95C

BACKHOE

Published 01/11 Part No. F-4145

OPERATOR'S MANUAL

This Operator's Manual is an integral part of the safe operation of this machine and must be maintained with the unit at all times. READ, UNDERSTAND, and FOLLOW the Safety and Operation Instructions contained in this manual before operating the equipment. *C01-Cover*

FC-BH-0003

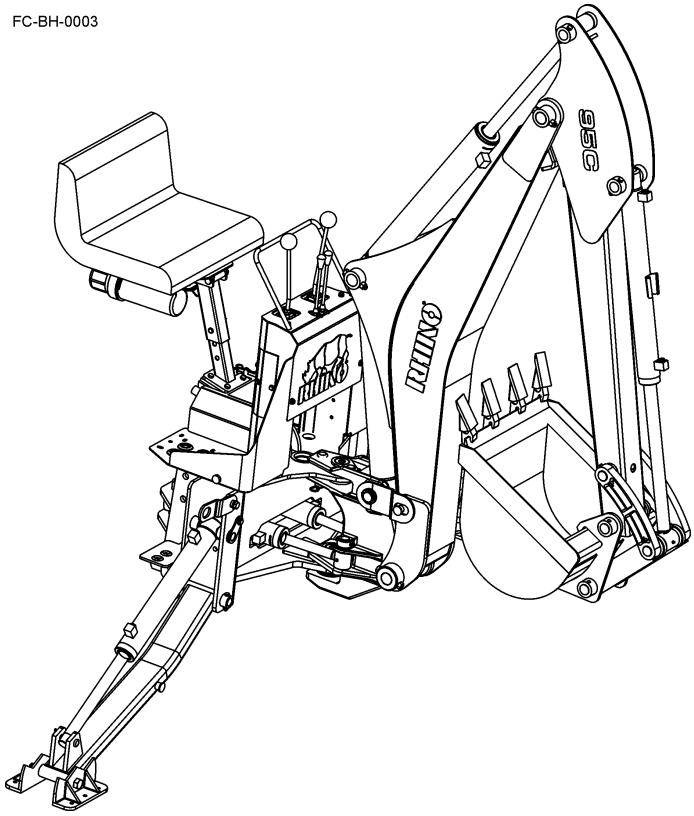

RHINO®
1020 S. Sangamon Ave.
Gibson City, IL 60936
800-446-5158
Email: parts@servis-rhino.com

¡ATENCIÓN!
LEA EL INSTRUCTIVO
Si No Lee Ingles, Pida Ayuda a Alguien Que Se Lo Lea Para Que le Traduzca Las Medidas de Seguridad

MEMBER OF THE ALAMO GROUP
ALWAYS ON THE CUTTING EDGE®

$0.00

TO THE OWNER/OPERATOR/DEALER

All implements with moving parts are potentially hazardous. There is no substitute for a cautious, safe-minded operator who recognizes the potential hazards and follows reasonable safety practices. The manufacturer has designed this implement to be used with all its safety equipment properly attached to minimize the chance of accidents.

BEFORE YOU START!!Read the safety messages on the implement and shown in your manual. Observe the rules of safety and common sense!

⚠ WARNING

TO PREVENT BODILY INJURY

- **Read operator's manual before using backhoe. Follow all safety precautions.**
- **Replacement manuals are available from your local dealer.**
- **Inspect backhoe daily for loosened, bent or broken parts.**
- **Before transporting, attach slow moving vehicle sign and engage boom and swing locks.**
- **A minimum 20% of tractor and equipment weight must be on tractor front wheels with backhoe in transport position.**
- **Enter and exit operators platform only from between stabilizers and tires.**
- **Avoid digging in area of stabilizer pads to keep solid base for stabilizers.**
- **Operate from backhoe operators seat only.**
- **Keep all guards in place.**
- **When operating backhoe, keep others away from stabilizers and maximum bucket swing areas.**
- **Keep others off backhoe and tractor while operating backhoe.**
- **Consult local utilities before digging. Know location of underground cables and pipelines. Watch for overhead hazards.**
- **Do not repair or service backhoe unless it is mounted on tractor and securely supported. Loss of oil or removal of parts could cause backhoe to collapse.**
- **Do not use this unit for lifting, conveying or providing a work platform for personnel.**
- **Before leaving equipment unattended, raise boom and install transport locks. Fold in dipperstick and bucket. Shut off engine and remove key.**

45970

⚠ PELIGRO

LEA EL INSTRUCTIVO
Si No Lee Ingles, Pida Ayuda a Alguien Que Si Lo Lea Que Le Traduzca Las Medidas de Seguridad.

WARRANTY INFORMATION:
Read and understand the complete Warranty Statement found in this Manual. Fill out the Warranty Registration Form in full and return it to within 30 Days. Make certain the Serial Number of the Machine is recorded on the Warranty Card and on the Warranty Form that you retain. The use of "will-fit" parts will void your warranty and can cause catastrophic failure with possible injury or death.

TABLE OF CONTENTS

SAFETY SECTION

General Safety Instructions and Practices

A careful operator is the best operator. Safety is of primary importance to the manufacturer and should be to the owner/operator. Most accidents can be avoided by being aware of your equipment, your surroundings, and observing certain precautions. The first section of this manual includes a list of Safety Messages that, if followed, will help protect the operator and bystanders from injury or death. Read and understand these Safety Messages before assembling, operating or servicing this Implement. This equipment should only be operated by those persons who have read the manual, who are responsible and trained, and who know how to do so responsibly.

The Safety Alert Symbol combined with a Signal Word, as seen below, is used throughout this manual and on decals which are attached to the equipment. The Safety Alert Symbol means: "ATTENTION! BECOME ALERT! YOUR SAFETY IS INVOLVED!" The Symbol and Signal Word are intended to warn the owner/operator of impending hazards and the degree of possible injury faced when operating this equipment.

Practice all usual and customary safe working precautions and above all---remember safety is up to YOU. Only YOU can prevent serious injury or death from unsafe practices.

DANGER Indicates an imminently hazardous situation that, if not avoided, WILL result in DEATH OR VERY SERIOUS INJURY.

WARNING Indicates an imminently hazardous situation that, if not avoided, COULD result in DEATH OR SERIOUS INJURY.

CAUTION Indicates an imminently hazardous situation that, if not avoided, MAY result in MINOR INJURY.

Important Identifies special instructions or procedures that, if not strictly observed, could result in damage to, or destruction of the machine, attachments or the environment.

NOTE: *Identifies points of particular interest for more efficient and convenient operation or repair.* (SG-1)

READ, UNDERSTAND, and FOLLOW the following Safety Messages. Serious injury or death may occur unless care is taken to follow the warnings and instructions stated in the Safety Messages. Always use good common sense to avoid hazards. (SG-2)

PELIGRO Si no lee ingles, pida ayuda a alguien que si lo lea para que le traduzca las medidas de seguridad. (SG-3)

DANGER Never operate the Tractor or Implement until you have read and completely understand this Manual, the Tractor Operator's Manual, and each of the Safety Messages found in the Manual or on the Tractor and Implement. Learn how to stop the tractor engine suddenly in an emergency. Never allow inexperienced or untrained personnel to operate the Tractor or Implement without supervision. Make sure the operator has fully read and understood the manuals prior to operation. (SG-4)

DANGER Never allow children to operate, ride on, or come close to the Tractor or Implement. Usually, 16-17 year-old children who are mature and responsible can operate the implement with adult supervision, if they have read and understand the Operator's Manuals, been trained in proper operation of the tractor and Implement, and are physically large enough to reach and operate the controls easily. (SG-11)

DANGER Never allow children to play on or around Tractor or Implement. Children can slip or fall off the Equipment and be injured or killed. Inadvertent contact with controls can cause the Implement to shift or fall crushing themselves or others. (SG-25)

DANGER DO NOT use drugs or alcohol immediately before or while operating the Tractor and Implement. Drugs and alcohol will affect an operator's alertness and coordination and therefore affect the operator's ability to operate the equipment safely. Before operating the Tractor or Implement, an operator on prescription or over-the-counter medication must consult a medical professional regarding any side effects of the medication that would hinder their ability to operate the Equipment safely. NEVER knowingly allow anyone to operate this equipment when their alertness or coordination is impaired. Serious injury or death to the operator or others could result if the operator is under the influence of drugs or alcohol. (SG-27)

WARNING Always read carefully and comply fully with the manufacturer's instructions when handling oil, solvents, cleansers, and any other chemical agent. (SG-22)

WARNING Engine Exhaust, some of its constituents, and certain vehicle components contain or emit chemicals known to the state of California to cause cancer and birth defects or other reproductive harm. (SG-30)

DANGER Never run the Tractor engine in a closed building or without adequate ventilation. The exhaust fumes can be hazardous to your health. (SG-23)

WARNING Battery posts, terminals and related accessories contain lead and lead compounds, chemicals known to the state of California to cause cancer, birth defects or other reproductive harm. (SG-31)

WARNING The operator and all support personnel should wear hard hats, safety shoes, safety glasses, and proper hearing protection at all times for protection from injury including injury from items that may be thrown by the equipment. (SG-16)

CAUTION PROLONGED EXPOSURE TO LOUD NOISE MAY CAUSE PERMANENT HEARING LOSS! Tractors with or without an Implement attached can often be noisy enough to cause permanent hearing loss. We recommend that you always wear hearing protection if the noise in the Operator's position exceeds 80db. Noise over 85db over an extended period of time will cause severe hearing loss. Noise over 90db adjacent to the Operator over an extended period of time will cause permanent or total hearing loss. ***NOTE:*** *Hearing loss from loud noise [from tractors, chain saws, radios, and other such sources close to the ear] is cumulative over a lifetime without hope of natural recovery.* (SG-I7)

WARNING Repeated or substantial breathing of hazardous dusts, including crystalline silica, could cause fatal or serious respiratory disease including silicosis. Concrete, masonry, many types of rock, and various other materials contain silica sand. California lists respirable crystalline silica as a substance known to cause cancer. Operation of this equipment under certain conditions may generate airborne dust particles that could contain crystalline silica. In those conditions, personal protective equipment including an appropriate respirator must be used. If excessive dust is generated, a dust collection or suppression system should also be used during operation. (SG-41)

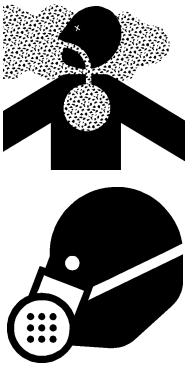

WARNING Use extreme caution when getting onto the Implement to perform repairs, maintenance and when removing accumulated material. Only stand on solid flat surfaces to ensure good footing. Use a ladder or raised stand to access high spots which cannot be reached from ground level. Slipping and falling can cause serious injury or death. (SG-33)

WARNING Use caution and wear protective gloves when handling sharp objects such as blades, knives, and other cutting edges. Be alert to worn component surfaces which have sharp edges. Sharp surfaces can inflict severe laceration injuries if proper hand protection is not worn. (SG-37)

WARNING For your protection while operating or servicing equipment, wear relatively tight and belted clothing to avoid entanglement in moving parts. Tie up and protect long hair that could become entangled in machinery. Remove all jewelry including necklaces, rings and watches which can get caught in machinery or on corners or edges of the equipment. Serious injury can result from entanglement with the machinery. (SG-42)

WARNING Use extreme care when loading, carrying or handling any agricultural fertilizers, chemicals or biological residue. Follow the manufacturer's handling instructions and wear appropriate Personal Protective Equipment including gloves, safety glasses and respirator when required. If you are using a tractor equipped with a cab, make sure the cab is rated for appropriate environmental exposure. Be safe and always wear proper protection. Short or long term exposure to certain chemicals and materials can result in serious injury or death. (SL-19)

Connecting and Disconnecting Safety Instructions and Practices

WARNING Do not stand or allow bystander or coworkers between the Backhoe and the tractor while installing or disconnecting the Backhoe from the tractor. Keep hands and body clear of the Backhoe and the Backhoe mounts. Serious injury or death can result from a person being crushed between the tractor and Backhoe. (SBH-32)

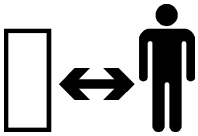

WARNING Only mount the backhoe on a tractor that is listed on the mounting instructions. Never mount on a tricycle steering front axle. Move the tractor front and rear wheels to the widest spacing and add the recommended rear tractor ballast to prevent tractor tip over. Keep the tractor tires properly inflated. Maintain at least 20% of the total Tractor and Backhoe weight on the front axle. Always wear your seatbelt and make sure the ROPS structure is fully deployed to prevent serious injury or death from the tractor tipping over. (SBH-18)

WARNING Make sure the Backhoe is properly attached to the tractor and the retaining pins securely lock the Backhoe into position. Improper mounting of the Backhoe onto the tractor can result in the Backhoe falling causing serious injury. (SBH-22)

WARNING Make sure all tractor and Backhoe guards are in place and properly functioning. (SBH-26)

WARNING Make sure the hydraulic quick disconnects are fully seated into the connections. Do not use the Backhoe if the hydraulic connection is leaking. Leaking oil could allow the Backhoe to fall resulting in a serious crushing injury. (SBH-21)

CAUTION Make sure all air is purged from the hydraulic system before using the Backhoe. Air in the system can cause the Backhoe to respond sluggishly or with unexpected movement. The air can be purged from the cylinder lines by fully cycling the cylinders several times from the fully closed to fully open position. Sudden or unexpected movement or dropping of the Backhoe and attachment could result in serious injury. (SBH-29)

WARNING Never interfere with factory-set hydraulic calibrations. Any change in calibration could cause a failure of the equipment and may result in injury. (SBH-13)

CAUTION Backhoe mounting bolts and nuts must be kept tightened. Retighten the bolts and nuts after the first 10 minutes of operation, and every 8 hours after that. (SBH-39)

WARNING Do not lean over controls. Engage and disengage the boom and stabilizer transport locks and the swing lock pin with the engine off. Do not operate the backhoe control from outside of the operator's area. (SBH-40)

Equipment Operation Safety Instructions and Practices

DANGER Do not use the backhoe hydraulic control levers as grab handles. Activation of the control levers can cause unexpected movement of the boom, arm, bucket or stabilizers. Always enter and exit the backhoe from the ground using the steps and grab handles. (SBH-41)

WARNING Operate the tractor only while seated in the tractor seat with the seatbelt fastened. Operate the backhoe only while seated in the backhoe seat. (SBH-19)

DANGER Never allow children or other persons to ride on the Tractor or Implement. Falling off can result in serious injury or death. (SG-10)

WARNING Do not mount or dismount the Tractor while the tractor is moving. Mount the Tractor only when the Tractor and all moving parts are completelystopped. (SG-12)

DANGER Start tractor only when properly seated in the Tractor seat. Starting a tractor in gear can result in injury or death. Read the Tractor operators manual for proper starting instructions. (SG-13)

WARNING Operate this Equipment only with a Tractor equipped with an approved roll-over-protective system (ROPS). Always wear seat belts. Serious injury or even death could result from falling off the tractor--particularly during a turnover when the operator could be pinned under the ROPS. (SG-7)

DANGER Operate the Tractor and/or Implement controls only while properly seated in the Tractor seat with the seat belt securely fastened around you. Inadvertent movement of the Tractor or Implement may cause serious injury or death. (SG-29)

WARNING Movement of the backhoe boom, stabilizers and attachment can create pinch points that can cause serious crushing injuries. Only operate the backhoe controls while seated in the operator's seat. Keep your hands, arms and legs inside the operator's zone. Stop operating the backhoe if any bystanders or coworkers come within 25 feet of the backhoe. (SBH-42)

WARNING Keep bystanders 25 feet away from the tractor and backhoe while operating. The bystanders could enter the path of the tractor or items could fall from the backhoe resulting in serious injury to the bystander. Position a barricade perimeter around the work area. Stop operating the backhoe if any person enters the work area. (SBH-14)

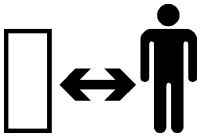

WARNING Prolonged operation may cause operator boredom and fatigue affecting safe operation. Take scheduled work breaks to help prevent these potentially impaired operating conditions. Never operate the Implement and Tractor in a fatigued or bored mental state which impairs proper and safe operation. (SG-32)

WARNING Never dig with backhoe unless stabilizers are lowered and properly seated. Do not dig under stabilizers or tractor with backhoe. Soft ground or sandy soil could cause cave in and tractor rollover. (SBH-43)

WARNING Operate the tractor and Backhoe only in conditions where you have clear visibility in daylight or with adequate artificial lighting. Never operate in darkness or foggy conditions where you cannot clearly see at least 100 feet in front and to the sides of the tractor. Make sure you can clearly see bystanders, ditches, steep slopes, drop-offs, overhead obstructions, power lines, and debris or obstruction in the travel path. If you are unable to clearly see these types of items discontinue operating. Contact with unseen vehicles, bystanders, obstructions, or drop-offs can cause serious injury. (SBH-31)

⚠WARNING Do Not operate this equipment in areas where insects such as bees may attack you and/or cause you to lose control of the equipment. If you must enter in such areas, use a tractor with an enclosed Cab and close the windows to prevent insects from entering. If a tractor cab is not available, wear suitable clothing including head, face, and hand protection to shield you from the insects. Attacking insects can cause you to lose control of the tractor, which can result in serious injury or death to you or bystanders. Never dismount a moving tractor. (SG-40)

⚠WARNING In case of mechanical difficulty during operation, place the transmission in the park position, set the parking brake, shut down all power, including the PTO and the engine and remove the key. Wait until all rotating motion has stopped before dismounting. (SG-39)

⚠WARNING If the Backhoe valve controls fail to function properly discontinue use of the tractor and Backhoe until the controls are properly repaired. Sudden or unexpected movement or dropping of the Backhoe and attachment could result in serious injury. (SBH-28)

⚠WARNING Never leave the Implement and Power Unit unattended while the Implement is in the raised position. Accidental operation of a lifting lever or a hydraulic failure may cause the implement to suddenly fall causing serious injury or possible death to anyone who might inadvertently be under the Implement. Lower the implement carefully to the ground. Do not put hands or feet under lifted components. (SPU-3)

⚠WARNING Do not operate this Equipment with hydraulic oil or fuel leaking. Oil and fuel are explosive and their presence could present a hazard. Do not check for leaks with your hand! High-pressure oil streams from breaks in the line could penetrate the skin and cause tissue damage including gangrene. To check for a hose leak, SHUT the unit ENGINE OFF and remove all hydraulic pressure. Wear oil impenetrable gloves, safety glasses and use Cardboard to check for evidence of oil leaks. If you suspect a leak, REMOVE the HOSE and have it tested at a Dealer. If oil does penetrate the skin, have the injury treated immediately by a physician knowledgeable and skilled in this procedure. (SG-15)

⚠DANGER Never walk or work under any raised boom or bucket. The Boom could fall and cause serious bodily injury or death. Always lower the boom and bucket flat on the ground or support the Boom and bucket on safety stands. Unload all hydraulic actuators prior to performing any maintenance. To do this, set the bucket on the ground then kill the tractor engine. Push and pull the control levers in and out several times to remove pressure. Do not work under raised Boom or Bucket unless components are securely blocked up to prevent inadvertent dropping. (SBH-7)

WARNING Avoid contact with hot surfaces including hydraulic oil tanks, pumps, motors, valves and hose connections. Relieve hydraulic pressure before performing maintenance or repairs. Use gloves and eye protection when servicing hot components. Contact with a hot surface or fluid can cause serious injury from burns or scalding. (SG-34)

WARNING Avoid contact with hot surfaces of the engine or muffler. Use gloves and eye protection when servicing hot components. Contact with a hot surface or fluid can cause serious injury from burns or scalding. (SG-38)

DANGER Be sure you have adequate knowledge of the property you will be working on. Take time to make yourself aware of any area underground lines or cables. Contact with buried lines or cable could result in **serious injury** or **death**. If in doubt about buried utility lines call 811 before digging or 1-800-258-0808. (SBH-6)

DANGER Do not let the Backhoe or attachment contact electrical power lines. Contact with electrical power lines can result in serious injury or electrocution. If the backhoe attachment contacts a power line remain in the tractor seat until the power has been shut off. Stepping off the tractor can permit electrical current to pass through the body resulting in electrocution. (SBH-17)

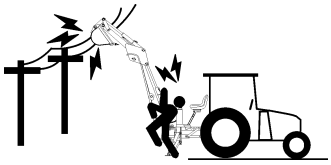

DANGER The Boom is designed only to position and operate the Bucket which is attached to it. Never attempt to lift, pull, or push other solid objects with the boom or bucket. Serious injury could result from a structural failure when the Boom is used for purposes other than those for which it was designed. (SBH-9)

DANGER Never attach pulling devices to the rear of the backhoe. The unit could tip rearwards causing serious injury or even death. (SBH-10)

DANGER Do not use Backhoe as a jack to raise the tractor tires off the ground. The Backhoe could fail causing the tractor and Backhoe to fall to the ground resulting in serious injury. (SBH-24)

DANGER Do not work from the backhoe or attachments. Do now allow any riders on the backhoe, tractor or attachments. Falling off could result in serious injury. (SBH-34)

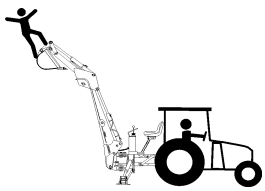

WARNING Use extreme care when digging, transporting or dumping loads that impair or partially block the operator's line of sight. Know where you are traveling. Make sure no bystanders are in the area of travel. If a bystander assists in providing guidance, make sure they are not in the path of travel. Keep all bystanders 25 feet away from travel path. (SBH-35)

DANGER Do not raise the Backhoe on a hillside. Do not transport across a slope with a raised Backhoe. When the Backhoe is raised, the center of gravity of the tractor and Backhoe is raised increasing the potential for the tractor to tip over. Tractor wheel contact with any wash out, drop off or the ground obstruction with a raised Backhoe could result in the tractor tipping over and causing serious bodily injury. (SBH-20)

WARNING When the bucket is swung to the side of the tractor, it exerts a movement on the tractor causing the tractor to rock from side to side. Make sure the stabilizers are lowered to the ground and stabilize the tractor before swinging the boom.Extreme care should be taken when operating on slopes. Bodily Harm or Death could result from tractor's tipping over. (SBH-1)

WARNING Avoid full reach and swinging a loaded bucket to the down hill side when operating on slopes. (SBH-2)

WARNING Digging with the arm may pull the compact tractor backward. Do not dig too much material at one time. (SBH-44)

WARNING Use extreme care when piling material above 6 feet high. Material could shift and fall onto the operator or bystanders. The material could crush or suffocate the operator or bystander resulting in serious injury or death. (SBH-45)

WARNING Always lower bucket and stabilizer feet to the ground, and shut off the engine before dismounting from the unit. (SBH-11)

DANGER BEFORE leaving the tractor seat lower the implement, set the parking brake and/ or set the tractor transmission in parking gear, disengage the PTO, stop the engine, remove the key, and wait for all moving parts to stop. Place the tractor shift lever into a low range or parking gear to prevent the tractor from rolling. Never dismount a Tractor that is moving or while the engine is running. Operate the Tractor controls from the tractor seat only. (SG-9)

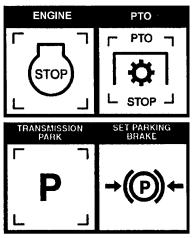

Transporting Safety Instructions and Practices

WARNING Transport only at speeds where you can maintain control of the equipment. Serious accidents and injuries can result from operating this equipment at high speeds. Understand the Tractor and Implement and how it handles before transporting on streets and highways. Make sure the Tractor steering and brakes are in good condition and operate properly.

Before transporting the Tractor and Implement, determine the proper transport speeds for you and the equipment. Make sure you abide by the following rules:

Test the tractor at a slow speed and increase the speed slowly. Apply the Brakes smoothly to determine the stopping characteristics of the Tractor and Implement. As you increase the speed of the Tractor the stopping distance increases. Determine the maximum transport speed not to exceed 20 mph (30 kph) for transporting this equipment.

Test the equipment at a slow speed in turns. Increase the speed through the turn only after you determine that the equipment can be operated at a higher speed. Use extreme care and reduce your speed when turning sharply to prevent the tractor and implement from turning over. Determine the maximum turning speed for you and this equipment before operating on roads or uneven ground.

Only transport the Tractor and Implement at the speeds which allow you to properly control the equipment.

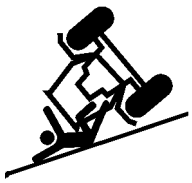

Be aware of the operating conditions. Do not operate the Tractor with weak or faulty brakes or worn tires. When operating down a hill or on wet or rain slick roads, the braking distance increases: use extreme care and reduce your speed. When operating in traffic always use the Tractor's flashing warning lights and reduce your speed. Be aware of traffic around you and watch out for the other guy. (SG-19)

WARNING Be particularly careful when transporting the Implement with the Tractor. Turn curves or go up hills only at a low speed and using a gradual steering angle. Rear mounted implements move the center of gravity to the rear and remove weight from the front wheels. Make certain, by adding front ballast, that at least 20% of the tractor's weight is on the front wheels to prevent rearing up, loss of steering control or Tractor tip-over. Slow down on rough or uneven surfaces to prevent loss of steering control which could result in property damage or possible injury. Dropping implement in transport can cause serious damage to the tractor and/or Implement and possibly cause the operator or others to be injured or killed. (SBH-38)

WARNING Do not drive near the edge of a ditch or excavation. The soil could giveway resulting in loss of control or rollover. (SBH-46)

CAUTION Use extra care when turning or stopping. Allow for increased length and weight of added backhoe. The backhoe adds five to six feet of length in rear of the tractor and significant weight. Allow extra distance when stopping or turning. Do not allow backhoe or attachment to contact solid objects. (SBH-16)

⚠ DANGER This Implement may be wider than the Tractor. Be careful when operating or transporting this equipment to prevent the Implement from running into or striking sign posts, guard rails, concrete abutments or other solid objects. Such an impact could cause the Implement and Tractor to pivot violently resulting in loss of steering control, serious injury, or even death. Never allow the Implement to contact obstacles. (S3PT-12)

⚠ WARNING Lower the Backhoe to the bed of the truck or trailer when transporting the tractor and Backhoe with a truck. Measure to ensure the transport height does not exceed the legal limits. Contact with overhead obstructions or power lines can cause property damage or serious injury. (SBH-30)

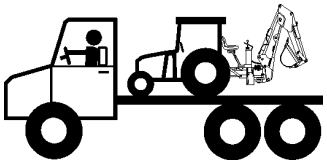

⚠ WARNING Make certain that the "Slow Moving Vehicle" (SMV) sign is installed in such a way as to be clearly visible and legible. When transporting the Equipment use the Tractor flashing warning lights and follow all local traffic regulations. (SG-6)

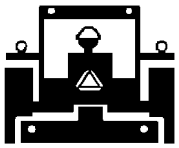

⚠ WARNING Engage boom swing and lift pins. Lock both stabilizers in the raised position. If the backhoe attachment, such as a bucket, were to drop suddenly and hit the ground while transporting, the tractor could stop or swing to the side. Immediately resulting in the operator hitting the steering wheel or flying out of the operator's seat. Serious injury could result. (SBH-15)

⚠ WARNING Your driving vision may be reduced or impaired by the tractor, cab, or implement. Before driving on public roadways identify any limited vision areas, and make adjustments to your operating position, mirrors, and the implement transport position so that you can clearly see the area where you will be traveling, and any traffic that may approach you. Failure to maintain adequate vision of the public roadway and traffic can result in serious injury or even death. (STI-10)

⚠ WARNING Carry the Backhoe and attachment low when transporting to reduce the potential of the tractor tipping over. Transport on slopes only at slow speeds and use gradual turning angles. Tractor wheel contact with any wash out, drop off or ground obstruction with a raised Backhoe could result in the tractor tipping over and causing serious injury. (SBH-36)

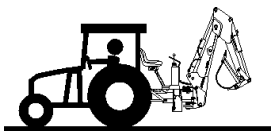

⚠ WARNING Always look behind you before backing up. Make sure you are looking in the direction of travel. A bystander could walk behind the tractor. Running into a bystander can result in serious injury or death. (SBH-27)

Storage Safety Instructions and Practices

WARNING Always lower legs and bucket to the ground and engage the swing lock when the Backhoe is not in use. (SBH-8)

WARNING Always store in a stable position with the swing lock and lift ram strap engaged. (SBH-12)

WARNING Do not remove the attachment from the Backhoe when the Backhoe is disconnected from the tractor. The attachment stabilizes the Backhoe. If the attachment is removed, the Backhoe will fall and could result in serious injury. (SBH-25

DANGER Never crawl under or allow children to play around or on a Backhoe that is disconnected from the tractor. The Backhoe could fall crushing a person resulting in serious injury or death. (SBH-33)

Maintenance Safety Instructions and Practices

WARNING Perform service, repairs and lubrication according to the maintenance section. Ensure the unit is properly lubricated as specified in the lubrication schedule and all bolts and nuts are properly torqued. Failure to properly service, repair and maintain this Implement in good operating condition could cause component failure and possible serious injury or even death. (SG-35)

WARNING Relieve hydraulic pressure prior to doing any maintenance or repair work on the Implement. Place the Implement on the ground or securely blocked up, disengage the PTO, and turn off the tractor engine. Push and pull the Remote Cylinder lever in and out several times. Disconnect and remove the Implement hydraulic hoses from the tractor prior to starting any maintenance or repair work. (STL-17)

WARNING Never attempt to lubricate, adjust, or remove material from the Implement while it is in motion or while tractor engine is running. (SG-20)

⚠WARNING Periodically inspect all moving parts for wear and replace when necessary with authorized service parts. Look for loose fasteners, worn or broken parts, and leaky or loose fittings. Make sure all pins have cotter pins and washers. Serious injury may occur from not maintaining this machine in good working order. (SG-21)

⚠WARNING Always maintain the safety signs in good readable condition. If the safety signs are missing, damaged, or unreadable, obtain and install replacement safety signs immediately. (SG-5)

⚠DANGER Do Not fill fuel tank while engine is running. Refuel only after engine has cooled down. If fuel is spilled, move machine away from the area of the spill and avoid creating any source of ignition until the gasoline has evaporated. (SG-28)

⚠WARNING Do not modify or alter this Implement. Do not permit anyone to modify or alter this Implement, any of its components or any Implement function. (SG-8)

⚠DANGER Never work under the Implement, the framework, or any lifted component unless the Implement is securely supported or blocked up to prevent sudden or inadvertent falling which could cause serious injury or even death. (SG-14)

PARTS INFORMATION

Rhino products are designed utilizing specifically matched system components to ensure optimum equipment performance. These parts are made and tested to Rhino specifications. Non-genuine "will fit" parts do not consistently meet these specifications. The use of “will fit” parts may reduce equipment performance, void warranties, and present a safety hazard. Use genuine Rhino parts for economy and safety. (SPRM-2)

SEE YOUR RHINO DEALER

Concluding Safety Instructions and Practices

In addition to the design and configuration of this Implement, including Safety Signs and Safety Equipment, hazard control and accident prevention are dependent upon the awareness, concern, prudence, and proper training of personnel involved in the operation, transport, maintenance, and storage of the machine. Refer also to Safety Messages and operation instruction in each of the appropriate sections of the Tractor and Equipment Manuals. Pay close attention to the Safety Signs affixed to the Tractor and Equipment. (SG-18)

Decal Location

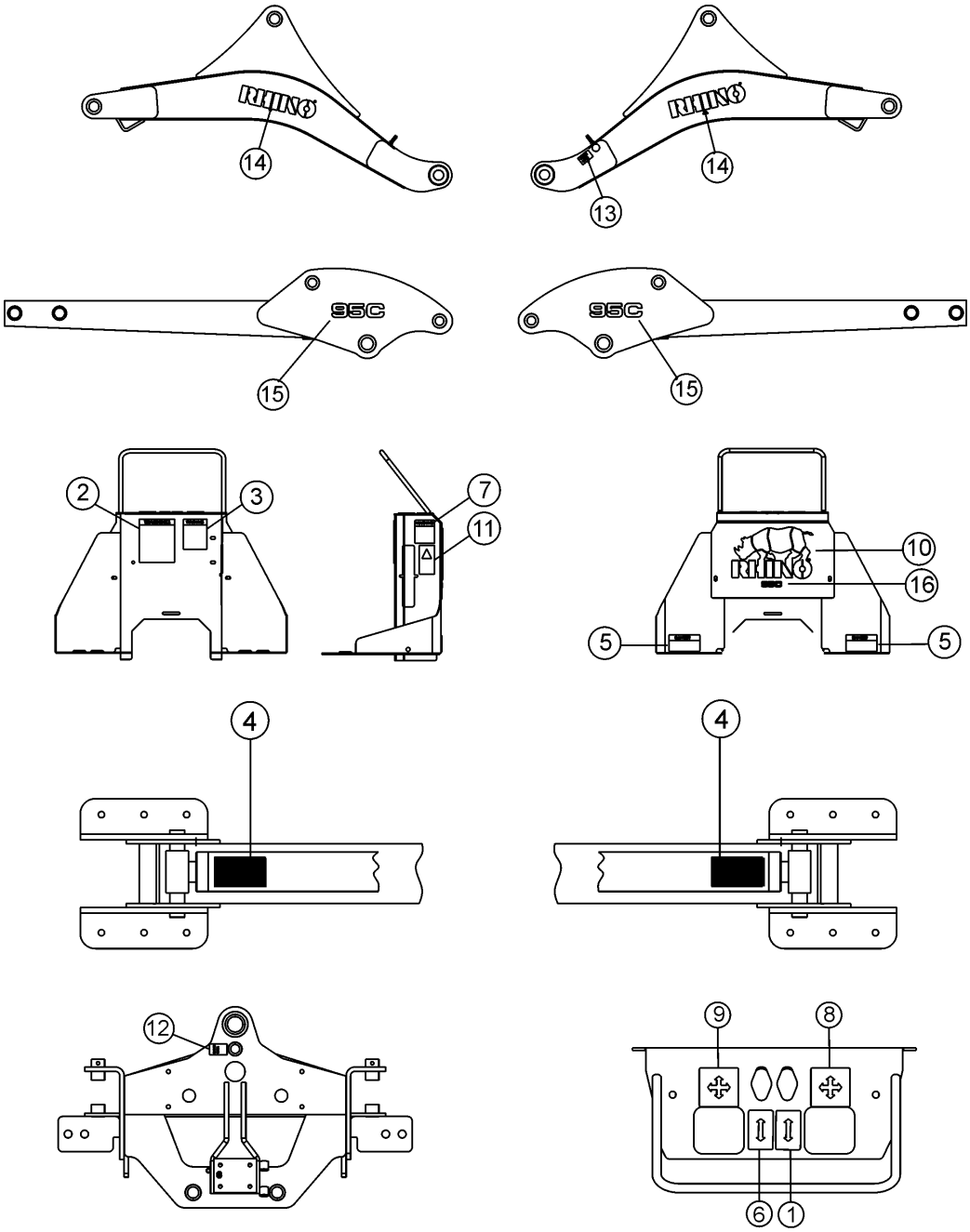

DL-BH-0003

ITEM	PART NO.	QTY	LEVEL	DESCRIPTION
1.	44901	1	OPERATION	Right Side Stabilizer Position
2.	45970	2	WARNING	To Prevent Bodily Injury
3.	44896	1	WARNING	To Prevent Bodily Injury
4.	44897	2	DANGER	Crushing Hazard
5.	44895	2	DANGER	Crushing Hazard
6.	44900	1	OPERATION	Left Side Stabilizer Position
7.	44907	1	WARNING	To Prevent Instability
8.	44899	1	OPERATION	Dipperstick & Bucket Operation
9.	44898	1	OPERATION	Boom Operation
10.	54287	1	LOGO	Rhino Logo
11.	48280	1	_____	Universal One Call
12.	44909	1	OPERATION	Swing Lock
13.	44908	1	OPERATION	Boom Lock
14.	54288	2	LOGO	Rhino Logo
15.	54040	2	NAME	Model 95C (Big)
16.	54041	1	NAME	Model 95C (Small)

Decal Description

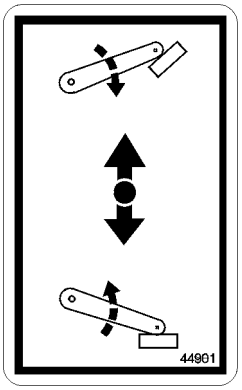

1 -- 44901

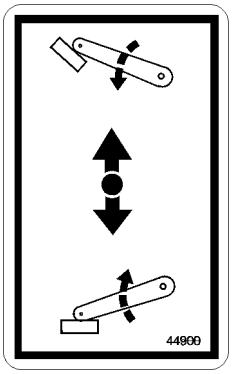

6 -- 44900

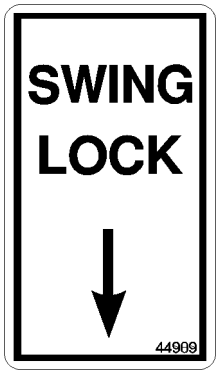

12 -- 44909

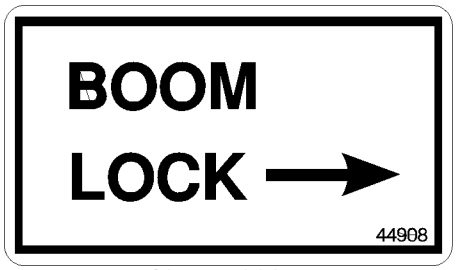

13 -- 44908

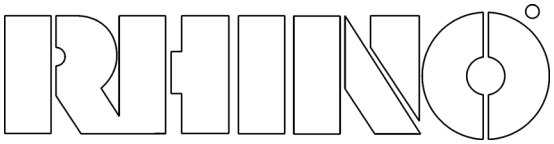

14 -- 54288

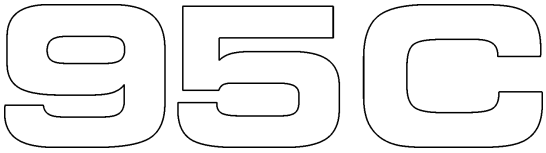

15 -- 54040

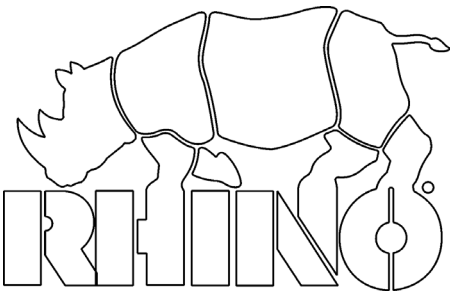

10 -- 54287

16 -- 54041

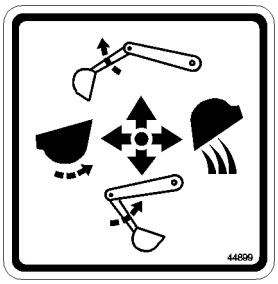

8 -- 44899

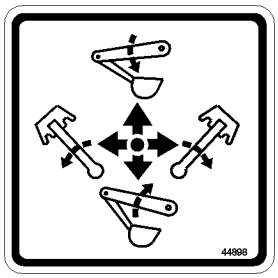

9 -- 44898

Note: *Safety decal location is listed below each decal. Replace decal if damaged or illegible. Replacement decals are available from dealer.*

3 -- 44896

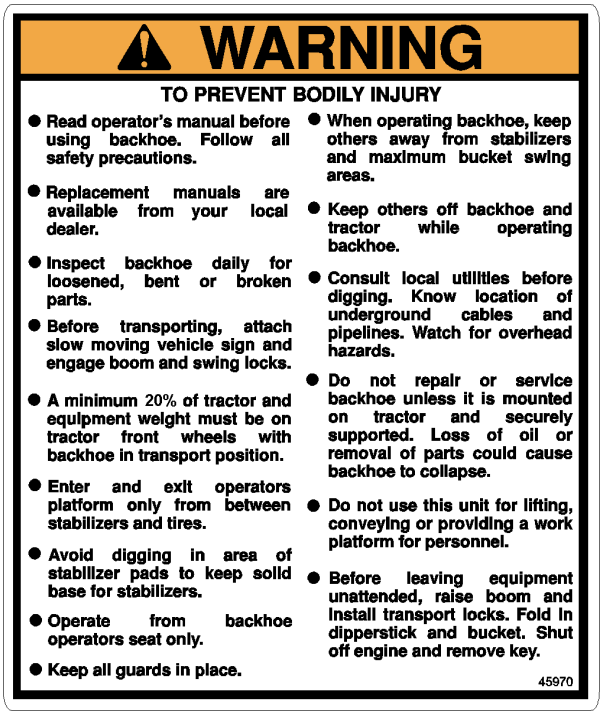

2 -- 45970

5 -- 44895

4 -- 44897

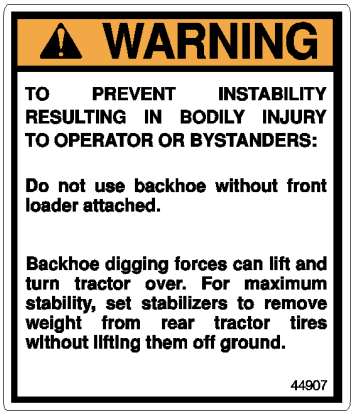

7 -- 44907

11 -- 48280

Federal Laws and Regulations

This section is intended to explain in broad terms the concept and effect of federal laws and regulations concerning employer and employee equipment operators. This section is not intended as a legal interpretation of the law and should not be considered as such.

Employer-Employee Operator Regulations

U.S. Public Law 91-596 (The Williams-Steiger Occupational and Health Act of 1970) OSHA

This Act Seeks:

"...to assure so far as possible every working man and woman in the nation safe and healthful working conditions and to preserve our human resources..."

DUTIES

Sec. 5 (a) Each employer-

(1) shall furnish to each of his employees employment and a place of employment which are free from recognized hazards that are causing or are likely to cause death or serious physical harm to his employees;

(2) shall comply with occupational safety and health standards promulgated under this Act.

(b) Each employee shall comply with occupational safety and health standards and all rules, regulations and orders issued pursuant to this Act which are applicable to his own actions and conduct.

OSHA Training Requirements

Title 29, Code of Federal Regulations Part 1928.57(a)(6). **www.osha.gov**

Operator instructions. At the time of initial assignment and at least annually thereafter, the employer shall instruct every employee who operates an agricultural tractor and implements in the safe operating practices and servicing of equipment with which they are or will be involved, and of any other practices dictated by the work environment.

Keep all guards in place when the machine is in operation;

Permit no riders on equipment

Stop engine, disconnect the power source, and wait for all machine movement to stop before servicing, adjusting, cleaning or unclogging the equipment, except where the machine must be running to be properly serviced or maintained, in which case the employer shall instruct employees as to all steps and procedures which are necessary to safely service or maintain the equipment.

Make sure everyone is clear of machinery before starting the engine, engaging power, or operating the machine.

Employer Responsibilities:

To ensure employee safety during Tractor and Implement operation, it is the employer's responsibility to:

1. Train the employee in the proper and safe operation of the Tractor and Implement.
2. Require that the employee read and fully understand the Tractor and Implement Operator's manual.
3. Permit only qualified and properly trained employees to operate the Tractor and Implement.
4. Maintain the Tractor and Implement in a safe operational condition and maintain all shields and guards on the equipment.
5. Ensure the Tractor is equipped with a functional ROPS and seat belt and require that the employee operator securely fasten the safety belt and operate with the ROPS in the raised position at all times.
6. Forbid the employee operator to carry additional riders on the Tractor or Implement.
7. Provide the required tools to maintain the Tractor and Implement in a good safe working condition and provide the necessary support devices to secure the equipment safely while performing repairs and service.
8. Require that the employee operator stop operation if bystanders or passersby come within 300 feet.

Child Labor Under 16 Years of Age

Some regulations specify that no one under the age of 16 may operate power machinery. It is your responsibility to know what these regulations are in your own area or situation. (Refer to U.S. Dept. of Labor, Employment Standard Administration, Wage & Home Division, Child Labor Bulletin #102.)

INTRODUCTION SECTION

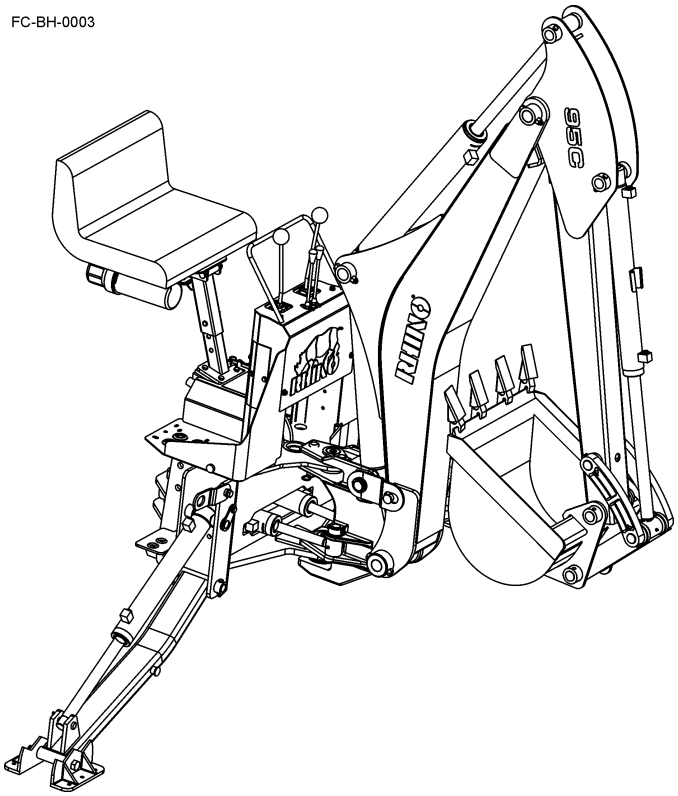

Rhino C Series Backhoes are designed to provide years of outstanding service. C Series Backhoes are designed to fit on a wide range of compact and utility class tractors operating in a wide range of conditions. C Series backhoes should be mounted to a sub-frame on tractors smaller than 50 PTO HP or to a 3-Point mount for larger tractors.

The purpose of this manual is to assist you with proper assembly, operation and maintenance of your new C Series Backhoe. Successful operation and long life of the backhoe depends on proper maintenance and care during operation. Please read and follow the instructions provided in this manual carefully. Additional instructions and information may be provided with your backhoe's sub-frame or mounting kit or hydraulic kit. That information should be kept with this manual at all times.

WARNING A Front End Loader or adequate front ballasting weight is required before operating or transporting a backhoe attachment.

Note: This safety alert symbol identifies important safety messages in this manual. Observe and follow all safety messages to prevent personal injury.

Reference to left-hand and right-hand used in this manual refers to position of operator when seated in the operating position of backhoe.

If at any time you have a service problem with your backhoe or need new parts, contact your local dealer. Your dealer will need your backhoe model number and serial number to give you prompt efficient service.

Parts orders must give complete description, correct part number, total amount required, model number, all necessary serial numbers, method of shipment and shipping addresss.

SPECIFICATIONS

Specifications may vary depending on tractor model, tire size and bucket used and are subject to change without notification. Tractor must be equipped with ROPS and seat belt that will provide greater safety and installation of backhoe subframe.

GENERAL DATA

A. Digging Depth (two foot flat bottom) ..... 108.77”
B. Reach from center line of Swing Pivot ..... 148.09”
C. Loading Height (bucket at 60°) ..... 91”
D. Swing Arc ..... 180°
E. Transport Height (maximum) ..... 95.66”
F. Transport Overhang ..... 46.92”
G. Bucket Rotation ..... 180°
H. Stabilizer Spread, down position ..... 90”
I. Stabilizer Spread, up position ..... 53.75”
J. Shipping Weight (less bucket) ..... 1100 lbs

BUCKET DATA

BUCKET WIDTH	SAE STRUCK CAPACITY	SAE HEAPED CAPACITY
9”	0.73 cu. ft.	0.87cu. ft.
12”	1.01 cu. ft.	1.24 cu. ft.
16”	1.38 cu. ft.	1.76 cu. ft.
18”	1.56 cu. ft.	2.02 cu. ft.
24”	2.11 cu. ft.	2.82 cu. ft.
36” Grave	2.78 cu. ft.	4.0 cu. ft.
36” Muck	2.78 cu. ft.	4.0 cu. ft.

CYLINDER DATA

CYLINDER	PISTON DIA.	STROKE	RETRACTED LENGTH	EXTENDED LENGTH	ROD DIA.
Boom	3”	18.5”	27.25”	45.75”	1.5”
Dipperstick	3”	19.75”	28.5”	48.25”	1.5”
Bucket	2.25”	19.25”	27”	46.25	1.5”
Swing	2.25”	8.56”	16”	24.56”	1.13”
Stabilizer	2.25”	14”	21”	35”	1.375”

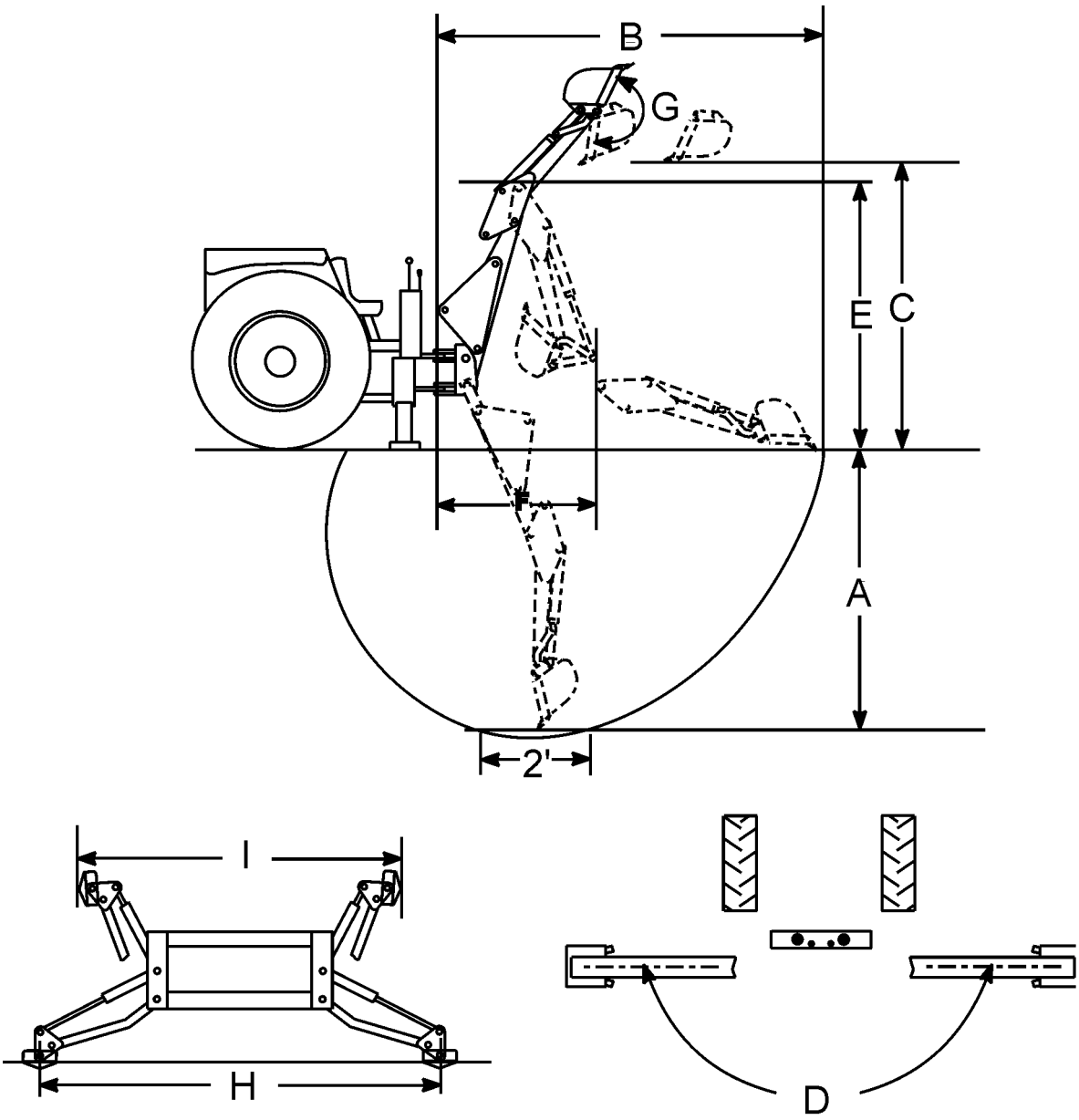

Int-BH-0001

ASSEMBLY SECTION

INSTALLING PUMP KIT (Optional)

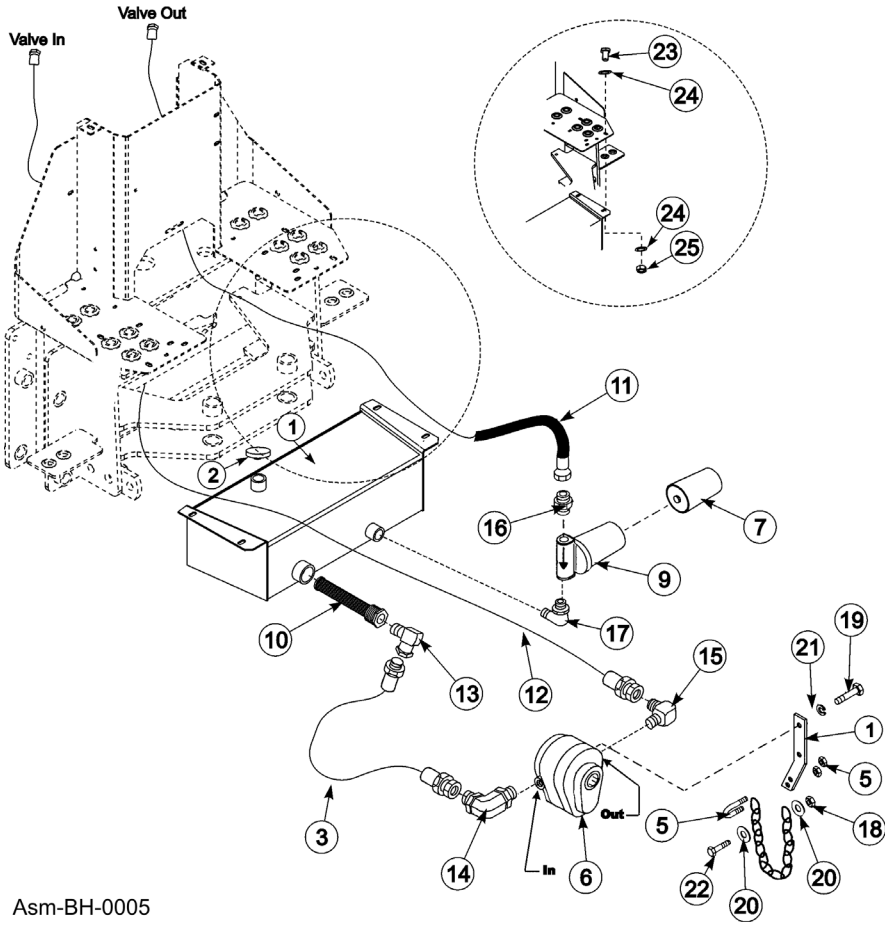

Asm-BH-0005

NOTE: *Drawbar may need to be removed if it interferes with reservoir. If drawbar can be left in place, retaining bracket (4) should be installed on left side of pump as shown and positioned on left side of tractor drawbar.*

1. Fasten hydraulic pump retaining bracket (4) to pump (6) using 3/8-16 x 1-1/4 cap screws (19) and 3/8 lock washers (21). Fasten one end of chain (8) to pump retaining bracket using only “U” bolt of wire rope clip (5) and 5/16 lock nuts that come up with clip.

NOTE: *Wrap chain tightly around hitch bracket on tractor to prevent pump from slipping off PTO shaft.*

2. Fasten tank (1) to backhoe using 3/8 x 1 cap screws (23), 3/8 flat washers 924) and 3/8 lock nuts (25).
3. Install 3/4 NPT x 3/4 NPT 90° elbow (17) to right tank port. Point fitting up.
4. Install filter body (without filter element) to 3/4 elbow (17). Be sure oil flow (arrow on filter body) is correct. Position body so element points right. Install filter element (7).
5. Install 3/4 NPT x 3/4 JIC fitting (16) to filter body.
6. Install 1-1/4 strainer (10) and 3/4 NPT x 3/4 NPT 90° elbow to left tank port.
7. Install 1-5/16 o-ring x 1-1/16 JIC to “IN” port on pump. Install 3/4 x 1-1/16 elbow fitting (15) to “OUT” port on pump.
8. Connect suction hose (3) to left port on reservoir and to “IN” port on pump.
9. Connect pressure hose (12) to “OUT” port on pump and “IN” port on valve. Connect tank hose (11) to “OUT” port on valve and to filter on hydraulic reservoir.
10. Fill reservoir to within 1 inch from top with 10W or 20W hydraulic oil with SAE J183-M2C33F classification. Dextron 2 ATF fluid and 10W engine oil with API “SD” classification are also acceptable. Install breather cap (2) to reservoir.

NOTE: *After cycling all cylinders, recheck oil level. Empty reservoir requires 4 gallons to fill to 1 inch from top.*

INSTALLING THREE POINT ADAPTER (Option)

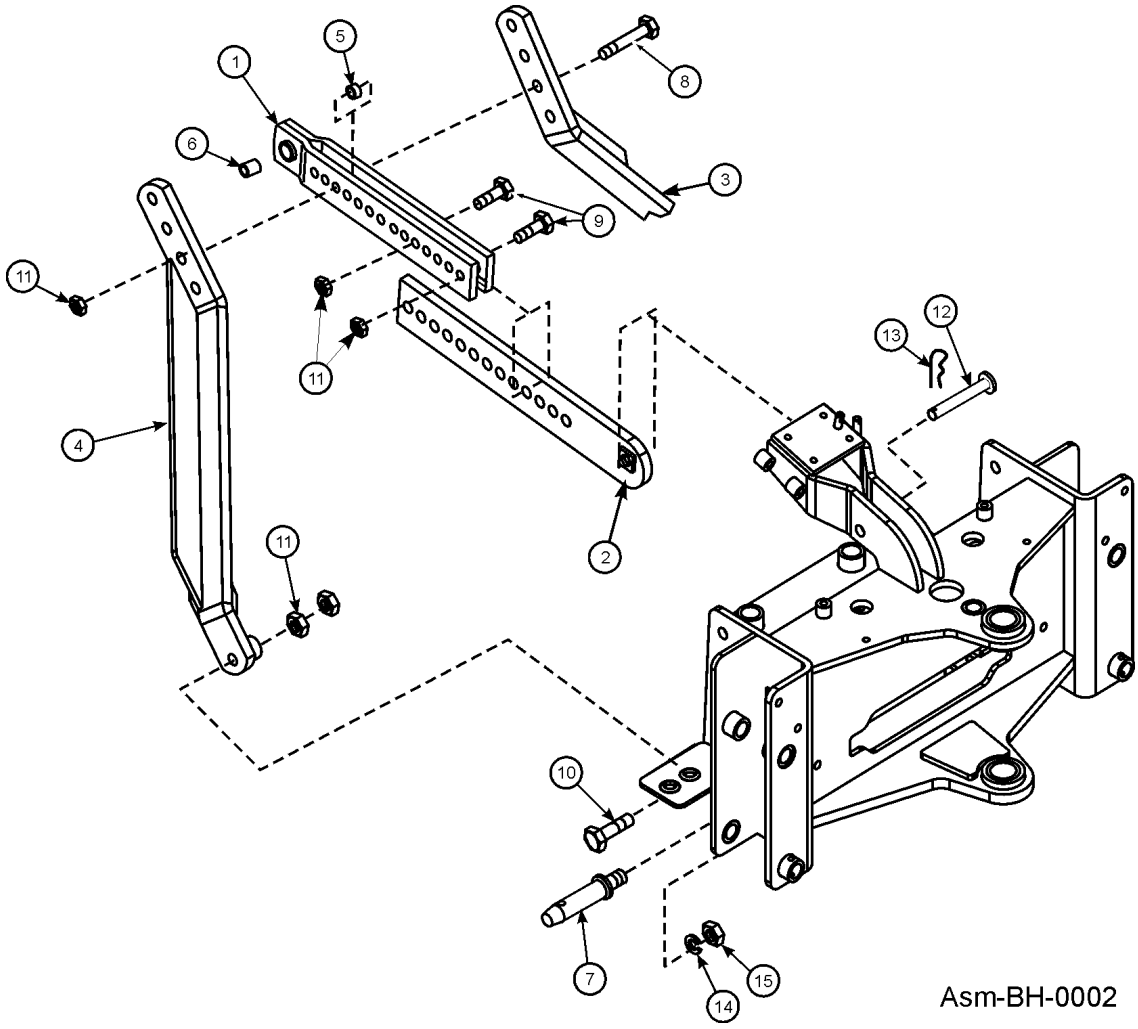

1. Install link pins (7) to backhoe using 7/8 lock washers (14) and 7/8 nuts (15).
2. Join upper link (1) and center link (2) using 3/4 x 2-1/2 cap screws (9) and 3/4 lock nuts (11). Leave a minimum of 3-3/4 inches between bolts.

NOTE: *Leave hardware loose. Assembly may need to be lengthened or shortened to mount backhoe mainframe in vertical position.*

3. Install link assembly to backhoe mainframe using clevis pin (12) and hairpin cotter (13).
4. Fasten support braces (3) to backhoe using 3/4 x 2 cap screws (10) and 3/4 lock nut (11) and to link assembly using 3/4 x 4 cap screw (9), bushing (5) and 3/4 lock nut (11).

NOTE: *Support brace must be fastened within 6-3/4 inches of link point that fastens to tractor. Bottom end of support braces are mounted to inside*

MOUNTING BACKHOE TO TRACTOR

1. Back tractor close enough to backhoe to connect hose kit or pump to tractor.

WARNING: ***BEFORE*** *leaving the Power Unit Seat, always engage the brake and set the Power Unit transmission in parking gear, disengage the auxiliary hydraulics, stop the engine, remove the key, and wait for all moving parts to stop.*

2. Using backhoe hydraulics, lower stabilizers until backhoe can be connected to 3-point hitch. Bottom of backhoe boom pivot should be 8 to 12 inches off ground when attaching to tractor lower 3-point arms.
3. Connect lower 3-point hitch members to backhoe and secure using linch pins from 3-point hitch.
4. Connect link assembly to upper connecting point on 3-point hitch using clevis pin and linch pin from 3-point hitch.

NOTE: *Insert adapter tube (5) in end of link assembly if necessary to adapt to smaller 3-point connecting pin.*

5. Adjust link assembly length if necessary for backhoe mainframe to rest in vertical position.

NOTE: *Adjustment limitations are shown in Figure 3.*

6. Check for proper operator head clearance with ROPS and cab (Figure 4).
7. Tighten all hardware in upper link assembly to torque specifications in backhoe manual.

WARNING: *Escaping hydraulic fluid under pressure can penetrate skin causing serious injury.*

•DO NOT use your hands to check for leaks. Use a piece of cardboard or paper to search for leaks.

- *Stop engine and relieve pressure before connecting or disconnecting lines.*
- *Tighten all connections before starting engine or pressurizing lines.*
- *If any fluid is injected into skin, obtain medical attention immediately or gangrene may result.*

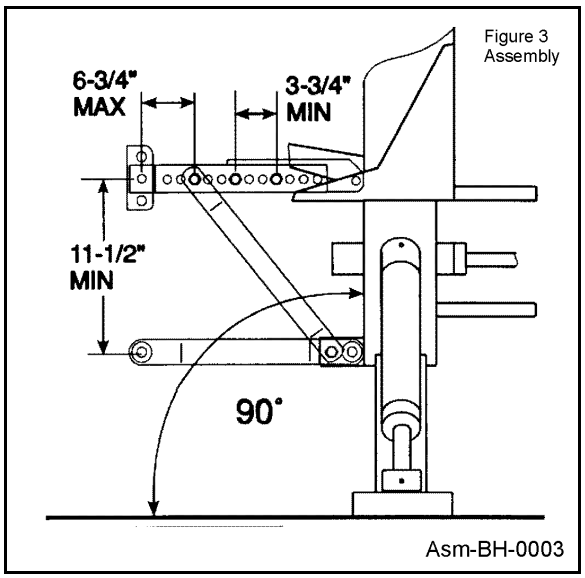

Figure 3
Assembly

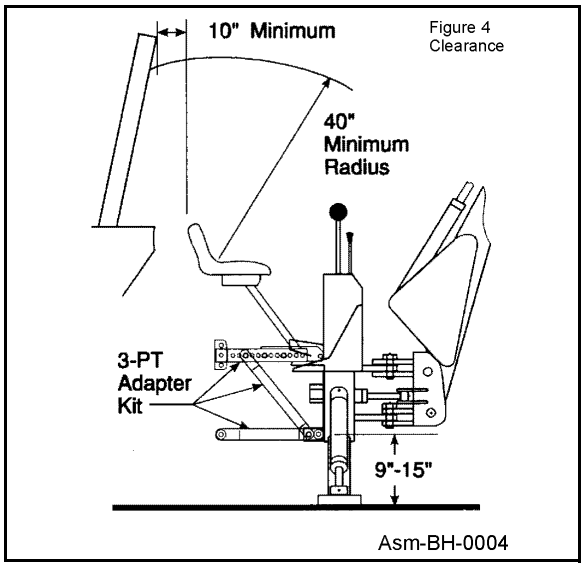

Figure 4
Clearance

OPERATION SECTION

CAUTION: *To avoid possible injury, observe the following safety rules BEFORE OPERATING backhoe.*

- *Be sure area is clear of underground utilities or other hazards.*
- *Position a barricade around work area.*
- *Keep bystanders a safe distance away.*

PRE-OPERATION CHECKLIST

This backhoe is designed for safety, durability and operator convenience. To insure satisfactory performance, complete the following check list and make all necessary adjustments before initial operation.

1. All safety shields must be in place.
2. Safety and operation decals must be in place, undamaged and clean.
3. Hydraulic hookup must be correct and all connections tight.

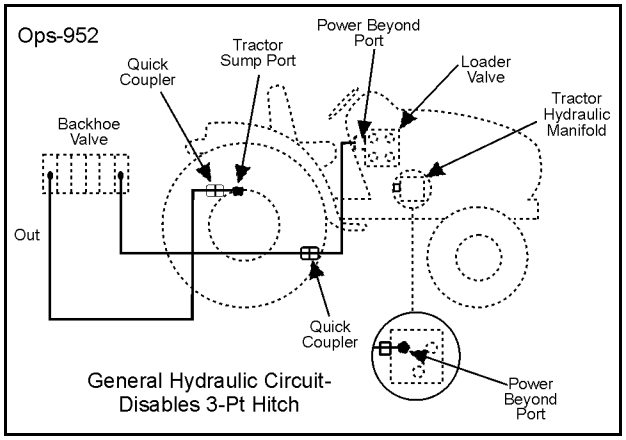

General Hydraulic Circuit-
Disables 3-Pt Hitch

4. All bolts and pins which attach backhoe to tractor must be in place. Check tightness of bolts and check that all pins are retained.
5. Tractor must be in proper operating condition.
6. Lubricate backhoe, see MAINTENANCE SECTION.
7. Controls must operate properly. See OPERATION SECTION.
8. Cycle all cylinders slowly to purge air from hydraulic system.
9. Hydraulic system oil level must be correct. Reservoir level should be 1” from top of tank.

OPERATING DIRECTIONS

The terms right, left, front and back shall be from the position of the operator when seated in the operating position on the backhoe.

ENGINE SPEED

Speed at which backhoe operates is dependent on tractor PTO RPM. Use a moderate engine speed to start and increase it as your experience permits.

CONTROLS

The backhoe has two major control levers, Boom/Swing and Crowd/Bucket. These controls are located on the control panel directly ahead of the operator.

The stabilizer control levers are located between the two major control levers.

BOOM/SWING

Push lever forward, boom moves down, away from operator. Pull lever back, boom moves up, toward operator.

Pushing lever farther forward into detent position puts boom into “float”. Float detent position allows boom to drift up or down.

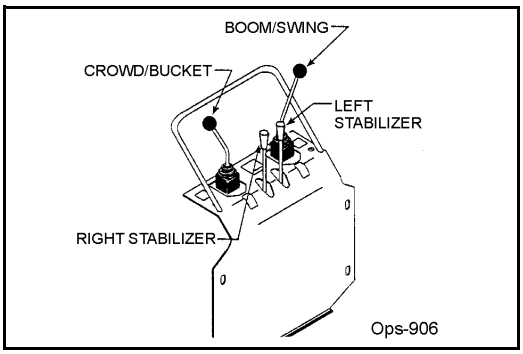

Move lever to left, backhoe swings left. Move lever to right, backhoe swings right.

By moving lever to one of the intermediate positions, boom can be swung left or right at the same time as it is being raised or lowered, performing two operations simultaneously.

Swing left and lower boom by moving control lever forward and to the left.

Swing left and raise boom by moving control lever back and to the left.

Swing right and lower boom by moving control lever forward to the right.

Swing right and raise boom by moving control lever back and to the right.

CROWD/BUCKET

Push lever forward, dipperstick moves away from operator. Pull lever back, dipperstick moves toward operator.

Move lever to left, bucket curls in. Move lever right, bucket extends out.

By moving lever to one of the intermediate positions, dipperstick can be extended or retracted at the same time as bucket is being loaded or dumped.

Move dipperstick away and extend bucket by moving lever forward and to the right.

Move dipperstick away and curl bucket by moving lever back and to the right.

Move dipperstick away and extend (dump) bucket by moving lever forward and to the right.

Move dipperstick toward operator and extend bucket by

moving lever back and to the right.

The two operations of the boom and swing lever combined with the two operations performed by bucket and dipperstick control lever provide four simultaneous operations of the two levers. Oil flow will go to operation which requires the least pressure. The ability to feather valve spools and balance pressure comes with experience resulting in reduced cycle times.

LEFT HAND STABILIZER

Push lever forward, left hand stabilizer lowers. Pull lever back, left hand stabilizer raises.

RIGHT HAND STABILIZER

Push lever forward, right hand stabilizer lowers. Pull lever back, right hand stabilizer raises.

OPERATING BACKHOE

CAUTION: *To avoid possible injury, observe the following safety rules BEFORE OPERATING backhoe.*

- *Operate from backhoe operator's seat only.*
- *Lower stabilizers until weight of tractor is supported by stabilizers. Do not lift tractor tires off ground.*
- *Do not dig near stabilizers.*
- *Do not attempt to raise tractor off ground or move tractor forward or backward using backhoe dipperstick or bucket.*
- *Do not lose stability by swinging bucket downhill when positioned on a slope.*

It is not difficult to become an efficient operator. Control operating decals are located in front of control levers. Study these decals. They will assist you in becoming familiar with the controls.

Smooth, light handling of controls will result in the most efficient backhoe operation.

Operate backhoe control levers to become familiar with their speed and movements. Engine speed and PTO RPM will determine speed of cylinder operation.

Swing boom several times to practice controlling the speed of swing. Do not operate swing more than 45 degrees each way for the first few times. Gradually increase the arc.

Best results are obtained by digging near center of swing arc so material can be dumped on either side.

As operator becomes more familiar with operation of backhoe, it will be common practice to operate two controls at one time. For example, with bucket extended and dipperstick extended, the lift control and crowd control can be operated together to bring bucket toward operator with down pressure on it. As dipperstick approaches operator, the crowd and bucket controls can be operated together to close bucket and trap material. At end of stroke, lift and crowd controls are operated to move load up and away from operator to save time in clearing excavation.

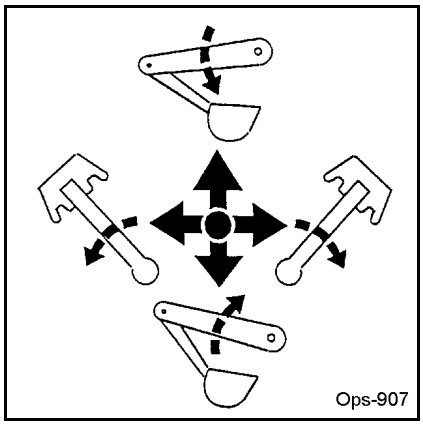
Ops-907

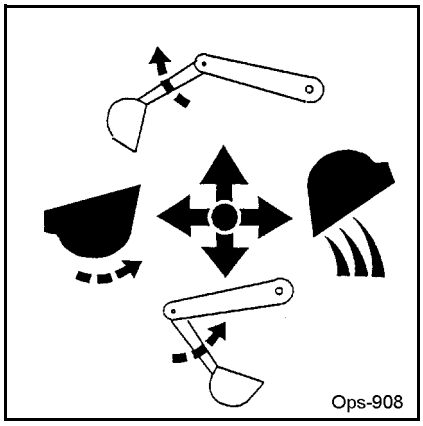
Ops-908

This dual operation of controls will speed and simplify digging operation. Normally two or more movements will not be equal or even simultaneous, but as pressure within the cylinders and resistance of an operating member of backhoe lessens, it will begin to move. It is balancing the force of one member against another.

NOTE: *Actuating bucket is the key to powerful digging. Operating the crowd and bucket controls simultaneously will insure a full bucket and prevent wasted motion and time.*

FILLING BUCKET

Control the bucket attitude throughout the digging cycle to keep teeth at the proper angle for best penetration. This will minimize dragging and scraping the bucket through the ground.

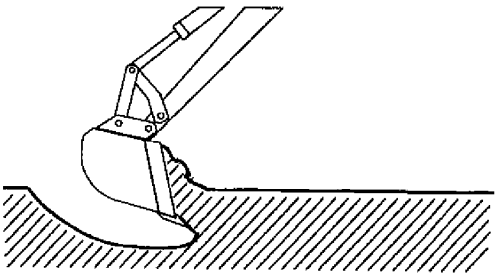

Ops-1118

When digging in hard-packed soil, bucket penetration can be increased by applying down pressure with the boom while crowding in and curling the bucket. If the crowd action “stalls”, it may be necessary to apply lift occasionally during the digging cycle to correct the bucket depth.

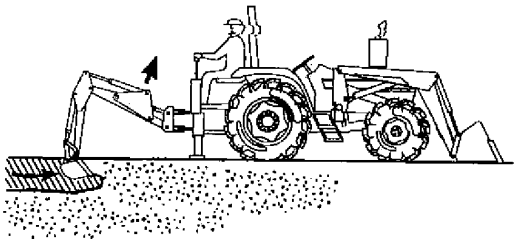

Ops-1119

To obtain a cleaner trench and avoid the build-up of material directly in front of the backhoe, crowd out and completely curl the bucket while starting to lift it from the excavation. In this way, excess material will fall back into the excavation.

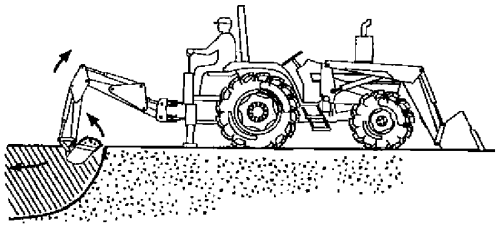

Ops-1120

DUMPING BUCKET

To dump the bucket at the end of the digging cycle, lift the bucket clear of the trench while crowding it out and swinging it to the spoil pile.

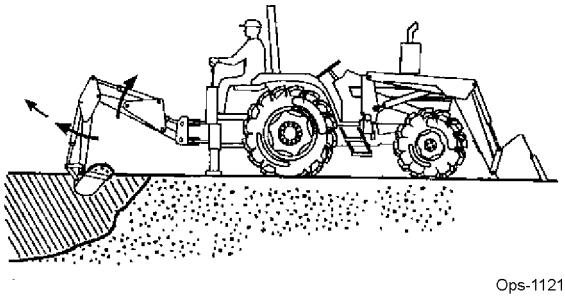

Ops-1121

As the pile is approached, dump the bucket. When the bucket is empty, the dipstick and bucket are in position to resume digging upon return to the trench.

IMPORTANT: *Avoid constant jarring or hammering-type contact between the spoil pile and the loaded bucket as this may cause premature wear to the backhoe pin and bushings.*

TRENCHING BETWEEN A BUILDING & OPEN EXCAVATORS

Start the trench at the building. Trench out halfway to the excavation. Then, start trenching from the excavation to the first trench. Dig toward the first trench until there is just enough room to move the unit out from between the two trenches.

Ops-1122

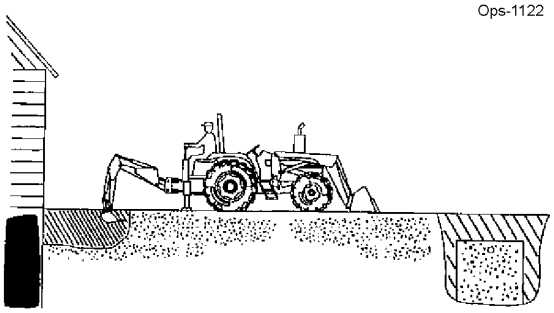

Position the unit so the backhoe swing post is over the center line of the trench connection. Dig with the backhoe at extreme swing positions, and in as close to the stabilizers as possible. Pile the soil on the opposite side of the trenches.

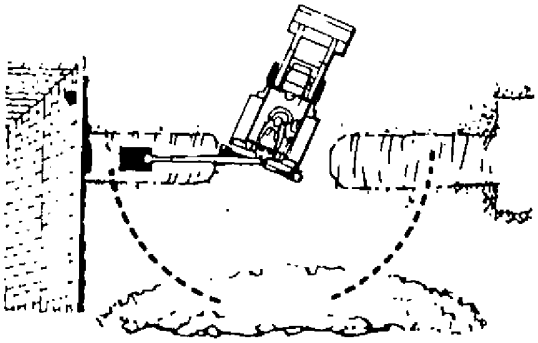

Ops-1123

Position the unit forward with the lift and crowd levers so the two trenches can be connected. Pile the spoil on the opposite side of the trench.

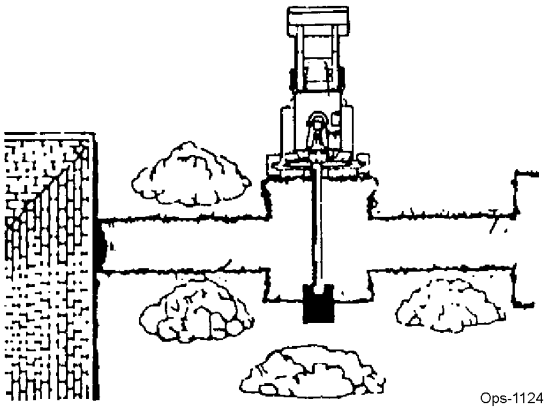

Ops-1124

SIDE SLOPE EXCAVATING OR TRENCHING

Dig with the backhoe uphill whenever possible.

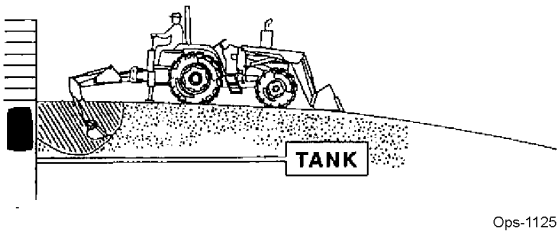

Ops-1125

Level the backhoe on slopes with the stabilizers to dig plumb trenches, or use the backhoe or loader to cut a level slot for the uphill wheel and stabilizer. Pile the slot on the low side.

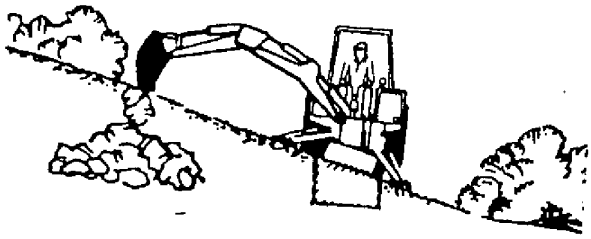

Ops-1126

When on the side of a steep slope, cut a level surface along the uphill side of the trench with the loader.

Pile the spoil of the cut downhill. When digging, pile the spoil of the trench uphill.

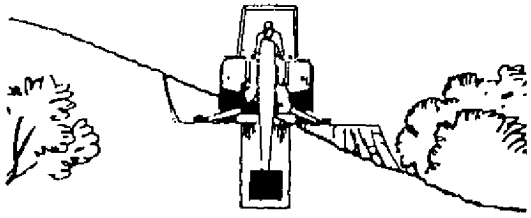

Ops-1127

Dig field trenches progressively. As soon as one trench is completed, have the work men lay the tile. Start the next trench, using the spoil to fill the previous trench.

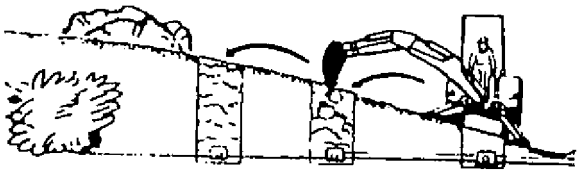

Ops-1128

MISCELLANEOUS

When finishing straight walls or bell holes in sandy soil, use a platform under the rear tires and stabilizers. The platform distributes the load over a larger area and lessens the possibility of a cave-in. The platform also tends to keep the unit from creeping rearward if hard digging is encountered.

REVERSIBLE STABILIZER

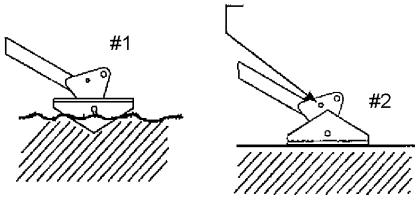

Ops-1129

FINISHING STRAIGHT WALLS

Finish the far wall by crowding out while forcing the bucket down with the bottom. Actuate the bucket (curl out) to keep the bottom of the bucket vertical.

Ops-1130

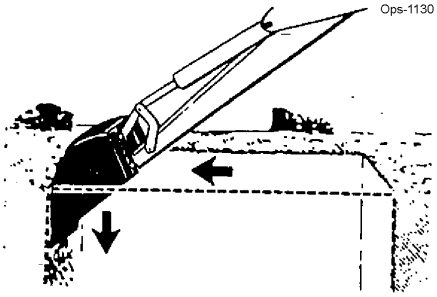

To finish the rear wall, lift up and crowd in. Keep the edges of the bucket horizontal.

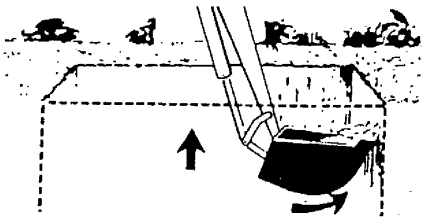

BACKFILLING

Backfill by lifting the bucket over the spoil pile and then crowding in. Pull both the crowd and lift levers for smooth, even backfilling.

IMPORTANT: *Do not backfill by using the swing circuit and dragging the bucket sideways. Doing so can cause damage to the dipstick, boom, swing cylinders, or mainframe.*

SEAT ADJUSTMENT

To adjust seat up or down, remove clevis pin (1) and hair pin (2) which secures seat bracket (3) to seat post (4) and raise or lower the seat. Adjust seat forward or rearward by repositioning seat on mounting plate (5).

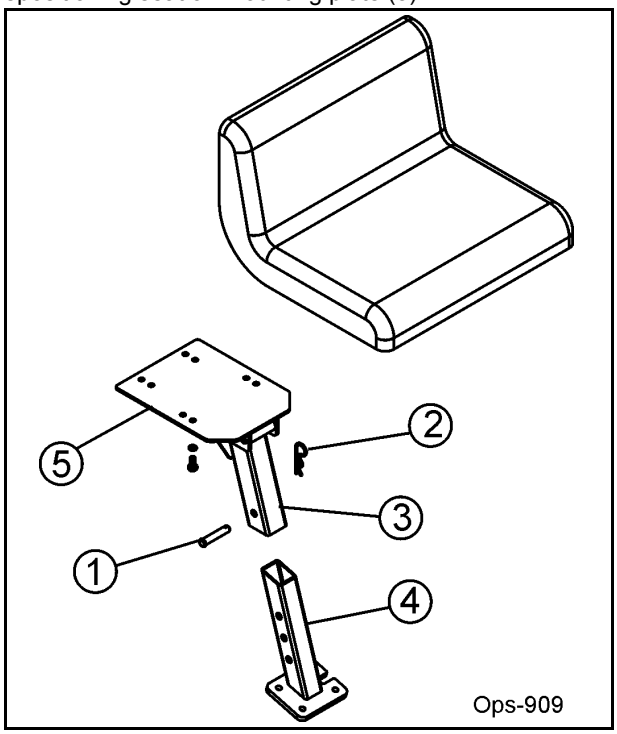

MOUNTING AND DISMOUNTING BUCKETS

Mount buckets using 1 x 6-5/8 antirotation pins (1), 3/8 x 1-1/8 cap screws (2) and lock nuts (3).

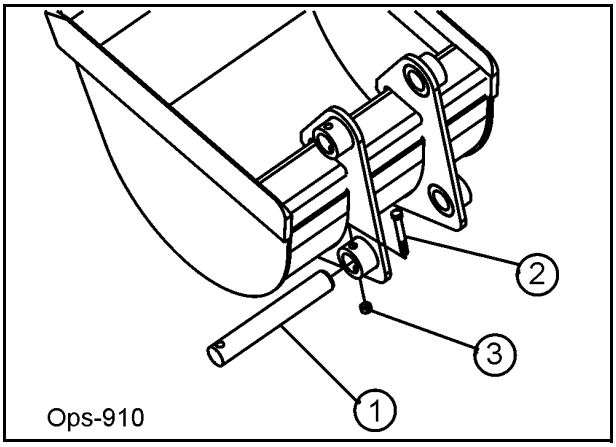

PLACING THE STABILIZERS

Set the stabilizers to remove weight from the rear wheels. Rear wheels are to remain touching the ground as this provides for the widest stabilizer stance and lowest center of gravity.

Raising the wheels off the ground will not only reduce stability and digging depth, but impair performance and impose unnecessary stress on the backhoe and tractor.

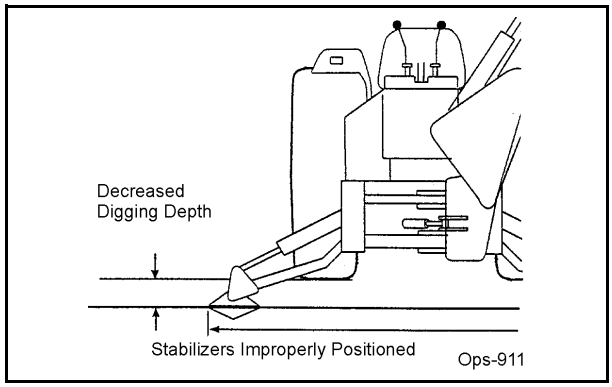

SWING LOCK

Use swing lock when transporting or dismounting backhoe.

Position boom straight back and drop pin through holes in swing frame and mainframe. Store pin in bushing provided on mainframe.

BOOM LOCK

Use boom lock when transporting backhoe.

1. Completely raise boom and lower dipperstick.
2. Secure boom using boom lock bracket.

STABILIZER LOCK

Use stabilizer lock when transporting backhoe.

1. Completely raise stabilizers.
2. Secure each stabilizer using stabilizer lock brackets.

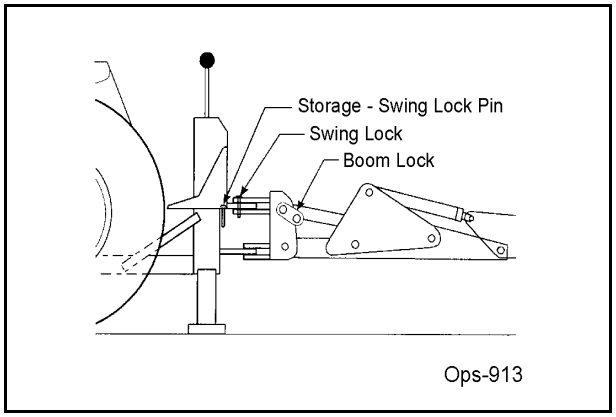

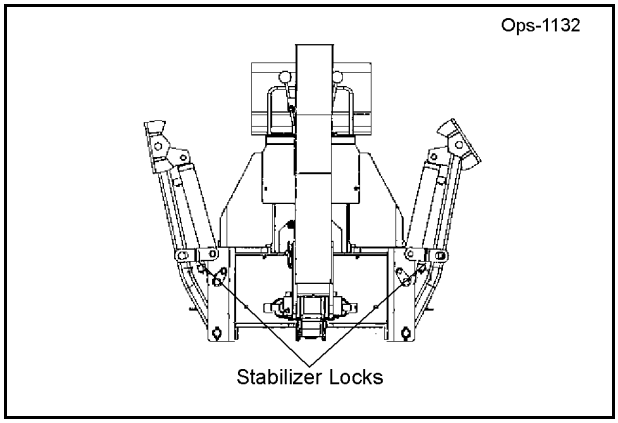

TRANSPORTING THE BACKHOE

CAUTION: *To avoid possible injury, observe the following safety rules BEFORE OPERATING backhoe.*

- *Travel slowly over rough terrain, on hillsides, and around curves to prevent tipping.*
- *Do not drive tractor near the edge of a ditch or excavation.*
- *Use accessory lights and slow moving vehicle emblem when traveling on highways.*

Before leaving backhoe operator's seat, position backhoe for transport by raising boom, swinging to center, curling bucket in, crowding dipperstick in and raising stabilizers.

Install swing, boom and stabilizer locks.

When transporting for long distances, periodically examine backhoe and raise boom, stabilizers and bucket back up to full height. It is normal for backhoe to slowly settle while being transported.

IMPORTANT: *Position SMV sign on mounting bracket located on bucket cylinder when transporting backhoe. During backhoe operation, position SMV sign on bracket located on tractor.*

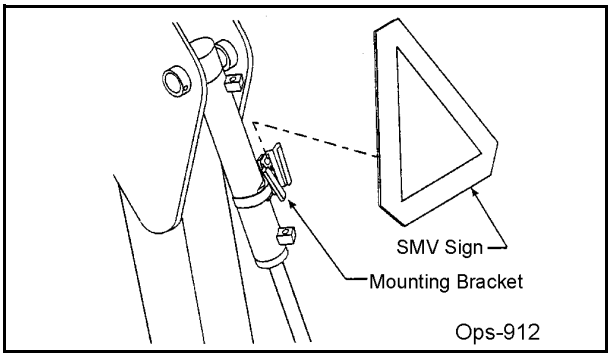

REMOVAL FROM TRACTOR - STORAGE

Backhoe is self-assisting during installation and removal procedures.

1. Put stabilizers down and lift backhoe slightly. Rotate boom straight back.
2. Install swing lock pin.
3. Complete raise boom and lower dipperstick. Curl bucket until bottom of bucket is level with ground. Lower boom until bucket rests firmly on ground.
4. Remove pins which secure backhoe to tractor.
5. Slowly drive forward until tractor clears backhoe. Engage tractor brakes.
6. Lower backhoe by raising stabilizers and boom until backhoe or subframe rests on suitable blocking. Leave stabilizers touching ground.

NOTE*: For added stability, rest backhoe or subframe on wood blocks or plywood.*

7. Shut off tractor. Work handles back and forth to relieve hydraulic pressure. Disconnect hydraulic lines or pump from backhoe.
8. For long term storage, coat all exposed cylinder rods with grease.
9. Lubricate all grease fittings, stabilizer pivot pins and complete handle linkage.

WARNING: *To avoid injury during removal of backhoe:*

- *Do not permit bystanders within 15 feet.*
- *Dismount backhoe on firm level ground.*
- *Always shut off tractor engine, disengage PTO and relieve pressure before disconnecting oil lines.*

MAINTENANCE SECTION

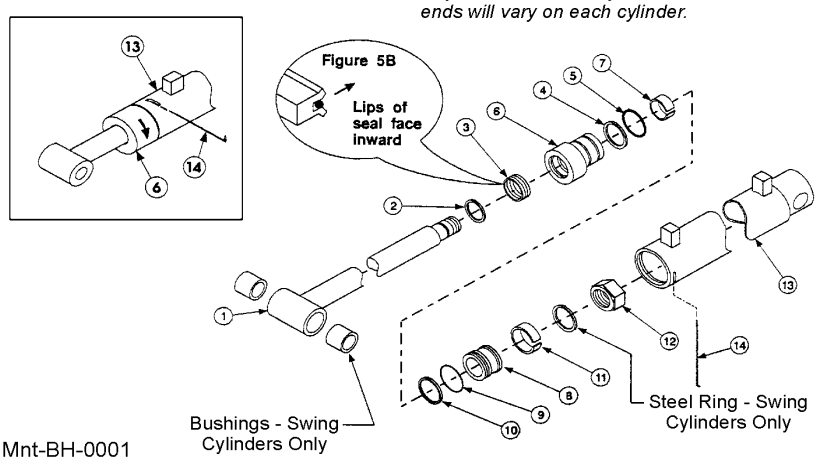

CYLINDER SERVICE

Cylinder are designed to be reliable and easy to service. If a cylinder should malfunction during warranty period, return complete cylinder assembly, without disassembling, to your authorized service department for instructions. Unauthorized disassembly of a cylinder in warranty period will **VOID WARRANTY.**

Following is an outline procedure for disassembling and reassembling cylinders.

CYLINDER DISASSEMBLY

1. Hold cylinder tube (13) stationary and pull wire ring (14) out through slot. Rotate head (6) to ease disassembly.
2. Pull shaft (1), with all assembled parts, out of cylinder tube.

NOTE: *Resistance will be felt until piston seal (10) slides over wire retaining ring groove. Seal is usually damaged when cylinder is disassembled.*

3. Remove lock nut (12) from end of shaft and slide piston (8) and cylinder head (6) off shaft.
4. Remove piston wear ring (11), piston seal (10) and o-ring (9) from outside grooves on piston (Swing cylinders have additional steel ring between piston and nut).
5. Remove wiper seal (2), rod seal (3) and wear ring (7) from inside of cylinder head and o-ring (5) with backup washer (4) from groove on outside of head.
6. Clean all parts including cylinder tube, in a suitable cleaning solvent, then use air pressure to blow any dirt or excess solvent from all parts.
7. Examine all parts for wear or damage and replace, if necessary.

CYLINDER ASSEMBLY

Note: *Be careful not to damage seals and o-rings on edges or holes in cylinder tube. Inspect and remove burrs and sharp edges if necessary before reassembly.*

1. Place rod seal (3) into groove inside cylinder head.

NOTE: *Lips of seal (3) must face inward and seal must be firmly seated in groove. For easier installation, place seal (3) in 120°F water to warm seal.*

2. Install wiper seal (2) with lip of seal facing out and flush with top of cylinder head. Install wear ring (7) inside other end of head.
3. Place o-ring (5) with backup washer (4) in groove on outside of head. Backup washer must be on rod side.
4. Remove sharp edges on outer edge of threaded end of shaft (1). Lubricate wiper seal (2) and rod seal (3) in head and carefully slide head onto shaft.
5. Place o-ring (9), piston seal (10) and piston wear ring (11) in grooves on outside of piston.

NOTE: *For easier installation, place piston seal (10) in 120°F water to warm seal.*

6. Slide piston onto threaded end of shaft and install lock nut (12). Swing, bucket and stabilizers cylinders; tighten lock nut (12) to 300 ft./lbs. Lift and dipperstick cylinders; tighten lock nut (12) to 375 ft./lbs. on lift cylinders.
7. Lubricate piston wear ring (11) and piston seal (10) on piston, o-ring (5) and backup washer (4) on head and inside of cylinder tube (13), then carefully slide piston and head into cylinder tube.
8. Insert wire retaining ring (14) into slot in cylinder tube (13). Apply pressure to wire ring to thread it into groove while turning cylinder head.

CAUTION: To avoid possible injury, observe the following safety rules when servicing backhoe.

- *Do not oil, grease or adjust backhoe while it is in motion.*
- *Do not change any backhoe relief valve settings. Relief valve settings are factory set for best backhoe performance and safety.*
- *Escaping fluid under pressure can have sufficient force to penetrate the skin and cause serious injury. Be sure to relieve all presure before disconnecting lines. Be sure all connections are tight and that lines, pipes and hoses are not damaged before applying pressure to the system.*
- *Fluid escaping from a very small hole can be almost invisible. Use a piece of cardboard or wood - not your hands - to search for suspected leaks.*
- *See a doctor at once if injured by escaping fluid. Serious infection or reaction can develop if proper medical treatment is not administered immediately.*
- *Protect your eyes - wear safety glasses. Guard against injury when driving connecting pins or performing any repair in which particles can chip from work piece or striking tool.*

BEGINNING OF SEASON

Remove all protective covering. Remove excessive grease from cylinder rods if unit has been in long term storage.

Check hydraulic hoses for deterioration and replace if necessary. Caution, hydraulic hoses may be under pressure. Make sure pressure has been relieved before removing hoses.

Lubricate all grease fittings and oil handle linkage.

Clean and inspect all safety and operation decals. Replace missing or damaged decals.

Replace oil filter.

Fill hydraulic fluid to proper level.

Tighten all loose bolts, nuts and set screws (See Torque chart).

Sharpen or replace worn bucket teeth.

Operate backhoe slowly for a short time before placing unit under full load.

Fully cycle backhoe through all movements several times to purge air from system.

HYDRAULIC HOSES

WARNING: *Escaping hydraulic fluid under pressure can penetrate skin causing serious injury.*

- *DO NOT use your hand to check for leaks. Use a piece of cardboard or paper to search for leaks.*
- *Stop engine and relieve pressure before connecting or disconnecting lines.*
- *Tighten all connections before starting engine or pressurizing lines.*
- *Oil leaks on the suction side will draw air into the system, causing oil in reservoir to appear foamy.*
- *When tightening connections, always use two wrenches.*

IMPORTANT: *Do not overtighten fittings. Make them just tight enough to eliminate leaks.*

NOTE: *Apply sealant only to all tapered threads unless coupled with swivel adapters. When using teflon tape, wrap tape clockwise (as viewed from end) and wrap tape only twice. Keep sealant away front first two threads of tapered end to prevent contamination of hydraulic fluid. Do not use sealant on o-ring or flare adapter threads.*

Hoses on backhoe are very severely worked and will fail in time. Examine them regularly and replace any that show signs of failure. Pay careful attention to routing of hoses so they can move freely, without kinking and cannot be pinched or cut by any part of backhoe.

HYDRAULIC SYSTEM RESERVOIR

Maintain reservoir fluid level at 1 inch below tank top when bucket is extended to full reach, bucket rolled back for loading and resting on the ground, and stabilizers fully raised. If reservoir is overfilled, fluid may be forced out of breather cap.

Fill with SAE 10W engine oil with API”SD” classification in northern climates and SAE 40W engine oil with API”SD” classification in southern climates.

Change oil and filter every 200 hours or more often if necessary.

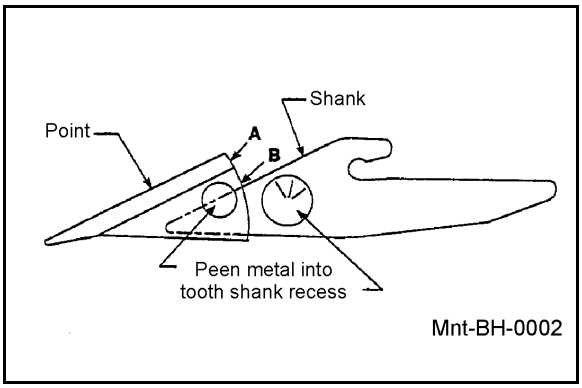

BUCKET TOOTH POINTS

Bucket tooth points are self-sharpening and will require little attention. However, points can be replaced when they become badly worn or broken.

Remove point from welded tooth shank by hammering at “A” on tooth point or by driving a chisel at “B”, just between tooth point box section and tooth shank. Install new point and anchor it to shank by peening at location shown.

It a tooth shank breaks off, becoming lost or damaged so that is cannot hold a tooth point, a new shank should be welded to bucket.

TIGHTENING NUTS AND BOLTS

Periodically check to be sure all bolts and nuts are tight (See Torque Chart).

Check all pivot pins for cotter pins, washers and retainers. If any are missing, replace them.

LUBRICATION

Economical and efficient operation of backhoe is dependent upon regular and proper lubrication of all moving parts with a quality lubricant.

All parts provided with grease fittings should be lubricated with a good quality chassis lube type grease. If any grease fittings are missing, replace them immediately. Clean all fittings thoroughly before using grease gun.

Lubricate all 20 grease fittings at least twice daily (See Lubrication Chart for locations), once at the beginning of operation and again approximately half way through the work day. Grease hourly any joints that operate in water.

Control valve handle linkage should be oiled with SAE 30 oil.

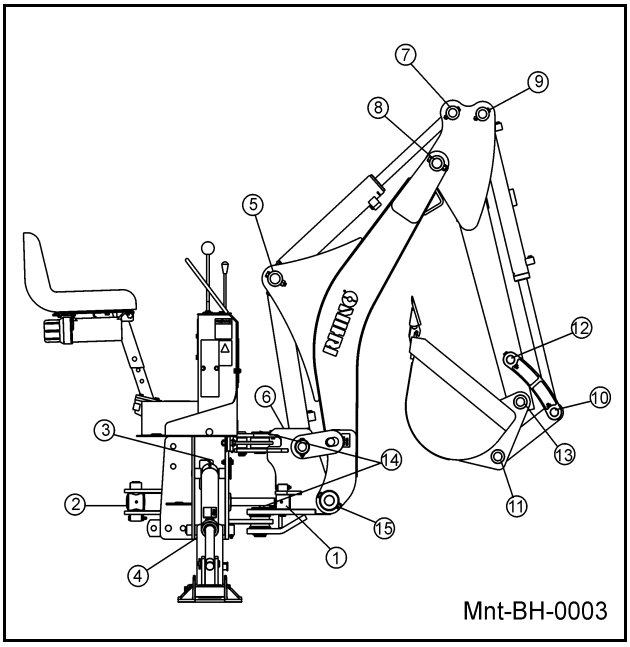

LUBRICATION CHART

Item No.	Location Description	Qty. Total
1	Rod, Swing Cylinders	2
2	Base, Swing Cylinders	2
3	Base, Stabilizer Cylinders	2
4	Stabilizer Arm Pivot	2
5	Base, Boom Cylinder	1
6	Rod, Boom Cylinder	1
7	Rod, Dipperstick Cylinder	1
8	Boom - Dipperstick Pivot	1
9	Base, Bucket Cylinder	1
10	Rod, Bucket Cylinder	1
11	Bucket, 4- Bar Link	1
12	4- Bar Link	1
13	Dipperstick - Bucket Pivot	1
14	Swing Post	2
15	Boom to Swing Frame	1

HYDRAULIC TROUBLESHOOTING

Hydraulic troubleshooting material presented in this section is offered as a guide to diagnosing probable causes and remedies for general operational problems.

Match your problem wiht the typical problem examples given in the possible cause column. These numbers correspond with the possible cause and correction paragraphs that follow.

NOTE: *If, when using the following chart, it is decided that overhaul of components or pressure adjustment is necessary, it is recommended that your dealer make these repairs. He is equipped to do this work.*

PROBLEM	POSSIBLE CAUSE
Machine fails to operate when initially started.	1, 2, 5, 7, 15, 23
Machine looses power after initially operating satisfactorily.	1, 8, 10, 15, 23
Loss of power in lift or crowd cylinder, but other cylinders function properly	22, 24, 28
Loss of power in any one cylinder including lift and crowd	8, 9, 10, 11, 12, 13, 22, 23, 25
Loss of power or loss of cushioning action in swing cylinders, but other cylinders function properly.	8, 9, 10, 11, 12, 13, 22, 23, 25
Maximum swing action cannot be obtained.	12, 14
Slow operation of machine (lack of power) all cylinders.	1, 4, 6, 15, 23
Spongy or jerky action of cylinders and/ or noisy operation.	1, 3, 4, 5
Lift crowd or bucket cylinders drop under load when lever spools are shifted from neutral.	26, 28
Load drops or settles.	8, 10, 13, 25, 26
Leaky cylinders.	10, 11, 12, 13
Leaky valve.	8, 15, 16, 27
Sticky valve spool.	16, 19, 20, 21
Unable to push valve spool in.	16, 17, 20, 21
Spring centered spools do not return to neutral.	16, 17, 18, 19, 20, 21

	POSSIBLE CAUSE	CORRECTIVE ACTION
1	Low oil level in reservoir.	Fill reservoir to proper level.
2	No oil supply to machine.	Engage tractor PTO.
3	Air in system.	Purge all circuits of air by operating all cylinders through full movements several times. Check oil in reservoir for foaming. Check all suction lines for leaks. Fill reservoir to correct level.
4	Oil viscosity too heavy or oil is not at operating temperature.	Use recommended hydraulic fluid. Run machine until it reaches operating temperature.
5	Pump not running.	Check PTO to be sure it is engaged. Pump connected to PTO.
6	Insufficient pumping.	Advance engine throttle.
7	Improper hose connection.	IMPORTANT: Be sure inlet and return hoses are hooked up correctly. Improper hookup will result in damage to backhoe valve.
8	Loose hydraulic connections, leaks in fittings or hoses.	Tighten all hose connections and replace all damaged o-rings at leaking o-ring fittings. Check and replace any damaged hoses.
9	Restriction in fittings or hoses.	Check and replace any damaged hoses and fittings. Check for pinched hoses.
10	Oil is bypassing cylinder piston.	Replace or rebuild cylinder. Replace damaged parts.
11	Scored piston rods or worn rod guides in cylinder.	Replace or rebuild cylinder. Replace damaged parts.
12	Bent piston rod in cylinder	Replace or rebuild cylinder. Replace damaged parts
13	Worn or damaged rod seals on cylinder. External leaks.	Re-pack cylinder. Rebuild cylinder replacing damaged parts as necessary.
14	Swing linkage jammed.	Remove interference.

	POSSIBLE CAUSE	CORRECTIVE ACTION
15	Excessive back pressure.	Restriction between “in” and “out” port and reservoir.
16	Paint on valve spool. Sticking valve spool, or scored valve.	Clean valve spool. Binding may be caused by over tightened plug, mounting bolt, fitting or tie rod bolt. See Item 30.
17	Oil leakage past spool seal into spool cap.	If spool cap contains oil, replace spool seal o-ring. If o-ring retainer is “bellied”, check for restriction from “out” port reservoir. See Item 30.
18	Broken return springs.	Replace broken return springs.
19	Bent spool.	Return for factory repair or replace with new spool section. See Item 30.
20	Foreign particles.	Clean system and valve.
21	Misalignment of control handle linkage.	Check linkage for binding condition.
22	Spool not moved to full stroke.	Spool travel should be 5/16” either way or 5/8” total.
23	Relief valve setting in control valve too low or defective.	Clean or overhaul relief valve or replace cartridge. Refer to VALVE SERVICE section for proper PSI settings.
24	Overload relief valve in control valve stuck open or malfunctioning.	Clean relief. Do not disturb pressure setting or replace cartridge.
25	Worn control valve.	Replace control valve.
26	Check poppet in control valve not holding.	Clean check poppet(s) carefully. Ensure free movement and proper seating or replace check poppet. See Item 30.
27	Damaged or worn spool seals.	Replace spool end seals.
28	Check ball in anti-cavitation is stuck or not seated properly.	Clean anti-cavitation valve carefully. Assure that checks move freely and seat properly or replace cartridge. See Item 30.
29	Valve cap and center return mechanism binding.	Loosen screws holding cap on valve (ref. Valve Service image). Operate valve spool and retighten screws.

30. This valve is a precision device and is not intended for extensive field adjustment or repair. Field replacement parts are limited to seal kits, cartridges and tie rod ends. Beyond replacement of these parts, opening of check cavities and certain relief valve cavities to examine for trapped dirt, or resetting main relief valve with the use of a good pressure gauge, valve should be returned for service.

Dirt and shreds of packing material are the usual causes of valve malfunction. Be sure that oil supply is kept clean. Use only factory supplied packings in cylinder repair. Fittings and hoses must be clean before being removed.

NOTE: *Pay close attention to all caution warning notes so valve will not have to be returned to manufacturer for reconditioning.*

Troubleshooting guide is designed to help qualified individuals, with valve service training, correct minor problems which may develop. If valve is under warranty do not attempt disassembly for repairs. Contact your authorized dealer. Any attempt to disassemble valve during warranty period will VOID warranty.

VALVE SERVICE

Top of valve is defined as side where joysticks are installed.

Before servicing valve, make sure backhoe has boom locked, stabilizers locked, and dipper in down position. Shut off tractor and relieve pressure by activating valve handles. Use a drip pan below backhoe to catch any escaping oil during removal of valve.

WARNING: *Failure to lock booms and stabilizer and relieve pressure in valve can cause serious injury from equipment falling when hydraulic pressure is released by the removal of valve.*

MAIN RELIEF REPLACEMENT

1. Use a socket to remove main relief from valve housing.
2. Inspect new relief to ensure seal is properly installed, and apply grease around the relief.
3. Ensure that pressure setting stamped on new relief matches the setting of old relief.
4. Install o-rings on relief.
5. Insert relief and torque to 60 ft./lbs.

SPOOL SEAL INSTALLATION

1. Remove the mechanical joystick kit from the top of the valve and the return kit from the bottom.
2. Remove the old o-rings and leave spool in housing, making sure spool is in center position.
3. Lightly oil one seal and insert it in top of valve. Slide the seal into position in the groove in the valve body, making sure that it does not fall into the spool groove.
4. Lightly oil a second o-ring and insert in bottom of valve. Slide the seal into position in the groove in the valve body making sure it does not fall into the spool groove. Do not push on the spool as it may cause the first seal to come out of the groove.

WARNING: *If either of the seals falls in the spool groove, it may be cut when the spool moves. If this happens, make sure to gently remove the seal from the groove, and reposition seal after inspecting for cuts in the housing groove once the spool is back in center position.*

5. Reinstall the mechanical joystick kit on the top of the valve and return kit on the bottom.

TORQUE SETTINGS

1. Main Relief Body: 60 ft./lbs.
2. Load Check Valve: 15 ft./lbs.
3. Screws: 4 ft./lbs.

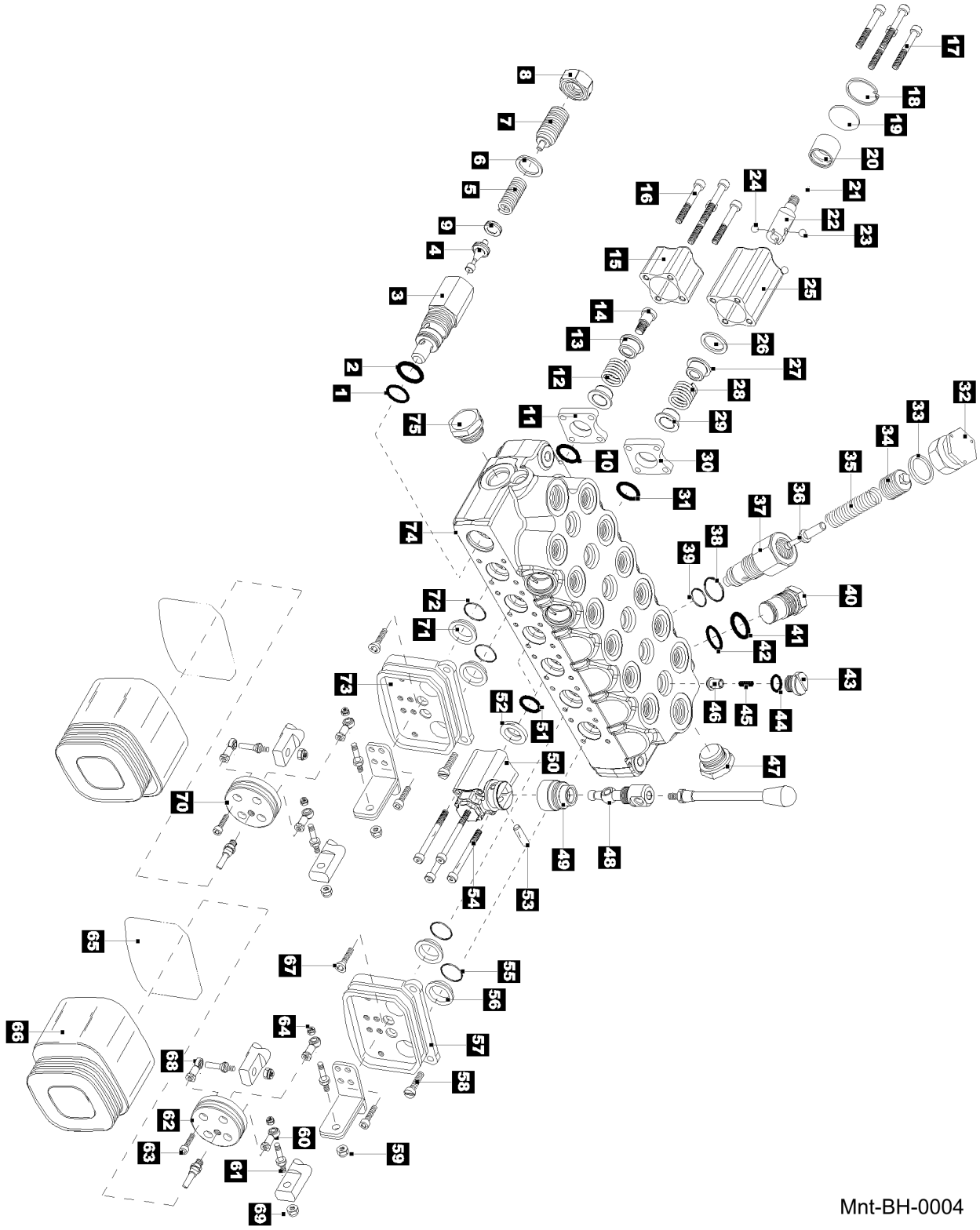

Mnt-BH-0004

PARTS LIST

ITEM NO.	DESCRIPTION	QTY
1	O-RING, 9.75 X 1.78	1
2	O-RING, 18.77 X 1.78	1
3	VALVE BODY/RELIEF	1
4	PISTON	1
5	SPRING	1
6	O-RING	1
7	REGISTER	1
8	NUT, M16-1.5	1
9	DEFLECTOR	1
10	O-RING	5
11	CENTERING RING	5
12	SPRING	5
13	SPACER	10
14	SCREW	5
15	CAP	20
16	SCREW	20
17	SCREW	4
18	CIRCLIP	1
19	WASHER	1
20	BUSHING	1
21	SPRING	1
22	BALL HOLDER	1
23	STEEL BALL D.5	3
24	STEEL BALL D.7	1
25	CAP	1
26	WASHER	1
27	SPACER	1
28	SPRING	1
29	SPACER	1
30	CENTERING RING	1
31	O-RING 15.10 X 2.70	1
32	PLUG	4
33	COPPER GASKET 14 X 20 X 15	4
34	REGISTER	4
35	SPRING	4
36	PISTON	4
37	VALVE BODY/RELIEF	4
38	O-RING 17.17 X 1.78	4
39	O-RING	1
40	PLUG	1
41	O-RING 17.17 X 1.78	1
42	O-RING	1
43	PLUG	6
44	SPRING	6
45	O-RING 11.11 X 1.78	6
46	BODY	6
47	PLUG	1
48	LEVER	2
49	RUBBER BELLOWS	2
50	HOUSING/LEVER	2
51	O-RING 15.10 X 2.70	2
52	CENTERING RING	2
53	LEVER PIN	2
54	SCREW	8
55	O-RING 15.10 X 2.70	4
56	NUT	3
57	PLATE/JOYSTICK	1
58	SCREW	8
59	ASSEMBLY	2
60	ASSEMBLY	2
61	PIN	2
62	FLANGE	1
63	SCREW	6
64	NUT, M7	4
65	O-RING GASKET	2
66	RUBBER BELLOWS	2
67	SCREW	4
68	ARICULATION	2
69	NUT, M6	2
70	FLANGE	1
71	CENTERING RING	1
72	O-RING 15.60 X 1.78	1
73	PLATE/JOYSTICK	1
74	VALVE BLOCK	1
75	PLUG	1

*This parts list is provided to aid in maintenance and servicing only. Service parts are sold in kits only.

PROPER TORQUE FOR FASTENERS

GENERAL TORQUE SPECIFICATIONS

USE THE FOLLOWING TORQUES WHEN SPECIAL TORQUES ARE NOT GIVEN

AMERICAN STANDARD CAP SCREWS									METRIC CAP SCREWS								
SAE Grade	5				8				Metric Class	8.8				10.9			
										8.8				10.9			
Cap Screw	TORQUE				TORQUE				Cap Screw	TORQUE				TORQUE			
Size	FT-LBS		Nm		FT-LBS		Nm		Size	FT-LBS		Nm		FT-LBS		Nm	
Inches	MIN	MAX	MIN	MAX	MIN	MAX	MIN	MAX	Millimeters	MIN	MAX	MIN	MAX	MIN	MAX	MIN	MAX
1/4-20	6.25	7.25	8.5	10	8.25	9.5	11	13	M6x100	6	8	8	11	9	11	12	15
1/4-28	8	9	11	12	10.5	12	14	16	M8 x 1.25	16	20	215	27	23	27	31	36.5
5/16 - 18	14	15	19	20	18.5	20	25	27	M10 x 1.50	29	35	39	47	42	52	57	70
5/16 - 24	17.5	19	23	26	23	25	31	34	M12 x 1.75	52	62	70	84	75	91	102	123
3/8 - 16	26	28	35	38	35	37	47.5	50	M14 x 2.00	85	103	115	139	120	146	163	198
3/8 - 24	31	34	42	46	41	45	55.5	61	M16 x 2.50	130	158	176	214	176	216	238	293
7/16 - 14	41	45	555	61	55	60	74.5	81	M18 x 2.50	172	210	233	284	240	294	325	398
7/16 - 20	51	55	69	745	68	75	92	102	M20 x 2.50	247	301	335	408	343	426	465	577
½ - 13	65	72	88	975	86	96	116	130	M22 x 2.50	332	404	450	547	472	576	639	780
½ - 20	76	84	103	114	102	112	138	152	MM24 x 3.00	423	517	573	700	599	732	812	992
9/16 - 12	95	105	129	142	127	140	172	190	M27 x 3.00	637	779	863	1055	898	1098	1217	1488
9/16 - 18	111	123	150	167	148	164	200	222	M30 x 3.00	872	1066	1181	1444	1224	1496	1658	2027
5/8 - 11	126	139	171	188	168	185	228	251									
5/8 - 18	152	168	206	228	203	224	275	304									
¾ - 10	238	262	322	355	318	350	431	474									
¾ - 16	274	305	371	409	365	402	495	544									
7/8 - 9	350	386	474	523	466	515	631	698									
7/8 -14	407	448	551	607	543	597	736	809									
1 - 8	537	592	728	802	716	790	970	1070									
1 - 14	670	740	908	1003	894	987	1211	1337									

Torgue Specifications for 37° JIC Fittings

		Assembly Torque			
Size	Thread Size	in. lb.	ft. lb.	Tube Connection F.F.F.T.	Swivel Nut or Hose Connection F.F.F.T.
-4	7/16-20	140 ± 10	12 ± 1	2	2
-5	1/2-20	160 ± 15	15 ± 1	2	2
-6	9/16-18	250 ± 15	21 ± 1	1 1/2	1 1/4
-8	3/4-16	550 ± 25	45 ± 5	1 1/2	1
-12	1 1/16-12	1000 ± 50	85 ± 5	1 1/4	1
-16	1 5/16-12	1450 ± 50	120 ± 5	1	1
-20	1 5/8-12	2000 ± 100	170 ± 10	1	1
-24	1 7/8-12	2400 ± 150	200 ± 15	1	1
-32	2 1/2-12	3200 ± 200	270 ± 20	1	1

Mnt-L-0003

Torque Specifications for SAE O-Ring Fittings

		Assembly Torque		
Size	Thread Size	in. lb.	ft. lb.	F.F.F.T.
2	5/16-24	90 ± 5	7.5 ± 0.5	1 ± .25
3	3/8-24	170 ± 10	14 ± 1	1 ± .25
4	7/16-20	220 ± 15	18 ± 1	1 ± .25
5	1/2-20	260 ± 15	22 ± 1	1 ± .25
6	9/16-18	320 ± 20	27 ± 2	1.5 ± .25
8	3/4-16	570 ± 25	48 ± 2	1.5 ± .25
10	7/8-14	1060 ± 50	90 ± 5	1.5 ± .25
12	1 1/16-12	1300 ± 50	110 ± 5	1.5 ± .25
14	1 3/16-12	1750 ± 75	145 ± 6	1.5 ± .25
16	1 5/16-12	1920 ± 25	160 ± 6	1.5 ± .25
20	1 5/8-12	2700 ± 150	225 ± 12	1.5 ± .25
24	1 7/8-12	3000 ± 150	250 ± 12	1.5 ± .25
32	2 1/2-12	3900 ± 200	325 ± 15	1.5 ± .25

RHINO
LIMITED WARRANTY

1. LIMITED WARRANTIES

1.01. Rhino warrants for one year from the purchase date to the original non-commercial, governmental, or municipal purchaser ("Purchaser") and warrants for six months to the original commercial or industrial purchaser ("Purchaser") that the goods purchased are free from defects in material or workmanship.

1.02. Manufacturer will replace for the Purchaser any part or parts found, upon examination at one of its factories, to be defective under normal use and service due to defects in material or workmanship.

1.03. This limited warranty does not apply to any part of the goods which has been subjected to improper or abnormal use, negligence, alteration, modification, or accident, damaged due to lack of maintenance or use of wrong fuel, oil, or lubricants, or which has served its normal life. This limited warranty does not apply to any part of any internal combustion engine, or expendable items such as blades, shields, guards, or pneumatic tires except as specifically found in your Operator's Manual.

1.04. Except as provided herein, no employee, agent, Dealer, or other person is authorized to give any warranties of any nature on behalf of Manufacturer.

2. REMEDIES AND PROCEDURES.

2.01. This limited warranty is not effective unless the Purchaser returns the Registration and Warranty Form to Manufacturer within 30 days of purchase.

2.02. Purchaser claims must be made in writing to the Authorized Dealer ("Dealer") from whom Purchaser purchased the goods or an approved Authorized Dealer ("Dealer") within 30 days after Purchaser learns of the facts on which the claim is based.

2.03. Purchaser is responsible for returning the goods in question to the Dealer.

2.04. If after examining the goods and/or parts in question, Manufacturer finds them to be defective under normal use and service due to defects in material or workmanship, Manufacturer will:

(a)Repair or replace the defective goods or part(s) or

(b)Reimburse Purchaser for the cost of the part(s) and reasonable labor charges (as determined by Manufacturer) if Purchaser paid for the repair and/or replacement prior to the final determination of applicability of the warranty by Manufacturer.

The choice of remedy shall belong to Manufacturer.

2.05. Purchaser is responsible for any labor charges exceeding a reasonable amount as determined by Manufacturer and for returning the goods to the Dealer, whether or not the claim is approved. Purchaser is responsible for the transportation cost for the goods or part(s) from the Dealer to the designated factory.

3. LIMITATION OF LIABILITY.

3.01. MANUFACTURER DISCLAIMS ANY EXPRESS (EXCEPT AS SET FORTH HEREIN) AND IMPLIED WARRANTIES WITH RESPECT TO THE GOODS INCLUDING, BUT NOT LIMITED TO, MERCHANTABILITY AND FITNESS FOR A PARTICULAR PURPOSE.

3.02. MANUFACTURER MAKES NO WARRANTY AS TO THE DESIGN, CAPABILITY, CAPACITY, OR SUITABILITY FOR USE OF THE GOODS.

3.03. EXCEPT AS PROVIDED HEREIN, MANUFACTURER SHALL HAVE NO LIABILITY OR RESPONSIBILITY TO PURCHASER OR ANY OTHER PERSON OR ENTITY WITH RESPECT TO ANY LIABILITY, LOSS, OR DAMAGE CAUSED OR ALLEGED TO BE CAUSED DIRECTLY OR INDIRECTLY BY THE GOODS INCLUDING, BUT NOT LIMITED TO, ANY INDIRECT, SPECIAL, CONSEQUENTIAL, OR INCIDENTAL DAMAGES RESULTING FROM THE USE OR OPERATION OF THE GOODS OR ANY BREACH OF THIS WARRANTY. NOT WITHSTANDING THE ABOVE LIMITATIONS AND WARRANTIES, MANUFACTURER'S LIABILITY HEREUNDER FOR DAMAGES INCURRED BY PURCHASER OR OTHERS SHALL NOT EXCEED THE PRICE OF THE GOODS.

3.04. NO ACTION ARISING OUT OF ANY CLAIMED BREACH OF THIS WARRANTY OR TRANSACTIONS UNDER THIS WARRANTY MAY BE BROUGHT MORE THAN TWO (2) YEARS AFTER THE CAUSE OF ACTION HAS OCCURRED.

4. MISCELLANEOUS.

4.01. Proper Venue for any lawsuits arising from or related to this limited warranty shall be only in Guadalupe County, Texas.

4.02. Manufacturer may waive compliance with any of the terms of this limited warranty, but no waiver of any terms shall be deemed to be a waiver of any other term.

4.03. If any provision of this limited warranty shall violate any applicable law and is held to be unenforceable, then the invalidity of such provision shall not invalidate any other provisions herein.

4.04. Applicable law may provide rights and benefits to purchaser in addition to those provided herein.

KEEP FOR YOUR RECORDS

ATTENTION: Purchaser should fill in the blanks below for his reference when buying repair parts and/or for proper machine identification when applying for warranty.

Rhino Implement Model_____ Serial Number_____

Date Purchased _____ Dealer _____

ATTENTION:

READ YOUR OPERATOR'S MANUAL

RHINO®
1020 S Sangamon Ave.
Gibson City, IL 60936
800-446-5158
Email: parts@servis-rhino.com

TO THE OWNER/OPERATOR/DEALER

To keep your implement running efficiently and safely, read your manual thoroughly and follow these directions and the Safety Messages in this Manual. The Table of Contents clearly identifies each section where you can easily find the information you need.
The OCCUPATIONAL SAFETY AND HEALTH ACT (1928.51 Subpart C) makes these minimum safety requirements of tractor operators:

REQUIRED OF THE OWNER:
1. Provide a Roll-Over-Protective Structure that meets the requirements of this Standard; and
2. Provide Seat belts that meet the requirements of this paragraph of this Standard and SAE J4C; and
3. Ensure that each employee uses such Seat belt while the tractor is moving; and
4. Ensure that each employee tightens the Seat belt sufficiently to confine the employee to the protected area provided by the ROPS

REQUIRED OF THE OPERATOR:
1. Securely fasten seat belt if the tractor has a ROPS.
2. Where possible, avoid operating the tractor near ditches, embankments, and holes.
3. Reduce speed when turning, crossing slopes, and on rough, slick, or muddy surfaces.
4. Stay off slopes too steep for safe operation.
5. Watch where you are going - especially at row ends, on roads, and around trees.
6. Do not permit others to ride.
7. Operate the tractor smoothly - no jerky turns, starts, or stops.
8. Hitch only to the drawbar and hitch points recommended by the tractor manufacturer.
9. When the tractor is stopped, set brakes securely and use park lock, if available.

☒ Keep children away from danger all day, every day...

☒ Equip tractors with rollover protection (ROPS) and keep all machinery guards in place...

☒ Please work, drive, play and live each day with care and concern for your safety and that of your family and fellow citizens.

95C-SOM-01/11
Printed U.S.A

P/N F-4145C