PARTS

MANUAL

2010
WIC HARVESTER
6 ROW 30 - SCRUB

Amity
TECHNOLOGY

2800 7TH Avenue North
Fargo, ND 58102

Phone: (701) 232-4199
Fax: (701) 234-1716
www.amitytech.com

TABLE OF CONTENTS

HITCH ASSEMBLY…… 1-2
LIFTER STRUT…… 3-10
ROW FINDER #51486…… 11-14
GUARDS & SHIELDS…… 15-16
DOOR ASSEMBLY…… 17-18
APRON SHAFT…… 19-24
PADDLE SHAFT…… 25-28
CLEANING ROLLS…… 29-32
CLEANING ROLL MOUNTING PACKAGE…… 33-34
MAIN DRIVE…… 35-38
MAIN DRIVE: ONBOARD OPTION…… 39-40
CLEANING ROLL DRIVE…… 41-42
APRON/PADDLE SHAFT DRIVE…… 43-44
TANK…… 45-46
ELEVATOR AND BOOM ASSEMBLY…… 47-50
BOOM EXTENSION 50MM/56MM (OPTIONAL)…… 51-52
REAR SCRUB…… 53-56
REAR SCRUB: BELTED CHAIN…… 57-62
REAR SCRUB: HOOK CHAIN…… 63-64
REAR SCRUB DRIVE: GEARBOX…… 65-66
REAR SCRUB DRIVE: SINGLE MOTOR…… 67-70
REAR SCRUB DRIVE: DUAL MOTOR…… 71-72
STANDARD REAR STRUTS 11.2 X 24…… 73-76
STEERABLE REAR STRUTS…… 77-80
ROW FINDER & HITCH HYDRAULICS…… 81-82
VALVE GROUP: DUAL MOTOR SCRUB…… 83-84
TANK HYDRAULICS…… 85-86
HYDRAULIC TANK…… 87-88
LIGHT KIT…… 89-90
REVERSE #4 CLEANING ROLL #62111 (OPTIONAL)…… 91-92
HARVESTER STAND #63357 (OPTIONAL)…… 93-94
PTO DRIVELINE 1.75” – 20 SPLINE #51481…… 95-96
PTO DRIVELINE 1.38" – 21 SPLINE #51480…… 97-98
DRIVELINE COMPONENTS…… 99-100
GEARBOX (1.81:1) #63846 …… 101-102
GEARBOX (1.81:1): ONBOARD OPTION #62396 …… 103-104
GEARBOX (1.35:1) #63847…… 105-106
GEARBOX (1:1.35) #63848…… 107-108
MOTOR (13.9 IN^3) #57687…… 109-110

MOTOR (32.3 IN^3) #57686..... 111-112
HYDRAULIC PUMP #62153..... 113-114
HYDRAULIC CYLINDER (2.5 X 16") #58889..... 115-116
HYDRAULIC CYLINDER (3 X 8") #58890..... 117-118
HYDRAULIC CYLINDER (4 X 8") #58991..... 119-120
HYDRAULIC CYLINDER (4 X 10") #62082..... 121-122
FLOW CONTROL VALVE #58985..... 123-124
SELECTOR VALVE #58470..... 125-126
ROW FINDER VALVE #62350..... 127-128
SPROCKET #54824..... 129-130
BELT TIGHTENER #56422..... 129-130
SLIP CLUTCH (IN-LINE) #57926..... 131-132
SLIP CLUTCH/SPROCKET #57993..... 131-132
SLIP CLUTCH/SPROCKET #58335..... 131-132
IDLER PULLEY #56409..... 133-134
SPROCKET IDLER #56851..... 133-134
ROLLERS..... 135-136
SCRUB DRIVELINE ASSEMBLY..... 137
BELT LAP JOINT..... 138
BELT REPAIR KIT..... 139
TOOL CUTTER..... 140

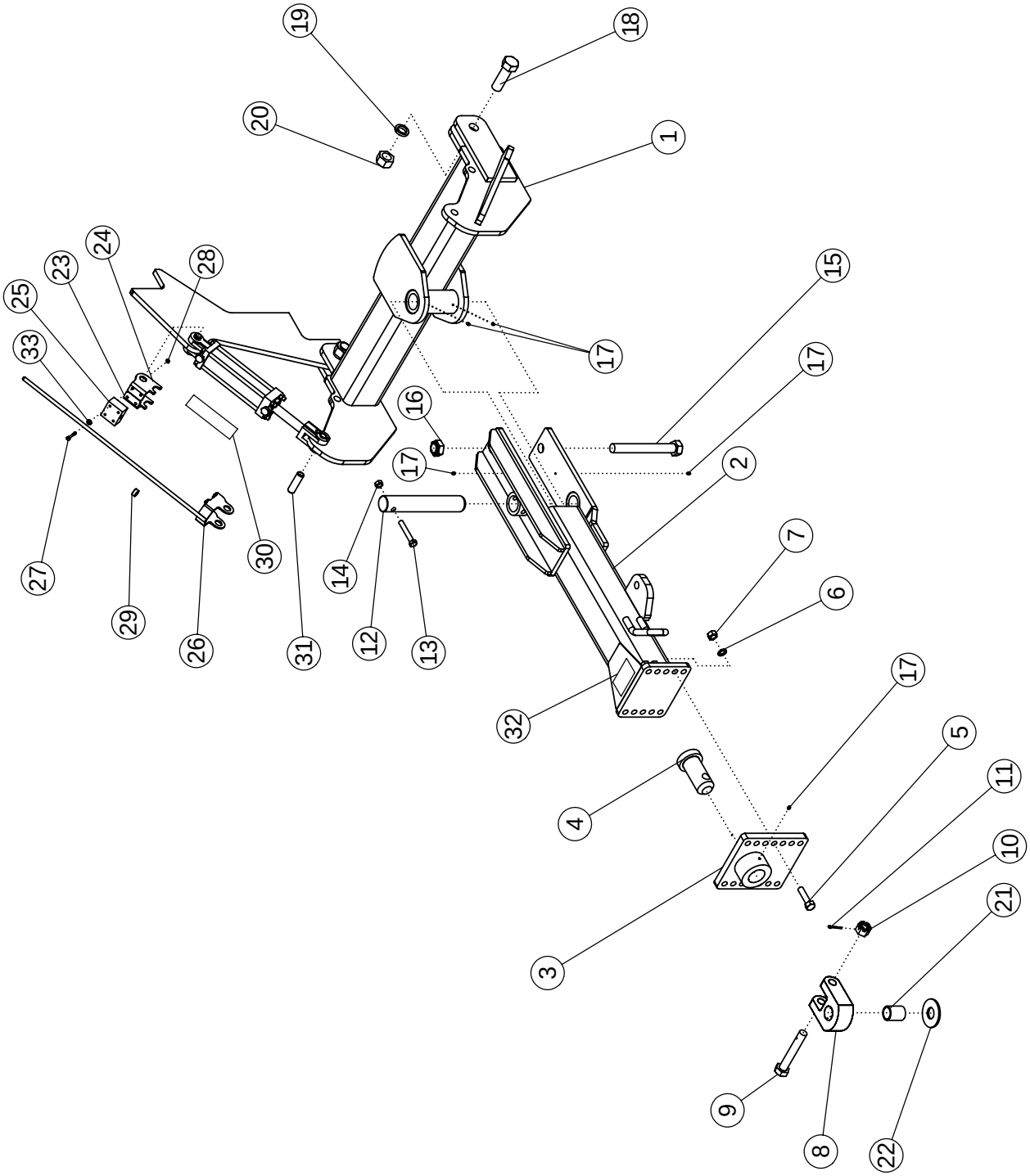
19
20
24
23
25
33
27
29
26
28
30
31
14
12
13
16
17
18
1
17
15
17
2
7
6
32
17
5
11
10
21
4
3
9
8
22

HITCH ASSEMBLY

ITEM	PART NO.	DESCRIPTION	QTY
1	50341	WLDMT - STD HITCH PIVOT	1
2	57928	WLDMT - DRAWPOLE	1
3	57930	WLDMT-HITCH PLATE	1
4	62101	PIN-HITCH MACHINED PAINTED	1
5	1012059	BOLT-HEX: .75 X 3.00 NC GR5 ZP	6
6	1012061	WASHER-LOCK: .75 ZP	6
7	1011620	NUT-HEX: .75 NC	6
8	64476	PLATE-PULL HITCH	1
9	62477	BOLT-HITCH DRILLED	1
10	62088	NUT-SLOTTED: 1.13 NC GR5 ZP	1
11	1013473	PIN-COTTER: .19 X 2.00 NP	1
12	50678	PIN	1
13	1015117	BOLT-HEX: .63 X 4.00 NC GR8 ZP	1
14	1016595	NUT-TOPLOCK: .63 NC GR5 ZP	1
15	1030756	BOLT-HEX: 1.25 X 10.50 NC GR5 ZP	1
16	1030759	NUT-TOPLOCK: 1.25 NC ZP	1
17	1011748	ZERK - GREASE	5
18	1030757	BOLT-HEX: 1.38 X 4.25 NC GR5 ZP	2
19	1030760	WASHER-LOCK: 1.38 ZP	2
20	1030758	NUT-HEX: 1.38 NC ZP	2
21	64614	TUBE-SPACER 2.00 X 1.63	1
22	58925	HARDENED WASHER	1
	68645	WASHER-FLAT: 2.00 ZP GR8	
23	63995	TOP BRACKET RH	1
24	63996	TOP BRACKET LH	1
25	63383	POLY GUIDE BLOCK	1
26	63999	WLDMT - BOTTOM_BRACKET	1
27	1016211	BOLT-HEX: .25 X 2.00 NC GR5	4
28	1030946	NUT-TOPLOCK: .25 NC GR5 ZP	4
29	63359	SET COLLAR .56	1
30	63405	DECAL-DEPTH GAUGE	1
31	63406	PIN-CLEVIS: 1.00 X 4.00 ZP	2
32	52448	DECAL-CAUTION	1
33	1020416	WASHER-FLAT: .25 ZP	4
34	58090	CHAIN-SAFETY 20200# 6 ROW (NOT SHOWN)	1
	69256	CHAIN-SAFETY 41000# 8 &12 ROW(NOT SHOWN)	

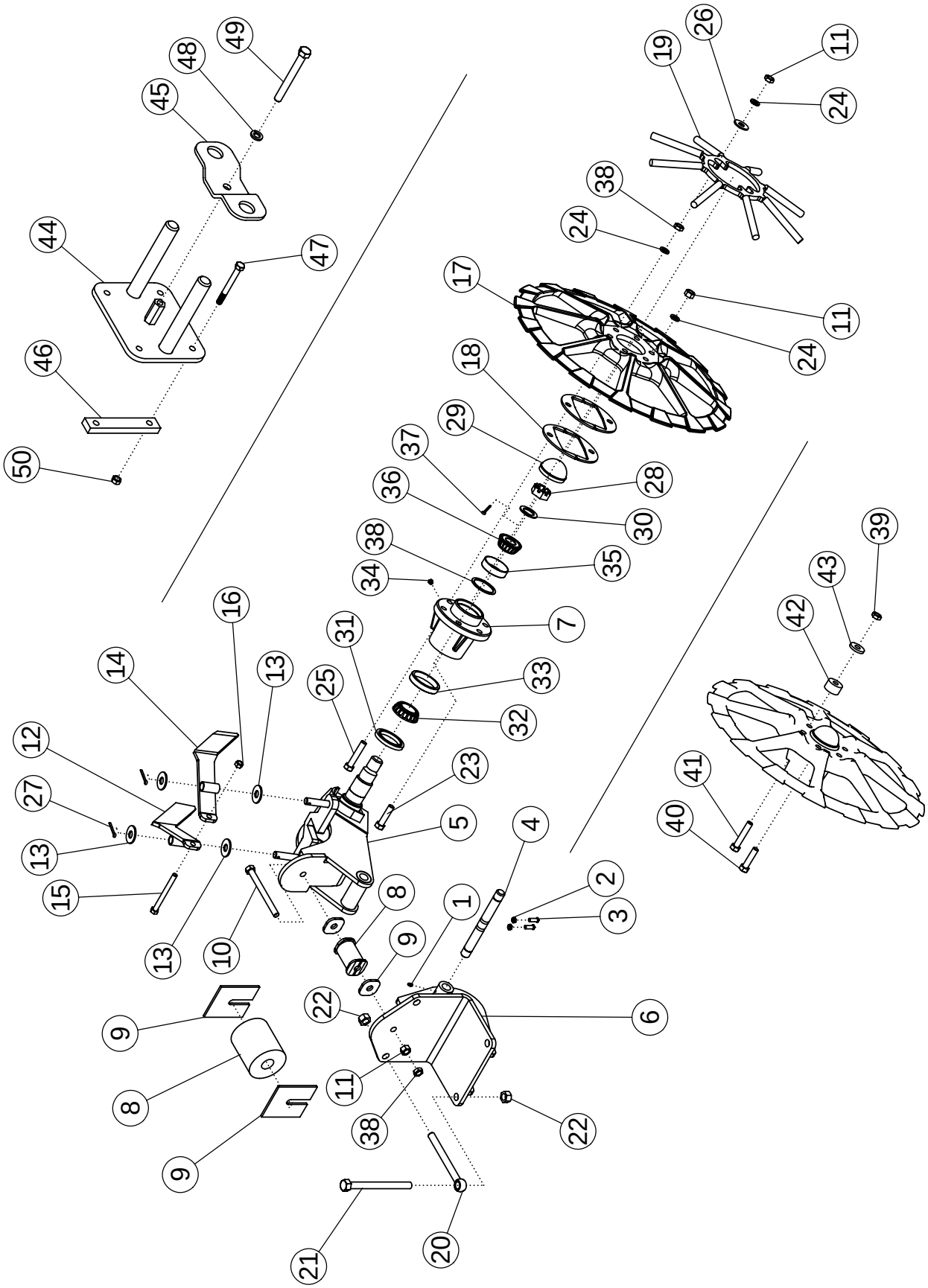
49
48
45
44
47
46
50
19
26
11
24
38
24
17
11
24
18
29
37
28
36
30
38
35
34
7
39
43
42
16
31
14
13
25
33
32
12
23
41
27
5
4
40
13
2
15
8
1
3
13
10
9
22
6
9
11
8
38
22
9
21
20

LIFTER STRUT

ITEM	PART NO.	DESCRIPTION	QTY
1	1011748	ZERK - GREASE: .25 UNF	2
2	1013519	NUT-JAM: .38 NC GR2 ZP	2
3	50813	SCREW-SET: SQ HD .38 X 1.00 ZP	2
4	50397	SHAFT-STRUT	1
5	50142	STRUT-SPINDLE ASSY-STD	1
6	50146	WLDMT-STRUT BRACKET	1
7	63655	HUB-MACHINED	2
8	50134	WLDMT-SPACER	1
	51542	BUMPER-RUBBER	1
9	50137	WASHER	2
	50139	PLATE ZP	2
10	1030761	BOLT-HEX: .63 X 7.00 NC GR 8 ZP	1
11	1011578	NUT-HEX: .63 NC GR5 ZP	13
12	50715	WLDMT-SCRAPER RH	1
13	1030702	WASHER-FLAT: .75 ZP	4
14	50716	WLDMT-SCRAPER LH	1
15	1016660	BOLT-HEX: .50 X 5.50 NC GR5 ZP	1
16	1027461	NUT-TOPLOCK: .50 NC GR5 ZP	1
17	53867	LIFTER WHEEL MACHINED	2
	53853	LIFTER WHEEL HARD	
18	50747	SPACER F.C.	AR
19	63880	WLDMT-WHEEL FILLER (OPTIONAL)	2
20	64135	BOLT-EYE: .75 X 8.00 ZP	2
21	64136	BOLT-HEX: .75 X 8.50 NC GR5 ZP	2
22	1017000	NUT-TOPLOCK: .75 NC GR5 ZP	4
23	1013023	BOLT-HEX: .63 X 2.50 NC GR5 ZP	8
24	1011813	WASHER-LOCK: .63 ZP	16
25	65825	BOLT-HEX: .63 X 3.25 NC GR5 ZP	4
26	1013024	WASHER-FLAT: .63 ZP	4
27	1013473	PIN-COTTER: .19 X 2.00 NP	2
28	1016367	NUT-SPINDLE: 1.38 NF NP	2
29	63624	HUB CAP ROUNDED	2
30	1030765	BUSHING-MACHINED: 1.38 NR 10 GA	2
31	53632	SEAL	2
32	53634	CONE-BEARING INNER	2
33	53636	CUP-BEARING INNER	2
34	1030766	ZERK - GREASE .13 NPT STRAIGHT	2
35	53635	CUP-BEARING OUTER	2
36	53633	CONE-BEARING OUTER	2
37	64012	PIN-COTTER: .19 X 3.00 NP	2

CONTINUED

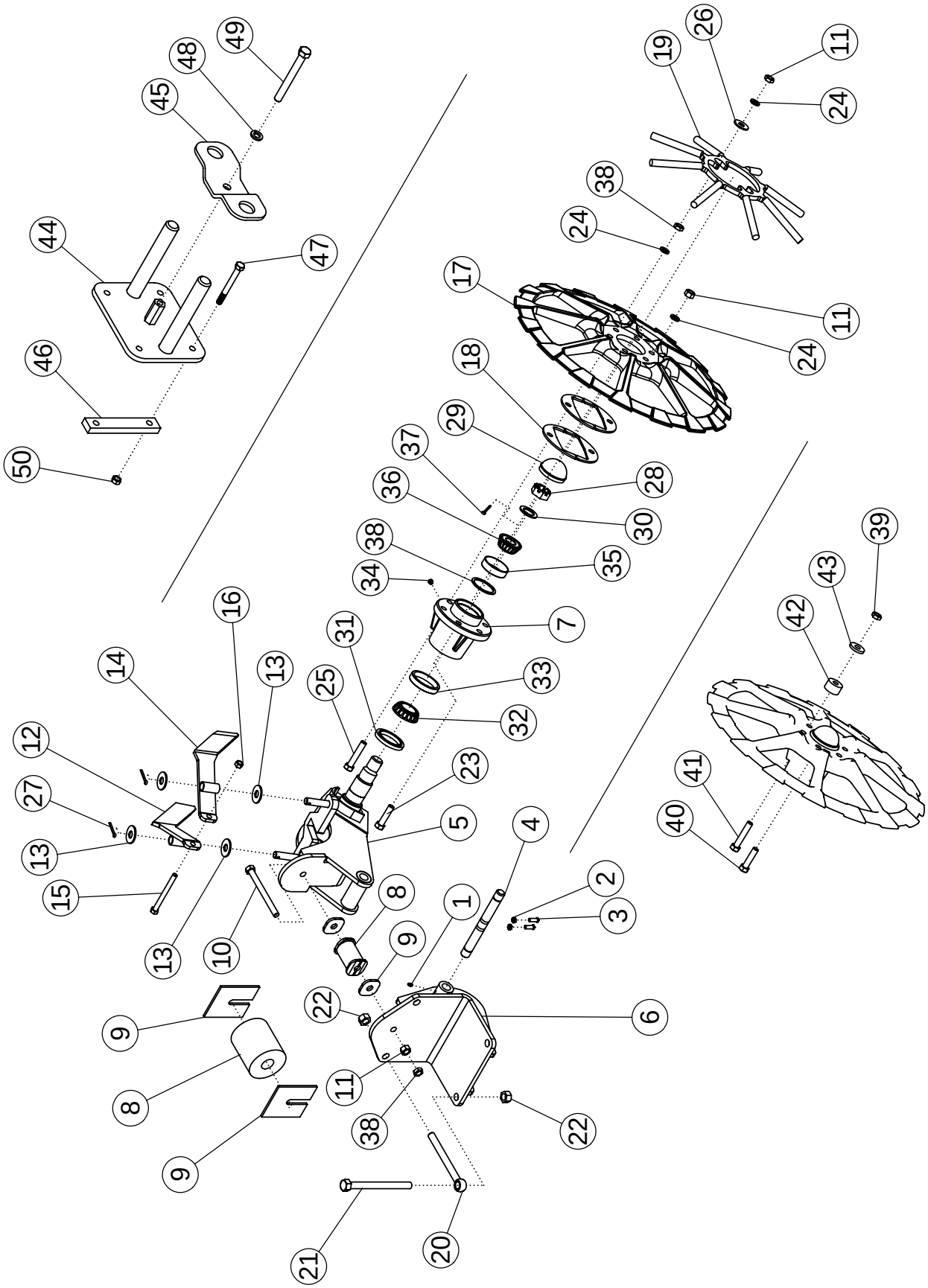
49
48
45
44
47
46
50
19
26
11
24
38
24
17
11
24
18
29
37
28
36
30
38
35
34
7
39
43
42
16
31
14
13
25
33
32
12
23
41
27
5
4
40
13
2
15
8
1
3
13
10
9
22
6
9
11
8
38
22
9
21
20

LIFTER STRUT (CONTINUED)

ITEM	PART NO.	DESCRIPTION	QTY	
38	64674	RACE-SPACER (.120)	AR	
		OPTIONAL URETHANE BUSHING		
39	1016595	NUT-TOPLOCK: .63 GR5 ZP	12	
40	1014000	BOLT-HEX: .63 X 3.50 NC GR5 ZP	8	
41	1013935	BOLT-HEX: .63 X 4.50 NC GR5 ZP	4	
42	51705	BUSHING	12	
43	50822	WASHER-FLAT: .63 GR8 ZP	12	
		OPTIONAL WHEEL FILLER BRACKET	6-8ROW	12 ROW
44	64658	WLDMT-WHEEL FILLER BRACKET	2	3
45	64659	PLATE-RETAINER	2	3
46	63372	BAR-BACKING	4	6
47	58176	BOLT-HEX: .38 X 3.50 NC GR5 ZP	8	12
48	1011581	WASHER-LOCK: .50 ZP	2	3
49	1013682	BOLT-HEX: .50 X 4.50 NC GR5 ZP	2	3
50	1016999	NUT-TOPLOCK: .38 NC GR5 ZP	8	12

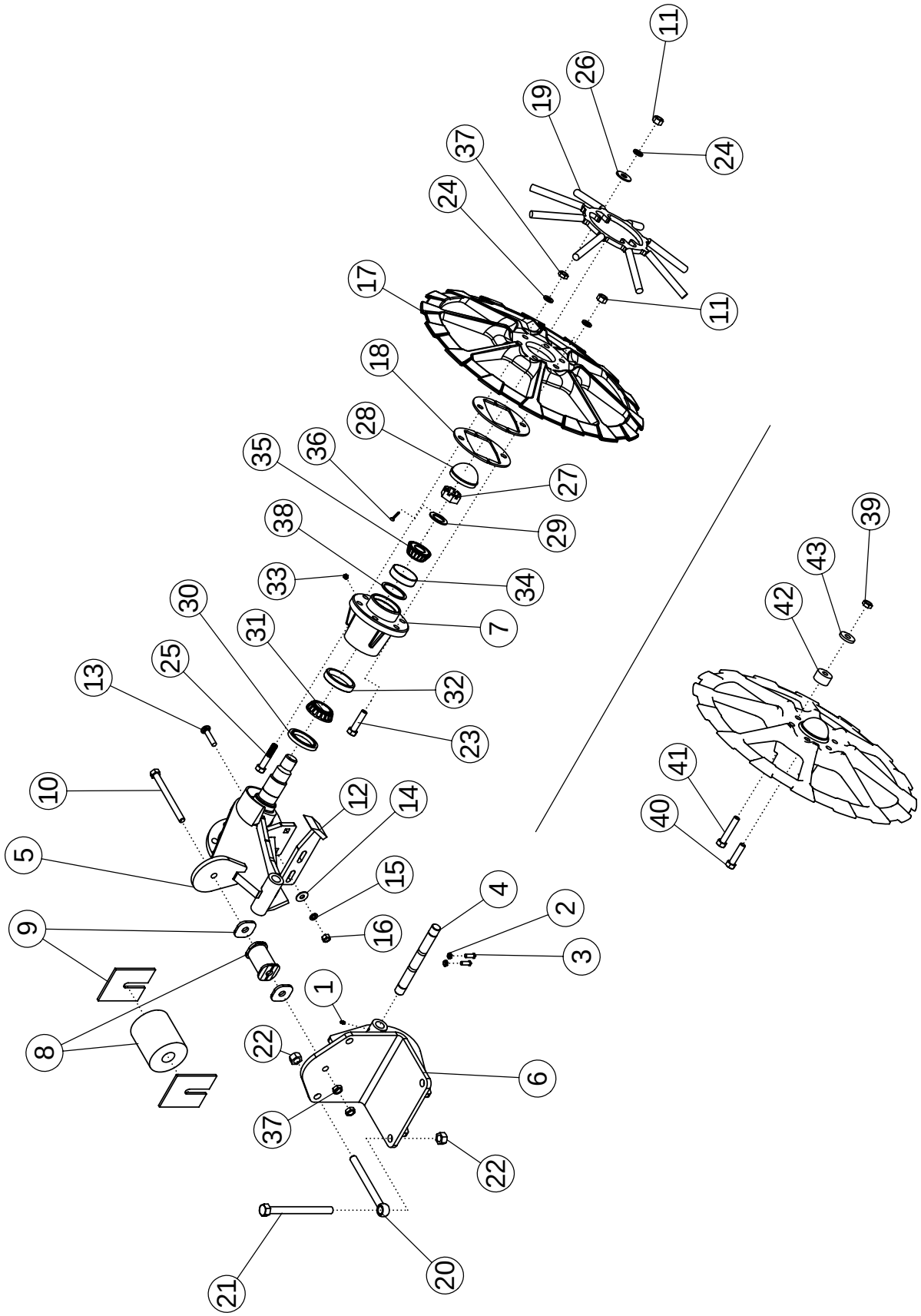
11
26
19
24
37
24
17
11
18
28
35
36
27
29
38
39
33
34
43
30
7
42
31
25
32
13
23
41
10
12
14
40
5
15
4
2
9
16
3
1
8
22
6
37
22
21
20

LIFTER STRUT - BOTTOM SCRAPER OPTION

ITEM	PART NO.	DESCRIPTION	QTY
1	1011748	ZERK - GREASE: .25 UNF	2
2	1013519	NUT-JAM: .38 NC GR2 ZP	2
3	50813	SCREW-SET: SQ HD .38 X 1.00 ZP	2
4	64376	SHAFT-STRUT	1
5	68095	WLDMT-SP LIFTER STRUT STD	1
6	50146	WLDMT-STRUT BRACKET	1
7	63655	HUB-MACHINED	2
8	50134	WLDMT-SPACER	1
	51542	BUMPER-RUBBER	1
9	50137	WASHER	2
	50139	PLATE ZP	2
10	1030761	BOLT-HEX: .63 X 7.00 NC GR 8 ZP	1
11	1011578	NUT-HEX: .63 NC GR5 ZP	12
12	64369	WLDMT-SCRAPER	2
13	64685	BOLT-CRG: .50 X 2.25 NC GR5 ZP	2
14	1014443	WASHER-FLAT: .50 ZP	2
15	1011581	WASHER-LOCK: .50 ZP	2
16	1011577	NUT-HEX: .50 NC GR5 ZP	2
17	53867	LIFTER WHEEL MACHINED	2
	53853	LIFTER WHEEL HARD	
18	50747	SPACER	AR
19	63880	WLDMT-WHEEL FILLER (OPTIONAL)	2
20	64135	BOLT-EYE: .75 X 8.00 ZP	2
21	64136	BOLT-HEX: .75 X 8.50 NC GR5 ZP	2
22	1017000	NUT-TOPLOCK: .75 NC GR5 ZP	4
23	1013023	BOLT-HEX: .63 X 2.50 NC GR5 ZP	8
24	1011813	WASHER-LOCK: .63 ZP	16
25	65825	BOLT-HEX: .63 X 3.25 NC GR5 ZP	4
26	1013024	WASHER-FLAT: .63 ZP	4
27	1016367	NUT-SPINDLE: 1.38 NF NP	2
28	63624	HUB CAP ROUNDED	2
29	1030765	BUSHING-MACHINED: 1.38 NR 10 GA	2
30	53632	SEAL	2
31	53634	CONE-BEARING INNER	2
32	53636	CUP-BEARING INNER	2
33	1030766	ZERK - GREASE .13 NPT STRAIGHT	2
34	53635	CUP-BEARING OUTER	2
35	53633	CONE-BEARING OUTER	2
36	64012	PIN-COTTER: .19 X 3.00 NP	2
37	1026259	NUT-JAM: .63 NC ZP	5
38	64674	RACE-SPACER (.120)	AR

CONTINUED

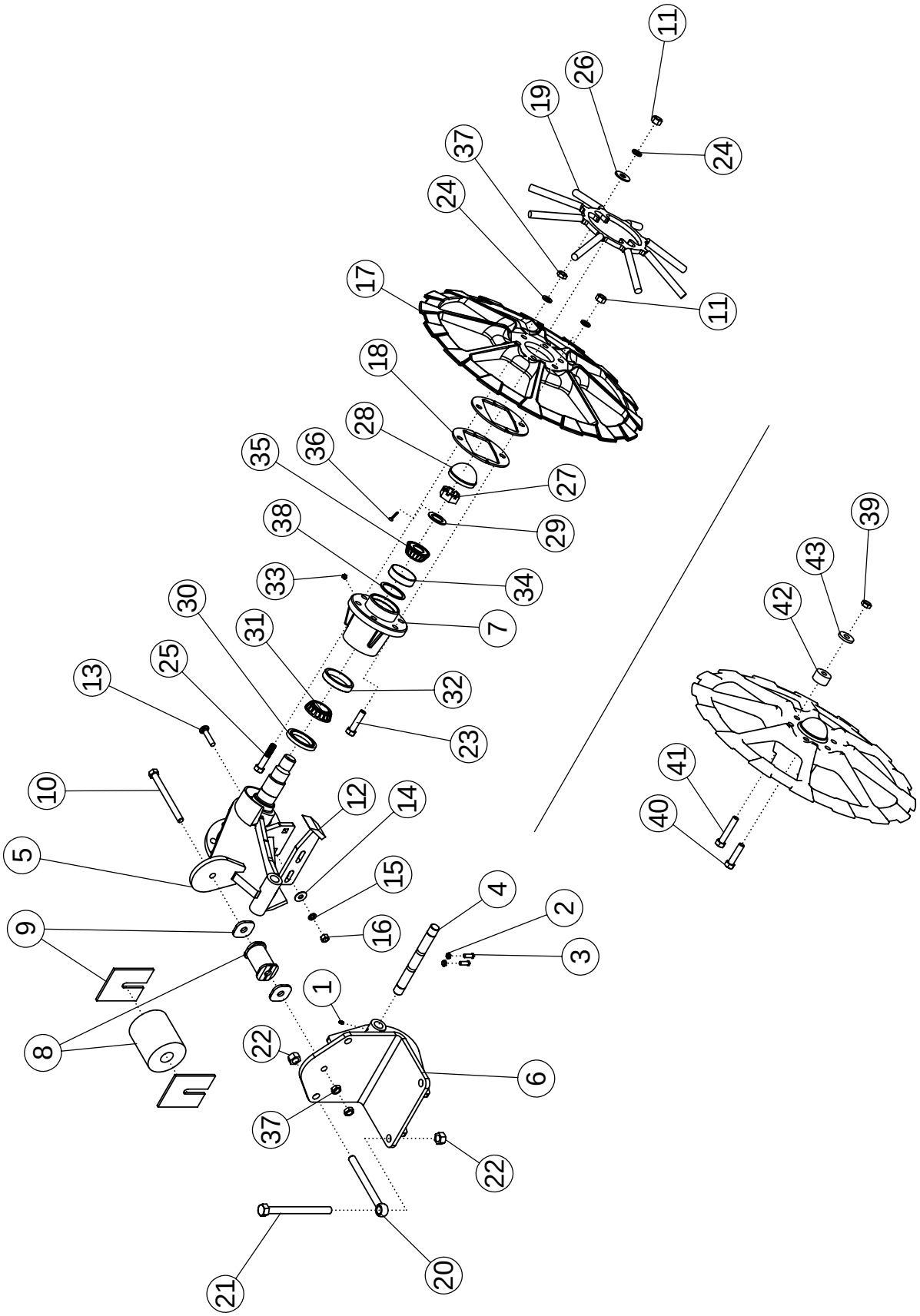
11
26
19
24
37
24
17
11
18
28
35
36
27
29
38
39
33
34
43
30
7
42
31
25
32
13
23
41
10
12
14
40
5
15
4
2
9
16
3
1
8
22
6
37
22
21
20

LIFTER STRUT - BOTTOM SCRAPER (CONTINUED)

ITEM	PART NO.	DESCRIPTION	QTY
		OPTIONAL URETHANE BUSHING	
39	1016595	NUT-TOPLOCK: .63 GR5 ZP	12
40	1014000	BOLT-HEX: .63 X 3.50 NC GR5 ZP	8
41	1013935	BOLT-HEX: .63 X 4.50 NC GR5 ZP	4
42	51705	BUSHING	12
43	50822	WASHER-FLAT: .63 GR8 ZP	12

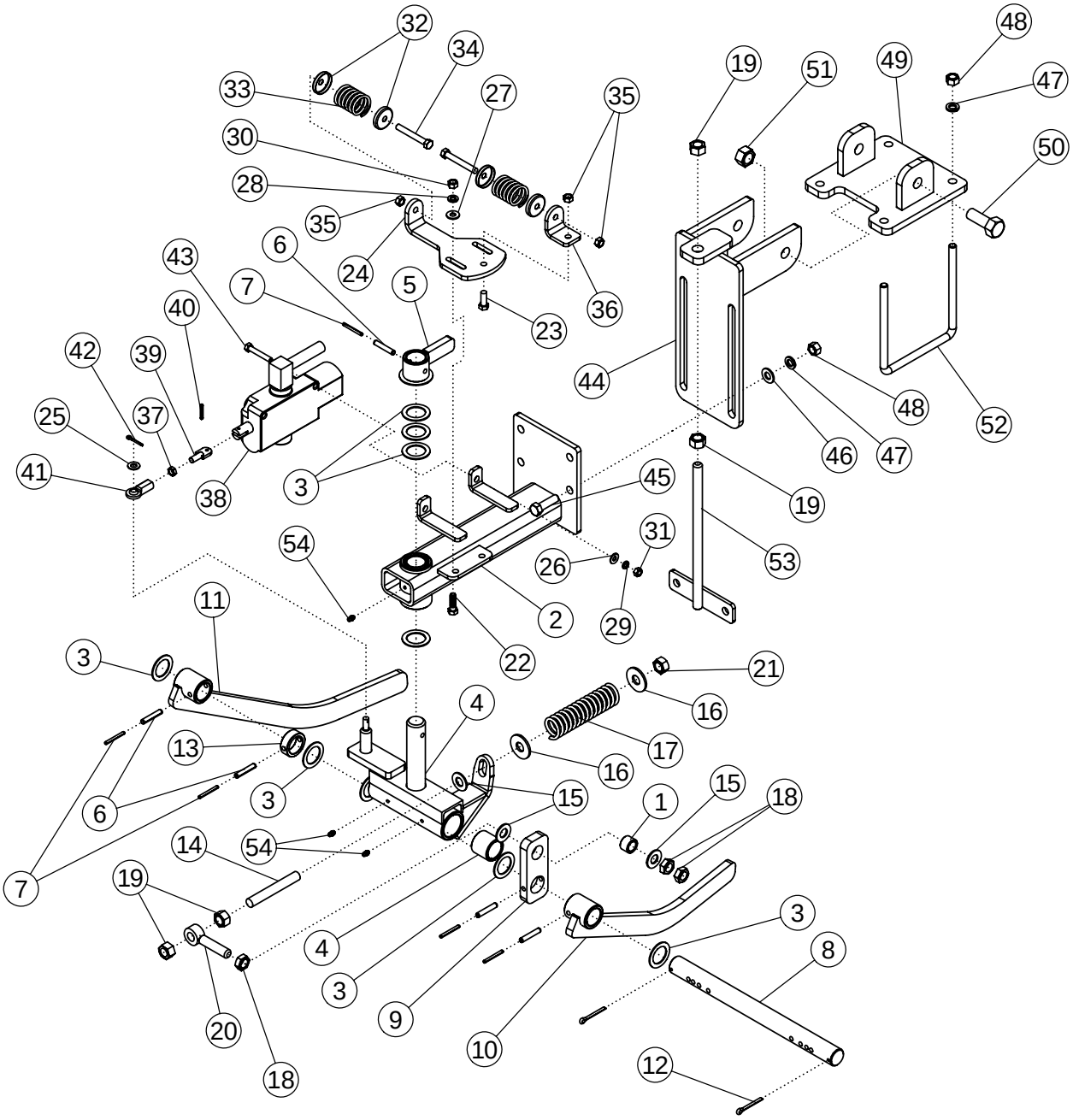
32
34
33
27
35
30
28
35
24
36
23
6
43
7
5
40
42
39
25
37
41
38
3
44
19
51
49
48
47
50
48
46
47
52
19
53
45
31
26
29
2
22
54
11
3
21
16
4
17
16
13
3
6
15
15
18
1
14
54
7
19
4
3
3
9
10
8
20
18
12

HYDRAULIC ROW FINDER #51486

ITEM	PART NO.	DESCRIPTION	QTY
1	52567	BUSHING-ZP	1
2	62520	ASSY-MAIN FRAME	1
3	55206	BUSHING-MACH: 1.25 NR 14GA	9
4	51139	ASSY - SWIVEL	1
5	51130	WLDMT-FLIPPER	1
6	1030793	PIN-ROLL: .31 X 1.75 ZP	5
7	1030798	PIN-ROLL: .31 X 1.75 ZP	5
8	51690	SHAFT ZP	1
9	52566	TENSIONER ARM	1
10	51131	SENSOR ARM-L.H.	1
11	52564	SENSOR ARM-R.H.	1
12	1030797	PIN-COTTER: .19 X 1.75 NP	2
13	51137	COLLAR	1
14	52565	ADJUSTMENT BOLT	1
15	1013004	WASHER-FLAT: SAE .63 ZP	3
16	1013024	WASHER-FLAT: .63 ZP	2
17	51692	SPRING: .21 X 1.44 OD X 6.00 15 COILS	1
18	1026259	NUT-JAM: .63 NC GR2 ZP	3
19	1011578	NUT-HEX: .63 NC GR2 ZP	4
20	51691	EYEBOLT: .63 X 3.25 ZP	1
21	1016595	NUT-TOPLOCK: .63 NC GR5 ZP	1
22	1011601	BOLT-HEX: .38 X 1.25 NC GR5 ZP	2
23	1011600	BOLT-HEX: .38 X 1.00 NC GR5 ZP	1
24	51129	PLATE	1
25	1014608	WASHER-FLT: SAE .38 ZP	1
26	1020416	WASHER-FLAT: .25 ZP	2
27	1011583	WASHER-FLAT: .31 ZP	2
28	1011586	WASHER-LOCK: .38 ZP	2
29	1029115	WASHER-LOCK: .31 ZP	2
30	1011576	NUT-HEX: .38 NC GR2 ZP	2
31	1011575	NUT-HEX: .31 NC GR2 ZP	2
32	52582	SPRING CAP	4
33	51689	SPRING	2
34	1019828	BOLT-HEX: .38 X 2.75 NC GR5 ZP	2
35	1016999	NUT-TOPLOCK: .38 NC GR5 ZP	3
36	51128	SPRING PLATE	1
37	1030792	NUT-JAM: .38 NF GR2 ZP	1
38	62350	VALVE-ROWFINDER O/C	1
39	62540	PLATE STUD ZP	1
40	64157	PIN-ROLL: .19 X 1.125 ZP	1

CONTINUED

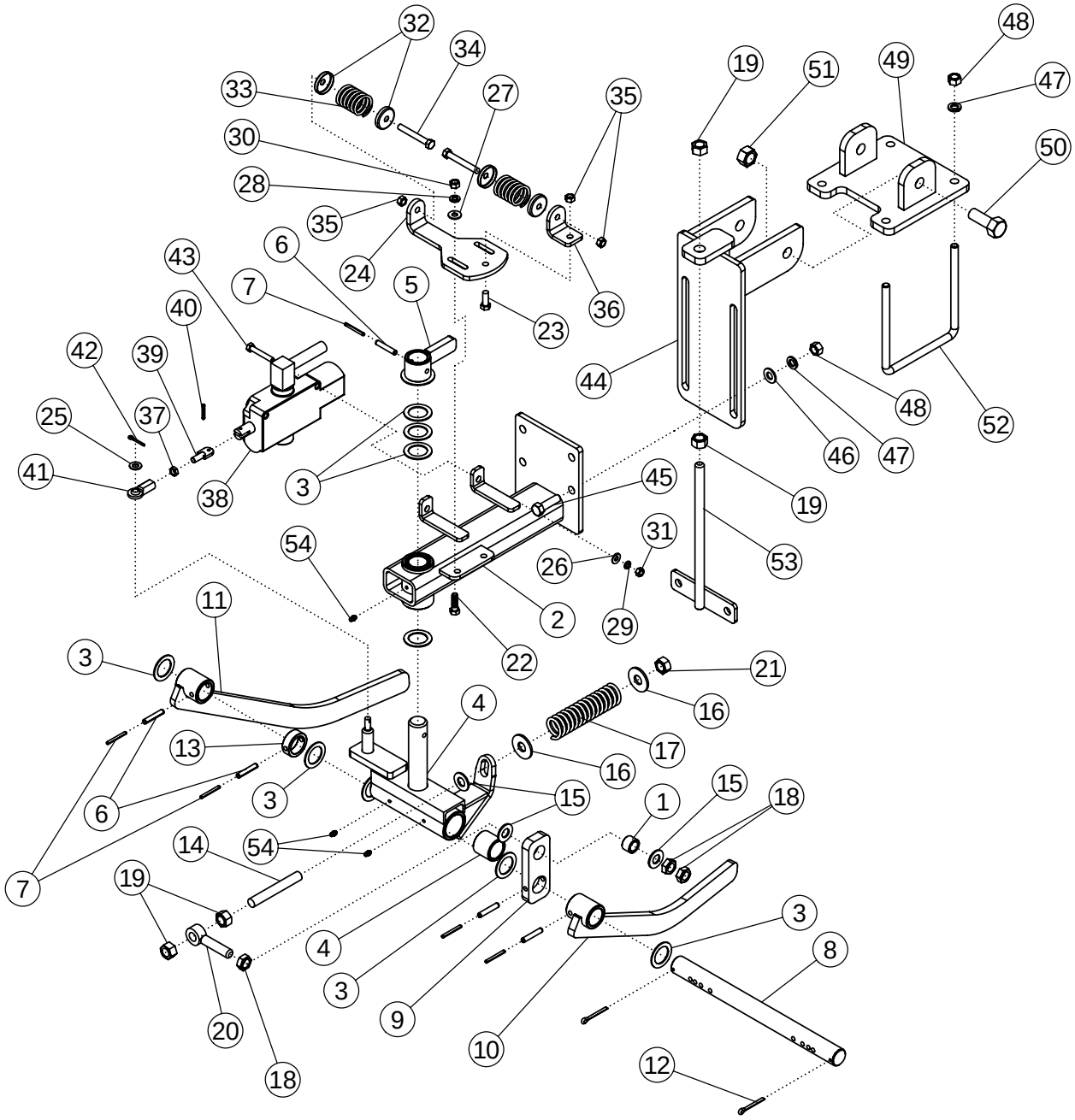
32
34
33
27
35
30
28
35
24
6
43
7
5
40
23
36
42
39
25
37
41
38
3
44
19
51
49
48
47
50
48
46
47
52
19
53
45
31
26
29
54
2
22
11
3
21
16
4
17
13
16
3
6
15
1
15
18
14
54
7
19
4
3
3
9
20
18
10
12
8

HYDRAULIC ROW FINDER #51486 (CONTINUED)

ITEM	PART NO.	DESCRIPTION	QTY
41	51136	UNIBALL COUPLING	1
42	64570	PIN-COTTER: .13 X 1.00 ZP	1
43	1011285	BOLT-HEX : .31 X 2.00 NC	2
44	52181	MOUNTING BRACKET	1
45	1011608	BOLT-HEX: .50 X 1.75 NC GR5 ZP	4
46	1011584	WASHER-FLAT: SAE .50 ZP	4
47	1011581	WASHER-LOCK: .50 ZP	8
48	1011577	NUT-HEX: .50 NC GR2 ZP	8
49	62871	WLDMT-BRACKET	1
50	1012060	BOLT-HEX: .75 X 2.00 NC GR5 ZP	2
51	1013537	NUT-TOPLOCK: .75 NC GR5 ZP	2
52	53984	U-BOLT 1/2 X 7 X 6 X 7	2
53	62882	TIGHTENER BOLT-ZP	1
54	1011748	ZERK - GREASE	3

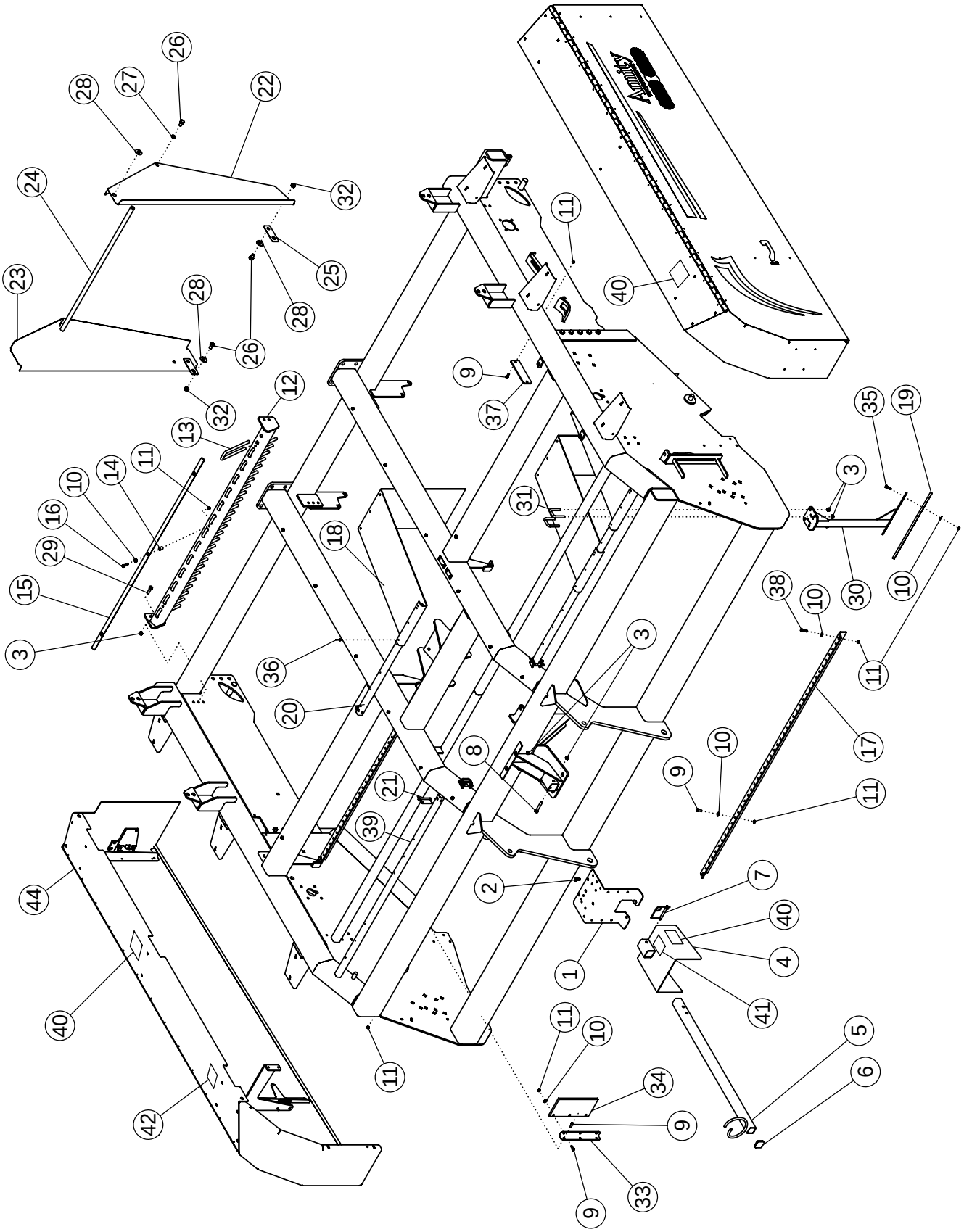
26
28
27
22
24
32
23
25
28
28
26
32
12
13
11
14
10
16
29
15
3
11
9
37
40
31
18
36
20
3
8
21
39
44
40
42
11
2
1
7
40
4
41
11
10
34
9
33
9
5
6
35
19
3
30
10
38
10
11
17
9
10
11

GUARDS AND SHIELDS 6 ROW 30

ITEM	PART NO.	DESCRIPTION	QTY
1	62883	PLATE-HOSE MOUNT	1
2	1011096	BOLT-HEX: .50 X 1.00 NC GR5 ZP	4
3	1027461	NUT-TOPLOCK: .50 NC GR5 ZP	33
4	63354	WLDMT-PTO SHIELD	1
5	54800	WLDMT-HOSE SUPPORT	1
6	63869	CAPLUG-2" SQ	1
7	52408	SPRING PIN .50" X 3.50"	1
8	1011611	BOLT-HEX: .50 X 3.00 NC GR5 ZP	1
9	1011600	BOLT-HEX: .38 X 1.00 NC GR5 ZP	34
10	1011828	WASHER-FLAT: .38 ZP	52
11	1016999	NUT-TOPLOCK: .38 NC GR5 ZP	64
12	58182	WLDMT-MOUNT	2
13	69117	U ROD ZP	28
14	58446	SPACER ZP	6
15	58448	STRAP	2
16	1011603	BOLT-HEX: .38 X 1.75 NC GR5 ZP	6
17	51225	MOUNT-TARP 8R	2
18	58961	APRON-RUBBER	6
19	51687	DEFLECTION-RUBBER	5
20	57721	TUBE-INNER APRON 6R/8R	1
21	59101	SPRING PIN .38 X 3.00	3
22	56257	GUARD-REAR SCRUB LH	1
23	56258	GUARD-REAR SCRUB RH	1
24	56754	PIPE-THREADED	1
25	56256	LINK-GUARD	2
26	1032275	BOLT-HEX: .63 X 1.00 NC GR5 ZP	6
27	1011813	WASHER-LOCK: .63 ZP	2
28	1013024	WASHER-FLAT: .63 ZP	4
29	1011608	BOLT-HEX: .50 X 1.75 NC GR5 ZP	8
30	62378	WLDMT - DEFLECTOR	5
31	65658	U-BOLT: .50 X 3 X 2.06 X 3	10
32	1016595	NUT-TOPLOCK: .63 NC GR5 ZP	4
33	51331	ANGLE	2
34	51680	DEFLECTOR-RUBBER	2
35	1011601	BOLT-HEX: .38 X 1.25 NC GR5 ZP	21
36	1011974	RIVET-POP: .19 X .53 ZP	18
37	63501	PLATE-COVER	2
38	1011602	BOLT-HEX: .38 X 1.50 NC GR5 ZP	4
39	64508	TUBE-OUTER APRON MOUNT 6R30	2
40	52341	DECAL-WARNING	5
41	52336	DECAL-CAUTION	1
42	53740	DECAL-DANGER	1
43	69265	ASSY-LH DOOR 6R & 8R	1
44	69350	ASSY-RH DOOR 6R & 8R	1

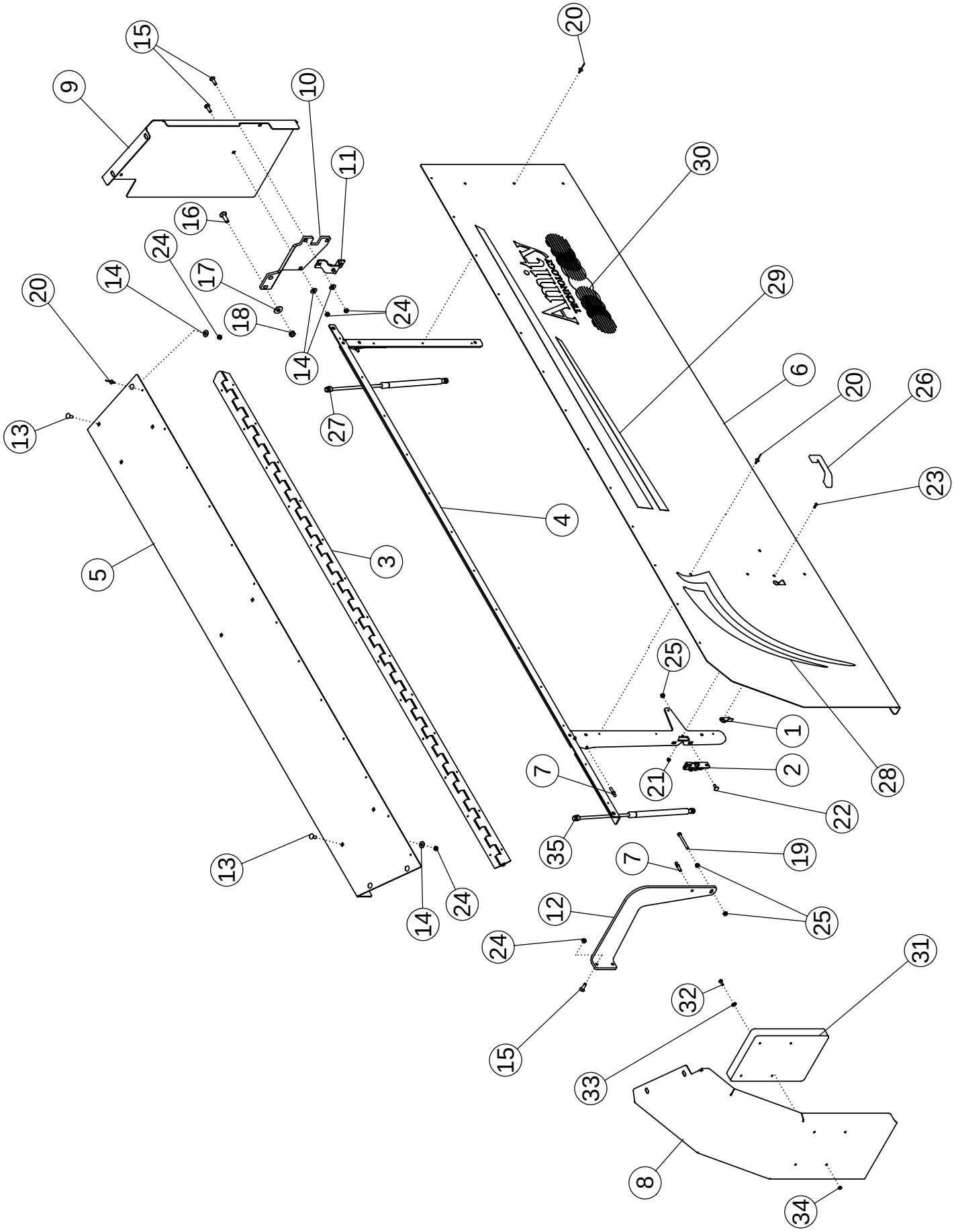
15
9
10
11
16
24
17
14
18
20
13
5
3
27
4
20
30
29
6
20
26
23
28
25
1
2
21
22
7
35
19
7
25
12
24
15
31
32
33
8
34
13
14
24
14
24

DOOR ASSEMBLY

ITEM	PART NO.	DESCRIPTION	QTY
1	69284	LEVER-HRV LATCH ZP	1
2	69283	LATCH-DLP ROTARY SLAM	1
3	69286	HINGE-108 HEAVY CONTINUOUS	1
4	69266	WLDMT-DOOR FRAME LH	1
	69348	WLDMT-DOOR FRAME RH (NOT SHOWN)	
5	69271	PANEL-SHIELD TOP LH PC	1
	69316	PANEL-SHIELD TOP RH PC (NOT SHOWN)	
6	69270	SHEET-SHIELD DOOR LH PC	1
	69319	SHEET-SHIELD DOOR RH PC (NOT SHOWN)	
7	69278	STUD-BALL .31-18NC X .75	4
8	69272	PANEL-SHIELD FRONT LH PC	1
	69317	PANEL-SHIELD FRONT RH PC (NOT SHOWN)	
9	69273	PANEL-SHIELD REAR LH PC	1
	69318	PANEL-SHIELD REAR RH PC (NOT SHOWN)	
10	69274	PLATE-SUPPORT REAR LH	1
	69344	PLATE-SUPPORT REAR RH (NOT SHOWN)	
11	69275	BRACKET-SPRING REAR	1
12	69277	BRACKET-SPRING FRONT LH	1
	69320	BRACKET-SPRING FRONT RH (NOT SHOWN)	
13	59488	BOLT-CRG: .38 X 1.00 NC GR5 ZP	10
14	1011828	WASHER-FLAT .38 ZP	17
15	1016362	BOLT-CRG: .38 X 1.25 NC GR5 ZP	7
16	1011660	BOLT-CRG: .50 X 1.50 NC GR5 ZP	2
17	1014443	WASHER-FLAT: .50 ZP	2
18	1027461	NUT-TOPLOCK: .50 NC GR5 ZP	2
19	1029448	BOLT-HEX .31 X 3.00 NC GR5 ZP	1
20	1011974	RIVET-POP: .19 X .531 ZP	32
21	67079	NUT-NYLOCK: 10-24 GR2 ZP	2
22	65702	BOLT-CRG: .31 X .75 NC GR5 ZP	2
23	67078	SCREW-P-H: 10-24 X .75 NC GR2 ZP	2
24	1016999	NUT-TOPLOCK: .38 NC GR5 ZP	17
25	67077	NUT-FLANGE SERR .31 NC ZP GR2	4
26	69285	HANDLE-MOLDED GRAB	1
27	69282	SPRING-700N GAS	1
28	69294	DECAL-LH CURVE	1
	69297	DECAL-RH CURVE	1
29	69295	DECAL-LH STRIPE	1
	69298	DECAL-RH STRIPE	1
30	69399	DECAL-AMITY LOGO	1
31	64635	CASE-MANUAL STORAGE	1
32	1011595	BOLT-HEX: .25 X .75 NC GR5 ZP	4
33	1020416	WASHER-FLAT: .25 ZP	4
34	1030946	NUT-TOPLOCK: .25 NC GR5 ZP	4
35	69411	SPRING-GAS LIFT N LATCH FRONT	1

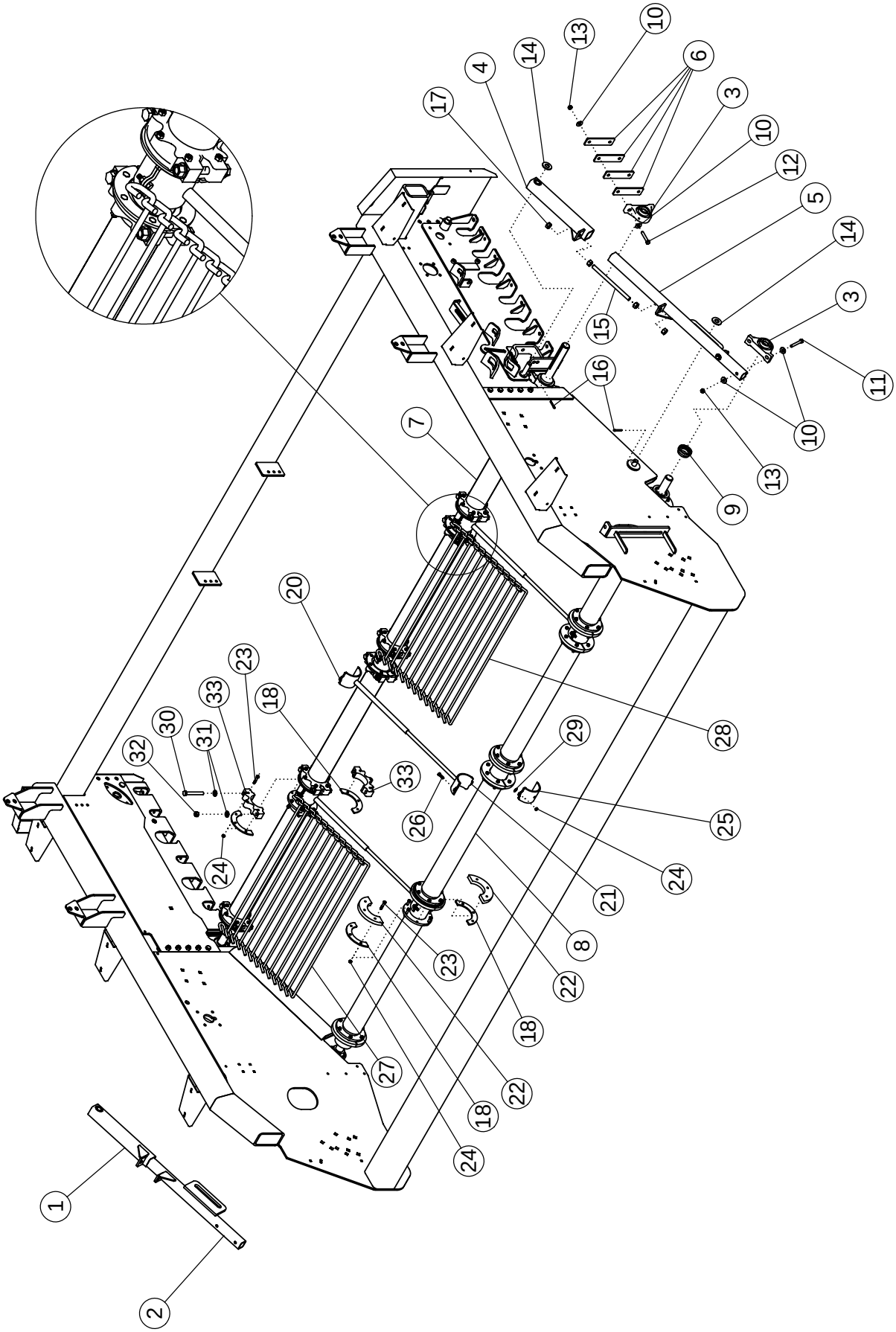
1
2
7
20
23
33
18
30
31
32
24
27
22
26
29
25
21
8
28
9
16
15
17
4
14
13
10
6
3
12
5
11

APRON SHAFT - HOOK CHAIN

ITEM	PART NO.	DESCRIPTION	QTY
1	56693	WLDMT-ARM RH	1
2	56698	WLDMT-SLIDE RH	1
3	52405	BEARING-PILLOW 1.75	4
4	56692	WLDMT-ARM LH	1
5	56697	WLDMT-SLIDE LH	1
6	56672	SHIM-BEARING ZP	AR
7	69249	WLDMT-TOP APRON SHAFT	1
8	62695	WLDMT-BOTTOM APRON SHAFT	1
9	52382	SEAL PROTECTOR 1.75	2
10	1014443	WASHER-FLAT: .50 ZP	16
11	1029104	BOLT-HEX: .50 X 3.75 NC GR5 ZP	4
12	1011611	BOLT-HEX: .50 X 3.00 NC GR5 ZP	4
13	1027461	NUT-TOPLOCK: .50 NC GR5 ZP	8
14	1020685	WASHER-FLAT: 1.00	4
15	56718	ROD-THREADED ZP	2
16	1016944	PIN-COTTER: .25 X 2.00 ZP	4
17	1011620	NUT-HEX: .75 NC GR2 ZP	8
18	62836	HALF DISC-SPACER ZP (1/2" CHAIN ONLY)	32
19	1013239	BOLT-HEX: .38 X 3.00 NC GR5 ZP (1/2" CHAIN ONLY)	48
	1019828	BOLT-HEX: .38 X 2.75 NC GR5 ZP	
20	64162	WLDMT-UPPER FILLER	3
21	64161	WLDMT-LOWER FILLER	3
22	58322	HALF-DISC ZP	16
23	1011725	BOLT-HEX: .38 X 2.00 NC GR5 ZP (1/2" CHAIN ONLY)	48
	1011603	BOLT-HEX: .38 X 1.75 NC GR5 ZP	
24	1016999	NUT-TOPLOCK: .38 NC GR5 ZP	108
25	64159	CLAMP-FILLER PAINTED	6
26	64991	BOLT-HEX: .38 X 1.25 NC GR8 ZP	12
27	59559	CHAIN 1/2 X 48 X 2.38	4
	64399	CHAIN 5/8 X 48 X 2.38	
28	62609	CHAIN 1/2 X 36 X 2.38	4
	64400	CHAIN 5/8 X 36 X 2.38	
29	1011828	WASHER-FLAT: .38 ZP	12
30	69246*	BOLT-HEX: .63 X 5.00 NC GR8 ZP	16
31	66498*	WASHER-FLAT: SAE .63 YZP	32
32	66500*	NUT-HEX: .63 NC GR8 YZP	16
33	69245*	CLAMP-APRON	16

*INCLUDED IN ITEM 7

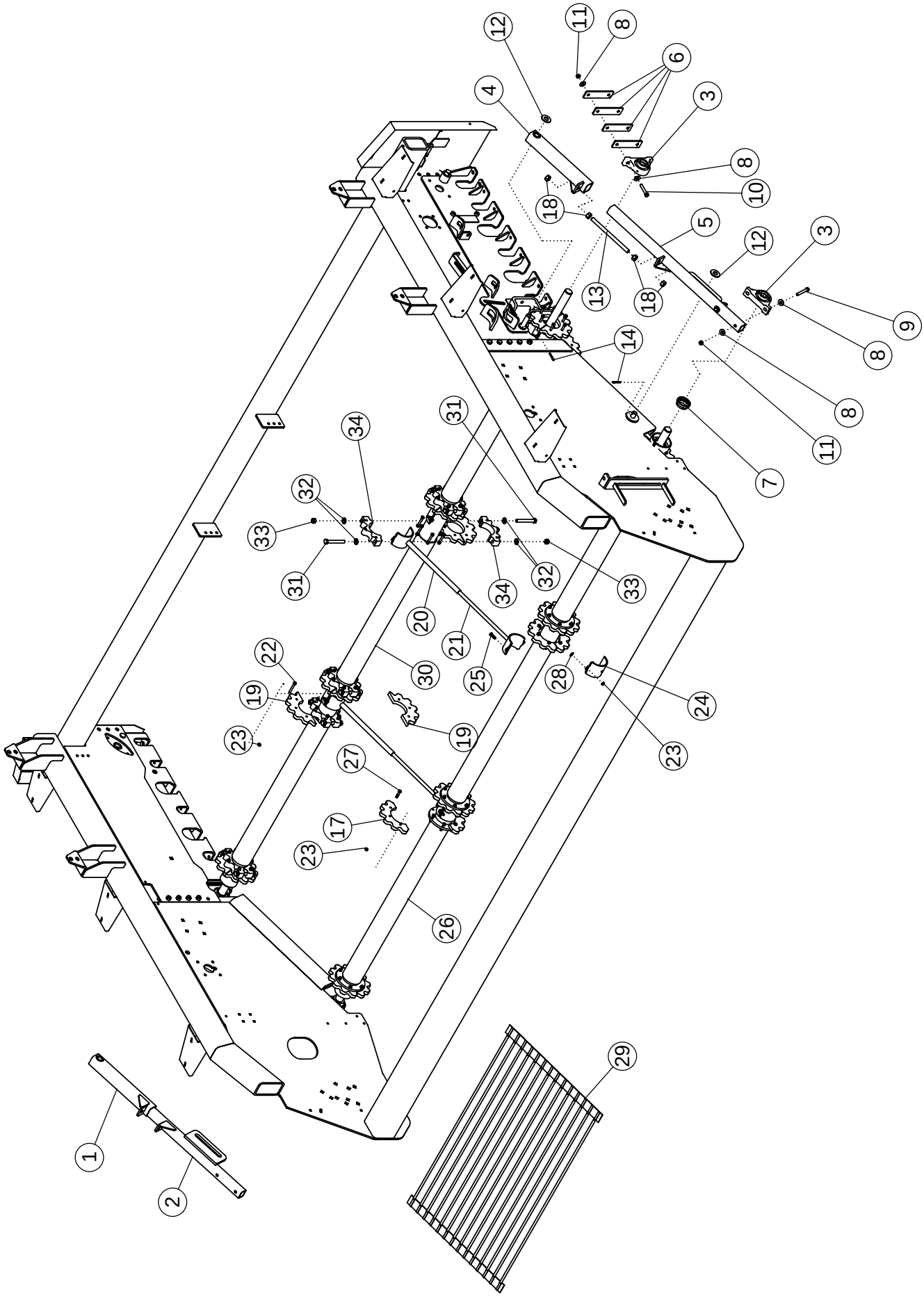
12
11
8
6
4
3
8
10
18
5
12
3
13
18
9
14
8
8
11
7
31
34
32
33
31
34
32
33
20
21
25
22
30
28
24
19
19
23
23
27
17
23
26
29
1
2

APRON SHAFT - BELTED CHAIN

ITEM	PART NO.	DESCRIPTION	QTY
1	56693	WLDMT-ARM RH	1
2	56698	WLDMT-SLIDE RH	1
3	52405	BEARING-PILLOW 1-3/4"	4
4	56692	WLDMT-ARM LH	1
5	56697	WLDMT-SLIDE LH	1
6	56672	SHIM-BEARING ZP	8
7	52382	SEAL PROTECTOR 1-3/4"	2
8	1014443	WASHER-FLAT: .50 ZP	14
9	1029104	BOLT-HEX: .50 X 3.75 NC GR5 ZP	4
10	1011611	BOLT-HEX: .50 X 3.00 NC GR5 ZP	4
11	1027461	NUT-TOPLOCK: .50 NC GR5 ZP	8
12	1020685	WASHER-FLAT: 1.00	4
13	56718	ROD-THREADED ZP	2
14	1016944	PIN-COTTER: .25 X 2.00 ZP	2
15	58906	WLDMT-MOUNT LH	1
16	58907	WLDMT-MOUNT RH	1
17	63361	SPROCKET-SPLIT 2.205 COUNTER BORED	12
18	1011620	NUT-HEX: .75 NC GR2 ZP	8
19	69255	SPROCKET-SPLIT 56MM 12T APRON	7
20	64162	WLDMT-UPPER FILLER	3
21	64161	WLDMT-LOWER FILLER	3
22	1019828	BOLT-HEX: .38 X 2.75 NC GR5 ZP	42
23	1016999	NUT-TOPLOCK: .38 NC GR5 ZP	89
24	64159	CLAMP-FILLER PAINTED	6
25	1011601	BOLT-HEX: .38 X 1.25 NC GR5 ZP	11
26	64440	WLDMT-BOTTOM APRON SHAFT 6R30 56.5"	1
27	1011603	BOLT-HEX: .38 X 1.75 NC GR5 ZP	36
28	1011828	WASHER-FLAT .38 ZP	1
29	64904	BELT: .63 X 56.5	3
30	69619	ASSY-TOP APRON SHAFT 6R30 56.5 BELT	1
31	69246*	BOLT-HEX: .63 X 4.75 NC GR8 ZP	24
32	66498*	WASHER-FLAT: SAE .63 GR8 ZP	48
33	66500*	NUT-HEX: .63 NC GR8 ZP	24
34	69245*	CLAMP-APRON	12

*INCLUDED IN ITEM 30

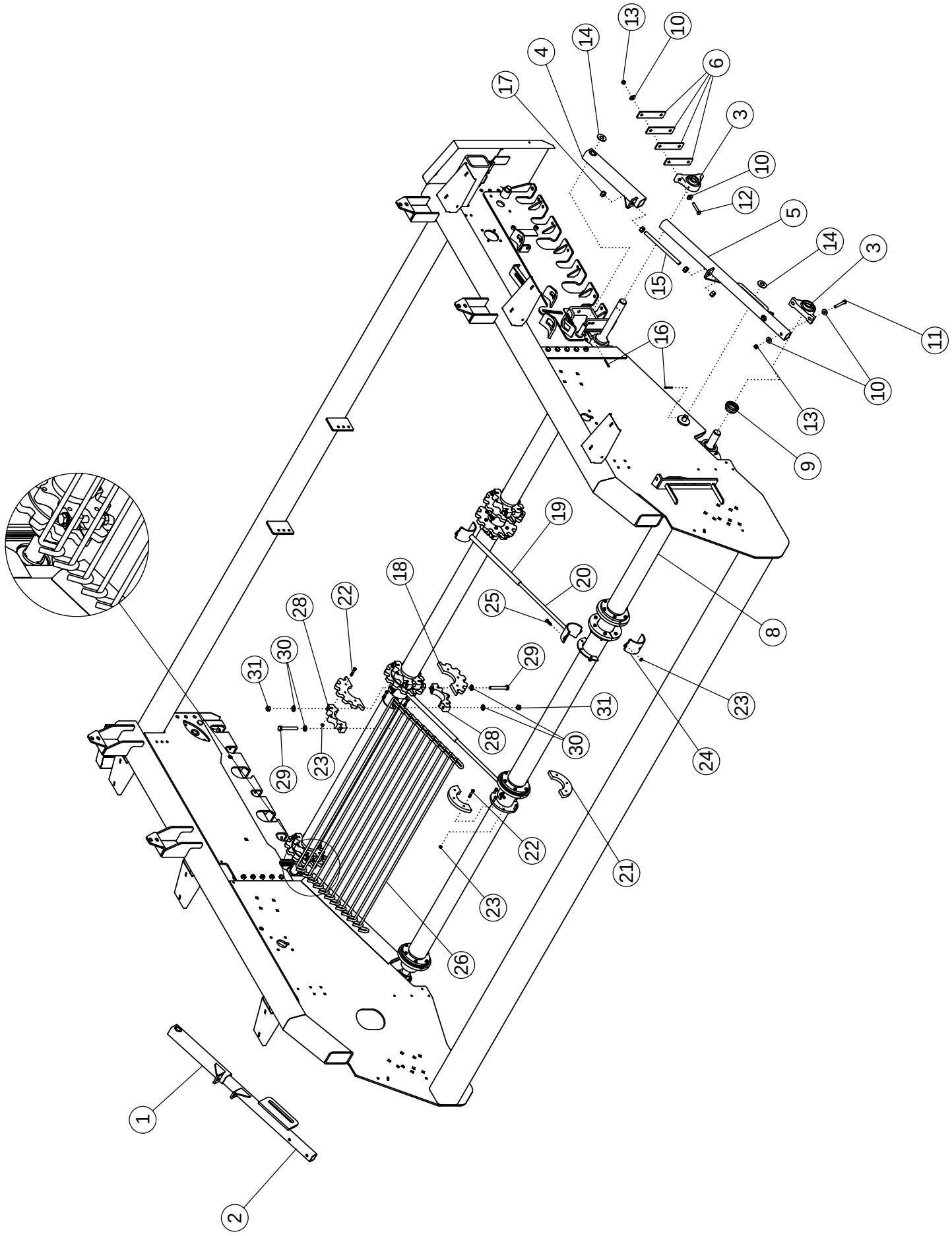
1
2
3
4
5
6
8
9
10
11
12
13
14
15
16
17
18
19
20
21
22
23
24
25
26
28
29
30
31

APRON SHAFT - HOOK CHAIN 56.5"

ITEM	PART NO.	DESCRIPTION	QTY
1	56693	WLDMT-ARM RH	1
2	56698	WLDMT-SLIDE RH	1
3	52405	BEARING-PILLOW 1.75	4
4	56692	WLDMT-ARM LH	1
5	56697	WLDMT-SLIDE LH	1
6	56672	SHIM-BEARING ZP	AR
7	69247	WLDMT-TOP APRON SHAFT	1
8	64440	WLDMT-BOTTOM APRON SHAFT	1
9	52382	SEAL PROTECTOR 1.75	2
10	1014443	WASHER-FLAT: .50 ZP	16
11	1029104	BOLT-HEX: .50 X 3.75 NC GR5 ZP	4
12	1011611	BOLT-HEX: .50 X 3.00 NC GR5 ZP	4
13	1027461	NUT-TOPLOCK: .50 NC GR5 ZP	8
14	1020685	WASHER-FLAT: 1.00	4
15	56718	ROD-THREADED ZP	2
16	1016944	PIN-COTTER: .25 X 2.00 ZP	4
17	1011620	NUT-HEX: .75 NC GR2 ZP	8
18	64154	SPROCKET-HALF 2.38 ZP (ROCK)	12
19	64162	WLDMT-UPPER FILLER	2
20	64161	WLDMT-LOWER FILLER	2
21	58322	HALF-DISC ZP	12
22	1011603	BOLT-HEX: .38 X 1.75 NC GR5 ZP	72
23	1016999	NUT-TOPLOCK .38 NC GR5 ZP	80
24	64159	CLAMP-FILLER PAINTED	4
25	64991	BOLT-HEX: .38 X 1.25 NC GR8 ZP	8
26	64438	CHAIN 5/8 X 56.5 X 2.38	6
27	1011828	WASHER-FLAT: .38 ZP	8
28	69245*	CLAMP-APRON	12
29	69246*	BOLT-HEX: .63 X 4.75 NC GR8 ZP	12
30	66498*	WASHER-FLAT: SAE .63 GR8 ZP	24
31	66500*	NUT-HEX: .63NC GR8 ZP	12

*INCLUDED IN ITEM 7

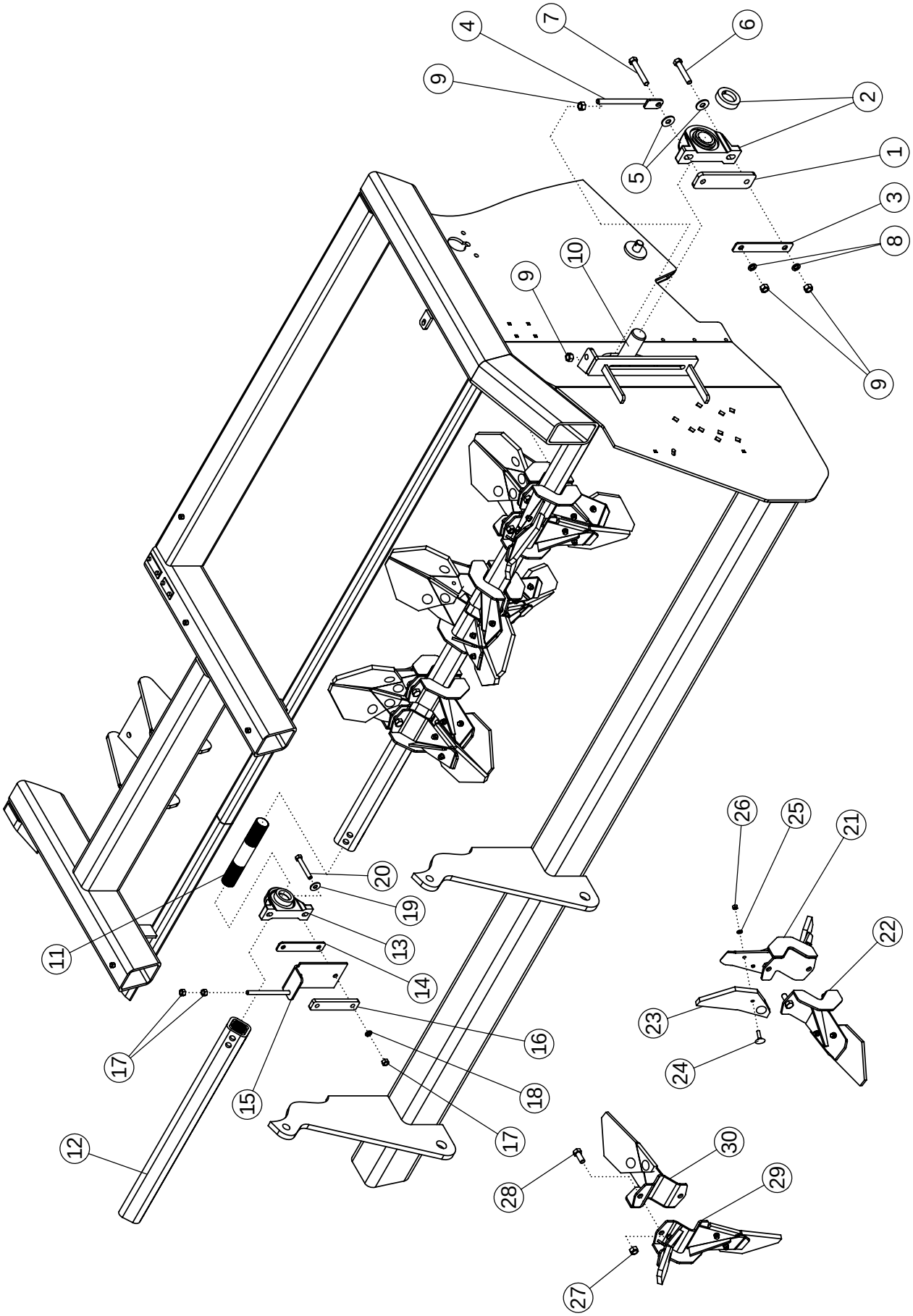
1
2
3
4
5
6
7
8
9
9
9
10
11
12
13
14
15
16
17
17
18
19
20
21
22
23
24
25
26
27
28
29
30

PADDLE SHAFT

ITEM	PART NO.	DESCRIPTION	QTY
1	57996	SHIM-BEARING	2
2	57997	BEARING-PILLOW 2"	2
3	57998	PLATE-BACKING	2
4	51365	TIGHTENER BOLT	2
5	1013024	WASHER-FLAT: .63 ZP	4
6	1014000	BOLT-HEX: .63 X 3.50 NC GR5 ZP	2
7	1016726	BOLT-HEX: .63 X 4.00 NC GR5 ZP	2
8	1011813	WASHER-LOCK: .63 ZP	4
9	1011578	NUT-HEX: .63 NC GR2 ZP	8
10	58027	WLDMT-PADDLE SHAFT LH	1
11	57196	SHAFT-STUB #7	1
12	58028	WLDMT-PADDLE SHAFT RH	1
13	52405	BEARING-PILLOW 1-3/4"	1
14	50564	PLATE	1
15	56737	WLDMT-ROD ZP	1
16	50305	SPACER-BEARING	1
17	1011577	NUT-HEX: .50 NC GR2 ZP	4
18	1011581	WASHER-LOCK: .50 ZP	2
19	1014443	WASHER-FLAT: .50 ZP	2
20	1011612	BOLT-HEX: .50 X 3.50 GR5 ZP	2
21	50719	WLDMT - PADDLE DOUBLE LH	6
22	50720	WLDMT - PADDLE SINGLE LH	6
23	51562	PADDLE-RUBBER	36
24	1030779	BOLT-ELEVATOR:.38 X 1.50 NC ZP	72
25	1011586	WASHER-LOCK: .38 ZP	72
26	1011576	NUT-HEX: .38 NC GR2 ZP	72
27	1016595	NUT-TOPLOCK: .63 NC GR5 ZP	24
28	1014349	BOLT-HEX: .63 X 1.50 NC GR5 ZP	24
29	50722	WLDMT - PADDLE DOUBLE RH	6
30	50721	WLDMT - PADDLE SINGLE RH	6

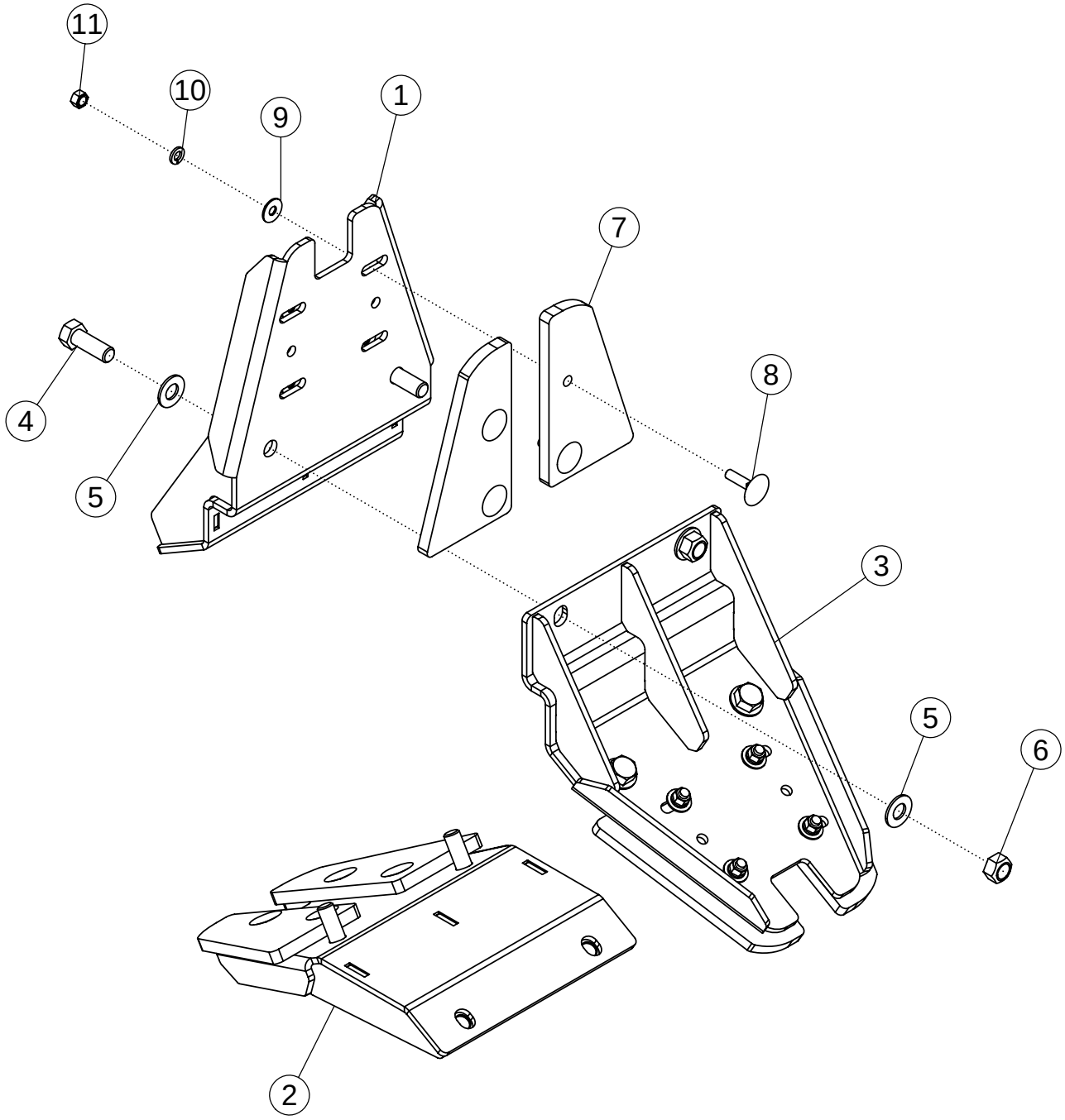
11
10
9
1
7
4
5
8
3
5
6
2

PLASTIC PADDLE ASSEMBLY (OPTIONAL)

ITEM	PART NO.	DESCRIPTION	QTY
1	69639	WLDMT-PADDLE 1	1
2	69642	WLDMT-PADDLE 2	1
3	69645	WLDMT-PADDLE 3	1
4	1013918	BOLT-HEX .63 X 1.750 NC GR5 ZP	6
5	1013004	WASHER-FLAT: SAE .63 ZP	12
6	1016595	NUT-TOPLOCK: .63 NC GR5 ZP	6
7	69398	PADDLE-PLASTIC	6
8	1030779	BOLT-ELEVATOR:.38 X 1.50 NC ZP	12
9	1011828	WASHER-FLAT .38 ZP	12
10	1011586	WASHER-LOCK: .38 ZP	12
11	1011576	NUT-HEX: .38 NC GR2 ZP	12

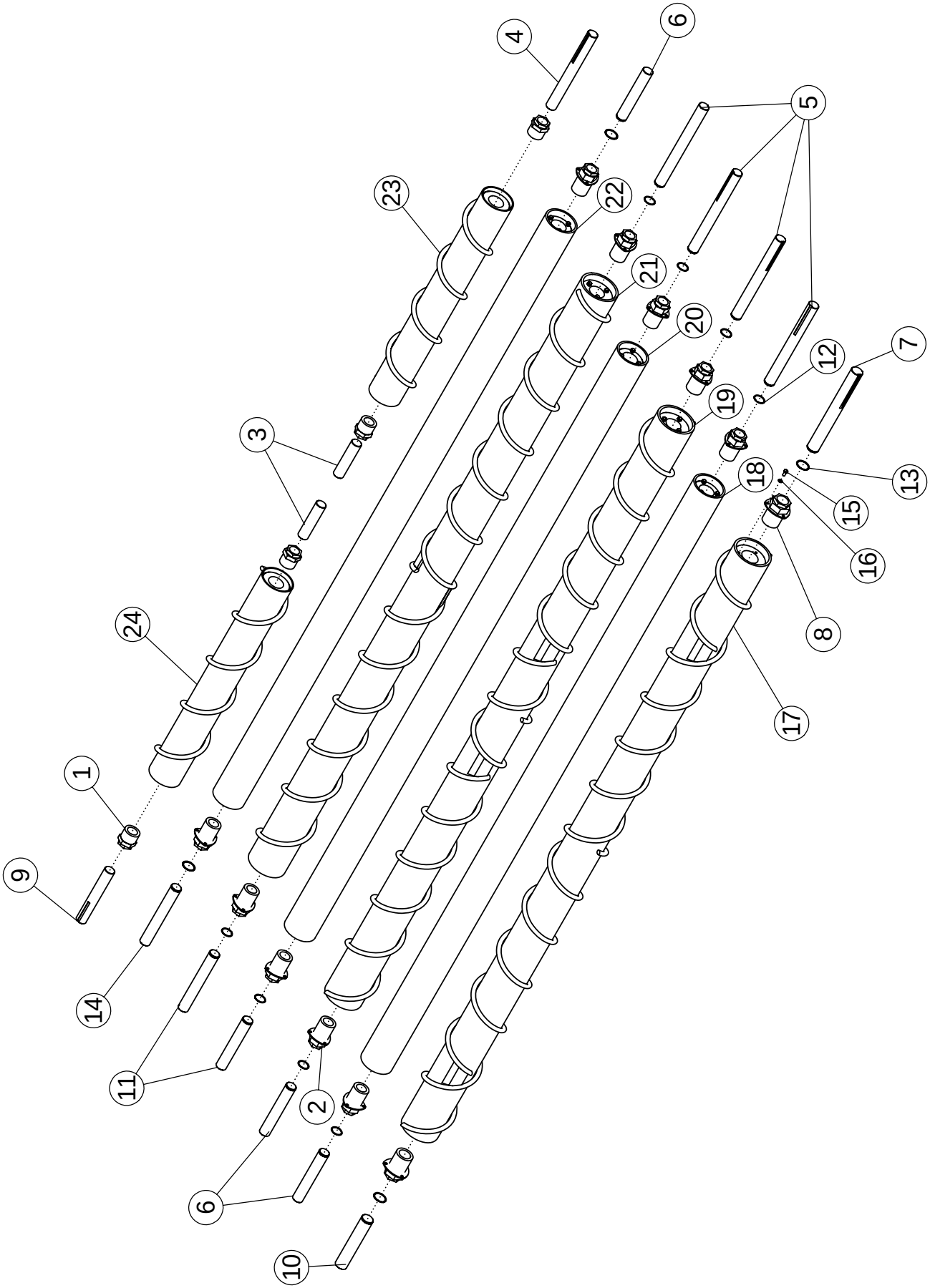
4
6
5
23
22
21
20
12
7
19
3
18
13
15
16
24
8
17
1
9
14
11
2
6
10

CLEANING ROLLS

ITEM	PART NO.	DESCRIPTION	QTY
		PARTS COMMON TO ALL ROLLS	
1	58459	HUB-TRANTORQUE 1.75	4
2	64163	HUB-TRANTORQUE 1.75 X 3.38	10
3	59471	SHAFT-STUB-#7 ROLL-RH, LH-IDLER	2
4	58759	SHAFT-#7 LH ROLL-DRIVE END	1
5	64177	SHAFT-DRIVE #2,3,4,5	4
6	64179	SHAFT-IDLER #2,3,4,6	3
7	64181	SHAFT-#1 DRIVE END	1
8	64165	HUB-TRANTORQUE 2.00 X 3.38	2
9	58761	SHAFT-#7 RH ROLL-DRIVE END	1
10	64182	SHAFT-#1 IDLER END	1
11	64180	SHAFT-REVERSE #4 RH	2
12	64184	RING-RETAINING 1.75	10
13	64185	RING-RETAINING 2.00	2
14	64178	SHAFT-#5,6	1
15	1011599	BOLT-HEX: .38 X .75 NC GR5 ZP	36
16	1011586	WASHER-LOCK: .38 ZP	36
		NUMBER ONE ROLL (COMPLETE)	
17	58999	ROLL-SPIRAL-STANDARD	1
	59011	ROLL-SPIRAL-POLY COATED	
	58966	ROLL-SPIRAL-HARDENED	
		NUMBER TWO ROLL (COMPLETE)	
18	58969	ROLL-5.5" SMOOTH-STANDARD	1
	59016	ROLL-5" SMOOTH-POLY COATED	
		NUMBER THREE ROLL (COMPLETE)	
19	59000	ROLL-SPIRAL-STANDARD	1
	59013	ROLL-SPIRAL-POLY COATED	
	58977	ROLL-SPIRAL-HARDENED	

CONTINUED

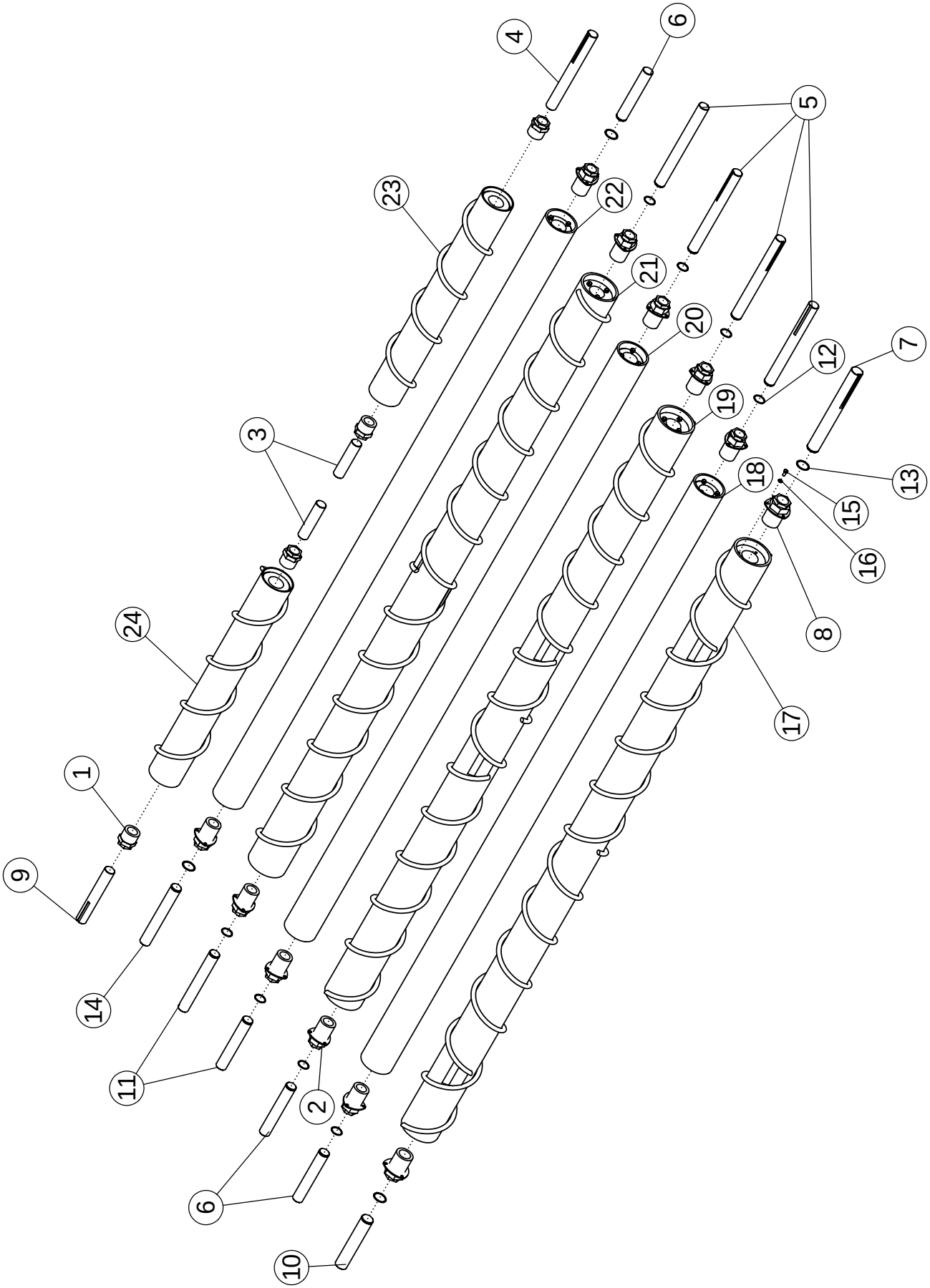
1
2
3
4
5
6
7
8
9
10
11
12
13
14
15
16
17
18
19
20
21
22
23
24

CLEANING ROLLS (CONTINUED)

ITEM	PART NO.	DESCRIPTION	QTY
		NUMBER FOUR ROLL (COMPLETE)	
20	62764	ROLL-5.5" SMOOTH-STANDARD	1
	62765	ROLL-5" SMOOTH-POLY COATED	
		NUMBER FIVE ROLL (COMPLETE)	
21	59001	ROLL-SPIRAL-STANDARD	1
	59015	ROLL-SPIRAL-POLY COATED	
	58992	ROLL-SPIRAL-HARDENED	
		NUMBER SIX ROLL (COMPLETE)	
22	58989	ROLL-5.5" SMOOTH-STANDARD	1
	59017	ROLL-SPIRAL-POLY COATED	
		NUMBER SEVEN ROLL - - LEFT HAND (COMPLETE)	
23	62193	ROLL-SPIRAL-POLY	1
	59535	ROLL-SPIRAL	
		NUMBER SEVEN ROLL - - RIGHT HAND (COMPLETE)	
24	62195	ROLL-SPIRAL-POLY	1
	59536	ROLL-SPIRAL	

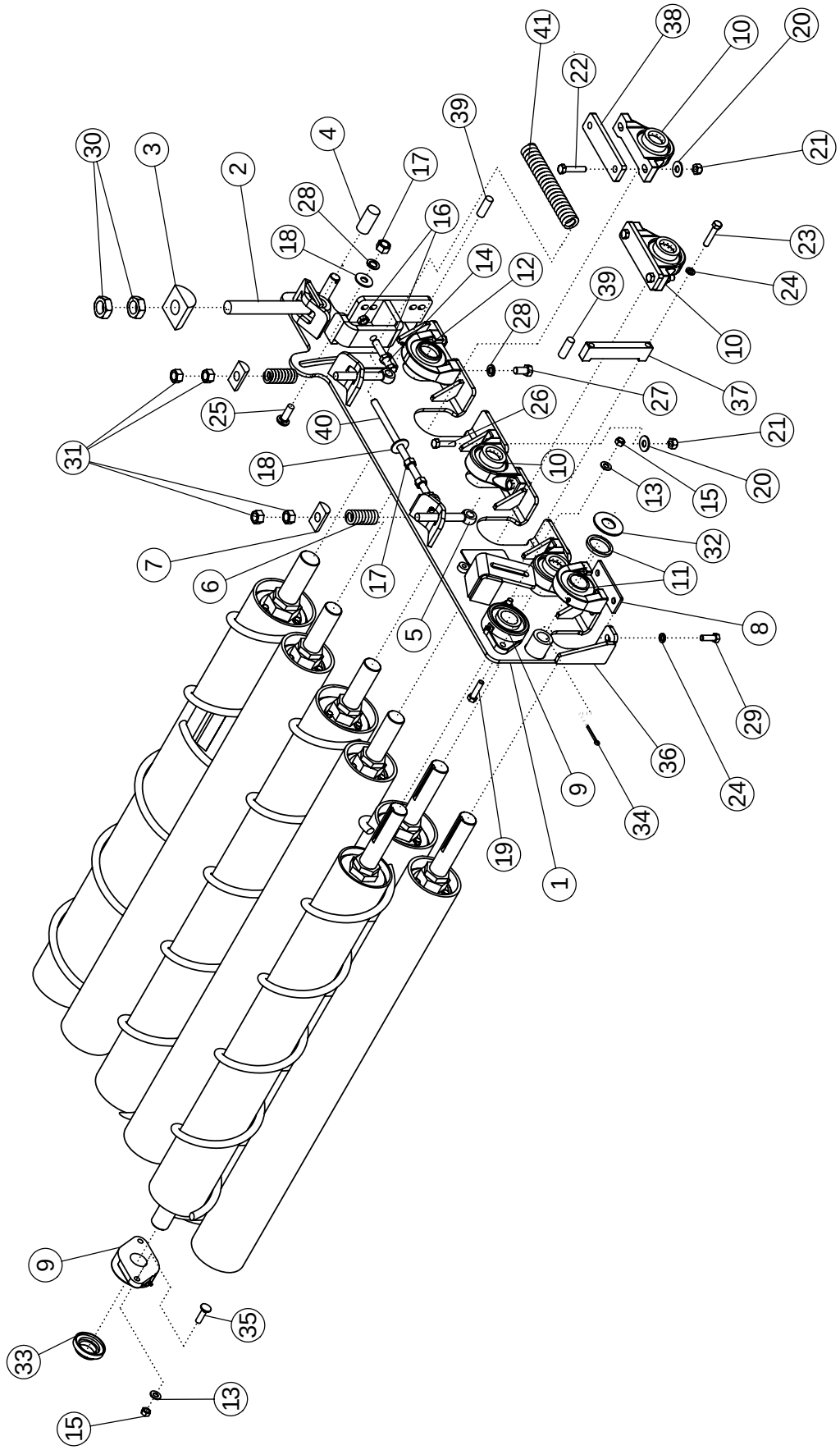
41
38
10
20
22
39
21
4
30
3
17
2
28
16
23
18
14
12
24
39
28
10
37
27
26
25
40
21
31
18
10
20
15
13
32
7
6
17
11
5
8
29
36
24
9
34
19
1
9
35
33
13
15

CLEANING ROLL MOUNTING PACKAGE

ITEM	PART NO.	DESCRIPTION	QTY
1	58907	WLDMT-MOUNT RH	1
	58906	WLDMT-MOUNT LH (NOT SHOWN)	1
2	56813	BOLT-EYEBOLT: 1.25 X 10.5 ZP	2
3	56679	HALF ROUND 3.0" ZP	2
4	56676	ROD ZP	2
5	56814	BOLT-EYEBOLT: .75 X 6.00 ZP	4
6	57877	SPRING 3.00" (RIGHT SIDE ONLY)	2
7	56680	HALF ROUND 1.50" ZP	4
8	57992	SHIM-BEARING	2
9	62134	BEARING-FLANGE 1-3/4"	4
10	52405	BEARING-PILLOW 1-3/4"	8
	64466	PILLOW BLOCK BEARING 1-3/4" STL (ROCK ONLY)	
11	62135	BEARING 1.750 TAPPED BASE	2
12	62136	BEARING 2.000 TAPPED BASE	2
13	1011584	WASHER-FLAT: SAE .50 ZP	4
14	1032273	BOLT-TAP: .63 X 3.50 NC GR5 ZP	2
15	1027461	NUT-TOPLOCK: .50 NC GR5 ZP	8
16	1026259	NUT-JAM: .63 NC GR2 ZP	4
17	1011578	NUT-HEX: .63 NC GR2 ZP	8
18	1013024	WASHER-FLAT: .63 ZP	4
19	1011609	BOLT-HEX: .50 X 2.00 NC GR5 ZP	4
20	59104	WASHER-FLAT: .56 GR8 ZP	16
21	59105	NUT-TOPLOCK: .56 NC GR8 ZP	16
22	59103	BOLT-HEX: .56 X 2.50 NC GR8 ZP	8
23	1011610	BOLT-HEX: .50 X 2.50 NC GR5 ZP	4
24	1011581	WASHER-LOCK: .50 ZP	8
25	58635	BOLT-CRG: .63 X 2.00 NC GR5 ZP	2
26	59102	BOLT-HEX: .56 X 2.00 NC GR8 ZP	8
27	1032509	BOLT-HEX: .63 X 1.25 NC GR5 ZP	4
28	1011813	WASHER-LOCK: .63 ZP	6
29	1011607	BOLT-HEX: .50 X 1.50 NC GR5 ZP	4
30	62511	NUT-JAM: 1.25 NC GR2 ZP	4
31	1011620	NUT-HEX: .75 NC GR2 ZP	8
32	1013431	WASHER-FLAT: 1.25 ZP	2
33	52383	LOCK PROTECTOR 1-3/4"	2
34	1016727	PIN-COTTER: .25 X 2.50 NP	2
35	59517	BOLT-CRG: .50 X 1.75 NC GR5 ZP	4
36	56682	WLDMT-SLIDE MOUNT RH	1
	56681	WLDMT-SLIDE MOUNT LH (NOT SHOWN)	1
37	56677	WLDMT-HOLDER	2
38	57792	SHIM-BEARING	4
39	56675	ROD ZP	4
40	56815	WLDMT-BOLT & NUT ZP	2
41	57878	SPRING 10"	2

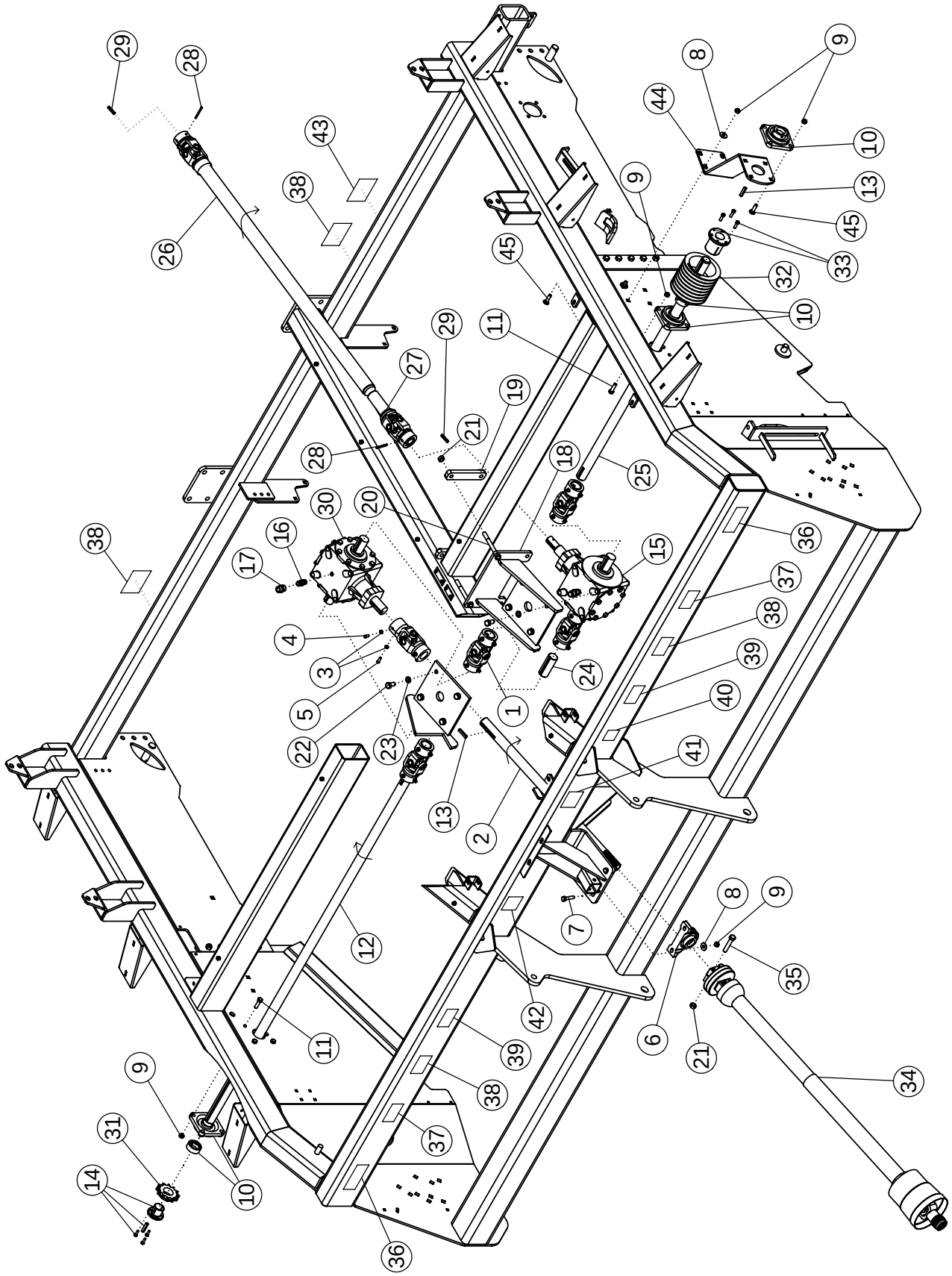
29
28
43
38
26
9
8
44
10
13
45
33
32
10
45
9
11
29
27
19
21
28
18
25
30
20
16
17
38
36
15
37
38
4
3
39
24
5
1
40
22
23
41
13
2
12
7
8
9
35
42
11
39
6
21
34
38
9
37
31
10
14
36

MAIN DRIVE

ITEM	PART NO.	DESCRIPTION	QTY
1	53642	U-JOINT	5
2	56775	SPLINE SHAFT	1
3	1013519	NUT-JAM: .38 NC GR2 ZP	20
4	1030708	SCREW-SET: C-P .38 X 0.75 NC GR8	10
5	1030709	SCREW-SET: C-P .38 X 1.00 NC GR8	10
6	52405	BEARING-PILLOW 1.75	1
7	1017708	BOLT-HEX: .50 X 2.25 NC GR5 ZP	2
8	1014443	WASHER-FLAT: .50 ZP	6
9	1027461	NUT-TOPLOCK: .50 NC GR5 ZP	18
10	52404	BEARING-FLANGE 1.75	2
11	1011608	BOLT-HEX: .50 X 1.75 NC GR5 ZP	8
12	56759	SHAFT-DRIVE 8R	1
13	50152	KEY .38 X .38 X 2.00	11
14	53641	HUB P1 1.75 (WITH KEY)	1
15	63847	GEARBOX-PRAIRIE (1.35:1) BLACK	1
16	69128	FTG-ADAPTER: 8MP-8MP 4" LONG	2
17	55730	FTG-ADAPTER: 8FP-8FP	2
18	62204	WLDMT - MOUNT GEARBOX	1
19	62544	BAR - BOLTING	2
20	1032504	BOLT-HEX: .63 X 6.00 NC GR8 ZP	4
21	1016595	NUT-TOPLOCK: .63 NC GR5 ZP	6
22	1032509	BOLT-HEX: .63 X 1.25 NC GR5 ZP	8
23	1011813	WASHER-LOCK: .63 ZP	8
24	57934	SHAFT-DRIVE LH SHORT	1
25	58336	SHAFT-DRIVE LH LONG	1
26	57924	SHAFT-DRIVE: 72.50	1
27	57925	COUPLER-DRIVE BLACK	1
28	58489	PIN-ROLL: .25 X 2.75 NP	2
29	58396	KEY .31 X .31 X 1.75	2
30	63846	GEARBOX-PRAIRIE (1.81:1) BLACK	1
31	62034	SPROCKET H80-P12	1
32	57680	SHEAVE 8B62Q	1
	57681	SHEAVE 8B68Q	
	57679	SHEAVE 8B56Q	
33	55123	HUB Q2 1.75	1
34	51481	PTO-CV 1.75" WEASLER (HRV)	1
	51480	PTO-CV 1.38" WEASLER (HRV)	
35	1030704	BOLT-HEX: .63 X 3.25 NC GR5 ZP	2
36	64617	DECAL-DANGER	2
37	52334	DECAL-WARNING	2
38	52338	DECAL-DANGER	4

CONTINUED

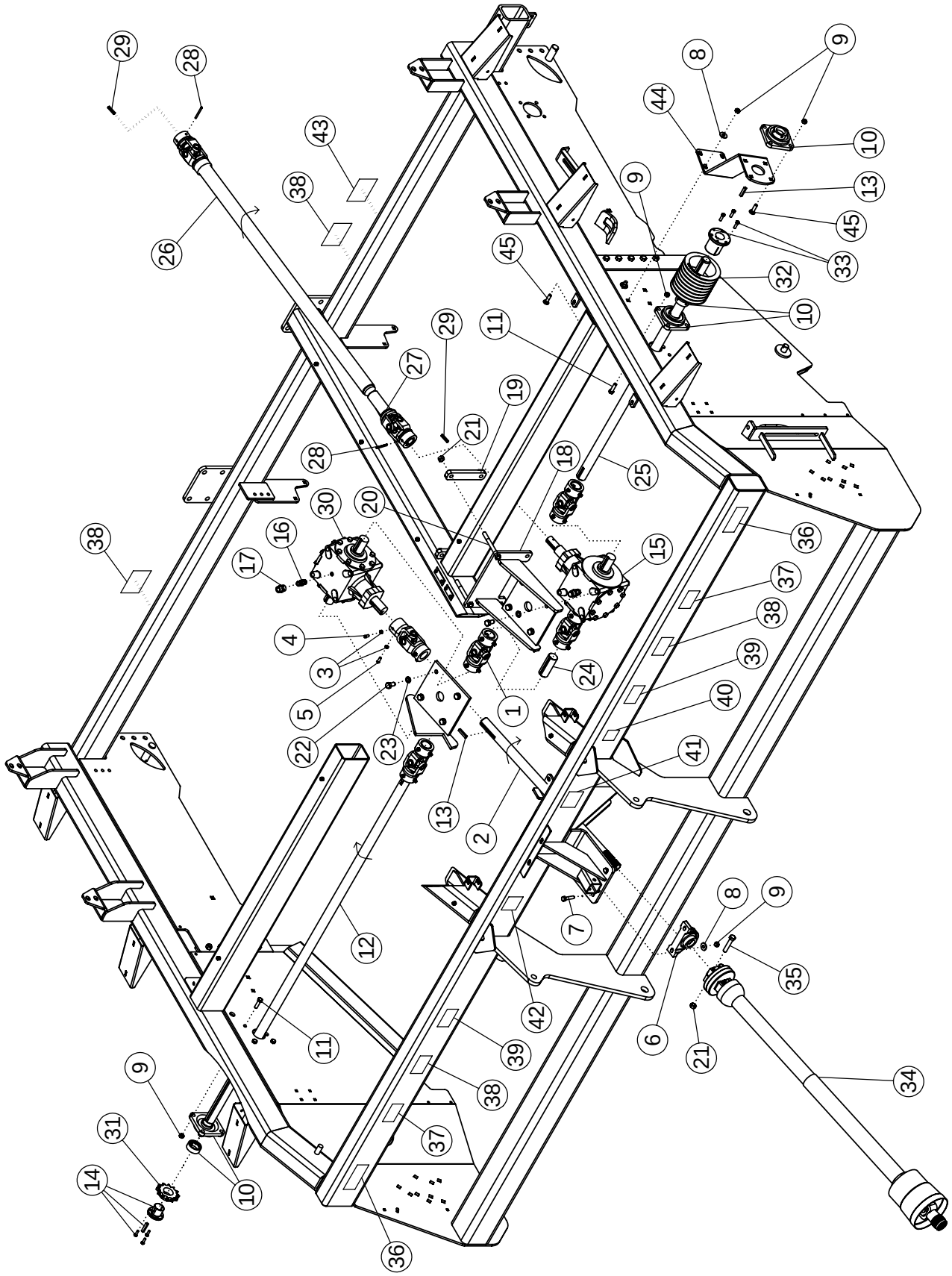
29
28
43
38
26
9
8
44
10
13
45
33
32
10
45
11
29
27
19
21
28
18
25
30
20
16
17
15
36
37
38
39
40
41
4
3
5
22
23
1
24
13
2
12
11
7
8
9
35
6
21
34
42
39
38
37
36
9
31
14
10

MAIN DRIVE (CONTINUED)

ITEM	PART NO.	DESCRIPTION	QTY
39	52329	DECAL-DANGER	2
40	64616	DECAL-ENGAGE PTO	1
41	62964	DECAL-WARNING	1
42	53747	DECAL-DANGER	1
43	59614	DECAL-CAUTION	1
44	68111	BRACKET-BRACE BEARING	1
45	59517	BOLT-CRG: .50 X 1.75 NC GR5 ZP	8

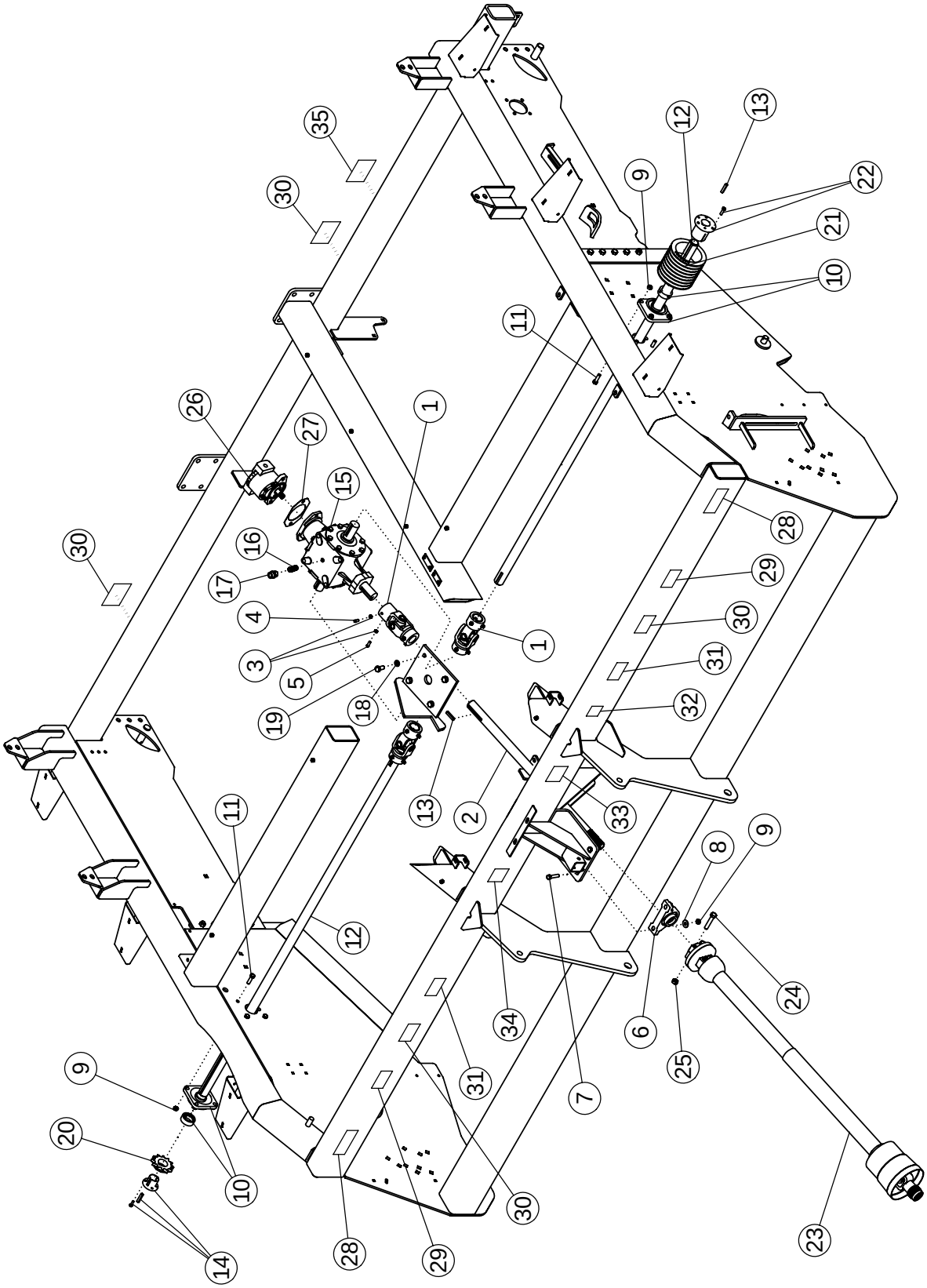
35
30
26
27
15
16
17
4
3
5
19
18
1
11
12
13
9
22
21
10
28
29
31
32
33
2
8
24
6
25
34
7
23
20
14

MAIN DRIVE: ONBOARD OPTION

ITEM	PART NO.	DESCRIPTION	QTY
1	53642	U-JOINT	3
2	56775	SPLINE SHAFT	1
3	1013519	NUT-JAM: .38 NC GR2 ZP	12
4	1030708	SCREW-SET: C-P .38 X .75 NC GR8	6
5	1030709	SCREW-SET: C-P .38 X 1.00 NC GR8	6
6	52405	BEARING-PILLOW 1.75	1
7	1017708	BOLT-HEX: .50 X 2.25 NC GR5 ZP	2
8	1014443	WASHER-FLAT: .50 ZP	2
9	1027461	NUT-TOPLOCK: .50 NC GR5 ZP	10
10	52404	BEARING-FLANGE 1.75	2
11	1011608	BOLT-HEX: .50 X 1.75 NC GR5 ZP	8
12	56759	SHAFT-DRIVE 8R	2
13	50152	KEY .38 X .38 X 2.00	7
14	53641	HUB P1 1.75 (WITH KEY)	1
15	62396	GEARBOX-PRAIRIE (1.81:1) PAINTED	1
16	69128	FTG-ADAPTER: 8MP-8MP 4" LONG	1
17	55730	FTG-ADAPTER: 8FP-8FP	1
18	1011813	WASHER-LOCK: .63 ZP	4
19	1032509	BOLT-HEX: .63 X 1.25 NC GR5 ZP	4
20	62034	SPROCKET H80-P12	1
21	57680	SHEAVE 8B62Q	1
	57681	SHEAVE 8B68Q	
	57679	SHEAVE 8B56Q	
22	55123	HUB Q2 1.75	1
23	51481	PTO-CV 1.75" WEASLER (HRV)	1
	51480	PTO-CV 1.38" WEASLER (HRV)	
24	1030704	BOLT-HEX: .63 X 3.25 NC GR5 ZP	2
25	1016595	NUT-TOPLOCK: .63 NC GR5 ZP	2
26	62153	PUMP-HYDRAULIC 5.3	1
27	63702	PLATE-ADAPTER SAE 'B' PUMP	1
28	64617	DECAL-DANGER	2
29	52334	DECAL-WARNING	2
30	52338	DECAL-DANGER	4
31	52329	DECAL-DANGER	2
32	64616	DECAL-ENGAGE PTO	1
33	62964	DECAL-WARNING	1
34	53747	DECAL-DANGER	1
35	59614	DECAL-CAUTION	1

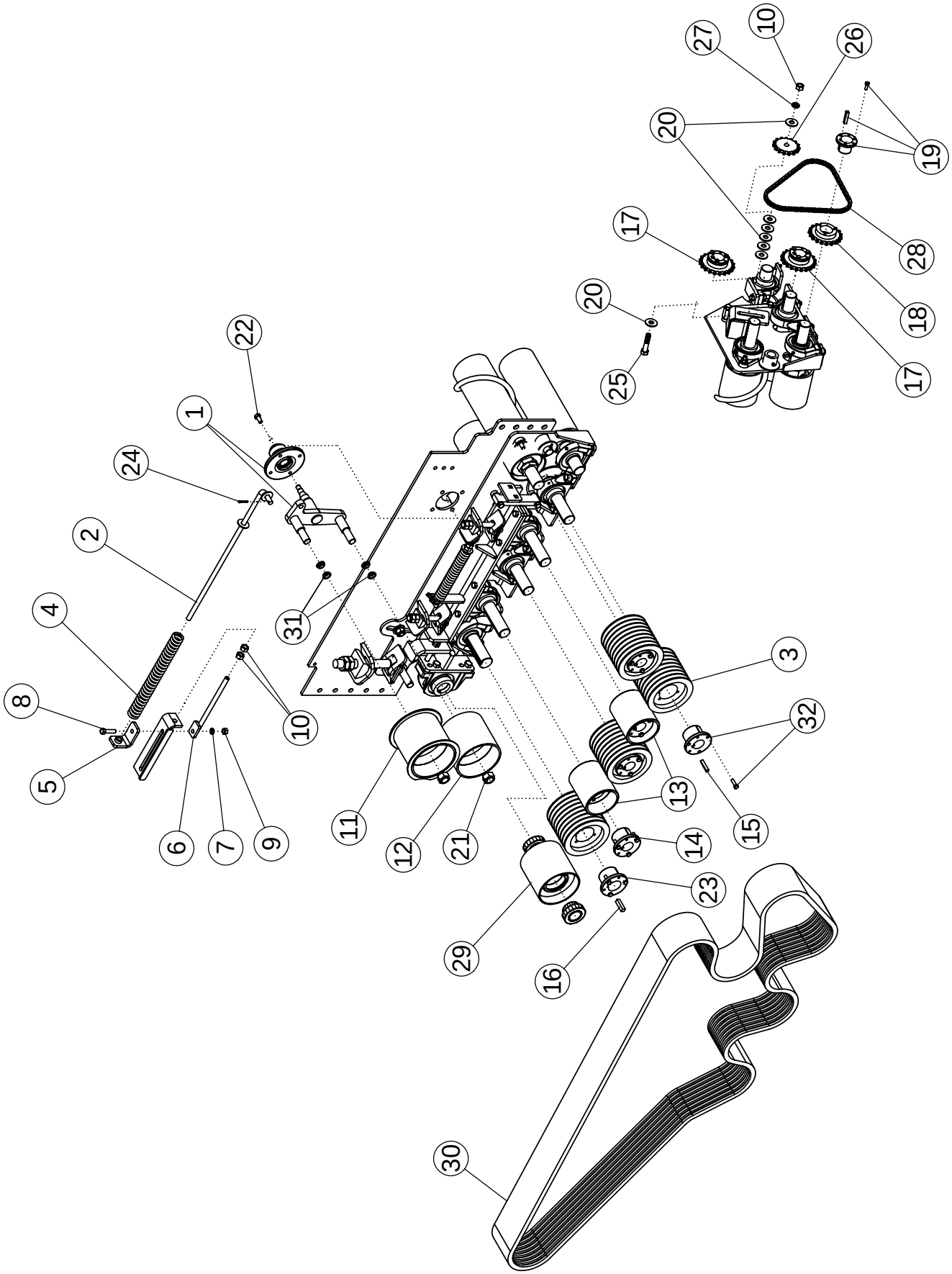
1
2
3
4
5
6
7
8
9
10
11
12
13
14
15
16
17
18
19
20
21
22
23
24
25
26
27
28
29
30
31
32

CLEANING ROLL DRIVE

ITEM	PART NO.	DESCRIPTION	QTY
1	56422	ASSY-SPINDLE & HUB	1
2	56711	ROD-PLATED	1
3	57680	SHEAVE 8B62Q	4
4	56853	SPRING	1
5	56708	HOLDER-PLATED	1
6	56707	ADJUSTMENT ROD ZP	1
7	1011581	WASHER-LOCK: .50 ZP	1
8	1011609	BOLT-HEX: .50 X 2.00 NC GR5 ZP	1
9	1011577	NUT-HEX: .50 NC GR2 ZP	1
10	1011578	NUT-HEX: .63 NC GR2 ZP	3
11	58295	WLDMT-IDLER	1
12	56425	TIGHTENER IDLER	1
13	56398	WLDMT-PULLEY 8R	2
14	50335	HUB Q1 1.75	2
15	50152	KEY .38 X .38 X 2.00	5
16	57995	KEY .50 X .50 X 2.00	1
17	53649	SPROCKET H60-P20	2
18	62106	SPROCKET H60-P19	1
19	53641	HUB P1 1.75 (WITH KEY)	3
20	1013024	WASHER-FLAT: .63 ZP	7
21	1016969	NUT-TOPLOCK: 1.00 NC GR5 ZP	2
22	1015558	BOLT-HEX: .50 X 1.00 NF GR5 ZP	4
23	58248	HUB Q2 2.00	1
24	1019827	PIN-COTTER: .19 X 1.00 NP	1
25	1011624	BOLT-HEX: .63 X 3.00 NC GR5 ZP	1
26	53651	7348-2 SPROCKET IDLER	1
27	1011813	WASHER-LOCK: .63 ZP	1
28	58165	CHAIN-ROLLER 60H-1R-052	1
29	56409	ASSY-IDLER PULLEY 8R	1
30	64474	V-BELT 8B195	1
31	50940	BUSHING	4
32	55123	HUB Q2 1.75	3

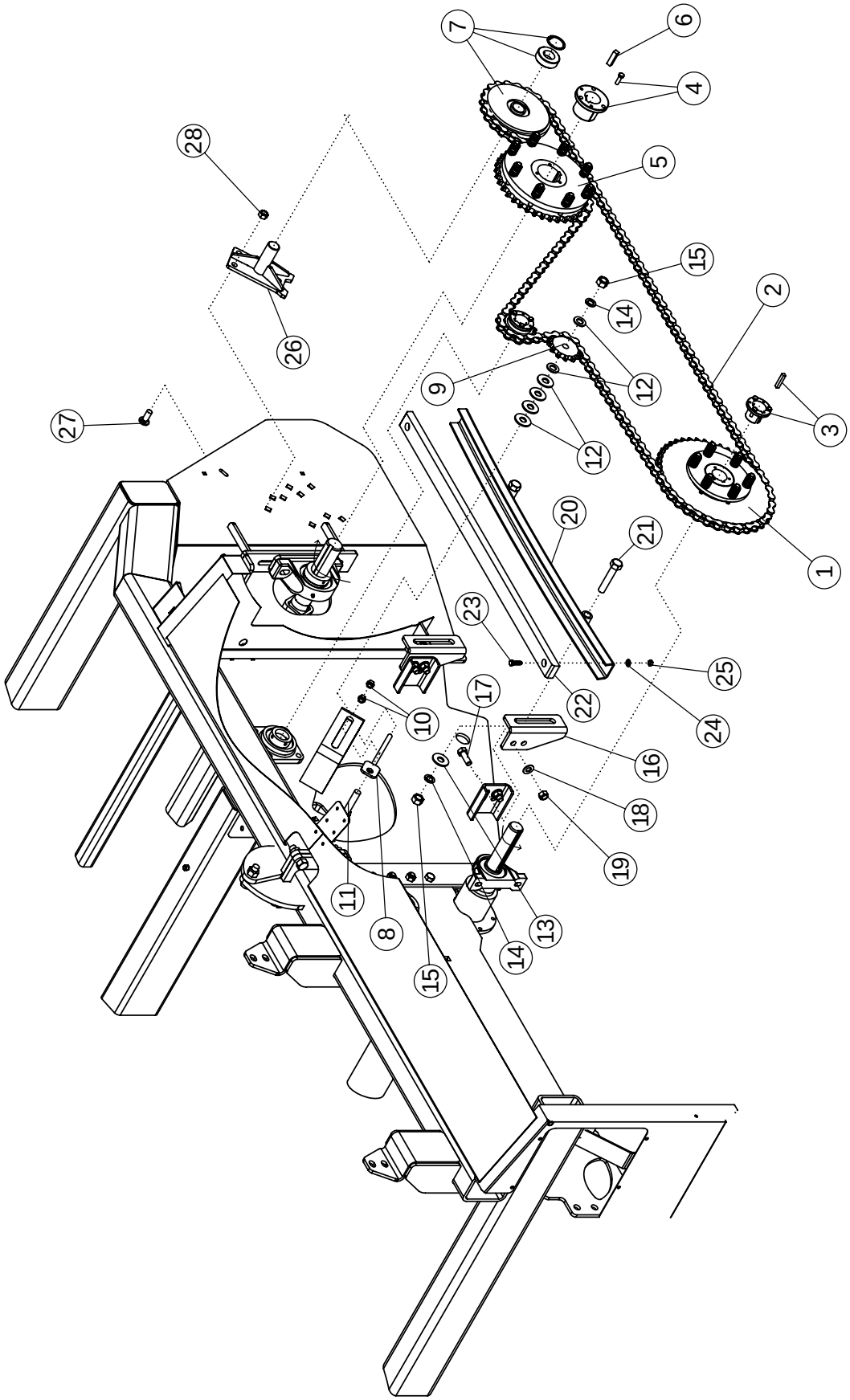
7
6
4
28
5
15
2
14
26
9
12
3
27
12
20
21
1
23
25
22
17
10
24
16
18
19
11
8
13
14
15

APRON/PADDLE SHAFT DRIVE

ITEM	PART NO.		QTY
1	58335	SPROCKET-CLUTCH 80P45 PRESET	1
2	63578	CHAIN-ROLLER 80H-1R-176	1
3	53641	HUB P1 1.75 (WITH .38 X 2.00 KEY)	1
4	50385	HUB Q1 2.00	1
5	57993	SPROCKET-CLUTCH 80Q36 PRESET	1
	69630	SPROCKET-CLUTCH 80Q51 PRESET (PLASTIC PADDLE)	
6	57995	KEY .50 X .50 X 2.00	1
7	56851	SPROCKET-IDLER H8025 X 1.44	1
8	56864	WLDMT-ADJUSTER	1
9	56334	SPROCKET-IDLER 8012	1
10	1011577	NUT-HEX: .50 NC GR2 ZP	2
11	1032271	BOLT-HEX: .75 X 3.25 NC GR5 ZP	1
12	1012634	WASHER-FLAT: SAE .75 ZP	6
13	1030702	WASHER-FLAT: .75 ZP	2
14	1012061	WASHER-LOCK: .75 ZP	3
15	1011620	NUT-HEX: .75 NC GR5 ZP	3
16	57804	MOUNT	2
17	1013918	BOLT-HEX: .63 X 1.75 NC GR5 ZP	4
18	1013004	WASHER-FLAT: SAE .63 ZP	4
19	1016595	NUT-TOPLOCK: .63 NC GR5 ZP	4
20	57853	WLDMT-SUPPORT	1
21	1011625	BOLT-HEX: .75 X 4.00 NC GR5 ZP	2
22	57827	SLIDE-CHAIN	1
23	1011601	BOLT-HEX: .38 X 1.25 NC GR5 ZP	2
24	1014608	WASHER-FLAT: SAE .38 ZP	2
25	1016999	NUT-TOPLOCK: .38 NC GR5 ZP	2
26	69625	WLDMT-IDLER PADDLE SHAFT	1
27	72063	BOLT-CRG: .63 X 1.50 NC GR5 ZP	3
28	1016595	NUT-TOPLOCK: .63 NC GR5 ZP	3

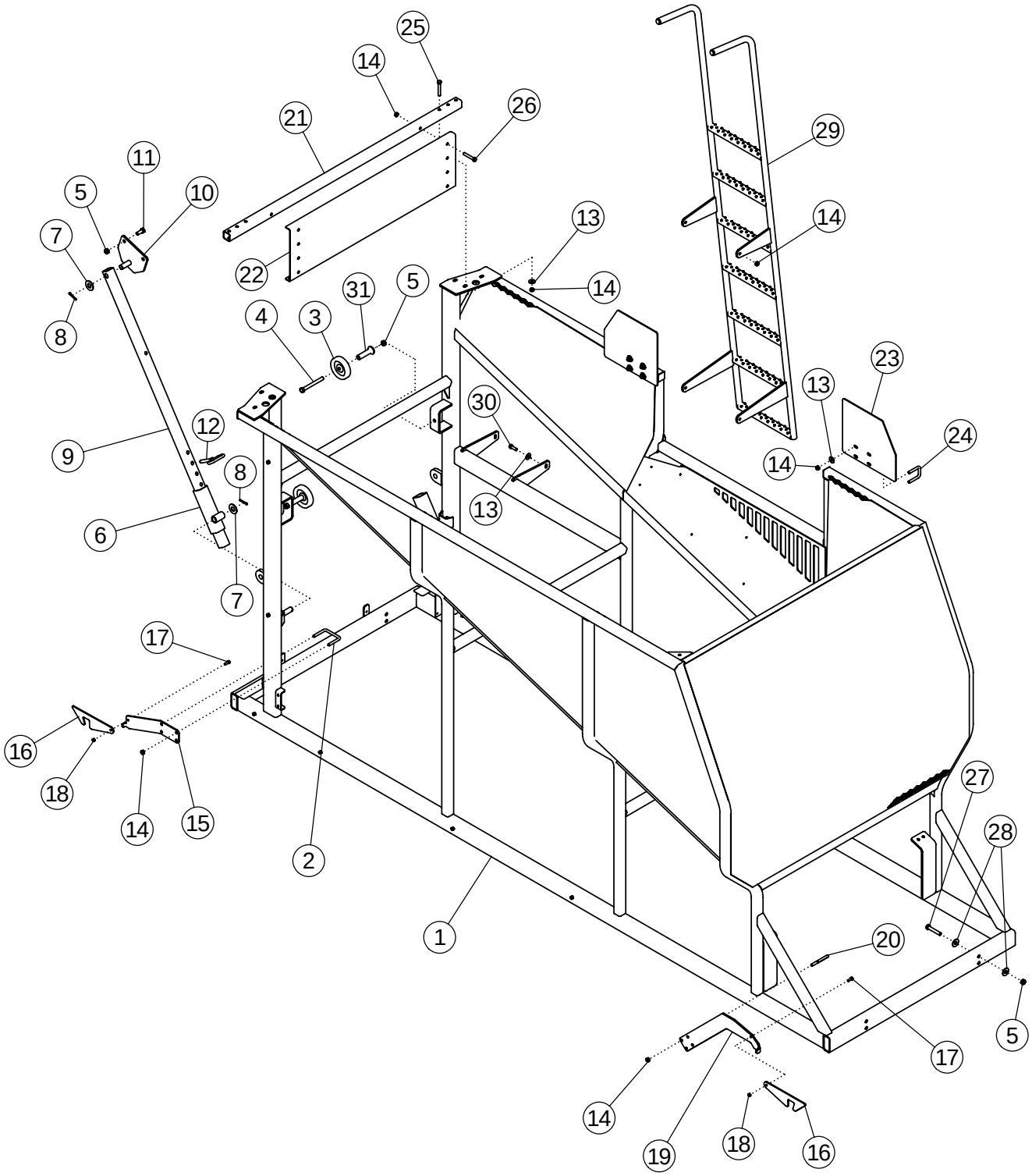
25
14
21
26
29
11
5
10
7
13
14
22
31
5
14
4
3
8
23
13
30
12
24
9
8
14
13
6
7
17
16
18
27
14
15
28
2
1
20
5
17
14
19
18
16

TANK

ITEM	PART NO.	DESCRIPTION	QTY
1	68058	WLDMT-TANK SCRUB 8R	1
2	54653	U-BOLT: .50 X 3.25 X 4.00 X 3.25	2
3	53825	BOGIE WHEEL 5"	2
4	1013068	BOLT-HEX: .63 X 6.00 NC GR5 ZP	2
5	1016595	NUT-TOPLOCK: .63 NC GR5 ZP	14
6	54788	WLDMT-LOCK SLIDE	2
7	1020685	WASHER-FLAT: 1.00 ZP	4
8	1016944	PIN-COTTER: .25 X 2.00 ZP	4
9	56836	TUBE-LOCK	2
10	54785	WLDMT-LOCK BRACKET	2
11	1014349	BOLT-HEX: .63 X 1.50 NC GR5 ZP	4
12	1030947	PIN-HITCH: .63 X 4.00 ZP W/HAIRPIN	2
13	1014443	WASHER-FLAT: .50 ZP	16
14	1027461	NUT-TOPLOCK: .50 NC GR5 ZP	26
15	64573	PLATE-LATCH RH	1
16	51332	LATCH-DOOR	2
17	1011600	BOLT-HEX: .38 X 1.00 NC GR5 ZP	2
18	1016999	NUT-TOPLOCK: .38 NC GR5 ZP	2
19	64957	PLATE-LATCH LH	1
20	65658	U-BOLT: .50 X 3 X 2.06 X 3	2
21	64749	TUBE-STRIKER	1
22	64574	PLATE-STRIKER	1
23	57917	PLATE-EXTENSION	2
24	53677	U-BOLT: .50 X 3 X 2.00 X 3	4
25	1017719	BOLT-HEX: .50 X 3.25 NC GR5 ZP	4
26	1011611	BOLT-HEX: .50 X 3.00 NC GR5 ZP	2
27	1014000	BOLT-HEX: .63 X 3.50 NC GR5 ZP	8
28	1013024	WASHER-FLAT: .63 ZP	16
29	64739	ASSY-LADDER & DECAL	1
30	1011607	BOLT-HEX: .50 X 1.50 NC GR5 ZP	4
31	64192	STAND-OFF 4.00	2

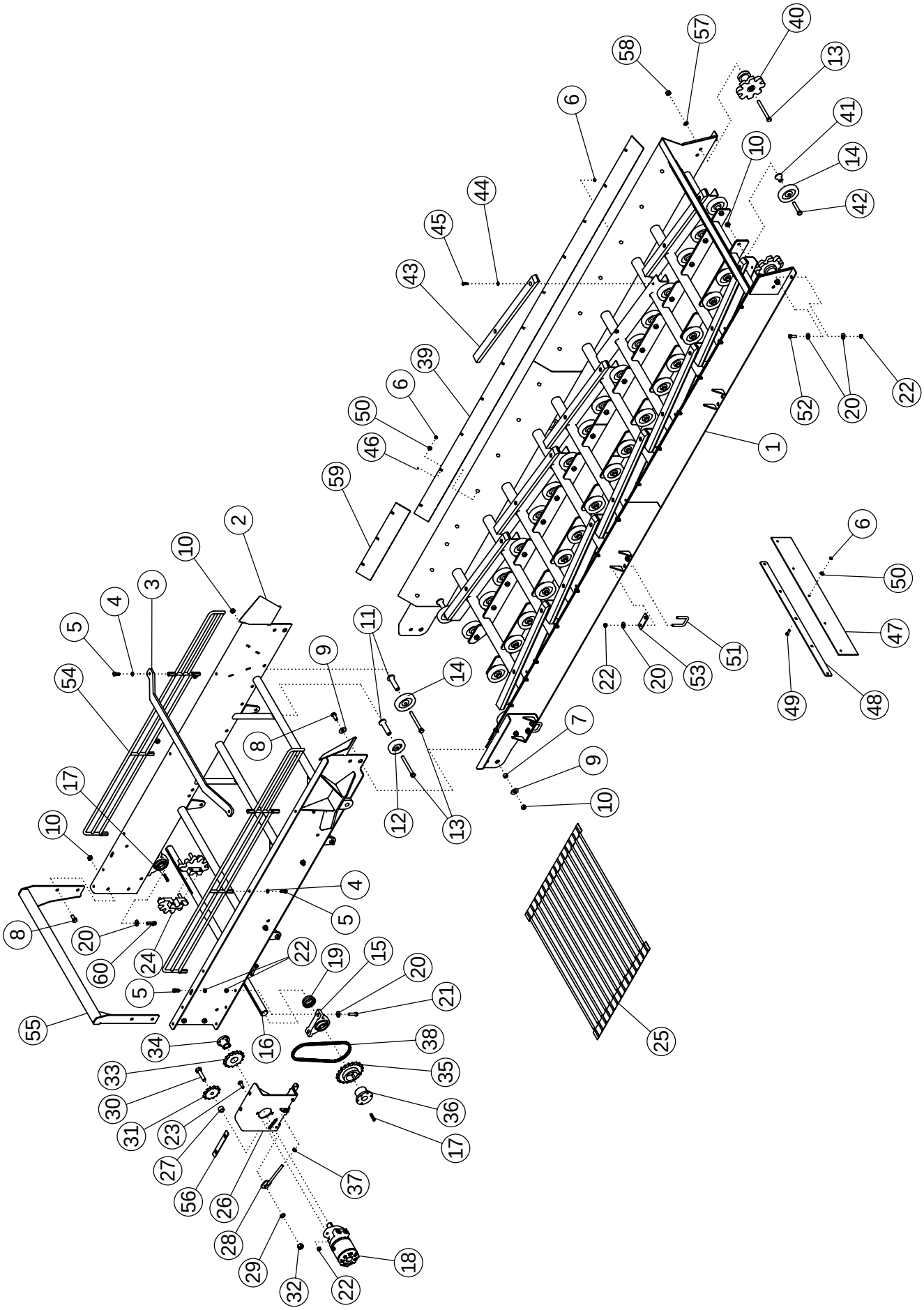
1
2
3
4
5
6
7
8
9
10
11
12
13
14
15
16
17
18
19
20
21
22
23
24
25
26
27
28
29
30
31
32
33
34
35
36
37
38
39
40
41
42
43
44
45
46
47
48
49
50
51
52
53
54
55
56
57
58
59
60

ELEVATOR AND BOOM ASSEMBLY

ITEM	PART NO.	DESCRIPTION	QTY
1	64960	WLDMT-ELEVATOR 8R	1
2	53450	WLDMT-ELEVATOR BOOM	1
3	54803	CROSS BRACE-BOOM	1
4	1011581	WASHER-LOCK: .50 ZP	8
5	1011606	BOLT-HEX: .50 X 1.25 NC GR5 ZP	10
6	1016999	NUT-TOPLOCK: .38 NC GR5 ZP	53
7	53449	SLEEVE-HINGE	2
8	1014349	BOLT-HEX: .63 X 1.50 NC GR5 ZP	6
9	1013024	WASHER-FLAT: .63 ZP	4
10	1016595	NUT-TOPLOCK: .63 NC GR5 ZP	50
11	64192	STAND OFF: .63 X 4.00	12
12	53854	BOGIE WHEEL 4"	4
13	1013068	BOLT-HEX: .63 X 6.00 NC GR5 ZP	14
14	53825	BOGIE WHEEL 5"	40
15	52405	BEARING-PILLOW 1.75	2
16	68650	SHAFT-HEAD Ø1.75	1
17	50152	KEY .38 X .38 X 2.00	3
18	57686	MOTOR-HYDRAULIC 32.3IN^3/REV	1
19	52382	SEAL PROTECTOR 1.75	2
20	1014443	WASHER-FLAT: .50 ZP	26
21	1011609	BOLT-HEX: .50 X 2.00 NC GR5 ZP	26
22	1027461	NUT-TOPLOCK: .50 NC GR5 ZP	22
23	1011660	BOLT-CRG: .50 X 1.50 NC GR5 ZP	2
24	68659	SPROCKET-SPLIT 50MM	2
	68658	SPROCKET-SPLIT 56MM	
25	68073	BELT-50MM .50 X 42 X 261 LPR	1
	68072	BELT-56MM .50 X 42 X 233 LPR	
26	64627	WLDMT-REDUCTION MOUNT	1
27	58086	SPACER-CHAIN IDLER ZP	1
28	63876	TENSIONER ZP	1
29	1012061	WASHER-LOCK: .75 ZP	1
30	1012059	BOLT-HEX: .75 X 3.00 NC GR5 ZP	1
31	56334	SPROCKET-IDLER 8012	1
32	1011620	NUT-HEX: .75 NC	1
33	64155	SPROCKET H80-P15	1
34	53719	HUB P1 1.25	1
35	56650	SPROCKET H80-Q20	1
36	50335	HUB Q1 1.75	1
37	1011591	NUT-JAM: .50 NC ZP	2
38	64654	CHAIN-ROLLER 80H-1R-038	1
	64675	LINK OFFSET 80H	AR

CONTINUED

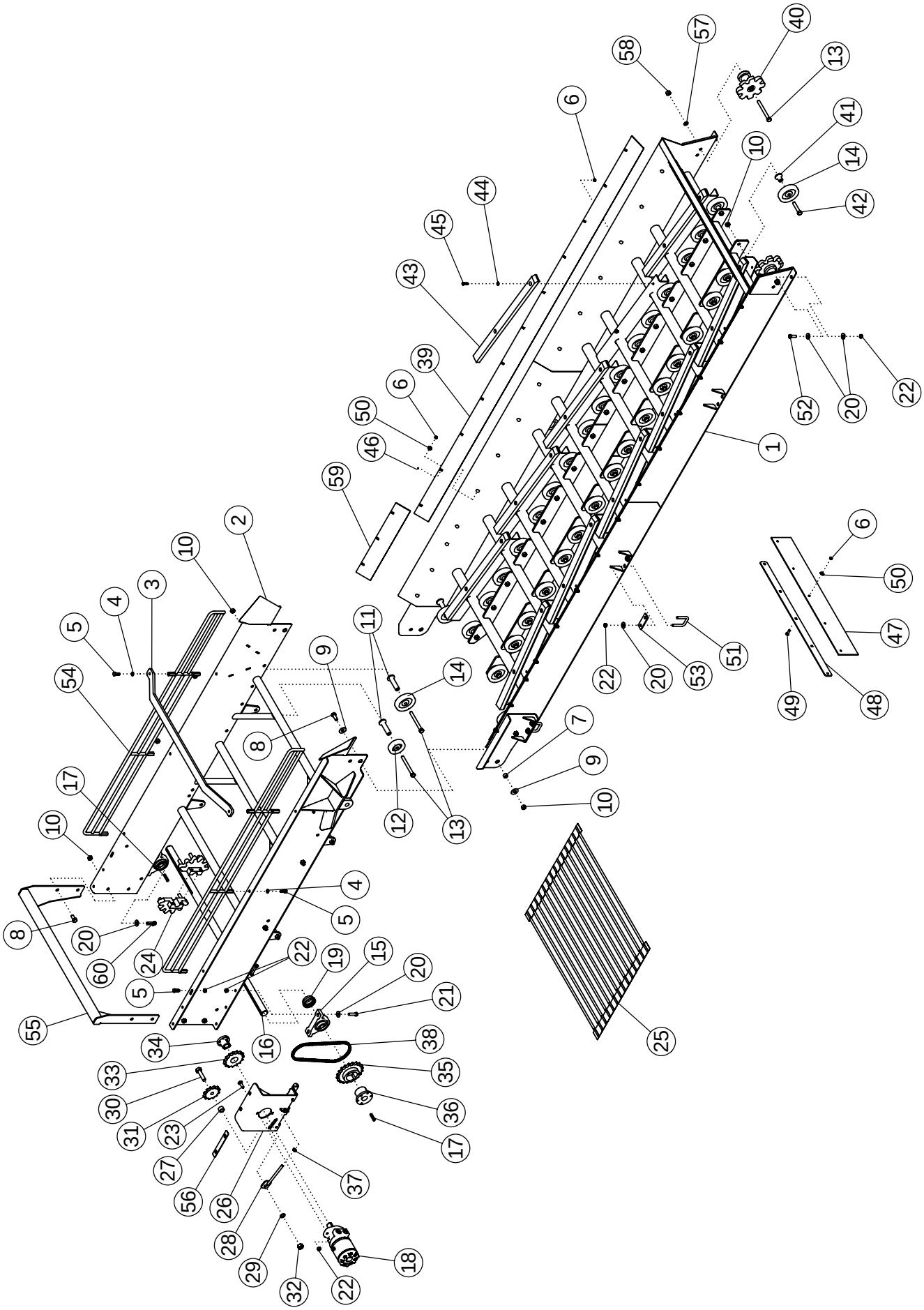
1
2
3
4
5
6
7
8
9
10
11
12
13
14
15
16
17
18
19
20
21
22
23
24
25
26
27
28
29
30
31
32
33
34
35
36
37
38
39
40
41
42
43
44
45
46
47
48
49
50
51
52
53
54
55
56
57
58
59
60

ELEVATOR AND BOOM ASSEMBLY (CONTINUED)

ITEM	PART NO.	DESCRIPTION	QTY
39	64550	BELT PROTECTOR	2
40	63813	SPROCKET-IDLER 50MM 10T	2
	54824	SPROCKET-IDLER 56MM	
41	58971	STAND OFF 1.50"	32
42	65825	BOLT-HEX: .63 X 3.25 NC GR5 ZP	32
43	56774	PLASTIC SLIDE	10
44	1014608	WASHER-FLT: SAE .38 ZP	20
45	1011601	BOLT-HEX: .38 X 1.25 NC GR5 ZP	20
46	1011599	BOLT-HEX: .38 X .75 NC GR5 ZP	28
47	64609	FLAP-ELEVATOR	1
48	64608	STRIP-BOLTING	1
49	1016362	BOLT-CRG: .38 X 1.25 NC GR5 ZP	5
50	1011828	WASHER-FLAT: .38 ZP	33
51	65658	U-BOLT: .50 X 3 X 2.06 X 3	6
52	1011607	BOLT-HEX: .50 X 1.50 NC GR5 ZP	2
53	64748	PLATE-ELEVATOR BACKING	4
54	64744	WLDMT-BOOM EXTENSION	2
55	64578	WLDMT-BOOM END SUPPORT	1
56	64732	PLATE-SHIM	AR
57	1011813	WASHER-LOCK: .63 ZP	2
58	1011578	NUT-HEX: .63 NC GR2 ZP	2
59	64965	BELT PROTECTOR	2
60	1011608	BOLT-HEX: .50 X 1.750 NC GR5 ZP	2

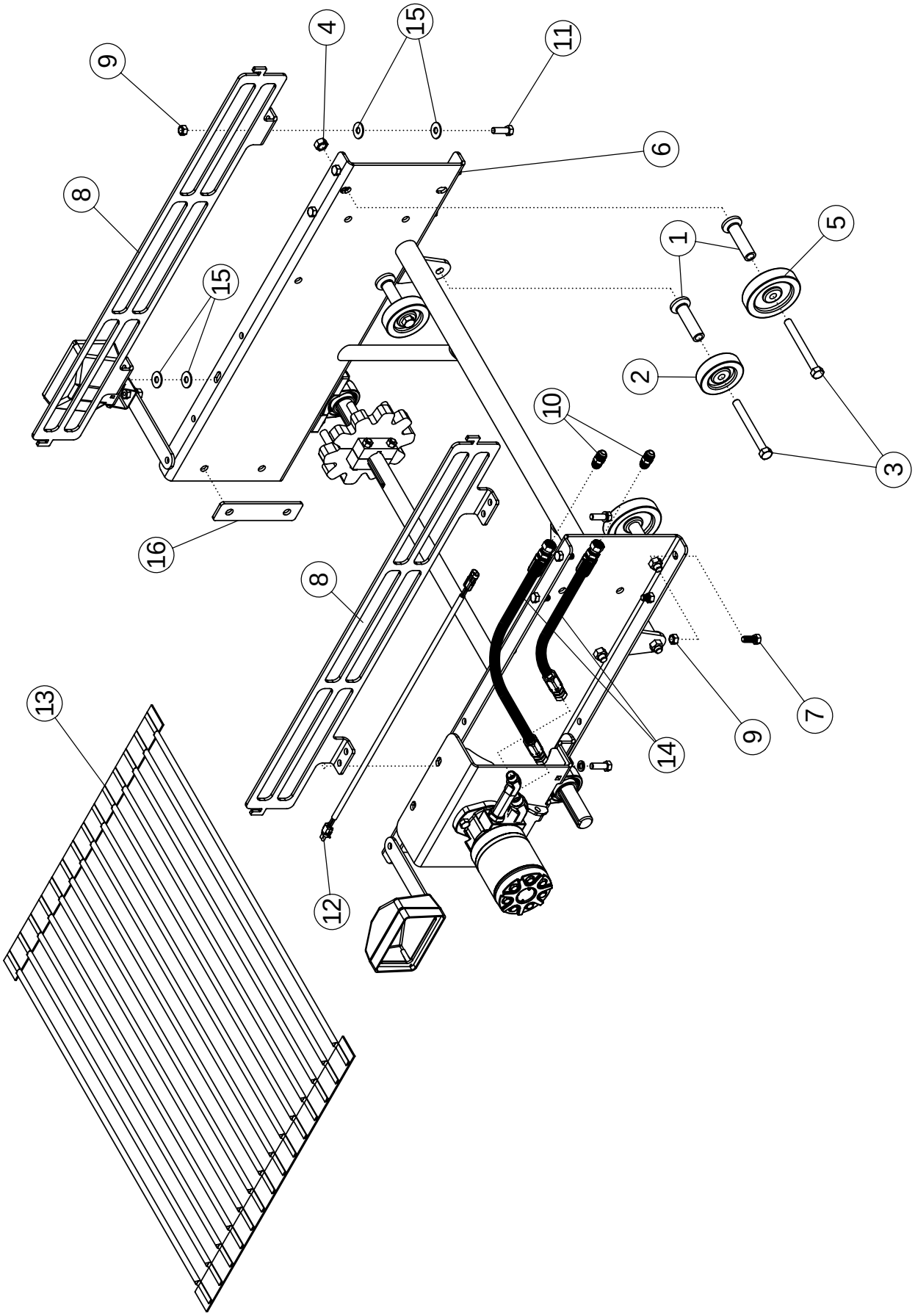
9
4
15
11
6
8
1
5
15
2
10
3
16
8
13
14
9
7
12

BOOM EXTENSION 50MM/56MM (OPTIONAL)

ITEM	PART NO.	DESCRIPTION	QTY
1	64192	STAND OFF	6
2	53854	BOGIE WHEEL 4"	4
3	1013068	BOLT-HEX: .63 X 6.00 NC GR5 ZP	6
4	1016595	NUT-TOPLOCK: .63 NC GR5 ZP	6
5	53825	BOGIE WHEEL 5"	2
6	68708	WLDMT-BOOM EXTENSION	1
7	1011606	BOLT-HEX: .50 X 1.25 NC GR5 ZP	8
8	58898	WLDMT-BOOM EXT. RAIL	2
9	1027461	NUT-TOPLOCK: .50 NC GR5 ZP	12
10	58194	FTG-ADAPTER: 8MJ-8MJ	2
11	1011607	BOLT-HEX: .50 X 1.50 NC GR5 ZP	4
12	64077	HARNESS-EXTENSION: 32" 2 WIRE	2
13	68077	BELT-50MM: .50 X 42 X 30LPR	1
	68076	BELT-56MM: .50 X 42 X 27LPR	
14	57676	HOSE: .50 X 31 8FJX-8FJX	2
15	1014443	WASHER-FLAT: .50 ZP	9
16	68710	PLATE-BOOM SUPPORT SPACER	AR

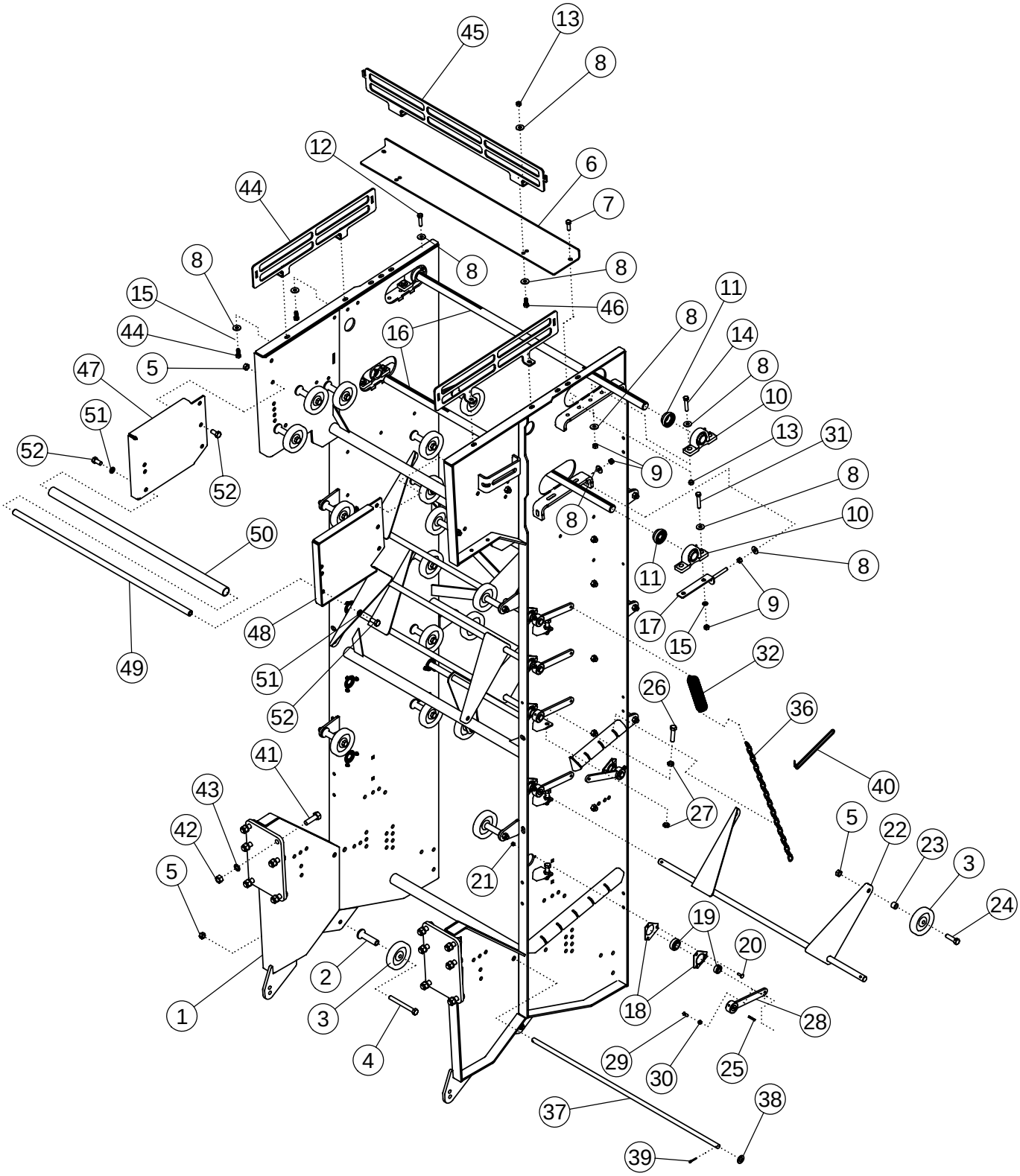
45
13
8
12
6
44
7
8
8
8
15
46
11
44
16
8
14
5
8
47
10
51
13
31
52
9
8
52
8
10
50
11
8
9
48
17
15
49
51
32
52
26
36
41
40
43
27
42
5
22
23
5
21
3
24
19
20
2
1
3
18
28
4
29
30
25
37
38
39

REAR SCRUB

ITEM	PART NO.	DESCRIPTION	QTY
1	57911	WLDMT-REAR SCRUB	1
2	64192	STAND OFF	28
3	53825	BOGIE WHEEL 5"	40
4	1013068	BOLT-HEX: .63 X 6.00 NC GR5 ZP	28
5	1016595	NUT-TOPLOCK: .63 NC GR5 ZP	46
6	57916	BAR-STRIPPER	1
7	1011607	BOLT-HEX: .50 X 1.50 NC GR5 ZP	2
8	1014443	WASHER-FLAT: .50 ZP	24
9	1011577	NUT-HEX: .50 NC GR2 ZP	10
10	52405	PILLOW BLOCK BEARING 1.75	4
11	52382	SEAL PROTECTOR 1.75	4
12	1011609	BOLT-HEX: .50 X 2.00 NC GR5 ZP	2
13	1027461	NUT-TOPLOCK: .50 NC GR5 ZP	10
14	1011610	BOLT-HEX: .50 X 2.50 NC GR5 ZP	4
15	1011581	WASHER-LOCK: .50 ZP	4
16	68650	SHAFT-HEAD 1.75	2
17	68655	TIGHTENER-ZP	2
18	53945	TRIANGLE FLANGETTE	24
19	53944	BEARING-INSERT 1" WITH LOCKING COLLAR	12
20	1017255	BOLT-CRG: .31 X 1.00	36
21	1030700	NUT-TOPLOCK: .31 NC GR5 ZP	36
22	53401	WLDMT-PENDULUM	6
23	64253	SPACER ZP	12
24	1017526	BOLT-HEX: .63 X 2.25 NC GR5 ZP	12
25	54638	KEY .25 X .25 X 1.38	12
26	1013023	BOLT-HEX: .63 X 2.50 NC GR5 ZP	8
27	1026259	NUT-JAM: .63 NC GR2 ZP	16
28	50718	ARM-ZP	12
29	50813	SCREW-SET: SQ HD .38 X 1.00 ZP	12
30	1013519	NUT-JAM: .38 NC GR2 ZP	12
31	1016858	BOLT-HEX: .50 X 2.75 NC GR5 ZP	2
32	53159	SPRING	12
33	57937	CHAIN-LINK: .19 X 8.00 (NOT SHOWN)	4
34	57938	CHAIN-LINK: .19 X 20.00 (NOT SHOWN)	2
35	57939	CHAIN-LINK: .19 X 24.00 (NOT SHOWN)	4
36	57940	CHAIN-LINK: .19 X 30.00	2
37	62896	ROD-SCRUB CLEANER	1
38	1012634	WASHER-FLAT: SAE .75 ZP	2
39	1011984	PIN-COTTER: .16 X 1.50 ZP	2
40	1017248	TIE, CABLE	4

CONTINUED

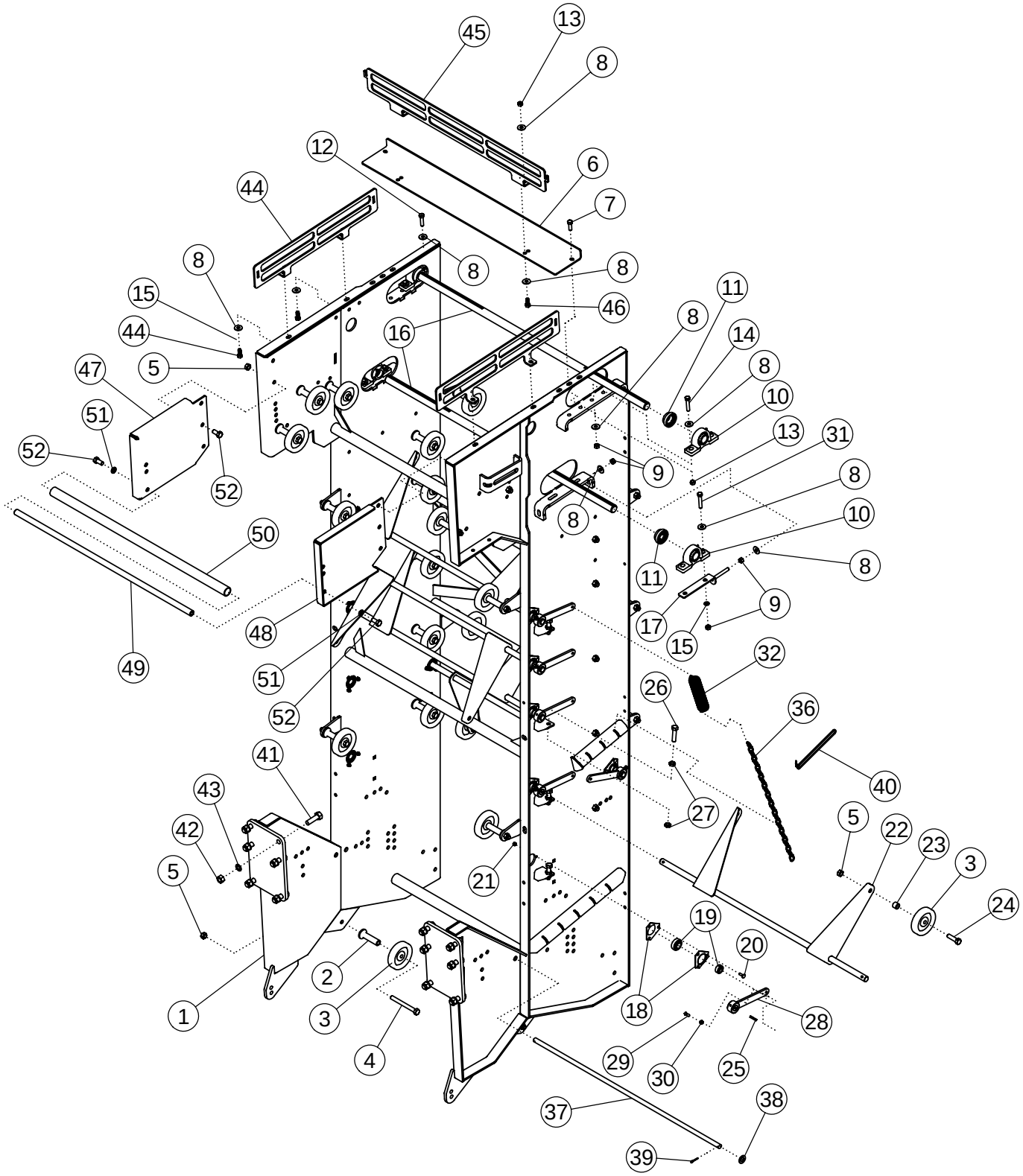
45
13
8
12
6
44
7
8
8
8
15
46
11
44
16
8
14
5
8
47
10
51
13
31
52
9
8
52
8
10
50
11
8
9
48
17
15
49
51
32
52
26
36
41
40
43
27
42
5
22
23
5
21
3
24
19
20
2
1
3
18
28
4
29
30
25
37
38
39

REAR SCRUB (CONTINUED)

ITEM	PART NO.	DESCRIPTION	QTY
41	1016598	BOLT- HEX: .75 X 2.50 NC GR5 ZP	12
42	1011620	NUT-HEX: .75 NC	12
43	1012061	WASHER-LOCK: .75 ZP	12
44	58900	WLDMT-SCRUB EXT.-SIDE	2
45	58898	WLDMT-SCRUB EXT-REAR	1
46	1011606	BOLT-HEX: .50 X 1.25 NC GR5 ZP	6
47	54805	REAR SCRUB EXTENSION RH	1
48	54778	REAR SCRUB EXTENSION LH	1
49	56754	PIPE-THREADED	1
50	56773	PIPE-PLASTIC	1
51	1011813	WASHER-LOCK: .63 ZP	2
52	1032509	BOLT-HEX: .63 X 1.25 NC GR5 ZP	8

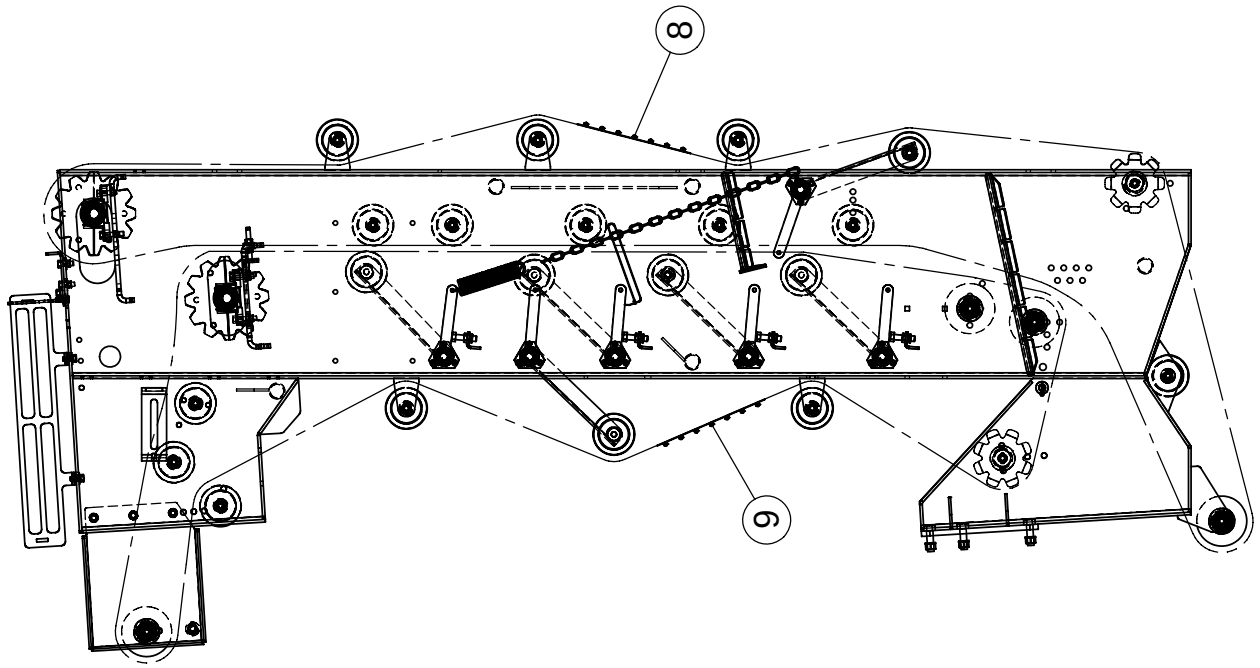
8
9

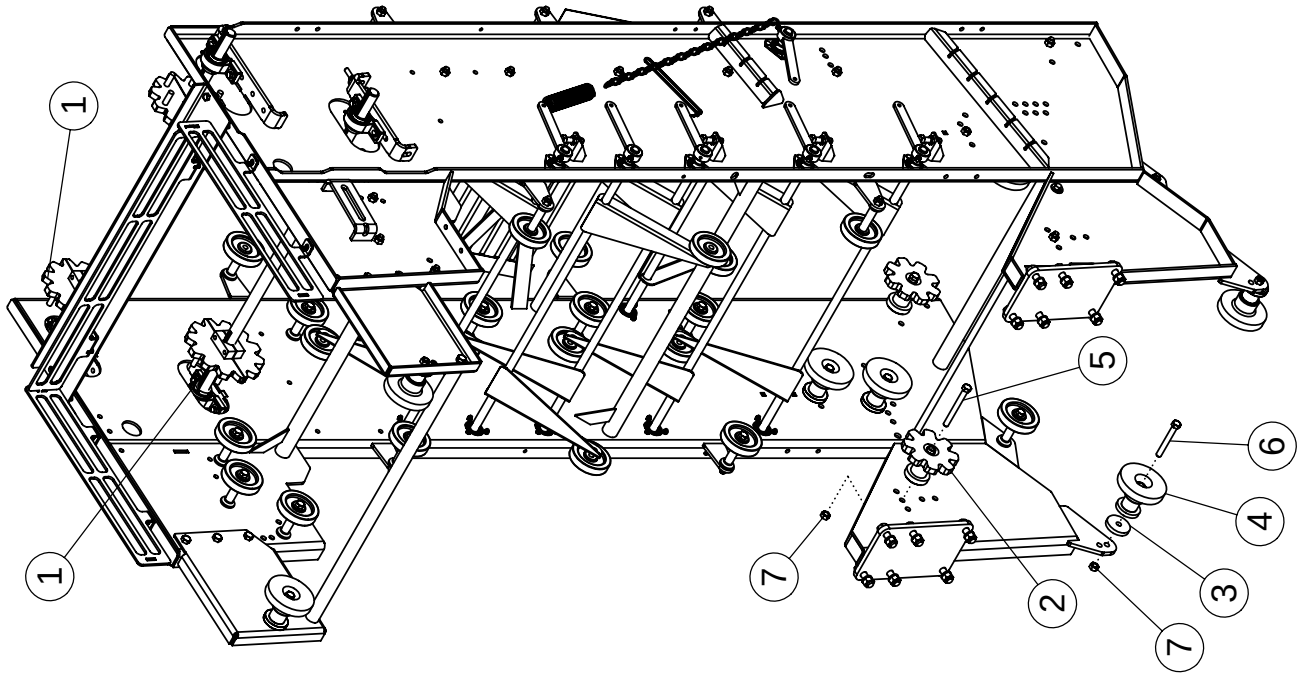
1
1
5
6
4
3
7
2
7

REAR SCRUB: BELTED CHAIN 56MM

ITEM	PART NO.	DESCRIPTION	QTY
1	68651	SPROCKET-SPLIT 56MM	4
	68667*	SPROCKET-56MM 12T URETHANE	
2	54824	SPROCKET-IDLER 56MM	4
3	62932	PLATE-SHIM	8
4	54042	ROLLER-FLANGE 6"	8
5	1013068	BOLT-HEX: .63 X 6.00 NC GR5 ZP	4
6	1013816	BOLT-HEX: .63 X 5.00 NC GR5 ZP	8
7	1016595	NUT-TOPLOCK: .63 NC GR5 ZP	12
8	53842	BELT-56MM 1/2 X 42 X 156 LPR	1
9	62141	BELT-56MM 1/2 X 42 X 136 LPR	1

* Urethane option only

REAR SCRUB: BELTED CHAIN 50MM

ITEM	PART NO.	DESCRIPTION	QTY
1	68657	SPROCKET-SPLIT 50MM	4
	68666*	SPROCKET-50MM 12T URETHANE	
2	63813	SPROCKET-IDLER 50MM	4
3	62932	PLATE-SHIM	8
4	54042	ROLLER-FLANGE 6"	8
5	1013068	BOLT-HEX .63 X 6.00 NC GR5 ZP	4
6	1013816	BOLT-HEX .63 X 5.00 NC GR5 ZP	8
7	1016595	NUT-TOPLOCK: .63 NC GR5 ZP	12
8	63815	BELT-50MM 1/2 X 42 X 175 LPR	1
9	63814	BELT-50MM 1/2 X 42 X 154 LPR	1

* Urethane option only

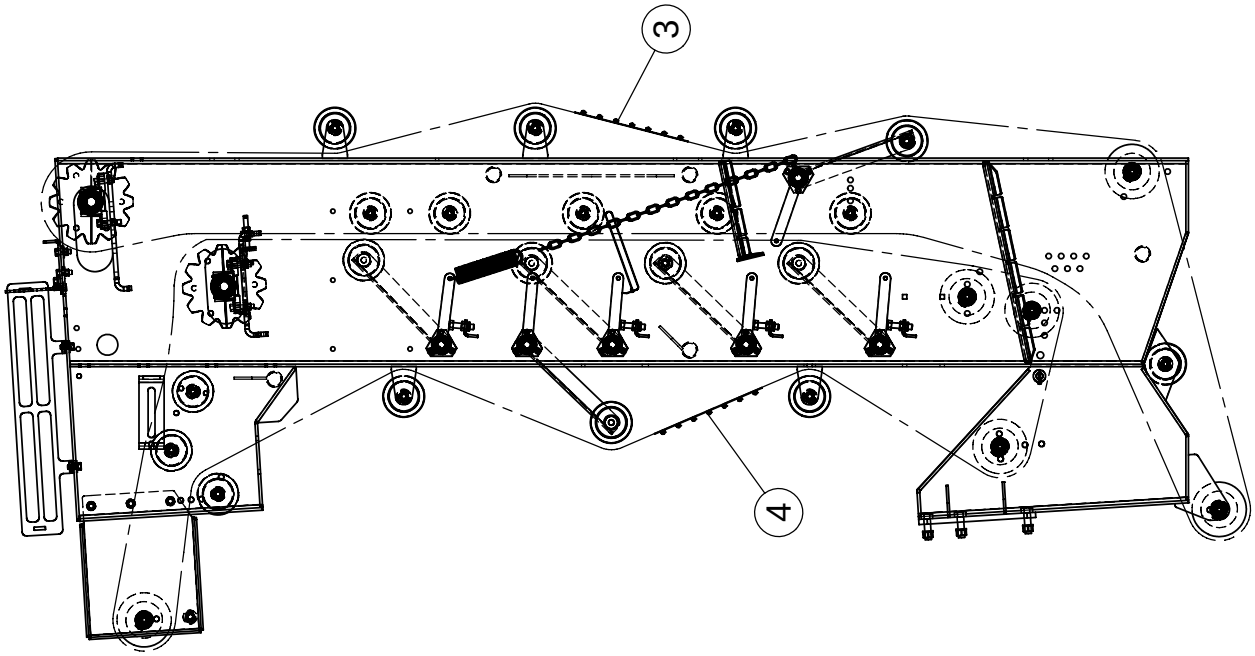
3
4

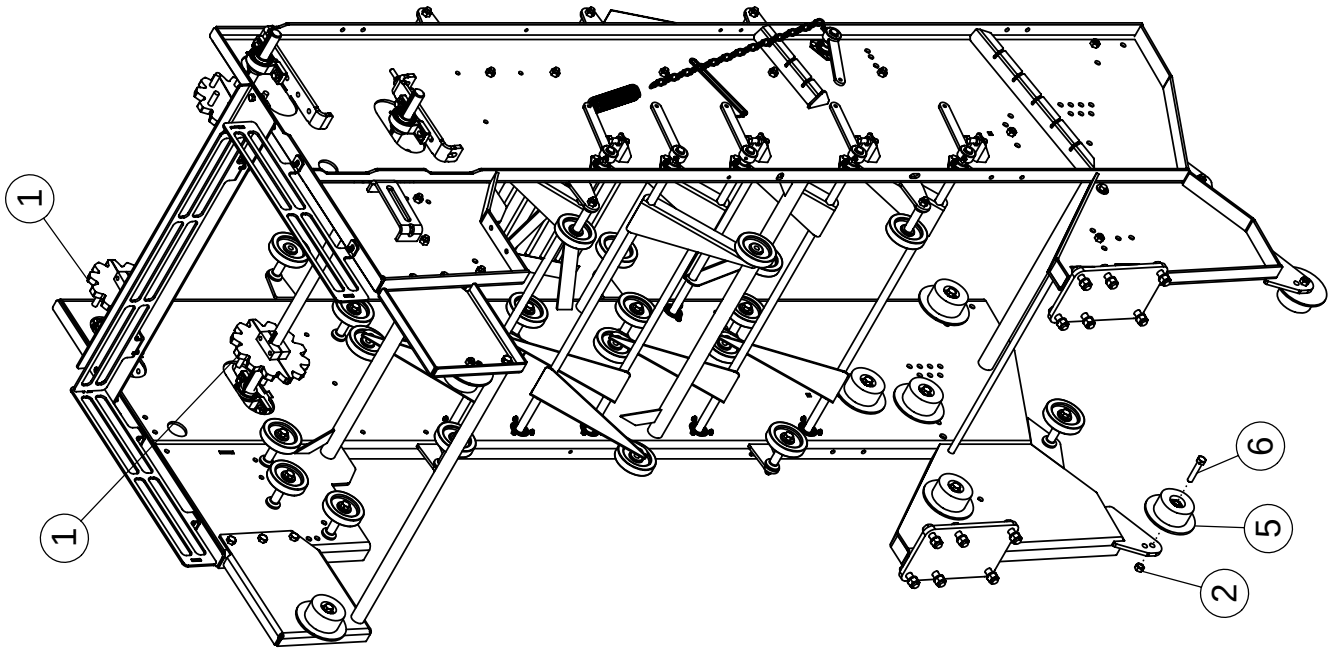
1
1
6
5
2

REAR SCRUB: 56MM BELTED CHAIN FLANGE

ITEM	PART NO.	DESCRIPTION	QTY
1	68651	SPROCKET-SPLIT 56MM	4
2	1016595	NUT-TOPLOCK: .63 NC GR5 ZP	12
3	53842	BELT-56MM 1/2 X 42 X 156 LPR	1
4	62141	BELT-56MM 1/2 X 42 X 136 LPR	1
5	59057	ROLLER-FLANGE 6.5"	12
6	1030704	BOLT-HEX: .63 X 3.25 NC GR5 ZP	12

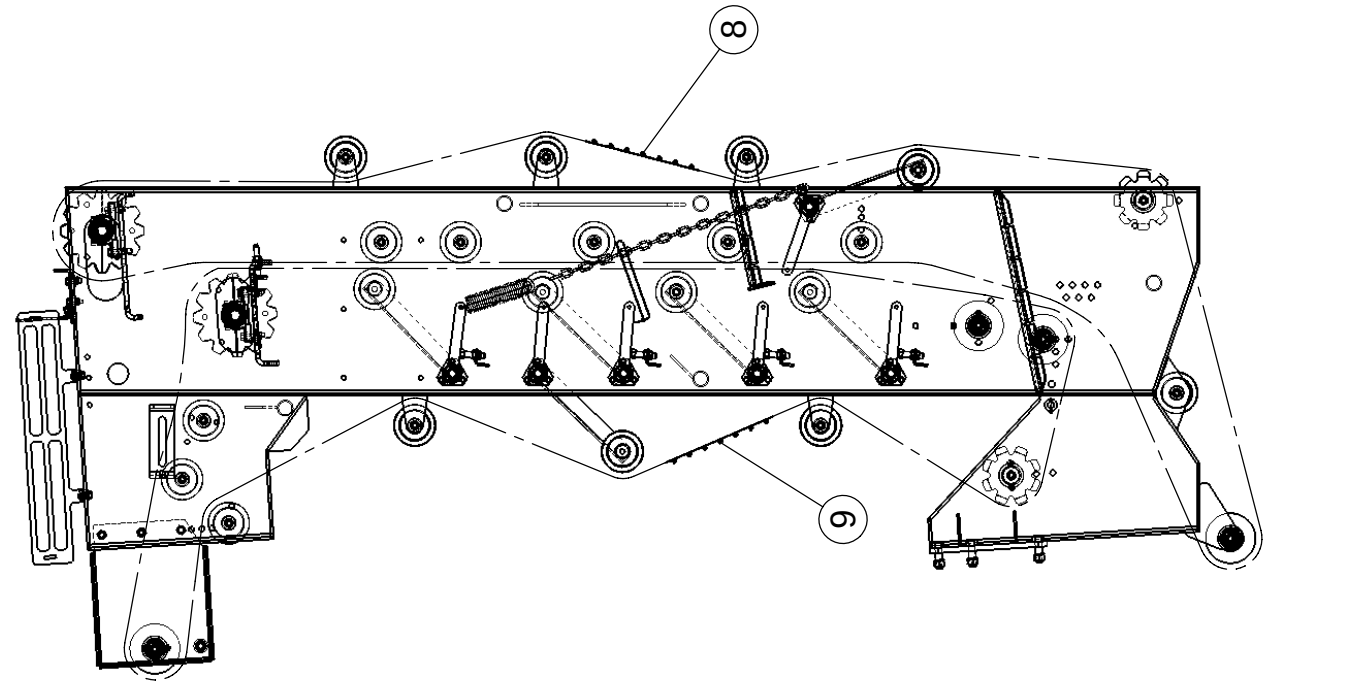
8
9

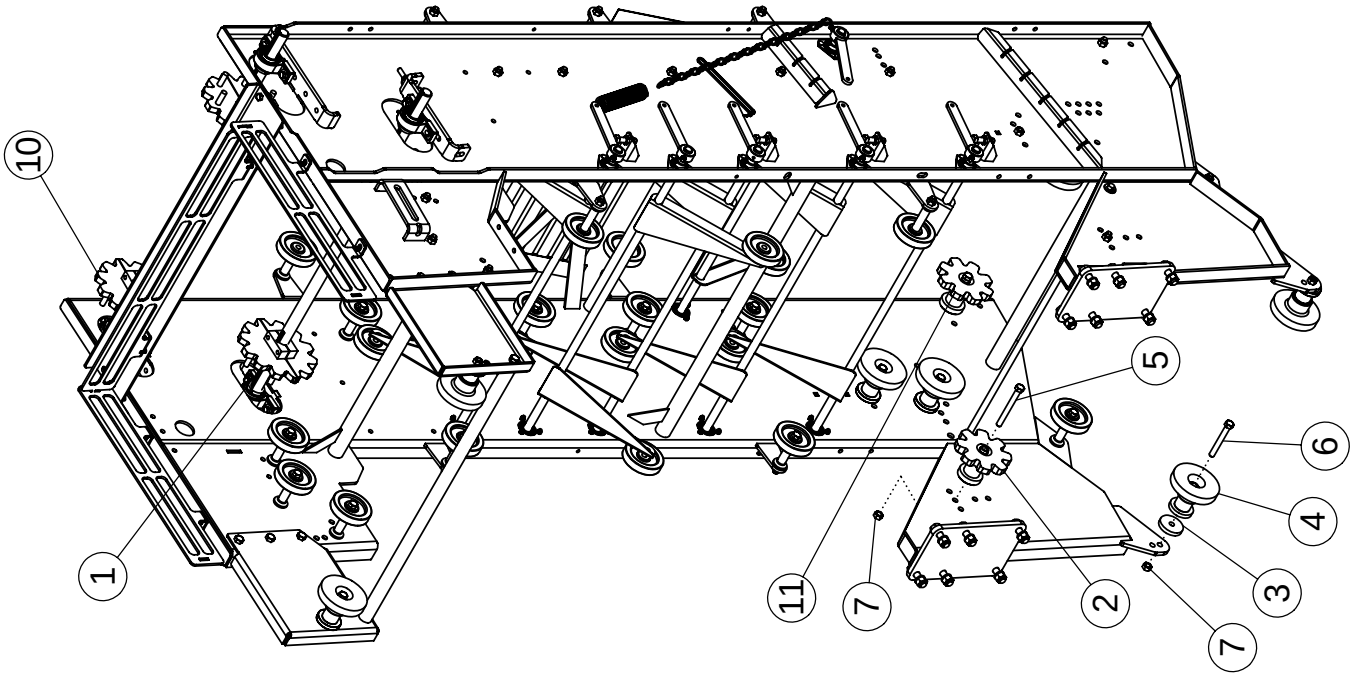
10
1
11
7
2
7
3
4
6
5

REAR SCRUB: BELTED CHAIN 50 MM INSIDE 56 MM OUTSIDE W/ URETHANE

ITEM	PART NO.	DESCRIPTION	QTY
1	68666	SPROCKET 50MM 12T URETHANE	2
2	63813	SPROCKET-IDLER 50MM 10T	2
3	62932	PLATE-SHIM .50	8
4	54042	ROLLER-STEP 6"	8
5	1013068	BOLT-HEX: .63 X 6.00 NC GR5 ZP	4
6	1013816	BOLT-HEX: .63 X 5.00 NC GR5 ZP	8
7	1016595	NUT-TOPLOCK: .63 NC GR5 ZP	12
8	53842	BELT-56MM 1/2 X 42 X 156 LPR	1
9	63814	BELT-50MM 1/2 X 42 X 154 LPR	1
10	68667	SPROCKET-56MM 12T URETHANE	2
11	54824	SPROCKET-IDLER 56MM	2

REAR SCRUB: BELTED CHAIN 56 MM INSIDE 50 MM OUTSIDE

ITEM	PART NO.	DESCRIPTION	QTY
1	68651	SPROCKET-SPLIT 56MM	2
2	54824	SPROCKET-IDLER 56MM	2
3	62932	PLATE-SHIM .50	8
4	54042	ROLLER-STEP 6"	8
5	1013068	BOLT-HEX: .63 X 6.00 NC GR5 ZP	4
6	1013816	BOLT-HEX: .63 X 5.00 NC GR5 ZP	8
7	1016595	NUT-TOPLOCK: .63 NC GR5 ZP	12
8	63815	BELT-50MM 1/2 X 42 X 175 LPR	1
9	62141	BELT-56MM 1/2 X 42 X 136 LPR	1
10	68657	SPROCKET-SPLIT 50MM	2
11	63813	SPROCKET-IDLER 50MM 10T	2

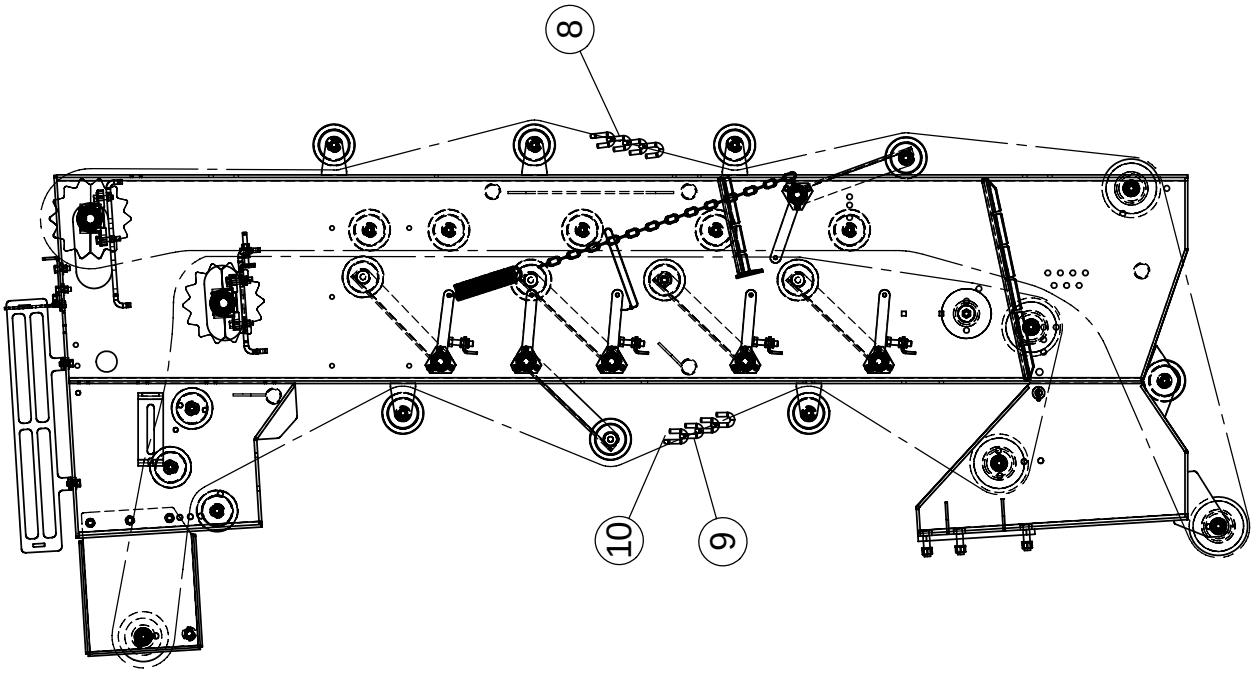
8
10
9

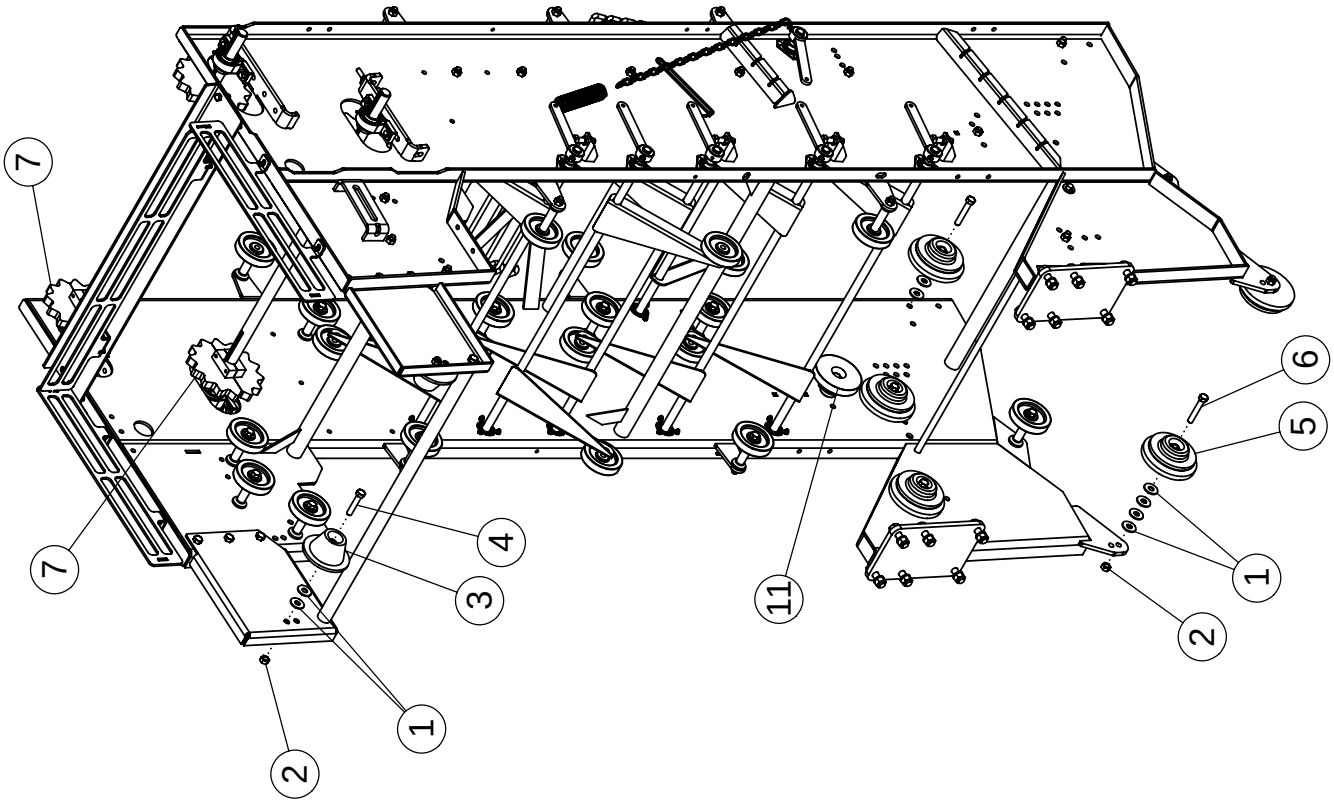
7
7
2
1
3
4
11
2
1
5
6

REAR SCRUB: HOOK CHAIN 2.38

ITEM	PART NO.	DESCRIPTION	QTY
1	1013024	WASHER-FLAT: .63 ZP	AR
2	1016595	NUT-TOPLOCK: .63 NC GR5 ZP	12
3	53950	ROLLER-CONE 6"	2
4	1030704	BOLT-HEX: .63 X 3.25 NC GR5 ZP	2
5	53951	ROLLER-STEP FLANGE 7"	8
6	59093	BOLT-HEX: .63 X 3.75 NC GR5 ZP	10
7	68660	SPROCKET-SPLIT 2.375	4
8	53850	CHAIN 1/2 X 42 X 2.38 X 37 LPR	4
9	53851	CHAIN 1/2 X 42 X 2.38 X 38 LPR	3
10	54829	CHAIN 1/2 X 42 X 2.38 X 13LPR	1
11	54042	ROLLER-STEP 6"	2

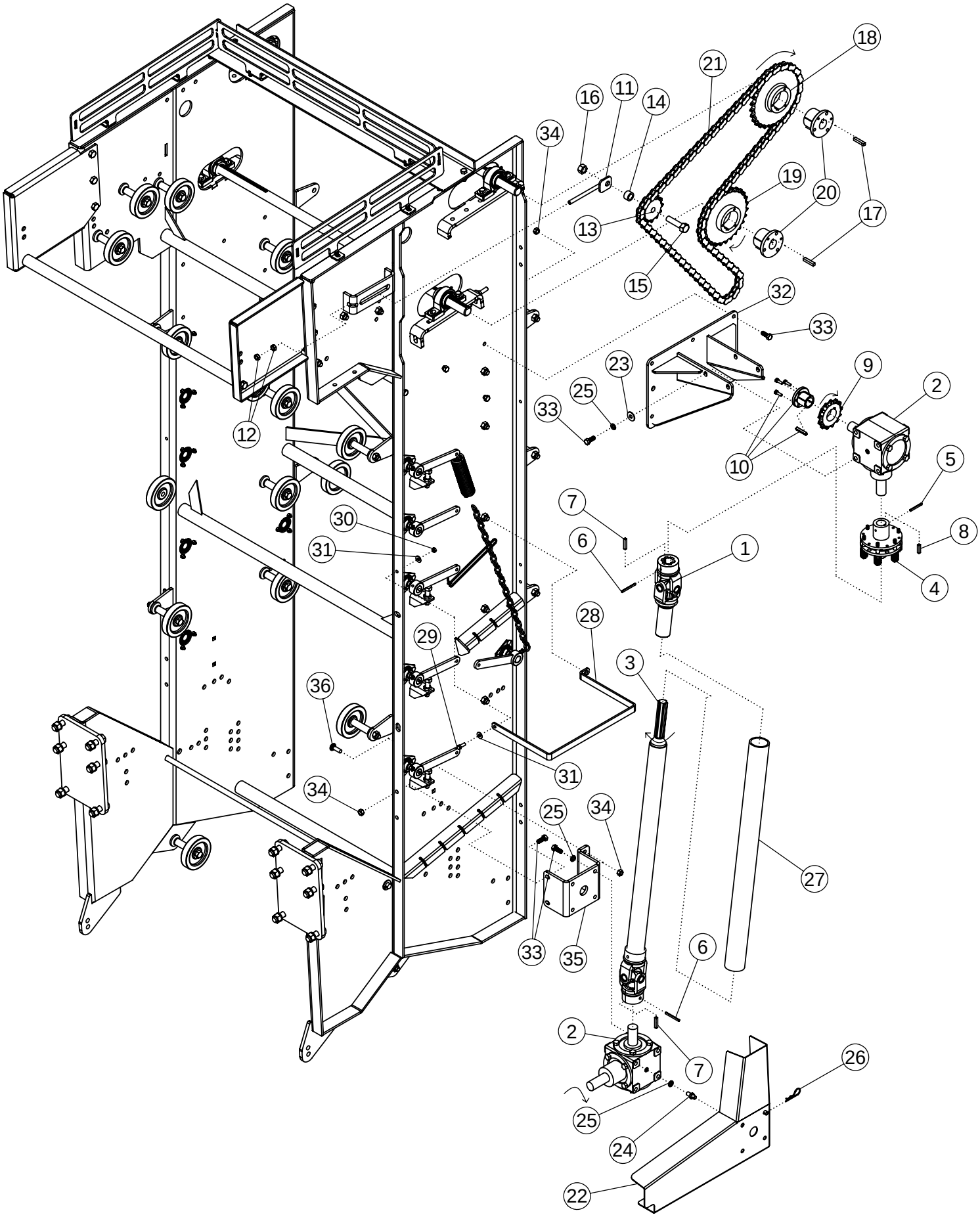
18
21
16
11
14
34
19
20
17
13
15
32
33
23
9
2
25
33
12
10
5
7
30
8
6
1
31
4
28
29
3
36
31
34
25
34
27
33
35
6
2
7
26
25
24
22

REAR SCRUB DRIVE: GEARBOX

ITEM	PART NO.	DESCRIPTION	QTY
1	57925	COUPLER-DRIVE BLACK	1
2	63848	GEARBOX-PRAIRIE (1:1.35) 6001 BLACK	2
3	57923	SHAFT-DRIVE: 49.25"	1
4	57926	CLUTCH-SLIP	1
5	58290	PIN-ROLL: .25 X 2.25 NP	1
6	58489	PIN-ROLL: .25 X 2.75 NP	2
7	58396	KEY .31 X .31 X 1.75	2
8	58397	KEY .31 X .31 X 1.38	1
9	56339	SPROCKET H80-P13	1
10	57943	HUB P1 1.38	1
11	63876	TENSIONER ZP	1
12	1011591	NUT-JAM: .50 NC ZP	2
13	56334	SPROCKET-IDLER 8012	1
14	58086	SPACER-CHAIN IDLER ZP	1
15	1012059	BOLT-HEX: .75 X 3.00 NC GR5 ZP	1
16	1017000	NUT-TOPLOCK: .75 NC GR5 ZP	1
17	50152	KEY .38 X .38 X 2.00	2
18	57942	SPROCKET H80-Q29	1
19	57941	SPROCKET H80-Q27	1
20	50335	HUB Q1 1.75	2
21	63549	CHAIN-ROLLER 80-1R-110	1
22	57894	WLDMT-SHIELD	1
23	1014443	WASHER-FLAT: .50 ZP	4
24	59106	STUD-SCRUB SHIELD ZP	4
25	1011581	WASHER-LOCK: .50 ZP	12
26	1029164	PIN-HAIR: .19 X 3.00 ZP	4
27	58015	SLEEVE-PLASTIC	1
28	58456	BAR-GUARD	1
29	1011600	BOLT-HEX: .38 X 1.00 NC GR5 ZP	1
30	1016999	NUT-TOPLOCK: .38 NC GR5 ZP	1
31	1011828	WASHER-FLAT: .38 ZP	2
32	62103	WLDMT-GEARBOX MOUNT	1
33	1011606	BOLT-HEX: .50 X 1.25 NC GR5 ZP	15
34	1027461	NUT-TOPLOCK: .50 NC GR5 ZP	9
35	59432	PLATE-GEARBOX MOUNT	1
36	1011660	BOLT-CRG: .50 X 1.50 NC GR5 ZP	2

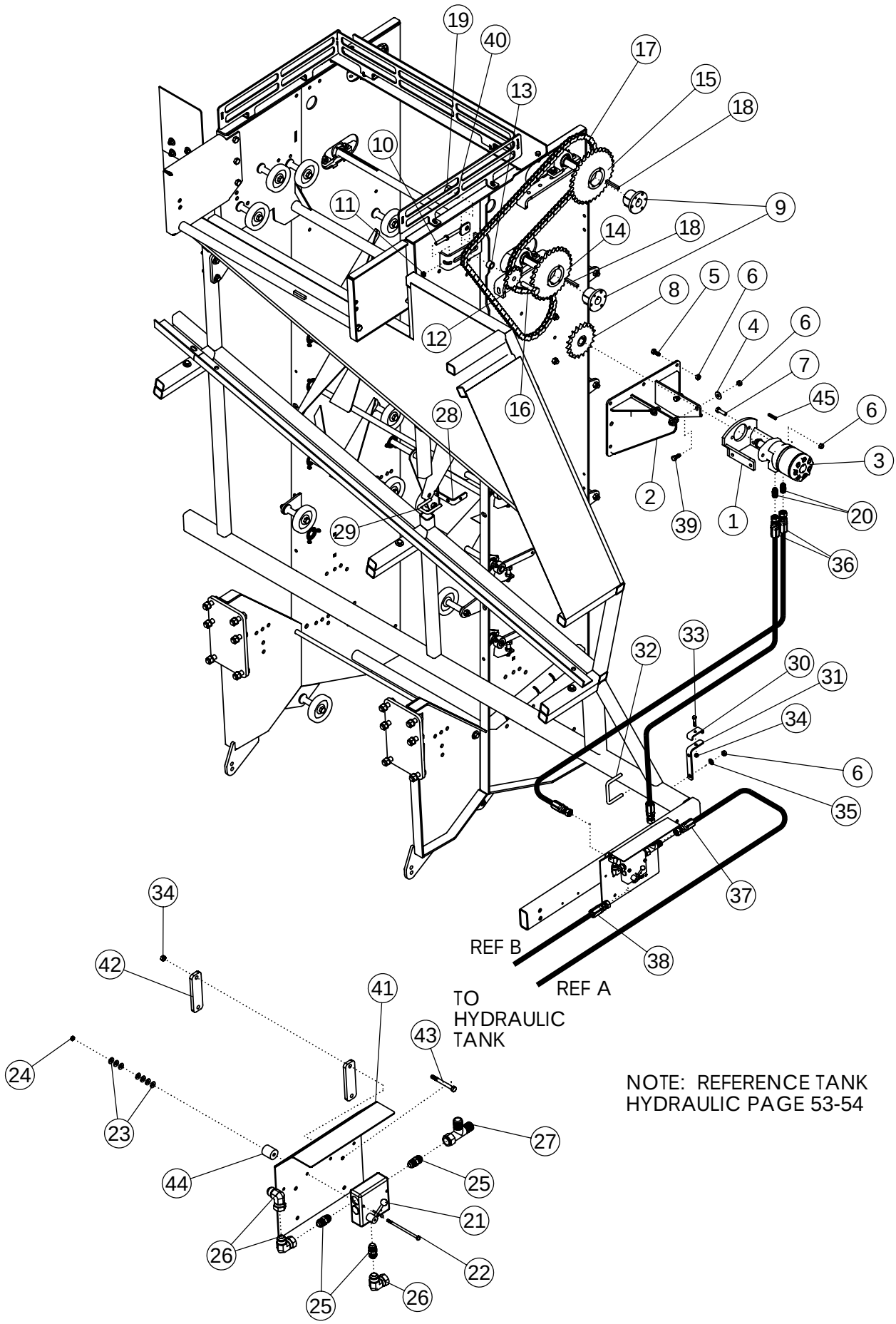
19
40
17
15
13
18
10
9
11
14
18
5
6
8
4
6
12
7
45
16
6
28
3
2
39
1
20
29
36
33
32
30
31
34
6
35
37
34
REF B
38
42
REF A
41
TO
HYDRAULIC
TANK
43
24
NOTE: REFERENCE TANK
HYDRAULIC PAGE 53-54
23
27
44
25
21
26
22
25
26

REAR SCRUB DRIVE: SINGLE MOTOR

ITEM	PART NO.	DESCRIPTION	QTY
1	58102	WLDMT-MOTOR BRACKET	1
2	62103	WLDMT-GEARBOX MOUNT	1
3	58987	MOTOR-HYDRAULIC 20.6IN^3/REV	1
4	1014443	WASHER-FLAT: .50 ZP	4
5	1011606	BOLT-HEX: .50 X 1.25 NC GR5 ZP	5
6	1027461	NUT-TOPLOCK: .50 NC GR5 ZP	17
7	1011608	BOLT-HEX: .50 X 1.75 NC GR5 ZP	2
8	62125	SPROCKET-8019X 1.25 BORE .313 KEY	1
9	50335	HUB Q1 1.75	2
10	63876	TENSIONER ZP	1
11	1011577	NUT-HEX: .50 NC GR2 ZP	2
12	56334	SPROCKET-IDLER 8012	1
13	58086	SPACER-CHAIN IDLER ZP	1
14	59051	SPROCKET H80-Q30	1
15	59052	SPROCKET H80-Q32	1
16	1012059	BOLT- HEX: .75 X 3.00 NC GR5 ZP	1
17	68784	CHAIN-ROLLER 80-1R-114	1
18	50152	KEY .38 X .38 X 2.00	2
19	1011620	NUT-HEX: .75 NC GR2 ZP	1
20	59043	FTG-ADAPTER: 10MB-12MJ	2
21	58985	VALVE-FLOW CONTROL- 3/4" FP	1
22	1030766	BOLT-HEX: .25 X 4.00 NC GR5 ZP	2
23	1020416	WASHER-FLAT: .25 ZP	14
24	1030946	NUT-TOPLOCK: .25 NC GR5 ZP	2
25	59042	FTG-ADAPTER: 12MP-12MJ	3
26	59041	FTG-ELBOW: 12MJ-12FJX-90	3
27	59888	FTG-TEE: 12MJ-12FJX-12MJ	1
28	59184	BRACKET-HOSE ZP	1
29	65658	U-BOLT: .50 X 3.00 X 2.06 X 3.00	1
30	63753	CLAMP .75 ZP	3
31	59182	BRACKET-HOSE ZP	2
32	54653	U-BOLT: .50 X 3.25 X 4.00 X 3.25	2
33	59390	BOLT-HEX: .38 X 2.25 NC GR5 ZP	3
34	1016999	NUT-TOPLOCK: .38 NC GR5 ZP	7
35	1011584	WASHER-FLAT: SAE .50 ZP	6
36	59895	HOSE: .75 X 173 12FJX-12FJX (8R-FRAME)	2
	59036	HOSE: .75 X 152 12FJX-12FJX (6R-FRAME)	
37	59801	HOSE: .75 X 74 12FJX-12FJX	1
38	59035	HOSE: .75 X 66 12FJX-12FJX	1
39	1011607	BOLT-HEX: .50 X 1.50 NC GR5 ZP	4

CONTINUED

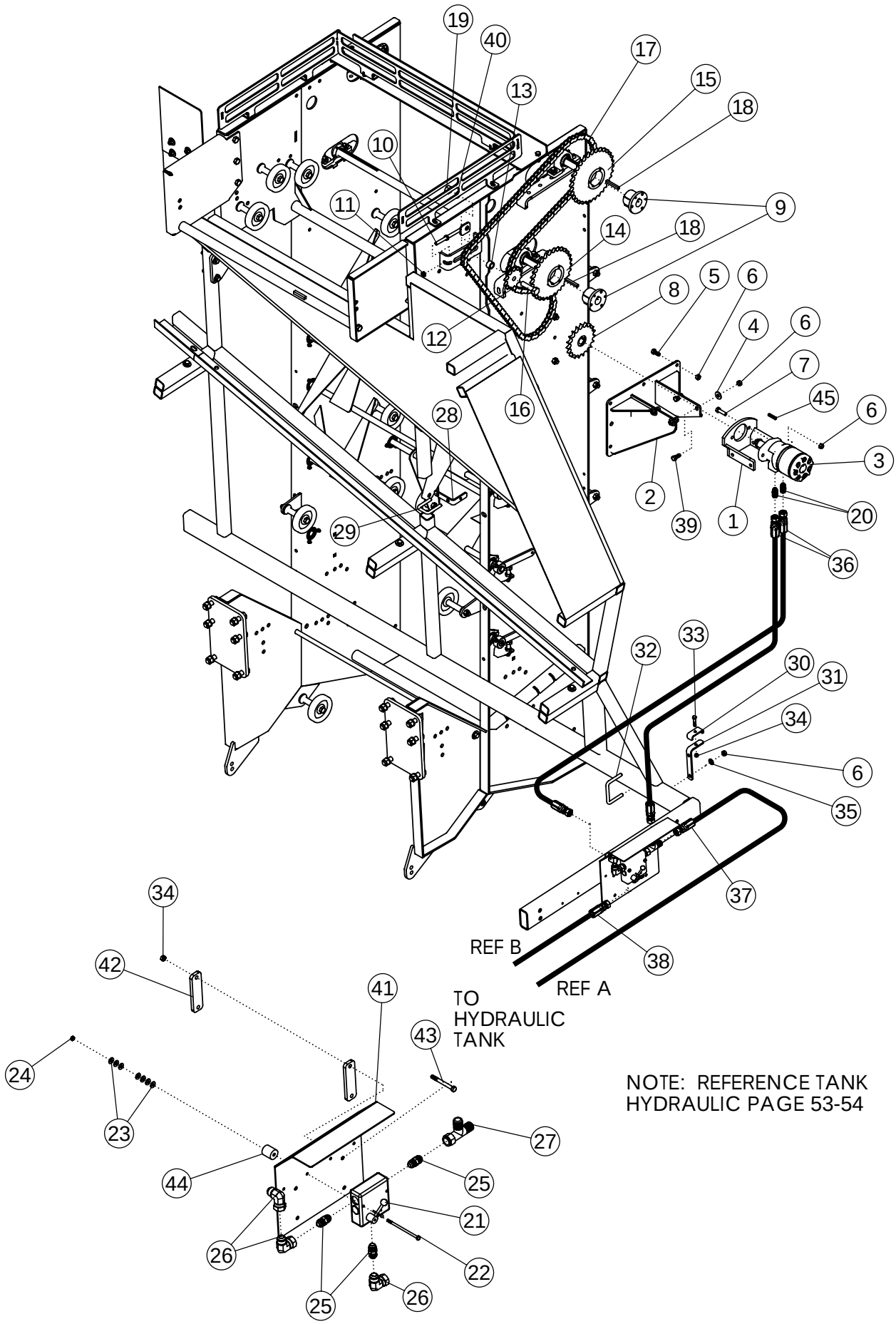
19
40
17
15
13
18
10
9
11
14
18
5
6
8
4
6
12
7
45
16
6
28
3
2
39
1
20
29
36
33
32
30
31
34
6
35
37
34
REF B
38
42
REF A
41
TO
HYDRAULIC
TANK
43
24
NOTE: REFERENCE TANK
HYDRAULIC PAGE 53-54
23
27
44
25
21
26
22
25
26

REAR SCRUB DRIVE: SINGLE MOTOR (CONTINUED)

ITEM	PART NO.	DESCRIPTION	QTY
40	1012061	WASHER-LOCK: .75 ZP	1
41	69020	WLDMT-BRACKET FLOW CONTROL	1
42	59881	BRACKET-BOLT PLATE	4
43	58176	BOLT-HEX: .38 X 3.50 NC GR5 ZP	4
44	59463	SPACER ZP	2
45	58396	KEY .313 X .313 X 1.750	1

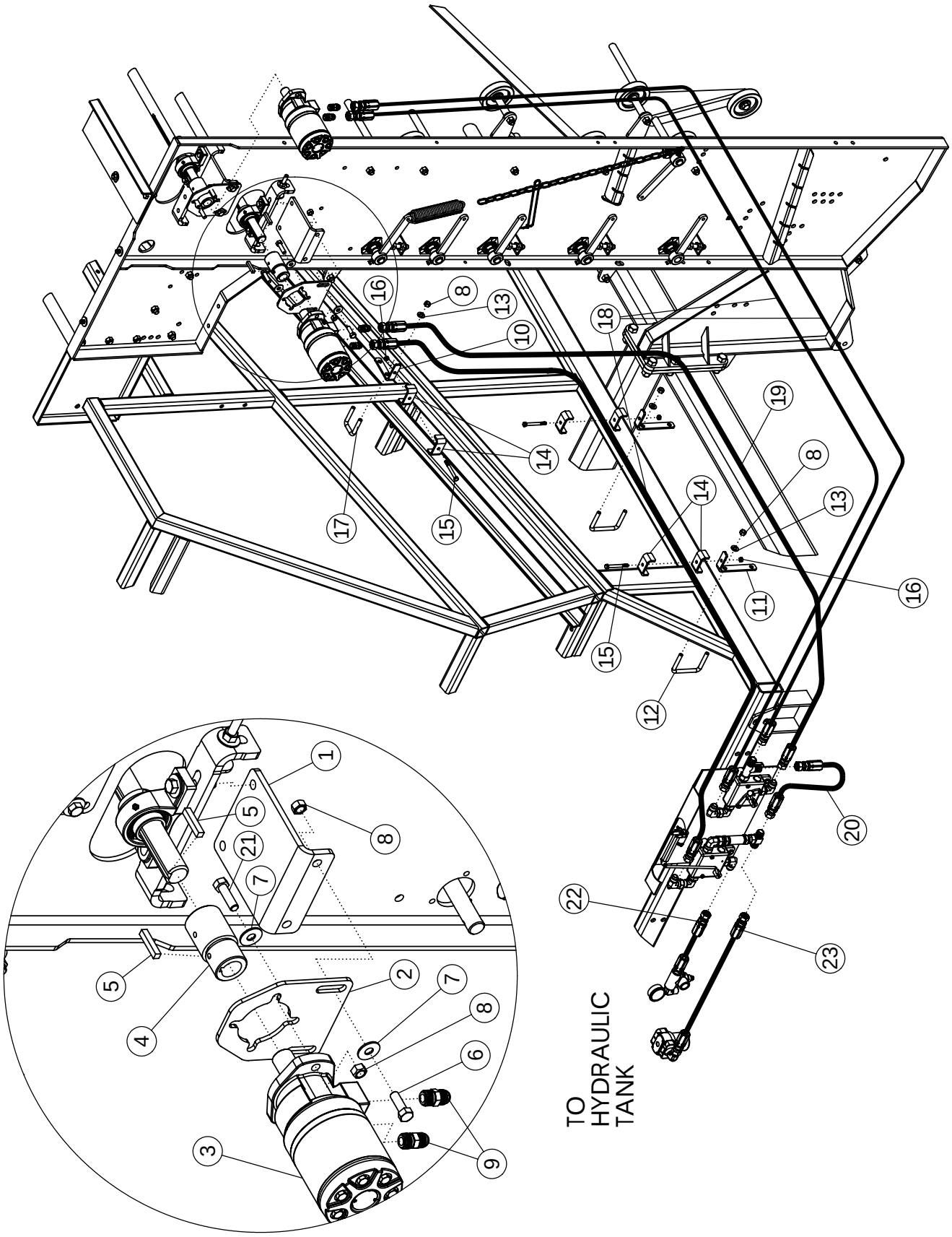
TO
HYDRAULIC
TANK

REAR SCRUB DRIVE: DUAL MOTOR

ITEM	PART NO.	DESCRIPTION	QTY
1	68654	PLATE	2
2	57843	PLATE-F.C.	2
3	57686	MOTOR-HYDRAULIC 32.3IN^3/REV	2
4	68663	COUPLING	2
5	50152	KEY .38 X .38 X 2.00	4
6	1011607	BOLT-HEX: .50 X 1.50 NC GR5 ZP	4
7	1014443	WASHER-FLAT: .50 ZP	8
8	1027461	NUT-TOPLOCK: .50 NC GR5 ZP	14
9	59043	FTG-ADAPTER: 10MB-12MJ	4
10	59184	BRACKET-HOSE ZP	1
11	59182	BRACKET-HOSE ZP	2
12	54653	U-BOLT: .50 X 3.25 X 4.00 X 3.25	2
13	1011584	WASHER-FLAT: SAE .50 ZP	6
14	63753	CLAMP-HOSE 3/4" ZP	6
15	58176	BOLT-HEX: .38 X 3.50 NC GR5 ZP	3
16	1016999	NUT-TOPLOCK: .38 NC GR5 ZP	3
17	53677	U-BOLT: .50 X 3 X 2 X 3	1
18	62214	HOSE: .75 X 166 12FJX-12FJX	3
19	62215	HOSE: .75 X 160 12FJX-12FJX	1
20	63473	HOSE: .75 X 19 12FJX-12FJX	1
21	1011608	BOLT-HEX: .50 X 1.75 NC GR5 ZP	4
22	59035	HOSE: .75 X 66 12FJX-12FJX	1
23	59801	HOSE: .75 X 74 12FJX-12FJX	1

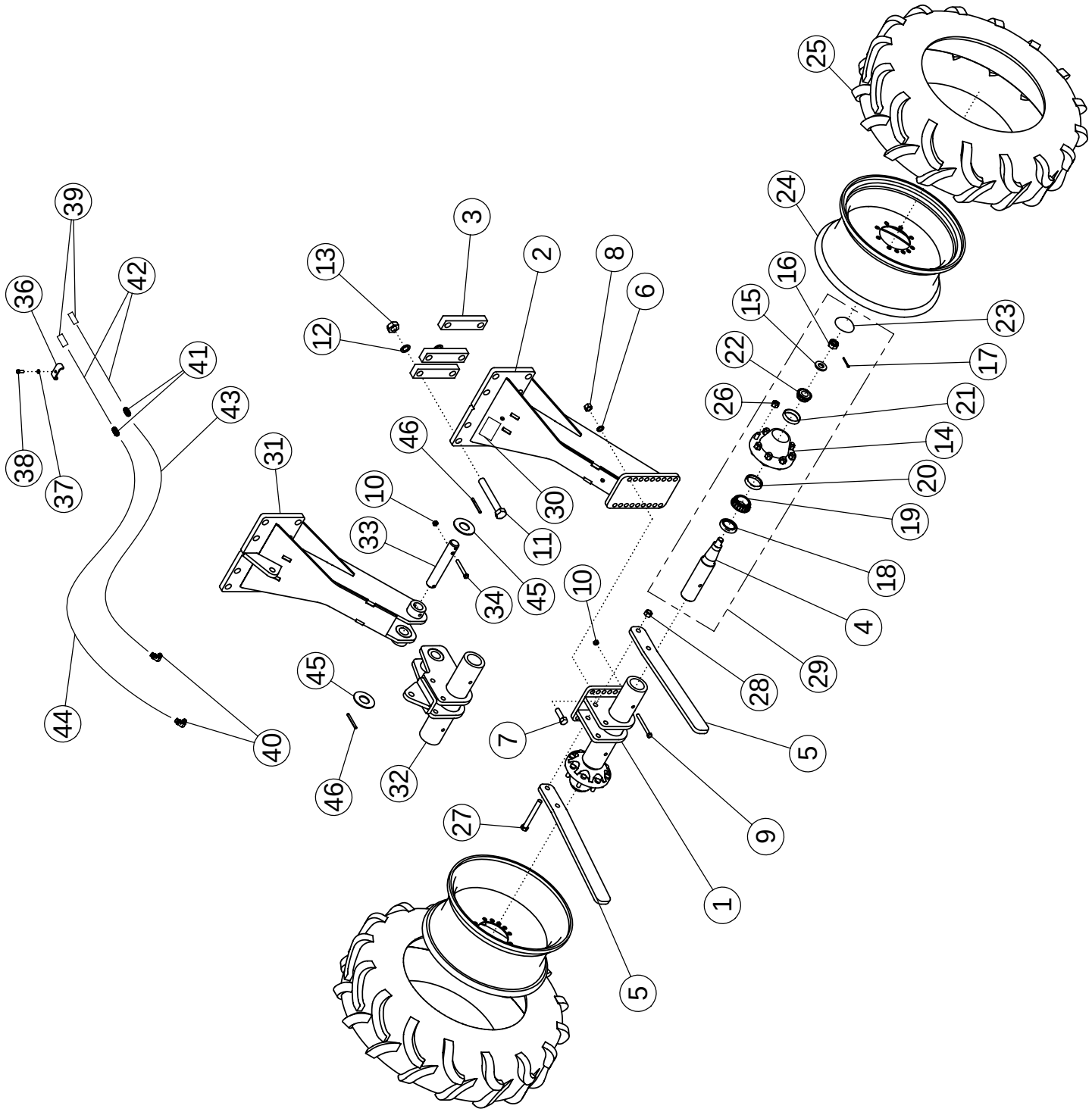
25
24
23
16
15
17
22
21
26
14
20
19
18
4
29
28
5
9
1
5
27
7
32
46
45
40
44
10
33
34
45
11
30
46
31
43
41
42
39
36
38
37
13
12
3
2
8
6

STANDARD REAR STRUTS 11.2 X 24

ITEM	PART NO.	DESCRIPTION	QTY
1	57233	WLDMT - MOUNT STANDARD	1
2	69206	WLDMT-STRUT RH 11.2 X 24	1
3	64143	BAR - BOLTING	4
4	52954*	SPINDLE-STANDARD	1
5	59045	SCRAPER	2
6	1012061	WASHER-LOCK: .75 ZP	6
7	1016598	BOLT-HEX: .75 X 2.50 NC GR5 ZP	6
8	1011620	NUT-HEX: .75 NC	6
9	1011618	BOLT-HEX: .50 X 5.00 NC GR5 ZP	2
10	1027461	NUT-TOPLOCK: .50 NC GR5 ZP	2
11	64145	BOLT-HEX: 1.13 X 8.00 NC GR8 ZP	8
12	64147	WASHER-LOCK: 1.13 ZP	8
13	64146	NUT-HEX: 1.13 NC GR2 ZP	8
14	53623*	HUB-WHEEL 8 BOLT	1
15	1030728*	WASHER-SPINDLE: 1.06ID X 2.13OD	1
16	1030726*	NUT-SPINDLE: 1.00 NF NP	1
17	1030797*	PIN-COTTER: .19 X 1.75 NP	1
18	53619*	SEAL	1
19	53621*	BEARING CONE-INNER	1
20	53622*	BEARING CUP-INNER	1
21	52243*	BEARING CUP-OUTER	1
22	53620*	BEARING CONE-OUTER	1
23	53624*	HUB CAP	1
24	56903	WHEEL W10 X 24 8 BOLT (1.88 POS)	2
25	56976	TIRE 11.2-24 10 PLY R1	2
	68973	TUBE-REPAIR 11.2-24	AR
26	53625*	NUT-WHEEL: .63-18NF	8
27	1012059	BOLT-HEX: .75 X 6.50 NC GR5 ZP	2
28	1017000	NUT-TOPLOCK: .75 NC GR5 ZP	2
29	53167	ASSY-HUB & SPINDLE 8-BOLT	2
30	52248	DECAL-CAUTION	1
31	69204	WLDMT-STRUT LH ADJ 11.2 X 24	1
32	69205	WLDMT-MOUNT ADJ STRUT	1
33	73367	PIN-AXLE MAIN	1
34	1032524	BOLT-HEX: .50 X 4.00 NC GR5 ZP	1
35	72950	CYLINDER-HYDRAULIC 4 X 10	1
36	50714	CLAMP .50 ZP	6
37	1011586	WASHER-LOCK: .38 ZP	6
38	1011600	BOLT-HEX: .38 X 1.00 NC GR5 ZP	6

CONTINUED

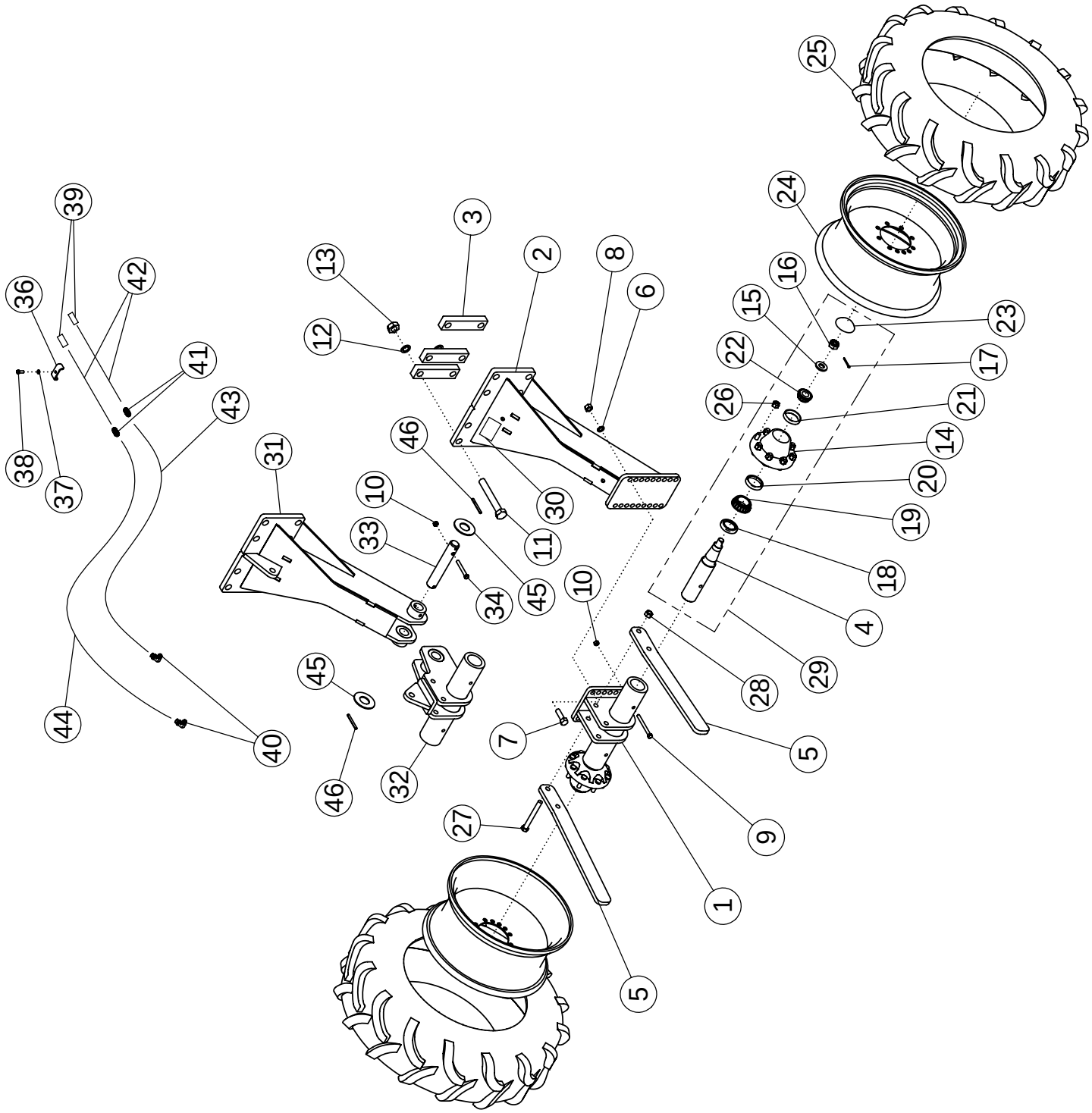
39
36
42
38
37
41
43
44
40
31
13
12
3
2
8
6
46
10
33
34
45
30
11
45
46
32
7
27
10
28
29
4
18
19
20
14
21
26
22
15
16
23
17
24
25
5
9
1
5

STANDARD REAR STRUTS (CONTINUED)

ITEM	PART NO.	DESCRIPTION	QTY
39	53631	PIONEER TIP 8010-4	2
40	58560	FTG-ELBOW: 8MB-8MJ-90	2
41	58194	FTG-ADAPTER: 8MJ-8MJ	2
42	58376	HOSE: .50 X 108 8MP-8FJX	2
43	58377	HOSE: .50 X 172 8FJX-8FJX	1
44	58378	HOSE: .50 X 182 8FJX-8FJX	1
45	73368	WASHER-FLAT: 1.75 ZP	2
46	73369	ROLL PIN: .38 X 3.50 ZP	2

* Items are included in Item 29

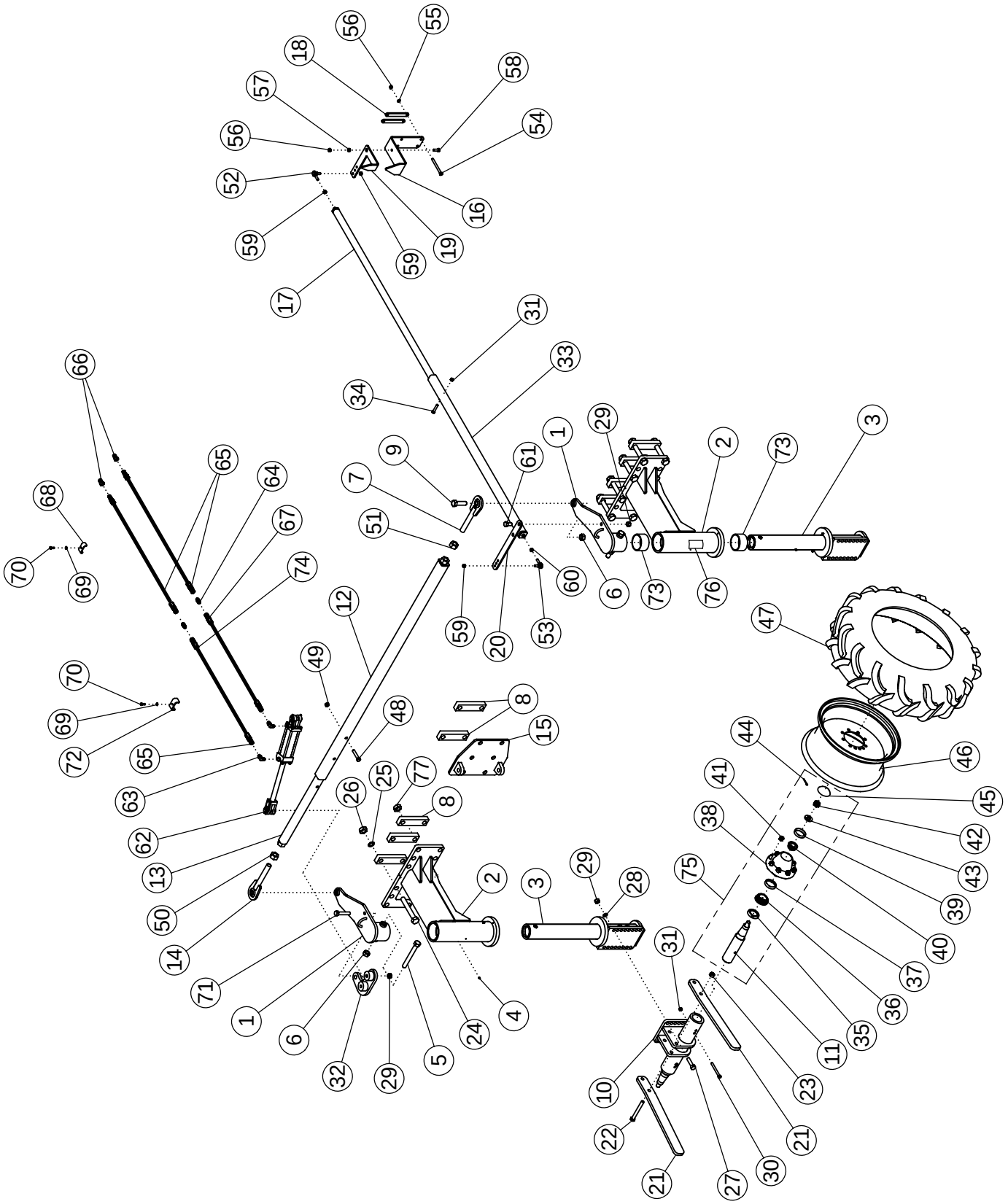
56
55
18
58
57
54
56
52
16
59
19
59
17
31
33
34
66
29
1
2
73
3
9
61
65
64
7
68
67
51
70
69
74
60
6
73
76
12
59
20
53
47
49
70
8
69
48
15
72
65
44
46
41
45
25
77
26
8
38
42
63
43
62
39
13
75
29
2
3
28
50
40
14
31
37
71
36
1
4
24
35
6
11
5
32
29
23
10
21
22
21
27
30

STEERABLE REAR STRUTS

ITEM	PART NO.	DESCRIPTION	QTY
1	58240	WLDMT - STEERING ARM	2
2	69415	WLDMT-STEERING HOUSING	2
3	58238	WLDMT - KING PIN	2
4	1011748	ZERK - GREASE	10
5	1033376	BOLT-HEX: 1.00 X 8.50 NC GR8 ZP	2
6	1016969	NUT-TOPLOCK: 1.00 NC GR5 ZP	4
7	58186	WLDMT-TIE ROD RH	1
8	64143	BAR - BOLTING	6
9	1032276	BOLT-HEX: 1.00 X 3.50 NC GR8 ZP	2
10	68712	WLDMT - MOUNT STANDARD & 24"	2
11	52954*	SPINDLE-STANDARD	4
12	58374	WLDMT-TIE ROD EXTENSION	1
13	58341	WLDMT-TIE ROD	1
14	58203	WLDMT-TIE ROD LH	1
15	69418	WLDMT-CYLINDER MOUNT STEERABLE	1
16	53278	MOUNT-INDICATOR	1
17	59492	WLDMT-TIE ROD	1
18	56809	BAR-BOLTING	2
19	58348	INDICATOR LH	1
	68131	INDICATOR RH	
20	64980	ARM-STEERING INDICATOR	1
21	59045	SCRAPER	4
22	1016718	BOLT-HEX: .75 X 6.50 NC GR5 ZP	4
23	1017000	NUT-TOPLOCK: .75 NC GR5 ZP	4
24	64145	BOLT-HEX: 1.13 X 8.00 NC GR8 ZP	20
25	64147	WASHER-LOCK: 1.13 ZP	20
26	64146	NUT-HEX: 1.13 NC GR5 ZP	20
27	1012059	BOLT-HEX: .75 X 3.00 NC GR5 ZP	12
28	1012061	WASHER-LOCK: .75 ZP	12
29	1011620	NUT-HEX: .750 NC	16
30	1011618	BOLT-HEX: .50 X 5.00 NC GR5 ZP	4
31	1027461	NUT-TOPLOCK: .50 NC GR5 ZP	5
32	58123	PLATE	1
33	59493	WLDMT-TIE ROD EXTENSION	1
34	1011610	BOLT-HEX: .50 X 2.50 NC GR5 ZP	1
35	53619*	SEAL	4
36	53621*	BEARING CONE-INNER	4
37	53622*	BEARING CUP-INNER	4
38	53623*	HUB-WHEEL 8 BOLT	4
39	52243*	BEARING CUP-OUTER	4
40	53620*	BEARING CONE-OUTER	4

CONTINUED

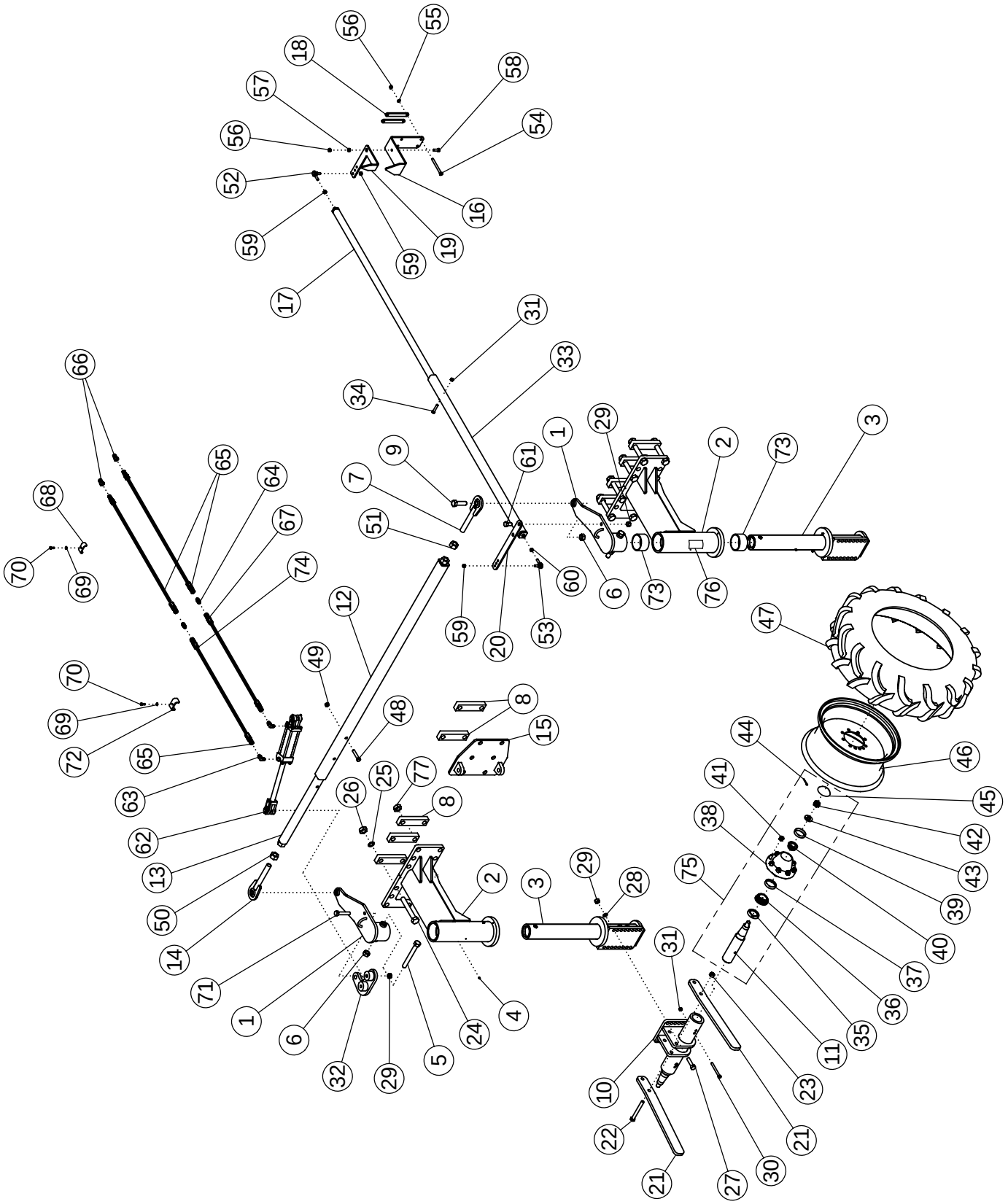
56
55
18
58
57
54
56
52
16
59
19
59
17
31
33
34
66
29
1
2
73
3
9
61
65
64
7
68
67
51
70
69
74
60
6
73
76
12
59
20
53
47
49
70
8
69
48
15
72
65
44
46
63
25
77
41
45
26
8
38
42
62
43
13
75
29
2
3
28
39
50
40
14
31
37
71
36
1
35
6
24
4
11
32
29
5
23
10
21
22
21
27
30

STEERABLE REAR STRUTS (CONTINUED)

ITEM	PART NO.	DESCRIPTION	QTY
41	53625*	NUT-WHEEL: .63-18NF	32
42	1030726*	NUT-SPINDLE: 1.00 NF NP	4
43	1030728*	WASHER-SPINDLE: 1.06ID X 2.13OD	4
44	1030797*	PIN-COTTER: .19 X 1.75 NP	4
45	53624*	HUB CAP	4
46	56903	WHEEL W10 X 24 8 BOLT (1.875 POS)	4
47	56976	TIRE 11.2-24 10 PLY R1	4
	68973	TUBE-REPAIR 11.2-24 (NOT SHOWN)	AR
48	1030704	BOLT-HEX: .63 X 3.25 NC GR5 ZP	1
49	1011578	NUT-HEX: .63 NC GR2 ZP	1
50	1030729	NUT-HEX: 1.25 NC GR2 ZP LH	1
51	1011621	NUT-HEX: 1.25 NC GR2 ZP	1
52	58350	BALL JOINT ROD END 1/2-20NF RH	1
53	58351	BALL JOINT ROD END 1/2-20NF LH	1
54	1016660	BOLT-HEX: .50 X 5.50 NC GR5 ZP	4
55	1011581	WASHER-LOCK: .50 ZP	4
56	1011577	NUT-HEX: .50 NC GR2 ZP	5
57	56884	BUSHING-INDICATOR REAR STRUT	1
58	1011607	BOLT-HEX: .50 X 1.50 NC GR5 ZP	1
59	58355	NUT-HEX: .50 NF GR5 ZP RH	3
60	58366	NUT-HEX: .50 NF GR5 ZP LH	1
61	58367	BOLT-HEX: .75 X 1.50 NC GR5 ZP	2
62	58890	CYLINDER HYDRAULIC 3 X 8	1
63	58560	FTG-ELBOW: 8MB-8MJ-90	2
64	58194	FTG-ADAPTER: 8MJ-8MJ	2
65	58376	HOSE: .50 X 108 8MP-8FJX	2
66	53631	PIONEER TIP 8010-4	2
67	58377	HOSE: .50 X 172 8FJX-8FJX	1
68	50714	CLAMP 1/2" ZP	1
69	1011586	WASHER-LOCK: .38 ZP	4
70	1011600	BOLT-HEX: .38 X 1.00 NC GR5 ZP	4
71	1011625	BOLT-HEX: .75 X 4.00 NC GR5 ZP	2
72	63753	CLAMP-HOSE 3/4" ZP	3
73	59205	BUSHING-BORED 4.5 X 4.025	4
74	58378	HOSE: .50 X 182 8FJX-8FJX	1
75	53167	ASSY-HUB & SPINDLE 8 BOLT	2
76	52248	DECAL CAUTION	1

* Items are included in Item 75

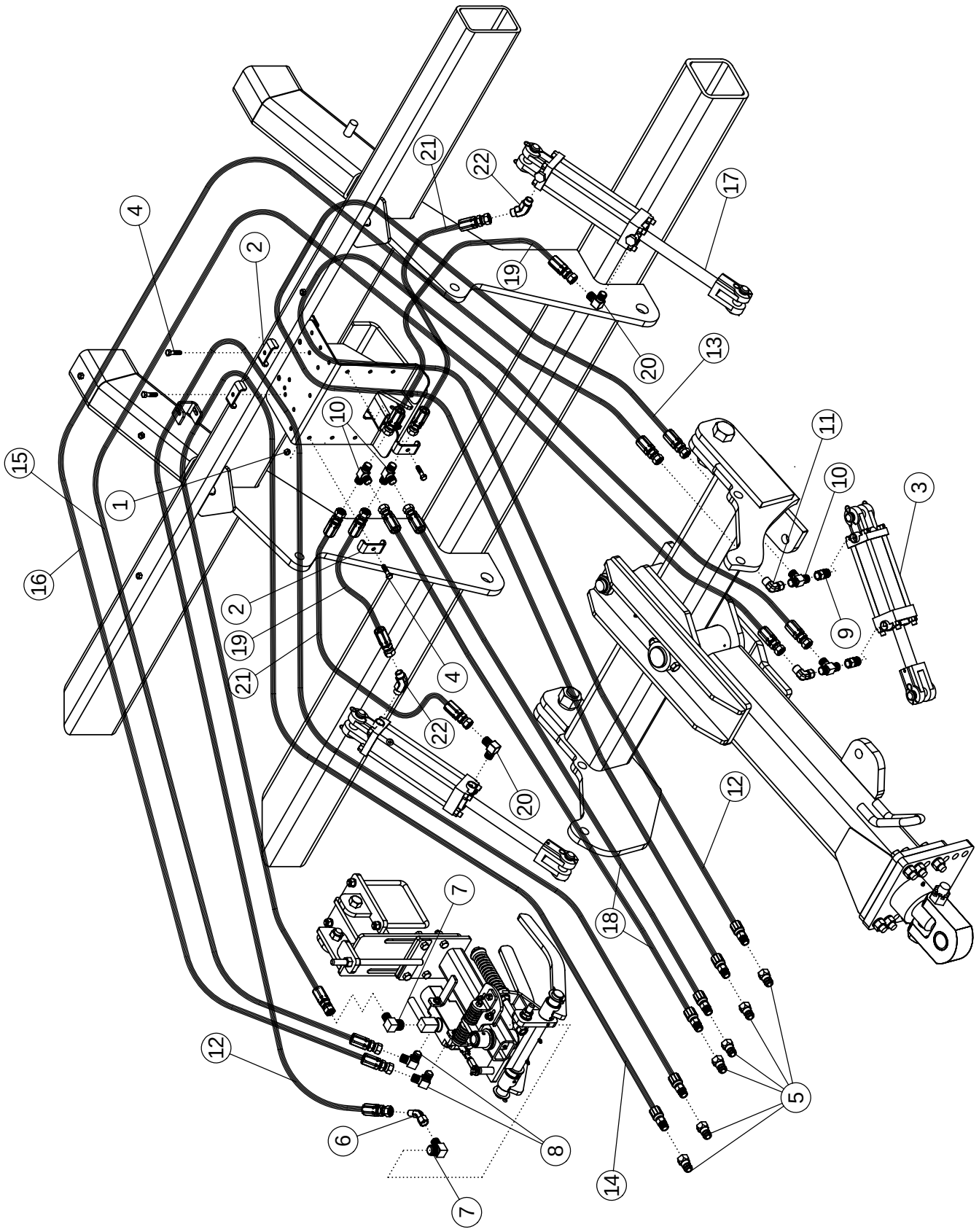
1
2
3
4
5
6
7
8
9
10
11
12
13
14
15
16
17
18
19
20
21
22

ROW FINDER AND HITCH HYDRAULICS

ITEM	PART NO.	DESCRIPTION	QTY
1	1016999	NUT-TOPLOCK: .38 NC GR5 ZP	4
2	50714	CLAMP .50 ZP	4
3	58891	CYLINDER-HYDRAULIC 4 X 8" 3000	1
4	1011602	BOLT-HEX: .38 X 1.50 NC GR5 ZP	4
5	53631	PIONEER TIP 8010-4	6
6	57663	FTG-ELBOW: 8MJ-8FJX-45	1
7	57664	FTG-ELBOW: 12MP-8MJ-90	2
8	57665	FTG-ELBOW: 8MP-8MJ-90	2
9	56941	FTG-ADAPTER: 8MB-8FJX	2
10	57667	FTG-TEE: 8MJ-8MJ-8MJ	4
11	57668	FTG-ELBOW: 8MJ-8FJX 90	2
12	57669	HOSE: .50 X 153 8MP-8FJX	2
13	57670	HOSE: .50 X 150 8MP-8FJX	1
14	57671	HOSE: .50 X 163 8MP-8FJX	1
15	57672	HOSE: .50 X 098 8FJX-8FJX	1
16	57673	HOSE: .50 X 096 8FJX-8FJX	1
17	62082	CYLINDER-HYDRAULIC 4 X 10" 3000	2
18	57675	HOSE: .50 X 100 8MP-8FJX	2
19	57676	HOSE: .50 X 031 8FJX-8FJX	2
20	58560	FTG-ELBOW: 8MB-8MJ-90	2
21	57677	HOSE: .50 X 021 8FJX-8FJX	2
22	58515	FTG-ELBOW: 8MB-8MJ-45	2

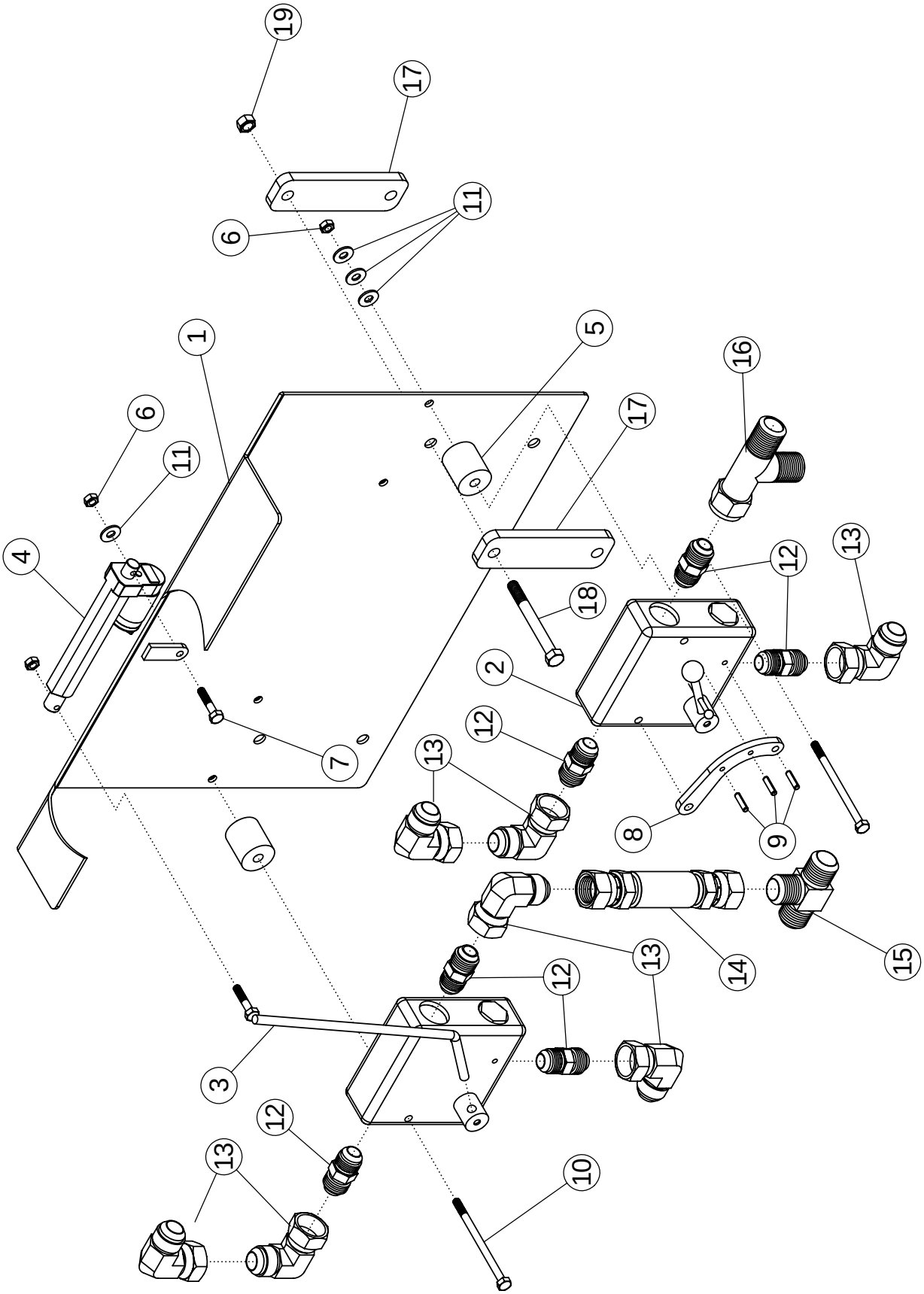
19
17
11
6
1
5
16
6
11
17
4
12
13
18
2
12
13
7
8
9
13
14
15
12
3
12
13
10

VALVE GROUP: DUAL MOTOR SCRUB

ITEM	PART NO.	DESCRIPTION	QTY
1	68092	WLDMT-BRACKET FLOW CONTROL	1
2	58985	VALVE-FLOW CONTROL- 3/4" FP	2
3	59524	WLDMT-ARM FLOW CONTROL Z.P.	1
4	59633	ACTUATOR-12VDC 4" STROKE	1
5	59463	SPACER	4
6	1030946	NUT-TOPLOCK: .25 NC GR5 ZP	6
7	1013940	BOLT-HEX: .25 X 1.25 NC GR5	1
8	59206	BRACKET-FLOW CONTROL ZP	1
9	54314	PIN-ROLL .19 X .75 ZP	3
10	1030776	BOLT-HEX: .25 X 4.00 NC GR5	4
11	1020416	WASHER-FLAT: .25 ZP	13
12	59042	FTG-ADAPTER: 12MP-12MJ	6
13	59041	FTG-ELBOW: 12MJ-12FJX 90	7
14	63471	ASSY-TUBE LINE .75 X 5.25 0-0	1
15	58986	FTG-TEE: 12MJ-12MJ-12MJ	1
16	59888	FTG-TEE: 12MJ-12FJX-12MJ	1
17	59881	BRACKET-BOLT PLATE	4
18	58176	BOLT-HEX: .38 X 3.50 NC GR5 ZP	4
19	1016999	NUT-TOPLOCK: .38 NC GR5 ZP	4

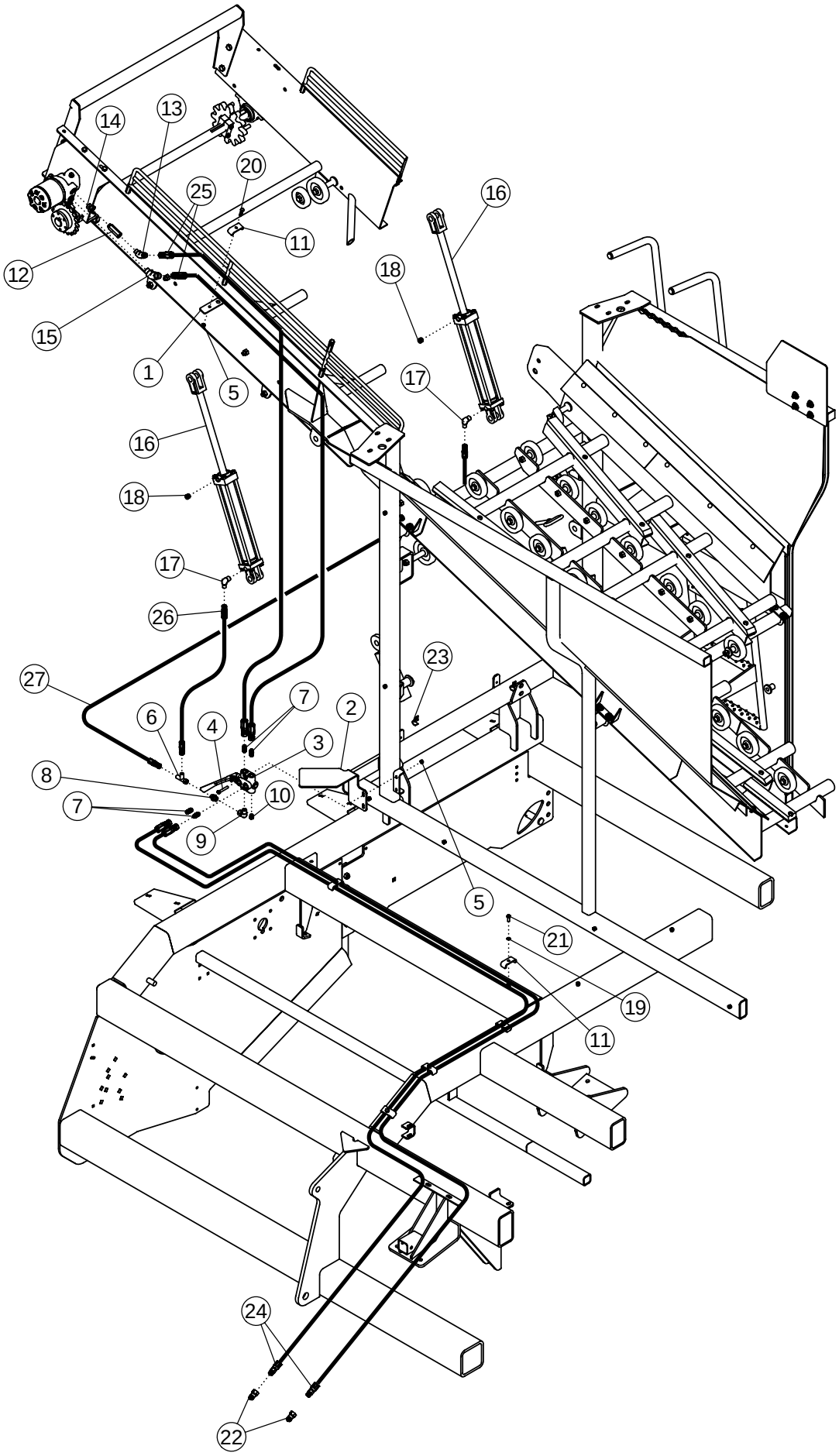
14
13
20
25
16
11
12
18
15
1
5
17
16
18
17
26
23
27
7
6
4
2
3
8
10
7
9
5
21
19
11
24
22

TANK HYDRAULICS

ITEM	PART NO.	DESCRIPTION	QTY
1	54825	BRACKET-HOSE ZP	2
2	62904	GUARD-SELECTOR VALVE	1
3	58470	VALVE-SELECTOR	1
4	59390	BOLT-HEX: .38 X 2.25 NC GR5 ZP	2
5	1016999	NUT-TOPLOCK: .38 NC GR5 ZP	4
6	56231	FTG-TEE: 6MJ-6FJX-6MJ	1
7	56226	FTG-ADAPTER: 8MB-8MJ	4
8	64307	FITTING-RESTRICTOR (6MJ-8MP R 1/16)	1
9	55733	FTG-ELBOW: 8MB-8FP 90	1
10	56190	FTG-PLUG: 8MB	1
11	50714	CLAMP 1/2" ZP	8
12	53722	VALVE-CHECK: 8MP-8FP	1
13	58288	FTG-ELBOW: 8MP-8MJ-45	1
14	58289	FTG-ADAPTER: 10MB-8FP	1
15	56229	FTG-ELBOW: 10MB-8MJ-45	1
16	58889	CYLINDER-HYD 2.5 X 16	2
17	58557	FTG-ELBOW: 8MB-6MJ 90	2
18	58547	FTG-PLUG: 8MB BREATHER	2
19	1011586	WASHER-LOCK: .38 ZP	6
20	1011602	BOLT-HEX: .38 X 1.50 NC GR5 ZP	2
21	1011600	BOLT-HEX: .38 X 1.00 NC GR5 ZP	6
22	53631	PIONEER TIP 8010-4	2
23	50779	HOSE-CLAMP	2
24	57699	HOSE: .50 X 262 8MP-8FJX	2
25	59889	HOSE: .50 X 161 X 8FJX-8FJX	2
26	58151	HOSE: .38 X 34 X 6FJX-6FJX	1
27	68163	HOSE: .38 X 96 6FJX-6FJX	1

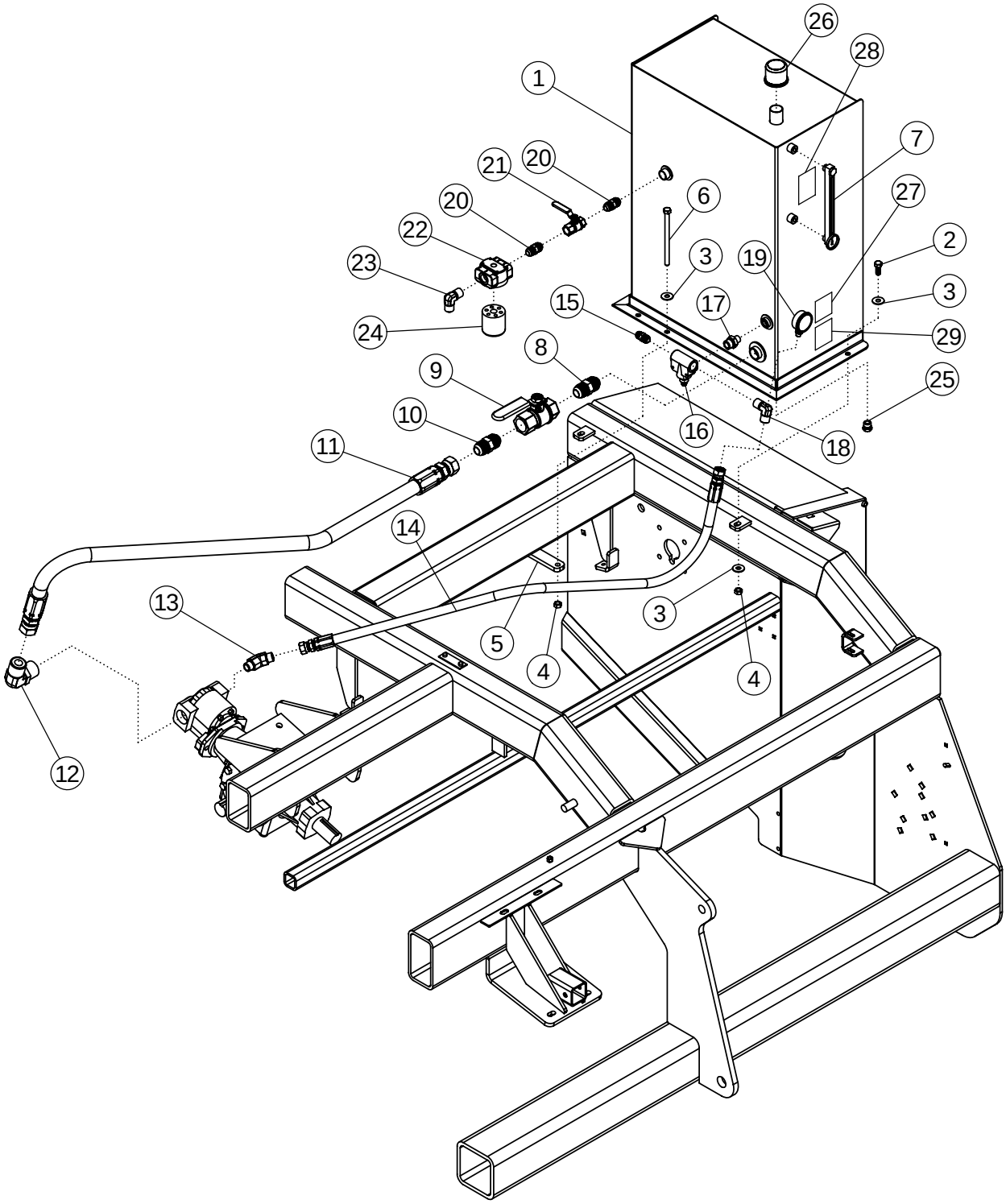
26
28
1
7
21
20
6
27
20
22
2
3
19
23
3
15
17
24
29
8
9
25
10
16
18
11
14
13
3
5
4
4
12

HYDRAULIC TANK

ITEM	PART NO.	DESCRIPTION	QTY
1	58079	HYDRAULIC TANK-PAINTED	1
2	1011606	BOLT-HEX: .50 X 1.25 NC GR5 ZP	2
3	1014443	WASHER-FLAT: .50 ZP	6
4	1027461	NUT-TOPLOCK: .50 NC GR5 ZP	4
5	58204	BAR - BOLTING	1
6	1032514	BOLT-HEX: .50 X 7.50 NC GR5 ZP	2
7	58914	GAUGE-LEVEL & TEMP	1
8	58978	FTG-ADAPTER: 20MP-20MP	1
9	58979	VALVE-BALL: 20FP-20FP	1
10	62209	FTG-ADAPTER: 20MP-20MJ	1
11	62213	HOSE: 1.25 X 084 20FJX-20FJX	1
12	58980	FTG-ELBOW: 24MB-20MJ-90	1
13	62212	FTG-ELBOW: 16MB-12MJ-45	1
14	62517	HOSE: .75 X 079 12FJX-12FJX	1
15	59042	FTG-ADAPTER: 12MP-12MJ	1
16	58190	VALVE-RELIEF	1
17	58466	FTG-ADAPTER: 12MP-8MP	1
18	58983	FTG-ELBOW: 12MP-12MJ-90 W/.25" FP	1
19	62518	GAUGE-PRESSURE: 1/4"MP 3000 PSI	1
20	58196	FTG-ADAPTER: 12MP-12MP	2
21	59165	VALVE-BALL 3/4FP - 3/4FP	1
22	58690	FILTER HEAD	1
23	59044	FTG-ELBOW: 12MP-12MJ-90	1
24	58691	FILTER-HYDRAULIC	1
25	55718	FTG-PLUG: 8MB	1
26	58197	CAP-FILLER	1
27	62964	DECAL-WARNING	1
28	64428	DECAL-HYD TANK SPECS	1
29	64429	DECAL-WARNING BALL VALVE	1

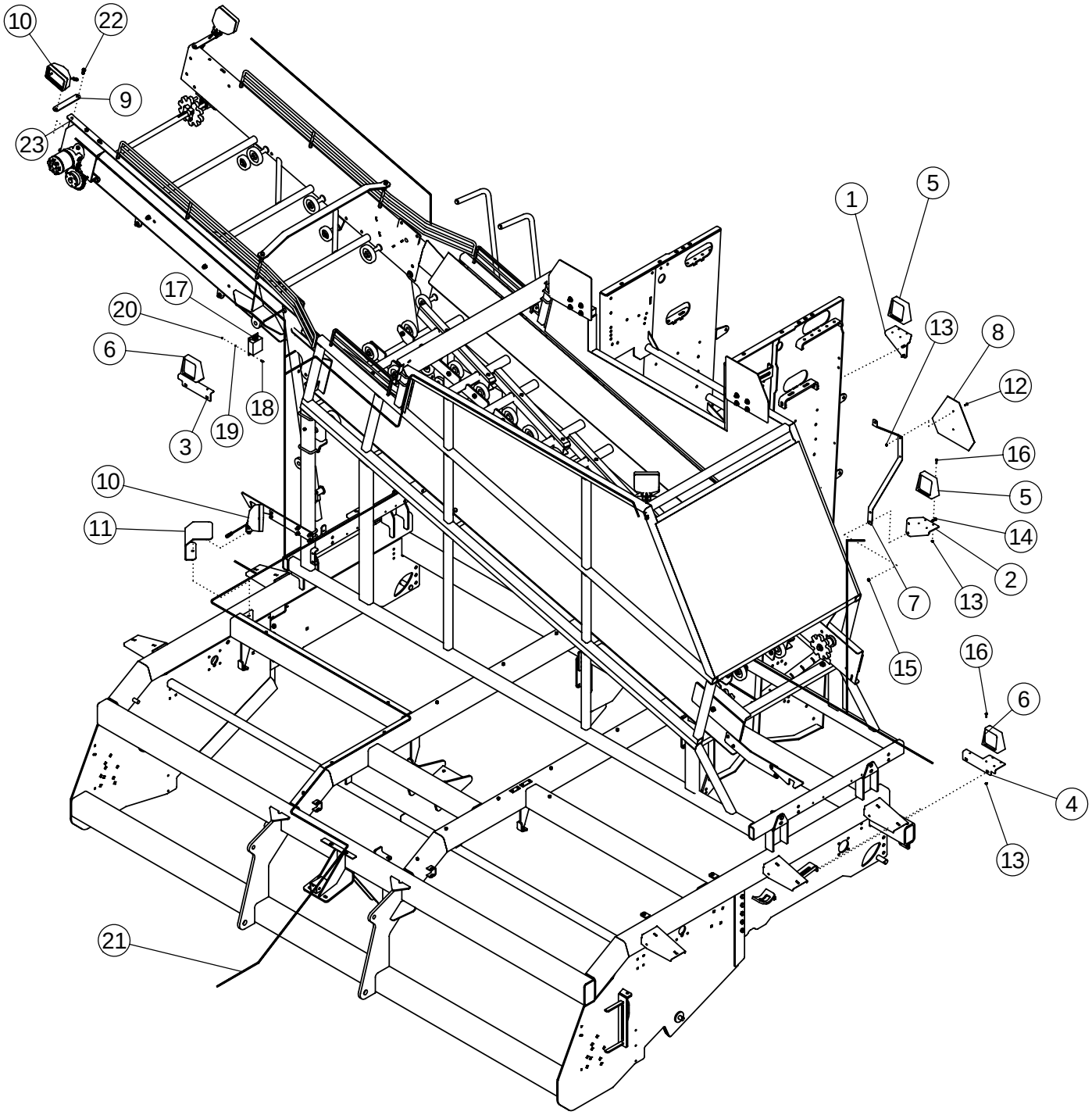
10
22
9
23
17
20
6
18
19
3
10
11
21
1
5
13
8
12
16
5
14
2
13
7
15
16
6
4
13

LIGHT KIT

ITEM	PART NO.	DESCRIPTION	QTY
1	64236	BRACKET-LIGHT RH RED	1
2	64235	BRACKET-LIGHT LH RED	1
3	64175	BRACKET RH	1
4	64176	BRACKET LH	1
5	65953	LAMP-RED TAIL	2
6	65954	LAMP-AMBER TAIL	2
7	64290	MOUNT-SMV SIGN	1
8	65329	SIGN-SMV ASAE	1
9	57168	LIGHT BRACKET	2
10	62900	ASSY - LIGHT FLOOD W/CON	4
11	62894	GUARD-GRABROLL LIGHT	1
12	1011595	BOLT-HEX: .25 X .75 NC GR5 ZP	2
13	1030946	NUT-TOPLOCK: .25 NC GR5 ZP	18
14	1011601	BOLT-HEX: .38 X 1.25 NC GR5 ZP	4
15	1016999	NUT-TOPLOCK .375 NC GR5 ZP	4
16	1013423	BOLT-HEX: .25 X 1.00 NC GR5 ZP	16
17	65341	MODULE-INTERFACE	1
18	0100615	BOLT: .19 X .75 NC GR5 ZP	4
19	1012061	WASHER-LOCK: .19 ZP	4
20	1011588	NUT-HEX: .19 NC GR2 ZP	4
21	64283	HARNESS-HARVESTER	1
22	1011606	BOLT-HEX: .50 X 1.25 NC GR5 ZP	2
23	1027461	NUT-TOPLOCK: .50 NC GR5 ZP	2
24	1013122	TIE-CABLE, NYLON 14.00" (NOT SHOWN)	40
25	62833	CLAMP-ADHESIVE BACKED CABLE (NOT SHOWN)	8

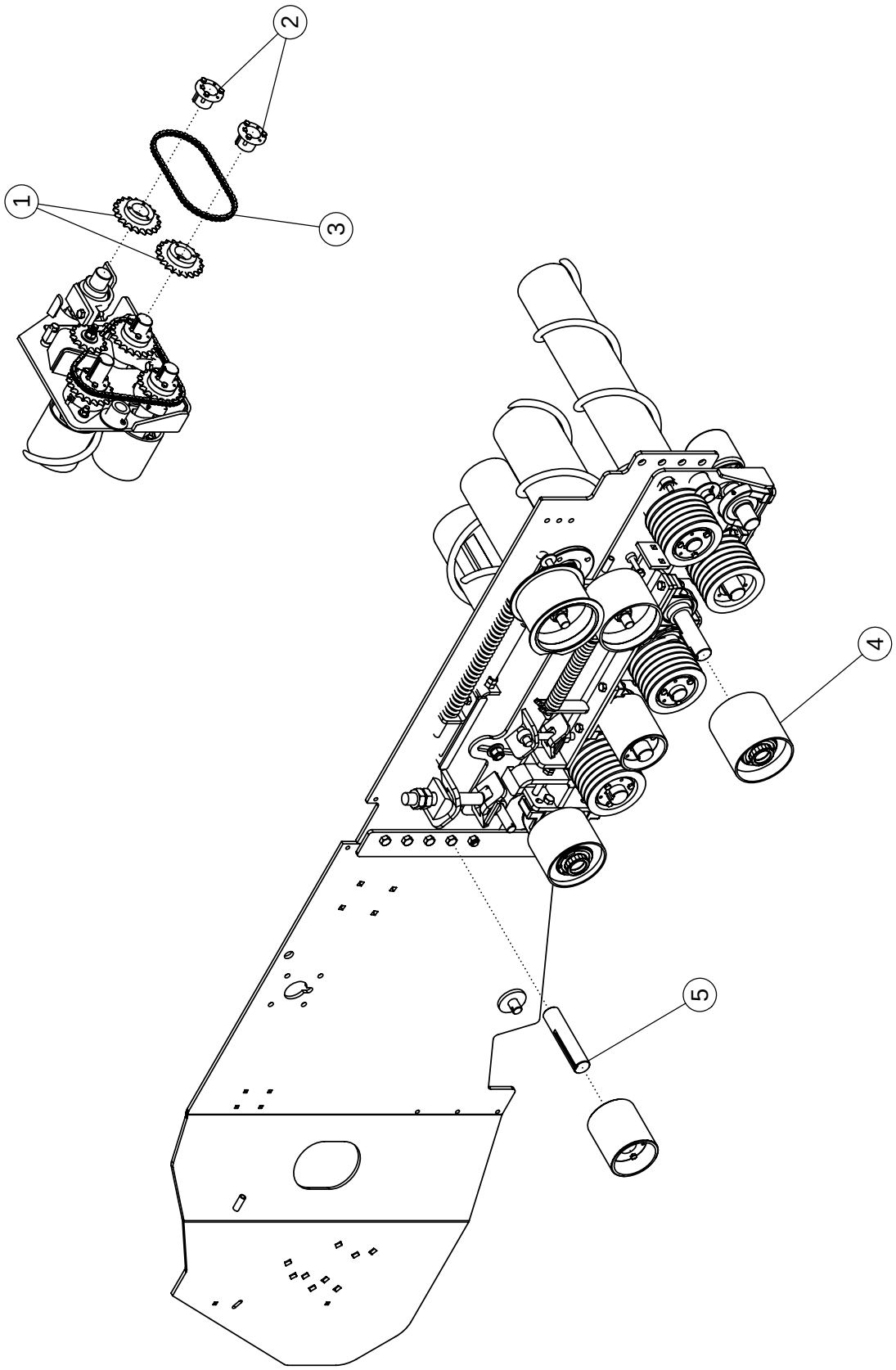
1
2
3
4
5

REVERSE #4 CLEANING ROLL #62111 (OPTIONAL)

ITEM	PART NO.	DESCRIPTION	QTY
1	53649	SPROCKET H60-P20	2
2	53641	HUB P1 1.75 (WITH KEY)	2
3	62110	CHAIN-ROLLER 60H-1R-045	1
4	56409	ASSY-IDLER PULLEY 8R	1
5	62108	SHAFT-STUB REVERSE #4	1

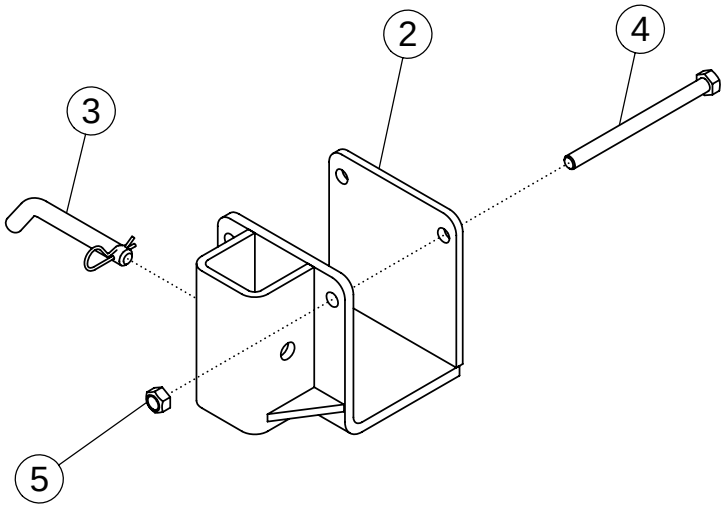
2
4
3
5

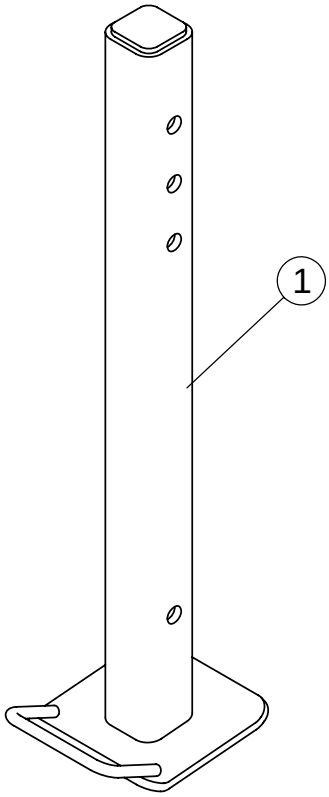
1

HARVESTER STAND #63397 (OPTIONAL)

ITEM	PART NO.	DESCRIPTION	QTY
1	63382	WLDMT-STAND SUPPORT	1
2	63377	WLDMT-STAND MOUNT	1
3	63407	PIN-BENT	1
4	1018957	BOLT-HEX: .63 X 8.00 NC GR5 ZP	2
5	1016595	NUT-TOPLOCK: .63 NC GR5 ZP	2

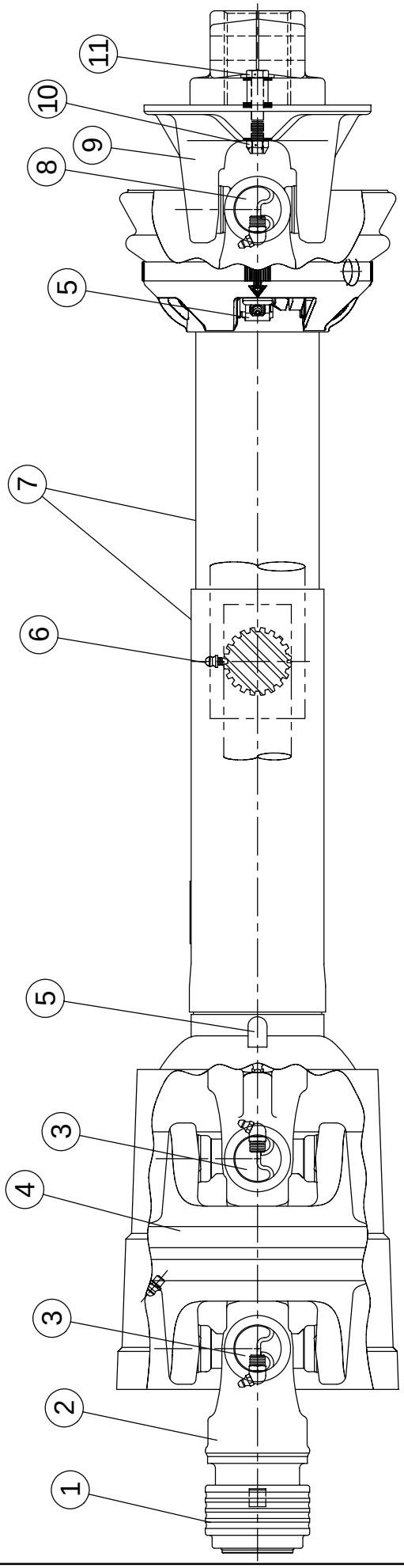
11
10
9
8
5
7
6
5
3
4
3
2
1

PTO DRIVELINE #51481
1.75" - 20 SPLINE

ITEM	PART NO.	DESCRIPTION	QTY
1	62123	SAFETY SLIDE LOCK REPAIR KIT	1
2	54157	SAFETY SLIDE LOCK YOKE ASSEMBLY	1
3	54159	CAT 5 CROSS & BEARING KIT	2
4	64411	CV CENTER HOUSING ASSEMBLY	1
5	64398	NYLON REPAIR KIT	2
6	54161	ZERK-GREASE STRAIGHT	4
7	64412	FULL GUARD SET W/NYLON BEARINGS	1
8	54172	35R CROSS & BEARING KIT	1
9	57286	BALL SHEAR ASSEMBLY	1
10	1030700	NUT-TOPLOCK: .31 NC GR5 ZP	1
11	1011285	BOLT-HEX: .31 X 2.00 NC GR5 ZP	1

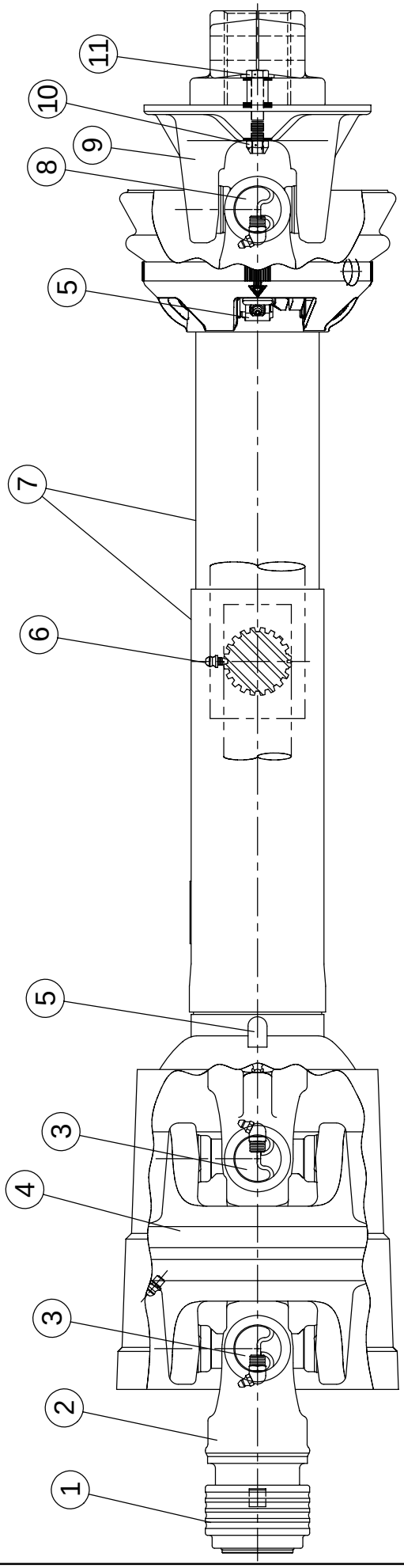
11
10
9
8
5
7
6
5
3
4
3
2
1

PTO DRIVELINE #51480
1.38" - 21 SPLINE

ITEM	PART NO.	DESCRIPTION	QTY
1	55187	SAFETY SLIDE LOCK REPAIR KIT	1
2	54156	SAFETY SLIDE LOCK YOKE ASSEMBLY	1
3	54159	CAT 5 CROSS & BEARING KIT	2
4	64411	CV CENTER HOUSING ASSEMBLY	1
5	64398	NYLON REPAIR KIT	2
6	54161	ZERK-GREASE STRAIGHT	4
7	64412	FULL GUARD SET W/NYLON BEARINGS	1
8	54172	35R CROSS & BEARING KIT	1
9	57286	BALL SHEAR ASSEMBLY	1
10	1030700	NUT-TOPLOCK: .31 NC GR5 ZP	1
11	1011285	BOLT-HEX: .31 X 2.00 NC GR5 ZP	1

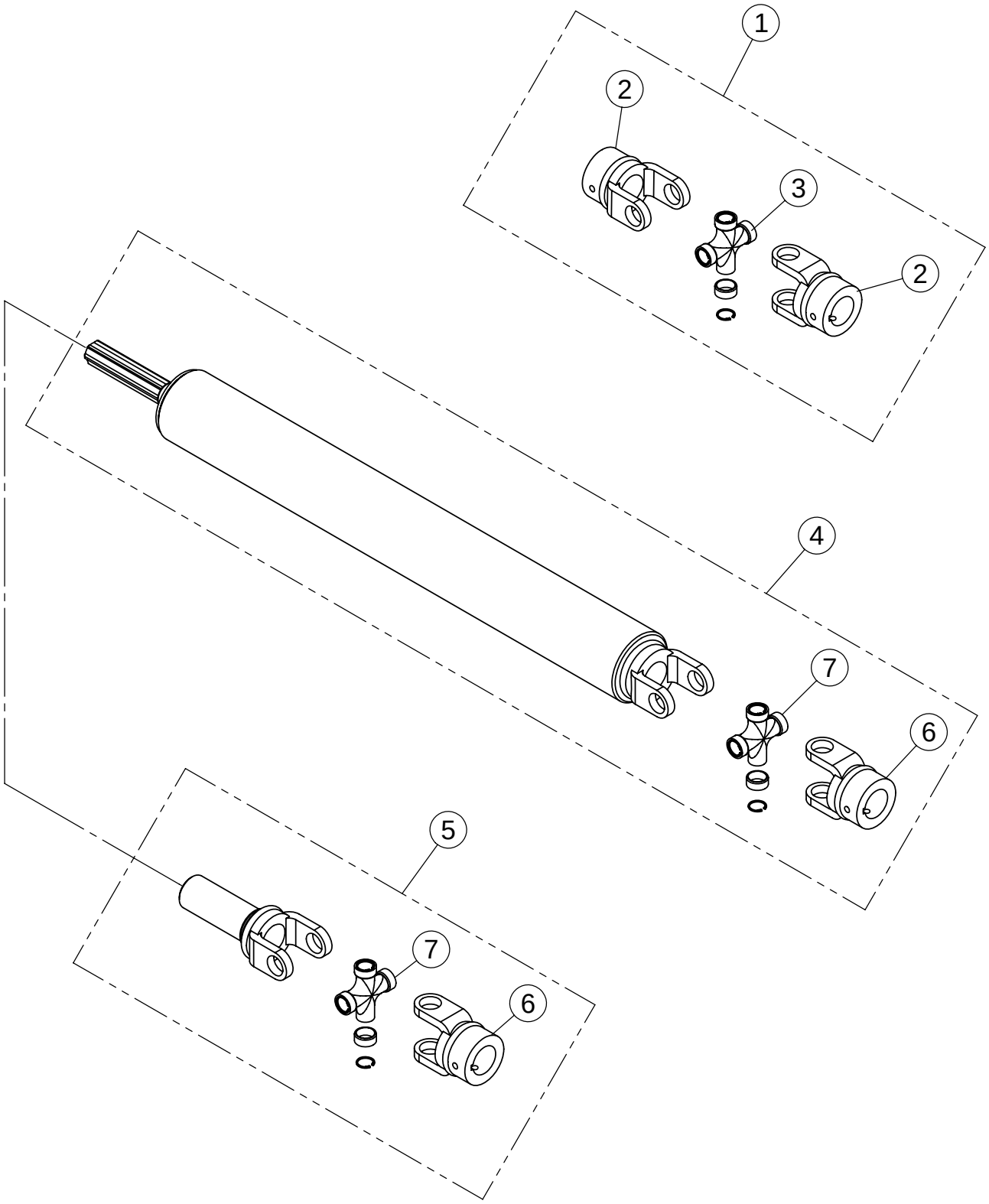
1
2
3
2
4
7
6
5
7
6

DRIVELINE COMPONENTS

ITEM	PART NO.	DESCRIPTION	QTY
1	53642	U-JOINT	1
2	55035	YOKE 1.75"	2
3	54172	35E CROSS & BEARING KIT	1
4	57923	DRIVE SHAFT 49.25"	1
	57924	DRIVE SHAFT 72.50"	
5	57925	DRIVE COUPLER	1
6	62037	YOKE 1.38"	1
7	58876	CROSS KIT U-JOINT 14E	1

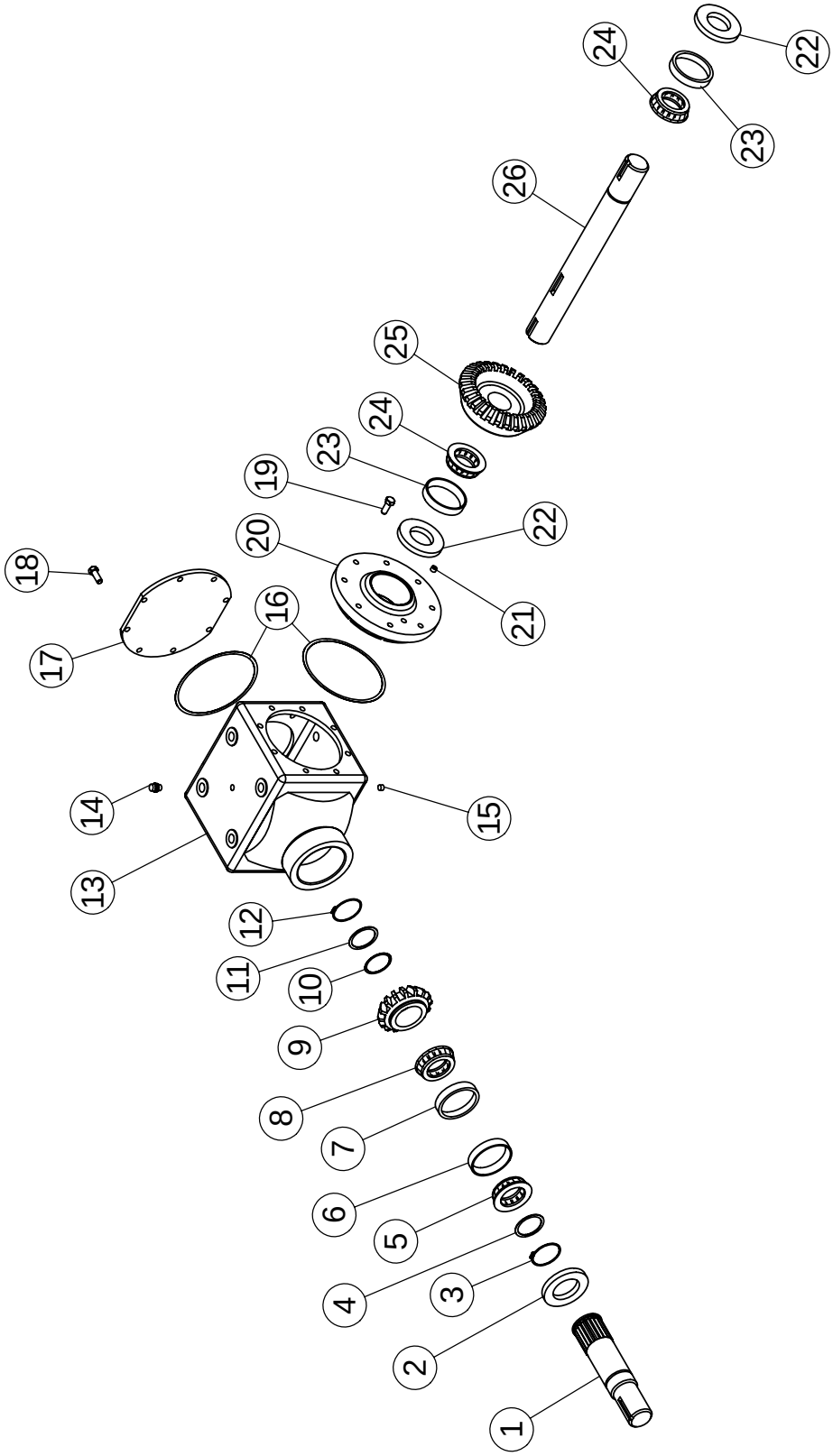
1
2
3
4
5
6
7
8
9
10
11
12
13
14
15
16
17
18
19
20
21
22
23
24
25
26
24
23
22

GEARBOX (1.81:1) #63846
(PRIMARY)

ITEM	PART NO.	DESCRIPTION	QTY
1	62721	QUILL SHAFT	1
2	62722	SEAL: 2.00 X 3.263	1
3	62724	SNAP RING	1
4	62723	WASHER 2.00 X .134	1
5	62725	BEARING CONE	1
6	62726	BEARING CUP	1
7	62727	BEARING CUP	1
8	62728	BEARING CONE	1
9	62729	PINION-16 TOOTH	1
10	62730	SHIM: 1.75 X .007	1
11	62731	WASHER 1.75 X .179	1
	68599	WASHER 1.75 X .135	
12	62732	SNAP RING	1
13	62733	CASE-900 SERIES	1
14	64408	VENT PLUG: .50 NPT (SQ. HD.)	1
15	62735	PLUG: .50 NPT	1
16	62736	SHIM-COVER	2
17	64434	PLATE	1
18	1011599	BOLT-HEX: .38 X .75 NC GR5 ZP	8
19	62738	BOLT-HEX: .38 X 1.00 NC GR5 NP	8
20	62742	COVER-OPEN .375 NPT	1
21	62743	PLUG: .38 NPT	1
22	62744	OIL SEAL: 1.75 X .313	2
23	62745	BEARING CUP	2
24	62746	BEARING CONE	2
25	64410	GEAR-29 TOOTH	1
26	64409	THRU SHAFT	1

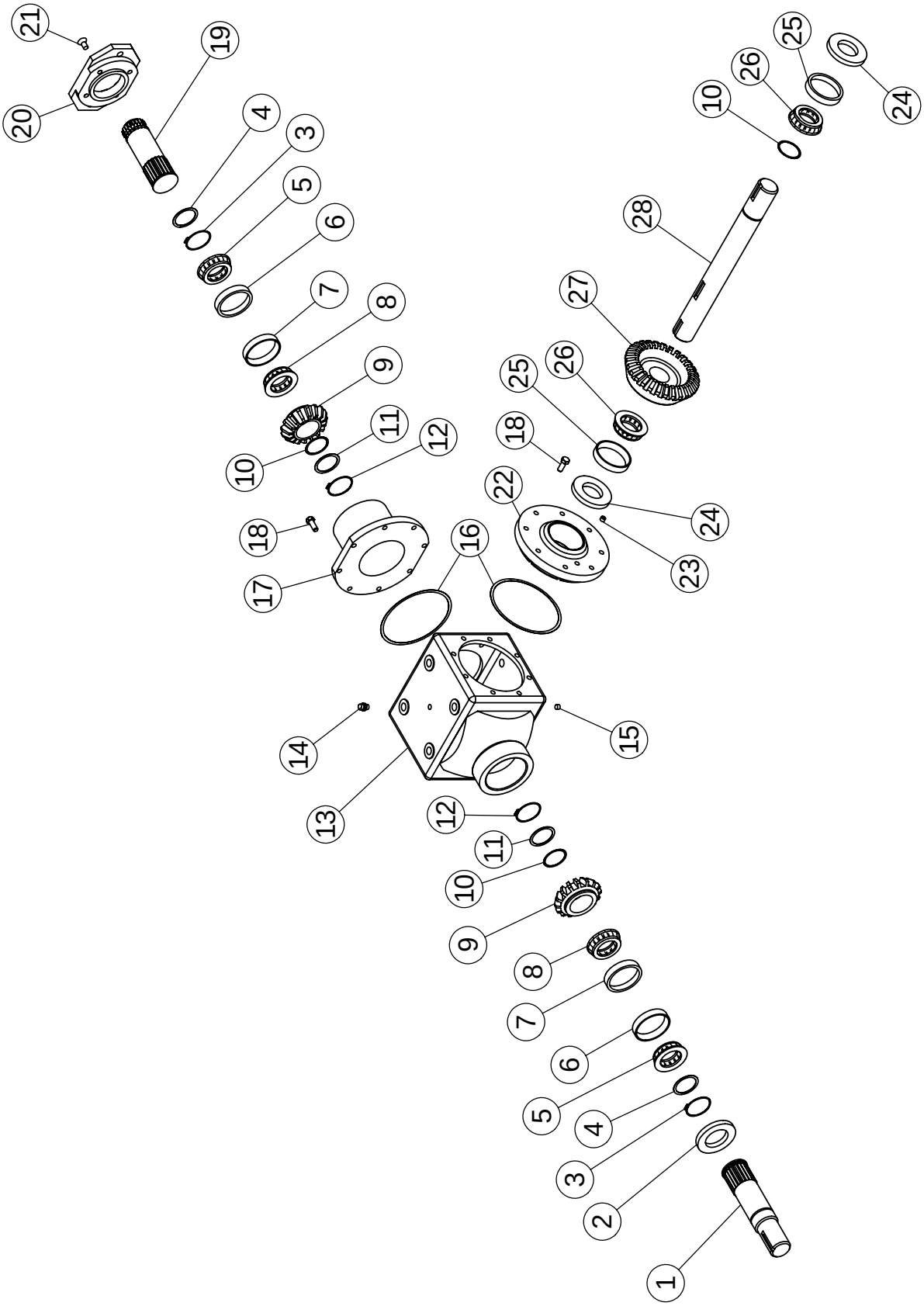
21
20
19
4
3
5
6
7
8
9
10
11
12
18
17
16
14
13
12
11
10
9
8
7
6
5
4
3
2
1
10
26
25
24
28
27
25
26
18
22
24
23
15

GEARBOX (1.81:1) #62396
(PRIMARY: ONBOARD OPTION)

ITEM	PART NO.	DESCRIPTION	QTY
1	62721	QUILL SHAFT	1
2	62722	SEAL: 2.00 - 3.26	1
3	62724	SNAP RING	2
4	62723	WASHER 2.00 X .13	2
5	62725	BEARING CONE	2
6	62726	BEARING CUP	2
7	62727	BEARING CUP	2
8	62728	BEARING CONE	2
9	62729	PINION-16 TOOTH	2
10	62730	SHIM: 1.75 X .007	3
11	62731	WASHER 1.75 X .179	2
	68599	WASHER 1.75 X .135	
12	62732	SNAP RING	2
13	62733	CASE-900 SERIES	1
14	64408	VENT PLUG: .50 NPT (SQ. HD.)	1
15	62735	PLUG: .50 NPT	1
16	62736	SHIM-COVER	2
17	62737	QUILL HOUSING	1
18	62738	BOLT-HEX: .38 X 1.00 NC GR5 NP	16
19	62739	QUILL SHAFT	1
20	62740	FLANGE: 'SAE B' -2.00 BOLT	1
21	62741	SFHCS: .38 X .75 NC GR5	4
22	62742	COVER-OPEN .38 NPT	1
23	62743	PLUG: .38 NPT	1
24	62744	OIL SEAL: 1.75 X .31	2
25	62745	BEARING CUP	2
26	62746	BEARING CONE	2
27	64410	GEAR-29 TOOTH	1
28	64409	THRU SHAFT	1

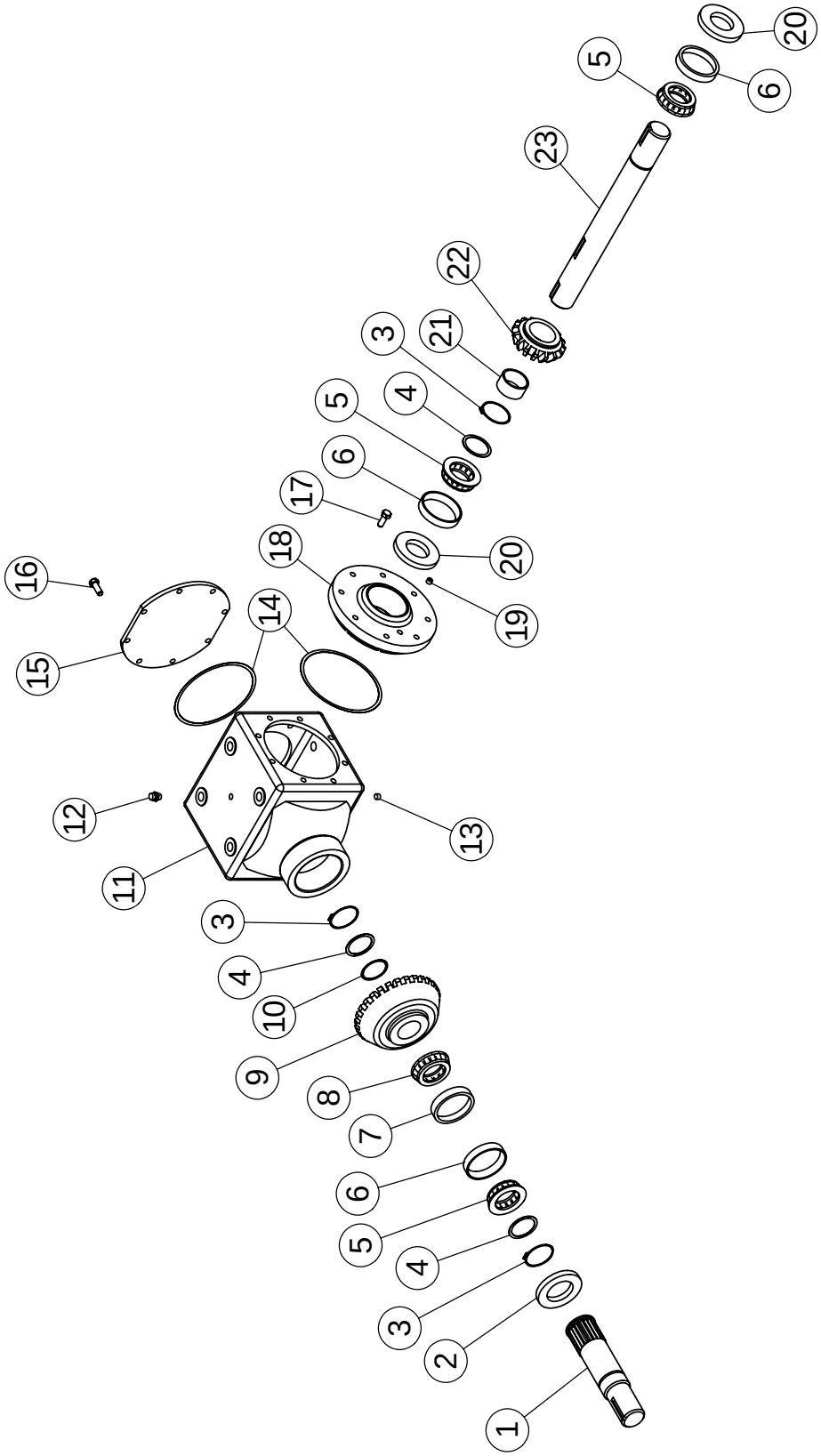
20
5
6
23
22
3
21
4
5
6
17
18
20
16
19
14
15
12
13
11
3
4
10
9
8
7
6
5
4
3
2
1

GEARBOX (1.35:1) #63847
(SECONDARY)

ITEM	PART NO.	DESCRIPTION	QTY
1	64435	QUILL SHAFT	1
2	64436	OIL SEAL	1
3	62732	SNAP RING	3
4	62731	WASHER 1.75 X .179	3
	68599	WASHER 1.75 X .135	
5	62746	BEARING CONE	3
6	62745	BEARING CUP	3
7	62727	BEARING CUP	1
8	64443	BEARING CONE	1
9	64444	GEAR-27 TOOTH	1
10	62730	SHIM: 1.75 X .007	1
11	62733	CASE-900 SERIES	1
12	64445	VENT PLUG: .50 NPT	1
13	62735	PLUG: .50 NPT	1
14	62736	SHIM-COVER	2
15	64434	PLATE	1
16	1011599	BOLT-HEX: .38 X .75 NC GR5 ZP	8
17	62738	BOLT-HEX: .375 X 1.00 NC GR5 NP	8
18	62742	COVER-OPEN .375 NPT	1
19	62743	PLUG: .375 NPT	1
20	62744	OIL SEAL: 1.75 X .313	2
21	64446	SPACER TUBE	1
22	64447	PINION-20T	1
23	64448	CROSS SHAFT	1

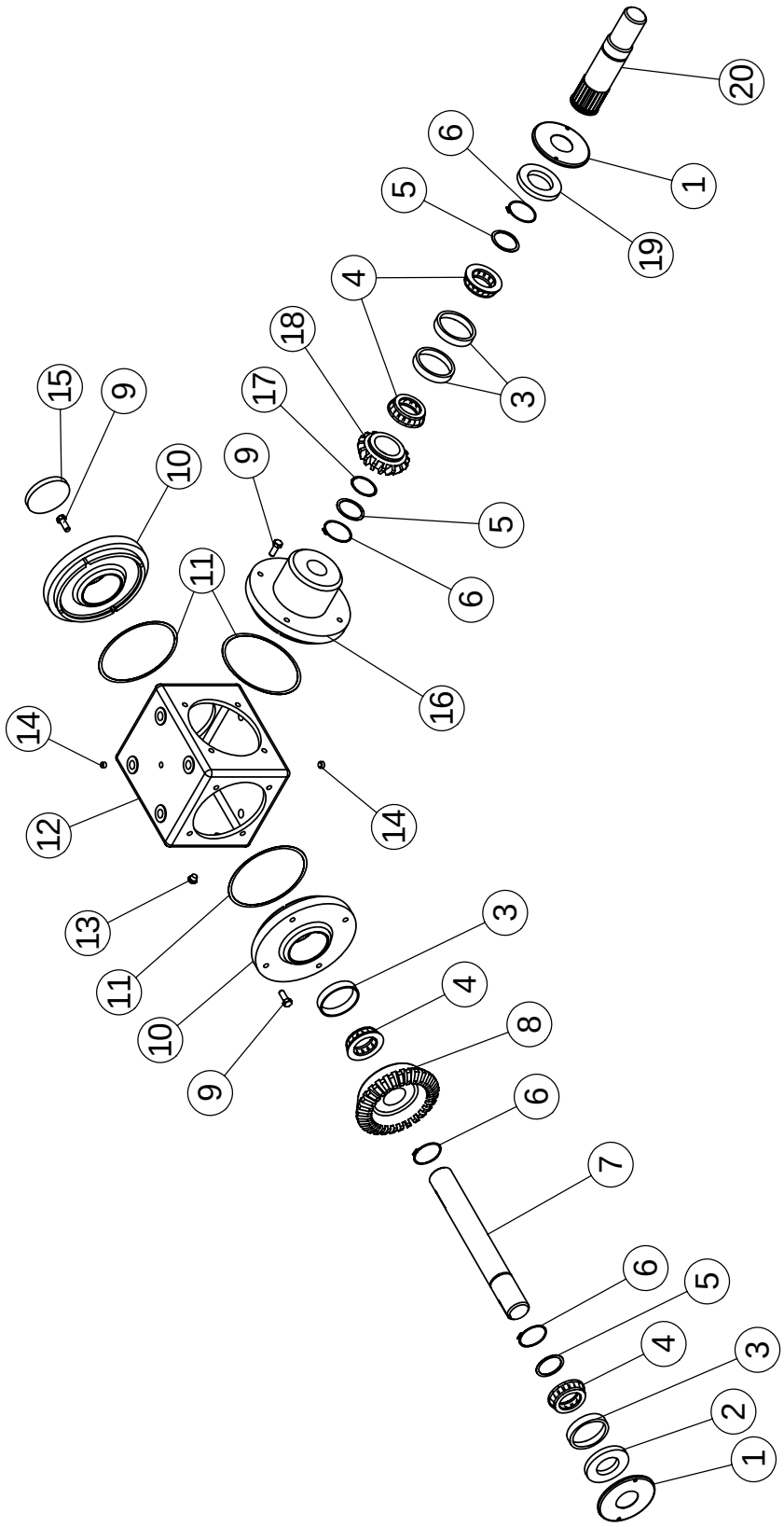
20
1
19
6
5
4
3
18
17
5
6
16
9
15
10
11
14
12
13
11
10
9
14
3
4
8
6
7
6
5
4
3
2
1

GEARBOX (1:1.35) # 63848
(REAR SCRUB)

ITEM	PART NO.	DESCRIPTION	QTY
1	64332	SHIELD	2
2	64449	OIL SEAL: 1.375 - 2.375	1
3	64450	BEARING CUP	4
4	64451	BEARING CONE	4
5	64452	WASHER: 2.00 X .179	3
6	64453	SNAP RING	4
7	64454	CROSS SHAFT	1
8	64455	GEAR-23 TOOTH	1
9	62738	BOLT-HEX: .38 X 1.00 NC GR5 NP	12
10	64456	COVER-OPEN	2
11	64457	SHIM-COVER	3
12	64458	CASE-M600-3 PORT	1
13	64333	T-VENT PLUG: .25 NPT (SQ. HD.)	1
14	62743	PLUG: .375 NPT	2
15	64459	EXPANSION PLUG	1
16	64460	COVER	1
17	64461	SHIM: 1.375 X .007	1
18	64462	PINION-17T	1
19	64463	OIL SEAL: 1.375 - 2.562	1
20	64464	PINION SHAFT	1

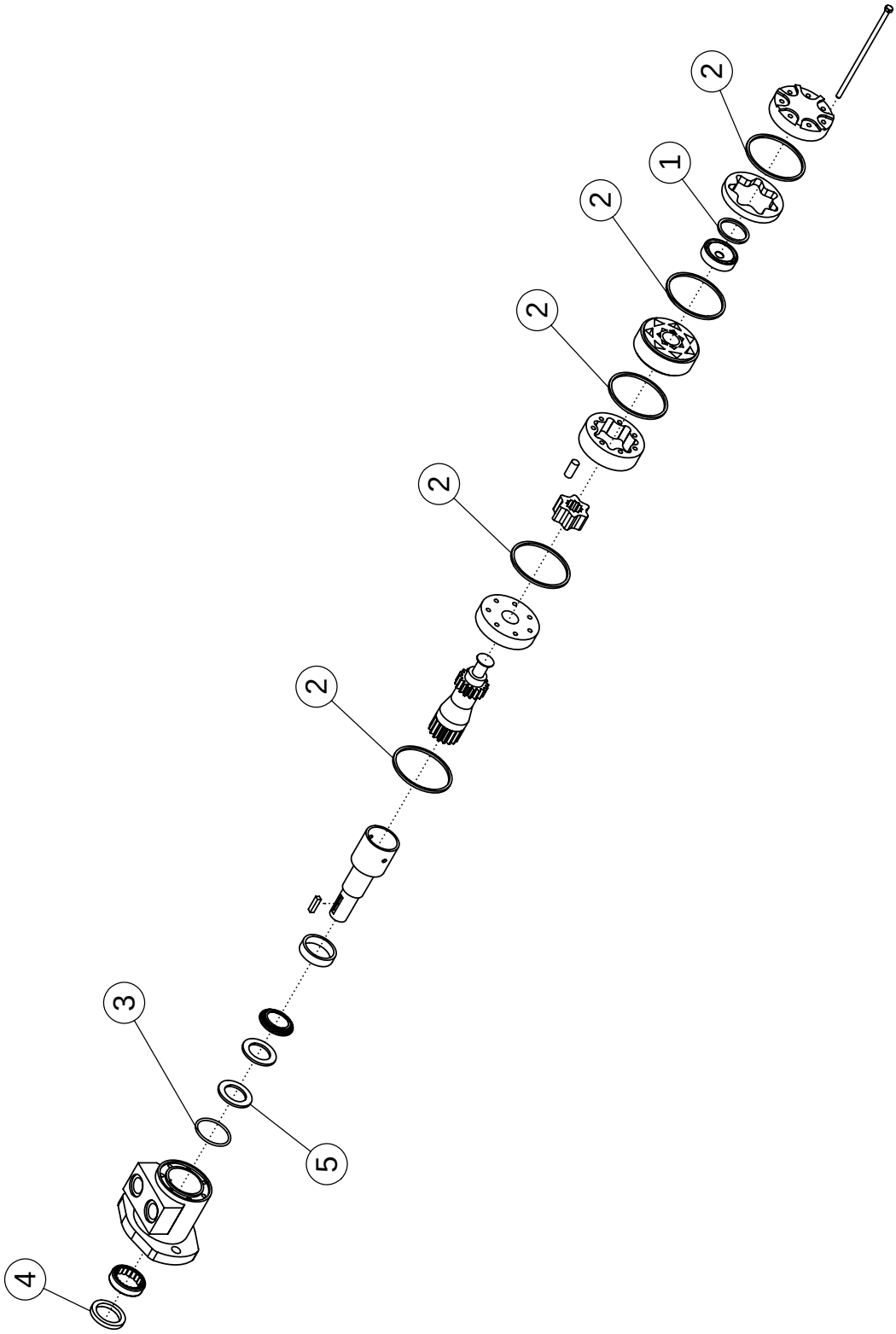
4
3
5
2
2
2
2
2
1
2

MOTOR: 13.9 in^3 #57687

ITEM	PART NO.	DESCRIPTION	QTY
	57881	**SEAL KIT**	
1		COMMUTATOR SEAL	1
2		SEAL RING	5
3		BACKUP WASHER	1
4		DIRT & WATER SEAL	1
5		INNER SEAL	1

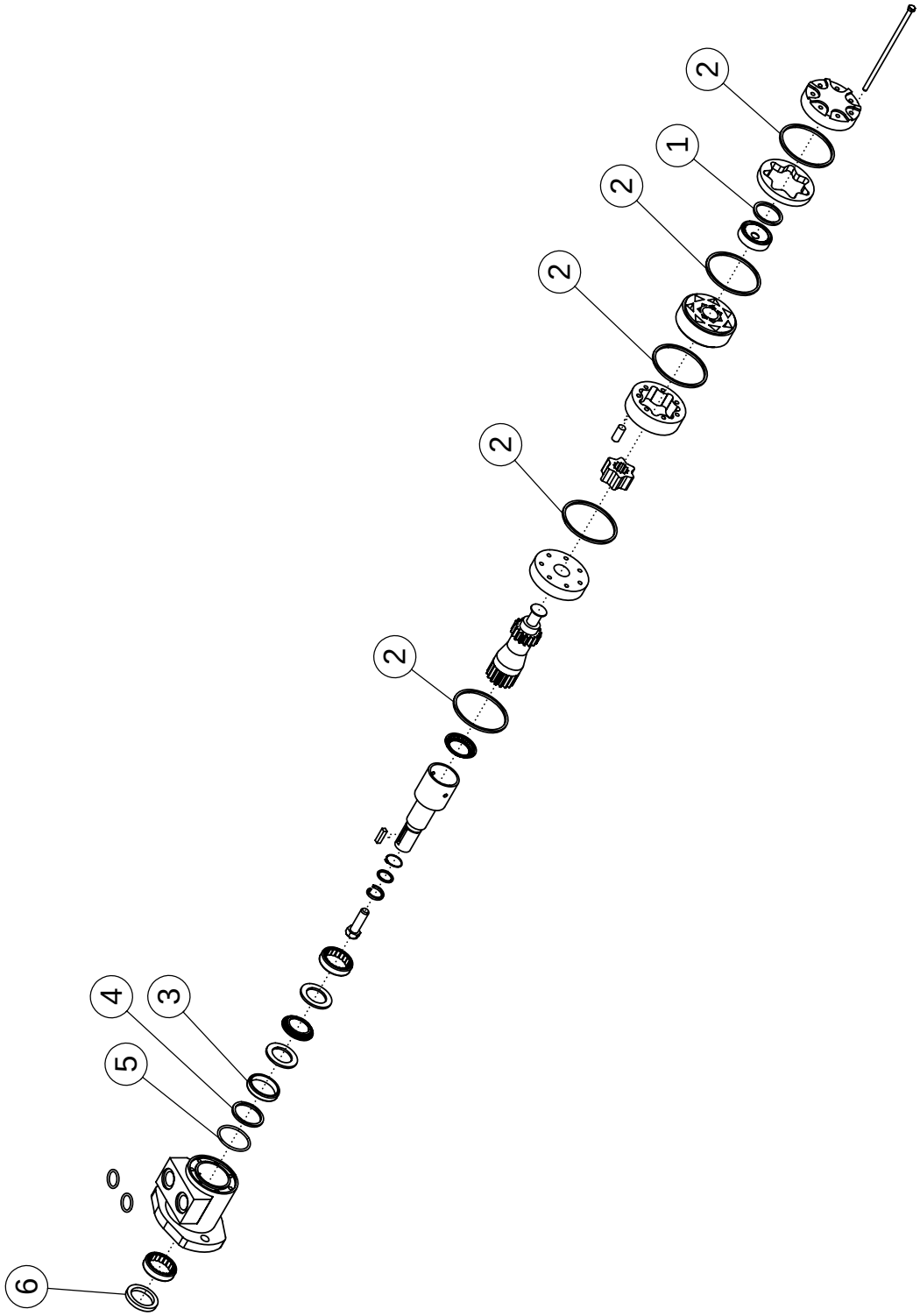
6
5
4
3
2
2
2
2
2
1
2

MOTOR: 32.3 IN^3 #57686

ITEM	PART NO.	DESCRIPTION	QTY
	57880	**SEAL KIT**	
1		COMMUTATOR SEAL	1
2		SEAL RING	5
3		INNER SEAL	1
4		BACKUP WASHER	1
5		BACKUP WASHER	1
6		DIRT & WATER SEAL	1

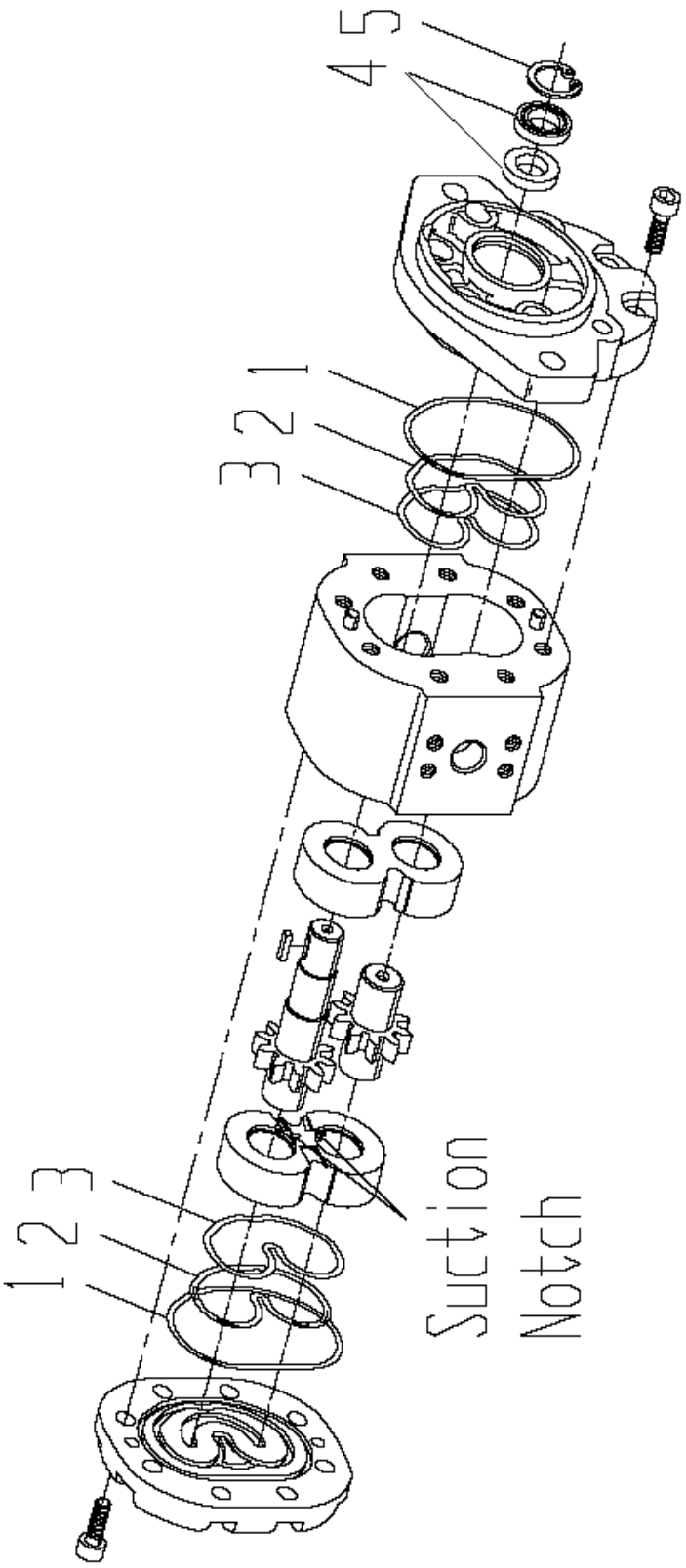
4 5
3 2 1
1 2 3
Suction
Notch

HYDRAULIC PUMP #62153

ITEM	PART NO.	DESCRIPTION	QTY
	59761	**KIT-SEAL: PUMP PZG3A**	
		BODY O-RING	
1		LOADING O-RING	2
2		LOADING O-RING BACK-UP	2
3		SHAFT SEAL	2
4		SNAP RING	2
5			1

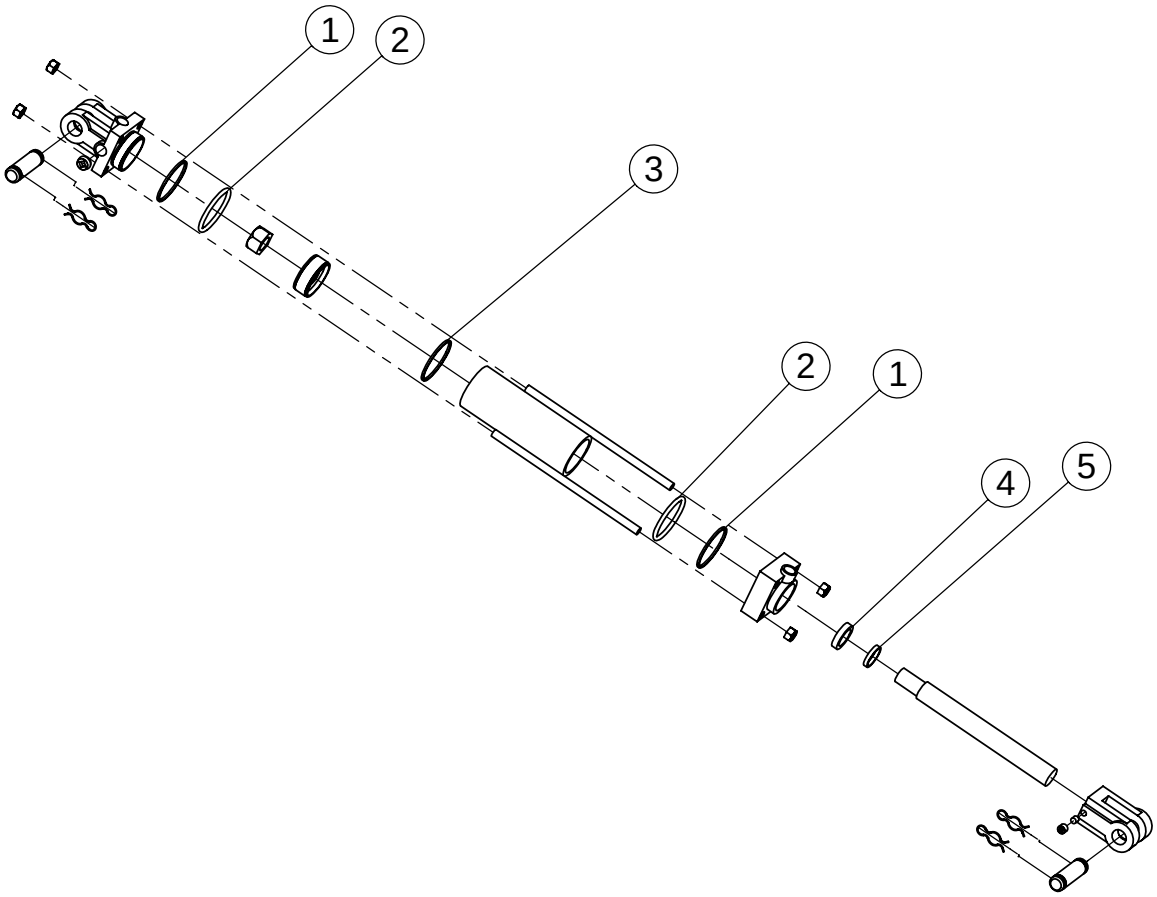
1
2
3
2
1
4
5

HYDRAULIC CYLINDER: 2.5X16 #58889

ITEM	PART NO.	DESCRIPTION	QTY
	59242	**SEAL KIT - CYLINDER 2.5"; 3000 PSI**	
1		BACKUP WASHER - END CAP	2
2		O-RING - END CAP	2
3		PISTON SEAL	1
4		ROD SEAL	1
5		ROD DUST SEAL	1

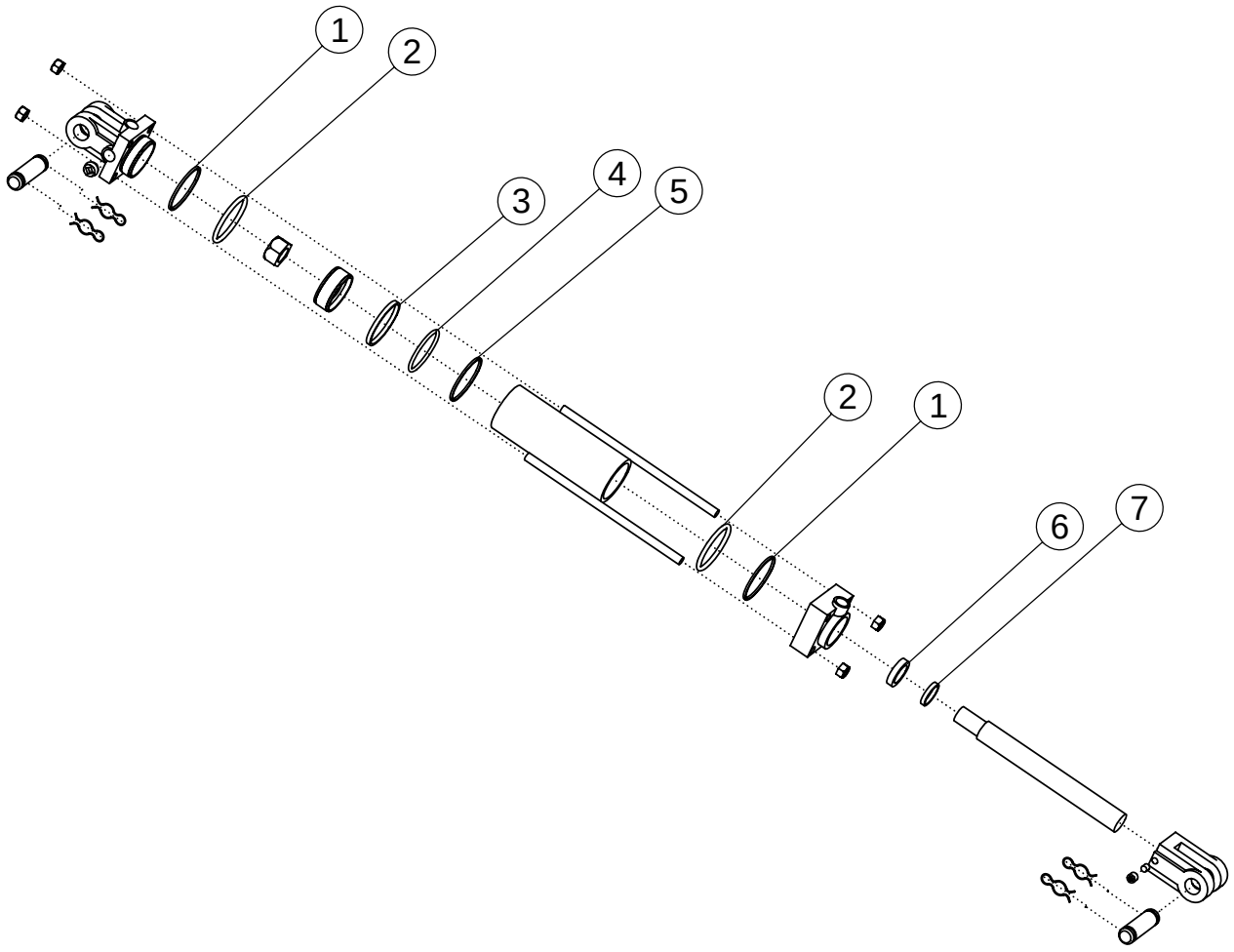
1
2
3
4
5
2
1
6
7

HYDRAULIC CYLINDER: 3X8 #58890

ITEM	PART NO.	DESCRIPTION	QTY
	59243	**SEAL KIT - CYLINDER 3"; 3000 PSI**	
1		BACKUP WASHER - END CAP	2
2		O-RING END CAP	2
3		WEAR RING - PISTON	1
4		O-RING	1
5		PISTON SEAL	1
6		SEAL-ROD WIPER	1
7		SEAL-ROD DUST	1

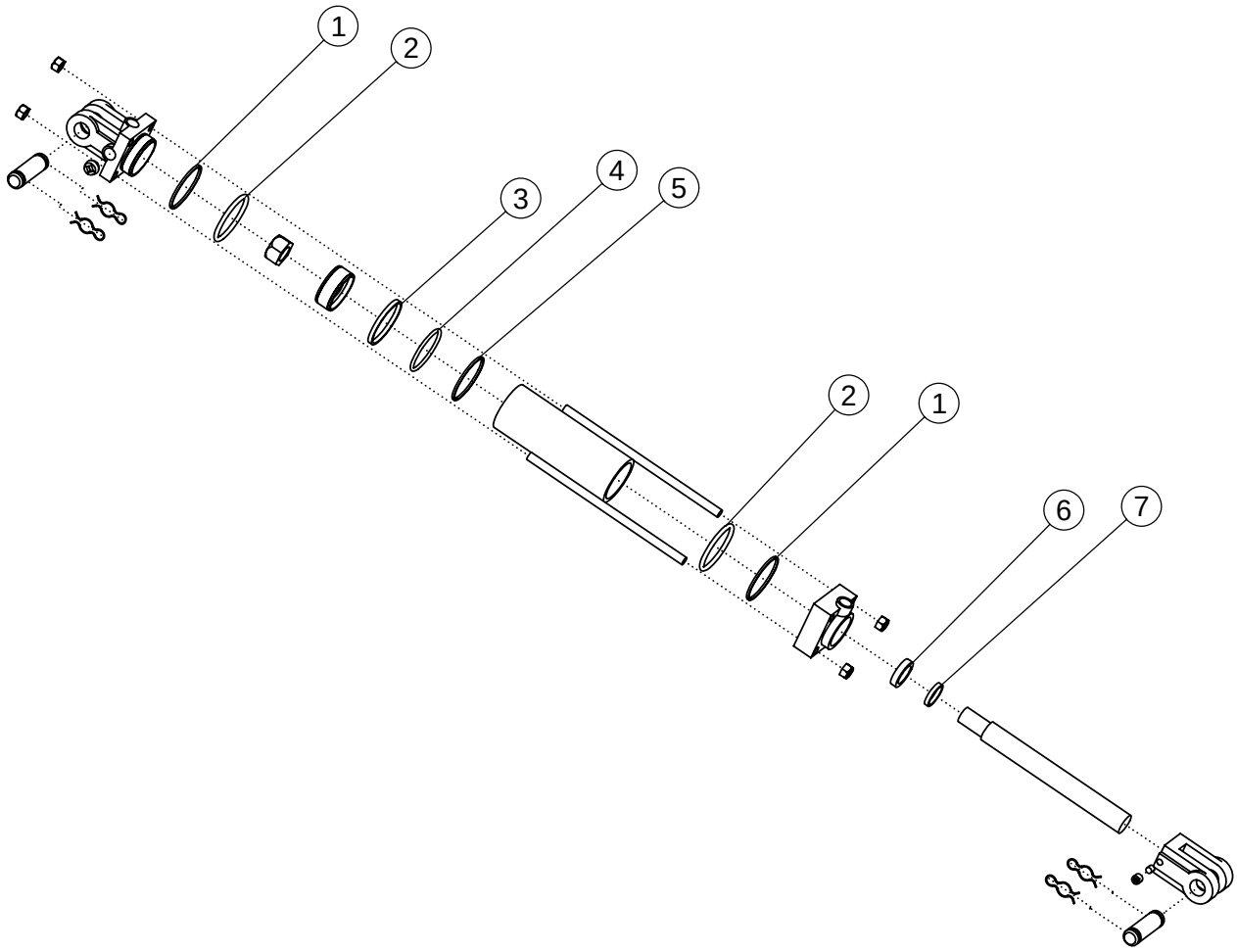
1
2
3
4
5
2
1
6
7

HYDRAULIC CYLINDER: 4X8 #58891

ITEM	PART NO.	DESCRIPTION	QTY
	59244	**SEAL KIT - CYLINDER 4"; 3000 PSI**	
1		BACKUP WASHER-END CAP	2
2		O-RING-END CAP	2
3		WEAR RING-PISTON	1
4		O-RING	1
5		PISTON SEAL	1
6		SEAL-ROD WIPER	1
7		SEAL-ROD DUST	1

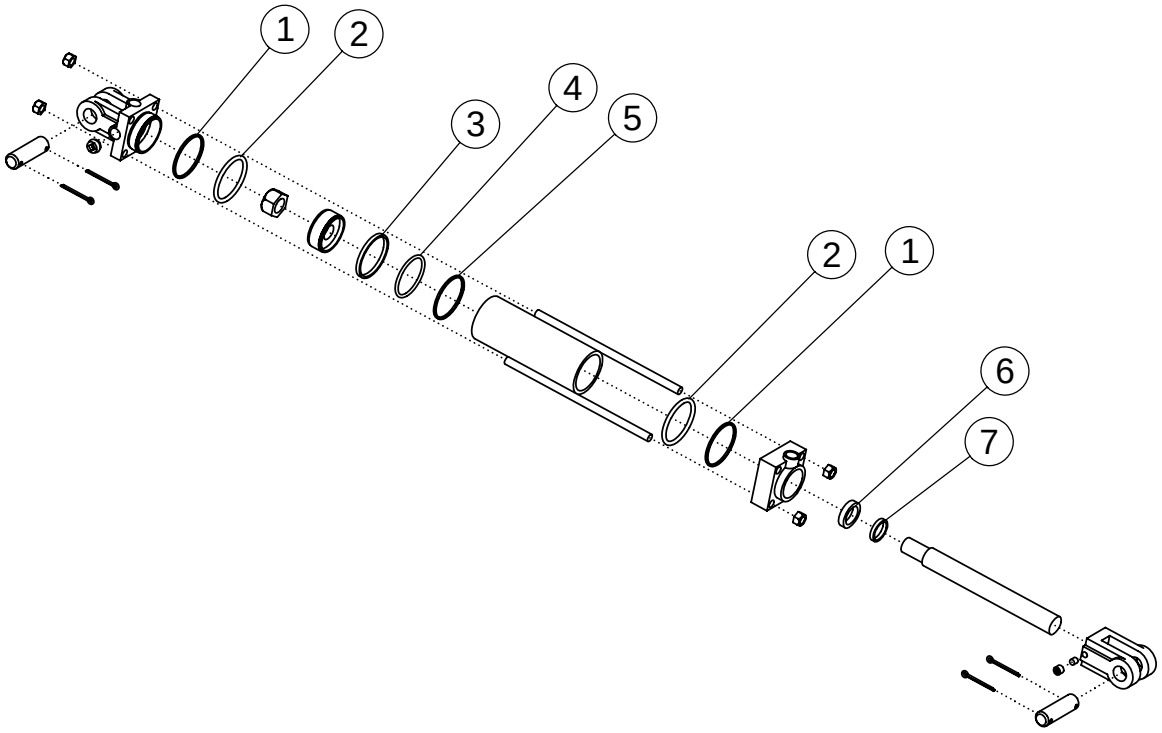
1
2
3
4
5
2
1
6
7

HYDRAULIC CYLINDER: 4X10 #62082

ITEM	PART NO.	DESCRIPTION	QTY
	59244	**SEAL KIT - CYLINDER 4"; 3000 PSI**	
1		BACKUP WASHER - END CAP	2
2		O-RING - END CAP	2
3		WEAR RING	1
4		O-RING	1
5		PISTON SEAL	1
6		SEAL-ROD WIPER	1
7		SEAL-ROD DUST	1

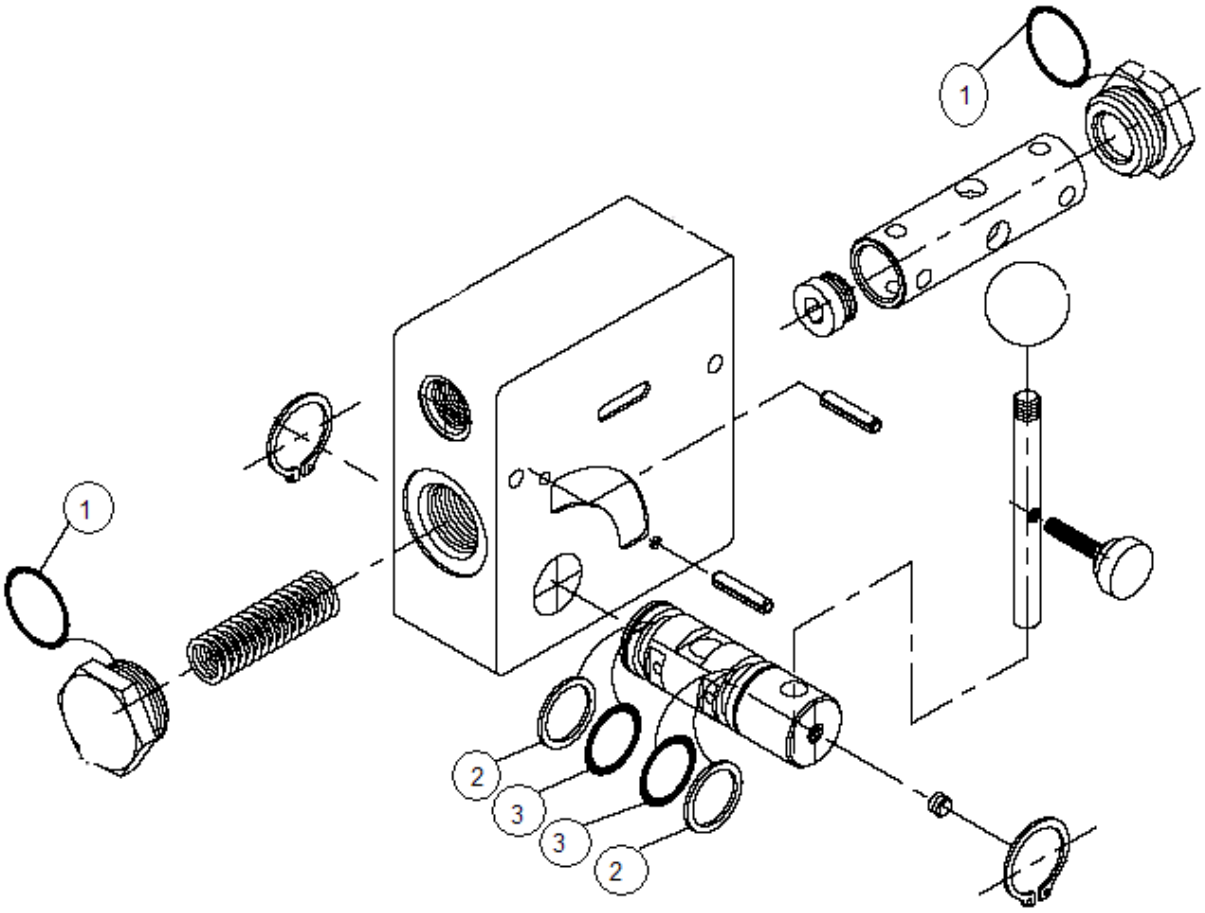
1
1
2
3
3
2

FLOW CONTROL VALVE #58985

ITEM	PART NO.	DESCRIPTION	QTY
	64414	**SEAL KIT**	
1		O-RING	2
2		BACK-UP WASHER	2
3		O-RING	2

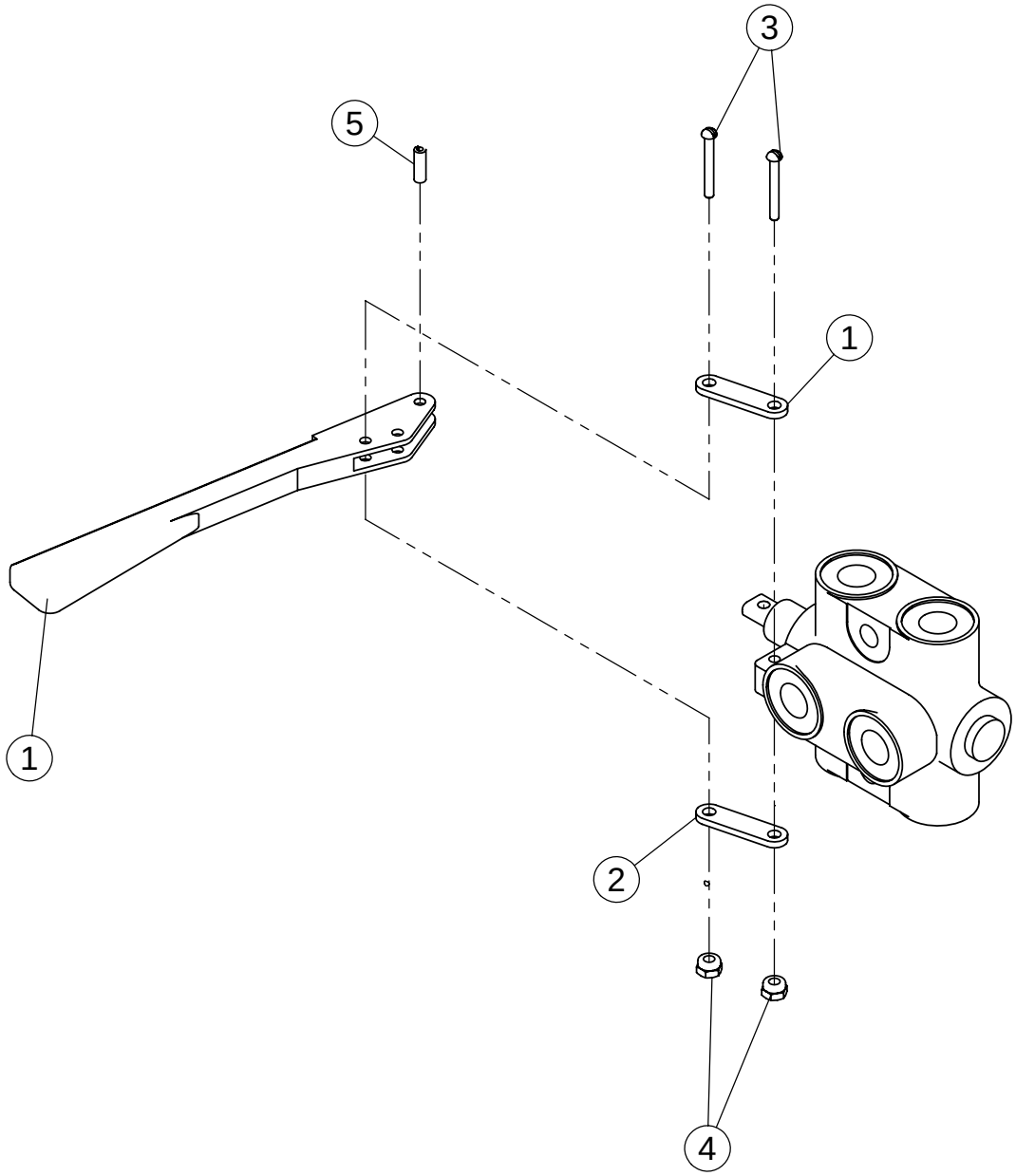
3
5
1
1
2
4

SELECTOR VALVE #58470

ITEM	PART NO.	DESCRIPTION	QTY
	64432	**QUAD RING SEAL KIT**	**2**
	58470-1	**HANDLE KIT**	**1**
1	68060	PLATE-TAB SELECTOR VALVE ZP	2
2	1011303	SCREW-MACH RND SLT: #10-24 X 1.25	2
3	65712	NUT-NYLOCK: 10-24 GR2 SS	2
4		HANDLE	1
5		SPRING PIN	1

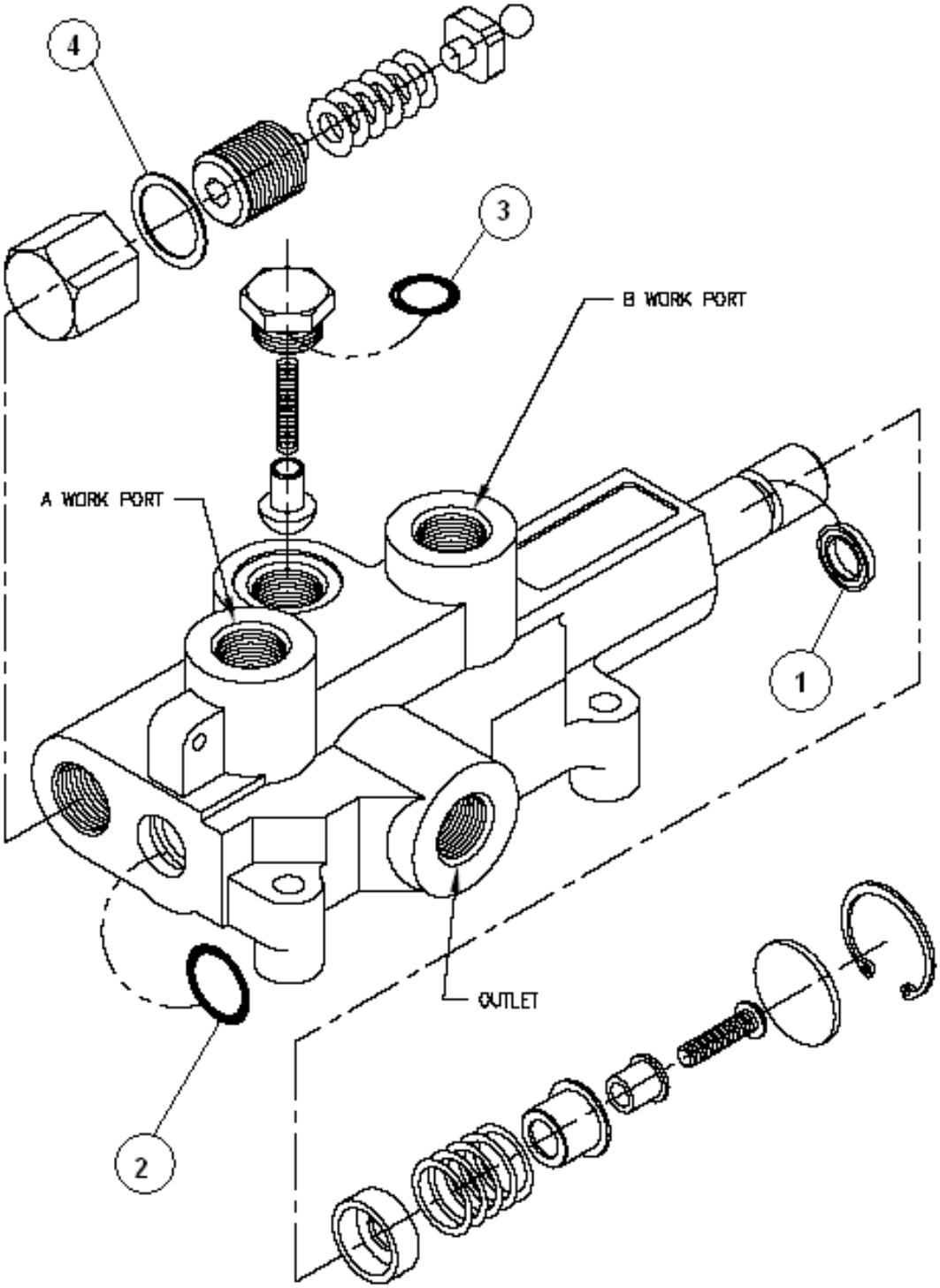
4
3
B WORK PORT
A WORK PORT
1
OUTLET
2

ROW FINDER VALVE #62350

ITEM	PART NO.	DESCRIPTION	QTY
	62757	**SEAL KIT**	
1		U-CUP	1
2		O-RING	1
3		O-RING	1
4		ALUMINUM WASHER	1

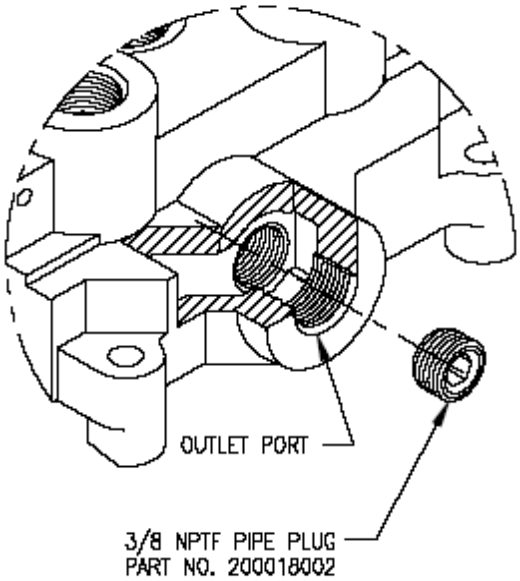

OPEN CENTER TO CLOSED CENTER CONVERSION

THIS FEATURE ALLOWS AN OTHERWISEOPEN CENTER VALVE TO BE CONVERTED TO CLOSED CENTER OPERATION. AS SHOWN ABOVE, A 3/8 NPTF PIPE PLUG IS INSTALLED IN THE BOTTOM OF THE OUTLET PORT TO BLOCK OPEN CENTER PASSAGE. A PIPE THREAD SEALANT SHOULD BE USED. THIS FEATURE IS STANDARD ON ALL VALVES WITH 3/4 NPTF INLET AND OUTLET PORTS. THE PIPE PLUG IS INCLUDED WITH THESE MODELS. DISCARD THE PIPE PLUG IF THE VALVE IS USED ON AN OPEN CENTER APPLICATION.

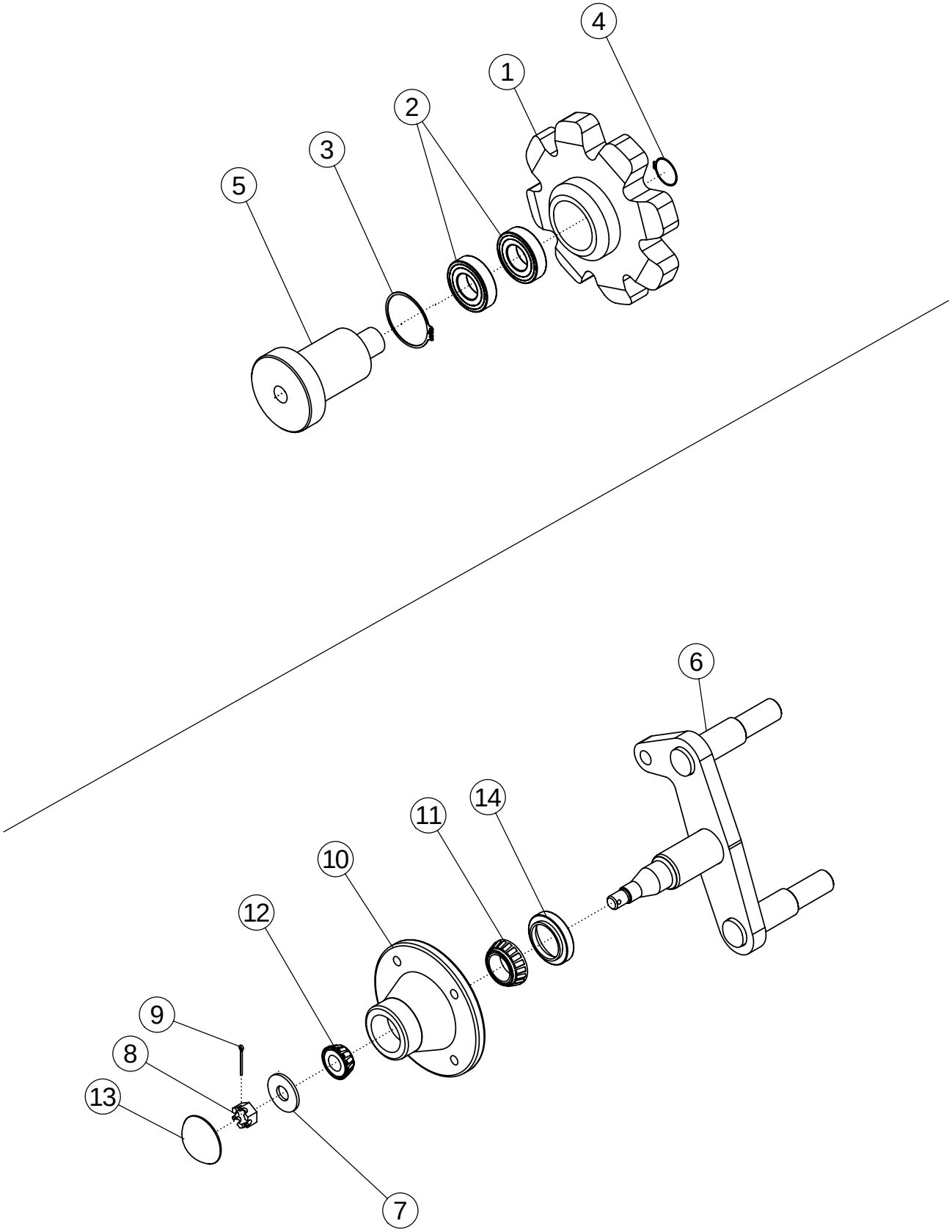
4
1
2
3
5
6
14
11
10
12
9
8
13
7

SPROCKET #54824

ITEM	PART NO.	DESCRIPTION	QTY
1	56893	SPROCKET 56MM 8T	1
2	54108	BEARING 2"	2
3	54151	SNAP RING SR11	1
4	54154	SNAP RING SR3	1
5	56892	STUB SHAFT	1

BELT TIGHTENER #56422

ITEM	PART NO.	DESCRIPTION	QTY
6	56421	WLDMT - SPINDLE	1
7	1013623	BUSHING-MACH: .63 NP	1
8	1013625	NUT-HEX: SLOT .63 NF GR5 ZP	1
9	1013626	PIN-COTTER: .16 X 1.25 ZP	1
10	1015157*	HUB	1
11	1012356*	CONE-BEARING	1
12	1013620*	CONE-BEARING	1
13	1013622*	HUB CAP	1
14	1029527*	SEAL	1
15	56951	ASSY-HUB	1

*Items are included in item 15

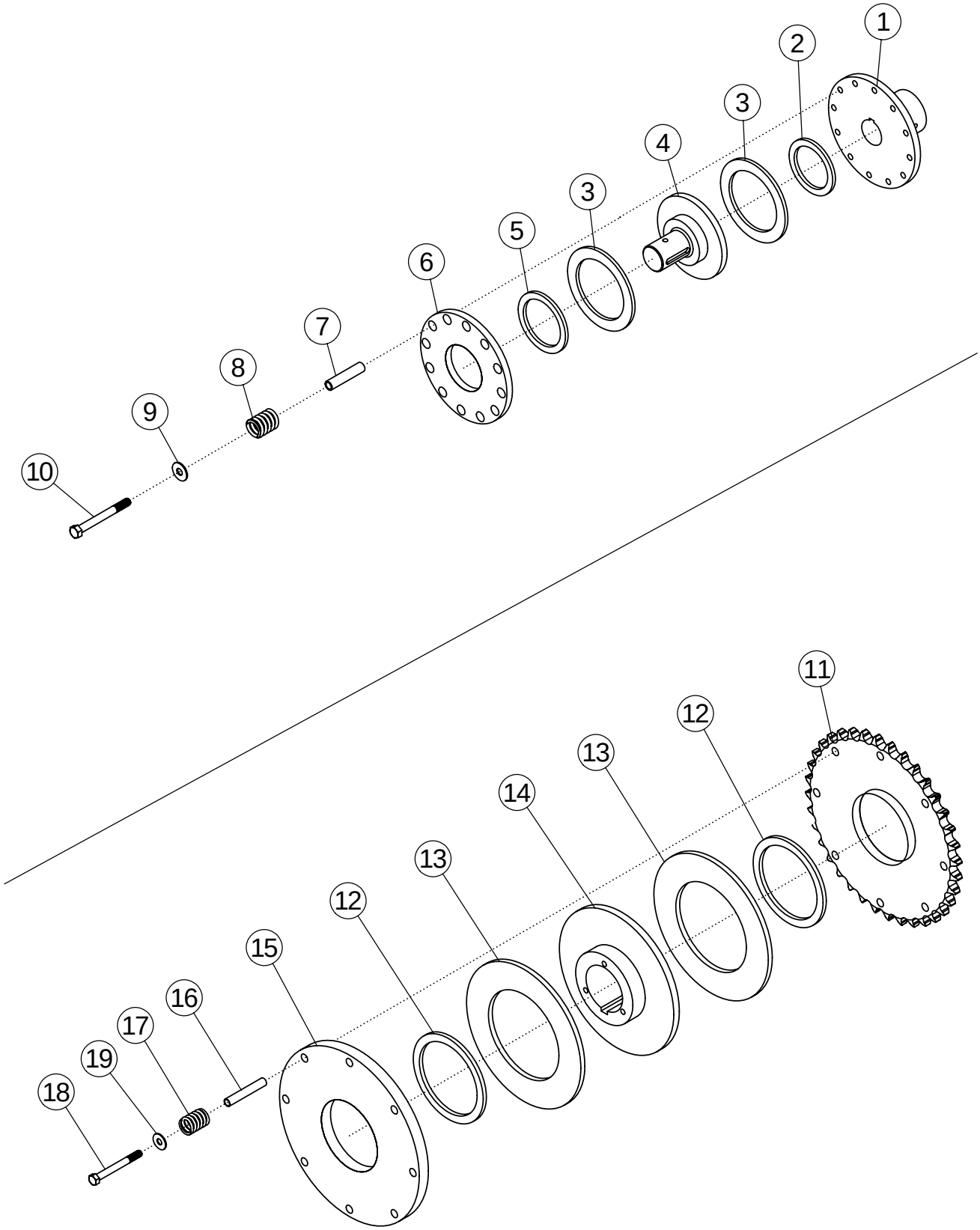
1
2
3
4
3
5
6
7
8
9
10
11
12
13
14
13
12
15
16
17
19
18

SLIP CLUTCH (IN-LINE) #57926

ITEM	PART NO.	DESCRIPTION	QTY
1	58168	HUB-DRIVE	1
2	58169	BUSHING-BRONZE	1
3	58170	DISC-FIBER	2
4	58171	HUB-SLIP CLUTCH	1
5	58172	BUSHING-BRONZE	1
6	58173	PLATE-SLIP CLUTCH	1
7	58565	TUBE-SLIP CLUTCH	6
8	58174	SPRING-SLIP CLUTCH	6
9	1011828	WASHER-FLAT: .38 ZP	6
10	1013239	BOLT-HEX: .38 X 3.00 NC GR5 ZP	6

SLIP CLUTCH/SPOCKET #57993

ITEM	PART NO.	DESCRIPTION	QTY
11	58177	SPROCKET	1
12	58207	BUSHING-BRONZE	2
13	58215	DISC-FIBER	2
14	58209	HUB-CLUTCH	1
15	58211	PLATE-SLIP CLUTCH	1
16	58213	TUBE-SLIP CLUTCH (2.870")	8
17	58174	SPRING-SLIP CLUTCH	8
18	58176	BOLT-HEX: .38 X 3.50 NC GR5 ZP	8
19	1011828	WASHER-FLAT: .38 ZP	8

SLIP CLUTCH/SPOCKET #58335

ITEM	PART NO.	DESCRIPTION	QTY
11	58566	SPROCKET	1
12	58208	BUSHING-BRONZE	2
13	58216	DISC-FIBER	2
14	58210	HUB-CLUTCH	1
15	58212	PLATE-SLIP CLUTCH	1
16	58565	TUBE-SLIP CLUTCH (PTG)	6
17	58174	SPRING-SLIP CLUTCH	6
18	1013239	BOLT-HEX: .38 X 3.00 NC GR5 ZP	6
19	1011828	WASHER-FLAT: .38 ZP	6

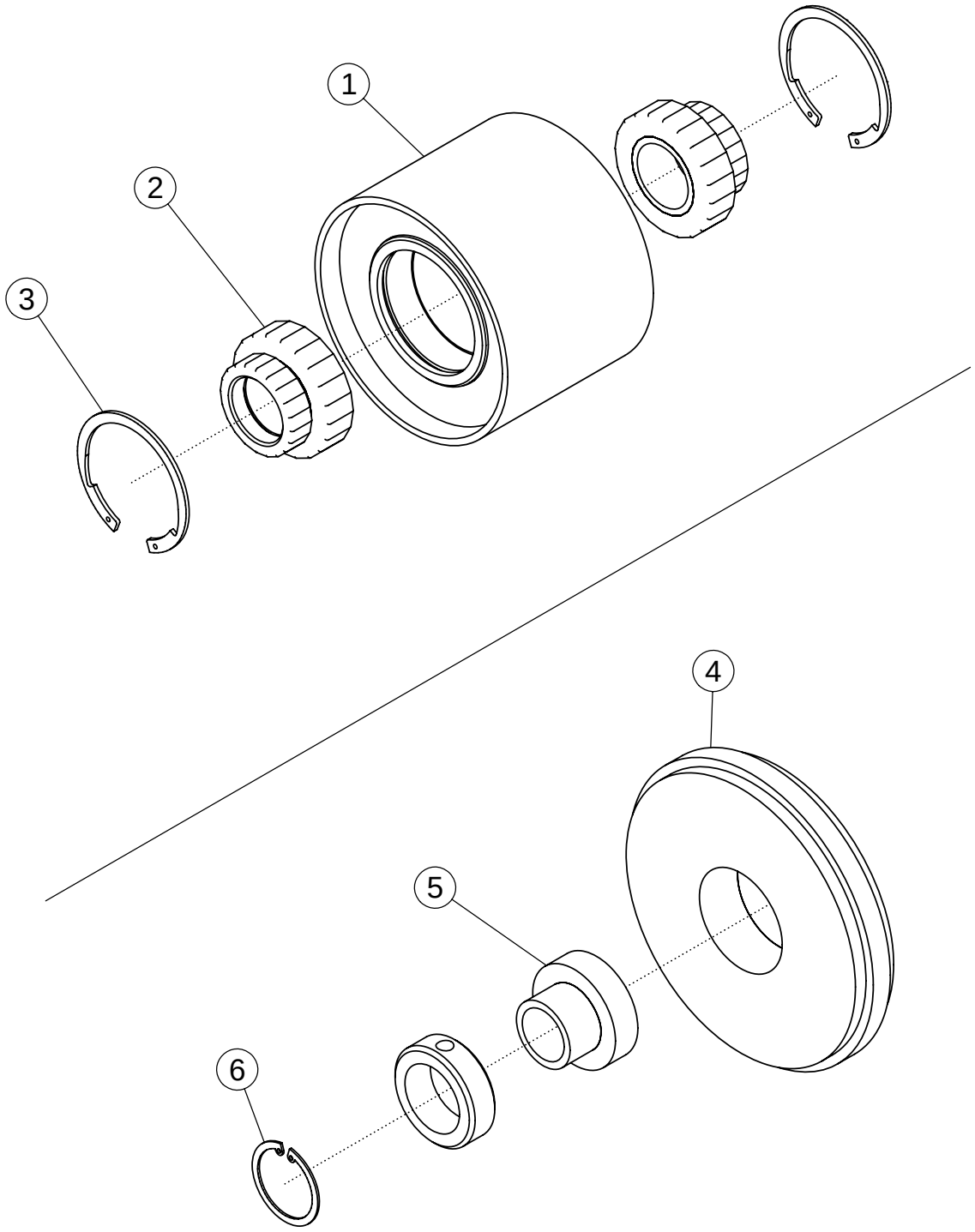
1
2
3
4
5
6

IDLER PULLEY #56409

ITEM	PART NO.	DESCRIPTION	QTY
1	56408	WLDMT-PULLEY 8R	1
2	56399	BALL BEARING 1.75	2
3	56400	RETAINING RING	2

SPROCKET IDLER #56851

ITEM	PART NO.	DESCRIPTION	QTY
4	58807	ROLLER-IDLER	1
5	58806	BEARING-IDLER	1
6	58805	SNAP-RING	1

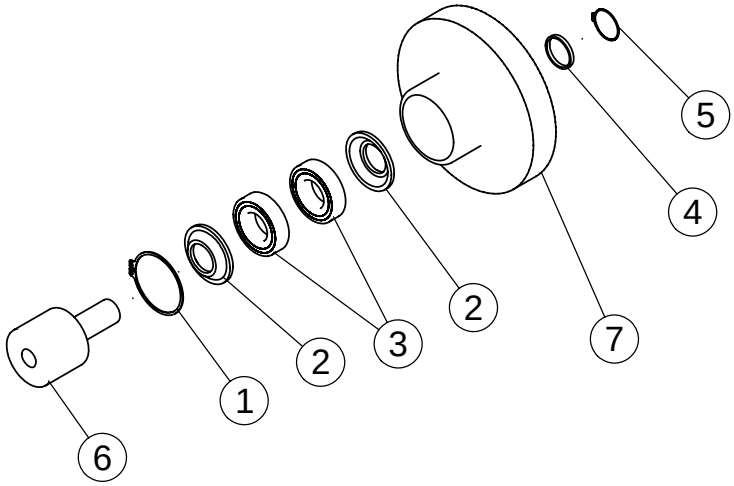
5
4
2
3
7
2
1
6

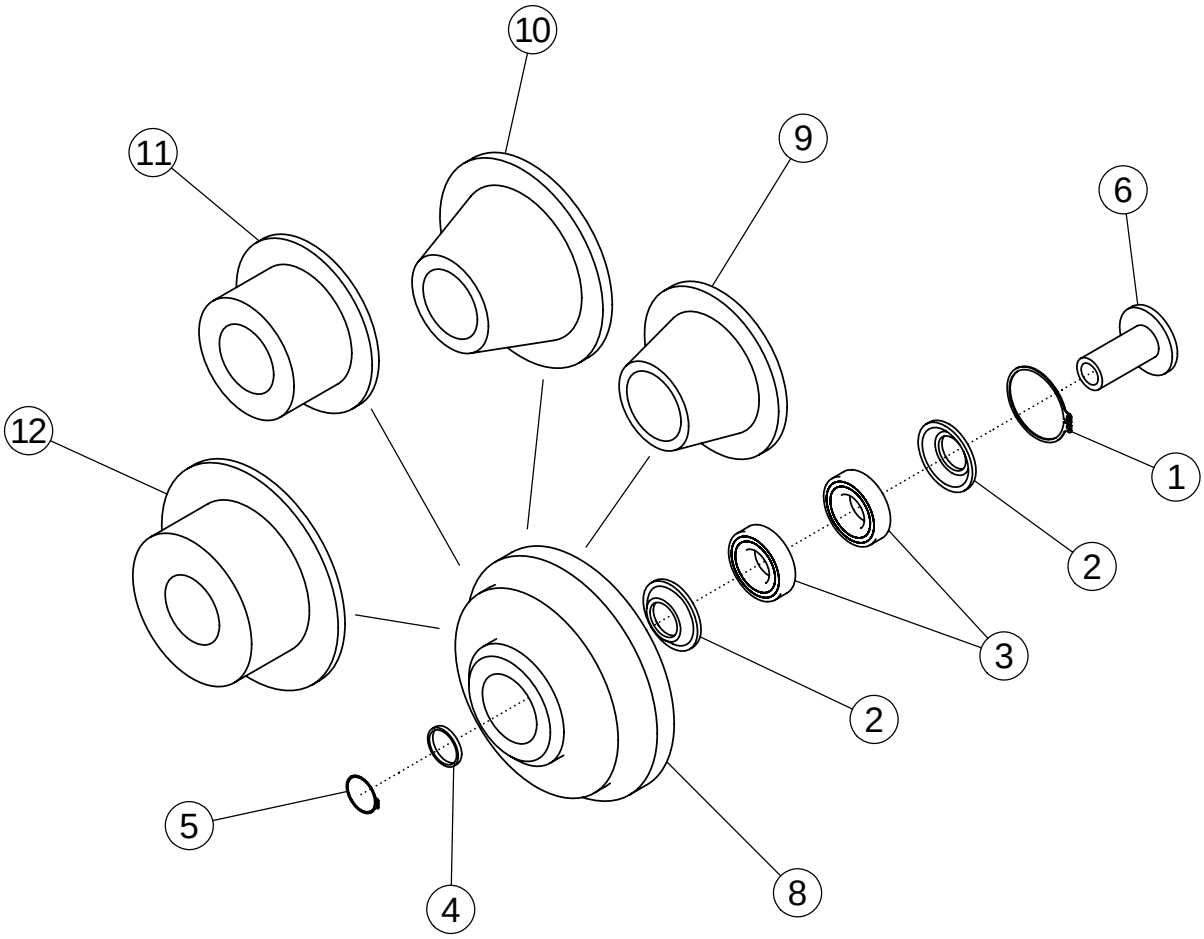
10
11
9
6
12
1
2
3
2
5
4
8

ROLLERS

ITEM	PART NO.	DESCRIPTION	QTY
1	54151	SNAP RING SR11	1
2	54152	WASHER	2
3	54108	BEARING 2"	2
4	54153	SPACER-NRS	1
5	54154	SNAP RING SR3	1
6	56885	STUB SHAFT	1
7	54042*	ROLLER-STEP 6"	1
6	56889	STUB SHAFT	1
8	53951*	ROLLER-STEP FLANGE 7"	1
6	54155	STUB SHAFT	1
9	53699*	ROLLER-CONE 4"	1
6	54155	STUB SHAFT	1
10	53950*	ROLLER-CONE 6"	1
6	56887	STUB SHAFT	1
11	54041*	ROLLER-RUBBER FLANGE 5"	1
6	54155	STUB SHAFT	1
12	59057*	ROLLER-RUBBER FLANGE 6.5"	1

* COMES WITH ITEMS 1-6

SCRUB DRIVELINE ASSEMBLY

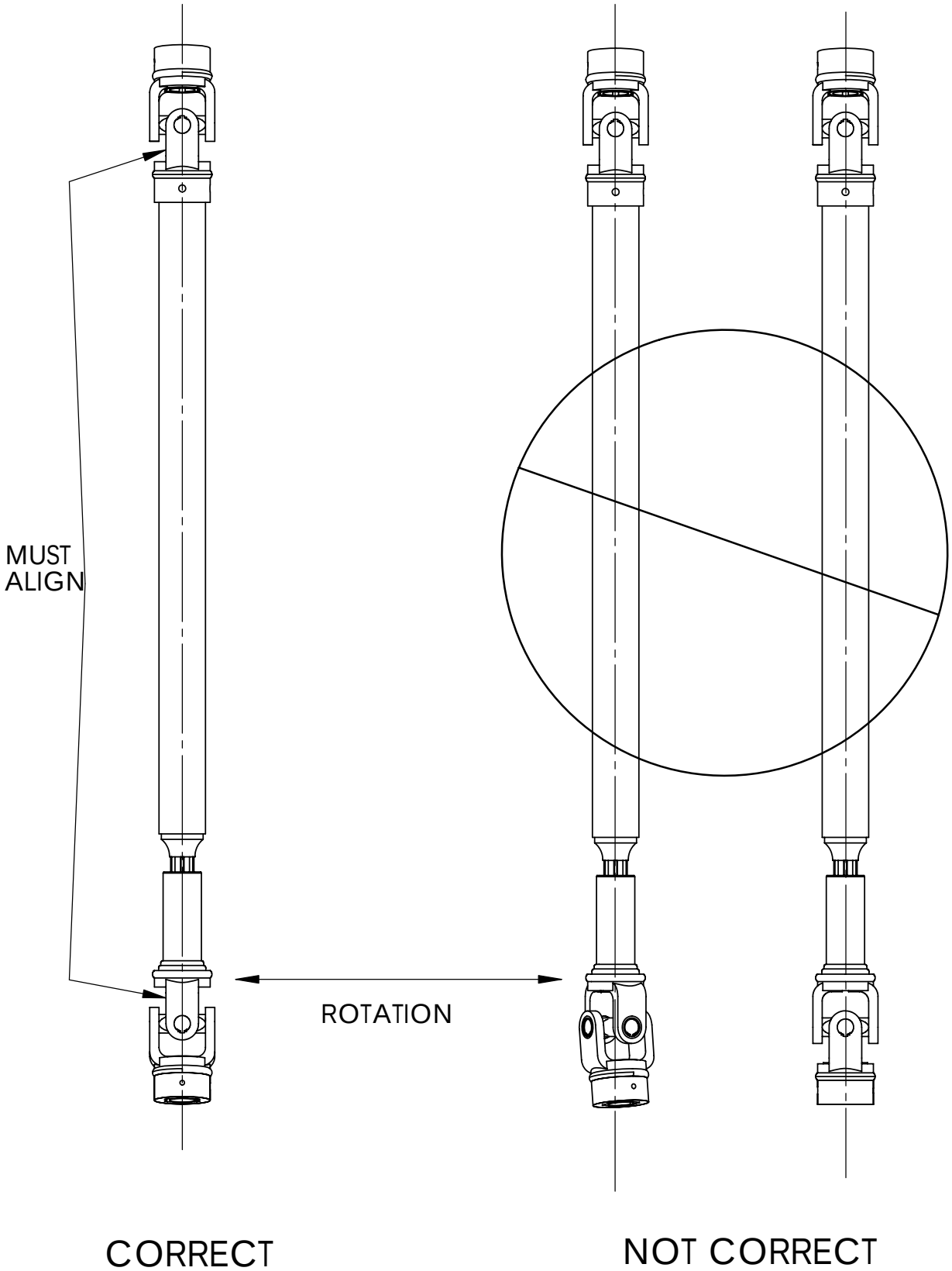

BELTED CHAIN
LAP JOINT CONNECTION

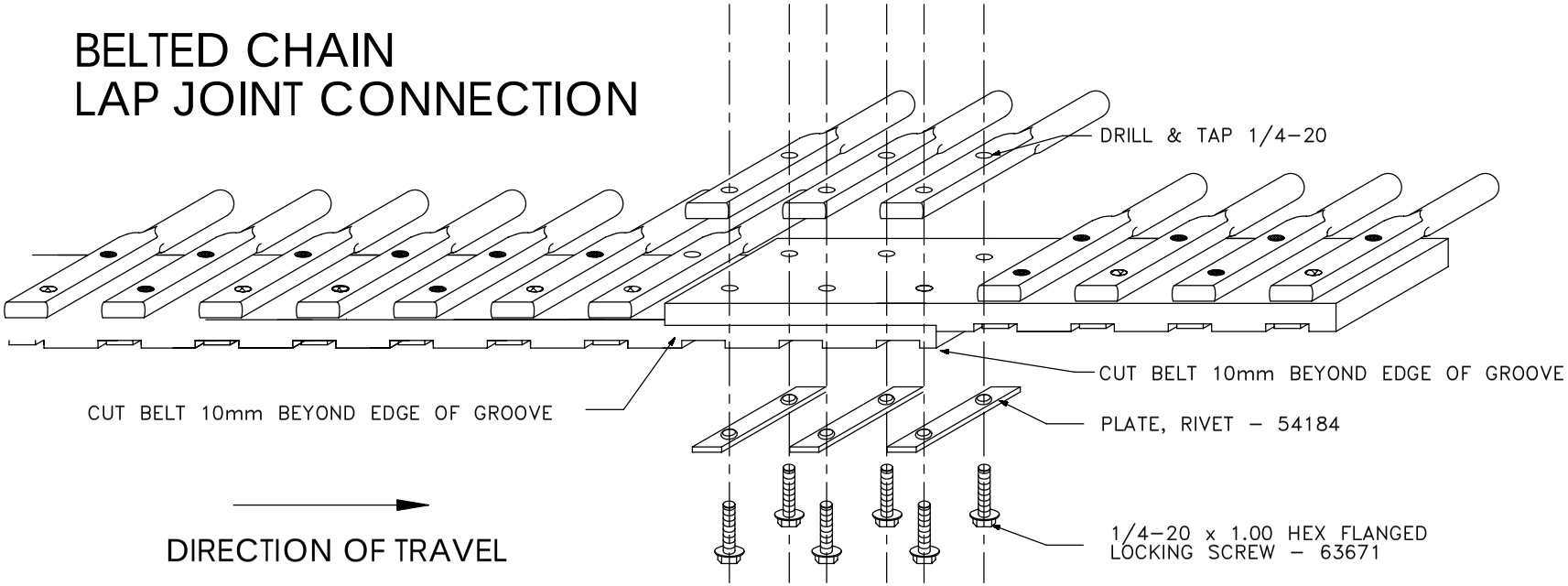

WARNING : ENSURE THAT SCREWS ARE SUFFICIENTLY TIGHT TO PRODUCE A BULGE AT THE EDGE OF THE BELT OF BETWEEN 1 AND 2mm (SEE DIAGRAM).
FAILURE TO DO SO MAY CAUSE PREMATURE FAILURE AND VOID YOUR WARRANTY

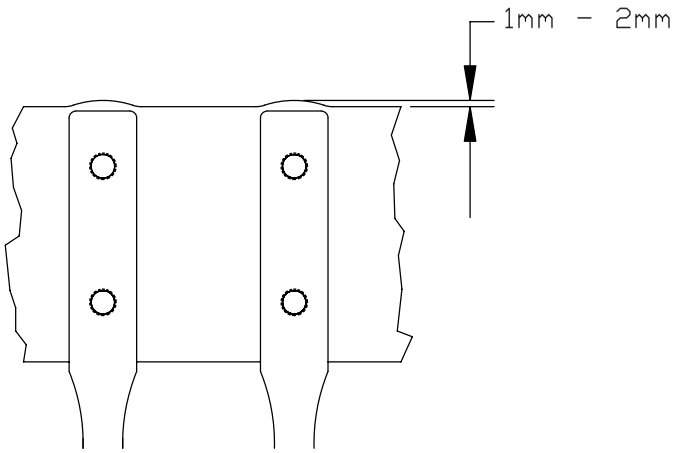

.50 Ø RODS
DRILL & TAP .250-20
STRAIGHT - #59168
UP - #64757
DOWN - #59169

REPAIR KIT - BELTED CHAIN #59180

KIT CONSISTS OF:

1.25 FT – BELT, NO–PROFILE
8 EA – PLATE, RIVET
16 EA – SCREW
16 EA – NUT

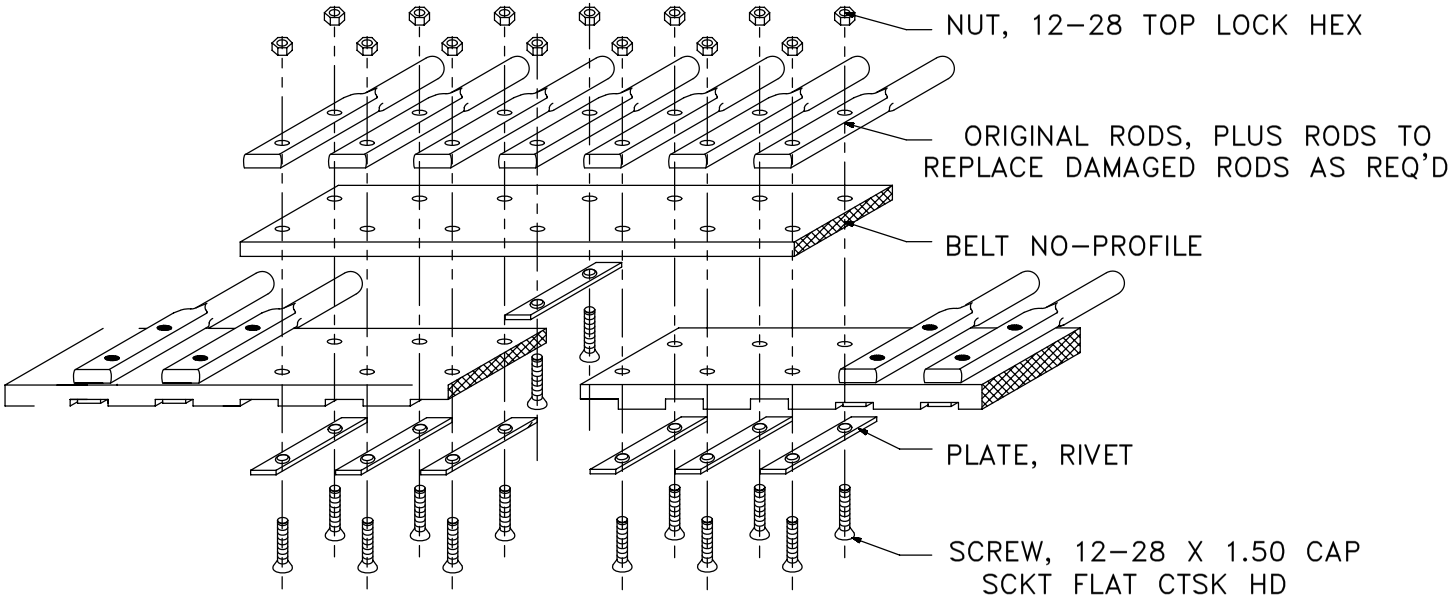

REPAIR PROCEDURE

1. REMOVE RIVETS 3 PITCHES (MIN) EACH SIDE OF DAMAGED BELT.
2. TRIM OUT DAMAGED BELT.
3. CUT NO-PROFILE BELT TO GIVE MINIMUM OF 3 PITCHES OVERLAP BOTH SIDES OF DAMAGE.
4. LAY NO-PROFILE BELT ON BELT TO BE REPAIRED AND DRILL HOLES TO MATCH PITCH.
5. ASSEMBLE AS SHOWN.
6. TIGHTEN SCREWS TO FORM APPROXIMATELY 2mm BELT SWELL AT BOLTED JOINT.
7. CUT OFF SCREWS NEXT TO NUTS.
8. PEEN SCREWS TO SECURE NUTS.

BELTED CHAIN RIVET CUTTER #62802

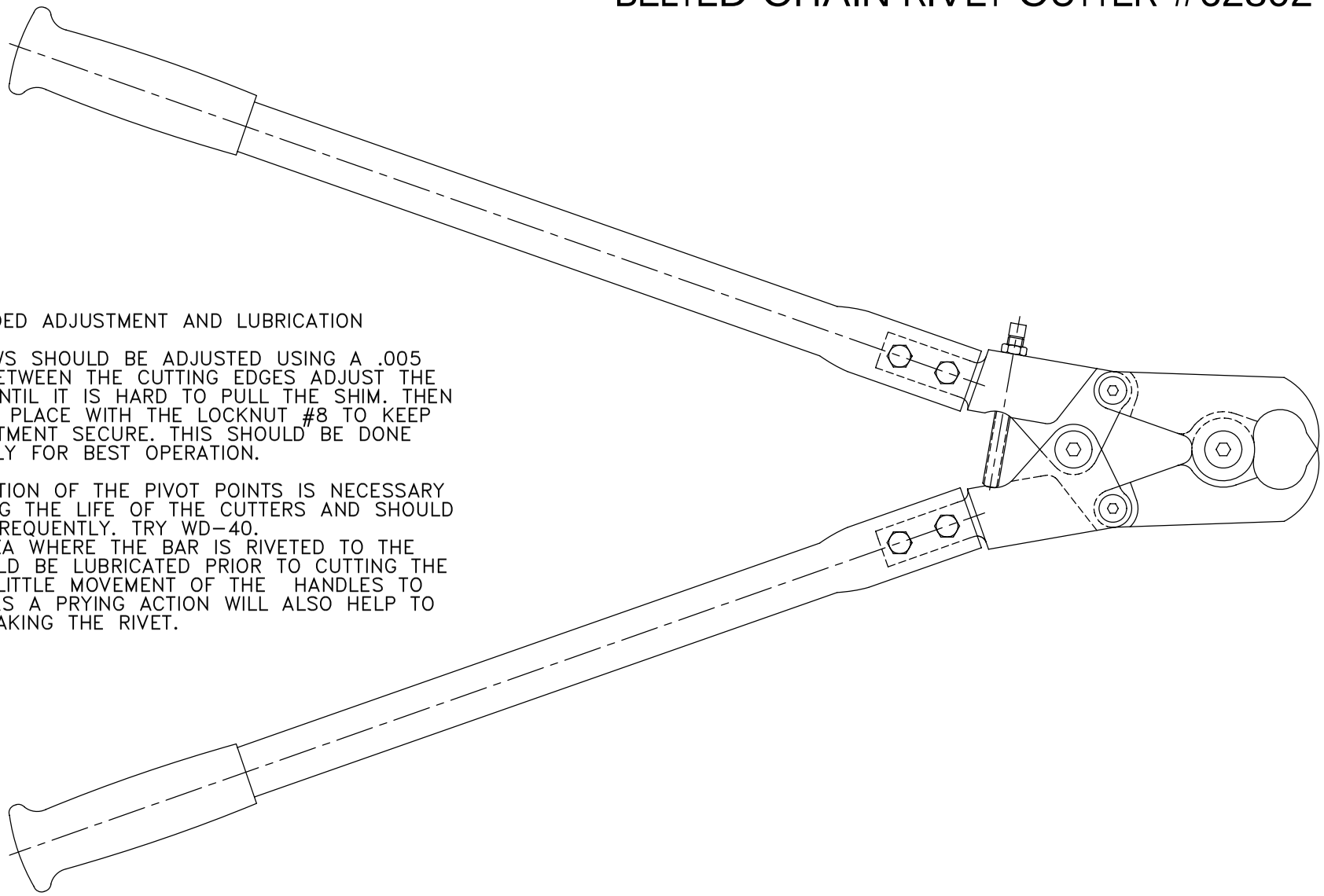

RECOMMENDED ADJUSTMENT AND LUBRICATION

1. THE JAWS SHOULD BE ADJUSTED USING A .005 IN. SHIM BETWEEN THE CUTTING EDGES ADJUST THE BOLT #7 UNTIL IT IS HARD TO PULL THE SHIM. THEN LOCK IT IN PLACE WITH THE LOCKNUT #8 TO KEEP THE ADJUSTMENT SECURE. THIS SHOULD BE DONE PERIODICALLY FOR BEST OPERATION.

2. LUBRICATION OF THE PIVOT POINTS IS NECESSARY TO PROLONG THE LIFE OF THE CUTTERS AND SHOULD BE DONE FREQUENTLY. TRY WD-40.
3. THE AREA WHERE THE BAR IS RIVETED TO THE BELT SHOULD BE LUBRICATED PRIOR TO CUTTING THE RIVETS, A LITTLE MOVEMENT OF THE HANDLES TO THE SIDE AS A PRYING ACTION WILL ALSO HELP TO FINISH BREAKING THE RIVET.