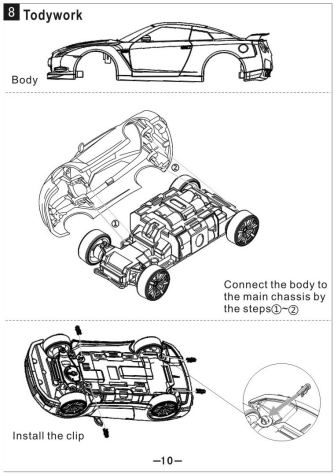

8 Todywork

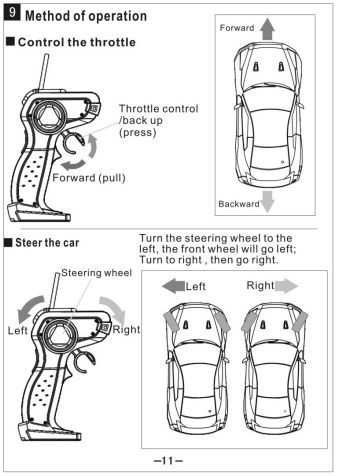

9 Method of operation

■ **Control the throttle**

■ **Steer the car**

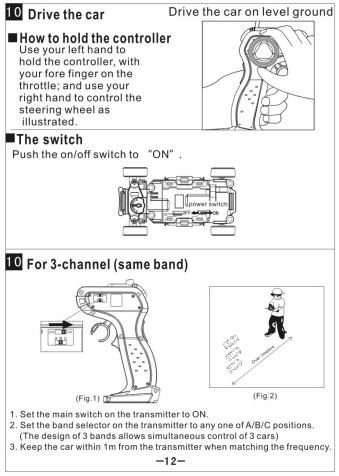

10 Drive the car

■ **How to hold the controller**
Use your left hand to hold the controller, with your fore finger on the throttle; and use your right hand to control the steering wheel as illustrated.

■ **The switch**
Push the on/off switch to "ON" .

10 For 3-channel (same band)

1. Set the main switch on the transmitter to ON.
2. Set the band selector on the transmitter to any one of A/B/C positions. (The design of 3 bands allows simultaneous control of 3 cars)
3. Keep the car within 1m from the transmitter when matching the frequency.

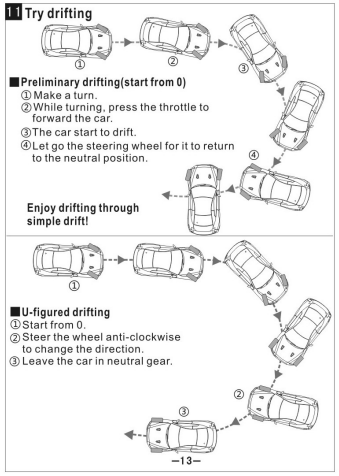

11 Try drifting

■ **Preliminary drifting(start from 0)**
① Make a turn.
② While turning, press the throttle to forward the car.
③ The car start to drift.
④ Let go the steering wheel for it to return to the neutral position.

Enjoy drifting through simple drift!

■ **U-figured drifting**
① Start from 0.
② Steer the wheel anti-clockwise to change the direction.
③ Leave the car in neutral gear.

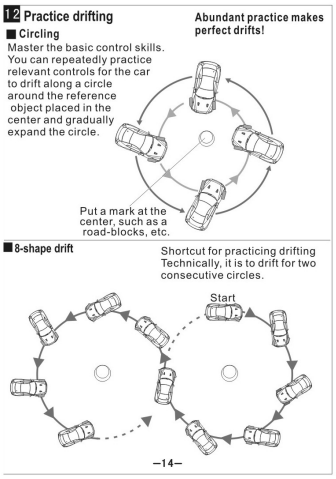

12 Practice drifting

■ **Circling**
Master the basic control skills. You can repeatedly practice relevant controls for the car to drift along a circle around the reference object placed in the center and gradually expand the circle.

■ **8-shape drift**
Shortcut for practicing drifting Technically, it is to drift for two consecutive circles.

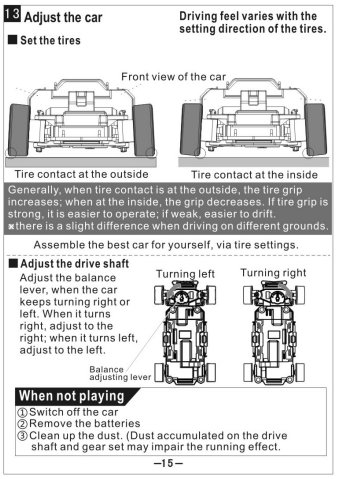

13 Adjust the car

■ **Set the tires**

■ **Adjust the drive shaft**
Adjust the balance lever, when the car keeps turning right or left. When it turns right, adjust to the right; when it turns left, adjust to the left.

SYMPTOM	Cause	Solution
Could not moveh	Controller or no battery in the remote or the car	Please put in 5 new alkaline dry batteries.Used batteries would affect the operation and hind the propagation of radio wave.
	Forgot to switch on	Switch the car on; And then operate.
	Error in installment	Please strictly follow the INSTRUCTION, and install the car.
	Radio wave not received	The range of frequency varies with the environment. Please get closer.
	Different frequencies	Set the frequencies the same as each other.
Out of control	Dirt on the tires or the drive shaft	If there is dirt on the tires or the drive shaft, the car may have difficulty in turning. Please sweep the dirt carefully.
	Wrong position for the balance adjusting lever	Put the balance lever at the right position.
	Driving on the carpets, etc	Please do not drive it on blankets or carpets, or it ma y go wrong.
Moves (or stops) for no reason	Radio interference	Try again at another place
	The controller is too close	If the controller is too close, the car may stop. Keep the controller some distance away.
	The controller is too close topeople	If the controller is too close to people, when touched, it can hardly give signals. Keep the aerial some distance away.

WINYEA **DRIFT RACING**

INSTRUCTION Suitable for kids above 8

Thank you for purchasing .Please read this INSTRUCTIONN carefully before operating.After reading,please keep it for future reference.

⚠ CAUTION

- Parental supervision is needed when pliers and knife are used.
- Please read this INSTRUCTION carefully before using the product; and keep the INSTRUCTION for future reference.
- This product cans be provided as child to dismantle to pack by oneself
- Please ditch the plastic wrapping after opening it.
- In case of accidents, please keep your face away from the product or its components while operating.
- Indoor operation only. If driven outdoors, the car may go wrong because of dirt, rubbish, etc.
- Please do not play on blankets or carpets, or it may get stuck due to the furry surface.
- To dismantle to get off hull while installing battery

Components

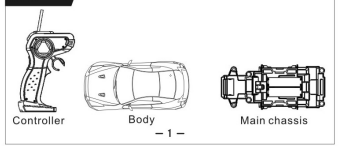

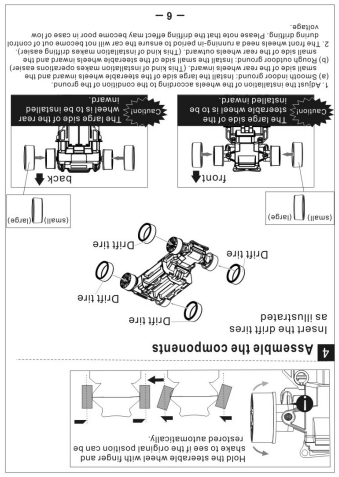

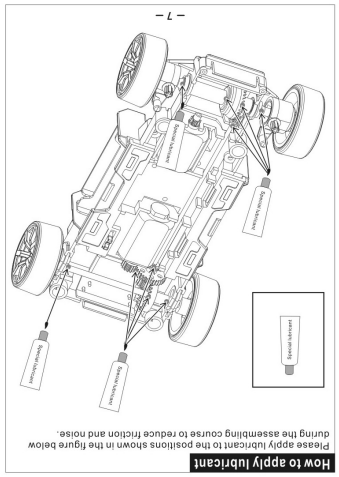

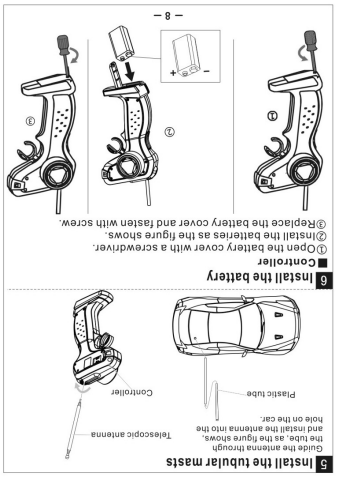

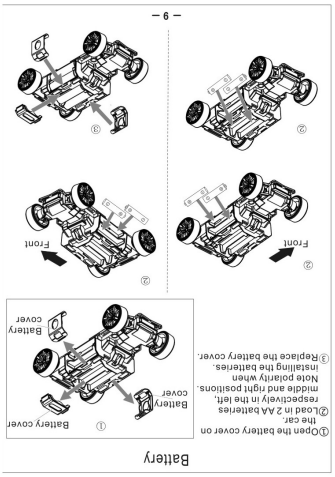

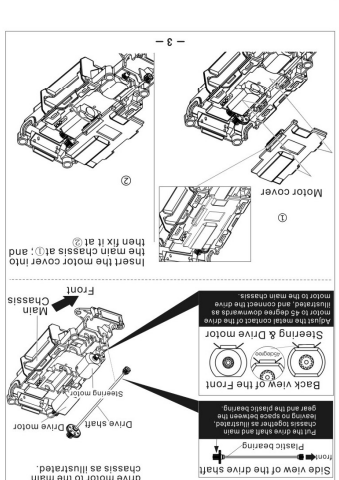

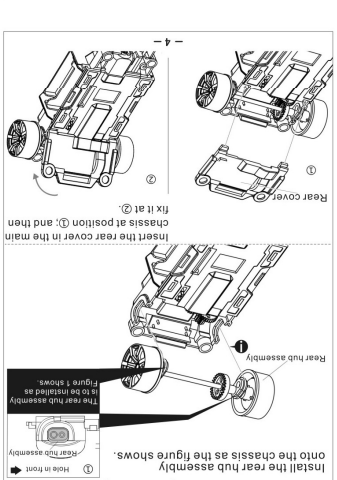

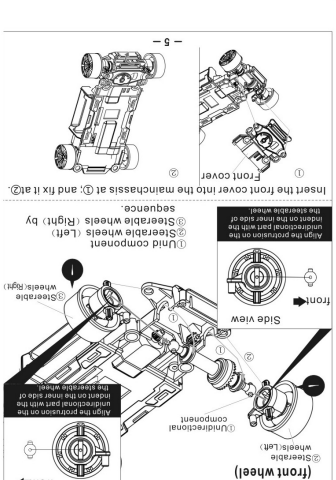

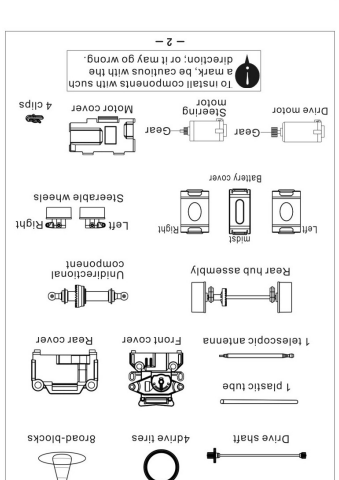

FCC INFORMATION:
Changes or modifications not expressly approved by the party responsible for compliance could void the user's authority to operate the equipment.This equipment has been tested and found to comply with the limits for a class B digital device, pursuant to part 15 of the FCC rules. These limits are designed to provide reasonable protection against harmful interference in a residential installation. This equipment generates, uses and can radiate radio frequency energy and, if not installed and used in accordance with the instructions, may cause harmful interference to radio communications. However, there is no guarantee that interference will not occur in a particular installation.
If this equipment does cause harmful interference to radio or television reception, which can be determined by turning the equipment off and on, the user is encouraged to try to correct the interference by one or more of the following measures:
- Reorient or relocate the receiving antenna.
- Increase the separation between the equipment and receiver.
- Connect the equipment into an outlet on a circuit different from that to which the receiver is connected.
- Consult the dealer or an experienced radio/TV technician for help.
This device complies with Part 15 of the FCC Rules. Operation is subject to the following two conditions: (1) This device may not cause harmful interference, and (2) this device must accept any interference received, including interference that may cause undesired operation.