C51 Microcontrollers Demo Board

User Guide

Table of Contents

Section 1

Introduction 1-2

1.1 C51/C251 Support 1-2

1.2 Demo Board Features 1-3

Section 2

Hardware Description 2-4

2.1 Block Diagram 2-4

2.2 Specifications 2-4

2.3 Supported Microcontrollers 2-4

2.4 Board Supply Considerations 2-5

2.5 Board Layout 2-6

2.6 J11 Switches 2-7

Section 3

Operation Mode 3-10

3.1 Flash Products 3-10

3.1.1 Switch Configuration 3-10

3.1.2 Running ISP 3-10

3.2 ISP External Flash Memory Mode 3-11

3.2.1 Hardware Configuration 3-11

3.2.2 Terminal Configuration 3-11

3.2.3 ISP Operation 3-11

3.3 Demo Mode 3-14

3.3.1 C51 Mode 3-14

3.3.2 C251 Mode 3-15

Section 4

Bill of Material 4-16

Section 5

Schematics 5-18

Section 1
Introduction

The C51/C251 Demo Board allows easy evaluation of most of Atmel C51/C251 devices. The C51/C251 Demo Board can be powered using a simple 9V battery or using a 9V rechargeable battery. The C51/C251 Demo Board can also be used as programming tool for Flash products.

1.1 Package Contents

- One PCB C51/C251 Demo Board (with battery connector)
- One Serial cable (1.8m length)

Figure 1-1. C51/C251 Demo Board

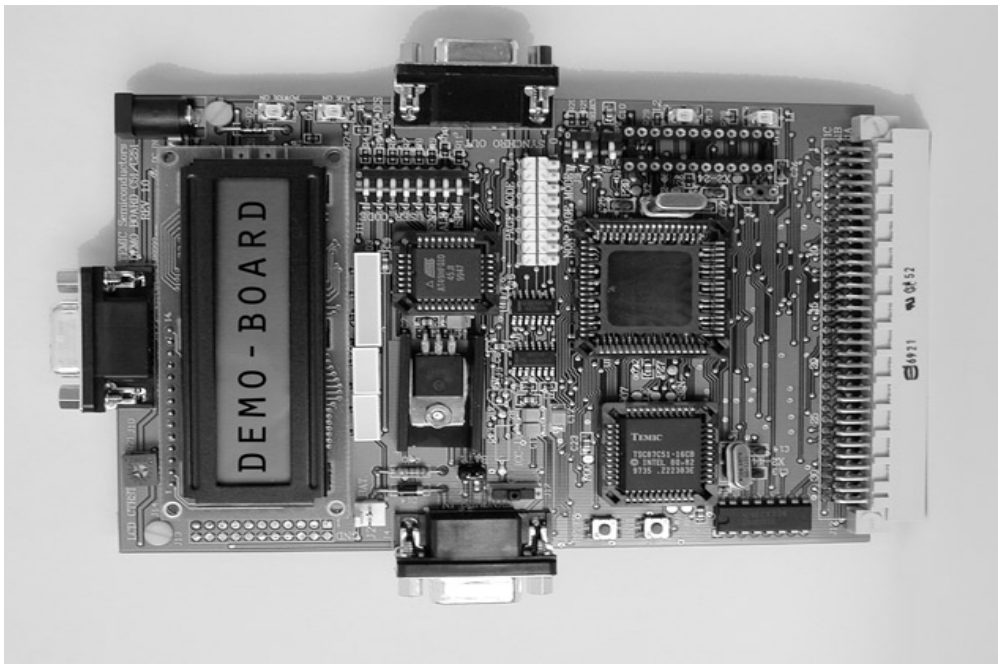

1.2 On-line Utilities

The following utilities involved in using the C51/C251 Demo Board are **available on the Atmel Web site http://www.atmel.com**.
Search for DEMOBOARD1.

- FLIP: In-System Programming (ISP) software for Flash microcontrollers
- ISP Demo Board Source and Code to program external Flash memory
- Source and Code of demo software

1.3 Support

Questions can be sent to: mcu@atmel.com

1.4 Demo Board Features

- An LCD Display (2 lines of 16 characters)
- An Eight LED Bar Graph
- 128 KB Flash Memory
- Three Different Sockets: PLCC44, PLCC68 & DIL24
- In-System Programming (ISP) Software to Download HEX Files in Flash Memory
- Hardware Capability to Program the Microcontrollers On-Chip Flash Memory
- Extension Connectors for Special Features, Applications, New Products, or Demos

Section 2

Hardware Description

2.1 Block Diagram

Figure 2-1. Block Diagram

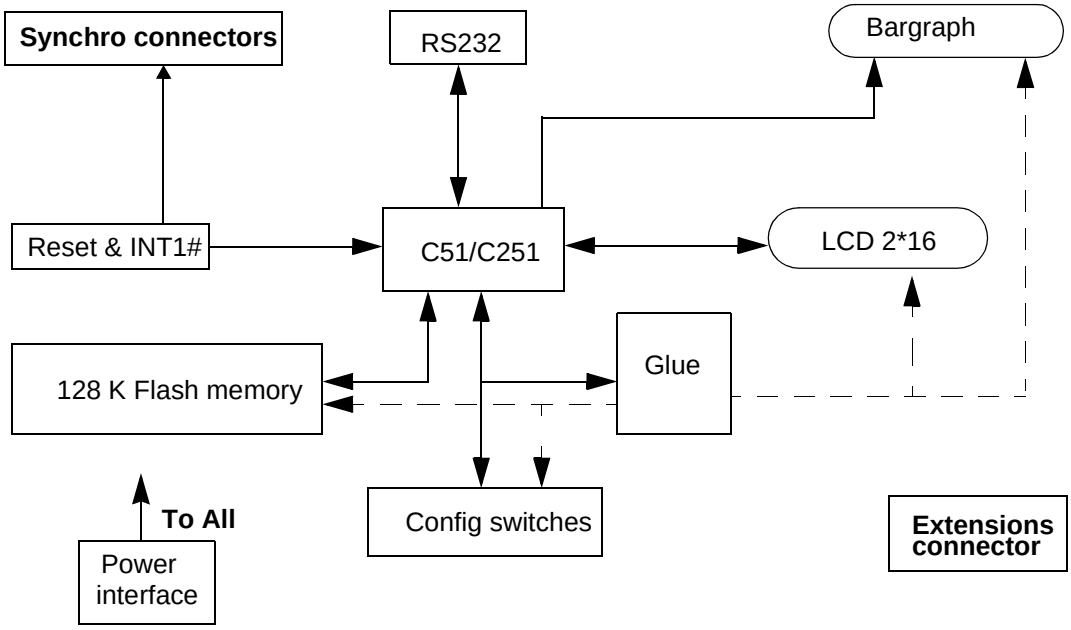

2.2 Specifications

Parameter	Typ	Max	Unit
Supply DC voltage	9	12	V
Supply DC current	200		mA
Consumption at 12 MHz	60	100	mA
Consumption at 60 MHz in X2 mode	110	150	mA
non-rechargeable battery capacity	550		mAh
Rechargeable battery capacity	150		mAh

2.3 Supported Microcontrollers

Most Atmel C51 and C251 microcontrollers are supported.

The Demo Board does not support low voltage parts, only 5V parts are supported.

2.4 Board Supply Considerations

- Power connector J1 or battery connector J2 may be used to power the board.
- On J2 connector a rechargeable battery or a non-rechargeable battery may be used.
- In case of rechargeable battery usage on J2, if J18 is ON the battery is charged when the board is powered by J1.
- Board may be powered by J2 for about 10 hours with one new non-rechargeable battery.

Note: J18 must be Off, when the board is powered by J1 with a non-rechargeable battery connected on J2 (see figure 3).

Figure 2-2. C51/C251 Demo Board powered by J1 with a non-rechargeable battery on J2

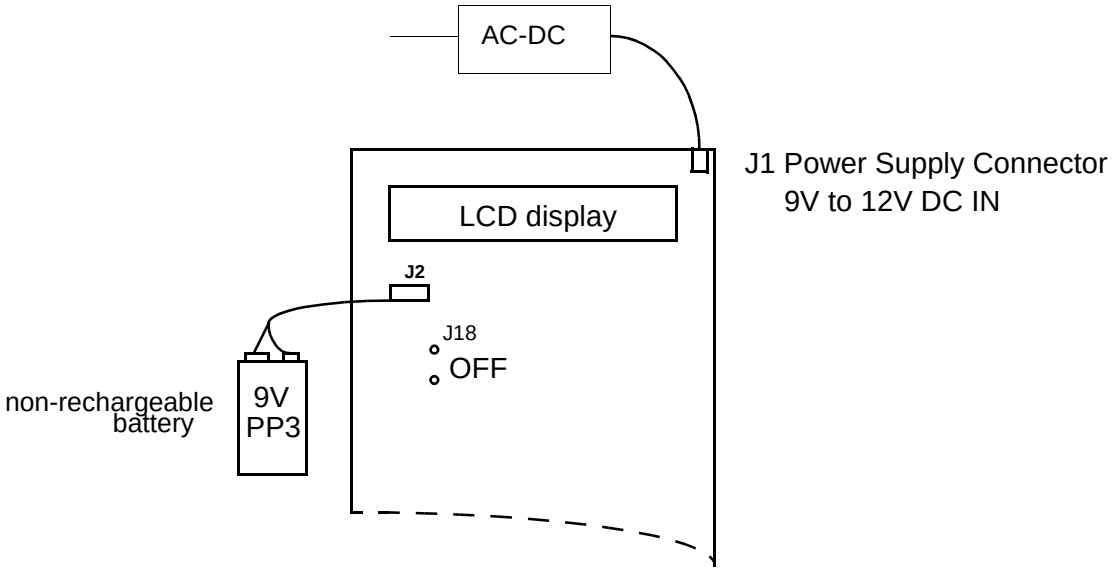

Figure 2-3. C51/C251 Demo Board powered by J1 with a rechargeable battery on J2

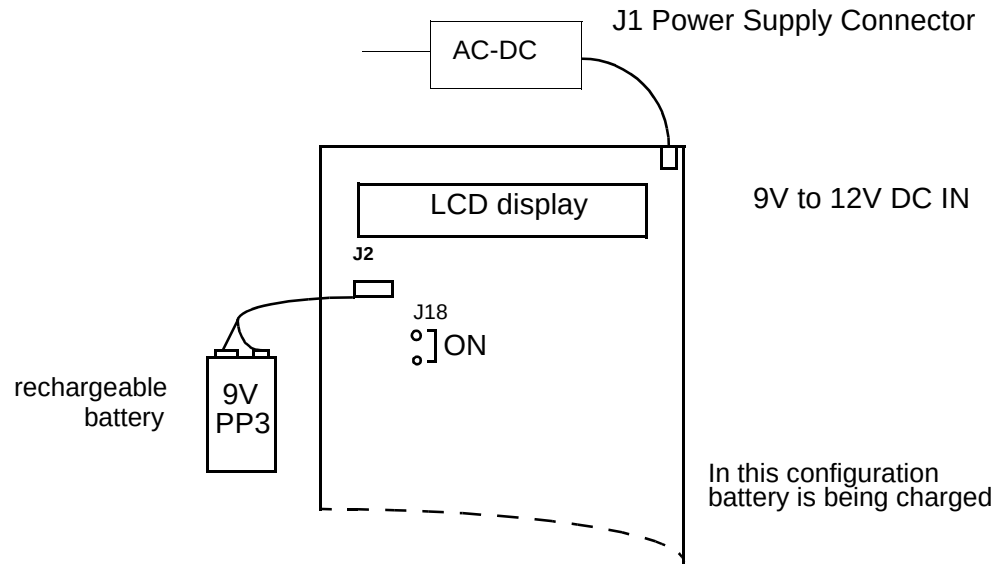

Figure 2-4. C51/C251 Demo Board Powered by J2.

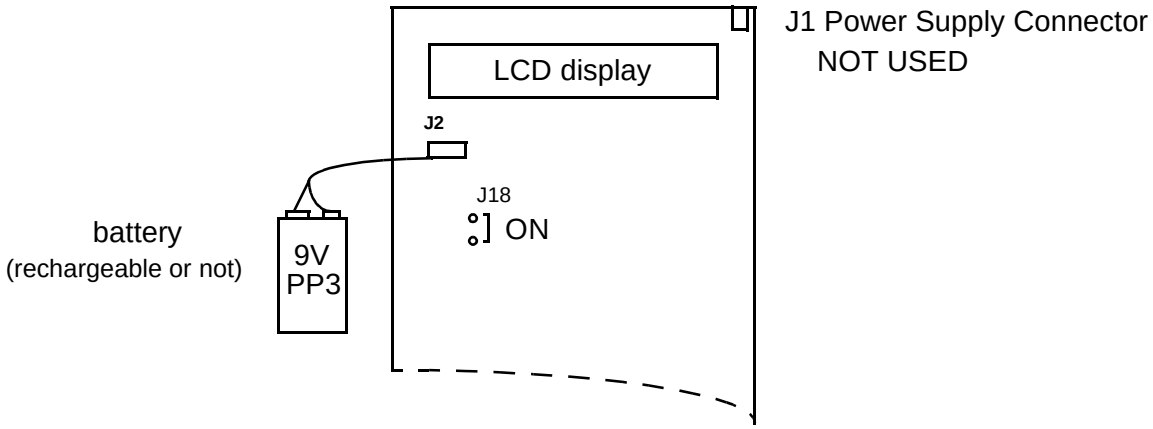

2.5 Board Layout

- On-Off
  - Switches ON the power supply.
- Reset
  - Resets the microcontrollers.
- INT1#
  - Issues an interruption on microcontollers on INT1# pin.
- J8 Connector
  - Configure hardware in Page Mode or Non Page Mode.
  - for C251 microcontrollers. For C51 products, the configuration must be set to Non Page Mode.
- Synchro IN
  - Used to connect several C51/C251 Demo Boards together, provides global reset / interrupt for all connected C51/C251 Demo Boards.
- Synchro OUT
  - Only one power supply is needed but it may be able to deliver enough current to supply all the C51/C251 Demo Boards.
  - There are no rules to connect two boards together anyone of the two DB9 may be used.
- RS232
  - Used to connect a terminal or through an RS232 serial communication port.
  - This serial port can be used for displaying messages or for programming external Flash memory.

Note: The cable that connect this RS232 Connector MUST be a pin to pin cable.

Figure 2-5. C51/C251 Demo Board

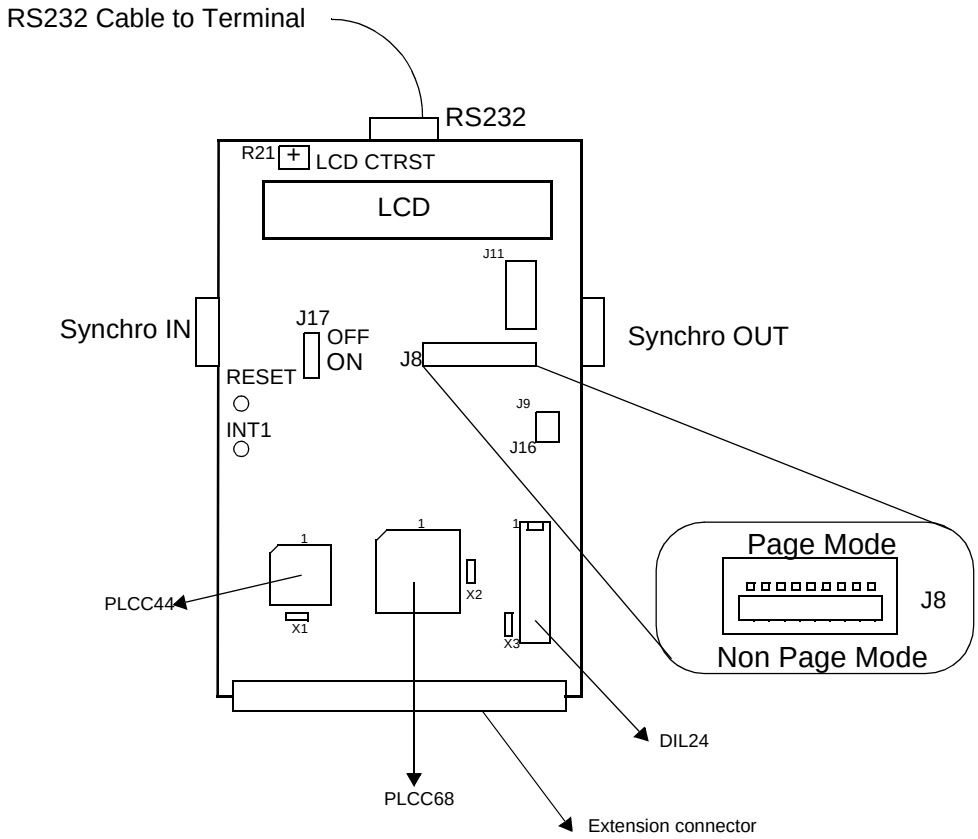

2.6 J11 Switches

Table 1. J11 Switches

7	6	5	4	3	2	1	0
ISP	**ALE**	**PSEN**	**UC4**	**UC3**	**UC2**	**UC1**	**UC0**

Bit Number	Bit Mnemonic	Description
7	ISP1	**In-System Programming (external Flash memory)** Set to enable external Flash memory programming Clear to protect external Flash memory from erasure and programming
6	ALE	**Address Latch Enable** Set to see ALE activity Clear to ground ALE
5	PSEN	**Program Store Enable** Set to run demos Clear to program T89C51RD2 on-chip Flash memory
4-0	UC4:0	**User Code** Free of use as data input for demos.

(Set=1, Clear=0)

Table 2. J9 Switches

1	0
MAP SELECT	**EA**

Bit Number	Bit Mnemonic	Description
1	MAP SELECT	**Map Select** Set to select external Flash memory zone from $10000 to $1FFFF Clear to select external Flash memory zone from $00000 to $0FFFF
0	EA	**External Address** Set to fetch internal code (on chip code). Clear to fetch code from external Flash memory

Table 3. J16 Switches

0
ISP2

Bit Number	Bit Mnemonic	Description
0	ISP2	**In System Programming 2 (external Flash memory)** RESERVED MUST BE OFF (set to 1)

Figure 2-6. Switch Configuration

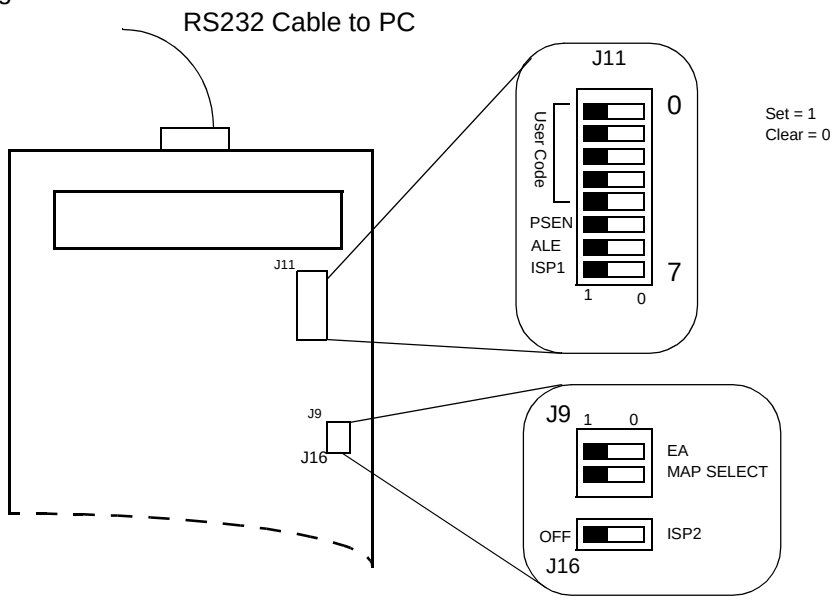

Socket and Quartz Crystal

The C51/C251 Demo Board provides three different sockets for microcontrollers, a PLCC44, a PLCC68 and a DIL24.

Each socket has it own quartz crystal X1, X2 and X3.

Only one Atmel microcontroller must be plugged-in at one time, in one of the three sockets.

Crystal may be easily changed on each socket.

Section 3

Operation Mode

3.1 Flash Products

3.1.1 Switch Configuration

To program the on-chip Flash memory, hardware configuration of the chip should be the following: PSEN = 0, EA = 1 and ALE = 1 or not connected.

On C51/C251 Demo Board, switches must be as shown on Figure 3-2.

Figure 3-1. **C51/C251 Demo Board** Switches Configuration to use ISP

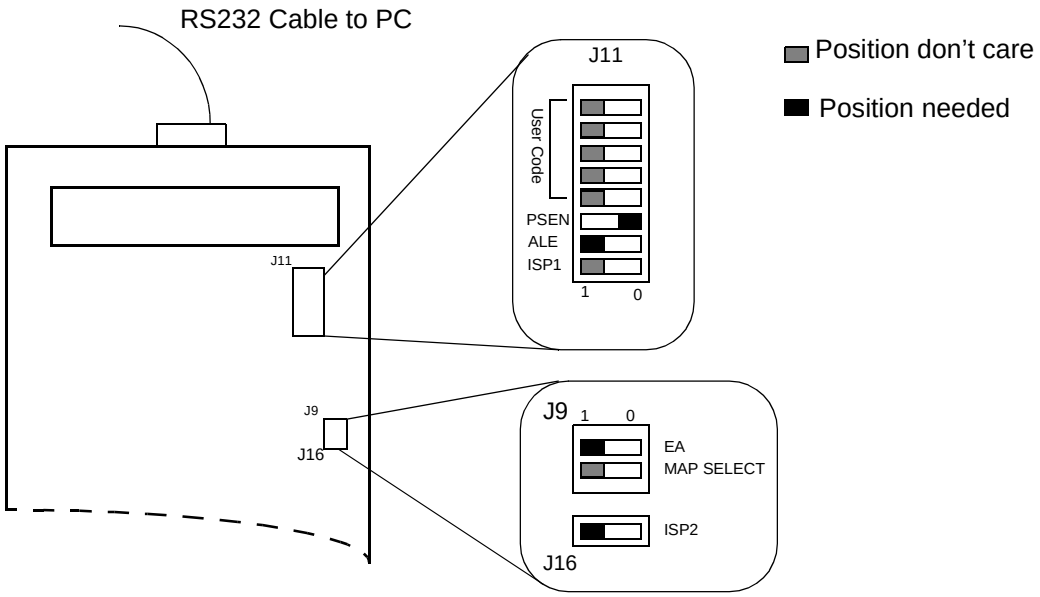

3.1.2 Running ISP

The C51/C251 Demo Board must be connected to a PC com port via the RS232 cable connected to the RS232 connector of C51/C251 Demo Board**.**

After downloading, you can run code by switching PSEN on J11 to 1 and pressing the RESET push button.

3.2 ISP External Flash Memory Mode

External Flash memory might be programmed using Windows hyper terminal or any terminal able to send HEX files in text mode.

3.2.1 Hardware Configuration

The C51/C251 Demo Board must be connected to the PC com port with the cable connected to the RS232 connector J10.

The switch must be set as shown on Figure 3-2.

PLCC44 socket and X1 Quartz crystal will be used to program external Flash memory. X1 must be 11.0592 Mhz and Atmel microcontroller must be plugged into PLCC44 socket.

Figure 3-2. **C51/C251 Demo Board** Switches Configuration to Program External Flash Memory.

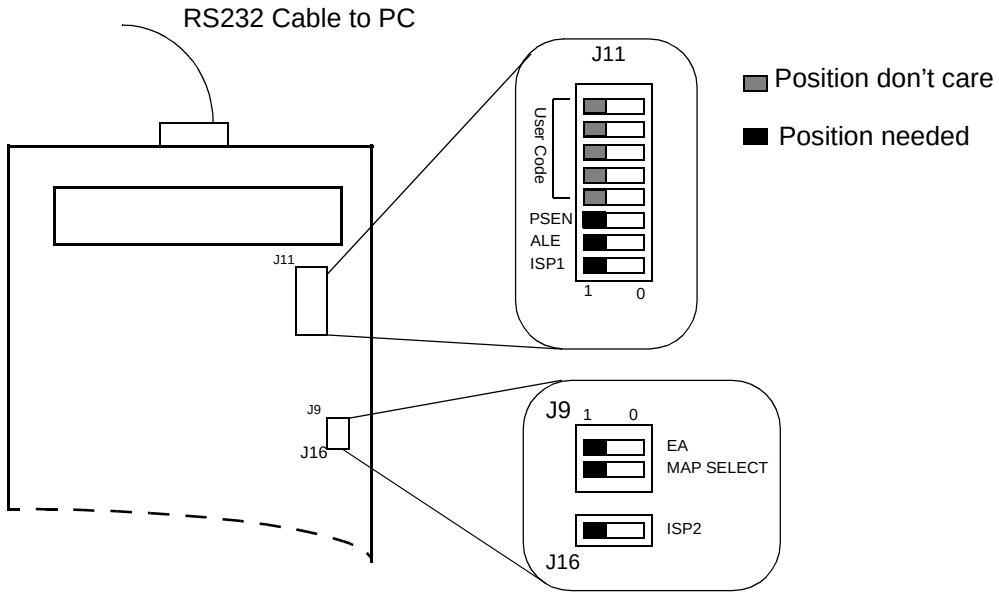

3.2.2 Terminal Configuration

Use the following configuration for the terminal.

Parameter	Value
Bauds	9600
Data bits	8
Stop bits	1
Parity	None
Flow control	Xon-Xoff

3.2.3 ISP Operation

1. Connect C51/C251 Demo Board to the PC com port with the cable.
2. Run Windows hyper terminal and configure it with the parameter specified in Figure 3-3.

Figure 3-3. Com Port Configuration

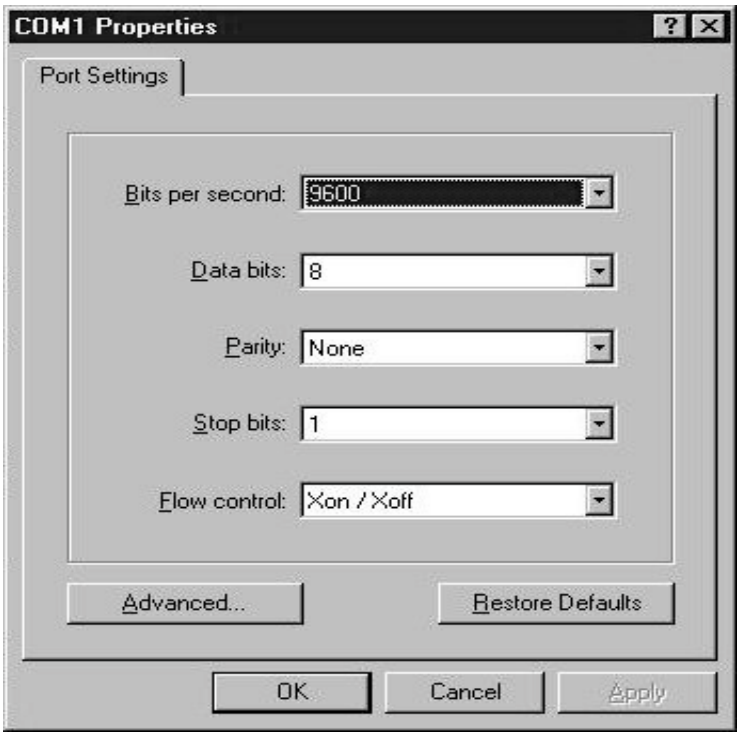

Figure 3-4. Terminal Window on Running ISP

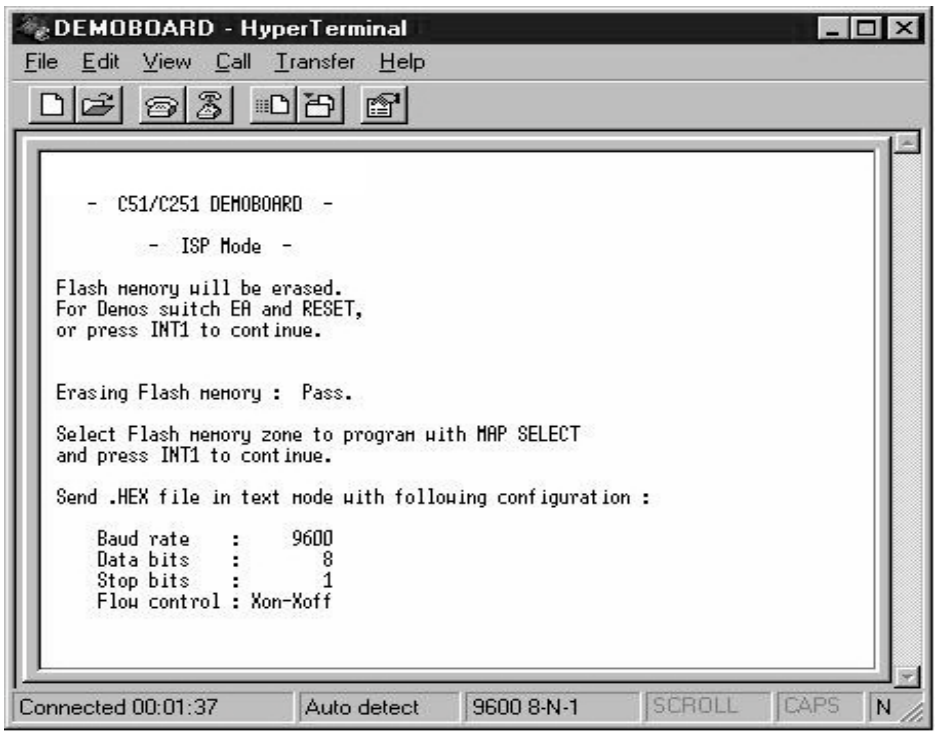

Turn on the C51/C251 Demo Board and then follow the instructions on the terminal screen and LCD display. After erasing Flash, the program asks for the memory zone, and then asks to send the HEX file in text mode (see Figure 3-4, Figure 3-5 & Figure 3-6).

Figure 3-5. Send HEX File in Text Mode

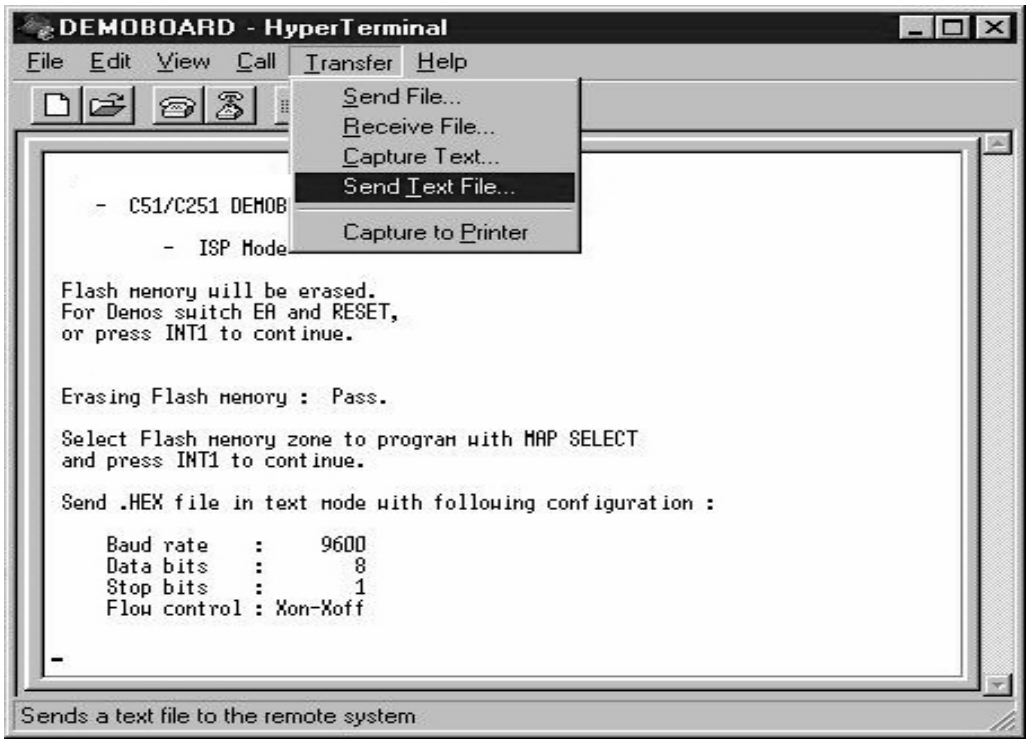

Figure 3-6. Use *.* in the Selection Zone to See HEX files in the Directory

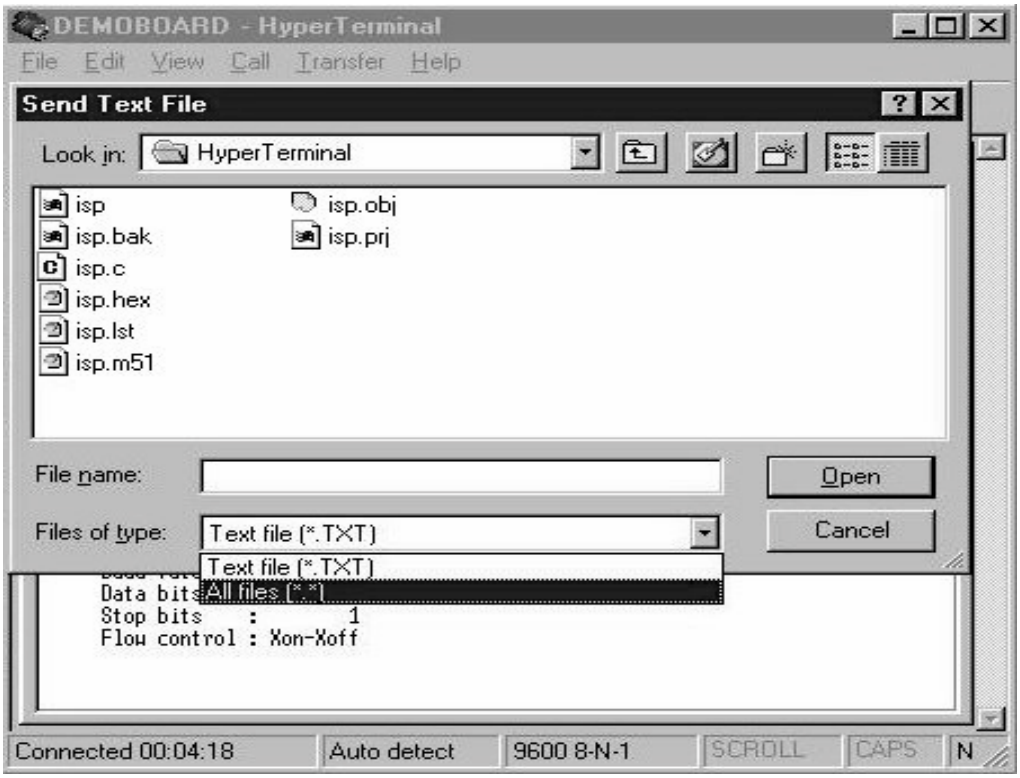

After the download of the HEX file, the program asks if you want to download another HEX file in the second zone of the external Flash memory.

In this case you'll have to switch MAP SELECT (to access second zone) and send another HEX file in text mode.

All the external flash memory (128K bytes) is erased when ISP is used, even if you only want to download one zone.

If you have one external Flash memory zone programmed, and later you want to add another program to the second memory zone, you will have to download both programs at the same time.

Note: The data transfer is seen on bar graph.

3.3 Demo Mode

In demo mode, programs stored into external flash memory are executed to demonstrate capability of Atmel Microcontrollers. To run external code we must have EA=0.

In this mode the first four bits of J11 (UC3:0) are used to select demo program and UC4 is used to select display (LCD or RS232).

Figure 3-7. Switch Utilities in Demo Mode

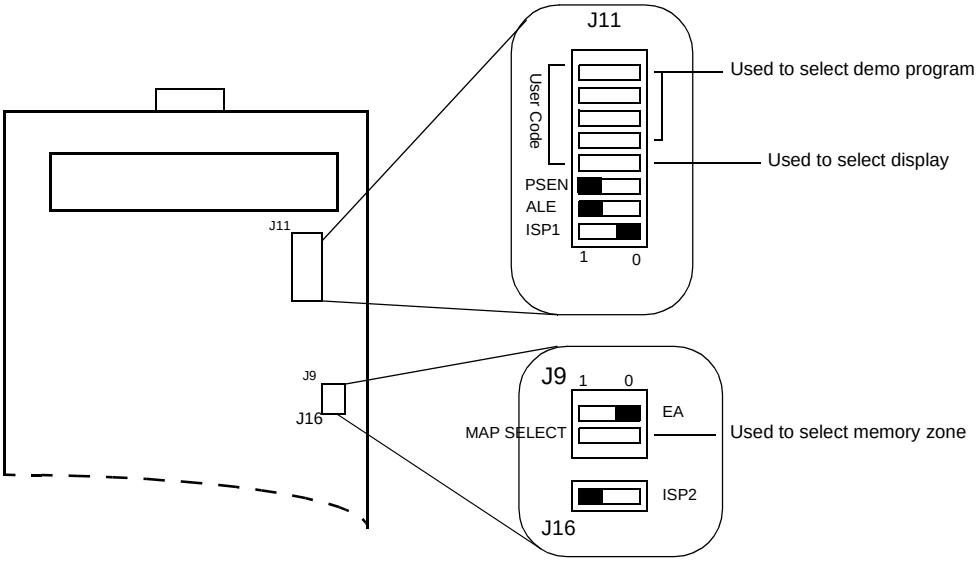

3.3.1 C51 Mode

In C51 mode (Non Page Mode) switch J8 must be as shown in Figure 3-8.

Figure 3-8. C51 Mode (Non Page Mode)

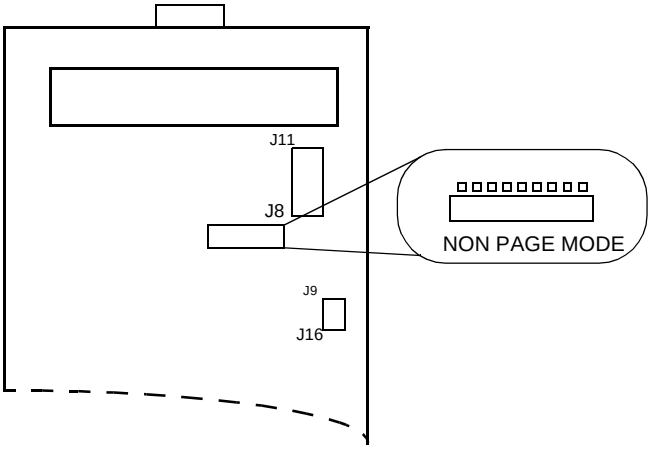

3.3.2 C251 Mode

In C251 mode, the microcontroller can be used in Page Mode or Non Page Mode. For Non Page Mode switch J8 must be in the same configuration as in C51 mode. For Page Mode switch J8 must be as shown in Figure 3-9.

Figure 3-9. C251 Mode (Page Mode)

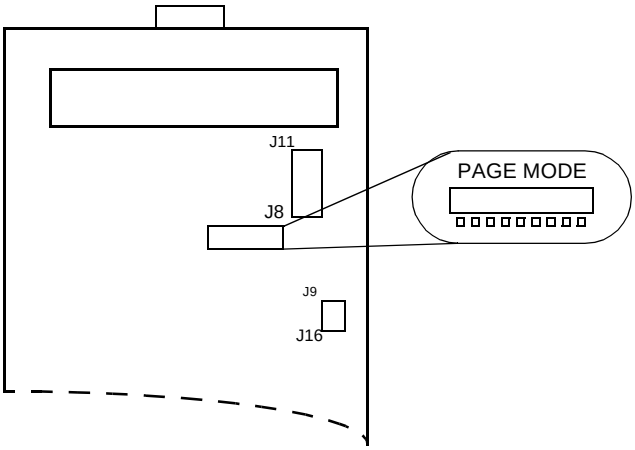

Section 4

Bill of Material

Reference	Type		Qty	Comment
C1-C28	POL_CAPACITOR	4,7uF	2	CMS_TAJ_Package_B
C2:C10-C19:C23	CAPACITOR	100nF	14	Package_0805
C11	POL_CAPACITOR	3,3uF	1	TAJ_CMS_Package_B
C12	POL_CAPACITOR	10uF	1	TAJ_CMS_Package_B
C13-C14-C24:C27	CAPACITOR	22pF	6	Serie_680
C15:C18	POL_CAPACITOR	10uF	4	CMS_TAJ_Package_B
D1-D14	1N4001	1N4001	2	Package_DO204AL
D2-D11:D13	LED	LED	4	CMS_STANDART
D3:D6	LED_GREEN	GREEN LED	1	in_line_2.54mm step
D7:D8	LED_YELLOW	YELLOW LED	1	in_line_2.54mm step
D9:D10	LED_RED	RED LED	1	in_line_2.54mm step
J1	CONNECTOR	CONNECTOR	1	
J2	CONNECTOR_BATTERY_9V	CONN_BATTERY_9V	1	
J3	STRAP	STRAP	0	
J4	DB9_MALE	DB9_MALE	1	SUBD9Pins_Right_Angle
J5-J10	DB9_FEMELLE	DB9_FEMELLE	2	SUBD9Pins_Right_Angle
J6:J7	Push_Button	Push_Button	2	CMS
J8	SWITCH_ON_ON	SWITCH_ON_ON	1	
J9	Commut_DIP_2	Commut_DIP_2	1	
J11	Commut_DIP_8	Commut_DIP_8	1	DIL
J12	CONNECTOR	CONNECTOR	1	DIN41612_3*32_MALE_Right_Angle
J13	Jumper_2,54mm	CONNECTOR	1	2*11 contacts
J14	LCD_2X16	LCD_2X16	1	NULL
J15	ALE_DIS	Strap	0	
J16	Commut_DIP_1	Commut_DIP_1	1	
J17	Switch ON-ON	Switch ON-ON	1	Inter. ON/OFF
J18	jumper Battery	Picot Pile	1	2 pins, step of 2,54mm
J19	Switch ON-ON	Switch ON-ON		
R1-R24-R28-R29	RESISTOR	1kOhm	4	Package_0603
R2-R3-R20-R21-R25	RESISTOR	10kOhm	6	Package_0603
R4:R11	RESISTOR	10kOhm	2	Package_1206-CMS_ARC_241
R12-R19	RESISTOR	1kOhm	2	Package_1206_CMS_ARC_241
R21	POTENTIOMETER	10kOhm	1	SERIE_3362P
R23	RESISTOR	100 Ohm	1	0.6W-1%
R30	RESISTOR	180 Ohm	1	0,5W
U1	LM7805C	LM7805C	1	TO220 + Heater
U2	LM2936Z5	LM2936Z5	1	TO92
U3-U4-U7-U8	74ACT573	74ACT573	4	CMS
U5	TSC80C31	Socket	1	PLCC44
U6	AT49HF010-45JC	Socket	1	PLCC32
U9	ICL232CBE	ICL232CBE	1	CMS
U10	HEF4555P	HEF4555P	1	DIL
U12	TSC80C51	Socket	1	DIL24
U13	TSC80C51	Socket	1	PLCC68
U14	74ACT14	74ACT14	1	CMS
U15	74ACT00	74ACT00	1	CMS
X1	Quartz_11.05920	11,0592 MHz	1	HC49/4H
X2	Quartz_22,1184	22,1184 MHz	1	HC49/U

Section 5

Schematics

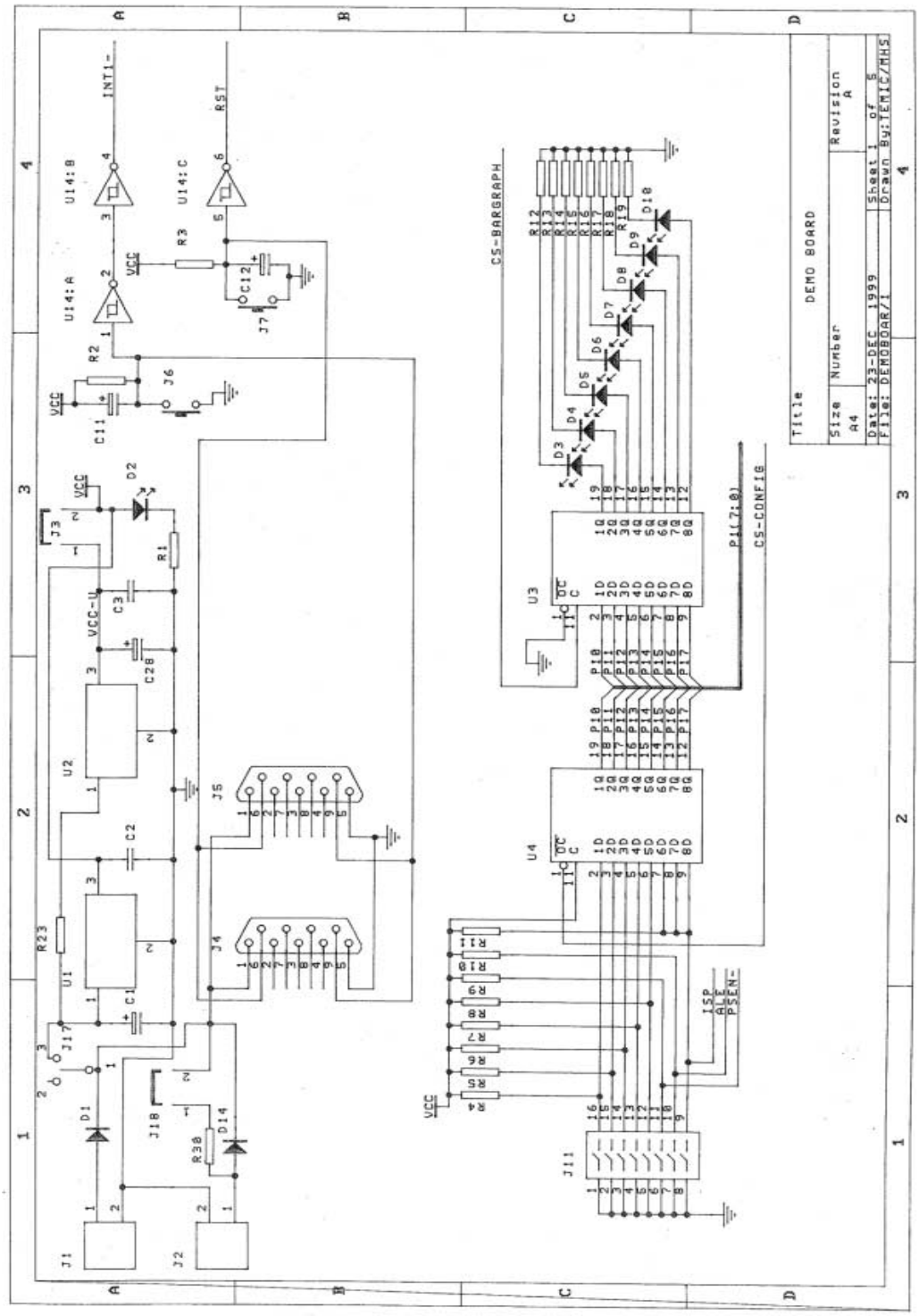

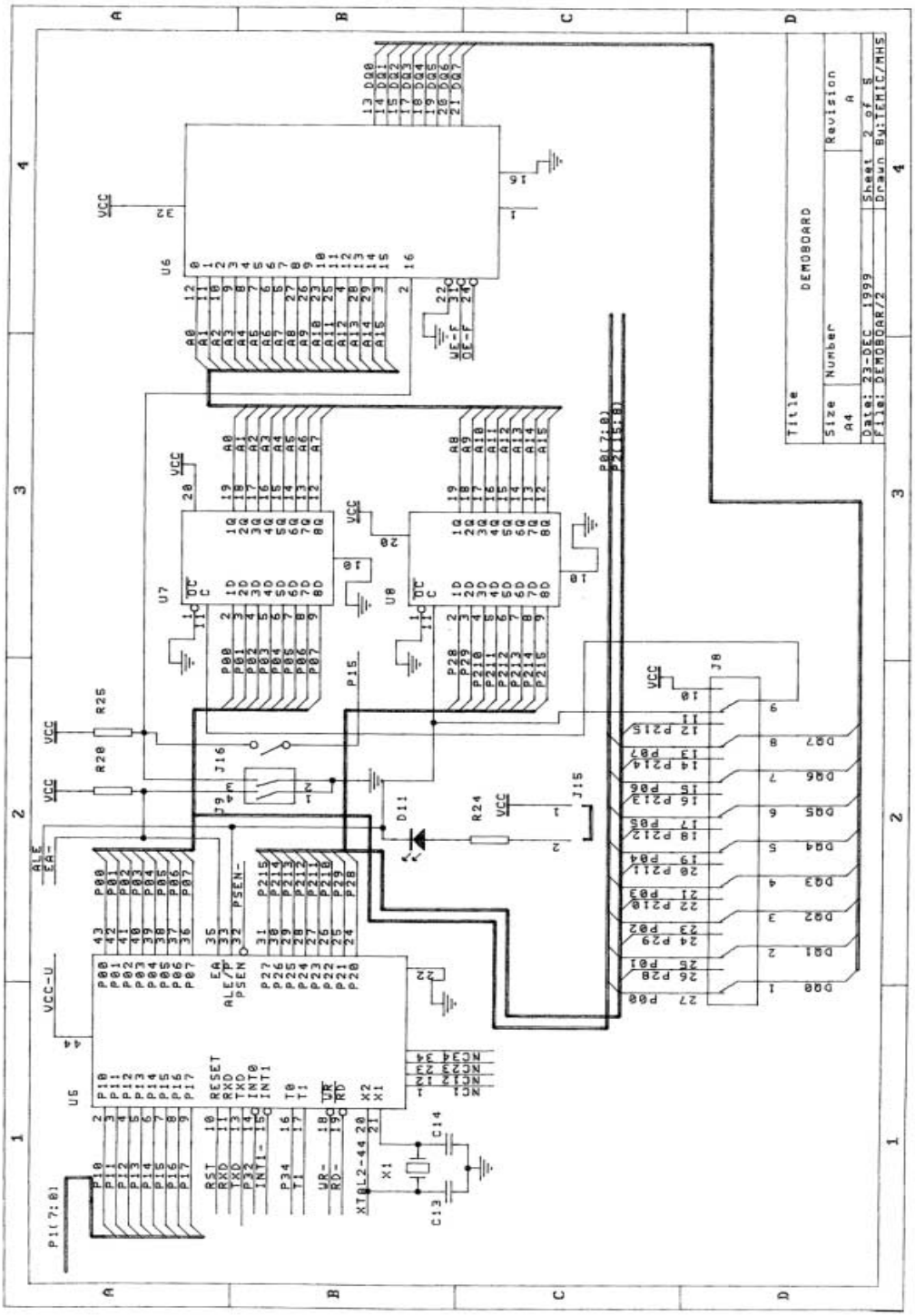
DEMOBOARD
Title
Size
A4
Number
Revision
A
Date: 23-DEC 1999
File: DEMOBOAR/2
Sheet 2 of 5
Drawn By:TEMIC/MHS
U6
U7
U8
U5
J8
J15
J16
D11
R24
R25
R28
C13
C14
X1
VCC
VCC-U
P1(7:0)
P0(7:0)
P2(15:8)
P15
ALE
EA-
PSEN-
XTAL2-44

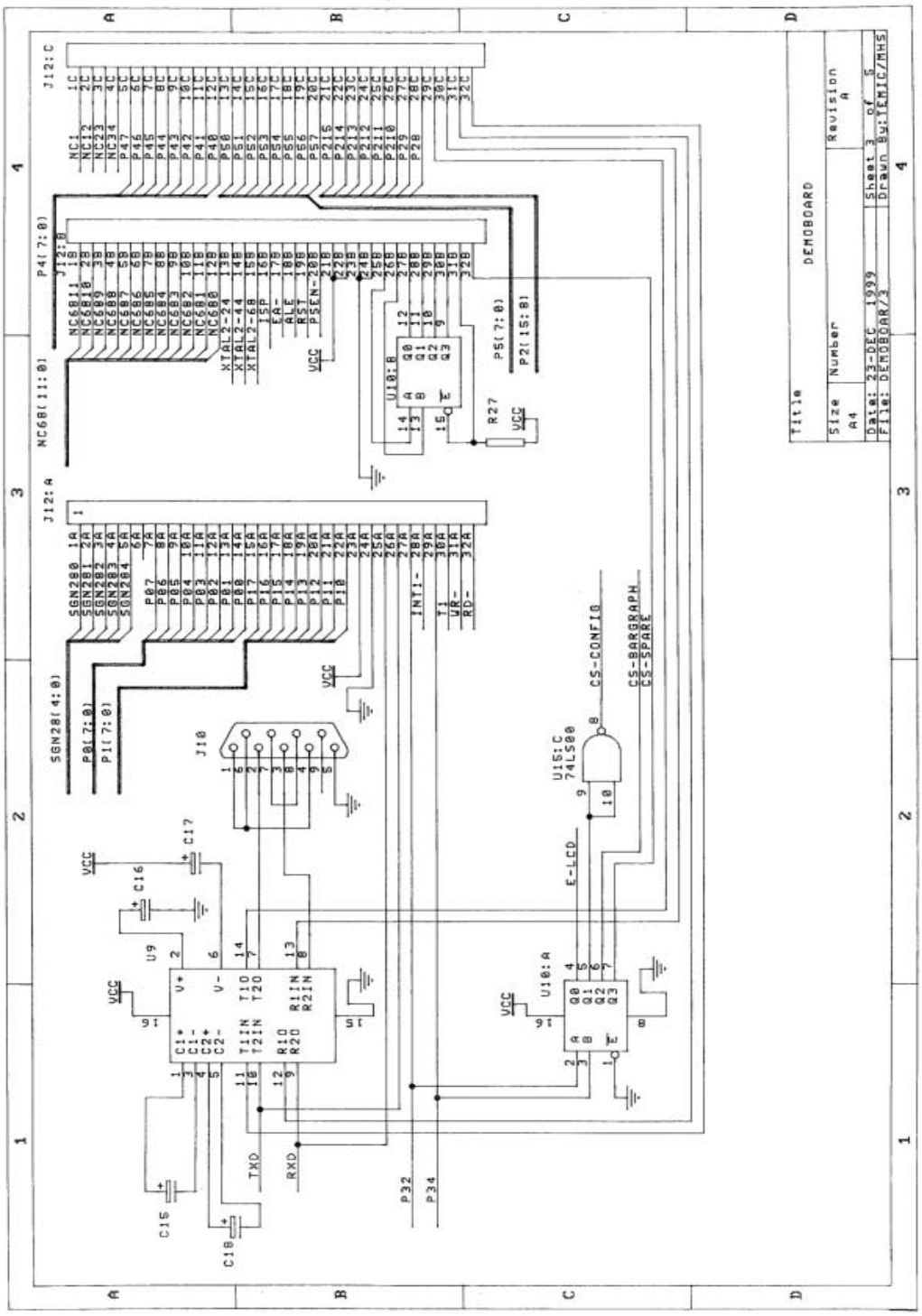
DEMOBOARD
Title
Size
A4
Number
Revision
A
Date: 23-DEC 1999
File: DEMOBOAR/3
Sheet 3 of 5
Drawn By: TEMIC/MHS
J12:C
J12:B
J12:A
NC68(11:0)
P4(7:0)
P5(7:0)
P2(15:8)
SGN28(4:0)
P0(7:0)
P1(7:0)
J10
U9
U10:A
U10:B
U15:C
74LS00
CS-CONFIG
CS-BARGRAPH
CS-SPARE
E-LCD
VCC
TXD
RXD
P32
P34
R27
C15
C16
C17
C18

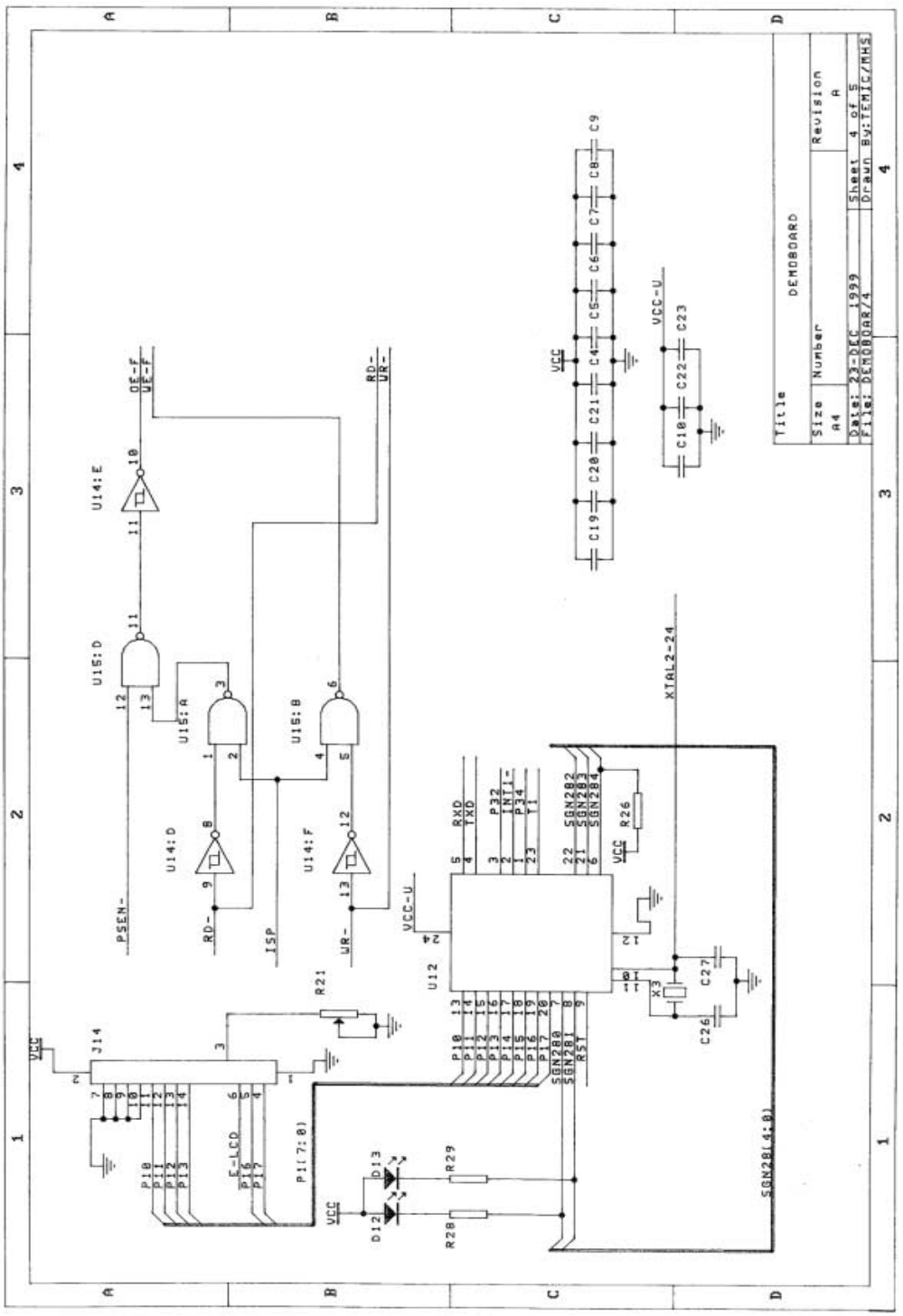
Title
DEMOBOARD
Size
A4
Number
Revision
A
Date: 23-DEC 1999
File: DEMOBOAR/4
Sheet 4 of 5
Drawn By:TEMIC/MHS
U12
U14:D
U14:E
U14:F
U15:A
U15:B
U15:D
J14
PSEN-
RD-
WR-
ISP
OE-F
WE-F
VCC
VCC-U
XTAL2-24
E-LCD
P1(7:0)
SGN28(4:0)
R21
R26
R28
R29
D12
D13
X3
C26
C27
C19
C20
C21
C4
C5
C6
C7
C8
C9
C10
C22
C23

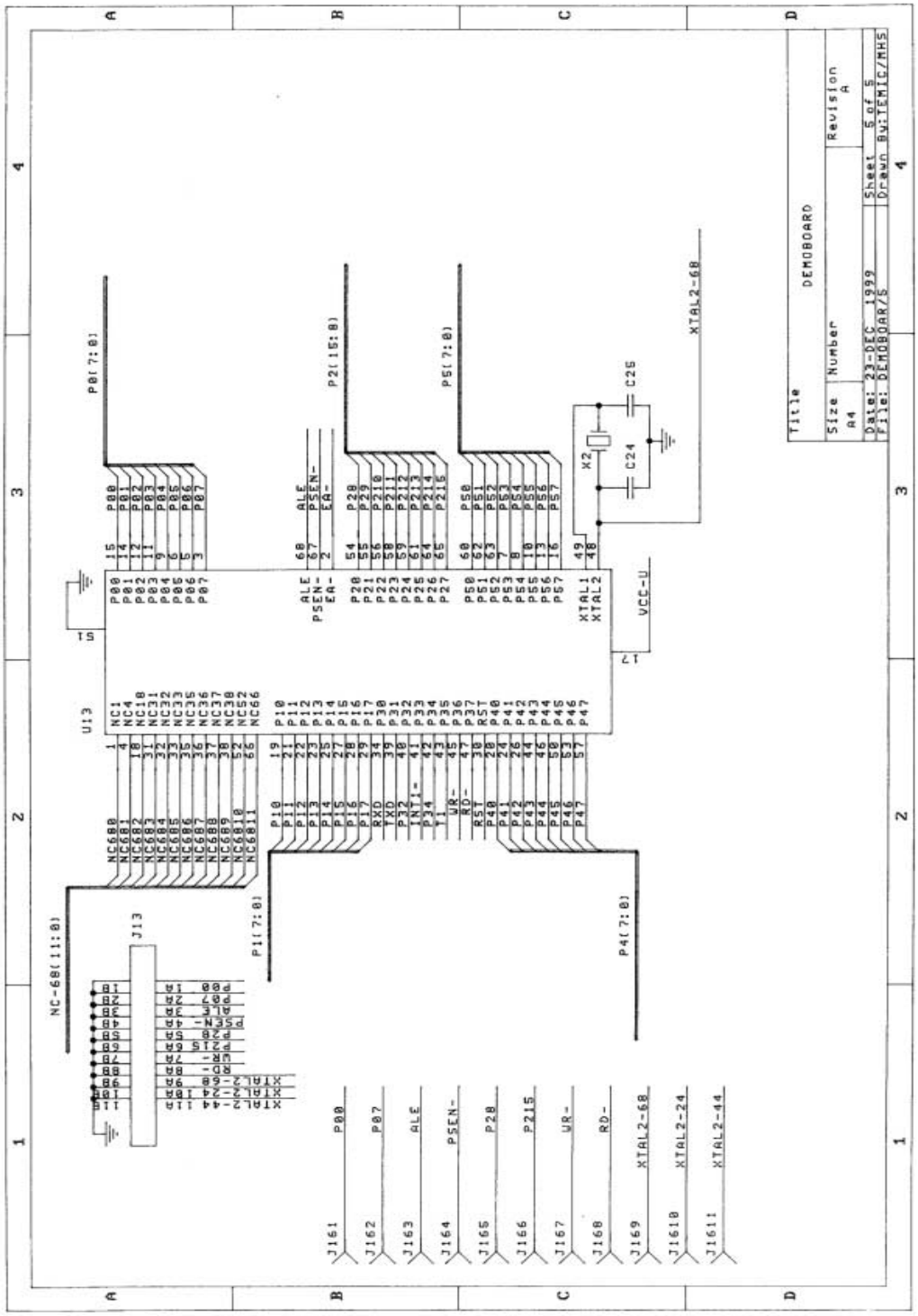
DEMOBOARD
Title
Size
A4
Number
Revision
A
Date: 23-DEC 1999
File: DEMOBOAR/5
Sheet 5 of 5
Drawn By:TEMIC/MHS
U13
J13
X2
C24
C25
XTAL2-68
VCC-U
P0(7:0)
P2(15:8)
P5(7:0)
P1(7:0)
P4(7:0)
NC-68(11:0)
P00
P07
ALE
PSEN-
P28
P215
WR-
RD-
XTAL2-68
XTAL2-24
XTAL2-44

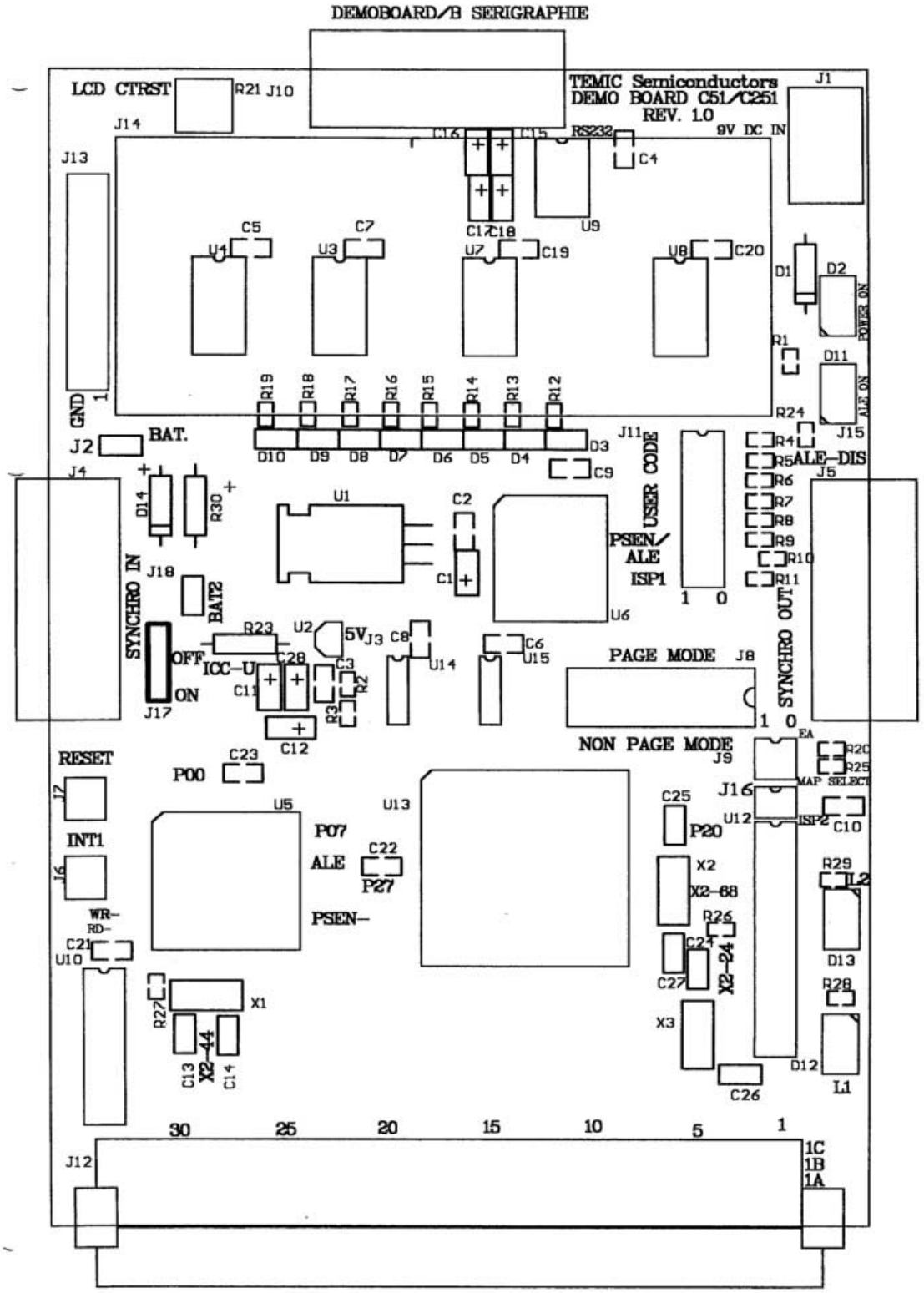
DEMOBOARD/B SERIGRAPHIE
TEMIC Semiconductors
DEMO BOARD C51/C251
REV. 1.0
9V DC IN
LCD CTRST
RS232
POWER ON
ALE ON
GND
BAT.
USER CODE
PSEN/
ALE
ISP1
ALE-DIS
SYNCHRO IN
BAT2
OFF
ON
ICC-U
5V
PAGE MODE
NON PAGE MODE
SYNCHRO OUT
EA
MAP SELECT
ISP2
RESET
INT1
P00
P07
ALE
P27
PSEN-
P20
X2-68
X2-24
X2-44
WR-
RD-
30
25
20
15
10
5
1
1C
1B
1A

Atmel Headquarters

Corporate Headquarters
2325 Orchard Parkway
San Jose, CA 95131
TEL 1(408) 441-0311
FAX 1(408) 487-2600

Europe
Atmel SarL
Route des Arsenaux 41
Casa Postale 80
CH-1705 Fribourg
Switzerland
TEL (41) 26-426-5555
FAX (41) 26-426-5500

Asia
Atmel Asia, Ltd.
Room 1219
Chinachem Golden Plaza
77 Mody Road Tsimhatsui
East Kowloon
Hong Kong
TEL (852) 2721-9778
FAX (852) 2722-1369

Japan
Atmel Japan K.K.
9F, Tonetsu Shinkawa Bldg.
1-24-8 Shinkawa
Chuo-ku, Tokyo 104-0033
Japan
TEL (81) 3-3523-3551
FAX (81) 3-3523-7581

Atmel Operations

Memory
Atmel Corporate
2325 Orchard Parkway
San Jose, CA 95131
TEL 1(408) 436-4270
FAX 1(408) 436-4314

Microcontrollers
Atmel Corporate
2325 Orchard Parkway
San Jose, CA 95131
TEL 1(408) 436-4270
FAX 1(408) 436-4314

Atmel Nantes
La Chantrerie
BP 70602
44306 Nantes Cedex 3, France
TEL (33) 2-40-18-18-18
FAX (33) 2-40-18-19-60

ASIC/ASSP/Smart Cards
Atmel Rousset
Zone Industrielle
13106 Rousset Cedex, France
TEL (33) 4-42-53-60-00
FAX (33) 4-42-53-60-01

Atmel Colorado Springs
1150 East Cheyenne Mtn. Blvd.
Colorado Springs, CO 80906
TEL 1(719) 576-3300
FAX 1(719) 540-1759

Atmel Smart Card ICs
Scottish Enterprise Technology Park
Maxwell Building
East Kilbride G75 0QR, Scotland
TEL (44) 1355-803-000
FAX (44) 1355-242-743

RF/Automotive
Atmel Heilbronn
Theresienstrasse 2
Postfach 3535
74025 Heilbronn, Germany
TEL (49) 71-31-67-0
FAX (49) 71-31-67-2340

Atmel Colorado Springs
1150 East Cheyenne Mtn. Blvd.
Colorado Springs, CO 80906
TEL 1(719) 576-3300
FAX 1(719) 540-1759

Biometrics/Imaging/Hi-Rel MPU/
High Speed Converters/RF Datacom
Atmel Grenoble
Avenue de Rochepleine
BP 123
38521 Saint-Egreve Cedex, France
TEL (33) 4-76-58-30-00
FAX (33) 4-76-58-34-80

---

e-mail
literature@atmel.com

Web Site
http://www.atmel.com

© Atmel Corporation 2003.
Atmel Corporation makes no warranty for the use of its products, other than those expressly contained in the Company's standard warranty which is detailed in Atmel's Terms and Conditions located on the Company's web site. The Company assumes no responsibility for any errors which may appear in this document, reserves the right to change devices or specifications detailed herein at any time without notice, and does not make any commitment to update the information contained herein. No licenses to patents or other intellectual property of Atmel are granted by the Company in connection with the sale of Atmel products, expressly or by implication. Atmel's products are not authorized for use as critical components in life support devices or systems.

Atmel® is a registered trademark of Atmel.

Other terms and product names may be the trademarks of others.

Printed on recycled paper.

4119C–8051–3/03 /xM