BLIZZARD

STRAIGHT BLADES

2002

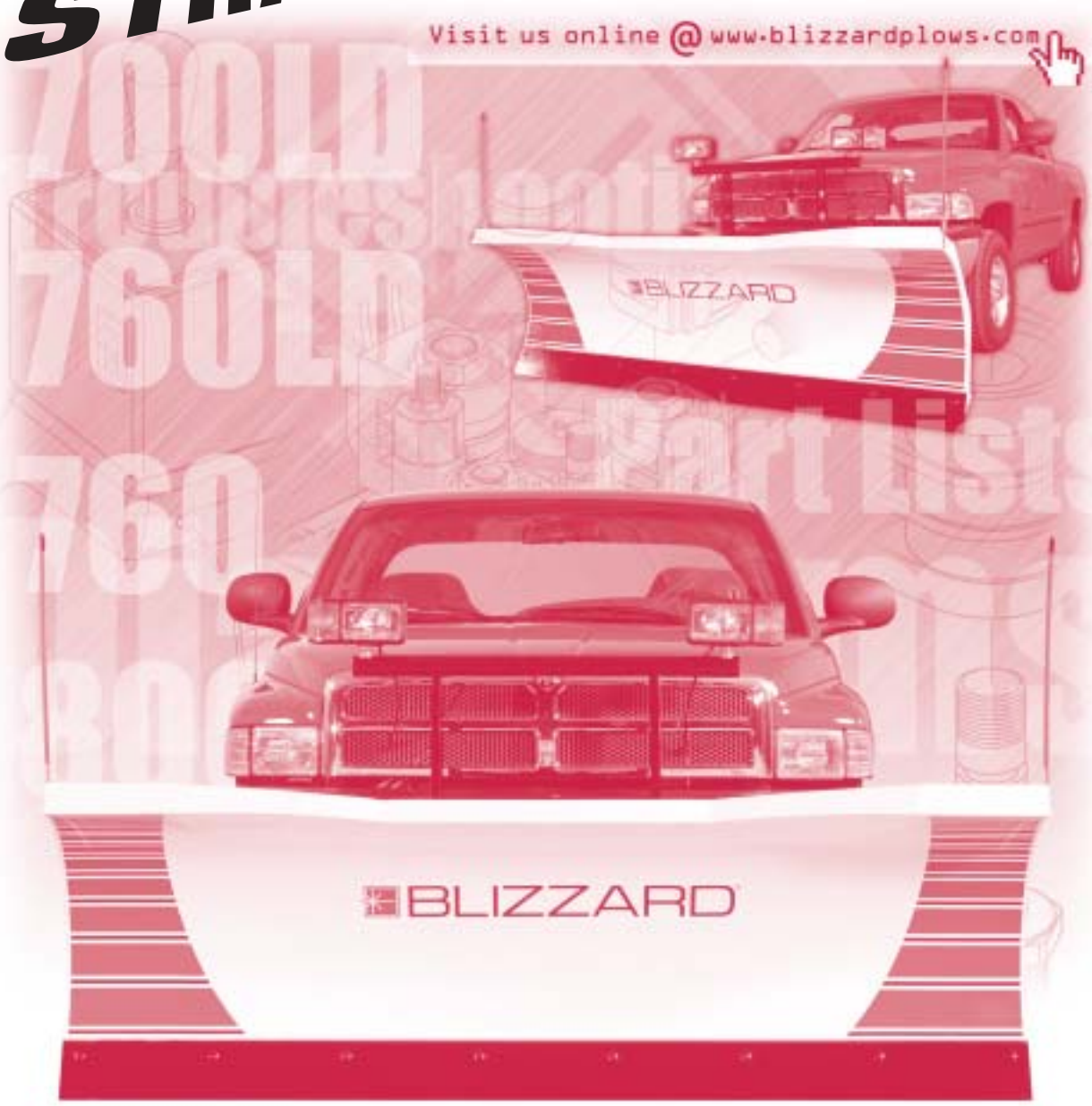

Assembly & Operation Manual

Blizzard Straight Blade Snowplows
Models 700LD, 760LD, 760 & 800

Introduction

Congratulations on purchasing the finest straight blade snowplow available! Blizzard straight blades are clearing new trails for innovative design, rugged durability, quality craftsmanship and superior performance. Our exclusive products are manufactured and tested in Michigan's Upper Peninsula, the snow capital of the Midwest. With an annual snowfall averaging over 250," we couldn't imagine building snow removal products anywhere else!

Your Blizzard straight blade is equipped with versatile features designed for years of dependable service. The hydraulic draw latch mounting system positively aligns the plow for fast installation or removal. All Blizzard straight blade snowplows feature an extended moldboard. This unique construction provides an additional 5" of blade that rolls snow farther ahead and to the side when plowing. Now you can move snow faster, saving fuel and reducing wear on your truck and plow. Safety features include full moldboard trip action, enclosed hydraulics and automatic cylinder pressure relief.

To ensure years of optimum snowplow performance, review the contents of this manual. It contains assembly information, detailed diagrams, complete parts listings, maintenance guidelines and troubleshooting tips.

Should you need additional information, contact your local Blizzard snowplow dealer. Their knowledgeable staff is well informed on the latest straight blade information. They are also your source for replacement parts, technical assistance and all service repairs.

Comments, suggestions or concerns? Address all correspondence to:

Blizzard Corporation
Customer Service Department
95 Airpark Boulevard
Calumet, MI 49913

Table of Contents

01 Snowplow Accessories
02 Warning!
03 Snowplow Operation

Assembly Instructions
04 Unpacking & Inspection
05 Moldboard & A-frame Assembly
09 Electrical Assembly - Plow Harness
10 Electrical Assembly - Vehicle Harness
12 Testing The Snowplow
14 Mounting & Dismounting Instructions

Maintenance & Plow Specifications
15 Regular Maintenance
16 Storing Your Snowplow
17 Plow Specifications

Plow Diagrams & Part Lists
18 Models 700LD, 760LD, 760 & 800 Parts List
22 Models 700LD, 760LD, 760 & 800 Assembly Schematic
24 Manifold Detail with Hydraulic & Electrical Schematics

Electrical Diagrams
25 Molded Plug Pin Locations
26 Plow Harness
27 Plow Harness Wire Schematic
28 Main Lighting Harness - Relay Version
29 Main Lighting Harness - Relay Version Wire Schematic
30 Vehicle Harness
31 Vehicle Harness Wire Schematic
32 On/Off Switch Leads & Ground Lead

Torque Specifications
33 Bolts & Hydraulic Adapters

Troubleshooting
34 Troubleshooting Guide

Warranties
36 Limited Consumer Warranty
37 Commercial Warranty

Snowplow Accessories

All of the accessories pictured below are currently offered for your snowplow. See your local Authorized Blizzard Dealer for pricing and availability. Visit our web site at www.blizzardplows.com to view new snowplow accessories and our latest Blizzard snowplow wearables.

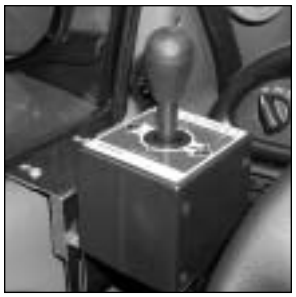

Straight Blade Joystick Window Mount Bracket
P/N 61261

This adjustable bracket mounts easily to your straight blade joystick control and installs quickly onto any door panel. Ideal for left hand joystick operation or for vehicles with center consoles. The window mount bracket is shipped complete with hardware. Some assembly required.

Blizzard Snowplow Rapid Action Hydraulic Oil
P/N 63070 (Quart)
P/N 63071 (12 Quarts/Case)

Blizzard hydraulic oil is specially formulated for use in Blizzard snowplows. This zinc-free product can significantly enhance the operation and performance of the hydraulic system in the most inclement weather conditions. Blizzard Snowplow Rapid Action Hydraulic Oil maintains its viscosity to temperatures as low as -60˚F. Blizzard hydraulic oil is available by the quart or case.

Blizzard Snowplow Touch-Up Paint
P/N 61219 (Gloss White)
P/N 63073 (Gloss Black)

Putting your snowplow away for the winter? Have a deep scratch to cover? Clean up your blade and plow parts with our gloss spray paints. Made to match your original plow equipment, Blizzard snowplow touch-up paint provides an excellent finish to help keep your snowplow looking its best. Paint provided in 12 oz. spray cans.

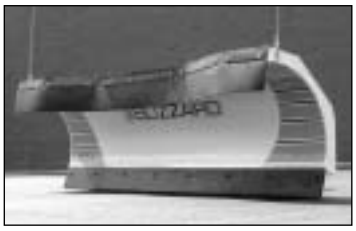

Rubber Snow Deflector
P/N 81040 (Model 700LD)
P/N 61243 (Model 760LD)
P/N 61242 (Model 760)
P/N 61260 (Model 800)

Plow safer and easier with our custom rubber snow deflector. This easy-to-install accessory keeps snow off of your windshield and in its place—on the ground! Rugged and durable, the 3/8" thick, 2-ply construction is made to last. All snow deflectors are shipped with complete mounting hardware.

Blizzard Snowplows Emergency Parts Kit
P/N 63074

Be prepared for unexpected plow emergencies! This kit includes the most common replacement parts conveniently packaged in a small, durable plastic case. Custom foam insert holds the following plow parts: Angle cylinder hose, lift cylinder hose, hitch pin w/hair pin cotter, angle cylinder clevis pin w/cotter, 90˚ angle cylinder fitting, solenoid, Power Hitch™ toggle switch, corrosion preventive compound (2 oz.) and 10A fuse. The compact case (13.5"x9"x3.3") allows for easy storage behind or under your truck seat.

Blizzard Snowplow Airfoil
P/N 81041 (700LD & 760LD)
P/N 52093 (760 & 800)

Help channel air flow to your truck radiator during the long haul over the road. Mounted front and center, our custom airfoil redirects air over the top of the blade and into the grill of your vehicle. Don't get stuck on the side of the road! Keep trucking with this easy-to-install accessory. The airfoil is shipped with complete mounting hardware.

WARNING!

WARNING:

CAUTION:

Prior to operating your straight blade, review the WARNING! label at the passenger's side rear of the moldboard (shown below).

Note: Read and understand all warnings indicated in this manual prior to operating the snowplow. Warnings and cautions in the manual are indicated by the icons shown to the left.

WARNING

1. **Properly mount the snowplow prior to moving the vehicle.**
2. **To prevent accidental plow activation, turn the Power switch on the snowplow control to the "OFF" position when not in use.**
3. **Stand clear of the attachment area when mounting the snowplow to the undercarriage and operating the Power Hitch Connect/Disconnect switch. Failure to do so may result in serious injury or death.**
4. **Securely position all mounting pins prior to operating your snowplow.**
5. **Do not position your body between the snowplow and the vehicle when servicing or operating.**
6. **Position snowplow in such a manner as to not block your vision or plow headlights while in transit.**
7. **Do not change the position of the snowplow while in transit.**
8. **Do not exceed 40 mph when transporting the snowplow.**
9. **Do not exceed 10 mph when plowing.**
10. **Always lower the snowplow when the vehicle is parked.**
11. **Vehicles equipped with air bags are designed to be activated in a frontal collision equivalent to hitting a solid object or barrier at approximately 14 mph or more.**

WARNING

Careless or high speed driving while plowing snow, which results in vehicle impact deceleration equivalent to or greater than the airbag deployment threshold described above, would deploy the airbag.

Blizzard straight blade snowplows are protected by U.S. Patent 6,276,076 B1. Other patents pending.

BLIZZARD STRAIGHT BLADES

READ OWNER'S MANUAL THOROUGHLY PRIOR TO OPERATING PLOW.

BLIZZARD® CORPORATION

Calumet, Michigan 49913

BLZ 1024

Should the WARNING! label or any of the labels that came with your snowplow become hard to read or wear off, contact your local Authorized Blizzard Dealer for replacements.

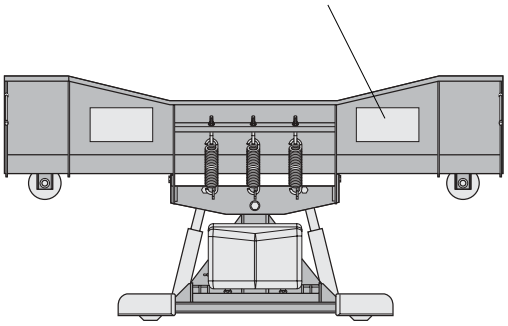

Snowplow Operation

Your snowplow is the most advanced and versatile straight blade on the market. The easy-to-use joystick control allows you to automatically adjust the plow blade into an infinite number of plowing positions. Review the illustrations below for instruction on maneuvering your snowplow.

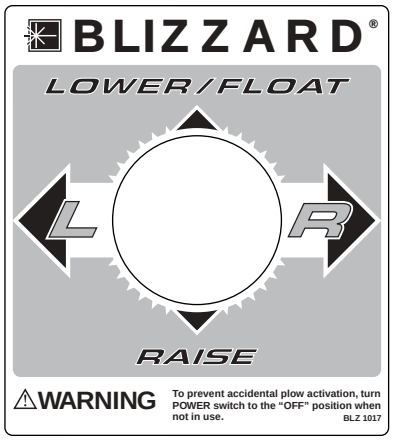

A.

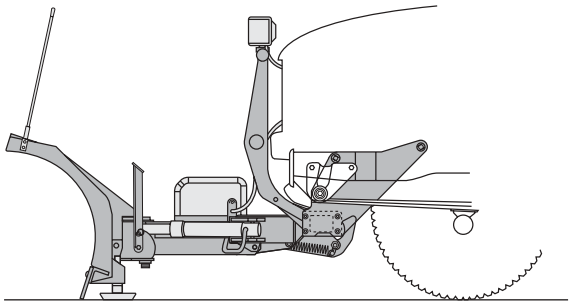

B.

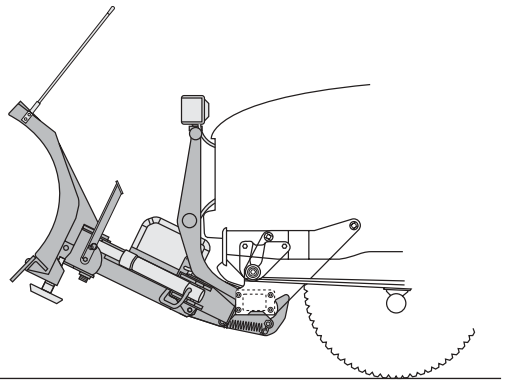

C.

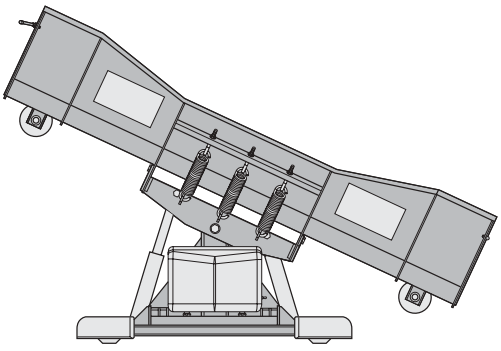

D.

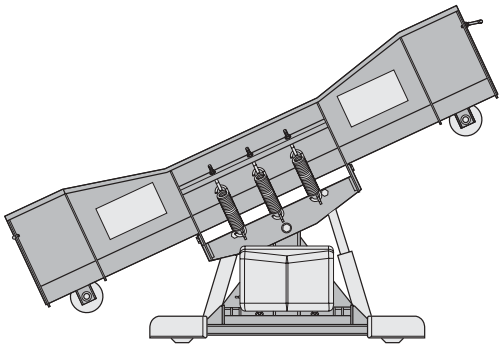

A. Lowered or Float Position
Pushing the joystick forward, toward the "Lower/Float" designation on the label, will lower your straight blade to the ground. Pushing the joystick ahead until the detent "locks" the control will allow the snowplow to "float", or follow the contour of the ground when moving forward or backward.

B. Raised Position
Pulling the joystick back, toward the "Raise" designation on the label, will lift your straight blade off of the ground. To stop raising the plow, simply return the joystick to its "neutral" or center position. The snowplow has reached its maximum raised position when the blade stops lifting – return the joystick to its neutral position.

C. Angled Right Position
To angle your straight blade to the right, position the joystick toward the "R" on the label. To stop angling the plow, return the joystick to its "neutral" or center position. The snowplow has reached its maximum angled position when the blade stops moving to the right side.

D. Angled Left Position
To angle your straight blade to the left, position the joystick toward the "L" on the label. To stop angling the plow, return the joystick to its "neutral" or center position. The snowplow has reached its maximum angled position when the blade stops moving to the left side.

******* IMPORTANT *******

To prevent premature failure of the power contactor (solenoid), initiate the plow function and return the joystick to its neutral or center position—except float. DO NOT hold the joystick in any position that allows the pump to continuously run after the plow has reached its maximum degree of movement. This will reduce the useful life of the solenoid.

Assembly Instructions

Unpacking & Inspection

Date of Purchase

Dealer/Distributor

Telephone Number

Snowplow Serial Number

Hydraulic Pump Serial Number

Your Blizzard straight blade has been packaged to withstand transit and weather related damage. Fully inspect all components upon receipt of your plow. In the event of shipping damage or missing parts, immediately contact our Customer Service Department toll free at 1-888-680-8600.

Begin unpacking and inspection in the following order:

1. Remove the shipping document from the end panel of the pallet wrap. Retain all documentation for your records.

2. All wood framing and polyethylene material should be removed from the pallet for easy access to the snowplow.

3. Due to the odd shaped components and size of several assembly parts, various cable ties and corrugated material are used for scratch resistance and package orientation. Please remove these items prior to assembly.

4. Place the main blade assembly on a flat, level surface.

Once you have inspected all parts and removed all packaging materials, your snowplow is ready to be fully assembled.

Pallet Wrap End Panel

The tear resistant woven polyethylene pallet wrap contains a moisture barrier to help protect all packaged components and keep out the most inclement weather during shipping and storage. The end panel of the pallet cover contains important information regarding the snowplow model and the plow's serial number. Both of these numbers are given together. The first three digits and/or two letters in the the number indicated is always the plow model 700LD, 760LD, 760 or 800 – and the entire seven (nine) digit number make up the entire serial number. The shipping document is also attached to the end panel. Be sure to retain this list for your records.

Moldboard & A-Frame Assembly

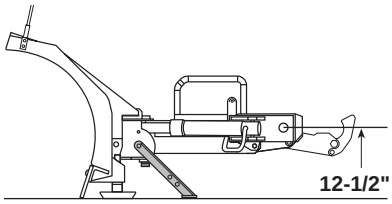

1. Begin the moldboard assembly by positioning the PIVOT BEAM and A-FRAME near the connecting points at the rear of the blade between the two center support ribs. Position the pivot beam between the two support ribs until the connecting points on the beam align with those on the plow. Insert one 3/4"-10 x 3" (2" shank) hex head cap screw through each mounting hole and secure with a 3/4"-10 top lock nut. Tighten each nut until it is snug with the pivot beam.

   CAUTION: Do not over tighten hex head nuts! Binding may prohibit the pivot beam from moving properly on the plow.

   Note: To aid in the remaining installation, rotate the spring loaded kick-stand clockwise until it locks into place. Adjust the foot on the stand arm so the height of the A-frame, at its mount points, is 12-1/2" to level ground (See the diagram to the right). Tighten both of the 1/2"-13 top lock nuts on the kickstand.

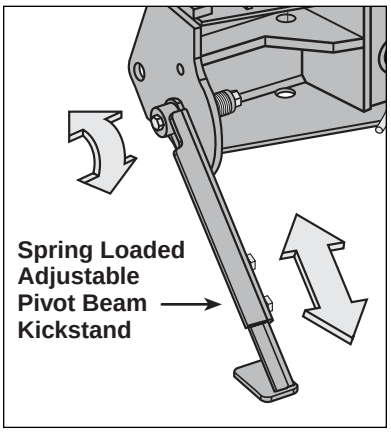

The kickstand is mounted to the side of the pivot beam with one 1/2"-13 x 4-1/2" hex cap screw and top lock nut. To pivot the kickstand, simply pull the spring loaded leg out and rotate it until the pin locks into place. The kickstand also has an adjustable foot that can be moved to accommodate varying vehicle heights. The proper height of your snowplow mounting points to level ground should be set at 12-1/2".

2. Position each ANGLE CYLINDER with the rod end of the cylinder in the pivot beam and the hydraulic hose port facing away from the A-frame. Secure the cylinder to the pivot beam with one 3/4" x 4-1/2" CLEVIS PIN and one 1/4" x 1-1/2" HAMMERLOCK COTTER PIN. *Note: The hammerlock cotter pin will "lock" itself into place once the head of the pin is struck. It is not necessary to bend the pin further upon installation.* Extend each cylinder rod until the cylinder base mounting hole aligns with the hole on the A-frame angle cylinder bracket. At this point, insert another clevis pin and secure it with a cotter pin. Repeat the same installation for the opposite angle cylinder.

3. Remove each dust cap from both of the hydraulic angle cylinder ports and attach one 9/16"-18 x 9/16"-18 90˚ ADJUSTABLE ELBOW O.R.B. ADAPTER to each port. *Note: All of the hydraulic adapters can be found packaged with the manifold assembly. Reference the table on page 33 for proper torque specifications.* Each adapter should be angled toward the top of the moldboard. Connect the 3/8" x 24" hydraulic hose, labeled #1, to the driver's side angle cylinder adapter. Attach the 3/8" x 24" hydraulic hose, identified by a #2, to the passenger's side angle cylinder adapter. Be careful not to overtighten the hose connections. Route both hoses over the top of each angle cylinder.

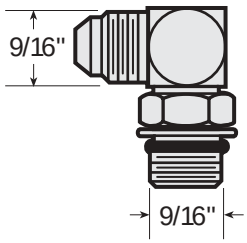

90˚ Adjustable Elbow O.R.B. Adapter

4. Next, remove both of the plastic dust caps from the HYDRAULIC LIFT CYLINDER ports. Attach one 7/16"-20 x 7/16"-20 45˚ ADJUSTABLE ELBOW O.R.B. ADAPTER to the driver's side port and one 7/16"-20 x 7/16"-20 MALE O.R.B. CONNECTOR ADAPTER to the passenger's side port. Once the adapters have been installed on the cylinder, connect the HYDRAULIC HOSES. *Note: Position the fittings in the cylinder port such that the hoses install directly in the center of the A-frame access holes. A hose installed too close to the edge of the opening may work itself free with the operation of the lift cylinder and/or movement of the plow.* The 45˚ adapter on the driver's side of the cylinder receives a 1/4" x 17" hose identified by a label containing the number 3. Connect the 45˚ angle on the hose to the hydraulic adapter on the cylinder. The male connector adapter on the passenger's side of the cylinder receives a 1/4" x 15" hose identified by a label containing the number 4. Tighten the 45˚ end of the hose to the hydraulic

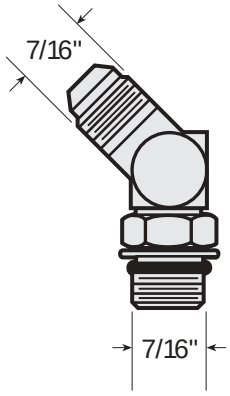

45˚ Adjustable Elbow O.R.B. Adapter

Male O.R.B. Connector Adapter

Draw Latch Assembly

The draw latch consists of a series of interconnected plates and pins that attach to the A-frame and the hydraulic lift cylinder.

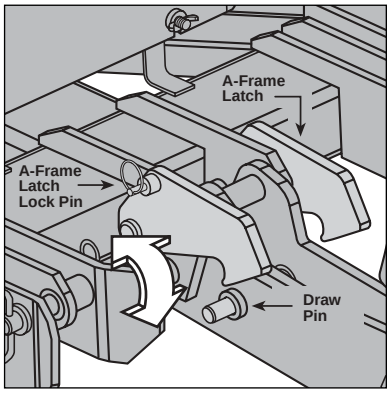

To mount the straight blade, the A-frame latch should be lowered over the draw pin – this allows the draw latch to pull the plow into the undercarriage. Once the plow is safely attached to the undercarriage, rotate the A-frame latch counterclockwise until the lock pin snaps into place. The A-frame latch is only used to mount the plow. **Do not allow the lock pin to set behind the pin catch hole in the raised position. The A-frame latch should always be locked in place when not in use.**

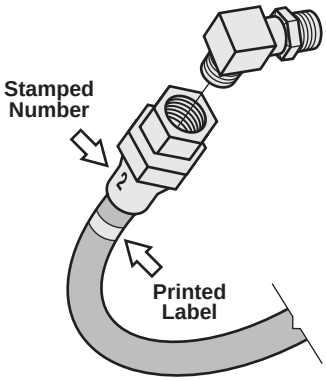

All of the hoses shipped with the snowplows contain either a stamped number on the sleeve or a printed label applied to the hose. All numbers, stamped or printed, correspond with the stamping of the ports on the manifold.

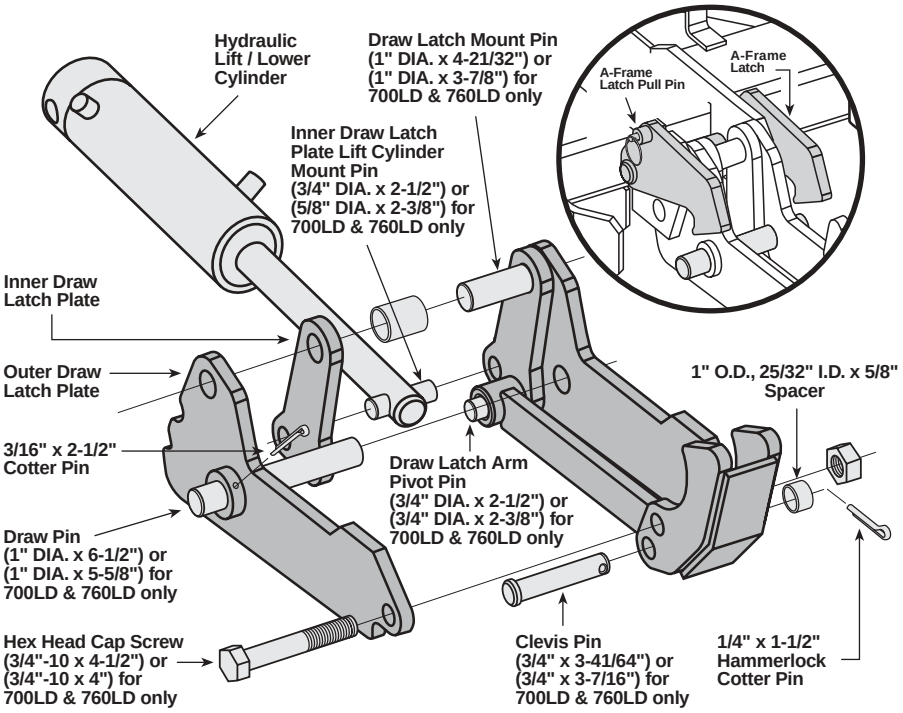

adapter on the cylinder. Both hoses should be routed through the triangular openings in the A-frame.

5. Begin the draw latch installation by first removing the DRAW LATCH MOUNT PIN & SPACER from the assembly. By removing this pin, the INNER DRAW LATCH PLATES can swing free. Proceed to remove the INNER DRAW LATCH PLATE LIFT CYLINDER MOUNT PIN. Position the plates on either side of the lift/lower cylinder rod and insert the pin through the plates and cylinder rod. With the cylinder connected to the inner draw latch plates, rotate the draw latch assembly toward the draw latch mount holes on the A-frame. Align the holes in the outer draw latch plate with those of the inner draw latch plates and the A-frame. *Note: The A-FRAME LATCH, located at the rear center of the A-frame, should be raised up to insert the draw latch mount pin. Pull the A-FRAME LATCH PULL PIN out and rotate the latch counterclockwise if it is locked into position.* Secure the assembly to the A-frame by replacing the draw latch mount pin and spacer. Reset the A-frame latch so the A-frame latch pull pin locks into place.

Once you have completed the draw latch installation, we will shift our attention to assembly of the manifold. The manifold, pump and coil harness have been joined together at the factory; however, the manifold contains several components that you will need to install prior to securing the assembly to the A-frame.

6. Each of the 4 HOSE PORTS on the HYDRAULIC MANIFOLD are covered with stretch wrap. Remove the wrap and install the appropriate fitting (illustrated on page7) in its respective port.

   Note: All ports are identified by a stamped number on the manifold. The numbers also identify the hydraulic functions, which can be referenced on the label under the hydraulic pump and manifold cover (see illustration on page 7).

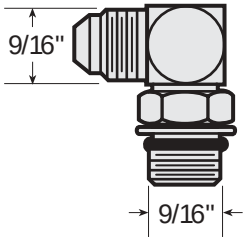

90˚ Adjustable Elbow O.R.B. Adapter
(Port #1)

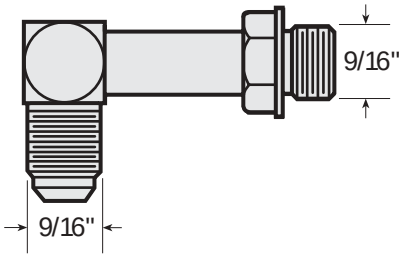

Male Extra Long Elbow Adapter
(Port #2)

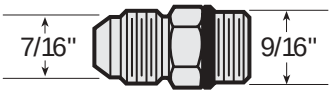

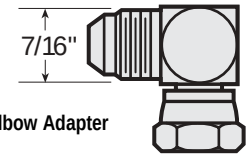

Male O.R.B. Connector Adapter & 90˚ Swivel Elbow Adapter
(Ports #3 & #4)

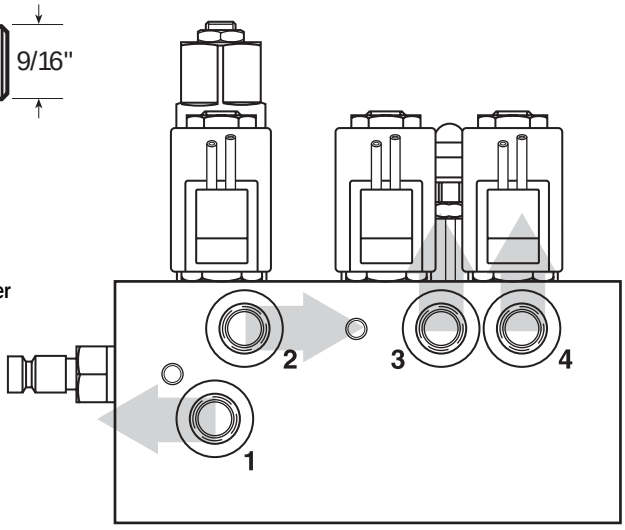

Note: The gray arrows shown on the manifold illustration above indicate the direction the 90˚ adapters should face to receive the hydraulic hoses.

Installing The Manifold Adapters

There are a total of 6 hydraulic adapters to install. All of the adapters can be found packaged with the manifold assembly. Remove the protective stretch wrap from the manifold in a clean area. **DO NOT** let any foreign objects enter into the open ports. The valves can become contaminated and greatly hinder the plow's performance. Review the table on page 33 for proper torque specifications.

Hydraulic Hose Identification Guide

Straight Blade Snowplows

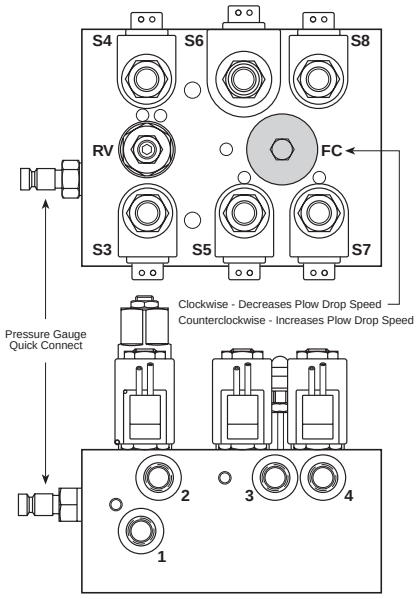

HYDRAULIC HOSES	
Port	**Function**
1	Right Angle - Left Cylinder
2	Left Angle - Right Cylinder
3	Raise - Lift Cylinder (Base)
4	Lower - Lift Cylinder (Rod)
NOTE: Energize the following solenoids for the functions:	
S3	Left Angle - Right Cylinder
S4	Right Angle - Left Cylinder
S6 & S7	Raise - Lift Cylinder (Base)
S5 & S8	Lower - Lift Cylinder (Rod)
S5 & S7	Float
RV	Angle Relief Valve
FC	Variable Flow Control Valve

BLIZZARD® CORPORATION
Calumet, Michigan 49913 BLZ 1035

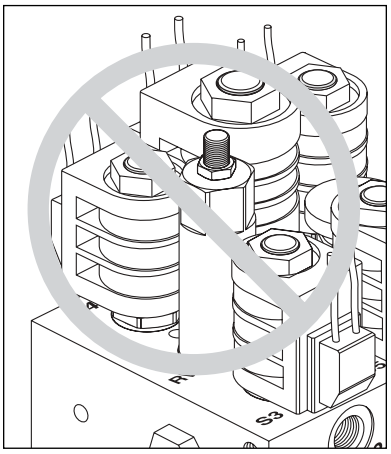

When installing the manifold between the mount brackets on the A-frame, **DO NOT** handle the manifold by the wire lead coils. The solenoid cartridges can bend, causing them to stick when activated. Always carry the manifold by the sides of the aluminum block.

7. Next, align the mount holes in the pump with the holes in the hinged bracket, located on the A-frame. *Note: To help facilitate the pump mount, first angle the hinged bracket as needed and tighten the bracket hardware, locking it in place.*

CAUTION: When installing the manifold between the mount brackets on the A-frame, hold the manifold at the sides of the block. Never handle the manifold by the wire lead coils. Doing so can cause a solenoid cartridge to bend, causing the cartridge to stick when activated.

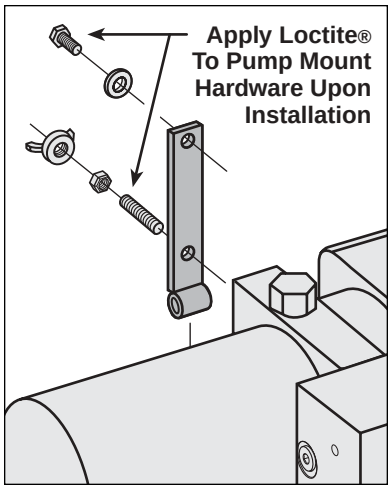

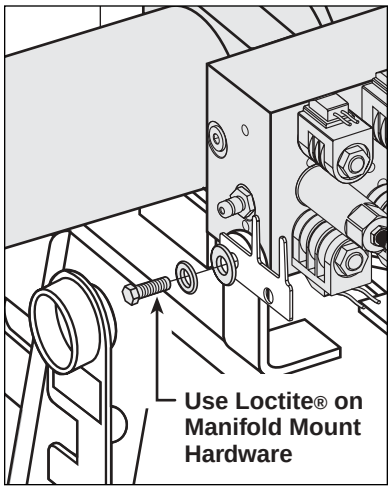

A medium strength threadlocker, such as Loctite® 242®, should be used to properly secure the mount hardware for the pump and manifold. This will help prevent the hardware from working free from vibration and plow use. Apply a liberal amount of threadlocker to both threaded fasteners and the threads in the pump (top diagram). The manifold receives two 3/8"-16 x 1" hex cap screws—one on each side of the A-frame. Likewise, use threadlocker on these fasteners and the tapped holes in the manifold (bottom diagram).

Secure one 3/8"-16 x 3/4" hex head cap screw and 3/8" flat washer through the top mount hole in the bracket and into the pump. Insert one 3/8"-16 x 1-3/4" threaded stud and 3/8"-16 jam nylon insert lock nut through the bottom mount hole in the bracket and into the pump. The threaded stud should bottom out in the pump. *Note: A medium strength threadlocker, such as Loctite® 242® should be used on both of the pump mount fasteners. This will help prevent the fasteners from working free.*

8. Once the pump and manifold assembly is in place, connect the hydraulic hoses to their respective adapters on the manifold. Remember, the labeling on the hydraulic hoses correspond with the stamped numbers on the manifold.

   Begin installing the hoses with the driver's side raise cylinder hose (#3). Attach the straight end of the hose to the 7/16"-20 x 9/16"-18 90˚ swivel elbow adapter on the manifold. Connect the passenger's side lower cylinder hose to Port #4. Loop the hose through the opening in the A-frame and connect the straight end of the hose to the 7/16"-20 90˚ swivel elbow adapter. Run both angle cylinder hoses (#1 and #2) over the A-frame angle and to their respective manifold ports. *Note: The lift cylinder hoses should be routed through the triangular openings in the A-frame.*

9. Next, secure the manifold to the A-frame. Remove both 3/8" flat washers, 3/8" split lock washers and 3/8"-16 x 1" hex head cap screws from the manifold and align the mount holes with the A-frame brackets. Position the DIODE PACK MOUNT BRACKET against the outside of the A-frame bracket on the driver's side. *Note: Both of the prongs should be facing up.* Align the outside hole on the diode bracket with the holes on the A-frame and manifold. Properly replace and tighten all hardware. *Note: A medium strength threadlocker, such as Loctite® 242® should be used to secure the manifold mount fasteners.*

10. Hook each EXTENSION SPRING to the receiving holes located on the pivot beam and connect the opposite end of the spring to their respective SPADE BOLTS. Install the 5/8"-11 x 5" spade bolts through the EXTENSION SPRING MOUNTING ANGLE on the top rear of the blade. Secure each spade bolt by placing one 5/8" flat washer on the bolt and thread one 5/8"-11 nylon insert lock nut. Tighten each lock nut until a piece of paper can pass between the 3th & 4th coils on the spring.

11. Install the flexible BLADE GUIDES at each end of the moldboard. Insert the 5/16"-18 x 1" hex head cap screw through the holes provided at the top of the outside reinforcement rib. Tighten all screws using the nylon insert lock nuts provided.

Congratulations! You have successfully completed half of the installation. Don't quit now, you're nearly out of the garage!

Electrical Assembly - Plow Harness

1. Begin the electrical assembly by connecting the RED POWER WIRE from the PLOW ELECTRICAL HARNESS to the PUMP motor terminal stud using the hardware provided on the pump.

2. Place one 3/8" INTERNAL/EXTERNAL TOOTH LOCK WASHER, the BLACK GROUND WIRE (from the harness) and the RED GROUND WIRE on the COIL WIRE HARNESS (from the manifold) over the tapped hole on the pump and secure the ground using one 3/8"-16 x 3/4" hex head cap screw.

3. Remove the hex jam nut and external tooth lock washer from the POWER HITCH CONNECT/DISCONNECT TOGGLE SWITCH and insert it through the back of the mounting bracket on the A-frame. Align the notch in the key washer on the switch to the notch on the bracket. Replace the lock washer and jam nut and tighten until the switch is firmly in place. Next, attach the connector on the plow harness to the switch. *Note: Use caution when making the connection. Switches can break if done forcefully.*

4. Continue the harness installation by connecting the PLASTIC FEMALE ELECTRICAL CONNECTOR on the harness to the PLASTIC MALE ELECTRICAL CONNECTOR found on the coil wire harness.

5. Finalize the harness installation by sliding the DIODE PACK over the diode pack mount bracket located behind the connect/disconnect toggle switch. Position the wire harness braid in the notch on the switch bracket and secure it with a cable tie.The diode pack mount bracket contains an extra hole for a cable tie. Use it to secure the diode pack.

6. To install the PUMP & MANIFOLD COVER, align the notches in the cover with the welded bolts on the A-frame brackets. Secure the cover with two 3/8" FLANGED WING NUTS. Verify the cover is positioned over the protective toggle switch hood. Pop the front of the cover on the threaded stud and secure it with the remaining wing nut.

Congratulations! You have just completed building the finest snowplow available! However, the vehicle wire harness still needs to be installed. That is the focus of the second half of the electrical assembly instruction.

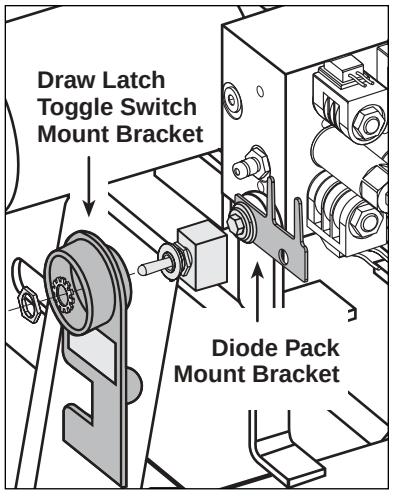

The diode pack (on the plow harness) clips onto the diode pack mount bracket. Place a cable tie through the hole at the end of the bracket and over the pack to secure it in place.

The draw latch toggle switch installs through the rear of the bracket with the protective hood. Align the key washer with the slot cut in the bracket to prevent the switch from turning. Secure the switch with the hardware provided. Note: Use the square notch in the bracket (below the protective hood) to position the braided harness. Use another cable tie to hold the harness against the bracket.

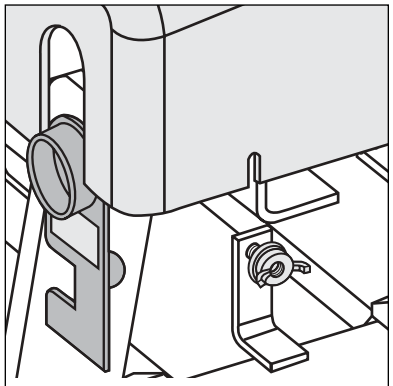

The Pump Cover Installs Over The Top Of The Draw Latch Switch Bracket

To properly secure the pump and manifold cover on the A-frame, position the cover over the top of the protective hood on the draw latch switch mount bracket. Align the slots in the cover with the welded bolts on the A-frame brackets—secure the cover using three flanged wing nuts.

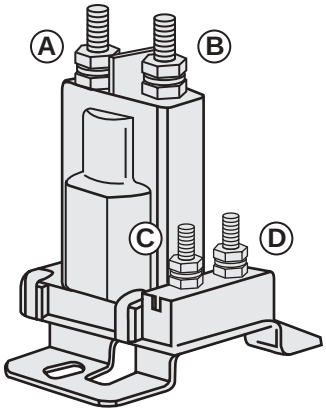

Heavy-Duty Power Contactor (Solenoid)

There are four wires that need to be attached to the power contactor:
(A) Red Power Battery Wire
(B) Vehicle Wire Harness Red Power Wire
(C) 24" Black Ground Wire
(D) Brown/White Pump Solenoid Activation Wire

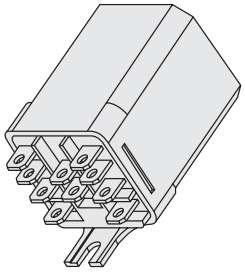

3PDT RELAY (30 AMPS) 12 VOLTS

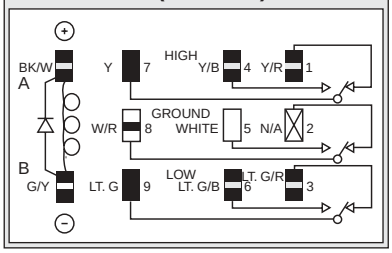

Connect the color coded wires from the vehicle harness to the headlight relay shown above. The wires correspond to the numbers/letters on the relay or the color abbreviations on the illustration.

(A) BK/W = Black/White Wire
(B) G/Y= Green/Yellow Wire
(1) Y/R = Yellow/Red Wire
(2) N/A = Not Applicable
(3) LT.G/R = Light Green/Red Wire
(4) Y/B = Yellow/Black
(5) W = White
(6) LT.G/B = Light Green/Black
(7) Y = Yellow
(8) W/R = White/Red Wire
(9) LT. G= Light Green

Electrical Assembly - Vehicle Harness

CAUTION: Always perform the vehicle wire harness assembly with the vehicle off and the keys out of the ignition. Use caution when testing the electrical wires for the vehicle's headlight functions.

1. Begin the installation of the electrical harness under the hood. Insert the WHITE POWER CONNECTOR & RED POWER WIRE (with FUSE) end of the harness through the driver's side fire wall access panel into the vehicle cab. *Note:You may need to widen an opening or cut access to the cab interior to facilitate the assembly.* Loosely position the remaining portion of the harness over the driver's side fender well and place the MOLDED RUBBER POWER CONNECTOR near the bumper.

2. Next, attach the POWER CONTACTOR (SOLENOID) to the driver's side wheel well or engine fan guard using two 12-14 x 3/4" hex washer self-drilling screws. *Note: Some model vehicles provide mounting locations for accessory components.* Connect the 24" BLACK GROUND WIRE to either small terminal on the solenoid and attach the opposite end to the vehicle with one hex washer self-drilling screw. Locate the BROWN/WHITE PUMP SOLENOID ACTIVATION WIRE on the wire harness and position the eyelet over the remaining small terminal on the contactor. Secure it with the hardware provided on the solenoid.

3. Proceed to connect the BLACK VEHICLE WIRE HARNESS GROUND WIRE to the negative terminal on the vehicle's battery. Cut the wire to length and crimp a 3/8" DIA. END RING TERMINAL on the wire. It is also recommended that the ring terminal be soldered. *Note: The harness should be secured to the vehicle prior to taking the necessary measurement.* Measure the distance needed for the RED POWER WIRE to reach the solenoid and properly secure an end ring terminal to it. Connect the power wire to either large terminal on the solenoid.

CAUTION: Do not fasten the wire harness to areas that come in contact with moving engine parts or possess extreme heat. The harness could become tangled and/or melt causing electrical failure and vehicle damage.

4. Attach and solder an end ring terminal to both ends of the remaining length of the red 4 gauge wire. Connect one end of the wire to the open terminal on the solenoid and the remaining end to the positive terminal on the battery.

5. With the vehicle harness secured to the truck, position the MAIN LIGHTING HARNESS such that both of the large, gray VEHICLE HEADLIGHT CONNECTORS are near the truck headlights and the smaller, black PLOW HEADLIGHT CONNECTORS are near the grill of the vehicle.

6. Plug the 9 TERMINALS, from the main lighting harness, into the HEADLIGHT RELAY. See the illustration to the left. Connect the GREEN & YELLOW wire, from the vehicle harness with the molded power plug, to the remaining spade on the relay. Securely mount the relay to the vehicle with the terminals facing down. Installing the relay in this position will allow moisture to drain from the relay.

7. Next, remove the front directional light assembly on the driver's side of the vehicle. Feed the VIOLET, turn light wire and GRAY, run light wire from the main lighting harness through the opening in the directional light housing. At this point, use a test light or ohm meter to determine the proper wires in the vehicle's electrical system to splice into. Once you have identified the proper wires, position one end of the turn or run light wire into a SPLICE LOCK CONNECTOR provided. Attach the vehicle wire to the opposite side of the splice lock connector. Complete the splice by pinching both wires together and locking the connector. Repeat the splice procedure for the remaining wire. The passenger's side directional light assembly requires the same installation; however, only one wire, the PINK, turn light, needs to be spliced.

8. Connect the vehicle headlights to the main lighting harness using a HEADLIGHT ADAPTER KIT. Due to differences in the construction of the adapter kits, and the various make and model vehicles Blizzard snowplows are installed on (see list to the right), a headlight adapter kit is not packaged with your snowplow. Contact your local Blizzard Dealer to obtain the appropriate adapter for your vehicle.

9. Begin the adapter kit installation by removing the existing vehicle headlight connector from the headlight. Attach the HEADLIGHT ADAPTER CONNECTOR to the existing vehicle headlight connector. Next, plug the BLACK, FIVE-PIN CONNECTOR on the headlight adapter into the gray, five-pin connector on the vehicle wire harness. Lastly, plug the HEADLIGHT ADAPTER CONNECTOR into the vehicle headlight receptacle. *Note: If more than one plug is present, match the colors of each connector (ie gray to gray, black to black, Chevrolet daylight running is clear to gray).* Repeat the installation for the opposite headlight.

10. Once the headlight adapter connections are completed, proceed to secure the braided harness to the vehicle. Safely route all harness lengths around the engine components and attach them to the vehicle with cable ties. Extend the PLOW HEADLIGHT CONNECTORS, from the main lighting harness, through the grill of the vehicle and position the HARNESS POWER PLUG and WEATHER CAP near the bumper. Cable tie the power plug to the vehicle bumper or tow hook to keep the harness from hanging too low.

11. Return to the driver's side cab interior to install the remainder of the vehicle wire harness. Find an accessible location for the PLOW HEADLIGHT TOGGLE SWITCH & BRACKET under the dashboard. Install the headlight bracket using two self-drilling screws. Insert the toggle switch through the bracket and secure it with the hardware provided. Use the MALE 2-PIN POWER CONNECTOR to connect the toggle switch to the vehicle wire harness.

    First, insert the 24" GREEN/YELLOW GROUND LEAD into the FEMALE 2-PIN POWER CONNECTOR (on the vehicle wire harness). This lead should be grounded to the vehicle. Next, plug both of the SWITCH LEADS into the toggle switch. *Note: Both terminals should be inserted into the spades on the same side of the switch. One terminal should be positioned in the middle spade. See the illustration to the right and on page 32.* Plug both 2-pin power connectors together.

Vehicle Headlight Adapter Kits

P/N	Vehicle Application
62010	1980 & Older, 1983-1993 Dodge 1995-1996 Chevrolet/GMC & Ford
62011	1987-1992 Ford, 1991 & Newer Dodge 3/4 & 1 Ton
62012	1993 & Newer Ford, 2002 & Newer Dodge 1/2 Ton
62013	1990-1999 GMC, 1991-1999 Chevrolet (Except '99 Chevrolet Silverado & '99 GMC Sierra)
62014	1999 & Newer Chevrolet Silverado & GMC Sierra (with Daytime Running Lights)
62015	1989 Chevrolet
62050	2000-2001 Dodge 1/2 Ton
62051	1980 & Older Chevrolet/GMC & Dodge

Note: Additional vehicles are continually being added to accommodate Blizzard snowplow models. Contact your local Blizzard Dealer for specific vehicle application information.

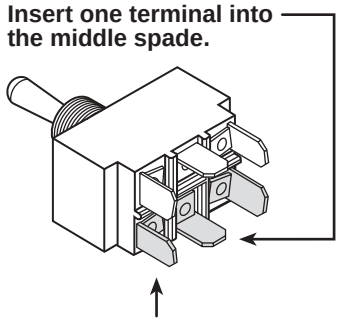

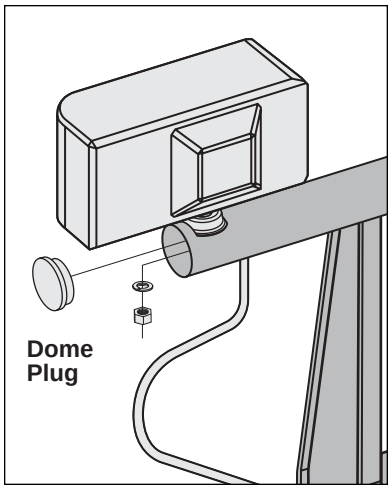

Apply a thin bead of silicone around the inside perimeter of the polyethylene dome plugs prior to capping the light tower ends. The silicone will help retain the dome plug inside of the headlight mount tube.

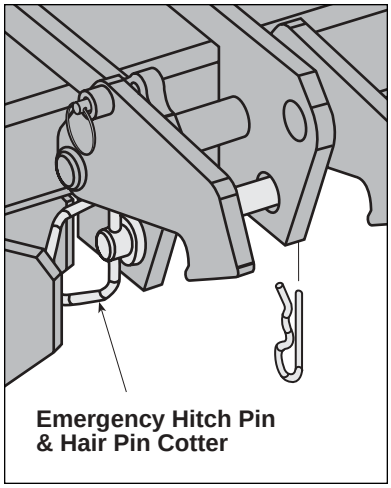

In the event you should lose hydraulic power while snowplowing, raise the snowplow into a pile of snow and insert the emergency hitch pin. The pin will lock the plow in a temporary raised position until proper service can be performed to restore hydraulic power. Note: For clarity, the draw latch is not shown in this illustration.

12. Connect the RED POWER WIRE (with 10 AMP FUSE) to a switched power source with a minimum of 10 amps. *Note: The red power wire MUST be fused and switched on and off with ignition.* Secure all loose wires under the dash.

13. Next, install the LIGHT TOWER. Position the tower arms into the receiving pockets located on the undercarriage push beam. Align the mounting holes in the light tower with those on the push beam and insert two 1/2"-13 x 1-1/4" hex head cap screws. Secure the screws with 1/2" washers and top lock nuts. See your local Blizzard Dealer for complete installation instructions for your vehicle undercarriage.

14. Proceed to install the PLOW HEADLIGHTS. Align one HEADLIGHT BALL STUD MOUNT ADAPTER on the light tower tube with the mounting hole and insert the threaded stud through each. Secure the headlight with one 1/2" split lock washer and hex nut. *Note: All snowplows are shipped with two BLACK DOME PLUGS that install at either end of the light tower. For secure placement, apply a bead of silicone around the perimeter of the plug prior to installation on the light tower.* Connect the terminals from the plow lights to the terminals on the main lighting harness. Repeat the installation for the opposite headlight.

15. Align the four mount holes on the JOYSTICK CONTROL with the holes located on the JOYSTICK BENCH MOUNT PEDESTAL. *Note: The radius on the pedestal should face the dashboard*. Secure the joystick to the pedestal with four 8-32 x 3/4" machine screws provided. Next, slide the VELCRO® STRAP through the slots cut in the pedestal. The metal D-RING should be located on the side opposite of the radius. Wrap the strap around the bench and fasten. Finally, connect the white power connector from the vehicle wire harness to the connector on the control station. The power switch on the joystick should be in the “OFF” position.

This completes the electrical assembly installation for the vehicle wire harness and main lighting harness. You are now ready to perform all of the test functions on the snowplow.

Testing The Snowplow

1. Fill the HYDRAULIC PUMP FLUID RESERVOIR with BLIZZARD SNOWPLOW RAPID ACTION HYDRAULIC OIL (P/N 63070) until it is approximately 3/4" from the top of the tank. Replace the cap on the reservoir. Proceed to remove the weather caps from each of the plow and vehicle wire harnesses and connect the plugs. Turn the POWER SWITCH on the joystick in the cab to the “ON” position and turn the vehicle ignition switch on. You now have power to the snowplow. Once all of the hydraulic functions have been executed, the system will have been filled with approximately 3 to 3-1/2 quarts of hydraulic oil.

2. Raise the DRAW LATCH on the snowplow by pushing and holding the toggle switch on the A-frame upward into the “CONNECT” position. Notice the action of the fluid in the reservoir. By activating the initial hydraulic function, the fluid begins to fill the system. Push and hold the toggle switch in the “DISCONNECT” position, the draw latch will lower. Refill the reservoir until the fluid is 3/4" from the top of the tank.

3. Position the vehicle such that the draw latch is below the push beam and the mounting points on the A-frame are in line with the mounting points on the undercarriage. Pull out the A-FRAME LATCH PIN and rotate the A-FRAME LATCH clockwise until the latch is resting on the DRAW PIN (See diagram on page 14). Move the snowplow in position by activating the draw latch connect switch and release.

   ⚠ **WARNING: Always use caution when operating the draw latch CONNECT/DISCONNECT switch. Keep your hands and feet away from the operation of the draw latch and the main blade. The action of the draw latch moves the snowplow in position for proper attachment to the vehicle. Failure to follow this warning may result in serious injury or death.**

   The draw latch will raise until it hits the push beam and the DRAW LATCH FINGERS will pull the plow into the vehicle. The mounting points on the plow and vehicle are now positively aligned. Rotate the A-frame latch counterclockwise until the latch is locked in the raised position. *Note: The A-frame latch pin should always lock in place. Do not set the pin past the lock point on the A-frame.* Insert the two HITCH PINS through the mounting holes on the A-frame and secure each with one hair pin cotter. The snowplow is now securely mounted to the vehicle.

4. Return to the interior of the vehicle. With the plow securely in place, you can now execute the remaining functions of the snowplow. The power supply on the joystick should be in the “ON” position. Next, raise the plow to its maximum height by pulling back (“RAISE”) on the joystick. Angle the snowplow to the left by moving the joystick toward the “L” (left angle) on the label. If the plow function is slow or delayed, the hydraulic fluid is filling the cylinder and replacing the air in the system. Continue testing the remaining joystick functions. Monitor the fluid level in the reservoir and fill to 3/4" from the top of the tank if needed. Also, look for any hydraulic fluid leaks around the manifold, pump, hydraulic hoses and all cylinders.

5. Lastly, check that the vehicle and plow headlights are in proper working condition including the turn signals. If necessary, adjust the plow headlight beams with the plow in the raised position.

Congratulations on a successful assembly and installation! Once all of the blade and electrical functions have been tested your Blizzard straight blade is ready for action. Should you need additional support during a plow assembly or undercarriage installation, contact your local Authorized Blizzard Dealer.

Your Blizzard Straight Blade snowplow will use approximately 3 to 3-1/2 quarts of Blizzard Rapid Action Hydraulic Oil. Note: The part number issued on the quart bottle label has been changed to P/N 63070. Blizzard hydraulic oil is also available by the case (P/N 63071). See your local Authorized Blizzard Dealer for price and availability.

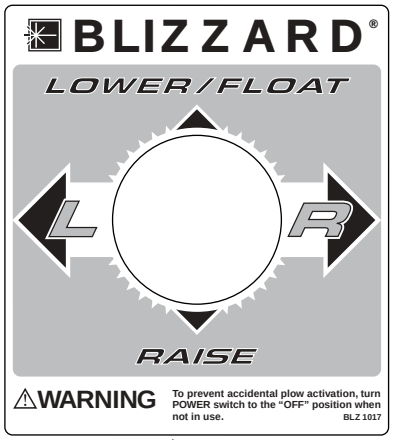

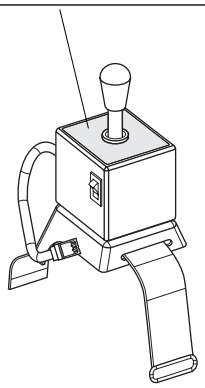

Mounting & Dismounting Instructions

Prior to operating your straight blade, review the Mounting & Dismounting Instructions label at the driver's side rear of the moldboard (shown below).

POWER HITCH™

MOUNTING & DISMOUNTING INSTRUCTIONS

MOUNTING

1. Position vehicle close to the plow and align mounting points on the undercarriage and A-frame. Verify that the plow kickstand is in the lowered position. Turn vehicle ignition off.
2. Turn power supply switch on the main plow control unit in the vehicle to the "OFF" position.
3. Remove protective weather caps and make electrical connection at the plow and vehicle.
4. Turn the vehicle ignition, and the power supply switch on the control unit, to the "ON" position. Pull the A-frame latch lock pin outward and verify that the A-frame latch lowers over the draw pin.
5. Activate the Power Hitch on the A-frame by pushing and holding the "CONNECT/DISCONNECT" switch (on the pump cover housing) upward. **CAUTION: Keep fingers away from plow and truck mounting points. Power Hitch will automatically pull the plow into the receiving points on the truck when activated.** Insert both hitch pins through the positively aligned holes on the plow and undercarriage and secure each with a hair pin cotter.
6. With the plow securely mounted, slightly lower the Power Hitch to relieve tension on the A-frame latch, pull the latch lock pin and raise the A-frame latch until it locks into position. Raise the Power Hitch and verify that the draw latch is fully engaged behind the push beam on the vehicle. Rotate the kickstand counterclockwise until it locks into place. The plow is now properly mounted and ready to operate.

DISMOUNTING

1. Lower the plow on a flat, level surface to dismount. Turn vehicle ignition off.
2. Pull the kickstand lock pin outward and rotate the kickstand clockwise. Release the pin to lock kickstand in place. Remove both hitch pins from the A-frame and undercarriage.
3. Turn the vehicle ignition and the power supply switch on the control unit to the "ON" position. Activate the Power Hitch by pushing and holding the "CONNECT/DISCONNECT" switch downward. **CAUTION: Keep fingers away from plow and truck mounting points.** Verify that the draw latch is fully disengaged from behind the push beam on the vehicle.
4. Turn power supply switch on the main plow control unit in the vehicle to the "OFF" position.
5. Disconnect electrical cords at the plow and vehicle. Replace protective weather caps.

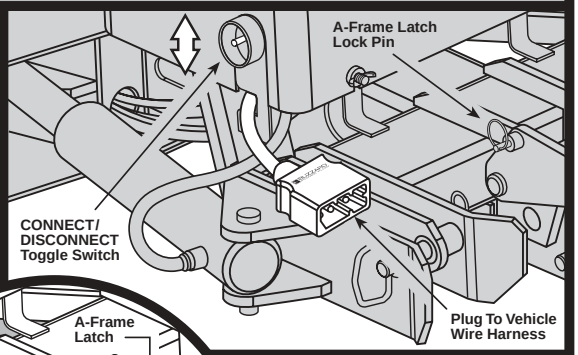

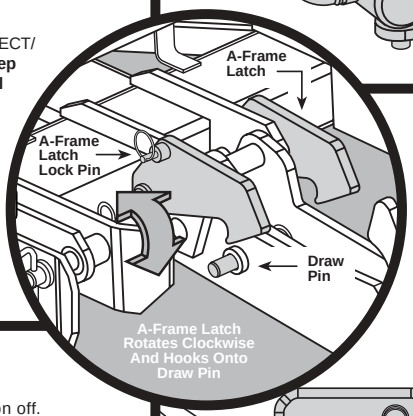

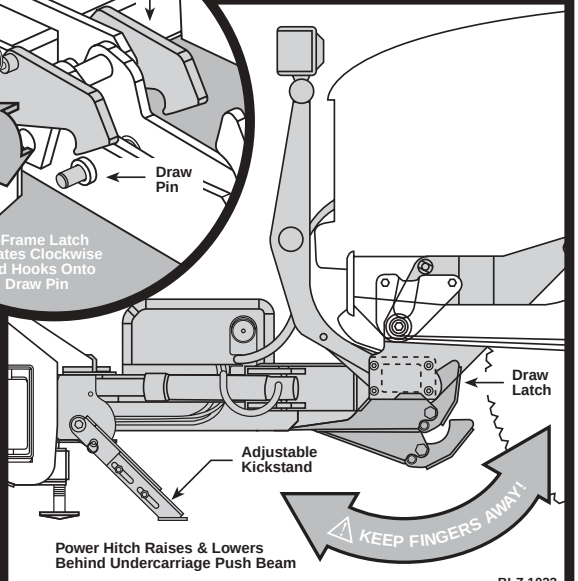

Should the Mounting & Dismounting Instructions label or any of the labels that came with your snowplow become hard to read or wear off, contact your local Authorized Blizzard Dealer for replacements.

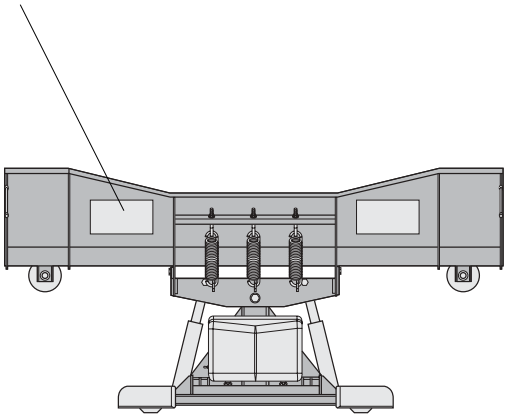

Regular Maintenance

Your Blizzard straight blade snowplow has been designed for years of rugged, dependable service with low maintenance. To ensure proper working condition, follow the maintenance guidelines below and on the next page.

CAUTION: Always follow the maintenance guidelines in a timely fashion. Failure to observe maintenance guidelines may result in poor snowplow operation, increased component wear or possibly lead to part failure.

Routinely inspect the following items – perform maintenance as needed:

1. All fasteners, pins, nuts and bolts for tightness. See the recommended maximum bolt torque chart on page 33.

2. All hydraulic hoses and hydraulic hose adapters for wear and leaks. See the recommended hydraulic adapter torque values on page 33.

3. All cylinders for leaks; inspect rod ends for corrosion and pitting.

4. Cutting edges and plow shoes for wear. Do not discard plow shoe washers. These should be retained for different shoe adjustments.

5. Clean and lubricate all electrical plugs, headlight connections, ground and battery cables, solenoid connections and switch connections to prevent corrosion. Apply dielectric grease for every 25 hours of snowplow use. You may need to grease more frequently depending on your plowing environment.

6. Lubricate all pins and bushings to prevent corrosion and to maintain consistent operation. A NLGI Grade 2 multipurpose lithium complex grease with molybdenum (MPGM) is recommended for lubrication.

7. Clean and cover deep scratches or exposed metal with Blizzard Snowplow white (P/N 61219) or black (P/N 63073) touch-up paint. Contact your local Blizzard Dealer for availability.

8. Check the hydraulic oil level in the hydraulic pump fluid reservoir. Fill the fluid to within 3/4" from the top of the reservoir. Do not exceed this level. Never mix different types of fluids. Contact your local dealer for replacement Blizzard Snowplow Rapid Action Hydraulic Oil (P/N 63070).

9. Check the trip spring adjustment. Properly adjusted tension will allow a sheet of paper to pass between the 3rd and 4th coils of the spring.

10. To adjust the snowplow drop speed, use the variable flow control valve (FC) on the manifold (see label under pump & manifold cover). Turn the dial on the valve clockwise to decrease the drop speed. Turn the dial counterclockwise to increase the drop speed. See the Troubleshooting Guide on page 35 for additional instructions.

11. Do not allow snow and ice to build-up on the pump and manifold cover. Excessive build-up may cause bumper damage when the plow is raised.

Maintenance Schedule	
Maintenance Performed	Date

Annual Fluid Replacement	
Type & Quantity of Fluid Replaced	Date

Storing Your Snowplow

Placing Your Plow In Storage

1. Position your plow on a flat, level surface for storage. Follow the dismounting procedure illustrated on page 14.

2. Pressure wash and dry the entire snowplow prior to placing in storage.

3. Apply a liberal amount of dielectric grease to all electrical plugs and connections. Clean and install all dust caps.

4. Lubricate all exposed hydraulic cylinder rod ends with liquid white lithium grease to prevent corrosion.

5. Lubricate all pins and bushings to prevent corrosion and to maintain consistent operation. A NLGI Grade 2 multipurpose lithium complex grease with molybdenum (MPGM) is recommended for lubrication.

6. Clean and cover deep scratches or exposed metal with Blizzard Snowplow white (P/N 61219) or black (P/N 63073) touch-up paint. Contact your local Blizzard Dealer for availability.

7. Remove and properly discard the fluid from the pump reservoir. Clean the pump filter and replace the hydraulic oil to within 3/4" from the top of the reservoir. Changing the fluid annually will prolong the life of your pump and manifold. Never mix different types of hydraulic oil. Contact your local dealer for replacement Blizzard Snowplow Rapid Action Hydraulic Oil (P/N 63070).

8. Cover the snowplow with a tarp if stored outside. This will protect your plow from sun fading and inclement weather which can lead to accelerated corrosion.

Removing Your Plow From Storage

1. Perform all regular maintenance indicated on the previous page.

2. If you have not replaced the hydraulic oil in the pump reservoir, it is strongly encouraged that you do so prior to operating your plow. Prolonged storage could result in condensation build-up.

3. Follow the mounting procedure illustrated on page 14.

4. Once the plow has been properly mounted to the vehicle and all electrical connections have been made, initiate all of the functions of the snowplow. Monitor the fluid level in the reservoir and fill to 3/4" from the top of the tank if needed.

5. Adjust the snowplow headlights as needed.

Plow Specifications

Moldboard

Length
- 700LD ..... 7'-0"
- 760LD ..... 7'-6"
- 760 ..... 7'-6"
- 800 ..... 8'-0"

Thickness ..... 12 Gauge

Height
- 700LD ..... 26-1/2"
- 760LD ..... 28"
- 760 & 800 ..... 29"

Reinforcement
- 700LD & 760LD ..... 4 Ribs @ 3/16"
- 760 & 800 ..... 6 Ribs @ 1/4"

Cutting Edge
- 700LD & 760LD ..... 3/8" x 6" (1080)
- 760 & 800 ..... 1/2" x 6" (1080)

Finish ..... Powder Coat - White

Trip Mechanism

Trip Spring Type
- 700LD ..... (2) 3/8" Hooked Extension
- 760LD ..... (3) 3/8" Hooked Extension
- 760 & 800 ..... (4) 3/8" Hooked Extension

Trip Spring Adjustment
- All Models ..... 5/8"-11 x 5" Spade Bolts

A-frame

Material ..... Rec. Tube & Channel Type
Hitch Pins ..... 3/4" x 4-3/4" Yellow Zinc
Emergency Hitch Pin ..... 1" x 5-3/4" Yellow Zinc
Finish ..... Powder Coat - Black

Pump

Construction ..... Steel Housing w/Clear Plastic Tank
Type ..... Internal Gear Pump
Motor ..... 12V Starter
Volume Per Minute ..... 1.25 GPM @ 1500 PSI
Weight ..... 32 lb.
Mount ..... A-frame Install w/Hex Head Screws
Reservoir Capacity ..... 2 quarts
Controls ..... Toggle Switch & Joystick

Manifold

Construction ..... Red Anodized Aluminum
Ports 4
Cartridge Valves 6
Relief Valve 1
Flow Control Valve 1
Weight ..... 13.8 lb.
Mount ..... A-frame Install w/Hex Head Screws
Maximum Flow Capacity ..... 2 gpm

Angle Cylinders

Stroke
- 700LD & 760LD ..... 9-3/8"
- 760 & 800 ..... 10"

Ram Diameter
- All Models ..... 1-3/4"

Bore Diameter
- All Models ..... 2"

Lower/Raise Cylinder

Stroke
- 700LD & 760LD ..... 4-1/4"
- 760 & 800 ..... 4-5/8"

Ram Diameter
- 700LD & 760LD ..... 1"
- 760 & 800 ..... 1-1/4"

Bore Diameter
- 700LD & 760LD ..... 1-3/4"
- 760 & 800 ..... 2-1/2"

Plow Headlights

Type ..... Low Profile w/Turn Signals
Measurements ..... 10-3/4" W x 5"H x 5-3/2"D
Housing ..... Plastic Composite
Mount ..... Adjustable Ball Type
Bulb Type ..... High/Low Sealed Beam Halogen, 12V Rect.
Switch Type ..... Dash Mount, Toggle

Miscellaneous

*Plow Weight**
- 700LD ..... Approx. 528 lb.
- 760LD ..... Approx. 550 lb.
- 760 ..... Approx. 720 lb.
- 800 ..... Approx. 750 lb.

Adjustable Plow Shoes
- 700LD & 760LD ..... (2) Standard
- 760 & 800 ..... (2) Heavy-Duty Cast Steel

Mount Mechanism ..... Hydraulic Draw Latch
Control Station ..... Joystick

*Plow weight does not include vehicle undercarriage.

Unless otherwise indicated, all specifications are for Models 700LD, 760LD, 760 & 800 straight blade snowplows.

Blizzard Corporation reserves the right, under its Continuous Improvement Policy, to change construction or design details and furnish equipment when so altered without reference to illustrations or specifications.

MODELS 700LD, 760LD, 760 & 800 PARTS LIST

Note: The reference numbers listed identify parts shown in the illustrations on pages 22-24. These numbers are specific to these illustrations only and do not correspond with other diagrams in the manual. Always review the part number given for proper component identification.

Ref. No.	Part No.	Build Quantity				Part Description
		700LD	760LD	760	800	
						Moldboard Assembly Parts
1	81021	1	N/A	N/A	N/A	Moldboard Weldment - Model 700LD
	81006	N/A	1	N/A	N/A	Moldboard Weldment - Model 760LD
	84006	N/A	N/A	1	N/A	Moldboard Weldment - Model 760
	80006	N/A	N/A	N/A	1	Moldboard Weldment - Model 800
2	81031	1	N/A	N/A	N/A	Cutting Edge, Moldboard (1080) - Model 700LD
	61165	N/A	1	N/A	N/A	Cutting Edge, Moldboard (1080) - Model 760LD
	61168	N/A	N/A	1	N/A	Cutting Edge, Moldboard (1080) - Model 760
	61164	N/A	N/A	N/A	1	Cutting Edge, Moldboard (1080) - Model 800
3	61196	6	8	8	8	Carriage Bolt, 1/2"-13 x 1-1/2" P
4	61026	10	12	12	12	Washer, SAE Mil-Carb High-Strength, 1/2", 1-1/16" O.D., 17/32" I.D. YZ
5	61020	11	13	13	13	Nut, Top Lock, 1/2"-13 Grade C Z
6A	**61098**	**2**	**2**	**N/A**	**N/A**	**Plow Shoe Assembly, Standard (7-3/4" Shaft) - Models 700LD & 760LD: (1) - 6 & 8, (18) - 7**
	61220	**N/A**	**N/A**	**2**	**2**	**Plow Shoe Assembly, Heavy-Duty Cast Iron (8-3/8" Shaft) - Models 760 & 800: (1) - 6 & 8, (18) - 7**
6	61102	2	2	2	2	Spacer, 1-5/8" O.D, 1-1/8" I.D. x 1-1/2" YZ
7	61101	36	36	36	36	Washer, Flat, 1", 1-3/4" O.D., 1-1/16" I.D. Z
8	61103	2	2	2	2	Pin, Linch, 1/2" x 1-3/4"
9A	**61049**	**2**	**2**	**2**	**2**	**Plow Guide Assembly: (2) - 9 & 10**
9	61051	4	4	4	4	Screw, Hex Head Cap, 5/16"-18 x 1" Grade 5 Z
10	61052	4	4	4	4	Nut, Nylon Insert Lock, 5/16"-18 Z
11	63066	1	N/A	N/A	N/A	Decal, Passenger's Side Moldboard (BLZ 1050) - Model 700LD
	61176	N/A	1	1	N/A	Decal, Passenger's Side Moldboard (BLZ 1019) - Models 760LD & 760
	61178	N/A	N/A	N/A	1	Decal, Passenger's Side Moldboard (BLZ 1021) - Model 800
12	61181	1	1	1	1	Label, WARNING! (BLZ 1024)
13	61175	1	1	1	1	Decal, Center Moldboard (BLZ 1018)
14	61180	1	1	1	1	Label, Power Hitch™ Mounting & Dismounting Instructions (BLZ 1023)
15	63067	1	N/A	N/A	N/A	Decal, Driver's Side Moldboard (BLZ 1051) - Model 700LD
	61177	N/A	1	1	N/A	Decal, Driver's Side Moldboard (BLZ 1020) - Model 760LD & 760
	61179	N/A	N/A	N/A	1	Decal, Driver's Side Moldboard (BLZ 1022) - Model 800
16	63062	1	N/A	N/A	N/A	Label, Sequential Serial Number (BLZ 1048) - Model 700LD
	61199	N/A	1	N/A	N/A	Label, Sequential Serial Number (BLZ 1029) - Model 760LD
	61183	N/A	N/A	1	N/A	Label, Sequential Serial Number (BLZ 1026) - Model 760
	61184	N/A	N/A	N/A	1	Label, Sequential Serial Number (BLZ 1027) - Model 800
						Pivot Beam & A-frame Assembly Parts
17	61188	2	3	4	4	Nut, Nylon Insert Lock, 5/8"-11 Type NE
18	61064	2	3	4	4	Washer, SAE Mil-Carb High-Strength, 5/8", 1-5/16" O.D., 21/32" I.D. YZ
19	61201	2	3	4	4	Bolt, Spade, 5/8"-11 x 5" Grade 8 Z
20	61351	2	N/A	N/A	N/A	Spring, Extension, 10-3/4" O.A.L. x 2-3/8" O.D., 3/8" Wire Diameter - Model 700LD
	61167	N/A	3	N/A	N/A	Spring, Extension, 12-15/16" O.A.L. x 2-3/8" O.D. x 3/8" Wire Diameter - Model 760LD
	61099	N/A	N/A	4	4	Spring, Extension, 15-1/4" O.A.L. x 2-3/8" O.D. x 3/8" - Models 760 & 800
21	61006	3	3	4	4	Nut,Top Lock, 3/4"-10 Grade C Z - Models 760 & 800
22	61063	1	1	N/A	N/A	Nut,Top Lock, 5/8"-11 Grade C Z - Models 700LD & 760LD
23	61314	2	2	2	2	Screw, Hex Head Cap, 3/4"-10 x 3" (with 2" Shank) Grade 8 YZ
24A	**41039**	**1**	**1**	**1**	**1**	**Kickstand Assembly: (1) - 24-26, 28, 29, (2) - 4, 27, (3) - 5**
24	61152	1	1	1	1	Screw, Hex Head Cap, 1/2"-13 x 4-1/2" Grade 8 YZ
25	41038	1	1	1	1	Kickstand Leg Weldment
26	41047	1	1	1	1	Kickstand Foot Weldment
27	61057	4	4	4	4	Screw, Hex Head Cap, 1/2"-13 x 1-1/4" Grade 8 YZ
28	61293	1	1	1	1	Spring, Compression, 2" O.A.L. x 1.101" O.D., 0.207 Wire Diameter
29	41037	1	1	1	1	Bushing, Stepped, 1.13" O.D., 0.53" I.D. x 3/8" Stainless Steel
30	83000	1	1	N/A	N/A	Pivot Beam Weldment - Models 700LD & 760LD
	41041	N/A	N/A	1	1	Pivot Beam Weldment - Models 760 & 800
31	41050	4	4	4	4	Pin, Clevis, 3/4" DIA. x 4-1/2" YZ
32	61357	5	5	5	5	Pin, Hammerlock Cotter, 1/4" x 1-1/2"
33	61331	1	1	N/A	N/A	Screw, Hex Head Cap, 1"-8 x 8-1/2" (with 7-1/8" Shank) Grade 8 P - Model 700LD & 760LD
	61330	N/A	N/A	1	1	Screw, Hex Head Cap, 1"-8 x 9" (with 7-3/4" Shank) Grade 8 P - Models 760 & 800
34	61008	1	1	1	1	Nut, Top Lock, 1"-8 Grade C Z
35	60065	2	2	N/A	N/A	Hydraulic Cylinder, Plow Angle - Models 700LD & 760LD
	60029	N/A	N/A	2	2	Hydraulic Cylinder, Plow Angle - Models 760 & 800
36	60005	3	3	3	3	Hydraulic Adapter, 9/16"-18 x 9/16"-18 90˚ Adjustable Elbow O.R.B.
37	60091	1	1	1	1	Hydraulic Hose (#1), 3/8" x 24" - Plow Angle, Driver's Side
38	60011	1	1	1	1	Hydraulic Hose (#2), 3/8" x 24" - Plow Angle, Passenger's Side
39	61253	1	1	N/A	N/A	Screw, Hex Head Cap, 5/8"-11 x 5-1/2" Grade 8 YZ - Models 700LD & 760LD
	61005	N/A	N/A	1	1	Screw, Hex Head Cap, 3/4"-10 x 6" Grade 8 YZ - Models 760 & 800
40	60092	1	1	1	1	Hydraulic Hose (#3), Straight/45˚, 1/4" x 17" - Plow Raise/Lower, Extend (Base End)
41	60002	1	1	1	1	Hydraulic Adapter, 7/16"-20 x 7/16"-20 45˚ Adjustable Elbow O.R.B.
42	60118	1	1	N/A	N/A	Hydraulic Cylinder, Plow Raise/Lower - Models 700LD & 760LD
	60130	N/A	N/A	1	1	Hydraulic Cylinder, Plow Raise/Lower - Models 760 & 800
43	60004	1	1	1	1	Hydraulic Adapter, 7/16"-20 x 7/16"-20 Male O.R.B. Connector
44	60093	1	1	1	1	Hydraulic Hose (#4), Straight/45˚, 1/4" x 15" - Plow Raise/Lower, Retract (Rod End)
45	61358	3	3	3	3	Nut, Flanged Wing, 3/8"-16
46	61012	2	2	2	2	Screw, Hex Head Cap, 3/8"-16 x 3/4" Grade 8 YZ
47	61016	3	3	3	3	Washer, SAE Mil-Carb High-Strength, 3/8", 13/16" O.D., 13/32" I.D., YZ

MODELS 700LD, 760LD, 760 & 800 PARTS LIST

Ref. No.	Part No.	Build Quantity 700LD	760LD	760	800	Part Description
						Pivot Beam & A-frame Assembly Parts (Continued)
48	61014	1	1	1	1	Nut, Jam Nylon Insert Lock, 3/8"-16 Z, Type NTE
49	61359	1	1	1	1	Stud, Threaded, 3/8"-16 x 1-3/4"
50	40004	1	1	1	1	Hinge Weldment, Pump Mount
51	61218	1	1	1	1	Screw, Hex Head Cap, 3/8"-16 x 2" Grade 8 YZ
52	61034	1	1	1	1	Nut, Top Lock, 3/8"-16 Grade C Z
53	62038	1	1	1	1	Switch, Toggle, DPDT, (On)-Off-(On), 16 Amps, 115V AC - Draw Latch Connect/Disconnect
54A	**82048**	**1**	**1**	**N/A**	**N/A**	**A-frame Assembly - Models 700LD & 760LD: (1) - 50-52, 54, 57-59, 65, (2) - 64, (4) - 62, 63**
	40105	**N/A**	**N/A**	**1**	**1**	**A-frame Assembly - Models 760 & 800: (1) - 50-52, 54, 57-59, 65, (2) - 64, (4) - 62, 63**
54	82043	1	1	N/A	N/A	A-frame Weldment - Models 700LD & 760LD
	40091	N/A	N/A	1	1	A-frame Weldment - Models 760 & 800
55	61115	2	2	2	2	Pin, Hitch, 3/4" x 4-3/4" YZ
56	61105	2	2	2	2	Pin, Hair Cotter, 9/64" DIA. x 2-11/16" Z
57	40079	1	1	1	1	Pin, A-frame Latch, 3/8" DIA. x 1-3/4", Stainless Steel
58	61000	1	1	1	1	Spring, Compression, 0.94" O.A.F.L. x 0.36" O.D., 0.029" Wire Diameter, Stainless Steel
59	61309	1	1	1	1	Ring, Standard Split, 1.48" O.D., 1.264" I.D., 0.92 Wire Diameter
60	61197	1	1	1	1	Pin, Emergency Hitch, 1" x 5-3/4" YZ
61	61226	1	1	1	1	Pin, Hair Cotter, 11/64" DIA. x 3-3/4" Z
62	61312	4	4	4	4	Screw, Hex Head Cap, 5/16"-18 x 3/4" Grade 8 YZ
63	61011	6	6	6	6	Washer, Split Lock, 5/16" YZ High-Alloy
64	40088	2	2	2	2	Bushing, A-frame Pivot, Replaceable
65	61295	1	1	1	1	Label, Power Hitch Connect/Disconnect Switch (BLZ 1037)
						Draw Latch Assembly Parts
66A	**82049**	**1**	**1**	**N/A**	**N/A**	**Draw Latch Assembly - Models 700LD & 760LD: (1) - 21, 32, 66-70, 72-79, (2) - 71**
	40109	**N/A**	**N/A**	**1**	**1**	**Draw Latch Assembly - Models 760 & 800: (1) - 21, 32, 66-70, 72-74, 77-79, (2) - 71, 75**
66	82035	1	1	N/A	N/A	Outer Draw Latch Plate Weldment, Driver's Side - Models 700LD & 760LD
	40080	N/A	N/A	1	1	Outer Draw Latch Plate Weldment, Driver's Side - Models 760 & 800
67	82050	1	1	N/A	N/A	Pin, Draw, 1" DIA. x 5-5/8" (with 13/64" DIA. Cotter Pin Hole) BZ
	40110	N/A	N/A	1	1	Pin, Draw, 1" DIA. x 6-1/2" (with 13/64" DIA. Cotter Pin Hole) YZ
68	61363	1	1	1	1	Pin, Cotter, 3/16" x 2-1/2"
69	61200	1	1	N/A	N/A	Screw, Hex Head Cap, 3/4"-10 x 4" Grade 8 YZ - Models 700LD & 760LD
	61004	N/A	N/A	1	1	Screw, Hex Head Cap, 3/4"-10 x 4-1/2" Grade 8 YZ - Models 760 & 800
70	82055	1	1	N/A	N/A	Pin, Clevis, 3/4" DIA. x 3-7/16" BZ
	50071	N/A	N/A	1	1	Pin, Clevis, 3/4" DIA. x 3-41/64" YZ
71	82014	2	2	N/A	N/A	Inner Draw Latch Plate - Models 700LD & 760LD
	40074	N/A	N/A	2	2	Inner Draw Latch Plate - Models 760 & 800
72	82027	1	1	N/A	N/A	Pin, Draw Latch Mount (To A-frame), 1" x 3-7/8" BZ - Models 700LD & 760LD
	40070	N/A	N/A	1	1	Pin, Draw Latch Mount (To A-frame), 1" x 4-21/32" YZ - Models 760 & 800
73	82054	1	1	N/A	N/A	Draw Latch Arm Weldment - Models 700LD & 760LD
	40114	N/A	N/A	1	1	Draw Latch Arm Weldment - Models 760 & 800
74	82037	1	1	N/A	N/A	Draw Latch Finger Weldment - Models 700LD & 760LD
	40082	N/A	N/A	1	1	Draw Latch Finger Weldment - Models 760 & 800
75	82033	1	1	N/A	N/A	Pin, 5/8" x 2-3/8" BZ, Inner Draw Latch Plate/Hydraulic Cylinder Rod End, Plow Raise/Lower - Models 700LD & 760LD
	40042	N/A	N/A	2	2	Pin, 3/4" x 2-1/2", Draw Latch Arm Pivot Pin/Hydraulic Cylinder Rod End, Plow Raise/Lower - Models 760 & 800
76	82024	1	1	N/A	N/A	Pin, 3/4" x 2-3/8" Draw Latch Arm Pivot - Models 700LD & 760LD
77	40093	1	1	1	1	Bushing, 1-1/4" O.D., 1-1/16" I.D. x 1-1/2" YZ
78	82036	1	1	N/A	N/A	Outer Draw Latch Plate Weldment, Passenger's Side - Models 700LD & 760LD
	40081	N/A	N/A	1	1	Outer Draw Latch Plate Weldment, Passenger's Side - Models 760 & 800
79	40116	1	1	1	1	Spacer, 1" O.D., 25/32" I.D. x 5/8" YZ
						Hydraulic Pump & Manifold Assembly Parts
80A	**60101**	**1**	**1**	**1**	**1**	**Hydraulic Pump Assembly (Fenner Fluid Power): (1) - 80-83**
80	60045	1	1	1	1	Reservoir, Hydraulic Pump
81	60046	1	1	1	1	Reservoir Cap, Hydraulic Pump
82	60044	1	1	1	1	Hex Cap, Relief Valve, Hydraulic Pump
83	60047	1	1	1	1	Power Unit (Motor), Hydraulic Pump
84	61307	1	1	1	1	Washer, Internal/External Tooth Lock, 3/8"
85	61129	1	1	1	1	Cover, Hydraulic Pump & Manifold, 1/4" Polyethylene
86	61302	1	1	1	1	Label, Hydraulic Hose Identification Guide (BLZ 1035)
87	60038	2	2	2	2	O-ring, 3/ 32" C.S.W., 9/16" I.D., 3/4" O.D. Neoprene, 70 Durometer
88	61222	2	2	2	2	Washer, Split Lock, 3/8" High-Alloy YZ
89	61033	2	2	2	2	Screw, Hex Head Cap, 3/8"-16 x 1" Grade 8 YZ
90	82047	1	1	1	1	Bracket, Diode Board Mount
91	61010	2	2	2	2	Screw, Hex Head Cap, 5/16"-18 x 3-3/4" Grade 8 YZ
92A	**60158**	**1**	**1**	**1**	**1**	**Manifold Assembly: (1) - 36, 92, 95, 97, 102, 104, 105, 62119, (2) - 93, 94, 96, 98, 106, (6) - 100**
92	60164	1	1	1	1	Manifold Block (with Cross Port Relief), Red Anodized Aluminum
93	60003	2	2	2	2	Hydraulic Adapter, 7/16"-20 x 9/16"-18 Male O.R.B. Connector
94	60009	2	2	2	2	Hydraulic Adapter, 7/16"-20 90˚ Swivel Elbow
95	60072	1	1	1	1	Hydraulic Adapter, 9/16"-18 x 9/16"-18 Male Extra Long Elbow
96	60050	2	2	2	2	Plug, -6 SAE Hollow Hex
97	60173	1	1	1	1	Coupling, Test Port, 7/16"-20 O.R.B.
98	60167	2	2	2	2	Valve, Spool, Four-Way, Two Position C.C. (86020464)
99	62114	5	5	5	5	Coil, PDL 10VDC

MODELS 700LD, 760LD, 760 & 800 PARTS LIST

Ref. No.	Part No.	Build Quantity				Part Description
		700LD	760LD	760	800	
						Hydraulic Pump & Manifold Assembly Parts (Continued)
100	60052	6	6	6	6	Nut, Hex Jam, 1/2"- 20 YZ
101	60168	1	1	1	1	Valve, Relief, 3000 PSI
102	60170	1	1	1	1	Valve, Spool, Three-Way, Two Position (85020341)
103	62115	1	1	1	1	Coil, DDL 10VDC
104	60166	1	1	1	1	Valve, Spool, Three-Way, Two Position (86020463)
105	60169	1	1	1	1	Valve, Flow Control (85002054)
106	60165	2	2	2	2	Valve, N.C., Two-Way (86020190)
N/A	**62119**	**1**	**1**	**1**	**1**	**Coil Harness Assembly: (1) - 103, 62045, 62117, (4) - 62116, (5) - 99, (6) - 62096 & 62097**
N/A	62045	1	1	1	1	Connector, Electric, Male, Plastic
N/A	62096	16	16	16	16	Seal, Cable, Silicone, Orange (18 AWG)
N/A	62097	6	6	6	6	Terminal, Male (18-16 AWG)
N/A	62116	4	4	4	4	Silicone Cavity Plug, White (18-16 AWG)
N/A	62117	1	1	1	1	Terminal, End Ring, 3/8" I.D. Copper, 8 Gauge
						Snowplow Wire Harness Assembly Parts
107A	**62039**	**1**	**1**	**1**	**1**	**Wire Harness Assembly, Plow : (1) - 107, 108, 62006, 62046, (10) - 62096**
107	62057	1	1	1	1	Wire Harness, Plow
108	62001	1	1	1	1	Weather Cap, Rubber, Plow Wire Harness
N/A	62046	1	1	1	1	Connector, Electric, Female, Plastic
N/A	**62006**	**1**	**1**	**1**	**1**	**Diode Board Assembly: (1) - 62007, 62090, 62092, 62094, 62095, (5) - 62091, 62093**
N/A	62007	1	1	1	1	Cover, Clear, Diode Board
N/A	62090	1	1	1	1	Connector Body w/Gasket, Diode Board
N/A	62091	5	5	5	5	Seal, Cable, Silicone, Green (16 AWG)
N/A	62092	1	1	1	1	Plug, Cavity, Silicone, Green (16 AWG)
N/A	62093	15	15	15	15	Terminal, Female (18-16 AWG)
N/A	62094	1	1	1	1	Circuit Board
N/A	62095	1	1	1	1	Secondary Lock, Six-Way
						Vehicle Wire Harness Assembly Parts
109A	**62112**	**1**	**1**	**1**	**1**	**Wire Harness Assembly, Vehicle - Relay Version: (1) - 109, 110, 62124, 62113, 62125, 62008, 62009, 62056 (3) - 113, 62016, (4) - 62072**
109	62111	1	1	1	1	Wire Harness, Vehicle - Relay Version
110	62000	1	1	1	1	Weather Cap, Rubber, Vehicle Wire Harness
N/A	62124	1	1	1	1	Fuse, 1/4" DIA. x 1-1/4" BUSS AGC 15A, 32V
N/A	62113	1	1	1	1	Main Lighting Harness - Relay Version
N/A	62125	1	1	1	1	Headlight Relay, 3PDT, 30A, 12V
N/A	62042	1	1	1	1	Power Contactor (Solenoid), Heavy Duty, Water-Resistant DC
N/A	61228	4	4	4	4	Nut, Hex Jam, 5/16"- 24 Z
N/A	61229	4	4	4	4	Nut, Hex Full, #10 - 32 Z
N/A	61230	2	2	2	2	Washer, Split Lock, #10 Z Medium
N/A	62056	1	1	1	1	Ground Wire, Power Contactor, 24"
N/A	62072	4	4	4	4	Terminal, End Ring, 3/8" I.D. Copper, 4 Gauge
N/A	62008	1	1	1	1	Fuse Clip, Mini
N/A	62009	1	1	1	1	Fuse Clip, Auto Blade
N/A	62016	3	3	3	3	Connector, Splice Lock (18-14 AWG)
N/A	62126	1	1	1	1	Ground Lead (Green/Yellow Wire), 24" with #10 Ring Terminal
N/A	62127	1	1	1	1	Switch Lead, On/Off Plow Light (Green/Yellow Wires), 24" with Two 1/4" Receptacles
N/A	62024	1	1	1	1	Switch,Toggle, DPDT, On-On, 20 Amps, 125V AC - Plow/Vehicle Headlights
111	61041	1	1	1	1	Bracket, Plow/Vehicle Headlight Toggle Switch
112	61088	1	1	1	1	Label, Plow/Vehicle Headlight Toggle Switch Bracket (BLZ 1008)
113	61031	5	5	5	5	Screw, Hex Washer Self-Drilling, 12-14 x 3/4"
114A	**62058**	**2**	**2**	**2**	**2**	**Headlight Assembly, Plow (Specify Driver's or Passenger's Side): (1) - 115/116, 117-120, 62061**
115	62059	1	1	1	1	Headlight, Plow, Driver's Side
116	62060	1	1	1	1	Headlight, Plow, Passenger's Side
117	62032	2	2	2	2	Wire Harness (with 5-pin plug), Plow Headlight
N/A	62061	2	2	2	2	Bulb, Sealed Beam Halogen, Glass, Plow Headlight (H6545/H4666)
N/A	62062	1	1	1	1	Corrosion Preventive Compound (2 fl. oz.)
118	61231	2	2	2	2	Adapter, Ball Stud Mount, Headlight
119	61232	2	2	2	2	Washer, Heavy Split Lock, 1/2"
120	61025	2	2	2	2	Nut, Hex, 1/2"-13 Grade 8 YZ
121	61166	2	2	2	2	Plug, Polyethylene, Black, 2-3/8" x 10-14 Gauge x 0.71"
122	39034	1	1	N/A	N/A	Light Tower - Models 700LD & 760LD
	39032	N/A	N/A	1	1	Light Tower - Models 760 & 800
123A	**62073**	**1**	**1**	**1**	**1**	**Control Station Assembly, Joystick: (1) - 123-125, 127, (4) - 126**
123	62074	1	1	1	1	Control Station, Joystick
124	61185	1	1	1	1	Base Plate, 1/8" ABS Plastic, Joystick Control Station
125	61127	1	1	1	1	Strap (Velcro® with 2" Metal D-Ring), Black, 61"
126	61254	4	4	4	4	Screw, Pan Head Machine, 8-32 x 3/4" Z
127	61174	1	1	1	1	Label, Control Station, Joystick (BLZ 1017)
128	30042	N/A	N/A	1	1	Undercarriage Weldment, 1999 & Newer, Chevrolet/GMC 2500 Series
129	61128	1	1	N/A	N/A	Decal, Undercarriage Push Beam, 1-1/2" x 9-1/4" (BLZ 1004)
130	61085	N/A	N/A	1	1	Decal, Undercarriage Push Beam, 2-1/4" x 13-7/8" (BLZ 1003)

MODELS 700LD, 760LD, 760 & 800 PARTS LIST

Ref. No.	Part No.	Build Quantity				Part Description
		700LD	760LD	760	800	
						Miscellaneous Assembly Parts
N/A	61355	1	N/A	N/A	N/A	Kit, Hardware, Snowplow Assembly Parts - Model 700LD: (1) - 47-49, 84, (2) - 17-19, 21, 23 46, (3) - 45, (4) - 31 & 32
N/A	61354	N/A	1	N/A	N/A	Kit, Hardware, Snowplow Assembly Parts - Model 760LD: (1) - 47-49, 84, (2) - 21, 23 46, (3) - 17-19, 45, (4) - 31 & 32
N/A	61353	N/A	N/A	1	1	Kit, Hardware, Snowplow Assembly Parts - Models 760 & 800: (1) - 47-49, 84, (2) - 21, 23 46, (3) - 45, (4) -17-19, 31 & 32
N/A	60161	1	1	1	1	Kit, Hydraulic Adapter : (1) - 41, 43, 95, (2) - 93, 94, (3) - 36
N/A	60186	1	1	1	1	Kit, Hydraulic Hose : (1) - 37, 38, 40, 44
N/A	61257	1	N/A	N/A	N/A	Kit, Hardware, Moldboard Cutting Edge - Model 700LD: (6) - 3-5
N/A	61255	N/A	1	1	1	Kit, Hardware, Moldboard Cutting Edge - Models 760LD, 760 & 800: (8) - 3-5
N/A	81042	1	N/A	N/A	N/A	Cutting Edge (with Hardware Kit), Moldboard - Model 700LD: (1) - 81031, 61257
N/A	61256	N/A	1	N/A	N/A	Cutting Edge (with Hardware Kit), Moldboard - Model 760LD: (1) - 61165, 61255
N/A	61258	N/A	N/A	1	N/A	Cutting Edge (with Hardware Kit), Moldboard - Model 760: (1) - 61168, 61255
N/A	61259	N/A	N/A	N/A	1	Cutting Edge (with Hardware Kit), Moldboard - Model 800: (1) - 61164, 61255

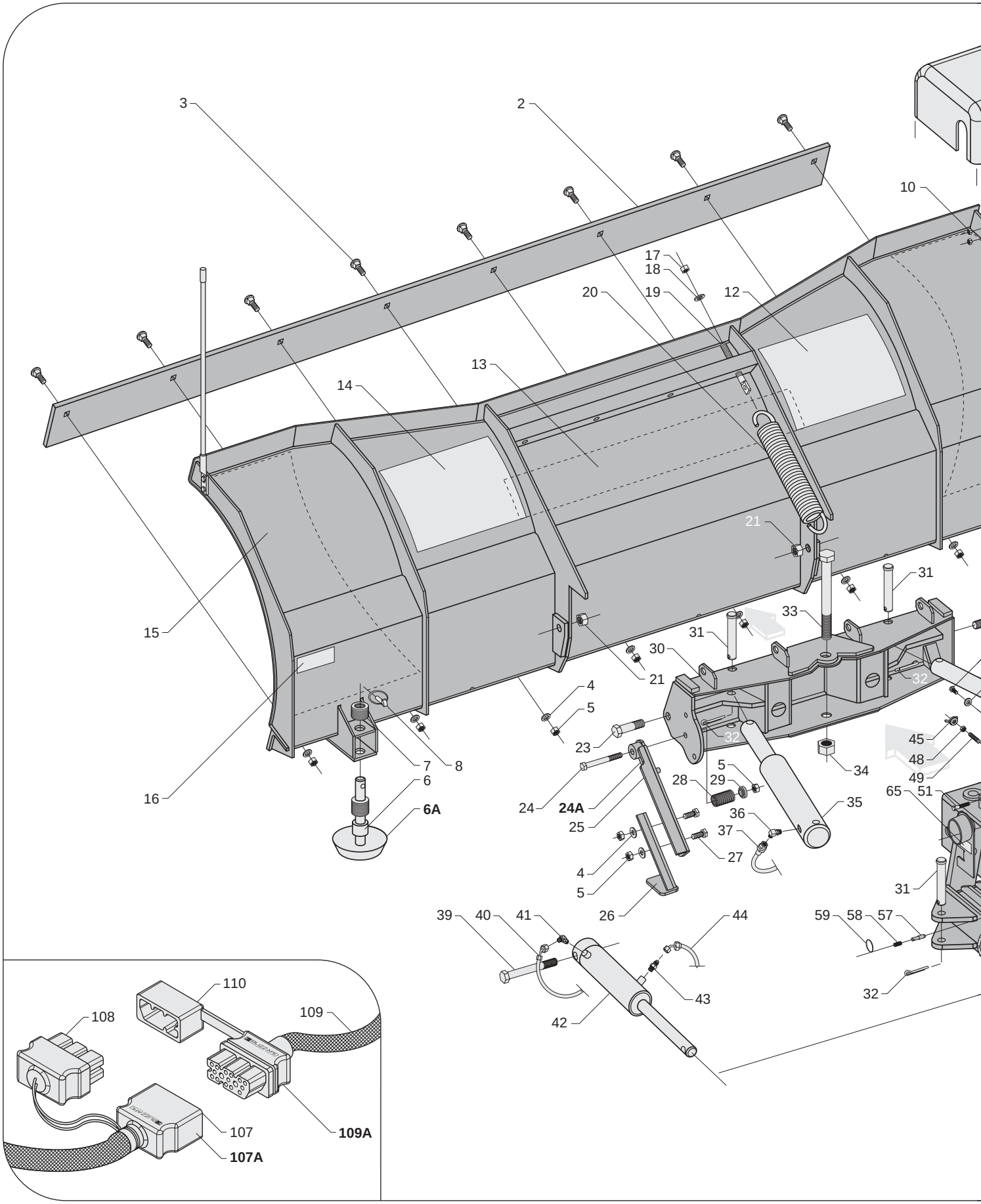
3
2
10
17
18
19
20
12
13
14
21
31
33
15
30
32
4
5
23
24
24A
25
7
8
6
6A
16
28
29
34
35
36
37
27
45
48
49
65
51
26
39
40
41
44
43
42
59
58
57
110
108
109
107
109A
107A

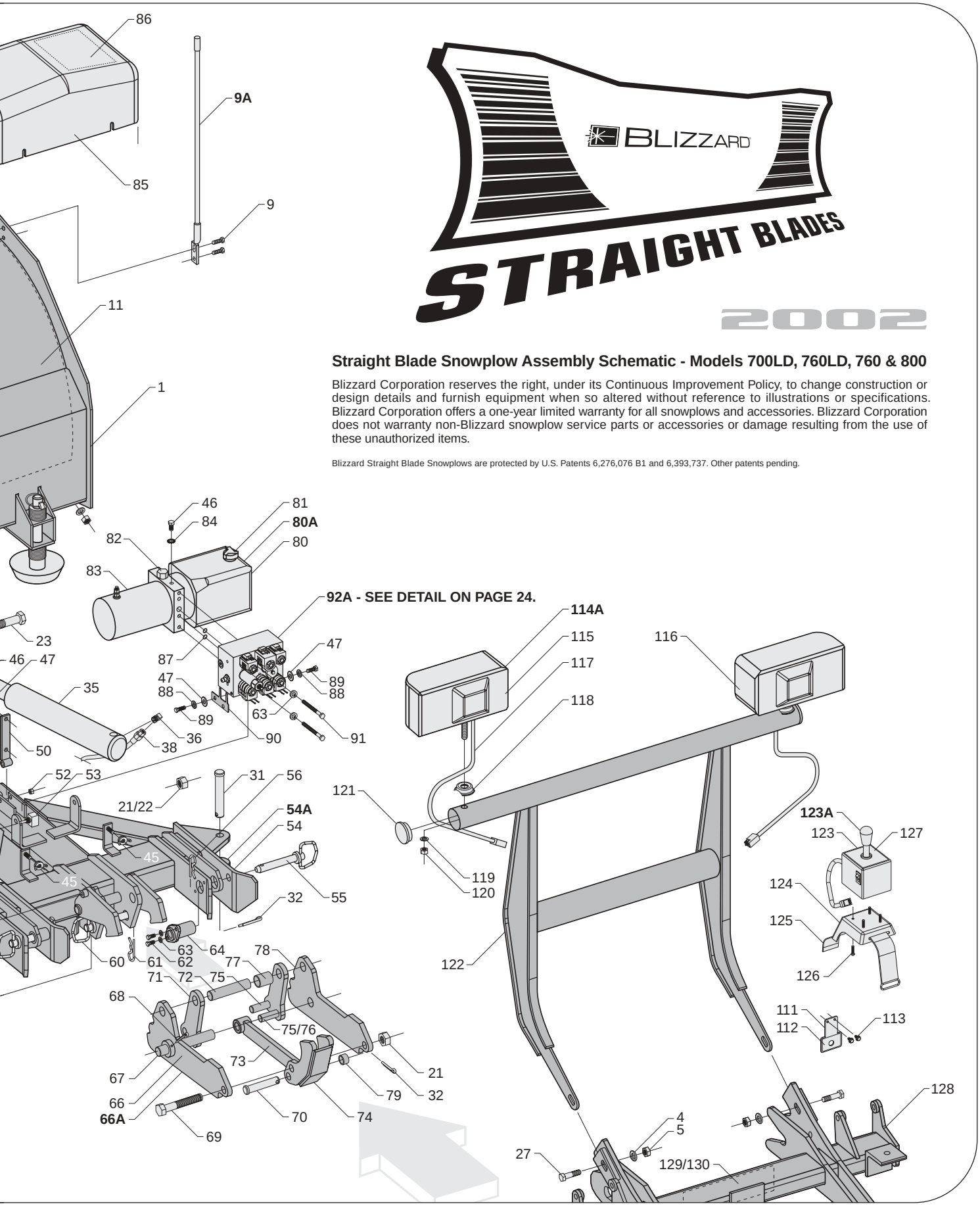

BLIZZARD

STRAIGHT BLADES

2002

Straight Blade Snowplow Assembly Schematic - Models 700LD, 760LD, 760 & 800

Blizzard Corporation reserves the right, under its Continuous Improvement Policy, to change construction or design details and furnish equipment when so altered without reference to illustrations or specifications. Blizzard Corporation offers a one-year limited warranty for all snowplows and accessories. Blizzard Corporation does not warranty non-Blizzard snowplow service parts or accessories or damage resulting from the use of these unauthorized items.

Blizzard Straight Blade Snowplows are protected by U.S. Patents 6,276,076 B1 and 6,393,737. Other patents pending.

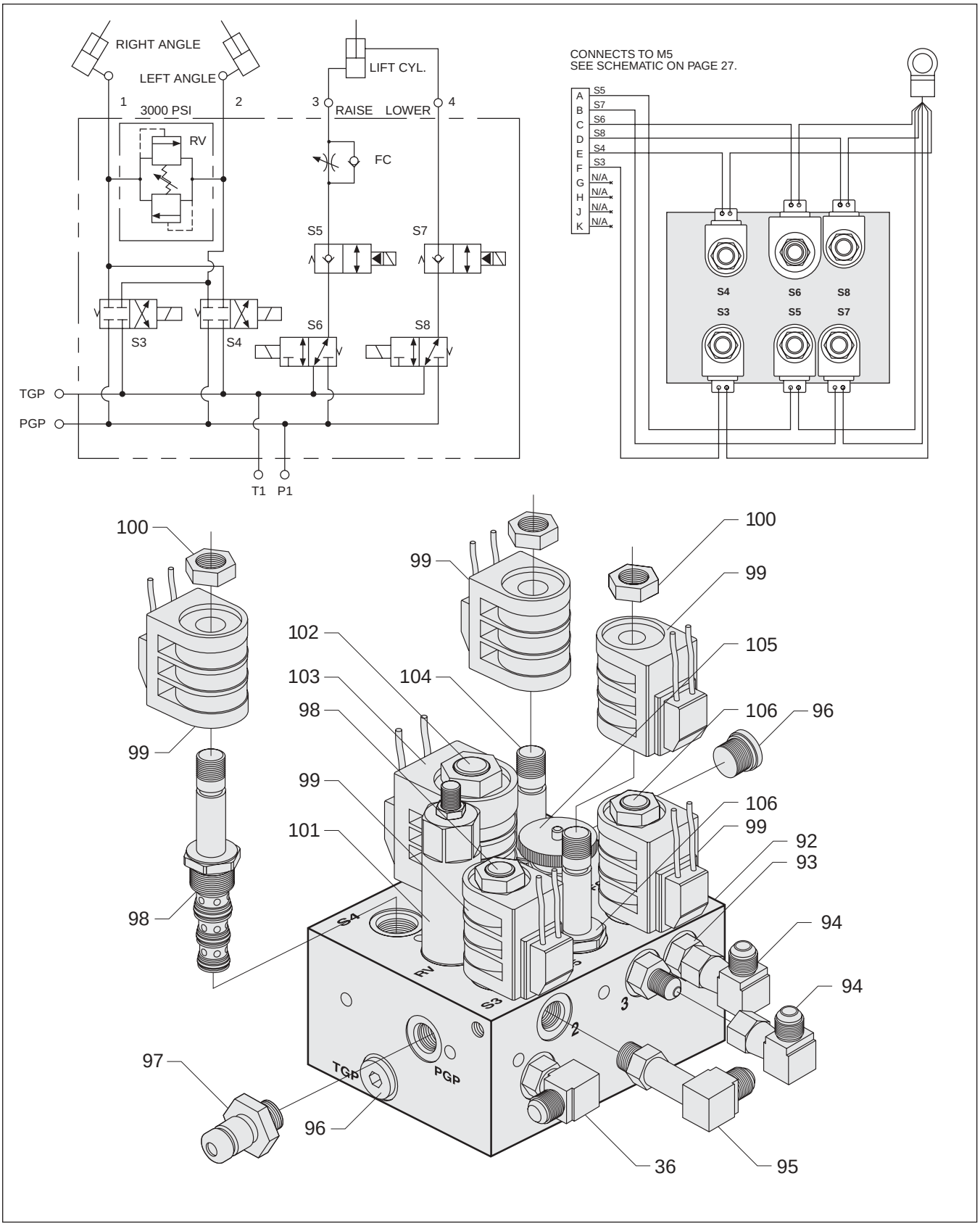
RIGHT ANGLE
LEFT ANGLE
LIFT CYL.
1
2
3
4
3000 PSI
RAISE
LOWER
RV
FC
S5
S7
S3
S4
S6
S8
TGP
PGP
T1
P1
CONNECTS TO M5
SEE SCHEMATIC ON PAGE 27.
A S5
B S7
C S6
D S8
E S4
F S3
G N/A
H N/A
J N/A
K N/A
100
99
102
103
104
98
101
105
106
96
92
93
94
97
36
95

BLIZZARD HARNESS PLUG (VEHICLE)
UNIVERSAL 14 + 2 MOLD

PIN NO.	COLOR	FUNCTION	AWG
1	BLACK	GROUND	4
	BLACK	GROUND	18
2	RED	12 VOLT DC (+)	4
3	BROWN/WHITE	PUMP SOLENOID TO RING	18
	BROWN	PUMP SOLENOID TO MOLEX	18
4	RED/WHITE	RIGHT SLIDE BOX EXTEND	18
5	RED/BLACK	RIGHT SLIDE BOX RETRACT	18
6	BLUE/WHITE	LEFT SLIDE BOX EXTEND	18
7	BLUE/BLACK	LEFT SLIDE BOX RETRACT	18
8	BLUE	LEFT ANGLE	18
9	GREEN	RIGHT ANGLE	18
10	WHITE	LIFT	18
11	ORANGE	FLOAT	18
12	N/A	N/A	N/A
13	N/A	N/A	N/A
14	N/A	N/A	N/A
15	PINK/BLACK	12 (+) VDC FUSED	18
16	N/A	N/A	18

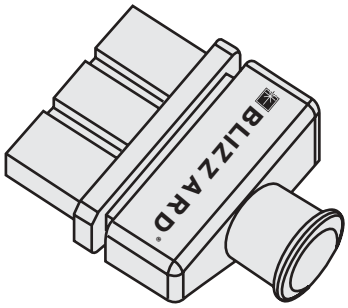

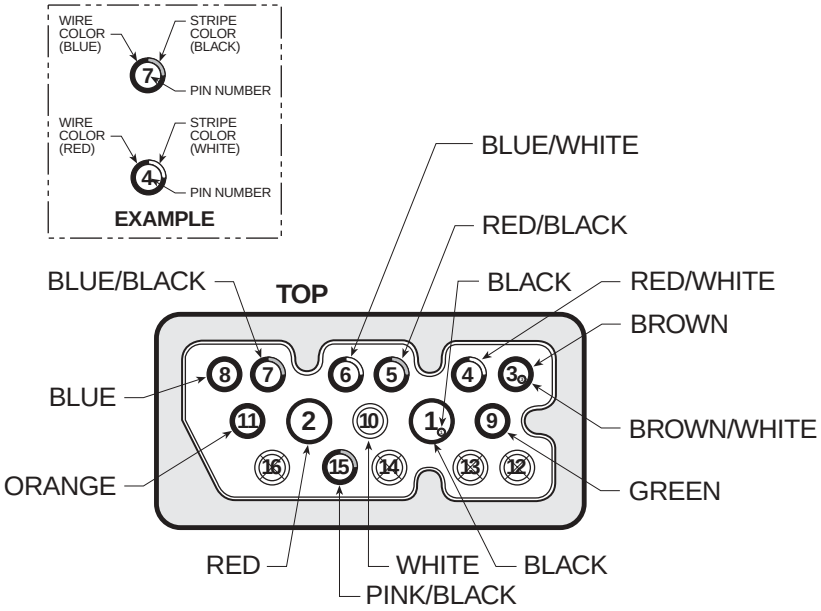

VEHICLE HARNESS PLUG (2002)

FACE VIEW LOOKING AT FEMALE CONNECTOR

FEMALE TERMINALS

BLIZZARD HARNESS PLUG (PLOW)

PIN NO.	COLOR	FUNCTION	AWG
1	BLACK	GROUND	4
	N/A	N/A	N/A
2	RED	12 VOLT DC (+)	4
3	BROWN	PUMP SOLENOID	18
4	RED/WHITE	RIGHT SLIDE BOX EXTEND	18
5	RED/BLACK	RIGHT SLIDE BOX RETRACT	18
6	BLUE/WHITE	LEFT SLIDE BOX EXTEND	18
7	BLUE/BLACK	LEFT SLIDE BOX RETRACT	18
8	BLUE	LEFT ANGLE	18
9	GREEN	RIGHT ANGLE	18
10	WHITE	LIFT	18
	WHITE/BLACK	LIFT	18
11	ORANGE	FLOAT	18
12	N/A	N/A	N/A
13	N/A	N/A	N/A
14	N/A	N/A	N/A
15	PINK/BLACK	12 (+) VDC FUSED	18
16	N/A	N/A	18

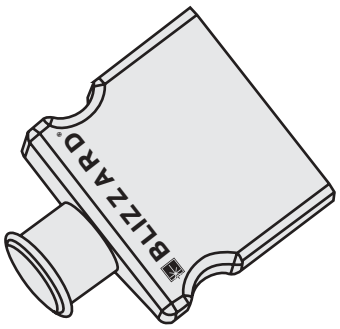

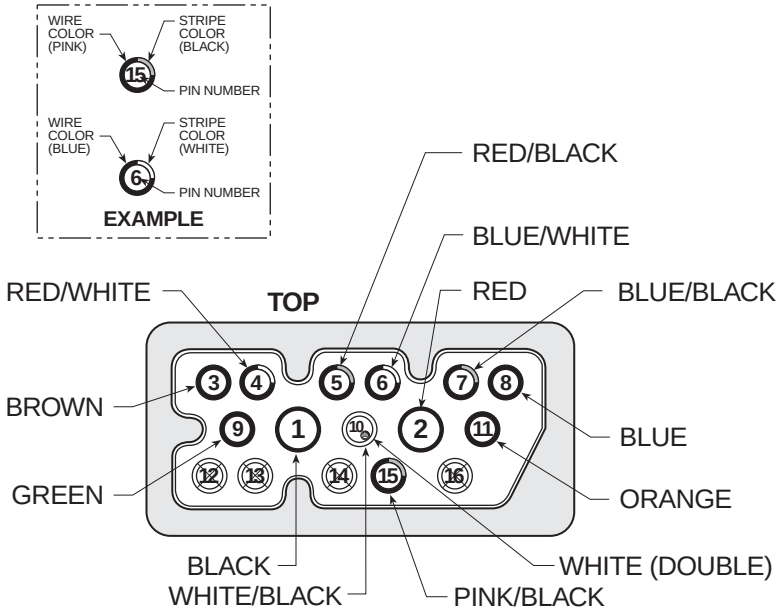

PLOW HARNESS PLUG (2002)

FACE VIEW LOOKING AT MALE CONNECTOR

MALE TERMINALS

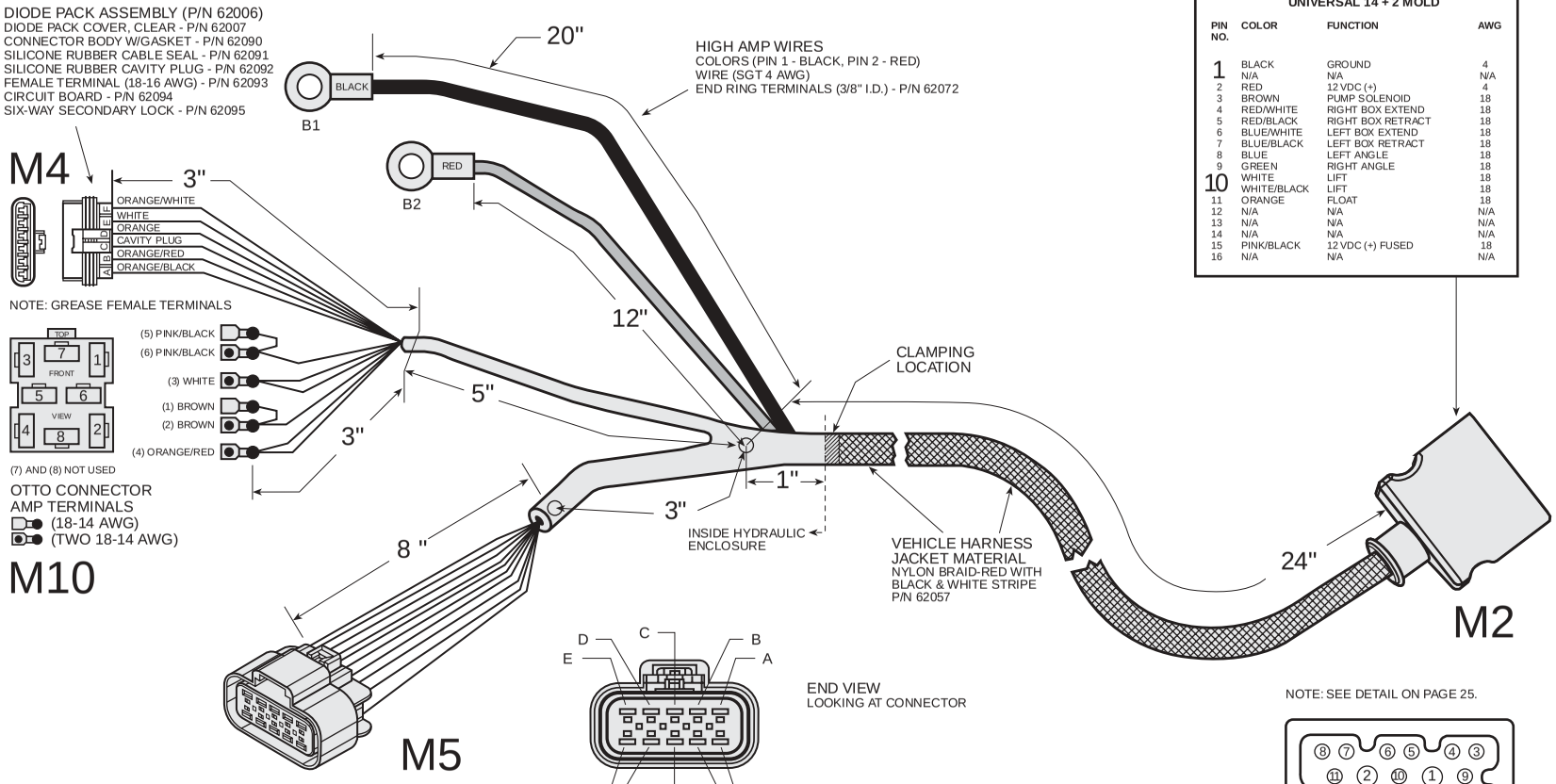

BLIZZARD PLUG (VEHICLE)
UNIVERSAL 14 + 2 MOLD

PIN NO.	COLOR	FUNCTION	AWG
1	BLACK	GROUND	4
	N/A	N/A	N/A
2	RED	12 VDC (+)	4
3	BROWN	PUMP SOLENOID	18
4	RED/WHITE	RIGHT BOX EXTEND	18
5	RED/BLACK	RIGHT BOX RETRACT	18
6	BLUE/WHITE	LEFT BOX EXTEND	18
7	BLUE/BLACK	LEFT BOX RETRACT	18
8	BLUE	LEFT ANGLE	18
9	GREEN	RIGHT ANGLE	18
10	WHITE	LIFT	18
	WHITE/BLACK	LIFT	18
11	ORANGE	FLOAT	18
12	N/A	N/A	N/A
13	N/A	N/A	N/A
14	N/A	N/A	N/A
15	PINK/BLACK	12 VDC (+) FUSED	18
16	N/A	N/A	N/A

NOTE: SEE DETAIL ON PAGE 25.

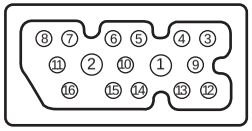

END VIEW
LOOKING AT CONNECTOR

PACKARD GT 280 ELECTRIC CONNECTOR (PLOW)

PIN NO.	COLOR	FUNCTION	AWG
A	ORANGE/BLACK	(S5) LOWER/FLOAT	18
B	ORANGE/WHITE	(S7) LIFT/FLOAT	18
C	WHITE/BLACK	(S6) LIFT	18
D	ORANGE/RED	(S8) HITCH LOWER	18
E	GREEN	(S4) ANGLE RIGHT	18
F	BLUE	(S3) ANGLE LEFT	18
G	BLUE/BLACK	(S9) LEFT SLIDE BOX RET.	18
H	BLUE/WHITE	(S10) LEFT SLIDE BOX EXT.	18
J	RED/BLACK	(S1) RIGHT SLIDE BOX RET.	18
K	RED/WHITE	(S2) RIGHT SLIDE BOX EXT.	18

PLOW HARNESS (2002)
WITH MOLDED PLUG
P/N 62039

NOT DRAWN TO SCALE

UNLESS OTHERWISE SPECIFIED
ALL DIMENSIONS IN INCHES

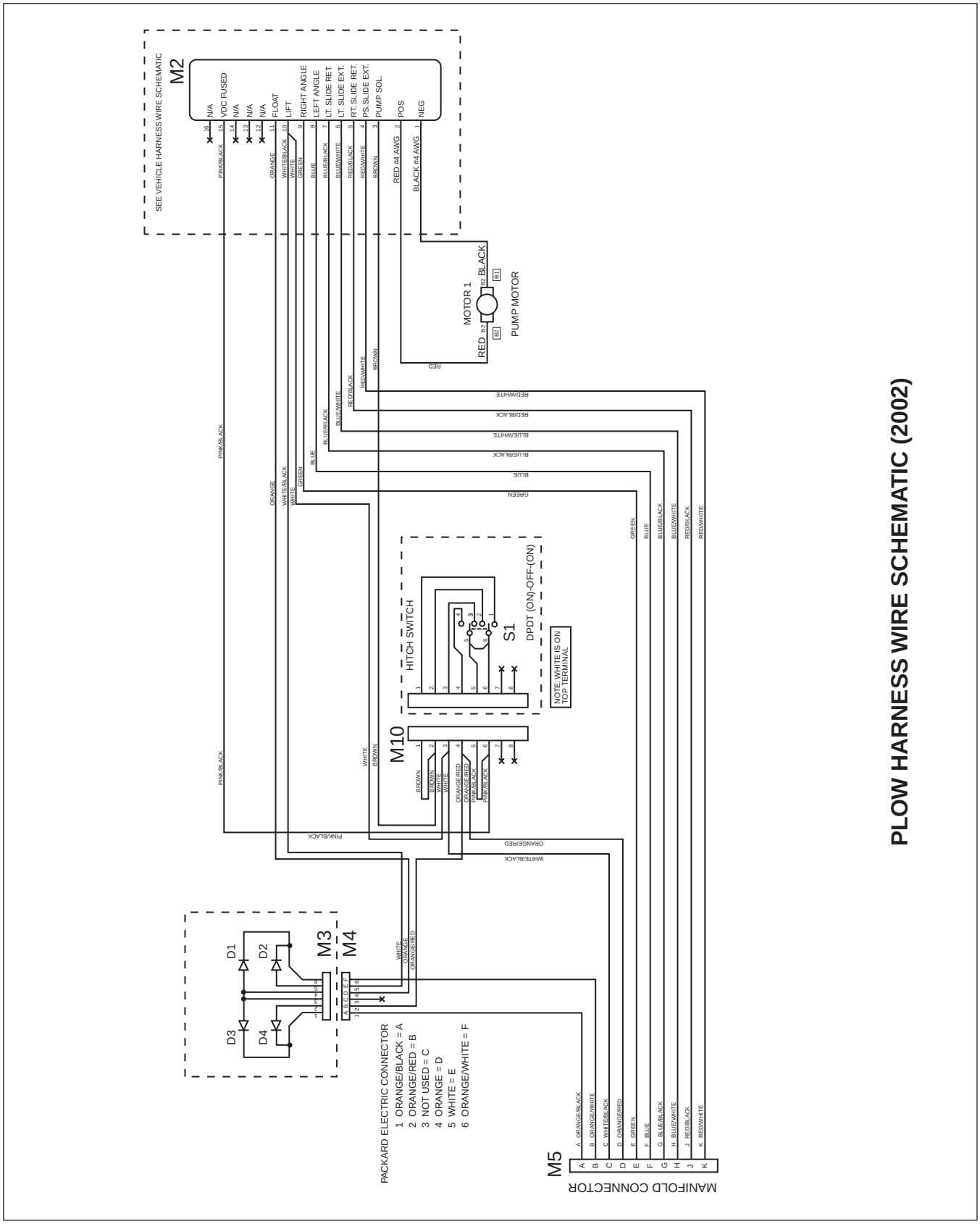
PLOW HARNESS WIRE SCHEMATIC (2002)
SEE VEHICLE HARNESS WIRE SCHEMATIC
M2
16 N/A
15 VDC FUSED
14 N/A
13 N/A
12 N/A
11 FLOAT
10 LIFT
9 RIGHT ANGLE
8 LEFT ANGLE
7 LT. SLIDE RET.
6 LT. SLIDE EXT.
5 RT. SLIDE RET.
4 PS. SLIDE EXT.
3 PUMP SOL.
2 POS
1 NEG
PINK/BLACK
ORANGE
WHITE/BLACK
WHITE
GREEN
BLUE
BLUE/BLACK
BLUE/WHITE
RED/BLACK
RED/WHITE
BROWN
RED #4 AWG
BLACK #4 AWG
RED
MOTOR 1
RED B2
B2
BLACK B2
B1
PUMP MOTOR
RED/WHITE
RED/BLACK
BLUE/WHITE
BLUE/BLACK
BLUE
GREEN
PINK/BLACK
ORANGE
WHITE/BLACK
WHITE
GREEN
BLUE
BLUE/BLACK
BLUE/WHITE
RED/BLACK
RED/WHITE
HITCH SWITCH
S1
DPDT (ON)-OFF-(ON)
NOTE: WHITE IS ON TOP TERMINAL
M10
WHITE
BROWN
BROWN
BROWN
WHITE
WHITE
ORANGE/RED
ORANGE/RED
PINK/BLACK
BROWN
PINK/BLACK
ORANGE/RED
WHITE/BLACK
D1
D2
D3
D4
M3
M4
WHITE
ORANGE/WHITE
ORANGE/RED
PACKARD ELECTRIC CONNECTOR
1 ORANGE/BLACK = A
2 ORANGE/RED = B
3 NOT USED = C
4 ORANGE = D
5 WHITE = E
6 ORANGE/WHITE = F
M5
MANIFOLD CONNECTOR
A ORANGE/BLACK
B ORANGE/WHITE
C WHITE/BLACK
D ORANGE/RED
E GREEN
F BLUE
G BLUE/BLACK
H BLUE/WHITE
J RED/BLACK
K RED/WHITE

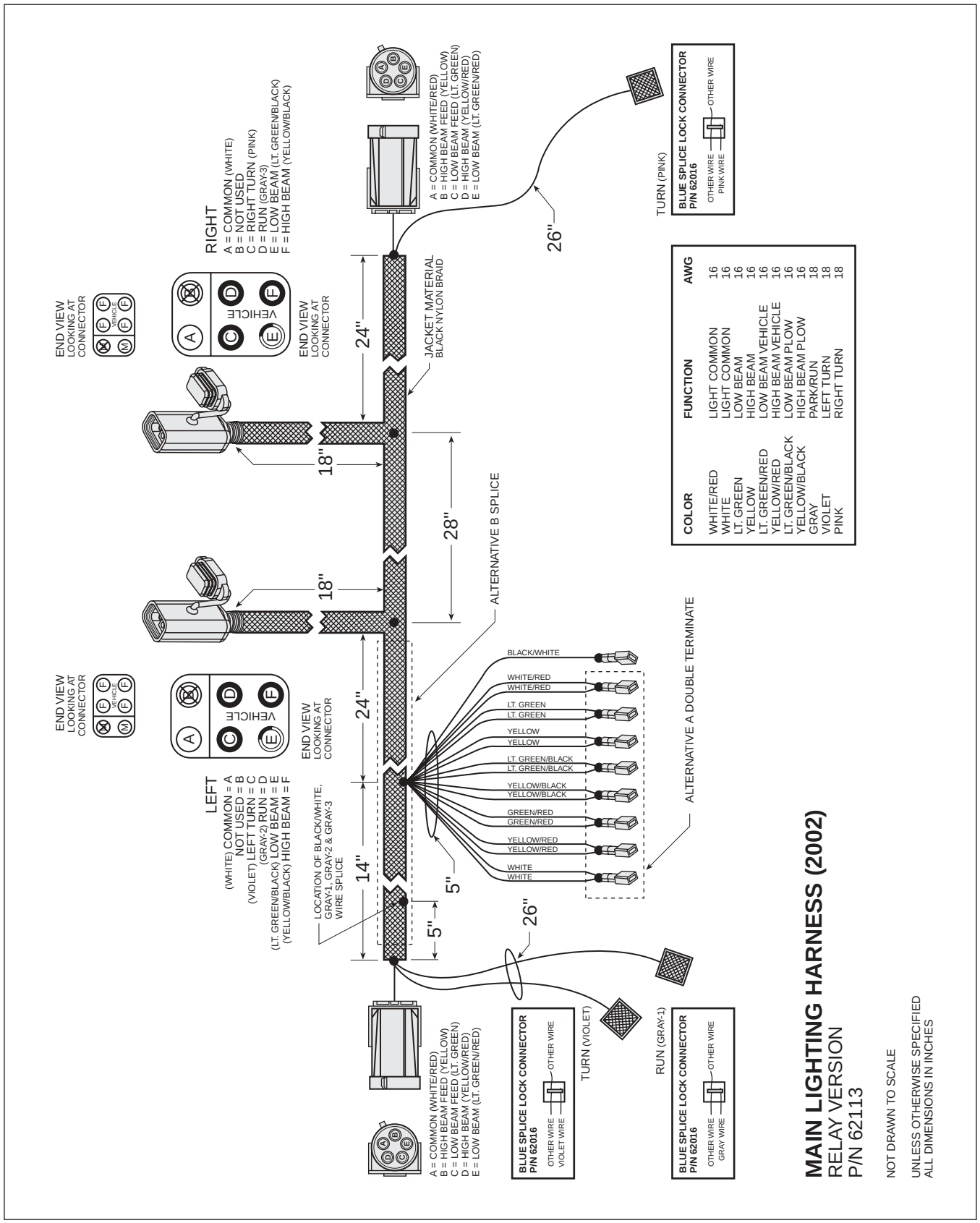
RIGHT
A = COMMON (WHITE)
B = NOT USED
C = RIGHT TURN (PINK)
D = RUN (GRAY-3)
E = LOW BEAM (LT. GREEN/BLACK)
F = HIGH BEAM (YELLOW/BLACK)
LEFT
(WHITE) COMMON = A
NOT USED = B
(VIOLET) LEFT TURN = C
(GRAY-2) RUN = D
(LT. GREEN/BLACK) LOW BEAM = E
(YELLOW/BLACK) HIGH BEAM = F
END VIEW LOOKING AT CONNECTOR
VEHICLE
VEHICLE
A = COMMON (WHITE/RED)
B = HIGH BEAM FEED (YELLOW)
C = LOW BEAM FEED (LT. GREEN)
D = HIGH BEAM (YELLOW/RED)
E = LOW BEAM (LT. GREEN/RED)
JACKET MATERIAL
BLACK NYLON BRAID
ALTERNATIVE B SPLICE
ALTERNATIVE A DOUBLE TERMINATE
LOCATION OF BLACK/WHITE, GRAY-1, GRAY-2 & GRAY-3 WIRE SPLICE
24"
18"
28"
14"
5"
26"
BLACK/WHITE
WHITE/RED
LT. GREEN
YELLOW
LT. GREEN/BLACK
YELLOW/BLACK
GREEN/RED
YELLOW/RED
WHITE
TURN (PINK)
TURN (VIOLET)
RUN (GRAY-1)
BLUE SPLICE LOCK CONNECTOR P/N 62016
OTHER WIRE
PINK WIRE
VIOLET WIRE
GRAY WIRE
COLOR FUNCTION AWG
WHITE/RED LIGHT COMMON 16
WHITE LIGHT COMMON 16
LT. GREEN LOW BEAM 16
YELLOW HIGH BEAM 16
LT. GREEN/RED LOW BEAM VEHICLE 16
YELLOW/RED HIGH BEAM VEHICLE 16
LT. GREEN/BLACK LOW BEAM PLOW 16
YELLOW/BLACK HIGH BEAM PLOW 16
GRAY PARK/RUN 18
VIOLET LEFT TURN 18
PINK RIGHT TURN 18
MAIN LIGHTING HARNESS (2002)
RELAY VERSION
P/N 62113
NOT DRAWN TO SCALE
UNLESS OTHERWISE SPECIFIED
ALL DIMENSIONS IN INCHES

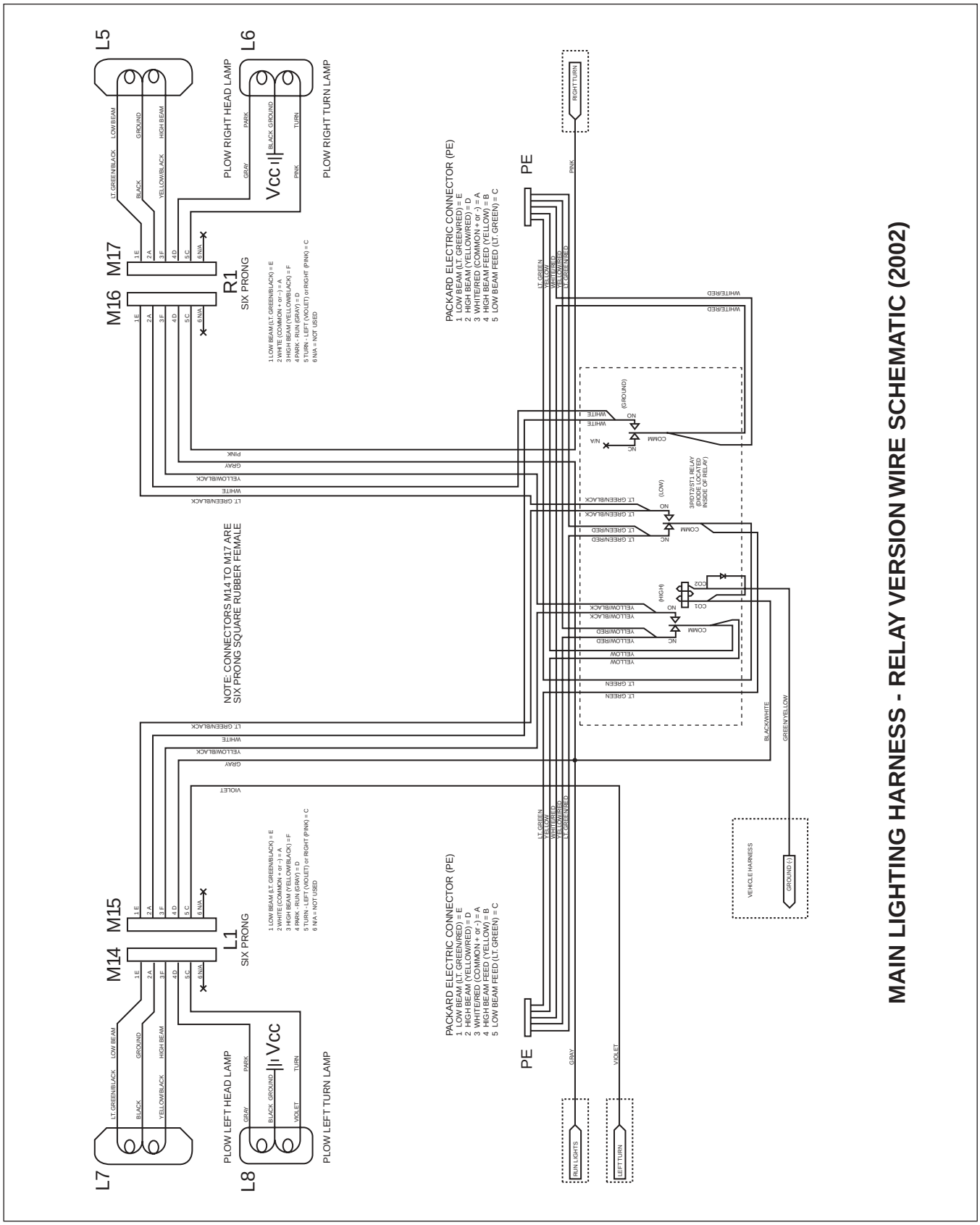
MAIN LIGHTING HARNESS - RELAY VERSION WIRE SCHEMATIC (2002)
L5
L6
L7
L8
M16
M17
M14
M15
R1
SIX PRONG
L1
SIX PRONG
PLOW RIGHT HEAD LAMP
PLOW RIGHT TURN LAMP
PLOW LEFT HEAD LAMP
PLOW LEFT TURN LAMP
Vcc
PE
PACKARD ELECTRIC CONNECTOR (PE)
1 LOW BEAM (LT. GREEN/RED) = E
2 HIGH BEAM (YELLOW/RED) = D
3 WHITE/RED (COMMON + or -) = A
4 HIGH BEAM FEED (YELLOW) = B
5 LOW BEAM FEED (LT. GREEN) = C
1 LOW BEAM (LT. GREEN/BLACK) = E
2 WHITE (COMMON + or -) = A
3 HIGH BEAM (YELLOW/BLACK) = F
4 PARK - RUN (GRAY) = D
5 TURN - LEFT (VIOLET) or RIGHT (PINK) = C
6 N/A = NOT USED
NOTE: CONNECTORS M14 TO M17 ARE
SIX PRONG SQUARE RUBBER FEMALE
3PDT23T1 RELAY
(FOUR LOCATED
INSIDE OF RELAY)
(GROUND)
(LOW)
(HIGH)
COM
NO
NC
N/A
COI
COI2
RIGHT TURN
RUN LIGHTS
LEFT TURN
VEHICLE HARNESS
GROUND (-)
BLACK/WHITE
GREEN/YELLOW

BLIZZARD PLUG (VEHICLE)

PIN NO.	COLOR	FUNCTION	AWG
1	BLACK (A1)	GROUND	4
2	BLACK	GROUND	18
3	RED (A2)	12 VDC (+)	4
4	BROWN/WHITE	PUMP SOLENOID TO RING	18
5	BROWN	PUMP SOLENOID TO MOLEX	18
6	RED/WHITE	RIGHT BOX EXTEND	18
7	RED/BLACK	RIGHT BOX RETRACT	18
8	BLUE/WHITE	LEFT BOX EXTEND	18
9	BLUE/BLACK	LEFT BOX RETRACT	18
10	BLUE	LEFT ANGLE	18
11	GREEN	RIGHT ANGLE	18
12	WHITE	LIFT	18
13	ORANGE	FLOAT	18
14	N/A	N/A	N/A
15	N/A	N/A	N/A
16	PINK/BLACK	12 VDC (+) FUSED	18
	N/A	N/A	N/A

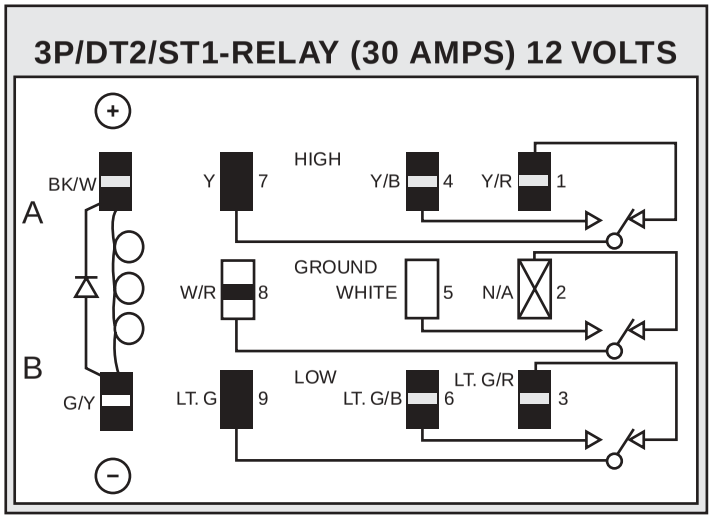

"MOLEX" FREE HANGING RECEPTACLE .093 (12) PIN POWER CONNECTOR WITH "MOLEX" FEMALE TERMINAL

PIN NO.	COLOR	FUNCTION	AWG
1	RED/WHITE	RIGHT SLIDE BOX EXTEND	18
2	RED/BLACK	RIGHT SLIDE BOX RETRACT	18
3	RED	SWITCH 12 VOLT +	18
4	ORANGE	FLOAT	18
5	BLUE/WHITE	LEFT SLIDE BOX EXTEND	18
6	BLUE/BLACK	LEFT SLIDE BOX RETRACT	18
7	BLACK	GROUND	18
8	WHITE	LIFT	18
9	BROWN	PUMP SOLENOID	18
10	PINK/BLACK	12 (+) DC FUSED	18
11	GREEN	RIGHT ANGLE	18
12	BLUE	LEFT ANGLE	18

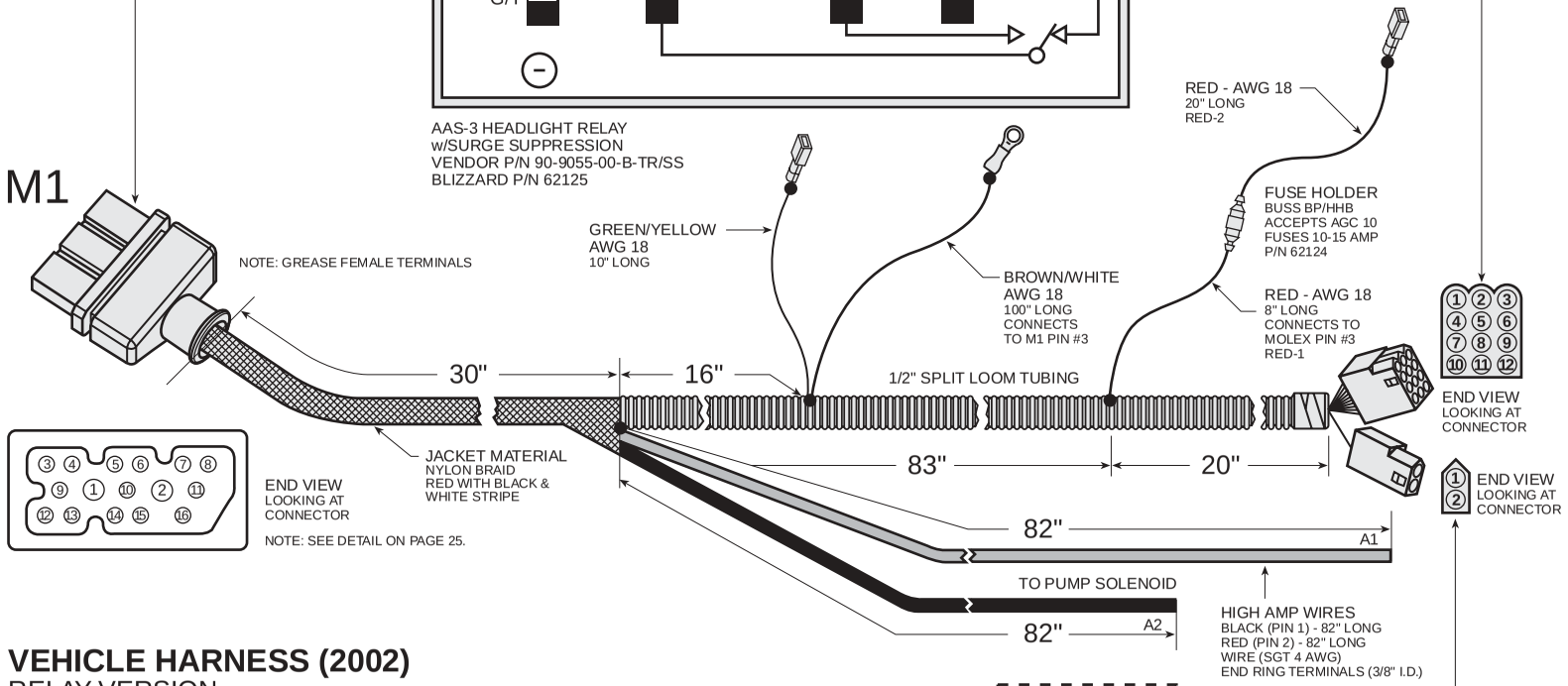

"MOLEX" FREE HANGING RECEPTACLE .093 (2) PIN POWER CONNECTOR WITH "MOLEX" FEMALE TERMINAL

PIN NO.	COLOR	FUNCTION	AWG
1	GREEN/YELLOW	RELAY GROUND	18
2	N/A	N/A	N/A

VEHICLE HARNESS (2002)

RELAY VERSION
P/N 62111

NOT DRAWN TO SCALE

UNLESS OTHERWISE SPECIFIED
ALL DIMENSIONS IN INCHES

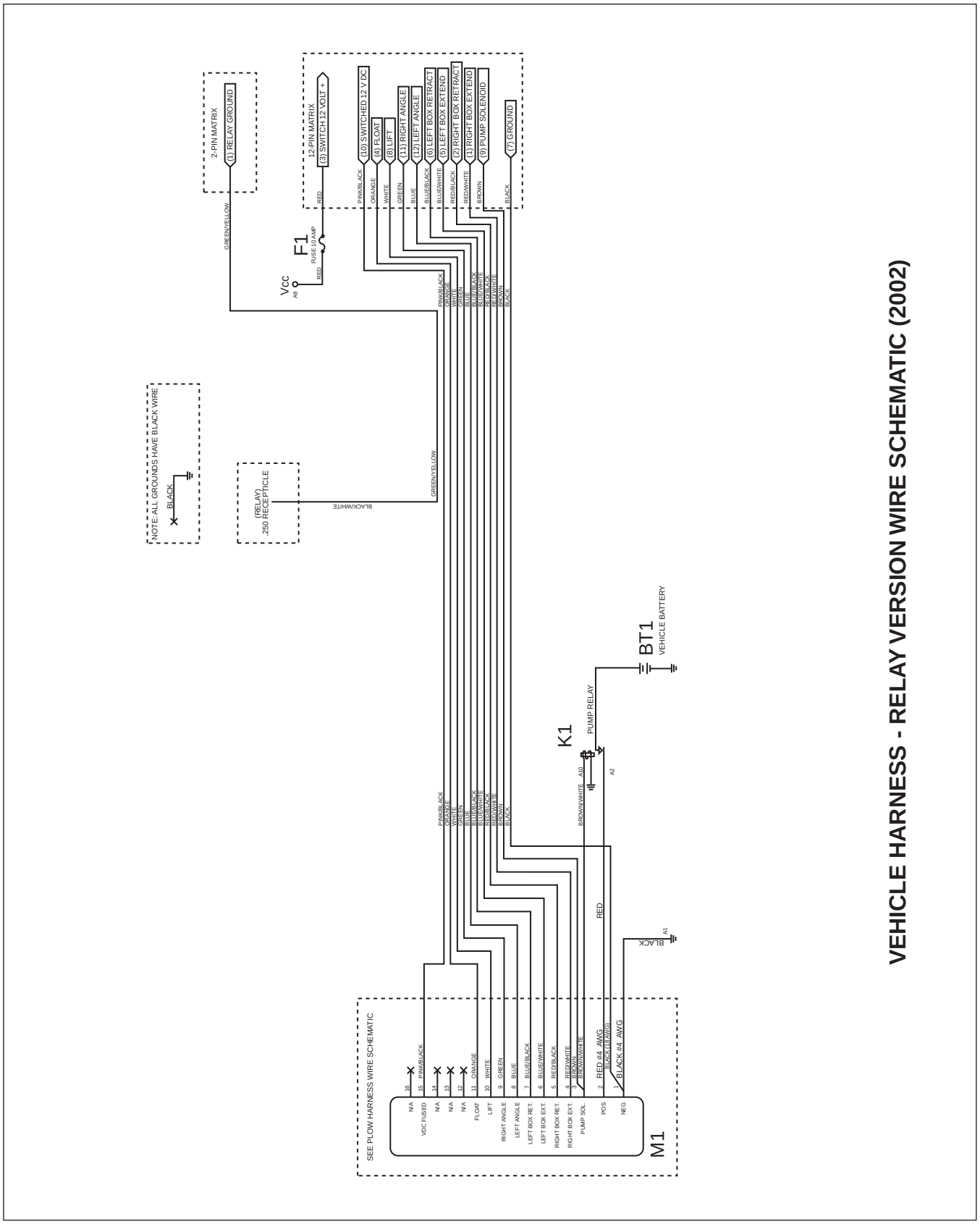

VEHICLE HARNESS - RELAY VERSION WIRE SCHEMATIC (2002)

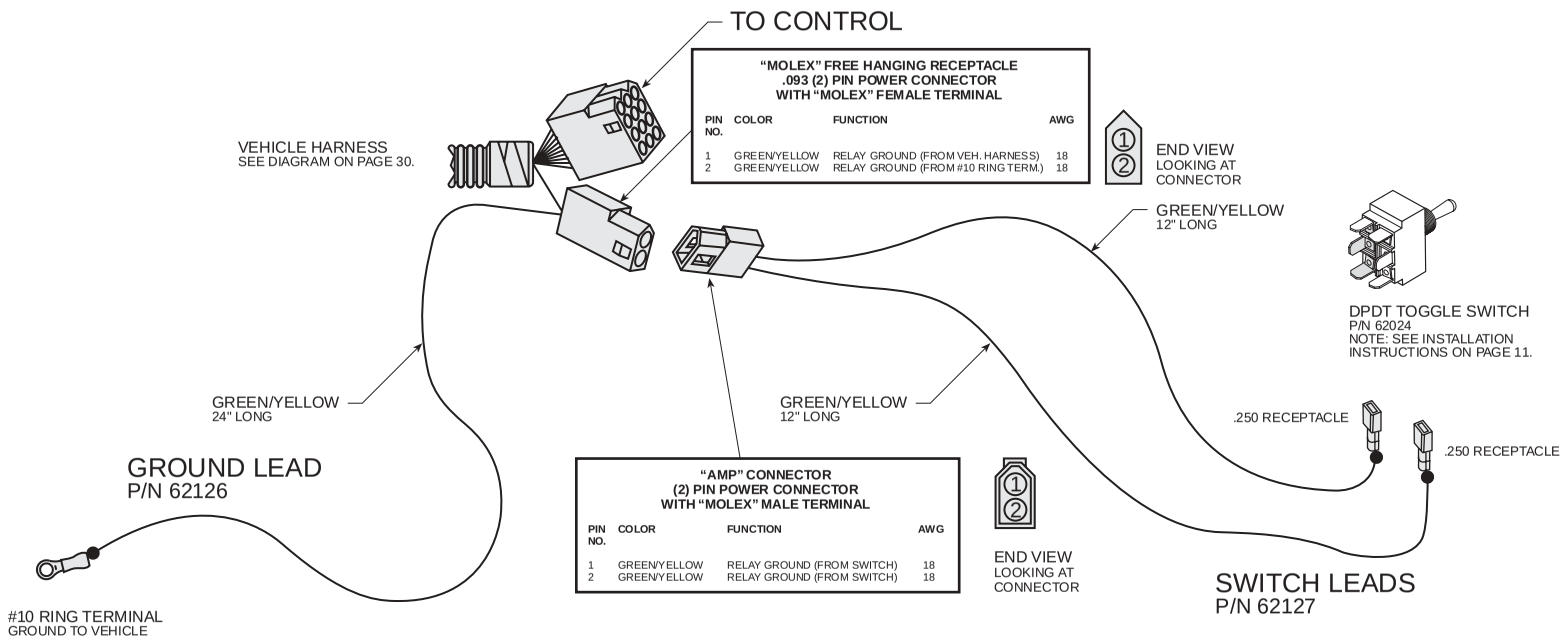

ON/OFF SWITCH LEADS & GROUND LEAD (2002)

FOR BLIZZARD RELAY HARNESS WHEN USING A CONTROL STATION
WITH A SINGLE POWER SWITCH

NOT DRAWN TO SCALE

UNLESS OTHERWISE SPECIFIED
ALL DIMENSIONS IN INCHES

Torque Specifications

Grade Identification Marking for J429 - Grade 5 Bolt
- Material: Medium carbon steel: quenched and tempered
- Minimum Proof Strength: 85,000 psi
- Minimum Tensile Strength: 120,000 psi
- Core Hardness Rockwell (min.): C25, (max.): C34
- Minimum Yield Strength: 92,000 psi

Grade Identification Marking for J429 - Grade 8 Bolt
- Material: Medium carbon alloy steel:quenched and tempered
- Minimum Proof Strength: 120,000 psi
- Minimum Tensile Strength: 150,000 psi
- Core Hardness Rockwell (min.): C33, (max.): C39
- Minimum Yield Strength: 130,000 psi

Nominal Thread Size	SAE J429 - Grade 5			Nominal Thread Size	SAE J429 - Grade 8		
	Clamp Loads (lbs.)	Tightening Torque			Clamp Loads (lbs.)	Tightening Torque	
		"Lubricated"	"Dry"			"Lubricated"	"Dry"
1/4-20	2,000	75 in-lbs	100 in-lbs	1/4-20	2,850	107 in-lbs	143 in-lbs
5/16-18	3,350	157 in-lbs	210 in-lbs	5/16-18	4,700	220 in-lbs	305 in-lbs
3/8-16	4,950	23 ft-lbs	31 ft-lbs	3/8-16	6,950	32.5 ft-lbs	44 ft-lbs
7/16-14	6,800	37 ft-lbs	50 ft-lbs	7/16-14	9,600	53 ft-lbs	70 ft-lbs
1/2-13	9,050	57 ft-lbs	75 ft-lbs	1/2-13	12,800	80 ft-lbs	107 ft-lbs
9/16-12	11,600	82 ft-lbs	109 ft-lbs	9/16-12	16,400	115 ft-lbs	154 ft-lbs
5/8-11	14,500	113 ft-lbs	151 ft-lbs	5/8-11	20,300	159 ft-lbs	21 ft-lbs
3/4-10	21,300	200 ft-lbs	266 ft-lbs	3/4-10	30,100	282 ft-lbs	376 ft-lbs
7/8-9	29,435	321 ft-lbs	430 ft-lbs	7/8-9	41,550	454 ft-lbs	606 ft-lbs
1-8	38,600	482.5 ft-lbs	640 ft-lbs	1-8	54,540	680 ft-lbs	900 ft-lbs

Grade Identification Marking for Metric - Grade 8.8 Bolt
- Material: Medium carbon steel: quenched and tempered
- Minimum Proof Strength: 580 MPa
- Minimum Tensile Strength: 800 MPa
- Core Hardness Rockwell (min.): C22, (max.): C32
- Minimum Yield Strength: 640 MPa

Grade Identification Marking for Metric - Grade 10.9 Bolt
- Material: Low carbon alloy steel: quenched and tempered
- Minimum Proof Strength: 830 MPa
- Minimum Tensile Strength: 1040 MPa
- Core Hardness Rockwell (min.): C32, (max.): C39
- Minimum Yield Strength: 940 MPa

Diameter (millimeters)	Metric Class 8.8			Diameter (millimeters)	Metric Class 10.9		
	Clamp Loads (Newton)	Tightening Torque			Clamp Loads (Newton)	Tightening Torque	
		"Lubricated"	"Dry"			"Lubricated"	"Dry"
5	6177	4.63 N-m	6.18 N-m	5	8840	6.63 N-m	8.84 N-m
6	8743	7.87 N-m	10.5 N-m	6	12512	11.3 N-m	15.0 N-m
7	12570	13.2 N-m	17.6 N-m	7	17990	18.9 N-m	25.2 N-m
8	15921	19.1 N-m	25.5 N-m	8	22784	27.3 N-m	36.5 N-m
10	25230	37.8 N-m	50.5 N-m	10	36105	54.1 N-m	72.2 N-m
12	36670	66.0 N-m	88.0 N-m	12	52475	94.5 N-m	125 N-m
14	50025	105 N-m	140 N-m	14	71587	150 N-m	200 N-m
16	70650	170 N-m	226 N-m	16	97732	235 N-m	313 N-m
18	86400	233 N-m	311 N-m	18	119520	323 N-m	430 N-m
20	110250	330 N-m	441 N-m	20	152513	458 N-m	610 N-m

37° JIC Flare Torque Values

Turns	Size	ft-lbs min./max.
N/A	-02	6 - 7
N/A	-03	8 - 9
2	-04	11 - 12
2	-05	14 - 15
1-1/2	-06	18 - 20
1-1/2	-08	36 - 39
1-1/2	-10	57 - 63
1-1/4	-12	79 - 88
1	-14	94 - 103
1	-16	108 - 113
1	-20	127 - 133
1	-24	158 - 167
1	-32	245 - 258

Assembly Steps w/Visual Check

1. Make sure the tubing and threads are clean.
2. Lubricate the threads with 10W hydraulic oil.
3. Hand tighten the nut/sleeve to appox. 30 in-lbs.
4. Make alignment marks on the nut and fitting.
5. Proceed to tighten to turns or ft-lb values.
6. When fully tightened make a 2nd set of alignment marks at the fully tightened position.

Note: Torque values specified are for threads lubricated with 10W hydraulic oil.

Sizes -02 through -08 are less tolerant to over-torque abuse. This will reduce the clamping force resulting in loss of seal and reduction in flow.

O-Ring Boss Torque Values

Size	ft-lbs min./max.
-02	6 - 7
-03	8 - 10
-04	13 - 15
-05	17 - 21
-06	22 - 25
-08	40 - 43
-10	43 - 57
-12	68 - 75
-14	90 - 99
-16	112 - 123
-20	146 - 200
-24	154 - 215
-32	218 - 290

O-Ring Boss Assembly

1. Verify the port, O-ring, sealing surfaces, and threads are clean and free of damage.
2. Lubricate the threads and the O-ring with 10W hydraulic oil.
3. For an adjustable O.R.B., completely back-off the lock nut and the washer.
4. Hand tighten the fitting until it contacts the port spotface. Point the elbow or tee in the desired direction and hold.
5. Proceed to tighten to the proper specified torque value.

Note: Torque values specified are for threads lubricated with 10W hydraulic oil.

Disclaimer: All torque values included in the charts above are advisory only, and their use by anyone is entirely voluntary. Reliance on the contents for any purpose by anyone is the sole risk of that person and Blizzard Corporation is not responsible for any loss, claim or damages arising therefrom. Blizzard Corporation has made an effort to present the above contents accurately, but we do not guarantee its completeness or validity. This information is subject to change at any time, without notice. Blizzard Corporation makes no representations or warranties, express or implied, in connection with the information.

Troubleshooting Guide

Prior to diagnosing your straight blade, verify that all connectors (plow and vehicle wire harness plugs, headlight adapters, control box, fused hot lead, draw latch switch, solenoid ground wire connection, coil wire lead harness, plow headlight harnesses) are free of corrosion and are well lubricated with dielectric grease. Insuring that all connectors are in good working order will save time in determining your snowplow's service needs.

Problem	Probable Cause(s)	Suggested Remedy
Pump will not run.	Plow wire harness may not be properly connected to the vehicle wire harness.	Verify the wire harnesses are properly connected. Review the instruction on pages 9-12.
	Power or ground cables to the battery, pump or solenoid may not be properly connected.	Properly connect all cables. Clean and lubricate with dielectric grease. If power does not resume, check the continuity of all cables to find the break.
Pump will not run, power to the solenoid.	The black ground wire and brown/white activation wire on the solenoid are not properly connected.	Properly connect both cables. Test for power by initiating any joystick function except the float. Note: The POWER rocker switch must be in the "ON" position to properly test any plow function. If the solenoid is grounded and no power exists, diagnose the plow & truck wire harnesses.
Pump will not run with power to the solenoid. Brown/white activation wire and ground are properly connected.	The red, hot wire to the pump motor is not properly connected.	Connect red wire and check the black ground wire. If problem is not resolved, the solenoid could be inoperable or the pump motor may be worn. Replace the solenoid if there is no power to it. Replace the pump motor if it is receiving power.
Pump will not turn off. Do not allow the pump motor to continuously run. Unplug both of the harnesses until the pump can be tested or a Blizzard Dealer can diagnose the problem.	Solenoid may be damaged.	Disconnect the brown/white activation wire from the solenoid. If the problem is not resolved, replace the solenoid.
	Short in the joystick control or wire harness.	Disconnect the joystick in the cab. If the solenoid turns off, there is a short in the electrical system.
Pump runs but plow functions are slow.	Fluid level in the pump reservoir is low. Fluid is leaking.	Add fluid to within 3/4" from the top of the tank. Check for leaks around the pump, manifold and cylinders.
	System pressure may be set too low. Increasing the pressure excessively will increase the amperage draw. This could damage the vehicle wire harness.	Adjust the pressure. Remove the hex cap on top of the pump and turn the screw clockwise. Proper system pressure should be set at 2400 PSI. Test functions and repeat procedure as needed.
	Amperage from the vehicle's alternator is too low.	Repair or replace vehicle alternator. System amperage draw is 150 Amps at 1500 PSI.
	Pump filter may be clogged.	Remove the pump tank and thoroughly clean the filter.
A-frame latch will not move.	Draw latch is binding the A-frame latch.	Lower the draw latch to relieve binding on the A-frame latch and reposition the A-frame latch as needed.
Plow will not lift. Pump works properly.	Control station in the cab may not be properly connected.	Connect the power connector from the control to the vehicle wire harness.
	A-frame latch is in the (down) locked position.	Lift the A-frame latch into the raised position.
	Diode pack may be corroded or could have failed.	Clean diode pack thoroughly and/or replace.

Problem	Probable Cause(s)	Suggested Remedy
Plow will not lift. Pump works properly. (Continued from page 34.)	Coils on the manifold may be damaged.	Remove both S6 & S7 coils from the cartridge valves. Position a screwdriver inside of the coil and push the draw latch connect/disconnect toggle switch upward. The screwdriver should be magnetically drawn to the coil. Replace the coil if there is no action.
Plow will not lift with magnification to the S6 & S7 coils.	Hydraulic lock in the manifold. This occurs if the voltage is too low on the coils – should be 11.8 volts.	Loosen cartridge valve S6 or S7 to relieve pressure and retighten. DO NOT OVERTIGHTEN! Valves should be torqued to a maximum of 24 ft. lbs.
	Solenoid cartridge valve may be contaminated.	Remove any foreign objects that may be obstructing proper valve operation. Replace if not operating properly after cleaning.
Plow will not stay angled when plowing.	The angle pressure relief valve is set too low. NOTE: Increasing the pressure relief valve will cause damage to your plow. Do not set the pressure relief greater than 3000 PSI (See illustration below)	Check the pressure relief by testing the valve inline with the cylinder. Attach a tee fitting to the angle cylinder hydraulic adapter and connect the hose and pressure gauge to the tee. Push the plow against a solid object and record the pressure reading. Note: The setting should not exceed 3000 PSI.
Plow will not angle, pump works.	Review all probable causes above.	NOTE: Verify solenoids S3 & S4 for angle functions.
Plow lowers too slow.	Variable flow control valve is not adjusted properly. (See illustration below)	Turn flow control valve counterclockwise in small increments and test. NOTE: Never make adjustments when the plow is in the raised position! Fluid pressure will make the valve difficult to adjust and serious injury or death can occur from a falling plow.
Plow drops sporadically.	Variable flow control valve is opened too far.	Turn clockwise 1/16 of a turn and test. See warning above.
Headlights will not switch from the vehicle to the snowplow.	No power or ground to the headlight relay.	Verify green/yellow (G/Y) wire for the ground is connected. Verify black/white (BK/W) wire for the power is connected. If both are connected properly, replace the headlight relay.

Should your snowplow develop other problems not indicated in the Troubleshooting Guide, contact your local dealer for technical assistance and/or replacement parts.

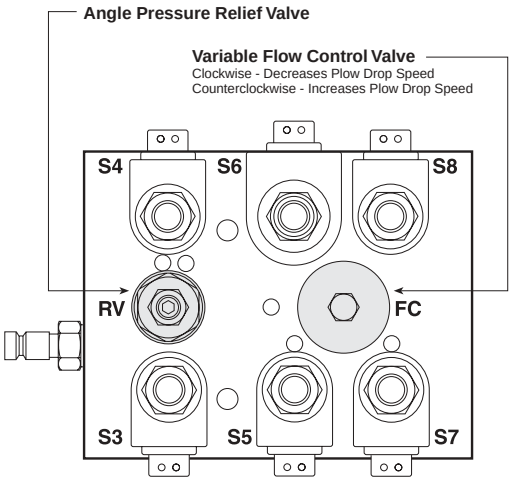

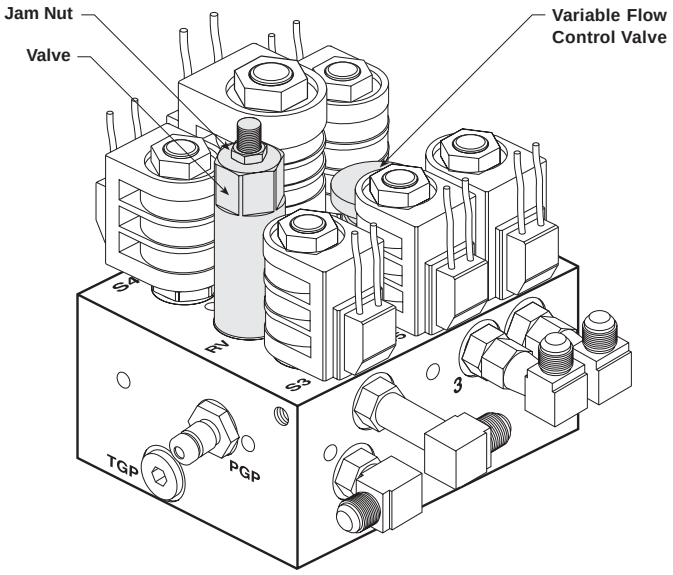

BLIZZARD®
STRAIGHT BLADES

LIMITED CONSUMER WARRANTY

This warranty covers defects in material and workmanship except as set forth below.

WARRANTED PARTY:

This warranty applies only to the “Original Purchaser” who purchased this plow from an Authorized Blizzard Dealer, for personal, family or household use.

TERM OF WARRANTY:

This Blizzard straight blade snowplow is warranted for the following period:
Parts and labor are warranted for one year from date of purchase.

BLIZZARD CORPORATION’S WARRANTY REMEDY:

Blizzard Corporation will, at its sole discretion, repair or replace defective parts at no charge.

CUSTOMERS RESPONSIBILITY:

To obtain warranty service, the purchaser must return the defective snowplow to any Authorized Blizzard Dealer. The purchaser must verify the original purchase date. Transportation costs to and from the dealer will be the responsibility of the purchaser.

ITEMS NOT COVERED UNDER THIS WARRANTY:

This limited warranty does not cover the following:

1. Expendable parts such as cutting edges, plow shoes, hoses, fasteners, blade guides, paint finish, etc.
2. Any snowplow or part thereof which has been repaired or altered by anyone other than an Authorized Blizzard Dealer.
3. Any snowplow or part thereof which has been subject to neglect, misuse, accident, improper installation, maintenance, or storage. This includes, but is not limited to, corrosion of any electrical components.
4. Snowplows mounted on vehicles other than those for whom Blizzard Corporation has provided a specific undercarriage system.
5. Blizzard Corporation does not assume liability for damage to the purchaser's vehicle resulting from the attachment and use of a Blizzard straight blade snowplow. Vehicle risk is the sole responsibility of the purchaser.

WARRANTY LIMITATIONS:

THIS WARRANTY IS OFFERED IN LIEU OF ANY OTHER EXPRESS WARRANTY.

THE DURATION OF ALL IMPLIED WARRANTIES, INCLUDING BUT NOT LIMITED TO THE IMPLIED WARRANTIES OF MERCHANTABILITY AND FITNESS FOR A PARTICULAR PURPOSE, ARE LIMITED TO THE DURATION OF THIS WARRANTY.

BLIZZARD CORPORATION'S LIABILITY IS EXPRESSLY LIMITED TO REPAIR OR REPLACEMENT OF DEFECTIVE PARTS. BLIZZARD CORPORATION SHALL NOT BE LIABLE FOR CONSEQUENTIAL, INCIDENTAL OR CONTINGENT DAMAGES WHATSOEVER, EVEN IF DAMAGES ARE CAUSED BY THE NEGLIGENCE OR FAULT OF BLIZZARD CORPORATION.

State Laws: Some states do not allow exclusion of incidental or consequential damages or the limitations on how long an implied warranty lasts, so these limitations or exclusions may not apply to you. This warranty gives you specific legal rights and you may also have other rights which vary from state to state.

This warranty does not apply if you purchased your snowplow for other than personal, family, or household use. If purchased for other than personal, family or household use, refer to the Blizzard Straight Blade Commercial Warranty.

BLIZZARD®
CORPORATION

95 AIRPARK BOULEVARD ■ CALUMET, MICHIGAN 49913 ■ [906] 482-5555

1029-7-99 REV 8/01

BLIZZARD®
STRAIGHT BLADES

COMMERCIAL WARRANTY

This warranty covers defects in material and workmanship except as set forth below.

WARRANTED PARTY:

This warranty applies only to the “Original Purchaser” who purchased this plow from an Authorized Blizzard Dealer, for commercial use.

TERM OF WARRANTY:

This Blizzard straight blade snowplow is warranted for the following period:
Parts and labor are warranted for one year from date of purchase.

BLIZZARD CORPORATION’S WARRANTY REMEDY:

Blizzard Corporation will, at its sole discretion, repair or replace defective parts at no charge.

CUSTOMERS RESPONSIBILITY:

To obtain warranty service, the purchaser must return the defective snowplow to any Authorized Blizzard Dealer within the warranty period. The purchaser must verify the original purchase date. Transportation costs to and from the Dealer will be the responsibility of the purchaser.

ITEMS NOT COVERED UNDER THIS WARRANTY:

This warranty does not cover the following:

1. Expendable parts such as cutting edges, plow shoes, hoses, fasteners, blade guides, paint finish, etc.
2. Any snowplow or part thereof which has been repaired or altered by anyone other than an Authorized Blizzard Dealer.
3. Any snowplow or part thereof which has been subject to neglect, misuse, accident, improper installation, maintenance, or storage. This includes, but is not limited to, corrosion of any electrical components.
4. Snowplows mounted on vehicles other than those for whom Blizzard Corporation has provided a specific undercarriage system.
5. Blizzard Corporation does not assume liability for damage to the purchaser's vehicle resulting from the attachment and use of a Blizzard straight blade snowplow. Vehicle risk is the sole responsibility of the purchaser.

LIMITS OF BLIZZARD CORPORATION’S LIABILITIES:

BLIZZARD CORPORATION'S LIABILITY IS EXPRESSLY LIMITED TO REPAIR OR REPLACEMENT OF DEFECTIVE PARTS. BLIZZARD CORPORATION SHALL NOT BE LIABLE FOR CONSEQUENTIAL, INCIDENTAL OR CONTINGENT DAMAGES WHATSOEVER, EVEN IF DAMAGES ARE CAUSED BY THE NEGLIGENCE OR FAULT OF BLIZZARD CORPORATION.

THE FOREGOING WARRANTIES ARE EXCLUSIVE AND IN LIEU OF ALL OTHER EXPRESSED AND IMPLIED WARRANTIES INCLUDING, BUT NOT LIMITED TO, THE IMPLIED WARRANTIES OF MERCHANTABILITY AND FITNESS FOR A PARTICULAR PURPOSE.

This warranty does not apply if you purchased your snowplow for personal, family, or household use.
In this case, refer to the Blizzard Straight Blade Limited Consumer Warranty.

BLIZZARD®
CORPORATION

95 AIRPARK BOULEVARD ■ CALUMET, MICHIGAN 49913 ■ [906] 482-5555

1030-7-99 REV 8/01

700LD
760LD
760
800

BLIZZARD®
CORPORATION

95 Airpark Boulevard
Calumet, MI 49913
[888] 680-8600
[906] 482-5555
[906] 482-5445 Fax
www.blizzardplows.com

Blizzard and Power Hitch are trademarks of Blizzard Corporation. Blizzard is registered in the United States Patent and Trademark Office. Loctite and 242 are registered trademarks of Loctite Corporation, USA. Velcro is a registered trademark of Velcro Industries B.V. Ford is a trademark of Ford Motor Company. Chevrolet, GM and Silverado are registered trademarks of General Motors Corporation. Dodge is a trademark of DaimlerChrysler. Blizzard straight blade snowplows are protected by U.S. Patents 6,276,076 B1 and 6,393,737; patents pending. Copyright © 2002 Blizzard Corporation. All rights reserved. Made and printed in the USA.1265-05-02