Cancels: IIK 555A-18-36 IIK 555A-18-37
6–02

Installation Instructions
Part Numbers
CPLOWAMB001A00, CPLOWAMB002A00

NOTE: Read the entire instruction manual before starting the installation.

SAFETY CONSIDERATIONS

Installation, start-up and servicing of this equipment can be hazardous due to system pressures, electrical components, and equipment location (roofs, elevated structures, etc.)

Only trained, qualified installers and service technicians should install, start up, and service this equipment.

When working on this equipment, observe precautions in the literature, tags, stickers, and labels attached to the equipment, and any other safety precautions that may apply.

⚠ WARNING

Open all remote disconnects before servicing this equipment. Electrical shock could result in serious injury or death.

INTRODUCTION

These instructions cover the installation of the Motormaster II Controller head pressure control device. Refer to the Installation section for directions. Louvered panels are required for this installation; see Note 9 in the Installation section of this document and Tables 1 and 2 for more information.

Table 1—Add Louvered Panels to These Units

48GS	582A	PY1P-B
48GX	583A	PY2P-B
50GS	701A	PA1P-B
50GX	702A	PA2P-B
50JS	601A	PH1P-B
50JX	602A	PH2P-B

Table 2—Do NOT Add Louvered Panels to These Units

50SX	557A	
50HX	657A	
50ZP	564A	PA1Z
50ZH	664A	PH1Z
48GP*	583B*	
50GL*	702B*	
50JZ*	602B*	
48JZ*	683B*	

* Louvered panels are standard on these units.

DESCRIPTION AND USAGE

The Motormaster II head pressure controller is a cycle control device activated by a temperature sensor mounted on a header tube of the outdoor coil (see Fig. 1). It is designed to cycle the outdoor-fan motors to maintain the saturated condensing temperature within normal operating limits of approximately 130 to 110°F high, 70 to 50°F low (55–43°C high, 21 to 10°C low). The controller maintains working head pressure at low ambient temperatures down to –20°F when properly installed.

INSTALLATION

1. Disconnect power to unit. *Install lockout tag.*
2. Remove unit access panel.
3. Disconnect outdoor-fan motor (OFM). (See Wiring Schematic, Fig. 8 or 9)
4. Remove OFM wires from unit control box.
5. Mount Motormaster II Controller on unit. Refer to Fig. 3–6. The controller must be mounted vertically with the leads at the bottom. Using the Mounting Template (Fig. 10) as a guide, drill mounting holes. To ensure electrical ground, insert star washers (supplied with the controller) under the heads of mounting screws.

NOTE: Field-supplied conduit must be used between controller and access panel (or wire into unit entrance).

6. Determine sensor location by referring to Fig. 11–25. Route sensor wire through bottom of Motormaster II Controller (Fig. 1.) to sensor location specified. Prior to installation, apply conductive grease supplied with accessory to contact surface of sensor.

⚠ CAUTION

Sensor assembly is delicate. Handle with care.

7. Attach sensor to top half of header tube as shown in Fig. 2. Installed sensor must be left uninsulated.
8. Power wiring must comply with all local and National Electrical Code (NEC) and International Electric Code (IEC) requirements. Refer to Fig. 8 and 9 for power wiring connections. Coil up all excess wire and secure. (Yellow and blue wires, from controller, must run to unit contactor and connect on the load side.)

Manufacturer reserves the right to discontinue, or change at any time, specifications or designs without notice and without incurring obligations.

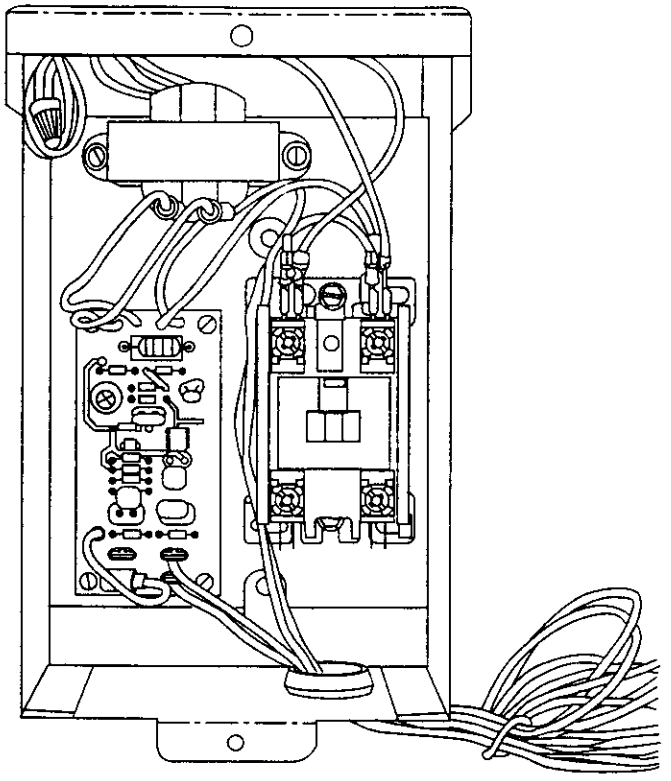

Motormaster® II Controller Interior

C00102

Fig. 1—Controller Interior

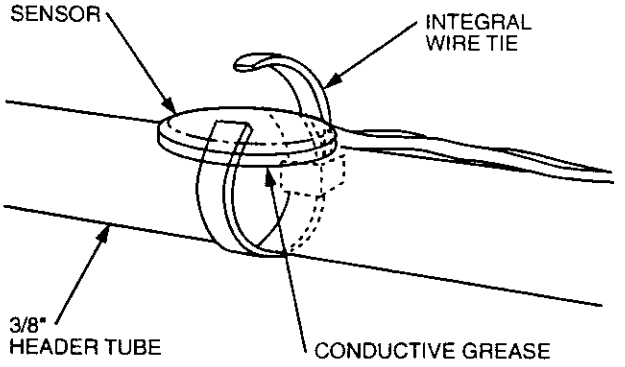

NOTE: INSTALLED SENSOR MUST BE LEFT UNINSULATED.

Sensor Connection Details

C00103

Fig. 2—Sensor Connection Details

⚠ CAUTION

All wires must be secured so that they are not in contact with unit tubing.

9. To prevent wind cross-currents from causing abnormally low condensing temperatures, louvered panels are required on some models. See Table 1 and 2 for models requiring/not requiring louvered panels.
10. Reconnect power to the unit.

The Motormaster II head pressure controller is equipped with an alternate operating mode. When this mode is selected, the controller shifts the fan cycle sequence to effectively raise the average condensing temperature approximately 20°F higher than the standard operating mode. In this alternate mode, the outdoor fan begins cycling at higher outdoor ambient temperatures. This mode should only be used if the evaporator coil shows signs of frosting at low outdoor ambient temperatures.

To select the alternate operating mode, move the jumper wire on the Motormaster II control board from reset T1 to reset T2.

Refer to Fig. 7 for thermistor resistance vs. temperature.

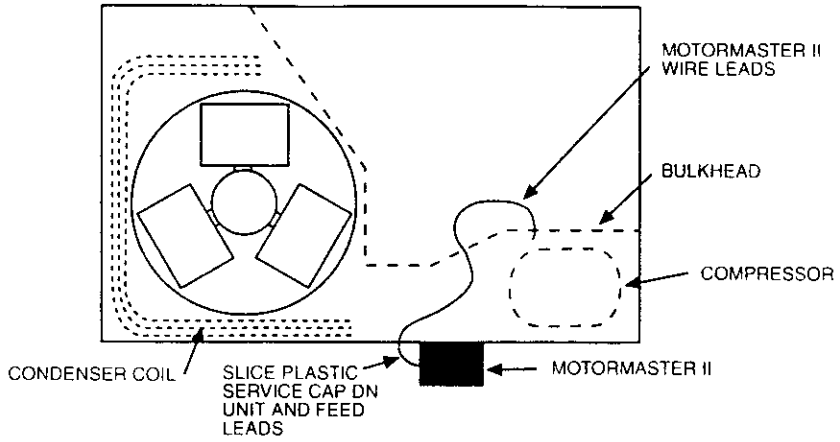

50ZP, ZH, 564A/664A, PA1Z/PH1Z UNITS

C00108

Fig. 3—Mounting Locations

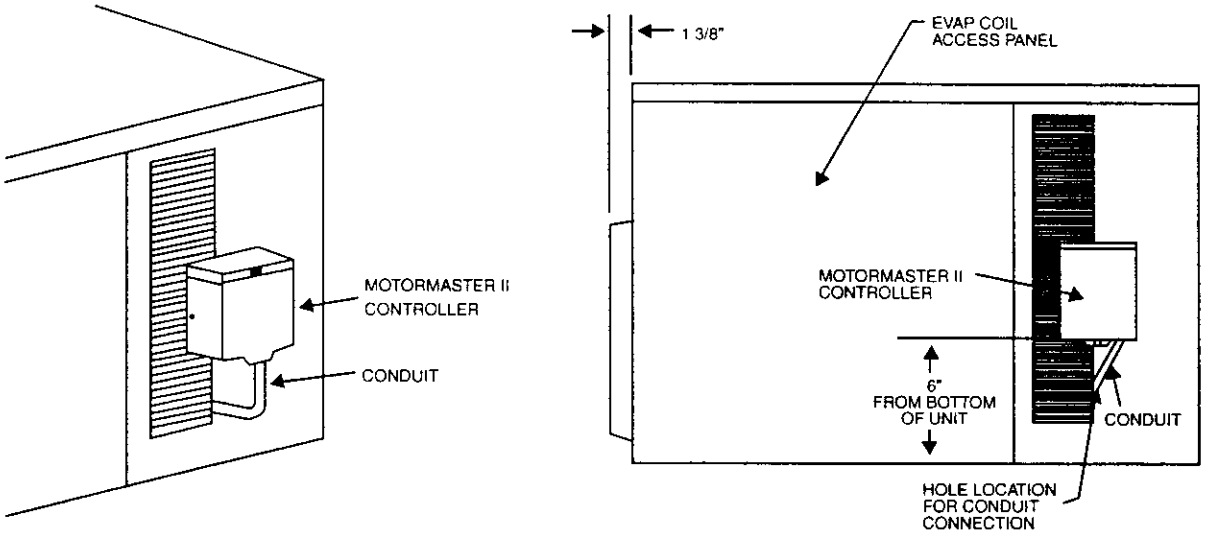

50SX/ 557A
50HX/ 657A

C00141

Fig. 4—Mounting Locations

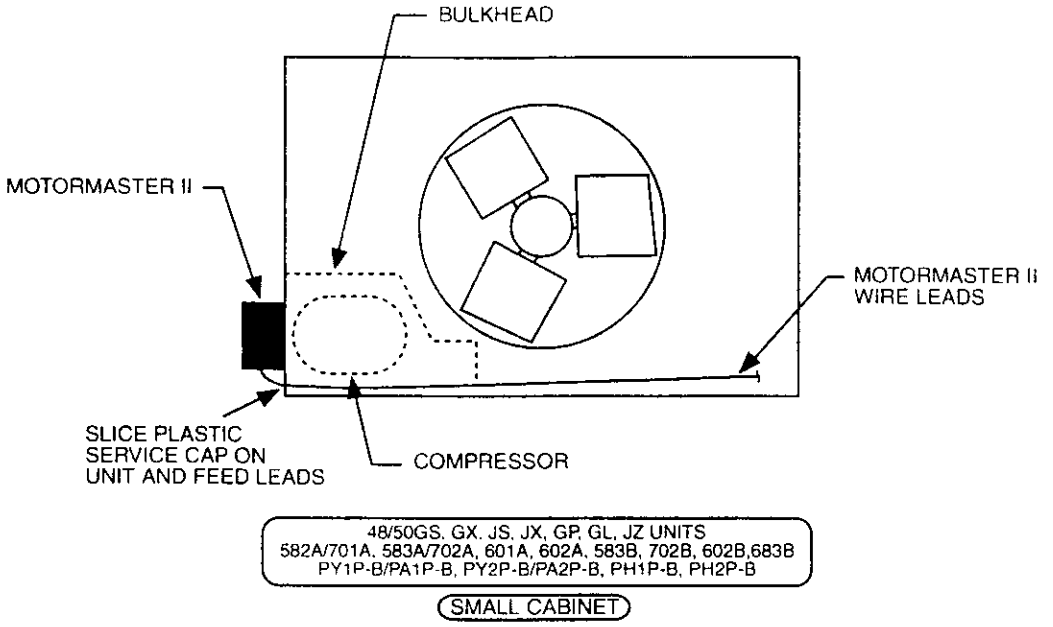

C00109

Fig. 5—Mounting Locations-Small Cabinet

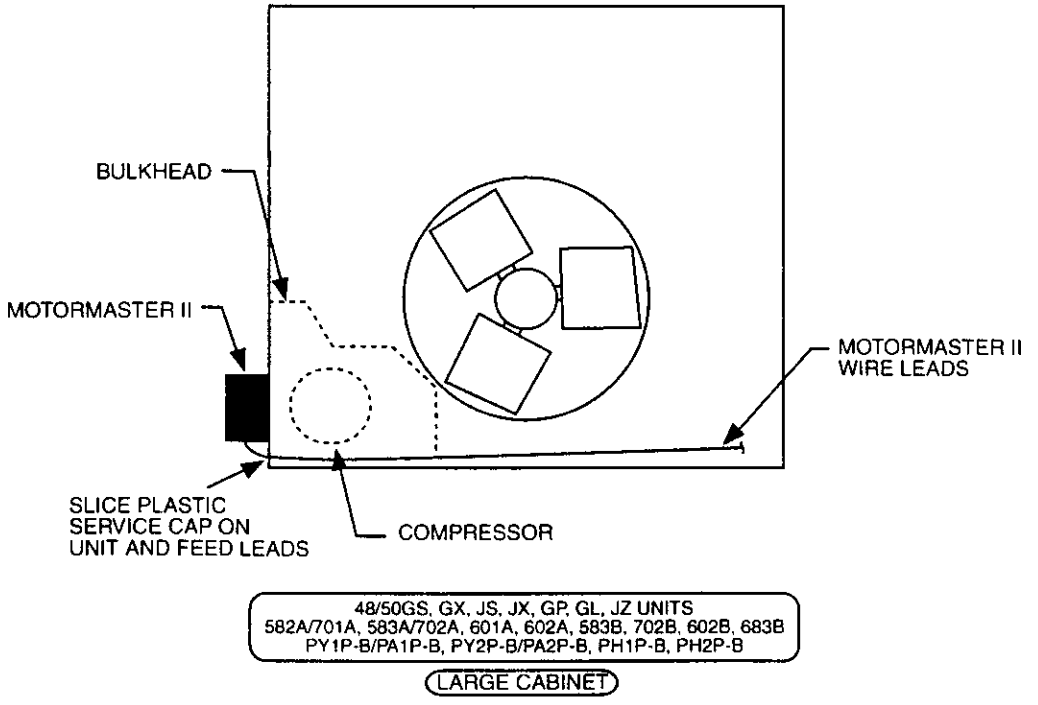

C00110

Fig. 6—Mounting Locations-Large Cabinet

Table 3—Sensor Mounting Locations

MODEL NUMBER	FIGURE NUMBER
50JX/602A/PH2P-B 024-048	Fig. 11
50JX/602A/PH2P-B 060 and 50JS/601A/PH1P-B 018-030	Fig. 12
50JS/601A/PH1P-B 036-060	Fig. 13
48GS/582A/PY1P-B/50GS/701A/PA1P-B 018-036 and 48GX/583A/PY2P-B/50GX/702A/PA2P-B 024-030	Fig. 14
48GS/582A/PY1P-B/50GS/701A/PA1P-B 042-060 and 48GX/583A/PY2P-B/50GX/702A/PA2P-B 036-060	Fig. 15
48GP/50GL/583B/702B 024-048 and 50GL 024-048	Fig. 16
48GP/50GL/583B/702B 060	Fig. 17
48/50JZ/683B/602B 024–060	Fig. 18
50ZP/564A/PA1Z 024–042	Fig. 19
50ZP/564A/PA1Z 048–060	Fig. 20
50ZH/664A/PH1Z 024–042	Fig. 21
50ZH/664A/PH1Z 048–060	Fig. 22
50SX/557A 024–060	Fig. 23
50HX/657A 048–060	Fig. 24
50HX/657A 024–042	Fig. 25

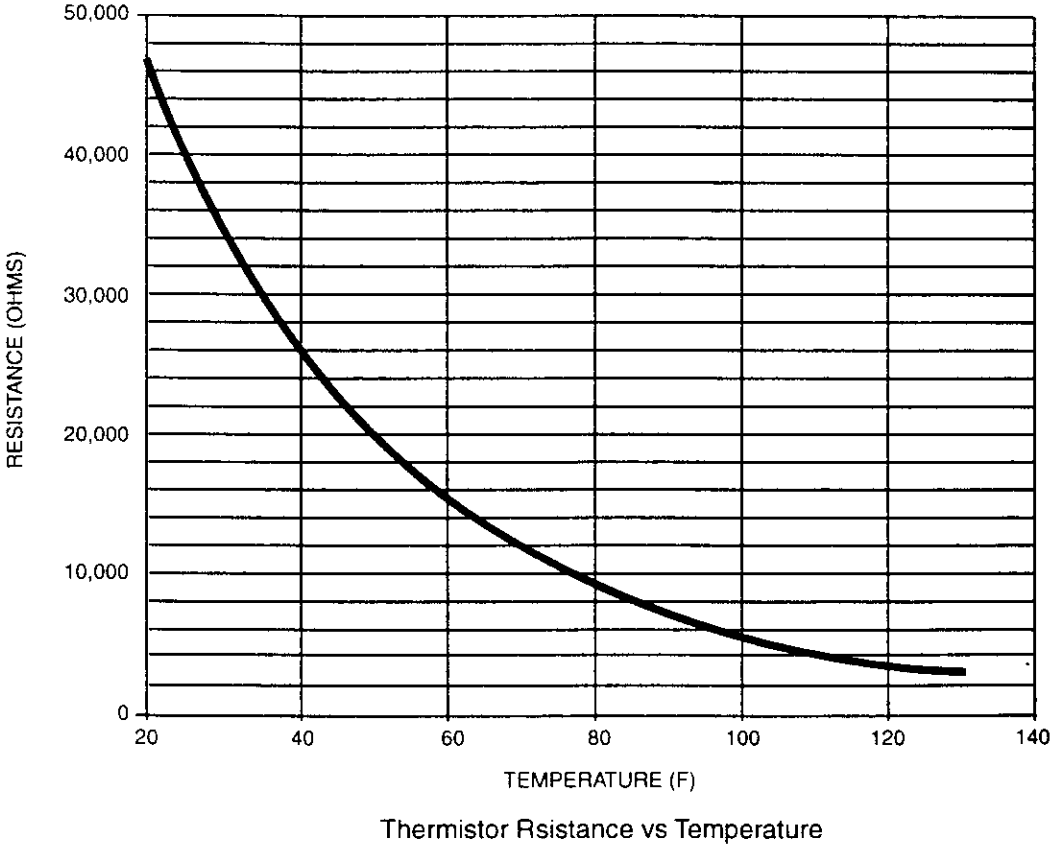

Fig. 7—Thermistor Resistance vs. Temperature Chart

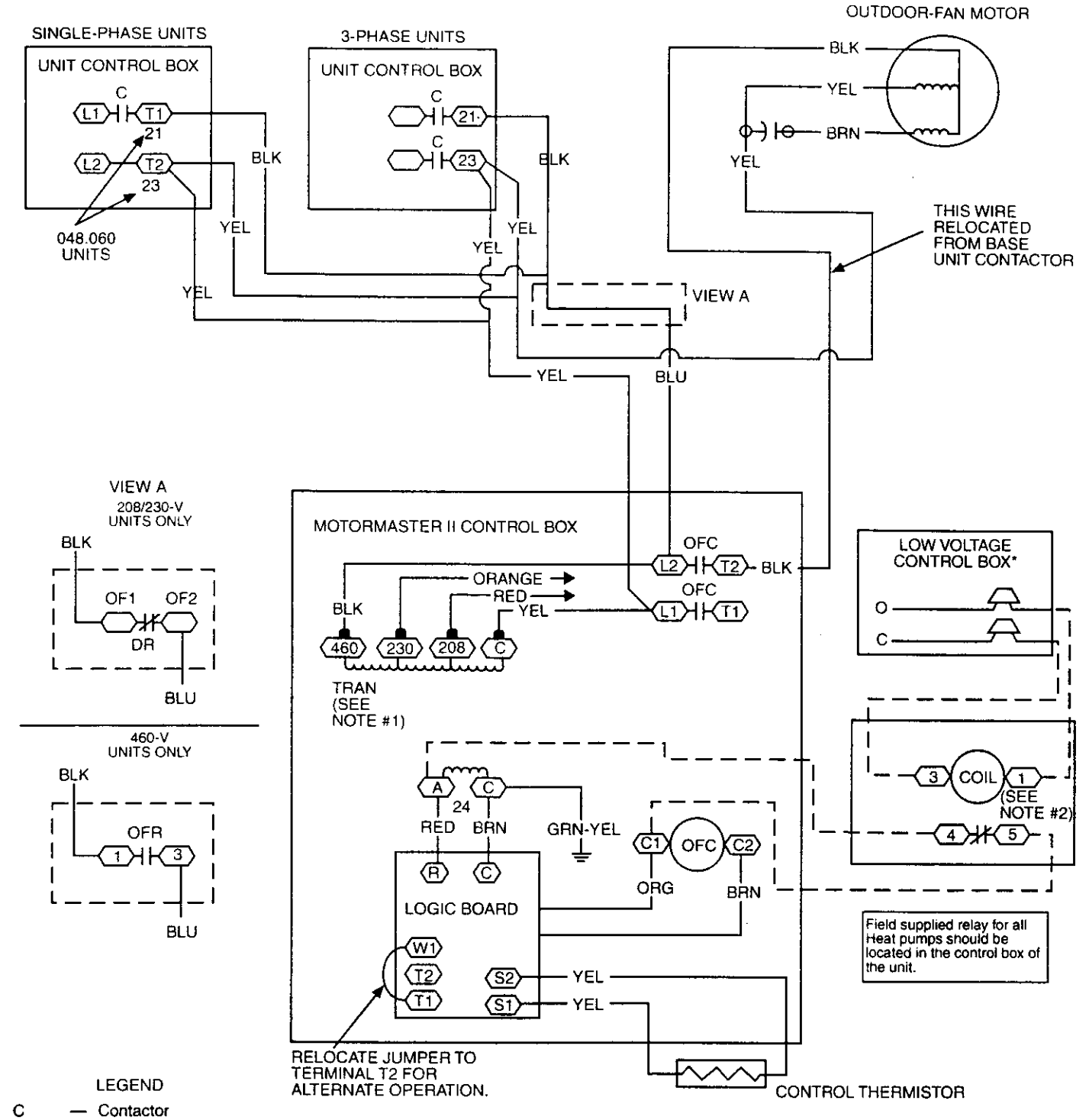

LEGEND

C — Contactor
DR — Defrost Relay
OFC — Outdoor-Fan Contactor
OFR — Outdoor-Fan Relay
TRAN — Transformer
- - - — Field Wiring

*In low voltage control box, "O" is orange and "C" is Brown (common).

NOTES:

1. Motomaster® II transformer is wired for 460-v supply; it must be rewired for 208/230-v application. Be sure to insulate unused tap.
2. Relay, part no. HN61KB324, is field supplied and normally closed.
3. CPLOWAMB002A00 transformer only contains a 400-v. supply.

C00106

Fig. 8—Wiring Schematic, Heat Pumps

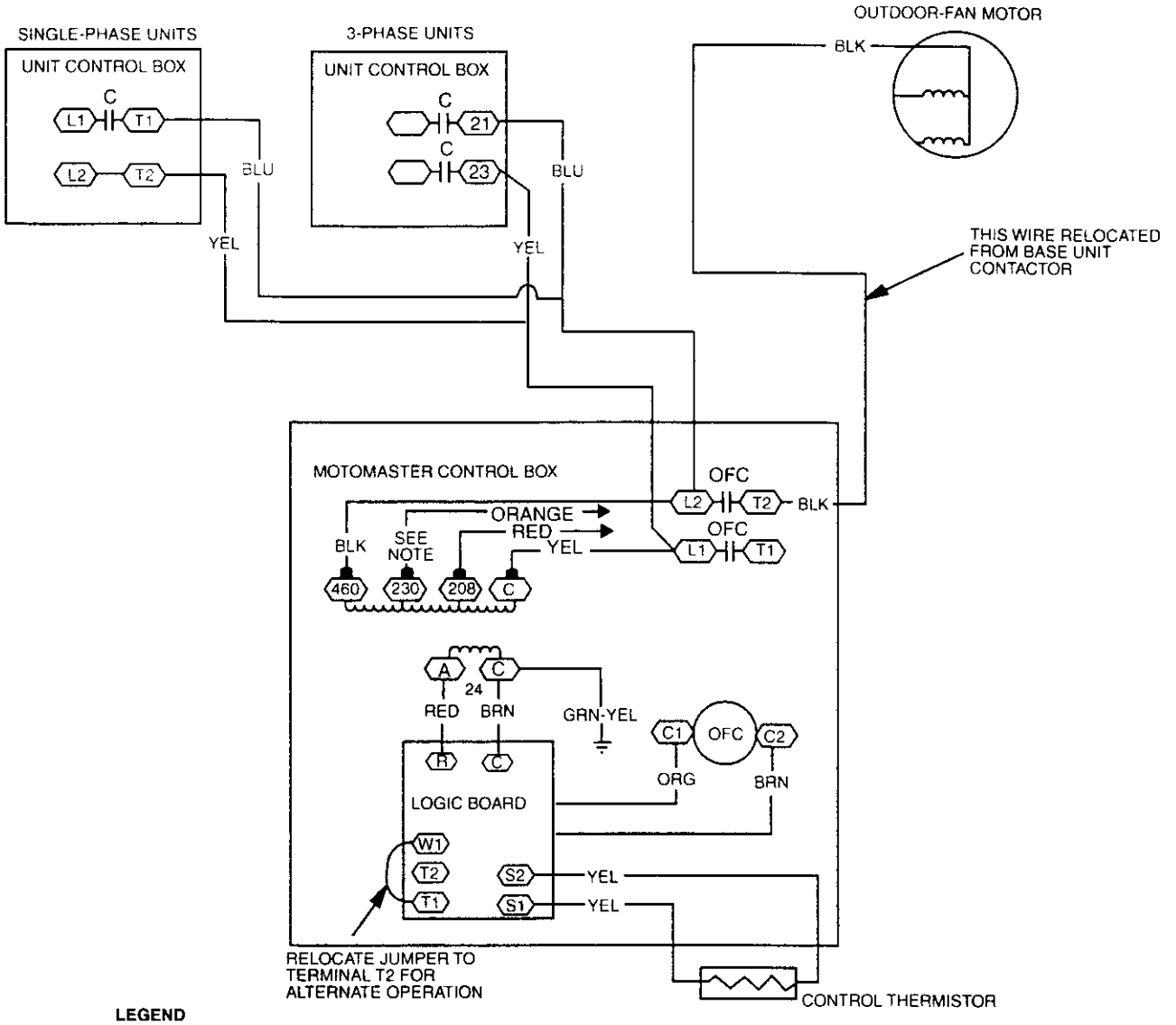

LEGEND

C - Contractor
OFC - Outdoor- Fan Contactor
TRAN - Transformer

NOTE:
1. Motormaster® II is wired for 460-v supply; it must be rewired for 208/230-v application. Be sure to insulate unused tap.
2. CPLOWAMB002A00 Transformer only contains a 400V supply.

C00140

Fig. 9—Wiring Schematic, AC and Gas PACs

MOUNTING TEMPLATE

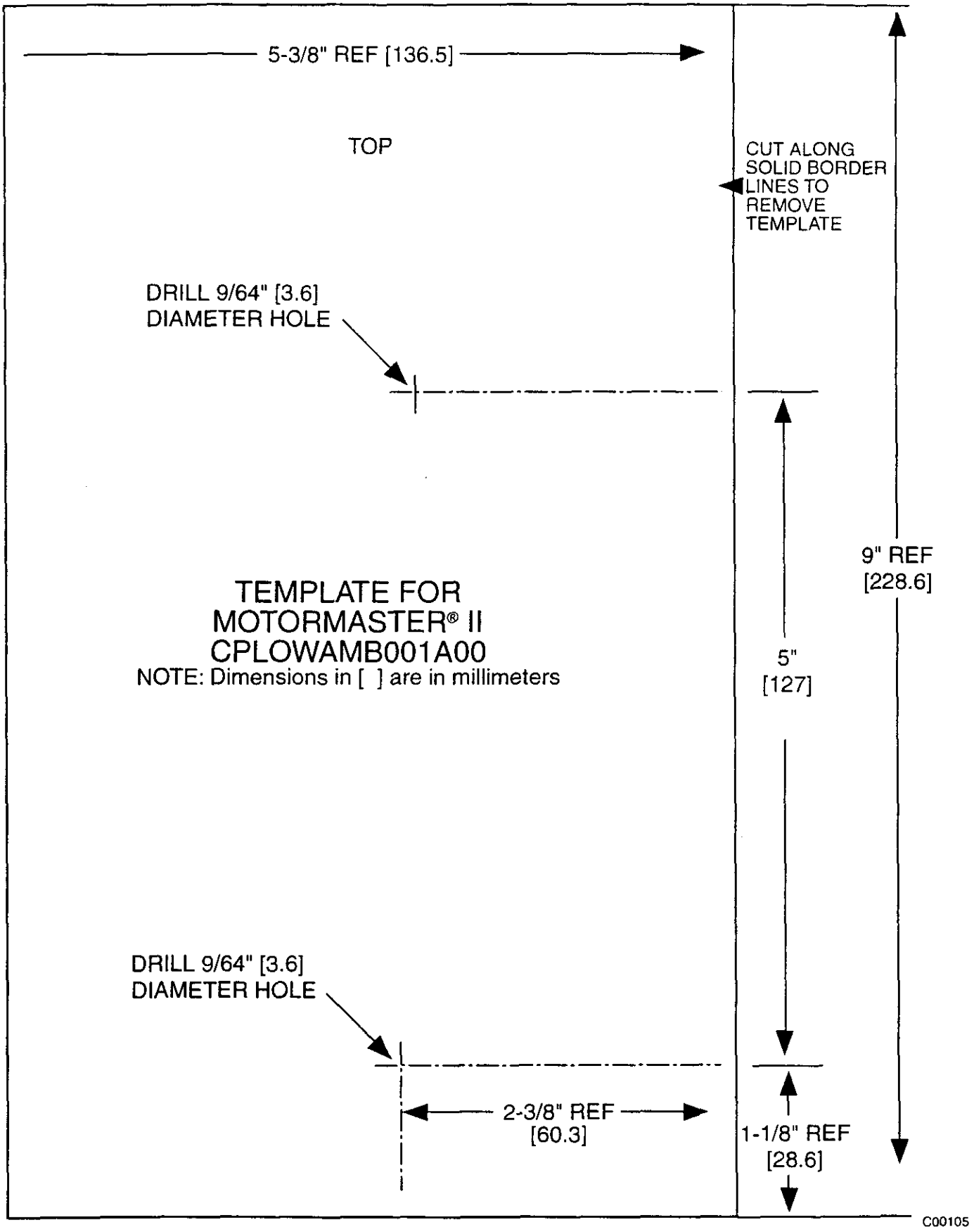

Fig. 10—Controller Mounting Template

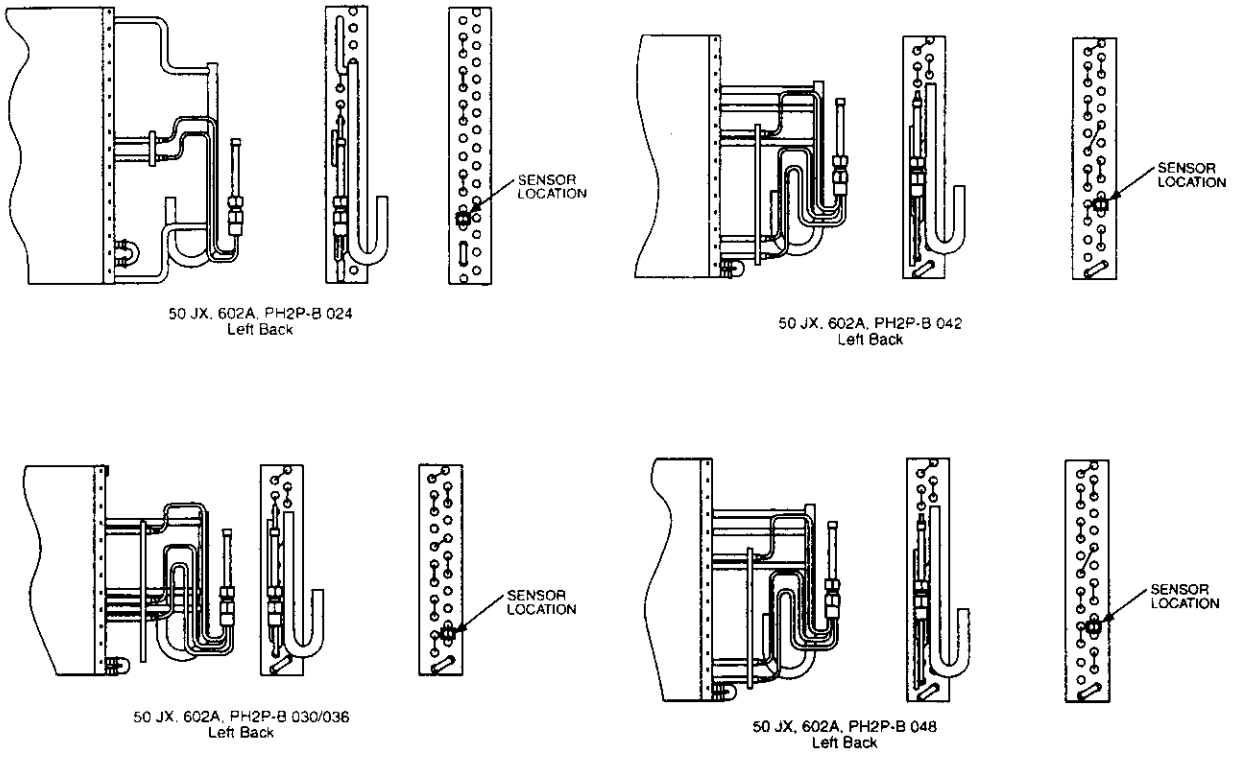

C00111

Fig. 11—Sensor Mounting Location

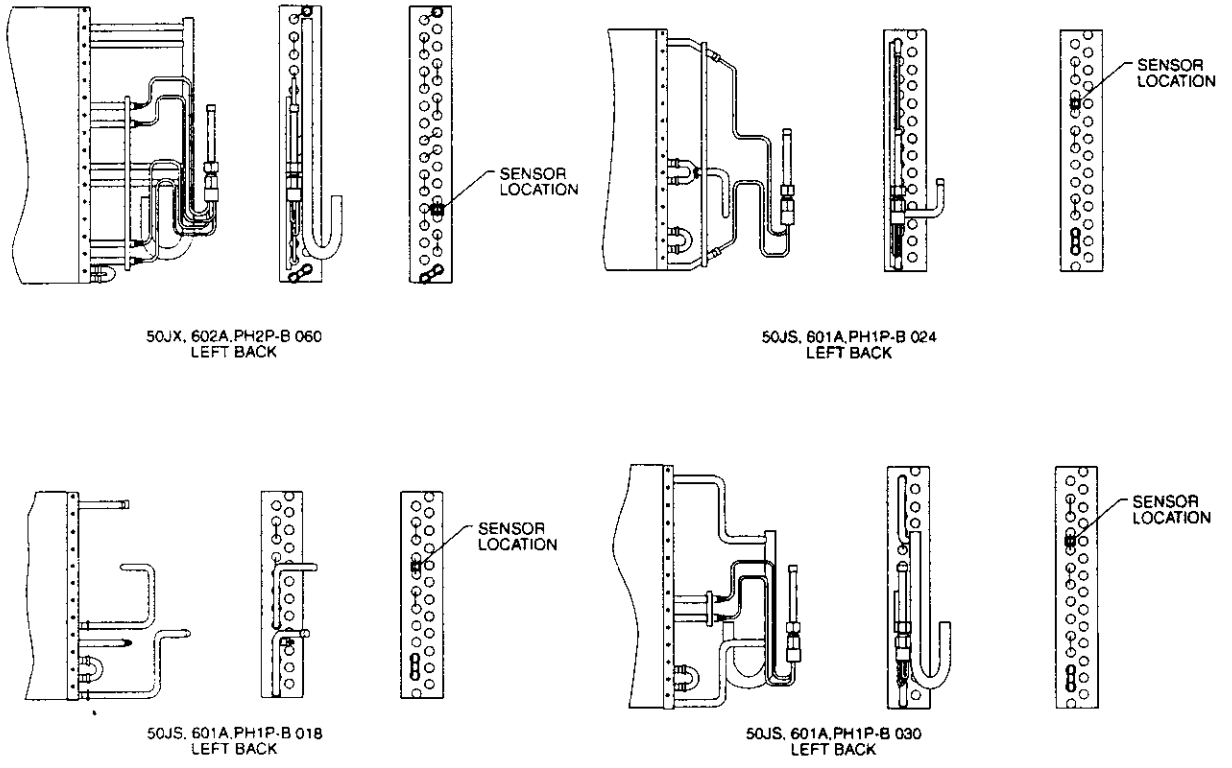

C00112

Fig. 12—Sensor Mounting Location

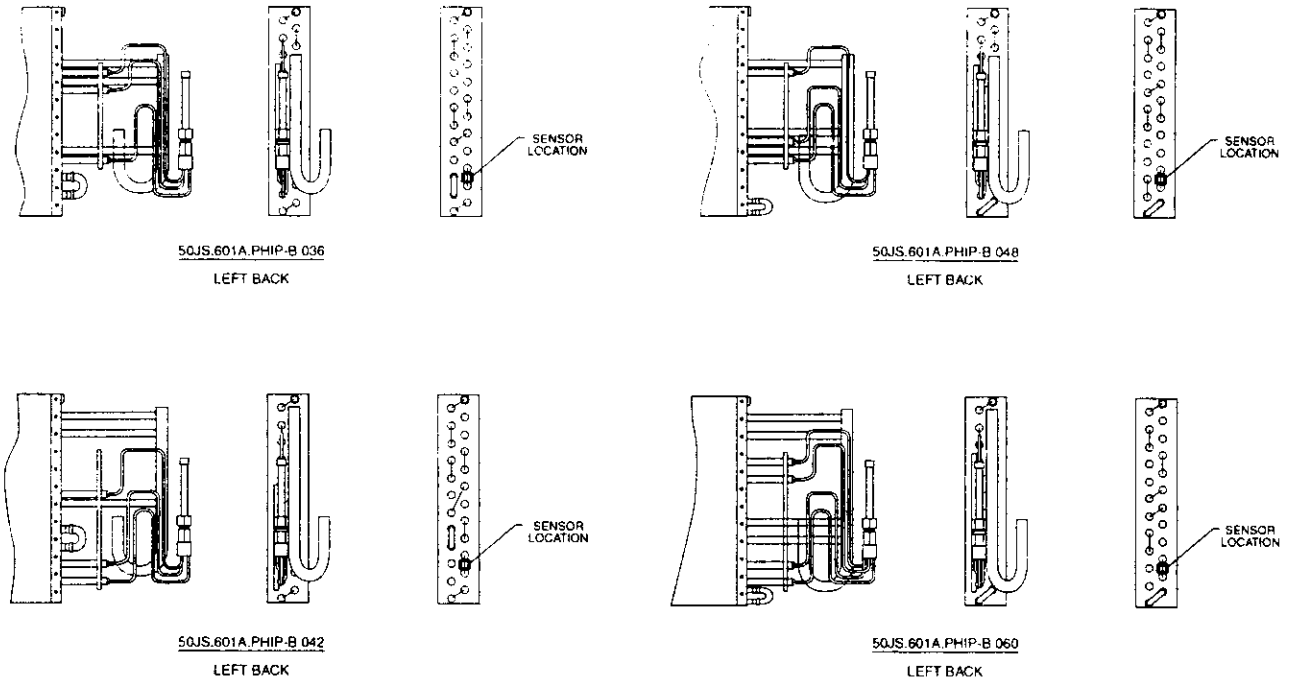

Fig. 13—Sensor Mounting Location

C00113

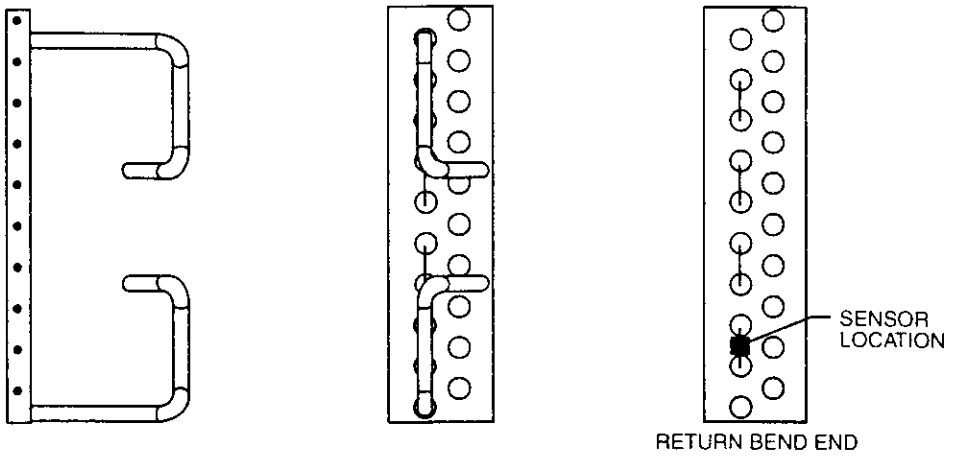

48GS, 582A, PY1P-B, 50GS, 701A, PA1P-B, 018, 024, 030 & 036
48GX, 583A, PY2P-B, 024, 50GX, 702A, PA2P-B, 024
LEFT BACK

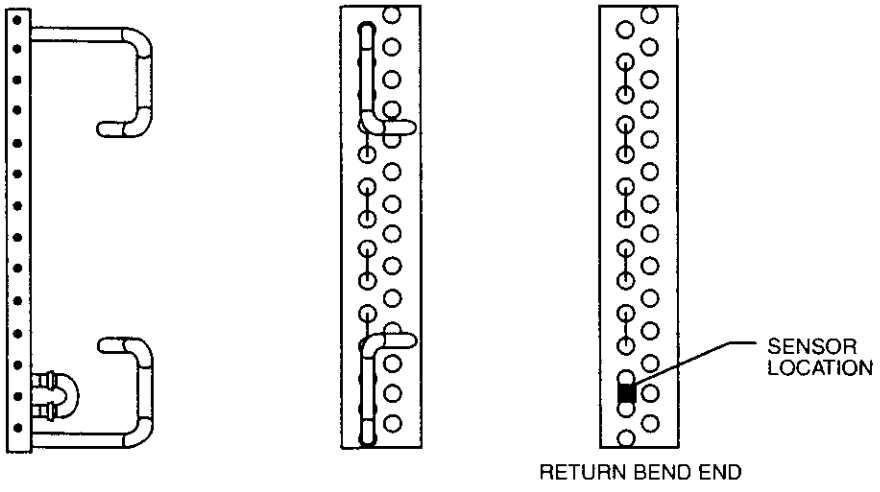

50/48GX030, 702A/583A030, PA2P/PY2P 030 (B SERIES)
LEFT BACK

C00114

Fig. 14—Sensor Mounting Location

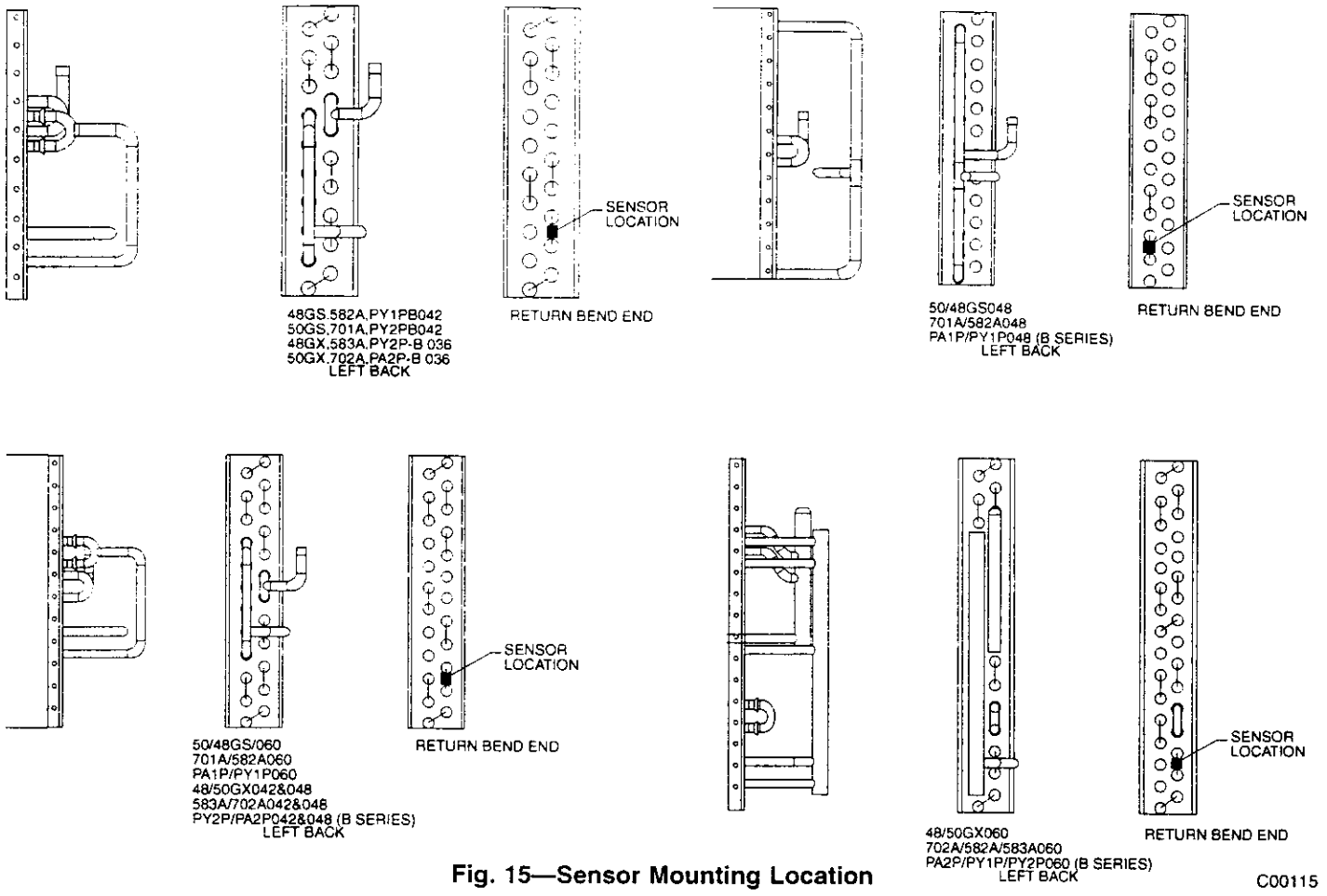

Fig. 15—Sensor Mounting Location

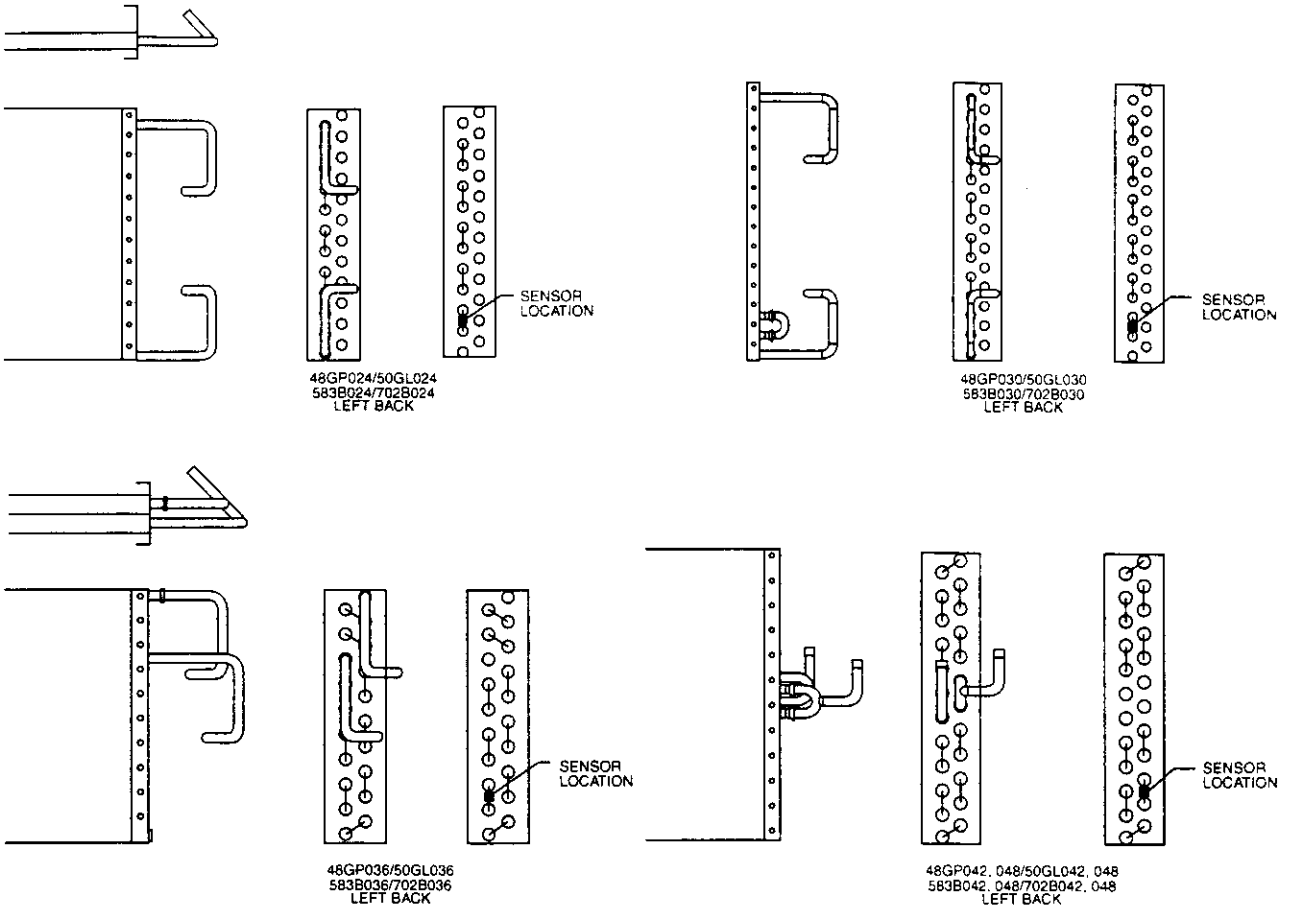

C00116

Fig. 16—Sensor Mounting Location

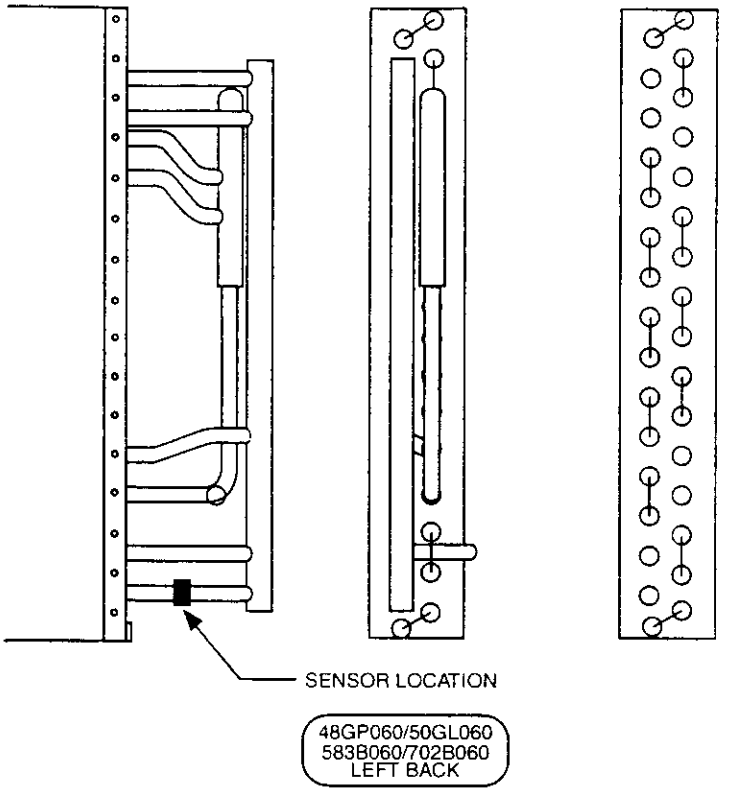

C00117

Fig. 17—Sensor Mounting Location

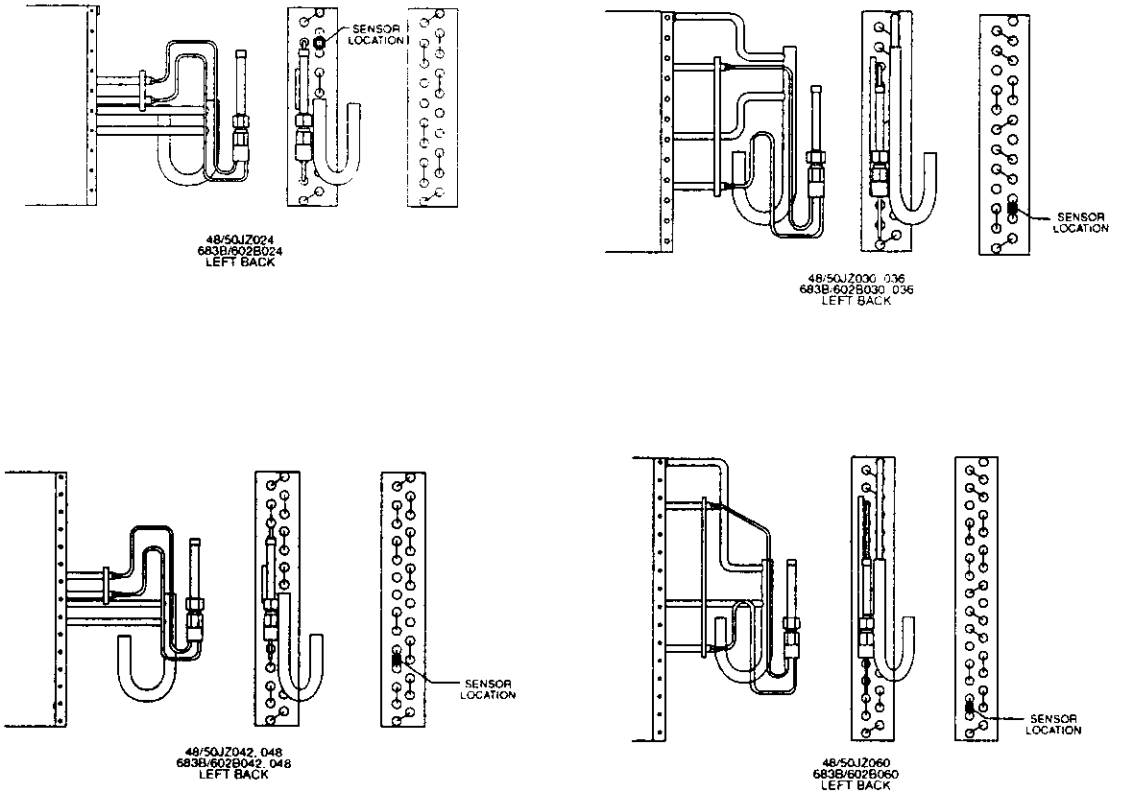

C00118

Fig. 18—Sensor Mounting Location

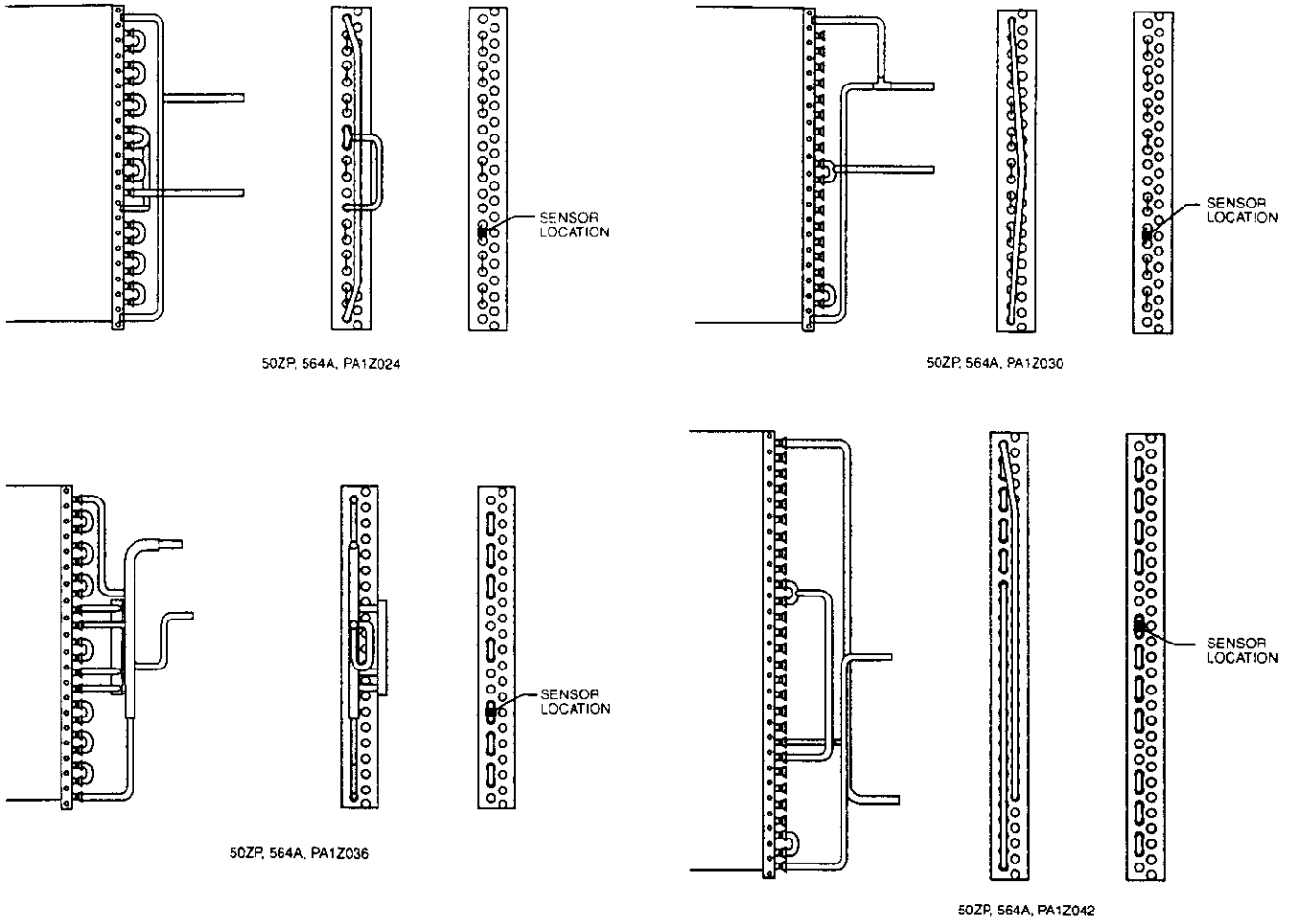

C00119

Fig. 19—Sensor Mounting Location

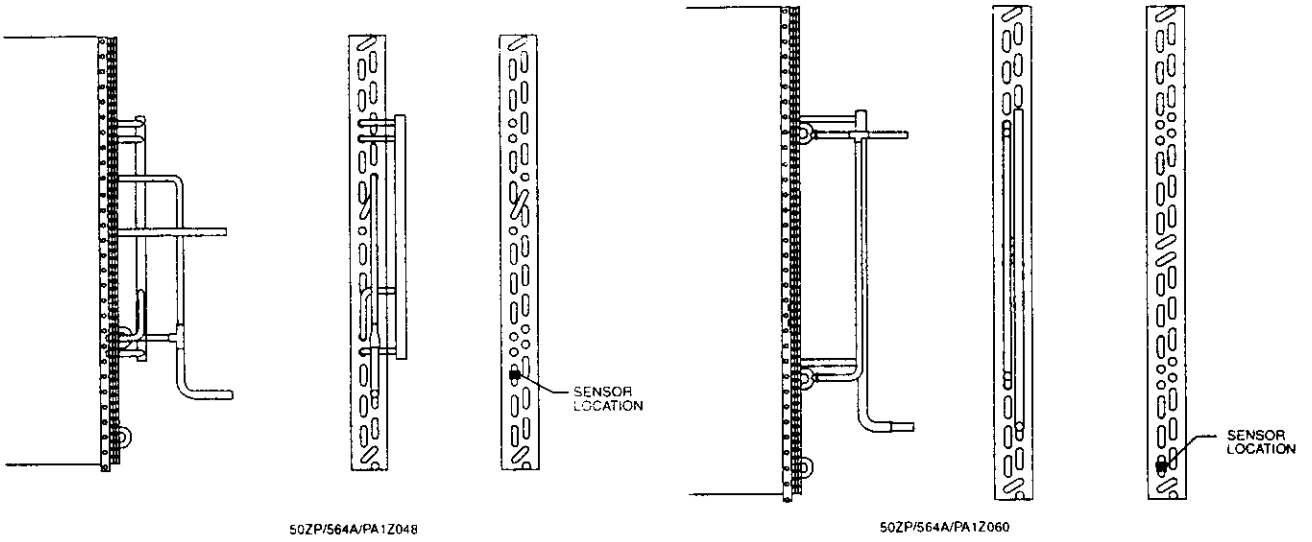

Fig. 20—Sensor Mounting Location

C00120

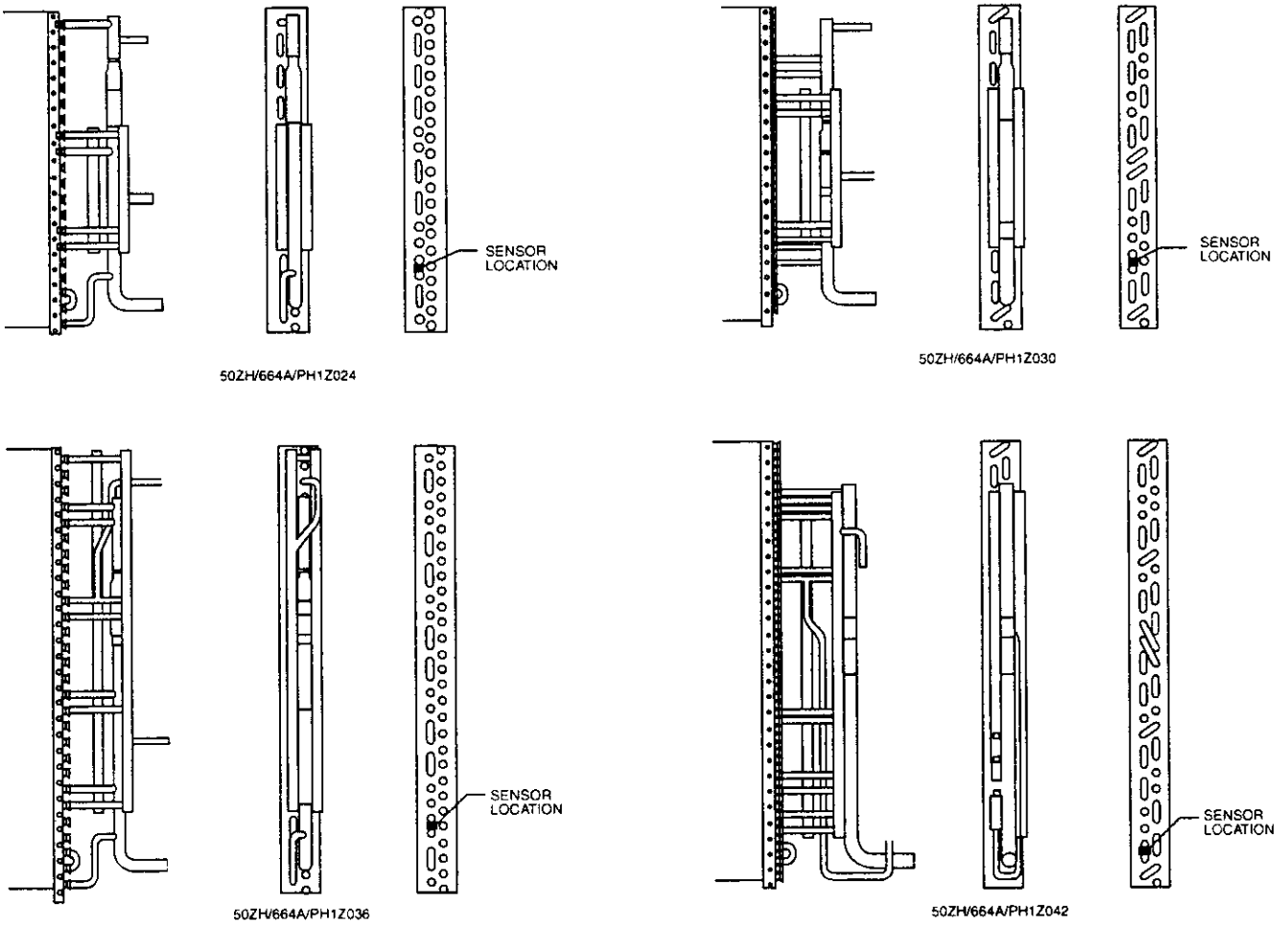

C00121

Fig. 21—Sensor Mounting Location

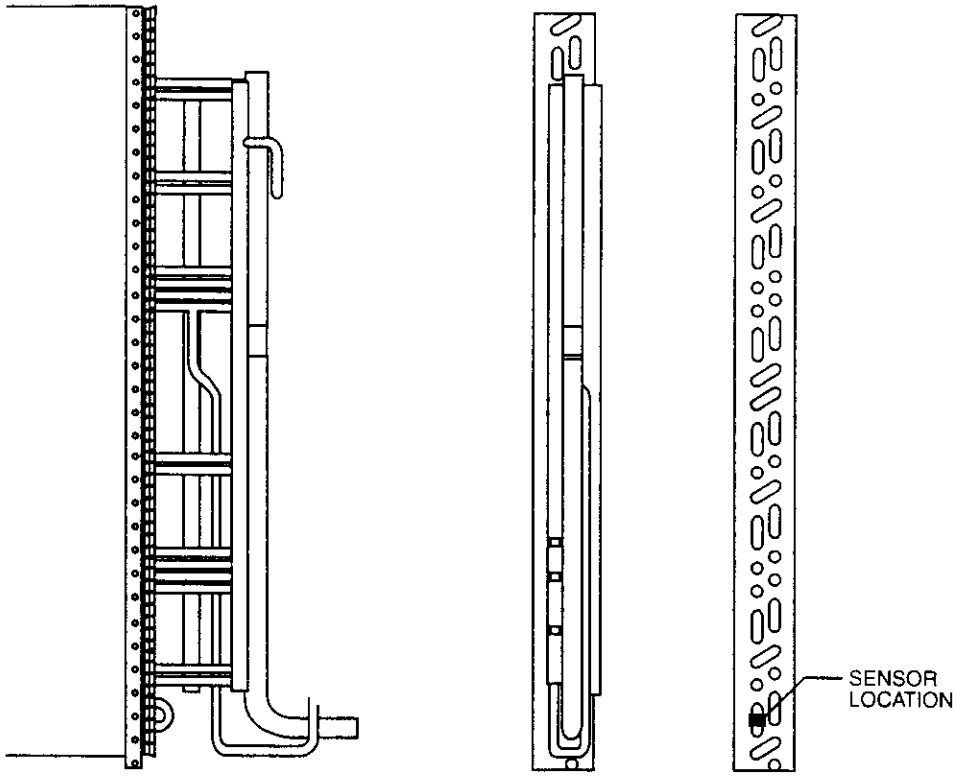

50ZH/664A/PH1Z060

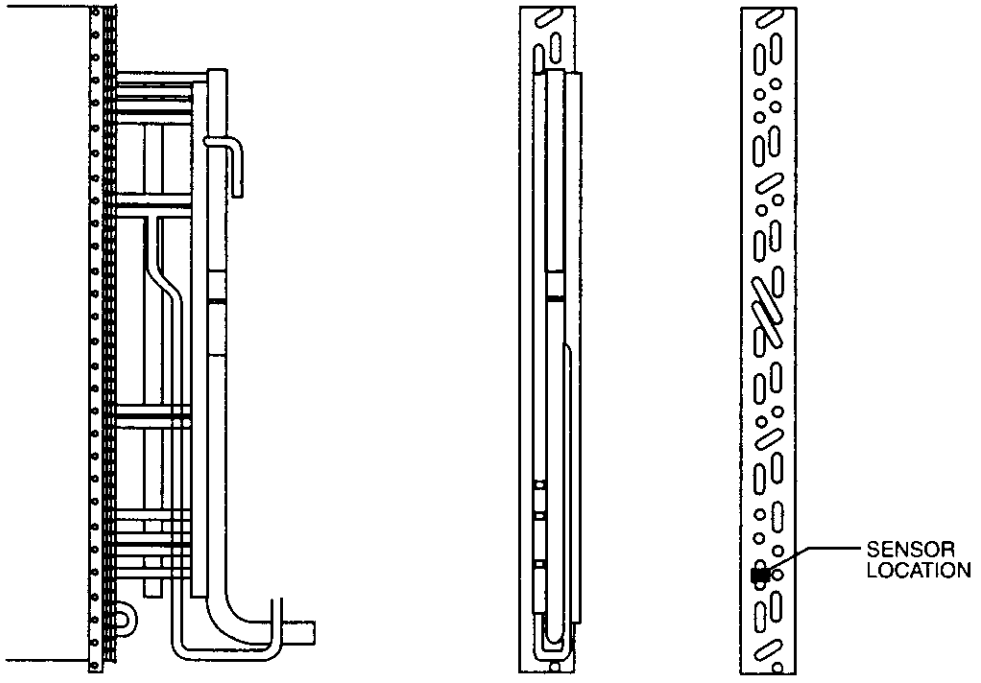

50ZH/664A/PH1Z048

C00122

Fig. 22—Sensor Mounting Location

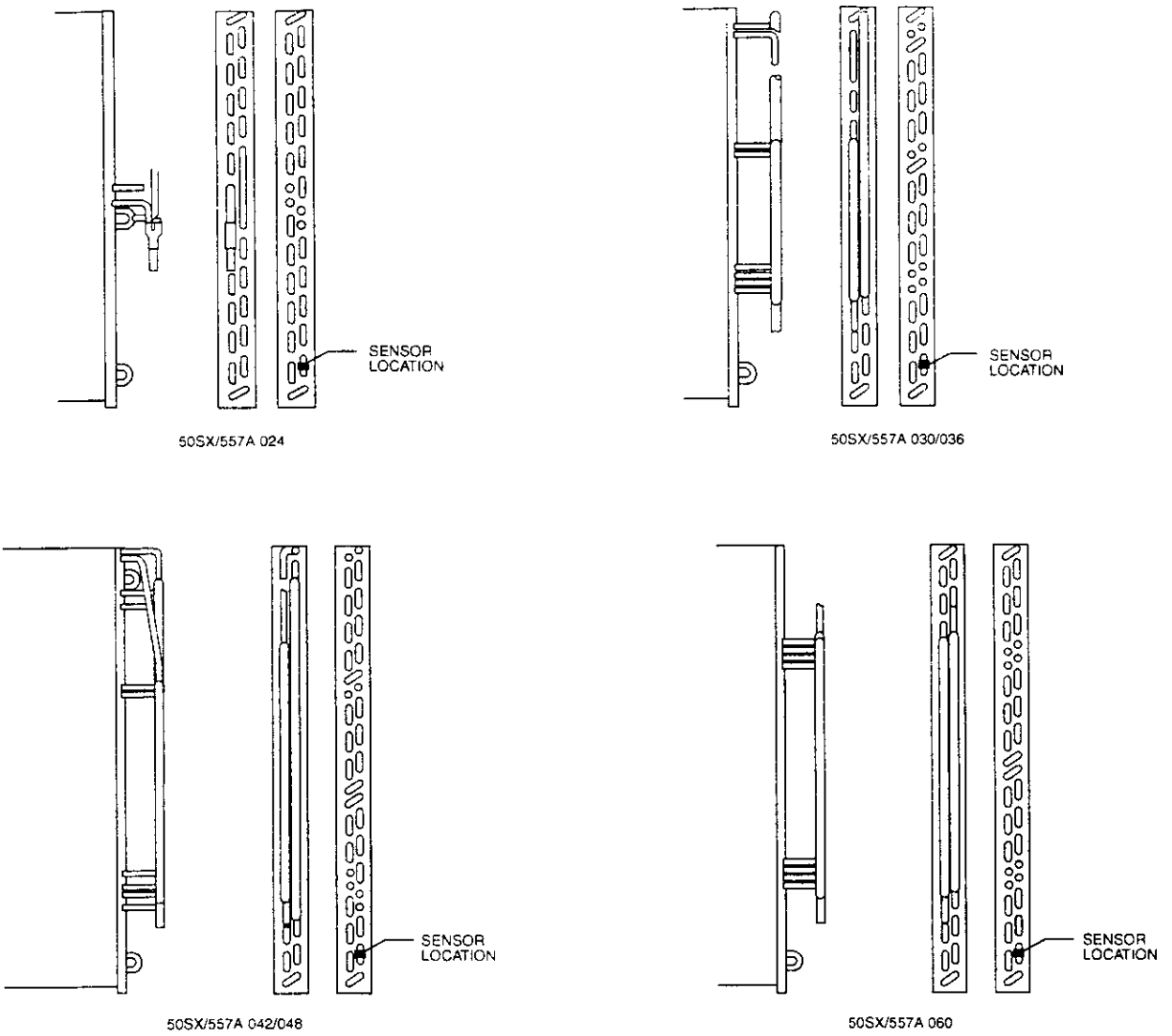

Fig. 23—Sensor Mounting Location

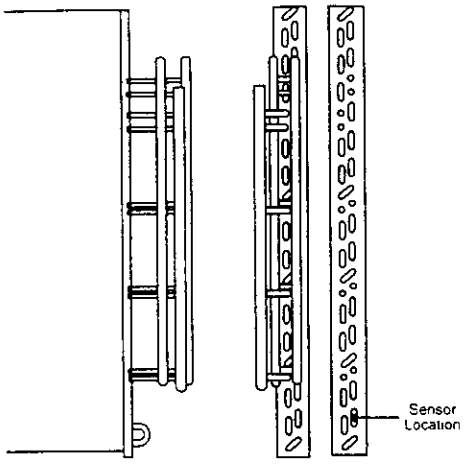

50HX/657A/048

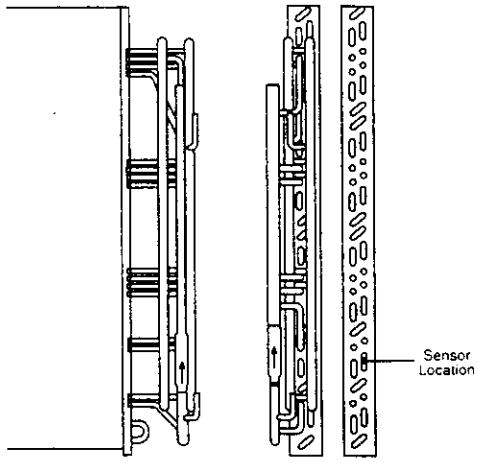

50HX/657A/060

C00127

Fig. 24—Sensor Mounting Location

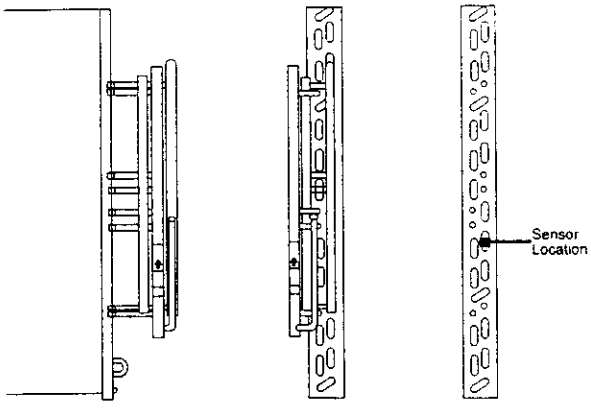

50HX/657A024

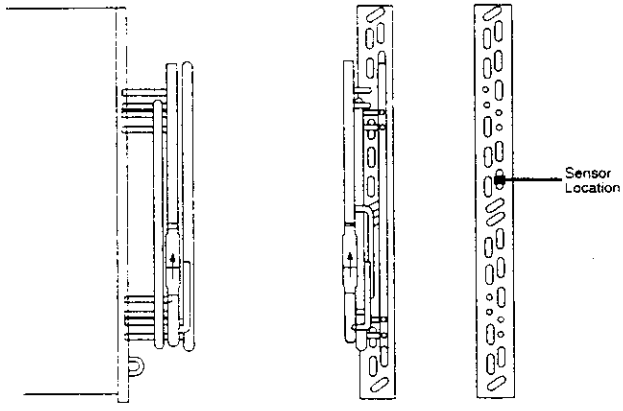

50HX/657A030

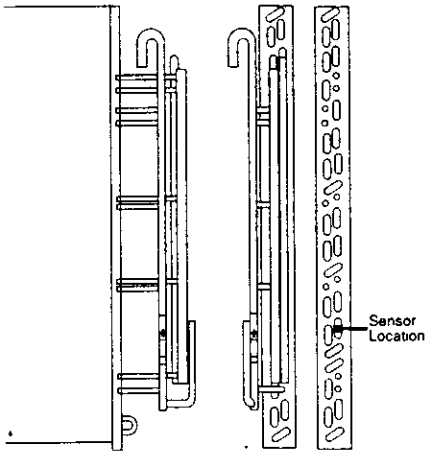

50HX/657A036

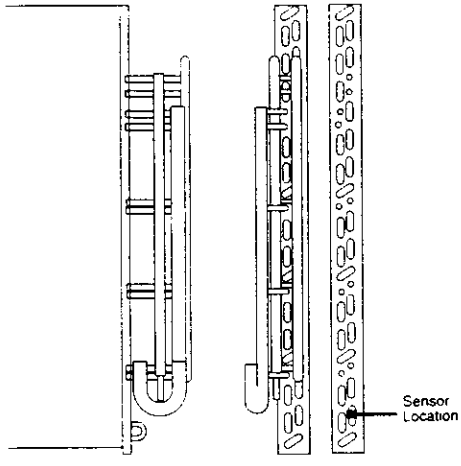

50HX/657A042

C00128

Fig. 25—Sensor Mounting Location

Copyright 2002 Carrier Corporation

Manufacturer reserves the right to discontinue, or change at any time, specifications or designs without notice and without incurring obligations.