SHORT TERM CONFIDENTIAL

Carestream

Preliminary User Manual

Publication No. AA2204_en
2012-07-27

Contents

1 Overview

The Laser Imaging System is a continuous-tone laser imager with an internal photothermographic film processor. Heat, rather than photo chemicals, is used to develop the film. This easy-to-use and reliable imager provides high-quality prints. Use the prints from this system for:

- Diagnostic purposes to determine patient treatments, including imaging for full field digital mammography
- Referral, sharing, or educational purposes

The system receives and prints from qualified image sources such as medical electrical equipment (modalities) and workstations over the network. You can send print jobs simultaneously from multiple image sources. The open design lets you connect to modalities of all types and vendors.

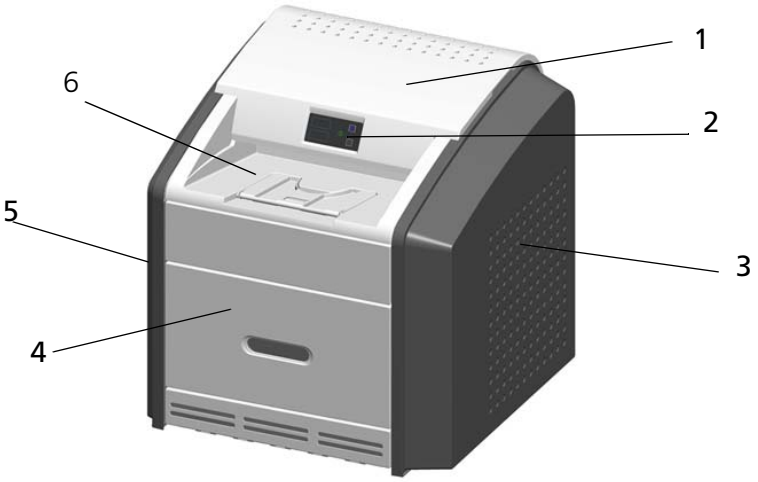

1	**Top cover**. Covers the processor rollers. The top cover is interlocked.
2	**Display screen**. Provides an interface to the imager, with status and error information.
3	**Right cover**. Protects sensitive electronic equipment. The right cover is interlocked and is only accessed by service personnel.
4	**Film supply cover**. Covers the upper and lower film supplies. Supports five film sizes.
5	**Left cover**. Covers the left side of the imager. You might remove the left cover to clear an occasional film jam. The left cover is interlocked.
6	**Exit tray**. Holds up to 50 processed sheets of film. Extend the exit tray to hold large film (35 x 43 cm, or 14 x 17 in.) as it finishes printing.

Major Internal Assemblies

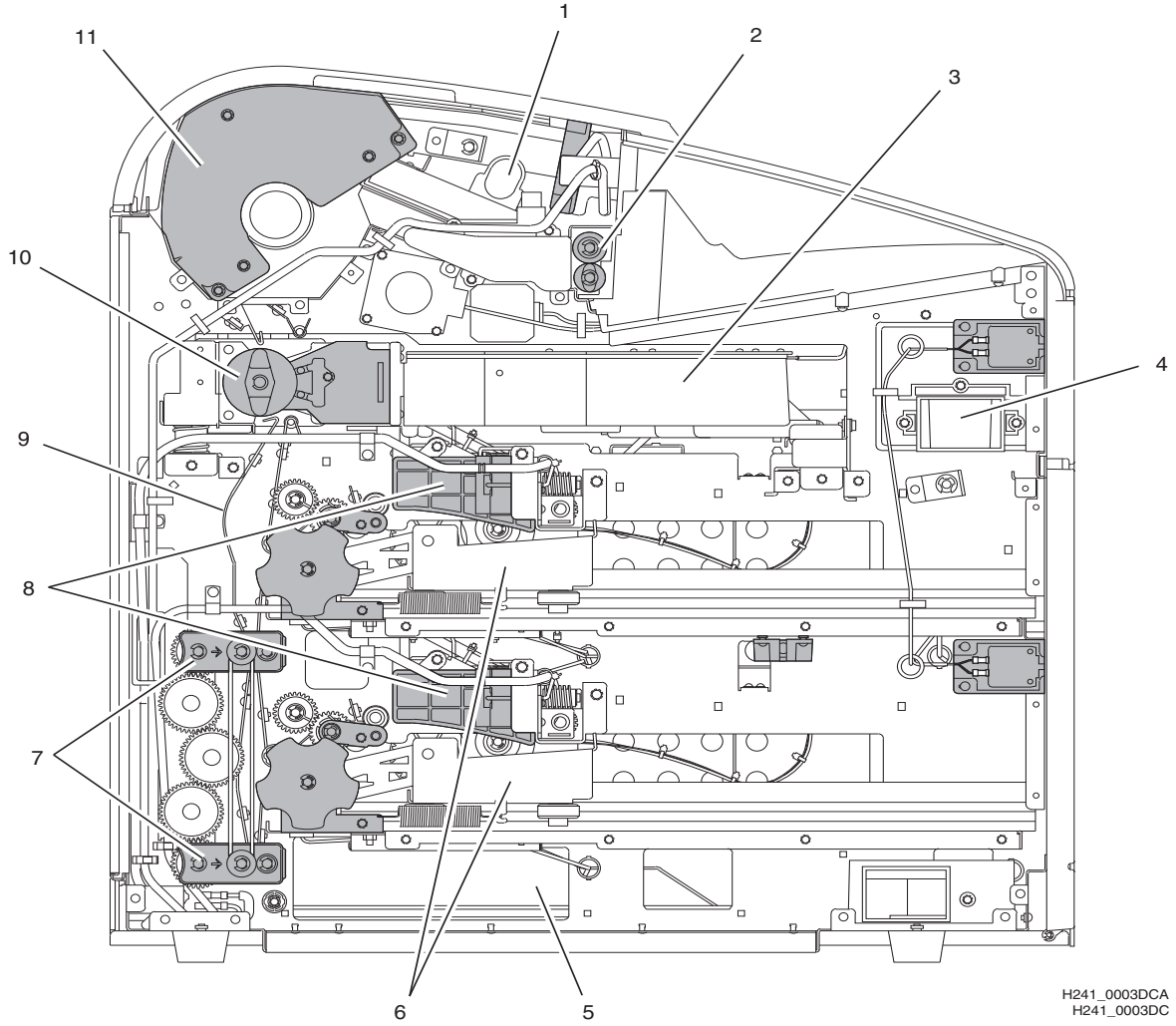

1	**Airflow manifolds**. Remove heat and processing odors from the processor assembly.
2	**Exit rollers**. Move the film from the processor area to the exit tray.
3	**Optics module**. Writes the image onto the film while the film is moved through the exposure transport.
4	**Charcoal filter**. Absorbs the odors caused by heat processing.
5	**Accumulator**. Receives the film as it is imaged. When imaging is complete, the film is sent from the accumulator up to the processor assembly where the heat is applied to process the image.

6	**Rollback assemblies (upper and lower)**. Roll the film cartridge cover back so the pickup assembly can lift the film. When the imager is not printing, the cover is closed over the film cartridge to protect the film from light.
7	**Feed rollers**. Move the film through the imager.
8	**Pickup assemblies (upper and lower)**. Lift a single sheet of film from the supply cartridge and feed it into the rollers.
9	**Transport guides**. Orient and center the film while moving the film from the supply to the imaging portion of the imager.
10	**Exposure transport**. Moves the film past the scanning laser beam.
11	**Processor drum**. Provides the heat that processes the image on the film.

How the Imager Works

The imager receives, processes, manages, and prints the images on film. The imager has limited storage to hold a small number of digital images. As images are received for printing, they are stored in memory, placed in a sequential print queue, and printed in order. The imager can continue to accept incoming print jobs even if temporarily unable to print (if the film supply is empty, etc.).

During normal operation, the imager requires very little attention. It prints automatically in response to print requests from the configured image sources. Information sent with the images by the image source, such as film type and size and image quality settings, is applied unless you set the imager to override information that comes from the image source.

Print Sequence

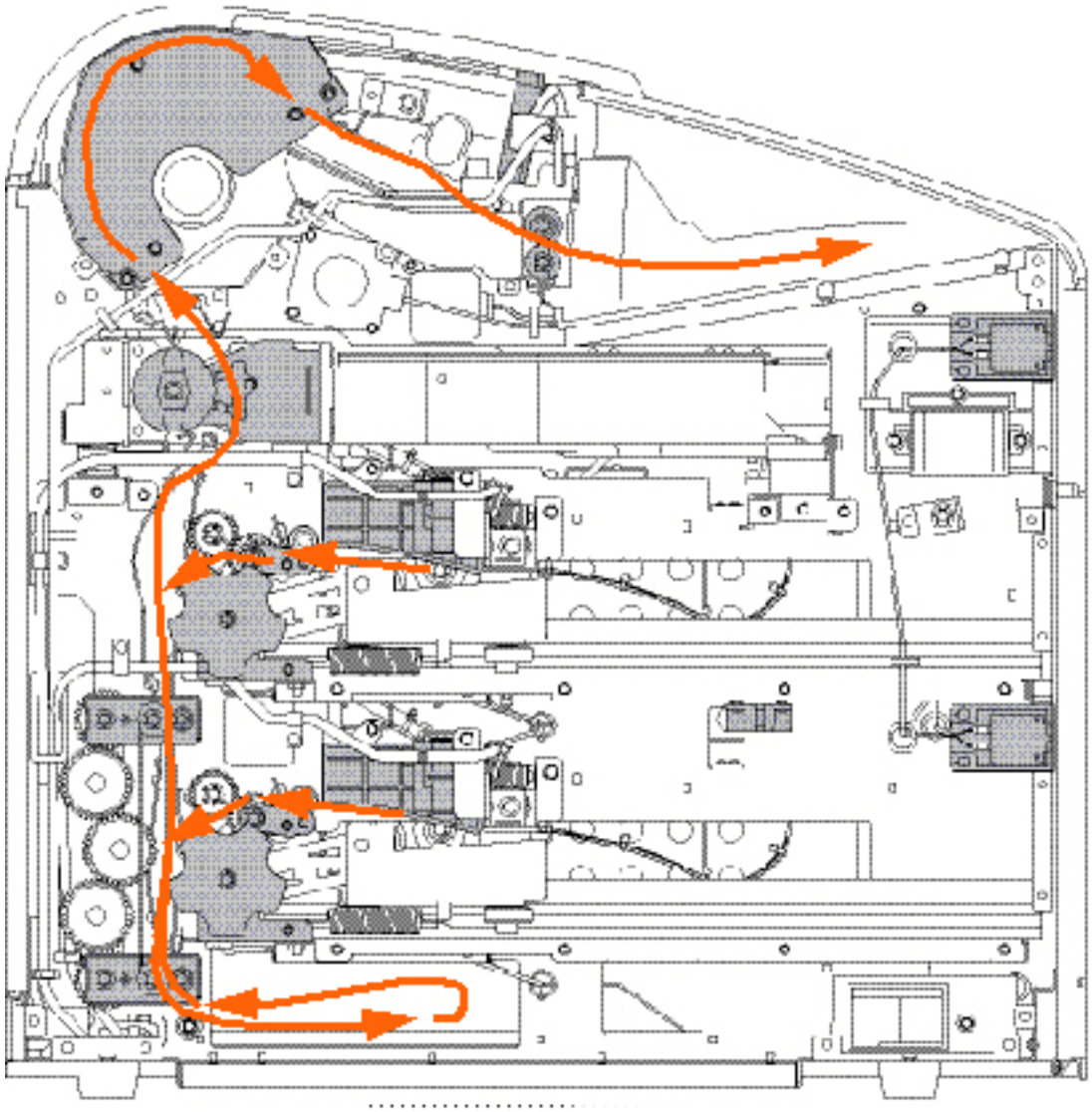

Each time the imager receives a print request, the following print sequence occurs. The arrows show the film path.

1. Suction cups in the pickup area lift a single sheet of film out of one of the supply cartridges and feed the film into the transport rollers.
2. The transport rollers move the film down into the exposure transport area.
3. The film moves down during imaging (as the optics module writes the image onto film), reverses direction at the conclusion of imaging, and then the film moves up into the processor.
4. As the film passes over the processor drum, the heat generated by the drum develops the film.
5. The exit rollers move the developed film to the exit tray.

Film Sizes

The imager supports five sizes:

- 35 x 43 cm (14 x 17 in.)
- 35 x 35 cm (14 x 14 in.)
- 28 x 35 cm (11 x 14 in.)
- 25 x 30 cm (10 x 12 in.)
- 20 x 25 cm (8 x 10 in.)

Clear, blue, and mammography film types are supported.

Mammography Imaging

To manage and support mammography imaging, the imager provides these features:

- You can load mammography film in one or both film supplies.
- The imager only prints mammography images on mammography film. If a mammography image request is received, and:
  - a cartridge with mammography film is not loaded,
    and/or
  - the requested mammography film size is not loaded,

  then the imager will request the appropriate film size and type. You must load the requested size and type to print the mammography job.
- Several mammography-specific test prints are provided, including a default test print for the routine calibration of mammography film (for example, a density wedge print). The default mammography test print is configured during installation and can be changed from the Web Portal.

Note

For help with the quality control process for mammography, see the Quality Control Manual. Requirements for mammography quality control vary by region.

Automatic Image Quality and Processing

An internal densitometer enables the imager to automatically adjust image processing parameters using Automatic Image Quality Control (AIQC) to produce an optimal image. The imager adjusts these parameters each time it prints a calibration film.

A calibration film is printed when:

- A film cartridge is inserted in the imager with film of a new lot number.
- You request a calibration film at the display screen or the Web Portal.
- A film cartridge is inserted into the imager for which a current calibration is not stored.

Related topics

Calibrate the Imager for the Loaded Film

Configure and Monitor the System (Using the Web Portal)

The Web Portal is your interface to additional features. In addition to the installation and setup of your system, you can view and manage the imager's connections over the network, configure features, view error messages, and access general status information at the Web Portal. You can also check film count, film size, and film type.

Related topics

Access the Web Portal

Enhanced Serviceability with Remote Monitoring

Remote Management Services is set up through the Web Portal, and is designed to enhance efficient system serviceability and simplify analytical and service processes through the monitoring of your equipment. Additionally, this simplifies the service process by providing qualified service personnel with faster, easier, and more complete access to the operational history of each system.

Remote Management Services provides the following for the imager:

- Ability to monitor and diagnose error conditions without introducing “downtime”
- Firewall-safe, Internet transmission of machine data, while complying with patient confidentiality regulations
- Minimal effort to set up communication
- Flexibility to facilitate specific configurations at each site

Agency Compliance

See the Safety Manual.

User Manual Conventions

The following special messages emphasize information or indicate potential risks to personnel or equipment.

Note

Notes provide additional information, such as expanded explanations, hints, or reminders.

Important

Important notes highlight critical policy information that affects how you use this guide and this product.

Caution

Cautions point out procedures that you must follow precisely to avoid damage to the system or any of its components, loss of data, or corruption of files in software applications.

DANGER

Danger identifies procedures that you must follow precisely to avoid injury to yourself or others.

Laser Warning

Laser warnings warn personnel that access to laser radiation is possible and all personnel must avoid direct exposure to the beam.

2 Basic Operating Tasks

During normal operation, the imager receives and automatically prints images sent by modalities over a network. Very little interaction is required. You can do the following:

- Turn the power on (|) and off (0).
- Load the film cartridges.
- Monitor the display screen for status and operating conditions.

Sometimes it will be necessary to perform preventive maintenance, filter replacement, and other corrective actions such as a restart.

You also may access the Web Portal to perform additional configuration, optimize image quality, or do troubleshooting tasks.

Related topics

Maintenance and Troubleshooting

Access More Functionality with the Web Portal

The Display Screen

The display screen communicates the status of the imager.

Figure 1: Display screen: normal state, processing a print job from the upper supply. In this example, there are 86 sheets of film in the upper cartridge and 113 sheets in the lower cartridge.

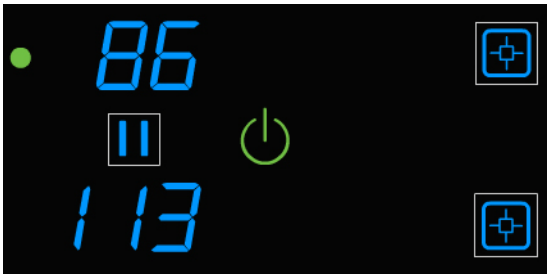

Symbol or code	Description
Upper and lower left side: 	Film counts. Displays the number of films that are remaining in the upper and lower film cartridges. If a blue number does not display while the imager is powered on, the associated film cartridge is not inserted (or not fully inserted) into the imager.
Center right: 	Error or status code. The 3-digit code displays when the error or status condition is present. If the imager is on and a 3-digit code does not display, the imager is operating normally. • If a different film size or type has been requested than either of the loaded sizes, the requested film size displays. For mammography film, an **M** displays in front of the film size; **B** indicates the blue base film, and **C** indicates the clear base film. • When the imager is starting, a countdown displays the number of minutes until the imager will be ready to print (for example, -4 means 4 minutes until the imager will be ready to print).

Symbol or code	Description
Indicator light	The light indicates the active cartridge. For example, when printing from the upper supply, the indicator light appears next to the upper film count. • When green, operation is normal. • When amber, the light indicates that there is an issue with the film supply, such as a jammed film.
Power	When the symbol is green, the power is on and the imager is ready to print. • The symbol flashes while the imager is processing, calibrating, or making a test print. • When the symbol is amber, the imager is not ready to print. Examples are when the imager has just been started, when a film cartridge is empty or jammed, and when a cover is removed.
Calibrate	Press to initiate film calibration for the film cartridge (upper or lower). • The symbol flashes while the calibration is in process, when making a test print (upper or lower), and when the filter must be reset. • When amber, there is an error such as a failed calibration. The indicator light associates the error code to the film cartridge.
Pause	**Important** To avoid exposing the film to light, do not open the film supply until the Pause symbol is off. Wait until the symbol is off to replace a cartridge. • During most normal operation, including when the imager is idle, the symbol is off. • The symbol is on while the imager is processing images, test prints, and during calibration. • The symbol flashes when a film cartridge cover is being removed and when the cartridge is open. If the Pause symbol is on, you can press the symbol to temporarily pause printing. Any jobs in progress finish printing, then the film cartridge cover closes.
Film Size	When this symbol appears, the requested print job requires a different film size. The required film size flashes in the location of the error or status code. You can also press the symbol to delete the pending jobs that require a different film size.
Restart	Restart the imager. An error code also displays to indicate the reason for the restart.

Symbol or code	Description
Film Jam 	Film is jammed from the upper or lower cartridge. The error code confirms the film jam and gives direction on where to find the film inside the imager. The indicator light associates the error code with the film cartridge.
Maintenance 	Preventive maintenance is required. An error code also displays to indicate the action to take.

Related topics

Maintenance and Troubleshooting

Load a Different Film Size to Match a Print Request

Calibrate the Imager for the Loaded Film

Delete All Pending Jobs

Make a Test Print

Restart the Imager

Preventive Maintenance

Imager Power

Power Switch Location

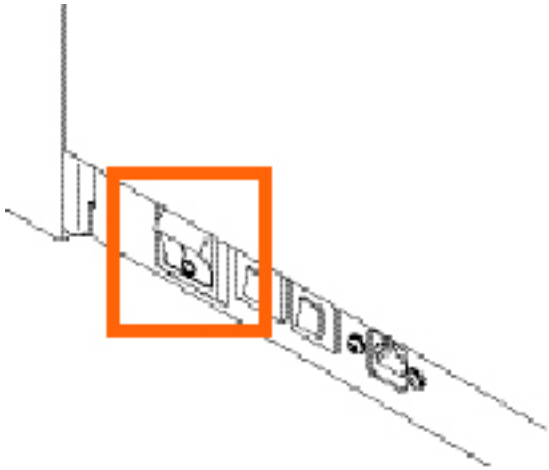

The power switch is on the lower back panel.

Start the Imager

1. Press the power switch on the back of the imager on.

2. Wait as the imager warms up.

   The warm-up period might last up to 30 minutes. The display screen shows the progress as the imager becomes ready to print.

Figure 2: The imager counts up to zero (0) to indicate how soon the imager will be ready to print. In this example, the imager will be ready to print in 7 minutes. The amber power symbol also indicates that the imager is not ready to print.

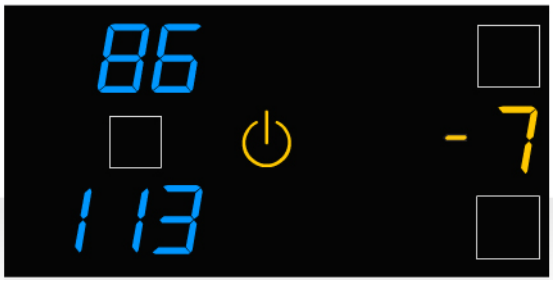

The warm-up period varies depending on the amount of time the imager has been off and the ambient temperature. During the warm-up period, the imager can receive and store images but cannot print films.

When the imager reaches operating temperature, the display screen changes to show that the system is ready to print, and the imager prints any images that were received during the warm-up period.

Figure 3: The green power symbol indicates that the imager is ready to process job requests.

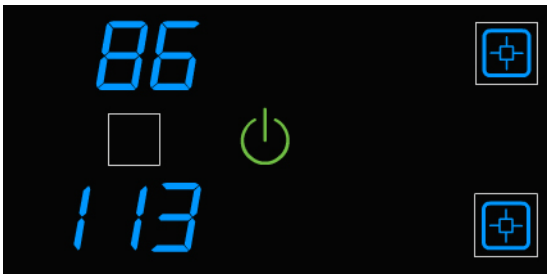

Emergency Shutdown or Power Loss

In the event of a power loss, or if an emergency requires an immediate shutdown of the imager, films in process will not be completed. However, when power is restored, the imager will restart. After warming up, the imager automatically reprints any films that were in process when the power was interrupted.

Restart the Imager

If the imager encounters an error that is usually corrected with a restart, the display screen shows the Restart symbol.

Figure 4: A restart is required, and the error code indicates the error condition.

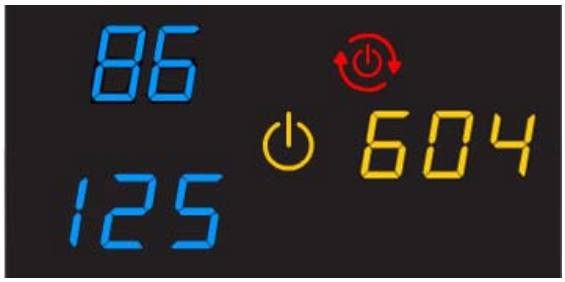

Note

Check the Troubleshooting chapter or the Quick Reference Card to identify the error code.

1. Press the power switch on the back of the imager off.

2. Press the power switch on.

If the error does not clear after the restart, it might be necessary to contact a qualified service provider.

View the Film Cartridge Information

Film Count

The upper and lower film counts appear on the display screen.

Figure 5: In this example, the upper cartridge has 86 sheets of film, and the lower has 113.

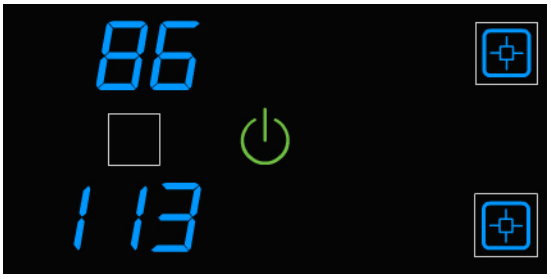

Size/Type of the Loaded Film

To check the size of the loaded film, open the film supply and view the loaded cartridges.

Note
Make sure the Pause symbol is off before you open the film supply.

Film Count Flashes “0”

When either cartridge is empty, the film count flashes “0.” Replace the cartridge.

Figure 6: In this example, the upper film cartridge is empty. Replace the upper cartridge.

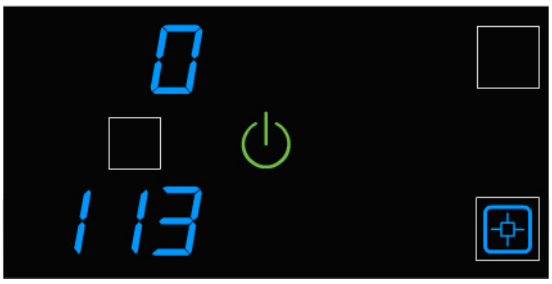

Film Size/Type Flashes

When a film size/type is requested that is not loaded, the Film Size symbol appears, and the requested film flashes. Change the loaded film to match the print request.

Figure 7: View and load the requested film size/type in the error code location (amber text). In this example, "M" represents a request for mammography film.

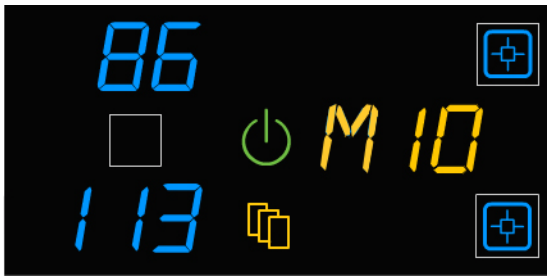

Related topics

Replace an Empty Film Cartridge

Load a Different Film Size to Match a Print Request

Replace an Empty Film Cartridge

When a film cartridge is empty, the film count appears as **0** on the display screen.

Note

Before you load a new film cartridge, make sure that the Pause symbol is **off**. During normal operation, the symbol is off. When the film cartridge cover is open, the symbol is on. To avoid exposing the film to light, do not open the film supply until the Pause symbol is off.

1. If the Pause symbol is on, press the symbol to close the film cartridge cover.

2. Open the film supply.
3. Hold the edges of the film cartridge and lift the empty cartridge out of the film supply.
4. Discard the empty cartridge.
5. Insert the new film cartridge. Align the cartridge with the label facing up and the perforations to the front. Set the leading edge on the cartridge guides, and then slide the film cartridge into the imager to engage the detents in the bottom of the cartridge.

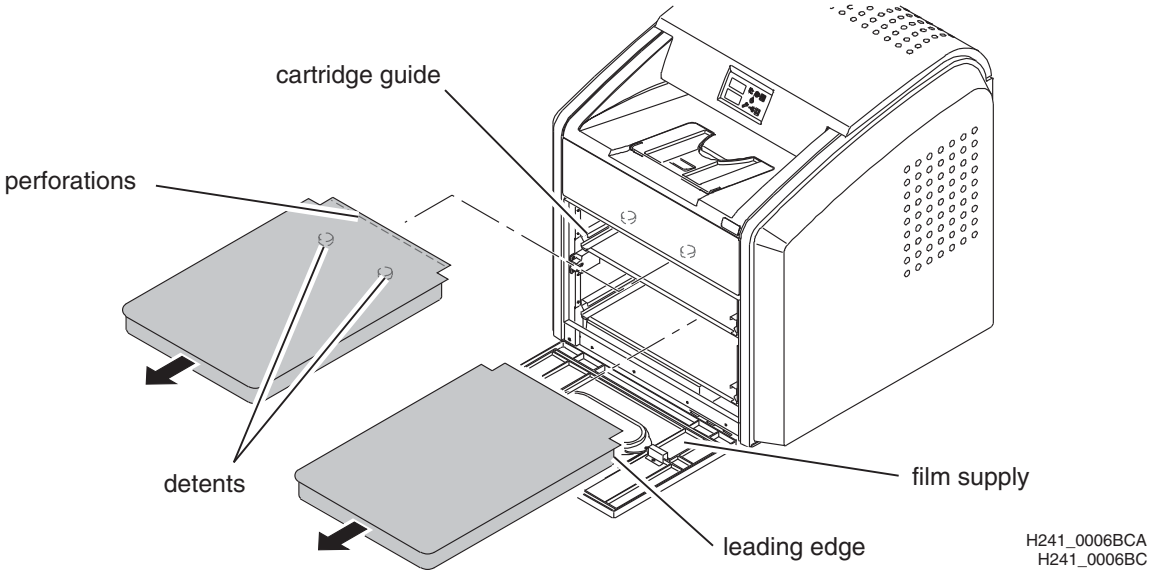

6. Close the film supply.
7. Check that the display screen changes to reflect the new film count. A new film cartridge contains 125 sheets.

Load a Different Film Size to Match a Print Request

If a print request requires a different film size, the requested film size flashes on the display screen. Change the installed film to match the print request.

- **M** = mammography film
- **B** = blue base film
- **C** = clear base film

Figure 8: The requested film size flashes, and the Film Size symbol indicates the need to load a different film size and/or type. In this example, mammography 10 x 12 in. film is requested. The amber text changes between “M10” and “M12.” Load it to continue with the print request.

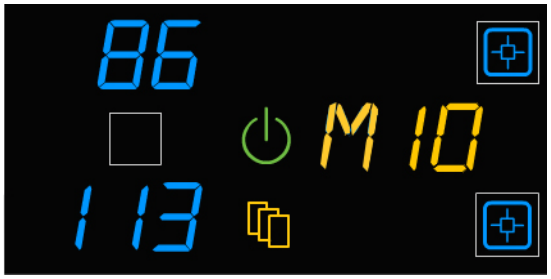

1. If the Pause symbol is on, press it and wait until it turns off.
2. Open the film supply.
3. Hold the edges of the film cartridge and lift the cartridge out of the film supply.
4. Insert the new film cartridge:

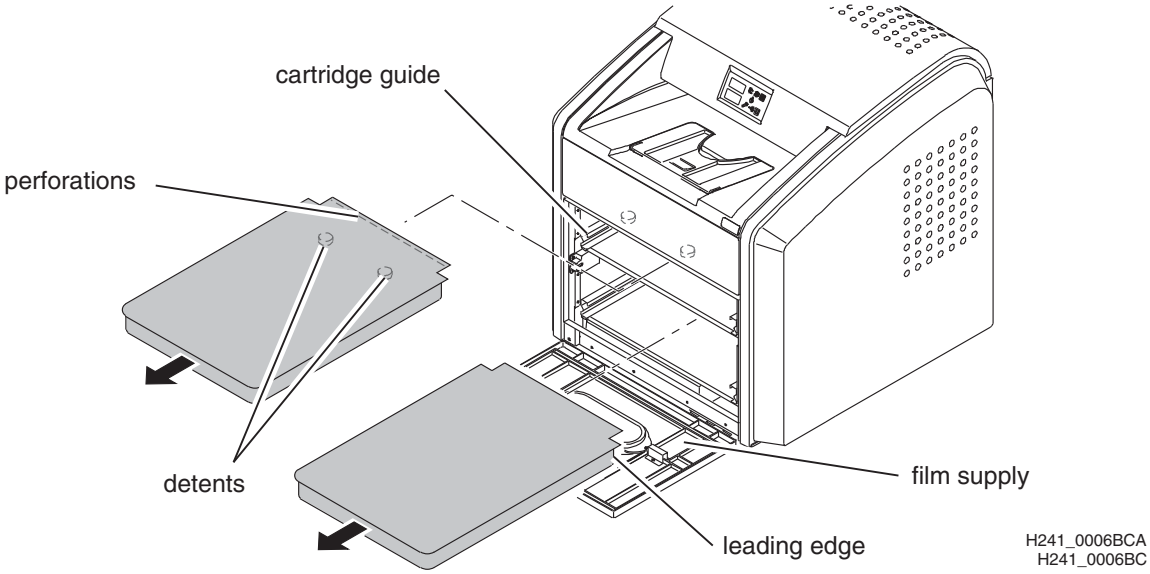

   a. Align the cartridge with the label facing up and the perforations to the front.
   b. Set the leading edge on the cartridge guides.
   c. Slide the film cartridge into the imager to engage the detents in the bottom of the cartridge.

Film Size/Type Flashes

When a film size/type is requested that is not loaded, the Film Size symbol appears, and the requested film flashes. Change the loaded film to match the print request.

Figure 7: View and load the requested film size/type in the error code location (amber text). In this example, "M" represents a request for mammography film.

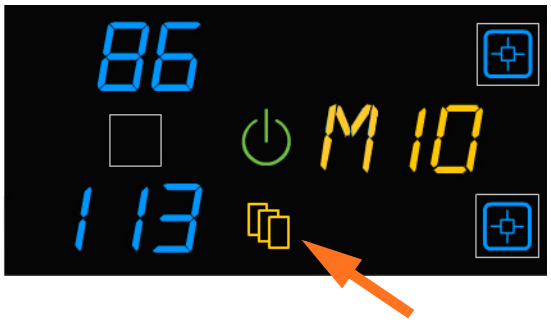

Related topics

Replace an Empty Film Cartridge

Load a Different Film Size to Match a Print Request

Calibrate the Imager for the Loaded Film

Automatic vs. Manual Calibration

The imager automatically calibrates film with a new media lot number.

The calibration initiates a test print with a step wedge pattern. The pattern has a series of 21 step wedges of increasing optical density.

Occasionally, it will be necessary to manually calibrate the imager for the film. Run a calibration manually when:

- Code 001 appears on the display screen.
- A calibration error occurred, indicated by codes 624, 631, or 632 on the display screen.
- A **Not Calibrated** message appears on the Web Portal Home screen.

Manual Calibration

1. Press the Calibrate symbol for the film cartridge (upper or lower).

Figure 9: In this example, the imager is running a calibration on the lower cartridge. The Calibration and Power symbols both flash while the calibration is in progress.

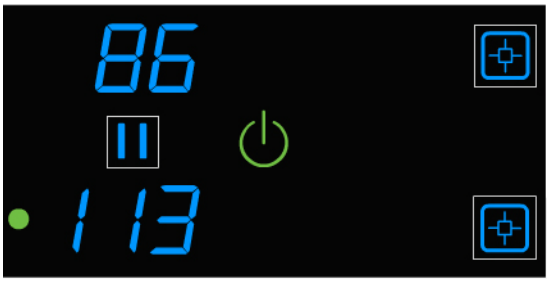

2. When the symbols stop flashing, the calibration is complete.

Note

If the Calibration symbol turns from blue to amber, there was a problem with the calibration process. An error code will display, and the indicator light associates the error code to the film cartridge. When a calibration error occurs, it might be necessary to address the error before you can continue printing to that film cartridge.

Related topics

Error Indicators on the Display Screen

Access the Web Portal

Make a Test Print

Make a test print to verify that you can print. The type of test print varies depending on whether you have clear/blue or mammography film loaded.

There are several options for mammography calibration prints; the default is configured during installation. If you need a different type of test print for mammography film, you can change the default at the Web Portal.

SMPTE Image Prints

1. Press and hold the Calibrate symbol for the film cartridge (upper or lower) for **three seconds**.

Figure 10: In this example, the imager is printing a test image from the upper cartridge. The Calibration and Power symbols both flash while the test print is in progress.

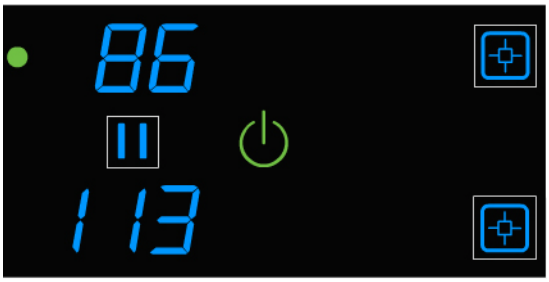

2. When the symbols stop flashing, the test print is complete.

Mammography Test Prints

There are several options for mammography calibration prints, for example, QC wedges, multipurpose QC, TG18-PQC or QC, TG18-UN10 or 80, or TG18-UNL10 or 80. The default is configured during installation, and you can change it any time from the Web Portal.

Press and hold the Calibrate symbol for the film cartridge (upper or lower, where the mammography film is loaded) for **three seconds**.

Figure 11: In this example, the imager is printing a QC step wedge test. The density value identifier displays at the upper left (1–4), and the density displays on the right side (1.40 in this example).

Related topics

Access the Web Portal

Open or Remove a Cover

You can open or remove the imager's top cover, left cover, and film supply. The covers are protected with an interlock mechanism to keep the imager from printing when they are open, to keep you safe.

Code 701 alerts you that a cover and an interlock are open, and internal power to the imager is turned off.

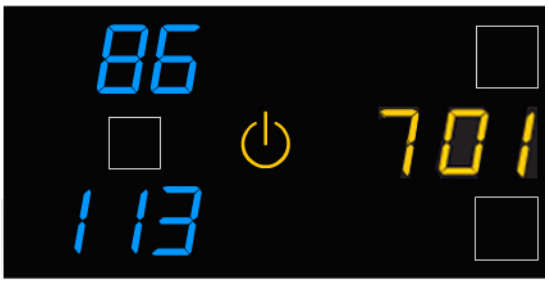

You might remove the top cover or left cover to search for film jams.

Related topics

Recognize and Handle a Film Jam

Access More Functionality with the Web Portal

The Web Portal is your interface to additional features. In addition to the installation and setup of your system, you can view and manage the imager's connections over the network, configure features, view error messages, and access general status information at the Web Portal. You can also check film count, film size, and film type.

Troubleshooting tools include:

- Optimization of image quality for modalities.
- Diagnostic utilities, including backup and restore.

The Web Portal provides an online Help system and a user's guide to assist you.

Access the Web Portal

Prerequisites:

A desktop or laptop computer connected to the network

1. On a desktop or laptop computer, start WINDOWS INTERNET EXPLORER (version 6, 7, or 8).
2. In the address field, type: `http://<imager's IP address>`

Note

If you do not know the IP address, check with your network administrator or the person who installed the imager.

3. Click **Go**.
   - The main window for the Web Portal shows the general status, the number of print jobs queued, the number of jobs waiting for film, and the film count.
   - The center panel displays the screens where you view and perform tasks. Online Help is available by selecting **Documentation** from the left panel, and the Help icon provides context-sensitive Help for fields and pages.
   - The left panel also provides the links to all other screens.

Note

If you are using WINDOWS INTERNET EXPLORER 8, place the INTERNET EXPLORER (IE) window into compatibility view. After you have opened the IE 8 window, click the Compatibility View toolbar button. This will correct some potential viewing issues with IE 8. If the icon is not on the toolbar, select **Compatibility View** from the **Tools** menu.

3 Maintenance and Troubleshooting

Use the information in this chapter to keep the imager in the best condition and to correct minor problems.

- Overview: Status and Error Messages and Codes—Review this overview for information about where and when the messages and codes appear.
- Preventive Maintenance—Learn how to respond to the Maintenance symbol.
- Error Indicators on the Display Screen—Learn about the amber and red error symbols.
- Using the Web Portal to Gain More Information on Errors—Learn how and why to access the Web Portal.
- Subsystem Error Codes and Messages—Refer to this section for error codes and messages.
- Condition Codes—Refer to this section for all condition codes.
- Film Jam Indication and Areas—See instructions to locate and correct jammed films.
- Display Screen is Not Functional—Learn what to do if the display screen is not responding.
- Call for Support—Learn how to get help.

Overview: Status and Error Messages and Codes

The imager detects errors and other conditions and reports them to you in multiple ways. Some conditions require your action. This section provides a list of the codes, explains the condition, and provides recommended actions when appropriate. View the codes:

- **At the imager's display screen,** on the top left. The display screen reports 3-digit codes.

  Some codes are associated with symbols on the display screen, such as the Film Jam symbol, to help you quickly understand the condition.
- **At the Web Portal**. Access the Web Portal using your personal computer, keyboard, and mouse to gain more information about the errors and conditions. Using the Web Portal is optional, but you may find it useful. The Web Portal can report more information than the imager's display screen due to the limited size of the display screen.

Related topics

Using the Web Portal to Gain More Information on Errors

Preventive Maintenance

Note

These conditions are also reported at the Web Portal.

About the Charcoal Filter

Caution

In the U.S., exhausted filters are considered to be non-hazardous waste according to the US Environmental Protection Agency Resource Conservation Recovery Act (RCRA). Municipality owned and licensed solid waste management facilities are an appropriate disposal option. Contact your local or state solid waste authorities to determine if additional disposal requirements apply. In other regions, contact local or regional solid waste authorities for proper disposal guidance.

The filter traps the odors that are generated in the imager during film processing. The filter must be replaced after 7500 prints. Keep at least one new filter available to replace the used filter when needed.

Replace the Filter

When the filter must be replaced, the display screen shows the error code and the Maintenance symbol:

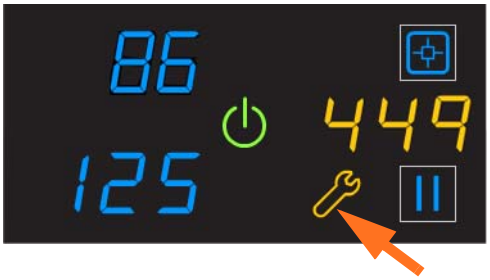

1. Remove the filter cover.

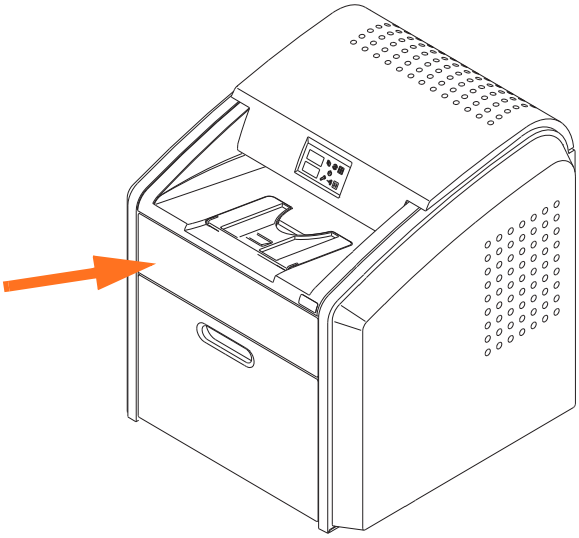

2. Remove the filter by lifting it up and pulling it forward.

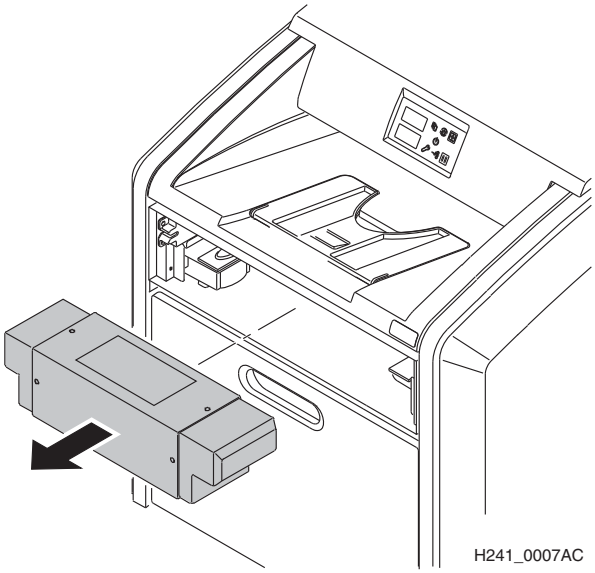

3. Install a new filter.
4. Re-install the filter cover.
5. To reset the imager for the new filter and to clear the Maintenance symbol, press and then release the Maintenance and Calibrate symbols at the same time.

550 Code and Maintenance Symbol

If the imager needs a preventive maintenance service call, the 550 code and Maintenance symbol appear:

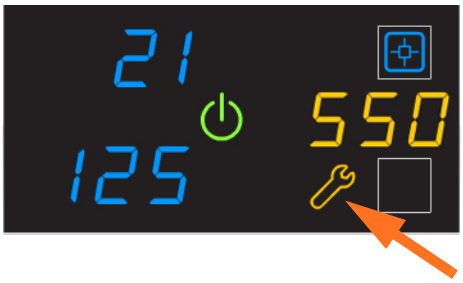

When the 550 code displays, contact a qualified service provider.

Error Indicators on the Display Screen

The imager can detect errors and other conditions that require a response. Some errors or abnormal conditions are reported on the display screen in the form of condition codes and symbols.

Note

These errors are also reported at the Web Portal.

Recognize and Handle a Calibration Error

When the calibration has failed, the display screen shows a 624, 631, or 632 error and the Calibrate symbol is amber.

Figure 1: In this example, the amber indicator light and Calibration symbol indicate that calibration of the film in the lower cartridge has failed.

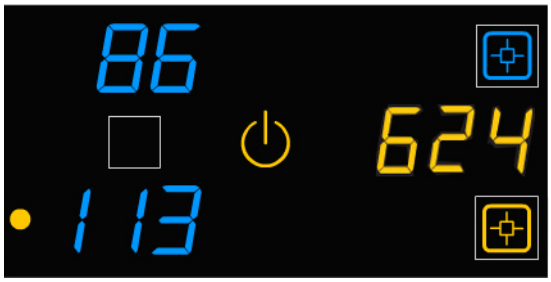

The most common cause is a film-related problem. Depending on the cause, you may be able to keep printing, but the imager may not be optimally calibrated for this film lot.

Attempt a manual calibration. If the calibration fails again, load a new film cartridge.

Related topics

Calibrate the Imager for the Loaded Film

Handle a Required Restart

When the Restart symbol appears, you must restart the imager.

Figure 2: The amber Power symbol, together with the Restart symbol, indicates that you must restart the imager to continue printing.

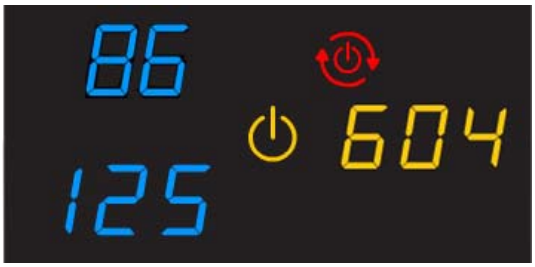

1. Press the power switch on the back of the imager off.

2. Press the power switch on.

If the error does not clear after the restart, it might be necessary to contact a qualified service provider.

Related topics

Restart the Imager

Recognize and Handle a Film Jam

When the Film Jam symbol appears, you must clear the jam before the imager can continue to print. After the jam has been cleared, the imager will reprint the image on a new sheet of film.

Figure 3: In this example, the red jam symbol alerts you to the jam, and the amber indicator light shows you that the jam is related to the upper film cartridge. The error code also indicates a film jam.

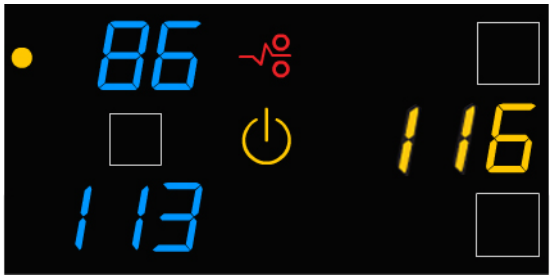

Related topics

Film Jam Indication and Areas

Using the Web Portal to Gain More Information on Errors

The Web Portal is your interface to additional functions on the imager. You can view and correct error messages and access general status information at the Web Portal.

About Codes on the Web Portal and the Display Screen

The 3-digit error and status codes on the display screen are reported at the Web Portal as 5-digit codes. The last three digits on the Web Portal codes match the three digits on the display screen. For example, code 701 on the display screen is the same as code 20701 on the Web Portal. Use the information in this section to understand the information at the display screen and/or at the Web Portal and to respond appropriately.

Related topics

Access the Web Portal

Subsystem Error Codes and Messages

Use the information in this section to interpret the codes and messages that appear on the display screen and at the Web Portal.

DICOM (Digital Imaging and Communications in Medicine)

In response to a DICOM printer N-GET status request from a modality, a printer status message and a printer status info message are returned to the requesting service class user (SCU). Every error has an associated printer status info message. If more than one error exists when a printer N-GET request is received, a status message is sent in response, according to an established priority. The table shows the DICOM printer status and info message.

Printer Status	Printer Status Info	Printer Status	Printer Status Info
FAILURE	ELEC DOWN PRINTER DOWN PROC DOWN	WARNING	BAD SUPPLY MGZ CALIBRATION ERR CHECK PRINTER COVER OPEN EMPTY MEDIASZ MEDIATP FILM JAM FILM TRANS ERR PROC INIT PRINTER INIT PRINTER OFFLINE

Printer

Printer Status	Display Screen	Web Portal	DICOM Status	Description
Cover is open	Code: 701 Power symbol is yellow	20701: Cover Open	WARNING / COVER OPEN	The top cover or one of the side panels may be off. The imager is not ready to print.
Failed	Power symbol is yellow	Failed	See Condition Code	An error has occurred that prevents printing.
Cartridge closure is requested	Power symbol is green and/or flashing Pause symbol is on	Not Ready	Not Applicable	The imager completes any prints in progress before closing the cartridge cover.
Offline	Power symbol is yellow	20704: Printing Disabled	WARNING / PRINTER OFFLINE	The imager has been disabled and does not have a network connection.

Printer Status	Display Screen	Web Portal	DICOM Status	Description
Printing	Power symbol is green and flashing	Printing	NORMAL	The imager is currently printing films.
Ready	Power symbol is green Film count displays	Ready	NORMAL	The imager is online and the processor has reached operating temperature.
Self-test	Power symbol is yellow and flashing Code and film count are replaced by dashes	Self-test	WARNING / PRINTER INIT	This occurs when power is first applied to the imager.
Service Mode	Status code: 700 Power symbol is yellow	20700: Service Mode	WARNING / PRINTER OFFLINE	The service switch is enabled. The imager is not ready to print.
Warming	Power symbol is yellow and flashing Number of minutes count down until ready	Warming=xx	WARNING / PROC INIT	The processor is warming up and will not be ready to print for xx minutes.

Film Cartridge

Film Cartridge State	Display Screen	Web Portal	Description
Failed	Power symbol is yellow Pause and Calibrate symbols are off Film count is replaced by dashes	Failed	An error has occurred that affects normal operation. This film cartridge is currently not usable. Reinsert the cartridge. If error reoccurs, insert a new film cartridge.
Calibrating	Power symbol is green and flashing Pause symbol is on Calibrate symbol is blue and flashing	Calibrating	A calibration is in progress for the film cartridge.

Film Cartridge State	Display Screen	Web Portal	Description
Film cartridge is empty	Power symbol is yellow Pause and Calibrate symbols are off Film count is flashing “0”	Empty and/or sheet count of 0	The film cartridge is inserted, but the sheet count is 0. Insert a new cartridge.
Manual mode	Status code: 002 Power symbol is green Calibrate symbol is yellow	AIQC Off (with normal tray information)	The film in this cartridge does not meet AIQC standards. However, the imager prints if ready.
Invalid film cartridge	Power symbol is yellow Pause and Calibrate symbols are off Film count is replaced by dashes	Invalid Film Tray	There is a film cartridge in the film supply, but it does not contain a liner/RF tag. Install a new film cartridge.
Ready	Power symbol is green Calibrate symbol is on	Normal Tray Info	The film cartridge is ready for use.
Requires calibration	Power symbol is yellow Calibrate symbol is on	Requires Calibration	The film cartridge must be calibrated before the imager can print.
Film cartridge is not detected	Power symbol is yellow Pause and Calibrate symbols are off Film count is blank	No Film Tray	The film cartridge is not fully inserted in the imager. Insert the cartridge.
Not ready	Various	Not Ready	When the conditions are corrected, the imager can print.
Cartridge closure is pending	Power symbol is green Calibrate symbol is off Pause symbol is on	Pause Requested	You pressed the Pause button, but the rollback has not started because films are still moving through the imager. When the closure is complete, the Pause symbol is off. At this time, you can remove the film cartridge.

Related topics

Calibrate the Imager for the Loaded Film

Job Manager

Job Manager Status	Display Screen	Web Portal	Description
Active	Not Applicable	Shows how many print requests have been initiated.	The imager is accepting DICOM job requests and film is available for all current jobs.
No Media	Power symbol is green Film Size symbol is yellow The required film size is shown on the display screen	Shows how many jobs with this status are in the job queue.	The imager is accepting DICOM job requests, but film of the correct size and type is not available for at least one current job.
Offline	Status code: 704 Power symbol is green	DICOM Offline	The imager cannot accept any DICOM job requests. Restart the imager.

Related topics

Load a Different Film Size to Match a Print Request

Restart the Imager

Condition Codes

Condition codes are shown on the display screen in the order in which they are generated. If there is more than one code associated with the current condition of the imager, the first code is shown on the display screen for six seconds, while other codes in the list display for three seconds as the list is cycled. You can also view these codes and messages at the Web Portal.

Display Screen	Web Portal	Web Portal Message	Action
004	01004	MIM Core: Internal Software Error	Restart the imager. If the error persists, call for service.
200	04200	MIM Core: Disk Full	Load the requested film type and size for jobs that are waiting for media. If the error persists, call for service.
400	06400	MIM Core: Image Page Error	Resend the print job from the image source. If the error persists, call for service.
410	06410	MIM Core: Image Rendering Error	Resend the print job from the image source. If the error persists, call for service.
411	06411	MIM Core: Image Data Error	Resend the print job from the image source. If the error persists, call for service.
420	06420	MIM Core: Internal Software Error	Resend the print job from the image source. If the error persists, call for service.
430	06430	MIM Core: Internal Software Error	Resend the print job from the image source. If the error persists, call for service.
001	10001	MIS: Internal Software Error	Restart the imager. If the error persists, call for service.
003	10003	MIS: Image Buffer Error	Restart the imager. If the error persists, call for service.
015	10015	MIS: Database Error	Restart the imager. If the error persists, call for service.
910	10910	MIS: MCS Communication Failure	Restart the imager. If the error persists, call for service.
006	20006	Disconnected or faulty network cable	Check and reconnect the network cable on both ends. If the error persists, call for service.

Display Screen	Web Portal	Web Portal Message	Action
154	20154	MCS: Internal Communications Failure	Restart the imager. If the error persists, call for service.
155	20155	Incompatible MCS Printer Configuration for Hardware	Restart the imager. If the error persists, call for service.
156	20156	Incompatible Software Versions Installed	Restart the imager. If the error persists, call for service.
209	20209	Laser Imager Opened During Self Test	Replace the cover. Restart the imager. If the error persists, call for service.
449	20449	None	Change the charcoal filter.
550	20550	None	Call service for preventive maintenance.
700	20700	None	Restart the imager. If the error persists, call for service.
701	20701	None	Replace the cover.
704	20704	None	The network connection to the imager has been lost. Restart the imager.
705	20705	None	The imager is restarting (for example, during a software update). Wait until the restart is complete.
706	20706	None	A shutdown that was initiated remotely is complete. Restart the imager.
915	20915	Internal Image Data Transfer Failed	Restart the imager. If the error persists, call for service.
919	20919	Internal Image Data Render Failed	Restart the imager. If the error persists, call for service.
002	21002	None	No action. The error may remain until the film cartridge is empty. The film cartridge is operating in manual mode and AIQC is off.
116	21116	Film Jam in Area 1	Clear the jam.

Display Screen	Web Portal	Web Portal Message	Action
118	21118	Film Supply: Internal Hardware Failure	If the Pause symbol is on, press it to cover the film cartridge. When the Pause symbol stops flashing, remove the film cartridge from the imager. Then reinsert the film cartridge into the imager. If the error persists, call for service.
119	21119	Film Supply: Internal Hardware Failure	If the Pause symbol is on, press it to cover the film cartridge. When the Pause symbol stops flashing, remove the film cartridge from the imager. Then reinsert the film cartridge into the imager. If the error persists, call for service.
125	21125	Film Supply: Internal Hardware Failure	If the Pause symbol is on, press it to cover the film cartridge. When the Pause symbol stops flashing, remove the film cartridge from the imager. Then reinsert the film cartridge into the imager. If the error persists, call for service.
139	21139	Film Supply: Unable to Identify Film Cartridge	If the Pause symbol is on, press it to cover the film cartridge. When the Pause symbol stops flashing, remove the film cartridge from the imager. Then reinsert the film cartridge into the imager. If the error persists, call for service.
145	21145	Film Supply: Unsupported Film Type	The imager does not support the loaded film type. Install a cartridge with a supported film type. If the error persists, call for service.
146	21146	Film Supply: Unsupported Film Size	The imager does not support the loaded film size. Install a cartridge with a supported size. If the error persists, call for service.
175	21175	Rollback Failed to Engage Cartridge	If the Pause symbol is on, press it to cover the film cartridge. When the Pause symbol stops flashing, remove the film cartridge from the imager. Then reinsert the film cartridge into the imager. If the error persists, call for service.

Display Screen	Web Portal	Web Portal Message	Action
177	21177	Film Cartridge Failed to Close	Open the film supply. Manually close the film cartridge, using the manual rollback knob, to prevent the film from fogging. If the error persists, call for service.
178	21178	Rollback Failed to Leave Home	If the Pause symbol is on, press it to cover the film cartridge. When the Pause symbol stops flashing, remove the film cartridge from the imager. Then reinsert the film cartridge into the imager. If the error persists, call for service.
624	21624	Film Supply: Film Calibration Failure	Calibrate again. If the error still displays, install a new film cartridge. If the error still displays, restart the imager. If the error persists, call for service.
631	21631	Film Supply: Film Calibration Failure - Dmin Outside Target	The minimum density of the film is too high. Calibration results for this film are outside the normal range. Printing will continue with these parameters. If the prints are not optimal, do the calibration procedure again or install another film cartridge.
632	21632	Film Supply: Film Calibration Failure - Dmax Outside Target	The maximum density of the film is lower than the target density. Calibration results for this film are outside the normal range. Printing will continue with these parameters. If the prints are not optimal, do the calibration procedure again or install another film cartridge.
922	25922	RF Tag: Internal Diagnostic Failure	Restart the imager. If the error persists, call for service.
323	26323	Film Jam in Area 2	Clear the jam.
324	26324	Film Jam in Area 2	Clear the jam.
325	26325	Film Jam in Area 2	Clear the jam.
326	26326	Film Jam in Area 2 or 3	Clear the jam.
543	26543	Film Jam in Area 3	Clear the jam.
544	26544	Film Jam in Area 3	Clear the jam.

Display Screen	Web Portal	Web Portal Message	Action
123	27123	Optics: Internal Hardware Failure	Restart the imager. If the error persists, call for service.
601	27601	Optics: Calibration Failed	Restart the imager. If the error persists, call for service.
604	27604	Optics: Calibration Failed	Restart the imager. If the error persists, call for service.
607	27607	Optics: Calibration Failed	Restart the imager. If the error persists, call for service.
611	27611	Optics: Internal Hardware Failure	Restart the imager. If the error persists, call for service.
646	27646	Optics: Internal Hardware Failure	Restart the imager. If the error persists, call for service.
650	27650	Optics: Internal Hardware Failure	Restart the imager. If the error persists, call for service.
501	28501	Processor: Internal Hardware Failure	Restart the imager. If the error persists, call for service.
509	28509	Processor Warm-up Failure	Restart the imager. If the error persists, call for service.
510	28510	Processor: Internal Hardware Failure	Restart the imager. If the error persists, call for service.
551	28551	Processor Heater Failure	Restart the imager. If the error persists, call for service.
554	28554	Processor Over Temperature	Restart the imager. If the error persists, call for service.
924	29924	Densitometer: Internal Diagnostic Failure	Restart the imager. If the error persists, call for service.
925	29925	Densitometer: Internal Diagnostic Failure	Restart the imager. If the error persists, call for service.

Display Screen	Web Portal	Web Portal Message	Action
931	29931	Densitometer: Internal Communications Failure	Restart the imager. If the error persists, call for service.
935	36935	Local Panel: No Communications from MCS	Restart the imager. If the error persists, call for service.

Related topics

Restart the Imager

Load a Different Film Size to Match a Print Request

Replace the Filter

550 Code and Maintenance Symbol

Calibrate the Imager for the Loaded Film

Clear Film Jam Code 116 / Jam in Area 1

Clear Film Jam Code 323 / Jam in Area 2

Clear Film Jam Code 324 or 325 / Jam in Area 2

Clear Film Jam Code 326 / Jam in Area 2 or 3

Clear Film Jam Code 543 / Jam in Area 3

Clear Film Jam code 544 / Jam in Area 3

Film Jam Indication and Areas

Jam Areas

When film is jammed, the display screen indicates a jam and an error code that provides guidance on where to check for the jammed film.

Figure 4: In this example, the indicator light shows you that the jam is related to the upper cartridge.

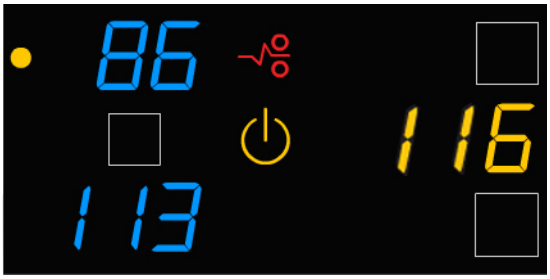

Note

These errors are also reported at the Web Portal.

Figure 5: Film Jam Areas

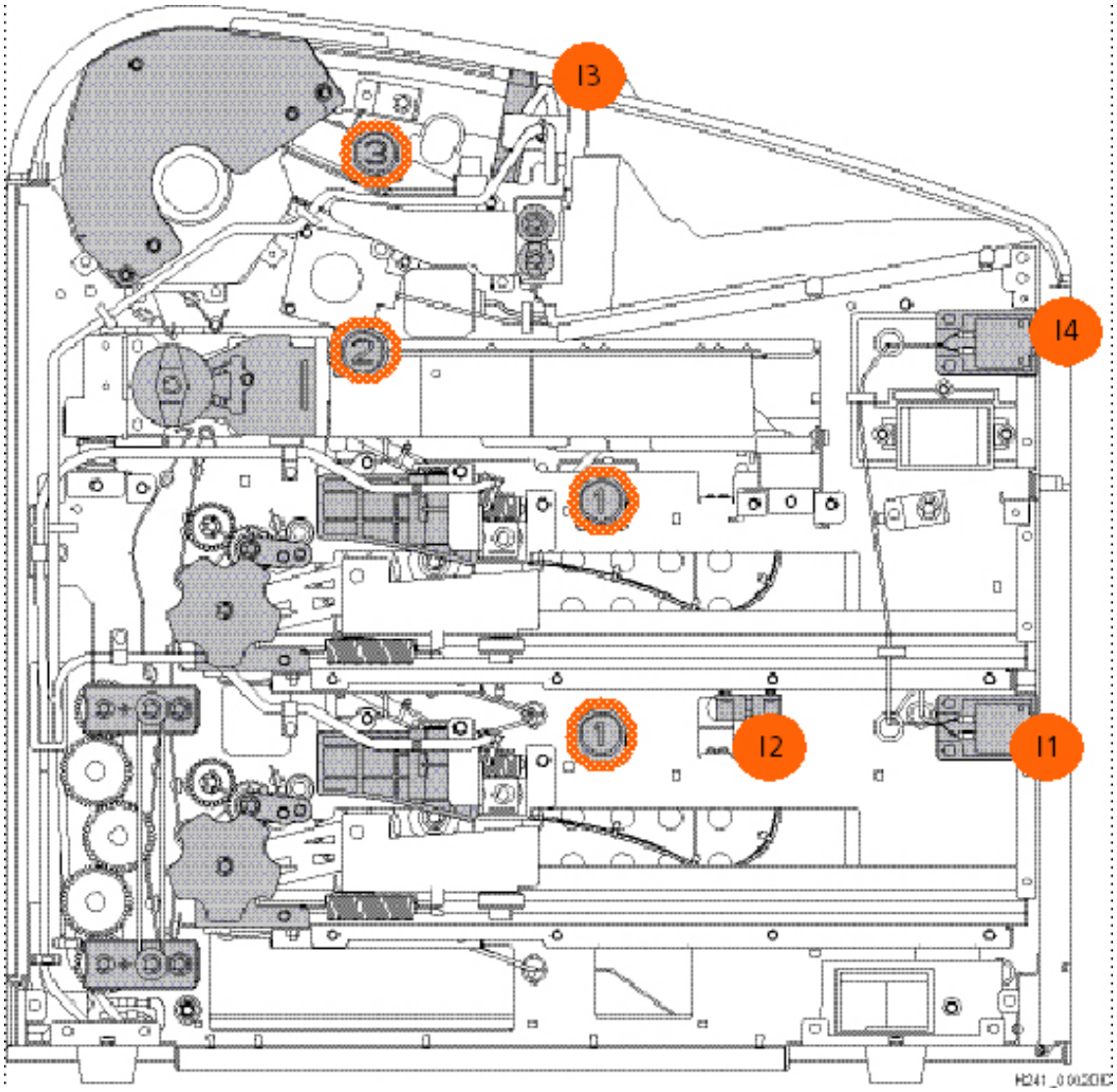

Jam Areas	Description	Interlocks	Description
1	Upper and Lower film supply	I1	Lower film supply
2	Film path	I2	Left cover
3	Processor / densitometer	I3	Top cover
		I4	Upper film supply

Roller Knobs

For some jams, you can remove the film by turning a knob to move the film out of the imager. See details in the film jam instructions.

Figure 6: Knobs for manual film removal

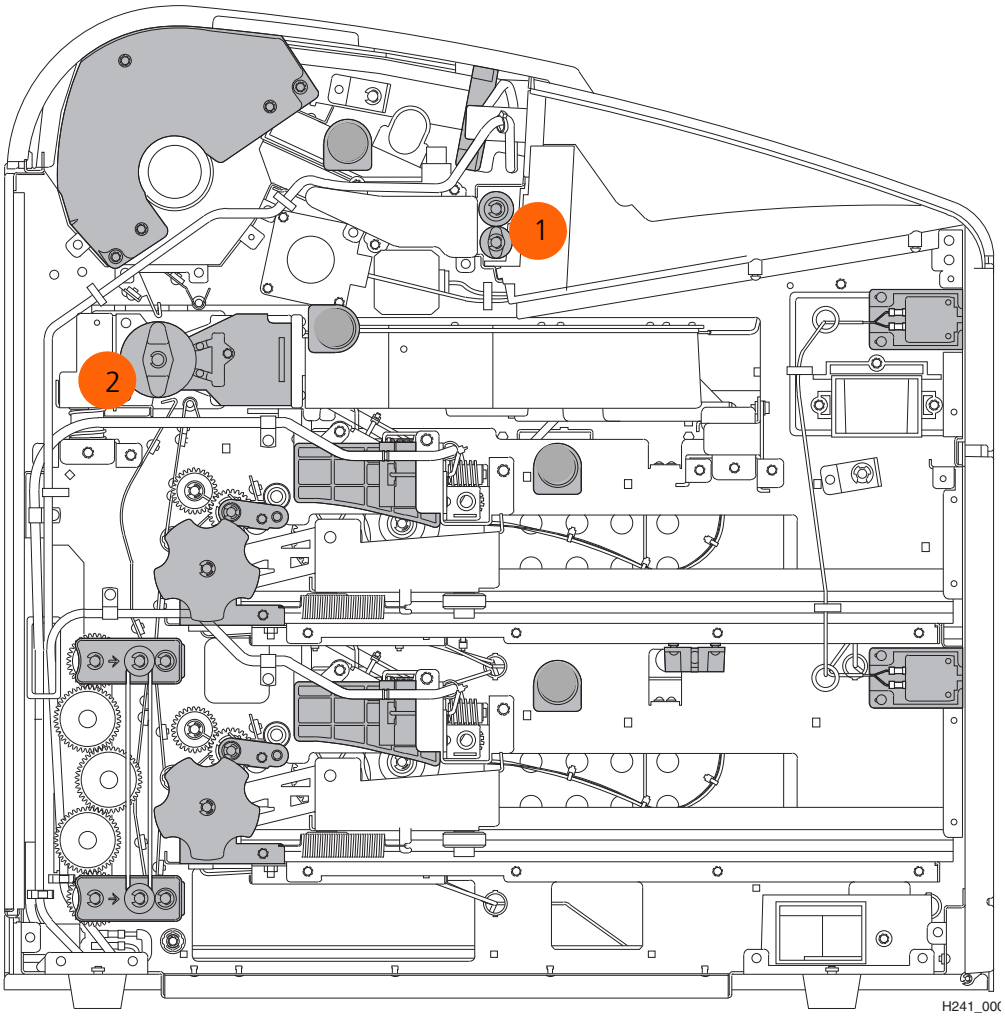

Knobs	Description
1	Exit Roller
2	Exposure Transport

Clear Film Jam Code 116 / Jam in Area 1

Note

This error displays as code 21116 at the Web Portal.

1. If the Pause symbol is on, press it and wait until it goes off.
2. Open the film supply and remove the film cartridge from the imager.
3. Look in Area 1 (the upper or lower film supply) and remove any film.
4. Reinsert the film cartridge in the imager.

Related topics

Film Jam Indication and Areas

Clear Film Jam Code 323 / Jam in Area 2

Note

This error displays as code 26323 at the Web Portal.

1. If the Pause symbol is on, press it and wait until it goes off.
2. Open the film supply.
3. Check that the film cartridge is closed. If it is not closed, carefully close the cartridge cover.
4. Remove any loose film near, in, or partially in the film cartridge.
5. Close the film supply.

Related topics

Film Jam Indication and Areas

Clear Film Jam Code 324 or 325 / Jam in Area 2

Note

This error displays as code 26324 or 26325 at the Web Portal.

1. If the Pause symbol is on, press it and wait until it goes off.
2. Remove the left cover:

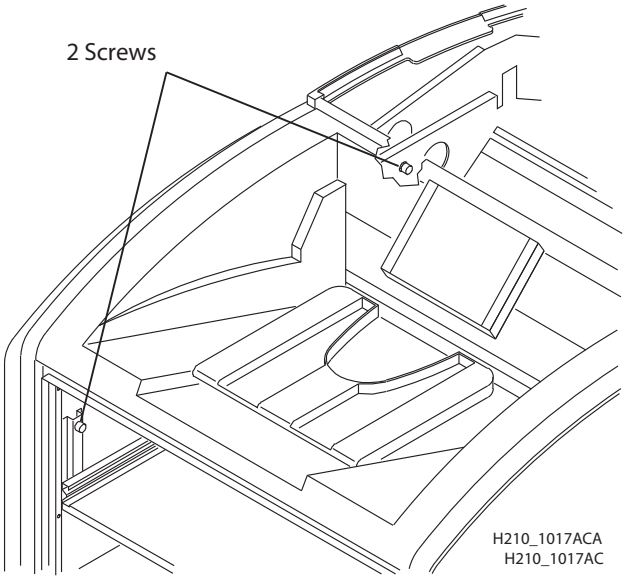

   a. Open the film supply.
   b. Remove the top cover.
   c. Turn the knurled knobs by hand.
3. Reach into Area 2 and remove any film.
4. If the film is not loose, carefully turn the exposure transport knob clockwise to remove the film from the rollers.
5. Reinstall the covers.

Related topics

Film Jam Indication and Areas

Clear Film Jam Code 326 / Jam in Area 2 or 3

Note

This error displays as code 26326 at the Web Portal.

1. If the Pause symbol is on, press it and wait until it goes off.
2. Remove the left cover:
   a. Open the film supply.
   b. Remove the top cover.
   c. Turn the knurled knobs by hand.
3. Rotate the exit roller knob clockwise until a film exits the imager.

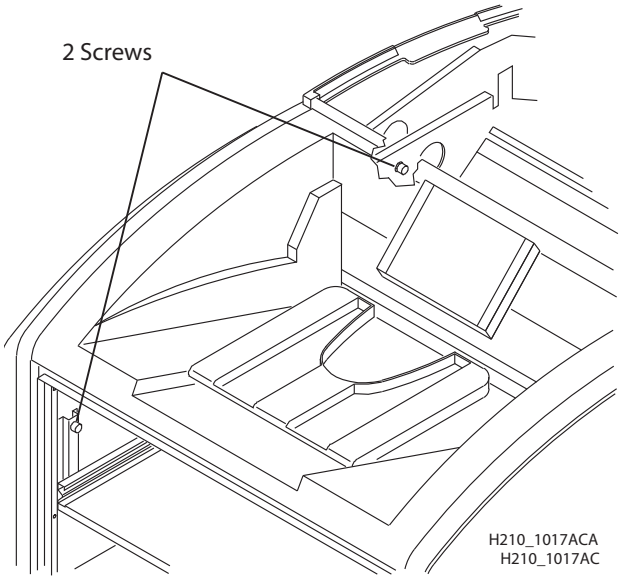

4. If a film does not exit:
   a. Reach into Area 2 and remove any film.
   b. If the film is not loose, carefully turn the exposure transport knob clockwise to remove the film from the rollers.
5. Reinstall the covers.

Related topics

Film Jam Indication and Areas

Clear Film Jam Code 543 / Jam in Area 3

Note

This error displays as code 26543 at the Web Portal.

1. If the Pause symbol is on, press it and wait until it goes off.
2. Remove the left cover:
   a. Open the film supply.
   b. Remove the top cover.
   c. Turn the knurled knobs by hand.
3. Rotate the exit roller handle clockwise until a film exits the imager.
4. Reinstall the covers.

Related topics

Film Jam Indication and Areas

Clear Film Jam code 544 / Jam in Area 3

Note

This error displays as code 26544 at the Web Portal.

1. Remove any film that is jammed in the exit tray.
2. If the Pause symbol is on, press it and wait until it goes off.
3. Remove the top cover and remove any films.
4. Close the top cover.

Related topics

Film Jam Indication and Areas

Display Screen is Not Functional

If the display screen is not responding, use the power switch on the imager to turn power off, and then on. If the display screen is still non-responsive, turn the imager off and contact a qualified service provider.

Call for Support

If you cannot correct a condition and need help, call for support. Have the following information ready when you call:

- Model number
- K-number
- Error code from the display screen and/or code and error message from the Web Portal

4 Film Technical Information

This section describes the characteristics of Laser Imaging Film, not the operation of the imager. The Laser Imaging Film is a high-resolution, infrared-sensitive, photothermographic film designed specifically for the imager.

Spectral Sensitivity of the Film

The Laser Imaging Film is infrared sensitive and has been sensitized to the infrared laser diode of the imagers. When handled according to instructions on the daylight-load film package, safelights are not needed. If you remove undeveloped film from the daylight-load package, you will need a darkroom setting and a green safelight.

Figure 1: Relative Log Exposure (Example)

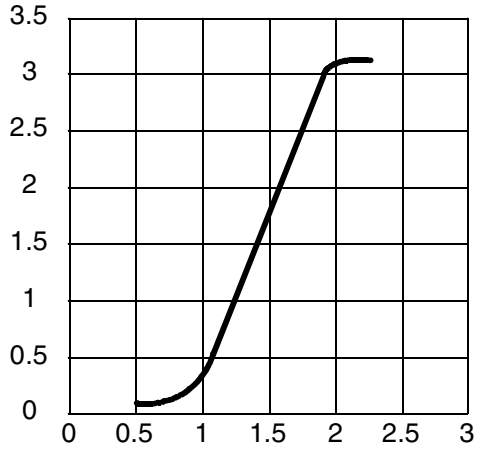

Film Image Quality

The Laser Imaging Film delivers diagnostic-quality, continuous-tone images along with sharp alphanumerics and optimum contrast. This high-quality, silver-based film provides health care providers with the same diagnostic information they are accustomed to viewing—including the spatial resolution, contrast, and gray levels. Because it is a totally dry imaging process, there is no image quality variability due to wet chemistry.

Environmental Impact

Tests show that the Laser Imaging Film is not considered hazardous to the environment. As a result, you can develop, recycle, and dispose of film with less impact on the environment than if you were using wet-developed silver halide films.

Table 1: Laser Imaging Film—US Environmental Regulations Comparison

	Wet (Silver Halide) Film				Dry Film
	Developer	**Fixer**	**Wash**	**Film**	**Film**
Product Regulations					
OSHA MSDS	Required	Required	Not required	Not required	Provided
DOT	Hazardous	Hazardous	No limits	No limits	No limits
Use permits	Local	Local	None	None	None
Disposal Regulations[ab]					
EPA	Hazardous	Hazardous	No	No	No
DOT	Hazardous	Hazardous	No	No	No

a. There is no Superfund liability with dry Laser Imaging Film.
b. State and local laws vary. Consult appropriate regulations or authorities prior to disposal.

Undeveloped Film Handling and Storage

To achieve consistent results up to the expiration date indicated on the film package, the Laser Imaging Film must be stored in a cool, dry place (5–25 °C, or 41–77 °F) and protected from radiation and chemistry fumes.

The film can withstand short-term temperature spikes (up to 35 °C, or 95 °F) for several hours without any significant effect on film quality or performance. Temperatures above 35 °C (95 °F) will gradually diminish shelf life.

Developed Film Handling and Archival

Handling the Laser Imaging Film requires reasonable care. Spills, humidity, and other moisture typically have no significant effect on developed films. However, prolonged exposure to intense light or excessive heat (equal to or greater than 54.4 °C or 130 °F) for more than three hours may cause some gradual darkening of images. Leaving films in vehicles in hot climates for extended periods of time is not recommended.

For best results, store the film in sleeves when not being reviewed. The Laser Imaging Film can be left on a light box for more than 24 hours. In extreme cases in which the light boxes are exceptionally hot (equal to or greater than 49° C or 120° F), the manufacturer recommends removing them prior to eight hours of continuous exposure.

Take care when using spotlight viewing for more than 30 seconds because temperatures near the light source may exceed 82.2 °C (180 °F). Use in slide projectors is not recommended due to the high temperatures generally found in these devices.

With dry technology, a small amount of final development occurs when the film exits the imager and is initially exposed to ambient or view-box lighting. This is virtually undetectable and has no effect on image quality (typically 0.02 change in density). This small density increase is uniform and permanent upon full exposure of the film under normal handling conditions (room light or view box).

The Laser Imaging Film has been tested and can be archived for more than 100 years when stored at American National Standards Institute (ANSI) recommended storage conditions (equal to or less than 25 °C or 77 °F). Developed films may be stored at higher temperatures; however, that will reduce the number of years the film can be stored. For example, storing films at a constant elevated temperature of 32.2 °C (90 °F) may reduce archive capability to 30 years.

Exposing Film to Moisture

The Laser Imaging Films typically withstand humidity, spills, and other forms of water without any significant effect on image quality or film integrity. If needed, film can be cleaned with a clean, damp cloth.

Odor Dissipation

Dry technology eliminates virtually all unpleasant odors. While some low-level odors are produced during the development process, they pose no known adverse health risks. Processing odor levels are further reduced by a non-hazardous, recyclable filter in the imager. This filter traps most low-level odors and prevents them from dissipating into the work environment. To help maintain optimum performance, the filter requires periodic replacement. The imager requires no special venting.

Heat Dissipation

The imagers use controlled heat to develop the Laser Imaging Film. The heat has virtually no effect on the air temperature of the work area. The amount of heat dissipated into an area during a day is typically less than the heat generated by two to four 100-watt light bulbs.

Film Recycling

According to the Environmental Protection Agency (EPA) standards, the Laser Imaging Film is not considered hazardous and requires no special disposal procedures. However, the film does contain silver and polyester that may be recovered by using one of several recycling processes.

5 Specifications

This section identifies the system specifications and the site requirements to operate the imager.

Equipment Specifications

	Unpacked	Packed
These are all subject to change / preliminary.		
Height	66.55 cm (26.20 in.)	TBD cm (TBD in.)
Width	62.56 cm (24.63 in.)	TBD cm (TBD in.)
Depth	75.63 cm (29.77 in.)	TBD cm (TBD in.)
Weight	95 kg (210 lb)	TBD kg (TBD lb)

Operating Space Requirements

- Allow 31 cm (12 in.) clearance around the top, sides, and back of the imager. This space is required to let the imager perform normal operator functions.
- Place the imager in an area with good ventilation. A small, confined room is not recommended.
- Avoid placing the imager in direct or excessive sunlight (for example, near a large window).

Environmental Requirements

Temperature

- Operating: 15 to 35 °C (59 to 95 °F)
- Storage: -40 to 60 °C (-40 to 140 °F)

Relative Humidity

- Operating: 20–85 % RH, non-condensing
- Storage: 10–93 % RH, non-condensing

Altitude

30 m (100 ft) below sea level to 3,048 m (10,000 ft) above sea level

Surface Levelness

The surface where the imager is placed must be level within 1 °.

Environmental Effects

Acoustical noise:

- Less than 48 dB at 1 m during idle or standby
- Less than 75 dB momentary at 1 m during normal operation

Power Requirements

A power cord is provided with this equipment. All countries must use an Agency-approved power cord with a plug type suitable for the country of use. Contact a qualified dealer for help.

Connect the equipment to a power source that is suitable for the voltage and current ratings shown on the rating label. The single-phase power source, with grounding, must be provided within 2.5 m (8.0 ft) of the imager.

The wire must be insulation-rated for 600 V (ac). A dedicated line is recommended.

Network Requirements

The imager receives digital images from medical imaging devices (modalities) over a 10/100Base-T or 1000Base-T Ethernet Network.

6 Publication History

Revision	Date	Reason for Change
A	2012-07-27	Preliminary - for Gate 2 (preliminary) review

Carestream Health, Inc.
150 Verona Street
Rochester, NY 14608
United States

Printed in China.

Pub No. AA2204_en
Rev A (preliminary)

CE