2008 Chevrolet Colorado Owner Manual

Seats and Restraint Systems 1-1
Front Seats 1-2
Rear Seats 1-9
Safety Belts 1-12
Child Restraints 1-33
Airbag System 1-60
Restraint System Check 1-76

Features and Controls 2-1
Keys 2-3
Doors and Locks 2-7
Windows 2-12
Theft-Deterrent Systems 2-15
Starting and Operating Your Vehicle 2-19
Mirrors 2-39
OnStar® System 2-47
Storage Areas 2-50
Sunroof 2-52

Instrument Panel 3-1
Instrument Panel Overview 3-4
Climate Controls 3-20
Warning Lights, Gages, and Indicators 3-23
Driver Information Center (DIC) 3-38
Audio System(s) 3-46

Driving Your Vehicle 4-1
Your Driving, the Road, and Your Vehicle 4-2
Towing 4-41

Service and Appearance Care 5-1
Service 5-3
Fuel 5-5
Checking Things Under the Hood 5-10
Rear Axle 5-48
Four-Wheel Drive 5-49
Front Axle 5-50
Headlamp Aiming 5-51
Bulb Replacement 5-51
Windshield Wiper Blade Replacement 5-57
Tires 5-59
Appearance Care 5-106
Vehicle Identification 5-115
Electrical System 5-115
Capacities and Specifications 5-120

Maintenance Schedule 6-1
Maintenance Schedule 6-2

Customer Assistance Information 7-1
Customer Assistance and Information 7-2
Reporting Safety Defects 7-15
Vehicle Data Recording and Privacy 7-17

Index 1

GENERAL MOTORS, GM, the GM Emblem, CHEVROLET, the CHEVROLET Emblem, and the name COLORADO are registered trademarks of General Motors Corporation.

This manual includes the latest information at the time it was printed. We reserve the right to make changes after that time without further notice. For vehicles first sold in Canada, substitute the name “General Motors of Canada Limited” for Chevrolet Motor Division whenever it appears in this manual.

This manual describes features that may be available in this model, but your vehicle may not have all of them. For example, more than one entertainment system may be offered or your vehicle may have been ordered without a front passenger or rear seats.

Keep this manual in the vehicle for quick reference.

Litho in U.S.A.
Part No. 15866157 A First Printing

Canadian Owners

A French language copy of this manual can be obtained from your dealer/retailer or from:

Helm, Incorporated
P.O. Box 07130
Detroit, MI 48207

1-800-551-4123
www.helminc.com

Propriétaires Canadiens

On peut obtenir un exemplaire de ce guide en français auprès de concessionnaire ou à l’adresse suivante:

Helm Incorporated
P.O. Box 07130
Detroit, MI 48207

1-800-551-4123
www.helminc.com

©2007 General Motors Corporation. All Rights Reserved.

Using this Manual

Many people read the owner manual from beginning to end when they first receive their new vehicle to learn about the vehicle's features and controls. Pictures and words work together to explain things.

Index

A good place to quickly locate information about the vehicle is the Index in the back of the manual. It is an alphabetical list of what is in the manual and the page number where it can be found.

Safety Warnings and Symbols

There are a number of safety cautions in this book. A box with the word CAUTION is used to tell about things that could hurt you or others if you were to ignore the warning.

⚠ CAUTION:

These mean there is something that could hurt you or other people.

We tell you what the hazard is and what to do to help avoid or reduce the hazard. Please read these cautions. If you do not, you or others could be hurt.

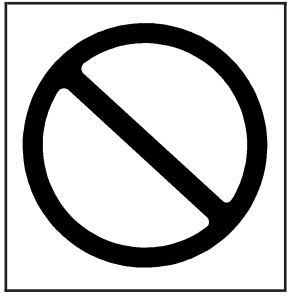

A circle with a slash through it is a safety symbol which means "Do Not," "Do Not do this" or "Do Not let this happen."

Vehicle Damage Warnings

You will also find notices in this manual.

Notice: **These mean there is something that could damage your vehicle.**

A notice tells about something that can damage the vehicle. Many times, this damage would not be covered by your vehicle's warranty, and it could be costly. The notice tells what to do to help avoid the damage.

When you read other manuals, you might see CAUTION and NOTICE warnings in different colors or in different words.

There are also warning labels on the vehicle which use the same words, CAUTION or NOTICE.

Vehicle Symbols

The vehicle has components and labels that use symbols instead of text. Symbols are shown along with the text describing the operation or information relating to a specific component, control, message, gage, or indicator.

Section 1 Seats and Restraint Systems

Front Seats 1-2
Manual Seats 1-2
Power Seats 1-3
Manual Lumbar 1-3
Power Lumbar 1-4
Heated Seats 1-4
Reclining Seatbacks 1-5
Head Restraints 1-7
Seatback Latches 1-8

Rear Seats 1-9
Rear Seat Operation (Extended Cab) 1-9
Rear Seat Operation (Crew Cab) 1-10

Safety Belts 1-12
Safety Belts: They Are for Everyone 1-12
How to Wear Safety Belts Properly 1-17
Lap-Shoulder Belt 1-25
Safety Belt Use During Pregnancy 1-31
Lap Belt 1-31
Safety Belt Extender 1-32

Child Restraints 1-33
Older Children 1-33
Infants and Young Children 1-36
Child Restraint Systems 1-39
Where to Put the Restraint 1-42
Lower Anchors and Tethers for Children (LATCH) 1-43
Securing a Child Restraint in a Rear Seat Position 1-54
Securing a Child Restraint in the Center Front Seat Position 1-56
Securing a Child Restraint in the Right Front Seat Position 1-56

Airbag System 1-60
Where Are the Airbags? 1-63
When Should an Airbag Inflate? 1-65
What Makes an Airbag Inflate? 1-67
How Does an Airbag Restrain? 1-67
What Will You See After an Airbag Inflates? 1-68
Passenger Sensing System 1-69
Servicing Your Airbag-Equipped Vehicle 1-74
Adding Equipment to Your Airbag-Equipped Vehicle 1-74

Restraint System Check 1-76
Checking the Restraint Systems 1-76
Replacing Restraint System Parts After a Crash 1-77

Front Seats

Manual Seats

⚠ CAUTION:

You can lose control of the vehicle if you try to adjust a manual driver's seat while the vehicle is moving. The sudden movement could startle and confuse you, or make you push a pedal when you do not want to. Adjust the driver's seat only when the vehicle is not moving.

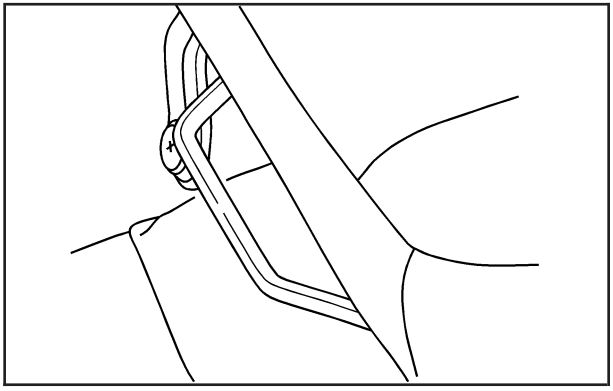

Lift the bar located under the front of the seat to unlock it. Slide the seat to where you want it and release the bar. Try to move the seat with your body to make sure the seat is locked into place.

Power Seats

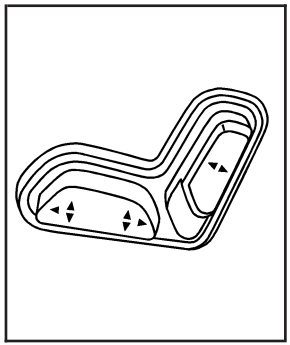

If the vehicle has power seats, the controls used to operate them are located on the outboard side of the seats.

To adjust the seat, do any of the following:

- Move the seat forward or rearward by sliding the horizontal control forward or rearward.
- Raise or lower the front part of the seat cushion by moving the front of the horizontal control up or down.
- Raise or lower the rear part of the seat cushion by moving the rear of the horizontal control up or down.
- Raise or lower the entire seat by moving the entire horizontal control up or down.
- Use the vertical control to recline the seatback. See “Power Reclining Seatbacks” under *Reclining Seatbacks on page 1-5* for more information.

Manual Lumbar

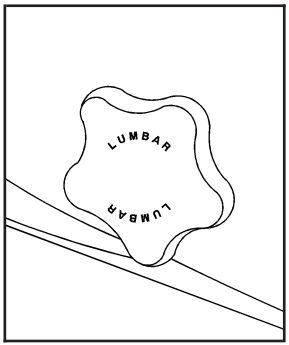

If your vehicle has this feature, there is a knob located on the outboard side of the driver’s seat.

Turn the top of the knob toward the front of the vehicle to increase lumbar support. Turn the top of the knob toward the rear of the vehicle to decrease lumbar support.

Power Lumbar

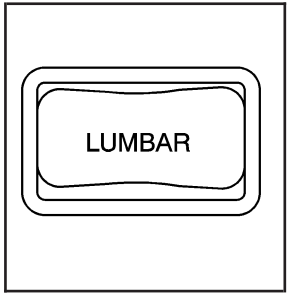

If your vehicle has this feature, the control is located on the outboard side of the seat(s).

Press and hold the front of the control until you have the desired lumbar support. To decrease lumbar support, press and hold the rear of the control.

Heated Seats

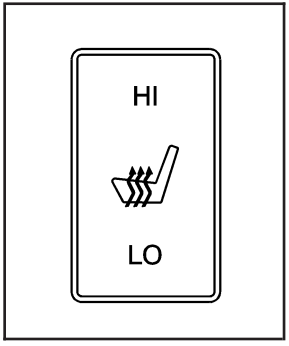

If your vehicle has this feature, the controls are located on the outboard side of the front seats.

This feature will heat the cushion and back of the seats.

Press the top of the switch to turn the heat to the high setting. Press the bottom of the switch to turn the heat to the low setting. Put the switch in the center position to turn the heat off.

The ignition must be on for the heated seat feature to work. The seat will heat to the last setting if the ignition has been turned off and then turned back on.

The passenger's safety belt must be fastened for the heated seat feature to work on the passenger's seat.

Reclining Seatbacks

Manual Reclining Seatbacks

⚠ CAUTION:

You can lose control of the vehicle if you try to adjust a manual driver's seat while the vehicle is moving. The sudden movement could startle and confuse you, or make you push a pedal when you do not want to. Adjust the driver's seat only when the vehicle is not moving.

⚠ CAUTION:

If the seatback is not locked, it could move forward in a sudden stop or crash. That could cause injury to the person sitting there. Always push and pull on the seatback to be sure it is locked.

If your seats have manual reclining seatbacks, the lever used to operate them is located on the outboard side of the seat(s).

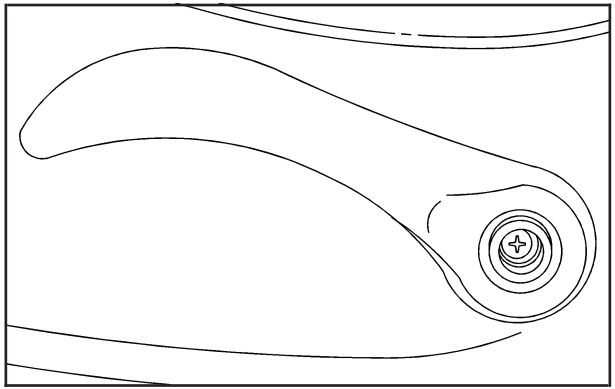

To recline the seatback, do the following:

1. Lift the recline lever.
2. Move the seatback to the desired position, then release the lever to lock the seatback in place.
3. Push and pull on the seatback to make sure it is locked.

To return the seatback to an upright position, do the following:

1. Lift the lever fully without applying pressure to the seatback and the seatback will return to the upright position.
2. Push and pull on the seatback to make sure it is locked.

Power Reclining Seatbacks

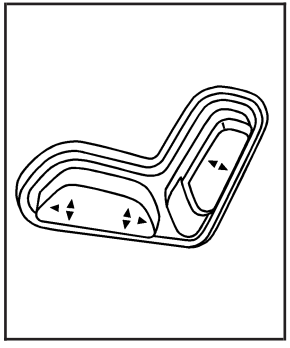

If the seats have power reclining seatbacks, use the vertical power seat control located on the outboard side of the seat.

- To recline the seatback, press the control toward the rear of the vehicle.
- To raise the seatback, press the control toward the front of the vehicle.

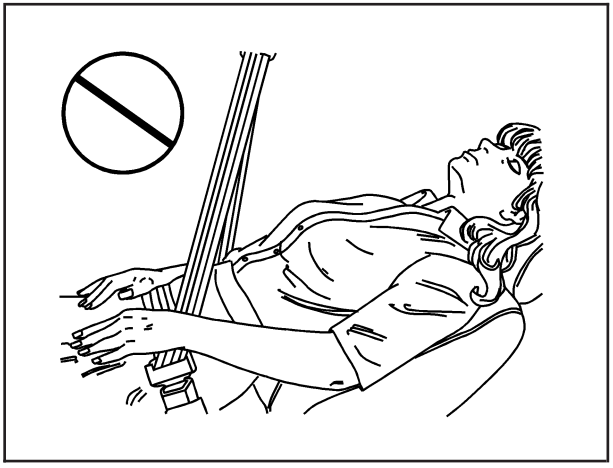

⚠ CAUTION:

Sitting in a reclined position when your vehicle is in motion can be dangerous. Even if you buckle up, your safety belts cannot do their job when you are reclined like this.

The shoulder belt cannot do its job because it will not be against your body. Instead, it will be in front of you. In a crash, you could go into it, receiving neck or other injuries.

The lap belt cannot do its job either. In a crash, the belt could go up over your abdomen. The belt forces would be there, not at your pelvic bones. This could cause serious internal injuries.

For proper protection when the vehicle is in motion, have the seatback upright. Then sit well back in the seat and wear your safety belt properly.

Do not have a seatback reclined if your vehicle is moving.

Head Restraints

Your front seats may have adjustable head restraints. If your vehicle has rear seats, they may have adjustable head restraints.

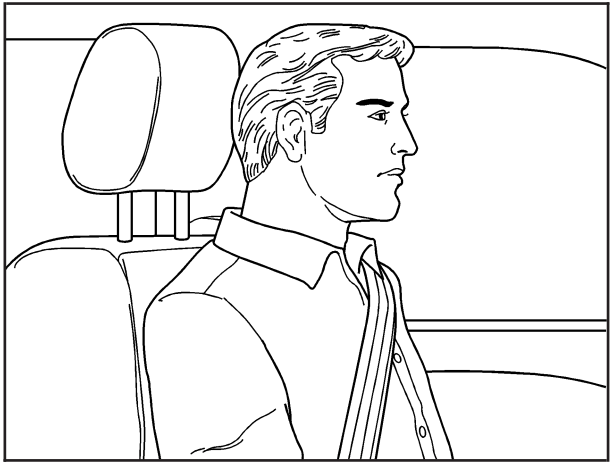

Adjust the head restraint so that the top of the restraint is at the same height as the top of the occupant's head. This position reduces the chance of a neck injury in a crash.

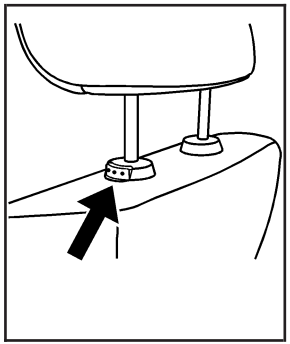

Pull up on the head restraint to raise it.
To lower the head restraint, press the button located on top of the seatback and push down on the head restraint.

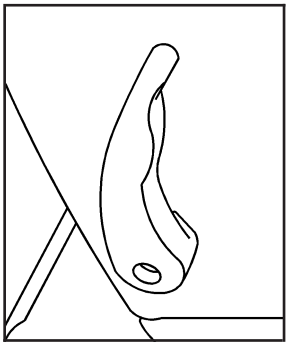

To fold the seatback forward, push the lever on the side of the seat rearward and pull the seatback forward.

Seatback Latches

Your vehicle may have front seatbacks that fold forward for easy access to the rear seats or the storage area behind the seats.

⚠ CAUTION:

If the seatback is not locked, it could move forward in a sudden stop or crash. That could cause injury to the person sitting there. Always push and pull on the seatback to be sure it is locked.

To return the seatback to the upright position, push the seatback all the way back until it latches. If the seatback was reclined before being folded forward, it will return to the reclined position.

Rear Seats

Rear Seat Operation (Extended Cab)

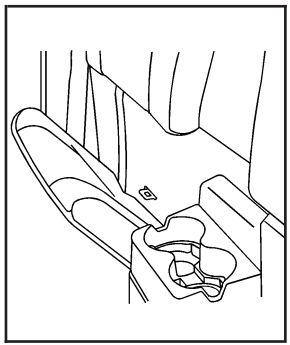

If your vehicle has an extended cab, there may be forward folding seats in the rear area.

To fold the rear seat cushion(s) from the stored position to the sitting position, pull the front of the seat cushion down completely.

The rear seat storage compartments must be closed before folding the seat down. See *Rear Storage Area on page 2-51*.

To store the seat, do the following:

Notice: **Folding a rear seat with the safety belts still fastened may cause damage to the seat or the safety belts. Always unbuckle the safety belts and return them to their normal stowed position before folding a rear seat.**

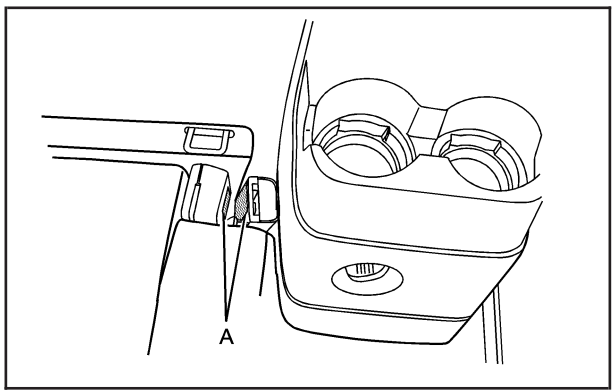

1. Secure the safety belt buckle to the inboard side of the seat with the hook and loop fastener (A), so that it does not move when not in use.
2. Push the entire seat up until it is flush with the trim panel.

Rear Seat Operation (Crew Cab)

The rear seatback(s) in the crew cab can be folded forward.

Notice: **Folding a rear seat with the safety belts still fastened may cause damage to the seat or the safety belts. Always unbuckle the safety belts and return them to their normal stowed position before folding a rear seat.**

To fold the rear seatback(s) forward, do the following:

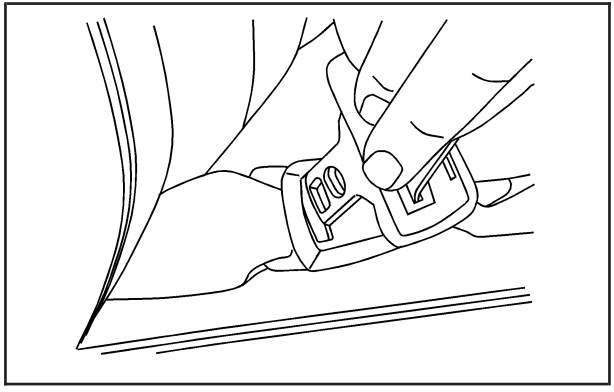

1. Disconnect the rear center safety belt latch from the mini buckle by inserting the tip of the safety belt tongue into the slot on the buckle. Let the belt retract.

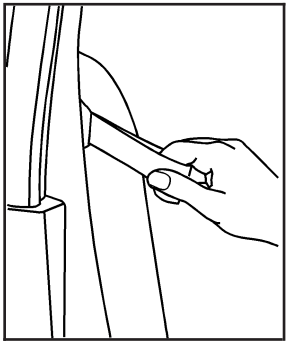

2. Pull the loop, located on the outboard side of the seatback, forward until you hear a click.

3. Fold the seatback(s) forward.

To return the seatback(s) to the upright position, do the following:

1. Lift the seatback(s) and push it into place.

⚠ CAUTION:

If the seatback is not locked, it could move forward in a sudden stop or crash. That could cause injury to the person sitting there. Always push and pull on the seatback to be sure it is locked.

2. Make sure the seatback(s) is locked by pushing and pulling on it.

⚠ CAUTION:

A safety belt that is improperly routed, not properly attached, or twisted will not provide the protection needed in a crash. The person wearing the belt could be seriously injured. After raising the rear seatback, always check to be sure that the safety belts are properly routed and attached, and are not twisted.

3. Reconnect the center safety belt latch plate to the mini buckle. Make sure the safety belt is not twisted. Push and pull on the latch plate to be sure it is secure.

When the seatback is not in use, it should be kept in the upright, locked position.

Safety Belts

Safety Belts: They Are for Everyone

This part of the manual tells you how to use safety belts properly. It also tells you some things you should not do with safety belts.

⚠ CAUTION:

Do not let anyone ride where he or she cannot wear a safety belt properly. If you are in a crash and you are not wearing a safety belt, your injuries can be much worse. You can hit things inside the vehicle harder or be ejected from it and be seriously injured or killed. In the same crash, you might not be, if you are buckled up. Always fasten your safety belt, and check that your passenger(s) are restrained properly too.

⚠ CAUTION:

People riding on the tailgate (if equipped) can easily lose their balance and fall even when the vehicle is operated at low speeds. Falling from a moving vehicle may result in serious injuries or death.

⚠ CAUTION:

It is extremely dangerous to ride in a cargo area, inside or outside of a vehicle. In a collision, people riding in these areas are more likely to be seriously injured or killed. Do not allow people to ride in any area of your vehicle that is not equipped with seats and safety belts. Be sure everyone in your vehicle is in a seat and using a safety belt properly.

Your vehicle has indicators as a reminder to buckle your safety belts. See *Safety Belt Reminders on page 3-26*.

In most states and in all Canadian provinces, the law requires wearing safety belts. Here is why:

You never know if you will be in a crash. If you do have a crash, you do not know if it will be a serious one.

A few crashes are mild, and some crashes can be so serious that even buckled up, a person would not survive. But most crashes are in between. In many of them, people who buckle up can survive and sometimes walk away. Without belts they could have been badly hurt or killed.

After more than 40 years of safety belts in vehicles, the facts are clear. In most crashes buckling up does matter... a lot!

Why Safety Belts Work

When you ride in or on anything, you go as fast as it goes.

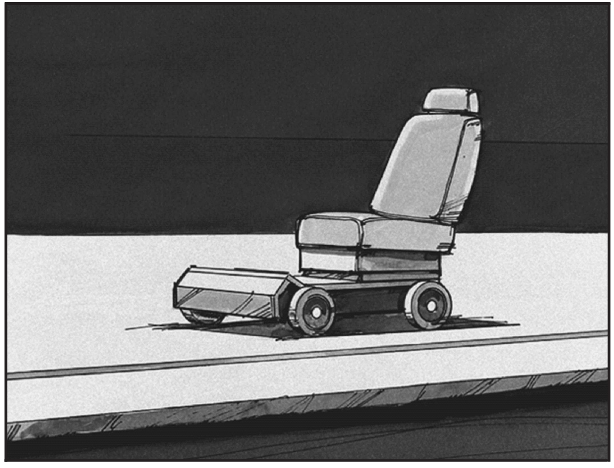

Take the simplest vehicle. Suppose it is just a seat on wheels.

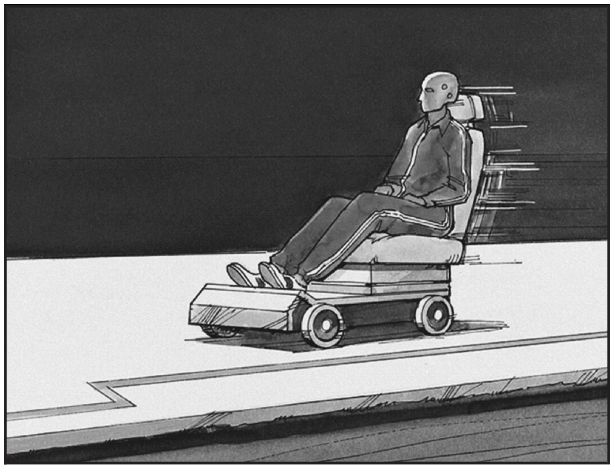

Put someone on it.

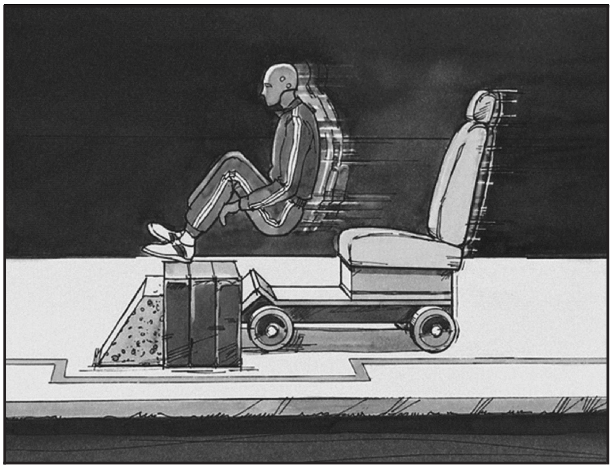

Get it up to speed. Then stop the vehicle.
The rider does not stop.

The person keeps going until stopped by something. In a real vehicle, it could be the windshield...

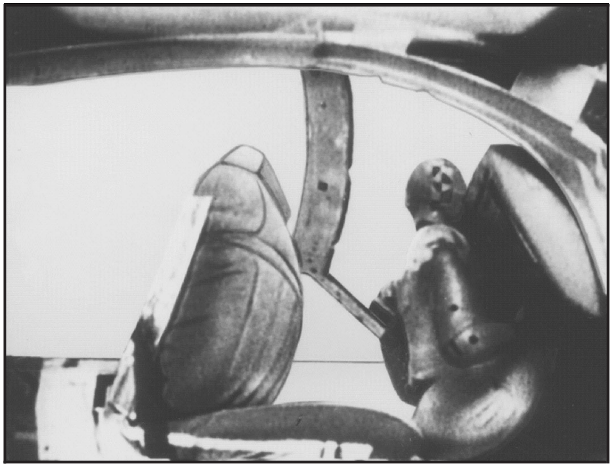

or the instrument panel...

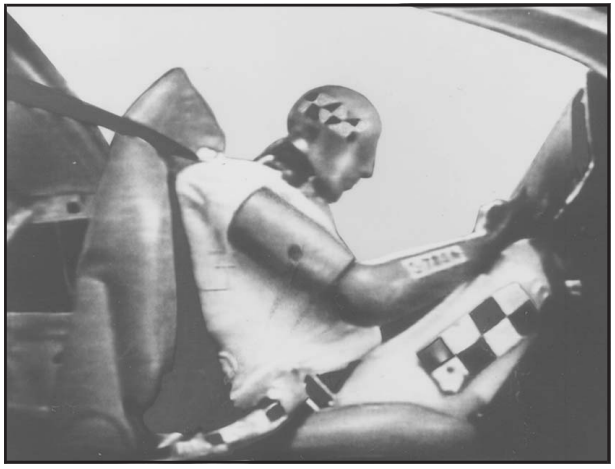

or the safety belts!

With safety belts, you slow down as the vehicle does. You get more time to stop. You stop over more distance, and your strongest bones take the forces. That is why safety belts make such good sense.

Questions and Answers About Safety Belts

Q: Will I be trapped in the vehicle after a crash if I am wearing a safety belt?

A: You *could* be — whether you are wearing a safety belt or not. But your chance of being conscious during and after an accident, so you can unbuckle and get out, is *much* greater if you are belted. And you can unbuckle a safety belt, even if you are upside down.

Q: If my vehicle has airbags, why should I have to wear safety belts?

A: Airbags are supplemental systems only; so they work *with* safety belts — not instead of them. Whether or not an airbag is provided, all occupants still have to buckle up to get the most protection. That is true not only in frontal collisions, but especially in side and other collisions.

Q: If I am a good driver, and I never drive far from home, why should I wear safety belts?

A: You may be an excellent driver, but if you are in a crash — even one that is not your fault — you and your passenger(s) can be hurt. Being a good driver does not protect you from things beyond your control, such as bad drivers.

Most accidents occur within 25 miles (40 km) of home. And the greatest number of serious injuries and deaths occur at speeds of less than 40 mph (65 km/h).

Safety belts are for everyone.

How to Wear Safety Belts Properly

This section is only for people of adult size.

Be aware that there are special things to know about safety belts and children. And there are different rules for smaller children and babies. If a child will be riding in your vehicle, see *Older Children on page 1-33* or *Infants and Young Children on page 1-36*. Follow those rules for everyone's protection.

It is very important for all occupants to buckle up. Statistics show that unbelted people are hurt more often in crashes than those who are wearing safety belts.

Occupants who are not buckled up can be thrown out of the vehicle in a crash. And they can strike others in the vehicle who are wearing safety belts.

First, before you or your passenger(s) wear a safety belt, there is important information you should know.

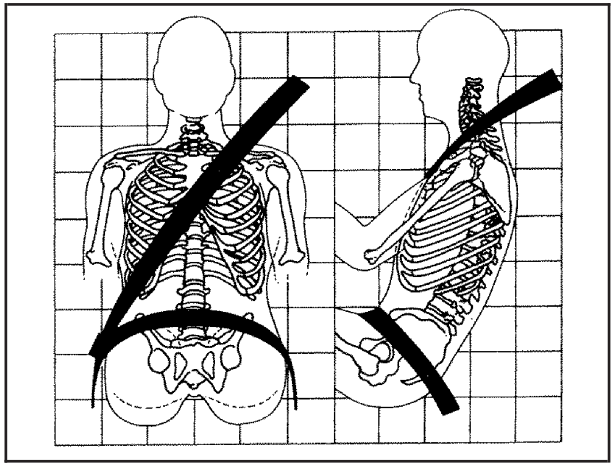

Sit up straight and always keep your feet on the floor in front of you. The lap part of the belt should be worn low and snug on the hips, just touching the thighs. In a crash, this applies force to the strong pelvic bones and you would be less likely to slide under the lap belt. If you slid under it, the belt would apply force on your abdomen. This could cause serious or even fatal injuries.

The shoulder belt should go over the shoulder and across the chest. These parts of the body are best able to take belt restraining forces.

The shoulder belt locks if there is a sudden stop or crash.

Q: What is wrong with this?

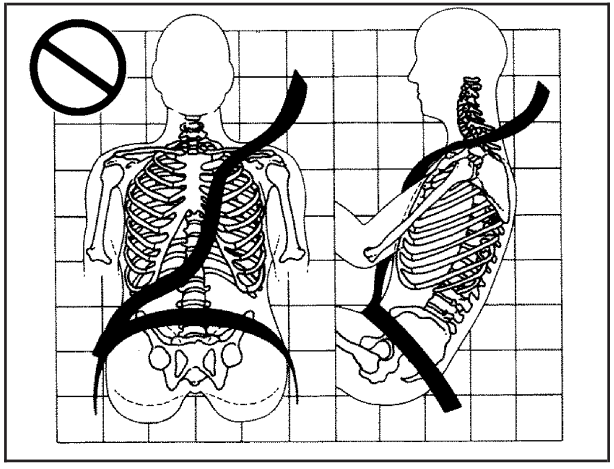

A: The shoulder belt is too loose. It will not give nearly as much protection this way.

⚠ CAUTION:

You can be seriously hurt if your shoulder belt is too loose. In a crash, you would move forward too much, which could increase injury. The shoulder belt should fit snugly against your body.

Q: What is wrong with this?

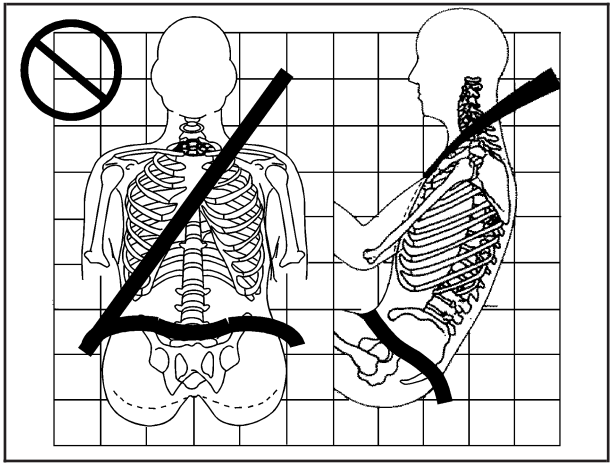

A: The lap belt is too loose. It will not give as much protection this way.

⚠ CAUTION:

You can be seriously hurt if your lap belt is too loose. In a crash, you could slide under the lap belt and apply force on your abdomen. This could cause serious or even fatal injuries. The lap belt should be worn low and snug on the hips, just touching the thighs.

Q: What is wrong with this?

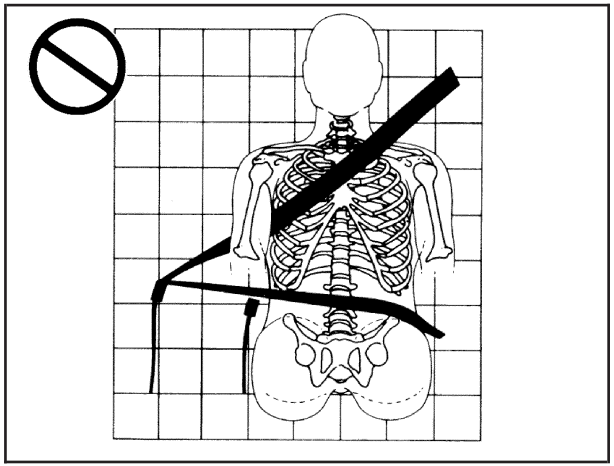

A: The belt is buckled in the wrong place.

⚠ CAUTION:

You can be seriously injured if your belt is buckled in the wrong place like this. In a crash, the belt would go up over your abdomen. The belt forces would be there, not on the pelvic bones. This could cause serious internal injuries. Always buckle your belt into the buckle nearest you.

Q: What is wrong with this?

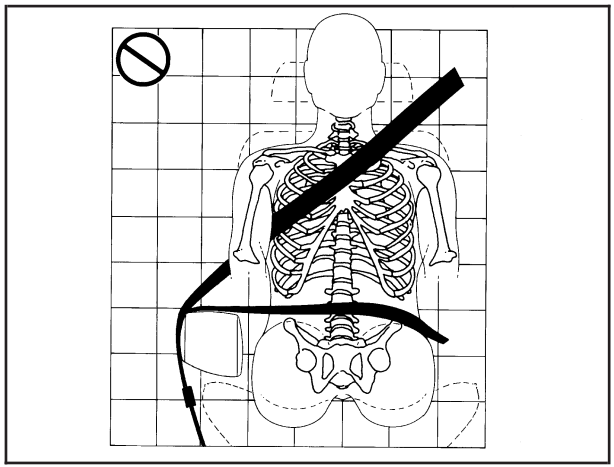

A: The belt is over an armrest.

⚠ CAUTION:

You can be seriously injured if your belt goes over an armrest like this. The belt would be much too high. In a crash, you can slide under the belt. The belt force would then be applied on the abdomen, not on the pelvic bones, and that could cause serious or fatal injuries.
Be sure the belt goes under the armrests.

Q: What is wrong with this?

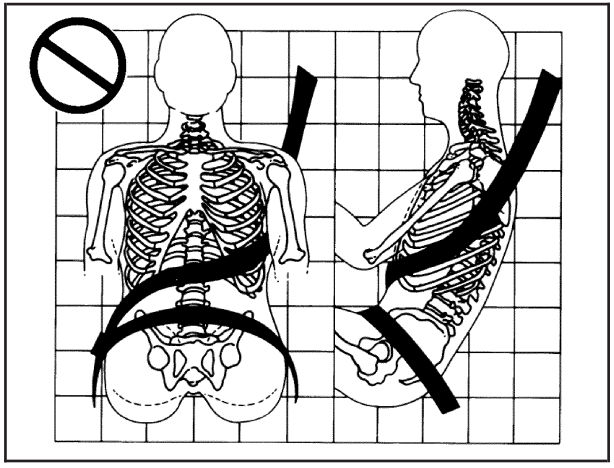

A: The shoulder belt is worn under the arm. It should be worn over the shoulder at all times.

⚠ CAUTION:

You can be seriously injured if you wear the shoulder belt under your arm. In a crash, your body would move too far forward, which would increase the chance of head and neck injury. Also, the belt would apply too much force to the ribs, which are not as strong as shoulder bones. You could also severely injure internal organs like your liver or spleen. The shoulder belt should go over the shoulder and across the chest.

Q: What is wrong with this?

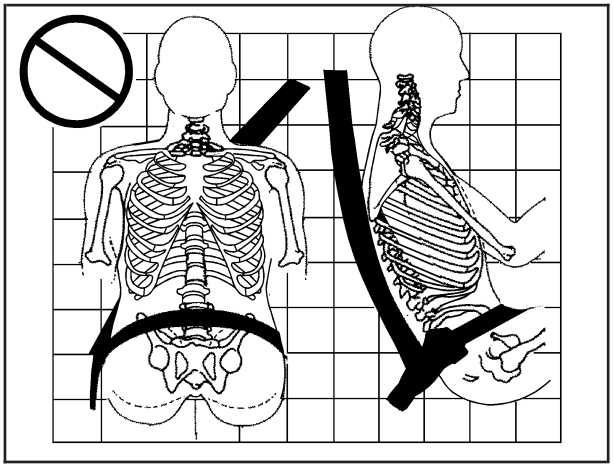

A: The belt is behind the body.

⚠ CAUTION:

You can be seriously injured by not wearing the lap-shoulder belt properly. In a crash, you would not be restrained by the shoulder belt. Your body could move too far forward increasing the chance of head and neck injury. You might also slide under the lap belt. The belt force would then be applied right on the abdomen. That could cause serious or fatal injuries. The shoulder belt should go over the shoulder and across the chest.

Q: What is wrong with this?

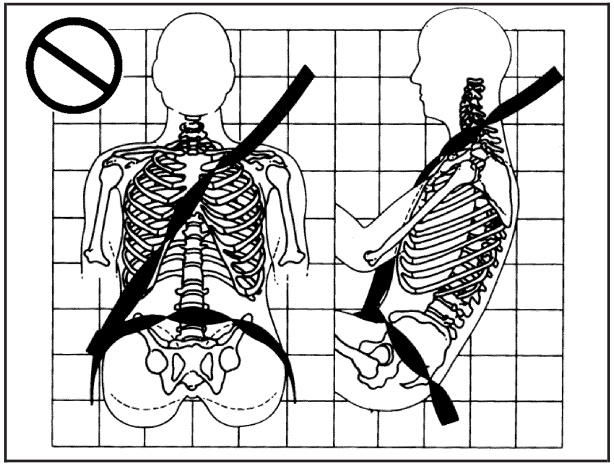

A: The belt is twisted across the body.

⚠ CAUTION:

You can be seriously injured by a twisted belt. In a crash, you would not have the full width of the belt to spread impact forces. If a belt is twisted, make it straight so it can work properly, or ask your dealer/retailer to fix it.

Lap-Shoulder Belt

All seating positions in your vehicle have a lap-shoulder belt except for the center front passenger position (if equipped), which has a lap belt. See *Lap Belt on page 1-31* for more information.

Here is how to wear a lap-shoulder belt properly.

1. Adjust the seat, if the seat is adjustable, so you can sit up straight. To see how, see “Seats” in the Index.
2. Pick up the latch plate and pull the belt across you. Do not let it get twisted.

   The lap-shoulder belt may lock if you pull the belt across you very quickly. If this happens, let the belt go back slightly to unlock it. Then pull the belt across you more slowly.

   If you ever pull the shoulder portion of a passenger belt out all the way, you may engage the child restraint locking feature. If this happens, just let the belt go back all the way and start again.

   Engaging the child restraint locking feature may affect the passenger sensing system. See *Passenger Sensing System on page 1-69*.

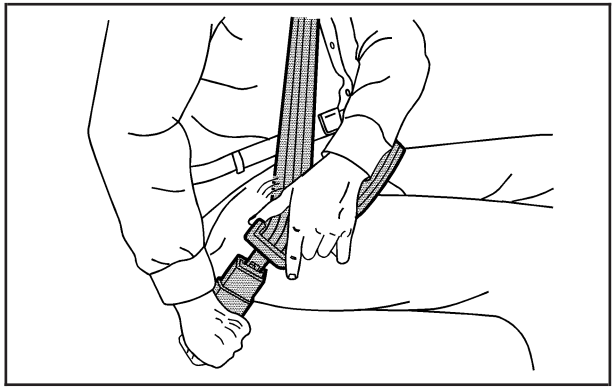

3. Push the latch plate into the buckle until it clicks.

   Pull up on the latch plate to make sure it is secure. If the belt is not long enough, see *Safety Belt Extender on page 1-32*.

   Make sure the release button on the buckle is positioned so you would be able to unbuckle the safety belt quickly if necessary.
4. If equipped with a shoulder belt height adjuster, move it to the height that is right for you. Improper shoulder belt height adjustment could reduce the effectiveness of the safety belt in a crash. See “Shoulder Belt Height Adjustment” later in this section.

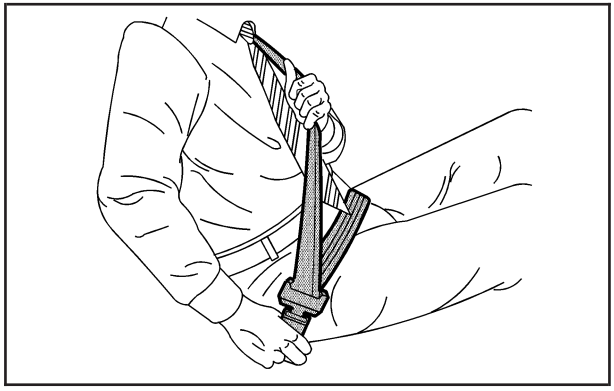

5. To make the lap part tight, pull up on the shoulder belt.

   It may be necessary to pull stitching on the safety belt through the latch plate to fully tighten the lap belt on smaller occupants.

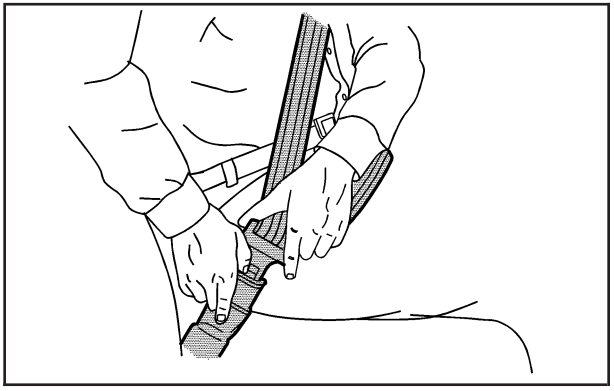

To unlatch the belt, push the button on the buckle. The belt should go back out of the way. When the safety belt is not in use, slide the latch plate up the safety belt webbing. The latch plate should rest on the stitching on the safety belt, near the guide loop on the side wall.

Before you close a door, be sure the belt is out of the way. If you slam the door on it, you can damage both the belt and your vehicle.

Shoulder Belt Height Adjuster

Your vehicle has a shoulder belt height adjuster for the driver and right front passenger position.

Adjust the height so that the shoulder portion of the belt is centered on your shoulder. The belt should be away from your face and neck, but not falling off your shoulder. Improper shoulder belt height adjustment could reduce the effectiveness of the safety belt in a crash.

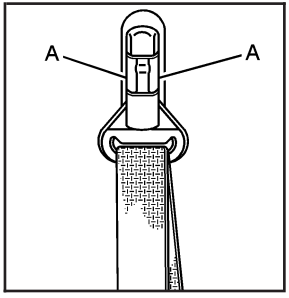

To move it up or down, squeeze the release buttons (A) together and move the height adjuster to the desired position.

After you move the height adjuster to where you want it, try to move it down without squeezing the release buttons to make sure it has locked into position.

Safety Belt Pretensioners

Your vehicle has safety belt pretensioners for front outboard occupants. Although you cannot see them, they are part of the safety belt assembly. They can help tighten the safety belts during the early stages of a moderate to severe frontal or near frontal crash if the threshold conditions for pretensioner activation are met.

Pretensioners work only once. If they activate in a crash, you will need to get new ones, and probably other new parts for your safety belt system. See *Replacing Restraint System Parts After a Crash on page 1-77*.

Rear Safety Belt Comfort Guides

Your vehicle may have rear shoulder belt comfort guides for the rear outside positions.

Rear shoulder belt comfort guides may provide added safety belt comfort for older children who have outgrown booster seats and for some adults. When installed on a shoulder belt, the comfort guide positions the belt away from the neck and head.

Here is how to install a comfort guide to the shoulder belt.

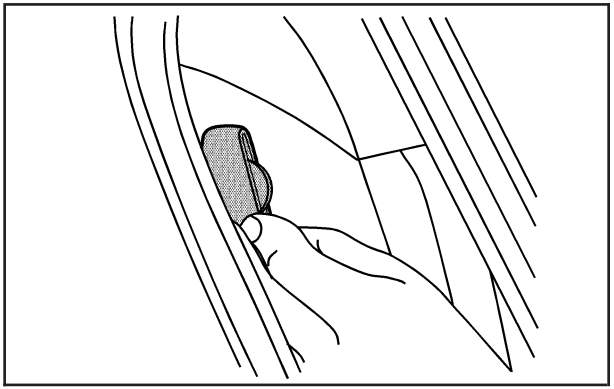

1. Slide the guide off of its storage clip located between the interior body and the seatback.

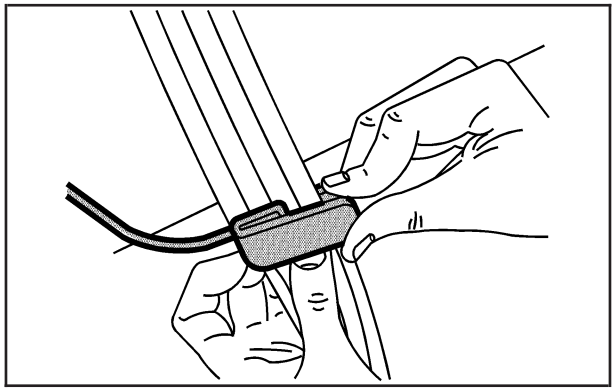

2. Place the guide over the belt and insert the two edges of the belt into the slots of the guide.

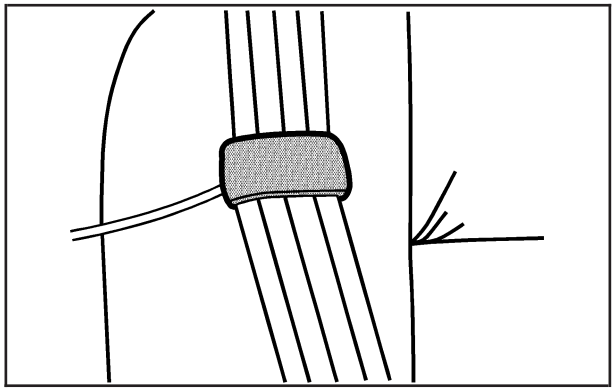

3. Be sure that the belt is not twisted and it lies flat. The elastic cord must be under the belt and the guide on top.

⚠ CAUTION:

A safety belt that is not properly worn may not provide the protection needed in a crash. The person wearing the belt could be seriously injured. The shoulder belt should go over the shoulder and across the chest. These parts of the body are best able to take belt restraining forces.

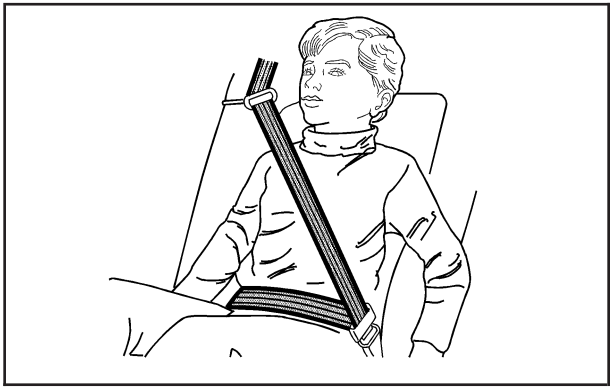

4. Buckle, position, and release the safety belt as described previously in this section. Make sure that the shoulder belt crosses the shoulder.

To remove and store a comfort guide, squeeze the belt edges together so that you can take them out of the guide. Slide the guide back on its storage clip located between the interior body and the seatback.

Safety Belt Use During Pregnancy

Safety belts work for everyone, including pregnant women. Like all occupants, they are more likely to be seriously injured if they do not wear safety belts.

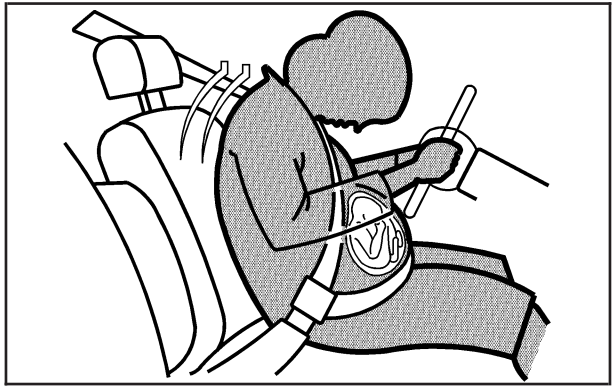

A pregnant woman should wear a lap-shoulder belt, and the lap portion should be worn as low as possible, below the rounding, throughout the pregnancy.

The best way to protect the fetus is to protect the mother. When a safety belt is worn properly, it is more likely that the fetus will not be hurt in a crash. For pregnant women, as for anyone, the key to making safety belts effective is wearing them properly.

Lap Belt

This part is only for the lap belt. To learn how to wear a lap-shoulder belt, see *Lap-Shoulder Belt on page 1-25*.

You vehicle may have a center seating position. When you sit in the center front seating position, you have a lap safety belt, which has no retractor.

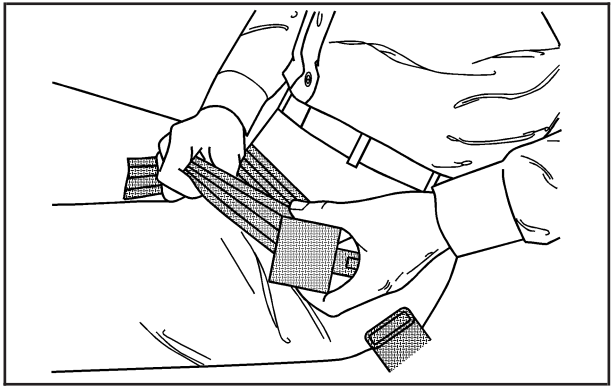

To make the belt longer, tilt the latch plate and pull it along the belt.

Buckle, position, and release it the same way as the lap part of a lap-shoulder belt.

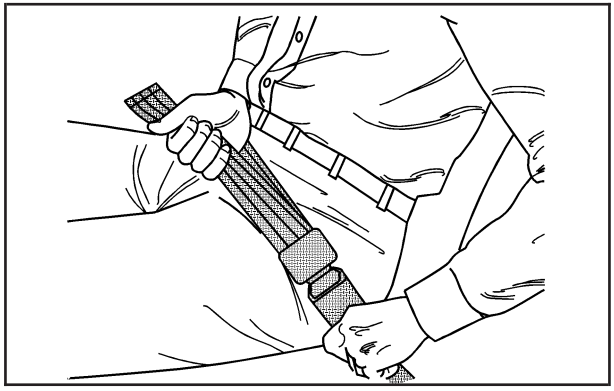

To make the belt shorter, pull its free end as shown until the belt is snug.

If the belt is not long enough, see *Safety Belt Extender on page 1-32*.

Make sure the release button on the buckle is positioned so you would be able to unbuckle the safety belt quickly if necessary.

Safety Belt Extender

If the vehicle's safety belt will fasten around you, you should use it.

But if a safety belt is not long enough, your dealer/retailer will order you an extender. When you go in to order it, take the heaviest coat you will wear, so the extender will be long enough for you. To help avoid personal injury, do not let someone else use it, and use it only for the seat it is made to fit. The extender has been designed for adults. Never use it for securing child seats. To wear it, attach it to the regular safety belt. For more information, see the instruction sheet that comes with the extender.

Child Restraints

Older Children

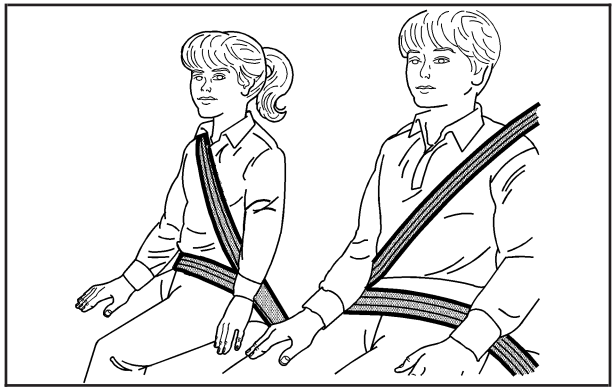

Older children who have outgrown booster seats should wear the vehicle's safety belts.

The manufacturer's instructions that come with the booster seat, state the weight and height limitations for that booster. Use a booster seat with a lap-shoulder belt until the child passes the below fit test:

- Sit all the way back on the seat. Do the knees bend at the seat edge? If yes, continue. If no, return to the booster seat.
- Buckle the lap-shoulder belt. Does the shoulder belt rest on the shoulder? If yes, continue. If no, try using the rear safety belt comfort guide. See "Rear Safety Belt Comfort Guides" under *Lap-Shoulder Belt on page 1-25* for more information. If the shoulder belt still does not rest on the shoulder, then return to the booster seat.
- Does the lap belt fit low and snug on the hips, touching the thighs? If yes, continue. If no, return to the booster seat.
- Can proper safety belt fit be maintained for length of trip? If yes, continue. If no, return to the booster seat.

If you have the choice, a child should sit in a position with a lap-shoulder belt and get the additional restraint a shoulder belt can provide.

Q: What is the proper way to wear safety belts?

A: An older child should wear a lap-shoulder belt and get the additional restraint a shoulder belt can provide. The shoulder belt should not cross the face or neck. The lap belt should fit snugly below the hips, just touching the top of the thighs. This applies belt force to the child's pelvic bones in a crash. It should never be worn over the abdomen, which could cause severe or even fatal internal injuries in a crash.

Also see "Rear Safety Belt Comfort Guides" under *Lap-Shoulder Belt on page 1-25*.

According to accident statistics, children and infants are safer when properly restrained in the rear seating positions than in the front seating positions.

In a crash, children who are not buckled up can strike other people who are buckled up, or can be thrown out of the vehicle. Older children need to use safety belts properly.

⚠ CAUTION:

Never do this.

Here two children are wearing the same belt. The belt cannot properly spread the impact forces. In a crash, the two children can be crushed together and seriously injured. A belt must be used by only one person at a time.

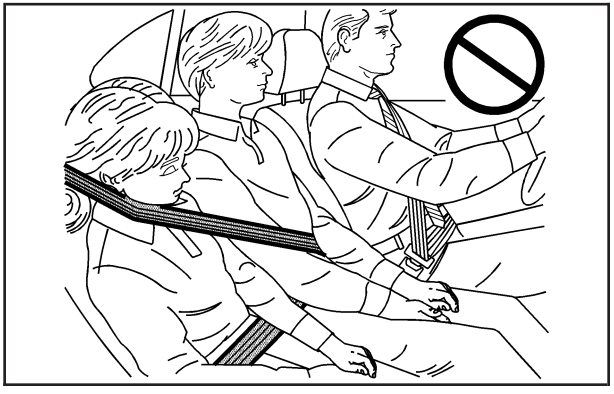

⚠ CAUTION:

Never do this.

Here a child is sitting in a seat that has a lap-shoulder belt, but the shoulder part is behind the child. In a crash, the child would not be restrained by the shoulder belt. The child might slide under the lap belt. The belt force would then be applied right on the abdomen. That could cause serious or fatal injuries. The child could also move too far forward increasing the chance of head and neck injury. The shoulder belt should go over the shoulder and across the chest.

Infants and Young Children

Everyone in a vehicle needs protection! This includes infants and all other children. Neither the distance traveled nor the age and size of the traveler changes the need, for everyone, to use safety restraints. In fact, the law in every state in the United States and in every Canadian province says children up to some age must be restrained while in a vehicle.

⚠ CAUTION:

Children can be seriously injured or strangled if a shoulder belt is wrapped around their neck and the safety belt continues to tighten. Never leave children unattended in a vehicle and never allow children to play with the safety belts.

Every time infants and young children ride in vehicles, they should have the protection provided by appropriate restraints. Children who are not restrained properly can strike other people, or can be thrown out of the vehicle. In addition, young children should not use the vehicle's adult safety belts alone; they need to use a child restraint.

⚠ CAUTION:

People should never hold an infant in their arms while riding in a vehicle. An infant does not weigh much — until a crash. During a crash an infant will become so heavy it is not possible to hold it. For example, in a crash at only 25 mph (40 km/h), a 12 lb (5.5 kg) infant will suddenly become a 240 lb (110 kg) force on a person's arms. An infant should be secured in an appropriate restraint.

⚠ CAUTION:

Children who are up against, or very close to, any airbag when it inflates can be seriously injured or killed. Airbags plus lap-shoulder belts offer protection for adults and older children, but not for young children and infants. Neither the vehicle's safety belt system nor its airbag system is designed for them. Young children and infants need the protection that a child restraint system can provide.

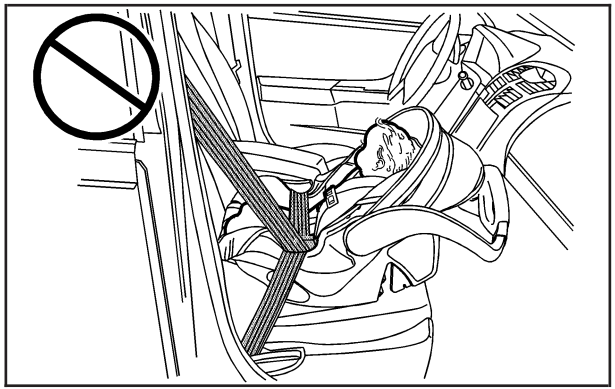

Q: What are the different types of add-on child restraints?

A: Add-on child restraints, which are purchased by the vehicle's owner, are available in four basic types. Selection of a particular restraint should take into consideration not only the child's weight, height, and age but also whether or not the restraint will be compatible with the motor vehicle in which it will be used.

For most basic types of child restraints, there are many different models available. When purchasing a child restraint, be sure it is designed to be used in a motor vehicle. If it is, the restraint will have a label saying that it meets federal motor vehicle safety standards.

The restraint manufacturer's instructions that come with the restraint state the weight and height limitations for a particular child restraint. In addition, there are many kinds of restraints available for children with special needs.

⚠ CAUTION:

Newborn infants need complete support, including support for the head and neck. This is necessary because a newborn infant's neck is weak and its head weighs so much compared with the rest of its body. In a crash, an infant in a rear-facing seat settles into the restraint, so the crash forces can be distributed across the strongest part of an infant's body, the back and shoulders. Infants should always be secured in appropriate infant restraints.

⚠ CAUTION:

The body structure of a young child is quite unlike that of an adult or older child, for whom the safety belts are designed. A young child's hip bones are still so small that the vehicle's regular safety belt may not remain low on the hip bones, as it should. Instead, it may settle up around the child's abdomen. In a crash, the belt would apply force on a body area that is unprotected by any bony structure. This alone could cause serious or fatal injuries. Young children should always be secured in appropriate child restraints.

Child Restraint Systems

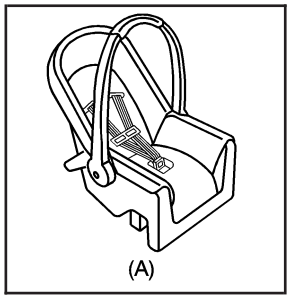
(A)

A rear-facing infant seat (A) provides restraint with the seating surface against the back of the infant.

The harness system holds the infant in place and, in a crash, acts to keep the infant positioned in the restraint.

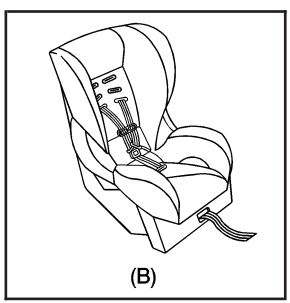
(B)

A forward-facing child seat (B) provides restraint for the child's body with the harness.

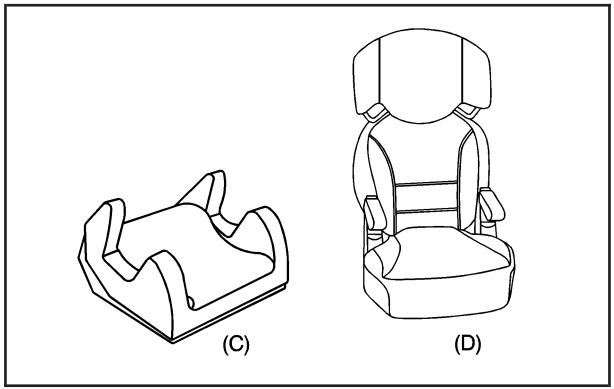

A booster seat (C-D) is a child restraint designed to improve the fit of the vehicle's safety belt system. A booster seat can also help a child to see out the window.

Securing an Add-On Child Restraint in the Vehicle

⚠ CAUTION:

A child can be seriously injured or killed in a crash if the child restraint is not properly secured in the vehicle. Make sure the child restraint is properly installed in the vehicle using the vehicle's safety belt or LATCH system, following the instructions that came with that restraint, and also the instructions in this manual.

To help reduce the chance of injury, the child restraint must be secured in the vehicle. Child restraint systems must be secured in vehicle seats by lap belts or the lap belt portion of a lap-shoulder belt, or by the LATCH system. See *Lower Anchors and Tethers for Children (LATCH) on page 1-43* for more information. A child can be endangered in a crash if the child restraint is not properly secured in the vehicle.

When securing an add-on child restraint, refer to the instructions that come with the restraint which may be on the restraint itself or in a booklet, or both, and to this manual. The child restraint instructions are important, so if they are not available, obtain a replacement copy from the manufacturer.

Keep in mind that an unsecured child restraint can move around in a collision or sudden stop and injure people in the vehicle. Be sure to properly secure any child restraint in your vehicle — even when no child is in it.

Securing the Child Within the Child Restraint

⚠ CAUTION:

A child can be seriously injured or killed in a crash if the child is not properly secured in the child restraint. Because there are different systems, it is important to refer to the instructions that come with the restraint. Make sure the child is properly secured, following the instructions that came with that restraint.

Where to Put the Restraint

Accident statistics show that children are safer if they are restrained in the rear rather than the front seat.

We recommend that children and child restraints be secured in a rear seat, including: an infant or a child riding in a rear-facing child restraint; a child riding in a forward-facing child seat; an older child riding in a booster seat; and children, who are large enough, using safety belts.

A label on your sun visor says, “Never put a rear-facing child seat in the front.” This is because the risk to the rear-facing child is so great, if the airbag deploys.

⚠ CAUTION:

A child in a rear-facing child restraint can be seriously injured or killed if the right front passenger’s airbag inflates. This is because the back of the rear-facing child restraint would be very close to the inflating airbag.

CAUTION: (Continued)

CAUTION: (Continued)

Even though the passenger sensing system is designed to turn off the right front passenger’s frontal airbag if the system detects a rear-facing child restraint, no system is fail-safe, and no one can guarantee that an airbag will not deploy under some unusual circumstance, even though it is turned off. We recommend that rear-facing child restraints be secured in a rear seat, even if the airbag is off.

If you secure a forward-facing child restraint in the right front seat, always move the front passenger seat as far back as it will go. It is better to secure the child restraint in a rear seat.

See *Passenger Sensing System on page 1-69* for additional information.

⚠ CAUTION:

A child in a child restraint in the center front seat can be badly injured or killed by the frontal airbags if they inflate. Never secure a child restraint in the center front seat. It is always better to secure a child restraint in a rear seat.

Do not use child restraints in the center front seat position.

When securing a child restraint in a rear seating position, study the instructions that came with your child restraint to make sure it is compatible with this vehicle.

If your vehicle does not have a rear seat that will accommodate a rear-facing child restraint, we recommend that rear-facing child restraints not be transported in your vehicle, even if the airbag is off.

Wherever you install a child restraint, be sure to secure the child restraint properly.

Keep in mind that an unsecured child restraint can move around in a collision or sudden stop and injure people in the vehicle. Be sure to properly secure any child restraint in your vehicle — even when no child is in it.

Lower Anchors and Tethers for Children (LATCH)

The LATCH system holds a child restraint during driving or in a crash. This system is designed to make installation of a child restraint easier. The LATCH system uses anchors in the vehicle and attachments on the child restraint that are made for use with the LATCH system.

Make sure that a LATCH-compatible child restraint is properly installed using the anchors, or use the vehicle's safety belts to secure the restraint, following the instructions that came with that restraint, and also the instructions in this manual. When installing a child restraint with a top tether, you must also use either the lower anchors or the safety belts to properly secure the child restraint. A child restraint must never be installed using only the top tether and anchor.

In order to use the LATCH system in your vehicle, you need a child restraint that has LATCH attachments. The child restraint manufacturer will provide you with instructions on how to use the child restraint and its attachments. The following explains how to attach a child restraint with these attachments in your vehicle.

Not all vehicle seating positions or child restraints have lower anchors and attachments or top tether anchors and attachments.

Lower Anchors

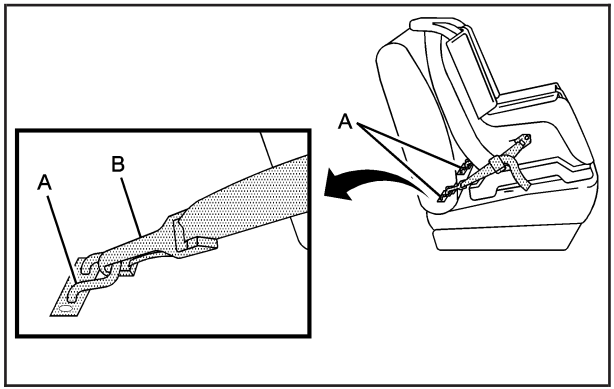

Lower anchors (A) are metal bars built into the vehicle. There are two lower anchors for each LATCH seating position that will accommodate a child restraint with lower attachments (B).

Top Tether Anchor

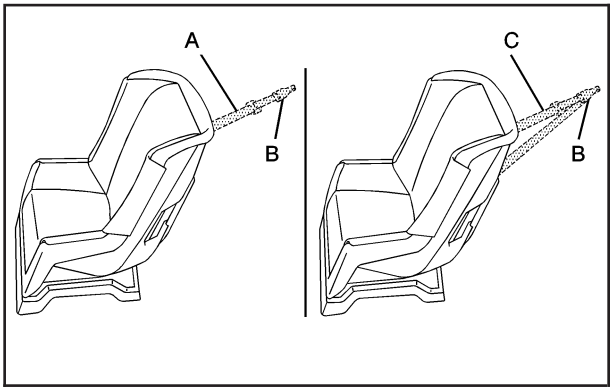

A top tether (A, C) anchors the top of the child restraint to the vehicle. A top tether anchor is built into the vehicle. The top tether attachment (B) on the child restraint connects to the top tether anchor in the vehicle in order to reduce the forward movement and rotation of the child restraint during driving or in a crash.

Your child restraint may have a single tether (A) or a dual tether (C). Either will have a single attachment (B) to secure the top tether to the anchor.

Some child restraints that have a top tether are designed for use with or without the top tether being attached. Others require the top tether always to be attached. In Canada, the law requires that forward-facing child restraints have a top tether, and that the tether be attached. Be sure to read and follow the instructions for your child restraint.

If the child restraint does not have a top tether, one can be obtained, in kit form, for many child restraints. Ask the child restraint manufacturer whether or not a kit is available.

Lower Anchor and Top Tether Anchor Locations

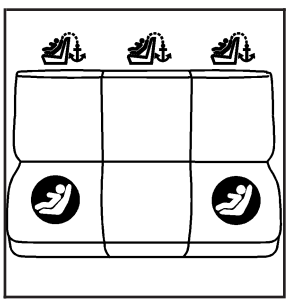

Crew Cab — Rear Seat

(Top Tether Anchor): Seating positions with top tether anchors.

(Lower Anchor): Seating positions with two lower anchors.

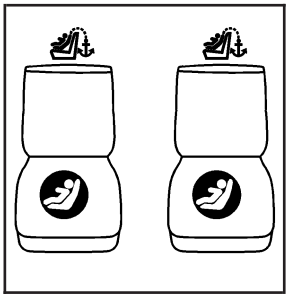

Extended Cab — Rear Seat

(Top Tether Anchor): Seating positions with top tether anchors.

(Lower Anchor): Seating positions with two lower anchors.

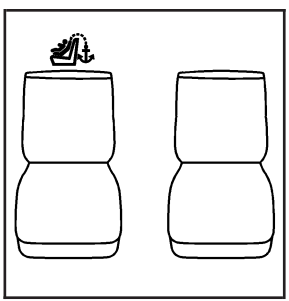

Front Seat — Regular and Extended Cab without Rear Seats

(Top Tether Anchor): Seating positions with top tether anchors.

For crew cab models, there are exposed metal lower anchors for each rear outboard seating position, located where the seatback meets the back of the seat cushion.

For extended cab models with rear seats, there are exposed metal lower anchors for each rear seating position, attached to the back wall, near the seat cushion.

To assist you in locating the lower anchors, place your hand in a palm-up position and reach up between the seat cushion and the seatback.

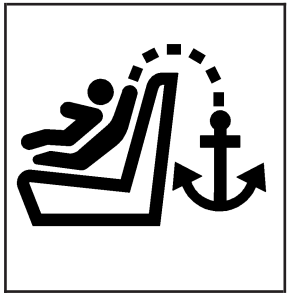

To assist you in locating the top tether anchors, the top tether anchor symbol is located on the cover.

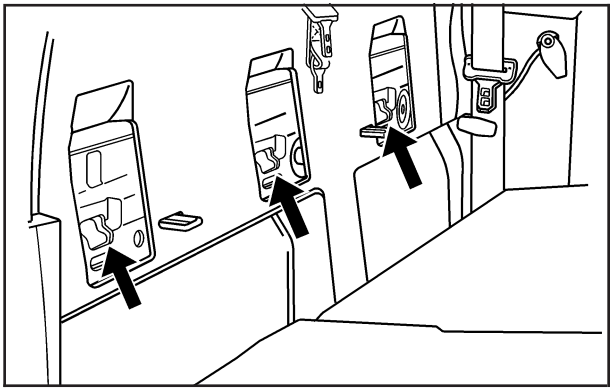

Crew Cab

The top tether anchors in a crew cab model are located on the back wall behind each rear seating position. Be sure to use an anchor located on the same side of the vehicle as the seating position where the child restraint will be placed.

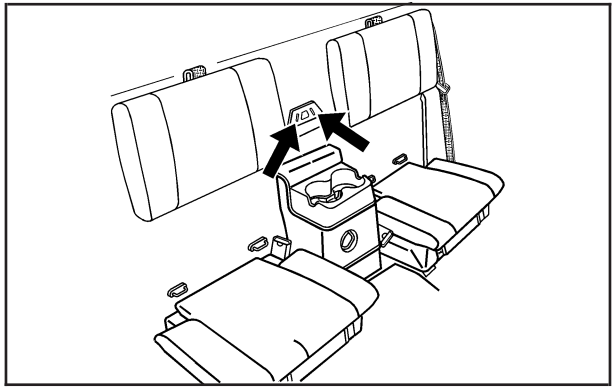

Extended Cab — Rear Seat

The top tether anchors in an extended cab model are located on the center of the back wall behind a removable cover for the rear seating positions. Be sure to use an anchor located nearest to the seating position where the child restraint will be placed.

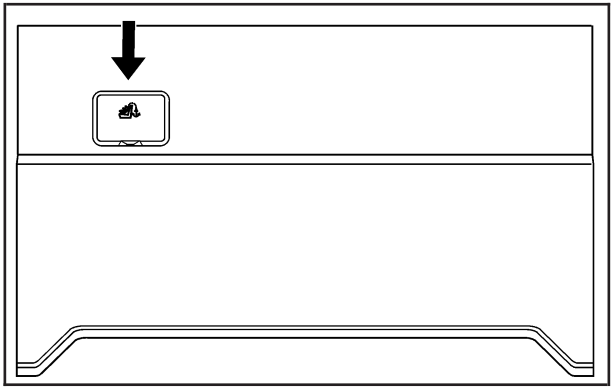

Regular and Extended Cab without Rear Seats

For regular and extended cab models without rear seats, there is a top tether anchor located behind a removable cover on the back wall behind the right front passenger seat. You may have to pull the seatback forward to access the anchor.

Do not secure a child restraint in a position without a top tether anchor if a national or local law requires that the top tether be attached, or if the instructions that come with the child restraint say that the top tether must be attached.

Accident statistics show that children are safer if they are restrained in the rear rather than the front seat. See *Where to Put the Restraint on page 1-42* for additional information.

Securing a Child Restraint Designed for the LATCH System

⚠ CAUTION:

If a LATCH-type child restraint is not attached to anchors, the restraint will not be able to protect the child correctly. In a crash, the child could be seriously injured or killed. Make sure that a LATCH-type child restraint is properly installed using the anchors, or use the vehicle's safety belts to secure the restraint, following the instructions that came with that restraint, and also the instructions in this manual.

⚠ CAUTION:

Each top tether anchor and lower anchor in the vehicle is designed to hold only one child restraint. Attaching more than one child restraint to a single anchor could cause the anchor or attachment to come loose or even break during a crash. A child or others could be injured if this happens. To help prevent injury to people and damage to your vehicle, attach only one child restraint per anchor.

⚠ CAUTION:

Children can be seriously injured or strangled if a shoulder belt is wrapped around their neck and the safety belt continues to tighten. Secure any unused safety belts behind the child restraint so children cannot reach them. Pull the shoulder belt all the way out of the retractor to set the lock, if your vehicle has one, after the child restraint has been installed. Be sure to follow the instructions of the child restraint manufacturer.

Notice: **Contact between the child restraint LATCH attachment parts and the vehicle's safety belt assembly may cause damage to these parts. Make sure when securing unused safety belts behind the child restraint that there is no contact between the child restraint LATCH attachment parts and the vehicle's safety belt assembly.**

Folding an empty rear seat with the safety belts secured may cause damage to the safety belt or the seat. When removing the child restraint, always remember to return the safety belts to their normal, stowed position before folding the rear seat.

Crew Cab — Rear Seat

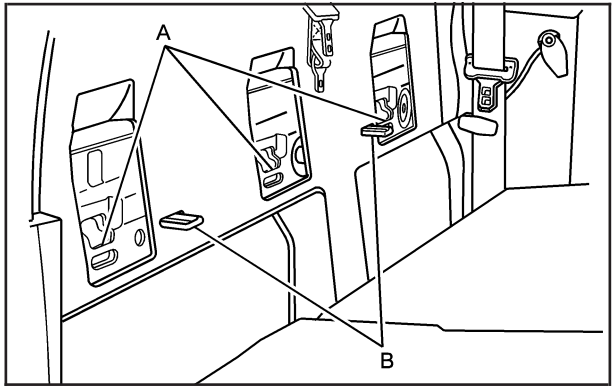

1. Put the child restraint on the seat.
2. If the child restraint manufacturer's instructions recommends that the top tether be attached, attach the top tether to the top tether anchor (A). Refer to the child restraint instructions and the following steps:
   2.1. Pull the seatback forward to access the top tether anchors (A). See *Rear Seat Operation (Extended Cab) on page 1-9* or *Rear Seat Operation (Crew Cab) on page 1-10*.

2.2. Route the top tether according to your child restraint instructions and the following instructions:

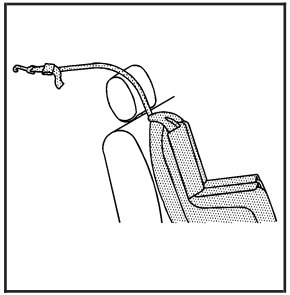

If the position you are using has a fixed headrest or head restraint and you are using a single tether, route the tether over the head restraint.

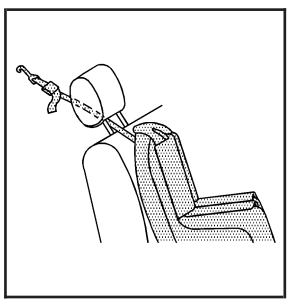

If the position you are using has an adjustable headrest or head restraint and you are using a single tether, raise the headrest or head restraint and route the tether under the headrest or head restraint and in between the headrest or head restraint posts.

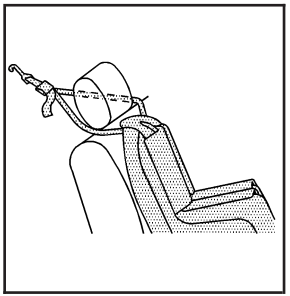

If the position you are using has a fixed or adjustable headrest or head restraint and you are using a dual tether, route the tether around the headrest or head restraint.

2.3. Attach the top tether to the anchor (A). Make sure that you secure the top tether to the top tether anchor and not to the seatback latch (B).

2.4. Push rearward on the seatback until it locks into its upright position. Push and pull on the seatback to make sure it is secured properly.

3. Attach and tighten the lower attachments to the lower anchors. If the child restraint does not have lower attachments or the desired seating position does not have lower anchors, secure the child restraint with the top tether and the safety belts. Refer to your child restraint manufacturer instructions and the instructions in this manual.
   3.1. Find the lower anchors for the desired seating position.
   3.2. Attach and tighten the lower attachments on the child restraint to the lower anchors.
4. Tighten the top tether.
5. Push and pull the child restraint in different directions to be sure it is secure.

Extended Cab — Rear Seat

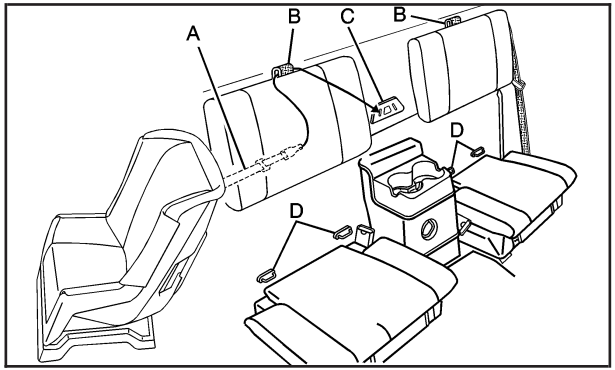

1. Attach and tighten the lower attachments to the lower anchors. If the child restraint does not have lower attachments or the desired seating position does not have lower anchors, secure the child restraint with the top tether and the safety belts. Refer to your child restraint manufacturer instructions and the instructions in this manual.
   1.1. Find the lower anchors (D) for the desired seating position.
   1.2. Put the child restraint on the seat.
   1.3. Attach the lower attachments on the child restraint to the lower anchors (D) in the vehicle. The child restraint instructions will show you how.

2. If the child restraint manufacturer recommends that the top tether be attached, attach and tighten the top tether to the top tether anchor (C). Refer to the child restraint instructions and the following steps:

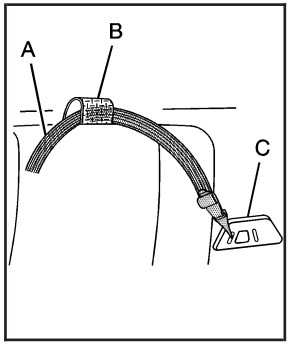

   2.1. Pull on the finger access tab to remove the cover to access the top tether anchors (C).
   2.2. Route the top tether (A) through the loop (B) at the top of the seatback to attach the top tether to the nearest top tether anchor (C).
3. Tighten the lower anchor attachments and the top tether. The child restraint instructions will show you how.
4. Push and pull the child restraint in different directions to be sure it is secure.

Front Seat — Regular/Extended Cab without Rear Seats

Your vehicle has a right front passenger's airbag and a passenger sensing system. The passenger sensing system is designed to turn off the right front passenger's frontal airbag when an infant in a rear-facing infant seat or a small child in a forward-facing child restraint or booster seat is detected. See *Securing a Child Restraint in the Right Front Seat Position on page 1-56* and *Passenger Sensing System on page 1-69* for important safety information and additional information on installing a child restraint in the right front seat position.

1. See *Securing a Child Restraint in the Right Front Seat Position on page 1-56* for instructions on installing the child restraint using the safety belts.
2. If the child restraint manufacturer's instructions recommends that the top tether be attached, attach and tighten the top tether to the top tether anchor. Refer to the child restraint instructions and the following steps:
   2.1. Pull the seatback forward to access the top tether anchor. See *Seatback Latches on page 1-8*.
   2.2. Pull on the finger access tab to remove the cover to access the top tether anchor.

2.3. Route the top tether according to your child restraint instructions and the following instructions:

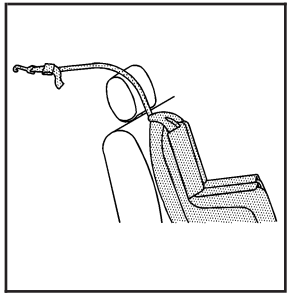

If the position you are using has a fixed headrest or head restraint and you are using a single tether, route the tether over the headrest or head restraint.

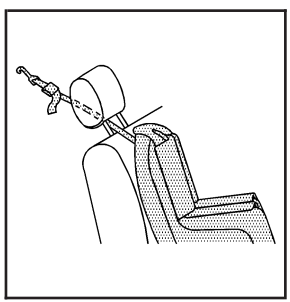

If the position you are using has an adjustable headrest or head restraint and you are using a single tether, raise the headrest or head restraint and route the tether under the headrest or head restraint and in between the headrest or head restraint posts.

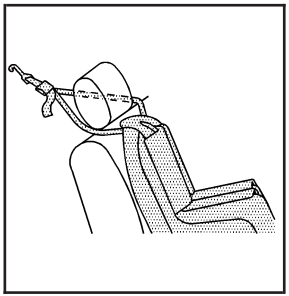

If the position you are using has a fixed or adjustable headrest or head restraint and you are using a dual tether, route the tether around the headrest or head restraint.

3. Attach and tighten the top tether according to your child restraint instructions.
4. Push and pull the child restraint in different directions to be sure it is secure.

Securing a Child Restraint in a Rear Seat Position

When securing a child restraint in a rear seating position, study the instructions that came with your child restraint to make sure it is compatible with this vehicle.

If your child restraint has the LATCH system, see *Lower Anchors and Tethers for Children (LATCH) on page 1-43* for how to install your child restraint using LATCH. If you secure a child restraint using a safety belt and it uses a top tether, see *Lower Anchors and Tethers for Children (LATCH) on page 1-43* for top tether anchor locations.

Do not secure a child seat in a position without a top tether anchor if a national or local law requires that the top tether be anchored, or if the instructions that come with the child restraint say that the top strap must be anchored.

If your child restraint does not have the LATCH system, you will be using the safety belt to secure the child restraint in this position. Be sure to follow the instructions that came with the child restraint. Secure the child in the child restraint when and as the instructions say.

If you need to install more than one child restraint in the rear seat, be sure to read *Where to Put the Restraint on page 1-42*

1. Put the child restraint on the seat.
2. Pick up the latch plate, and run the lap and shoulder portions of the vehicle's safety belt through or around the restraint. The child restraint instructions will show you how.

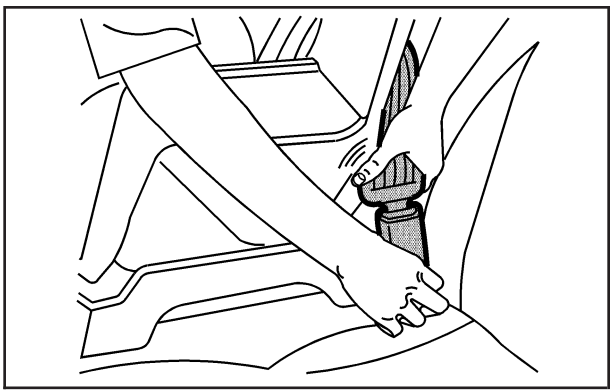

3. Push the latch plate into the buckle until it clicks.

   Make sure the release button is positioned so you would be able to unbuckle the safety belt quickly if necessary.

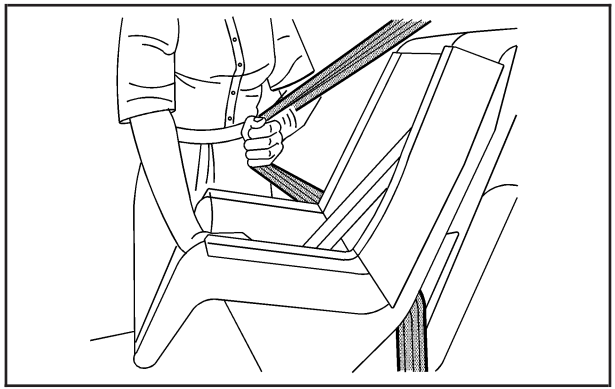

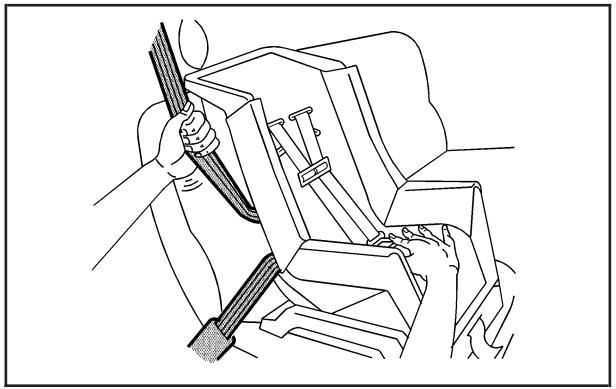

4. Pull the rest of the shoulder belt all the way out of the retractor to set the lock.
5. If your child restraint has a top tether, attach the top tether to the top tether anchor. See *Lower Anchors and Tethers for Children (LATCH) on page 1-43*.
6. To tighten the belt, push down on the child restraint, pull the shoulder portion of the belt to tighten the lap portion of the belt, and feed the shoulder belt back into the retractor. If you are using a forward-facing child restraint, you may find it helpful to use your knee to push down on the child restraint as you tighten the belt.
7. Tighten the top tether. See *Lower Anchors and Tethers for Children (LATCH) on page 1-43*.
8. Push and pull the child restraint in different directions to be sure it is secure.

To remove the child restraint, unbuckle the vehicle's safety belt and let it go back all the way. If the top tether is attached to a top tether anchor, disconnect it.

Securing a Child Restraint in the Center Front Seat Position

⚠ CAUTION:

A child in a child restraint in the center front seat can be badly injured or killed by the frontal airbags if they inflate. Never secure a child restraint in the center front seat. It is always better to secure a child restraint in a rear seat.

Do not use child restraints in the center front seat position.

Securing a Child Restraint in the Right Front Seat Position

Your vehicle has airbags. A rear seat is a safer place to secure a forward-facing child restraint. See *Where to Put the Restraint on page 1-42*.

In addition, your vehicle has a passenger sensing system which is designed to turn off the right front passenger's frontal airbag under certain conditions. See *Passenger Sensing System on page 1-69* and *Passenger Airbag Status Indicator on page 3-28* for more information on this, including important safety information.

A label on your sun visor says, "Never put a rear-facing child seat in the front." This is because the risk to the rear-facing child is so great, if the airbag deploys.

⚠ CAUTION:

A child in a rear-facing child restraint can be seriously injured or killed if the right front passenger's airbag inflates. This is because the back of the rear-facing child restraint would be very close to the inflating airbag.

Even though the passenger sensing system is designed to turn off the right front passenger's frontal airbag if the system detects a rear-facing child restraint, no system is fail-safe, and no one can guarantee that an airbag will not deploy under some unusual circumstance, even though it is turned off. We recommend that rear-facing child restraints be secured in a rear seat, even if the airbag is off.

If you secure a forward-facing child restraint in the right front seat, always move the front passenger seat as far back as it will go. It is better to secure the child restraint in a rear seat.

See *Passenger Sensing System on page 1-69* for additional information.

If your vehicle does not have a rear seat that will accommodate a rear-facing child restraint, we recommend that rear-facing child restraints not be transported in your vehicle, even if the airbag is off.

If your child restraint has the LATCH system, see *Lower Anchors and Tethers for Children (LATCH) on page 1-43* for how to install your child restraint using LATCH. If you secure a child restraint using a safety belt and it uses a top tether, see *Lower Anchors and Tethers for Children (LATCH) on page 1-43* for top tether anchor locations.

Do not secure a child seat in a position without a top tether anchor if a national or local law requires that the top tether be anchored, or if the instructions that come with the child restraint say that the top strap must be anchored.

In Canada, the law requires that forward-facing child restraints have a top tether, and that the tether be attached.

You will be using the lap-shoulder belt to secure the child restraint in this position. Follow the instructions that came with the child restraint.

1. Move the seat as far back as it will go before securing the forward-facing child restraint.
   When the passenger sensing system has turned off the right front passenger's frontal airbag, the off indicator on the passenger airbag status indicator should light and stay lit when you start the vehicle. See *Passenger Airbag Status Indicator on page 3-28*.

2. Put the child restraint on the seat.
3. Pick up the latch plate, and run the lap and shoulder portions of the vehicle's safety belt through or around the restraint. The child restraint instructions will show you how.

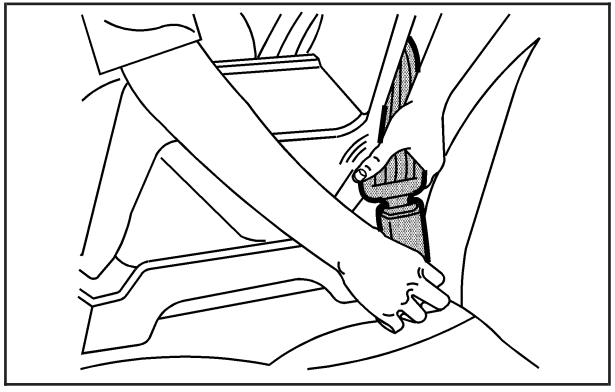

4. Push the latch plate into the buckle until it clicks.

   Make sure the release button is positioned so you would be able to unbuckle the safety belt quickly if necessary.

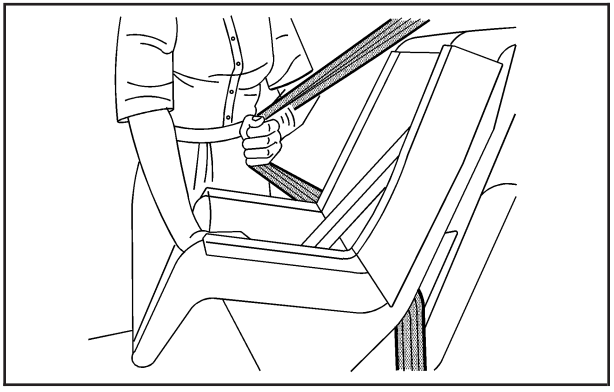

5. Pull the rest of the shoulder belt all the way out of the retractor to set the lock.
6. If your vehicle does not have a rear seat and your child restraint manufacturer recommends using a top tether anchor, attach the top tether to the top tether anchor. Refer to the instructions that came with the child restraint and to *Lower Anchors and Tethers for Children (LATCH) on page 1-43* for more information.

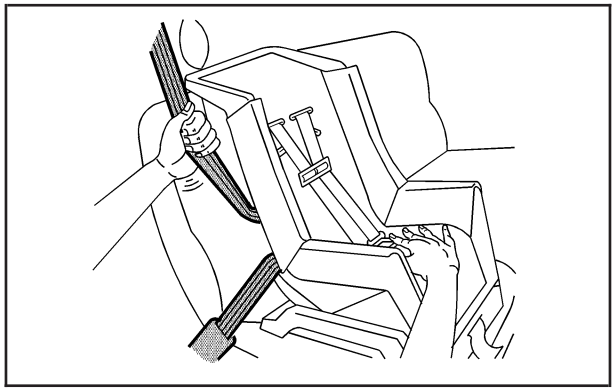

7. To tighten the belt, push down on the child restraint, pull the shoulder portion of the belt to tighten the lap portion of the belt and feed the shoulder belt back into the retractor. If you are using a forward-facing child restraint, you may find it helpful to use your knee to push down on the child restraint as you tighten the belt.
8. Tighten the top tether. See *Lower Anchors and Tethers for Children (LATCH) on page 1-43*.
9. Push and pull the child restraint in different directions to be sure it is secure.

If the airbag is off, the off indicator in the passenger airbag status indicator will come on and stay on when the vehicle is started.

If a child restraint has been installed and on indicator is lit, turn the vehicle off. Remove the child restraint from the vehicle and reinstall the child restraint.

If, after reinstalling the child restraint and restarting the vehicle, the on indicator is still lit, check to make sure that the vehicle's seatback is not pressing the child restraint into the seat cushion. If this happens, slightly recline the vehicle's seatback and adjust the seat cushion if possible. Also make sure the child restraint is not trapped under the vehicle head restraint. If this happens, adjust the head restraint.

Remove any additional material from the seat such as blankets, cushions, seat covers, seat heaters or seat massagers before reinstalling or securing the child restraint.

If the off symbol is still not lit, secure the child in the child restraint in a rear seat position in the vehicle, if one is available, and check with your dealer/retailer.

To remove the child restraint, unbuckle the vehicle's safety belt and let it go back all the way. If the top tether is attached to a top tether anchor, disconnect it.

Airbag System

Your vehicle has the following airbags:

- A frontal airbag for the driver.
- A frontal airbag for the right front passenger

Your vehicle may also have the following airbags:

- A roof-rail airbag for the driver and the passenger seated directly behind the driver.
- A roof-rail airbag for the right front passenger and the passenger seated directly behind the right front passenger.

All of the airbags in your vehicle will have the word AIRBAG embossed in the trim or on an attached label near the deployment opening.

For frontal airbags, the word AIRBAG will appear on the middle part of the steering wheel for the driver and on the instrument panel for the right front passenger.

With roof-rail airbags, the word AIRBAG will appear along the headliner or trim.

Airbags are designed to supplement the protection provided by safety belts. Even though today's airbags are also designed to help reduce the risk of injury from the force of an inflating bag, all airbags must inflate very quickly to do their job.

Here are the most important things to know about the airbag system:

⚠ CAUTION:

You can be severely injured or killed in a crash if you are not wearing your safety belt — even if you have airbags. Wearing your safety belt during a crash helps reduce your chance of hitting things inside the vehicle or being ejected from it. Airbags are "supplemental restraints" to the safety belts. All airbags are designed to work with safety belts, but do not replace them.

⚠ CAUTION:

Frontal airbags are designed to deploy in moderate to severe frontal and near frontal crashes. They are not designed to inflate in rollover, rear crashes, or in many side crashes.

Roof-rail airbags are designed to inflate in moderate to severe crashes where something hits the side of your vehicle. They are not designed to inflate in frontal, in rollover, or in rear crashes.

Everyone in your vehicle should wear a safety belt properly — whether or not there is an airbag for that person.

⚠ CAUTION:

Airbags inflate with great force, faster than the blink of an eye. Anyone who is up against, or very close to, any airbag when it inflates can be seriously injured or killed. Do not sit unnecessarily close to the airbag, as you would be if you were sitting on the edge of your seat or leaning forward. Safety belts help keep you in position before and during a crash. Always wear your safety belt, even with airbags. The driver should sit as far back as possible while still maintaining control of the vehicle.

Occupants should not lean on or sleep against the door or side windows in seating positions with roof-rail airbags.

⚠ CAUTION:

Airbags plus lap-shoulder belts offer the best protection for adults, but not for young children and infants. Neither the vehicle's safety belt system nor its airbag system is designed for them. Young children and infants need the protection that a child restraint system can provide. Always secure children properly in your vehicle. To read how, see *Older Children on page 1-33* or *Infants and Young Children on page 1-36*.

There is an airbag readiness light on the instrument panel, which shows the airbag symbol.

The system checks the airbag electrical system for malfunctions. The light tells you if there is an electrical problem. See *Airbag Readiness Light on page 3-27* for more information.

Where Are the Airbags?

The driver's airbag is in the middle of the steering wheel.

The right front passenger's airbag is in the instrument panel on the passenger's side.

Driver Side shown, Passenger Side similar

If your vehicle has roof-rail airbags for the driver, right front passenger, and second row outboard passengers, they are in the ceiling above the side windows.

⚠ CAUTION:

If something is between an occupant and an airbag, the airbag might not inflate properly or it might force the object into that person causing severe injury or even death. The path of an inflating airbag must be kept clear. Do not put anything between an occupant and an airbag, and do not attach or put anything on the steering wheel hub or on or near any other airbag covering.

If your vehicle has roof-rail airbags, never secure anything to the roof of your vehicle by routing the rope or tie down through any door or window opening. If you do, the path of an inflating roof-rail airbag will be blocked.

When Should an Airbag Inflate?

Frontal airbags are designed to inflate in moderate to severe frontal or near-frontal crashes to help reduce the potential for severe injuries mainly to the driver's or right front passenger's head and chest. However, they are only designed to inflate if the impact exceeds a predetermined deployment threshold. Deployment thresholds are used to predict how severe a crash is likely to be in time for the airbags to inflate and help restrain the occupants.

Whether your frontal airbags will or should deploy is not based on how fast your vehicle is traveling. It depends largely on what you hit, the direction of the impact, and how quickly your vehicle slows down.

Frontal airbags may inflate at different crash speeds. For example:

- If the vehicle hits a stationary object, the airbags could inflate at a different crash speed than if the vehicle hits a moving object.
- If the vehicle hits an object that deforms, the airbags could inflate at a different crash speed than if the vehicle hits an object that does not deform.
- If the vehicle hits a narrow object (like a pole), the airbags could inflate at a different crash speed than if the vehicle hits a wide object (like a wall).
- If the vehicle goes into an object at an angle, the airbags could inflate at a different crash speed than if the vehicle goes straight into the object.

Thresholds can also vary with specific vehicle design.

Frontal airbags are not intended to inflate during vehicle rollovers, rear impacts, or in many side impacts.

Your vehicle has seat position sensors which enables the sensing system to monitor the position of the driver's seat and the right front passenger's seat. Seat position sensors provide information that is used to determine if the airbags should deploy at a reduced level or at full deployment.

In addition, your vehicle has dual-stage frontal airbags. Dual-stage airbags adjust the restraint according to crash severity. Your vehicle has electronic frontal sensors, which help the sensing system distinguish between a moderate frontal impact and a more severe frontal impact. For moderate frontal impacts, dual-stage airbags inflate at a level less than full deployment. For more severe frontal impacts, full deployment occurs.

Your vehicle may or may not have roof-rail airbags. See *Airbag System on page 1-60*. Roof-rail airbags are intended to inflate in moderate to severe side crashes. Roof-rail airbags will inflate if the crash severity is above the system's designed threshold level. The threshold level can vary with specific vehicle design.

Roof-rail airbags are not intended to inflate in frontal impacts, near-frontal impacts, rollovers, or rear impacts. Both roof-rail airbags will deploy when either side of the vehicle is struck.

In any particular crash, no one can say whether an airbag should have inflated simply because of the damage to a vehicle or because of what the repair costs were. For frontal airbags, inflation is determined by what the vehicle hits, the angle of the impact, and how quickly the vehicle slows down. For roof-rail airbags, deployment is determined by the location and severity of the side impact.

What Makes an Airbag Inflate?

In a deployment event, the sensing system sends an electrical signal triggering a release of gas from the inflator. Gas from the inflator fills the airbag causing the bag to break out of the cover and deploy. The inflator, the airbag, and related hardware are all part of the airbag module.

Frontal airbag modules are located inside the steering wheel and instrument panel. For vehicles with roof-rail airbags, there are airbag modules in the ceiling of the vehicle, near the side windows that have occupant seating positions.

How Does an Airbag Restrain?

In moderate to severe frontal or near frontal collisions, even belted occupants can contact the steering wheel or the instrument panel. In moderate to severe side collisions, even belted occupants can contact the inside of the vehicle.

Airbags supplement the protection provided by safety belts. Frontal airbags distribute the force of the impact more evenly over the occupant's upper body, stopping the occupant more gradually. Roof-rail airbags distribute the force of the impact more evenly over the occupant's upper body.

But airbags would not help in many types of collisions, primarily because the occupant's motion is not toward those airbags. See *When Should an Airbag Inflate? on page 1-65* for more information.

Airbags should never be regarded as anything more than a supplement to safety belts.

What Will You See After an Airbag Inflates?

After the frontal airbags inflate, they quickly deflate, so quickly that some people may not even realize the airbags inflated. Roof-rail airbags may still be at least partially inflated for some time after they deploy. Some components of the airbag module may be hot for several minutes. For location of the airbag modules, see *What Makes an Airbag Inflate? on page 1-67*.

The parts of the airbag that come into contact with you may be warm, but not too hot to touch. There may be some smoke and dust coming from the vents in the deflated airbags. Airbag inflation does not prevent the driver from seeing out of the windshield or being able to steer the vehicle, nor does it prevent people from leaving the vehicle.

⚠ CAUTION:

When an airbag inflates, there may be dust in the air. This dust could cause breathing problems for people with a history of asthma or other breathing trouble. To avoid this, everyone in the vehicle should get out as soon as it is safe to do so. If you have breathing problems but cannot get out of the vehicle after an airbag inflates, then get fresh air by opening a window or a door. If you experience breathing problems following an airbag deployment, you should seek medical attention.

Your vehicle has a feature that may automatically unlock the doors (if equipped with power door locks), turn the interior lamps on, flash the hazard warning flashers, and turn off the radio when the airbag inflates. You can lock the doors again by using the door lock. The interior lamps and hazard warning flashers will deactivate after approximately 15 minutes.

In many crashes severe enough to inflate the airbag, windshields are broken by vehicle deformation. Additional windshield breakage may also occur from the right front passenger airbag.

- Airbags are designed to inflate only once. After an airbag inflates, you will need some new parts for the airbag system. If you do not get them, the airbag system will not be there to help protect you in another crash. A new system will include airbag modules and possibly other parts. The service manual for your vehicle covers the need to replace other parts.
- Your vehicle has a crash sensing and diagnostic module which records information after a crash. See *Vehicle Data Recording and Privacy on page 7-17* and *Event Data Recorders on page 7-18*.
- Let only qualified technicians work on the airbag system. Improper service can mean that the airbag system will not work properly. See your dealer/retailer for service.

Passenger Sensing System

Your vehicle has a passenger sensing system for the right front passenger's position. The passenger airbag status indicator will be visible on the instrument panel when you start your vehicle.

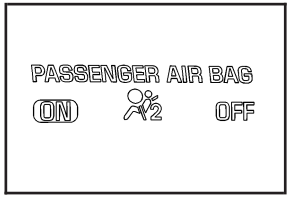

United States

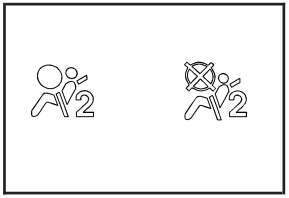

Canada

The words ON and OFF, or the symbol for on and off, will be visible during the system check. When the system check is complete, either the word ON or the word OFF, or the symbol for on or the symbol for off, will be visible. See *Passenger Airbag Status Indicator on page 3-28*.

The passenger sensing system will turn off the right front passenger's frontal airbag under certain conditions. The driver's airbags are not part of the passenger sensing system.

The passenger sensing system works with sensors that are part of the right front passenger's seat. The sensors are designed to detect the presence of a properly-seated occupant and determine if the right front passenger's frontal airbag should be enabled (may inflate) or not.

Accident statistics show that children are safer if they are restrained in the rear rather than the front seat.

We recommend that children be secured in a rear seat, including: an infant or a child riding in a rear-facing child restraint; a child riding in a forward-facing child seat; an older child riding in a booster seat; and children, who are large enough, using safety belts.

A label on your sun visor says, "Never put a rear-facing child seat in the front." This is because the risk to the rear-facing child is so great, if the airbag deploys.

⚠ CAUTION:

A child in a rear-facing child restraint can be seriously injured or killed if the right front passenger's airbag inflates. This is because the back of the rear-facing child restraint would be very close to the inflating airbag.

Even though the passenger sensing system is designed to turn off the right front passenger's frontal airbag if the system detects a rear-facing child restraint, no system is fail-safe, and no one can guarantee that an airbag will not deploy under some unusual circumstance, even though it is turned off. We recommend that rear-facing child restraints be secured in a rear seat, even if the airbag is off.

If you secure a forward-facing child restraint in the right front seat, always move the front passenger seat as far back as it will go. It is better to secure the child restraint in a rear seat.

If your vehicle does not have a rear seat that will accommodate a rear-facing child restraint, we recommend that rear-facing child restraints not be transported in your vehicle, even if the airbag is off.

The passenger sensing system is designed to turn off the right front passenger's frontal airbag if:

- The right front passenger seat is unoccupied.
- The system determines that an infant is present in a rear-facing infant seat.
- The system determines that a small child is present in a child restraint.
- The system determines that a small child is present in a booster seat.
- A right front passenger takes his/her weight off of the seat for a period of time.
- The right front passenger seat is occupied by a smaller person, such as a child who has outgrown child restraints.
- Or, if there is a critical problem with the airbag system or the passenger sensing system.

When the passenger sensing system has turned off the right front passenger's frontal airbag, the off indicator will light and stay lit to remind you that the airbag is off. See *Passenger Airbag Status Indicator on page 3-28*.

If a child restraint has been installed and the on indicator is lit, turn the vehicle off. Remove the child restraint from the vehicle and reinstall the child restraint following the child restraint manufacturer's directions and refer to *Securing a Child Restraint in the Right Front Seat Position on page 1-56*.

If, after reinstalling the child restraint and restarting the vehicle, the on indicator is still lit, check to make sure that the vehicle's seatback is not pressing the child restraint into the seat cushion. If this happens, slightly recline the vehicle's seatback and adjust the seat cushion if possible. Also make sure the child restraint is not trapped under the vehicle head restraint. If this happens, adjust the head restraint. See *Head Restraints on page 1-7*.

Remove any additional material from the seat such as blankets, cushions, seat covers, seat heaters, or seat massagers before reinstalling or securing the child restraint.

If the on indicator is still lit, secure the child in the child restraint in a rear seat position in the vehicle, and check with your dealer/retailer. If no rear seat is available, do not install a child restraint in this vehicle, and check with your dealer/retailer.

The passenger sensing system is designed to enable (may inflate) the right front passenger's frontal airbag anytime the system senses that a person of adult size is sitting properly in the right front passenger's seat.

When the passenger sensing system has allowed the airbag to be enabled, the on indicator will light and stay lit to remind you that the airbag is active.

For some children who have outgrown child restraints and for very small adults, the passenger sensing system may or may not turn off the right front passenger's frontal airbag, depending upon the person's seating posture and body build. Everyone in your vehicle who has outgrown child restraints should wear a safety belt properly — whether or not there is an airbag for that person.

If a person of adult-size is sitting in the right front passenger's seat, but the off indicator is lit, it could be because that person is not sitting properly in the seat. If this happens, turn the vehicle off, remove any additional material from the seat, such as blankets, cushions, seat covers, seat heaters or seat massagers and ask the person to place the seatback in the fully upright position, then sit upright in the seat, centered on the seat cushion, with the person's legs comfortably extended. Restart the vehicle and have the person remain in this position for two to three minutes. This will allow the system to detect that person and then enable the right front passenger's frontal airbag.

Safety belts help keep the passenger in position on the seat during vehicle maneuvers and braking, which helps the passenger sensing system maintain the passenger airbag status. See "Safety Belts" and "Child Restraints" in the Index for additional information about the importance of proper restraint use.

If you ever pull the shoulder portion of the belt out all the way, you will engage the child restraint locking feature. This may unintentionally cause the passenger sensing system to turn the airbag(s) off for some adult size occupants. If this happens, just let the belt go back all the way and start again.

⚠ CAUTION:

If the airbag readiness light in the instrument panel cluster ever comes on and stays on, it means that something may be wrong with the airbag system. If this ever happens, have the vehicle serviced promptly, because an adult-size person sitting in the right front passenger's seat may not have the protection of the airbag(s). See *Airbag Readiness Light on page 3-27* for more on this, including important safety information.

A thick layer of additional material, such as a blanket or cushion, or aftermarket equipment such as seat covers, seat heaters, and seat massagers can affect how well the passenger sensing system operates. We recommend that you not use seat covers or other aftermarket equipment other than any that GM has approved for your specific vehicle. See *Adding Equipment to Your Airbag-Equipped Vehicle on page 1-74* for more information about modifications that can affect how the system operates.

⚠ CAUTION:

Stowing of articles under the passenger's seat or between the passenger's seat cushion and seatback may interfere with the proper operation of the passenger sensing system.

Servicing Your Airbag-Equipped Vehicle

Airbags affect how your vehicle should be serviced. There are parts of the airbag system in several places around your vehicle. Your dealer/retailer and the service manual have information about servicing your vehicle and the airbag system. To purchase a service manual, see *Service Publications Ordering Information on page 7-16*.

⚠ CAUTION:

For up to 10 seconds after the ignition is turned off and the battery is disconnected, an airbag can still inflate during improper service. You can be injured if you are close to an airbag when it inflates. Avoid yellow connectors. They are probably part of the airbag system. Be sure to follow proper service procedures, and make sure the person performing work for you is qualified to do so.

Adding Equipment to Your Airbag-Equipped Vehicle

Q: Is there anything I might add to or change about the vehicle that could keep the airbags from working properly?

A: Yes. If you add things that change your vehicle's frame, bumper system, height, front end or side sheet metal, they may keep the airbag system from working properly. Changing or moving any parts of the front seats, safety belts, the airbag sensing and diagnostic module, steering wheel, instrument panel, roof-rail airbag modules, ceiling headliner or pillar garnish trim, front sensors, or airbag wiring can affect the operation of the airbag system.

In addition, your vehicle has a passenger sensing system for the right front passenger's position, which includes sensors that are part of the passenger's seat. The passenger sensing system may not operate properly if the original seat trim is replaced with non-GM covers, upholstery or trim, or with GM covers, upholstery or trim designed for a different vehicle.

Any object, such as an aftermarket seat heater or a comfort enhancing pad or device, installed under or on top of the seat fabric, could also interfere with the operation of the passenger sensing system. This could either prevent proper deployment of the passenger airbag(s) or prevent the passenger sensing system from properly turning off the passenger airbag(s). See *Passenger Sensing System on page 1-69*.

If you have any questions about this, you should contact Customer Assistance before you modify your vehicle. The phone numbers and addresses for Customer Assistance are in Step Two of the Customer Satisfaction Procedure in this manual. See *Customer Satisfaction Procedure on page 7-2*.

Q: Because I have a disability, I have to get my vehicle modified. How can I find out whether this will affect my airbag system?

A: If you have questions, call Customer Assistance. The phone numbers and addresses for Customer Assistance are in Step Two of the Customer Satisfaction Procedure in this manual. See *Customer Satisfaction Procedure on page 7-2*.

In addition, your dealer/retailer and the service manual have information about the location of the airbag sensors, sensing and diagnostic module and airbag wiring.

Restraint System Check

Checking the Restraint Systems

Safety Belts

Now and then, make sure the safety belt reminder light and all your belts, buckles, latch plates, retractors and anchorages are working properly.

Look for any other loose or damaged safety belt system parts. If you see anything that might keep a safety belt system from doing its job, have it repaired. Torn or frayed safety belts may not protect you in a crash. They can rip apart under impact forces. If a belt is torn or frayed, get a new one right away.

Make sure the safety belt reminder light is working. See *Safety Belt Reminders on page 3-26* for more information.

Keep safety belts clean and dry. See *Care of Safety Belts on page 5-109*.

Airbags

The airbag system does not need regularly scheduled maintenance or replacement. Make sure the airbag readiness light is working. See *Airbag Readiness Light on page 3-27* for more information.

Notice: **If an airbag covering is damaged, opened, or broken, the airbag may not work properly. Do not open or break the airbag coverings. If there are any opened or broken airbag covers, have the airbag covering and/or airbag module replaced. For the location of the airbag modules, see *What Makes an Airbag Inflate? on page 1-67*. See your dealer/retailer for service.**

Replacing Restraint System Parts After a Crash

⚠ CAUTION:

A crash can damage the restraint systems in your vehicle. A damaged restraint system may not properly protect the person using it, resulting in serious injury or even death in a crash. To help make sure your restraint systems are working properly after a crash, have them inspected and any necessary replacements made as soon as possible.

If you have had a crash, do you need new belts or LATCH system (if equipped) parts?

After a very minor crash, nothing may be necessary. But the belt assemblies that were used during any crash may have been stressed or damaged. See your dealer/retailer to have your safety belt assemblies inspected or replaced.

If your vehicle has the LATCH system and it was being used during a crash, you may need new LATCH system parts.

New parts and repairs may be necessary even if the belt or LATCH system (if equipped), was not being used at the time of the crash.

If an airbag inflates, you will need to replace airbag system parts. See the part on the airbag system earlier in this section.

Have your safety belt pretensioners checked if your vehicle has been in a crash, if your airbag readiness light stays on after you start your vehicle, or while you are driving. See *Airbag Readiness Light on page 3-27*.

NOTES

Section 2 Features and Controls

Keys 2-3
Remote Keyless Entry (RKE) System 2-4
Remote Keyless Entry (RKE) System Operation 2-5

Doors and Locks 2-7
Door Locks 2-7
Power Door Locks 2-8
Programmable Automatic Door Locks 2-8
Rear Door Security Locks (Crew Cab) 2-9
Lockout Protection 2-9
Rear Doors (Extended Cab) 2-9
Tailgate 2-10

Windows 2-12
Manual Windows 2-12
Power Windows 2-13
Sliding Rear Window 2-14
Sun Visors 2-15

Theft-Deterrent Systems 2-15
Content Theft-Deterrent 2-15
Passlock® (U. S. Only) 2-16
PASS-Key® III+ 2-17
PASS-Key® III+ Operation (Canada Only) 2-17

Starting and Operating Your Vehicle 2-19
New Vehicle Break-In 2-19
Ignition Positions 2-19
Retained Accessory Power (RAP) 2-21
Starting the Engine 2-21
Engine Coolant Heater 2-23
Automatic Transmission Operation 2-24
Manual Transmission Operation 2-26
Four-Wheel Drive 2-28
Parking Brake 2-32
Shifting Into PARK (P) (Automatic Transmission) 2-34
Shifting Out of PARK (P) (Automatic Transmission) 2-36
Parking Your Vehicle (Manual Transmission) 2-36
Parking Over Things That Burn 2-37
Engine Exhaust 2-37
Running the Engine While Parked 2-38

Mirrors 2-39
Manual Rearview Mirror 2-39
Manual Rearview Mirror with OnStar® 2-39
Automatic Dimming Rearview Mirror 2-40

Automatic Dimming Rearview Mirror with OnStar®, Compass and Temperature Display 2-40
Automatic Dimming Rearview Mirror with Compass and Temperature Display 2-43
Outside Manual Mirrors 2-45
Outside Power Mirrors 2-46
Outside Convex Mirror 2-46

OnStar® System 2-47

Storage Areas 2-50
Glove Box 2-50
Cupholder(s) 2-50
Center Console Storage 2-50
Assist Handles 2-50
Rear Storage Area 2-51

Sunroof 2-52

Keys

⚠ CAUTION:

Leaving children in a vehicle with the ignition key is dangerous for many reasons, children or others could be badly injured or even killed. They could operate the power windows or other controls or even make the vehicle move. The windows will function with the keys in the ignition and they could be seriously injured or killed if caught in the path of a closing window. Do not leave the keys in a vehicle with children.

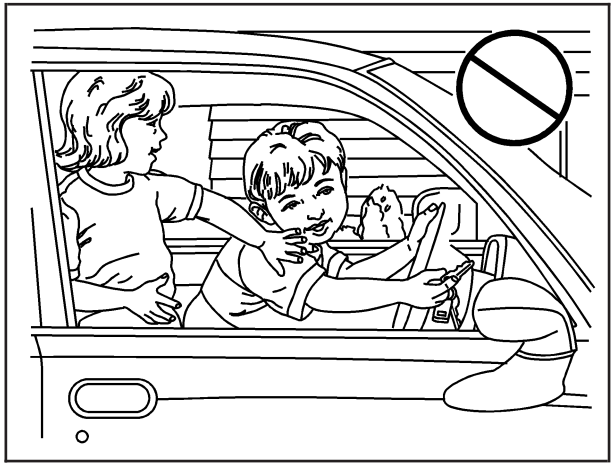

The key can be used for the ignition, all door locks, and the tailgate.

The key has a bar-coded key tag that the dealer/retailer or qualified locksmith can use to make new keys. Store this information in a safe place, not in your vehicle.

Notice: **If you ever lock your keys in your vehicle, you may have to damage the vehicle to get in. Be sure you have spare keys.**

If you are locked out of your vehicle, call the Roadside Assistance Center. See *Roadside Assistance Program on page 7-7*.

Remote Keyless Entry (RKE) System

If the vehicle has the Remote Keyless Entry (RKE) system, it operates on a radio frequency subject to Federal Communications Commission (FCC) Rules and with Industry Canada.

This device complies with Part 15 of the FCC Rules. Operation is subject to the following two conditions:

1. This device may not cause interference.
2. This device must accept any interference received, including interference that may cause undesired operation of the device.

This device complies with RSS-210 of Industry Canada. Operation is subject to the following two conditions:

1. This device may not cause interference.
2. This device must accept any interference received, including interference that may cause undesired operation of the device.

Changes or modifications to this system by other than an authorized service facility could void authorization to use this equipment.

At times you may notice a decrease in range. This is normal for any RKE system. If the transmitter does not work or if you have to stand closer to your vehicle for the transmitter to work, try this:

- Check the distance. You may be too far from your vehicle. You may need to stand closer during rainy or snowy weather.
- Check the location. Other vehicles or objects may be blocking the signal. Take a few steps to the left or right, hold the transmitter higher, and try again.
- Check to determine if battery replacement is necessary. See “Battery Replacement” later in this section.
- If you are still having trouble, see your dealer/retailer or a qualified technician for service.

Remote Keyless Entry (RKE) System Operation

If your vehicle has this feature you can lock and unlock your doors and disarm or arm your theft-deterrent system from about 3 feet (1 m) up to 30 feet (9 m) away using the Remote Keyless Entry (RKE) transmitter. See *Content Theft-Deterrent on page 2-15* for additional information.

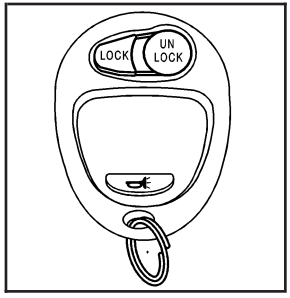

UNLOCK: Press this button to unlock the driver's door and turn on the interior lamps. The parking lamps may also flash, and the horn may chirp, when this button is pressed.

Press the unlock button again within three seconds and all of the doors will unlock.

LOCK: Press this button to lock all the doors. The parking lamps may also flash and the horn may chirp when this button is pressed.

If a door is open or ajar when the lock button is pressed, the horn will chirp several times to let you know the doors did not lock and the content theft-deterrent system is not armed. Pressing the lock button again while the horn is chirping or within three seconds after the horn stops sounding, the doors will lock but the content theft-deterrent system will not arm until the opened door is closed.

Different feedback modes can be programmed through the Driver Information Center (DIC). See "Remote Keyless Entry Feedback" under *DIC Operation and Displays on page 3-38*.

(Panic): Press this button to make the horn sound and the headlamps and taillamps flash for up to 30 seconds. To turn them off again, do one of these three things: wait for 30 seconds; press the panic button again; or start the vehicle.

Matching Transmitter(s) to Your Vehicle

Each RKE transmitter is coded to prevent another transmitter from unlocking your vehicle. If a transmitter is lost or stolen, a replacement can be purchased through your dealer/retailer. Remember to bring any remaining transmitters with you when you go to your dealer/retailer. When the dealer/retailer matches the replacement transmitter to your vehicle, any remaining transmitters must also be matched. Once your dealer/retailer has coded the new transmitter, the lost transmitter will not unlock your vehicle. Each vehicle can have a maximum of four transmitters matched to it.

Battery Replacement

Under normal use, the battery in your RKE transmitter should last about two years.

The battery is weak if the transmitter will not work at the normal range in any location. If you have to get close to your vehicle before the transmitter works, it is probably time to change the battery.

Notice: **When replacing the battery, use care not to touch any of the circuitry. Static from your body transferred to these surfaces may damage the transmitter.**

To replace the battery:

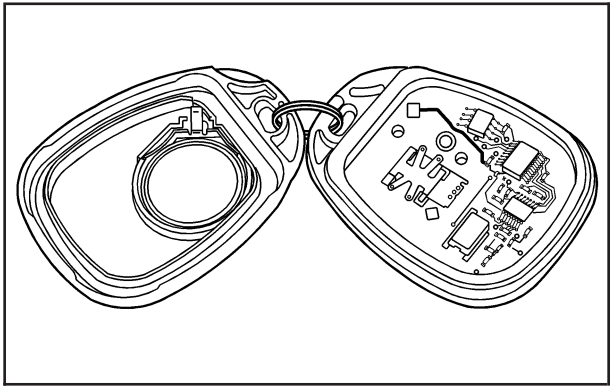

1. Insert a thin coin, or similar object, in the slot between the covers of the transmitter housing. Gently pry the transmitter apart.
2. Remove and replace the battery with a three-volt CR2032 or equivalent battery.
3. Align the covers and snap them together.
4. Check the operation of the transmitter.

Doors and Locks

Door Locks

⚠ CAUTION:

Unlocked doors can be dangerous.

- **Passengers, especially children, can easily open the doors and fall out of a moving vehicle. When a door is locked, the handle will not open it. You increase the chance of being thrown out of the vehicle in a crash if the doors are not locked. So, wear safety belts properly and lock the doors whenever you drive.**
- **Young children who get into unlocked vehicles may be unable to get out. A child can be overcome by extreme heat and can suffer permanent injuries or even death from heat stroke. Always lock your vehicle whenever you leave it.**
- **Outsiders can easily enter through an unlocked door when you slow down or stop your vehicle. Locking your doors can help prevent this from happening.**

There are several ways to lock and unlock your vehicle.

To lock or unlock the door from the outside, use the key in the driver's or front passenger's door or press the lock or unlock button on the remote keyless entry (RKE) transmitter.

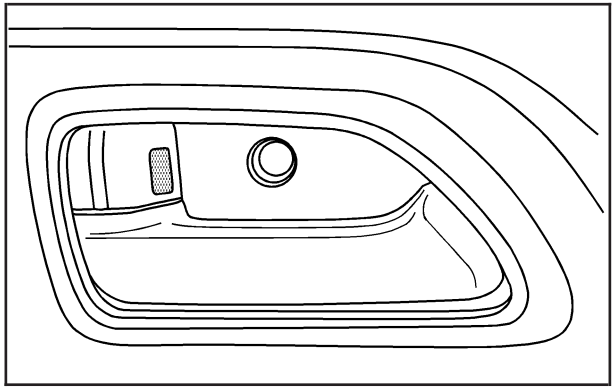

To lock a door from the inside, push the manual lever on the door forward. To unlock a door from the inside, push the lever on the door rearward.

You will see a colored area on the lever when the door is unlocked.

Power Door Locks

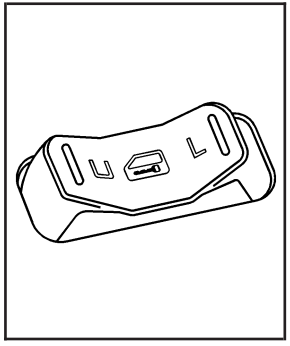

Driver's Switch Shown, Front Passenger's Switch Similar

If your vehicle has power door locks, the switches are located on the driver's and the front passenger's armrests.

Press L (lock) to lock all the doors at once. To unlock all the doors, press U (unlock).

On crew cab models, use the manual door lock lever on each rear door to lock or unlock the doors from the rear seating areas.

Programmable Automatic Door Locks

If your vehicle has power door locks and the remote keyless entry system, it has an automatic lock/unlock feature.

If your vehicle has an automatic transmission, it is programmed from the factory to lock all doors automatically when the shift lever is moved out of PARK (P). All the doors will unlock when the shift lever is moved back into PARK (P).

If your vehicle has a manual transmission, it is programmed from the factory to lock all the doors when the vehicle speed is greater than 15 mph (24 km/h). The doors will unlock when the key is removed from the ignition.

To change the automatic door lock and unlock settings, see "Automatic Door Locks" under *DIC Operation and Displays on page 3-38*.

Rear Door Security Locks (Crew Cab)

If your vehicle is a crew cab model, it may have rear door security locks. With this feature, you can lock the rear doors so they cannot be opened from the inside.

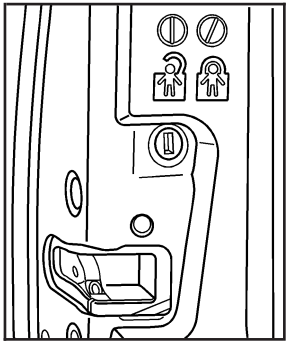

The rear door security lock is located on the inside edge of each rear door below the security lock label.

To engage the security locks, do the following:

1. Open one of the rear doors.
2. Using your ignition key, turn the lock to the horizontal position.
3. Close the door.
4. Repeat these steps on the other rear door.

If you want to open a rear door when the security lock is on, unlock the door and open the door from the outside.

To disengage the security locks, do the following:

1. Open one of the rear doors.
2. Using your ignition key, turn the lock to the vertical position.
3. Close the door.
4. Repeat these steps on the other rear door.

Lockout Protection

If you have power door locks, this feature protects you from locking your key in the vehicle when the key is in the ignition and a door is open.

If the power door lock switch is pressed when a door is open and the key is in the ignition, all of the doors will lock and then the driver's door will unlock.

Rear Doors (Extended Cab)

To open a rear door, open the front door. Then, use the handle located on the front edge of the rear door panel to open it. You must close the rear door before closing the front door.

Tailgate

⚠ CAUTION:

It is extremely dangerous to ride on the tailgate, even when the vehicle is operated at low speeds. People riding on the tailgate can easily lose their balance and fall in response to vehicle maneuvers. Falling from a moving vehicle may result in serious injuries or death. Do not allow people to ride on the tailgate. Be sure everyone in your vehicle is in a seat and using a safety belt properly.

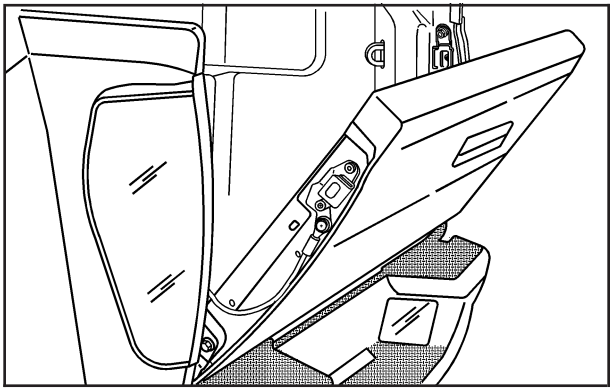

You can open the tailgate by pulling up on the outside handle while pulling the tailgate down.

When you put the tailgate back up, be sure it latches securely.

On vehicles with a locking tailgate, use the ignition key. Turn the key counterclockwise to lock the tailgate. Turn the key clockwise to unlock the tailgate.

Removing the Tailgate

Follow these steps if you want to remove the tailgate:

1. With the tailgate fully open, lift up slightly on the entire tailgate assembly.

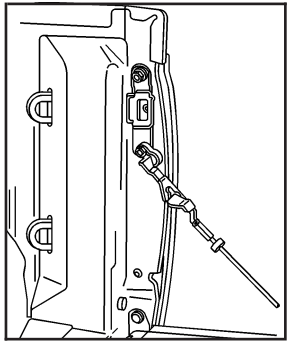

Remove the retaining cables from both sides of the tailgate by pulling the clips away from the bolt heads while pushing the cable bracket forward. When the larger part of the hole on the bracket is over the bolt, slide the bracket off of the bolt.

2. With the tailgate partially down, lift up on the passenger's side and pull the tailgate toward you, then move the tailgate to the right to release the driver's side. You can then remove the entire tailgate assembly.

Reverse the procedure to reinstall the tailgate. Make sure it is secure.

To partially lower the tailgate do the following:

1. With the tailgate fully open, lift up slightly on the entire tailgate assembly.

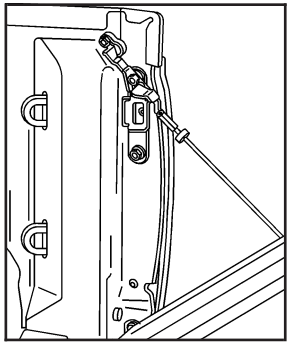

Tailgate Partially Down

2. Remove the retaining cable from the passenger side of the tailgate by pulling the clip away from the bolt head while pushing the cable bracket forward.

   When the larger part of the hole on the bracket is over the bolt, slide the bracket off of the bolt.

3. Slide the lower end fitting onto the top bolt. The tailgate will now stay in the partially opened position.
4. Repeat steps 2 and 3 for the driver side.

If you would like to close the tailgate, the bracket cannot be in the partially opened position and must be anchored on the bottom bolt, using the top position on the bracket.

Windows

⚠ CAUTION:

Leaving children, helpless adults, or pets in a vehicle with the windows closed is dangerous. They can be overcome by the extreme heat and suffer permanent injuries or even death from heat stroke. Never leave a child, a helpless adult, or a pet alone in a vehicle, especially with the windows closed in warm or hot weather.

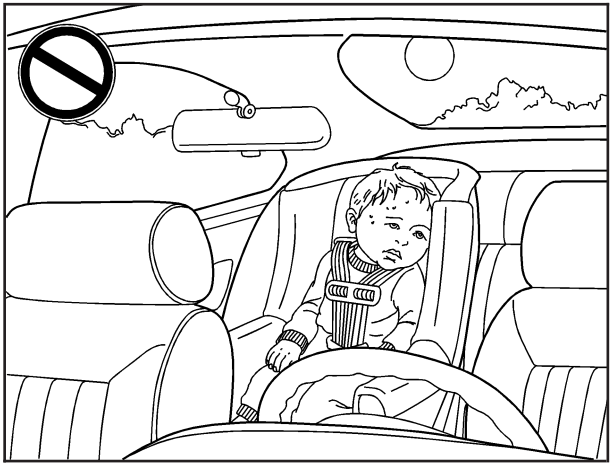

Manual Windows

On a vehicle with manual windows, use the handle on each door to open and close each window.

Power Windows

⚠ CAUTION:

Leaving children, helpless adults, or pets in a vehicle with the windows closed is dangerous. They can be overcome from extreme heat in warm or hot weather and suffer permanent injuries or even death from heat stroke.

Leaving children in a vehicle with the ignition key is dangerous for many reasons, children or others could be badly injured or even killed. They could operate the power windows or other controls or even make the vehicle move. The windows will function with the keys in the ignition and they could be seriously injured or killed if caught in the path of a closing window. Do not leave keys in a vehicle with children.

When there are children in the rear seat use the window lockout button to prevent unintentional operation of the windows.

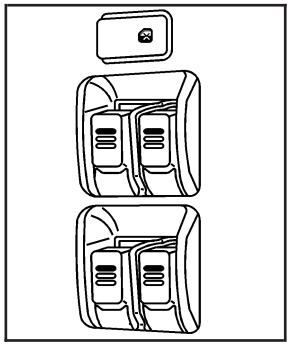

Crew Cab Switches Shown

The power window switches for all windows are located on the driver's door armrest. In addition, each passenger's door has its own switch.

The power windows will work when the ignition is in ACC (Accessory) or ON or while Retained Accessory Power (RAP) is active. See *Retained Accessory Power (RAP) on page 2-21*.

Pull the front of the switch up to raise the window. Press the front of the switch down to lower the window.

Do not hold all four power window switches down for several seconds after the windows have been completely lowered or raised, because the vehicle may blow a fuse.

Express-Down Windows

The driver's window has an express-down feature that allows the window to be lowered fully without continuously holding the switch. Press the front of the switch past the first position to activate the express-down mode. The express-down mode can be canceled at any time by pulling up on the switch.

Window Lockout

(Window Lockout): If you have a crew cab vehicle with power windows, you will also have a window lockout button located forward of the window switches. This feature disables the passenger's window switches when the window lockout button is pressed. To turn the lockout feature on or off, press the window lockout button. A red band on the side of the button can be seen when the windows are not locked out.

Sliding Rear Window

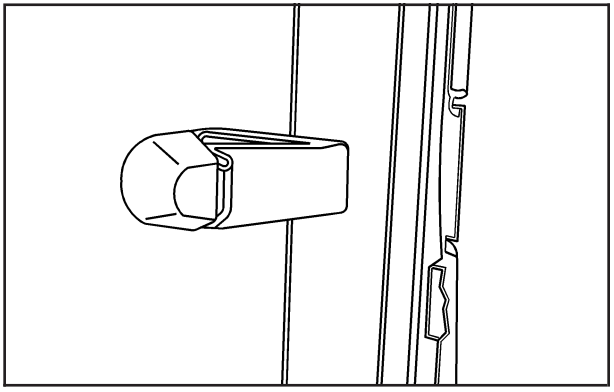

If your vehicle has this feature, squeeze the latch in the center of the window and slide the glass to open it.

When you close the window, be sure the latch is engaged.

Sun Visors

To block glare, pull the sun visor down. It can also be detached from the center mount and moved to the side to block glare from that direction.

Visor Vanity Mirror

The passenger's side sun visor may have a mirror. Pull down the visor to access the mirror.

Theft-Deterrent Systems

Vehicle theft is big business, especially in some cities. Although your vehicle has a number of theft-deterrent features, we know that nothing we put on it can make it impossible to steal.

Content Theft-Deterrent

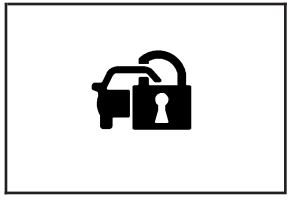

If your vehicle has the Remote Keyless Entry (RKE) system, the vehicle has a content theft-deterrent alarm system.

To activate the content theft-deterrent system:

1. Close all the doors.
2. Lock the doors with the RKE transmitter. The security light, located on the instrument panel cluster, will flash.

If the lock button on the RKE transmitter is pressed, but a door is open, the horn will chirp six times. Press the lock button again, within three seconds, and the doors will lock. Close the open door and the system will be activated.

If a locked door is not opened using the RKE transmitter, or by OnStar®, the pre-alarm will go off. If the engine is not started or unlock not pressed within 10 seconds, the front turn signal lamps will flash for two minutes, and the horn will sound for two minutes, then will turn off to save the battery power.

Remember, the theft-deterrent system will not activate if you lock the doors with a key, the manual door lock, or power door lock switch. The system can only be activated using the RKE transmitter, or by OnStar®. See *OnStar® System on page 2-47* for additional information. You should also remember that you can start your vehicle with the correct ignition key if the alarm has been set off.

Here is how to avoid setting off the alarm by accident:

- If you do not want to activate the theft-deterrent system, the vehicle should be locked with the door key after the doors are closed.
- Always unlock a door with the RKE transmitter. Unlocking a door any other way will set off the alarm.

If you set off the alarm by accident, you can turn off the alarm by pressing unlock on the RKE transmitter. The alarm will not stop if you try to unlock a door any other way.

Testing the Alarm

To test the alarm:

1. From inside the vehicle, activate the system by locking the doors with the RKE transmitter.
2. Unlock the door with the manual door lock and open the door. This should set off the alarm.
3. To turn the alarm off, press the unlock button on the RKE transmitter or start the engine.

If the alarm does not sound when it should but the lights flash, check to see if the horn works. The horn fuse may be blown. To replace the fuse, see *Fuses and Circuit Breakers on page 5-116*.

If the alarm does not sound or the front turn signal lamps do not flash, see your dealer/retailer for service.

Passlock® (U. S. Only)

Your vehicle has the Passlock® theft-deterrent system.

Passlock® is a passive theft-deterrent system. Passlock® enables fuel if the ignition lock cylinder is turned with a valid key. If an incorrect key is used or the ignition lock cylinder is tampered with, the fuel system is disabled and the vehicle will not start.

During normal operation, the security light will turn off approximately five seconds after the engine is started. See *Security Light on page 3-37*.

If the engine stalls and the security light flashes, wait about 10 minutes until the light stops flashing before trying to restart the engine. Remember to release the key from START as soon as the engine starts.

If the engine does not start after three tries, the vehicle needs service.

If the engine is running and the security light comes on, you will be able to restart the engine if you turn the engine off. However, your Passlock® system is not working properly and must be serviced by your dealer/retailer. Your vehicle is not protected by Passlock® at this time. See your dealer/retailer for service.

In an emergency, call the Roadside Assistance Center. See *Roadside Assistance Program on page 7-7*.

Do not leave the key or device that disarms or deactivates the theft deterrent system in the vehicle.

PASS-Key® III+

The PASS-Key® III+ system operates on a radio frequency subject to Federal Communications Commission (FCC) Rules and with Industry Canada.

This device complies with Part 15 of the FCC Rules. Operation is subject to the following two conditions:

1. This device may not cause harmful interference.
2. This device must accept any interference received, including interference that may cause undesired operation.

This device complies with RSS-210 of Industry Canada. Operation is subject to the following two conditions:

1. This device may not cause interference.
2. This device must accept any interference received, including interference that may cause undesired operation of the device.

Changes or modifications to this system by other than an authorized service facility could void authorization to use this equipment.

PASS-Key® III+ uses a radio frequency transponder in the key that matches a decoder in your vehicle.

PASS-Key® III+ Operation (Canada Only)

Your vehicle has a passive theft-deterrent system.

The system is automatically armed when the key is removed from the ignition.

The system is automatically disarmed when the key is turned to ON/RUN.

You do not have to manually arm or disarm the system.

The security light will come on if there is a problem with arming or disarming the theft-deterrent system.

The key uses a transponder that matches an immobilizer control unit in your vehicle. Only the correct key will start the vehicle. If the key is ever damaged, you may not be able to start your vehicle.

When trying to start the vehicle, if the engine does not start and the security light comes on, there may be a problem with your theft-deterrent system. Turn the ignition off and try again.

If the engine still does not start, and the key appears to be undamaged, try another ignition key. At this time, you may also want to check the fuse.
See *Fuses and Circuit Breakers on page 5-116*.

If the engine still does not start with the other key, your vehicle needs service. If your vehicle does start, the first key may be faulty. See your dealer/retailer who can service the theft-deterrent system and have a new key made.

It is possible for the theft-deterrent system decoder to learn the transponder value of a new or replacement key. Up to 10 keys can be programmed for the vehicle. The following procedure is for programming additional keys only.

Canadian Owners: If you lose or damage your keys, only a dealer/retailer can service the theft-deterrent system to have new keys made. To program additional keys you will require two current driver's keys.

To program a new key do the following:

1. Verify that the new key has PK3+ stamped on it.
2. Insert the current driver's key in the ignition and start the engine. If the engine will not start see your dealer/retailer for service.
3. After the engine has started, turn the key to LOCK/OFF, and remove the key.
4. Insert the second current driver's key in the ignition and start the engine within ten seconds of removing the previous key. If the engine will not start see your dealer/retailer for service.
5. After the engine has started, turn the key to LOCK/OFF, and remove the key. Insert the key to be programmed and turn it to ON/RUN within ten seconds of removing the previous key.

   The security light will turn off once the key has been programmed.
6. Repeat the Steps 1 through 5 if additional keys are to be programmed.

If the security light comes on and stays on while driving, you will be able to restart the engine if you turn it off. The theft-deterrent system, however, is not working properly and must be serviced by your dealer/retailer. Your vehicle is not protected by the theft-deterrent system at this time.

In an emergency, contact Roadside Assistance. See *Roadside Assistance Program on page 7-7*.

Do not leave the key or device that disarms or deactivates the theft deterrent system in the vehicle.

Starting and Operating Your Vehicle

New Vehicle Break-In

Notice: **Your vehicle does not need an elaborate break-in. But it will perform better in the long run if you follow these guidelines:**

- **Keep your speed at 55 mph (88 km/h) or less for the first 500 miles (805 km).**
- **Do not drive at any one constant speed, fast or slow, for the first 500 miles (805 km). Do not make full-throttle starts. Avoid downshifting to brake or slow the vehicle.**
- **Avoid making hard stops for the first 200 miles (322 km) or so. During this time the new brake linings are not yet broken in. Hard stops with new linings can mean premature wear and earlier replacement. Follow this breaking-in guideline every time you get new brake linings.**
- **Do not tow a trailer during break-in. See *Towing a Trailer on page 4-47* for the trailer towing capabilities of your vehicle and more information.**

Following break-in, engine speed and load can be gradually increased.

Ignition Positions

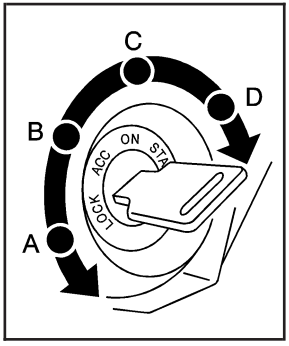

With the key in the ignition switch, you can turn to four different positions.

To shift out of PARK (P), the ignition must be in ON/RUN and the regular brake pedal must be applied.

Notice: **Using a tool to force the key from the ignition switch could cause damage or break the key. Use the correct key and turn the key only with your hand. Make sure the key is all the way in. If none of this works, then your vehicle needs service.**

(A) LOCK/OFF: This position locks the ignition. It also locks the transmission on automatic transmission vehicles. It locks the steering wheel on manual transmission vehicles when the key is removed. It is a theft-deterrent feature. You will only be able to remove your key when the ignition is turned to LOCK/OFF.

If you have an automatic transmission, the ignition switch cannot be turned to LOCK/OFF unless the shift lever is in PARK (P).

If the steering wheel is locked, move it from right to left and turn the key to ACC/ACCESSORY. If none of this works, then your vehicle needs service.

(B) ACC/ACCESSORY: This is the position in which you can operate your electrical accessories or items plugged into the accessory power outlets. On automatic transmission vehicles, this position unlocks the ignition. On manual transmission vehicles, it unlocks the ignition and steering wheel. Use this position if your vehicle must be pushed or towed.

(C) ON/RUN: This is the position that the switch returns to after you start your engine and release the switch. The switch stays in ON when the engine is running. But even when the engine is not running, you can use ON/RUN to operate the electrical accessories and to display some instrument panel cluster warning and indicator lights. The transmission is also unlocked in this position on automatic transmission vehicles.

The battery could be drained if you leave the key in the ACC/ACCESORY or ON/RUN position with the engine off. You may not be able to start your vehicle if the battery is allowed to drain for an extended period of time.

START (D): This is the position that starts the engine. When the engine starts, release the key. The ignition switch returns to ON/RUN for driving.

When the engine is not running, ACC/ACCESSORY and ON/RUN allows you to operate the electrical accessories, such as the radio or items plugged into the accessory power outlets.

A warning tone will sound if you open the driver's door when the ignition is in ACC/ACCESSORY or LOCK/OFF and the key is in the ignition.

Key In the Ignition

Never leave your vehicle with the keys inside, as it is an easy target for joy riders or thieves. If you leave the key in the ignition and park your vehicle, a chime will sound, when you open the driver's door. Always remember to remove your key from the ignition and take it with you. This will lock your ignition and transmission. Also, always remember to lock the doors.

The battery could be drained if you leave the key in the ignition while your vehicle is parked. You may not be able to start your vehicle after it has been parked for an extended period of time.

Retained Accessory Power (RAP)

These vehicle accessories can be used for up to 20 minutes after the engine is turned off:

- Audio System
- Wipers
- Power Windows

These features work when the key is in ON/RUN or ACC/ACCESSORY. Once the key is turned from ON/RUN to LOCK/OFF, power to these features continue to work for up to 20 minutes or until a door is opened.

Starting the Engine

Place the transmission in the proper gear.

Automatic Transmission

Move the shift lever to PARK (P) or NEUTRAL (N). The engine will not start in any other position -- this is a safety feature. To restart when you are already moving, use NEUTRAL (N) only.

Notice: **Do not try to shift to PARK (P) if your vehicle is moving. If you do, you could damage the transmission. Shift to PARK (P) only when your vehicle is stopped.**

Manual Transmission

The shift lever should be in neutral position and the parking brake engaged. Hold the clutch pedal down to the floor and start the engine. Your vehicle will not start if the clutch pedal is not all the way down. That is a safety feature.

Starting Procedure

1. With your foot off the accelerator pedal, turn the ignition key to START. When the engine starts, let go of the key. The idle speed will go down as your engine gets warm. Do not race the engine immediately after starting it. Operate the engine and transmission gently to allow the oil to warm up and lubricate all moving parts.

   Your vehicle has a Computer-Controlled Cranking System. This feature assists in starting the engine and protects components. If the ignition key is turned to the START position, and then released when the engine begins cranking, the engine will continue cranking for a few seconds or until the vehicle starts. If the engine does not start and the key is held in START for many seconds, cranking will be stopped after 15 seconds to prevent cranking motor damage. To prevent gear damage, this system also prevents cranking if the engine is already running. Engine cranking can be stopped by turning the ignition switch to ACC/ACCESSORY or LOCK/OFF.

Notice: **Cranking the engine for long periods of time, by returning the key to the START position immediately after cranking has ended, can overheat and damage the cranking motor, and drain the battery. Wait at least 15 seconds between each try, to let the cranking motor cool down.**

2. If the engine does not start after 5-10 seconds, especially in very cold weather (below 0°F or –18°C), it could be flooded with too much gasoline. Try pushing the accelerator pedal all the way to the floor and holding it there as you hold the key in START for up to a maximum of 15 seconds. Wait at least 15 seconds between each try, to allow the cranking motor to cool down. When the engine starts, let go of the key and accelerator. If the vehicle starts briefly but then stops again, do the same thing. This clears the extra gasoline from the engine. Do not race the engine immediately after starting it. Operate the engine and transmission gently until the oil warms up and lubricates all moving parts.

Notice: **The engine is designed to work with the electronics in your vehicle. If you add electrical parts or accessories, you could change the way the engine operates. Before adding electrical equipment, check with your dealer/retailer. If you do not, your engine might not perform properly. Any resulting damage would not be covered by your vehicle's warranty.**

Engine Coolant Heater

The engine coolant heater, if available, can help in cold weather conditions at or below 0°F (–18°C) for easier starting and better fuel economy during engine warm-up. Plug in the coolant heater at least four hours before starting your vehicle. An internal thermostat in the plug-end of the cord may exist which will prevent engine coolant heater operation at temperatures above 0°F (–18°C).

To Use the Engine Coolant Heater

1. Turn off the engine.
2. Open the hood and unwrap the electrical cord. The cord is located in the engine compartment behind the underhood fuse block on the driver's side of the vehicle.
3. Plug it into a normal, grounded 110-volt AC outlet.

⚠ CAUTION:

Plugging the cord into an ungrounded outlet could cause an electrical shock. Also, the wrong kind of extension cord could overheat and cause a fire. You could be seriously injured. Plug the cord into a properly grounded three-prong 110-volt AC outlet. If the cord will not reach, use a heavy-duty three-prong extension cord rated for at least 15 amps.

4. Before starting the engine, be sure to unplug and store the cord as it was before to keep it away from moving engine parts. If you do not, it could be damaged.

How long should you keep the coolant heater plugged in? The answer depends on the outside temperature, the kind of oil you have, and some other things. Instead of trying to list everything here, we ask that you contact your dealer/retailer in the area where you will be parking your vehicle. The dealer/retailer can give you the best advice for that particular area.

Automatic Transmission Operation

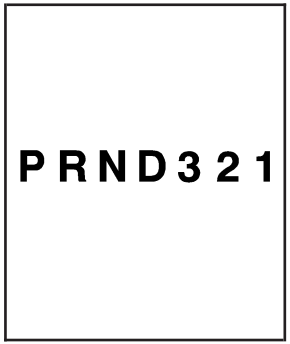

Your automatic transmission has a shift lever on the steering column.

It features an electronic shift position indicator within the instrument cluster. This display must be powered anytime the shift lever is capable of being moved out of PARK (P). This means that if your key is turned off, but not in LOCK, there will be a small current drain on your battery which could discharge your battery over a period of time. If you need to leave your key in the ignition but not in LOCK for an extended period, it is recommended that you disconnect the battery cable from the battery to prevent discharging your battery.

There are several different positions for your shift lever.

PARK (P): This position locks your rear wheels. It is the best position to use when you start your engine because your vehicle cannot move easily.

⚠ CAUTION:

It is dangerous to get out of your vehicle if the shift lever is not fully in PARK (P) with the parking brake firmly set. Your vehicle can roll.

Do not leave your vehicle when the engine is running unless you have to. If you have left the engine running, the vehicle can move suddenly. You or others could be injured. To be sure your vehicle will not move, even when you are on fairly level ground, always set your parking brake and move the shift lever to PARK (P). See *Shifting Into PARK (P) (Automatic Transmission) on page 2-34*. If you are pulling a trailer, see *Towing a Trailer on page 4-47*.

Make sure the shift lever is fully in PARK (P) before starting the engine. Your vehicle has an automatic transmission shift lock control system. You must fully apply your regular brakes before you can shift from PARK (P) when the ignition key is in ON.

If you cannot shift out of PARK (P), ease pressure on the shift lever by pushing the shift lever all the way into PARK (P) as you maintain brake application. Then move the shift lever into another gear. See *Shifting Out of PARK (P) (Automatic Transmission) on page 2-36*.

REVERSE (R): Use this gear to back up.

Notice: **Shifting to REVERSE (R) while your vehicle is moving forward could damage the transmission. The repairs would not be covered by your warranty. Shift to REVERSE (R) only after your vehicle is stopped.**

To rock your vehicle back and forth to get out of snow, ice, or sand without damaging your transmission, see *If Your Vehicle is Stuck in Sand, Mud, Ice, or Snow on page 4-32*.

NEUTRAL (N): In this position, your engine does not connect with the wheels. To restart when you are already moving, use NEUTRAL (N) only.

⚠ CAUTION:

Shifting into a drive gear while the engine is running at high speed is dangerous. Unless your foot is firmly on the brake pedal, your vehicle could move very rapidly. You could lose control and hit people or objects. Do not shift into a drive gear while your engine is running at high speed.

Notice: **Shifting out of PARK (P) or NEUTRAL (N) with the engine running at high speed may damage the transmission. The repairs would not be covered by your warranty. Be sure the engine is not running at high speed when shifting your vehicle.**

DRIVE (D): This position is for normal driving. If provides the best fuel economy for your vehicle. If you need more power for passing, and you are:

- Going less than about 35 mph (55 km/h), push your accelerator pedal about halfway down.
- Going about 35 mph (55 km/h) or more, push the accelerator all the way down.

  You will shift down to the next gear and have more power.

Downshifting the transmission in slippery road conditions could result in skidding, see “Skidding” under *Loss of Control on page 4-10*.

THIRD (3): This position is also used for normal driving. However, it reduces vehicle speed more than DRIVE (D) without using your brakes. You might choose THIRD (3) instead of DRIVE (D) when driving on hilly, winding roads, when towing a trailer, so there is less shifting between gears and when going down a steep hill.

SECOND (2): This position reduces vehicle speed even more than THIRD (3) without using your brakes. You can use SECOND (2) on hills. It can help control your speed as you go down steep mountain roads, but then you would also want to use your brakes off and on.

FIRST (1): This position reduces vehicle speed even more than SECOND (2) without using your brakes. You can use it on very steep hills, or in deep snow or mud. If the shift lever is put in FIRST (1) while the vehicle is moving forward, the transmission will not shift into first gear until the vehicle is going slowly enough.

Notice: **Spinning the tires or holding the vehicle in one place on a hill using only the accelerator pedal may damage the transmission. The repair will not be covered by your warranty. If you are stuck, do not spin the tires. When stopping on a hill, use the brakes to hold the vehicle in place.**

Manual Transmission Operation

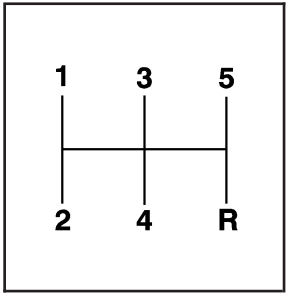

This is your shift pattern.

Here is how to operate your manual transmission:

FIRST (1): Press the clutch pedal and shift into FIRST (1). Then, slowly let up on the clutch pedal as you slowly press down on the accelerator pedal.

You can shift into FIRST (1) when you are going less than 20 mph (30 km/h). If you have come to a complete stop and it is hard to shift into FIRST (1), put the shift lever in NEUTRAL and let up on the clutch. Then press the clutch pedal back down and shift into FIRST (1).

SECOND (2): Press the clutch pedal as you let up on the accelerator pedal and shift into SECOND (2). Then, slowly let up on the clutch pedal as you press the accelerator pedal.

THIRD, FOURTH AND FIFTH (3, 4 and 5): Shift into THIRD (3), FOURTH (4) and FIFTH (5) the same way you do for SECOND (2). Slowly let up on the clutch pedal as you press the accelerator pedal.

To stop, let up on the accelerator pedal and press the brake pedal. Just before the vehicle stops, press the clutch pedal and the brake pedal, and shift to NEUTRAL.

NEUTRAL: Use this position when you start or idle your engine.

REVERSE (R): To back up, press the clutch pedal. After the vehicle stops, shift into REVERSE (R). Slowly let up on the clutch pedal as you press the accelerator pedal. If it is hard to shift, let the shift lever return to NEUTRAL and release the clutch pedal. Then press the clutch again and shift into REVERSE (R). Do not attempt to shift into the fifth gear position prior to shifting into REVERSE (R). Your transmission has a lock out feature which prevents a fifth gear to reverse gear shift.

Notice: **Shifting to REVERSE (R) while your vehicle is moving forward could damage the transmission. The repairs would not be covered by your warranty. Shift to REVERSE (R) only after your vehicle is stopped.**

Use REVERSE (R), along with the parking brake, for parking your vehicle.

Up-Shift Light

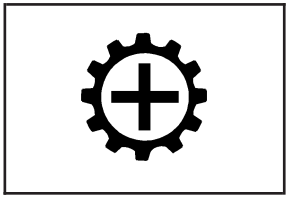

This light will show you when to shift to the next higher gear for best fuel economy.

When this light comes on, you can shift to the next higher gear if weather, road and traffic conditions permit. For the best fuel economy, accelerate slowly and shift when the light comes on.

While you accelerate, it is normal for the light to go on and off if you quickly change the position of the accelerator. Ignore the shift light when you downshift.

If your vehicle has four-wheel drive and has a manual transmission, disregard the shift light when the transfer case is in four-wheel low.

For more information, see *Up-Shift Light on page 3-30*.

Shift Speeds

⚠ CAUTION:

If you skip a gear when you downshift, you could lose control of your vehicle. You could injure yourself or others. Do not shift down more than one gear at a time when you downshift.

Four-Wheel Drive

If your vehicle has four-wheel drive, you can send your engine's driving power to all four wheels for extra traction. To get the best performance out of four-wheel drive, you must be familiar with its operation. Read the part that follows before using four-wheel drive. You should use two-wheel-drive high for most normal driving conditions.

Notice: **Driving on clean, dry pavement in four-wheel drive for an extended period of time can cause premature wear on your vehicle's powertrain. Do not drive on clean, dry pavement in Four-Wheel Drive for extended periods of time.**

Notice: **If your vehicle has four-wheel drive and the compact spare tire is installed on your vehicle, do not drive in four-wheel drive until you can have your flat tire repaired and/or replaced. You could damage your vehicle, and the repair costs would not be covered by your warranty. Never use four-wheel drive when the compact spare tire is installed on your vehicle.**

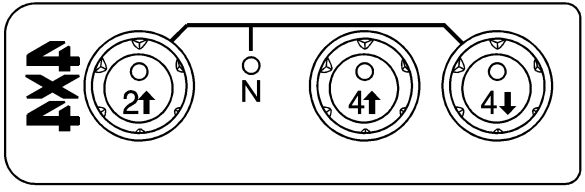

The transfer case buttons are located to the right of the steering wheel on the instrument panel.

Recommended Transfer Case Settings

Driving Conditions	Transfer Case Settings			
	2 ↑	4 ↑	4 ↓	N
Normal	YES			
Severe		YES		
Extreme			YES	
Vehicle in Tow*				YES
*See *Recreational Vehicle Towing on page 4-41* or *Towing Your Vehicle on page 4-41* for further information.				

Use these buttons to shift into and out of four-wheel drive. You can choose from the following:

2 ↑ (Two-Wheel High): This setting is for driving in most street and highway situations. Your front axle is not engaged in two-wheel drive.

⚠ CAUTION:

Shifting the transfer case to NEUTRAL can cause your vehicle to roll even if the transmission is in PARK (P), or if you have a manual transmission, even if you are in gear. You or someone else could be seriously injured. Be sure to set the parking brake before placing the transfer case in NEUTRAL. See *Parking Brake on page 2-32*.

N (NEUTRAL): Shift the vehicle's transfer case to NEUTRAL only when towing your vehicle.

4 ↑ (Four-Wheel High): This setting engages your front axle to help drive your vehicle. Use four-wheel high when you need extra traction, such as on snowy or icy roads, or in most off-road situations.

4 ↓ (Four-Wheel Low): This setting also engages your front axle to give you extra traction. It sends the maximum power to all four wheels. You might choose four-wheel low if you were driving off-road in sand, mud, or deep snow and while climbing or descending steep hills.

Indicator lights in the buttons show you which setting you are in. The indicator lights will come on briefly when you turn on the ignition and one will stay on the selected setting. If the lights do not come on, you should take your vehicle in for service. An indicator light will flash while shifting. It will stay on when the shift is completed.

If for some reason the transfer case does not shift, it will return to the last chosen setting.

Shifting from Two-Wheel High to Four-Wheel High

Press and release the Four-Wheel High button. This can be done at any speed, and the front axle will lock automatically.

Shifting from Four-Wheel High to Two-Wheel High

Press and release the Two-Wheel High button. This can be done at any speed, and the front axle will unlock automatically.

It is normal to hear and feel your vehicle's transfer case shift into Four-Wheel High. If you shift with the vehicle stopped, the indicator light may still flash slowly. It may be necessary to shift the transmission momentarily into REVERSE (R) and DRIVE (D), for an automatic transmission, or REVERSE (R) and FIRST (1) for a manual transmission to have the light stop flashing.

Shifting from Two-Wheel High or Four-Wheel High to Four-Wheel Low

To shift from Two-Wheel High or Four-Wheel High to Four-Wheel Low, the vehicle must be stopped or moving less than 3 mph (5 km/h) with the transmission in NEUTRAL (N) for an automatic transmission or the clutch pedal pressed for a manual transmission. The preferred method for shifting into Four-Wheel Low is to have your vehicle moving 1 to 2 mph (1.6 to 3.2 km/h).

Press and release the Four-Wheel Low button. You must wait for the Four-Wheel Low indicator light to stop flashing and stay on before shifting the transmission into gear or releasing the clutch pedal.

If the Four-Wheel Low button is pressed when your vehicle is in gear and/or moving faster than 3 mph (5 km/h), the four-wheel low indicator light will flash for 30 seconds and not complete the shift.

Shifting from Four-Wheel Low to Two-Wheel High or Four-Wheel High

To shift from Four-Wheel Low to Two-Wheel High or Four-Wheel High, your vehicle must be stopped or moving less than 3 mph (5 km/h) with the transmission in NEUTRAL (N) for an automatic transmission or the clutch pedal pressed for a manual transmission. The preferred method for shifting out of four-wheel low is to have your vehicle moving 1 to 2 mph (1.6 to 3.2 km/h).

Press and release the Four-Wheel High or Two-Wheel High button. You must wait for the Four-Wheel High or Two-Wheel High indicator light to stop flashing and stay on before shifting the transmission into gear or releasing the clutch pedal.

If the Four-Wheel High or Two-Wheel High button is pressed when your vehicle is in gear and/or moving faster than 3 mph (5km/h), the Four-Wheel High or Two Wheel High indicator light will flash for 30 seconds but not complete the shift.

Shifting to NEUTRAL

Use NEUTRAL when you plan to tow your vehicle. See *Recreational Vehicle Towing on page 4-41* for towing instructions. To shift the transfer case into NEUTRAL do the following:

1. Set the parking brake.
2. Start the vehicle.
3. Press the regular brake pedal and shift the transmission in NEUTRAL (N), or press in the clutch for vehicles with a manual transmission.
4. Shift the transfer case to Two-Wheel High.
5. Press and hold the Two-Wheel High and Four-Wheel Low buttons at the same time for 10 seconds. The NEUTRAL (N) light will come on when the transfer case shift to NEUTRAL (N) is complete.
6. Press and hold the regular brake pedal and shift the transmission to REVERSE (R) for one second, then shift the transmission to DRIVE (D) for one second, or FIRST (1) for vehicles with manual transmissions, and let out the clutch to insure the transfer case is in NEUTRAL. If the vehicle is not in NEUTRAL, repeat this procedure starting at Step 3.
7. Turn the engine off by turning the key to ACC.
8. Place the transmission shift lever in PARK (P), or FIRST (1) for vehicles that have a manual transmission.
9. Turn the ignition to LOCK.

Shifting Out of NEUTRAL

After towing your vehicle, you will have to shift out of NEUTRAL in order to drive. To shift out of NEUTRAL, do the following:

1. Set the parking brake and apply the regular brake pedal.
2. Start a vehicle with an automatic transmission in PARK (P). Use FIRST (1) for vehicles with a manual transmission.
3. Shift the transmission to NEUTRAL (N), or press the clutch pedal for vehicles with a manual transmission.
4. Press the button for the desired transfer case shift position (Two-Wheel High, Four-Wheel High, or Four-Wheel Low).
5. After the transfer case has shifted out of NEUTRAL, the indicator light will go out.
6. Release the parking brake.
7. Shift the transmission to the desired position.

Parking Brake

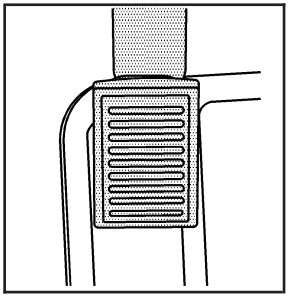

The parking brake pedal is located to the left of the regular brake pedal, near the driver's door.

To set the parking brake, hold the regular brake pedal down with your right foot. Push the parking brake pedal down to its fully-applied position with your left foot.

A chime will activate and the brake warning light, located on the instrument panel, will flash when the parking brake is applied and the vehicle is moving at least 3 mph (5 km/h) for at least three seconds. The chime will deactivate and the light will turn off when the parking brake is set and the vehicle is moving below 3 mph (5 km/h). See *Brake System Warning Light on page 3-31*.

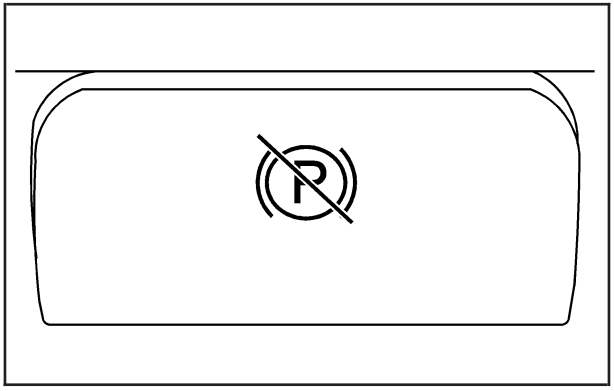

To release the parking brake, hold the regular brake pedal down. Pull the bottom edge of the lever, located above the parking brake pedal, with the parking brake symbol, directly rearward to release the parking brake.

If the ignition is on when the parking brake is released, the brake system warning light will go off.

Notice: **Driving with the parking brake on can overheat the brake system and cause premature wear or damage to brake system parts. Make sure that the parking brake is fully released and the brake warning light is off before driving.**

If you are towing a trailer and are parking on any hill, see *Towing a Trailer on page 4-47*.

Shifting Into PARK (P) (Automatic Transmission)

⚠ CAUTION:

It can be dangerous to get out of your vehicle if the shift lever is not fully in PARK (P) with the parking brake firmly set. Your vehicle can roll. If you have left the engine running, the vehicle can move suddenly. You or others could be injured. To be sure your vehicle will not move, even when you are on fairly level ground, use the steps that follow. If you are pulling a trailer, see *Towing a Trailer on page 4-47*.

1. Hold the brake pedal down with your right foot and set the parking brake.

   See *Parking Brake on page 2-32* for more information.

⚠ CAUTION:

If you have four-wheel drive, your vehicle will be free to roll — even if your shift lever is in PARK (P) — if your transfer case is in NEUTRAL. So, be sure the transfer case is in a drive gear, two-wheel high (2H) or four-wheel high (4H) or four-wheel low (4L) — not in NEUTRAL.

2. Move the shift lever into PARK (P) by pulling the lever toward you and moving it up as far as it will go.
3. Turn the ignition key to LOCK.
4. Remove the key and take it with you. If you can leave your vehicle with the key, your vehicle is in PARK (P).

Leaving Your Vehicle With the Engine Running (Automatic Transmission)

⚠ CAUTION:

It can be dangerous to leave your vehicle with the engine running. Your vehicle could move suddenly if the shift lever is not fully in PARK (P) with the parking brake firmly set. And, if you leave the vehicle with the engine running, it could overheat and even catch fire. You or others could be injured. Do not leave your vehicle with the engine running.

If you have to leave your vehicle with the engine running, be sure your vehicle is in PARK (P) and your parking brake is firmly set before you leave it. After you have moved the shift lever into PARK (P), hold the regular brake pedal down. Then, see if you can move the shift lever away from PARK (P) without first pulling it toward you. If you can, it means that the shift lever was not fully locked into PARK (P).

Torque Lock (Automatic Transmission)

If you are parking on a hill and you do not shift your transmission into PARK (P) properly, the weight of the vehicle may put too much force on the parking pawl in the transmission. You may find it difficult to pull the shift lever out of PARK (P). This is called torque lock. To prevent torque lock, set the parking brake and then shift into PARK (P) properly before you leave the driver's seat. To find out how, see *Shifting Into PARK (P) (Automatic Transmission) on page 2-34*.

When you are ready to drive, move the shift lever out of PARK (P) before you release the parking brake.

If torque lock does occur, you may need to have another vehicle push yours a little uphill to take some of the pressure from the parking pawl in the transmission, so you can pull the shift lever out of PARK (P).

Shifting Out of PARK (P) (Automatic Transmission)

Your vehicle has an automatic transaxle shift lock control system. You have to fully apply your regular brakes before you can shift from PARK (P) when the ignition is RUN. See *Automatic Transmission Operation on page 2-24*.

The shift lock control system is designed to do the following:

- Prevent the ignition key from being removed unless the shift lever is in PARK (P).
- Prevent movement of the shift lever out of PARK (P), unless the ignition is in ON/RUN and the regular brake pedal is applied.

The shift lock control system is always functional except in the case of a dead battery or low voltage (less than 9 V) battery.

If your vehicle has an uncharged battery or a battery with low voltage, try charging or jump starting the battery. See *Jump Starting on page 5-44* for more information.

To shift out of PARK (P) use the following:

1. Apply the brake pedal.
2. Move the shift lever to the desired position.

If you still are unable to shift out of PARK (P):

1. Ease the pressure on the shift lever.
2. While holding down the brake pedal, push the shift lever all the way into PARK (P)
3. Move the shift lever to the desired position.

If you are still having a problem shifting, then have your vehicle serviced soon.

Parking Your Vehicle (Manual Transmission)

Your vehicle has a manual transmission. Before you get out of your vehicle, move the shift lever into REVERSE (R), and firmly apply the parking brake. Once the shift lever has been placed into REVERSE (R) with the clutch pedal pressed in, turn the ignition key to LOCK, remove the key and release the clutch.

If you are parking on a hill, or if your vehicle is pulling a trailer, see *Towing a Trailer on page 4-47*.

Parking Over Things That Burn

⚠ CAUTION:

Things that can burn could touch hot exhaust parts under your vehicle and ignite. Do not park over papers, leaves, dry grass, or other things that can burn.

Engine Exhaust

⚠ CAUTION:

Engine exhaust can kill. It contains the gas carbon monoxide (CO), which you cannot see or smell. It can cause unconsciousness and death.

CAUTION: (Continued)

CAUTION: (Continued)

You might have exhaust coming in if:

- **The exhaust system sounds strange or different.**
- **Your vehicle gets rusty underneath.**
- **Your vehicle was damaged in a collision.**
- **Your vehicle was damaged when driving over high points on the road or over road debris.**
- **Repairs were not done correctly.**
- **Your vehicle or the exhaust system has been modified improperly.**

If you ever suspect exhaust is coming into your vehicle:

- **Drive it only with all the windows down to blow out any CO; and**
- **Have your vehicle fixed immediately.**

Running the Engine While Parked

It is better not to park with the engine running. But if you ever have to, here are some things to know.

⚠ CAUTION:

Idling the engine with the climate control system off could allow dangerous exhaust into your vehicle. See the earlier caution under *Engine Exhaust on page 2-37*.

Also, idling in a closed-in place can let deadly carbon monoxide (CO) into your vehicle even if the climate control fan is at the highest setting. One place this can happen is a garage. Exhaust — with CO — can come in easily. NEVER park in a garage with the engine running.

Another closed-in place can be a blizzard. See *Winter Driving on page 4-28*.

⚠ CAUTION:

It can be dangerous to get out of your vehicle if the automatic transmission shift lever is not fully in PARK (P) with the parking brake firmly set. Your vehicle can roll. Do not leave your vehicle when the engine is running unless you have to. If you have left the engine running, the vehicle can move suddenly. You or others could be injured. To be sure your vehicle will not move, even when it is on fairly level ground, always set the parking brake and move the automatic transmission shift lever to PARK (P), or the manual transmission shift lever to NEUTRAL.

⚠ CAUTION:

Four-wheel drive vehicles with the transfer case in NEUTRAL will allow the vehicle to roll, even if the automatic transmission shift lever is in PARK (P). So, be sure the transfer case is in a drive gear — not in NEUTRAL. Always set the parking brake.

Follow the proper steps to be sure your vehicle will not move. See *Shifting Into PARK (P) (Automatic Transmission) on page 2-34*.

If you are pulling a trailer, see *Towing a Trailer on page 4-47*.

Mirrors

Manual Rearview Mirror

When you are sitting in a comfortable driving position, adjust the mirror so you can see clearly behind your vehicle. Hold the mirror in the center to move it up or down and side to side. The day/night adjustment allows you to adjust the mirror to avoid glare from the lamps behind you. Push the tab forward for daytime use and pull it for nighttime use.

Manual Rearview Mirror with OnStar®

While you are sitting in a comfortable driving position, adjust the mirror so you can see clearly behind your vehicle. Hold the mirror in the center to move it up or down and side to side. The day/night adjustment allows you to adjust the mirror to avoid glare from the lamps behind you. Push the tab forward for daytime use and pull it for nighttime use.

There are also OnStar® buttons located at the bottom of the mirror face. See your dealer/retailer for more information on the system and how to subscribe to OnStar®. See *OnStar® System on page 2-47* for more information about the services OnStar® provides.

Cleaning the Mirror

While cleaning the mirror, use a paper towel or similar material dampened with glass cleaner. Do not spray glass cleaner directly on the mirror housing.

Automatic Dimming Rearview Mirror

Your vehicle may have an automatic dimming rearview mirror.

AUTO/○ (On/Off): Press and hold the AUTO button located on the lower center of the mirror for about three seconds to turn automatic dimming on. **The indicator light will illuminate when this feature is active**. The automatic dimming feature is active each time the vehicle is started. Press and hold the ○ (off) button located next to the AUTO button for about three seconds to turn the automatic dimming feature off.

Automatic Dimming Rearview Mirror with OnStar®, Compass and Temperature Display

Your vehicle may have this feature. When on, the automatic dimming mirror dims to the proper level to minimize glare from lights behind you after dark.

The mirror has a dual display in the upper right corner of the mirror face that shows the compass reading and the outside temperature.

Control buttons for the OnStar® system are at the bottom of the mirror. See *OnStar® System on page 2-47* for more information about the services OnStar® provides.

⏻ (On/Off): This is the on/off button.

Temperature and Compass Display

Press the on/off button, located to the far left, briefly to turn the compass/temperature display on or off.

If the display reads CAL, the compass needs to be calibrated. For more information, see “Compass Calibration” following.

To adjust between Fahrenheit and Celsius:

1. Press and hold the on/off button for approximately four seconds until either a flashing F or C appears.
2. Press the button again to change the display to the desired unit of measurement. After approximately four seconds of inactivity, the new unit will be locked in and the compass/temperature display will return.

If an abnormal temperature reading is displayed for an extended period of time, see your dealer/retailer. Under certain circumstances, a delay in updating the temperature is normal.

Automatic Dimming Mirror Operation

The automatic dimming mirror comes on each time the ignition is turned to start. To turn the automatic dimming feature off or back on, press the on/off button. The indicator light on the mirror is lit when the automatic dimming feature is on.

Compass Calibration

The compass may need calibration if one of the following occurs:

- After approximately five seconds, the display does not show a compass heading, N for North, for example, there may be a strong magnetic field interfering with the compass. Such interference may be caused by a magnetic antenna mount, magnetic note pad holder, or a similar magnetic item.
- The compass does not display the correct heading and the compass zone variance is set correctly.

In order to calibrate, CAL must be displayed in the mirror compass windows. If CAL is not displayed, push the on/off button for approximately 12 seconds or until CAL is displayed.

The compass can be calibrated by driving the vehicle in circles at 5 mph (8 km/h) or less until the display reads a direction.

Compass Variance

The mirror is set in zone eight upon leaving the factory. It will be necessary to adjust the compass to compensate for compass variance if the vehicle is outside of zone eight. Under certain circumstances, as during a long distance cross-country trip, it will be necessary to adjust for compass variance. Compass variance is the difference between earth's magnetic north and true geographic north. If not adjusted to account for compass variance, the compass could give false readings.

To adjust for compass variance:

1. Find your current location and variance zone number on the following zone map.

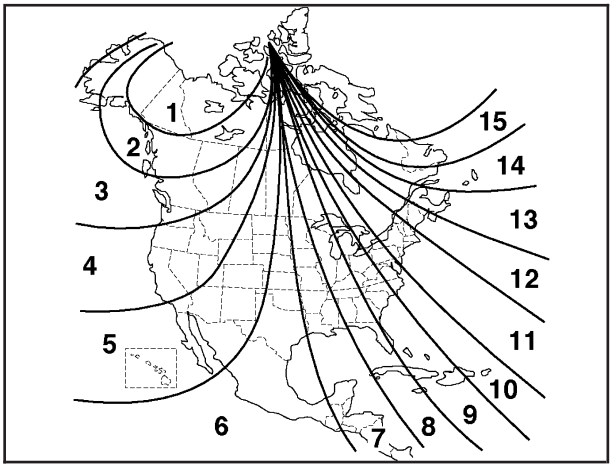

2. Press and hold the on/off button until a Z and a zone number appears in the display. The compass is now in zone mode.
3. Keep pressing the on/off button until the desired zone number appears in the display. Release the button. After approximately four seconds of inactivity, the new zone number will be locked in and the compass/temperature display will return.

Cleaning the Mirror

When cleaning the mirror, use a paper towel or similar material dampened with glass cleaner. Do not spray glass cleaner directly on the mirror as that may cause the liquid cleaner to enter the mirror housing.

Automatic Dimming Rearview Mirror with Compass and Temperature Display

Your vehicle may have this mirror. When on, an automatic dimming mirror will dim to the proper level to minimize glare from lights behind you after dark.

The mirror also includes a dual display in the upper right corner of the mirror with the compass reading and the outside temperature.

: Briefly press this button to turn the display on or off.

Temperature Display

The temperature can be displayed by pressing the compass/temperature button. Pressing the compass/temperature button once briefly, will toggle the display reading on and off. To alternate the temperature reading between Fahrenheit and Celsius, press and hold the compass/temperature button for approximately three seconds until the display blinks F and C. After approximately five seconds of inactivity, the display will stop blinking and display the last selection made.

If an abnormal reading is displayed, see your dealer/retailer.

Automatic Dimming Mirror Operation

: Press this button to turn the automatic dimming feature on or off. The indicator light to the left of the button will turn on to indicate when the feature is on. Once the mirror is turned off, it will remain off until it is turned back on, or until the vehicle is restarted.

Compass Operation

Press the compass/temperature button once briefly to turn the display on or off.

Compass Calibration

The compass may need calibration if one of the following occurs:

- If CAL is displayed while driving in the vehicle.
- After approximately five seconds, the display does not show a compass heading, N for North, for example, there may be a strong magnetic field interfering with the compass. Such interference may be caused by a magnetic antenna mount, magnetic note pad holder, or a similar magnetic item.
- The compass does not display the correct heading and the compass zone variance is set correctly.

In order to calibrate, CAL must be displayed in the mirror compass windows. If CAL is not displayed, push in the compass/temperature button for approximately nine seconds or until CAL is displayed.

The compass can be calibrated by driving the vehicle in circles at 5 mph (8 km/h) or less until the display reads a direction.

Compass Variance

The mirror is set in zone eight upon leaving the factory. It will be necessary to adjust the compass to compensate for compass variance if the vehicle is outside zone eight. Under certain circumstances, as during a long distance cross-country trip, it will be necessary to adjust for compass variance. Compass variance is the difference between earth's magnetic north and true geographic north. If not adjusted to account for compass variance, your compass could give false readings.

To adjust for compass variance:

1. Find your current location and variance zone number on the following zone map.

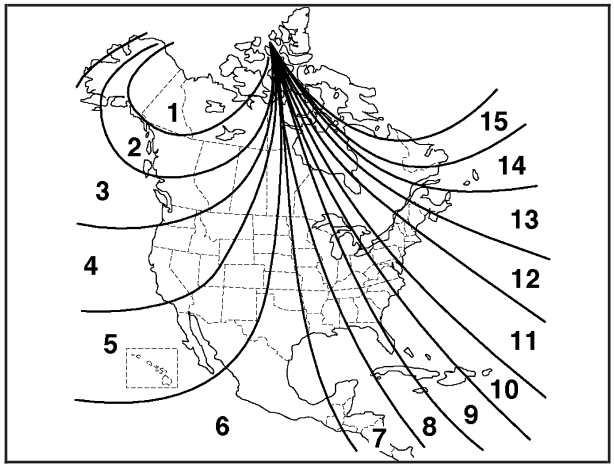

2. Press and hold the compass/temperature button for six seconds until a zone number appears in the display.
3. Press the compass/temperature button on the bottom of the mirror until the new zone number appears in the display. After you stop pressing the button, the display will show a compass direction within a few seconds.

Cleaning the Mirror

Use a paper towel or similar material dampened with glass cleaner. Do not spray glass cleaner directly on the mirror as that may cause the liquid cleaner to enter the mirror housing.

Outside Manual Mirrors

Adjust the outside rearview mirrors so you can see a little of the side of your vehicle, and the area beside your vehicle from a comfortable driving position. The mirrors can be folded in to enter narrow areas. Return the mirrors to the unfolded position before driving.

Outside Power Mirrors

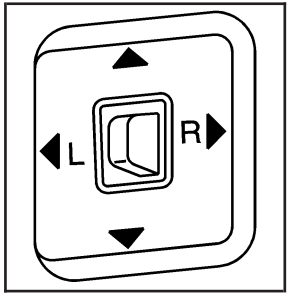

If your vehicle has this feature, the controls are located on the driver's door armrest.

To adjust the power mirrors, do the following:

1. Move the selector switch to the L (left) or R (right) to choose the driver's or passenger's mirror.
2. Use the arrows located on the four-way control pad to move the mirror in the direction you want the mirror to go.
3. Return the selector switch to the center position once the mirrors are adjusted.

If the mirror begins making a ratcheting sound, the mirror has reached the end of its travel and can go no farther in that direction. To stop the sound, reverse the mirror direction using the control pad.

The mirrors can be manually folded inward to prevent damage when going through an automatic car wash. To fold, push the mirror toward the vehicle. To return the mirror to its original position, push outward. Be sure to return both mirrors to the unfolded position before driving.

Outside Convex Mirror

⚠ CAUTION:

A convex mirror can make things (like other vehicles) look farther away than they really are. If you cut too sharply into the right lane, you could hit a vehicle on your right. Check your inside mirror or glance over your shoulder before changing lanes.

The passenger side mirror is convex. A convex mirror's surface is curved so more can be seen from the driver seat. It also makes things, like other vehicles, look farther away than they really are.

OnStar® System

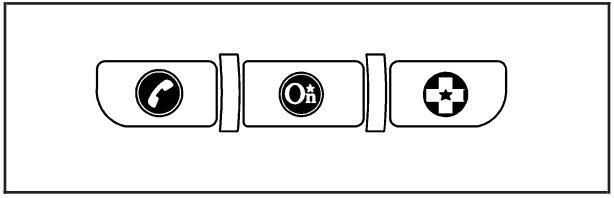

OnStar uses several innovative technologies and live advisors to provide you with a wide range of safety, security, information, and convenience services. If your airbags deploy, the system is designed to make an automatic call to OnStar Emergency advisors who can request emergency services be sent to your location. If you lock your keys in the vehicle, call OnStar at 1-888-4-ONSTAR and they can send a signal to unlock your doors. If you need roadside assistance, press the OnStar button and they can contact Roadside Service for you.

OnStar service is provided to you subject to the OnStar Terms and Conditions. You may cancel your OnStar service at any time by contacting OnStar as provided below. A complete OnStar Owner's Guide and the OnStar Terms and Conditions are included in the vehicle's OnStar Subscriber glove box literature.

For more information, visit onstar.com or onstar.ca, contact OnStar at 1-888-4-ONSTAR (1-888-466-7827) or TTY 1-877-248-2080, or press the OnStar button to speak with an OnStar advisor 24 hours a day, 7 days a week.

Not all OnStar features are available on all vehicles. To check if your vehicle is equipped to provide the services described below, or for a full description of OnStar services and system limitations, see the OnStar Owner's Guide in your glove box or visit onstar.com.

OnStar Services

For new vehicles equipped with OnStar, the Safe & Sound Plan, or the Directions & Connections Plan is included for one year from the date of purchase. You can extend this plan beyond the first year, or upgrade to the Directions & Connections Plan. For more information, press the OnStar button to speak with an advisor. Some OnStar services (such as Remote Door Unlock or Stolen Vehicle Location Assistance) may not be available until you register with OnStar.

Available Services with Safe & Sound Plan

- Automatic Notification of Airbag Deployment
- Advanced Automatic Crash Notification (AACN) (If equipped)
- Link to Emergency Services
- Roadside Assistance
- Stolen Vehicle Location Assistance
- AccidentAssist
- Remote Door Unlock/Vehicle Alert
- OnStar Vehicle Diagnostics
- GM Goodwrench® On Demand Diagnostics
- OnStar Hands-Free Calling with 30 complimentary minutes
- OnStar Virtual Advisor (U.S. Only)

Available Services included with Directions & Connections Plan

- All Safe and Sound Plan Services
- Driving Directions - Advisor delivered or OnStar Turn-by-Turn Navigation (If equipped)
- RideAssist
- Information and Convenience Services

OnStar Hands-Free Calling

OnStar Hands-Free Calling allows eligible OnStar subscribers to make and receive calls using voice commands. Hands-Free Calling is fully integrated into the vehicle, and can be used with OnStar Pre-Paid Minute Packages. Hands-Free Calling may also be linked to a Verizon Wireless service plan in the U.S. or a Bell Mobility service plan in Canada, depending on eligibility. To find out more, refer to the OnStar Owner's Guide in the vehicle's glove box, visit www.onstar.com or www.onstar.ca, or speak with an OnStar advisor by pressing the OnStar button or calling 1-888-4-ONSTAR (1-888-466-7827).

OnStar Virtual Advisor

OnStar Virtual Advisor is a feature of OnStar Hands-Free Calling that uses your minutes to access location-based weather, local traffic reports, and stock quotes. By pressing the phone button and giving a few simple voice commands, you can browse through the various topics. See the OnStar Owner's Guide for more information. (Only available in the continental U.S.).

How OnStar Service Works

In order to provide you with OnStar services, your vehicle's OnStar system has the capability of recording and transmitting vehicle information. This information is automatically sent to an OnStar Call Center at the time of an OnStar button press, Emergency button press or if your airbags or AACN system deploys. The vehicle information usually includes your GPS location and, in the event of a crash, additional information regarding the accident that your vehicle has been involved in (e.g. the direction from which your vehicle was hit). When you use the Virtual Advisor feature of OnStar Hands-Free Calling, your vehicle also sends OnStar your GPS location so that we can provide you with location-based services.

OnStar service cannot work unless your vehicle is in a place where OnStar has an agreement with a wireless service provider for service in that area. OnStar service also cannot work unless you are in a place where the wireless service provider OnStar has hired for that area has coverage, network capacity and reception when the service is needed, and technology that is compatible with the OnStar service. Not all services are available everywhere, particularly in remote or enclosed areas, or at all times.

OnStar service that involves location information about your vehicle cannot work unless GPS satellite signals are unobstructed and available in that place as well.

Your vehicle must have a working electrical system (including adequate battery power) for the OnStar equipment to operate. There are other problems OnStar cannot control that may prevent OnStar from providing OnStar service to you at any particular time or place. Some examples are damage to important parts of your vehicle in an accident, hills, tall buildings, tunnels, weather or wireless phone network congestion.

Your Responsibility

You may need to increase the volume of your radio to hear the OnStar advisor. If the light next to the OnStar buttons is red, this means that your system is not functioning properly and should be checked by a dealer/retailer. If the light appears clear (no light is appearing), your OnStar subscription has expired. You can always press the blue OnStar button to confirm that your OnStar equipment is active.

Storage Areas

Glove Box

To open the glove box, lift up on the lever.

Cupholder(s)

Your vehicle may have two cupholders located on the lower part of the front doors as well as two cupholders located at the front end of the console. Vehicles with bench seats may have cupholders attached to the front of the center seat.

If your vehicle is an extended cab or crew cab model, your vehicle also has two rear cupholders. On crew cab models, the cupholders are located at the front end of the rear center seat cushion. On extended cab models, the rear seat cupholders are located on top of the rear center console.

If you have an ashtray, it will use one of the cupholders.

Center Console Storage

For vehicles with bench seats, you may have a center armrest storage area. Lift up on the upper tab located at the front of the armrest to release the latch. Lift the lid to open the storage area.

For vehicles with bucket seats or uplevel packages, your vehicle may have a two-tiered center armrest storage area. Lift up on the upper tab located at the front of the armrest to release the latch. Lift the lid to the top storage area. A second tab is located below the top one and allows you to access the bottom storage area. Lift up on the lower tab to release the latch. Then, raise the lid of the lower storage area. The upper storage area will lift up with the lid of the lower storage area.

To close the storage area(s), lower the lid(s) until you feel the latch close.

Assist Handles

Your vehicle may have assist handles to be used when getting out of your vehicle. If your vehicle has assist handles, they are located above the doors.

If your vehicle has roof-mounted side impact air bags, there are assist handles located above both the driver’s and front passenger’s doors.

Rear Storage Area

If your vehicle is an extended cab model, it might have storage compartments under the rear seats.

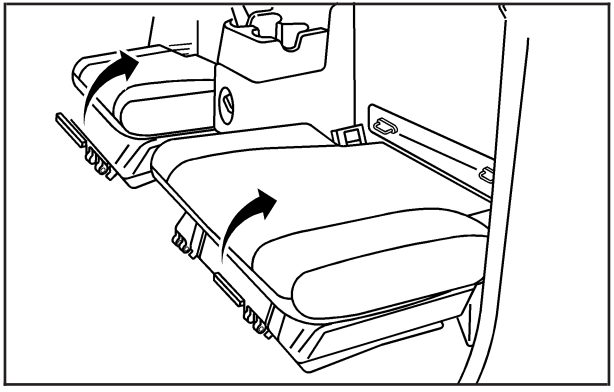

To access the storage compartments, lift the cushion on the bottom of the rear seats. This exposes the storage boxes under the seat.

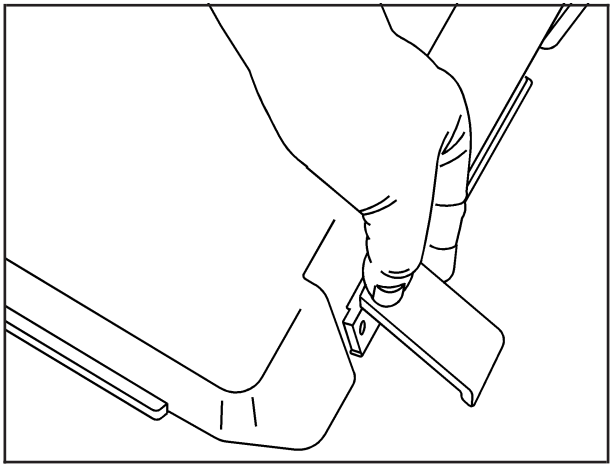

To open a storage box, unhook the bottom and lift the two latches on each side of the storage box.

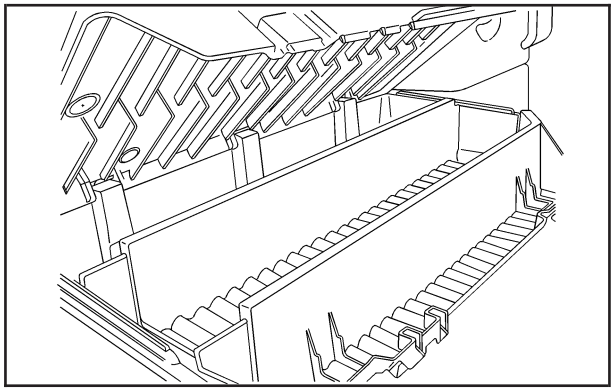

Lift the lid from the center area to access the storage box.

Sunroof

Your vehicle may have a sunroof.

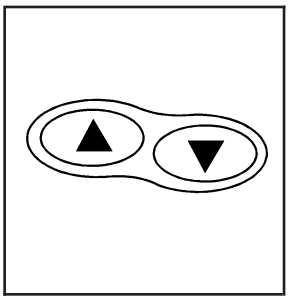

The sunroof control buttons are located on the headliner.

▲ **(Open/Vent):** Press and hold this button to vent, and open the sunroof. Release the button when the desired position is reached.

▼ **(Close):** Press and hold this button to close the sunroof. Release the button when the desired position is reached.

The sunshade must be opened manually.

Section 3 Instrument Panel

Instrument Panel Overview 3-4
Hazard Warning Flashers 3-6
Other Warning Devices 3-6
Horn 3-6
Tilt Wheel 3-7
Turn Signal/Multifunction Lever 3-7
Turn and Lane-Change Signals 3-8
Headlamp High/Low-Beam Changer 3-8
Flash-to-Pass 3-9
Windshield Wipers 3-9
Windshield Washer 3-10
Cruise Control 3-10
Exterior Lamps 3-14
Headlamps on Reminder 3-15
Daytime Running Lamps (DRL) 3-15
Automatic Headlamp System 3-16
Fog Lamps 3-16
Exterior Cargo Lamps 3-17
Interior Lamps 3-17
Instrument Panel Brightness 3-17
Dome Lamp 3-17
Dome Lamp Override 3-18
Exit Lighting 3-18
Electric Power Management 3-18
Battery Run-Down Protection 3-19
Accessory Power Outlet(s) 3-19
Ashtray(s) and Cigarette Lighter 3-20

Climate Controls 3-20
Climate Control System 3-20
Outlet Adjustment 3-22

Warning Lights, Gages, and Indicators 3-23
Instrument Panel Cluster 3-24
Speedometer and Odometer 3-25
Trip Odometer 3-25
Tachometer 3-25
Safety Belt Reminders 3-26
Airbag Readiness Light 3-27
Passenger Airbag Status Indicator 3-28
Charging System Light 3-30
Up-Shift Light 3-30
Brake System Warning Light 3-31
Antilock Brake System Warning Light 3-32
Traction Control System (TCS) Warning Light 3-32
Engine Coolant Temperature Gage 3-33
Tire Pressure Light 3-33
Malfunction Indicator Lamp 3-34
Oil Pressure Light 3-36
Security Light 3-37
Cruise Control Light 3-37
Highbeam On Light 3-37
Fuel Gage 3-37

Section 3 Instrument Panel

Driver Information Center (DIC) 3-38
DIC Operation and Displays 3-38
DIC Warnings and Messages 3-42
Audio System(s) 3-46
Setting the Time 3-47
Radio(s) 3-48
Using an MP3 3-64
XM Radio Messages 3-69
Theft-Deterrent Feature 3-70
Radio Reception 3-70
Fixed Mast Antenna 3-71
XM™ Satellite Radio Antenna System 3-71
Chime Level Adjustment 3-71

NOTES

Instrument Panel Overview

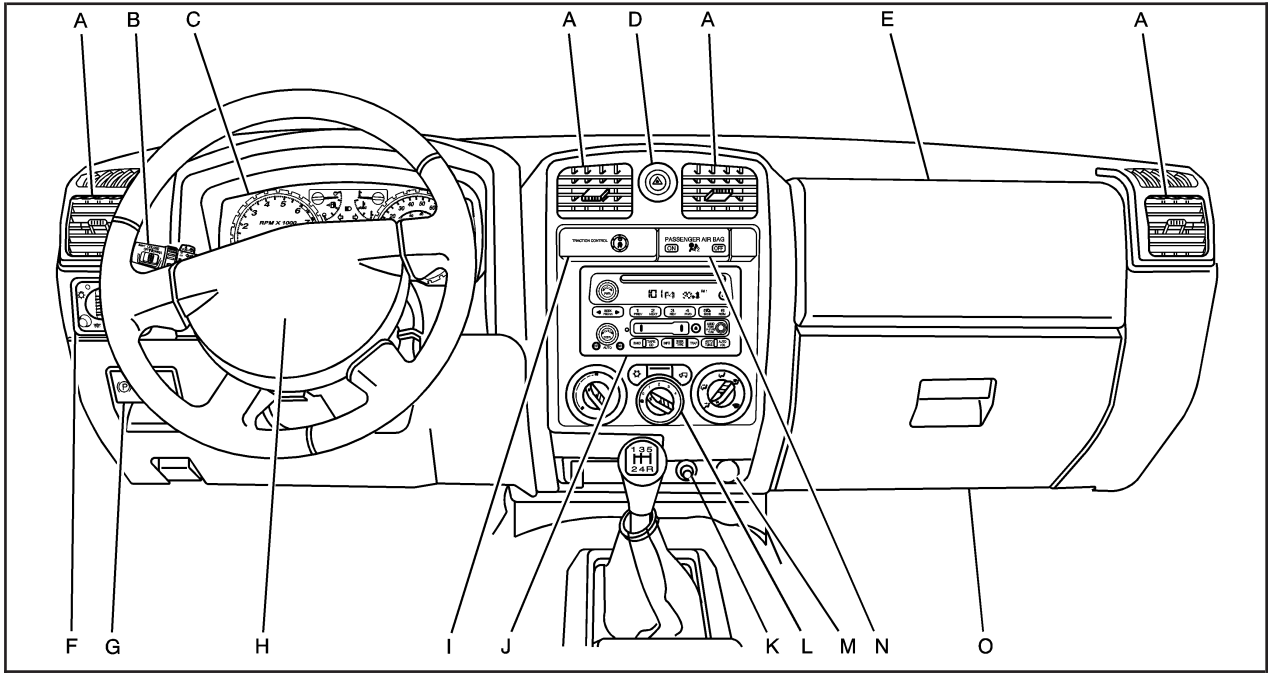

Manual Transmission shown, Automatic Transmission similar

The main components of your vehicle's instrument panel are the following:

A. Air Outlets. See *Outlet Adjustment on page 3-22*.

B. Turn Signal/Multifunction Lever. See *Turn Signal/Multifunction Lever on page 3-7*.

C. Instrument Panel Cluster. See *Instrument Panel Cluster on page 3-24*.

D. Hazard Warning Flasher Button. See *Hazard Warning Flashers on page 3-6*.

E. Passenger Side Airbag. See *Airbag System on page 1-60*.

F. Exterior Lamp Controls. See *Exterior Lamps on page 3-14*. Fog Lamps (If Equipped). See *Fog Lamps on page 3-16*. Exterior Cargo Lamps. See *Exterior Cargo Lamps on page 3-17*.

G. Parking Brake Release. See *Parking Brake on page 2-32*.

H. Horn. See *Horn on page 3-6*.

I. Traction Control Button or Four-Wheel Drive Buttons. See *Traction Control System (TCS) on page 4-5* and *Four-Wheel Drive on page 2-28*.

J. Audio System. See *Audio System(s) on page 3-46*.

K. Cigarette Lighter (If Equipped). See *Ashtray(s) and Cigarette Lighter on page 3-20*.

L. Climate Control System. See *Climate Control System on page 3-20*.

M. Accessory Power Outlet. See *Accessory Power Outlet(s) on page 3-19*.

N. Passenger Air Bag Status Indicator. See *Passenger Airbag Status Indicator on page 3-28*.

O. Glove Box. See *Glove Box on page 2-50*.

Hazard Warning Flashers

The hazard warning flashers let you warn the police and others that you have a problem. The front and rear turn signal lamps will flash on and off.

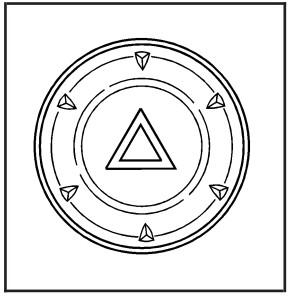

The hazard warning flasher button is located on the instrument panel, between the two air vents in the center.

The hazard warning flashers work no matter what position the key is in, and even if the key is not in the ignition.

Press the button to make the front and rear turn signal lamps flash on and off. Press the button again to turn the flashers off.

When the hazard warning flashers are on, the turn signals will not work.

Other Warning Devices

If you carry reflective triangles, you can set one up at the side of the road about 300 feet (100 m) behind your vehicle.

Horn

To sound the horn, press the horn symbol on the steering wheel pad.

Tilt Wheel

A tilt wheel allows you to adjust the steering wheel before you drive. The tilt steering wheel can be raised to the highest level to allow more room for the driver to enter and exit the vehicle.

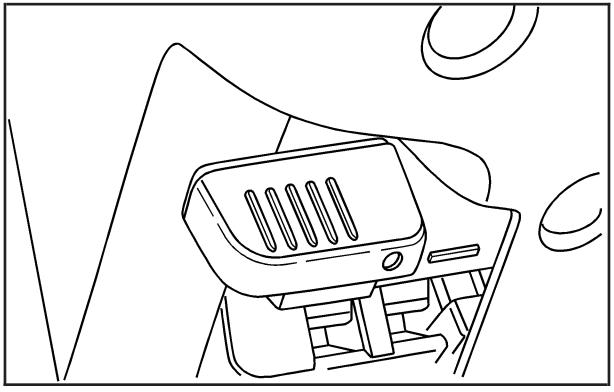

The tilt lever is located on the left side of the steering column, under the turn signal lever.

To tilt, hold the steering wheel and pull the tilt lever toward you. Move the wheel to a comfortable level, then release the tilt lever to lock the wheel in place.

Do not adjust the steering wheel while driving.

Turn Signal/Multifunction Lever

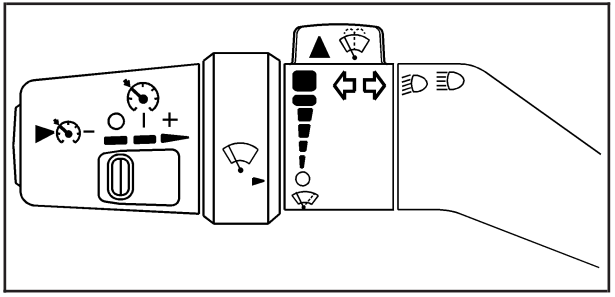

The lever on the left side of the steering column includes the following:

- Turn and Lane Change Signals. See *Turn Signal/Multifunction Lever on page 3-7*.
- Headlamp High/Low-Beam Changer. See *Headlamp High/Low-Beam Changer on page 3-8*.
- Flash-to-Pass. See *Flash-to-Pass on page 3-9*.
- Windshield Wipers. See *Windshield Wipers on page 3-9*.
- Windshield Washer. See *Windshield Washer on page 3-10*.
- Cruise Control. See *Cruise Control on page 3-10*.

Turn and Lane-Change Signals

The turn signal has two upward (for right) and two downward (for left) positions. These positions allow you to signal a turn or a lane change.

To signal a turn, move the lever all the way up or down. When the turn is finished, the lever will automatically return to the off position.

To signal a lane change, raise or lower the lever until the arrow starts to flash. Hold it there until the change is completed. The lever will return by itself when released.

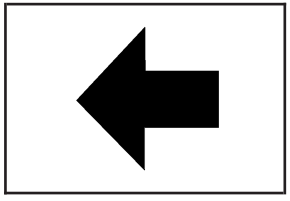

An arrow on the instrument panel cluster will flash in the direction of the turn or lane change.

As you signal a turn or a lane change, if the arrows flash more quickly than normal, a signal bulb may be burned out and other drivers will not see your vehicle's turn signal.

If a bulb is burned out, replace it to help avoid an accident. If the arrows do not go on at all when signaling a turn, check for a burned-out bulb or a blown fuse.

For bulb replacement, see *Taillamps, Turn Signal, Stoplamps and Back-up Lamps on page 5-54*. For a blown fuse or circuit breaker, see *Fuses and Circuit Breakers on page 5-116*

Turn Signal On Chime

If a turn signal is left on for more than 3/4 of a mile (1.2 km), a chime will sound at each flash of the turn signal and the message TURN SIGNAL will also appear in the DIC. To turn the chime and message off, move the turn signal lever to the off position.

See "TURN SIGNAL" under *DIC Warnings and Messages on page 3-42* for more information.

Headlamp High/Low-Beam Changer

(Headlamp High/Low Beam Changer): To change the headlamps from low to high beam, push the lever toward the instrument panel. To return to low-beam headlamps, pull the multifunction lever toward you. Then release it.

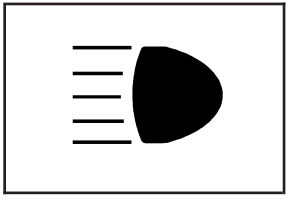

When the high beams are on, this indicator light on the instrument panel cluster will also be on.

Flash-to-Pass

This feature lets you use the high-beam headlamps to signal a driver in front of you that you want to pass. It works even if the headlamps are in the automatic position.

To use it, pull the turn signal lever toward you, then release it.

If your headlamps are in the automatic position or on low beam, your high-beam headlamps will turn on. They will stay on as long as you hold the lever toward you. The high-beam indicator on the instrument panel cluster will come on. Release the lever to return to normal operation.

Windshield Wipers

You control the windshield wipers by turning the band with the wiper symbol on it.

The windshield wipers work in all ignition positions, except off. This includes the Retained Access Power mode. See *Retained Accessory Power (RAP) on page 2-21*.

(Mist): For a single wiping cycle, turn the band to mist. Hold it there until the wipers start. Then let go. The wipers will stop after one wipe. If you want more wipes, hold the band on mist longer.

(Delay): You can set the wiper speed for a long or short delay between wipes. This can be very useful in light rain or snow. Turn the band to choose the delay time. The closer to the top of the lever, the shorter the delay.

(Low Speed): For steady wiping at low speed, turn the band away from you to the first solid position past the delay settings.

(High Speed): For high-speed wiping, turn the band to the second solid position past the delay settings.

(Off): To stop the wipers, move the band to off.

Be sure to clear ice and snow from the wiper blades before using them. If they're frozen to the windshield, carefully loosen or thaw them. If your blades do become worn or damaged, get new blades or blade inserts.

Windshield Washer

⚠ CAUTION:

In freezing weather, do not use your washer until the windshield is warmed. Otherwise the washer fluid can form ice on the windshield, blocking your vision.

▲ **(Washer Fluid):** There is a paddle marked with the windshield washer symbol at the top of the multifunction lever. To spray washer fluid on the windshield, push the paddle. The wipers will clear the window and then either stop or return to your preset speed.

Cruise Control

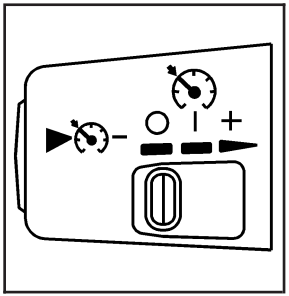

The cruise control set button is located at the end of the multifunction lever.

○ **(Off):** Move the lever to this position to turn the system off.

| **(On):** Move the lever to this position to turn the system on.

+ (Resume/Accelerate): Move the lever to this position to make the vehicle accelerate or resume to a previously set speed.

▶ **(Set):** Press this button to set the speed.

With cruise control, the vehicle can maintain a speed of about 25 mph (40 km/h) or more without keeping your foot on the accelerator. This can really help on long trips. Cruise control does not work at speeds below about 25 mph (40 km/h).

Cruise control will not work if the parking brake is set, or if the master cylinder brake fluid level is low.

If the brakes are applied, the cruise control will shut off.

⚠ CAUTION:

Cruise control can be dangerous where you cannot drive safely at a steady speed. So, do not use your cruise control on winding roads or in heavy traffic.

Cruise control can be dangerous on slippery roads. On such roads, fast changes in tire traction can cause excessive wheel slip, and you could lose control. Do not use cruise control on slippery roads.

If your vehicle has the Traction Control System (TCS) and it begins to limit wheel spin while the cruise control is on, the cruise control will automatically disengage. See *Traction Control System (TCS) on page 4-5*. When road conditions allow you to safely use it again, you can turn cruise control back on.

Setting Cruise Control

⚠ CAUTION:

If you leave your cruise control on when you are not using cruise, you might hit a button and go into cruise when you do not want to. You could be startled and even lose control. Keep the cruise control switch off until you want to use cruise control.

1. Move the cruise control lever to the on position.
2. Get up to the speed you want.
3. Press the set button at the end of the lever and release it.
4. Take your foot off the accelerator pedal.

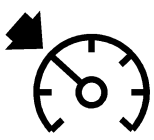

The cruise symbol on the instrument panel will be lit when the cruise control is engaged.

Resuming a Set Speed

Suppose you set the cruise control to a desired speed and then you apply the brake. This turns off the cruise control. But it does not need to be reset.

Once you are going about 25 mph (40 km/h) or more, you can move the cruise control switch briefly from on to resume/accelerate.

The vehicle will go right back up to your chosen speed and stay there.

If you hold the lever at resume/accelerate the vehicle will keep going faster until you release the lever or apply the brake. Do not hold the lever at resume/accelerate if you do not want the vehicle to go faster.

Increasing Speed While Using Cruise Control

There are two ways to go to a higher speed:

- Use the accelerator pedal to get to the higher speed. Press the set button at the end of the lever, then release the button and the accelerator pedal. You will now cruise at the higher speed. If the accelerator pedal is held longer than 60 seconds, cruise control will turn off.
- Move the cruise lever from on to resume/accelerate. Hold it there until you get up to the speed desired, and then release the lever. To increase your speed in very small amounts, move the lever briefly to resume/accelerate.

Reducing Speed While Using Cruise Control

- Press and hold the set button until you reach the lower speed desired, then release it.
- To slow down in very small amounts, briefly press the set button.

Passing Another Vehicle While Using Cruise Control

Use the accelerator pedal to increase the vehicle speed. When you take your foot off the pedal, the vehicle will slow down to the cruise control speed you set earlier.

Using Cruise Control on Hills

How well the cruise control will work on hills depends upon the vehicle speed, load, and the steepness of the hills. When going up steep hills, you might want to step on the accelerator pedal to maintain the vehicle speed. When going downhill, you might have to brake or shift to a lower gear to keep the vehicle speed down. Of course, applying the brake turns off the cruise control. Many drivers find this to be too much trouble and do not use cruise control on steep hills.

Ending Cruise Control

To turn off the cruise control, do one of the following:

- Step lightly on the brake pedal.
- Move the cruise control lever to off.
- Lightly tap or press the clutch, if you have a manual transmission.

Erasing Speed Memory

When you turn off the cruise control or the ignition, the cruise control set speed memory is erased.

Exterior Lamps

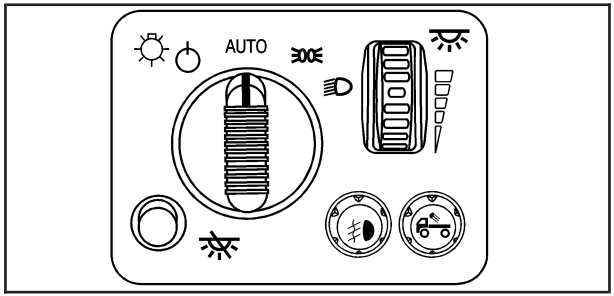

The control on the driver's side of the instrument panel operates the exterior lamps.

(Exterior Lamps): Turn the knob, located to the right of this symbol, to choose one of the four exterior lamp positions.

(Off): Turn the knob to this position to turn off all exterior lamps including the Daytime Running Lamps (DRL).

AUTO: Turn the knob to this position to automatically turn on the headlamps at normal brightness, together with the following:

- Sidemarker Lamps
- Taillamps
- Parking Lamps
- Instrument Panel Lights

See *Automatic Headlamp System on page 3-16* for more information.

(Parking Lamps): Turn the knob to this position to turn on the parking lamps, together with the following:

- Sidemarker Lamps
- Taillamps
- License Plate Lamps
- Instrument Panel Lights

(Headlamps): Turn the knob to this position to turn on the headlamps, together with the previously listed lamps and lights.

Push the turn signal/multifunction lever toward the instrument panel to switch the headlamps from low to high beam.

Headlamps on Reminder

If a door is open, a reminder chime will sound when the headlamps or parking lamps are manually turned on and your key is out of the ignition. To turn off the chime, turn the headlamp switch to off and then back on. In the automatic mode, the headlamps turn off once the ignition is in LOCK.

If your vehicle was first sold in Canada and the parking lamps are turned on manually, the Daytime Running Lamps (DRL) will stay on.

Daytime Running Lamps (DRL)

Daytime Running Lamps (DRL) can make it easier for others to see the front of your vehicle during the day. DRL can be helpful in many different driving conditions, but they can be especially helpful in the short periods after dawn and before sunset. Fully functional daytime running lamps are required on all vehicles first sold in Canada.

The DRL system will come on when the following conditions are met:

- The ignition is on.
- The exterior lamps control is in AUTO.
- The transmission is not in PARK (P) if you have an automatic transmission.
- The light sensor determines it is daytime.

Your vehicle will have either the parking lamps or reduced intensity low beams used as the DRL. When the DRL are on, only those lamps will be on. The taillamps, sidemarkers, and other lamps will not be on. The instrument panel will not be lit up either.

When it begins to get dark, the headlamps will automatically switch from DRL to the regular headlamps.

As with any vehicle, you should turn on the regular headlamp system when you need it.

Automatic Headlamp System

When it is dark enough outside, the automatic headlamp system will turn on after the transmission has been shifted from PARK (P) to DRIVE (D). The headlamps, taillamps, sidemarker, parking lamps, roof marker lamps, and the instrument panel lights will turn on at normal brightness. The radio lights will become more dim when the headlights are off compared to when the headlights are on.

Your vehicle has a light sensor located on the top of the instrument panel. Be sure it is not covered, or the system will be on whenever the ignition is on.

The system may also turn on the headlamps when driving through a parking garage, heavy overcast weather, or a tunnel. This is normal.

There is a delay in the transition between the daytime and nighttime operation of the Daytime Running Lamps (DRL) and the automatic headlamp system so that driving under bridges or bright overhead street lights does not affect the system. The DRL and automatic headlamp system will only be affected when the light sensor detects a change in lighting lasting longer than the delay.

If you start your vehicle in a dark garage, the automatic headlamp system will come on immediately. Once you leave the garage, it will take about one minute for the automatic headlamp system to change to DRL if it is light outside. During that delay, the instrument panel cluster may not be as bright as usual. Make sure the instrument panel brightness control is in the full bright position. See *Instrument Panel Brightness on page 3-17*.

Fog Lamps

If your vehicle has fog lamps, you can use them for better vision in foggy or misty conditions. Your parking lamps and/or low-beam headlamps must be on for your fog lamps to work.

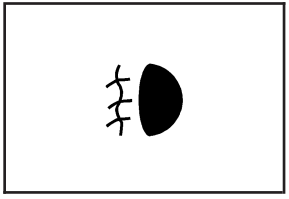

The fog lamp button is located near the exterior lamps control.

Press the button to turn the fog lamps on while the headlamps or parking lamps are on. Press the button again to turn them off. An indicator light will glow in the button when the fog lamps are on.

Remember, fog lamps alone will not give off as much light as your headlamps. Never use your fog lamps in the dark without turning on the headlamps.

The fog lamps will go off whenever your high-beam headlamps come on. When the high beams go off, the fog lamps will come on again.

Some localities have laws that require the headlamps to be on along with the fog lamps.

Exterior Cargo Lamps

The cargo lamps can be used if more light is needed in the cargo area of the vehicle or in the top-box storage units.

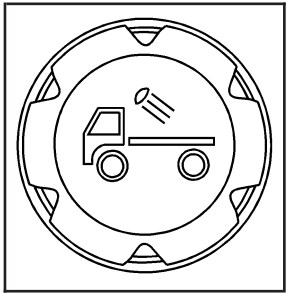

Press this button, located on the driver side of the instrument panel near the exterior lamp control, to turn the cargo lamps on and off.

The dome lamps must be on for the cargo lamps to come on. See *Dome Lamp on page 3-17*.

Interior Lamps

The thumbwheel for the interior lamps is located next to the exterior lamps control. See *Exterior Lamps on page 3-14* for additional information on location.

Instrument Panel Brightness

(Instrument Panel Lights): Turn the thumbwheel up or down to brighten or dim the instrument panel lights and the radio display. The instrument panel lights, cluster, and radio display do not dim to complete darkness. The instrument panel light brightness control will only work if the headlamps or parking lamps are on. See *Exterior Lamps on page 3-14*.

Dome Lamp

The dome and footwell lamps come on when any door is opened. The dome lamps are located in the cargo and front area of the vehicle.

The dome and footwell lamps can be turned on by turning the thumbwheel, located next to the exterior lamps control, all the way up. In this position, the lamps remain on whether a door is opened or closed.

Dome Lamp Override

(Dome Lamp Override): You can use the dome override button, located below the exterior lamps control, to set the dome and footwell lamps to come on automatically when a door is opened, or to remain off. To turn the lamps off, press the button into the in position. With the button in this position, the dome lamps will remain off when the doors are open. To return the lamps to automatic operation, press the button again and return it to the out position. With the button in this position, the dome lamps will come on when you open a door.

Exit Lighting

With exit lighting, the interior lamps will come on when you remove the key from the ignition. The lamps will not come on if the dome override button is pressed in.

Electric Power Management

The vehicle has Electric Power Management (EPM) that estimates the battery's temperature and state of charge. It then adjusts the voltage for best performance and extended life of the battery.

When the battery's state of charge is low, the voltage is raised slightly to quickly put the charge back in. When the state of charge is high, the voltage is lowered slightly to prevent overcharging. If the vehicle has a voltmeter gage, you may see the voltage move up or down. This is normal. If there is a problem, an alert will be displayed.

The battery can be discharged at idle if the electrical loads are very high. This is true for all vehicles. This is because the generator (alternator) may not be spinning fast enough at idle to produce all the power that is needed for very high electrical loads.

A high electrical load occurs when several of the following loads are on: headlamps, high beams, fog lamps, rear window defogger, climate control fan at high speed, heated seats, engine cooling fans, trailer loads, and loads plugged into accessory power outlets.

Battery Run-Down Protection

This feature shuts off the dome lamp if it is left on for more than 20 minutes when the ignition is in LOCK. This will help prevent your battery from running down.

Accessory Power Outlet(s)

The accessory power outlets can be used to connect electrical equipment such as a cellular phone or CB radio.

Your vehicle may have two accessory power outlets located on the lower part of the instrument panel below the climate control system and there may be one located on the rear of the center console. A small cap must be pulled down to access an accessory power outlet. When not using an outlet be sure to cover it with the protective cap.

Notice: **Leaving electrical equipment on for extended periods will drain the battery. Always unplug electrical equipment when not in use and do not plug in equipment that exceeds the maximum amperage rating of 20 amperes.**

Certain electrical accessories may not be compatible with the accessory power outlet and could result in blown vehicle or adapter fuses. If you experience a problem, see your dealer/retailer for additional information on accessory power outlets.

Notice: **Adding any electrical equipment to your vehicle may damage it or keep other components from working as they should. The repairs would not be covered by your warranty. Do not use equipment exceeding maximum amperage rating of 20 amperes. Check with your dealer/retailer before adding electrical equipment.**

When adding electrical equipment, be sure to follow the proper installation instructions included with the equipment.

Notice: **Improper use of the power outlet can cause damage not covered by your warranty. Do not hang any type of accessory or accessory bracket from the plug because the power outlets are designed for accessory power plugs only.**

Ashtray(s) and Cigarette Lighter

Your vehicle may have a removable ashtray and cigarette lighter.

The ashtray is located in the center console area. The ashtray can be removed for cleaning. When the ashtray is removed, this area can also be used as a cupholder.

Notice: **If you put papers, pins, or other flammable items in the ashtray, hot cigarettes or other smoking materials could ignite them and possibly damage your vehicle. Never put flammable items in the ashtray.**

To use the lighter, press it in all the way, and let go. When it is ready, it will pop back out by itself.

Notice: **Holding a cigarette lighter in while it is heating does not let the lighter back away from the heating element when it is hot. Damage from overheating can occur to the lighter or heating element, or a fuse could be blown. Do not hold a cigarette lighter in while it is heating.**

Climate Controls

Climate Control System

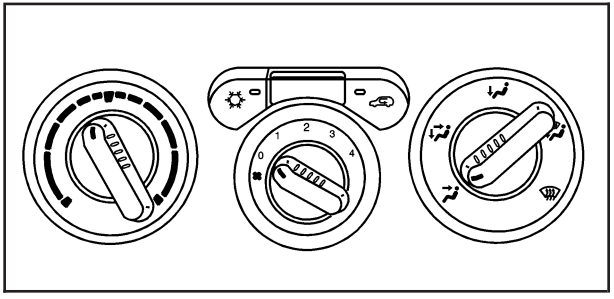

The heating, cooling, and ventilation for your vehicle can be controlled with this system.

Temperature Knob

The left knob on the control panel is used to adjust the temperature of the air in the vehicle. Turn the knob clockwise or counterclockwise to increase or decrease the temperature.

Fan Knob

(Fan): The center knob on the control panel is used to control the fan speed. Turn the knob clockwise or counterclockwise to increase or decrease the fan speed.

If the knob is set on “0” (zero), some outside air will still enter the vehicle and will be directed according to the position of the mode knob.

Mode Knob

The right knob on the control panel is used to direct the airflow inside the vehicle. Turn the knob to select one of the following modes:

(Vent): Select this mode to direct air to the instrument panel outlets.

(Bi-Level): Select this mode to direct approximately half of the air to the instrument panel outlets, and the remaining air to the floor outlets and the defroster and side window outlets. Cooler air is directed to the upper outlets and warmer air to the floor outlets.

(Floor): Select this mode to direct air to the floor outlets. Recirculation is disabled in this mode because interior window could fog under some conditions. If this occurs, see “Defogging and Defrosting” following.

Mode Buttons

(Recirculation): Press this button to turn the recirculation mode on or off. An indicator light on the button comes on to show that the recirculation mode is activated. This mode recirculates air inside the cabin, and prevents outside air from coming in the vehicle. It can be used to cool the air inside the vehicle more quickly.

Recirculation is only available and should only be used in the bi-level and vent modes. Recirculation is not available while in heat, floor, floor/defog, or defrost modes. If your try to select recirculation while in one of those modes, the indicator light will not come on or flash.

(Air Conditioning): Press this button to turn the air conditioning system on or off. An indicator light on the button comes on to show that the air conditioning is activated. When the system is on, this setting cools and dehumidifies the air entering the vehicle.

The air conditioning will not function if the fan is turned off.

You may notice a slight change in engine performance when the air conditioning compressor shuts off and turns on again. This is normal. The system is designed to make adjustments to help with fuel economy while still maintaining the selected temperature.

The air conditioning system removes moisture from the air, so a small amount of water might drip underneath the vehicle while idling or after turning off the engine. This is normal.

Defogging and Defrosting

Fog on the inside of windows is a result of high humidity (moisture) condensing on the cool window glass. This can be minimized if the climate control system is used properly. There are two modes to clear fog or frost from the windshield and side windows. Use the defog mode to clear the windows of fog or moisture and warm the passengers. Use the defrost mode to remove fog or frost from the windshield more quickly. For best results, clear all snow and ice from the windshield before defrosting.

Turn the mode knob on the climate control panel clockwise to select the defog or defrost modes.

(Floor/Defog): This mode directs the air to the windshield, the side window outlets, and to the floor outlets. When this mode is selected, the system runs the air conditioning compressor unless the outside temperature is near freezing or below. Recirculation is not available in this mode.

(Defrost): This mode directs most of the air to the windshield, and the side window outlets. When this mode is selected, the system runs the air conditioning compressor unless the outside temperature is near, or below freezing. Recirculation is not available in this mode.

Do not drive the vehicle until all the windows are clear.

Outlet Adjustment

Use the thumbwheel on the outlets to change the direction of the air flow.

Lift up or push down on the thumbwheel located in the center of the outlet to direct the air up or down, or slide the thumbwheel to the left or right to direct the airflow from side-to-side.

Operation Tips

- Clear away any ice, snow or leaves from the air inlets at the base of the windshield that may block the flow of air into your vehicle.
- Use of non-GM approved hood deflectors may adversely affect the performance of the system.
- Keep the path under the front seats clear of objects to help circulate the air inside of your vehicle more effectively.

Warning Lights, Gages, and Indicators

This part describes the warning lights and gages that may be on your vehicle. The pictures will help you locate them.

Warning lights and gages can signal that something is wrong before it becomes serious enough to cause an expensive repair or replacement. Paying attention to your warning lights and gages could also save you or others from injury.

Warning lights come on when there may be or is a problem with one of your vehicle's functions. As you will see in the details on the next few pages, some warning lights come on briefly when you start the engine just to let you know they are working. If you are familiar with this section, you should not be alarmed when this happens.

Gages can indicate when there may be or is a problem with one of your vehicle's functions. Often gages and warning lights work together to let you know when there is a problem with your vehicle.

When one of the warning lights comes on and stays on when you are driving, or when one of the gages shows there may be a problem, check the section that tells you what to do about it. Please follow this manual's advice. Waiting to do repairs can be costly — and even dangerous. So please get to know your warning lights and gages. They are a big help.

Your vehicle has a DIC that works along with the warning lights and gages. See *Driver Information Center (DIC) on page 3-38* for more information.

Instrument Panel Cluster

The instrument panel cluster is designed to let you know at a glance how your vehicle is running. You will know how fast you are going, about how much fuel you have used, and many other things you will need to know to drive safely and economically.

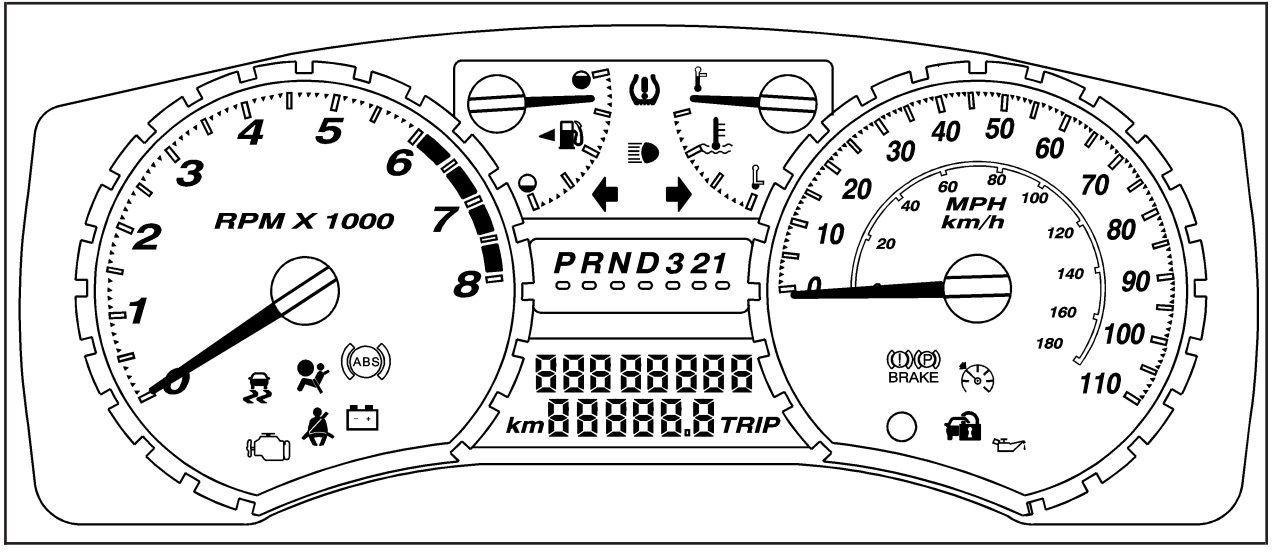

United States automatic transmission 2.9L version shown, Canada, manual transmission, 3.7L and 5.3L similar

Speedometer and Odometer

The speedometer lets you see your speed in both miles per hour (mph) and kilometers per hour (km/h).

The odometer shows how far your vehicle has been driven, in either miles (used in the United States) or kilometers (used in Canada).

The odometer mileage can be checked without the vehicle running by pressing the trip information stem. See “Odometer” under *DIC Operation and Displays on page 3-38* for more information.

If the cluster is replaced the new one will automatically detect and update the vehicle’s accumulated mileage.

Trip Odometer

Your vehicle has a trip odometer that can tell you how far your vehicle has been driven since you last set the trip odometer to zero.

See “Trip Odometer” under *DIC Operation and Displays on page 3-38* for more information.

Tachometer

The tachometer displays the engine speed in revolutions per minute (rpm).

Notice: **If you operate the engine with the tachometer in the shaded warning area, your vehicle could be damaged, and the damages would not be covered by your warranty. Do not operate the engine with the tachometer in the shaded warning area.**

Safety Belt Reminders

Safety Belt Reminder Light

When the engine is started, a chime will come on for several seconds to remind people to fasten their safety belts, unless the driver's safety belt is already buckled.

The safety belt light will also come on and stay on for several seconds, then it will flash for several more.

This chime and light is repeated if the driver remains unbuckled and the vehicle is in motion. If the driver's belt is already buckled, neither the chime nor the light will come on.

Passenger Safety Belt Reminder Light

Several seconds after the engine is started, a chime will sound for several seconds to remind the front passenger to buckle their safety belt. This would only occur if the passenger airbag is enabled. See *Passenger Sensing System on page 1-69* for more information. The passenger safety belt light, located on the instrument panel, will come on and stay on for several seconds and then flash for several more.

This chime and light are repeated if the passenger remains unbuckled and the vehicle is in motion.

If the passenger's safety belt is buckled, neither the chime nor the light will come on.

Airbag Readiness Light

There is an airbag readiness light on the instrument panel cluster, which shows the airbag symbol. The system checks the airbag's electrical system for malfunctions. The light tells you if there is an electrical problem. The system check includes the airbag sensor, the pretensioners, the airbag modules, the wiring and the crash sensing and diagnostic module. For more information on the airbag system, see *Airbag System on page 1-60*.

This light will come on when you start your vehicle, and it will flash for a few seconds. The light should go out and the system is ready.

If the airbag readiness light stays on after you start the vehicle or comes on when you are driving, your airbag system may not work properly. Have your vehicle serviced right away.

⚠ CAUTION:

If the airbag readiness light stays on after you start your vehicle, it means the airbag system may not be working properly. The airbags in your vehicle may not inflate in a crash, or they could even inflate without a crash. To help avoid injury to yourself or others, have your vehicle serviced right away if the airbag readiness light stays on after you start your vehicle.

The airbag readiness light should flash for a few seconds when you start the engine. If the light does not come on then, have it fixed immediately. If there is a problem with the airbag system, an airbag Driver Information Center (DIC) message may also come on. See *DIC Warnings and Messages on page 3-42* for more information.

Passenger Airbag Status Indicator

Your vehicle has the passenger sensing system. Your instrument panel has a passenger airbag status indicator.

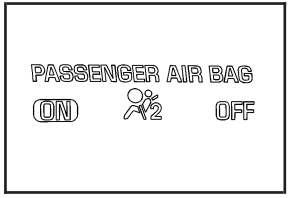

United States

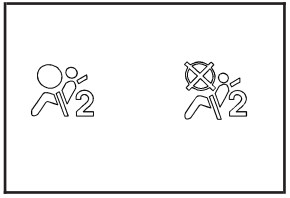

Canada

When you start the vehicle, the passenger airbag status indicator will light ON and OFF, or the symbol for on and off, for several seconds as a system check. Then, after several more seconds, the status indicator will light either ON or OFF, or either the on or off symbol to let you know the status of the right front passenger's frontal airbag.

If the word ON or the on symbol is lit on the passenger airbag status indicator, it means that the right front passenger's frontal airbag is enabled (may inflate).

⚠ CAUTION:

If the on indicator comes on when you have a rear-facing child restraint installed in the right front passenger's seat, it means that the passenger sensing system has not turned off the passenger's frontal airbag. A child in a rear-facing child restraint can be seriously injured or killed if the right front passenger's airbag inflates. This is because the back of the rear-facing child restraint would be very close to the inflating airbag. Do not use a rear-facing child restraint in the right front passenger's seat if the airbag is turned on.

⚠ CAUTION:

Even though the passenger sensing system is designed to turn off the right front passenger's frontal airbag if the system detects a rear-facing child restraint, no system is fail-safe, and no one can guarantee that an airbag will not deploy under some unusual circumstance, even though it is turned off. We recommend that rear-facing child restraints be secured in the rear seat, even if the airbag is off.

If the word OFF or the off symbol is lit on the airbag status indicator, it means that the passenger sensing system has turned off the right front passenger's frontal airbag. See *Passenger Sensing System on page 1-69* for more on this, including important safety information.

If, after several seconds, both status indicator lights remain on, or if there are no lights at all, there may be a problem with the lights or the passenger sensing system. See your dealer/retailer for service.

⚠ CAUTION:

If the airbag readiness light in the instrument panel cluster ever comes on and stays on, it means that something may be wrong with the airbag system. If this ever happens, have the vehicle serviced promptly, because an adult-size person sitting in the right front passenger's seat may not have the protection of the airbag(s). See *Airbag Readiness Light on page 3-27* for more on this, including important safety information.

Charging System Light

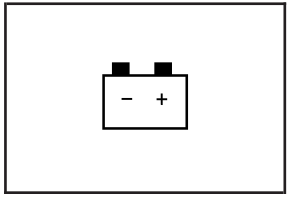

This light will come on briefly when you turn on the ignition, but the engine is not running, as a check to show you it is working.

It should go out once the engine is running. If it stays on, or comes on while you are driving, you may have a problem with the charging system. A charging system Driver Information Center (DIC) message may also appear. See *DIC Warnings and Messages on page 3-42* for more information. This light could indicate that you have problems with a generator drive belt, or another electrical problem. Have it checked right away. If you must drive a short distance with the light on, be certain to turn off all your accessories, such as the radio and air conditioner.

Up-Shift Light

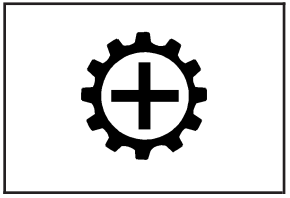

Your vehicle may have an up-shift light.

When this light comes on, you should shift to the next higher gear if weather, road, and traffic conditions allow you to.

See *Manual Transmission Operation on page 2-26* for more information.

Brake System Warning Light

Your vehicle's hydraulic brake system is divided into two parts. If one part is not working, the other part can still work and stop you. For good braking, though, you need both parts working well.

If the warning light comes on, there could be a brake problem. Have your brake system inspected right away.

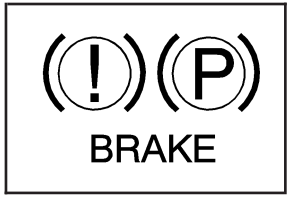

United States

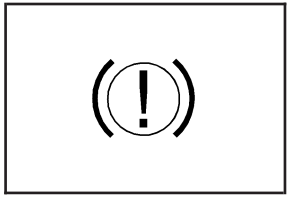

Canada

This light should come on briefly when you turn the ignition key to ON. If it does not come on then, have it fixed so it will be ready to warn you if there is a problem.

When the ignition is on, the brake system warning light will also come on when you set your parking brake. See *Parking Brake on page 2-32* for more information. The light will stay on if your parking brake does not release fully. If it stays on after your parking brake is fully released, it means you have a brake problem.

If the light comes on while you are driving, pull off the road and stop carefully. You may notice that the pedal is harder to push, or the pedal may go closer to the floor. It may take longer to stop. If the light is still on, have the vehicle towed for service. See *Towing Your Vehicle on page 4-41*.

⚠ CAUTION:

Your brake system may not be working properly if the brake system warning light is on. Driving with the brake system warning light on can lead to an accident. If the light is still on after you have pulled off the road and stopped carefully, have the vehicle towed for service.

Antilock Brake System Warning Light

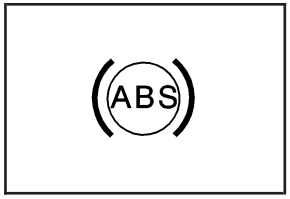

For vehicles with the Antilock Brake System (ABS), this light will come on briefly when you start the engine.

That is normal. If the light does not come on then, have it fixed so it will be ready to warn you if there is a problem.

If the ABS light stays on, turn the ignition off, if the light comes on when you are driving, stop as soon as it is safely possible and turn the ignition off. Then start the engine again to reset the system. If the ABS light still stays on, or comes on again while you are driving, your vehicle needs service. If the regular brake system warning light is not on, you still have brakes, but you do not have antilock brakes. If the regular brake system warning light is also on, you do not have antilock brakes and there is a problem with your regular brakes. See *Brake System Warning Light on page 3-31*

For vehicles with a Driver Information Center (DIC), see *DIC Warnings and Messages on page 3-42* for all brake related DIC messages.

Traction Control System (TCS) Warning Light

If your vehicle has the Traction Control System (TCS), this light may come on for the following reasons:

- If you turn the system off by pressing the TC (traction control) button, the light will come on and stay on. To turn the system back on, press the button again and the warning light should go out.
- If there is a brake system problem that is specifically related to traction control, the TCS will turn off and the warning light will come on.

If the TCS warning light comes on and stays on for an extended period of time when the system is turned on, your vehicle needs service. See *Traction Control System (TCS) on page 4-5* for more information.

Engine Coolant Temperature Gage

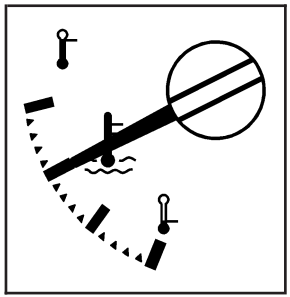

This gage shows the engine coolant temperature.

If the gage pointer is near the top of the gage, the engine is too hot. It means that your engine coolant has overheated. If you have been operating your vehicle under normal driving conditions, you should pull off the road, stop your vehicle and turn off the engine as soon as possible.

See *Engine Overheating on page 5-30* for more information.

Tire Pressure Light

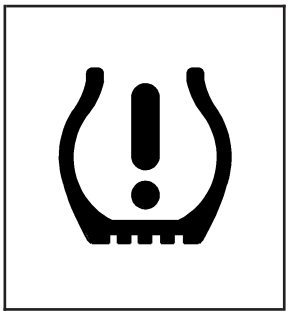

This light comes on briefly when the engine is started.

This light will also come on when one or more of your tires are significantly underinflated.

A tire pressure message in the Driver Information Center (DIC), may accompany the light. See *DIC Warnings and Messages on page 3-42* for more information.

Stop and check your tires as soon as it is safe to do so. If underinflated, inflate to the proper pressure. See *Tires on page 5-59* for more information.

If a problem is detected with the Tire Pressure Monitor System, this light will flash for approximately 60 seconds and then stay on solid for the remainder of the ignition cycle. See *Tire Pressure Monitor System on page 5-69* for more information.

Malfunction Indicator Lamp

Check Engine Light

A computer system called OBD II (On-Board Diagnostics-Second Generation) monitors operation of the fuel, ignition, and emission control systems. It makes sure that emissions are at acceptable levels for the life of the vehicle, helping to produce a cleaner environment.

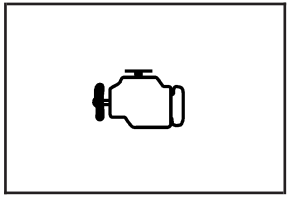

The check engine light comes on to indicate that there is an OBD II problem and service is required.

Malfunctions often are indicated by the system before any problem is apparent. This can prevent more serious damage to your vehicle. This system is also designed to assist your service technician in correctly diagnosing any malfunction.

Notice: **If you keep driving your vehicle with this light on, after a while, the emission controls might not work as well, your vehicle's fuel economy might not be as good, and the engine might not run as smoothly. This could lead to costly repairs that might not be covered by your warranty.**

Notice: **Modifications made to the engine, transmission, exhaust, intake, or fuel system of your vehicle or the replacement of the original tires with other than those of the same Tire Performance Criteria (TPC) can affect your vehicle's emission controls and can cause this light to come on. Modifications to these systems could lead to costly repairs not covered by your warranty. This could also result in a failure to pass a required Emission Inspection/Maintenance test. See *Accessories and Modifications on page 5-3*.**

This light comes on, as a check to show it is working, when the ignition is turned ON/RUN but the engine is not running. If the light does not come on, have it repaired. This light also comes on during a malfunction in one of two ways:

- **Light Flashing** — A misfire condition has been detected. A misfire increases vehicle emissions and could damage the emission control system on your vehicle. Diagnosis and service might be required.
- **Light On Steady** — An emission control system malfunction has been detected on your vehicle. Diagnosis and service might be required.

If the Light is Flashing

The following can prevent more serious damage to your vehicle:

- Reduce vehicle speed.
- Avoid hard accelerations.
- Avoid steep uphill grades.
- If you are towing a trailer, reduce the amount of cargo being hauled as soon as it is possible.

If the light stops flashing and remains on steady, see “If the Light Is On Steady” following.

If the light continues to flash, when it is safe to do so, stop the vehicle. Find a safe place to park the vehicle. Turn the ignition off, wait at least 10 seconds, and restart the engine. If the light remains on steady, see “If the Light Is On Steady” following. If the light is still flashing, follow the previous steps and see your dealer/retailer for service as soon as possible.

If the Light Is On Steady

You might be able to correct the emission system malfunction by considering the following:

Did you recently put fuel into your vehicle?

If so, reinstall the fuel cap, making sure to fully install the cap. See *Filling the Tank on page 5-8*. The diagnostic system can determine if the fuel cap has been left off or improperly installed. A loose or missing fuel cap allows fuel to evaporate into the atmosphere. A few driving trips with the cap properly installed should turn the light off.

Did you just drive through a deep puddle of water?

If so, your vehicle’s electrical system might be wet. The condition is usually corrected when the electrical system dries out. A few driving trips should turn the light off.

Have you recently changed brands of fuel?

If so, be sure to fuel your vehicle with quality fuel. See *Gasoline Octane on page 5-5*. Poor fuel quality causes the engine not to run as efficiently as designed. You might notice this as stalling after start-up, stalling when you put the vehicle into gear, misfiring, hesitation on acceleration, or stumbling on acceleration — these conditions might go away once the engine is warmed up. This will be detected by the system and cause the light to turn on.

If you experience one or more of these conditions, change the fuel brand you use. It will require at least one full tank of the proper fuel to turn the light off.

If none of the above steps have made the light turn off, your dealer/retailer can check the vehicle. Your dealer/retailer has the proper test equipment and diagnostic tools to fix any mechanical or electrical problems that might have developed.

Emissions Inspection and Maintenance Programs

Some state/provincial and local governments have or might begin programs to inspect the emission control equipment on your vehicle. Failure to pass this inspection could prevent you from getting a vehicle registration.

Here are some things you need to know to help your vehicle pass an inspection:

Your vehicle will not pass this inspection if the check engine light is on or not working properly.

Your vehicle will not pass this inspection if the OBD (on-board diagnostic) system determines that critical emission control systems have not been completely diagnosed by the system. The vehicle would be considered not ready for inspection. This can happen if you have recently replaced the battery or if the battery has run down. The diagnostic system is designed to evaluate critical emission control systems during normal driving. This can take several days of routine driving. If you have done this and your vehicle still does not pass the inspection for lack of OBD system readiness, your dealer/retailer can prepare the vehicle for inspection.

Oil Pressure Light

⚠ CAUTION:

Do not keep driving if the oil pressure is low. If you do, your engine can become so hot that it catches fire. You or others could be burned. Check your oil as soon as possible and have your vehicle serviced.

Notice: **Lack of proper engine oil maintenance may damage the engine. The repairs would not be covered by your warranty. Always follow the maintenance schedule in this manual for changing engine oil.**

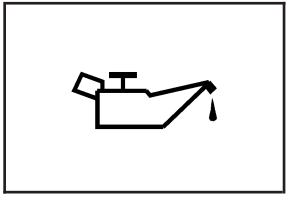

This light will come on briefly when you start your engine. If it does not, have your vehicle serviced.

When the light comes on and stays on, it means that oil is not flowing through your engine properly. You could be low on oil and you might have some other system problem.

Security Light

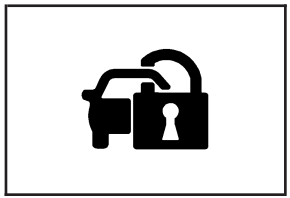

For information regarding this light and the vehicle's security system, see *Content Theft-Deterrent on page 2-15*.

Cruise Control Light

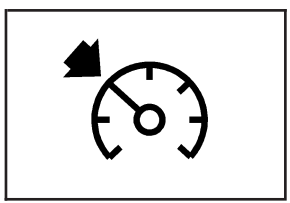

This light comes on whenever you set the cruise control.

The light goes out when the cruise control is turned off. See *Cruise Control on page 3-10* for more information.

Highbeam On Light

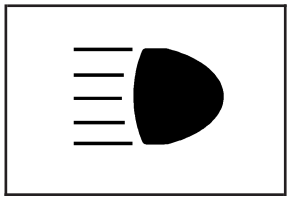

This light comes on when the high-beam headlamps are in use.

See *Headlamp High/Low-Beam Changer on page 3-8* for more information.

Fuel Gage

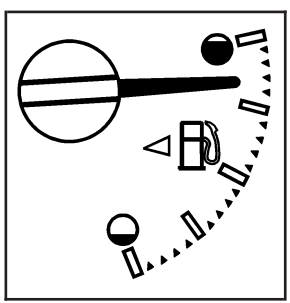

When the ignition is on, the fuel gage tells you about how much fuel you have remaining in the fuel tank.

Here are four things that some owners ask about. None of these indicate a problem with your fuel gage:

- At the gas station, the gas pump shuts off before the gage reads full.
- It takes a little more or less fuel to fill up than the gage indicated. For example, the gage may have indicated the tank was half full, but it actually took a little more or less than half the tank's capacity to fill the tank.
- The gage moves a little when you turn a corner or speed up.
- The gage does not go back to empty when you turn off the ignition.

When the fuel in the fuel tank is low, you will see a LOW FUEL message on the Driver Information Center (DIC) display. See *DIC Warnings and Messages on page 3-42* for more information.

Driver Information Center (DIC)

The Driver Information Center (DIC) displays information such as the trip odometer, personalization features, and warning messages. The DIC display is located on the instrument panel cluster.

DIC Operation and Displays

The Driver Information Center (DIC) comes on when the ignition is on.

If a problem is detected, a warning message appears on the display. Pressing and releasing the trip odometer reset stem on the DIC acknowledges some current warnings or service messages. Some messages only clear after the required action has been taken.

The DIC has different modes which can be accessed by pressing the trip odometer reset stem on the DIC. These modes are explained in the following section. The DIC trip odometer reset stem is located on the instrument panel cluster next to the DIC display. To scroll through the available functions, press and release the reset stem.

Trip Information

Odometer

The odometer is automatically displayed on the DIC when you start the vehicle. The odometer shows the total distance the vehicle has been driven in either miles for the United States or kilometers for Canada.

Trip Odometer

Press and release the reset stem until TRIP appears on the DIC display. The trip odometer shows the current distance traveled since the last reset of the trip odometer in either miles for the United States or kilometers for Canada.

To reset the trip odometer, press and hold the reset stem until the display returns to zero.

Engine Oil Life System

With the engine off, turn the key to ON/RUN and then press the reset stem until OIL LIFE RESET appears — alternating between OIL LIFE and RESET — on the DIC display. The CHANGE OIL message alerts you to change the oil on a schedule consistent with your driving conditions. Always reset the OIL LIFE message after an oil change. To reset the message, see *Engine Oil Life System on page 5-18*.

In addition to the engine oil life system monitoring the oil life, additional maintenance is recommended in the Maintenance Schedule in this manual. See *Engine Oil on page 5-15* and *Scheduled Maintenance on page 6-4* for more information.

Language

This feature allows you to choose the language in which the DIC display shows information.

To set your choice for this feature:

1. With the engine off, turn the key to ON/RUN, but do not start the engine.
2. Close all doors so the DOORS message does not display in the DIC.
3. Momentarily press and release the reset stem until the current language is displayed: English (default), Spanish, or French.
4. To select a different language, press and hold the reset stem until the next language appears.
5. Repeat Step 4 until the desired language is displayed. Once the desired language is shown on the DIC display, the language is set.
6. To exit the language selection, momentarily press and release the reset stem. All DIC messages will now display in the language selected.

Automatic Door Locks

This feature allows you to program the door locks to a preferred setting.

To set your choice for this feature:

1. With the engine off, turn the key to LOCK/OFF. Do not remove the key from the ignition.
2. Press and hold the power door lock button until the DIC display shows the current door lock mode.
3. To view the next available mode, press and hold the reset stem until the mode appears. Release the reset stem and press and hold again to view the next mode.
4. Once the desired mode is shown on the DIC display, briefly press the reset stem to set your choice. The DIC display then clears.

The following are the available modes:

Lock 1 (default): On vehicles with an automatic transmission, this mode locks all of the doors when the vehicle is shifted out of PARK (P) and unlocks all of the doors when the vehicle is shifted into PARK (P).

On vehicles with a manual transmission, this mode locks all of the doors when the vehicle speed is greater than 15 mph (24 km/h) and unlocks all of the doors when the key is removed from the ignition.

Lock 2: On vehicles with an automatic transmission, this mode locks all of the doors when the vehicle is shifted out of PARK (P) and unlocks the driver's door when the vehicle is shifted into PARK (P).

On vehicles with a manual transmission, this mode locks all of the doors when the vehicle speed is greater than 15 mph (24 km/h) and unlocks the driver's door when the key is removed from the ignition.

Lock 3: On vehicles with an automatic transmission, this mode locks all of the doors when the vehicle is shifted out of PARK (P). The doors will not automatically unlock.

On vehicles with a manual transmission, this mode locks all of the doors when the vehicle speed is greater than 15 mph (24 km/h). The doors will not automatically unlock.

Remote Keyless Entry (RKE) Feedback

This feature allows you to program the Remote Keyless Entry (RKE) feedback to a preferred setting.

To set your choice for this feature:

1. With the engine off, turn the key to LOCK/OFF. Do not remove the key from the ignition.
2. Press and hold the lock and unlock buttons on the RKE transmitter at the same time. Hold both buttons until the DIC display shows the current RKE feedback mode.
3. To view the next available mode, press and hold the reset stem until the mode appears. Release the reset stem and press and hold again to view the next mode.
4. Once the desired mode is shown on the DIC display, briefly press the reset stem to set your choice. The DIC display then clears.

The following are the available modes:

RFA 1 (default): This mode flashes the parking lamps when you press the lock or unlock buttons on the RKE transmitter.

RFA 2: This mode flashes the parking lamps and sounds the horn when you press the lock button on the RKE transmitter. This mode also flashes the parking lamps when you press the unlock button on the RKE transmitter.

RFA 3: This mode flashes the parking lamps and sounds the horn when you press the lock or unlock buttons on the RKE transmitter.

RFA 4: This mode disables RKE feedback. There will be no feedback when you press the lock or unlock buttons on the RKE transmitter.

DIC Warnings and Messages

Messages are displayed on the DIC to notify the driver that the status of the vehicle has changed and that some action may be needed by the driver to correct the condition. Multiple messages may appear one after another. The messages are displayed for several seconds each.

Some messages may not require immediate action, but you should press and release the trip odometer reset stem to acknowledge that you received the messages and to clear them from the display. Each message must be acknowledged individually.

Some messages cannot be cleared from the DIC display because they are more urgent. These messages require action before they can be cleared. You should take any messages that appear on the display seriously and remember that clearing the messages only makes the messages disappear, not correct the problem.

The following are the possible messages that can be displayed and some information about them.

AC (Air Conditioning) OFF

This message displays when the engine coolant temperature is too high and the air conditioning in your vehicle needs to be turned off. See *Engine Overheating on page 5-30* and *Climate Control System on page 3-20* for more information. This message displays along with the ENG HOT message.

ABS (Antilock Brake System) FAULT

This message displays if there is a problem with the Antilock Brake System (ABS). Check the ABS as soon as possible and have your vehicle serviced by your dealer/retailer. See *Brakes on page 5-39* and *Antilock Brake System Warning Light on page 3-32* for more information. Press and release the reset stem to acknowledge the message and clear it from the display.

BRAKES

This message displays if there is a problem with the brakes. Check the brakes as soon as possible and have your vehicle serviced by your dealer/retailer. See *Brakes on page 5-39* and *Brake System Warning Light on page 3-31* for more information. Press and release the reset stem to acknowledge the message and clear it from the display.

CHANGE OIL

This message displays when the oil needs to be changed. Check the oil in your vehicle as soon as possible and have your vehicle serviced by your dealer/retailer. See *Engine Oil on page 5-15* and *Scheduled Maintenance on page 6-4* for more information. Press and release the reset stem to acknowledge the message and clear it from the display.

DOORS

This message displays when one or more of the doors is ajar. Check all the doors on your vehicle to make sure they are closed. The message clears from the display after all of the doors are closed.

ENG (Engine) HOT

This message displays when the engine coolant temperature is hot. Check the engine coolant temperature gage. See *Engine Coolant Temperature Gage on page 3-33*. Have your vehicle serviced by your dealer/retailer as soon as possible if you suspect the engine is overheating. See *Engine Overheating on page 5-30* for more information.

FLUID

This message displays if the brake fluid is low. Check the brake fluid as soon as possible and have your vehicle serviced by your dealer/retailer. See *Brakes on page 5-39* for more information. Press and release the reset stem to acknowledge the message and clear it from the display.

FUEL CAP

This message displays if the vehicle's fuel cap is either off or loose. Pull over as soon as possible and check to see if the fuel cap is secure. You may also see the check engine light on the instrument panel cluster. If the check engine light does come on when the fuel cap was loose, it may take a few driving trips before the light turns off. See *Malfunction Indicator Lamp on page 3-34* for more information if the light still remains on. Press and release the reset stem to acknowledge the message and clear it from the display.

LOW FUEL

This message displays if the level of fuel in the vehicle is low. Also check the fuel gage. See *Fuel Gage on page 3-37* for more information. Refill the fuel tank as soon as possible.

LOW TIRE

This message displays if a low tire pressure is detected in any of the vehicle's tires. Press and release the reset stem to acknowledge the message and clear it from the display. The message appears at each ignition cycle until the tires are inflated to the correct inflation pressure. See *Tires on page 5-59* and *Inflation - Tire Pressure on page 5-66* for more information on tires and the correct inflation pressures.

LOW TRAC (Traction)

If your vehicle has the Traction Control System (TCS), this message displays when a low traction condition is detected. See *Traction Control System (TCS) on page 4-5* for more information. Press and release the reset stem to acknowledge the message and clear it from the display.

OIL

This message displays when the oil pressure is low. See *Oil Pressure Light on page 3-36* and *Engine Oil on page 5-15* for more information.

PARK BRK (Brake)

This message displays when the parking brake is set. See *Parking Brake on page 2-32* and *Brake System Warning Light on page 3-31* for more information. The message clears from the display after the parking brake is released or by pressing and releasing the reset stem.

REDUCED POWER

This message displays when the vehicle's engine power is reduced. Reduced engine power can affect the vehicle's ability to accelerate. If this message is on, but there is no reduction in performance, proceed to your destination. The performance may be reduced the next time the vehicle is driven. The vehicle may be driven at a reduced speed while this message is on, but acceleration and speed may be reduced. Anytime this message stays on, the vehicle should be taken to your dealer/retailer for service as soon as possible. Press and release the reset stem to acknowledge the message and clear it from the display.

SERV (Service) 4WD (Four-Wheel Drive)

This message displays when there is a problem with the transfer case control system. Check the transfer case on your vehicle and have it serviced by your dealer/retailer. See *Four-Wheel Drive on page 2-28* for more information about the transfer case. Press and release the reset stem to acknowledge the message and clear it from the display.

SERV (Service) TPM (Tire Pressure Monitor)

This message displays if a part on the Tire Pressure Monitor System (TPMS) is not working properly. The tire pressure light also flashes and then remains on during the same ignition cycle. See *Tire Pressure Light on page 3-33*. Several conditions may cause this message to appear. See *Tire Pressure Monitor Operation on page 5-70* for more information. If the warning comes on and stays on, there may be a problem with the TPMS. See your dealer/retailer.

SERV (Service) VEH (Vehicle)

This message displays if your vehicle needs service. Have your vehicle serviced by your dealer/retailer as soon as possible.

SERVICE CHARG (Charge) SYS (System)

This message displays if there is a problem with the battery charging system. Under certain conditions, the battery warning light may also turn on in the instrument panel cluster. See *Charging System Light on page 3-30*. The battery will not be charging at an optimal rate and the vehicle will lose the ability to enter the fuel economy mode. The vehicle is safe to drive, however have the electrical system checked by your dealer/retailer. Press and release the reset stem to acknowledge the message and clear it from the display.

TRAC (Traction) OFF

If your vehicle has the Traction Control System (TCS), this message displays when the Traction Control System (TCS) is turned off by pressing the TCS button. See *Traction Control System (TCS) on page 4-5* for more information.

TRACTION FAULT

If your vehicle has the Traction Control System (TCS), this message may display if there is a problem with the TCS. Check the TCS as soon as possible and have your vehicle serviced by your dealer/retailer. See *Traction Control System (TCS) on page 4-5* for more information. Press and release the reset stem to acknowledge the message and clear it from the display.

TURN SIGNAL

This message displays when the turn signal is on for about 0.75 miles (1.2 km) of travel. Press and release the reset stem to acknowledge the message and clear it from the display.

Audio System(s)

Determine which radio your vehicle has and then read the pages following to familiarize yourself with its features.

⚠ CAUTION:

This system provides you with far greater access to audio stations and song listings. Giving extended attention to entertainment tasks while driving can cause a crash and you or others can be injured or killed. Always keep your eyes on the road and your mind on the drive — avoid engaging in extended searching while driving.

Keeping your mind on the drive is important for safe driving. See *Defensive Driving on page 4-2*. Here are some ways in which you can help avoid distraction while driving.

While your vehicle is parked:

- Familiarize yourself with all of its controls.
- Familiarize yourself with its operation.
- Set up your audio system by presetting your favorite radio stations, setting the tone, and adjusting the speakers. Then, when driving conditions permit, you can tune to your favorite radio stations using the presets and steering wheel controls if the vehicle has them.

Notice: **Before adding any sound equipment to your vehicle, such as an audio system, CD player, CB radio, mobile telephone, or two-way radio, make sure that it can be added by checking with your dealer/retailer. Also, check federal rules covering mobile radio and telephone units. If sound equipment can be added, it is very important to do it properly. Added sound equipment may interfere with the operation of your vehicle's engine, radio, or other systems, and even damage them. Your vehicle's systems may interfere with the operation of sound equipment that has been added.**

Notice: **The chime signals related to safety belts, parking brake, and other functions of your vehicle operate through the radio/entertainment system. If that equipment is replaced or additional equipment is added to your vehicle, the chimes may not work. Make sure that replacement or additional equipment is compatible with your vehicle before installing it. See *Accessories and Modifications on page 5-3*.**

Setting the Time

Radios without Radio Data Systems (RDS)

Press and hold HR (hour) until the correct hour displays. Press and hold MIN (minute) until the correct minute displays. There is an initial two-second delay before the clock goes into time-set mode. Display the time with the ignition off, by pressing RCL (recall), HR, or MIN.

Radios with Radio Data Systems (RDS)

The radio could have a button marked with an H or HR to represent hours and an M or MN to represent minutes.

Press and hold the hour button until the correct hour displays. Press and hold the minute button until the correct minute displays. The time can be set with the ignition on or off.

To synchronize the time with an FM station broadcasting Radio Data System (RDS) information, press and hold the hour and minute buttons at the same time until RDS TIME displays. To accept this time, press and hold the hour and minute buttons, at the same time, for another two seconds. If the time is not available from the station, NO UPDAT (update) displays.

RDS time is broadcast once a minute. After tuning to an RDS broadcast station, it could take a few minutes for the time to update.

Radio(s)

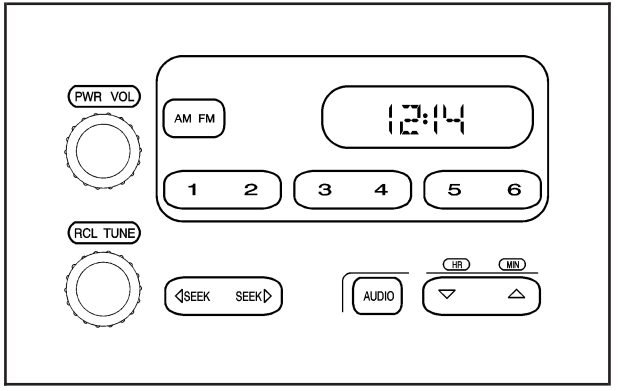

AM-FM Radio

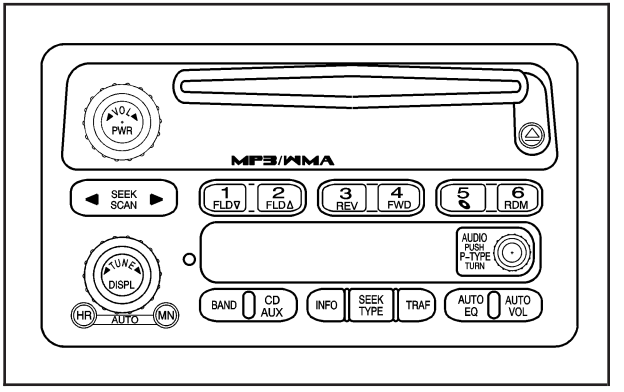

Radio with CD (MP3/WMA)

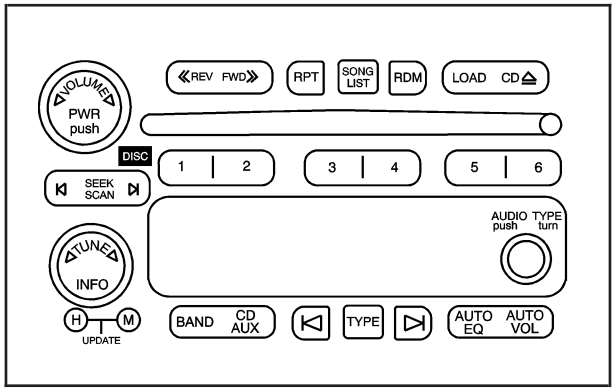

Radio with Six-Disc CD Player

Radio Data System (RDS)

The audio system has a Radio Data System (RDS). RDS features are available for use only on FM stations that broadcast RDS information.

With RDS, the radio can do the following:

- Seek to stations broadcasting the selected type of programming.
- Receive announcements concerning local and national emergencies.
- Display messages from radio stations.
- Seek to stations with traffic announcements.

This system relies upon receiving specific information from these stations and only works when the information is available. In rare cases, a radio station could broadcast incorrect information that causes the radio features to work improperly. If this happens, contact the radio station.

While the radio is tuned to an RDS station, the station name or call letters display instead of the frequency. RDS stations can also provide the time of day, a program type (PTY) for current programming, and the name of the program being broadcast.

Playing the Radio

PWR (Power): Press to turn the system on and off.

◁ ▷ **VOL/VOLUME:** Turn to increase or to decrease the volume.

RCL (Recall) (AM-FM Radio): Press to switch the display between the radio station frequency, band, and the time. When the ignition is off, press to display the time.

DISPL (Display) (Radio with CD): When the ignition is turned off, press to display the time.

For RDS, press the DISPL knob to change what displays while using RDS. The display options are station name, RDS station frequency, PTY (program type), and the name of the program (if available).

For XM™ (if equipped), press the DISPL knob while in XM™ mode to retrieve four different categories of information related to the current song or channel: Artist, Song Title, Category or PTY, Channel Number/ Channel Name.

To change the default on the display, press the DISPL knob until you see the desired display, then press and hold this knob for two seconds. The radio produces one beep. The selected display is now the default.

INFO (Information) (XM™ Satellite Radio Service and RDS Features) (Radio with Six-Disc CD): When the ignition is off, press to display the time.

Press the INFO button to display additional text information related to the current FM-RDS or XM™ station. A choice of additional information such as: Channel, Song, Artist, and PTY (program type) may appear. Continue pressing the information button to highlight the desired label, and the information about that label displays.

When information is not available, No Info displays.

To change the default on the display, press the INFO knob until you see the desired display, then press and hold the knob until a beep sounds. The selected display becomes the default.

AUTO VOL (Automatic Volume): Automatic volume automatically adjusts the audio system to make up for road and wind noise as you drive.

Set the volume at the desired level. Depending on the radio and displays, press to select MIN, MED, MAX AUTO VOL, or LOW, MEDIUM, and HIGH. AVOL displays. Each higher setting allows for more volume compensation at faster vehicle speeds. Then as you drive, automatic volume increases the volume, as necessary, to overcome noise at any speed. The volume level should always sound the same to you as you drive.

For the Radio with CD, NONE displays if the radio cannot determine the vehicle speed. To turn automatic volume off, press until OFF or AUTO VOL OFF displays.

Finding a Station

AM FM (AM-FM Radio): Press to switch between FM1, FM2, or AM. The selection displays.

BAND: Press to switch between FM1, FM2, AM, or XM1 or XM2 (if equipped). The selection displays.

◁ ▷ **TUNE:** Turn to select radio stations.

◁ **SEEK** ▷ **:** Press the arrows to go to the previous or to the next station and stay there.

To scan stations, press and hold either arrow for two seconds until a beep sounds. The radio goes to a station, plays for a few seconds, then goes to the next station. Press either arrow again to stop scanning.

To scan preset stations, press and hold either arrow for more than four seconds until two beeps sound. The radio goes to the first preset station stored on the pushbuttons, plays for a few seconds, then goes to the next preset station. Press either arrow again to stop scanning presets.

◀▶ **/** ⊲ ⊳ **SEEK:** Press the SEEK or SEEK/TYPE arrows to go to the previous or to the next station and stay there.

◀▶ **/** ⊲ ⊳ **SCAN:** Press and hold either SCAN arrow or SCAN/TYPE arrows for more than two seconds. SCAN or SCN displays and the radio produces one beep. The radio goes to a station, plays for a few seconds, then goes to the next station. Press either SCAN arrow or SCAN/TYPE arrows again, or for the Radio with Six-Disc CD player, one of the pushbuttons to stop scanning presets.

To scan preset stations, press and hold either SCAN arrow or SCAN/TYPE arrows for more than four seconds. PSCN or PSC displays and the radio produces one beep or depending on the radio, two beeps. The radio goes to a preset station, plays for a few seconds, then goes to the next preset station. Press either SCAN arrow or SCAN/TYPE arrows again, or for the Radio with CD, one of the pushbuttons to stop scanning presets.

The radio only scans stations with a strong signal that are in the selected band.

Setting Preset Stations

If your radio does not have XM™, up to 18 stations (six FM1, six FM2, and six AM) can be programmed on the six numbered pushbuttons.

If your radio has XM™, up to 30 stations (six FM1, six FM2, six AM, six XM1 and six XM2 (if equipped)) can be programmed on the six numbered pushbuttons.

To program either radio:

1. Turn the radio on.
2. Press BAND to select FM1, FM2, AM, or XM1 or XM2 (if equipped).
   - For the AM-FM Radio, press AM FM to select FM1, FM2, or AM.
3. Tune in the desired station.
4. Press and hold one of the six numbered pushbuttons until the radio beeps once. When that numbered pushbutton is pressed again, the station that was stored, returns.
5. Repeat the steps for each pushbutton.

Setting the Tone (Bass/Treble)

AUDIO: Push and release until BASS/TREB, or depending on the radio, BASS, MID, or TREB displays. Turn to increase or to decrease. The tone display shows the bass or the treble level. If a station is weak or has static, decrease the treble.

- For the AM-FM Radio, press and hold the △ ▽ arrows to increase or to decrease the tone.

To adjust the bass/treble or bass/midrange/treble to the middle position, press and hold the AUDIO knob. The radio produces one beep and adjusts the display level to the middle position.

- For the AM-FM Radio, adjust bass or treble to the middle position, select BAS (bass) or TRE (treble). Then press and hold for more than two seconds until a beep sounds. B (balance) and a zero or T (treble) and a zero displays.

To adjust all tone and speaker controls to the middle position, push and hold the AUDIO knob when no tone or speaker control displays. ALL CENTERED displays and a beep sounds.

- For the AM-FM Radio, adjust both tone controls and both speaker controls to the middle position, first exit out of audio mode by pressing another button, causing the radio to perform that function or wait five seconds for the display to return to time of day. Then press and hold for more than two seconds until a beep sounds. CEN (center) displays.

AUTO EQ (Automatic Equalization): Press to select customized equalization settings designed for country/western, jazz, talk, pop, rock, and classical.

To return to the manual mode, press the AUTO EQ button until CUSTOM displays. Then manually adjust the bass/treble, or bass/midrange/treble by using the AUDIO knob.

Adjusting the Speakers (Balance/Fade)

AUDIO: To adjust the balance between the right and the left speakers, push and release until BAL (balance) displays. Turn to move the sound toward the right or the left speakers.

- For the AM-FM Radio, press and hold the △ ▽ arrows to move the sound toward the right or the left speakers.

To adjust the fade between the front and the rear speakers, push and release the AUDIO knob until FADE or depending on the radio, FAD displays. Turn the knob to move the sound toward the front or the rear speakers.

- For the AM-FM Radio, press and hold the △ ▽ arrows to move the sound toward the right or the left speakers.

To adjust the balance or the fade to the middle position, push the AUDIO knob to select BAL or FADE/FAD, then push it again and hold it until one beep sounds.

- For the AM-FM Radio, adjust balance or fade to the middle position by selecting BAL or FAD. Press and hold AUDIO for more than two seconds until a beep sounds. B (balance) and a zero or F (fade) and a zero displays.

To adjust all tone and speaker controls to the middle position, push and hold the AUDIO knob when no tone or speaker control is displayed. ALL CENTERED displays and a beep sounds.

- For the AM-FM Radio, adjust both tone controls and both speaker controls to the middle position by exiting out of audio mode. To do this, press any button for the radio to perform that function or wait five seconds for the display to return to time of day. Then press and hold AUDIO for more than two seconds until a beep sounds. CEN (center) displays.

  Fade might not be available if the vehicle is a regular cab model.

Finding a Program Type (PTY) Station (RDS and XM™)

To select and find a desired PTY perform the following:

1. Press the P-TYPE or depending on the radio, TYPE knob to activate program type select mode. P-TYPE or TYPE and a PTY displays.
2. Turn the P-TYPE or TYPE knob again, to select a PTY.
3. Once the desired PTY displays, press the SEEK TYPE button or the SEEK/TYPE arrows to select and to take you to the PTY's first station.
4. For the Radio with CD, go to another station within that PTY by pressing the SEEK TYPE button twice to display the PTY and then go to another station.

SCAN: For the Radio with Six-Disc CD player, scan the stations within a PTY by performing the following:

1. Press the TYPE button to activate program type select mode. P-TYPE and the last selected PTY displays.
2. Turn the TYPE knob or press and release the TYPE button to select a PTY.
3. Once the desired PTY is displayed, press and hold either the SEEK or TYPE arrows for two seconds, and the radio begins scanning the stations in the PTY.
4. Press either the SEEK or TYPE arrows to stop scanning.

To cancel the seek, press the SEEK/TYPE button or any of the SEEK or TYPE arrows. This also exits the program type seek mode and returns to the last tuned station.

For the Radio with CD, if both PTY and TRAF (traffic) are on, the radio searches for stations with the selected PTY and traffic announcements.

If the radio cannot find the desired program type, NONE displays and the radio returns to the last tuned station.

BAND (Alternate Frequency): Alternate frequency lets the radio switch to a stronger station with the same program type. To turn alternate frequency on, press and hold BAND for two seconds. AF ON displays. The radio could switch to stations with a stronger frequency.

To turn alternate frequency off, press and hold BAND again for two seconds. AF OFF displays. The radio does not switch to other stations.

This function does not apply for XM™ Satellite Radio Service.

Setting Preset PTYs (RDS Only)

For the Radio with Six-Disc CD player, the six pushbuttons have factory PTY presets. Up to 12 PTYs (six FM1 and six FM2), can be programmed on the numbered pushbuttons, by performing the following steps:

1. Press BAND to select FM1 or FM2.
2. Press the TYPE button to activate program type select mode. P-TYPE and the last selected PTY displays.
3. Turn the TYPE knob or press and release the TYPE button to select a PTY.
4. Press and hold one of the six numbered pushbuttons until a beep sounds. When that numbered pushbutton is pressed, the PTY that was set, returns.
5. Repeat the steps for each pushbutton.

RDS Messages

ALERT!: For the Radio with CD, the Alert feature warns of local or national emergencies. When an alert announcement comes on the current radio station, ALERT! displays. You will hear the announcement, even if the volume is low or a CD is playing. If a CD is playing, play stops during the announcement. Alert announcements cannot be turned off.

ALERT! is not affected by tests of the emergency broadcast system. This feature is not supported by all RDS stations.

INFO (Information): If the current station has a message, the information symbol or INFO displays. Press this button to see the message. The message can display the artist, song title, call in phone numbers, etc.

If the entire message is not displayed, parts of the message displays every three seconds. To scroll through the message, press and release the INFO button. A new group of words display after every press of this button.

Once the complete message has displayed, the information symbol or INFO disappears from the display until another new message is received. The last message can be displayed by pressing the INFO button. The last message stays on the display until a new message is received or the radio is tuned to a different station.

When a message is not available from a station, NO INFO displays.

TRAF (Traffic): For the Radio with CD, if TRAF displays, the tuned station broadcasts traffic announcements. When a traffic announcement is broadcast on this station you will hear it.

If the station does not broadcast traffic announcements, press the TRAF button and the radio seeks to a station that does. When a station that broadcasts traffic announcements is found, the radio stops seeking and TRAF displays. If no station is found that broadcasts traffic announcements, NO TRAF displays.

If TRAF displays, press the TRAF button to turn off the traffic announcements.

The radio plays the traffic announcement if the volume is low. The radio interrupts the play of a CD if the last tuned station broadcasts traffic announcements.

This function does not apply to XM™ Satellite Radio Service.

Radio Messages

CAL ERR or CAL (Calibration Error): The audio system has been calibrated for your vehicle from the factory. If CAL or CAL ERR displays it means that the radio has not been configured properly for your vehicle and it must be returned to your dealer/retailer for service.

LOC or LOCKED: This message displays when the THEFTLOCK® system has locked up. Take your vehicle to your dealer/retailer for service.

If any error occurs repeatedly or if an error cannot be corrected, contact your dealer/retailer.

XM™ Satellite Radio Service

XM™ is a satellite radio service that is based in the 48 contiguous United States and 10 Canadian provinces. XM™ Satellite Radio has a wide variety of programming and commercial-free music, coast-to-coast, and in digital-quality sound. During your trial or when you subscribe, you will get unlimited access to XM™ Radio Online for when you are not in your vehicle. A service fee is required to receive the XM™ service. For more information, contact XM™ at www.xmradio.com or call 1-800-929-2100 in the U.S. and www.xmradio.ca or call 1-877-438-9677 in Canada.

Radio Messages for XM™ Only

See *XM Radio Messages on page 3-69* later in this section for further detail.

Playing a CD (Radio with Single CD Player)

Insert a CD partway into the slot, label side up. The player pulls it in, and READING displays. The CD should begin playing. If you want to insert a CD with the ignition off, first press the ⏏ (eject) button or the DISPL knob.

If the ignition or radio is turned off with a CD in the player it stays in the player. When the ignition or radio is turned on, the CD starts to play where it stopped, if it was the last selected audio source.

When the CD is inserted, the CD symbol displays. As each new track starts to play, the track number displays.

The CD player can play the smaller 3 inch (8 cm) single CDs with an adapter ring. Full-size CDs and the smaller CDs are loaded in the same manner.

Care of Your CDs

If playing a CD-R, the sound quality can be reduced due to CD-R quality, the method of recording, the quality of the music that has been recorded, and the way the CD-R has been handled. Handle them carefully. Store CD-R(s) in their original cases or other protective cases and away from direct sunlight and dust. The CD player scans the bottom surface of the disc. If the surface of a CD is damaged, such as cracked, broken, or scratched, the CD does not play properly or not at all. Do not touch the bottom side of a CD while handling it; this could damage the surface. Pick up CDs by grasping the outer edges or the edge of the hole and the outer edge.

If the surface of a CD is soiled, take a soft, lint free cloth or dampen a clean, soft cloth in a mild, neutral detergent solution mixed with water, and clean it. Make sure the wiping process starts from the center to the edge.

Care of Your CD Player

Do not add any label to a CD, it could get caught in the CD player. If a CD is recorded on a personal computer and a description label is needed, try labeling the top of the recorded CD with a marking pen.

The use of CD lens cleaners for CDs is not advised, due to the risk of contaminating the lens of the CD optics with lubricants internal to the CD player mechanism.

Notice: **If a label is added to a CD, or more than one CD is inserted into the slot at a time, or an attempt is made to play scratched or damaged CDs, the CD player could be damaged. While using the CD player, use only CDs in good condition without any label, load one CD at a time, and keep the CD player and the loading slot free of foreign materials, liquids, and debris.**

If an error displays, see “CD Messages” later in this section.

1 FLD ▽ (Previous): This button is inactive when playing a CD.

2 FLD △ (Next): This button is inactive when playing a CD.

3 REV (Fast Reverse): Press and hold to reverse quickly within a track. Press and hold for less than two seconds to reverse at 10 times the normal playing speed. Press and hold for more than two seconds to reverse at 20 times the normal playing speed. Release to play the passage. ET (elapsed time) and the elapsed time of the track displays.

4 FWD (Fast Forward): Press and hold to advance quickly within a track. Press and hold for less than two seconds to advance at six times the normal playing speed. Press and hold for more than two seconds to advance at 17 times the normal playing speed. Release to play the passage. ET and the elapsed time of the track displays.

6 RDM (Random): Press to hear the tracks in random, rather than sequential, order. RDM ON displays. RDM and the track number displays when each track starts to play. Press again to turn off random play. RDM OFF displays.

◀ SEEK ▶ : Press the left arrow to go to the start of the current or the previous track. Press the right arrow to go to the start of the next track. Pressing either arrow for more than two seconds scans the next tracks, playing the first eight seconds of each track until all of the tracks have been previewed. Press either arrow again to stop scanning and to play the track.

◁ **TUNE** ▷ **:** Turning this knob fast tracks reverse or advances through tracks. The track number displays for each track.

DISPL (Display): Press to see how long the current track has been playing. ET and the elapsed time of the track displays. To change the default on the display (track or elapsed time), press until you see the desired display, then press and hold for two seconds. The radio produces one beep. The selected display is now the default.

BAND: Press to listen to the radio when a CD is playing. The inactive CD remains inside the radio for future listening.

CD AUX (Auxiliary): Press to play a CD when listening to the radio. The CD symbol displays when a CD is loaded.

⏏ **(Eject):** Press to eject a CD. Eject can be activated with either the ignition or radio off. CDs can be loaded with the ignition and radio off if this button is pressed first.

Playing a CD(s) (Radio with Six-Disc CD Player)

LOAD: Press to load CDs into the CD player. This CD player holds up to six CDs.

To insert one CD, do the following:

1. Turn the ignition on.
2. Press and release the LOAD button.
3. Wait for the indicator light, located to the right of the slot, to turn green.
4. Load a CD. Insert the CD partway into the slot, label side up. The player pulls the CD in.

To insert multiple CDs, do the following:

1. Turn the ignition on.
2. Press and hold the LOAD button for two seconds.

   A beep sound and the indicator light, located to the right of the slot, begins to flash and MULTI LOAD # displays.
3. Once the light stops flashing and turns green, INSERT CD # displays, load a CD. Insert the CD partway into the slot, label side up. The player pulls the CD in.

   Once the CD is loaded, the indicator light begins flashing again. Once the light stops flashing and turns green, you can load another CD. The CD player takes up to six CDs. Do not try to load more than six.

To load more than one CD but less than six, complete Steps 1 through 3. When finished loading CDs, press the LOAD button to cancel the loading function. The radio begins to play the last CD loaded.

If more than one CD has been loaded, a number for each CD displays.

Playing a Specific Loaded CD

For every CD loaded, a number displays. To play a specific CD, first press the CD AUX button (if not already in CD mode), then press the numbered pushbutton that corresponds to the CD. A small bar appears under the CD number that is playing and the track number displays.

CD ⏏ (Eject): Press to eject CD(s).

To eject the CD that is currently playing, press and release this button.

To eject multiple CDs, do the following:

1. Press and hold the ⏏ button for five seconds.

   A beep sounds and the indicator light, located to the right of the slot, begins to flash and EJECT ALL displays.
2. Once the light stops flashing, REMOVE CD # displays. The CD ejects and can be removed.

   Once the CD is removed, the indicator light begins flashing again and another CD ejects.

   To stop ejecting the CDs, press the LOAD or the eject button.

If the CD is not removed, after 25 seconds, the CD automatically pulls back into the player. If CD is pushed back into the player, before the 25 second time period is complete, the player senses an error and tries to eject the CD several times before stopping.

Do not repeatedly press the CD eject button to eject a CD after you have tried to push it in manually. The player's 25-second eject timer resets at each press of eject, causing the player to not eject the CD until the 25-second time period has elapsed.

≪ **REV (Fast Reverse):** Press and hold to reverse quickly within a track. You will hear sound at a reduced volume. The elapsed time of the track displays. Release to play the passage.

FWD ≫ (Fast Forward): Press and hold to advance quickly within a track. You will hear sound at a reduced volume. The elapsed time of the track displays. Release to play the passage.

RPT (Repeat): With repeat, one track or an entire CD can be repeated.

To use repeat, do the following:

- To repeat the track you are listening to, press and release the RPT button. RPT displays. Press again to turn off repeat play.
- To repeat the CD you are listening to, press and hold the RPT button for two seconds. RPT displays. Press again to turn off repeat play.

RDM (Random): With the random setting, tracks can be listened to in random, rather than sequential, order, on one CD or on all of the CDs. To use random, do one of the following:

- To play the tracks on the CD you are listening to in random order, press and release the RDM button. RANDOM ONE displays. Press again to turn off random play.
- To play the tracks on all of the CDs that are loaded in random order, press and hold RDM for more than two seconds. A beep sounds and RANDOM ALL displays. Press again to turn off random play.

AUTO EQ (Automatic Equalization): Press to select the equalization setting while playing a CD. The equalization is stored when a CD is played. For more information on AUTO EQ, see "AUTO EQ" listed previously in this section.

⊲ **SEEK** ⊳ **:** Press the left arrow to go to the start of the current track (if more than 10 seconds have played), or to go to the previous track (if less than 10 seconds have played). Press the right arrow to go to the next track. If either arrow is held or pressed more than once, the player continues moving backward or forward through the CD.

⊲ **SCAN** ⊳ **:** To scan one CD, press and hold either arrow for more than two seconds until SCAN displays and a beep sounds. The radio goes to the next track, plays for 10 seconds, then goes to the next track. Press either arrow again, to stop scanning.

To scan all loaded CDs, press and hold either arrow for more than four seconds until CD SCAN displays and a beep sounds. Use this feature to listen to 10 seconds of the first track of each loaded CD. Press either arrow again, to stop scanning.

INFO (Information): Press to see how long the current track has been playing. To change the default on the display, track or elapsed time, press until you see the desired display, then press and hold until the radio beeps. The selected display becomes the default.

BAND: Press to listen to the radio while a CD is playing. The inactive CD(s) remains inside the radio for future listening.

Using Song List Mode (Radio with Six-Disc CD Player)

The six-disc CD changer has a feature called song list. This feature is capable of saving 20 track selections.

To save tracks into the song list feature:

1. Turn the CD player on and load it with at least one CD. See “LOAD CD” listed previously in this section for more information.
2. Check to see that the CD changer is not in song list mode. S-LIST should not display. If S-LIST is present, press the SONG LIST button to turn it off.
3. Select the desired CD by pressing the numbered pushbutton and then use the SEEK or TYPE right arrows to locate the track to be saved. The track begins to play.
4. Press and hold the SONG LIST button to save the track into memory. When SONG LIST is pressed, one beep sounds. After two seconds of continuously pressing the SONG LIST button, two beeps sound to confirm the track has been saved.
5. Repeat Steps 3 and 4 for saving other selections.

S-LIST FULL displays if you try to save more than 20 selections.

To play the song list, press the SONG LIST button. One beep sounds and S-LIST displays. The recorded tracks begins to play in the order they were saved.

Seek through the song list by using the SEEK or TYPE arrows. Seeking past the last saved track returns to the first saved track.

To delete tracks from the song list, perform the following steps:

1. Turn the CD player on.
2. Press the SONG LIST button to turn song list on. S-LIST displays.
3. Press either the SEEK or TYPE arrows to select the desired track to be deleted.
4. Press and hold the SONG LIST button for two seconds. When SONG LIST is pressed, one beep sounds. After two seconds of continuously pressing the SONG LIST button, two beeps sound to confirm that the track has been deleted.

After a track has been deleted, the remaining tracks are moved up the list. When another track is added to the song list, the track is added to the end of the list.

To delete the entire song list, perform the following steps:

1. Turn the CD player on.
2. Press the SONG LIST button to turn song list on. S-LIST displays.
3. Press and hold the SONG LIST button for more than four seconds. One beep sounds, followed by two beeps after two seconds, and a final beep sounds after four seconds. S-LIST EMPTY displays indicating the song list has been deleted.

If a CD is ejected, and the song list contains saved tracks from that CD, those tracks are automatically deleted from the song list. Any tracks saved to the song list again are added to the bottom of the list.

To end song list mode, press the SONG LIST button. One beep sounds and S-LIST is removed from the display.

Playing an MP3/WMA CD-R Disc

Radios with the MP3/WMA feature are capable of playing an MP3/WMA CD-R disc. For more information on how to play an MP3/WMA CD-R disc, see *Using an MP3 on page 3-64* later in this section.

CD Messages

CHECK CD: If this message displays and/or the CD comes out, it could be for one of the following reasons:

- It is very hot. When the temperature returns to normal, the CD should play.
- You are driving on a very rough road. When the road becomes smoother, the CD should play.
- The CD is dirty, scratched, wet, or upside down.
- The air is very humid. If so, wait about an hour and try again.
- The format of the CD might not be compatible. See *Using an MP3 on page 3-64* later in this section.
- There could have been a problem while burning the CD.
- The label could be caught in the CD player.

If the CD is not playing correctly, for any other reason, try a known good CD.

If any error occurs repeatedly or if an error cannot be corrected, contact your dealer/retailer. If the radio displays an error message, write it down and provide it to your dealer/retailer when reporting the problem.

Using an MP3

MP3/WMA CD-R Disc

MP3/WMA Format

If you burn your own MP3/WMA disc on a personal computer:

- Make sure the MP3/WMA files are recorded on a CD-R disc.
- Make sure playlists have a .mp3 or .wpl extension, other file extensions might not work.
- Files can be recorded with a variety of fixed or variable bit rates. Song title, artist name, and album are displayed by the radio when recorded using ID3 tags version 1 and 2.
- Create a folder structure that makes it easy to find songs while driving. Organize songs by albums using one folder for each album. Each folder or album should contain 18 songs or less.
- Make sure to finalize the disc when burning an MP3/WMA disc, using multiple sessions. It is usually better to burn the disc all at once.

The player is able to read and play a maximum of 253 folders, 50 playlists, 20 sessions, and 949 files. Long file names, folder names, or playlist names may use more disc memory space than necessary. To conserve space on the disc, minimize the length of the file, folder, or playlist names. An MP3/WMA CD-R that was recorded using no file folders. The system can support up to 11 folders in depth, though, keep the depth of the folders to a minimum in order to keep down the complexity and confusion in trying to locate a particular folder during playback. If a CD contains more than the maximum of 253 folders, 50 playlists, 20 sessions, and 949 files, the player lets you access and navigate up to the maximum, but all items over the maximum are played.

Root Directory

The root directory is treated as a folder. If the root directory has compressed audio files, the directory displays as F1 ROOT. All files contained directly under the root directory are accessed prior to any root directory folders. However, playlists (Px) are always accessed before root folders or files.

Empty Directory or Folder

If a root directory or a folder exists somewhere in the file structure that contains only folders/subfolders and no compressed files directly beneath them, the player advances to the next folder in the file structure that contains compressed audio files. The empty folder does not display.

No Folder

When the CD contains only compressed files, the files are located under the root folder. The next and previous folder functions have no function on a CD that was recorded without folders or playlists. When displaying the name of the folder the radio displays ROOT.

When the CD contains only playlists and compressed audio files, but no folders, all files are located under the root folder. The folder down and the folder up buttons search playlists (Px) first and then go to the root folder. When the radio displays the name of the folder, the radio displays ROOT.

Order of Play

Tracks are played in the following order:

- Play begins from the first track in the first playlist and continues sequentially through all tracks in each playlist. When the last track of the last playlist has played, play continues from the first track of the first playlist.
- If the CD does not contain any playlists, then play begins from the first track under the root directory. When all tracks from the root directory have played, play continues from files according to their numerical listing. After playing the last track from the last folder, play begins again at the first track of the first folder or root directory.

When play enters a new folder, the display does not automatically show the new folder name unless you have chosen the folder mode as the default display. See DISPL (display) later in this section for more information. The new track name displays.

File System and Naming

The song name that displays is the song name that is contained in the ID3 tag. If the song name is not present in the ID3 tag, then the radio displays the file name without the extension (such as .mp3) as the track name.

Track names longer than 32 characters or four pages are shortened. Parts of words on the last page of text and the extension of the filename does not display.

Preprogrammed Playlists

Preprogrammed playlists which were created by WinAmp™, MusicMatch™, or Real Jukebox™ software can be accessed, however, they cannot be edited. These playlists are treated as special folders containing compressed audio song files.

Playing an MP3/WMA

Insert a CD partway into the slot, label side up. The player pulls it in, and READING displays. The CD should begin playing and the CD symbol displays. If you want to insert a CD with the ignition off, first press the ⏏ button or the DISPL knob.

If the ignition or radio is turned off with a CD in the player it stays in the player. When the ignition or radio is turned on, the CD starts to play where it stopped, if it was the last selected audio source.

As each new track starts to play, the track number displays.

1 FLD ▽ (Previous Folder): Press this button to go to the first track in the previous folder. Pressing this button while in folder random mode takes you to the previous folder and plays the tracks in random order in that folder.

2 FLD △ (Next Folder): Press this button to go to the first track in the next folder. Pressing this button while in folder random mode takes the CD to the next folder and plays the tracks in random order in that folder.

3 REV (Reverse): Press and hold this button to reverse quickly within a track. Press and hold this button for less than two seconds to reverse at 10 times the normal playing speed. Press and hold it for more than two seconds to reverse at 20 times the normal playing speed. Release this button to play the passage. REV and the elapsed time of the track displays.

4 FWD (Forward): Press and hold this button to advance quickly within a track. Press and hold this button for less than two seconds to advance at 10 times the normal playing speed. Press and hold it for more than two seconds to advance at 20 times the normal playing speed. Release this button to play the passage. FWD and the elapsed time of the track displays.

6 RDM (Random): To play the tracks in random order in the current folder or playlist, press and release this button. FLDR RDM (folder random) displays. Once all of the tracks in the current folder or playlist have played, the system moves to the next folder or playlist and plays all of the tracks in random order.

To play all the tracks in random order on the CD, press and hold this button for two seconds. A beep sounds and DISC RDM (disc random) displays. This feature does not work with playlists.

When in random, pressing and releasing either SEEK arrow takes the CD to the previous or to the next random track.

Press and release this button again to turn off random play. NO RDM (no random) displays.

◀ SEEK ▶ : Press the left SEEK arrow to go to the start of the previous track. Press the right SEEK arrow to go to the start of the next track. Pressing either SEEK arrow for more than two seconds searches the previous or next tracks at two tracks per second. Release the button to stop searching and to play the track.

◁ TUNE ▷ : Turning this knob fast tracks reverse or advances through the tracks in all folders or playlists. The track number and file name displays for each track. Turning this knob while in random fast tracks reverse or advances the tracks in sequential order.

DISPL (Display): Press this knob to switch between track mode, folder/playlist mode, and time of day mode. The display shows only eight characters, but there can be up to four pages of text. If there are more than eight characters in the song, folder, or playlist name, pressing this knob within two seconds takes you to the next page of text. If there are no other pages to be shown, pressing this knob within two seconds takes you to the next display mode.

- Track mode displays the current track number and the ID3 tag song name.
- Folder/playlist mode displays the current folder or playlist number and the folder/playlist name.
- Time of day mode displays the time of day and the ID3 tag song name.

To change the default on the display, press the DISPL knob until you see the desired display, then press and hold this knob for two seconds. The radio produces one beep and the selected display is now the default.

INFO (Information): INFO displays when a current track has ID3 tag information. Press this button to display the artist name and album contained in the tag. INFO disappears from the display when the information in the ID3 tag has finished being read.

BAND: Press this button to listen to the radio when a CD is playing. The inactive CD remains inside the radio for future listening.

CD AUX (Auxiliary): Press this button to play a CD when listening to the radio. The CD symbol illuminates on the display when a CD is loaded.

⏏ **(Eject):** Press this button to eject a CD. Eject can activate while either the ignition or radio is off. CDs can be loaded with the ignition and radio off if this button is pressed first.

XM Radio Messages

XL (Explicit Language Channels): These channels, or any others, can be blocked at a customer's request, by calling 1-800-852-XMXM (9696).

Updating: The encryption code in the receiver is being updated, and no action is required. This process should take no longer than 30 seconds.

No Signl: The system is functioning correctly, but the vehicle is in a location that is blocking the XM™ signal. When the vehicle is moved into an open area, the signal should return.

Loading: The radio system is acquiring and processing audio and text data. No action is needed. This message should disappear shortly.

Off Air: This channel is not currently in service. Tune to another channel.

CH Unavl: This previously assigned channel is no longer assigned. Tune to another station. If this station was one of the presets, choose another station for that preset button.

No Info: No artist, song title, category, or text information is available at this time on this channel. The system is working properly.

No Info: No text or informational messages are available at this time on this channel. The system is working properly.

Not Found: There are no channels available for the selected category. The system is working properly.

XM Lock: The XM™ receiver in your vehicle could have previously been in another vehicle. For security purposes, XM™ receivers cannot be swapped between vehicles. If this message is received after having your vehicle serviced, check with your dealer/retailer.

Radio ID: If this message is received when tuned to channel 0, there could be a receiver fault. Consult with your dealer/retailer.

Check XM: If this message does not clear within a short period of time, the receiver could have a fault. Consult with your dealer/retailer.

Theft-Deterrent Feature

Non-RDS Radios

THEFTLOCK® is designed to discourage theft of your vehicle's radio. The feature works automatically by learning a portion of the Vehicle Identification Number (VIN). If the radio is moved to a different vehicle, it does not operate and LOC displays.

With THEFTLOCK® activated, the radio does not operate if stolen.

RDS Radios

THEFTLOCK® is designed to discourage theft of your vehicle's radio. The feature works automatically by learning a portion of the Vehicle Identification Number (VIN). If the radio is moved to a different vehicle, it does not operate and LOCKED displays.

When the radio and vehicle are turned off, the blinking red light indicates that THEFTLOCK® is armed.

With THEFTLOCK® activated, the radio does not operate if stolen.

Radio Reception

Frequency interference and static can occur during normal radio reception if items such as cell phone chargers, vehicle convenience accessories, and external electronic devices are plugged into the accessory power outlet. If there is interference or static, unplug the item from the accessory power outlet.

AM

The range for most AM stations is greater than for FM, especially at night. The longer range can cause station frequencies to interfere with each other. For better radio reception, most AM radio stations boost the power levels during the day, and then reduce these levels during the night. Static can also occur when things like storms and power lines interfere with radio reception. When this happens, try reducing the treble on your radio.

FM Stereo

FM stereo gives the best sound, but FM signals reach only about 10 to 40 miles (16 to 65 km). Tall buildings or hills can interfere with FM signals, causing the sound to fade in and out.

XM™ Satellite Radio Service

XM™ Satellite Radio Service gives digital radio reception from coast-to-coast in the 48 contiguous United States, and in Canada. Just as with FM, tall buildings or hills can interfere with satellite radio signals, causing the sound to fade in and out. In addition, traveling or standing under heavy foliage, bridges, garages, or tunnels may cause loss of the XM™ signal for a period of time. The radio may display No Signl to indicate interference.

Fixed Mast Antenna

The fixed mast antenna can withstand most car washes without being damaged. If the mast should ever become slightly bent, straighten it out by hand. If the mast is badly bent, replace it.

Check occasionally to make sure the mast is still tightened to its base. If tightening is required, tighten by hand, then with a wrench one quarter turn.

XM™ Satellite Radio Antenna System

The XM™ Satellite Radio antenna is located on the roof of your vehicle. Keep this antenna clear of snow and ice build up for clear radio reception.

If your vehicle has a sunroof, the performance of the XM™ system may be affected if the sunroof is open.

Loading items onto the roof of your vehicle can interfere with the performance of the XM™ system. Make sure the XM™ Satellite Radio antenna is not obstructed.

Chime Level Adjustment

The radio is used to adjust the vehicle's chime level. To change the volume level of the chime, press and hold pushbutton 6 with the ignition on and the radio power off. The volume level will change from the normal level to loud, and LOUD will appear on the radio display. To change back to the default or normal setting, press and hold pushbutton 6 again. The volume level will change from the loud level to normal, and NORMAL will appear on the radio display. Each time the chime volume is changed, three chimes will sound to indicate the new volume selected. Removing the radio and not replacing it with a factory radio or chime module will disable vehicle chimes.

NOTES

Section 4 Driving Your Vehicle

Your Driving, the Road, and Your Vehicle 4-2
Defensive Driving 4-2
Drunk Driving 4-2
Control of a Vehicle 4-3
Braking 4-3
Antilock Brake System (ABS) 4-4
Braking in Emergencies 4-5
Traction Control System (TCS) 4-5
Limited-Slip Rear Axle 4-6
Steering 4-7
Off-Road Recovery 4-9
Passing 4-9
Loss of Control 4-10
Off-Road Driving 4-11
Driving at Night 4-24
Driving in Rain and on Wet Roads 4-24
Before Leaving on a Long Trip 4-26
Highway Hypnosis 4-26
Hill and Mountain Roads 4-27
Winter Driving 4-28
If Your Vehicle is Stuck in Sand, Mud, Ice, or Snow 4-32
Rocking Your Vehicle to Get It Out 4-32
Recovery Hooks 4-33
Loading Your Vehicle 4-34
Truck-Camper Loading Information 4-40
Pickup Conversion to Chassis Cab 4-40
Towing 4-41
Towing Your Vehicle 4-41
Recreational Vehicle Towing 4-41
Towing a Trailer 4-47
Trailer Recommendations 4-60

Your Driving, the Road, and Your Vehicle

Defensive Driving

Defensive driving means “always expect the unexpected.” The first step in driving defensively is to wear your safety belt — See *Safety Belts: They Are for Everyone on page 1-12*.

⚠ CAUTION:

Assume that other road users (pedestrians, bicyclists, and other drivers) are going to be careless and make mistakes. Anticipate what they might do and be ready. In addition:

- **Allow enough following distance between you and the driver in front of you.**
- **Focus on the task of driving.**

Driver distraction can cause collisions resulting in injury or possible death. These simple defensive driving techniques could save your life.

Drunk Driving

⚠ CAUTION:

Drinking and then driving is very dangerous. Your reflexes, perceptions, attentiveness, and judgment can be affected by even a small amount of alcohol. You can have a serious — or even fatal — collision if you drive after drinking. Do not drink and drive or ride with a driver who has been drinking. Ride home in a cab; or if you are with a group, designate a driver who will not drink.

Death and injury associated with drinking and driving is a global tragedy.

Alcohol affects four things that anyone needs to drive a vehicle: judgment, muscular coordination, vision, and attentiveness.

Police records show that almost 40 percent of all motor vehicle-related deaths involve alcohol. In most cases, these deaths are the result of someone who was drinking and driving. In recent years, more than 17,000 annual motor vehicle-related deaths have been associated with the use of alcohol, with about 250,000 people injured.

For persons under 21, it is against the law in every U.S. state to drink alcohol. There are good medical, psychological, and developmental reasons for these laws.

The obvious way to eliminate the leading highway safety problem is for people never to drink alcohol and then drive.

Medical research shows that alcohol in a person's system can make crash injuries worse, especially injuries to the brain, spinal cord, or heart. This means that when anyone who has been drinking — driver or passenger — is in a crash, that person's chance of being killed or permanently disabled is higher than if the person had not been drinking.

Control of a Vehicle

The following three systems help to control your vehicle while driving — brakes, steering, and accelerator. At times, as when driving on snow or ice, it is easy to ask more of those control systems than the tires and road can provide. Meaning, you can lose control of your vehicle.

Adding non-dealer/non-retailer accessories can affect your vehicle's performance. See *Accessories and Modifications on page 5-3*.

Braking

See *Brake System Warning Light on page 3-31*.

Braking action involves perception time and reaction time. First, you have to decide to push on the brake pedal. That is perception time. Then you have to bring up your foot and do it. That is reaction time.

Average reaction time is about three-fourths of a second. But that is only an average. It might be less with one driver and as long as two or three seconds or more with another. Age, physical condition, alertness, coordination, and eyesight all play a part. So do alcohol, drugs, and frustration. But even in three-fourths of a second, a vehicle moving at 60 mph (100 km/h) travels 66 feet (20 m). That could be a lot of distance in an emergency, so keeping enough space between your vehicle and others is important.

And, of course, actual stopping distances vary greatly with the surface of the road, whether it is pavement or gravel; the condition of the road, whether it is wet, dry, or icy; tire tread; the condition of the brakes; the weight of the vehicle; and the amount of brake force applied.

Avoid needless heavy braking. Some people drive in spurts — heavy acceleration followed by heavy braking — rather than keeping pace with traffic. This is a mistake. The brakes might not have time to cool between hard stops. The brakes will wear out much faster if you do a lot of heavy braking. If you keep pace with the traffic and allow realistic following distances, you will eliminate a lot of unnecessary braking. That means better braking and longer brake life.

If your vehicle's engine ever stops while you are driving, brake normally but do not pump the brakes. If you do, the pedal could get harder to push down. If the engine stops, you will still have some power brake assist. But you will use it when you brake. Once the power assist is used up, it can take longer to stop and the brake pedal will be harder to push.

Adding non-dealer/non-retailer accessories can affect your vehicle's performance. See *Accessories and Modifications on page 5-3*.

Antilock Brake System (ABS)

Your vehicle has the Antilock Brake System (ABS), an advanced electronic braking system that will help prevent a braking skid.

When you start the engine and begin to drive away, ABS will check itself. You might hear a momentary motor or clicking noise while this test is going on. This is normal.

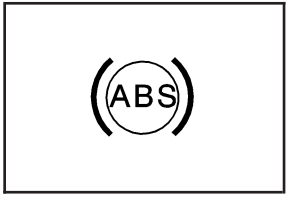

If there is a problem with the ABS, this warning light will stay on. See *Antilock Brake System Warning Light on page 3-32*.

Let us say the road is wet and you are driving safely. Suddenly, an animal jumps out in front of you. You slam on the brakes and continue braking. Here is what happens with ABS:

A computer senses that wheels are slowing down. If one of the wheels is about to stop rolling, the computer will separately work the brakes at each front wheel and at both rear wheels.

ABS can change the brake pressure faster than any driver could. The computer is programmed to make the most of available tire and road conditions. This can help you steer around the obstacle while braking hard.

As you brake, the computer keeps receiving updates on wheel speed and controls braking pressure accordingly.

Remember: ABS does not change the time you need to get your foot up to the brake pedal or always decrease stopping distance. If you get too close to the vehicle in front of you, you will not have time to apply the brakes if that vehicle suddenly slows or stops. Always leave enough room up ahead to stop, even though you have ABS.

Using ABS

Do not pump the brakes. Just hold the brake pedal down firmly and let antilock work for you. You might feel the brakes vibrate or notice some noise, but this is normal.

Braking in Emergencies

With ABS, you can steer and brake at the same time. In many emergencies, steering can help you more than even the very best braking.

Traction Control System (TCS)

Your vehicle may have a Traction Control System (TCS) that limits wheel spin. This is especially useful in slippery road conditions. The system operates only if it senses that one or both of the rear wheels are spinning or beginning to lose traction. When this happens, the system reduces engine power and may also upshift the transmission to limit wheel spin.

You may feel or hear the system working, but this is normal.

The TCS warning light will also flash to indicate that the traction control system is active.

This warning light will come on to let you know if there is a problem with your traction control system.

The light will also illuminate when the traction control system is turned off, and a TRAC OFF message will also appear on the Driver Information Center (DIC). See *DIC Warnings and Messages on page 3-42* for more information.

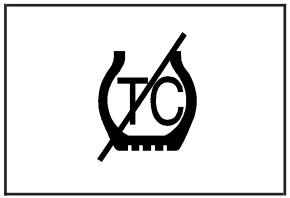

The TCS button is located on your instrument panel. Press this button to turn the TCS off and on.

If your vehicle is in cruise control when the traction control system begins to limit wheel spin, the cruise control will automatically disengage. When road conditions allow you to safely use it again, you may re-engage the cruise control. See *Cruise Control on page 3-10*.

TCS operates in all transmission shift lever positions. But the system can upshift the transmission only as high as the shift lever position you have chosen, so you should use the lower gears only when necessary. See *Automatic Transmission Operation on page 2-24* and/or *Manual Transmission Operation on page 2-26* for more information.

If there is a problem with TCS, the warning light will come on, and TRACTION FAULT will be displayed on your Driver Information Center (DIC). When this warning is displayed, the system will not limit wheel spin. Adjust your driving accordingly.

To limit wheel spin, especially in slippery road conditions, you should always leave TCS on. But you can turn the system off if you ever need to. You should turn the system off if your vehicle ever gets stuck in sand, mud or snow and rocking the vehicle is required. See *Rocking Your Vehicle to Get It Out on page 4-32* and *If Your Vehicle is Stuck in Sand, Mud, Ice, or Snow on page 4-32* for more information.

Adding non-dealer/non-retailer accessories can affect your vehicle's performance. See *Accessories and Modifications on page 5-3* for more information.

Limited-Slip Rear Axle

If your vehicle has this feature, your limited-slip rear axle can give you additional traction on snow, mud, ice, sand or gravel. It works like a standard axle most of the time, but when one of the rear wheels has no traction and the other does, this feature will allow the wheel with traction to move the vehicle.

Steering

Power Steering

If you lose power steering assist because the engine stops or the system is not functioning, you can steer but it will take much more effort.

Steering Tips

It is important to take curves at a reasonable speed.

A lot of the “driver lost control” accidents mentioned on the news happen on curves. Here is why:

Experienced driver or beginner, each of us is subject to the same laws of physics when driving on curves. The traction of the tires against the road surface makes it possible for the vehicle to change its path when you turn the front wheels. If there is no traction, inertia will keep the vehicle going in the same direction. If you have ever tried to steer a vehicle on wet ice, you will understand this.

The traction you can get in a curve depends on the condition of the tires and the road surface, the angle at which the curve is banked, and your speed. While you are in a curve, speed is the one factor you can control.

Suppose you are steering through a sharp curve. Then you suddenly accelerate. Both control systems — steering and acceleration — have to do their work where the tires meet the road. Adding the sudden acceleration can demand too much of those places. You can lose control.

What should you do if this ever happens? Ease up on the accelerator pedal, steer the vehicle the way you want it to go, and slow down.

Speed limit signs near curves warn that you should adjust your speed. Of course, the posted speeds are based on good weather and road conditions. Under less favorable conditions you will want to go slower.

If you need to reduce your speed as you approach a curve, do it before you enter the curve, while the front wheels are straight ahead.

Try to adjust your speed so you can drive through the curve. Maintain a reasonable, steady speed. Wait to accelerate until you are out of the curve, and then accelerate gently into the straightaway.

Adding non-dealer/non-retailer accessories can affect your vehicle’s performance. See *Accessories and Modifications on page 5-3*.

Steering in Emergencies

There are times when steering can be more effective than braking. For example, you come over a hill and find a truck stopped in your lane, or a car suddenly pulls out from nowhere, or a child darts out from between parked cars and stops right in front of you. You can avoid these problems by braking — if you can stop in time. But sometimes you cannot; there is not room. That is the time for evasive action — steering around the problem.

Your vehicle can perform very well in emergencies like these. First apply the brakes. See *Braking on page 4-3*. It is better to remove as much speed as you can from a possible collision. Then steer around the problem, to the left or right depending on the space available.

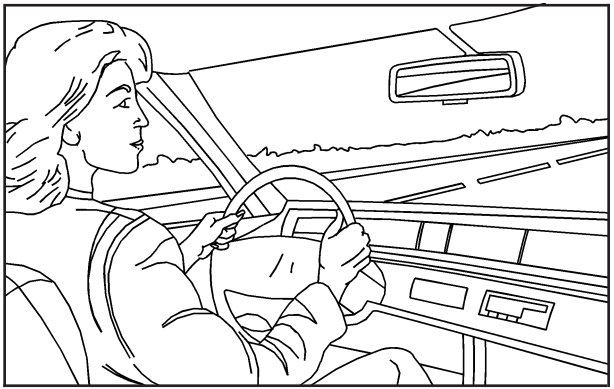

An emergency like this requires close attention and a quick decision. If you are holding the steering wheel at the recommended 9 and 3 o'clock positions, you can turn it a full 180 degrees very quickly without removing either hand. But you have to act fast, steer quickly, and just as quickly straighten the wheel once you have avoided the object.

The fact that such emergency situations are always possible is a good reason to practice defensive driving at all times and wear safety belts properly.

Off-Road Recovery

You may find that your right wheels have dropped off the edge of a road onto the shoulder while you are driving.

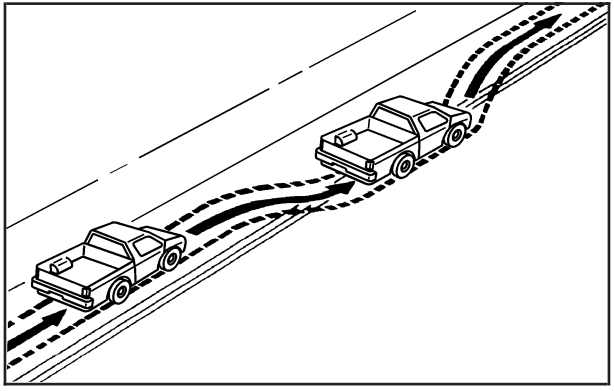

If the level of the shoulder is only slightly below the pavement, recovery should be fairly easy. Ease off the accelerator and then, if there is nothing in the way, steer so that your vehicle straddles the edge of the pavement. You can turn the steering wheel up to one-quarter turn until the right front tire contacts the pavement edge. Then turn the steering wheel to go straight down the roadway.

Passing

Passing another vehicle on a two-lane road can be dangerous. To reduce the risk of danger while passing, we suggest the following tips:

- Look down the road, to the sides, and to crossroads for situations that might affect a successful pass. If in doubt, wait.
- Watch for traffic signs, pavement markings, and lines that could indicate a turn or an intersection. Never cross a solid or double-solid line on your side of the lane.
- Do not get too close to the vehicle you want to pass. Doing so can reduce your visibility.
- Wait your turn to pass a slow vehicle.
- When you are being passed, ease to the right.

Loss of Control

Let us review what driving experts say about what happens when the three control systems — brakes, steering, and acceleration — do not have enough friction where the tires meet the road to do what the driver has asked.

In any emergency, do not give up. Keep trying to steer and constantly seek an escape route or area of less danger.

Skidding

In a skid, a driver can lose control of the vehicle. Defensive drivers avoid most skids by taking reasonable care suited to existing conditions, and by not overdriving those conditions. But skids are always possible.

The three types of skids correspond to your vehicle's three control systems. In the braking skid, the wheels are not rolling. In the steering or cornering skid, too much speed or steering in a curve causes tires to slip and lose cornering force. And in the acceleration skid, too much throttle causes the driving wheels to spin.

A cornering skid is best handled by easing your foot off the accelerator pedal.

If your vehicle starts to slide, ease your foot off the accelerator pedal and quickly steer the way you want the vehicle to go. If you start steering quickly enough, your vehicle may straighten out. Always be ready for a second skid if it occurs.

Of course, traction is reduced when water, snow, ice, gravel, or other material is on the road. For safety, you want to slow down and adjust your driving to these conditions. It is important to slow down on slippery surfaces because stopping distance is longer and vehicle control more limited.

While driving on a surface with reduced traction, try your best to avoid sudden steering, acceleration, or braking, including reducing vehicle speed by shifting to a lower gear. Any sudden changes could cause the tires to slide. You might not realize the surface is slippery until your vehicle is skidding. Learn to recognize warning clues — such as enough water, ice, or packed snow on the road to make a mirrored surface — and slow down when you have any doubt.

Remember: Any Antilock Brake System (ABS) helps avoid only the braking skid.

Off-Road Driving

This off-road guide is for vehicles that have four-wheel drive. Also, see *Braking on page 4-3* and *Antilock Brake System (ABS) on page 4-4*. If your vehicle does not have four-wheel drive, you should not drive off-road unless you are on a level, solid surface.

The airbag system is designed to work properly under a wide range of conditions, including off-road usage. Observe safe driving speeds, especially on rough terrain. As always, wear your safety belt.

Off-road driving can be great fun. But it does have some definite hazards. The greatest of these is the terrain itself.

“Off-roading” means you have left the great North American road system behind. Traffic lanes are not marked. Curves are not banked. There are no road signs. Surfaces can be slippery, rough, uphill, or downhill. In short, you have gone right back to nature.

Off-road driving involves some new skills. And that is why it is very important that you read this guide. You will find many driving tips and suggestions. These will help make your off-road driving safer and more enjoyable.

Before You Go Off-Roading

There are some things to do before you go out. For example, be sure to have all necessary maintenance and service work done. Check to make sure all underbody shields, if the vehicle has them, are properly attached. Be sure you read all the information about your four-wheel-drive vehicle in this manual. Is there enough fuel? Is the spare tire fully inflated? Are the fluid levels up where they should be? What are the local laws that apply to off-roading where you will be driving? If you do not know, you should check with law enforcement people in the area. Will you be on someone’s private land? If so, be sure to get the necessary permission.

Loading Your Vehicle for Off-Road Driving

⚠ CAUTION:

- **Cargo on the load floor piled higher than the seatbacks can be thrown forward during a sudden stop. You or your passengers could be injured. Keep cargo below the top of the seatbacks.**
- **Unsecured cargo on the load floor can be tossed about when driving over rough terrain. You or your passengers can be struck by flying objects. Secure the cargo properly.**
- **Heavy loads on the roof raise the vehicle's center of gravity, making it more likely to roll over. You can be seriously or fatally injured if the vehicle rolls over. Put heavy loads inside the cargo area, not on the roof. Keep cargo in the cargo area as far forward and low as possible.**

There are some important things to remember about how to load your vehicle.

- The heaviest things should be on the load floor and forward of the rear axle. Put heavier items as far forward as you can.
- Be sure the load is secured properly, so driving on the off-road terrain does not toss things around.

You will find other important information in this manual. See *Loading Your Vehicle on page 4-34* and *Tires on page 5-59*.

Environmental Concerns

Off-road driving can provide wholesome and satisfying recreation. However, it also raises environmental concerns. We recognize these concerns and urge every off-roader to follow these basic rules for protecting the environment:

- Always use established trails, roads, and areas that have been specially set aside for public off-road recreational driving; obey all posted regulations.
- Avoid any driving practice that could damage the environment — shrubs, flowers, trees, grasses — or disturb wildlife. This includes wheel-spinning, breaking down trees, or unnecessary driving through streams or over soft ground.
- Always carry a litter bag — make sure all refuse is removed from any campsite before leaving.
- Take extreme care with open fires where permitted, camp stoves, and lanterns.
- Never park your vehicle over dry grass or other combustible materials that could catch fire from the heat of the vehicle's exhaust system.

Traveling to Remote Areas

It makes sense to plan your trip, especially when going to a remote area. Know the terrain and plan your route. You are much less likely to get bad surprises. Get accurate maps of trails and terrain. Try to learn of any blocked or closed roads.

It is also a good idea to travel with at least one other vehicle. If something happens to one of them, the other can help quickly.

Does your vehicle have a winch? If so, be sure to read the winch instructions. In a remote area, a winch can be handy if you get stuck. But you will want to know how to use it properly.

Getting Familiar with Off-Road Driving

It is a good idea to practice in an area that is safe and close to home before you go into the wilderness. Off-road driving does require some new and different skills. Here is what we mean.

Tune your senses to different kinds of signals. Your eyes, for example, need to constantly sweep the terrain for unexpected obstacles. Your ears need to listen for unusual tire or engine sounds. With your arms, hands, feet, and body, you will need to respond to vibrations and vehicle bounce.

Controlling your vehicle is the key to successful off-road driving. One of the best ways to control your vehicle is to control your speed. Here are some things to keep in mind. At higher speeds:

- You approach things faster and you have less time to scan the terrain for obstacles.
- You have less time to react.
- You have more vehicle bounce when you drive over obstacles.
- You will need more distance for braking, especially since you are on an unpaved surface.

⚠ CAUTION:

When you are driving off-road, bouncing and quick changes in direction can easily throw you out of position. This could cause you to lose control and crash. So, whether you are driving on or off the road, you and your passengers should wear safety belts.

Scanning the Terrain

Off-road driving can take you over many different kinds of terrain. You need to be familiar with the terrain and its many different features. Here are some things to consider.

Surface Conditions: Off-roading can take you over hard-packed dirt, gravel, rocks, grass, sand, mud, snow, or ice. Each of these surfaces affects the steering, acceleration, and braking of your vehicle in different ways. Depending upon the kind of surface you are on, you may experience slipping, sliding, wheel spinning, delayed acceleration, poor traction, and longer braking distances.

Surface Obstacles: Unseen or hidden obstacles can be hazardous. A rock, log, hole, rut, or bump can startle you if you are not prepared for them. Often these obstacles are hidden by grass, bushes, snow, or even the rise and fall of the terrain itself. Here are some things to consider:

- Is the path ahead clear?
- Will the surface texture change abruptly up ahead?
- Does the travel take you uphill or downhill? There is more discussion of these subjects later.
- Will you have to stop suddenly or change direction quickly?

When you drive over obstacles or rough terrain, keep a firm grip on the steering wheel. Ruts, troughs, or other surface features can jerk the wheel out of your hands if you are not prepared.

When you drive over bumps, rocks, or other obstacles, the wheels can leave the ground. If this happens, even with one or two wheels, you cannot control the vehicle as well or at all.

Because you will be on an unpaved surface, it is especially important to avoid sudden acceleration, sudden turns, or sudden braking.

In a way, off-road driving requires a different kind of alertness from driving on paved roads and highways. There are no road signs, posted speed limits, or signal lights. You have to use your own good judgment about what is safe and what is not.

Drinking and driving can be very dangerous on any road. And this is certainly true for off-road driving. At the very time you need special alertness and driving skills, your reflexes, perceptions, and judgment can be affected by even a small amount of alcohol. You could have a serious — or even fatal — accident if you drink and drive or ride with a driver who has been drinking. See *Drunk Driving on page 4-2*.

Driving on Off-Road Hills

Off-road driving often takes you up, down, or across a hill. Driving safely on hills requires good judgment and an understanding of what your vehicle can and cannot do. There are some hills that simply cannot be driven, no matter how well built the vehicle.

⚠ CAUTION:

Many hills are simply too steep for any vehicle. If you drive up them, you will stall. If you drive down them, you cannot control your speed. If you drive across them, you will roll over. You could be seriously injured or killed. If you have any doubt about the steepness, do not drive the hill.

Approaching a Hill

When you approach a hill, you need to decide if it is one of those hills that is just too steep to climb, descend, or cross. Steepness can be hard to judge.

On a very small hill, for example, there may be a smooth, constant incline with only a small change in elevation where you can easily see all the way to the top. On a large hill, the incline may get steeper as you near the top, but you may not see this because the crest of the hill is hidden by bushes, grass, or shrubs.

Here are some other things to consider as you approach a hill.

- Is there a constant incline, or does the hill get sharply steeper in places?
- Is there good traction on the hillside, or will the surface cause tire slipping?
- Is there a straight path up or down the hill so you will not have to make turning maneuvers?
- Are there obstructions on the hill that can block your path, such as boulders, trees, logs, or ruts?
- What is beyond the hill? Is there a cliff, an embankment, a drop-off, a fence? Get out and walk the hill if you do not know. It is the smart way to find out.
- Is the hill simply too rough? Steep hills often have ruts, gullies, troughs, and exposed rocks because they are more susceptible to the effects of erosion.

Driving Uphill

Once you decide you can safely drive up the hill, you need to take some special steps.

- Use a low gear and get a firm grip on the steering wheel.
- Get a smooth start up the hill and try to maintain your speed. Do not use more power than you need, because you do not want the wheels to start spinning or sliding.

⚠ CAUTION:

Turning or driving across steep hills can be dangerous. You could lose traction, slide sideways, and possibly roll over. You could be seriously injured or killed. When driving up hills, always try to go straight up.

- Try to drive straight up the hill if at all possible. If the path twists and turns, you might want to find another route.
- Ease up on your speed as you approach the top of the hill.
- Attach a flag to the vehicle to make you more visible to approaching traffic on trails or hills.
- Sound the horn as you approach the top of the hill to let opposing traffic know you are there.
- Use your headlamps even during the day. They make your vehicle more visible to oncoming traffic.

⚠ CAUTION:

Driving to the top (crest) of a hill at full speed can cause an accident. There could be a drop-off, embankment, cliff, or even another vehicle. You could be seriously injured or killed. As you near the top of a hill, slow down and stay alert.

There are some things you should do if the vehicle stalls, or is about to stall, and you cannot make it up the hill:

- Push the brake pedal to stop the vehicle and keep it from rolling backwards. Also, apply the parking brake.
- If your engine is still running, shift the transmission to REVERSE (R), release the parking brake, and slowly back down the hill in REVERSE (R).
- If your engine has stopped running, you will need to restart it. With the brake pedal pressed and the parking brake still applied, shift the transmission to PARK (P), or shift to NEUTRAL if your vehicle has a manual transmission, and restart the engine. Then, shift to REVERSE (R), release the parking brake, and slowly back down the hill as straight as possible in REVERSE (R).
- As you are backing down the hill, put your left hand on the steering wheel at the 12 o'clock position. This way, you will be able to tell if the wheels are straight and maneuver as you back down. It is best that you back down the hill with the wheels straight rather than in the left or right direction. Turning the wheel too far to the left or right will increase the possibility of a rollover.

There are also some things you must not do if you stall, or are about to stall, when going up a hill:

- Never attempt to prevent a stall by shifting into NEUTRAL (N), or pressing the clutch if your vehicle has a manual transmission, to rev-up the engine and regain forward momentum. This will not work. Your vehicle will roll backwards very quickly and you could go out of control.

  Instead, apply the regular brake to stop the vehicle. Then apply the parking brake. Shift to REVERSE (R), release the parking brake, and slowly back straight down.
- Never attempt to turn around if you are about to stall when going up a hill. If the hill is steep enough to stall your vehicle, it is steep enough to cause you to roll over if you turn around. If you cannot make it up the hill, you must back straight down the hill.

If, after stalling, you try to back down the hill and decide you just cannot do it, set the parking brake, put the automatic transmission in PARK (P), or the manual transmission in FIRST (1), and turn off the engine. Leave the vehicle and go get some help. Exit on the uphill side and stay clear of the path the vehicle would take if it rolled downhill.

Driving Downhill

When off-roading takes you downhill, you will want to consider a number of things:

- How steep is the downhill? Will I be able to maintain vehicle control?
- What is the surface like? Smooth? Rough? Slippery? Hard-packed dirt? Gravel?
- Are there hidden surface obstacles? Ruts? Logs? Boulders?
- What is at the bottom of the hill? Is there a hidden creek bank or even a river bottom with large rocks?

If you decide you can go down a hill safely, then try to keep your vehicle headed straight down, and use a low gear. This way, engine drag can help the brakes and they will not have to do all the work. Descend slowly, keeping your vehicle under control at all times.

⚠ CAUTION:

Heavy braking when going down a hill can cause your brakes to overheat and fade. This could cause loss of control and a serious accident. Apply the brakes lightly when descending a hill and use a low gear to keep vehicle speed under control.

There some things not to do when driving down a hill. These are important because, if you ignore them, you could lose control and have a serious accident:

- When driving downhill, avoid turns that take you across the incline of the hill. A hill that is not too steep to drive down may be too steep to drive across. You could roll over if you do not drive straight down.
- Never go downhill with the transmission in NEUTRAL (N), or with the clutch pedal pressed down with a manual transmission. This is called “free-wheeling.” The brakes will have to do all the work and could overheat and fade.

Your vehicle is much more likely to stall when going uphill. But if it happens when going downhill:

1. Stop your vehicle by applying the regular brakes. Apply the parking brake.
2. Shift to PARK (P), or to NEUTRAL with the manual transmission, and, while still braking, restart the engine.
3. Shift back to a low gear, release the parking brake, and drive straight down.
4. If the engine will not start, get out and get help.

Driving Across an Incline

Sooner or later, an off-road trail will probably go across the incline of a hill. If this happens, you have to decide whether to try to drive across the incline. Here are some things to consider:

⚠ CAUTION:

Driving across an incline that is too steep will make your vehicle roll over. You could be seriously injured or killed. If you have any doubt about the steepness of the incline, do not drive across it. Find another route instead.

- A hill that can be driven straight up or down may be too steep to drive across. When you go straight up or down a hill, the length of the wheel base — the distance from the front wheels to the rear wheels — reduces the likelihood the vehicle will tumble end over end. But when you drive across an incline, the much more narrow track width — the distance between the left and right wheels — may not prevent the vehicle from tilting and rolling over. Also, driving across an incline puts more weight on the downhill wheels. This could cause a downhill slide or a rollover.
- Surface conditions can be a problem when you drive across a hill. Loose gravel, muddy spots, or even wet grass can cause your tires to slip sideways, downhill. If the vehicle slips sideways, it can hit something that will trip it — a rock, a rut, etc. — and roll over.
- Hidden obstacles can make the steepness of the incline even worse. If you drive across a rock with the uphill wheels, or if the downhill wheels drop into a rut or depression, your vehicle can tilt even more.

For reasons like these, you need to decide carefully whether to try to drive across an incline. Just because the trail goes across the incline does not mean you have to drive it. The last vehicle to try it might have rolled over.

When driving across an incline that is not too steep, the vehicle can hit some loose gravel and start to slide downhill. If you feel your vehicle starting to slide sideways, turn downhill. This should help straighten out the vehicle and prevent the side slipping. However, a much better way to prevent this is to get out and “walk the course” so you know what the surface is like before you drive it.

Stalling on an Incline

⚠ CAUTION:

Getting out on the downhill (low) side of a vehicle stopped across an incline is dangerous. If the vehicle rolls over, you could be crushed or killed. Always get out on the uphill (high) side of the vehicle and stay well clear of the rollover path.

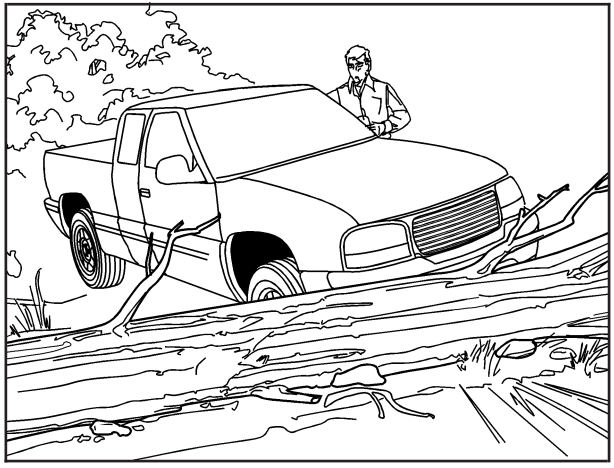

If your vehicle stalls when you are crossing an incline, be sure you, and any passengers, get out on the uphill side, even if the door there is harder to open. If you get out on the downhill side and the vehicle starts to roll over, you will be right in its path.

If you have to walk down the slope, stay out of the path the vehicle will take if it does roll over.

Driving in Mud, Sand, Snow, or Ice

When you drive in mud, snow, or sand, your wheels will not get good traction. You cannot accelerate as quickly, turning is more difficult, and you will need longer braking distances.

It is best to use a low gear when you are in mud — the deeper the mud, the lower the gear. In really deep mud, the idea is to keep your vehicle moving so you do not get stuck.

When you drive on sand, you will sense a change in wheel traction. But it will depend upon how loosely packed the sand is. On loosely packed sand, such as on beaches or sand dunes, your tires will tend to sink into the sand. This has an effect on steering, accelerating, and braking. Drive at a reduced speed and avoid sharp turns or abrupt maneuvers.

Hard packed snow and ice offer the worst tire traction. On these surfaces, it is very easy to lose control. On wet ice, for example, the traction is so poor that you will have difficulty accelerating. And if you do get moving, poor steering and difficult braking can cause you to slide out of control.

⚠ CAUTION:

Driving on frozen lakes, ponds, or rivers can be dangerous. Underwater springs, currents under the ice, or sudden thaws can weaken the ice. Your vehicle could fall through the ice and you and your passengers could drown. Drive your vehicle on safe surfaces only.

Driving in Water

⚠ CAUTION:

Driving through rushing water can be dangerous. Deep water can sweep your vehicle downstream and you and your passengers could drown. If it is only shallow water, it can still wash away the ground from under your tires, and you could lose traction and roll the vehicle over. Do not drive through rushing water.

Heavy rain can mean flash flooding, and flood waters demand extreme caution.

Find out how deep the water is before you drive through it. If it is deep enough to cover the wheel hubs, axles, or exhaust pipe, do not try it — you probably will not get through. Also, water that deep can damage the axle and other vehicle parts.

If the water is not too deep, drive slowly through it. At faster speeds, water splashes on the ignition system and your vehicle can stall. Stalling can also occur if you get the tailpipe under water. And, as long as the tailpipe is under water, you will never be able to start the engine. When you go through water, remember that when the brakes get wet, it may take you longer to stop.

See *Driving in Rain and on Wet Roads on page 4-24* for more information on driving through water.

After Off-Road Driving

Remove any brush or debris that has collected on the underbody, chassis, or under the hood. These accumulations can be a fire hazard.

After operation in mud or sand, have the brake linings cleaned and checked. These substances can cause glazing and uneven braking. Check the body structure, steering, suspension, wheels, tires, and exhaust system for damage. Also, check the fuel lines and cooling system for any leakage.

Your vehicle will require more frequent service due to off-road use. Refer to the maintenance schedule for additional information.

Driving at Night

Night driving is more dangerous than day driving because some drivers are likely to be impaired — by alcohol or drugs, with night vision problems, or by fatigue.

Night driving tips include:

- Drive defensively.
- Do not drink and drive.
- Reduce headlamp glare by adjusting the inside rearview mirror.
- Slow down and keep more space between you and other vehicles because your headlamps can only light up so much road ahead.
- Watch for animals.
- When tired, pull off the road.
- Do not wear sunglasses.
- Avoid staring directly into approaching headlamps.
- Keep the windshield and all glass on your vehicle clean — inside and out.
- Keep your eyes moving, especially during turns or curves.

No one can see as well at night as in the daytime. But, as we get older, these differences increase. A 50-year-old driver might need at least twice as much light to see the same thing at night as a 20-year-old.

Driving in Rain and on Wet Roads

Rain and wet roads can reduce vehicle traction and affect your ability to stop and accelerate. Always drive slower in these types of driving conditions and avoid driving through large puddles and deep-standing or flowing water.

⚠ CAUTION:

Wet brakes can cause crashes. They might not work as well in a quick stop and could cause pulling to one side. You could lose control of the vehicle.

After driving through a large puddle of water or a car/vehicle wash, lightly apply the brake pedal until the brakes work normally.

Flowing or rushing water creates strong forces. Driving through flowing water could cause your vehicle to be carried away. If this happens, you and other vehicle occupants could drown. Do not ignore police warnings and be very cautious about trying to drive through flowing water.

Hydroplaning

Hydroplaning is dangerous. Water can build up under your vehicle's tires so they actually ride on the water. This can happen if the road is wet enough and you are going fast enough. When your vehicle is hydroplaning, it has little or no contact with the road.

There is no hard and fast rule about hydroplaning. The best advice is to slow down when the road is wet.

Other Rainy Weather Tips

Besides slowing down, other wet weather driving tips include:

- Allow extra following distance.
- Pass with caution.
- Keep windshield wiping equipment in good shape.
- Keep the windshield washer fluid reservoir filled.
- Have good tires with proper tread depth. See *Tires on page 5-59*.

Before Leaving on a Long Trip

To prepare your vehicle for a long trip, consider having it serviced by your dealer/retailer before departing.

Things to check on your own include:

- *Windshield Washer Fluid:* Reservoir full? Windows clean — inside and outside?
- *Wiper Blades:* In good shape?
- *Fuel, Engine Oil, Other Fluids:* All levels checked?
- *Lamps:* Do they all work and are lenses clean?
- *Tires:* Are treads good? Are tires inflated to recommended pressure?
- *Weather and Maps:* Safe to travel? Have up-to-date maps?

Highway Hypnosis

Always be alert and pay attention to your surroundings while driving. If you become tired or sleepy, find a safe place to park your vehicle and rest.

Other driving tips include:

- Keep the vehicle well ventilated.
- Keep interior temperature cool.
- Keep your eyes moving — scan the road ahead and to the sides.
- Check the rearview mirror and vehicle instruments often.

Hill and Mountain Roads

Driving on steep hills or through mountains is different than driving on flat or rolling terrain. Tips for driving in these conditions include:

- Keep your vehicle serviced and in good shape.
- Check all fluid levels and brakes, tires, cooling system, and transmission.
- Going down steep or long hills, shift to a lower gear.

⚠ CAUTION:

If you do not shift down, the brakes could get so hot that they would not work well. You would then have poor braking or even none going down a hill. You could crash. Shift down to let the engine assist the brakes on a steep downhill slope.

⚠ CAUTION:

Coasting downhill in NEUTRAL (N) or with the ignition off is dangerous. The brakes will have to do all the work of slowing down and they could get so hot that they would not work well. You would then have poor braking or even none going down a hill. You could crash. Always have the engine running and your vehicle in gear when you go downhill.

- Stay in your own lane. Do not swing wide or cut across the center of the road. Drive at speeds that let you stay in your own lane.
- Top of hills: Be alert — something could be in your lane (stalled car, accident).
- Pay attention to special road signs (falling rocks area, winding roads, long grades, passing or no-passing zones) and take appropriate action.

See *Off-Road Driving on page 4-11* for information about driving off-road.

Winter Driving

Here are some tips for winter driving:

- Have your vehicle in good shape for winter.
- You might want to put winter emergency supplies in your vehicle.

Include an ice scraper, a small brush or broom, a supply of windshield washer fluid, a rag, some winter outer clothing, a small shovel, a flashlight, a red cloth, and a couple of reflective warning triangles. And, if you will be driving under severe conditions, include a small bag of sand, a piece of old carpet, or a couple of burlap bags to help provide traction. Be sure you properly secure these items in your vehicle.

Also see *Tires on page 5-59*.

Driving on Snow or Ice

Most of the time, those places where the tires meet the road probably have good traction.

However, if there is snow or ice between the tires and the road, you can have a very slippery situation. You have a lot less traction, or grip, and need to be very careful.

What is the worst time for this? Wet ice. Very cold snow or ice can be slick and hard to drive on. But wet ice can be even more trouble because it can offer the least traction of all. You can get wet ice when it is about freezing, 32°F (0°C), and freezing rain begins to fall. Try to avoid driving on wet ice until salt and sand crews can get there.

Whatever the condition — smooth ice, packed, blowing, or loose snow — drive with caution.

Accelerate gently. Try not to break the fragile traction. If you accelerate too fast, the drive wheels will spin and polish the surface under the tires even more.

The Antilock Brake System (ABS) improves your vehicle's stability when you make a hard stop on a slippery road. Even though you have ABS, begin stopping sooner than you would on dry pavement. See *Antilock Brake System (ABS) on page 4-4*.

- Allow greater following distance on any slippery road.
- Watch for slippery spots. The road might be fine until you hit a spot that is covered with ice. On an otherwise clear road, ice patches can appear in shaded areas where the sun cannot reach, such as around clumps of trees, behind buildings, or under bridges. Sometimes the surface of a curve or an overpass can remain icy when the surrounding roads are clear. If you see a patch of ice ahead of you, brake before you are on it. Try not to brake while you are actually on the ice, and avoid sudden steering maneuvers.

If You Are Caught in a Blizzard

If you are stopped by heavy snow, you could be in a serious situation. You should probably stay with your vehicle unless you know for sure that you are near help and you can hike through the snow. Here are some things to do to summon help and keep yourself and your passengers safe:

- Turn on the hazard warning flashers.
- Tie a red cloth to your vehicle to alert police that you have been stopped by the snow.
- Put on extra clothing or wrap a blanket around you. If you do not have blankets or extra clothing, make body insulators from newspapers, burlap bags, rags, floor mats — anything you can wrap around yourself or tuck under your clothing to keep warm.

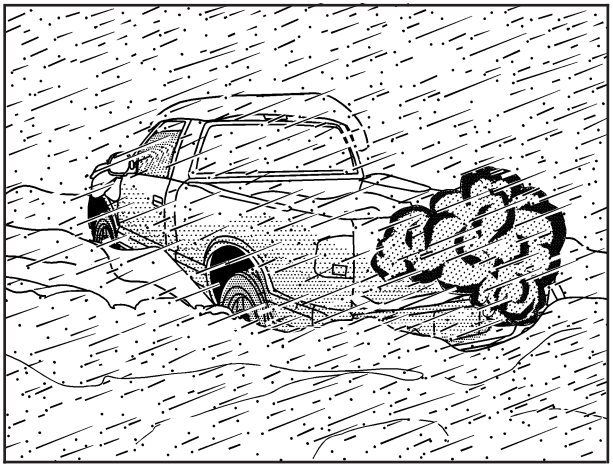

You can run the engine to keep warm, but be careful.

⚠ CAUTION:

Snow can trap exhaust gases under your vehicle. This can cause deadly CO (carbon monoxide) gas to get inside. CO could overcome you and kill you. You cannot see it or smell it, so you might not know it is in your vehicle. Clear away snow from around the base of your vehicle, especially any that is blocking the exhaust pipe. And check around again from time to time to be sure snow does not collect there.

Open a window just a little on the side of the vehicle that is away from the wind. This will help keep CO out.

Run your engine only as long as you must. This saves fuel. When you run the engine, make it go a little faster than just idle. That is, push the accelerator slightly. This uses less fuel for the heat that you get and it keeps the battery charged. You will need a well-charged battery to restart the vehicle, and possibly for signaling later on with the headlamps. Let the heater run for a while.

Then, shut the engine off and close the window almost all the way to preserve the heat. Start the engine again and repeat this only when you feel really uncomfortable from the cold. But do it as little as possible. Preserve the fuel as long as you can. To help keep warm, you can get out of the vehicle and do some fairly vigorous exercises every half hour or so until help comes.

If Your Vehicle is Stuck in Sand, Mud, Ice, or Snow

Slowly and cautiously spin the wheels to free your vehicle when stuck in sand, mud, ice, or snow. See *Rocking Your Vehicle to Get It Out on page 4-32*.

If your vehicle has a traction system, it can often help to free a stuck vehicle. Refer to your vehicle's traction system in the Index. If the stuck condition is too severe for the traction system to free the vehicle, turn the traction system off and use the rocking method.

⚠ CAUTION:

If you let your vehicle's tires spin at high speed, they can explode, and you or others could be injured. The vehicle can overheat, causing an engine compartment fire or other damage. Spin the wheels as little as possible and avoid going above 35 mph (55 km/h) as shown on the speedometer.

For information about using tire chains on your vehicle, see *Tire Chains on page 5-82*.

Rocking Your Vehicle to Get It Out

First, turn the steering wheel left and right to clear the area around the front wheels. For four-wheel drive vehicles, shift into 4HI. For vehicles with traction control, turn the system off. See *Traction Control System (TCS) on page 4-5*. Then shift back and forth between REVERSE (R) and a forward gear, or with a manual transmission, between FIRST (1) or SECOND (2) and REVERSE (R), spinning the wheels as little as possible. To prevent transmission wear, wait until the wheels stop spinning before shifting gears. Release the accelerator pedal while you shift, and press lightly on the accelerator pedal when the transmission is in gear. By slowly spinning the wheels in the forward and reverse directions, you will cause a rocking motion that could free your vehicle. If that does not get your vehicle out after a few tries, it might need to be towed out. Or, you can use the recovery hooks, if your vehicle has them. If your vehicle does need to be towed out, see *Towing Your Vehicle on page 4-41*.

Recovery Hooks

⚠ CAUTION:

These hooks, when used, are under a lot of force. Always pull the vehicle straight out. Never pull on the hooks at a sideways angle. The hooks could break off and you or others could be injured from the chain or cable snapping back.

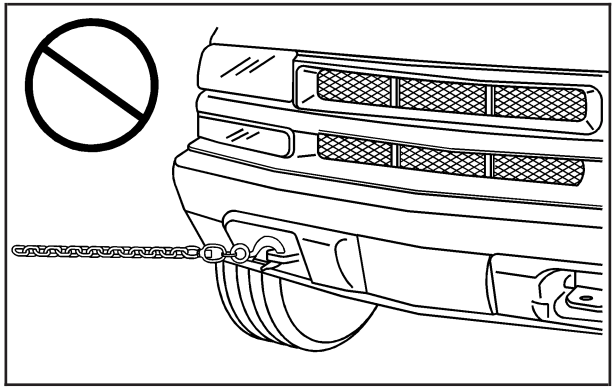

Notice: **Never use recovery hooks to tow the vehicle. Your vehicle could be damaged and it would not be covered by warranty.**

For vehicles with recovery hooks at the front of the vehicle, you can use them if you are stuck off-road and need to be pulled to some place where you can continue driving.

Loading Your Vehicle

It is very important to know how much weight your vehicle can carry. This weight is called the vehicle capacity weight and includes the weight of all occupants, cargo, and all nonfactory-installed options. Two labels on your vehicle show how much weight it may properly carry, the Tire and Loading Information label and the Certification/Tire label.

⚠ CAUTION:

Do not load your vehicle any heavier than the Gross Vehicle Weight Rating (GVWR), or either the maximum front or rear Gross Axle Weight Rating (GAWR). If you do, parts on your vehicle can break, and it can change the way your vehicle handles. These could cause you to lose control and crash. Also, overloading can shorten the life of your vehicle.

Tire and Loading Information Label

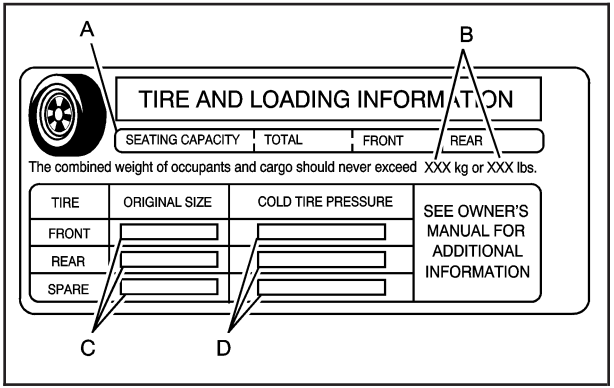

Label Example

A vehicle specific Tire and Loading Information label is attached to the vehicle's center pillar (B-pillar). With the driver's door open, you will find the label attached below the door latch post. Vehicle's without a center pillar, like extended cab models, will have the Tire and Loading Information label attached to the driver's side extended cab door, above the door latch post. The Tire and

Loading Information label shows the number of occupant seating positions (A), and the maximum vehicle capacity weight (B) in kilograms and pounds.

The Tire and Loading Information label also shows the size of the original equipment tires (C) and the recommended cold tire inflation pressures (D). For more information on tires and inflation see *Tires on page 5-59* and *Inflation - Tire Pressure on page 5-66*.

There is also important information on the Certification/Tire label. It tells you the Gross Vehicle Weight Rating (GVWR) and the Gross Axle Weight Rating (GAWR) for the front and rear axles. See “Certification/Tire Label” later in this section.

Steps for Determining Correct Load Limit

1. Locate the statement “The combined weight of occupants and cargo should never exceed XXX kg or XXX lbs’’ on your vehicle’s placard.
2. Determine the combined weight of the driver and passengers that will be riding in your vehicle.
3. Subtract the combined weight of the driver and passengers from XXX kg or XXX lbs.
4. The resulting figure equals the available amount of cargo and luggage load capacity. For example, if the “XXX” amount equals 1400 lbs and there will be five 150 lb passengers in your vehicle, the amount of available cargo and luggage load capacity is 650 lbs (1400 – 750 (5 x 150) = 650 lbs).
5. Determine the combined weight of luggage and cargo being loaded on the vehicle. That weight may not safely exceed the available cargo and luggage load capacity calculated in Step 4.
6. If your vehicle will be towing a trailer, the load from your trailer will be transferred to your vehicle. Consult this manual to determine how this reduces the available cargo and luggage load capacity of your vehicle.

   See *Towing a Trailer on page 4-47* for important information on towing a trailer, towing safety, and trailering tips.

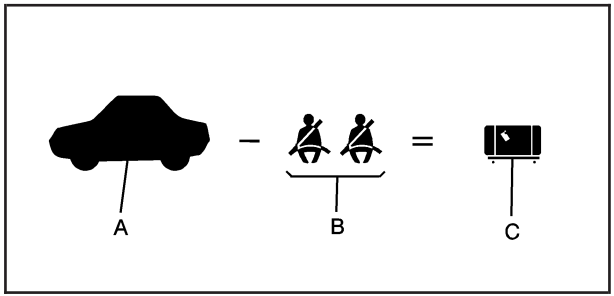

Example 1

Item	Description	Total
A	Vehicle Capacity Weight for Example 1 =	1,000 lbs (453 kg)
B	Subtract Occupant Weight 150 lbs (68 kg) x 2 =	300 lbs (136 kg)
C	Available Cargo Weight =	700 lbs (317 kg)

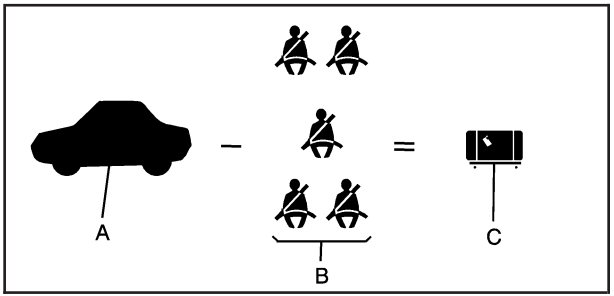

Example 2

Item	Description	Total
A	Vehicle Capacity Weight for Example 2 =	1,000 lbs (453 kg)
B	Subtract Occupant Weight 150 lbs (68 kg) x 5 =	750 lbs (340 kg)
C	Available Cargo Weight =	250 lbs (113 kg)

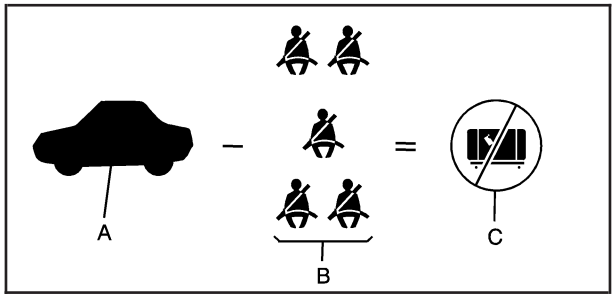

Example 3

Item	Description	Total
A	Vehicle Capacity Weight for Example 3 =	1,000 lbs (453 kg)
B	Subtract Occupant Weight 200 lbs (91 kg) x 5 =	1,000 lbs (453 kg)
C	Available Cargo Weight =	0 lbs (0 kg)

Refer to your vehicle's Tire and Loading Information label for specific information about your vehicle's capacity weight and seating positions. The combined weight of the driver, passengers, cargo, and any accessories or equipment added to your vehicle after it left the factory should never exceed your vehicle's capacity weight.

Certification/Tire Label

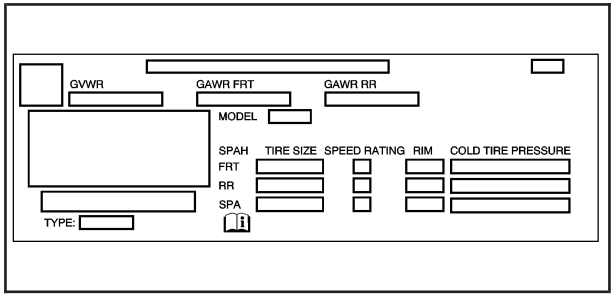

Label Example

A vehicle specific Certification/Tire label is attached to the bottom section of the center pillar, on the driver's side of the vehicle. Vehicles without a center pillar, like extended cab models, will have the Certification/Tire label attached to the edge of the driver's side, extended cab door, below the door latch post. The label shows the Gross Vehicle Weight Rating (GVWR).

The GVWR includes the weight of the vehicle, all occupants, fuel, cargo, and trailer tongue weight, if pulling a trailer.

The Certification/Tire label also tells you the maximum weights for the front and rear axles, called Gross Axle Weight Rating (GAWR). To find out the actual loads on your front and rear axles, you need to go to a weigh station and weigh your vehicle. Your dealer can help you with this. Be sure to spread out your load equally on both sides of the centerline.

Never exceed the GVWR for your vehicle, or the GAWR for either the front or rear axle.

If you do have a heavy load, you should spread it out.

Similar appearing vehicles may have different GVWRs and capacity weights. Please note your vehicle's Certification/Tire label or consult your dealer/retailer for additional details.

⚠ CAUTION:

Do not load your vehicle any heavier than the Gross Vehicle Weight Rating (GVWR), or either the maximum front or rear Gross Axle Weight Rating (GAWR). If you do, parts on your vehicle can break, and it can change the way your vehicle handles. These could cause you to lose control and crash. Also, overloading can shorten the life of your vehicle.

Using heavier suspension components to get added durability might not change your weight ratings. Ask your dealer/retailer to help you load your vehicle the right way.

Notice: **Overloading your vehicle may cause damage. Repairs would not be covered by your warranty. Do not overload your vehicle.**

If you put things inside your vehicle — like suitcases, tools, packages, or anything else — they will go as fast as the vehicle goes. If you have to stop or turn quickly, or if there is a crash, they will keep going.

⚠ CAUTION:

Things you put inside your vehicle can strike and injure people in a sudden stop or turn, or in a crash.

- **Put things in the cargo area of your vehicle. Try to spread the weight evenly.**
- **Never stack heavier things, like suitcases, inside the vehicle so that some of them are above the tops of the seats.**
- **Do not leave an unsecured child restraint in your vehicle.**
- **When you carry something inside the vehicle, secure it whenever you can.**
- **Do not leave a seat folded down unless you need to.**

There is also important loading information for off-road driving in this manual. See *"Loading Your Vehicle for Off-Road Driving"* under *Off-Road Driving on page 4-11*.

Remember not to exceed the Gross Axle Weight rating (GAWR) of the front or rear axle.

Two-Tiered Loading

By positioning four 2” X 6” wooden planks across the width of the pickup box, you can create an upper load platform. The planks must be inserted in the pickup box depressions. The length of the planks must allow for at least a 3/4 inch (2 cm) bearing surface on each end of the plank.

When using this upper load platform, be sure the load is securely tied down to prevent it from shifting. The load’s center of gravity should be positioned in a zone over the rear axle.

Any load that extends beyond the vehicle’s taillamp area must be properly marked according to local laws and regulations.

Remember not to exceed the Gross Axle Weight Rating (GAWR) of the rear axle.

Add-On Equipment

When you carry removable items, you may need to put a limit on how many people you carry inside your vehicle. Be sure to weigh your vehicle before you buy and install the new equipment.

Notice: **Overloading your vehicle may cause damage. Repairs would not be covered by your warranty. Do not overload your vehicle.**

Remember not to exceed the Gross Axle Weight Rating (GAWR) of the rear axle.

A reinforcement kit for mounting a toolbox is recommended. See your dealer/retailer.

Truck-Camper Loading Information

Your vehicle was not designed to carry a slide-in camper.

Pickup Conversion to Chassis Cab

We are aware that some vehicle owners might consider having the pickup box removed and a commercial or recreational body installed. However, we recommend that conversions of this type not be done to pickups. Owners should be aware that, as manufactured, there are differences between a chassis cab and a pickup with the box removed which could affect vehicle safety.

Towing

Towing Your Vehicle

Consult your dealer/retailer or a professional towing service if you need to have your disabled vehicle towed. See *Roadside Assistance Program on page 7-7*.

If you want to tow your vehicle behind another vehicle for recreational purposes (such as behind a motorhome), see “Recreational Vehicle Towing” following.

Recreational Vehicle Towing

Recreational vehicle towing means towing your vehicle behind another vehicle — such as behind a motorhome. The two most common types of recreational vehicle towing are known as “dinghy” (towing your vehicle with all four wheels on the ground) and “dolly” (towing your vehicle with two wheels on the ground and two wheels up on a device known as a “dolly”).

With the proper preparation and equipment, many vehicles can be towed in these ways. See “Dinghy Towing” and “Dolly Towing” following.

Here are some important things to consider before you do recreational vehicle towing:

- What’s the towing capacity of the towing vehicle? Be sure you read the tow vehicle manufacturer’s recommendations.
- How far will you tow? Some vehicles have restrictions on how far and how long they can tow.
- Do you have the proper towing equipment? See your dealer/retailer or trailering professional for additional advice and equipment recommendations.
- Is your vehicle ready to be towed? Just as you would prepare your vehicle for a long trip, you’ll want to make sure your vehicle is prepared to be towed.

Dinghy Towing

Two-Wheel Drive Vehicles

Notice: **If you tow your vehicle with all four wheels on the ground, the drivetrain components could be damaged. The repairs would not be covered by your warranty. Do not tow your vehicle with all four wheels on the ground.**

Two-wheel-drive vehicles should not be towed with all four wheels on the ground. Two-wheel-drive transmissions have no provisions for internal lubrication while being towed.

Four-Wheel Drive Vehicles

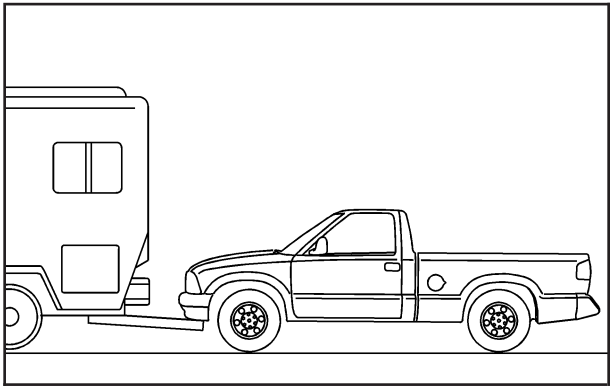

Use the following procedure to tow your vehicle with all four wheels on the ground:

1. Drive the vehicle to be towed into position behind the tow vehicle.
2. Firmly set the parking brake. See *Parking Brake on page 2-32* for more information.
3. Put an automatic transmission in PARK (P) or a manual transmission in FIRST (1).
4. Securely attach the vehicle being towed to the tow vehicle.

⚠ CAUTION:

Shifting a four-wheel-drive vehicle's transfer case into NEUTRAL can cause your vehicle to roll even if the transmission is in PARK (P) for an automatic transmission, or if your vehicle is in gear, for a manual transmission. You or others could be injured. Make sure the parking brake is firmly set before you shift the transfer case to NEUTRAL.

5. Shift the transfer case to NEUTRAL.
   See *Four-Wheel Drive on page 2-28* for more information.
6. Release the parking brake only after the vehicle being towed is firmly attached to the tow vehicle.
7. Turn the ignition to LOCK.

   If the tow vehicle will not be started or driven for six weeks or more, remove the battery cable from the negative terminal (post) of the battery to prevent your battery from draining while towing.

After towing see "Shifting Out of NEUTRAL" under *Four-Wheel Drive on page 2-28*.

Dolly Towing

Front Towing (Front Wheels Off the Ground)

Two-Wheel-Drive Vehicles

Notice: **If you tow a two-wheel-drive vehicle with the rear wheels on the ground, the transmission could be damaged. The repairs would not be covered by your warranty. Never tow your vehicle with the rear wheels on the ground.**

Two-wheel-drive vehicles should not be towed with the rear wheels on the ground. Two-wheel-drive transmissions have no provisions for internal lubrication while being towed. To dolly tow a two-wheel-drive vehicle, you must tow the vehicle with the rear wheels on the dolly. See "Rear Towing (Rear Wheels Off the Ground)" later in this section for more information.

Four-Wheel-Drive Vehicles

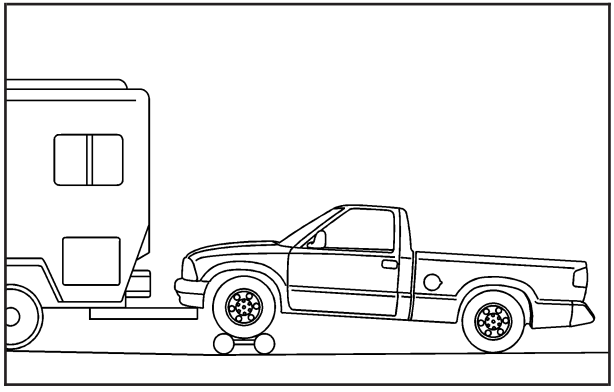

Use the following procedure to dolly tow your vehicle from the front:

1. Drive the vehicle onto the dolly.
2. Firmly set the parking brake. See *Parking Brake on page 2-32* for more information.
3. Put an automatic transmission in PARK (P) or a manual transmission in FIRST (1).
4. Follow the dolly manufacturer's instructions to attach and secure the vehicle being towed to the dolly and then the loaded dolly to the tow vehicle.

⚠ CAUTION:

Shifting a four-wheel-drive vehicle's transfer case into NEUTRAL can cause your vehicle to roll even if the transmission is in PARK (P) for an automatic transmission, or if your vehicle is in gear, for a manual transmission. You or others could be injured. Make sure the parking brake is firmly set before you shift the transfer case to NEUTRAL.

5. Shift the transfer case to NEUTRAL.
   See *Four-Wheel Drive on page 2-28* for more information.
6. Release the parking brake only after the vehicle being towed is firmly attached to the tow vehicle.
7. Turn the ignition to LOCK.
   If the tow vehicle will not be started or driven for six weeks or more, remove the battery cable from the negative terminal (post) of the battery to prevent your battery from draining while towing.

After towing see "Shifting Out of NEUTRAL" under *Four-Wheel Drive on page 2-28*.

Rear Towing (Rear Wheels Off the Ground)

Two-Wheel-Drive Vehicles

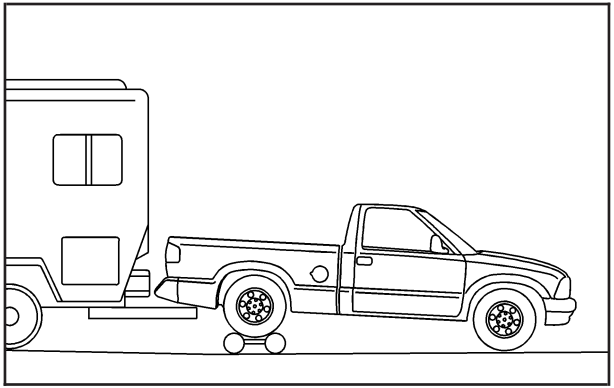

Use the following procedure to tow your vehicle from the rear:

1. Drive the vehicle onto the dolly.
2. Firmly set the parking brake. See *Parking Brake on page 2-32* for more information.
3. Put an automatic transmission in PARK (P) or a manual transmission in FIRST (1).
4. Follow the dolly manufacturer's instructions to attach and secure the vehicle being towed to the dolly and then the loaded dolly to the tow vehicle. Make sure the wheels are straight before towing.

   For manual transmission vehicles, make sure the wheels are straight before proceeding to the next steps. On automatic transmission vehicles, use an adequate clamping device to ensure that the front wheels are locked into the straight position.
5. Release the parking brake only after the vehicle being towed is firmly attached to the tow vehicle.
6. Turn the ignition to LOCK.

   If the tow vehicle will not be started or driven for six weeks or more, remove the battery cable from the negative terminal (post) of the battery to prevent your battery from draining while towing.

Four-Wheel-Drive Vehicles

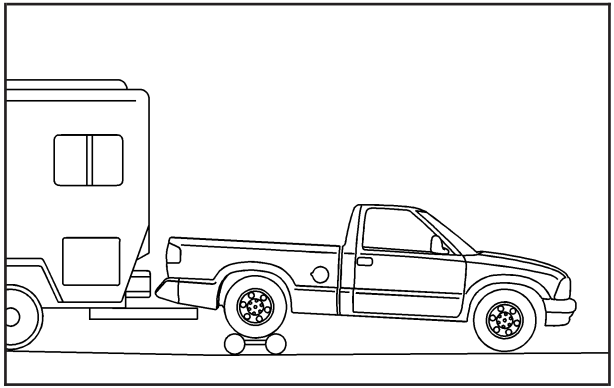

Use the following procedure to tow your vehicle from the rear:

1. Drive the vehicle onto the dolly.
2. Firmly set the parking brake. See *Parking Brake on page 2-32* for more information.
3. Put an automatic transmission in PARK (P) or a manual transmission in FIRST (1).
4. Follow the dolly manufacturer's instructions to attach and secure the vehicle being towed to the dolly and then the loaded dolly to the tow vehicle.

   For manual transmission vehicles, make sure the wheels are straight before proceeding to the next steps. On automatic transmission vehicles, use an adequate clamping device to ensure that the front wheels are locked into the straight position.

⚠ CAUTION:

Shifting a four-wheel-drive vehicle's transfer case into NEUTRAL can cause your vehicle to roll even if the transmission is in PARK (P) for an automatic transmission, or if your vehicle is in gear, for a manual transmission. You or others could be injured. Make sure the parking brake is firmly set before you shift the transfer case to NEUTRAL.

5. Shift the transfer case to NEUTRAL. See *Four-Wheel Drive on page 2-28* for more information.

6. Release the parking brake only after the vehicle being towed is firmly attached to the tow vehicle.
7. Turn the ignition to LOCK.

   If the tow vehicle will not be started or driven for six weeks or more, remove the battery cable from the negative terminal (post) of the battery to prevent your battery from draining while towing.

After towing, see “Shifting Out of NEUTRAL” under *Four-Wheel Drive on page 2-28*.

Towing a Trailer

⚠ CAUTION:

If you do not use the correct equipment and drive properly, you can lose control when you pull a trailer. For example, if the trailer is too heavy, the brakes may not work well — or even at all. You and your passengers could be

CAUTION: (Continued)

CAUTION: (Continued)

seriously injured. You may also damage your vehicle; the resulting repairs would not be covered by your warranty. Pull a trailer only if you have followed all the steps in this section. Ask your dealer/retailer for advice and information about towing a trailer with your vehicle.

Notice: **Pulling a trailer improperly can damage your vehicle and result in costly repairs that would not be covered by your warranty. Always follow the instructions in this section and check with your dealer/retailer for more information about towing a trailer with your vehicle.**

To identify the trailering capacity of your vehicle, you should read the information in “Weight of the Trailer” that appears later in this section.

Trailering is different than just driving your vehicle by itself. Trailering means changes in handling, acceleration, braking, durability and fuel economy. Successful, safe trailering takes correct equipment, and it has to be used properly.

That's the reason for this part. In it are many time-tested, important trailering tips and safety rules. Many of these are important for your safety and that of your passengers. So please read this section carefully before you pull a trailer.

If You Do Decide To Pull A Trailer

If you do, here are some important points:

- There are many different laws, including speed limit restrictions, having to do with trailering. Make sure your rig will be legal, not only where you live but also where you'll be driving. A good source for this information can be state or provincial police.
- Consider using a sway control. You can ask a hitch dealer/retailer about sway controls.
- Don't tow a trailer at all during the first 500 miles (800 km) your new vehicle is driven. Your engine, axle or other parts could be damaged.
- Then, during the first 500 miles (800 km) that you tow a trailer, don't drive over 50 mph (80 km/h) and don't make starts at full throttle. This helps your engine and other parts of your vehicle wear in at the heavier loads.
- You may want to shift the transmission to THIRD (3) or, if necessary, a lower gear selection if the transmission shifts too often (e.g., under heavy loads and/or hilly conditions). If you have a manual transmission and you are towing a trailer, it's better not to use the highest gear.

Three important considerations have to do with weight:

- the weight of the trailer,
- the weight of the trailer tongue
- and the weight on your vehicle's tires.

Weight of the Trailer

How heavy can a trailer safely be?

It depends on how you plan to use your rig. For example, speed, altitude, road grades, outside temperature and how much your vehicle is used to pull a trailer are all important. It can also depend on any special equipment that you have on your vehicle, and the amount of tongue weight the vehicle can carry. See “Weight of the Trailer Tongue” later in this section for more information.

Maximum trailer weight is calculated assuming only the driver is in the tow vehicle and it has all the required trailering equipment. The weight of additional optional equipment, passengers and cargo in the tow vehicle must be subtracted from the maximum trailer weight.

The following charts show how much your trailer can weigh, based upon your vehicle model and options.

2WD Regular Cab	Axle Ratio	Maximum Trailer Weight	GCWR*
Automatic Transmission, 2.9L Engine	3.73	3,400 lbs (1 542 kg)	7,000 lbs (3 175 kg)
Automatic Transmission, 3.7L Engine	3.73	4,000 lbs (1 814 kg)	8,500 lbs (3 855 kg)
Manual Transmission, 2.9L Engine	3.73	2,400 lbs (1 089 kg)	6,000 lbs (2 722 kg)
*The Gross Combination Weight Rating (GCWR) is the total allowable weight of the completely loaded vehicle and trailer including any passengers, cargo, equipment and conversions. The GCWR for your vehicle should not be exceeded.			

2WD Extended Cab	Axle Ratio	Maximum Trailer Weight	GCWR*
Automatic Transmission, 2.9L Engine	3.73	3,200 lbs (1 451 kg)	7,000 lbs (3 175 kg)
Automatic Transmission, 3.7L Engine	3.73	5,500 lbs (2 495 kg)	9,500 lbs (4 309 kg)
Automatic Transmission, 5.3L Engine	3.42	6,000 lbs (2 722 kg)	10,400 lbs (4 717 kg)
Automatic Transmission, 5.3L Engine **	3.42	4,000 lbs (1 814 kg)	10,400 lbs (4 717 kg)
Manual Transmission, 2.9L Engine	3.73	2,200 lbs (998 kg)	6,000 lbs (2 722 kg)

*The Gross Combination Weight Rating (GCWR) is the total allowable weight of the completely loaded vehicle and trailer including any passengers, cargo, equipment and conversions. The GCWR for your vehicle should not be exceeded.
**With the ZQ8 Suspension Package.

2WD Crew Cab	Axle Ratio	Maximum Trailer Weight	GCWR*
Automatic Transmission, 2.9L Engine	3.73	3,000 lbs (1 361 kg)	7,000 lbs (3 175 kg)
Automatic Transmission, 3.7L Engine	3.73	5,500 lbs (2 495 kg)	9,500 lbs (4 309 kg)
Automatic Transmission, 5.3L Engine	3.42	6,000 lbs (2 722 kg)	10,400 lbs (4 717 kg)

2WD Crew Cab	Axle Ratio	Maximum Trailer Weight	GCWR*
Automatic Transmission, 5.3L Engine **	3.42	3,800 lbs (1 724 kg)	10,400 lbs (4 717 kg)
Manual Transmission, 2.9L Engine	3.73	2,100 lbs (953 kg)	6,000 lbs (2 722 kg)
*The Gross Combination Weight Rating (GCWR) is the total allowable weight of the completely loaded vehicle and trailer including any passengers, cargo, equipment and conversions. The GCWR for your vehicle should not be exceeded. **With the ZQ8 Suspension Package.			

4WD Regular Cab	Axle Ratio	Maximum Trailer Weight	GCWR*
Automatic Transmission, 2.9L Engine	3.73	3,000 lbs (1 361 kg)	7,000 lbs (3 175 kg)
Automatic Transmission, 2.9L Engine	3.73	3,000 lbs (1 361 kg)	7,000 lbs (3 175 kg)
Automatic Transmission, 3.7L Engine	3.73	4,000 lbs (1 814 kg)	9,000 lbs (4 082 kg)
Manual Transmission, 2.9L Engine	3.73	2,100 lbs (953 kg)	6,000 lbs (2 722 kg)
Manual Transmission, 2.9L Engine	4.10	2,100 lbs (953 kg)	6,000 lbs (2 722 kg)
*The Gross Combination Weight Rating (GCWR) is the total allowable weight of the completely loaded vehicle and trailer including any passengers, cargo, equipment and conversions. The GCWR for your vehicle should not be exceeded.			

4WD Extended Cab	Axle Ratio	Maximum Trailer Weight	GCWR*
Automatic Transmission, 2.9L Engine	3.73	2,900 lbs (1 315 kg)	7,000 lbs (3 175 kg)
Automatic Transmission, 2.9L Engine	4.10	2,900 lbs (1 315 kg)	7,000 lbs (3 175 kg)
Automatic Transmission, 3.7L Engine	3.73	5,500 lbs (2 495 kg)	9,800 lbs (4 445 kg)
Automatic Transmission, 5.3L Engine	3.42	6,000 lbs (2 722 kg)	10,400 lbs (4 717 kg)
Manual Transmission, 2.9L Engine	3.73	1,900 lbs (861 kg)	6,000 lbs (2 722 kg)
Manual Transmission, 2.9L Engine	4.10	1,900 lbs (861 kg)	6,000 lbs (2 722 kg)
*The Gross Combination Weight Rating (GCWR) is the total allowable weight of the completely loaded vehicle and trailer including any passengers, cargo, equipment and conversions. The GCWR for your vehicle should not be exceeded.			

4WD Crew Cab	Axle Ratio	Maximum Trailer Weight	GCWR*
Automatic Transmission, 3.7L Engine	3.73	5,500 lbs (2 495 kg)	9,800 lbs (4 445 kg)
Automatic Transmission, 5.3L Engine	3.42	6,000 lbs (2 722 kg)	10,400 lbs (4 717 kg)
*The Gross Combination Weight Rating (GCWR) is the total allowable weight of the completely loaded vehicle and trailer including any passengers, cargo, equipment and conversions. The GCWR for your vehicle should not be exceeded.			

Ask your dealer/retailer for our trailering information or advice, or you can write us at our Customer Assistance Offices. See *Customer Assistance Offices on page 7-5* for more information.

Weight of the Trailer Tongue

The tongue load (A) of any trailer is an important weight to measure because it affects the total or gross weight of your vehicle. The Gross Vehicle Weight (GVW) includes the curb weight of the vehicle, any cargo you may carry in it, and the people who will be riding in the vehicle. If you have a lot of options, equipment, passengers or cargo in your vehicle, it will reduce the tongue weight your vehicle can carry, which will also reduce the trailer weight your vehicle can tow. And if you will tow a trailer, you must add the tongue load to the GVW because your vehicle will be carrying that weight, too. See *Loading Your Vehicle on page 4-34* for more information about your vehicle's maximum load capacity.

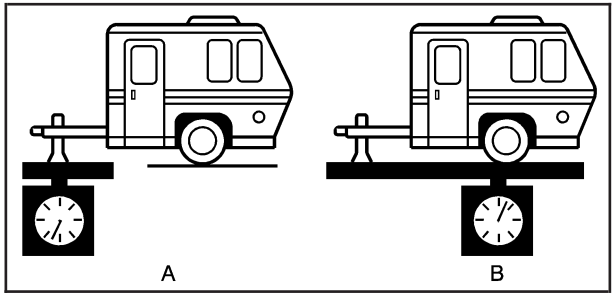

The trailer tongue weight (A) should be 10 percent to 15 percent of the total loaded trailer weight, up to a maximum of 500 lbs (226 kg) with a weight carrying hitch.

Do not exceed the maximum allowable tongue weight for your vehicle. Choose the shortest hitch extension that will position the hitch ball closest to the vehicle. This will help reduce the effect of trailer tongue weight on the rear axle.

After you've loaded your trailer, weigh the trailer and then the tongue, separately, to see if the weights are proper. If they aren't you may be able to get them right simply by moving some of the items around in the trailer.

Trailering may be limited by the vehicle's ability to carry tongue weight. Tongue weight cannot cause the vehicle to exceed the GVWR (Gross Vehicle Weight Rating) or the RGAWR (Rear Gross Axle Weight Rating). The effect of additional weight may reduce your trailering capacity more than the total of the additional weight.

Consider the following example:

A vehicle model base weight is 5,500 lbs (2 495 kg); 2,800 lbs (1 270 kg) at the front axle and 2,700 lbs (1 225 kg) at the rear axle. It has a GVWR of 7,200 lbs (3 266 kg), a RGAWR of 4,000 lbs (1 814 kg) and a GCWR (Gross Combination Weight Rating) of 14,000 lbs (6 350 kg). The trailer rating should be:

14,000 lbs (6350 kg)	GCWR
–5,500 lbs (2495 kg)	Vehicle Weight
8,500 lbs (3855 kg)	Trailer Rating

You can expect tongue weight to be at least 10 percent of trailer weight (850 lbs (386 kg)) and because the weight is applied well behind the rear axle, the effect on the rear axle will be greater than just the weight itself, as much as 1.5 times as much. The weight at the rear axle could be 850 lbs (386 kg) X 1.5 = 1,275 lbs (578 kg). Since the rear axle already weighs 2,700 lbs (1 225 kg), adding 1,275 lbs (578 kg) brings the total to 3,975 lbs (1 803 kg). This is very close to, but within the limit for RGAWR as well. The vehicle is set to trailer up to 8,500 lbs (3 856 kg).

But let's say your specific vehicle is equipped with some of the latest options and you have a front seat passenger and two rear seat passengers with some luggage and gear in the vehicle as well. You may add 300 lbs (136 kg) to the front axle weight and 400 lbs (181 kg) to the rear axle weight. Your vehicle now weighs:

2,800 lbs (1270 kg)	+	300 lbs (136 kg)	Front
2,700 lbs (1225 kg)	+	400 lbs (181 kg)	Rear
6,200 lbs (2812 kg)			Total

Weight is still below 7,200 lbs (3 266 kg) and you may think that you should subtract 700 additional pounds (318 kg) from your trailering capacity to stay within GCWR limits. Your maximum trailer would only be 7,800 lbs (3 538 kg). You may go further and think you must limit tongue weight to less than 1,000 lbs (454 kg) to avoid exceeding GVWR. But, you must still consider the effect on the rear axle. Because your rear axle now weighs 3,100 lbs (1 406 kg), you can only put 900 lbs (408 kg) on the rear axle without exceeding

RGAWR. The effect of tongue weight is about 1.5 times the actual weight. Dividing the 900 lbs (408 kg) by 1.5 leaves you with being able to handle only 600 lbs (272 kg) of tongue weight. Since tongue weight is usually at least 10 percent of total loaded trailer weight, you can expect that the largest trailer your vehicle can properly handle is 6,000 lbs (2 721 kg).

It is important that you make sure your vehicle does not exceed any of its ratings — GCWR, GVWR, RGAWR, Maximum Trailer Rating or Tongue Weight. The only way to be sure you are not exceeding any of these ratings is to weigh your vehicle and trailer.

Total Weight on Your Vehicle's Tires

Be sure your vehicle's tires are inflated to the upper limit for cold tires. You'll find these numbers on the Certification/Tire label located at the bottom of the center pillar on the driver's side of the vehicle, or see *Loading Your Vehicle on page 4-34*. Then be sure you don't go over the GVWR limit for your vehicle, including the weight of the trailer tongue.

Hitches

It's important to have the correct hitch equipment. Crosswinds, large trucks going by and rough roads are a few reasons why you'll need the right hitch.

Weight-Distributing Hitches and Weight Carrying Hitches

You can use your step bumper hitch for trailers up to 2,000 lbs (907 kg) total weight, and 200 lbs (90 kg) tongue weight.

Notice: **If you use a step-bumper hitch, your bumper could be damaged in sharp turns. Make sure you have ample room when turning to avoid contact between the trailer and the bumper.**

Safety Chains

You should always attach chains between your vehicle and your trailer. Cross the safety chains under the tongue of the trailer to help prevent the tongue from contacting the road if it becomes separated from the hitch. Instructions about safety chains may be provided by the hitch manufacturer or by the trailer manufacturer. For trailers up to 2,000 lbs (907 kg) you may attach the safety chains to the attaching points on the bumper. For heavier trailers, follow the trailer or hitch manufacturer's recommendation for attaching safety chains. Always leave just enough slack so you can turn with your rig. Never allow safety chains to drag on the ground.

Trailer Brakes

If your trailer weighs more than 1,000 lbs (450 kg) loaded, then it needs its own brakes — and they must be adequate. Be sure to read and follow the instructions for the trailer brakes so you'll be able to install, adjust and maintain them properly.

Your trailer's brake system can tap into the vehicle's hydraulic brake system only if:

- The trailer parts can withstand 3,000 psi (20 650 kPa) of pressure.
- The trailer's brake system will use less than 0.02 cubic inch (0.3 cc) of fluid from your vehicle's master cylinder. Otherwise, both braking systems won't work well. You could even lose your brakes.

If everything checks out this far, then make the brake fluid tap at the port on the master cylinder that sends fluid to the rear brakes. But don't use copper tubing for this. If you do, it will bend and finally break off. Use steel brake tubing.

Driving with a Trailer

Towing a trailer requires a certain amount of experience. Before setting out for the open road, you'll want to get to know your rig. Acquaint yourself with the feel of handling and braking with the added weight of the trailer. And always keep in mind that the vehicle you are driving is now a good deal longer and not nearly as responsive as your vehicle is by itself.

Before you start, check all trailer hitch parts and attachments, safety chains, electrical connector, lamps, tires and mirror adjustment. If the trailer has electric brakes, start your vehicle and trailer moving and then apply the trailer brake controller by hand to be sure the brakes are working. This lets you check your electrical connection at the same time.

During your trip, check occasionally to be sure that the load is secure, and that the lamps and any trailer brakes are still working.

Following Distance

Stay at least twice as far behind the vehicle ahead as you would when driving your vehicle without a trailer. This can help you avoid situations that require heavy braking and sudden turns.

Passing

You'll need more passing distance up ahead when you're towing a trailer. And, because you're a good deal longer, you'll need to go much farther beyond the passed vehicle before you can return to your lane.

Backing Up

Hold the bottom of the steering wheel with one hand. Then, to move the trailer to the left, just move that hand to the left. To move the trailer to the right, move your hand to the right. Always back up slowly and, if possible, have someone guide you.

Making Turns

Notice: **Making very sharp turns while trailering could cause the trailer to come in contact with the vehicle. Your vehicle could be damaged. Avoid making very sharp turns while trailering.**

When you're turning with a trailer, make wider turns than normal. Do this so your trailer won't strike soft shoulders, curbs, road signs, trees or other objects. Avoid jerky or sudden maneuvers. Signal well in advance.

Turn Signals When Towing a Trailer

When you tow a trailer, your vehicle has to have extra wiring and a heavy-duty turn signal flasher.

The arrows on your instrument panel will flash whenever you signal a turn or lane change. Properly hooked up, the trailer lamps will also flash, telling other drivers you're about to turn, change lanes or stop.

When towing a trailer, the arrows on your instrument panel will flash for turns even if the bulbs on the trailer are burned out. Thus, you may think drivers behind you are seeing your signal when they are not. It's important to check occasionally to be sure the trailer bulbs are still working.

Driving On Grades

Reduce speed and shift to a lower gear before you start down a long or steep downgrade. If you don't shift down, you might have to use your brakes so much that they would get hot and no longer work well.

When towing at high altitude on steep uphill grades, consider the following: Engine coolant will boil at a lower temperature than at normal altitudes. If you turn your engine off immediately after towing at high altitude on steep uphill grades, your vehicle may show signs similar to engine overheating. To avoid this, let the engine run while parked (preferably on level ground) with the automatic transmission in PARK (P) (or the manual transmission out of gear and the parking brake applied) for a few minutes before turning the engine off. If you do get the overheat warning, see *Engine Overheating on page 5-30*.

Parking on Hills

⚠ CAUTION:

You really should not park your vehicle, with a trailer attached, on a hill. If something goes wrong, your rig could start to move. People can be injured, and both your vehicle and the trailer can be damaged.

But if you ever have to park your rig on a hill, here's how to do it:

1. Apply your regular brakes, but don't shift into PARK (P) yet, or into gear for a manual transmission. When parking uphill, turn your wheels away from the curb. When parking downhill, turn your wheels into the curb.
2. Have someone place chocks under the trailer wheels.
3. When the wheel chocks are in place, release the regular brakes until the chocks absorb the load.

4. Reapply the regular brakes. Then apply your parking brake, and then shift into PARK (P), or REVERSE (R) for a manual transmission. See *Parking Brake on page 2-32* for more information.
5. If you have a four-wheel-drive vehicle, be sure the transfer case is in a drive gear and not in NEUTRAL. See *Four-Wheel Drive on page 2-28* for more information.
6. Release the regular brakes.

When You Are Ready to Leave After Parking on a Hill

1. Apply your regular brakes and hold the pedal down while you:
   - start your engine,
   - shift into a gear, and
   - release the parking brake.
2. Let up on the brake pedal.
3. Drive slowly until the trailer is clear of the chocks.
4. Stop and have someone pick up and store the chocks.

Maintenance When Trailer Towing

Your vehicle will need service more often when you're pulling a trailer. See *Scheduled Maintenance on page 6-4* for more on this. Things that are especially important in trailer operation are automatic transmission fluid (don't overfill), engine oil, axle lubricant, belt, cooling system and brake system. Each of these is covered in this manual, and the Index will help you find them quickly. If you're trailering, it's a good idea to review these sections before you start your trip.

Check periodically to see that all hitch nuts and bolts are tight.

Trailer Wiring Harness

Heavy-Duty Trailer Wiring Package

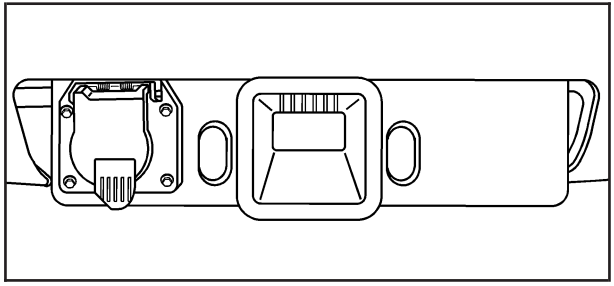

If your vehicle is equipped with a trailer towing package, the rear bumper harness will have a seven-pin universal heavy-duty trailer connector attached to a bracket on the hitch platform.

The trailer towing harness contains the following seven trailer circuits:

- Yellow: Left Stop/Turn Signal
- Dark Green: Right Stop/Turn Signal
- Brown: Taillamps
- White: Ground
- Light Green: Back-up Lamps
- Red: Battery Feed
- Dark Blue: Trailer Brake

If you are charging a remote (non-vehicle) battery, turn on the headlamps to boost the vehicle system voltage to properly charge the battery.

Trailer Brake Control Wiring Harness

The wires for the trailer brake control are taped to a wiring harness under the instrument panel. The trailer brake control harness will contain the following labeled wires:

- Dark Blue Wire (#47): Trailer Brake
- Red Wire (#242): Batt ‘‘+’’
- Light Blue Wire (#20): Brake Lights
- Black Wire (#2050): Brake Ground

Trailer Recommendations

You must subtract your hitch load from the CWR for your vehicle. Weigh your vehicle with your trailer attached, so that you won’t go over the GVWR or the GAWR.

You’ll get the best performance if you spread out the weight of your load the right way, and if you choose the correct hitch and trailer brakes.

For more information, see *Towing a Trailer on page 4-47* later in this section.

Section 5 Service and Appearance Care

Service 5-3
Accessories and Modifications 5-3
California Proposition 65 Warning 5-4
California Perchlorate Materials Requirements 5-4
Doing Your Own Service Work 5-4
Adding Equipment to the Outside of Your Vehicle 5-5

Fuel 5-5
Gasoline Octane 5-5
Gasoline Specifications 5-6
California Fuel 5-6
Additives 5-6
Fuels in Foreign Countries 5-7
Filling the Tank 5-8
Filling a Portable Fuel Container 5-10

Checking Things Under the Hood 5-10
Hood Release 5-11
Engine Compartment Overview 5-12
Engine Oil 5-15
Engine Oil Life System 5-18
Engine Air Cleaner/Filter 5-20
Automatic Transmission Fluid 5-21
Manual Transmission Fluid 5-24
Hydraulic Clutch 5-26
Engine Coolant 5-27
Radiator Pressure Cap 5-30
Engine Overheating 5-30
Cooling System 5-32
Engine Fan Noise 5-37
Power Steering Fluid 5-37
Windshield Washer Fluid 5-38
Brakes 5-39
Battery 5-43
Jump Starting 5-44

Rear Axle 5-48

Four-Wheel Drive 5-49

Front Axle 5-50

Headlamp Aiming 5-51

Bulb Replacement 5-51
Halogen Bulbs 5-51
Headlamps 5-52
Front Turn Signal, Parking and Daytime Running Lamps (DRL) 5-53
Center High-Mounted Stoplamp (CHMSL) 5-54
Taillamps, Turn Signal, Stoplamps and Back-up Lamps 5-54
License Plate Lamp 5-56
Replacement Bulbs 5-56

Windshield Wiper Blade Replacement 5-57

Section 5 Service and Appearance Care

Tires 5-59
Tire Sidewall Labeling 5-60
Tire Terminology and Definitions 5-63
Inflation - Tire Pressure 5-66
High-Speed Operation 5-68
Tire Pressure Monitor System 5-69
Tire Pressure Monitor Operation 5-70
Tire Inspection and Rotation 5-74
When It Is Time for New Tires 5-76
Buying New Tires 5-76
Different Size Tires and Wheels 5-78
Uniform Tire Quality Grading 5-79
Wheel Alignment and Tire Balance 5-80
Wheel Replacement 5-80
Tire Chains 5-82
If a Tire Goes Flat 5-83
Changing a Flat Tire 5-84
Removing the Spare Tire and Tools 5-85
Removing the Flat Tire and Installing the Spare Tire 5-89
Secondary Latch System 5-96
Storing a Flat or Spare Tire and Tools 5-100
Spare Tire 5-104

Appearance Care 5-106
Interior Cleaning 5-106
Fabric/Carpet 5-107
Leather 5-108
Instrument Panel, Vinyl, and Other Plastic Surfaces 5-109
Care of Safety Belts 5-109
Weatherstrips 5-109
Washing Your Vehicle 5-110
Cleaning Exterior Lamps/Lenses 5-110
Finish Care 5-111
Windshield and Wiper Blades 5-111
Aluminum or Chrome-Plated Wheels and Trim 5-112
Tires 5-113
Sheet Metal Damage 5-113
Finish Damage 5-113
Underbody Maintenance 5-113
Chemical Paint Spotting 5-113
Vehicle Care/Appearance Materials 5-114

Vehicle Identification 5-115
Vehicle Identification Number (VIN) 5-115
Service Parts Identification Label 5-115

Electrical System 5-115
Add-On Electrical Equipment 5-115
Windshield Wiper Fuses 5-116
Fuses and Circuit Breakers 5-116
Engine Compartment Fuse Block 5-116

Capacities and Specifications 5-120
Capacities and Specifications 5-120

Service

For service and parts needs, visit your dealer/retailer. You will receive genuine GM parts and GM-trained and supported service people.

Genuine GM parts have one of these marks:

Accessories and Modifications

When non-dealer/non-retailer accessories are added to your vehicle they can affect your vehicle's performance and safety, including such things as, airbags, braking, stability, ride and handling, emissions systems, aerodynamics, durability, and electronic systems like antilock brakes, traction control and stability control. Some of these accessories could even cause malfunction or damage not covered by warranty.

GM Accessories are designed to complement and function with other systems on your vehicle. Your GM dealer/retailer can accessorize your vehicle using genuine GM Accessories. When you go to your GM dealer/retailer and ask for GM Accessories, you will know that GM-trained and supported service technicians will perform the work using genuine GM Accessories.

Also, see *Adding Equipment to Your Airbag-Equipped Vehicle on page 1-74*.

California Proposition 65 Warning

Most motor vehicles, including this one, contain and/or emit chemicals known to the State of California to cause cancer and birth defects or other reproductive harm. Engine exhaust, many parts and systems (including some inside the vehicle), many fluids, and some component wear by-products contain and/or emit these chemicals.

California Perchlorate Materials Requirements

Certain types of automotive applications, such as airbag initiators, seat belt pretensioners, and lithium batteries contained in remote keyless entry transmitters, may contain perchlorate materials. Special handling may be necessary. For additional information, see www.dtsc.ca.gov/hazardouswaste/perchlorate.

Doing Your Own Service Work

⚠ CAUTION:

You can be injured and your vehicle could be damaged if you try to do service work on a vehicle without knowing enough about it.

- **Be sure you have sufficient knowledge, experience, the proper replacement parts, and tools before you attempt any vehicle maintenance task.**
- **Be sure to use the proper nuts, bolts, and other fasteners. English and metric fasteners can be easily confused. If you use the wrong fasteners, parts can later break or fall off. You could be hurt.**

If you want to do some of your own service work, you should use the proper service manual. It tells you much more about how to service your vehicle than this manual can. To order the proper service manual, see *Service Publications Ordering Information on page 7-16*.

Your vehicle has an airbag system. Before attempting to do your own service work, see *Servicing Your Airbag-Equipped Vehicle on page 1-74*.

You should keep a record with all parts receipts and list the mileage and the date of any service work you perform. See *Maintenance Record on page 6-16*.

Adding Equipment to the Outside of Your Vehicle

Things you might add to the outside of your vehicle can affect the airflow around it. This can cause wind noise and can affect fuel economy and windshield washer performance. Check with your dealer/retailer before adding equipment to the outside of your vehicle.

Fuel

Use of the recommended fuel is an important part of the proper maintenance of your vehicle. To help keep the engine clean and maintain optimum vehicle performance, we recommend the use of gasoline advertised as TOP TIER Detergent Gasoline.

Gasoline Octane

Use regular unleaded gasoline with a posted octane rating of 87 or higher. If the octane rating is less than 87, you might notice an audible knocking noise when you drive, commonly referred to as spark knock. If this occurs, use a gasoline rated at 87 octane or higher as soon as possible. If you are using gasoline rated at 87 octane or higher and you hear heavy knocking, the engine needs service.

Gasoline Specifications

At a minimum, gasoline should meet ASTM specification D 4814 in the United States or CAN/CGSB-3.5 or 3.511 in Canada. Some gasolines contain an octane-enhancing additive called methylcyclopentadienyl manganese tricarbonyl (MMT). We recommend against the use of gasolines containing MMT. See *Additives on page 5-6* for additional information.

California Fuel

If your vehicle is certified to meet California Emissions Standards, it is designed to operate on fuels that meet California specifications. See the underhood emission control label. If this fuel is not available in states adopting California emissions standards, your vehicle will operate satisfactorily on fuels meeting federal specifications, but emission control system performance might be affected. The malfunction indicator lamp could turn on and your vehicle might fail a smog-check test. See *Malfunction Indicator Lamp on page 3-34*. If this occurs, return to your authorized dealer/retailer for diagnosis. If it is determined that the condition is caused by the type of fuel used, repairs might not be covered by your warranty.

Additives

To provide cleaner air, all gasolines in the United States are now required to contain additives that help prevent engine and fuel system deposits from forming, allowing the emission control system to work properly. In most cases, you should not have to add anything to the fuel. However, some gasolines contain only the minimum amount of additive required to meet U.S. Environmental Protection Agency regulations. To help keep fuel injectors and intake valves clean, or if your vehicle experiences problems due to dirty injectors or valves, look for gasoline that is advertised as TOP TIER Detergent Gasoline. Also, your dealer/retailer has additives that will help correct and prevent most deposit-related problems.

Gasolines containing oxygenates, such as ethers and ethanol, and reformulated gasolines might be available in your area. We recommend that you use these gasolines, if they comply with the specifications described earlier. However, E85 (85% ethanol) and other fuels containing more than 10% ethanol must not be used in vehicles that were not designed for those fuels.

Notice: **Your vehicle was not designed for fuel that contains methanol. Do not use fuel containing methanol. It can corrode metal parts in the fuel system and also damage plastic and rubber parts. That damage would not be covered under your warranty.**

Some gasolines that are not reformulated for low emissions can contain an octane-enhancing additive called methylcyclopentadienyl manganese tricarbonyl (MMT); ask the attendant where you buy gasoline whether the fuel contains MMT. We recommend against the use of such gasolines. Fuels containing MMT can reduce the life of spark plugs and the performance of the emission control system could be affected. The malfunction indicator lamp might turn on. If this occurs, return to your dealer/retailer for service.

Fuels in Foreign Countries

If you plan on driving in another country outside the United States or Canada, the proper fuel might be hard to find. Never use leaded gasoline or any other fuel not recommended in the previous text on fuel. Costly repairs caused by use of improper fuel would not be covered by your warranty.

To check the fuel availability, ask an auto club, or contact a major oil company that does business in the country where you will be driving.

Filling the Tank

⚠ CAUTION:

Fuel vapor burns violently and a fuel fire can cause bad injuries. To help avoid injuries to you and others, read and follow all the instructions on the pump island. Turn off your engine when you are refueling. Do not smoke if you are near fuel or refueling your vehicle. Do not use cellular phones. Keep sparks, flames, and smoking materials away from fuel. Do not leave the fuel pump unattended when refueling your vehicle. This is against the law in some places. Do not re-enter the vehicle while pumping fuel. Keep children away from the fuel pump; never let children pump fuel.

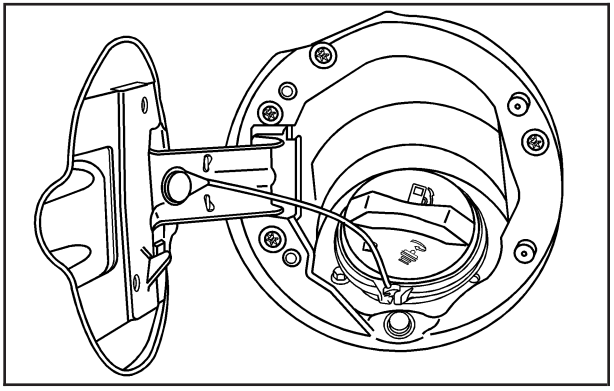

The tethered fuel cap is located behind a hinged fuel door on the driver's side of the vehicle.

To remove the fuel cap, turn it slowly counterclockwise.

While refueling, hang the tethered fuel cap from the hook on the fuel door.

⚠ CAUTION:

Fuel can spray out on you if you open the fuel cap too quickly. If you spill fuel and then something ignites it, you could be badly burned. This spray can happen if your tank is nearly full, and is more likely in hot weather. Open the fuel cap slowly and wait for any hiss noise to stop. Then unscrew the cap all the way.

Be careful not to spill fuel. Do not top off or overfill the tank and wait a few seconds after you have finished pumping before removing the nozzle. Clean fuel from painted surfaces as soon as possible. See *Washing Your Vehicle on page 5-110*.

When replacing the fuel cap, turn it clockwise until it clicks. Make sure the cap is fully installed. The diagnostic system can determine if the fuel cap has been left off or improperly installed. This would allow fuel to evaporate into the atmosphere. If the fuel cap is not properly installed, the FUEL CAP message will appear on the Driver Information Center (DIC) and the check engine light will be lit on the instrument panel cluster. See *DIC Warnings and Messages on page 3-42* and *Malfunction Indicator Lamp on page 3-34* for more information.

⚠ CAUTION:

If a fire starts while you are refueling, do not remove the nozzle. Shut off the flow of fuel by shutting off the pump or by notifying the station attendant. Leave the area immediately.

Notice: **If you need a new fuel cap, be sure to get the right type. Your dealer/retailer can get one for you. If you get the wrong type, it may not fit properly. This may cause your malfunction indicator lamp to light and may damage your fuel tank and emissions system. See *Malfunction Indicator Lamp on page 3-34*.**

Filling a Portable Fuel Container

⚠ CAUTION:

Never fill a portable fuel container while it is in your vehicle. Static electricity discharge from the container can ignite the fuel vapor. You can be badly burned and your vehicle damaged if this occurs. To help avoid injury to you and others:

- **Dispense fuel only into approved containers.**
- **Do not fill a container while it is inside a vehicle, in a vehicle's trunk, pickup bed, or on any surface other than the ground.**
- **Bring the fill nozzle in contact with the inside of the fill opening before operating the nozzle. Contact should be maintained until the filling is complete.**
- **Do not smoke while pumping fuel.**
- **Do not use a cellular phone while pumping fuel.**

Checking Things Under the Hood

⚠ CAUTION:

Things that burn can get on hot engine parts and start a fire. These include liquids like fuel, oil, coolant, brake fluid, windshield washer and other fluids, and plastic or rubber. You or others could be burned. Be careful not to drop or spill things that will burn onto a hot engine.

Hood Release

To open the hood, do the following:

1. Pull the handle with this symbol on it. It is located inside the vehicle on the lower left side of the instrument panel.
2. Release the secondary latch on the hood. It is located below the front center of the hood.
3. Lift the hood.
4. Release the hood prop from its retainer and put the hood prop into the slot in the hood.

Before closing the hood, be sure all the filler caps are on properly. Then lift the hood to relieve pressure on the hood prop. Remove the hood prop from the slot in the hood and return the prop to its retainer. Lower the hood 10 to 12 inches (25 to 30 cm) above the vehicle and release it to latch fully. Check to make sure the hood is closed and repeat the procedure if necessary.

Engine Compartment Overview

When you open the hood on the 2.9L engine (3.7L engine similar), you will see the following:

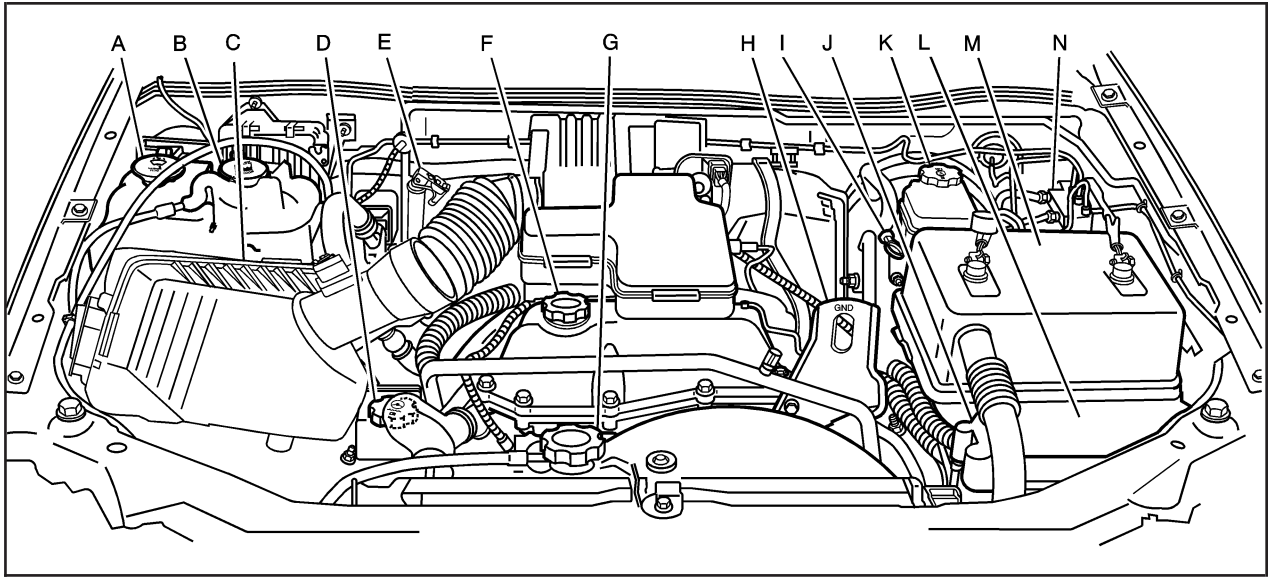

A. Windshield Washer Fluid. See “Adding Washer Fluid” under *Windshield Washer Fluid on page 5-38*.

B. Engine Coolant Recovery Tank. See *Engine Coolant on page 5-27*.

C. Engine Air Cleaner/Filter. See *Engine Air Cleaner/Filter on page 5-20*.

D. Power Steering Fluid Reservoir (low in engine compartment). See *Power Steering Fluid on page 5-37*.

E. Automatic Transmission Fluid Dipstick (If Equipped). See “Checking the Fluid Level” under *Automatic Transmission Fluid on page 5-21*.

F. Engine Oil Fill Cap. See “When to Add Engine Oil” under *Engine Oil on page 5-15*.

G. Radiator Pressure Cap. See *Cooling System on page 5-32*.

H. Remote Negative (–) Terminal (GND). See *Jump Starting on page 5-44*.

I. Engine Oil Dipstick. See “Checking Engine Oil” under *Engine Oil on page 5-15*.

J. Remote Positive (+) Terminal. See *Jump Starting on page 5-44*.

K. Brake Fluid Reservoir. See “Brake Fluid” under *Brakes on page 5-39*.

L. Engine Compartment Fuse Block. See *Engine Compartment Fuse Block on page 5-116*.

M. Battery. See *Battery on page 5-43*.

N. Hydraulic Clutch Fluid Reservoir (If Equipped). See *Hydraulic Clutch on page 5-26*.

When you open the hood on the 5.3L engine, you will see the following:

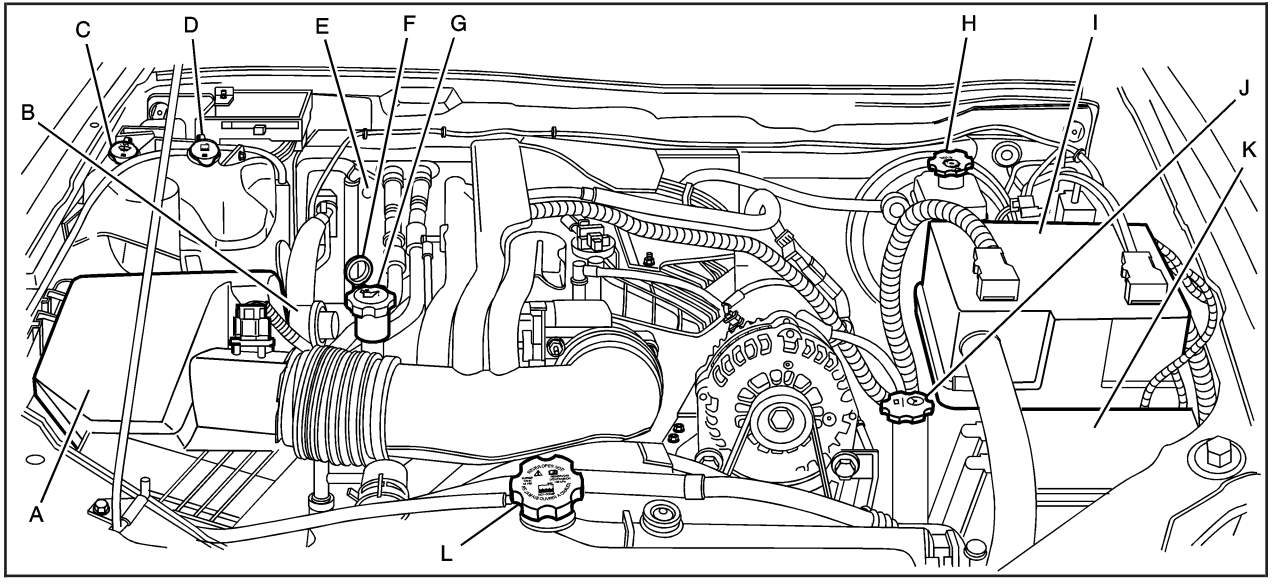

A. Engine Air Cleaner/Filter. See *Engine Air Cleaner/Filter on page 5-20*.

B. Air Filter Restriction Indicator (If Equipped). See *Engine Air Cleaner/Filter on page 5-20*.

C. Windshield Washer Fluid Reservoir. See “Adding Washer Fluid” under *Windshield Washer Fluid on page 5-38*.

D. Engine Coolant Recovery Tank. See *Engine Coolant on page 5-27*.

E. Automatic Transmission Fluid Dipstick (If Equipped). See “Checking the Fluid Level” under *Automatic Transmission Fluid on page 5-21*.

F. Engine Oil Dipstick. See “Checking Engine Oil” under *Engine Oil on page 5-15*.

G. Engine Oil Fill Cap. See “When to Add Engine Oil” under *Engine Oil on page 5-15*.

H. Brake Fluid Reservoir. See “Brake Fluid” under *Brakes on page 5-39*.

I. Battery. See *Battery on page 5-43*.

J. Power Steering Fluid Reservoir. See *Power Steering Fluid on page 5-37*.

K. Engine Compartment Fuse Block. See *Engine Compartment Fuse Block on page 5-116*.

L. Radiator Pressure Cap. See *Cooling System on page 5-32*.

Engine Oil

Checking Engine Oil

It is a good idea to check the engine oil every time you get fuel. In order to get an accurate reading, the oil must be warm and the vehicle must be on level ground.

The engine oil dipstick handle is a yellow loop. See *Engine Compartment Overview on page 5-12* for the location of the engine oil dipstick.

1. Turn off the engine and give the oil several minutes to drain back into the oil pan. If you do not do this, the oil dipstick might not show the actual level.
2. Pull out the dipstick and clean it with a paper towel or cloth, then push it back in all the way. Remove it again, keeping the tip down, and check the level.

When to Add Engine Oil

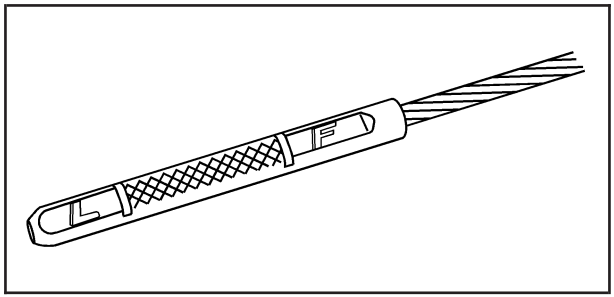

If the oil is below the cross-hatched area (L), add at least one quart/liter of the recommended oil. This section explains what kind of oil to use. For engine oil crankcase capacity, see *Capacities and Specifications on page 5-120*.

Notice: **Do not add too much oil. If the engine has so much oil that the oil level gets above the cross-hatched area that shows the proper operating range, the engine could be damaged.**

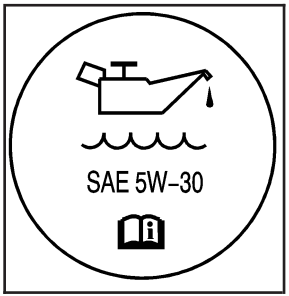

See *Engine Compartment Overview on page 5-12* for the location of the engine oil fill cap.

Be sure to add enough oil to put the level somewhere in the proper operating range. Push the dipstick all the way back in when you are through.

What Kind of Engine Oil to Use

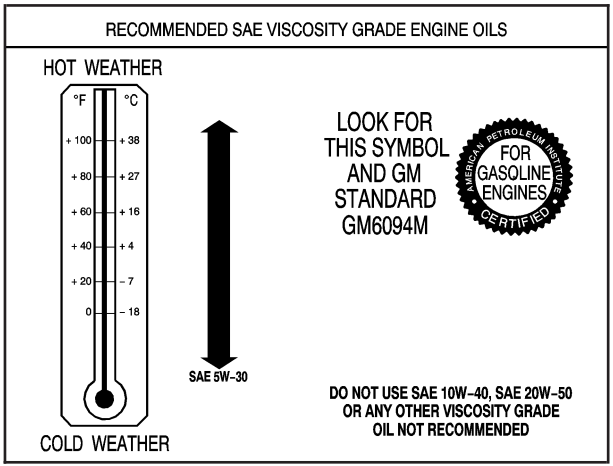

Look for three things:

- GM6094M

  Your vehicle's engine requires oil meeting GM Standard GM6094M. Look for and use only an oil that meets GM Standard GM6094M.

- SAE 5W-30

  As shown in the viscosity chart, SAE 5W-30 is best for your vehicle.

  These numbers on an oil container show its viscosity, or thickness. Do not use other viscosity oils such as SAE 20W-50.

- Oils meeting these requirements should have the starburst symbol on the container. This symbol indicates that the oil has been certified by the American Petroleum Institute (API).

Look for this information on the oil container, and use only those oils that are identified as meeting GM Standard GM6094M and have the starburst symbol on the front of the oil container.

Notice: **Use only engine oil identified as meeting GM Standard GM6094M and showing the American Petroleum Institute Certified For Gasoline Engines starburst symbol. Failure to use the recommended oil can result in engine damage not covered by your warranty.**

If you are in an area of extreme cold, where the temperature falls below –20°F (–29°C), it is recommended that you use either an SAE 5W-30 synthetic oil or an SAE 0W-30 oil. Both provide easier cold starting and better protection for the engine at extremely low temperatures.

Engine Oil Additives

Do not add anything to the oil. The recommended oils with the starburst symbol that meet GM Standard GM6094M are all you need for good performance and engine protection.

Engine Oil Life System

When to Change Engine Oil

Your vehicle has a computer system that lets you know when to change the engine oil and filter. This is based on engine revolutions and engine temperature, and not on mileage. Based on driving conditions, the mileage at which an oil change will be indicated can vary considerably. For the oil life system to work properly, you must reset the system every time the oil is changed.

When the system has calculated that oil life has been diminished, it will indicate that an oil change is necessary. A CHANGE OIL message will come on. See *DIC Warnings and Messages on page 3-42*. Change the oil as soon as possible within the next 600 miles (1 000 km). It is possible that, if you are driving under the best conditions, the oil life system might not indicate that an oil change is necessary for over a year. However, the engine oil and filter must be changed at least once a year and at this time the system must be reset. Your dealer/retailer has trained people who will perform this work using genuine parts and reset the system. It is also important to check the oil regularly and keep it at the proper level.

If the system is ever reset accidentally, you must change the oil at 3,000 miles (5 000 km) since your last oil change. Remember to reset the oil life system whenever the oil is changed.

How to Reset the Engine Oil Life System

The Engine Oil Life System calculates when to change the engine oil and filter based on vehicle use. Whenever the oil is changed, reset the system so it can calculate when the next oil change is required. If a situation occurs where you change the oil prior to a CHANGE OIL message being turned on, reset the system.

To reset the Engine Oil Life system:

1. With the engine off, turn the ignition to ON/RUN.
2. Press and release the stem in the lower center of the instrument cluster until the OIL LIFE message is displayed.
3. Once the alternating OIL LIFE and RESET messages appear, press and hold the stem until several beeps sound. This confirms that the oil life system has been reset.
4. Turn the key to LOCK/OFF.

If the CHANGE OIL message comes back on when you start your vehicle, the engine oil life system has not reset. Repeat the procedure. See *DIC Warnings and Messages on page 3-42*.

What to Do with Used Oil

Used engine oil contains certain elements that can be unhealthy for your skin and could even cause cancer. Do not let used oil stay on your skin for very long. Clean your skin and nails with soap and water, or a good hand cleaner. Wash or properly dispose of clothing or rags containing used engine oil. See the manufacturer's warnings about the use and disposal of oil products.

Used oil can be a threat to the environment. If you change your own oil, be sure to drain all the oil from the filter before disposal. Never dispose of oil by putting it in the trash, pouring it on the ground, into sewers, or into streams or bodies of water. Instead, recycle it by taking it to a place that collects used oil. If you have a problem properly disposing of used oil, ask your dealer/retailer, a service station, or a local recycling center for help.

Engine Air Cleaner/Filter

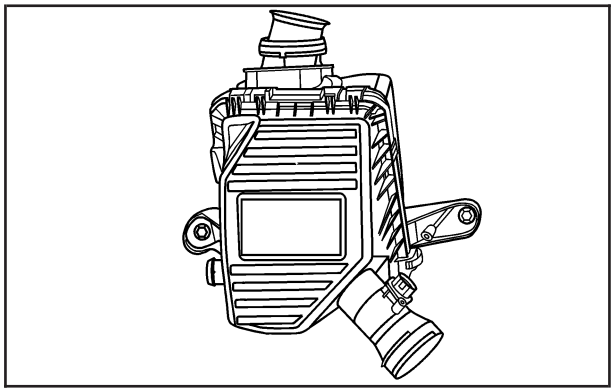

The engine air cleaner/filter is located in the engine compartment on the passenger's side of the vehicle. See *Engine Compartment Overview on page 5-12* for more information on location.

When to Inspect the Engine Air Cleaner/Filter

Inspect the air cleaner/filter at the Maintenance II intervals and replace it at the first oil change after each 50,000 mile (80 000 km) interval. See *Scheduled Maintenance on page 6-4* for more information. If you are driving in dusty/dirty conditions, inspect the filter at each engine oil change.

How to Inspect the Engine Air Cleaner/Filter

To inspect or replace the engine air cleaner/filter, do the following:

1. Unfasten the clips that hold the cover on and remove the cover.
2. Lift out the engine air cleaner/filter.
3. Inspect or replace the air filter. See *Normal Maintenance Replacement Parts on page 6-14* to determine which filter to use.
4. Reinstall the engine air cleaner/filter cover. Fasten the clips to hold the cover in place.

⚠ CAUTION:

Operating the engine with the air cleaner/filter off can cause you or others to be burned. The air cleaner not only cleans the air; it helps to stop flames if the engine backfires. If it is not there and the engine backfires, you could be burned. Do not drive with it off, and be careful working on the engine with the air cleaner/filter off.

Notice: **If the air cleaner/filter is off, a backfire can cause a damaging engine fire. And, dirt can easily get into your engine, which will damage it. Always have the air cleaner/filter in place when you are driving.**

Automatic Transmission Fluid

When to Check and Change Automatic Transmission Fluid

A good time to check your automatic transmission fluid level is when the engine oil is changed.

Change the fluid and filter at the intervals listed in *Additional Required Services on page 6-6*, and be sure to use the transmission fluid listed in *Recommended Fluids and Lubricants on page 6-12*.

How to Check Automatic Transmission Fluid

Because this operation can be a little difficult, you may choose to have this done at the dealer/retailer service department.

If you do it yourself, be sure to follow all the instructions here, or you could get a false reading on the dipstick.

Notice: **Too much or too little fluid can damage your transmission. Too much can mean that some of the fluid could come out and fall on hot engine parts or exhaust system parts, starting a fire. Too little fluid could cause the transmission to overheat. Be sure to get an accurate reading if you check your transmission fluid.**

Wait at least 30 minutes before checking the transmission fluid level if you have been driving:

- When outside temperatures are above 90°F (32°C).
- At high speed for quite a while.
- In heavy traffic — especially in hot weather.
- While pulling a trailer.

To get the right reading, the fluid should be at normal operating temperature, which is 180°F to 200°F (82°C to 93°C).

Get the vehicle warmed up by driving about 15 miles (24 km) when outside temperatures are above 50°F (10°C). If it is colder than 50°F (10°C), drive the vehicle in THIRD (3) until the engine temperature gage moves and then remains steady for 10 minutes.

A cold fluid check can be made after the vehicle has been sitting for eight hours or more with the engine off, but this is used only as a reference. Let the engine run at idle for five minutes if outside temperatures are 50°F (10°C) or more. If it is colder than 50°F (10°C), you may have to idle the engine longer. Should the fluid level be low during this cold check, you must check the fluid hot before adding fluid. Checking the fluid hot will give you a more accurate reading of the fluid level.

Checking the Fluid Level

Prepare your vehicle as follows:

1. Park your vehicle on a level place. Keep the engine running.
2. With the parking brake applied, place the shift lever in PARK (P).
3. With your foot on the brake pedal, move the shift lever through each gear range, pausing for about three seconds in each range. Then, position the shift lever in PARK (P).
4. Let the engine run at idle for three minutes or more.

Then, without shutting off the engine, follow these steps:

1. Flip the handle up and then pull out the dipstick and wipe it with a clean rag or paper towel.

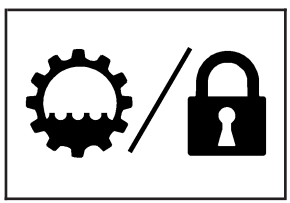

The automatic transmission dipstick handle with this symbol on it is located in the engine compartment on the passenger's side of the vehicle.

See *Engine Compartment Overview on page 5-12* for more information on location.

2. Push it back in all the way, wait three seconds and then pull it back out again.

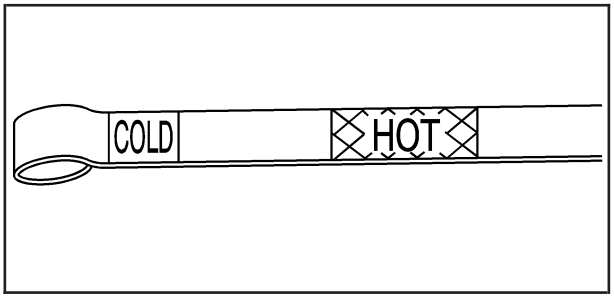

3. Check both sides of the dipstick, and read the lower level. The fluid level must be in the COLD area, below the cross-hatched area, for a cold check or in the HOT or cross-hatched area for a hot check. Be sure to keep the dipstick pointed down to get an accurate reading.
4. If the fluid level is in the acceptable range, push the dipstick back in all the way; then flip the handle down to lock the dipstick in place.

How to Add Automatic Transmission Fluid

Refer to the Maintenance Schedule to determine what kind of transmission fluid to use. See *Recommended Fluids and Lubricants on page 6-12*.

Add fluid only after checking the transmission fluid while it is hot. A cold check is used only as a reference. If the fluid level is low, add only enough of the proper fluid to bring the level up to the HOT area for a hot check. It does not take much fluid, generally less than one pint (0.5 L). Do not overfill.

Notice: **Use of the incorrect automatic transmission fluid may damage your vehicle, and the damages may not be covered by your warranty. Always use the automatic transmission fluid listed in *Recommended Fluids and Lubricants on page 6-12*.**

- After adding fluid, recheck the fluid level as described under “How to Check Automatic Transmission Fluid,” earlier in this section.
- When the correct fluid level is obtained, push the dipstick back in all the way; then flip the handle down to lock the dipstick in place.

Manual Transmission Fluid

When to Check

A good time to have it checked is when the engine oil is changed. However, the fluid in your manual transmission does not require changing.

How to Check

Because this operation can be a little difficult, you may choose to have this done at your GM dealer/retailer service department.

If you do it yourself, be sure to follow all the instructions here, or you could get a false reading.

Notice: **Too much or too little fluid can damage your transmission. Too little fluid could cause the transmission to overheat. Be sure to get an accurate reading if you check your transmission fluid.**

Check the fluid level only when your engine is off, the vehicle is parked on a level place and the transmission is cool enough for you to rest your fingers on the transmission case.

Then, follow these steps:

1. Remove the filler plug.
2. Check that the lubricant level is up to the bottom of the filler plug hole.
3. If the fluid level is good, install the plug and be sure it is fully seated. If the fluid level is low, add more fluid as described in the next steps.

How to Add Fluid

Here is how to add fluid. Refer to the Maintenance Schedule to determine what kind of fluid to use.
See *Recommended Fluids and Lubricants on page 6-12*.

1. Remove the filler plug.
2. Add fluid at the filler plug hole. Add only enough fluid to bring the fluid level up to the bottom of the filler plug hole.
3. Install the filler plug. Be sure the plug is fully seated.

Hydraulic Clutch

The hydraulic clutch linkage in your vehicle is self-adjusting. The clutch master cylinder reservoir is filled with hydraulic clutch fluid.

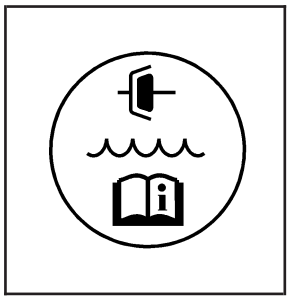

The hydraulic clutch fluid reservoir cap has this symbol on it. See *Engine Compartment Overview on page 5-12* for reservoir location.

It is not necessary to regularly check clutch fluid unless you suspect there is a leak in the system. Adding fluid will not correct a leak.

A fluid loss in this system could indicate a problem. Have the system inspected and repaired.

When to Check and What to Use

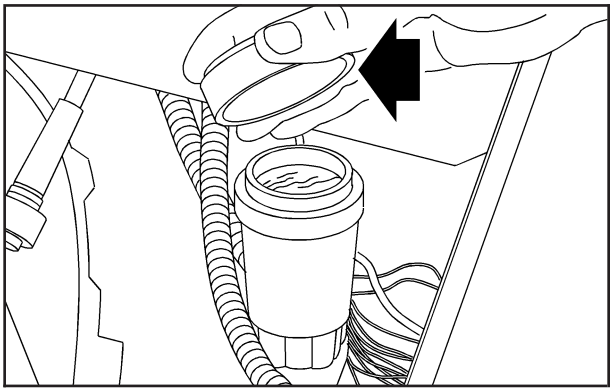

Refer to the Maintenance Schedule to determine how often you should check the fluid level in your clutch master cylinder reservoir and for the proper fluid. See *Recommended Fluids and Lubricants on page 6-12*.

How to Check and Add Fluid

The proper fluid should be added if the level does not reach the bottom of the diaphragm when it is in place in the reservoir. See the instructions on the reservoir cap.

Engine Coolant

The cooling system in your vehicle is filled with DEX-COOL® engine coolant. This coolant is designed to remain in your vehicle for five years or 150,000 miles (240 000 km), whichever occurs first, if you add only DEX-COOL® extended life coolant.

The following explains your cooling system and how to add coolant when it is low. If you have a problem with engine overheating, see *Engine Overheating on page 5-30*.

A 50/50 mixture of clean, drinkable water and DEX-COOL® coolant will:

- Give freezing protection down to –34°F (–37°C).
- Give boiling protection up to 265°F (129°C).
- Protect against rust and corrosion.
- Help keep the proper engine temperature.
- Let the warning lights and gages work as they should.

Notice: **Using coolant other than DEX-COOL® may cause premature engine, heater core, or radiator corrosion. In addition, the engine coolant may require changing sooner, at the first maintenance service after each 30,000 miles (50 000 km) or 24 months, whichever occurs first. Any repairs would not be covered by your warranty. Always use DEX-COOL® (silicate-free) coolant in your vehicle.**

What to Use

Use a mixture of one-half clean, drinkable water and one-half DEX-COOL® coolant which will not damage aluminum parts. If you use this coolant mixture, you do not need to add anything else.

⚠ CAUTION:

Adding only plain water to your cooling system can be dangerous. Plain water, or some other liquid such as alcohol, can boil before the proper coolant mixture will. Your vehicle's coolant warning system is set for the proper coolant mixture. With plain water or the wrong mixture, your engine could get too hot but you would not get the overheat warning. Your engine could catch fire and you or others could be burned. Use a 50/50 mixture of clean, drinkable water and the proper coolant.

Notice: **If you use an improper coolant mixture, your engine could overheat and be badly damaged. The repair cost would not be covered by your warranty. Too much water in the mixture can freeze and crack the engine, radiator, heater core, and other parts.**

Notice: **If you use extra inhibitors and/or additives in your vehicle's cooling system, you could damage your vehicle. Use only the proper mixture of the engine coolant listed in this manual for the cooling system. See *Recommended Fluids and Lubricants on page 6-12* for more information.**

Checking Coolant

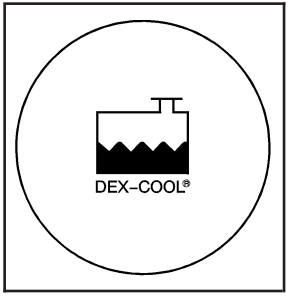

The coolant recovery tank cap has this symbol on it.

It is located toward the rear of the engine compartment on the passenger's side of the vehicle. See *Engine Compartment Overview on page 5-12* for more information on location.

The vehicle must be on a level surface. When your engine is cold, the coolant level should be at FULL COLD, or a little higher. When your engine is warm, the level could be above the FULL COLD level.

Adding Coolant

If you need more coolant, add the proper DEX-COOL® coolant mixture at the coolant recovery tank.

⚠ CAUTION:

Turning the radiator pressure cap when the engine and radiator are hot can allow steam and scalding liquids to blow out and burn you badly. With the coolant recovery tank, you will almost never have to add coolant at the radiator. Never turn the radiator pressure cap — even a little — when the engine and radiator are hot.

Add coolant mixture at the recovery tank, but be careful not to spill it.

⚠ CAUTION:

You can be burned if you spill coolant on hot engine parts. Coolant contains ethylene glycol, and it will burn if the engine parts are hot enough. Do not spill coolant on a hot engine.

Occasionally check the coolant level in the radiator. For information on how to add coolant to the radiator, see *Cooling System on page 5-32*.

Radiator Pressure Cap

Notice: **If the pressure cap is not tightly installed, coolant loss and possible engine damage may occur. Be sure the cap is properly and tightly secured.**

See *Engine Compartment Overview on page 5-12* for more information on location.

Engine Overheating

A coolant temperature gage is on the instrument panel. See *Engine Coolant Temperature Gage on page 3-33*.

The air conditioning might stop working if the engine is too hot. This is normal and helps cool the engine.

If Steam Is Coming From Your Engine

⚠ CAUTION:

Steam from an overheated engine can burn you badly, even if you just open the hood. Stay away from the engine if you see or hear steam coming from it. Just turn it off and get everyone away from the vehicle until it cools down. Wait until there is no sign of steam or coolant before you open the hood.

If you keep driving when your engine is overheated, the liquids in it can catch fire. You or others could be badly burned. Stop your engine if it overheats, and get out of the vehicle until the engine is cool.

Notice: **If your engine catches fire because you keep driving with no coolant, your vehicle can be badly damaged. The costly repairs would not be covered by your warranty.**

If No Steam Is Coming From Your Engine

If you get an engine overheat warning but see or hear no steam, the problem may not be too serious. Sometimes the engine can get a little too hot when you:

- Climb a long hill on a hot day.
- Stop after high-speed driving.
- Idle for long periods in traffic.
- Tow a trailer. See “Driving on Grades” under *Towing a Trailer on page 4-47*.

If you get the overheat warning with no sign of steam, try this for a minute or so:

1. In heavy traffic, let the engine idle in NEUTRAL while stopped. If it is safe to do so, pull off the road, shift to PARK (P) or NEUTRAL and let the engine idle.
2. Turn off the air conditioning.
3. Turn on your heater to full hot at the highest fan speed and open the windows as necessary.

If you no longer have the overheat warning, you can drive. Just to be safe, drive slower for about 10 minutes. If the warning does not come back on, you can drive normally.

If the warning continues, pull over, stop, and park your vehicle right away.

If there is still no sign of steam, idle the engine for three minutes while you are parked. Push down the accelerator until the engine speed is about twice as fast as normal idle speed for at least three minutes while you are parked. If you still have the warning, turn off the engine and get everyone out of the vehicle until it cools down.

You may decide not to lift the hood but to get service help right away.

Cooling System

When you decide it is safe to lift the hood, here is what you will see:

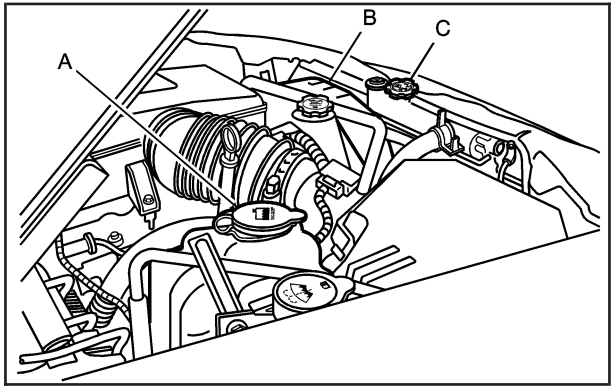

A. Coolant Recovery Tank

B. Engine Cooling Fan

C. Radiator Pressure Cap

If the coolant inside the coolant recovery tank is boiling, do not do anything else until it cools down. The vehicle should be parked on a level surface.

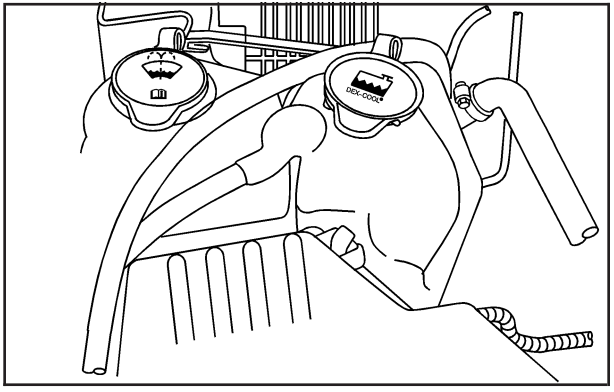

When the engine is cold, the coolant level should be at least up to the FULL COLD mark. If it is not, you may have a leak at the pressure cap or in the radiator hoses, heater hoses, radiator, water pump or somewhere else in the cooling system.

⚠ CAUTION:

Heater and radiator hoses, and other engine parts, can be very hot. Do not touch them. If you do, you can be burned.

Do not run the engine if there is a leak. If you run the engine, it could lose all coolant. That could cause an engine fire, and you could be burned. Get any leak fixed before you drive the vehicle.

If there seems to be no leak, start the engine again. The engine cooling fan speed should increase when idle speed is doubled by pushing the accelerator pedal down. If it does not, your vehicle needs service. Turn off the engine.

Notice: **Engine damage from running the engine without coolant is not covered by the warranty.**

Notice: **Using coolant other than DEX-COOL® may cause premature engine, heater core, or radiator corrosion. In addition, the engine coolant could require changing sooner, at 30,000 miles (50 000 km) or 24 months, whichever occurs first. Any repairs would not be covered by the warranty. Always use DEX-COOL® (silicate-free) coolant in the vehicle.**

How to Add Coolant to the Coolant Recovery Tank

If you have not found a problem yet, but the coolant level is not at the FULL COLD mark, add a 50/50 mixture of clean, drinkable water and DEX-COOL® engine coolant at the coolant recovery tank. See *Engine Coolant on page 5-27* for more information.

⚠ CAUTION:

Adding only plain water to the cooling system can be dangerous. Plain water, or some other liquid such as alcohol, can boil before the proper coolant mixture will. The vehicle's coolant warning system is set for the proper coolant mixture. With plain water or the wrong mixture, the engine could get too hot but you would not get the overheat warning. The engine could catch fire and you or others could be burned. Use a 50/50 mixture of clean, drinkable water and DEX-COOL® coolant.

Notice: **In cold weather, water can freeze and crack the engine, radiator, heater core and other parts. Use the recommended coolant and the proper coolant mixture.**

⚠ CAUTION:

You can be burned if you spill coolant on hot engine parts. Coolant contains ethylene glycol and it will burn if the engine parts are hot enough. Do not spill coolant on a hot engine.

When the coolant in the coolant recovery tank is at the FULL COLD mark, start your vehicle.

If the overheat warning continues, there is one more thing you can try. Add the proper mixture directly to the radiator, but be sure the cooling system is cool before you do it.

⚠ CAUTION:

Steam and scalding liquids from a hot cooling system can blow out and burn you badly. They are under pressure, and if you turn the radiator pressure cap — even a little — they can come out at high speed. Never turn the cap when the cooling system, including the radiator pressure cap, is hot. Wait for the cooling system and radiator pressure cap to cool if you ever have to turn the pressure cap.

How to Add Coolant to the Radiator

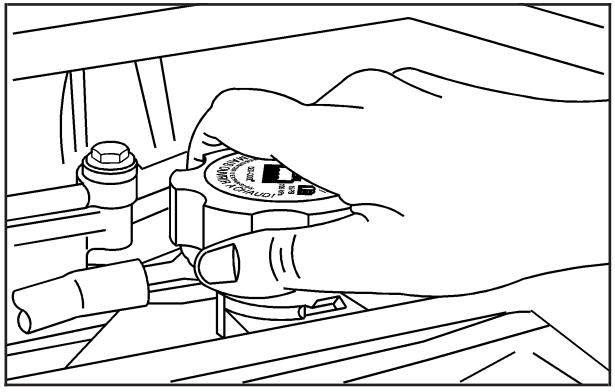

1. Remove the radiator pressure cap when the cooling system, including the upper radiator hose, is no longer hot. Turn the pressure cap slowly counterclockwise about one full turn.

   If you hear a hiss, wait for that to stop. A hiss means there is still some pressure left.
2. Keep turning the cap to remove it.
3. Fill the radiator with the proper DEX-COOL® coolant mixture, up to the base of the filler neck. See *Engine Coolant on page 5-27* for more information about the proper coolant mixture.

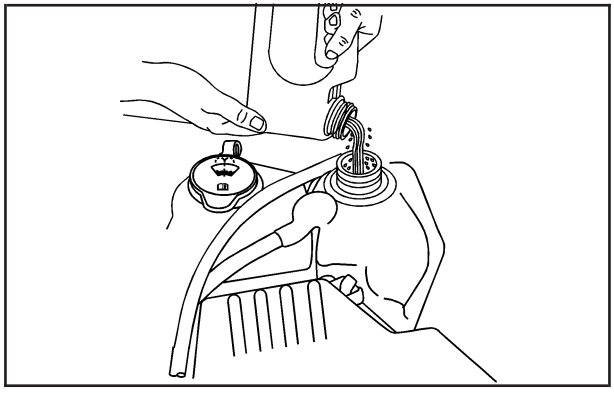

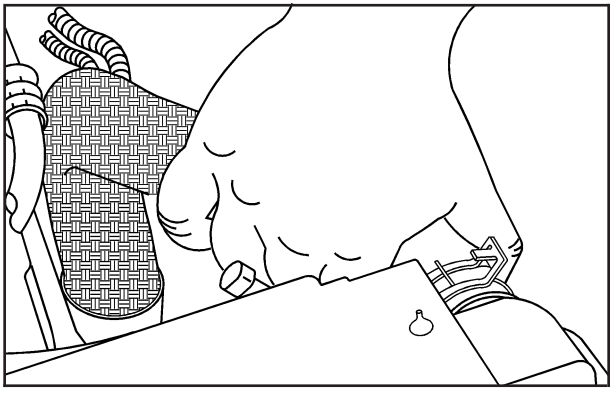

4. Fill the coolant recovery tank to the FULL COLD mark.
5. Reinstall the cap on the coolant recovery tank, but leave the radiator pressure cap off.
6. Start the engine and let it run until you can feel the upper radiator hose getting hot. Watch out for the engine cooling fan.
7. By this time, the coolant level inside the radiator filler neck might be lower. If the level is lower, add more of the proper DEX-COOL® coolant mixture through the filler neck until the level reaches the base of the filler neck.
8. Then replace the pressure cap.

At any time during this procedure if coolant begins to flow out of the filler neck, reinstall the pressure cap. Be sure to secure it tightly.

Engine Fan Noise

This vehicle has a clutched engine cooling fan. When the clutch is engaged, the fan spins faster to provide more air to cool the engine. In most everyday driving conditions, the clutch is not engaged. This improves fuel economy and reduces fan noise. Under heavy vehicle loading, trailer towing and/or high outside temperatures, the fan speed increases when the clutch engages. So you may hear an increase in fan noise. This is normal and should not be mistaken as the transmission slipping or making extra shifts. It is merely the cooling system functioning properly. The fan will slow down when additional cooling is not required and the clutch disengages.

You may also hear this fan noise when you start the engine. It will go away as the fan clutch disengages.

Power Steering Fluid

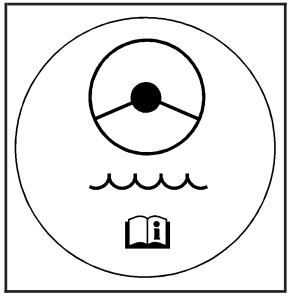

The power steering fluid reservoir is located near the front of the engine compartment, behind the radiator. See *Engine Compartment Overview on page 5-12* for reservoir location.

When to Check Power Steering Fluid

It is not necessary to regularly check power steering fluid unless you suspect there is a leak in the system or you hear an unusual noise. A fluid loss in this system could indicate a problem. Have the system inspected and repaired.

How to Check Power Steering Fluid

1. Turn the key off and let the engine compartment cool down.
2. Wipe the cap and the top of the reservoir clean.
3. Unscrew the cap and wipe the dipstick with a clean rag.
4. Replace the cap and completely tighten it.
5. Then remove the cap again and look at the fluid level on the dipstick.

The level should be between the ADD and FULL marks. If necessary, add only enough fluid to bring the level up to the proper range.

What to Use

To determine what kind of fluid to use, see *Recommended Fluids and Lubricants on page 6-12*. Always use the proper fluid.

Notice: **Use of the incorrect fluid may damage your vehicle and the damages may not be covered by your warranty. Always use the correct fluid listed in *Recommended Fluids and Lubricants on page 6-12*.**

Windshield Washer Fluid

What to Use

When you need windshield washer fluid, be sure to read the manufacturer's instructions before use. If you will be operating your vehicle in an area where the temperature may fall below freezing, use a fluid that has sufficient protection against freezing.

Adding Washer Fluid

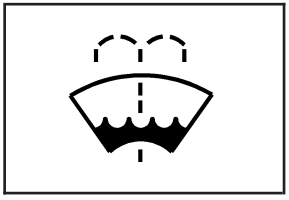

Open the cap with the washer symbol on it. Add washer fluid until the tank is full. See *Engine Compartment Overview on page 5-12* for reservoir location.

Notice:

- **When using concentrated washer fluid, follow the manufacturer's instructions for adding water.**
- **Do not mix water with ready-to-use washer fluid. Water can cause the solution to freeze and damage your washer fluid tank and other parts of the washer system. Also, water does not clean as well as washer fluid.**
- **Fill the washer fluid tank only three-quarters full when it is very cold. This allows for fluid expansion if freezing occurs, which could damage the tank if it is completely full.**
- **Do not use engine coolant (antifreeze) in your windshield washer. It can damage the vehicle's windshield washer system and paint.**

Brakes

Brake Fluid

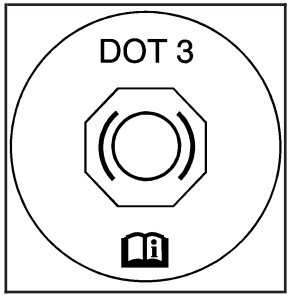

The brake master cylinder reservoir is filled with DOT-3 brake fluid. See *Engine Compartment Overview on page 5-12* for the location of the reservoir.

There are only two reasons why the brake fluid level in the reservoir might go down. The first is that the brake fluid goes down to an acceptable level during normal brake lining wear. When new linings are put in, the fluid level goes back up. The other reason is that fluid is leaking out of the brake hydraulic system. If it is, you should have the brake hydraulic system fixed, since a leak means that sooner or later the brakes will not work well.

It is not a good idea to top off the brake fluid. Adding brake fluid will not correct a leak. If fluid is added when the linings are worn, there will be too much fluid when new brake linings are installed. Add or remove brake fluid, as necessary, only when work is done on the brake hydraulic system.

⚠ CAUTION:

If you have too much brake fluid, it can spill on the engine. The fluid will burn if the engine is hot enough. You or others could be burned, and your vehicle could be damaged. Add brake fluid only when work is done on the brake hydraulic system. See "Checking Brake Fluid" in this section.

Refer to the Maintenance Schedule to determine when to check the brake fluid. See *Scheduled Maintenance on page 6-4*.

Checking Brake Fluid

The brake fluid can be checked without taking off the cap by looking at the brake fluid reservoir.

The fluid level should be above MIN. If it is not, have the brake hydraulic system checked to see if there is a leak.

After work is done on the brake hydraulic system, make sure the level is above the MIN but not over the MAX mark.

What to Add

When you do need brake fluid, use only DOT-3 brake fluid. Use new brake fluid from a sealed container only. See *Recommended Fluids and Lubricants on page 6-12*.

Always clean the brake fluid reservoir cap and the area around the cap before removing it. This helps keep dirt from entering the reservoir.

⚠ CAUTION:

With the wrong kind of fluid in the brake hydraulic system, the brakes might not work well. This could cause a crash. Always use the proper brake fluid.

Notice:

- **Using the wrong fluid can badly damage brake hydraulic system parts. For example, just a few drops of mineral-based oil, such as engine oil, in the brake hydraulic system can damage brake hydraulic system parts so badly that they will have to be replaced. Do not let someone put in the wrong kind of fluid.**
- **If you spill brake fluid on your vehicle's painted surfaces, the paint finish can be damaged. Be careful not to spill brake fluid on your vehicle. If you do, wash it off immediately. See *Washing Your Vehicle on page 5-110*.**

Brake Wear

Your vehicle has front disc brakes and rear drum brakes.

Disc brake pads have built-in wear indicators that make a high-pitched warning sound when the brake pads are worn and new pads are needed. The sound can come and go or be heard all the time your vehicle is moving, except when you are pushing on the brake pedal firmly.

⚠ CAUTION:

The brake wear warning sound means that soon the brakes will not work well. That could lead to an accident. When you hear the brake wear warning sound, have your vehicle serviced.

Notice: **Continuing to drive with worn-out brake pads could result in costly brake repair.**

Some driving conditions or climates can cause a brake squeal when the brakes are first applied or lightly applied. This does not mean something is wrong with the brakes.

Properly torqued wheel nuts are necessary to help prevent brake pulsation. When tires are rotated, inspect brake pads for wear and evenly tighten wheel nuts in the proper sequence to torque specifications in *Capacities and Specifications on page 5-120*.

Rear drum brakes do not have wear indicators, but if you ever hear a rear brake rubbing noise, have the rear brake linings inspected immediately. Also, the rear brake drums should be removed and inspected each time the tires are removed for rotation or changing. When you have the front brake pads replaced, have the rear brakes inspected, too.

Brake linings should always be replaced as complete axle sets.

Brake Pedal Travel

See your dealer/retailer if the brake pedal does not return to normal height, or if there is a rapid increase in pedal travel. This could be a sign that brake service might be required.

Brake Adjustment

Every time you make a brake stop, the brakes adjust for wear.

Replacing Brake System Parts

The braking system on a vehicle is complex. Its many parts have to be of top quality and work well together if the vehicle is to have really good braking. Your vehicle was designed and tested with top-quality brake parts. When you replace parts of the braking system — for example, when the brake linings wear down and you need new ones put in — be sure you get new approved replacement parts. If you do not, the brakes might not work properly. For example, if someone puts in brake linings that are wrong for your vehicle, the balance between the front and rear brakes can change — for the worse. The braking performance you have come to expect can change in many other ways if someone puts in the wrong replacement brake parts.

Battery

Your vehicle has a maintenance free battery. When it is time for a new battery, see your dealer/retailer for one that has the replacement number shown on the original battery's label. See *Engine Compartment Overview on page 5-12* for battery location.

Warning: Battery posts, terminals, and related accessories contain lead and lead compounds, chemicals known to the State of California to cause cancer and reproductive harm. Wash hands after handling.

Vehicle Storage

⚠ CAUTION:

Batteries have acid that can burn you and gas that can explode. You can be badly hurt if you are not careful. See *Jump Starting on page 5-44* for tips on working around a battery without getting hurt.

Infrequent Usage: If you drive your vehicle infrequently, remove the black, negative (–) cable from the battery. This will help keep the battery from running down.

Extended Storage: For extended storage of your vehicle, remove the black, negative (–) cable from the battery or use a battery trickle charger. This will help maintain the charge of the battery over an extended period of time.

Jump Starting

If your vehicle's battery has run down, you may want to use another vehicle and some jumper cables to start your vehicle. Be sure to use the following steps to do it safely.

> **⚠ CAUTION:**
>
> **Batteries can hurt you. They can be dangerous because:**
>
> - **They contain acid that can burn you.**
> - **They contain gas that can explode or ignite.**
> - **They contain enough electricity to burn you.**
>
> **If you do not follow these steps exactly, some or all of these things can hurt you.**

Notice: **Ignoring these steps could result in costly damage to your vehicle that would not be covered by your warranty.**

Trying to start your vehicle by pushing or pulling it will not work, and it could damage your vehicle.

1. Check the other vehicle. It must have a 12-volt battery with a negative ground system.

Notice: **If the other vehicle's system is not a 12-volt system with a negative ground, both vehicles can be damaged. Only use vehicles with 12-volt systems with negative grounds to jump start your vehicle.**

2. Get the vehicles close enough so the jumper cables can reach, but be sure the vehicles are not touching each other. If they are, it could cause a ground connection you do not want. You would not be able to start your vehicle, and the bad grounding could damage the electrical systems.

   To avoid the possibility of the vehicles rolling, set the parking brake firmly on both vehicles involved in the jump start procedure. Put an automatic transmission in PARK (P) or a manual transmission in NEUTRAL before setting the parking brake. If you have a four-wheel-drive vehicle, be sure the transfer case is not in NEUTRAL.

Notice: **If you leave your radio or other accessories on during the jump starting procedure, they could be damaged. The repairs would not be covered by your warranty. Always turn off your radio and other accessories when jump starting your vehicle.**

3. Turn off the ignition on both vehicles. Unplug unnecessary accessories plugged into the cigarette lighter or the accessory power outlets. Turn off the radio and all lamps that are not needed. This will avoid sparks and help save both batteries. And it could save the radio!

4. Open the hoods and locate the positive (+) and negative (–) terminal locations on the other vehicle. Your vehicle has a remote positive (+) and a remote negative (–) jump starting terminal. See *Engine Compartment Overview on page 5-12* for more information on the terminal locations.

⚠ CAUTION:

Using a match near a battery can cause battery gas to explode. People have been hurt doing this, and some have been blinded. Use a flashlight if you need more light.

Be sure the batteries have enough water. You do not need to add water to the ACDelco® battery (or batteries) installed in your new vehicle. But if a battery has filler caps, be sure the right amount of fluid is there. If it is low, add water to take care of that first. If you do not, explosive gas could be present.

Battery fluid contains acid that can burn you. Do not get it on you. If you accidentally get it in your eyes or on your skin, flush the place with water and get medical help immediately.

⚠ CAUTION:

Fans or other moving engine parts can injure you badly. Keep your hands away from moving parts once the engine is running.

5. Check that the jumper cables do not have loose or missing insulation. If they do, you could get a shock. The vehicles could be damaged too.

   Before you connect the cables, here are some basic things you should know. Positive (+) will go to positive (+) or to a remote positive (+) terminal if the vehicle has one. Negative (–) will go to a heavy, unpainted metal engine part or to a remote negative (–) terminal if the vehicle has one.

   Do not connect positive (+) to negative (–) or you will get a short that would damage the battery and maybe other parts too. And do not connect the negative (–) cable to the negative (–) terminal on the dead battery because this can cause sparks.

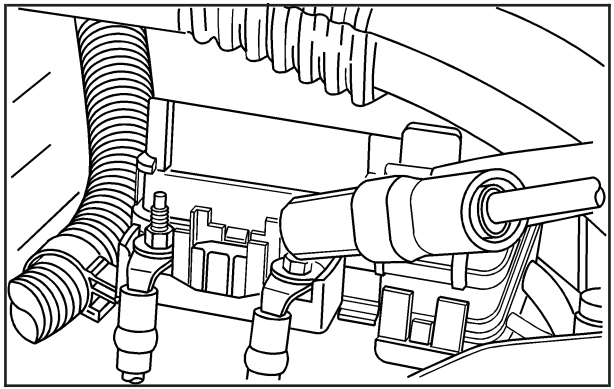

6. Connect the red positive (+) cable to the positive (+) terminal of the dead battery. Use a remote positive (+) terminal if the vehicle has one.
7. Do not let the other end touch metal. Connect it to the positive (+) terminal of the good battery. Use a remote positive (+) terminal if the vehicle has one.
8. Now connect the black negative (–) cable to the negative (–) terminal of the good battery. Use a remote negative (–) terminal if the vehicle has one.

   Do not let the other end touch anything until the next step. The other end of the negative (–) cable does not go to the dead battery. It goes to a heavy, unpainted metal engine part, or to a remote negative (–) terminal on the vehicle with the dead battery.
9. Connect the other end of the negative (–) cable at least 18 inches (45 cm) away from the dead battery, but not near engine parts that move. The electrical connection is just as good there, and the chance of sparks getting back to the battery is much less.

   Your vehicle has a remote negative (–) terminal for this purpose.
10. Now start the vehicle with the good battery and run the engine for a while.
11. Try to start the vehicle that had the dead battery. If it will not start after a few tries, it probably needs service.

Notice: **If the jumper cables are connected or removed in the wrong order, electrical shorting may occur and damage the vehicle. The repairs would not be covered by your warranty. Always connect and remove the jumper cables in the correct order, making sure that the cables do not touch each other or other metal.**

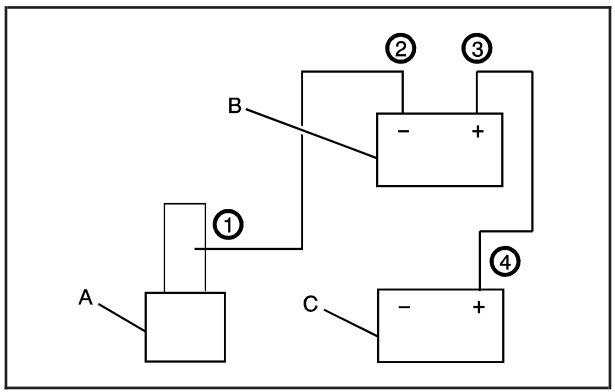

Jumper Cable Removal

A. Heavy, Unpainted Metal Engine Part or Remote Negative (–) Terminal

B. Good Battery or Remote Positive (+) and Remote Negative (–) Terminals

C. Dead Battery or Remote Positive (+) Terminal

To disconnect the jumper cables from both vehicles, do the following:

1. Disconnect the black negative (–) cable from the vehicle that had the dead battery.
2. Disconnect the black negative (–) cable from the vehicle with the good battery.
3. Disconnect the red positive (+) cable from the vehicle with the good battery.
4. Disconnect the red positive (+) cable from the other vehicle.

Rear Axle

When to Check and Change Lubricant

It is not necessary to regularly check rear axle fluid unless you suspect there is a leak or you hear an unusual noise. A fluid loss could indicate a problem. Have it inspected and repaired.

How to Check Lubricant

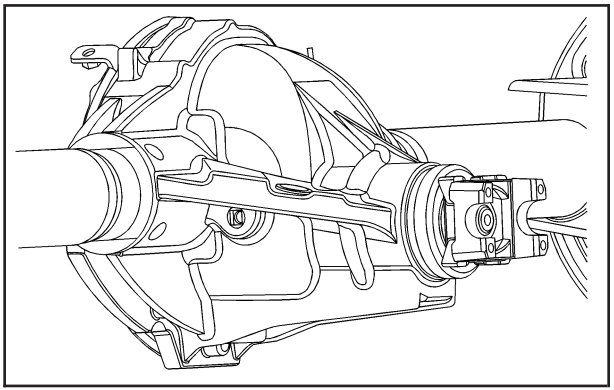

To get an accurate reading, the vehicle should be on a level surface.

The proper level is from 0 to 3/8 inch (0 mm to 10 mm) below the bottom of the filler plug hole, located on the rear axle.

What to Use

See *Recommended Fluids and Lubricants on page 6-12* to determine which kind of lubricant to use.

Four-Wheel Drive

Lubricant checks in this section apply to this vehicle. There are two additional systems that need lubrication.

Transfer Case

When to Check Lubricant

Refer to the Maintenance Schedule to determine how often to check the lubricant. See *Additional Required Services on page 6-6*.

How to Check Lubricant

To get an accurate reading, the vehicle should be on a level surface.

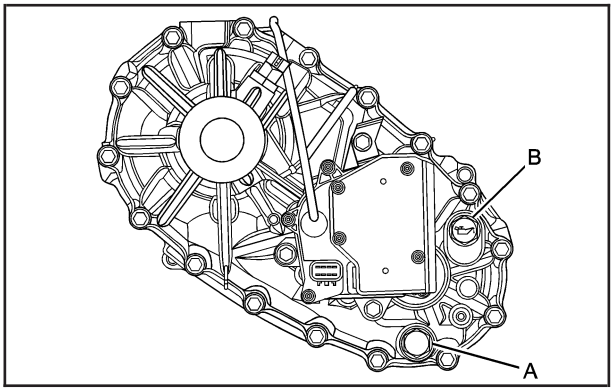

A. Drain Plug
B. Filler Plug

If the level is below the bottom of the filler plug hole, located on the transfer case, you'll need to add some lubricant. Remove the plug and add enough lubricant to raise the level to the bottom of the filler plug hole. Use care not to overtighten the plug.

What to Use

Refer to the Maintenance Schedule to determine what kind of lubricant to use. See *Recommended Fluids and Lubricants on page 6-12*.

Front Axle

When to Check and Change Lubricant

It is not necessary to regularly check your front axle fluid unless you suspect there is a leak or you hear an unusual noise. A fluid loss could indicate a problem. Have it inspected and repaired.

How to Check Lubricant

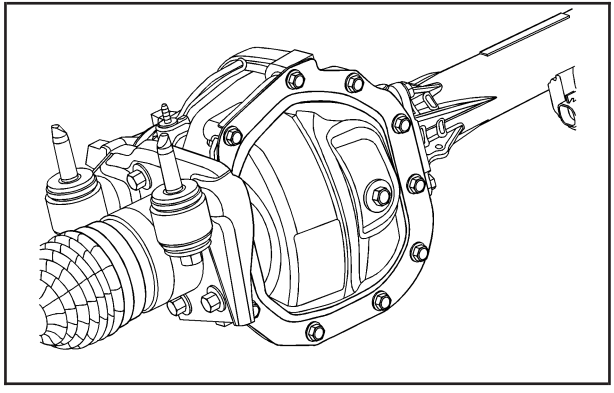

To get an accurate reading, the vehicle should be on a level surface.

If the level is below the bottom of the filler plug hole, located on the front axle, you may need to add some lubricant.

When the differential is cold, add enough lubricant to raise the level to 1/2 inch (12 mm) below the filler plug hole.

When the differential is at operating temperature (warm), add enough lubricant to raise the level to the bottom of the filler plug hole.

What to Use

See *Recommended Fluids and Lubricants on page 6-12* to determine what kind of lubricant to use.

Headlamp Aiming

Headlamp aim has been preset at the factory and should need no further adjustment.

However, if your vehicle is damaged in a crash, the headlamp aim may be affected. Aim adjustment to the low-beam headlamps may be necessary if oncoming drivers flash their high-beam headlamps at you (for vertical aim).

If the headlamps need to be re-aimed, it is recommended that you take the vehicle to your dealer/retailer for service.

Bulb Replacement

For the proper type of replacement bulbs, see *Replacement Bulbs on page 5-56*.

For any bulb changing procedure not listed in this section, contact your dealer/retailer.

Halogen Bulbs

⚠ CAUTION:

Halogen bulbs have pressurized gas inside and can burst if you drop or scratch the bulb. You or others could be injured. Be sure to read and follow the instructions on the bulb package.

Headlamps

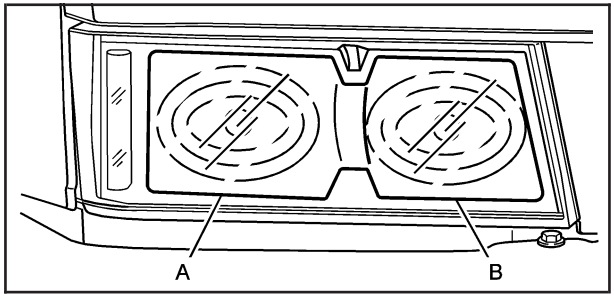

A. Low-Beam Headlamp/Daytime Running Lamps (DRL)
B. High-Beam Headlamp

To replace one of these bulbs:

1. Open the hood. See *Hood Release on page 5-11* for more information.
2. Reach in and access the bulb sockets from inside the engine compartment.

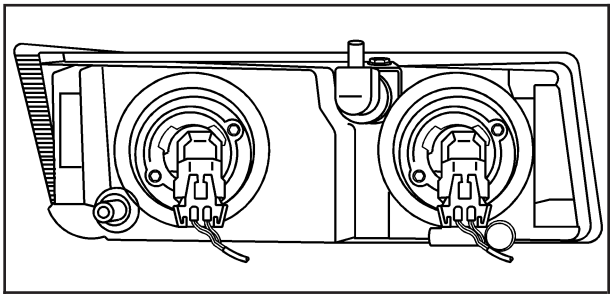

3. Turn the bulb socket counterclockwise to remove it from the headlamp assembly and pull it straight out.
4. Unplug the electrical connector from the old bulb by releasing the clips on the bulb socket.
5. Replace with a new bulb socket.
6. Plug in the electrical connector to the new bulb socket.
7. Reinstall the new bulb socket into the headlamp assembly and turn it clockwise to secure.
8. Close the hood.

Front Turn Signal, Parking and Daytime Running Lamps (DRL)

To replace one of these bulbs:

1. Open the hood. See *Hood Release on page 5-11* for more information.

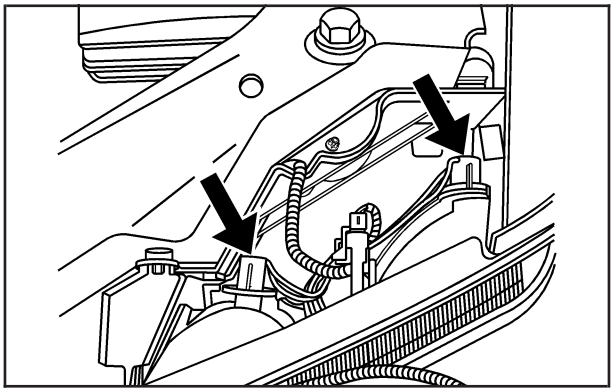

2. Reach in to access either one of the bulb sockets in the engine compartment.
3. Turn the bulb socket counterclockwise and remove it from the lamp assembly.
4. Holding the socket, pull the old bulb to release it from the bulb socket.
5. Push the new bulb into the socket until it clicks.
6. Insert the bulb socket into the lamp assembly and turn it clockwise to secure.
7. Close the hood.

Center High-Mounted Stoplamp (CHMSL)

To replace the CHMSL bulb:

1. Remove the two screws and lift off the lamp assembly from the vehicle.

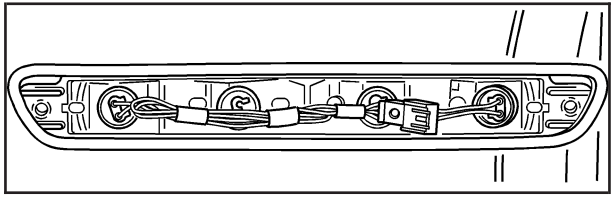

2. Turn the bulb socket counterclockwise and remove it from the lamp assembly.
3. Holding the socket, pull the bulb to release it from the socket.
4. Push the new bulb into the socket until it clicks.
5. Insert the bulb socket into the lamp assembly and turn it clockwise to secure.
6. Reinstall the lamp assembly and tighten the screws.

Taillamps, Turn Signal, Stoplamps and Back-up Lamps

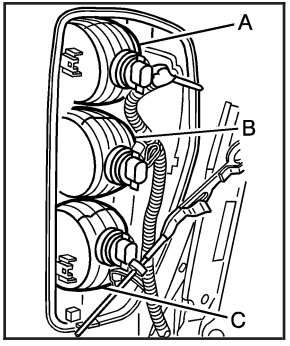

A. Stoplamp/Taillamp
B. Turn Signal/Taillamp
C. Back-up Lamp

To replace one of these bulbs:

1. Open the tailgate. See *Tailgate on page 2-10* for more information.

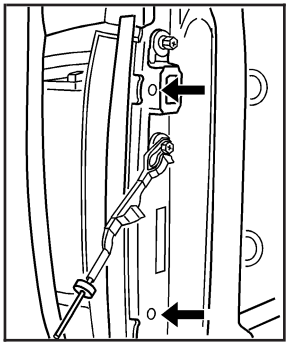

2. Remove the two rear lamp assembly screws near the tailgate latch.

3. Pull the lamp assembly away from the vehicle.
4. Turn the bulb socket counterclockwise to remove it from the taillamp assembly.
5. Holding the socket, pull the old bulb to release it from the socket.
6. Push the new bulb into the socket until it clicks.
7. Insert the bulb socket into the taillamp assembly and turn it clockwise to secure.
8. Reinstall the taillamp assembly and tighten the screws.
9. Close the tailgate.

License Plate Lamp

To replace one of these bulbs:

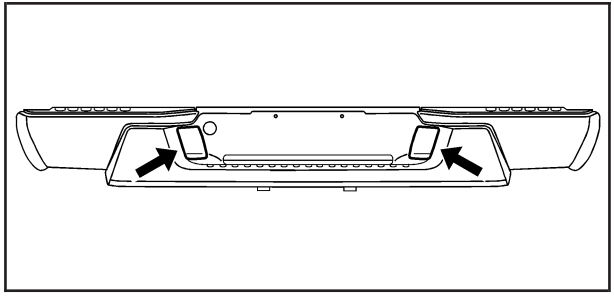

1. Reach under the rear bumper for the bulb socket.
2. Turn the bulb socket counterclockwise and pull the bulb socket out of the connector.
3. Pull the old bulb straight out from the bulb socket.
4. Push the new bulb straight in until it clicks to secure it.
5. Reverse Steps 1 through 3 to reinstall the license plate lamp.

Replacement Bulbs

Exterior Lamp	Bulb Number
Center High-Mounted Stoplamp (CHMSL)	912
License Plate Bulb	W5W
Headlamps	
High-beam	9005
Low-beam/Daytime Running Lamp (DRL)	9006
Parking/Front Turn Signal	3757KA
Parking Lamp (Inboard)	3157A
Stoplamp, Rear Turn Signal, Taillamp, and Back-up Lamp	3057

For replacement bulbs not listed here, contact your dealer/retailer.

Windshield Wiper Blade Replacement

Windshield wiper blades should be inspected for wear and cracking. See *Scheduled Maintenance on page 6-4* for more information.

Replacement blades come in different types and are removed in different ways. For proper type and length, see *Normal Maintenance Replacement Parts on page 6-14*.

Allowing the wiper blade arm to touch the windshield when no wiper blade is installed could damage the windshield. Any damage that occurs would not be covered by your warranty. Do not allow the wiper blade arm to touch the windshield.

1. To remove the old wiper blades, lift the wiper arm until it locks into a vertical position.

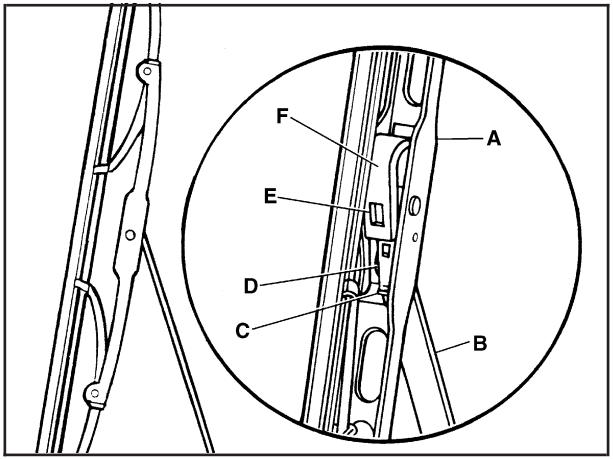

A. Blade Assembly
B. Arm Assembly
C. Locking Tab
D. Blade Pivot
E. Hook Slot
F. Arm Hook

2. Press down on the blade assembly pivot locking tab. Pull down on the blade assembly to release it from the wiper arm hook.
3. Remove the insert from the blade assembly. The insert has two notches at one end that are locked by bottom claws of the blade assembly. At the notched end, pull the insert from the blade assembly.

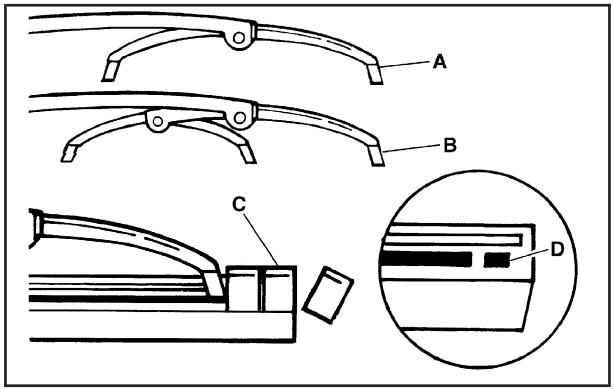

4. To install the new wiper insert, slide the insert (D), notched end last, into the end with two blade claws (A). Slide the insert all the way through the blade claws at the opposite end (B). The plastic caps (C) will be forced off as the insert is fully inserted.
5. Be sure that the notches are locked by the bottom claws. Make sure that all other claws are properly locked on both sides of the insert slots.

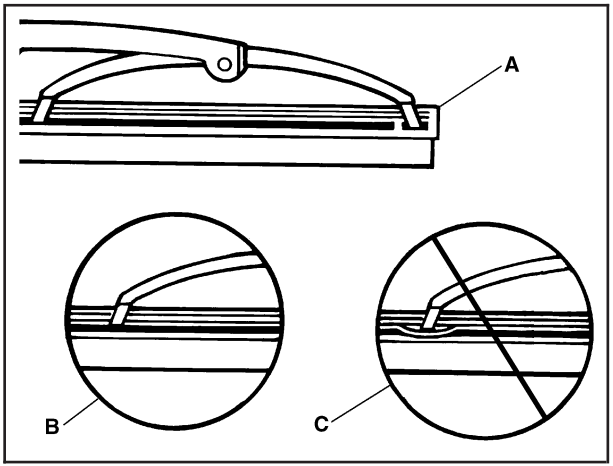

A. Claw in Notch
B. Correct Installation
C. Incorrect Installation

6. Put the blade assembly pivot in the wiper arm hook. Pull up until the pivot locking tab locks in the hook slot.
7. Carefully lower the wiper arm and blade assembly onto the windshield.

Tires

Your new vehicle comes with high-quality tires made by a leading tire manufacturer. If you ever have questions about your tire warranty and where to obtain service, see your vehicle Warranty booklet for details.

⚠ CAUTION:

Poorly maintained and improperly used tires are dangerous.

- **Overloading your vehicle's tires can cause overheating as a result of too much friction. You could have an air-out and a serious accident. See *Loading Your Vehicle on page 4-34*.**

CAUTION: (Continued)

CAUTION: (Continued)

- **Underinflated tires pose the same danger as overloaded tires. The resulting accident could cause serious injury. Check all tires frequently to maintain the recommended pressure. Tire pressure should be checked when your vehicle's tires are cold. See *Inflation - Tire Pressure on page 5-66*.**
- **Overinflated tires are more likely to be cut, punctured, or broken by a sudden impact — such as when you hit a pothole. Keep tires at the recommended pressure.**
- **Worn, old tires can cause accidents. If the tire's tread is badly worn, or if your vehicle's tires have been damaged, replace them.**

Tire Sidewall Labeling

Useful information about a tire is molded into its sidewall. The examples below show a typical passenger vehicle tire and a compact spare tire sidewall.

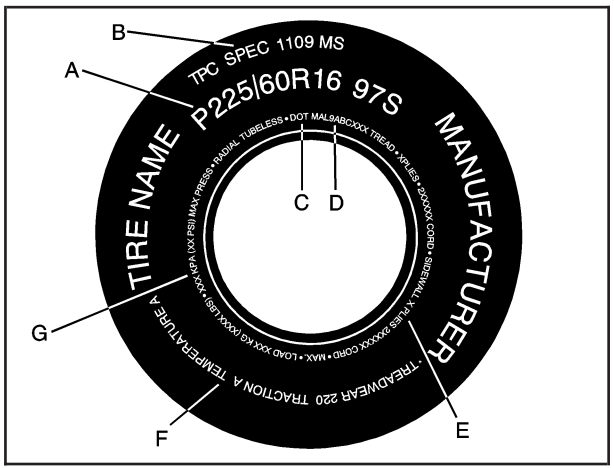

Passenger Vehicle Tire Example

(A) Tire Size: The tire size is a combination of letters and numbers used to define a particular tire's width, height, aspect ratio, construction type and service description. See the "Tire Size" illustration later in this section for more detail.

(B) TPC Spec (Tire Performance Criteria Specification): Original equipment tires designed to GM's specific tire performance criteria have a TPC specification code molded onto the sidewall. GM's TPC specifications meet or exceed all federal safety guidelines.

(C) DOT (Department of Transportation): The Department of Transportation (DOT) code indicates that the tire is in compliance with the U.S. Department of Transportation Motor Vehicle Safety Standards.

(D) Tire Identification Number (TIN): The letters and numbers following DOT code are the Tire Identification Number (TIN). The TIN shows the manufacturer and plant code, tire size, and date the tire was manufactured. The TIN is molded onto both sides of the tire, although only one side may have the date of manufacture.

(E) Tire Ply Material: The type of cord and number of plies in the sidewall and under the tread.

(F) Uniform Tire Quality Grading (UTQG): Tire manufacturers are required to grade tires based on three performance factors: treadwear, traction and temperature resistance. For more information see *Uniform Tire Quality Grading on page 5-79*.

(G) Maximum Cold Inflation Load Limit: Maximum load that can be carried and the maximum pressure needed to support that load.

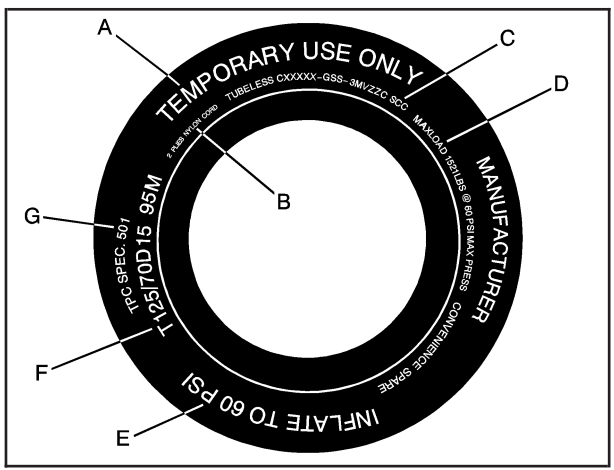

Compact Spare Tire Example

(A) Temporary Use Only: The compact spare tire or temporary use tire has a tread life of approximately 3,000 miles (5 000 km) and should not be driven at speeds over 65 mph (105 km/h). The compact spare tire is for emergency use when a regular road tire has lost air and gone flat. See “Compact Spare Tire” under *Spare Tire on page 5-104* for additional information.

(B) Tire Ply Material: The type of cord and number of plies in the sidewall and under the tread.

(C) Tire Identification Number (TIN): The Tire Identification Number (TIN). The TIN shows the manufacturer and plant code, tire size, and date the tire was manufactured. The TIN is molded onto both sides of the tire, although only one side may have the date of manufacture.

(D) Maximum Cold Inflation Load Limit: Maximum load that can be carried and the maximum pressure needed to support that load.

(E) Tire Inflation: The temporary use tire or compact spare tire should be inflated to 60 psi (420 kPa). For more information on tire pressure and inflation see *Inflation - Tire Pressure on page 5-66*.

(F) Tire Size : A combination of letters and numbers define a tire's width, height, aspect ratio, construction type and service description. The letter T as the first character in the tire size means the tire is for temporary use only.

(G) TPC Spec (Tire Performance Criteria Specification): Original equipment tires designed to GM's specific tire performance criteria have a TPC specification code molded onto the sidewall. GM's TPC specifications meet or exceed all federal safety guidelines.

Tire Size

The following illustration shows an example of a typical passenger vehicle tire size.

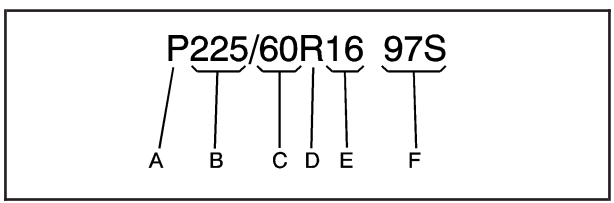

(A) P-Metric Tire: The United States version of a metric tire sizing system. The letter P as the first character in the tire size means a passenger vehicle tire engineered to standards set by the U.S. Tire and Rim Association.

(B) Tire Width: The three-digit number indicates the tire section width in millimeters from sidewall to sidewall.

(C) Aspect Ratio: A two-digit number that indicates the tire height-to-width measurements. For example, if the tire size aspect ratio is 70, as shown in item C of the illustration, it would mean that the tire's sidewall is 70 percent as high as it is wide.

(D) Construction Code: A letter code is used to indicate the type of ply construction in the tire. The letter R means radial ply construction; the letter D means diagonal or bias ply construction; and the letter B means belted-bias ply construction.

(E) Rim Diameter: Diameter of the wheel in inches.

(F) Service Description: These characters represent the load range and speed rating of the tire. The load index represents the load carry capacity a tire is certified to carry. The load index can range from 1 to 279. The speed rating is the maximum speed a tire is certified to carry a load. Speed ratings range from A to Z.

Tire Terminology and Definitions

Air Pressure: The amount of air inside the tire pressing outward on each square inch of the tire. Air pressure is expressed in pounds per square inch (psi) or kilopascal (kPa).

Accessory Weight: This means the combined weight of optional accessories. Some examples of optional accessories are, automatic transmission, power steering, power brakes, power windows, power seats, and air conditioning.

Aspect Ratio: The relationship of a tire's height to its width.

Belt: A rubber coated layer of cords that is located between the plies and the tread. Cords may be made from steel or other reinforcing materials.

Bead: The tire bead contains steel wires wrapped by steel cords that hold the tire onto the rim.

Bias Ply Tire: A pneumatic tire in which the plies are laid at alternate angles less than 90 degrees to the centerline of the tread.

Cold Tire Pressure: The amount of air pressure in a tire, measured in pounds per square inch (psi) or kilopascals (kPa) before a tire has built up heat from driving. See *Inflation - Tire Pressure on page 5-66*.

Curb Weight: The weight of a motor vehicle with standard and optional equipment including the maximum capacity of fuel, oil, and coolant, but without passengers and cargo.

DOT Markings: A code molded into the sidewall of a tire signifying that the tire is in compliance with the U.S. Department of Transportation (DOT) motor vehicle safety standards. The DOT code includes the Tire Identification Number (TIN), an alphanumeric designator which can also identify the tire manufacturer, production plant, brand, and date of production.

GVWR: Gross Vehicle Weight Rating. See *Loading Your Vehicle on page 4-34*.

GAWR FRT: Gross Axle Weight Rating for the front axle. See *Loading Your Vehicle on page 4-34*.

GAWR RR: Gross Axle Weight Rating for the rear axle. See *Loading Your Vehicle on page 4-34*.

Intended Outboard Sidewall: The side of an asymmetrical tire, that must always face outward when mounted on a vehicle.

Kilopascal (kPa): The metric unit for air pressure.

Light Truck (LT-Metric) Tire: A tire used on light duty trucks and some multipurpose passenger vehicles.

Load Index: An assigned number ranging from 1 to 279 that corresponds to the load carrying capacity of a tire.

Maximum Inflation Pressure: The maximum air pressure to which a cold tire can be inflated. The maximum air pressure is molded onto the sidewall.

Maximum Load Rating: The load rating for a tire at the maximum permissible inflation pressure for that tire.

Maximum Loaded Vehicle Weight: The sum of curb weight, accessory weight, vehicle capacity weight, and production options weight.

Normal Occupant Weight: The number of occupants a vehicle is designed to seat multiplied by 150 lbs (68 kg). See *Loading Your Vehicle on page 4-34*.

Occupant Distribution: Designated seating positions.

Outward Facing Sidewall: The side of an asymmetrical tire that has a particular side that faces outward when mounted on a vehicle. The side of the tire that contains a whitewall, bears white lettering, or bears manufacturer, brand, and/or model name molding that is higher or deeper than the same moldings on the other sidewall of the tire.

Passenger (P-Metric) Tire: A tire used on passenger cars and some light duty trucks and multipurpose vehicles.

Recommended Inflation Pressure: Vehicle manufacturer's recommended tire inflation pressure as shown on the tire placard. See *Inflation - Tire Pressure on page 5-66* and *Loading Your Vehicle on page 4-34*.

Radial Ply Tire: A pneumatic tire in which the ply cords that extend to the beads are laid at 90 degrees to the centerline of the tread.

Rim: A metal support for a tire and upon which the tire beads are seated.

Sidewall: The portion of a tire between the tread and the bead.

Speed Rating: An alphanumeric code assigned to a tire indicating the maximum speed at which a tire can operate.

Traction: The friction between the tire and the road surface. The amount of grip provided.

Tread: The portion of a tire that comes into contact with the road.

Treadwear Indicators: Narrow bands, sometimes called wear bars, that show across the tread of a tire when only 1/16 inch (1.6 mm) of tread remains. See *When It Is Time for New Tires on page 5-76*.

UTQGS (Uniform Tire Quality Grading Standards): A tire information system that provides consumers with ratings for a tire's traction, temperature, and treadwear. Ratings are determined by tire manufacturers using government testing procedures. The ratings are molded into the sidewall of the tire. See *Uniform Tire Quality Grading on page 5-79*.

Vehicle Capacity Weight: The number of designated seating positions multiplied by 150 lbs (68 kg) plus the rated cargo load. See *Loading Your Vehicle on page 4-34*.

Vehicle Maximum Load on the Tire: Load on an individual tire due to curb weight, accessory weight, occupant weight, and cargo weight.

Vehicle Placard: A label permanently attached to a vehicle showing the vehicle's capacity weight and the original equipment tire size and recommended inflation pressure. See "Tire and Loading Information Label" under *Loading Your Vehicle on page 4-34*.

Inflation - Tire Pressure

Tires need the correct amount of air pressure to operate effectively.

Notice: **Do not let anyone tell you that under-inflation or over-inflation is all right. It is not. If your tires do not have enough air (under-inflation), you can get the following:**

- **Too much flexing**
- **Too much heat**
- **Tire overloading**
- **Premature or irregular wear**
- **Poor handling**
- **Reduced fuel economy**

If your tires have too much air (over-inflation), you can get the following:

- **Unusual wear**
- **Poor handling**
- **Rough ride**
- **Needless damage from road hazards**

A vehicle specific Tire and Loading Information label is attached to your vehicle. This label shows your vehicle's original equipment tires and the correct inflation pressures for your tires when they are cold. The recommended cold tire inflation pressure, shown on the label, is the minimum amount of air pressure needed to support your vehicle's maximum load carrying capacity.

For additional information regarding how much weight your vehicle can carry, and an example of the Tire and Loading Information label, see *Loading Your Vehicle on page 4-34*. How you load your vehicle affects vehicle handling and ride comfort. Never load your vehicle with more weight than it was designed to carry.

When to Check

Check your tires once a month or more. Also check the tire pressure of the spare tire. If your vehicle has a compact spare tire, it should be at 60 psi (420 kPa). See *Spare Tire on page 5-104* for additional information.

How to Check

Use a good quality pocket-type gage to check tire pressure. You cannot tell if your tires are properly inflated simply by looking at them. Radial tires may look properly inflated even when they are underinflated. Check the tire's inflation pressure when the tires are cold. Cold means your vehicle has been sitting for at least three hours or driven no more than 1 mile (1.6 km).

Remove the valve cap from the tire valve stem. Press the tire gage firmly onto the valve to get a pressure measurement. If the cold tire inflation pressure matches the recommended pressure on the Tire and Loading Information label, no further adjustment is necessary. If the inflation pressure is low, add air until you reach the recommended amount.

If you overfill the tire, release air by pushing on the metal stem in the center of the tire valve. Recheck the tire pressure with the tire gage.

Be sure to put the valve caps back on the valve stems. They help prevent leaks by keeping out dirt and moisture.

High-Speed Operation

⚠ CAUTION:

Driving at high speeds, 100 mph (160 km/h) or higher, puts an additional strain on tires. Sustained high-speed driving causes excessive heat build up and can cause sudden tire failure. You could have a crash and you or others could be killed. Some high-speed rated tires require inflation pressure adjustment for high speed operation. When speed limits and road conditions are such that a vehicle can be driven at high speeds, make sure the tires are rated for high speed operation, in excellent condition, and set to the correct cold tire inflation pressure for the vehicle load.

If your vehicle has P235/50R18 size tires, they will require inflation pressure adjustment when driving your vehicle at speeds of 100 mph (160 km/h) or higher. Set the cold inflation pressure to the maximum inflation pressure shown on the tire sidewall, or 35 psi (241 kPa), whichever is lower. See the example following.

When you end this high-speed driving, return the tires to the cold tire inflation pressure shown on the Tire and Loading Information label. See *Loading Your Vehicle on page 4-34* and *Inflation - Tire Pressure on page 5-66*.

Example:

You will find the maximum load and inflation pressure molded on the tire's sidewall, in small letters, near the rim flange. It will read something like this: Maximum load 690 kg (1521 lbs) 300 kPa (44 psi) Max. Press.

For this example, you would set the inflation pressure for high-speed driving at 35 psi (241 kPa).

Tire Pressure Monitor System

The Tire Pressure Monitor System (TPMS) uses radio and sensor technology to check tire pressure levels. The TPMS sensors monitor the air pressure in your vehicle's tires and transmit tire pressure readings to a receiver located in the vehicle.

Each tire, including the spare (if provided), should be checked monthly when cold and inflated to the inflation pressure recommended by the vehicle manufacturer on the vehicle placard or tire inflation pressure label. (If your vehicle has tires of a different size than the size indicated on the vehicle placard or tire inflation pressure label, you should determine the proper tire inflation pressure for those tires.)

As an added safety feature, your vehicle has been equipped with a tire pressure monitoring system (TPMS) that illuminates a low tire pressure telltale when one or more of your tires is significantly under-inflated.

Accordingly, when the low tire pressure telltale illuminates, you should stop and check your tires as soon as possible, and inflate them to the proper pressure. Driving on a significantly under-inflated tire causes the tire to overheat and can lead to tire failure. Under-inflation also reduces fuel efficiency and tire tread life, and may affect the vehicle's handling and stopping ability.

Please note that the TPMS is not a substitute for proper tire maintenance, and it is the driver's responsibility to maintain correct tire pressure, even if under-inflation has not reached the level to trigger illumination of the TPMS low tire pressure telltale.

Your vehicle has also been equipped with a TPMS malfunction indicator to indicate when the system is not operating properly. The TPMS malfunction indicator is combined with the low tire pressure telltale. When the system detects a malfunction, the telltale will flash for approximately one minute and then remain continuously illuminated. This sequence will continue upon subsequent vehicle start-ups as long as the malfunction exists.

When the malfunction indicator is illuminated, the system may not be able to detect or signal low tire pressure as intended. TPMS malfunctions may occur for a variety of reasons, including the installation of replacement or alternate tires or wheels on the vehicle that prevent the TPMS from functioning properly. Always check the TPMS malfunction telltale after replacing one or more tires or wheels on your vehicle to ensure that the replacement or alternate tires and wheels allow the TPMS to continue to function properly.

See *Tire Pressure Monitor Operation on page 5-70*, for additional information.

Federal Communications Commission (FCC) and Industry and Science Canada

The Tire Pressure Monitor System (TPMS) operates on a radio frequency and complies with Part 15 of the FCC Rules. Operation is subject to the following two conditions:

1. This device may not cause harmful interference.
2. This device must accept any interference received, including interference that may cause undesired operation.

The Tire Pressure Monitor System (TPMS) operates on a radio frequency and complies with RSS-210 of Industry and Science Canada. Operation is subject to the following two conditions:

1. This device may not cause interference.
2. This device must accept any interference received, including interference that may cause undesired operation of the device.

Changes or modifications to this system by other than an authorized service facility could void authorization to use this equipment.

Tire Pressure Monitor Operation

The Tire Pressure Monitor System (TPMS) is designed to warn the driver when a low tire pressure condition exists. TPMS sensors are mounted onto each tire and wheel assembly on your vehicle, excluding the spare tire. The TPMS sensors monitor the air pressure in your vehicle's tires and transmit the tire pressure readings to a receiver located in the vehicle.

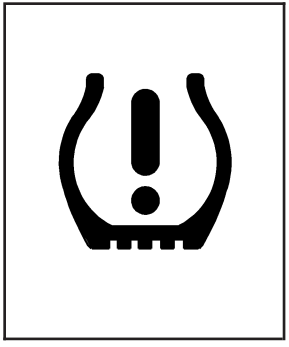

When a low tire pressure condition is detected, the TPMS illuminates the low tire pressure warning light located on the instrument panel cluster.

At the same time, a Driver Information Center (DIC) message is displayed on the DIC display screen. The low tire pressure warning light and the DIC warning message come on at each ignition cycle until the tires are inflated to the correct inflation pressure. For additional information and details about the DIC operation and displays see *DIC Operation and Displays on page 3-38* and *DIC Warnings and Messages on page 3-42*.

The low tire pressure warning light may come on in cool weather when the vehicle is first started, and then turn off as you start to drive. This could be an early indicator that the air pressure in the tire(s) are getting low and need to be inflated to the proper pressure.

A Tire and Loading Information label, attached to your vehicle, shows the size of your vehicle's original equipment tires and the correct inflation pressure for your vehicle's tires when they are cold. See *Loading Your Vehicle on page 4-34*, for an example of the Tire and Loading Information label and its location on your vehicle. Also see *Inflation - Tire Pressure on page 5-66*.

Your vehicle's TPMS can warn you about a low tire pressure condition but it does not replace normal tire maintenance. See *Tire Inspection and Rotation on page 5-74* and *Tires on page 5-59*.

Notice: **Liquid tire sealants could damage the Tire Pressure Monitor System (TPMS) sensors. Sensor damage caused by using a tire sealant is not covered by your warranty. Do not use liquid tire sealants.**

TPMS Malfunction Light and Message

The TPMS will not function properly if one or more of the TPMS sensors are missing or inoperable. When the system detects a malfunction, the low tire warning light flashes for about one minute and then stays on for the remainder of the ignition cycle. A DIC warning message is also displayed. The low tire warning light and DIC warning message come on at each ignition cycle until the problem is corrected. Some of the conditions that can cause the malfunction light and DIC message to come on are:

- One of the road tires has been replaced with the spare tire. The spare tire does not have a TPMS sensor. The TPMS malfunction light and DIC message should go off once you re-install the road tire containing the TPMS sensor.
- The TPMS sensor matching process was started but not completed or not completed successfully after rotating the vehicle's tires. The DIC message and TPMS malfunction light should go off once the TPMS sensor matching process is performed successfully. See "TPMS Sensor Matching Process" later in this section.
- One or more TPMS sensors are missing or damaged. The DIC message and the TPMS malfunction light should go off when the TPMS sensors are installed and the sensor matching process is performed successfully. See your dealer/retailer for service.
- Replacement tires or wheels do not match your vehicle's original equipment tires or wheels. Tires and wheels other than those recommended for your vehicle could prevent the TPMS from functioning properly. See *Buying New Tires on page 5-76*.
- Operating electronic devices or being near facilities using radio wave frequencies similar to the TPMS could cause the TPMS sensors to malfunction.

If the TPMS is not functioning it cannot detect or signal a low tire condition. See your dealer/retailer for service if the TPMS malfunction light and DIC message comes on and stays on.

TPMS Sensor Matching Process

Each TPMS sensor has a unique identification code. Any time you replace one or more of the TPMS sensors or rotate your vehicle's tires, the identification codes need to be matched to the new tire/wheel position. The sensors are matched to the tire/wheel positions in the following order: driver side front tire, passenger side front tire, passenger side rear tire, and driver side rear tire using a TPMS diagnostic tool. See your dealer/retailer for service.

The TPMS sensors can also be matched to each tire/wheel position by increasing or decreasing the tire's air pressure. If increasing the tire's air pressure, do not exceed the maximum inflation pressure indicated on the tire's sidewall. To let air-pressure out of a tire you can use the pointed end of the valve cap, a pencil-style air pressure gage, or a key.

You have one minute to match the first tire/wheel position, and five minutes overall, to match all four tire/wheel positions. If it takes longer than one minute, to match the first tire and wheel, or more than five minutes to match all four tire and wheel positions, the matching process stops and you need to start over.

The TPMS sensor matching procedure is outlined below:

1. Set the parking brake.
2. Turn the ignition switch to ON/RUN with the engine off.
3. Turn the exterior lamp switch from AUTO to OFF four times within three seconds. A double horn chirp will sound and the TPMS low tire warning light starts flashing. The double horn chirp and flashing TPMS warning light indicates the TPMS matching process has started. The TPMS warning light should continue flashing throughout the matching procedure. The LOW TIRE message displays on the Driver Information Center (DIC).
4. Start with the driver side front tire.
5. Remove the valve cap from the valve cap stem. Activate the TPMS sensor by increasing or decreasing the tire's air pressure for 10 seconds, then stop and listen for a single horn chirp. The single horn chirp should sound within 15 seconds, confirming that the sensor identification code has been matched to this tire and wheel position. If you do not hear the confirming single horn chirp, turn the ignition switch to LOCK and start over beginning with Step 2.

6. Proceed to the passenger side front tire, and repeat the procedure in Step 5.
7. Proceed to the passenger side rear tire, and repeat the procedure in Step 5.
8. Proceed to the driver side rear tire, and repeat the procedure in Step 5.
9. After hearing the confirming horn chirp for the driver side rear tire, check to see if the TPMS low tire warning light and the DIC LOW TIRE messages have turned off. If yes, the TPMS sensors have been relearned. Turn the ignition switch to LOCK/OFF.

   If the low tire warning light and the SERV TPM message on the DIC are on after completing Step 5 for the driver side rear tire, the sensor relearn process has not been successful. Turn the ignition switch to LOCK/OFF and repeat the matching process beginning with Step 2.
10. Set all four tires to the recommended air pressure level as indicated on the Tire and Loading Information label.
11. Put the valve caps back on the valve stems.

Tire Inspection and Rotation

We recommend that you regularly inspect your vehicle's tires, including the spare tire, for signs of wear or damage. See *When It Is Time for New Tires on page 5-76* for more information.

Tires should be rotated every 5,000 to 8,000 miles (8 000 to 13 000 km). See *Scheduled Maintenance on page 6-4*.

The purpose of a regular tire rotation is to achieve a uniform wear for all tires on the vehicle. This will ensure that your vehicle continues to perform most like it did when the tires were new.

Any time you notice unusual wear, rotate your tires as soon as possible and check wheel alignment. Also check for damaged tires or wheels. See *When It Is Time for New Tires on page 5-76* and *Wheel Replacement on page 5-80*.

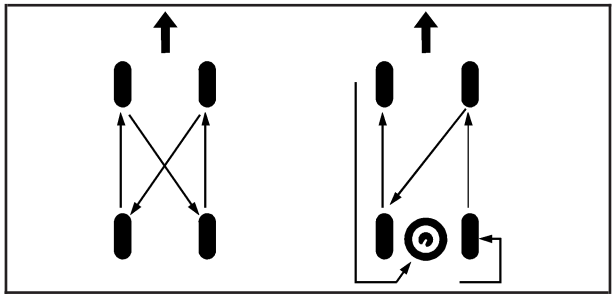

When rotating your tires, always use one of the correct rotation patterns shown here.

If your vehicle has a compact spare tire or a spare tire that does not match your vehicle's road tires and wheels, in size and type, do not include the spare in the tire rotation.

After the tires have been rotated, adjust the front and rear inflation pressures as shown on the Tire and Loading Information label. See *Inflation - Tire Pressure on page 5-66* and *Loading Your Vehicle on page 4-34*.

Reset the Tire Pressure Monitor System. See *Tire Pressure Monitor Operation on page 5-70*.

Make certain that all wheel nuts are properly tightened. See "Wheel Nut Torque" under *Capacities and Specifications on page 5-120*.

⚠ CAUTION:

Rust or dirt on a wheel, or on the parts to which it is fastened, can make wheel nuts become loose after time. The wheel could come off and cause an accident. When you change a wheel, remove any rust or dirt from places where the wheel attaches to the vehicle. In an emergency, you can use a cloth or a paper towel to do this; but be sure to use a scraper or wire brush later, if needed, to get all the rust or dirt off. See *Changing a Flat Tire on page 5-84*.

Make sure the spare tire is stored securely. Push, pull, and then try to rotate or turn the tire. If it moves, tighten the cable. See *Storing a Flat or Spare Tire and Tools on page 5-100*.

When It Is Time for New Tires

Various factors, such as maintenance, temperatures, driving speeds, vehicle loading, and road conditions, influence when you need new tires.

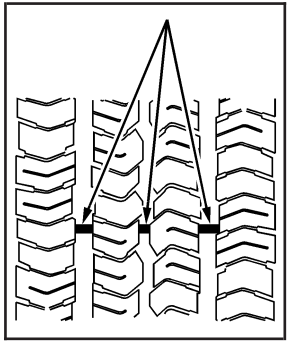

One way to tell when it is time for new tires is to check the treadwear indicators, which appear when your tires have only 1/16 inch (1.6 mm) or less of tread remaining. Some commercial truck tires may not have treadwear indicators.

You need new tires if any of the following statements are true:

- You can see the indicators at three or more places around the tire.
- You can see cord or fabric showing through the tire's rubber.
- The tread or sidewall is cracked, cut, or snagged deep enough to show cord or fabric.
- The tire has a bump, bulge, or split.
- The tire has a puncture, cut, or other damage that cannot be repaired well because of the size or location of the damage.

The rubber in tires degrades over time, even if they are not being used. This is also true for the spare tire, if your vehicle has one. Multiple conditions affect how fast this aging takes place, including temperatures, loading conditions, and inflation pressure maintenance. With proper care and maintenance tires will typically wear out before they degrade due to age. If you are unsure about the need to replace your tires as they get older, consult the tire manufacturer for more information.

Buying New Tires

GM has developed and matched specific tires for your vehicle. The original equipment tires installed on your vehicle, when it was new, were designed to meet General Motors Tire Performance Criteria Specification (TPC spec) system rating. If you need replacement tires, GM strongly recommends that you get tires with the same TPC Spec rating. This way, your vehicle will continue to have tires that are designed to give the same performance and vehicle safety, during normal use, as the original tires.

GM's exclusive TPC Spec system considers over a dozen critical specifications that impact the overall performance of your vehicle, including brake system performance, ride and handling, traction control, and tire pressure monitoring performance. GM's TPC Spec number is molded onto the tire's sidewall near the tire size. If the tires have an all-season tread design, the TPC spec number will be followed by an MS for mud and snow. See *Tire Sidewall Labeling on page 5-60* for additional information.

GM recommends replacing tires in sets of four. This is because uniform tread depth on all tires will help keep your vehicle performing most like it did when the tires were new. Replacing less than a full set of tires can affect the braking and handling performance of your vehicle. See *Tire Inspection and Rotation on page 5-74* for information on proper tire rotation.

⚠ CAUTION:

Mixing tires could cause you to lose control of your vehicle while driving. If you mix tires of different sizes, brands, or types (radial and bias-belted tires), the vehicle may not handle properly, and you could have a crash. Using tires of different sizes, brands, or types may also cause damage to your vehicle. Be sure to use the correct size, brand, and type of tires on all wheels.

Your vehicle may have a compact spare tire and wheel assembly. If the vehicle has a compact spare tire and wheel, they have the same overall diameter as your vehicle's full-size tires and wheels. Because they were designed and developed for use on your vehicle, it is all right to drive your vehicle with the compact spare installed properly. Compact spare tires are designed for temporary use only. See *Spare Tire on page 5-104*.

⚠ CAUTION:

If you use bias-ply tires on your vehicle, the wheel rim flanges could develop cracks after many miles of driving. A tire and/or wheel could fail suddenly, causing a crash. Use only radial-ply tires with the wheels on your vehicle.

If you must replace your vehicle's tires with those that do not have a TPC Spec number, make sure they are the same size, load range, speed rating, and construction type (radial and bias-belted tires) as your vehicle's original tires.

Vehicles that have a tire pressure monitoring system could give an inaccurate low-pressure warning if non-TPC Spec rated tires are installed on your vehicle. Non-TPC Spec rated tires may give a low-pressure warning that is higher or lower than the proper warning level you would get with TPC Spec rated tires. See *Tire Pressure Monitor System on page 5-69*.

Your vehicle's original equipment tires are listed on the Tire and Loading Information Label. See *Loading Your Vehicle on page 4-34*, for more information about the Tire and Loading Information Label and its location on your vehicle.

Different Size Tires and Wheels

If you add wheels or tires that are a different size than your original equipment wheels and tires, this may affect the way your vehicle performs, including its braking, ride and handling characteristics, stability, and resistance to rollover. Additionally, if your vehicle has electronic systems such as, anti-lock brakes, traction control, and electronic stability control, the performance of these systems can be affected.

⚠ CAUTION:

If you add different sized wheels, your vehicle may not provide an acceptable level of performance and safety if tires not recommended for those wheels are selected. You may increase the chance that you will crash and suffer serious injury. Only use GM specific wheel and tire systems developed for your vehicle, and have them properly installed by a GM certified technician.

See *Buying New Tires on page 5-76* and *Accessories and Modifications on page 5-3* for additional information.

Uniform Tire Quality Grading

Quality grades can be found where applicable on the tire sidewall between tread shoulder and maximum section width. For example:

Treadwear 200 Traction AA Temperature A

The following information relates to the system developed by the United States National Highway Traffic Safety Administration (NHTSA), which grades tires by treadwear, traction, and temperature performance. This applies only to vehicles sold in the United States. The grades are molded on the sidewalls of most passenger car tires. The Uniform Tire Quality Grading (UTQG) system does not apply to deep tread, winter-type snow tires, space-saver, or temporary use spare tires, tires with nominal rim diameters of 10 to 12 inches (25 to 30 cm), or to some limited-production tires.

While the tires available on General Motors passenger cars and light trucks may vary with respect to these grades, they must also conform to federal safety requirements and additional General Motors Tire Performance Criteria (TPC) standards.

Treadwear

The treadwear grade is a comparative rating based on the wear rate of the tire when tested under controlled conditions on a specified government test course. For example, a tire graded 150 would wear one and a half (1.5) times as well on the government course as a tire graded 100. The relative performance of tires depends upon the actual conditions of their use, however, and may depart significantly from the norm due to variations in driving habits, service practices, and differences in road characteristics and climate.

Traction – AA, A, B, C

The traction grades, from highest to lowest, are AA, A, B, and C. Those grades represent the tire's ability to stop on wet pavement as measured under controlled conditions on specified government test surfaces of asphalt and concrete. A tire marked C may have poor traction performance.

Warning: **The traction grade assigned to this tire is based on straight-ahead braking traction tests, and does not include acceleration, cornering, hydroplaning, or peak traction characteristics.**

Temperature – A, B, C

The temperature grades are A (the highest), B, and C, representing the tire's resistance to the generation of heat and its ability to dissipate heat when tested under controlled conditions on a specified indoor laboratory test wheel. Sustained high temperature can cause the material of the tire to degenerate and reduce tire life, and excessive temperature can lead to sudden tire failure.
The grade C corresponds to a level of performance which all passenger car tires must meet under the Federal Motor Vehicle Safety Standard No. 109. Grades B and A represent higher levels of performance on the laboratory test wheel than the minimum required by law.

Warning: **The temperature grade for this tire is established for a tire that is properly inflated and not overloaded. Excessive speed, underinflation, or excessive loading, either separately or in combination, can cause heat buildup and possible tire failure.**

Wheel Alignment and Tire Balance

The tires and wheels on your vehicle were aligned and balanced carefully at the factory to give you the longest tire life and best overall performance. Adjustments to wheel alignment and tire balancing will not be necessary on a regular basis. However, if you notice unusual tire wear or your vehicle pulling to one side or the other, the alignment might need to be checked. If you notice your vehicle vibrating when driving on a smooth road, the tires and wheels might need to be rebalanced. See your dealer/retailer for proper diagnosis.

Wheel Replacement

Replace any wheel that is bent, cracked, or badly rusted or corroded. If wheel nuts keep coming loose, the wheel, wheel bolts, and wheel nuts should be replaced. If the wheel leaks air, replace it (except some aluminum wheels, which can sometimes be repaired). See your dealer/retailer if any of these conditions exist.

Your dealer/retailer will know the kind of wheel you need.

Each new wheel should have the same load-carrying capacity, diameter, width, offset, and be mounted the same way as the one it replaces.

If you need to replace any of your wheels, wheel bolts, wheel nuts, or Tire Pressure Monitor System (TPMS) sensors, replace them only with new GM original equipment parts. This way, you will be sure to have the right wheel, wheel bolts, wheel nuts, and TPMS sensors for your vehicle.

⚠ CAUTION:

Using the wrong replacement wheels, wheel bolts, or wheel nuts on your vehicle can be dangerous. It could affect the braking and handling of your vehicle, make your tires lose air and make you lose control. You could have a collision in which you or others could be injured. Always use the correct wheel, wheel bolts, and wheel nuts for replacement.

Notice: **The wrong wheel can also cause problems with bearing life, brake cooling, speedometer or odometer calibration, headlamp aim, bumper height, vehicle ground clearance, and tire or tire chain clearance to the body and chassis.**

See *Changing a Flat Tire on page 5-84* for more information.

Used Replacement Wheels

⚠ CAUTION:

Putting a used wheel on your vehicle is dangerous. You cannot know how it has been used or how far it has been driven. It could fail suddenly and cause a crash. If you have to replace a wheel, use a new GM original equipment wheel.

Tire Chains

⚠ CAUTION:

If your vehicle has P225/75R15, P265/75R15, P235/75R15, P265/70R17, or P235/50R18 size tires, do not use tire chains. They can damage your vehicle because there is not enough clearance. Tire chains used on a vehicle without the proper amount of clearance can cause damage to the brakes, suspension, or other vehicle parts. The area damaged by the tire chains could cause you to lose control of your vehicle and you or others may be injured in a crash.

Use another type of traction device only if its manufacturer recommends it for use on your vehicle and tire size combination and road conditions. Follow that manufacturer's instructions. To help avoid damage to your

CAUTION: (Continued)

CAUTION: (Continued)

vehicle, drive slowly, readjust, or remove the device if it is contacting your vehicle. Do not spin the vehicle's wheels.

If you do find traction devices that will fit, install them on the rear tires.

Notice: **If your vehicle has a tire size other than P225/75R15, P265/75R15, P235/75R15, P265/70R17, or P235/50R18 use tire chains only where legal and only when you must. Use chains that are the proper size for your tires. Install them on the tires of the rear axle. Do not use chains on the tires of the front axle. Tighten them as tightly as possible with the ends securely fastened. Drive slowly and follow the chain manufacturer's instructions. If you can hear the chains contacting your vehicle, stop and retighten them. If the contact continues, slow down until it stops. Driving too fast or spinning the wheels with chains on will damage your vehicle.**

If a Tire Goes Flat

It is unusual for a tire to blowout while you are driving, especially if you maintain your vehicle's tires properly. If air goes out of a tire, it is much more likely to leak out slowly. But if you should ever have a blowout, here are a few tips about what to expect and what to do:

If a front tire fails, the flat tire creates a drag that pulls the vehicle toward that side. Take your foot off the accelerator pedal and grip the steering wheel firmly. Steer to maintain lane position, and then gently brake to a stop well out of the traffic lane.

A rear blowout, particularly on a curve, acts much like a skid and may require the same correction you would use in a skid. In any rear blowout remove your foot from the accelerator pedal. Get the vehicle under control by steering the way you want the vehicle to go. It may be very bumpy and noisy, but you can still steer. Gently brake to a stop, well off the road if possible.

⚠ CAUTION:

Lifting a vehicle and getting under it to do maintenance or repairs is dangerous without the appropriate safety equipment and training. The jack provided with your vehicle is designed only for changing a flat tire. If it is used for anything else, you or others could be badly injured or killed if the vehicle slips off the jack. Use the jack provided with your vehicle only for changing a flat tire.

If a tire goes flat, the next part shows how to use the jacking equipment to change a flat tire safely.

Changing a Flat Tire

If a tire goes flat, avoid further tire and wheel damage by driving slowly to a level place. Turn on your hazard warning flashers. See *Hazard Warning Flashers on page 3-6* for more information.

⚠ CAUTION:

Changing a tire can be dangerous. The vehicle can slip off the jack and roll over or fall on you or other people. You and they could be badly injured or even killed. Find a level place to change your tire. To help prevent the vehicle from moving:

1. **Set the parking brake firmly.**
2. **Put the shift lever in PARK (P).**

CAUTION: (Continued)

CAUTION: (Continued)

3. **If you have a four-wheel-drive vehicle, be sure the transfer case is in a drive gear – not in NEUTRAL.**
4. **Turn off the engine and do not restart while the vehicle is raised.**
5. **Do not allow passengers to remain in the vehicle.**

To be even more certain the vehicle will not move, put blocks at the front and rear of the tire farthest away from the one being changed. That would be the tire on the other side, at the opposite end of the vehicle.

When your vehicle has a flat tire, use the following example as a guide to assist you in the placement of the wheel blocks.

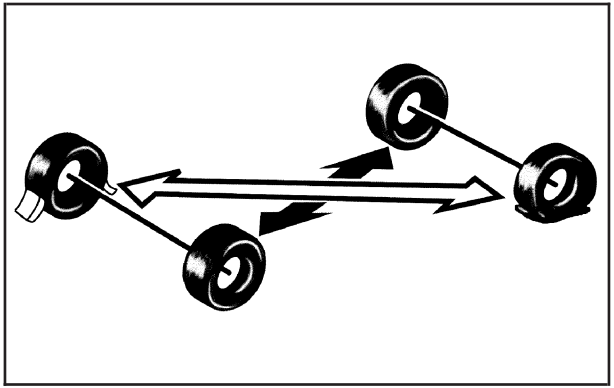

The following information will tell you next how to use the jack and change a tire.

Removing the Spare Tire and Tools

The tools you will need are located under the passenger's seat.

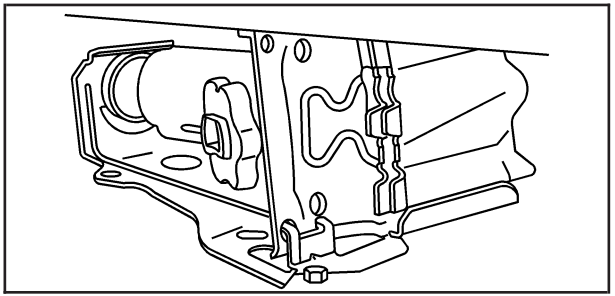

Crew Cab

For crew cab models, the jack and wheel blocks are located under the driver side rear seat.

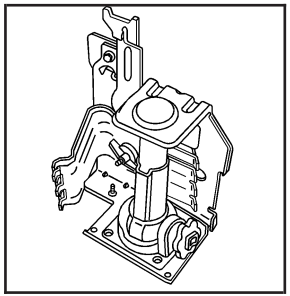

Regular/Extended Cab

For regular and extended cab vehicles, the jack and wheel blocks are located under the cover at the center of the vehicle behind the front seats.

To access the tools:

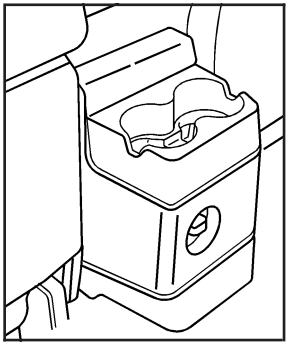

Extended/Regular Cab

1. Move the seats forward to access the cover.

2. Turn the wing nut on the cover counterclockwise to remove it.

   For crew cab models, reach under the rear seat to access the jack and wheel blocks. To reinstall the jack and wheel block assembly in the mounting bracket, insert the tabs into the jack base by pushing the blocks up into the assembly. The outer hole in the jack base aligns with the tab on the bracket. When reinstalling, make sure the jack is secure, but do not overtighten the jack in the bracket.

3. Remove the wheel blocks and the wheel block retainer by turning the wing nut counterclockwise.
4. Put the wheel blocks at the front and rear of the tire farthest away from the one being changed. That would be the tire on the other side, at the opposite end of the vehicle.
5. Locate the wing nut used to retain the storage bag and tools which is under the front passenger's seat. Remove it by turning the wing nut counterclockwise.

Use the jack handle extensions and the wheel wrench to remove the underbody-mounted spare tire.

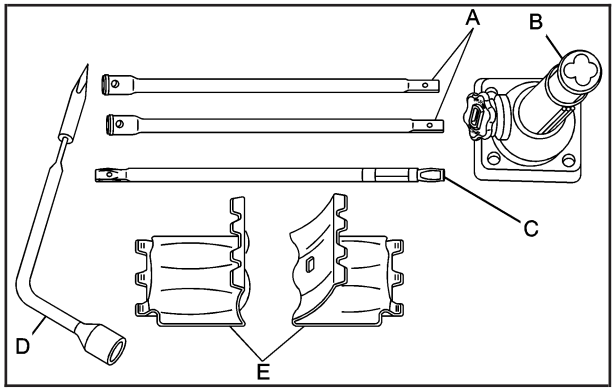

A. Jack Handle Extensions
B. Jack
C. Extension Tool
D. Wheel Wrench
E. Wheel Blocks

1. Assemble the wheel wrench (D) and the jack handle extensions (A).

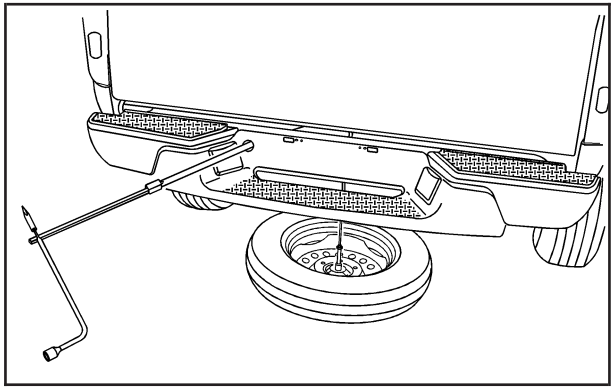

2. Insert the hoist end (chiseled end) of the extension tool (C) through the hole in the rear bumper and into the funnel-shaped guide. The chiseled end of the extension is used to lower the spare tire.
3. Turn the wheel wrench (D) counterclockwise to lower the spare tire to the ground. Continue to turn the wheel wrench until the spare tire can be pulled out from under the vehicle.

   If the spare tire does not lower to the ground, the secondary latch is engaged causing the tire not to lower. See *Secondary Latch System on page 5-96*.

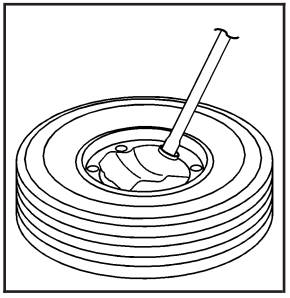

4. Tilt the retainer when the tire has been lowered, and slide it up the cable so it can be pulled up through the wheel opening.
5. Put the spare tire near the flat tire.

Removing the Flat Tire and Installing the Spare Tire

Use the following pictures and instructions to remove the flat tire and raise the vehicle.

The tools you will be using include the jack (A), the wheel blocks (B), the extension tool (C), the jack handle extensions (D), and the wheel wrench (E).

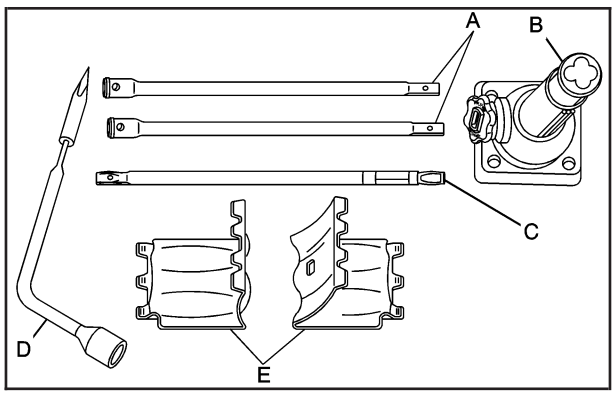

1. Do a safety check before proceeding. See *Changing a Flat Tire on page 5-84* for more information.

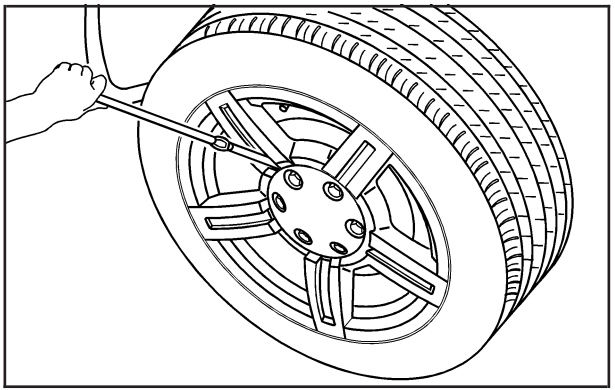

2. Remove the center cap by placing the chisel end of the wheel wrench (E) into one of the slots on the wheel and gently prying the cap out.

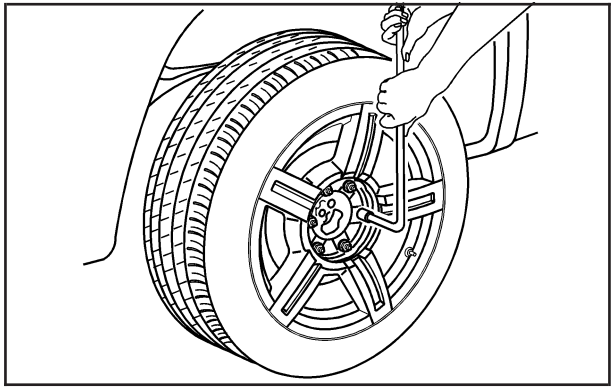

3. Use the wheel wrench to loosen all the wheel nuts by turning it counterclockwise. Do not remove the wheel nuts yet.

⚠ CAUTION:

Getting under a vehicle when it is jacked up is dangerous. If the vehicle slips off the jack you could be badly injured or killed. Never get under a vehicle when it is supported only by a jack.

⚠ CAUTION:

Raising your vehicle with the jack improperly positioned can damage the vehicle and even make the vehicle fall. To help avoid personal injury and vehicle damage, be sure to fit the jack lift head into the proper location before raising the vehicle.

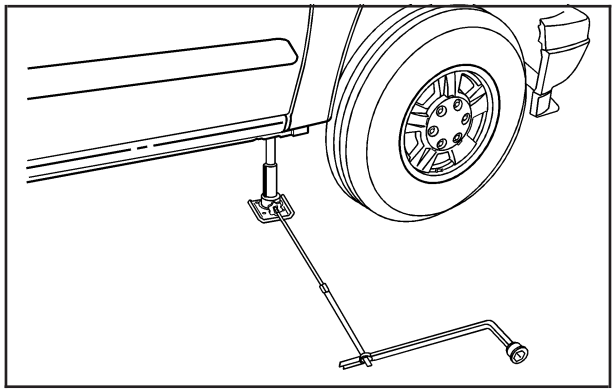

Front Position

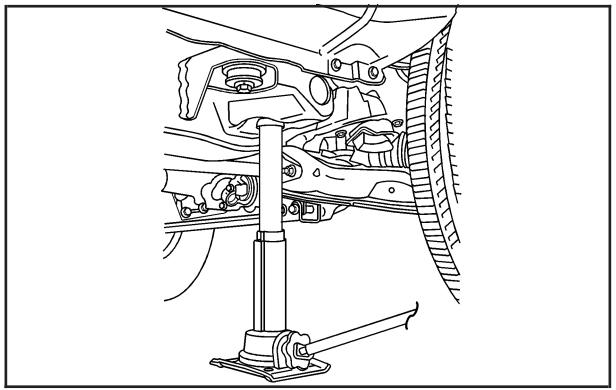

Front Position

4. Position the jack (A) under the vehicle as shown for the front or rear locations.

If the flat tire is on the front of the vehicle, position the jack to the rear of the front tire in the pocket off of the frame.

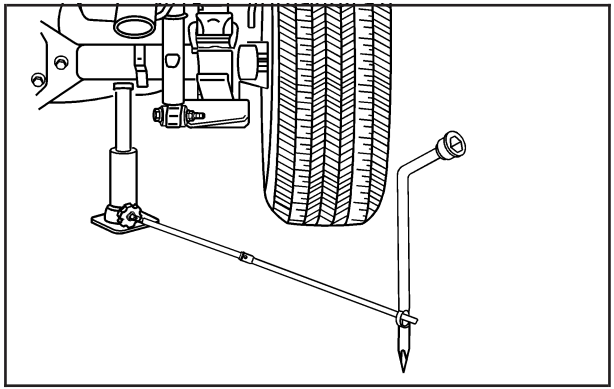

Rear Position

If the flat tire is on the rear, position the jack under the rear axle and get as close as possible to the shock absorber.

5. Make sure the jack head is positioned so that the rear axle is resting securely between the grooves that are on the jack head.
6. Turn the wheel wrench clockwise to raise the vehicle. Raise the vehicle far enough off the ground so there is enough room for the spare tire to fit under the wheel well.

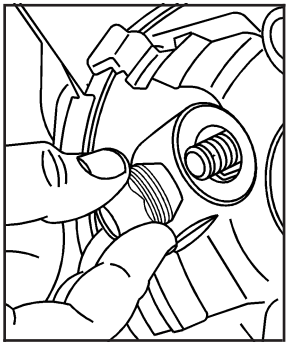

7. Remove all the wheel nuts and the flat tire.

⚠ CAUTION:

Rust or dirt on a wheel, or on the parts to which it is fastened, can make wheel nuts become loose after time. The wheel could come off and cause an accident. When you change a wheel, remove any rust or dirt from places where the wheel attaches to the vehicle. In an emergency, you can use a cloth or a paper towel to do this; but be sure to use a scraper or wire brush later, if needed, to get all the rust or dirt off. See *Changing a Flat Tire on page 5-84*.

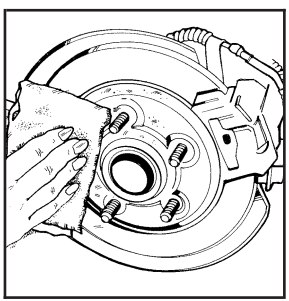

8. Remove any rust or dirt from the wheel bolts, mounting surfaces and spare wheel.

9. Install the spare tire.

⚠ CAUTION:

Never use oil or grease on studs or nuts. Because the nuts might come loose. The vehicle's wheel could fall off, causing a crash.

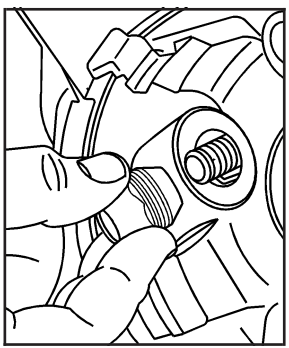

10. Put the wheel nuts back on with the rounded end of the nuts toward the wheel. Tighten each wheel nut by hand. Then use the wheel wrench to tighten the nuts until the wheel is held against the hub.

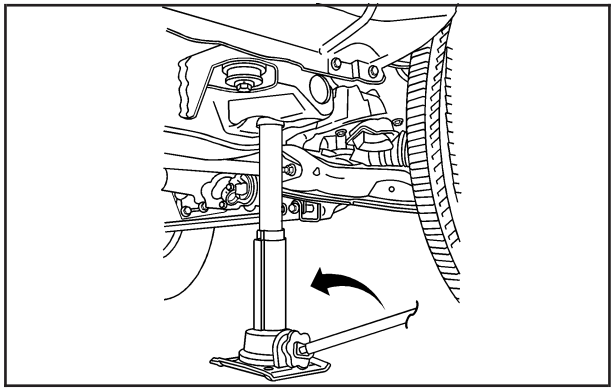

Front Position

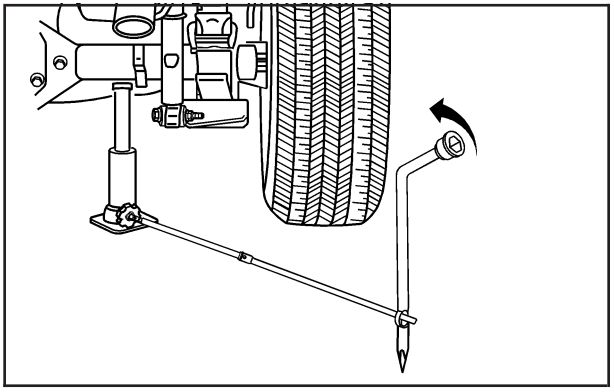

Rear Position

11. Turn the wheel wrench counterclockwise to lower the vehicle. Lower the jack completely.

⚠ CAUTION:

Incorrect or improperly tightened wheel nuts can cause the wheel to come loose and even come off. This could lead to a crash. If you have to replace them, be sure to get new original equipment wheel nuts. Stop somewhere as soon as you can and have the nuts tightened with a torque wrench to the proper torque specification. See *Capacities and Specifications on page 5-120* for wheel nut torque specification.

Notice: **Improperly tightened wheel nuts can lead to brake pulsation and rotor damage. To avoid expensive brake repairs, evenly tighten the wheel nuts in the proper sequence and to the proper torque specification. See *Capacities and Specifications on page 5-120* for the wheel nut torque specification.**

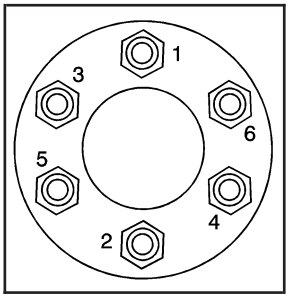

12. Tighten the wheel nuts firmly in a crisscross sequence as shown by turning the wheel wrench clockwise.

When you reinstall the regular wheel and tire, you must also reinstall the center cap. Place the cap on the wheel and tap it into place until it seats flush with the wheel. The cap only goes on one way. Be sure to line up the tab on the center cap with the indentation on the wheel.

Secondary Latch System

Your vehicle has an underbody-mounted tire hoist assembly equipped with a secondary latch system. It is designed to stop the spare tire from suddenly falling off your vehicle. For the secondary latch to work, the spare must be installed with the valve stem pointing down. See *Storing a Flat or Spare Tire and Tools on page 5-100*.

⚠ CAUTION:

Before beginning this procedure read all the instructions. Failure to read and follow the instructions could damage the hoist assembly and you and others could get hurt. Read and follow the instructions listed next.

To release the spare tire from the secondary latch:

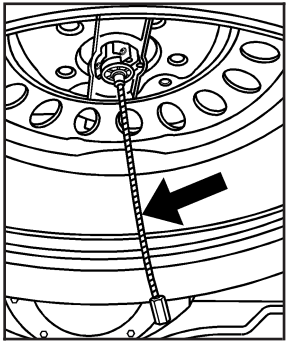

1. Check under the vehicle to see if the cable end is visible. If the cable is not visible proceed to Step 6.
2. If it is visible, first try to tighten the cable by turning the wheel wrench clockwise until you hear two clicks or feel it skip twice. You cannot overtighten the cable.
3. Loosen the cable by turning the wrench counterclockwise three or four turns.
4. Repeat this procedure at least two times. If the spare tire lowers to the ground, continue with Step 5 of *Removing the Spare Tire and Tools on page 5-85*.

5. If the spare does not lower, turn the wrench counterclockwise until approximately 6 inches (15 cm) of cable is exposed.
6. Stand the wheel blocks on their shortest ends, with the backs facing each other.

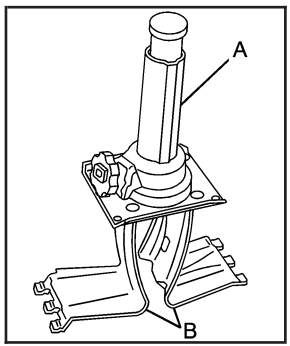

7. Place the bottom edge of the jack (A) on the wheel blocks (B), separating them so that the jack is balanced securely.

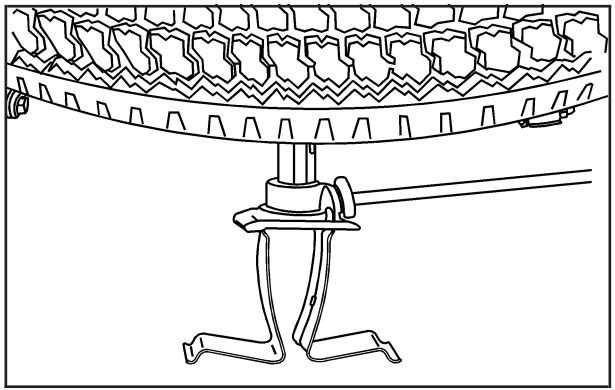

8. Attach the jack handle, extension, and wheel wrench to the jack and place it (with the wheel blocks) under the vehicle toward the front of the rear bumper.

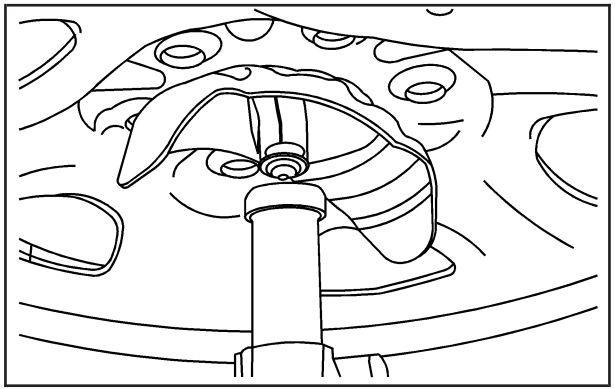

9. Position the center lift point of the jack under the center of the spare tire.
10. Turn the wrench clockwise to raise the jack until it lifts the end fitting.
11. Continue raising the jack until the spare tire stops moving upward and is held firmly in place. The secondary latch has released and the spare tire is balancing on the jack.
12. Lower the jack by turning the wheel wrench counterclockwise. Keep lowering the jack until the spare tire slides off the jack or is hanging by the cable.

⚠ CAUTION:

Someone standing too close during the procedure could be injured by the jack. If the spare tire does not slide off the jack completely, make sure no one is behind you or on either side of you as you pull the jack out from under the spare.

13. Disconnect the jack handle from the jack and carefully remove the jack. Use one hand to push against the spare while firmly pulling the jack out from under the spare tire with the other hand.

    If the spare tire is hanging from the cable, insert the hoist end of extension, and wheel wrench into the hoist shaft hole in the bumper and turn the wheel wrench counterclockwise to lower the spare the rest of the way.

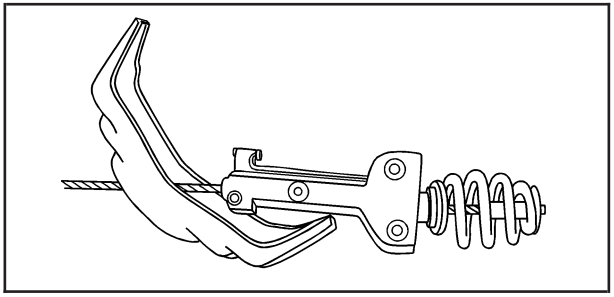

14. Tilt the tire retainer at the end of the cable and pull it through the wheel opening. Pull the tire out from under the vehicle.
15. Turn the wheel wrench in the hoist shaft hole in the bumper clockwise to raise the cable back up if the cable is hanging under the vehicle.

Have the hoist assembly inspected as soon as you can. You will not be able to store a spare or flat tire using the hoist assembly until it has been replaced.

To continue changing the flat tire, see *Removing the Flat Tire and Installing the Spare Tire on page 5-89*.

Storing a Flat or Spare Tire and Tools

⚠ CAUTION:

Storing a jack, a tire, or other equipment in the passenger compartment of the vehicle could cause injury. In a sudden stop or collision, loose equipment could strike someone. Store all these in the proper place.

Notice: **Storing an aluminum wheel with a flat tire under your vehicle for an extended period of time or with the valve stem pointing up can damage the wheel. Always stow the wheel with the valve stem pointing down and have the wheel/tire repaired as soon as possible.**

Store the tire under the rear of the vehicle in the spare tire carrier.

1. Put the tire on the ground at the rear of the vehicle with the valve stem pointed down.

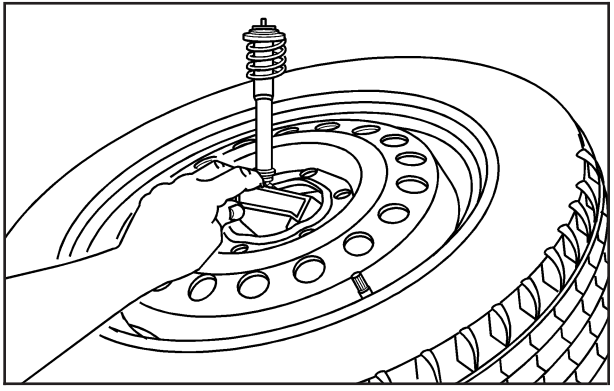

2. Tilt the retainer downward and through the wheel opening. Make sure the retainer is fully seated across the underside of the wheel.

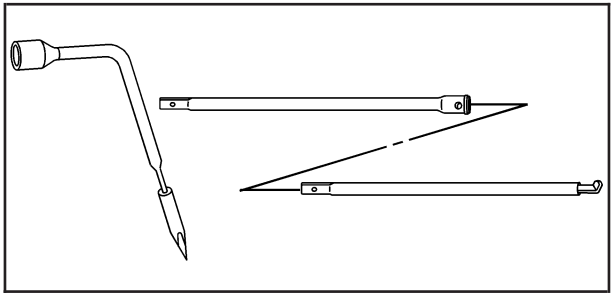

3. Attach the wheel wrench and extensions together as shown.

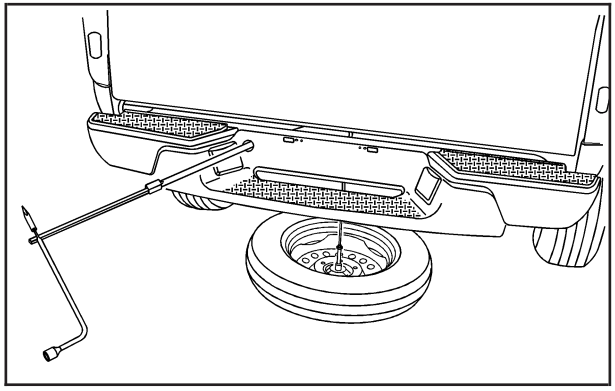

4. Insert the hoist end of the extension through the hole in the rear bumper and into the funnel-shaped guide.

5. Turn the wheel wrench clockwise to raise the tire part way up. Make sure the retainer is seated in the wheel opening and the valve stem is pointed down.

   Continue raising the tire, watch to make sure it does not get caught on anything on the underbody. If the tire does get caught, loosen up two or three turns and push and pull the tire and then retighten.

   Repeat this procedure as many times as needed to ensure proper stowage.

6. When the tire is properly seated to the underbody, continue turning the wheel wrench clockwise until you feel the override which is 2 skips. You cannot overtighten the cable.

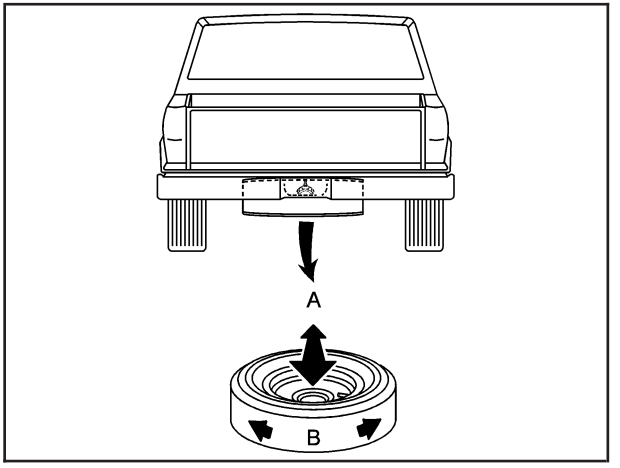

7. Make sure the tire is stored securely. Push, pull (A), and then try to turn (B) the tire. If the tire moves, check to make sure the tire valve stem is pointing down, then use the wheel wrench to loosen and then tighten the cable.

To store the tools, do the following:

1. Return the wheel wrench, jack extensions and the storage bag to the locations described under *Removing the Spare Tire and Tools on page 5-85*.
2. Install the wheel blocks first. Then install the jack.
3. Secure the items in the vehicle as shown next.

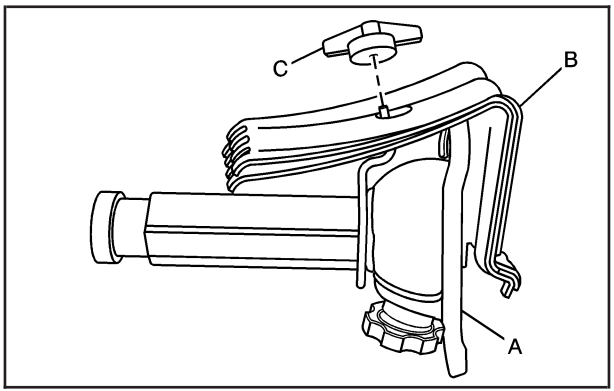

Crew Cab

A. Jack
B. Wheel Blocks
C. Wing Nut

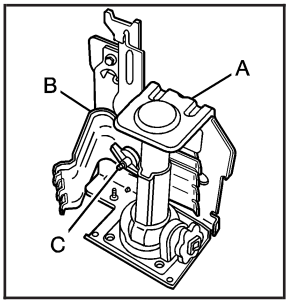

Regular/Extended Cab

A. Jack
B. Wheel Blocks
C. Wing Nut

Spare Tire

Compact Spare Tire

Your vehicle may have a compact spare tire. Although the compact spare tire was fully inflated when your vehicle was new, it can lose air over time. Check the inflation pressure regularly. It should be 60 psi (420 kPa).

Notice: **If your vehicle has four-wheel drive and the compact spare tire is installed on your vehicle, do not drive in four-wheel drive until you can have your flat tire repaired and/or replaced. You could damage your vehicle, and the repair costs would not be covered by your warranty. Never use four-wheel drive when the compact spare tire is installed on your vehicle.**

After installing the compact spare on your vehicle, you should stop as soon as possible and make sure your vehicle's spare tire is correctly inflated.

The compact spare is made to perform well at speeds up to 62 mph (100 km/h) for distances up to 500 miles (804 km). For heavy payloads or towing, and for low traction or four-wheel-drive conditions, repair or replace the full-size tire. Of course, it is best to replace your vehicle's spare with a full-size tire as soon as you can. The spare tire will last longer and be in good shape in case you need it again.

Notice: **When the compact spare is installed, do not take your vehicle through an automatic car wash with guide rails. The compact spare can get caught on the rails. That can damage the tire and wheel, and maybe other parts of your vehicle.**

Do not use your compact spare on other vehicles.

And do not mix your compact spare tire or wheel with other wheels or tires. They will not fit. Keep your spare tire and its wheel together.

Notice: **Tire chains will not fit your compact spare. Using them can damage your vehicle and can damage the chains too. Do not use tire chains on your compact spare.**

Full-Size Spare Tire

Your vehicle may have a full-size spare tire, which, when new, was fully inflated. A spare tire may lose air over time, so check its inflation pressure regularly. See *Inflation - Tire Pressure on page 5-66* and *Loading Your Vehicle on page 4-34* for information regarding proper tire inflation and loading your vehicle. For instruction on how to remove, install, or store a spare tire, see *Removing the Flat Tire and Installing the Spare Tire on page 5-89* and *Storing a Flat or Spare Tire and Tools on page 5-100*.

Your vehicle may have a different size spare tire than the road tires originally installed on your vehicle. This spare was developed for use on your vehicle, so it is alright to drive on it. If your vehicle has four-wheel drive and the different size spare tire is installed, keep the vehicle in two-wheel drive.

Notice: **If your vehicle has four-wheel drive and the different size spare tire is installed on your vehicle, do not drive in four-wheel drive until you can have your flat tire repaired and/or replaced. You could damage your vehicle, and the repair costs would not be covered by your warranty. Never use four-wheel drive when the different size spare tire is installed on your vehicle.**

After installing the spare tire on your vehicle, you should stop as soon as possible and make sure the spare is correctly inflated. The spare tire is made to perform well at speeds up to 62 mph (100 km/h) for distances up to 500 miles (804 km). For heavy payloads or towing, and for low traction or four-wheel-drive conditions, repair or replace the full-size tire. Have the damaged or flat road tire repaired or replaced as soon as you can and installed back onto your vehicle. This way, the spare tire will be available in case you need it again.

Do not mix tires and wheels of different sizes, because they will not fit. Keep your spare tire and its wheel together.

Appearance Care

Interior Cleaning

Your vehicle's interior will continue to look its best if it is cleaned often. Although not always visible, dust and dirt can accumulate on your upholstery. Dirt can damage carpet, fabric, leather, and plastic surfaces. Regular vacuuming is recommended to remove particles from your upholstery. It is important to keep your upholstery from becoming and remaining heavily soiled. Soils should be removed as quickly as possible. Your vehicle's interior may experience extremes of heat that could cause stains to set rapidly.

Lighter colored interiors may require more frequent cleaning. Use care because newspapers and garments that transfer color to your home furnishings may also transfer color to your vehicle's interior.

When cleaning your vehicle's interior, only use cleaners specifically designed for the surfaces being cleaned. Permanent damage may result from using cleaners on surfaces for which they were not intended. Use glass cleaner only on glass. Remove any accidental over-spray from other surfaces immediately. To prevent over-spray, apply cleaner directly to the cleaning cloth.

Notice: **If you use abrasive cleaners when cleaning glass surfaces on your vehicle, you could scratch the glass and/or cause damage to the rear window defogger. When cleaning the glass on your vehicle, use only a soft cloth and glass cleaner.**

Many cleaners contain solvents that may become concentrated in your vehicle's breathing space. Before using cleaners, read and adhere to all safety instructions on the label. While cleaning your vehicle's interior, maintain adequate ventilation by opening your vehicle's doors and windows.

Dust may be removed from small buttons and knobs using a small brush with soft bristles.

Your dealer/retailer has a product for cleaning your vehicle's glass. Should it become necessary, you can also obtain a product from your dealer/retailer to remove odors from your vehicle's upholstery.

Do not clean your vehicle using the following cleaners or techniques:

- Never use a knife or any other sharp object to remove a soil from any interior surface.
- Never use a stiff brush. It can cause damage to your vehicle's interior surfaces.
- Never apply heavy pressure or rub aggressively with a cleaning cloth. Use of heavy pressure can damage your interior and does not improve the effectiveness of soil removal.
- Use only mild, neutral-pH soaps. Avoid laundry detergents or dishwashing soaps with degreasers. Using too much soap will leave a residue that leaves streaks and attracts dirt. For liquid cleaners, about 20 drops per gallon (3.78 L) of water is a good guide.
- Do not heavily saturate your upholstery while cleaning.
- Damage to your vehicle's interior may result from the use of many organic solvents such as naptha, alcohol, etc.

Fabric/Carpet

Use a vacuum cleaner with a soft brush attachment frequently to remove dust and loose dirt. A canister vacuum with a beater bar in the nozzle may only be used on floor carpet and carpeted floor mats. For soils, always try to remove them first with plain water or club soda. Before cleaning, gently remove as much of the soil as possible using one of the following techniques:

- For liquids: gently blot the remaining soil with a paper towel. Allow the soil to absorb into the paper towel until no more can be removed.
- For solid dry soils: remove as much as possible and then vacuum.

To clean, use the following instructions:

1. Saturate a lint-free, clean white cloth with water or club soda.
2. Wring the cloth to remove excess moisture.
3. Start on the outside edge of the soil and gently rub toward the center. Continue cleaning, using a clean area of the cloth each time it becomes soiled.
4. Continue to gently rub the soiled area until the cleaning cloth remains clean.
5. If the soil is not completely removed, use a mild soap solution and repeat the cleaning process that was used with plain water.

If any of the soil remains, a commercial fabric cleaner or spot lifter may be necessary. When a commercial upholstery cleaner or spot lifter is to be used, test a small hidden area for colorfastness first. If the locally cleaned area gives any impression that a ring formation may result, clean the entire surface.

After the cleaning process has been completed, a paper towel can be used to blot excess moisture from the fabric or carpet.

Leather

A soft cloth dampened with water can be used to remove dust. If a more thorough cleaning is necessary, a soft cloth dampened with a mild soap solution can be used. Allow the leather to dry naturally. Do not use heat to dry. Never use steam to clean leather. Never use spot lifters or spot removers on leather. Many commercial leather cleaners and coatings that are sold to preserve and protect leather may permanently change the appearance and feel of your leather and are not recommended. Do not use silicone or wax-based products, or those containing organic solvents to clean your vehicle’s interior because they can alter the appearance by increasing the gloss in a non-uniform manner. Never use shoe polish on leather.

Instrument Panel, Vinyl, and Other Plastic Surfaces

A soft cloth dampened with water may be used to remove dust. If a more thorough cleaning is necessary, a clean soft cloth dampened with a mild soap solution can be used to gently remove dust and dirt. Never use spot lifters or removers on plastic surfaces. Many commercial cleaners and coatings that are sold to preserve and protect soft plastic surfaces may permanently change the appearance and feel of your interior and are not recommended. Do not use silicone or wax-based products, or those containing organic solvents to clean your vehicle's interior because they can alter the appearance by increasing the gloss in a non-uniform manner.

Some commercial products may increase gloss on your instrument panel. The increase in gloss may cause annoying reflections in the windshield and even make it difficult to see through the windshield under certain conditions.

Care of Safety Belts

Keep belts clean and dry.

⚠ CAUTION:

Do not bleach or dye safety belts. If you do, it may severely weaken them. In a crash, they might not be able to provide adequate protection. Clean safety belts only with mild soap and lukewarm water.

Weatherstrips

Silicone grease on weatherstrips will make them last longer, seal better, and not stick or squeak. Apply silicone grease with a clean cloth. During very cold, damp weather frequent application may be required. See *Recommended Fluids and Lubricants on page 6-12*.

Washing Your Vehicle

The best way to preserve your vehicle's finish is to keep it clean by washing it often.

Notice: **Certain cleaners contain chemicals that can damage the emblems or nameplates on your vehicle. Check the cleaning product label. If it states that it should not be used on plastic parts, do not use it on your vehicle or damage may occur and it would not be covered by the warranty.**

Do not wash the vehicle in direct sunlight. Use a car washing soap. Do not use cleaning agents that are petroleum based or that contain acid or abrasives, as they can damage the paint, metal or plastic on your vehicle. Approved cleaning products can be obtained from your dealer/retailer. See *Vehicle Care/Appearance Materials on page 5-114*.

Follow all manufacturers' directions regarding correct product usage, necessary safety precautions and appropriate disposal of any vehicle care product.

Rinse the vehicle well, before washing and after to remove all cleaning agents completely. If they are allowed to dry on the surface, they could stain.

Dry the finish with a soft, clean chamois or an all-cotton towel to avoid surface scratches and water spotting

High pressure car washes may cause water to enter the vehicle. Avoid using high pressure washes closer than 12 inches (30 cm) to the surface of the vehicle. Use of power washers exceeding 1,200 psi (8 274 kPa) can result in damage or removal of paint and decals.

Cleaning Exterior Lamps/Lenses

Use only lukewarm or cold water, a soft cloth and a car washing soap to clean exterior lamps and lenses. Follow instructions under *Washing Your Vehicle on page 5-110*.

Finish Care

Occasional waxing or mild polishing of your vehicle by hand may be necessary to remove residue from the paint finish. You can get approved cleaning products from your dealer/retailer. See *Vehicle Care/Appearance Materials on page 5-114*.

If your vehicle has a basecoat/clearcoat paint finish, the clearcoat gives more depth and gloss to the colored basecoat. Always use waxes and polishes that are non-abrasive and made for a basecoat/clearcoat paint finish.

Notice: **Machine compounding or aggressive polishing on a basecoat/clearcoat paint finish may damage it. Use only non-abrasive waxes and polishes that are made for a basecoat/clearcoat paint finish on your vehicle.**

Foreign materials such as calcium chloride and other salts, ice melting agents, road oil and tar, tree sap, bird droppings, chemicals from industrial chimneys, etc., can damage your vehicle's finish if they remain on painted surfaces. Wash the vehicle as soon as possible. If necessary, use non-abrasive cleaners that are marked safe for painted surfaces to remove foreign matter.

Exterior painted surfaces are subject to aging, weather and chemical fallout that can take their toll over a period of years. You can help to keep the paint finish looking new by keeping your vehicle garaged or covered whenever possible.

Protecting Exterior Bright Metal Parts

Bright metal parts should be cleaned regularly to keep their luster. Washing with water is all that is usually needed. However, you may use chrome polish on chrome or stainless steel trim, if necessary.

Use special care with aluminum trim. To avoid damaging protective trim, never use auto or chrome polish, steam or caustic soap to clean aluminum. A coating of wax, rubbed to high polish, is recommended for all bright metal parts.

Windshield and Wiper Blades

Clean the outside of the windshield with glass cleaner.

Clean the rubber blades using a lint free cloth or paper towel soaked with windshield washer fluid or a mild detergent. Wash the windshield thoroughly when cleaning the blades. Bugs, road grime, sap, and a buildup of vehicle wash/wax treatments may cause wiper streaking. Replace the wiper blades if they are worn or damaged.

Wipers can be damaged by:

- Extreme dusty conditions
- Sand and salt
- Heat and sun
- Snow and ice, without proper removal

Aluminum or Chrome-Plated Wheels and Trim

Your vehicle may have either aluminum or chrome-plated wheels.

Keep the wheels clean using a soft clean cloth with mild soap and water. Rinse with clean water. After rinsing thoroughly, dry with a soft clean towel. A wax may then be applied.

Notice: **Chrome wheels and other chrome trim may be damaged if you do not wash your vehicle after driving on roads that have been sprayed with magnesium, calcium or sodium chloride. These chlorides are used on roads for conditions such as ice and dust. Always wash your vehicle's chrome with soap and water after exposure.**

Notice: **If you use strong soaps, chemicals, abrasive polishes, cleaners, brushes, or cleaners that contain acid on aluminum or chrome-plated wheels, you could damage the surface of the wheel(s). The repairs would not be covered by your warranty. Use only approved cleaners on aluminum or chrome-plated wheels.**

The surface of these wheels is similar to the painted surface of your vehicle. Do not use strong soaps, chemicals, abrasive polishes, abrasive cleaners, cleaners with acid, or abrasive cleaning brushes on them because you could damage the surface. Do not use chrome polish on aluminum wheels.

Notice: **Using chrome polish on aluminum wheels could damage the wheels. The repairs would not be covered by your warranty. Use chrome polish on chrome wheels only.**

Use chrome polish only on chrome-plated wheels, but avoid any painted surface of the wheel, and buff off immediately after application.

Notice: **If you drive your vehicle through an automatic car wash that has silicone carbide tire cleaning brushes, you could damage the aluminum or chrome-plated wheels. The repairs would not be covered by your warranty. Never drive a vehicle equipped with aluminum or chrome-plated wheels through an automatic car wash that uses silicone carbide tire cleaning brushes.**

Tires

To clean the tires, use a stiff brush with tire cleaner.

Notice: **Using petroleum-based tire dressing products on your vehicle may damage the paint finish and/or tires. When applying a tire dressing, always wipe off any overspray from all painted surfaces on your vehicle.**

Sheet Metal Damage

If the vehicle is damaged and requires sheet metal repair or replacement, make sure the body repair shop applies anti-corrosion material to parts repaired or replaced to restore corrosion protection.

Original manufacturer replacement parts will provide the corrosion protection while maintaining the warranty.

Finish Damage

Any stone chips, fractures or deep scratches in the finish should be repaired right away. Bare metal will corrode quickly and may develop into major repair expense.

Minor chips and scratches can be repaired with touch-up materials available from your dealer/retailer. Larger areas of finish damage can be corrected in your dealer's/retailer's body and paint shop.

Underbody Maintenance

Chemicals used for ice and snow removal and dust control can collect on the underbody. If these are not removed, corrosion and rust can develop on the underbody parts such as fuel lines, frame, floor pan, and exhaust system even though they have corrosion protection.

At least every spring, flush these materials from the underbody with plain water. Clean any areas where mud and debris can collect. Dirt packed in close areas of the frame should be loosened before being flushed. Your dealer/retailer or an underbody car washing system can do this for you.

Chemical Paint Spotting

Some weather and atmospheric conditions can create a chemical fallout. Airborne pollutants can fall upon and attack painted surfaces on the vehicle. This damage can take two forms: blotchy, ring-shaped discolorations, and small, irregular dark spots etched into the paint surface.

Although no defect in the paint job causes this, we will repair, at no charge to the owner, the surfaces of new vehicles damaged by this fallout condition within 12 months or 12,000 miles (20 000 km) of purchase, whichever occurs first.

Vehicle Care/Appearance Materials

Description	Usage
Polishing Cloth	Interior and exterior polishing cloth.
Tar and Road Oil Remover	Removes tar, road oil, and asphalt.
Chrome Cleaner and Polish	Use on chrome or stainless steel.
White Sidewall Tire Cleaner	Removes soil and black marks from whitewalls and raised white lettering.
Vinyl Cleaner	Cleans vinyl.
Glass Cleaner	Removes dirt, grime, smoke and fingerprints.
Chrome Wheel Cleaner	Removes dirt and grime from chrome wheels.
Finish Enhancer	Removes dust, fingerprints, and surface contaminants. Spray on and wipe off.

Description	Usage
Swirl Remover Polish	Removes swirl marks, fine scratches, and other light surface contamination.
Cleaner Wax	Removes light scratches and protects finish.
Foaming Tire Shine Low Gloss	Cleans, shines, and protects tires. No wiping necessary.
Wash Wax Concentrate	Medium foaming shampoo. Cleans and lightly waxes. Biodegradable and phosphate free.
Spot Lifter	Quickly removes spots and stains from carpets, vinyl, and cloth upholstery.
Odor Eliminator	Odorless spray odor eliminator used on fabrics, vinyl, leather and carpet.

Vehicle Identification

Vehicle Identification Number (VIN)

This is the legal identifier for your vehicle. It appears on a plate in the front corner of the instrument panel, on the driver side. You can see it if you look through the windshield from outside your vehicle. The VIN also appears on the Certification/Tire and Service Parts labels and the certificates of title and registration.

Engine Identification

The eighth character in the VIN is the engine code. This code helps you identify your vehicle's engine, specifications, and replacement parts. See *Capacities and Specifications on page 5-120* for your vehicle's engine code.

Service Parts Identification Label

This label is on the inside of the glove box. It is very helpful if you ever need to order parts. The label has the following information:

- Vehicle Identification Number (VIN)
- Model designation
- Paint information
- Production options and special equipment

Do not remove this label from the vehicle.

Electrical System

Add-On Electrical Equipment

Notice: **Do not add anything electrical to your vehicle unless you check with your dealer/retailer first. Some electrical equipment can damage your vehicle and the damage would not be covered by your warranty. Some add-on electrical equipment can keep other components from working as they should.**

Add-on equipment can drain your vehicle's battery, even if your vehicle is not operating.

Your vehicle has an airbag system. Before attempting to add anything electrical to your vehicle, see *Servicing Your Airbag-Equipped Vehicle on page 1-74*.

Windshield Wiper Fuses

The windshield wiper motor is protected by a circuit breaker and a fuse. If the motor overheats due to heavy snow, etc., the wiper will stop until the motor cools. If the overload is caused by some electrical problem, have it fixed.

Fuses and Circuit Breakers

The wiring circuits in your vehicle are protected from short circuits by a combination of fuses and circuit breakers. This greatly reduces the chance of fires caused by electrical problems.

Look at the silver-colored band inside the fuse. If the band is broken or melted, replace the fuse. Be sure you replace a bad fuse with a new one of the identical size and rating.

If you ever have a problem on the road and do not have a spare fuse, you can borrow one that has the same amperage. Just pick some feature of your vehicle that you can get along without — like the radio or cigarette lighter — and use its fuse, if it is the correct amperage. Replace it as soon as you can.

Engine Compartment Fuse Block

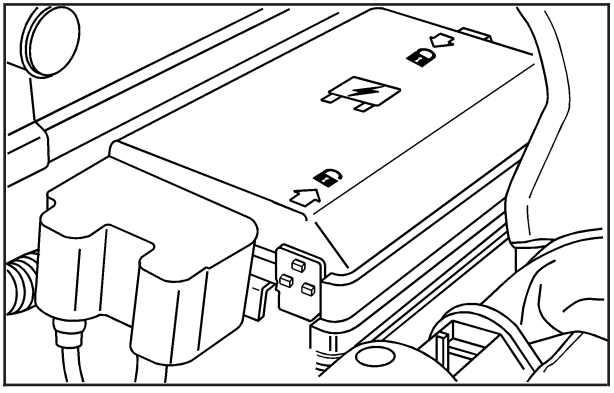

The engine compartment fuse block is located on the driver side of the engine compartment. See *Engine Compartment Overview on page 5-12* for more information on location.

To remove the cover, push in on the tab on the end of the cover and lift. To reinstall the cover, line up the tab and push down on the cover until the tab clicks into place.

Notice: **Spilling liquid on any electrical components on your vehicle may damage it. Always keep the covers on any electrical component.**

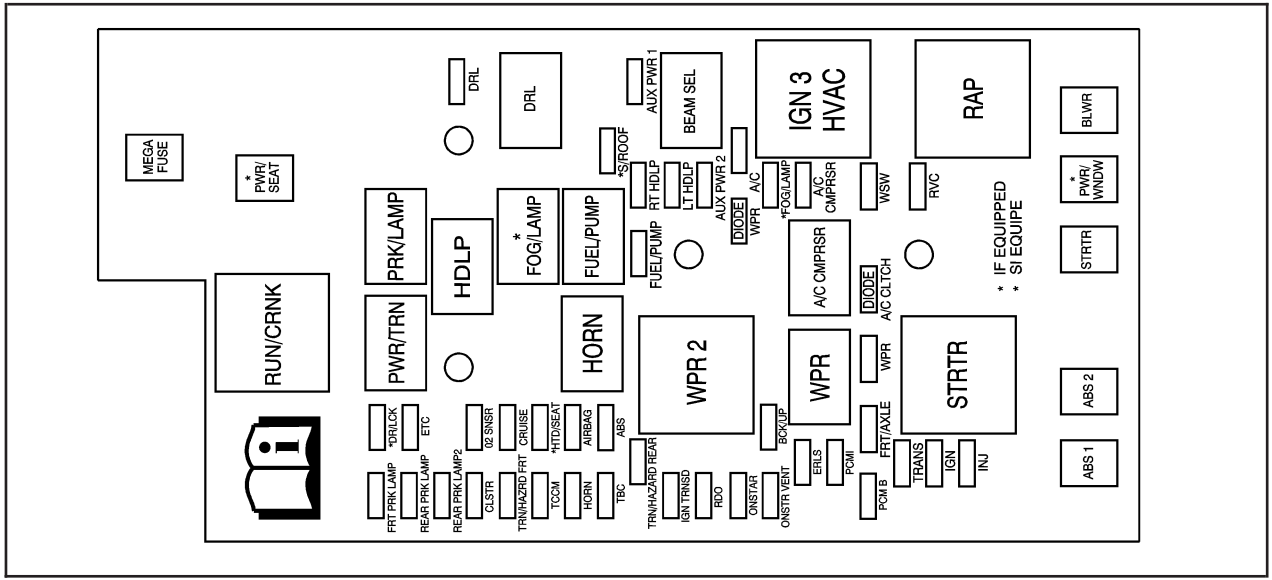

Fuses	Usage
DRL	Daylight Running Lamps
AUX PWR 1	Accessory Power 1
BLWR	Climate Control Fan

Fuses	Usage
S/ROOF	Sunroof (If Equipped)
A/C	Air Conditioning Control Head, Power Seats

Fuses	Usage
PWR/SEAT	Power Seat Circuit Breaker (If Equipped)
RT HDLP	Passenger Side Headlamp
LT HDLP	Driver Side Headlamp
AUX PWR 2	Accessory Power 2
FOG/LAMP	Fog Lamps (If Equipped)
A/C CMPRSR	Air Conditioning Compressor
WSW	Wiper/Washer Switch
RVC	Regulated Voltage Control
PWR/WNDW	Power Windows (If Equipped)
FUEL/PUMP	Fuel Pump
STRTR	Starter Solenoid Relay
WPR	Wiper
ABS 2	Antilock Brake System 2 (ABS Pump)
DR/LCK	Power Door Locks (If Equipped)
ETC	Electronic Throttle Control (ETC)
02 SNSR	Oxygen Sensors, Air Injection Reactor (AIR) Relay
CRUISE	Cruise Control Switch, Inside Rearview Mirror, Transfer Case Control Module, Brake Switch, Clutch Disable
HTD/SEAT	Heated Seat (If Equipped)

Fuses	Usage
AIRBAG	Supplemental Inflatable Restraint System, Sensing and Diagnostic Module
ABS	Antilock Brake System (ABS), ABS Module, Four-Wheel Drive, Gravity Sensor
BCK/UP	Back-up Lights
FRT/AXLE	Front Axle Actuator
TRN/HAZRD REAR	Rear Turn/Hazard Lights
ERLS	Mass Air Flow (MAF) Sensor, Can Purge Solenoid, Air Injection Reactor (AIR) Relay
PCMI	Powertrain Control Module (PCM)
TRANS	Transmission Solenoid
IGN	Ignition, Clutch Starter Switch, Neutral Safety Back-Up Switch, Ignition Coils 1-5, Air Conditioning Relay
INJ	Injectors
ABS 1	Antilock Brake System 1 (ABS Logic)
FRT PRK LAMP	Front Park/Turn Lamps, Driver and Passenger Side Power Window Switches Lighting
REAR PRK LAMP	Rear Parking Lamp 1, Passenger Side Taillamp, License Plate Lamps

Fuses	Usage
REAR PRK LAMP2	Driver Side Rear Taillamp, Passenger Side Airbag Indicator Lighting, Instrument Panel Dimming Power (2WD/4WD switch lighting)
CLSTR	Cluster
TRN/HAZRD FRT	Turn/Hazard/Courtesy/Cargo Lamps/Mirrors
TCCM	Transfer Case Control Module
HORN	Horn
TBC	Truck Body Controller
IGN TRNSD	Ignition Transducers
RDO	Radio
ONSTAR	OnStar®
CNSTR VENT	Fuel Canister Vent Solenoid
PCM B	Powertrain Control Module (PCM) B

Relays	Usage
DRL	Daylight Running Lamps
BEAM SEL	Beam Selection
IGN 3 HVAC	Ignition 3, Climate Control, Climate Control Head Fuse, Power Seat Fuse
RAP	Retained Accessory Power (Power Window Fuse, Wiper/Washer Switch Fuse), Sunroof Fuse

Relays	Usage
PRK/LAMP	Front Parking Lamp Fuse, Rear Parking Lamps
HDLP	Headlamps
FOG/LAMP	Fog Lamps (If Equipped)
FUEL/PUMP	Fuel Pump, Fuel Pump Fuse
A/C CMPRSR	Air Conditioning Compressor
RUN/CRNK	Run/Crank, Airbag System Fuse, Cruise Control Fuse, Ignition Fuse, Back-Up Lamps, ABS Fuse, Front Axle, PCM-1, Injectors Fuse, Transmission Fuse, ERLS
PWR/TRN	Powertrain, Electronic Throttle Control Fuse, Oxygen Sensor Fuse
HORN	Horn
WPR 2	Wiper 2 (High/Low)
WPR	Wipers (On/Off)
STRTR	Starter Relay (PCM Relay)

Miscellaneous	Usage
WPR	Diode — Wiper
A/C CLTCH	Diode — Air Conditioning, Clutch
MEGA FUSE	Mega Fuse

Capacities and Specifications

The following approximate conversion capacities are given in English and metric conversions. See *Recommended Fluids and Lubricants on page 6-12* for more information.

Capacities and Specifications

Application	Capacities	
	English	Metric
Air Conditioning Refrigerant R134a	For the air conditioning system refrigerant charge amount, see the refrigerant caution label located under the hood. See your dealer/retailer for more information.	
Cooling System		
2.9L Engine	10.4 qt	9.8 L
3.7L Engine	10.6 qt	10.0 L
5.3L Engine	13.7 qt	13.0 L
Engine Oil with Filter		
2.9L Engine	5.0 qt	4.7 L
3.7L and 5.3LEngines	6.0 qt	5.7 L
Fuel Tank	19.5 gal	76 L

Capacities and Specifications (cont'd)

Application	Capacities	
	English	Metric
Transmission (Drain and Refill)		
Automatic	5.0 qt	4.7 L
Manual – Rear-Wheel Drive	2.3 qt	2.2 L
Manual – Four-Wheel Drive	2.4 qt	2.3 L
Wheel Nut Torque	100 lb ft	140 N•m
All capacities are approximate. When adding, be sure to fill to the appropriate level or as recommended in this manual. Recheck fluid level after filling.		

Engine Specifications

Type	VIN Code	Transmission	Spark Plug Gap
2.9L	9	Automatic Manual	0.040 in (1.01 mm)
3.7L	E	Automatic	0.040 in (1.01 mm)
5.3L	L	Automatic	0.040 in (1.01 mm)

NOTES

Section 6 Maintenance Schedule

Maintenance Schedule 6-2
Introduction 6-2
Maintenance Requirements 6-2
Your Vehicle and the Environment 6-2
Using the Maintenance Schedule 6-2
Scheduled Maintenance 6-4
Additional Required Services 6-6
Maintenance Footnotes 6-7
Owner Checks and Services 6-8
At Each Fuel Fill 6-9
At Least Once a Month 6-9
At Least Once a Year 6-10
Recommended Fluids and Lubricants 6-12
Normal Maintenance Replacement Parts 6-14
Engine Drive Belt Routing 6-15
Maintenance Record 6-16

Maintenance Schedule

Introduction

Important: Keep engine oil at the proper level and change as recommended.

Have you purchased the GM Protection Plan? The Plan supplements your new vehicle warranties. See your Warranty and Owner Assistance booklet or your dealer/retailer for details.

Maintenance Requirements

Notice: **Maintenance intervals, checks, inspections, replacement parts, and recommended fluids and lubricants as prescribed in this manual are necessary to keep your vehicle in good working condition. Any damage caused by failure to follow scheduled maintenance might not be covered by warranty.**

Your Vehicle and the Environment

Proper vehicle maintenance not only helps to keep your vehicle in good working condition, but also helps the environment. All recommended maintenance is important. Improper vehicle maintenance can even affect the quality of the air we breathe. Improper fluid levels or the wrong tire inflation can increase the level of emissions from your vehicle. To help protect our environment, and to keep your vehicle in good condition, be sure to maintain your vehicle properly.

Using the Maintenance Schedule

We want to help you keep your vehicle in good working condition. But we do not know exactly how you will drive it. You might drive very short distances only a few times a week. Or you might drive long distances all the time in very hot, dusty weather. You might use your vehicle in making deliveries. Or you might drive it to work, to do errands, or in many other ways.

Because of all the different ways people use their vehicles, maintenance needs vary. You might need more frequent checks and replacements. So please read the following and note how you drive. If you have any questions on how to keep your vehicle in good condition, see your dealer/retailer.

This schedule is for vehicles that:

- carry passengers and cargo within recommended limits. You will find these limits on the Tire and Loading Information label. See *Loading Your Vehicle on page 4-34*.
- are driven on reasonable road surfaces within legal driving limits.
- are driven off-road in the recommended manner. See *Off-Road Driving on page 4-11*.
- use the recommended fuel. See *Gasoline Octane on page 5-5*.

The services in *Scheduled Maintenance on page 6-4* should be performed when indicated. See *Additional Required Services on page 6-6* and *Maintenance Footnotes on page 6-7* for further information.

⚠ CAUTION:

Performing maintenance work on a vehicle can be dangerous. In trying to do some jobs, you can be seriously injured. Do your own maintenance work only if you have the required

CAUTION: (Continued)

CAUTION: (Continued)

know-how and the proper tools and equipment for the job. If you have any doubt, see your dealer/retailer to have a qualified technician do the work. See *Doing Your Own Service Work on page 5-4*.

Some maintenance services can be complex. So, unless you are technically qualified and have the necessary equipment, you should have your dealer/retailer do these jobs.

When you go to your dealer/retailer for your service needs, you will know that trained and supported service technicians will perform the work using genuine parts.

If you want to purchase service information, see *Service Publications Ordering Information on page 7-16*.

Owner Checks and Services on page 6-8 tells you what should be checked, when to check it, and what you can easily do to help keep your vehicle in good condition.

The proper replacement parts, fluids, and lubricants to use are listed in *Recommended Fluids and Lubricants on page 6-12* and *Normal Maintenance Replacement Parts on page 6-14*. When your vehicle is serviced, make sure these are used. All parts should be replaced and all necessary repairs done before you or anyone else drives the vehicle. We recommend the use of genuine parts from your dealer/retailer.

Scheduled Maintenance

When the CHANGE OIL message comes on, it means that service is required for your vehicle. See *DIC Warnings and Messages on page 3-42*. Have your vehicle serviced as soon as possible within the next 600 miles (1 000 km). It is possible that, if you are driving under the best conditions, the engine oil life system may not indicate that vehicle service is necessary for over a year. However, your engine oil and filter must be changed at least once a year and at this time the system must be reset. Your dealer/retailer has trained service technicians who will perform this work using genuine parts and reset the system.

If the engine oil life system is ever reset accidentally, you must service your vehicle within 3,000 miles (5 000 km) since your last service. Remember to reset the oil life system whenever the oil is changed. See *Engine Oil Life System on page 5-18* for information on the Engine Oil Life System and resetting the system.

When the CHANGE OIL message appears, certain services, checks, and inspections are required. Required services are described in the following for “Maintenance I” and “Maintenance II.” Generally, it is recommended that your first service be Maintenance I, your second service be Maintenance II, and that you alternate Maintenance I and Maintenance II thereafter. However, in some cases, Maintenance II may be required more often.

Maintenance I — Use Maintenance I if the CHANGE OIL message comes on within 10 months since the vehicle was purchased or Maintenance II was performed.

Maintenance II — Use Maintenance II if the previous service performed was Maintenance I. Always use Maintenance II whenever the message comes on 10 months or more since the last service or if the message has not come on at all for one year.

Scheduled Maintenance

Service	Maintenance I	Maintenance II
Change engine oil and filter. See *Engine Oil on page 5-15*. Reset oil life system. See *Engine Oil Life System on page 5-18*. *An Emission Control Service.*	•	•
Visually check for any leaks or damage. *See footnote (g).*	•	•
Inspect engine air cleaner filter. If necessary, replace filter. See *Engine Air Cleaner/Filter on page 5-20*. *See footnote (j).*		•
Rotate tires and check inflation pressures and wear. See *Tire Inspection and Rotation on page 5-74* and “Tire Wear Inspection” in *At Least Once a Month on page 6-9*.	•	•
Inspect brake system. *See footnote (a).*	•	•
Check engine coolant and windshield washer fluid levels and add fluid as needed.	•	•
Perform any needed additional services. See “Additional Required Services” in this section.	•	•
Inspect suspension and steering components. *See footnote (b).*		•
Inspect engine cooling system. *See footnote (c).*		•
Inspect wiper blades. *See footnote (d).*		•
Inspect restraint system components. *See footnote (e).*		•
Lubricate body components. *See footnote (f).*		•
Check transmission and transfer case fluid levels and add fluid as needed.		•

Additional Required Services

The following services should be performed at the first maintenance service (I or II) after the indicated miles (kilometers) shown for each item.

Additional Required Services

Service and Miles (Kilometers)	25,000 (40 000)	50,000 (80 000)	75,000 (120 000)	100,000 (160 000)	125,000 (200 000)	150,000 (240 000)
Inspect fuel system for damage or leaks.	•	•	•	•	•	•
Inspect exhaust system for loose or damaged components.	•	•	•	•	•	•
Replace engine air cleaner filter. See *Engine Air Cleaner/Filter on page 5-20*.		•		•		•
Change automatic transmission fluid and filter (severe service). *See footnote (h).*		•		•		•
Change automatic transmission fluid and filter (normal service).				•		
Replace spark plugs. *An Emission Control Service.*				•		
Engine cooling system service (or every five years, whichever occurs first). *An Emission Control Service. See footnote (i).*						•
Inspect engine accessory drive belt. *An Emission Control Service. See footnote (k).*						•

Maintenance Footnotes

(a) *Visually inspect brake lines and hoses for proper hook-up, binding, leaks, cracks, chafing, etc. Inspect disc brake pads for wear and rotors for surface condition. Inspect drum brake linings/shoes for wear or cracks. Inspect other brake parts, including drums, wheel cylinders, calipers, parking brake, etc. Check parking brake adjustment.*

(b) *Visually inspect front and rear suspension and steering system for damaged, loose, or missing parts or signs of wear. Inspect power steering lines and hoses for proper hook-up, binding, leaks, cracks, chafing, etc. Visually check constant velocity joints, rubber boots, and axle seals for leaks.*

(c) *Visually inspect hoses and have them replaced if they are cracked, swollen, or deteriorated. Inspect all pipes, fittings, and clamps; replace with genuine parts as needed. To help ensure proper operation, a pressure test of the cooling system and pressure cap and cleaning the outside of the radiator and air conditioning condenser is recommended at least once a year.*

(d) *Inspect wiper blades for wear, cracking, or contamination. Clean the windshield and wiper blades, if contaminated. Replace wiper blades that are worn or damaged. See Windshield Wiper Blade Replacement on page 5-57 and Windshield and Wiper Blades on page 5-111 for more information.*

(e) *Make sure the safety belt reminder light and safety belt assemblies are working properly. Look for any other loose or damaged safety belt system parts. If you see anything that might keep a safety belt system from doing its job, have it repaired. Have any torn or frayed safety belts replaced. Also see Checking the Restraint Systems on page 1-76*.

(f) *Lubricate all key lock cylinders, body door and fuel door hinges, latches and locks (including glove box and console doors), hood latch assembly, secondary latch, pivots, spring anchor, release pawl, and any moving seat hardware. Lubricate hood safety lever pivot and prop rod pivot and tailgate latch bolt, handle assembly pivot points, and hinges. More frequent lubrication may be required when exposed to a corrosive environment. Applying silicone grease on weatherstrips with a clean cloth will make them last longer, seal better, and not stick or squeak.*

(g) *A fluid loss in any vehicle system could indicate a problem. Have the system inspected and repaired and the fluid level checked. Add fluid if needed.*

(h) *Change automatic transmission fluid and filter if the vehicle is mainly driven under one or more of these conditions:*

- *In heavy city traffic where the outside temperature regularly reaches 90°F (32°C) or higher.*
- *In hilly or mountainous terrain.*
- *When doing frequent trailer towing.*
- *Uses such as found in taxi, police, or delivery service.*

(i) *Drain, flush, and refill cooling system. This service can be complex; you should have your dealer/retailer perform this service. See Engine Coolant on page 5-27 for what to use. Inspect hoses. Clean radiator, condenser, pressure cap, and filler neck. Pressure test the cooling system and pressure cap.*

(j) *If you drive regularly under dusty conditions, inspect the filter at each engine oil change.*

(k) *Visually inspect belt for fraying, excessive cracks, or obvious damage. Replace belt if necessary.*

Owner Checks and Services

These owner checks and services should be performed at the intervals specified to help ensure the safety, dependability, and emission control performance of your vehicle. Your dealer/retailer can assist you with these checks and services.

Be sure any necessary repairs are completed at once. Whenever any fluids or lubricants are added to your vehicle, make sure they are the proper ones, as shown in *Recommended Fluids and Lubricants on page 6-12*.

At Each Fuel Fill

It is important to perform these underhood checks at each fuel fill.

Engine Oil Level Check

Notice: **It is important to check the engine oil regularly and keep it at the proper level. Failure to keep the engine oil at the proper level can cause damage to the engine not covered by your warranty.**

Check the engine oil level and add the proper oil if necessary. See *Engine Oil on page 5-15*.

Engine Coolant Level Check

Check the engine coolant level and add DEX-COOL® coolant mixture if necessary. See *Engine Coolant on page 5-27*.

Windshield Washer Fluid Level Check

Check the windshield washer fluid level in the windshield washer fluid reservoir and add the proper fluid if necessary.

At Least Once a Month

Tire Inflation Check

Inspect your vehicle's tires and make sure they are inflated to the correct pressures. Do not forget to check the spare tire. See *Inflation - Tire Pressure on page 5-66*. Check to make sure the spare tire is stored securely. See *Changing a Flat Tire on page 5-84*.

Tire Wear Inspection

Tire rotation may be required for high mileage highway drivers prior to the Engine Oil Life System service notification. Check the tires for wear and, if necessary, rotate the tires. See *Tire Inspection and Rotation on page 5-74*.

At Least Once a Year

Starter Switch Check

⚠ CAUTION:

When you are doing this inspection, the vehicle could move suddenly. If the vehicle moves, you or others could be injured.

1. Before you start, be sure you have enough room around the vehicle.
2. Firmly apply both the parking brake and the regular brake. See *Parking Brake on page 2-32*.

   Do not use the accelerator pedal, and be ready to turn off the engine immediately if it starts.
3. On automatic transmission vehicles, try to start the engine in each gear. The vehicle should start only in PARK (P) or NEUTRAL (N). If the vehicle starts in any other position, contact your dealer/retailer for service.

   On manual transmission vehicles, put the shift lever in NEUTRAL, push the clutch pedal down halfway, and try to start the engine. The vehicle should start only when the clutch pedal is pushed down all the way to the floor. If the vehicle starts when the clutch pedal is not pushed all the way down, contact your dealer/retailer for service.

Automatic Transmission Shift Lock Control System Check

⚠ CAUTION:

When you are doing this inspection, the vehicle could move suddenly. If the vehicle moves, you or others could be injured.

1. Before you start, be sure you have enough room around the vehicle. It should be parked on a level surface.
2. Firmly apply the parking brake. See *Parking Brake on page 2-32*.

   Be ready to apply the regular brake immediately if the vehicle begins to move.
3. With the engine off, turn the ignition to ON/RUN, but do not start the engine. Without applying the regular brake, try to move the shift lever out of PARK (P) with normal effort. If the shift lever moves out of PARK (P), contact your dealer/retailer for service.

Ignition Transmission Lock Check

While parked, and with the parking brake set, try to turn the ignition to LOCK/OFF in each shift lever position.

- With an automatic transmission, the ignition should turn to LOCK/OFF only when the shift lever is in PARK (P). The ignition key should come out only in LOCK/OFF.
- With a manual transmission, the ignition key should come out only in LOCK/OFF.

Contact your dealer/retailer if service is required.

Parking Brake and Automatic Transmission Park (P) Mechanism Check

⚠ CAUTION:

When you are doing this check, your vehicle could begin to move. You or others could be injured and property could be damaged. Make sure there is room in front of your vehicle in case it begins to roll. Be ready to apply the regular brake at once should the vehicle begin to move.

Park on a fairly steep hill, with the vehicle facing downhill. Keeping your foot on the regular brake, set the parking brake.

- To check the parking brake's holding ability: With the engine running and transmission in NEUTRAL (N), slowly remove foot pressure from the regular brake pedal. Do this until the vehicle is held by the parking brake only.
- To check the PARK (P) mechanism's holding ability: With the engine running, shift to PARK (P). Then release the parking brake followed by the regular brake.

Contact your dealer/retailer if service is required.

Underbody Flushing Service

At least every spring, use plain water to flush any corrosive materials from the underbody. Take care to clean thoroughly any areas where mud and other debris can collect.

Recommended Fluids and Lubricants

Fluids and lubricants identified below by name, part number, or specification can be obtained from your dealer/retailer.

Usage	Fluid/Lubricant
Engine Oil	Engine oil which meets GM Standard GM6094M and displays the American Petroleum Institute Certified for Gasoline Engines starburst symbol. To determine the proper viscosity for your vehicle's engine, see *Engine Oil on page 5-15*.
Engine Coolant	50/50 mixture of clean, drinkable water and use only DEX-COOL® Coolant. See *Engine Coolant on page 5-27*.
Hydraulic Brake System	Delco® Supreme 11 Brake Fluid or equivalent DOT-3 brake fluid.
Windshield Washer	Optikleen® Washer Solvent.

Usage	Fluid/Lubricant
Parking Brake Cable Guides	Chassis Lubricant (GM Part No. U.S. 12377985, in Canada 88901242) or lubricant meeting requirements of NLGI #2, Category LB or GC-LB.
Power Steering System	GM Power Steering Fluid (GM Part No. U.S. 89021184, in Canada 89021186).
Automatic Transmission	DEXRON®-VI Automatic Transmission Fluid.
Manual Transmission	Manual Transmission Fluid (GM Part No. U.S. 89021806, in Canada 89021807).
Hydraulic Clutch System	Hydraulic Clutch Fluid (GM Part No. U.S. 12345347, in Canada 10953517) or equivalent DOT-3 brake fluid.
Key Lock Cylinders	Multi-Purpose Lubricant, Superlube (GM Part No. U.S. 12346241, in Canada 10953474).
Chassis Lubrication	Chassis Lubricant (GM Part No. U.S. 12377985, in Canada 88901242) or lubricant meeting requirements of NLGI #2, Category LB or GC-LB.

Usage	Fluid/Lubricant
Front and Rear Axle	SAE 75W-90 Synthetic Axle Lubricant (GM Part No. U.S. 89021677, in Canada 89021678) meeting GM Specification 9986115.
Transfer Case	Synchromesh Transmission Fluid (GM Part No. U.S. 12345349, in Canada 10953465).
Rear Driveline Center Spline and Universal Joints	Chassis Lubricant (GM Part No. U.S. 12377985, in Canada 88901242) or lubricant meeting requirements of NLGI #2, Category LB or GC-LB.
Constant Velocity Universal Joint	Chassis Lubricant (GM Part No. U.S. 12377985, in Canada 88901242) or lubricant meeting requirements of NLGI #2, Category LB or GC-LB.
Hood Latch Assembly, Secondary Latch, Pivots, Spring Anchor, and Release Pawl	Lubriplate Lubricant Aerosol (GM Part No. U.S. 12346293, in Canada 992723) or lubricant meeting requirements of NLGI #2, Category LB or GC-LB.

Usage	Fluid/Lubricant
Hood and Door Hinges, Body Door Hinge Pins, Liftgate Hinge and Linkage, Folding Seats, and Fuel Door Hinge	Multi-Purpose Lubricant, Superlube (GM Part No. U.S. 12346241, in Canada 10953474).
Outer Tailgate Handle Pivot Points and Hinges	Multi-Purpose Lubricant, Superlube (GM Part No. U.S. 12346241, in Canada 10953474).
Weatherstrip Conditioning	Weatherstrip Lubricant (GM Part No. U.S. 3634770, in Canada 10953518) or Dielectric Silicone Grease (GM Part No. U.S. 12345579, in Canada 992887).
Weatherstrip Squeaks	Synthetic Grease with Teflon, Superlube (GM Part No. U.S. 12371287, in Canada 10953437).

Normal Maintenance Replacement Parts

Replacement parts identified below by name, part number, or specification can be obtained from your dealer/retailer.

Part	GM Part Number	ACDelco® Part Number
Engine Air Cleaner/Filter	15942429	—
Engine Oil Filter		
2.9L Engine	88984215	PF46
3.7L Engine	89017342	PF61
5.3L Engine	89017524	PF48
Spark Plugs		
2.9L and 3.7L Engines	12598004	41-103
5.3L Engine	12571164	41-985
Windshield Wiper Blades		
Driver's Side — 22 inches (55 cm)	10389562	—
Passenger's Side — 19 inches (48 cm)	10389563	—

Engine Drive Belt Routing

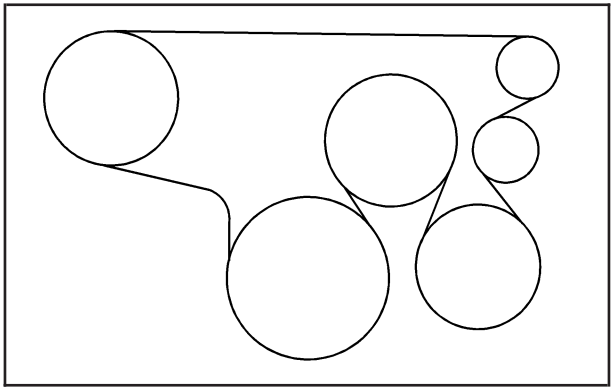

2.9L and 3.7L Engines

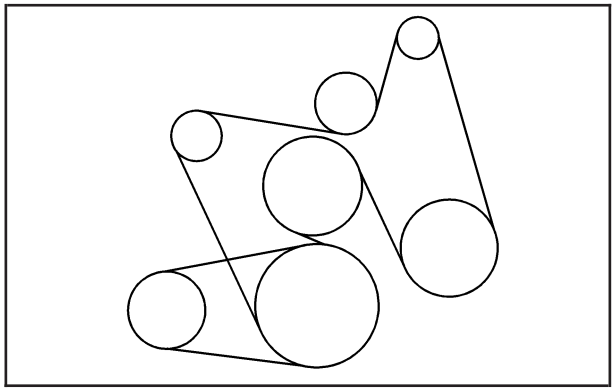

5.3L Engine

Maintenance Record

After the scheduled services are performed, record the date, odometer reading, who performed the service, and the type of services performed in the boxes provided. See *Maintenance Requirements on page 6-2*. Any additional information from *Owner Checks and Services on page 6-8* can be added on the following record pages. You should retain all maintenance receipts.

Maintenance Record

Date	Odometer Reading	Serviced By	Maintenance I or Maintenance II	Services Performed

Maintenance Record (cont'd)

Date	Odometer Reading	Serviced By	Maintenance I or Maintenance II	Services Performed

Maintenance Record (cont'd)

Date	Odometer Reading	Serviced By	Maintenance I or Maintenance II	Services Performed

Section 7 Customer Assistance Information

Customer Assistance and Information 7-2
Customer Satisfaction Procedure 7-2
Online Owner Center 7-4
Customer Assistance for
Text Telephone (TTY) Users 7-5
Customer Assistance Offices 7-5
GM Mobility Reimbursement Program 7-6
Roadside Assistance Program 7-7
Scheduling Service Appointments 7-9
Courtesy Transportation 7-10
Collision Damage Repair 7-12

Reporting Safety Defects 7-15
Reporting Safety Defects to the
United States Government 7-15
Reporting Safety Defects to the
Canadian Government 7-16
Reporting Safety Defects to
General Motors 7-16
Service Publications Ordering Information 7-16

Vehicle Data Recording and Privacy 7-17
Event Data Recorders 7-18
OnStar® 7-19
Navigation System 7-19
Radio Frequency Identification (RFID) 7-19

Customer Assistance and Information

Customer Satisfaction Procedure

Your satisfaction and goodwill are important to your dealer and to Chevrolet. Normally, any concerns with the sales transaction or the operation of your vehicle will be resolved by your dealer's sales or service departments. Sometimes, however, despite the best intentions of all concerned, misunderstandings can occur. If your concern has not been resolved to your satisfaction, the following steps should be taken:

STEP ONE: Discuss your concern with a member of dealership management. Normally, concerns can be quickly resolved at that level. If the matter has already been reviewed with the sales, service, or parts manager, contact the owner of the dealership or the general manager.

STEP TWO: If after contacting a member of dealership management, it appears your concern cannot be resolved by the dealership without further help, in the U.S., contact the Chevrolet Customer Assistance Center by calling 1-800-222-1020. In Canada, contact General Motors of Canada Customer Communication Centre by calling 1-800-263-3777 (English) or 1-800-263-7854 (French).

We encourage you to call the toll-free number in order to give your inquiry prompt attention. Please have the following information available to give the Customer Assistance Representative:

- Vehicle Identification Number (VIN). This is available from the vehicle registration or title, or the plate at the top left of the instrument panel and visible through the windshield.
- Dealership name and location.
- Vehicle delivery date and present mileage (kilometers).

When contacting Chevrolet, please remember that your concern will likely be resolved at a dealer's facility. That is why we suggest you follow Step One first if you have a concern.

STEP THREE — U.S. Owners: Both General Motors and your dealer are committed to making sure you are completely satisfied with your new vehicle. However, if you continue to remain unsatisfied after following the procedure outlined in Steps One and Two, you should file with the Better Business Bureau (BBB) Auto Line Program to enforce your rights.

The BBB Auto Line Program is an out of court program administered by the Council of Better Business Bureaus to settle automotive disputes regarding vehicle repairs or the interpretation of the New Vehicle Limited Warranty.

Although you may be required to resort to this informal dispute resolution program prior to filing a court action, use of the program is free of charge and your case will generally be heard within 40 days. If you do not agree with the decision given in your case, you may reject it and proceed with any other venue for relief available to you.

You may contact the BBB Auto Line Program using the toll-free telephone number or write them at the following address:

BBB Auto Line Program
Council of Better Business Bureaus, Inc.
4200 Wilson Boulevard
Suite 800
Arlington, VA 22203-1838

Telephone: 1-800-955-5100

This program is available in all 50 states and the District of Columbia. Eligibility is limited by vehicle age, mileage, and other factors. General Motors reserves the right to change eligibility limitations and/or discontinue its participation in this program.

STEP THREE — Canadian Owners: In the event that you do not feel your concerns have been addressed after following the procedure outlined in Steps 1 and 2, General Motors of Canada Limited wants you to be aware of its participation in a no-charge Mediation/Arbitration Program.

General Motors of Canada Limited has committed to binding arbitration of owner disputes involving factory-related vehicle service claims. The program provides for the review of the facts involved by an impartial third party arbiter, and may include an informal hearing before the arbiter. The program is designed so that the entire dispute settlement process, from the time you file your complaint to the final decision, should be completed in about 70 days. We believe our impartial program offers advantages over courts in most jurisdictions because it is informal, quick, and free of charge.

For further information concerning eligibility in the Canadian Motor Vehicle Arbitration Plan (CAMVAP), call toll-free 1-800-207-0685. Alternatively, you may call the General Motors Customer Communication Centre, 1-800-263-3777 (English), 1-800-263-7854 (French), or you may write to:

The Mediation/Arbitration Program
c/o Customer Communication Centre
General Motors of Canada Limited
Mail Code: CA1-163-005
1908 Colonel Sam Drive
Oshawa, Ontario L1H 8P7

Your inquiry should be accompanied by your Vehicle Identification Number (VIN).

Online Owner Center

Online Owner Center (United States only)

The Owner Center is a resource for your GM ownership needs. Specific vehicle information can be found in one place.

The Online Owner Center allows you to:

- Get e-mail service reminders.
- Access information about your specific vehicle, including tips and videos and an electronic version of this owner manual.
- Keep track of your vehicle's service history and maintenance schedule.
- Find GM dealers/retailers for service nationwide.
- Receive special promotions and privileges only available to members.

Refer to www.MyGMLink.com on the web for updated information and to register your vehicle.

My GM Canada (Canada only)

My GM Canada is a password-protected section of gmcanada.com where you can save information on GM vehicles, get personalized offers, and use handy tools and forms with greater ease.

Here are a few of the valuable tools and services you will have access to:

- My Showroom: Find and save information on vehicles and current offers in your area.
- My Dealers/Retailers: Save details such as address and phone number for each of your preferred GM Dealers or Retailers.
- My Driveway: Receive service reminders and helpful advice on owning and maintaining your vehicle.
- My Preferences: Manage your profile, subscribe to E-News and use tools and forms with greater ease.

To sign up to My GM Canada, visit the My GM Canada section within www.gmcanada.com.

Customer Assistance for Text Telephone (TTY) Users

To assist customers who are deaf, hard of hearing, or speech-impaired and who use Text Telephones (TTYs), Chevrolet has TTY equipment available at its Customer Assistance Center. Any TTY user in the U.S. can communicate with Chevrolet by dialing: 1-800-833-CHEV (2438). (TTY users in Canada can dial 1-800-263-3830.)

Customer Assistance Offices

Chevrolet encourages customers to call the toll-free number for assistance. However, if a customer wishes to write or e-mail Chevrolet, the letter should be addressed to:

United States — Customer Assistance

Chevrolet Motor Division
Chevrolet Customer Assistance Center
P.O. Box 33170
Detroit, MI 48232-5170

www.Chevrolet.com
1-800-222-1020
1-800-833-2438 (For Text Telephone devices (TTYs))
Roadside Assistance: 1-800-CHEV-USA (243-8872)
Fax Number: 313-381-0022

From Puerto Rico:
1-800-496-9992 (English)
1-800-496-9993 (Spanish)
Fax Number: 313-381-0022

From U.S. Virgin Islands:
1-800-496-9994
Fax Number: 313-381-0022

Canada — Customer Assistance

General Motors of Canada Limited
Customer Communication Centre, CA1-163-005
1908 Colonel Sam Drive
Oshawa, Ontario L1H 8P7

www.gmcanada.com
1-800-263-3777 (English)
1-800-263-7854 (French)
1-800-263-3830 (For Text Telephone devices (TTYs))
Roadside Assistance: 1-800-268-6800

Overseas — Customer Assistance

Please contact the local General Motors Business Unit.

Mexico, Central America and Caribbean Islands/Countries (Except Puerto Rico and U.S. Virgin Islands) — Customer Assistance

General Motors de Mexico, S. de R.L. de C.V.
Customer Assistance Center
Paseo de la Reforma # 2740
Col. Lomas de Bezares
C.P. 11910, Mexico, D.F.
01-800-508-0000
Long Distance: 011-52-53 29 0 800

GM Mobility Reimbursement Program

GM MOBILITY℠

This program, available to qualified applicants, can reimburse you up to $1,000 of the cost of eligible aftermarket adaptive equipment required for your vehicle, such as hand controls or a wheelchair/scooter lift.

The offer is available for a very limited period of time from the date of vehicle purchase/lease. For more details, or to determine your vehicle's eligibility, visit gmmobility.com or call the GM Mobility Assistance Center at 1-800-323-9935. Text telephone (TTY) users, call 1-800-833-9935.

General Motors of Canada also has a Mobility Program. Call 1-800-GM-DRIVE (463-7483) for details.
TTY users call 1-800-263-3830.

Roadside Assistance Program

For vehicles purchased in the U.S., call **1-800-CHEV-USA (1-800-243-8872); (Text telephone (TTY): 1-888-889-2438)**.

For vehicles purchased in Canada, call **1-800-268-6800**.

Service is available 24 hours a day, 365 days a year.

As the owner of a new Chevrolet vehicle, you are automatically enrolled in the Chevrolet Roadside Assistance program.

Who is Covered?

Roadside Assistance coverage is for the vehicle operator, regardless of ownership. In Canada, a person driving this vehicle without the consent of the owner is not eligible for coverage.

Services Provided

The following services are provided in the U.S. and Canada up to 5 years/100,000 miles (160 000 km), whichever occurs first, and, in Canada only, up to a maximum coverage of $100.

- **Fuel Delivery:** Delivery of enough fuel for the vehicle to get to the nearest service station (approximately $5 in Canada). In Canada, service to provide diesel may be restricted. For safety reasons, propane and other alternative fuels will not be provided through this service.
- **Lock-out Service:** Lock-out service will be covered at no charge if you are unable to gain entry into your vehicle. A remote unlock may be available if you have an active OnStar® subscription. To ensure security, the driver must present personal identification before lock-out service is provided. In Canada, the vehicle registration is also required.

- **Emergency Tow From a Public Roadway or Highway:** Tow to the nearest dealership for warranty service or in the event of a vehicle-disabling crash. Winch-out assistance is provided when the vehicle is mired in sand, mud, or snow.
- **Flat Tire Change:** Installation of a spare tire in good condition, when equipped and properly inflated, is covered at no charge. The customer is responsible for the repair or replacement of the tire if not covered by a warrantable failure.
- **Jump Start:** A battery jump start is covered at no charge if the vehicle does not start.
- **Trip Routing Service (Canada only):** Upon request, Roadside Assistance will send you detailed, computer personalized maps, highlighting your choice of either the most direct route or the most scenic route to your destination, anywhere in North America, along with helpful travel information pertaining to your trip.

  Please allow three weeks before your planned departure date. Trip routing requests will be limited to six per calendar year.
- **Trip Interruption Benefits and Assistance (Canada only):** In the event of a warranty related vehicle disablement, while en route and over 250 kilometres from the original point of departure, you may qualify for trip interruption expense assistance. This assistance covers reasonable reimbursement of up to a maximum of $500 (Canadian) for (A) meals (maximum of $50/day), (B) lodging (maximum of $100/night) and (C) alternate ground transportation (maximum of $40/day). This benefit is to assist you with some of the unplanned expense you may incur while waiting for your vehicle to be repaired.

  Pre-authorization, original detailed receipts and a copy of the repair order are required.

  Once authorization has been given, your advisor will help you make any necessary arrangements and explain how to claim for trip interruption expense assistance.
- **Alternative Service (Canada only):** There may be times, when Roadside Assistance cannot provide timely assistance. Your advisor may authorize you to secure local emergency road service, and you will be reimbursed up to $100 upon submission of the original receipt to Roadside Assistance.

In many instances, mechanical failures may be covered. However, any cost for parts and labor for non-warranty repairs are the responsibility of the driver.

Chevrolet and General Motors of Canada Limited reserve the right to limit services or reimbursement to an owner or driver when, in their sole discretion, the claims become excessive in frequency or type of occurrence.

Calling for Assistance

For prompt and efficient assistance when calling, please provide the following to the Roadside Assistance Representative:

- Your name, home address, and home telephone number
- Telephone number of your location
- Location of the vehicle
- Model, year, color, and license plate number of the vehicle
- Odometer reading, Vehicle Identification Number (VIN), and delivery date of the vehicle
- Description of the problem

Towing and Road Service Exclusions

Specifically excluded from Roadside Assistance coverage are towing or services for vehicles operated on a non-public roadway or highway, fines, impound towing caused by a violation of local, Municipal, State, Provincial, or Federal law, and mounting, dismounting or changing of snow tires, chains, or other traction devices.

Roadside Assistance is not part of or included in the coverage provided by the New Vehicle Limited Warranty. Chevrolet and General Motors of Canada Limited reserve the right to make any changes or discontinue the Roadside Assistance program at any time without notification.

Scheduling Service Appointments

When your vehicle requires warranty service, contact your dealer/retailer and request an appointment. By scheduling a service appointment and advising your service consultant of your transportation needs, your dealer/retailer can help minimize your inconvenience.

If your vehicle cannot be scheduled into the service department immediately, keep driving it until it can be scheduled for service, unless, of course, the problem is safety-related. If it is, please call your dealership/retailer, let them know this, and ask for instructions.

If the dealer/retailer requests that you simply drop the vehicle off for service, you are urged to do so as early in the work day as possible to allow for the same day repair.

Courtesy Transportation

To enhance your ownership experience, we and our participating dealers are proud to offer Courtesy Transportation, a customer support program for vehicles with the Bumper to Bumper (Base Warranty Coverage period in Canada) and extended powertrain warranty in both the U.S. and Canada.

Several courtesy transportation options are available to assist in reducing your inconvenience when warranty repairs are required.

Courtesy Transportation is not a part of the New Vehicle Limited Warranty. A separate booklet entitled “Warranty and Owner Assistance Information” furnished with each new vehicle provides detailed warranty coverage information.

Transportation Options

Warranty service can generally be completed while you wait. However, if you are unable to wait, GM helps to minimize your inconvenience by providing several transportation options. Depending on the circumstances, your dealer can offer you one of the following:

Shuttle Service

Shuttle service is the preferred means of offering Courtesy Transportation. Dealers may provide you with shuttle service to get you to your destination with minimal interruption of your daily schedule. This includes one-way or round trip shuttle service within reasonable time and distance parameters of the dealer’s area.

Public Transportation or Fuel Reimbursement

If your vehicle requires overnight warranty repairs, and public transportation is used instead of the dealer's shuttle service, the expense must be supported by original receipts and can only be up to the maximum amount allowed by GM for shuttle service. In addition, for U.S. customers, should you arrange transportation through a friend or relative, limited reimbursement for reasonable fuel expenses may be available. Claim amounts should reflect actual costs and be supported by original receipts. See your dealer for information regarding the allowance amounts for reimbursement of fuel or other transportation costs.

Courtesy Rental Vehicle

Your dealer may arrange to provide you with a courtesy rental vehicle or reimburse you for a rental vehicle that you obtain if your vehicle is kept for an overnight warranty repair. Rental reimbursement will be limited and must be supported by original receipts. This requires that you sign and complete a rental agreement and meet state/provincial, local, and rental vehicle provider requirements. Requirements vary and may include minimum age requirements, insurance coverage, credit card, etc. You are responsible for fuel usage charges and may also be responsible for taxes, levies, usage fees, excessive mileage, or rental usage beyond the completion of the repair.

It may not be possible to provide a like-vehicle as a courtesy rental.

Additional Program Information

All program options, such as shuttle service, may not be available at every dealer. Please contact your dealer for specific information about availability. All Courtesy Transportation arrangements will be administered by appropriate dealer personnel.

General Motors reserves the right to unilaterally modify, change or discontinue Courtesy Transportation at any time and to resolve all questions of claim eligibility pursuant to the terms and conditions described herein at its sole discretion.

Collision Damage Repair

If your vehicle is involved in a collision and it is damaged, have the damage repaired by a qualified technician using the proper equipment and quality replacement parts. Poorly performed collision repairs diminish your vehicle's resale value, and safety performance can be compromised in subsequent collisions.

Collision Parts

Genuine GM Collision parts are new parts made with the same materials and construction methods as the parts with which your vehicle was originally built. Genuine GM Collision parts are your best choice to assure that your vehicle's designed appearance, durability, and safety are preserved. The use of Genuine GM parts can help maintain your GM New Vehicle Warranty.

Recycled original equipment parts may also be used for repair. These parts are typically removed from vehicles that were total losses in prior crashes. In most cases, the parts being recycled are from undamaged sections of the vehicle. A recycled original equipment GM part, may be an acceptable choice to maintain your vehicle's originally designed appearance and safety performance, however, the history of these parts is not known. Such parts are not covered by your GM New Vehicle Limited Warranty, and any related failures are not covered by that warranty.

Aftermarket collision parts are also available. These are made by companies other than GM and may not have been tested for your vehicle. As a result, these parts may fit poorly, exhibit premature durability/corrosion problems, and may not perform properly in subsequent collisions. Aftermarket parts are not covered by your GM New Vehicle Limited Warranty, and any vehicle failure related to such parts are not covered by that warranty.

Repair Facility

GM also recommends that you choose a collision repair facility that meets your needs before you ever need collision repairs. Your dealer/retailer may have a collision repair center with GM-trained technicians and state of the art equipment, or be able to recommend a collision repair center that has GM-trained technicians and comparable equipment.

Insuring Your Vehicle

Protect your investment in your GM vehicle with comprehensive and collision insurance coverage. There are significant differences in the quality of coverage afforded by various insurance policy terms. Many insurance policies provide reduced protection to your GM vehicle by limiting compensation for damage repairs by using aftermarket collision parts. Some insurance companies will not specify aftermarket collision parts. When purchasing insurance, we recommend that you assure your vehicle will be repaired with GM original equipment collision parts. If such insurance coverage is not available from your current insurance carrier, consider switching to another insurance carrier.

If your vehicle is leased, the leasing company may require you to have insurance that assures repairs with Genuine GM Original Equipment Manufacturer (OEM) parts or Genuine Manufacturer replacement parts. Read your lease carefully, as you may be charged at the end of your lease for poor quality repairs.

If a Crash Occurs

Here is what to do if you are involved in a crash.

- Try to relax and then check to make sure you are all right. If you are uninjured, make sure that no one else in your vehicle, or the other vehicle, is injured.
- If there has been an injury, call emergency services for help. Do not leave the scene of a crash until all matters have been taken care of. Move your vehicle only if its position puts you in danger or you are instructed to move it by a police officer.
- Give only the necessary and requested information to police and other parties involved in the crash. Do not discuss your personal condition, mental frame of mind, or anything unrelated to the crash. This will help guard against post-crash legal action.
- If you need roadside assistance, call GM Roadside Assistance. See *Roadside Assistance Program on page 7-7* for more information.

- If your vehicle cannot be driven, know where the towing service will be taking it. Get a card from the tow truck operator or write down the driver's name, the service's name, and the phone number.
- Remove any valuables from your vehicle before it is towed away. Make sure this includes your insurance information and registration if you keep these items in your vehicle.
- Gather the important information you will need from the other driver. Things like name, address, phone number, driver's license number, vehicle license plate, vehicle make, model and model year, Vehicle Identification Number (VIN), insurance company and policy number, and a general description of the damage to the other vehicle.
- If possible, call your insurance company from the scene of the crash. They will walk you through the information they will need. If they ask for a police report, phone or go to the police department headquarters the next day and you can get a copy of the report for a nominal fee. In some states/provinces with "no fault" insurance laws, a report may not be necessary. This is especially true if there are no injuries and both vehicles are driveable.
- Choose a reputable collision repair facility for your vehicle. Whether you select a dealer/retailer or a private collision repair facility to fix the damage, make sure you are comfortable with them. Remember, you will have to feel comfortable with their work for a long time.
- Once you have an estimate, read it carefully and make sure you understand what work will be performed on your vehicle. If you have a question, ask for an explanation. Reputable shops welcome this opportunity.

Managing the Vehicle Damage Repair Process

In the event that your vehicle requires damage repairs, GM recommends that you take an active role in its repair. If you have a pre-determined repair facility of choice, take your vehicle there, or have it towed there. Specify to the facility that any required replacement collision parts be original equipment parts, either new Genuine GM parts or recycled original GM parts. Remember, recycled parts will not be covered by your GM vehicle warranty.

Insurance pays the bill for the repair, but you must live with the repair. Depending on your policy limits, your insurance company may initially value the repair using aftermarket parts. Discuss this with your repair professional, and insist on Genuine GM parts. Remember if your vehicle is leased you may be obligated to have the vehicle repaired with Genuine GM parts, even if your insurance coverage does not pay the full cost.

If another party's insurance company is paying for the repairs, you are not obligated to accept a repair valuation based on that insurance company's collision policy repair limits, as you have no contractual limits with that company. In such cases, you can have control of the repair and parts choices as long as cost stays within reasonable limits.

Reporting Safety Defects

Reporting Safety Defects to the United States Government

If you believe that your vehicle has a defect which could cause a crash or could cause injury or death, you should immediately inform the National Highway Traffic Safety Administration (NHTSA) in addition to notifying General Motors.

If NHTSA receives similar complaints, it may open an investigation, and if it finds that a safety defect exists in a group of vehicles, it may order a recall and remedy campaign. However, NHTSA cannot become involved in individual problems between you, your dealer/retailer, or General Motors.

To contact NHTSA, you may call the Vehicle Safety Hotline toll-free at 1-888-327-4236 (TTY: 1-800-424-9153); go to http://www.safercar.gov; or write to:

Administrator, NHTSA
400 Seventh Street, SW.
Washington D.C., 20590

You can also obtain other information about motor vehicle safety from http://www.safercar.gov.

Reporting Safety Defects to the Canadian Government

If you live in Canada, and you believe that your vehicle has a safety defect, notify Transport Canada immediately, in addition to notifying General Motors of Canada Limited. Call them at 1-800-333-0510 or write to:

Transport Canada
Road Safety Branch
2780 Sheffield Road
Ottawa, Ontario K1B 3V9

Reporting Safety Defects to General Motors

In addition to notifying NHTSA (or Transport Canada) in a situation like this, please notify General Motors.

Call 1-800-222-1020, or write:

Chevrolet Motor Division
Chevrolet Customer Assistance Center
P.O. Box 33170
Detroit, MI 48232-5170

In Canada, call 1-800-263-3777 (English) or 1-800-263-7854 (French), or write:

General Motors of Canada Limited
Customer Communication Centre, CA1-163-005
1908 Colonel Sam Drive
Oshawa, Ontario L1H 8P7

Service Publications Ordering Information

Service Manuals

Service Manuals have the diagnosis and repair information on engines, transmission, axle suspension, brakes, electrical, steering, body, etc.

Service Bulletins

Service Bulletins' give additional technical service information needed to knowledgeably service General Motors cars and trucks. Each bulletin contains instructions to assist in the diagnosis and service of your vehicle.

Owner Information

Owner publications are written specifically for owners and intended to provide basic operational information about the vehicle. The owner manual includes the Maintenance Schedule for all models.

In-Portfolio: Includes a Portfolio, Owner Manual, and Warranty Booklet.

RETAIL SELL PRICE: $35.00 (U.S.) plus processing fee

Without Portfolio: Owner Manual only.

RETAIL SELL PRICE: $25.00 (U.S.) plus processing fee

Current and Past Model Order Forms

Technical Service Bulletins and Manuals are available for current and past model GM vehicles. To request an order form, specify year and model name of the vehicle.

ORDER TOLL FREE: 1-800-551-4123 Monday-Friday 8:00 AM - 6:00 PM Eastern Time

For Credit Card Orders Only (VISA-MasterCard-Discover), visit Helm, Inc. on the World Wide Web at: www.helminc.com

Or you can write to:

Helm, Incorporated
P.O. Box 07130
Detroit, MI 48207

Prices are subject to change without notice and without incurring obligation. Allow ample time for delivery.

Note to Canadian Customers: All listed prices are quoted in U.S. funds. Canadian residents are to make checks payable in U.S. funds.

Vehicle Data Recording and Privacy

Your GM vehicle has a number of sophisticated computers that record information about the vehicle's performance and how it is driven. For example, your vehicle uses computer modules to monitor and control engine and transmission performance, to monitor the conditions for airbag deployment and deploy airbags in a crash and, if so equipped, to provide antilock braking to help the driver control the vehicle. These modules may store data to help your dealer/retailer technician service your vehicle. Some modules may also store data about how you operate the vehicle, such as rate of fuel consumption or average speed. These modules may also retain the owner's personal preferences, such as radio pre-sets, seat positions, and temperature settings.

Event Data Recorders

This vehicle has an Event Data Recorder (EDR). The main purpose of an EDR is to record, in certain crash or near crash-like situations, such as an air bag deployment or hitting a road obstacle, data that will assist in understanding how a vehicle's systems performed. The EDR is designed to record data related to vehicle dynamics and safety systems for a short period of time, typically 30 seconds or less. The EDR in this vehicle is designed to record such data as:

- How various systems in your vehicle were operating
- Whether or not the driver and passenger safety belts were buckled/fastened
- How far, if at all, the driver was pressing the accelerator and/or brake pedal
- How fast the vehicle was traveling

This data can help provide a better understanding of the circumstances in which crashes and injuries occur.

Important: EDR data is recorded by your vehicle only if a non-trivial crash situation occurs; no data is recorded by the EDR under normal driving conditions and no personal data (e.g., name, gender, age, and crash location) is recorded. However, other parties, such as law enforcement, could combine the EDR data with the type of personally identifying data routinely acquired during a crash investigation.

To read data recorded by an EDR, special equipment is required, and access to the vehicle or the EDR is needed. In addition to the vehicle manufacturer, other parties, such as law enforcement, that have the special equipment, can read the information if they have access to the vehicle or the EDR.

GM will not access this data or share it with others except: with the consent of the vehicle owner or, if the vehicle is leased, with the consent of the lessee; in response to an official request of police or similar government office; as part of GM's defense of litigation through the discovery process; or, as required by law. Data that GM collects or receives may also be used for GM research needs or may be made available to others for research purposes, where a need is shown and the data is not tied to a specific vehicle or vehicle owner.

OnStar®

If your vehicle has OnStar® and you subscribe to the OnStar® services, please refer to the OnStar® Terms and Conditions for information on data collection and use. See also *OnStar® System on page 2-47* in this manual for more information.

Navigation System

If your vehicle has a navigation system, use of the system may result in the storage of destinations, addresses, telephone numbers, and other trip information. Refer to the navigation system operating manual for information on stored data and for deletion instructions.

Radio Frequency Identification (RFID)

RFID technology is used in some vehicles for functions such as tire pressure monitoring and ignition system security, as well as in connection with conveniences such as key fobs for remote door locking/unlocking and starting, and in-vehicle transmitters for garage door openers. RFID technology in GM vehicles does not use or record personal information or link with any other GM system containing personal information.

NOTES

A

Accessories and Modifications 5-3
Adding Equipment to Your Airbag-Equipped
  Vehicle 1-74
Additives, Fuel 5-6
Add-On Electrical Equipment 5-115
Air Cleaner/Filter, Engine 5-20
Air Conditioning 3-20
Airbag
  Passenger Status Indicator 3-28
  Readiness Light 3-27
Airbag System 1-60
  What Will You See After an Airbag Inflates? 1-68
  When Should an Airbag Inflate? 1-65
  Where Are the Airbags? 1-63
Airbag Systems
  Adding Equipment to Your Airbag-Equipped
    Vehicle 1-74
  How Does an Airbag Restrain? 1-67
  Passenger Sensing System 1-69
  Servicing Your Airbag-Equipped Vehicle 1-74
  What Makes an Airbag Inflate? 1-67
Antenna, Fixed Mast 3-71
Antenna, XM™ Satellite Radio Antenna System .. 3-71
Antilock Brake System (ABS) 4-4
Antilock Brake, System Warning Light 3-32
Appearance Care
  Aluminum or Chrome-Plated Wheels 5-112
  Care of Safety Belts 5-109
  Chemical Paint Spotting 5-113
  Cleaning Exterior Lamps/Lenses 5-110
  Fabric/Carpet 5-107
  Finish Care 5-111
  Finish Damage 5-113
  Instrument Panel, Vinyl, and Other Plastic
    Surfaces 5-109
  Interior Cleaning 5-106
  Leather 5-108
  Sheet Metal Damage 5-113
  Tires 5-113
  Underbody Maintenance 5-113
  Vehicle Care/Appearance Materials 5-114
  Washing Your Vehicle 5-110
  Weatherstrips 5-109
  Windshield and Wiper Blades 5-111
Appointments, Scheduling Service 7-9
Ashtray 3-20
Assist Handles 2-50
Audio System 3-46
  Chime Level Adjustment 3-71
  Fixed Mast Antenna 3-71
  Radio Reception 3-70
  Setting the Time 3-47
  Theft-Deterrent Feature 3-70
  XM™ Satellite Radio Antenna System 3-71
Audio System(s) 3-48

Automatic Headlamp System 3-16
Automatic Transmission
Fluid 5-21
Operation 2-24

B

Battery 5-43
Electric Power Management 3-18
Run-Down Protection 3-19
Brake
Emergencies 4-5
Brakes 5-39
System Warning Light 3-31
Braking 4-3
Braking in Emergencies 4-5
Break-In, New Vehicle 2-19
Bulb Replacement 5-51
Center High-Mounted Stoplamp (CHMSL) 5-54
Front Turn Signal, Parking and Daytime
Running Lamps 5-53
Halogen Bulbs 5-51
Headlamp Aiming 5-51
Headlamps 5-52
License Plate Lamps 5-56
Replacement Bulbs 5-56
Taillamps, Turn Signal, Stoplamps and
Back-up Lamps 5-54
Buying New Tires 5-76

C

Calibration 2-40, 2-43
California Fuel 5-6
California Perchlorate Materials Requirements 5-4
California Proposition 65 Warning 5-4
Canadian Owners ii
Capacities and Specifications 5-120
Carbon Monoxide 2-10, 2-37, 4-28, 4-47
Care of
Safety Belts 5-109
CD, MP3 3-64
Center Console Storage Area 2-50
Center High-Mounted Stoplamp (CHMSL) 5-54
Chains, Tire 5-82
Charging System Light 3-30
Check
Engine Light 3-34
Checking Things Under the Hood 5-10
Chemical Paint Spotting 5-113
Child Restraints
Child Restraint Systems 1-39
Infants and Young Children 1-36
Lower Anchors and Tethers for Children 1-43
Older Children 1-33
Securing a Child Restraint in a Rear Seat
Position 1-54

Child Restraints (cont.)
Securing a Child Restraint in the Center Front Seat Position 1-56
Securing a Child Restraint in the Right Front Seat Position 1-56
Where to Put the Restraint 1-42
Chime Level Adjustment 3-71
Cigarette Lighter 3-20
Cleaning
Aluminum or Chrome-Plated Wheels 5-112
Exterior Lamps/Lenses 5-110
Fabric/Carpet 5-107
Finish Care 5-111
Instrument Panel, Vinyl, and Other Plastic Surfaces 5-109
Interior 5-106
Leather 5-108
Tires 5-113
Underbody Maintenance 5-113
Washing Your Vehicle 5-110
Weatherstrips 5-109
Windshield and Wiper Blades 5-111
Climate Control System 3-20
Outlet Adjustment 3-22
Clock 3-47
Clutch, Hydraulic 5-26
Collision Damage Repair 7-12
Compass 2-40, 2-43
Content Theft-Deterrent 2-15
Control of a Vehicle 4-3
Coolant
Engine Temperature Gage 3-33
Heater, Engine 2-23
Cooling System 5-32
Cruise Control 3-10
Cruise Control Light 3-37
Cupholder(s) 2-50
Customer Assistance Information
Courtesy Transportation 7-10
Customer Assistance for Text Telephone (TTY) Users 7-5
Customer Assistance Offices 7-5
Customer Satisfaction Procedure 7-2
GM Mobility Reimbursement Program 7-6
Reporting Safety Defects to General Motors 7-16
Reporting Safety Defects to the Canadian Government 7-16
Reporting Safety Defects to the United States Government 7-15
Roadside Assistance Program 7-7
Service Publications Ordering Information 7-16

D

Daytime Running Lamps 3-15
Defensive Driving 4-2
Disc, MP3 3-64
Doing Your Own Service Work 5-4
Dome Lamp 3-17
Dome Lamp Override 3-18
Door
  Locks 2-7
  Power Door Locks 2-8
  Programmable Automatic Door Locks 2-8
  Rear Door Security Locks 2-9
  Rear Doors 2-9
Driver Information Center (DIC) 3-38
  DIC Operation and Displays 3-38
  DIC Warnings and Messages 3-42
Driving
  At Night 4-24
  Before a Long Trip 4-26
  Defensive 4-2
  Drunken 4-2
  Highway Hypnosis 4-26
  Hill and Mountain Roads 4-27
  In Rain and on Wet Roads 4-24
  Off-Road 4-11
  Recovery Hooks 4-33
  Rocking Your Vehicle to Get it Out 4-32
  Winter 4-28

E

EDR 7-17
Electrical System
  Add-On Equipment 5-115
  Engine Compartment Fuse Block 5-116
  Fuses and Circuit Breakers 5-116
  Windshield Wiper Fuses 5-116
Engine
  Air Cleaner/Filter 5-20
  Check and Service Engine Soon Light 3-34
  Coolant 5-27
  Coolant Heater 2-23
  Coolant Temperature Gage 3-33
  Drive Belt Routing 6-15
  Engine Compartment Overview 5-12
  Exhaust 2-37
  Fan Noise 5-37
  Oil 5-15
  Oil Life System 5-18
  Overheating 5-30
  Running While Parked 2-38
  Starting 2-21
Event Data Recorders 7-18
Exit Lighting 3-18
Extender, Safety Belt 1-32
Exterior Cargo Lamps 3-17
Exterior Lamps 3-14

F

Filter
  Engine Air Cleaner 5-20
Finish Damage 5-113
Fixed Mast Antenna 3-71
Flashers, Hazard Warning 3-6
Flash-to-Pass 3-9
Flat Tire 5-83
Flat Tire, Changing 5-84
Flat Tire, Storing 5-100
Fluid 5-21, 5-24
  Power Steering 5-37
  Windshield Washer 5-38
Fog Lamp
  Fog 3-16
Four-Wheel Drive 2-28, 5-49
Front Axle 5-50
Front Turn Signal, Parking and Daytime
  Running Lamps 5-53
Fuel 5-5
  Additives 5-6
  California Fuel 5-6
  Filling a Portable Fuel Container 5-10
  Filling the Tank 5-8
Fuel (cont.)
  Fuels in Foreign Countries 5-7
  Gage 3-37
  Gasoline Octane 5-5
  Gasoline Specifications 5-6
Fuses
  Engine Compartment Fuse Block 5-116
  Fuses and Circuit Breakers 5-116
  Windshield Wiper 5-116

G

Gage
  Engine Coolant Temperature 3-33
  Fuel 3-37
  Speedometer 3-25
  Tachometer 3-25
Gasoline
  Octane 5-5
  Specifications 5-6
Glove Box 2-50
GM Mobility Reimbursement Program 7-6

H

Hazard Warning Flashers 3-6
Head Restraints 1-7
Headlamp
  Aiming 5-51
Headlamps 5-52
  Bulb Replacement 5-51
  Daytime Running Lamps 3-15
  Exterior Lamps 3-14
  Flash-to-Pass 3-9
  Halogen Bulbs 5-51
  High/Low Beam Changer 3-8
  On Reminder 3-15
Heated Seats 1-4
Heater 3-20
Highbeam On Light 3-37
High-Speed Operation, Tires 5-68
Highway Hypnosis 4-26
Hill and Mountain Roads 4-27
Hood
  Checking Things Under 5-10
  Release 5-11
Horn 3-6
How to Wear Safety Belts Properly 1-17
Hydraulic Clutch 5-26

I

Ignition Positions 2-19
Infants and Young Children, Restraints 1-36
Inflation - Tire Pressure 5-66
Instrument Panel
  Overview 3-4
Instrument Panel (I/P)
  Brightness 3-17
  Cluster 3-24
Interior Lamps 3-17

J

Jump Starting 5-44

K

Keyless Entry System 2-4
Keys 2-3

L

Labeling, Tire Sidewall 5-60
Lamps
  Dome 3-17
  Dome Lamp Override 3-18
  Exterior Cargo 3-17
Lap Belt 1-31
Lap-Shoulder Belt 1-25
LATCH System
  Child Restraints 1-43
Latches, Seatback 1-8
License Plate Lamps 5-56
Light
  Airbag Readiness 3-27
  Antilock Brake System Warning 3-32
  Brake System Warning 3-31
  Charging System 3-30
  Cruise Control 3-37
  Highbeam On 3-37
  Malfunction Indicator 3-34
  Oil Pressure 3-36
  Passenger Airbag Status Indicator 3-28
  Safety Belt Reminders 3-26
  Security 3-37
Light (cont.)
  TCS Warning Light 3-32
  Tire Pressure 3-33
  Traction Control System (TCS) Warning 3-32
  Up-Shift 3-30
Lighting
  Exit 3-18
Lights
  Exterior Lamps 3-14
  Flash-to-Pass 3-9
  High/Low Beam Changer 3-8
  Interior Lamps 3-17
  On Reminder 3-15
Limited-Slip Rear Axle 4-6
Loading Your Vehicle 4-34
Lockout Protection 2-9
Locks
  Door 2-7
  Lockout Protection 2-9
  Power Door 2-8
  Programmable Automatic Door Locks 2-8
  Rear Door Security Locks 2-9
Loss of Control 4-10
Lumbar
  Manual Controls 1-3
  Power Controls 1-4

M

Maintenance Schedule
Additional Required Services 6-6
At Each Fuel Fill 6-9
At Least Once a Month 6-9
At Least Once a Year 6-10
Introduction 6-2
Maintenance Footnotes 6-7
Maintenance Record 6-16
Maintenance Replacement Parts 6-14
Maintenance Requirements 6-2
Owner Checks and Services 6-8
Recommended Fluids and Lubricants 6-12
Scheduled Maintenance 6-4
Using 6-2
Your Vehicle and the Environment 6-2
Malfunction Indicator Light 3-34
Manual Lumbar Controls 1-3
Manual Seats 1-2
Manual Transmission
Fluid 5-24
Operation 2-26
Manual, Using iii
Manual Windows 2-12
Message
DIC Warnings and Messages 3-42
Mirrors
Automatic Dimming Rearview 2-40
Automatic Dimming Rearview with Compass and Temperature Display 2-43
Automatic Dimming Rearview with OnStar®, Compass and Temperature Display 2-40
Manual Rearview Mirror 2-39
Manual Rearview Mirror with OnStar® 2-39
Outside Convex Mirror 2-46
Outside Manual Mirrors 2-45
Outside Power Mirrors 2-46
MP3 3-64
MyGMLink.com 7-4

N

Navigation System, Privacy 7-19
New Vehicle Break-In 2-19

O

Odometer 3-25
Odometer, Trip 3-25
Off-Road Driving 4-11
Off-Road Recovery 4-9
Oil
  Engine 5-15
  Pressure Light 3-36
Oil, Engine Oil Life System 5-18
Older Children, Restraints 1-33
Online Owner Center 7-4
OnStar, Privacy 7-19
OnStar® System, see OnStar® Manual 2-47
Other Warning Devices 3-6
Outlet Adjustment 3-22
Outlets
  Accessory Power 3-19
Outside
  Convex Mirror 2-46
  Manual Mirrors 2-45
  Power Mirrors 2-46
Owner Checks and Services 6-8
Owners, Canadian ii

P

Paint, Damage 5-113
Park Brake 2-32
Park (P)
  Shifting Into 2-34
  Shifting Out of 2-36
Parking
  Over Things That Burn 2-37
Parking Your Vehicle 2-36
Passenger Airbag Status Indicator 3-28
Passenger Sensing System 1-69
Passing 4-9
PASS-Key® III+ 2-17
PASS-Key® III+ Operation 2-17
Passlock® 2-16
Perchlorate Materials Requirements, California 5-4
Pickup Conversion to Chassis Cab 4-40
Power
  Door Locks 2-8
  Lumbar Controls 1-4
  Retained Accessory (RAP) 2-21
  Seat 1-3
  Steering Fluid 5-37
  Windows 2-13

Privacy 7-17
Event Data Recorders 7-18
Navigation System 7-19
OnStar 7-19
Radio Frequency Identification 7-19
Programmable Automatic Door Locks 2-8

R

Radiator Pressure Cap 5-30
Radio Frequency Identification (RFID), Privacy 7-19
Radios 3-46
Radio(s) 3-48
Radios
Reception 3-70
Setting the Time 3-47
Theft-Deterrent 3-70
Rear Axle 5-48
Limited-Slip 4-6
Rear Door Security Locks 2-9
Rear Doors 2-9
Rear Seat Operation 1-9, 1-10
Rear Storage Area 2-51
Rearview Mirror, Automatic Dimming 2-40
Rearview Mirror, Automatic Dimming with
Compass and Temperature Display 2-43
Rearview Mirror, Automatic Dimming with
OnStar®, Compass and Temperature Display ... 2-40
Rearview Mirror with OnStar® 2-39
Rearview Mirrors 2-39
Reclining Seatbacks 1-5
Recommended Fluids and Lubricants 6-12
Recovery Hooks 4-33
Recreational Vehicle Towing 4-41
Remote Keyless Entry (RKE) System 2-4
Remote Keyless Entry (RKE) System,
Operation 2-5
Removing the Flat Tire and Installing the
Spare Tire 5-89
Removing the Spare Tire and Tools 5-85
Replacement Bulbs 5-56
Replacement Parts, Maintenance 6-14
Reporting Safety Defects
Canadian Government 7-16
General Motors 7-16
United States Government 7-15
Restraint System Check
Checking the Restraint Systems 1-76
Replacing Restraint System Parts
After a Crash 1-77
Retained Accessory Power (RAP) 2-21
Roadside
Assistance Program 7-7
Rocking Your Vehicle to Get it Out 4-32
Routing, Engine Drive Belt 6-15
Running the Engine While Parked 2-38

S

Safety Belt
Reminder Light 3-26
Safety Belts
Care of 5-109
How to Wear Safety Belts Properly 1-17
Lap Belt 1-31
Lap-Shoulder Belt 1-25
Safety Belt Extender 1-32
Safety Belt Use During Pregnancy 1-31
Safety Belts Are for Everyone 1-12
Safety Warnings and Symbols iii
Scheduled Maintenance 6-4
Seatback Latches 1-8
Seats
Head Restraints 1-7
Heated Seats 1-4
Manual Lumbar 1-3
Power Lumbar 1-4
Power Seats 1-3
Rear Seat Operation 1-9, 1-10
Reclining Seatbacks 1-5
Seatback Latches 1-8
Secondary Latch System 5-96
Securing a Child Restraint
Center Front Seat Position 1-56
Rear Seat Position 1-54
Right Front Seat Position 1-56
Security Light 3-37
Service 5-3
Accessories and Modifications 5-3
Adding Equipment to the Outside of Your Vehicle 5-5
California Pershlorate Materials Requirements 5-4
California Proposition 65 Warning 5-4
Doing Your Own Work 5-4
Engine Soon Light 3-34
Publications Ordering Information 7-16
Service, Scheduling Appointments 7-9
Servicing Your Airbag-Equipped Vehicle 1-74
Sheet Metal Damage 5-113
Shifting Into Park (P) 2-34
Shifting Out of Park (P) 2-36
Signals, Turn and Lane-Change 3-8
Sliding Rear Windows 2-14
Spare Tire 5-104
Installing 5-89
Removing 5-85
Storing 5-100
Specifications, Capacities 5-120
Speedometer 3-25
Starting the Engine 2-21
Steering 4-7
Steering Wheel, Tilt Wheel 3-7

Storage Areas
Center Console Storage Area 2-50
Cupholder(s) 2-50
Glove Box 2-50
Rear Storage Area 2-51
Stuck in Sand, Mud, Ice, or Snow 4-32
Sun Visors 2-15
Sunroof 2-52

T

Tachometer 3-25
Tailgate 2-10
Taillamps
Turn Signal, Stoplamps and Back-up Lamps 5-54
TCS Warning Light 3-32
Theft-Deterrent, Radio 3-70
Theft-Deterrent Systems 2-15
Content Theft-Deterrent 2-15
PASS-Key® III+ 2-17
PASS-Key® III+ Operation 2-17
Passlock® 2-16
Tilt Wheel 3-7
Time, Setting 3-47
Tire
Pressure Light 3-33
Tires 5-59
Aluminum or Chrome-Plated Wheels,
Cleaning 5-112
Buying New Tires 5-76
Chains 5-82
Changing a Flat Tire 5-84
Cleaning 5-113
Different Size 5-78
High-Speed Operation 5-68
If a Tire Goes Flat 5-83
Inflation - Tire Pressure 5-66
Inspection and Rotation 5-74
Installing the Spare Tire 5-89
Pressure Monitor Operation 5-70
Pressure Monitor System 5-69
Removing the Flat Tire 5-89
Removing the Spare Tire and Tools 5-85
Secondary Latch System 5-96
Spare Tire 5-104
Storing a Flat or Spare Tire and Tools 5-100
Tire Sidewall Labeling 5-60
Tire Terminology and Definitions 5-63
Uniform Tire Quality Grading 5-79
Wheel Alignment and Tire Balance 5-80
Wheel Replacement 5-80
When It Is Time for New Tires 5-76

Towing
Recreational Vehicle 4-41
Towing a Trailer 4-47
Your Vehicle 4-41
Traction
Control System (TCS) 4-5
Control System Warning Light 3-32
Limited-Slip Rear Axle 4-6
Trailer
Recommendations 4-60
Transmission
Fluid, Automatic 5-21
Fluid, Manual 5-24
Up-Shift Light 3-30
Transmission Operation, Automatic 2-24
Transmission Operation, Manual 2-26
Trip Odometer 3-25
Truck-Camper Loading Information 4-40
Turn and Lane-Change Signals 3-8
Turn Signal/Multifunction Lever 3-7

U

Uniform Tire Quality Grading 5-79
Up-Shift Light 3-30
Using this Manual iii

V

Vehicle
Control 4-3
Damage Warnings iv
Loading 4-34
Parking Your 2-36
Symbols iv
Vehicle Data Recording and Privacy 7-17
Vehicle Identification
Number (VIN) 5-115
Service Parts Identification Label 5-115
Ventilation Adjustment 3-22
Visors 2-15

W

Warning Lights, Gages and Indicators 3-23
Warnings
DIC Warnings and Messages 3-42
Hazard Warning Flashers 3-6
Other Warning Devices 3-6
Safety and Symbols iii
Vehicle Damage iv
Wheels
Alignment and Tire Balance 5-80
Different Size 5-78
Replacement 5-80
Where to Put the Restraint 1-42
Windows 2-12
Manual 2-12
Power 2-13
Sliding Rear 2-14
Windshield
Washer 3-10
Washer Fluid 5-38
Wiper Blade Replacement 5-57
Wiper Blades, Cleaning 5-111
Wiper Fuses 5-116
Wipers 3-9
Winter Driving 4-28

X

XM Radio Messages 3-69
XM™ Satellite Radio Antenna System 3-71

Y

Your Vehicle and the Environment 6-2