**Operating Instructions**

12/2014 MN04802003Z-EN
replaces M003161

# XP-702
# MICRO PANEL

Powering Business Worldwide

**Manufacturer**

Eaton Automation AG
Spinnereistrasse 8-14
CH-9008 St. Gallen
Switzerland
www.eaton.eu
www.eaton.com

**Support**

Region North America
Eaton Corporation
Electrical Sector
1111 Superior Ave.
Cleveland, OH 44114
United States
877-ETN-CARE (877-386-2273)
www.eaton.com

Other regions
Please contact your local supplier or send an Email to: automation@eaton.com

**Original instructions**
The German version of this document is the original instructions.

**Translations of the original instructions**
All non-German editions of this document are translations of the original instructions.

**Editor**
Monika Jahn

**Brand and product names**
All brand and product names are trademarks or registered trademarks of the owner concerned.

**Copyright**
© Eaton Automation AG, CH-9008 St. Gallen

All rights reserved, also for the translation.

None of this document may be reproduced or processed, duplicated or distributed by electronic systems in any form (print, photocopy, microfilm or any other process) without the written permission of Eaton Automation AG, St. Gallen.

Subject to modifications.

# Contents


| | | |
|---|---|---|
| **1** | **General** | **7** |
| 1.1 | Purpose of these Operating Instructions | 7 |
| 1.2 | Comments about this document | 7 |
| 1.3 | Additional documentation | 7 |
| **2** | **Device description** | **9** |
| 2.1 | Function | 9 |
| 2.2 | Intended use | 9 |
| 2.3 | Device versions | 9 |
| 2.3.1 | Devices with 1 GHz (XP-702-C…, XP-702-E…) | 10 |
| 2.3.2 | Devices with 1.8 GHz (XP-702-D…, XP-702-F…) | 11 |
| 2.4 | Package contents | 12 |
| 2.4.1 | BOX devices | 12 |
| 2.4.2 | 8.4" devices | 12 |
| 2.4.3 | 10.4" and 12.1" devices | 13 |
| 2.4.4 | 15" devices | 13 |
| 2.5 | Accessories | 14 |
| 2.6 | Designation | 15 |
| **3** | **Safety regulations** | **17** |
| 3.1 | General | 17 |
| 3.2 | Meaning of symbols | 18 |
| 3.3 | Mandatory requirements, personnel | 19 |
| 3.3.1 | Work safety | 19 |
| 3.3.2 | Qualification of personnel | 19 |
| 3.3.3 | Operating Instructions | 19 |
| 3.3.4 | Installation, maintenance and disposal | 19 |
| 3.3.5 | Prohibited use | 19 |
| 3.3.6 | Requirements for proper operation | 20 |
| 3.4 | Device related hazards | 21 |
| **4** | **Operating and indication elements** | **25** |
| 4.1 | Operating and indication elements on the front | 25 |
| 4.2 | Operating elements on the service side | 26 |
| 4.3 | Indication elements on the service side | 27 |
| **5** | **Installation** | **29** |
| 5.1 | Safety regulations | 29 |
| 5.2 | Requirements for the place of installation | 30 |
| 5.2.1 | Engineering conditions of acceptability by Underwriters Labaratories Inc. (UL) | 30 |
| 5.2.2 | Requirements for the mounting position | 30 |
| 5.3 | Interfaces | 32 |
| 5.3.1 | Overview of interfaces | 33 |
| 5.3.2 | Preparation of cables with D-Sub connector | 34 |
| 5.3.3 | Power supply | 36 |
| 5.3.4 | RS232 (Com Port) | 37 |

5.3.5 Ethernet ... 39
5.3.6 USB Host ... 40
5.3.7 PCI ... 40
5.3.8 VGA ... 41
5.3.9 DVI ... 41
5.4 Preparing the device for operation ... 42
5.4.1 Fitting a PCI expansion card in the device ... 44
5.4.2 Inserting and removing a CF card ... 46
5.4.3 Fitting a hard disk in the device ... 48
5.4.4 Mounting the active cooling unit ... 50
5.4.5 Mounting a device with a display ... 51
5.4.6 Mounting a BOX device ... 56

**6 Operation ... 57**
6.1 Safety regulations ... 57
6.2 Starting the device ... 58
6.3 Switching off the device ... 58

**7 Maintenance and service ... 59**
7.1 Safety regulations ... 59
7.2 Maintenance ... 60
7.2.1 Cleaning the infra-red touch ... 60
7.2.2 Recalibrating the infra-red touch ... 60
7.2.3 Replacing the battery ... 61
7.3 Service ... 62
7.3.1 Repairs ... 62
7.3.2 Replacing the active cooling unit ... 63
7.4 Troubleshooting ... 65
7.4.1 Activate the second display ... 66

**8 Storage, transport and disposal ... 69**
8.1 Safety regulations ... 69
8.2 Storage ... 69
8.3 Transport ... 69
8.4 Disposal ... 70

**9 Technical data ... 71**
9.1 Dimensions and weights ... 71
9.1.1 BOX devices ... 71
9.1.2 8.4" devices ... 72
9.1.3 10.4" devices ... 73
9.1.4 12.1" devices ... 74
9.1.5 15" devices ... 75
9.2 Display ... 76
9.3 Touch sensor ... 77
9.4 System ... 77
9.5 Interfaces ... 78
9.5.1 Power supply ... 79
9.5.1.1 Devices with 1 GHz (XP-702-C…, XP-702-E…) ... 79

9.5.1.2 Devices with 1.8 GHz (XP-702-D…, XP-702-F…) ..... 81
9.6 Enclosure ratings ..... 82
9.7 Agency approvals and standards ..... 83
9.8 Applicable standards and regulations ..... 84
9.9 Ambient conditions ..... 85

# 1 General

## 1.1 Purpose of these Operating Instructions

These Operating Instructions contain the information required for the correct and safe use of the MICRO PANELs XP-702. The Operating Instructions are part of the devices and must therefore be kept nearby.

These Operating Instructions describe all aspects of the devices: transport, installation, commissioning, operation, maintenance, storage and disposal. The operating system and the application software are not described.

☞ **Read Chapter 3 Safety regulations, 🗎 17 before working with the device. This contains important information for your personal safety. This chapter must be read and understood by all persons working with this device.**

**⚠WARNING**

**Incomplete copy of the Operating Instructions**

Working with individual pages of these Operating Instructions may cause damage to property or personnel by failure to observe safety-related information.

▶ Always work with the complete document.

## 1.2 Comments about this document

Please send any comments, recommendations or suggestions relating to this document to info-automation@eaton.com.

## 1.3 Additional documentation

The following documents may be helpful in the use of the device in addition to this document:

[1] MN05010008Z-EN System Description Windows XP/XPe
(operation of the Windows XP/XPe operating system on MICRO PANELs)

[2] MN05010009Z-EN System Description Networks in Brief
(information on networks in general and on the integration of PCs and MICRO PANELs in networks)

The documents can be downloaded from:

- www.moeller.net, «Support» section
- www.eaton.eu (search document No. via search field of the home page)
- www.eaton.com (search document No. via search field of the home page)
- www.eaton-automation.com, «DOWNLOADS» section

# 2 Device description

## 2.1 Function

MICRO PANELs XP-702 are industrial PCs with an open system structure.

## 2.2 Intended use

MICRO PANELs XP-702 are primarily used in machine and system building. They are suitable for tasks in the industrial sector and are typically used in automation.

## 2.3 Device versions

MICRO PANELs XP-702 are available in versions with and without display with 1 GHz or 1.8 GHz.

Abb. 1 XP-702 with display

Abb. 2 XP-702 without display (BOX device)

### 2.3.1 Devices with 1 GHz (XP-702-C…, XP-702-E…)

| Basic device | Display | Interfaces, depending on the device version | XP-702 type |
|---|---|---|---|
| Version C:<br>■ 1 GHz processor<br>■ 1024 MByte DRAM<br>■ Interfaces:<br>1 × Ethernet 100/10<br>1 × Ethernet 1000/100/10<br>2 × RS232<br>4 × USB Host<br>1 × VGA | Devices without display (BOX devices) | PCI and DVI | XP-702-C0-BOX |
| | 8.4" color display (TFT-LCD), SVGA, infra-red touch | PCI | XP-702-C0-84TSI |
| | 10.4" color display (TFT-LCD), SVGA, infra-red touch | PCI | XP-702-C0-10TSI |
| | 12.1" color display (TFT-LCD), XGA, infra-red touch | PCI | XP-702-C0-12TXI |
| | 15" color display (TFT-LCD), XGA, infra-red touch | PCI | XP-702-C0-15TXI |
| Version E[1]:<br>■ 1 GHz processor<br>■ 1024 MByte DRAM<br>■ Interfaces:<br>1 × Ethernet 100/10<br>1 × Ethernet 1000/100/10<br>2 × RS232<br>4 × USB Host<br>1 × VGA<br>■ CF cards:<br>1 × CF card with operating system, min. 4 GByte<br>1 × CF card, min. 1 GByte | Devices without display (BOX devices) | PCI and DVI | XP-702-E0-BOX |
| | 8.4" color display (TFT-LCD), SVGA, infra-red touch | PCI | XP-702-E0-84TSI |
| | 10.4" color display (TFT-LCD), SVGA, infra-red touch | PCI | XP-702-E0-10TSI |
| | 12.1" color display (TFT-LCD), XGA, infra-red touch | PCI | XP-702-E0-12TXI |
| | 15" color display (TFT-LCD), XGA, infra-red touch | PCI | XP-702-E0-15TXI |

Tab. 1 Device versions devices with 1 GHz (XP-702-C…, XP-702-E…)

1) XP-702-E… devices are only available in the USA.

### 2.3.2 Devices with 1.8 GHz (XP-702-D…, XP-702-F…)

| Basic device | Display | Interfaces, depending on the device version | XP-702 type |
|---|---|---|---|
| Version D:<br>■ 1.8 GHz processor<br>■ 2048 MByte DRAM<br>■ Interfaces:<br>1 × Ethernet 100/10<br>1 × Ethernet 1000/100/10<br>2 × RS232<br>4 × USB Host<br>1 × VGA<br>■ Active cooling unit | Devices without display (BOX devices) | PCI and DVI | XP-702-D0-BOX |
| | 8.4" color display (TFT-LCD), SVGA, infra-red touch | PCI | XP-702-D0-84TSI |
| | 10.4" color display (TFT-LCD), SVGA, infra-red touch | PCI | XP-702-D0-10TSI |
| | 12.1" color display (TFT-LCD), XGA, infra-red touch | PCI | XP-702-D0-12TXI |
| | 15" color display (TFT-LCD), XGA, infra-red touch | PCI | XP-702-D0-15TXI |
| Version F[1]:<br>■ 1.8 GHz processor<br>■ 2048 MByte DRAM<br>■ Interfaces:<br>1 × Ethernet 100/10<br>1 × Ethernet 1000/100/10<br>2 × RS232<br>4 × USB Host<br>1 × VGA<br>■ Active cooling unit<br>■ CF cards:<br>1 × CF card with operating system, min. 4 GByte<br>1 × CF card, min. 1 GByte | Devices without display (BOX devices) | PCI and DVI | XP-702-F0-BOX |
| | 8.4" color display (TFT-LCD), SVGA, infra-red touch | PCI | XP-702-F0-84TSI |
| | 10.4" color display (TFT-LCD), SVGA, infra-red touch | PCI | XP-702-F0-10TSI |
| | 12.1" color display (TFT-LCD), XGA, infra-red touch | PCI | XP-702-F0-12TXI |
| | 15" color display (TFT-LCD), XGA, infra-red touch | PCI | XP-702-F0-15TXI |

Tab. 2 Device versions devices with 1.8 GHz (XP-702-D…, XP-702-F…)

1) XP-702-F… devices are only available in the USA.

## 2.4 Package contents

The accessories supplied with the MICRO PANELs XP-702 depend on the device version.

### 2.4.1 BOX devices

| Qty | Designation |
|---|---|
| 1 | MICRO PANEL:<br>■ XP-702-…-BOX… |
| 1 | Power supply connector |
| 1 | Active cooling unit (only supplied with XP-702-D… and XP-702-F… devices) |
| 1 | CF card with operating system, min. 4 GByte<br>(only supplied with XP-702-E… and XP-702-F… devices) |
| 1 | CF card, min. 1 GByte<br>(only supplied with XP-702-E… and XP-702-F… devices) |

Tab. 3 Package contents for BOX devices

### 2.4.2 8.4" devices

| Qty | Designation |
|---|---|
| 1 | MICRO PANEL:<br>■ XP-702-…-84TSI… |
| 8 or 4 | Retaining brackets with threaded pin for mounting the device |
| 1 | Sealing strip for mounting the device (glued in the device and/or loose enclosed) |
| 1 | Power supply connector |
| 1 | Active cooling unit (only supplied with XP-702-D… and XP-702-F… devices) |
| 1 | CF card with operating system, min. 4 GByte<br>(only supplied with XP-702-E… and XP-702-F… devices) |
| 1 | CF card, min. 1 GByte<br>(only supplied with XP-702-E… and XP-702-F… devices) |

Tab. 4 Package contents for 8.4" devices

### 2.4.3 10.4" and 12.1" devices

| Qty | Designation |
|---|---|
| 1 | MICRO PANEL:<br>■ XP-702-…-12TXI… |
| 8 or 6 | Retaining brackets with threaded pin for mounting the device |
| 1 | Sealing strip for mounting the device (glued in the device and/or loose enclosed) |
| 1 | Power supply connector |
| 1 | Active cooling unit (only supplied with XP-702-D… and XP-702-F… devices) |
| 1 | CF card with operating system, min. 4 GByte<br>(only supplied with XP-702-E… and XP-702-F… devices) |
| 1 | CF card, min. 1 GByte<br>(only supplied with XP-702-E… and XP-702-F… devices) |

Tab. 5 Package contents for 10.4" and 12.1" devices

### 2.4.4 15" devices

| Qty | Designation |
|---|---|
| 1 | MICRO PANEL:<br>■ XP-702-…-15TXI… |
| 12 or 8 | Retaining brackets with threaded pin for mounting the device |
| 1 | Sealing strip for mounting the device (glued in the device and/or loose enclosed) |
| 1 | Power supply connector |
| 1 | Active cooling unit (only supplied with XP-702-D… and XP-702-F… devices) |
| 1 | CF card with operating system, min. 4 GByte<br>(only supplied with XP-702-E… and XP-702-F… devices) |
| 1 | CF card, min. 1 GByte<br>(only supplied with XP-702-E… and XP-702-F… devices) |

Tab. 6 Package contents for 15" devices

## 2.5 Accessories

Different accessories are available. Use only original accessories. Order the accessories required from your supplier.

| Accessories | Type |
|---|---|
| Windows licenses | |
| Windows XPe | |
| License for Windows XP Embedded incl. license sticker | LIC-OS-EXP-S |
| Windows XP | |
| License for Windows XP Professional incl. license sticker | LIC-OS-XP-S |
| XP license product papers | |
| GALILEOopen license product paper with license sticker | LIC-GALILEO-OPEN-XP |
| Memory media | |
| Industrial hard disk | |
| Industrial grade hard disk ≥ 80 GByte<br>without operating system | HDU-A7-SI |
| Industrial grade hard disk ≥ 80 GByte<br>Windows XP pre-installed<br>without Windows license (**license required (LIC-OS-XP-S)**) | OS-HDU-A7-SI |
| Consumer hard disk | |
| Hard disk ≥ 80 GByte<br>without operating system | HDU-A7-S |
| Hard disk ≥ 80 GByte<br>Windows XP pre-installed<br>without Windows license (**license required (LIC-OS-XP-S)**) | OS-HDU-A7-S |
| CF cards | |
| Compact Flash 2 GByte<br>without operating system | MEMORY-CF-A7-S |
| Compact Flash 2 GByte<br>Windows XPe pre-installed<br>without Windows license (**license required (LIC-OS-EXP-S)**) | OS-FLASH-A7-S |
| Additional retaining brackets | |
| 4 Retaining brackets with threaded pin for mounting the device | ACCESSORIES-HKS-IP65 |
| 100 Retaining brackets with threaded pin for mounting the device | ACCESSORIES-HKS-IP65-100 |

| Accessories | Type |
|---|---|
| Device accessories | |
| Device accessories as replacement for 8.4" devices<br>■ 4 Retaining brackets with threaded pin for mounting the device<br>■ 1 Sealing strip for mounting the device<br>■ 1 Power supply connector | ACCESSORIES-TP-84-IR-1 |
| Device accessories as replacement for 10.4", 12.1" und 15" devices<br>■ 8 Retaining brackets with threaded pin for mounting the device<br>■ 1 Sealing strip for mounting the device<br>■ 1 Power supply connector | ACCESSORIES-TP-15-IR-1 |
| Cooling | |
| Active cooling unit | ACCESSORIES-FAN-700-S |

Tab. 7 Accessories

## 2.6 Designation

### Nameplate

A nameplate is fixed on the rear of the device in order to identify it. The nameplate contains the following information:

- Manufacturer address
- Type designation
- Power supply required
- Part no. (Part-No or Art.-No)
- Serial no.
- Time of manufacturing (week/year)
- Approval mark and information to the approval
- Arrangement of interfaces and operating elements

### Support

To ensure fast and optimum support always provide the support personnel with the following information on the nameplate:

- Part no. (Part-No or Art.-No)
- Serial no.

# 3 Safety regulations

## 3.1 General

Hazards may still occur even though the device meets the current state of the art and complies with all recognized safety requirements.

The device must only be installed and commissioned in perfect technical condition and in compliance with this document.

☞ **Read this chapter before working with the device. This contains important information for your personal safety. This chapter must be read and understood by all persons working with this device.**

## 3.2 Meaning of symbols

The following symbols are used in this document according to the hazard level described:

| ⚠ DANGER | |
|---|---|
| | **Signal word DANGER**<br>Indicates an imminently hazardous situation which, if not avoided, will result in death or serious injury. |

| ⚠ WARNING | |
|---|---|
| | **Signal word WARNING**<br>Indicates a potentially hazardous situation which, if not avoided, could result in death or serious injury. |

| ⚠ CAUTION | |
|---|---|
| | **Signal word CAUTION**<br>Indicates a potentially hazardous situation which, if not avoided, could result in minor or moderate injury. |

| CAUTION | |
|---|---|
| | **Signal word CAUTION without safety alert symbol**<br>Indicates a situation which, if not avoided, could result in material damage. |

☞ **Indicates useful information.**

The danger symbol used and the text indicate the actual danger and the related preventative measures.

## 3.3 Mandatory requirements, personnel

### 3.3.1 Work safety

All applicable work safety regulations (in-house and national) must be observed.

### 3.3.2 Qualification of personnel

The personnel responsible for installation, operation, maintenance and service must be adequately qualified. These persons must be sufficiently trained or instructed and they must be informed of all hazards and risks associated with the device.

### 3.3.3 Operating Instructions

It must be ensured that any person working with the device in any phase of its lifespan has read and understood the relevant sections of the Operating Instructions.

**⚠WARNING**

**Incomplete copy of the Operating Instructions**

Working with individual pages of these Operating Instructions may cause damage to property or personnel by failure to observe safety-related information.

▶ Always work with the complete document.

### 3.3.4 Installation, maintenance and disposal

It must be ensured that the device is properly connected, mounted, maintained and disposed of in compliance with all relevant standards and safety regulations.

### 3.3.5 Prohibited use

The implementation of safety functions (relating to the protection of personnel and machinery) using the device is prohibited.

### 3.3.6 Requirements for proper operation

The following points must be observed so that the device meets the contractual requirements:

- Only qualified personnel may work with the device.
- These persons must have read the Operating Instructions and must observe the requirements described.
- The ambient conditions stated must be observed. See Chapter 9.9 Ambient conditions, 🗎 85.
- The maintenance work must be carried out correctly.
- Potentially explosive atmosphere, Zone 22:
  The ground resistance of accessible metal parts must be less than $10^9$ ohms.

No liability is accepted for damage, consequential damage and accidents caused by the following:

- Failure to observe work safety regulations
- Failure or malfunction of the device
- Improper handling or use
- Failure to observe the Operating Instructions
- Conversions, modifications and repairs to the device

☞ **Repairs, see Chapter 7.3.1 Repairs, 🗎 62.**

## 3.4 Device related hazards

**⚠ DANGER**

**Explosion hazard**

Death, serious injury or material damage may occur if an electrical plug connection is removed in a potentially explosive atmosphere during operation or if the device is subjected to hazardous knocks.

- ▶ Only use the device in the following environments:
  - Environments not subject to explosion hazards
  - Potentially explosive atmosphere, Zone 22 (according to ATEX 94/9/EC)
- ▶ Potentially explosive atmosphere, Zone 22:
  The ground resistance of accessible metal parts must be less than $10^9$ ohms.
- ▶ When used in potentially explosive atmosphere, Zone 22, the environment has to be designed to avoid any bunch discharge.
- ▶ Prevent the device from being subjected to hazardous knocks.
- ▶ Only operate the device in potentially explosive atmospheres if it is correctly mounted.
- ▶ Switch off the device before removing the plug connections.

**⚠ WARNING**

**Live parts in the device**

When the device is opened, there is a risk of electric shock if live parts are touched.

- ▶ The device must not be opened.

**⚠ WARNING**

**Potential equalization currents**

Large equalization currents between the protective ground systems of different devices may cause operational malfunctions due to signal interference and may even cause fires.

- ▶ If necessary, a potential equalization conductor should be installed parallel to the cable. This should have a cross-section that is a multiple of the cable shield.

**⚠ CAUTION**

**Electrostatic discharge**

Electrostatic discharge may damage or destroy electronic components.

- ▶ Avoid contact with components (such as connector pins) that are susceptible to electrostatic discharge.
- ▶ Discharge (by touching a grounded metal object) any static charge accumulated in your body before touching the device.

**CAUTION**

**Non-isolated interfaces**

The device may be damaged due to potential differences.

▶ The GND terminals of all bus stations must be connected.

**CAUTION**

**Data loss**

During a write operation to a CF card/hard disk, this may lose data or may be destroyed if there is a power failure or if it is removed.

▶ Only insert and remove CF cards/hard disk when the device is in a de-energized state.
▶ Always secure CF cards with the CF slot cover.
▶ Before switching off:
- Ensure that no software write operations to a CF card/hard disk are in progress («CF ACT» and «HD ACT» LEDs must not be lit).
- Shut down the operating system.

▶ If possible, avoid write operations to CF cards/hard disk. Reasons:
- The number of write cycles possible on CF cards is limited.
- A power failure during write operations will most likely lead to loss of data.

▶ If the writing of the CF card/hard disk cannot be avoided, use an uninterruptible power supply (USP) to prevent data loss.

**CAUTION**

**Device condensation**

If the device is or was exposed to climatic changes (temperature fluctuation, air humidity) moisture can form on or in the device (device condensation). In this case, there is a risk of short-circuit.

▶ The device must **not** be switched on when device condensation is present.
▶ If condensation is present on the device, or if it was exposed to temperature fluctuations, it must be allowed to adjust to room temperature (do not expose the device to the direct heat of heating devices) prior to commissioning.

**CAUTION**

**UV light**

When exposed to UV light, plastics can embrittle and the lifespan of the device is reduced.

▶ Protect the device against direct sunlight and lamps with UV rays.

**CAUTION**

**Cleaning the device**

Damage to the device due to the use of pointed or sharp objects or by liquids.

- Do not use any pointed or sharp objects (e.g. knife) for cleaning.
- Do not use any aggressive or abrasive cleaning agent or solvent.
- Avoid any liquid entering the device (risk of short-circuit).

# 4 Operating and indication elements

## 4.1 Operating and indication elements on the front

Abb. 3 Operating and indication elements on the front

The device has the following operating and indication elements on the front:

| Element | Function |
|---|---|
| A Touch sensor | Infra-red touch:<br>Detection of the actuation of the operating elements shown on the display. These devices are operated by interrupting the infra-red light matrix with your finger or a suitable object (min. ø 7 mm). It is not necessary to touch the infra-red touch protective panel. |
| B Display | Display operating and indication elements. |

Tab. 8 Operating and indication elements on the front

## 4.2 Operating elements on the service side

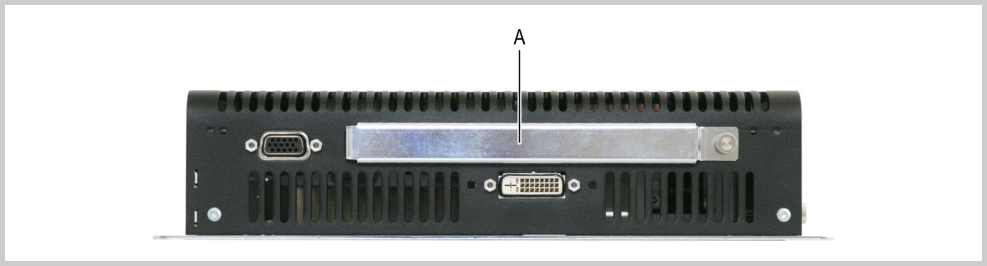


Abb. 4 Operating elements on the service side (CF slot cover fitted)

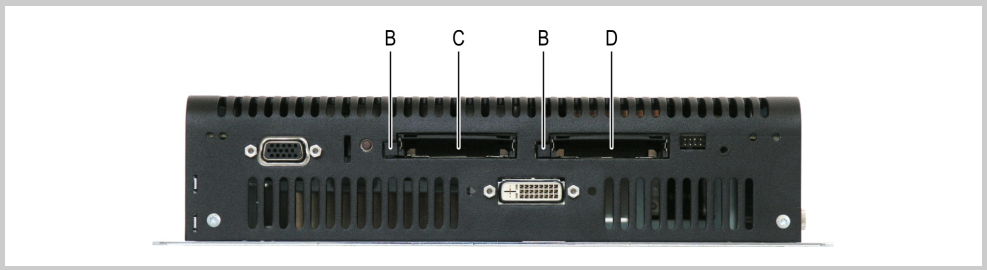


Abb. 5 Operating elements on the service side (CF slot cover removed)

The device has the following operating elements on the service side:

| Element | Function |
|---|---|
| A CF slot cover | Fastening the CF card in the CF slot. |
| B Ejector button | Ejecting the CF card. |
| C CF slot 0 | Slot for CF card with operating system and applications. |
| D CF slot 1 | Slot for CF card with data. |

Tab. 9 Operating elements on the service side

## 4.3 Indication elements on the service side

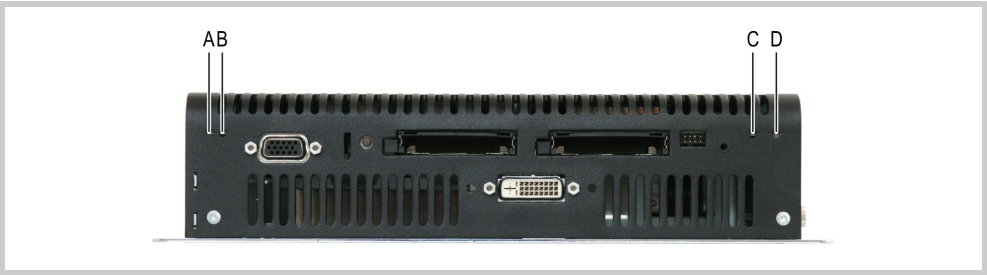


Abb. 6 Indication elements on the service side

The device has the following indication elements on the service side:

| LED | Function |
|---|---|
| A SUPPLY ERR (red) | ■ Lit briefly after power up.<br>■ Lit in the event of errors.<br>■ Lit after power off. |
| B SUPPLY OK (green) | Lit during startup and operation. |
| C CF ACT (red) | Lit if a CF card is accessed. |
| D HD ACT (red) | Lit if the hard disk is accessed. |

Tab. 10 Indication elements on the service side

# 5 Installation

## 5.1 Safety regulations

☞ **Read Chapter 3 Safety regulations, 🗎 17 before installing and commissioning the device. This contains important information for your personal safety.**

## 5.2 Requirements for the place of installation

- Approvals:
  The device must only be used in locations that are approved for the device. See the markings on the nameplate and Chapter 9 Technical data, 🗎 71.
- Power supply:
  The power supply must comply with the requirements stated in Chapter 9.5.1 Power supply, 🗎 79.

### 5.2.1 Engineering conditions of acceptability by Underwriters Labaratories Inc. (UL)

For the approval in accordance with the standard UL 508, consideration must be given to the following:

- Ambient conditions:
  - Max. ambient temperature: 50°C
  - Pollution degree 2
- The external field wiring must be designed for min. 75°C.
- The screw terminals of the connector for the power supply must be tightened with a max. tightening torque of 0.6…0.8 Nm or 5…7 Lb. In.

### 5.2.2 Requirements for the mounting position

The devices can be mounted in the following objects depending on the device version:

- Devices with a display:
  - Control cabinets
  - Control panels
  - Control desks
- BOX devices:
  - Control cabinets

The devices must only be mounted horizontally. The following requirements must be fulfilled when selecting a suitable mounting position:

- The device should not be exposed to direct sunlight (Sunlight disturbs the infra-red touch sensor. In addition, when exposed to UV light, plastic parts of the device can embrittle and the lifespan of the device is reduced).
- If the device is to be used in potentially explosive atmospheres, the device must not be subjected to hazardous knocks.
- The inclination angle for vertical mounting must be max. ±15°.
- The operating elements on the service side of the device and the cable connections are accessible after the device has been mounted.
- The ambient conditions stated must be observed. See Chapter 9.9 Ambient conditions, 🗎 85.
- Sufficient ventilation (cooling) must be ensured by means of:
  - Clearance of at least 5 cm to the ventilation slots
  - Clearance of at least 15 cm from heat radiating components such as heavily loaded transformers
  - The expected temperatures should be within the permissible range. See Chapter 9.9 Ambient conditions, 🗎 85.

- Properties of the mounting surfaces:
  - Material thickness at the mounting cutout 2…5 mm
  - Flatness ≤ 0.5 mm
    (this requirement must also be fulfilled when the device is mounted!)
  - Surface roughness Rz ≤ 120

## 5.3 Interfaces

**⚠ WARNING**

**Potential equalization currents**

Large equalization currents between the protective ground systems of different devices may cause operational malfunctions due to signal interference and may even cause fires.

- ▶ If necessary, a potential equalization conductor should be installed parallel to the cable. This should have a cross-section that is a multiple of the cable shield.

**CAUTION**

**Operational malfunctions**

Use of unsuitable or improperly prepared cables, as well as incorrect wiring will mean that neither the values stated in the technical data nor the electromagnetic compatibility (EMC) can be ensured.

- ▶ Only use cables prepared by specialists.
- ▶ The cables used must be prepared according to the interface description in this document.
- ▶ The wiring instructions for the relevant interface must be observed when wiring the device.
- ▶ Any generally applicable regulations and standards must be fulfilled.

**CAUTION**

**Non-isolated interfaces**

The device may be damaged due to potential differences.

- ▶ The GND terminals of all bus stations must be connected.

### 5.3.1 Overview of interfaces

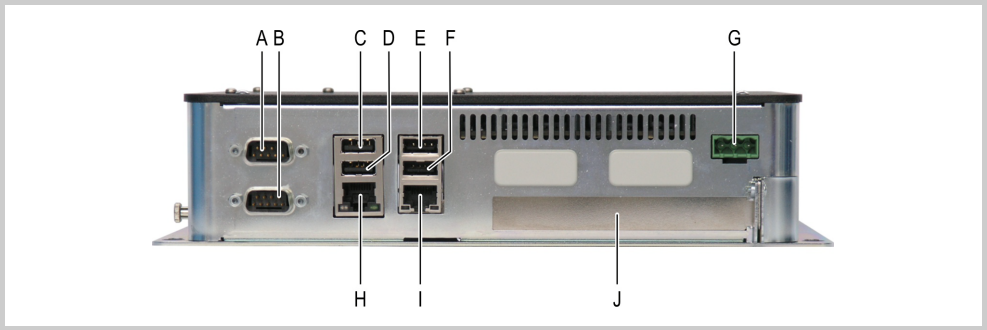


Abb. 7 Connector side of the device

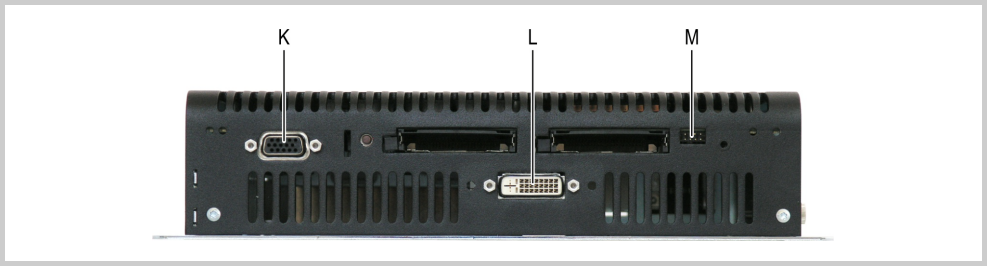


Abb. 8 Service side of the device

| Interface | | | Interface description |
|---|---|---|---|
| A | COM 1 | RS232 | → Chapter 5.3.4, 🗎 37 |
| B | COM 2 | | |
| C | USB 1 | USB Host | → Chapter 5.3.6, 🗎 40 |
| D | USB 2 | | |
| E | USB 3 | | |
| F | USB 4 | | |
| G | SUPPLY | Power supply | → Chapter 5.3.3, 🗎 36 |
| H | LAN 1 | Ethernet 1000Base-T / 100Base-TX / 10Base-T | → Chapter 5.3.5, 🗎 39 |
| I | LAN 2 | Ethernet 100Base-TX / 10Base-T | → Chapter 5.3.5, 🗎 39 |
| J | PCI SLOT | PCI | → Chapter 5.3.7, 🗎 40 |
| K | VGA | VGA | → Chapter 5.3.8, 🗎 41 |
| L | DVI | DVI (only BOX devices) | → Chapter 5.3.9, 🗎 41 |
| M | DIAG | DIAG | Only for service tasks |

Tab. 11 Overview of interfaces

### 5.3.2 Preparation of cables with D-Sub connector

The preparation of bus cables is an essential factor in ensuring reliable operation and electromagnetic compatibility (EMC).

**Wiring requirements**

- The cables must be shielded.
- The cable shield must be made from a copper braid.
- The cable shield must make a low impedance connection with the connector casing over a large contact area. This is achieved by:
  - Use of metal or metallized connector casings with a cable clamp for strain relief.
  - The cable clamp must be screwed securely to the connector.

**Connecting the cable shield**

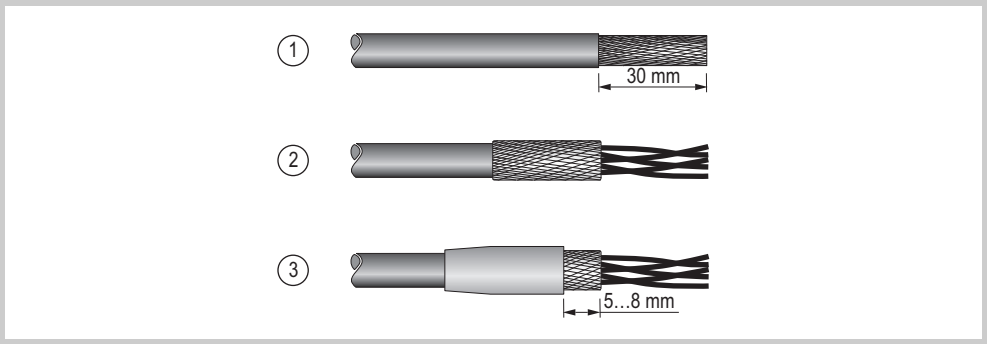


Abb. 9 Connecting the cable shield

1. Strip the cable end so that approx. 3 cm of the shield braid is exposed.
2. Fold back the shield braid over the cable shield.
3. Fit approx. 3 cm of heat shrinkable tubing over the folded back end of the shield braid or use a rubber grommet.
   - 5…8 mm of the shield braid must be exposed at the cable end.
   - The folded back shield braid end must be covered by the heat shrinkable tubing or by the rubber grommet.
4. Fit the D-Sub connector to the cable end:
   - The exposed metal shield braid must be clamped to the connector casing with the cable clamp.

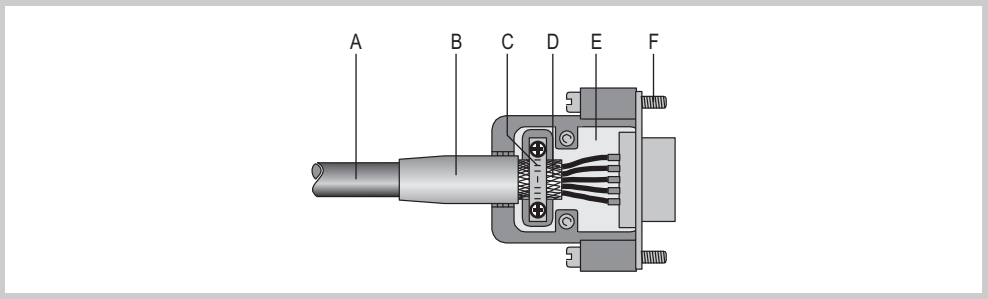


Abb. 10 Cable prepared with D-Sub connector

A Cable with cable sheath
B Heat shrinkable tubing or rubber grommet
C Cable clamp
D Shield braid
E D-Sub connector
F Mounting screw UNC

☞ **The EMC values stated in the technical data (immunity and emission) can only be guaranteed by observing the prescribed cable preparation!**

### 5.3.3 Power supply

The device is provided with an internal fuse and is protected against polarity reversal. The functional earthing terminal is connected to both the housing and the 0 V terminal. The device power supply is **not** electrically isolated.

The device requires a 24 VDC power supply from an AC/DC converter with safe isolation (SELV). For other power supply requirements see Chapter 9.5.1 Power supply, 🗎 79.

- SELV (safety extra low voltage):
  Circuit in which no dangerous voltage is present, even in the event of a single fault.

Abb. 11 Power supply interface

#### Wiring

- Phoenix Contact MSTB 2.5/3-ST-5.08 connector, Phoenix order no. 1757022 is supplied with the device.

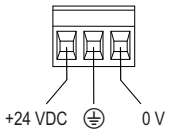


Abb. 12 Phoenix Contact MSTB 2.5/3-ST-5.08 connector (view from the wiring side)

| Connection | Assignment |
|---|---|
| +24 VDC | +24 VDC power supply |
| ? | Functional earthing connected to housing.<br>Does not have to be connected.<br>This connection can be used as protective earthing connection if the mounting environment requires this. |
| 0 V | 0 V power supply (connected to ⏚) |

Tab. 12 Assignment of connector

- The following must be observed when the connector wiring is prepared:

| Preparing the wiring of the connector | |
|---|---|
| Terminal type | Pluggable screw terminal |
| Cross-section | ■ min. 0.75 $mm^2$ / max. 2.5 $mm^2$ (lead or wire)<br>■ min. AWG18 / max. AWG12 |
| Stripping length | 7 mm |
| Max. tightening torque | 0.6…0.8 Nm / 5…7 Lb. In. |

Tab. 13 Preparing the wiring of the connector

### 5.3.4 RS232 (Com Port)

The RS232 interface is **not** electrically isolated. The GND pin is directly connected to the housing potential.

**CAUTION**

**Non-isolated interfaces**

The device may be damaged due to potential differences.

▶ The GND terminals of all bus stations must be connected.

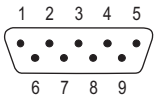


Abb. 13 RS232 interface (9-pin, D-Sub, male, UNC)

| Pin | Signal | Assignment |
|---|---|---|
| 1 | DCD | Data Carrier Detected |
| 2 | RxD | Receive Data |
| 3 | TxD | Transmit Data |
| 4 | DTR | Data Terminal Ready |
| 5 | GND | Ground |
| 6 | DSR | Data Set Ready |
| 7 | RTS | Request to Send |
| 8 | CTS | Clear to Send |
| 9 | RI | Ring Indicator |

Tab. 14 Pin assignment of the RS232 interface

#### Wiring

- Shielded cables must be used.
- The maximum baud rate depends on the cable length:

| Cable length | Max. baud rate |
|---|---|
| 2.5 m | 115200 Bit/s |
| 5 m | 57600 Bit/s |
| 10 m | 38400 Bit/s |
| 15 m | 19200 Bit/s |
| 30 m | 9600 Bit/s |

Tab. 15 Relationship of cable length / baud rate

☞ **When preparing the cables, ensure that there is a low-resistance connection between the cable shield and the connector casing (→ Chapter 5.3.2, 🗎 34).**

### 5.3.5 Ethernet

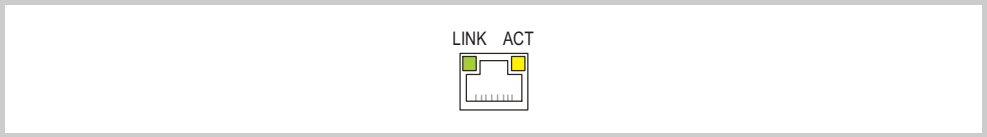


Abb. 14 Ethernet interface (RJ45 socket)

| LED | Signal | Meaning |
|---|---|---|
| ACT (yellow) | flashes | Ethernet is active (data traffic) |
| LINK (green) | lit | Active network is connected and detected |

Tab. 16 Control LEDs of the Ethernet interface

**Cable**

- Use shielded twisted pair cable (STP) for networking:
  - For device to device connection: crossover cable
  - For connecting to the hub/switch: 1:1 patch cable
- Maximum cable length: 100 m.

**CAUTION**

**Forces acting on the Ethernet interface**

Communication can be disturbed and the connection mechanics damaged if the Ethernet interface is exposed to severe vibration or the RJ45 plug connection is pulled.

▶ Protect the RJ45 connection from severe vibration.
▶ Protect the RJ45 connection from pulling on the socket.

### 5.3.6 USB Host

The USB Host interfaces support USB 2.0.

Abb. 15 USB Host interface (USB Host, type A)

**Cable**

- Only use shielded USB standard cable.
- Maximum cable length: 5 m.

### 5.3.7 PCI

The PCI interface complies with the PCI 2.1 standard.

Abb. 16 PCI interface (PCI 32 bit 2.1)

**PCI expansion card**

- Only use 3.3 V compatible PCI expansion cards.

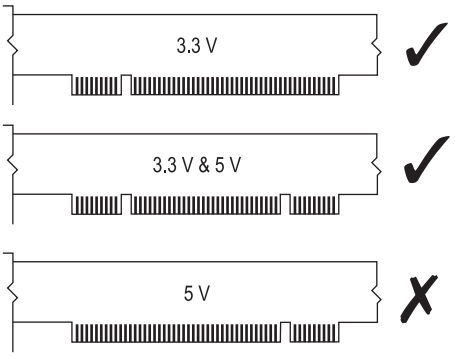


Abb. 17 Usable PCI expansion cards

- Power consumptions: max. 6.6 W (2 A).

### 5.3.8 VGA

The VGA interface can be used for connecting a monitor.

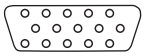

Abb. 18 VGA interface (15 pin, high-density D-Sub, female)

**Cable**

- Only use standard shielded VGA cable.
- Cable length: normally 5 m.

### 5.3.9 DVI

The Single Link DVI interface is only available with BOX devices (XP-702-…-BOX). The interface complies with the DVI-D standard and can be used for connecting a DVI monitor.

Abb. 19 DVI interface (DVI-D Single Link)

**Cable**

- Only use standard shielded DVI-D cable.
- Cable length: normally 5 m.

## 5.4 Preparing the device for operation

**CAUTION**

**Operational malfunctions**

Use of unsuitable or improperly prepared cables, as well as incorrect wiring will mean that neither the values stated in the technical data nor the electromagnetic compatibility (EMC) can be ensured.

- ▶ Only use cables prepared by specialists.
- ▶ The cables used must be prepared according to the interface description in this document.
- ▶ The wiring instructions for the relevant interface must be observed when wiring the device.
- ▶ Any generally applicable regulations and standards must be fulfilled.

**CAUTION**

**Device condensation**

If the device is or was exposed to climatic changes (temperature fluctuation, air humidity) moisture can form on or in the device (device condensation). In this case, there is a risk of short-circuit.

- ▶ The device must **not** be switched on when device condensation is present.
- ▶ If condensation is present on the device, or if it was exposed to temperature fluctuations, it must be allowed to adjust to room temperature (do not expose the device to the direct heat of heating devices) prior to commissioning.

☞ **Required depending on device version and operating system used:**
- **CF card with operating system (for Windows XPe)**
- **Hard disk with operating system (for Windows XP)**
- **Active cooling unit (for devices with 1.8 GHz (XP-702-D…, XP-702-F…)**

1 Check the device for damage in transit.

☞ **The device must only be installed and commissioned in perfect technical condition and in compliance with this document.**

2 If required, fit the required PCI expansion card in the device. See Chapter 5.4.1 Fitting a PCI expansion card in the device, 🗎 44.

3 Fit the mass storage memory (CF cards and/or hard disk) in the device:
- Fitting the CF card, see Chapter 5.4.2, 🗎 46.
- Fitting the hard disk, see Chapter 5.4.3, 🗎 48.

4 With 1.8 GHz devices (XP-702-D…, XP-702-F…), fit an active cooling unit to the rear of the device. See Chapter 5.4.4 Mounting the active cooling unit, 🗎 50.

5 Mount the device in the control cabinet, control panel or the control desk (BOX devices only in control cabinets):
- Devices with display, see Chapter 5.4.5 Mounting a device with a display, 🗎 51.
- BOX devices, see Chapter 5.4.6 Mounting a BOX device, 🗎 56.

**6** Connect the device as required.

- Follow the instructions on wiring the relevant interface. See Chapter 5.3 Interfaces, 🗎 32.

☞ **The device is not provided with an On/Off switch. If the power supply is not provided with a switch, the device will start up (boot) as soon as it is connected to the power supply.**

### 5.4.1 Fitting a PCI expansion card in the device

**1** Remove the mounting screw (A) of the PCI card slot cover.

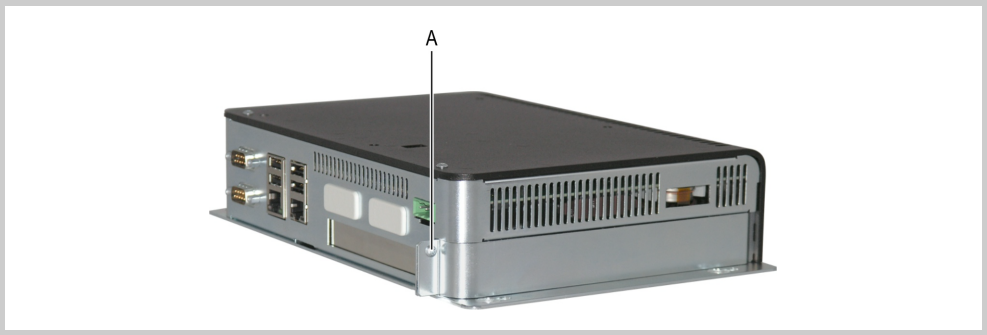


Abb. 20 Removing the mounting screw (A)

**2** Remove the side cover.

Abb. 21 Removing the side cover

**3** Remove the PCI card slot cover.
- Keep the PCI cardslot cover.

Abb. 22 Removing the PCI card slot cover

**4** Slide the PCI expansion card along the housing wall into the PCI card slot:
- The tab of the front plate of the PCI expansion card must be inserted in the recess provided for it on the device housing.
- The PCI contacts of the expansion card must be pushed all the way into the PCI interface of the device.

Abb. 23 Inserting the PCI expansion card

**5** Slide the two tabs of the side cover into the recesses provided for them in the device housing.

Abb. 24 Positioning the side cover

**6** Fasten the PCI expansion card and the side cover on the device using the mounting screw (A).

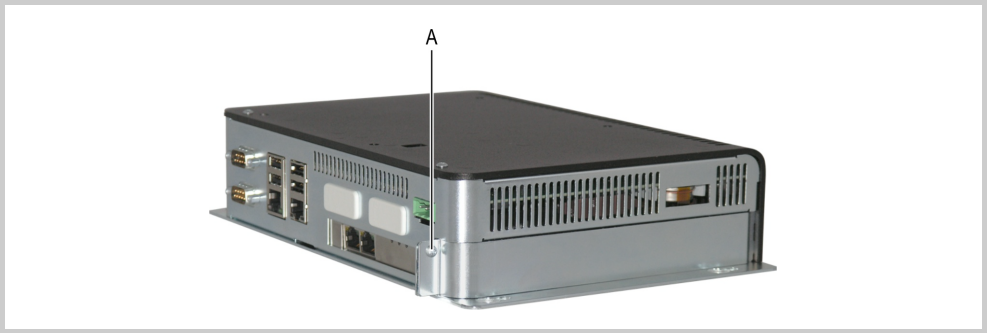


Abb. 25 Fastening the PCI expansion card and the side cover

### 5.4.2 Inserting and removing a CF card

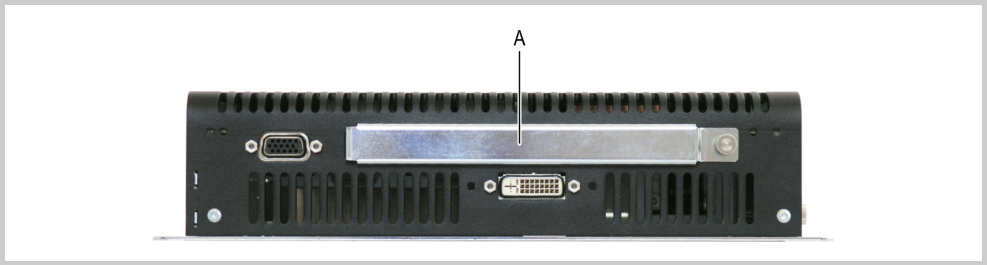


Abb. 26 Service side of the device (CF slot cover fitted)

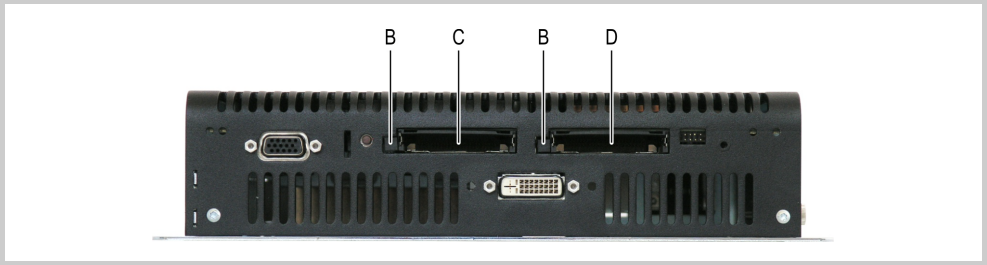


Abb. 27 Service side of the device (CF slot cover removed)

**CAUTION**

**Data loss**

During a write operation to a CF card/hard disk, this may lose data or may be destroyed if there is a power failure or if it is removed.

- ▶ Only insert and remove CF cards/hard disk when the device is in a de-energized state.
- ▶ Always secure CF cards with the CF slot cover.
- ▶ Before switching off:
  - Ensure that no software write operations to a CF card/hard disk are in progress («CF ACT» and «HD ACT» LEDs must not be lit).
  - Shut down the operating system.
- ▶ If possible, avoid write operations to CF cards/hard disk. Reasons:
  - The number of write cycles possible on CF cards is limited.
  - A power failure during write operations will most likely lead to loss of data.
- ▶ If the writing of the CF card/hard disk cannot be avoided, use an uninterruptible power supply (USP) to prevent data loss.

☞ **Do not apply any force (CF cards are protected against reverse insertion).**

**Inserting a CF card**

1 Remove the CF slot cover (A).

2 Push the CF card all the way into the CF slot:

- CF card with operating system in CF slot 0 (C)
- CF card with data in CF slot 1 (D)

3 Fit the CF slot cover (A).

**Removing a CF card**

1 Remove the CF slot cover (A).

2 Fully press in the ejector button (B) of the CF slot containing the CF card to be removed.
   - This will cause the CF card to come out of the CF slot slightly.

3 Pull the CF card out of the CF slot.

4 Fit the CF slot cover (A).

### 5.4.3 Fitting a hard disk in the device

**CAUTION**

**Data loss**

During a write operation to a CF card/hard disk, this may lose data or may be destroyed if there is a power failure or if it is removed.

- ▶ Only insert and remove CF cards/hard disk when the device is in a de-energized state.
- ▶ Always secure CF cards with the CF slot cover.
- ▶ Before switching off:
  - Ensure that no software write operations to a CF card/hard disk are in progress («CF ACT» and «HD ACT» LEDs must not be lit).
  - Shut down the operating system.
- ▶ If possible, avoid write operations to CF cards/hard disk. Reasons:
  - The number of write cycles possible on CF cards is limited.
  - A power failure during write operations will most likely lead to loss of data.
- ▶ If the writing of the CF card/hard disk cannot be avoided, use an uninterruptible power supply (USP) to prevent data loss.

**1** Remove the hard disk slot cover (A).
- ■ Keep the hard disk slot cover.

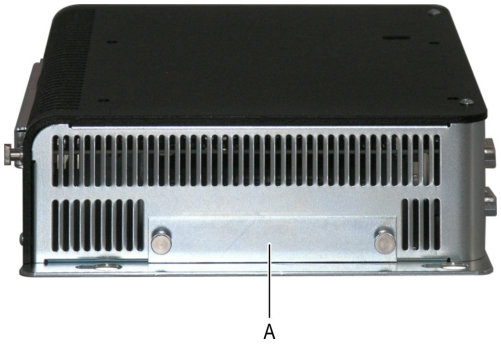


Abb. 28 Hard disk slot cover (A)

**2** Insert the hard disk into the hard disk slot.

☞ **Do not apply force (hard disk is protected against incorrect insertion).**

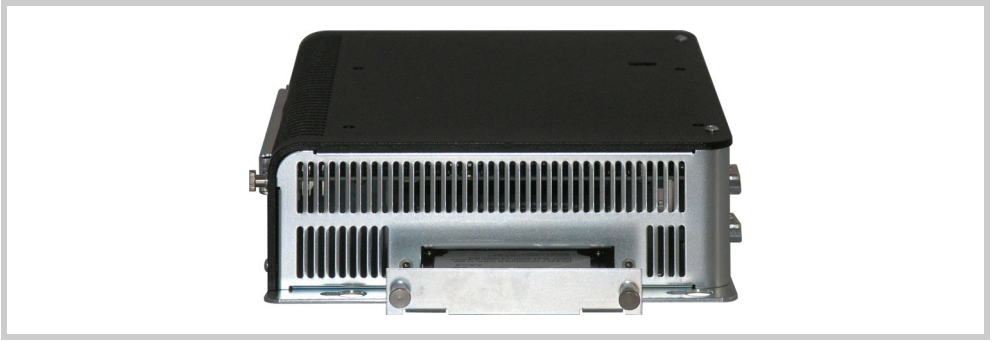

Abb. 29 Inserting a hard disk into the hard disk slot

**3** Fasten the hard disk module with the two knurled screws.

### 5.4.4 Mounting the active cooling unit

1 Connect the power supply for the active cooling unit on the device.

Abb. 30 Power supply for the active cooling unit connected

2 Position the active cooling unit on the device so that the expanding rivets are located on the device mounting holes provided for this.

Abb. 31 Active cooling unit positioned

3 Push the four expanding rivets into the mounting holes.

Abb. 32 Active cooling unit mounted

### 5.4.5 Mounting a device with a display

**The following number of retaining brackets and threaded pins are required for mounting in accordance with IP65 / NEMA 4X and for use in potentially explosive atmospheres:**
- **8.4", 10.4" and 12.1" devices: 8 pieces each**
- **15" devices: 12 pieces each**

**If needed, please order additional retaining brackets with threaded pins from your supplier.**

1 Select the mounting position of the device as described in Chapter 5.2.2 Requirements for the mounting position, 30.

2 Prepare a mounting cutout for the device at the selected position:
- Mounting cutout:
  - 8.4" devices: 261 × 194 mm (±1 mm)
  - 10.4" devices: 329 × 238 mm (±1 mm)
  - 12.1" devices: 344 × 262 mm (±1 mm)
  - 15" devices: 410 × 315 mm (±1 mm)
- Material thickness at the mounting cutout 2…5 mm

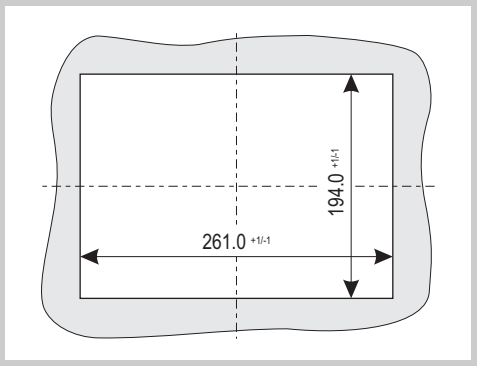


Abb. 33 Mounting cutout for 8.4" devices

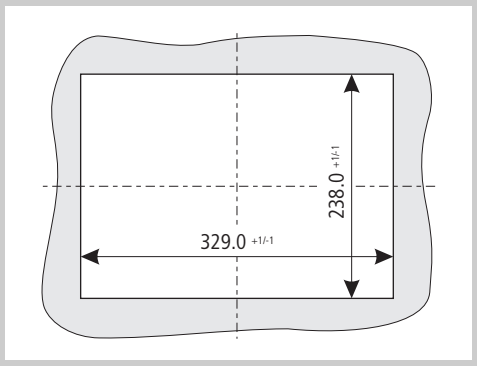


Abb. 34 Mounting cutout for 10.4" devices

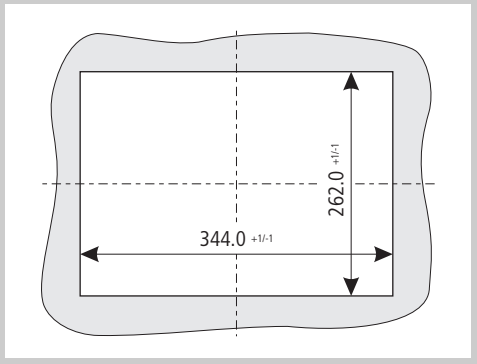


Abb. 35 Mounting cutout for 12.1" devices

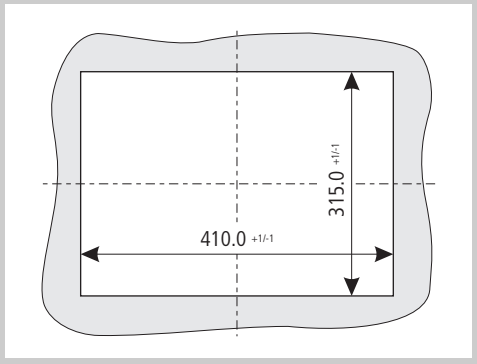


Abb. 36 Mounting cutout for 15" devices

3 If no sealing strip is glued in the groove (A) on the rear of the device front plate, insert the sealing strip supplied in the groove (A) and cut it so that the join is tight.

**CAUTION**

**Poor sealing**

Poor sealing resulting from the twisting of the sealing strip or due to a gap between the ends of the sealing strip.

- ▶ The join of the sealing strip must be positioned on the bottom of the device.
- ▶ Do **not** twist the sealing strip when it is inserted.
- ▶ Cut the sealing strip to a suitable length so that the join is tight.

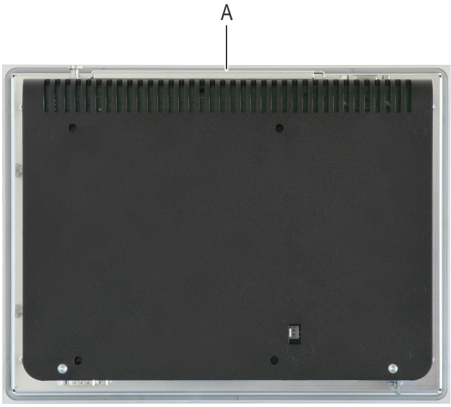


Abb. 37 Groove for sealing strip (A)

4 Fit the supplied threaded pins in the retaining brackets beforehand.

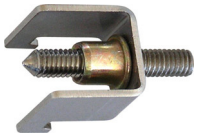

Abb. 38 Threaded pin pre-fitted in a retaining bracket

5 Fit the device from the front into the mounting cutout.

6 Clip on the retaining brackets in the recesses provided for them on the device as shown below and fix the device by tightening the threaded pins until the front of the MICRO PANEL is flush with the surface of the control cabinet at the fixing points.

**CAUTION**

**Mechanical damage to the device**

Tightening the threaded pins too tightly may damage the device.

- ▶ Tighten threaded pins with a max. tightening torque of 0.2 Nm.

**The positions of the retaining brackets depend on:**
- **the size of the device and**
- **the mounting requirements.**

- 8.4" devices (standard mounting):
  - Top and bottom of the device:
    Fit one retaining bracket each at the left and right fixing position

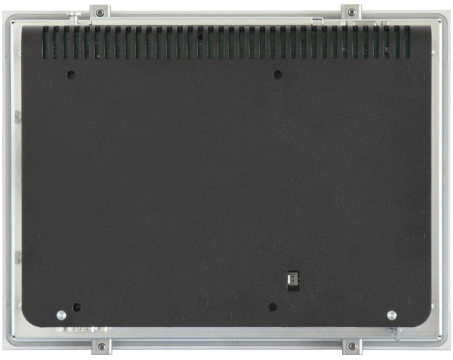

Abb. 39 8.4" devices with four retaining brackets (do not meet IP65 / NEMA 4X requirements)

- 8.4" devices which must be mounted in accordance with IP65 / NEMA 4X or used in potentially explosive atmospheres:
  - Top and bottom of the device:
    Fit one retaining bracket each at the left and right fixing position
  - Left and right on the device:
    One retaining bracket each at the top and bottom fixing position

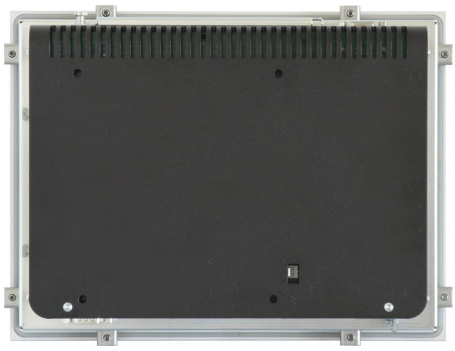

Abb. 40 8.4" devices with eight retaining brackets (meet IP65 / NEMA 4X requirements)

- 10.4" and 12.1" devices (standard mounting):
  - Top and bottom of the device:
    One retaining bracket each at the central fixing position
  - Left and right on the device:
    One retaining bracket each at the top and bottom fixing position

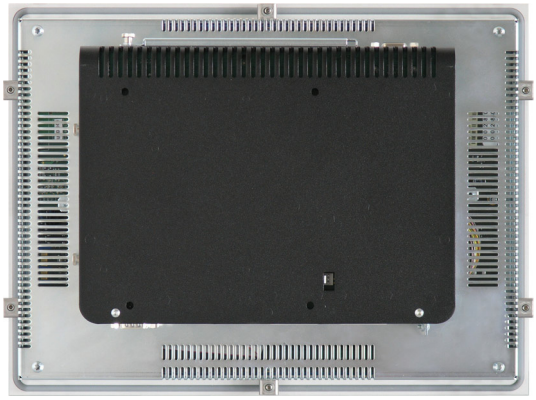

Abb. 41 10.4" and 12.1" devices with six retaining brackets (do not meet IP65 / NEMA 4X requirements)

- 10.4" and 12.1" devices which must be mounted in accordance with IP65 / NEMA 4X or used in potentially explosive atmospheres:
  - Top and bottom of the device:
    One retaining bracket each at the outermost fixing position on the left and on the right, and at the central fixing position
  - Left and right on the device:
    One retaining bracket each at the central fixing position

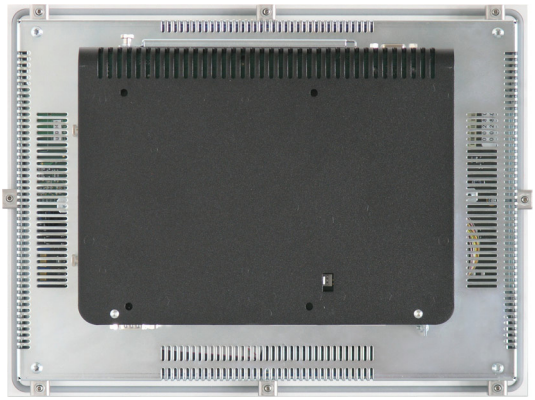

Abb. 42 10.4" and 12.1" devices with eight retaining brackets (meet IP65 / NEMA 4X requirements)

- 15" devices (standard mounting):
  - Top and bottom of the device:
    One retaining bracket each at the second fixing position from the left and from the right
  - Left and right on the device:
    One retaining bracket each at the top and bottom fixing position

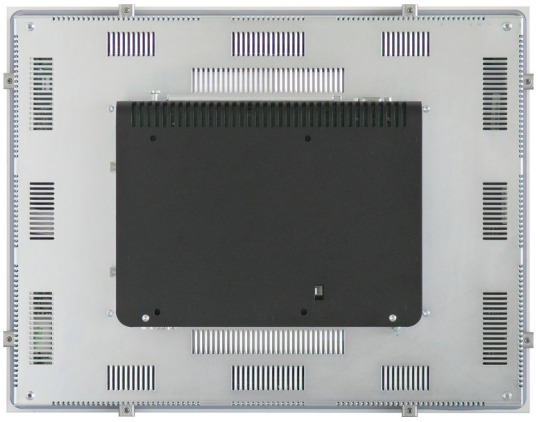

Abb. 43 15" devices with eight retaining brackets (do not meet IP65 / NEMA 4X requirements)

- 15" devices which must be mounted in accordance with IP65 / NEMA 4X or used in potentially explosive atmospheres:
  - Top and bottom of the device:
    One retaining bracket each at the outermost and at the two innermost fixing positions
  - Left and right on the device:
    One retaining bracket each at the two innermost fixing positions

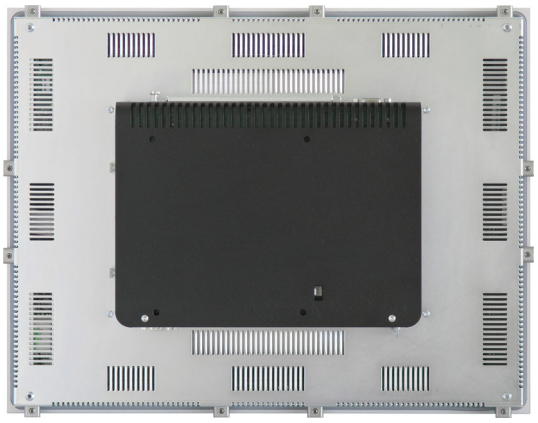

Abb. 44 15" devices with twelve retaining brackets (meet IP65 / NEMA 4X requirements)

### 5.4.6 Mounting a BOX device

1 Select the mounting position of the device in the control cabinet as described in Chapter 5.2.2 Requirements for the mounting position, 🗎 30.

2 Mount the device at the appropriate position.

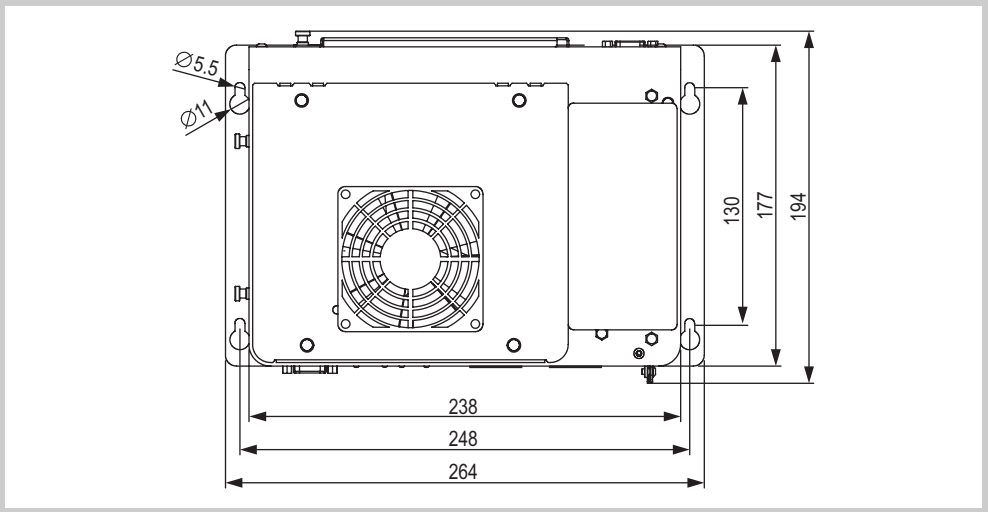


Abb. 45 BOX device with active cooling unit (view from rear)

# 6 Operation

## 6.1 Safety regulations

**Read Chapter 3 Safety regulations, 🗎 17 before working with the device. This contains important information for your personal safety.**

**CAUTION**

**Device condensation**

If the device is or was exposed to climatic changes (temperature fluctuation, air humidity) moisture can form on or in the device (device condensation). In this case, there is a risk of short-circuit.

- The device must **not** be switched on when device condensation is present.
- If condensation is present on the device, or if it was exposed to temperature fluctuations, it must be allowed to adjust to room temperature (do not expose the device to the direct heat of heating devices) prior to commissioning.

## 6.2 Starting the device

Requirement:

- The CF card with the operating system is located in the CF slot 0
- or the hard disk with the operating system is mounted in the device.

Procedure:

1. Energize the device.
   - The device will boot.
2. If the device does not boot up and/or if an error message appears while starting (booting) the device, see Chapter 7.4 Troubleshooting, 🗎 65.
3. Complete the following steps after initial commissioning
   (→ Document «MN05010008Z-EN System Description Windows XP/XPe»):
   - **3.1** Adjust the system settings of the device.
   - **3.2** Install the required application programs.

## 6.3 Switching off the device

☞ **Frequent on/off switching of the device, especially at low temperatures, will reduce the lifespan of the cold cathode tubes (CCFL) of the backlight.**
- **Avoid frequent on/off switching of the device.**

1. Shut down the operating system.
2. De-energize the device.

☞ **To switch on the device again, it must be de-energized and can only be switched on again after a pause of 20 seconds.**

# 7 Maintenance and service

## 7.1 Safety regulations

☞ **Read Chapter 3 Safety regulations, 🗎 17 before working with the device. This contains important information for your personal safety.**

## 7.2 Maintenance

The infra-red frame on devices with infra-red touch must be cleaned regularly (see Chapter 7.2.1 Cleaning the infra-red touch, 🗎 60). Otherwise these devices are maintenance-free.

### 7.2.1 Cleaning the infra-red touch

The infra-red frame must be cleaned regularly.

☞ **The infra-red touch needs to be cleaned if the following is indicated:**

- **On the taskbar of the display, one of the following icons will appear:**
  - **: Contaminated touch sensor**
  - **: Faulty or severely contaminated touch sensor**
- **A visualization application will show an appropriate warning.**

The infra-red channels may be interrupted if the infra-red frame is severely contaminated. In extreme cases, this may mean that the affected zones of the touch sensor cannot be touch activated.

**CAUTION**

**Cleaning the device**

Damage to the device due to the use of pointed or sharp objects or by liquids.

- ▶ Do not use any pointed or sharp objects (e.g. knife) for cleaning.
- ▶ Do not use any aggressive or abrasive cleaning agent or solvent.
- ▶ Avoid any liquid entering the device (risk of short-circuit).

1 Clean the infra-red frame and the display with a clean, soft, damp cloth.
   - With stubborn contamination, spray a little cleaning agent onto the damp cloth first.

### 7.2.2 Recalibrating the infra-red touch

Devices with infra-red touch do not have to be recalibrated.

### 7.2.3 Replacing the battery

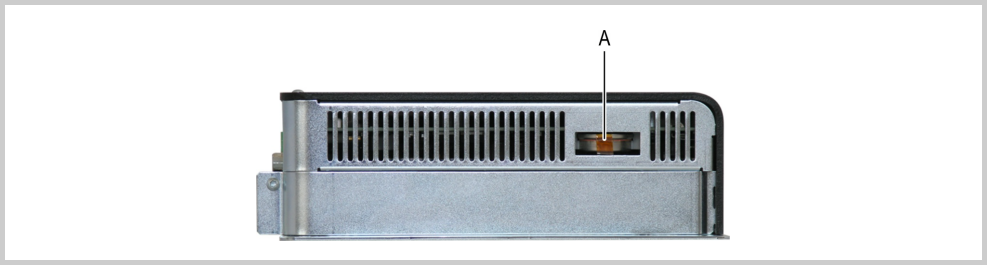


Abb. 46 Battery (A)

1 Remove the battery from the opening in the device housing by pulling on the tab.
2 Insert a new battery into the device.
   - Battery type, see Chapter 9.4 System, 🗎 77.
3 Reset the date and time of the device.

## 7.3 Service

### 7.3.1 Repairs

The device must only be opened by the manufacturer or by an authorized repair center.

Contact your local supplier or Eaton technical support for repairs.

Only the original packaging should be used for transporting the device.

### 7.3.2 Replacing the active cooling unit

1 Undo the fixing of the active cooling unit by pulling on the heads of the expanding rivets.

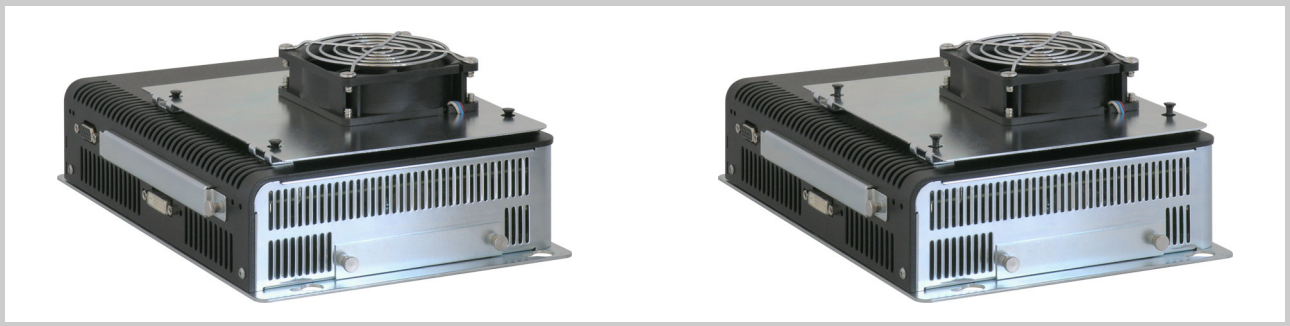

Abb. 47 Undoing the fastening for the active cooling unit

2 Pull the power supply connector from the active cooling unit.

Abb. 48 Connector for the power supply of the active cooling unit

3 Connect the power supply of the new active cooling unit on the device.

4 Position the active cooling unit on the device so that the expanding rivets are located on the device mounting holes provided for this.

Abb. 49 Active cooling unit positioned

**5** Push the four expanding rivets into the mounting holes.

Abb. 50 Active cooling unit mounted

## 7.4 Troubleshooting

| Fault and possible cause | Corrective action |
|---|---|
| Device does not start (boot). | |
| Power supply interface does not have any power. | Check the power supply cable. |
| The device was not de-energized after shut down. | De-energize the device for at least 20 s after shutdown. |
| While the device is starting (booting), the following message appears: | |
| «Reboot and select proper boot device…» | |
| There is no CF card/hard disk with operating system in the CF slot 0/hard disk slot. | Insert the CF card/hard disk with the operating system in the CF slot 0/hard disk slot. |
| CF card/hard disk in CF slot 0/hard disk slot is not bootable. | Replace the CF card/hard disk with the operating system in CF slot 0/hard disk slot. |
| A bootable USB mass storage memory without an operating system is connected to the device. | Remove the USB mass storage memory. |
| Display remains or becomes dark. | |
| Backlight is faulty. | Send in your device for repair. |
| BIOS setup lost or BIOS incorrectly set. | Send in your device for repair. |
| Second display remains black when the device is started (booted). | |
| Second display is deactivated. | Activate the second display (→ Chapter 7.4.1, 🗎 66). |
| Touch does not react or does not react correctly to touch operation. | |
| Infra-red frame of the infra-red touch is contaminated. | Clean the infra-red frame (→ Chapter 7.2.1, 🗎 60). |
| Touch controller is faulty. | Send in your device for repair. |
| The icon appears in the taskbar. | |
| Incorrect operation of the operating elements on the display. | Remove all objects from the area of the display. |
| Infra-red frame of the infra-red touch is contaminated. | Clean the infra-red frame (→ Chapter 7.2.1, 🗎 60). |
| The threaded pins for mounting the device have been tightened too much. | Loosen the threaded pins (observe max. torque, → Chapter 5.4.5, 🗎 51). |
| Device is faulty. | Send in your device for repair. |

| Fault and possible cause | Corrective action |
|---|---|
| Date/time is incorrect. | |
| Battery is empty/faulty. | ■ Replace battery (→ Chapter 7.2.3, 🗎 61).<br>■ Set date and time. |
| «SUPPLY ERR» LED lit. | |
| Device is faulty. | Send in your device for repair. |

Tab. 17 Troubleshooting

### 7.4.1 Activate the second display

If the device is started while the second display is **not** connected, in the device the setting «Single Display» is set. To activate the second display again, act as follows:

1 Connect an USB mouse to an USB interface of the device.

2 Energize the device.
- The device will boot.
- One display is booted up.

3 On the desktop of the display booted, click the right mouse key.

4 In the context menu, click [Graphics Properties].

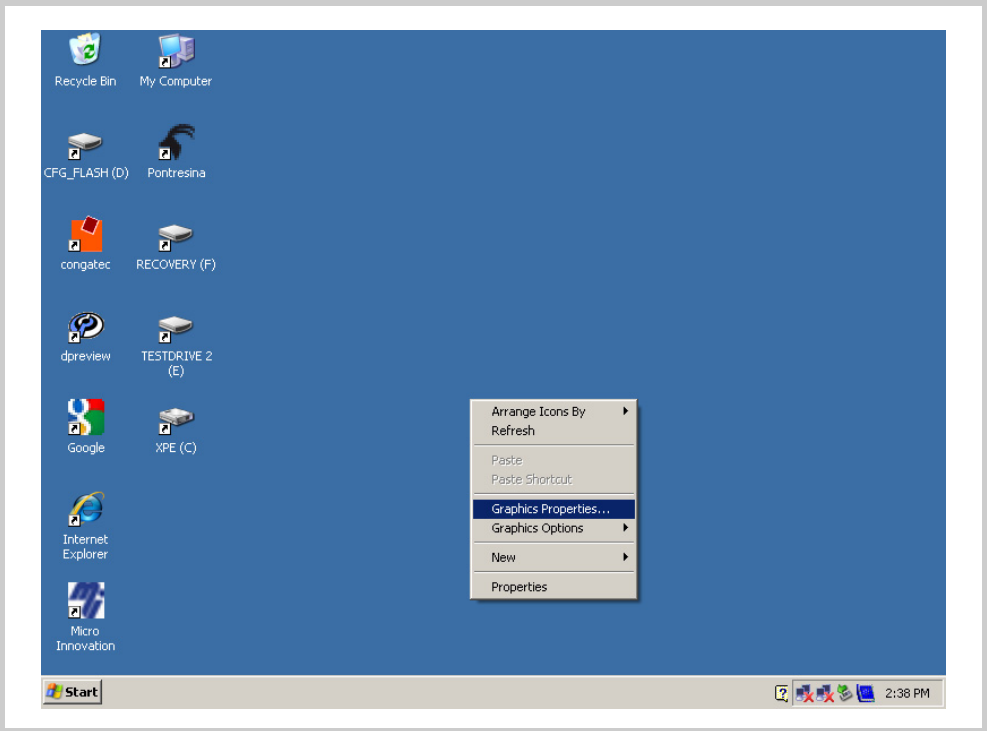


Abb. 51 [Graphics Properties] in the context menu

- The window «Monitor and Digital Display» appears.

5 Under «Multiple Display», select «Intel(R) Dual Display Clone».

Abb. 52 Window «Monitor and Digital Display»

**6** Click [OK].

- In the second display, it appears the same as in the first display.
- The window «Confirm the Desktop Change» appears.

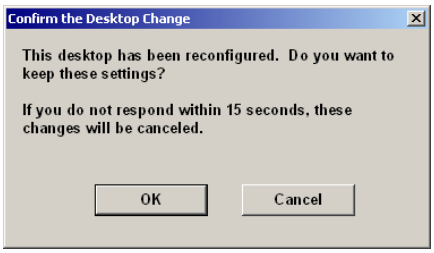


Abb. 53 Window «Confirm the Desktop Change»

**7** Click [OK].

# 8 Storage, transport and disposal

## 8.1 Safety regulations

☞ **Read Chapter 3 Safety regulations, 🗎 17 before installing and commissioning the device. This contains important information for your personal safety.**

## 8.2 Storage

The ambient conditions for storage must be fulfilled. See Chapter 9.9 Ambient conditions, 🗎 85.

## 8.3 Transport

Damage to the device must be prevented during transport (use an appropriate packaging).

The ambient conditions must be fulfilled even when the device is transported. See Chapter 9.9 Ambient conditions, 🗎 85.

1 Check the device on arrival for damage in transit.

## 8.4 Disposal

**⚠ DANGER**

**Explosive and toxic materials**

Any improper handling causes a risk of explosion due to the lithium battery soldered in the device and a risk of poisoning due to the mercury content of the cold cathode tubes.

▶ Dispose of the device properly.

Devices that are no longer used must be properly disposed of in accordance with the applicable national regulations or returned to the manufacturer or sales office.

### Materials used in the device

| Component | Material |
|---|---|
| Housing | Galvanized sheet steel and power-coated aluminum |
| Front plate | Aluminum, Peraluman 101 anodized |
| Infra-red frame | Polycarbonate (PC) |
| Infra-red touch protective panel | Glass |
| Cold cathode tubes | Mercury (< 5 mg) |
| Battery | Lithium CR2477, 3.0 V, 950 mAh, Renata |
| ■ Battery weight | 8.3 g |
| ■ SVHC Substance | 1.2 dimethoxy ethane (DME) |
| ■ Substance weight | 1-3.5 % |
| Electronic components | Various |

Tab. 18 Materials used in the device

☞ **The materials used for our housings are halogen-free.**

### Materials used in the packaging

| Packaging | Material |
|---|---|
| External packaging | Cardboard |
| Internal packaging | ■ Closed-cell polyethylene foam, CFC-free<br>■ Plastic bag: Polyethylene (PE) |

Tab. 19 Materials used in the packaging

# 9 Technical data

## 9.1 Dimensions and weights

### 9.1.1 BOX devices

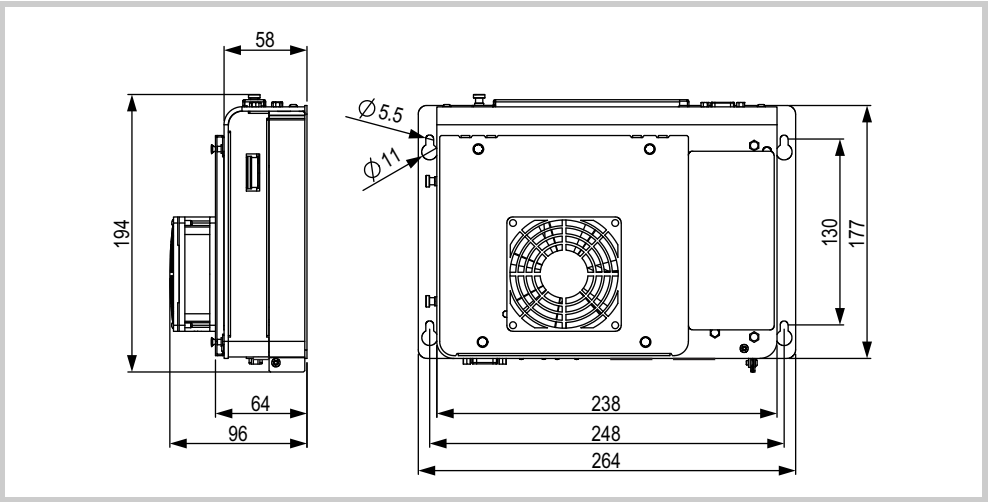


Abb. 54 Mechanical dimensions of the BOX devices in mm

| Property | XP-702 BOX |
|---|---|
| Height | 194 mm |
| Width | 264 mm |
| Depth | |
| Devices without active cooling unit | 58 mm |
| Devices with active cooling unit | 96 mm |
| Weight | |
| Devices without active cooling unit | Approx. 1.9 kg |
| Devices with active cooling unit | Approx. 2.3 kg |

Tab. 20 Dimensions and weights of the BOX devices

### 9.1.2 8.4" devices

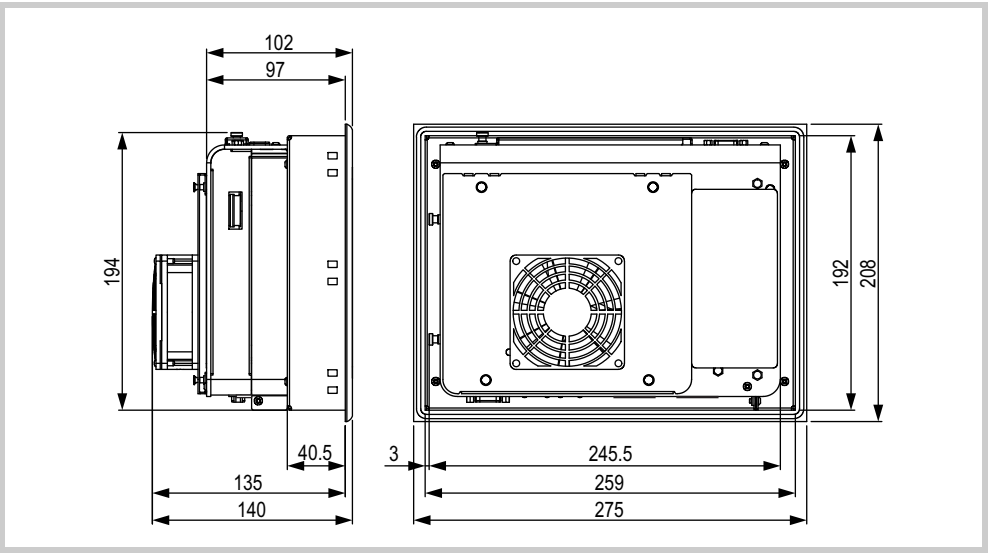


Abb. 55 Mechanical dimensions of the 8.4" devices in mm

| Property | XP-702 8.4" |
|---|---|
| Height | 208 mm |
| Width | 275 mm |
| Depth incl. front plate | |
| Devices without active cooling unit | 102 mm |
| Devices with active cooling unit | 140 mm |
| Thickness of front plate | 5 mm |
| Mounting depth | |
| Devices without active cooling unit | 97 mm |
| Devices with active cooling unit | 135 mm |
| Mounting cutout | 261 mm × 194 mm (±1 mm) |
| Weight | |
| Devices without active cooling unit | Approx. 3.2 kg |
| Devices with active cooling unit | Approx. 3.6 kg |

Tab. 21 Dimensions and weights of the 8.4" devices

### 9.1.3 10.4" devices

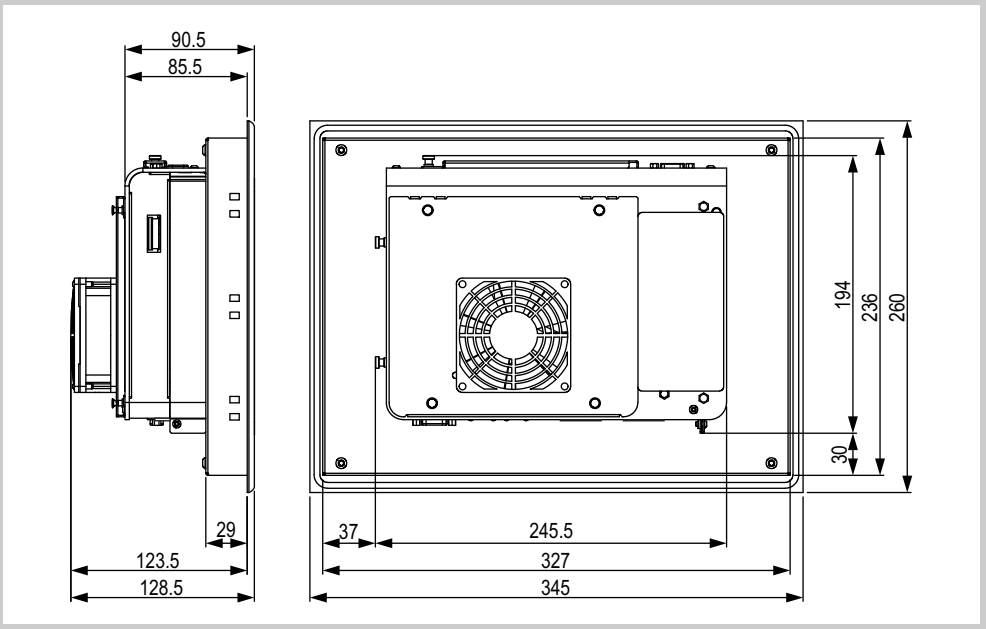


Abb. 56 Mechanical dimensions of the 10.4" devices in mm

| Property | XP-702 10.4" |
|---|---|
| Height | 260 mm |
| Width | 345 mm |
| Depth incl. front plate | |
| Devices without active cooling unit | 90.5 mm |
| Devices with active cooling unit | 128.5 mm |
| Thickness of front plate | 5 mm |
| Mounting depth | |
| Devices without active cooling unit | 85.5 mm |
| Devices with active cooling unit | 123.5 mm |
| Mounting cutout | 329 × 238 mm (±1 mm) |
| Weight | |
| Devices without active cooling unit | Approx. 4.1 kg |
| Devices with active cooling unit | Approx. 4.5 kg |

Tab. 22 Dimensions and weights of the 10.4" devices

### 9.1.4 12.1" devices

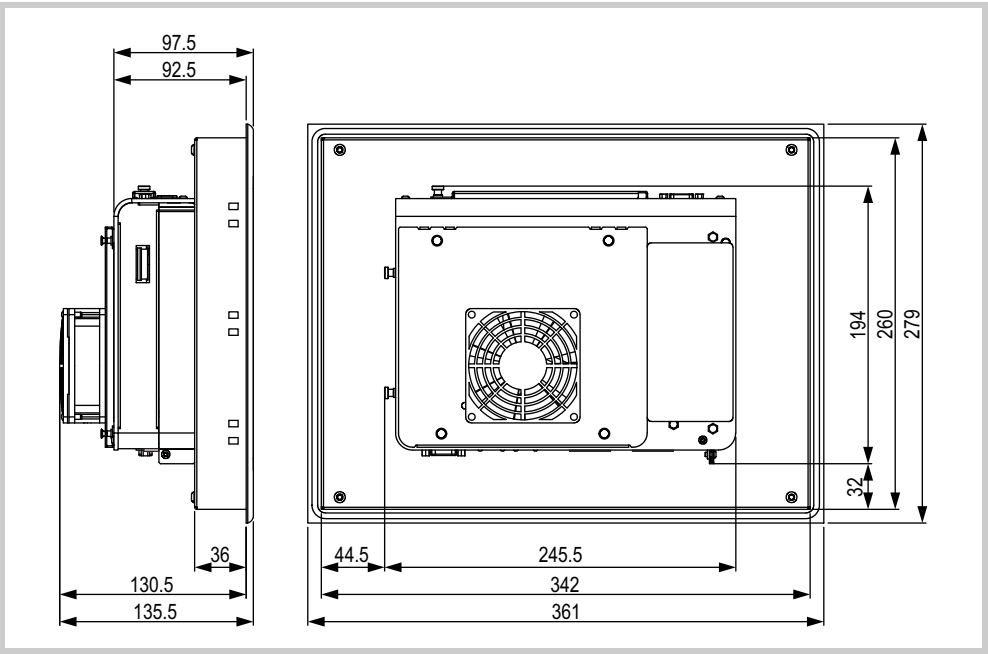


Abb. 57 Mechanical dimensions of the 12.1" devices in mm

| Property | XP-702 12.1" |
|---|---|
| Height | 279 mm |
| Width | 361 mm |
| Depth incl. front plate | |
| Devices without active cooling unit | 97.5 mm |
| Devices with active cooling unit | 135.5 mm |
| Thickness of front plate | 5 mm |
| Mounting depth | |
| Devices without active cooling unit | 92.5 mm |
| Devices with active cooling unit | 130.5 mm |
| Mounting cutout | 344 × 262 mm (±1 mm) |
| Weight | |
| Devices without active cooling unit | Approx. 4.7 kg |
| Devices with active cooling unit | Approx. 5.1 kg |

Tab. 23 Dimensions and weights of the 12.1" devices

### 9.1.5 15" devices

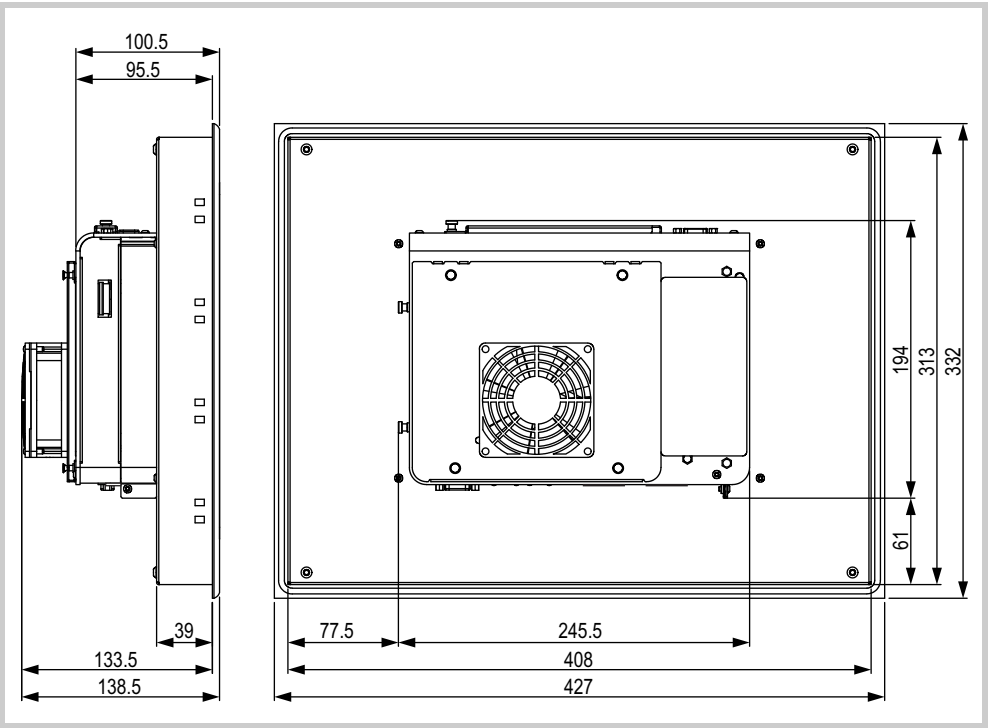


Abb. 58 Mechanical dimensions of the 15" devices in mm

| Property | XP-702 15" |
|---|---|
| Height | 332 mm |
| Width | 427 mm |
| Depth incl. front plate | |
| Devices without active cooling unit | 100.5 mm |
| Devices with active cooling unit | 138.5 mm |
| Thickness of front plate | 5 mm |
| Mounting depth | |
| Devices without active cooling unit | 95.5 mm |
| Devices with active cooling unit | 133.5 mm |
| Mounting cutout | 410 mm × 315 mm (±1 mm) |
| Weight | |
| Devices without active cooling unit | Approx. 6.3 kg |
| Devices with active cooling unit | Approx. 6.7 kg |

Tab. 24 Dimensions and weights of the 15" devices

## 9.2 Display

| Property | XP-702 8.4"/10.4"/12.1"/15" |
|---|---|
| Type | TFT-LCD (color) |
| Resolution (W × H) | |
| SVGA devices:<br>■ XP-702-…-84TSI<br>■ XP-702-…-10TSI | SVGA (800 × 600 pixels) |
| XGA devices:<br>■ XP-702-…-12TXI<br>■ XP-702-…-15TXI | XGA (1024 × 768 pixels) |
| Visible display area | |
| 8.4" devices | 170 mm × 128 mm (8.4" screen diagonal) |
| 10.4" devices | 211 mm × 158 mm (10.4" screen diagonal) |
| 12.1" devices | 246 mm × 185 mm (12.1" screen diagonal) |
| 15" devices | 304 mm × 228 mm (15" screen diagonal) |
| Color resolution | Adjustable: 16.7 mill., 64 k or 256 colors |
| Contrast ratio | Normally 400:1 |
| Brightness | Normally 400 cd/m$^2$ |
| Backlight | |
| Technology | |
| 8.4", 10.4" and 12.1" devices | 2× CCFL |
| 15" devices | 4× CCFL |
| Lifespan | Normally 50 000 h |
| Infra-red touch protective panel | Non-reflective safety glass |

Tab. 25 Display

## 9.3 Touch sensor

| Property | XP-702 8.4"/10.4"/12.1"/15" |
|---|---|
| Type | Infra-red touch |
| Resolution | |
| 8.4" devices | 63 × 47 logic channels |
| 10.4" devices | 79 × 59 logic channels |
| 12.1" devices | 95 × 71 logic channels |
| 15" devices | 107 × 83 logic channels |

Tab. 26 Touch sensor of the devices with infra-red touch

## 9.4 System

| Property | XP-702 |
|---|---|
| Processor, depending on the device version: | |
| Devices with 1 GHz (XP-702-C…, XP-702-E…) | X86 Celeron M, 1 GHz |
| Devices with 1.8 GHz (XP-702-D…, XP-702-F…) | X86 Pentium M, 1.8 GHz |
| Internal memory | |
| DRAM | |
| Devices with 1 GHz (XP-702-C…, XP-702-E…) | 1024 MByte |
| Devices with 1.8 GHz (XP-702-D…, XP-702-F…) | 2048 MByte |
| External memory (optional) | |
| CF slot | 2× CompactFlash Card Type I/II<br>for operating system, programs and data<br>Use only original accessories. |
| Hard disc slot | 1× 2.5" hard disc<br>for operating system, programs and data<br>Use only original accessories. |
| Real-time clock (battery backup) | |
| Battery type | CR2477 (950 mA/h), maintenance-free |
| Backup time in de-energized state | Normally 10 years |

Tab. 27 System

## 9.5 Interfaces

| Property | XP-702 |
|---|---|
| Ethernet | ■ 1 × 100Base-TX / 10Base-T<br>■ 1 × 1000Base-T / 100Base-TX / 10Base-T |
| COM | 2 × RS232, not electrically isolated |
| USB Host | 4 × USB 2.0 (1.5 / 12 / 480 Mbit/s),<br>not electrically isolated |
| PCI | PCI 32 bit 2.1:<br>Slot for 3.3 V PCI expansion card<br>(e.g.: communication module) |
| VGA | VGA |
| DVI (only BOX devices) | DVI-D (Single Link) |
| Power supply | → Chapter 9.5.1, 🗎 79 |
| DIAG | Only for service tasks |

Tab. 28 Interfaces

## 9.5.1 Power supply

### 9.5.1.1 Devices with 1 GHz (XP-702-C…, XP-702-E…)

| Property | XP-702-C…, XP-702-E… |
|---|---|
| Rated voltage | 24 VDC SELV (safety extra low voltage) |
| Permissible voltage | ■ RMS value:<br>20.4…28.8 VDC<br>(rated voltage -15 % / +20 %)<br>■ Absolute with ripple:<br>19.2 … 30.0 VDC<br>■ 35 VDC for a period < 100 ms |
| Voltage dips | ■ 1 ms from rated voltage (24 VDC)<br>■ 1 ms from undervoltage (20.4 VDC) |
| Power consumption | |
| BOX devices | |
| Basic device | Max. 18 W (normally 15 W) |
| PCI expansion card | Max. 7 W |
| USB stations on USB host | Max. 6 W |
| Hard disk | Max. 2.5 W |
| Total | Max. 33.5 W |
| 8.4" devices | |
| Basic device | Max. 33 W (normally 27 W) |
| PCI expansion card | Max. 7 W |
| USB stations on USB host | Max. 6 W |
| Hard disk | Max. 2.5 W |
| Total | Max. 48.5 W |
| 10.4" devices | |
| Basic device | Max. 33 W (normally 27 W) |
| PCI expansion card | Max. 7 W |
| USB stations on USB host | Max. 6 W |
| Hard disk | Max. 2.5 W |
| Total | Max. 48.5 W |

| Property | XP-702-C…, XP-702-E… |
|---|---|
| 12.1" devices | |
| Basic device | Max. 35 W (normally 28 W) |
| PCI expansion card | Max. 7 W |
| USB stations on USB host | Max. 6 W |
| Hard disk | Max. 2.5 W |
| Total | Max. 50.5 W |
| 15" devices | |
| Basic device | Max. 49 W (normally 40 W) |
| PCI expansion card | Max. 7 W |
| USB stations on USB host | Max. 6 W |
| Hard disk | Max. 2.5 W |
| Total | Max. 64.5 W |
| Current consumption | |
| Continuous current | |
| BOX devices | Max. 1.4 A (24 VDC) |
| 8.4" devices | Max. 2.0 A (24 VDC) |
| 10.4" devices | Max. 2.0 A (24 VDC) |
| 12.1" devices | Max. 2.1 A (24 VDC) |
| 15" devices | Max. 2.7 A (24 VDC) |
| Starting current inrush | 2 $A^2s$ |
| Protection against reverse polarity | Yes |
| Fuse | Yes (replacement only by the manufacturer or by an authorized repair center) |
| Potential isolation | No |

Tab. 29 Power supply devices with 1 GHz (XP-702-C…, XP-702-E…)

### 9.5.1.2 Devices with 1.8 GHz (XP-702-D…, XP-702-F…)

| Property | XP-702-D…, XP-702-F… |
|---|---|
| Rated voltage | 24 VDC SELV (safety extra low voltage) |
| Permissible voltage | ■ RMS value:<br>20.4…28.8 VDC<br>(rated voltage -15 % / +20 %)<br>■ Absolute with ripple:<br>19.2 … 30.0 VDC<br>■ 35 VDC for a period < 100 ms |
| Voltage dips | ■ 1 ms from rated voltage (24 VDC)<br>■ 1 ms from undervoltage (20.4 VDC) |
| Power consumption | |
| BOX devices | |
| Basic device | Max. 32.5 W (normally 26 W) |
| PCI expansion card | Max. 7 W |
| USB stations on USB host | Max. 6 W |
| Hard disk | Max. 2.5 W |
| Total | Max. 48 W |
| 8.4" devices | |
| Basic device | Max. 42 W (normally 35 W) |
| PCI expansion card | Max. 7 W |
| USB stations on USB host | Max. 6 W |
| Hard disk | Max. 2.5 W |
| Total | Max. 57.5 W |
| 10.4" devices | |
| Basic device | Max. 44.5 W (normally 38 W) |
| PCI expansion card | Max. 7 W |
| USB stations on USB host | Max. 6 W |
| Hard disk | Max. 2.5 W |
| Total | Max. 60 W |
| 12.1" devices | |
| Basic device | Max. 44.5 W (normally 38 W) |
| PCI expansion card | Max. 7 W |
| USB stations on USB host | Max. 6 W |
| Hard disk | Max. 2.5 W |
| Total | Max. 60 W |

| Property | XP-702-D…, XP-702-F… |
|---|---|
| 15" devices | |
| Basic device | Max. 61 W (normally 52 W) |
| PCI expansion card | Max. 7 W |
| USB stations on USB host | Max. 6 W |
| Hard disk | Max. 2.5 W |
| Total | Max. 76.5 W |
| Current consumption | |
| Continuous current | |
| BOX devices | Max. 2.0 A (24 VDC) |
| 8.4" devices | Max. 2.4 A (24 VDC) |
| 10.4" devices | Max. 2.5 A (24 VDC) |
| 12.1" devices | Max. 2.5 A (24 VDC) |
| 15" devices | Max. 3.2 A (24 VDC) |
| Starting current inrush | 2 $A^2s$ |
| Protection against reverse polarity | Yes |
| Fuse | Yes (replacement only by the manufacturer or by an authorized repair center) |
| Potential isolation | No |

Tab. 30 Power supply devices with 1.8 GHz (XP-702-D…, XP-702-F…)

## 9.6 Enclosure ratings

| Property | XP-702 |
|---|---|
| Front, depending on the device version: | |
| Devices without display (BOX devices) | IP20, Enclosure Type 1 |
| Devices with display | IP65, Enclosure Type 4X (indoor use only)<br>Required number of retaining brackets and threaded pins for mounting:<br>■ 8.4", 10.4" and 12.1" devices: 8 pieces each<br>■ 15" devices: 12 pieces each |
| Rear | IP20, Enclosure Type 1 |

Tab. 31 Enclosure ratings

## 9.7 Agency approvals and standards

| Property | XP-702 |
|---|---|
| EMC | 2004/108/EC |
| Explosion protection, depending on the device version: | |
| Devices without display (BOX devices) | II 3D Ex tc IIIC T70°C IP6x (ATEX 94/9/EC):<br>■ Zone 22, category 3D[1)] |
| Devices with display | II 3D Ex tc IIIC T70°C IP6x (ATEX 94/9/EC):<br>■ Zone 22, category 3D[1)]<br>Required number of retaining brackets and threaded pins for mounting:<br>- 8.4", 10.4" and 12.1" devices: 8 pieces each<br>- 15" devices: 12 pieces each |
| UL | Devices delivered with a glued in seal:<br>UL 508, file no. E205091<br>Required number of retaining brackets and threaded pins for mounting:<br>■ 8.4", 10.4" and 12.1" devices: 8 pieces each<br>■ 15" devices: 12 pieces each |

Tab. 32 Agency approvals and standards

1) Zone 22, category 3D:
- IP5x for devices of the group IIIB (non-conductive dust)
- IP6x for devices of the group IIIC (conductive dust)

## 9.8 Applicable standards and regulations

| Property | XP-702 |
|---|---|
| EMC (in relation to CE) | |
| IEC/EN 61000-6-2 | Immunity for industrial areas |
| IEC/EN 61000-6-4 | Emission for industrial environments<br>Devices meeting this standard may not be used in residential areas. |
| Explosion protection (in relation to CE) | |
| ATEX 94/9/EC: Zone 22, Category 3D (II 3D Ex tc IIIC T70°C IP6x): | |
| IEC/EN 60079-0 | Explosive atmospheres: equipment - general requirements |
| IEC/EN 60079-31 | Explosive atmospheres: equipment dust ignition protection by enclosure «t» |
| Safety | |
| IEC/EN 60950 | Safety of information technology equipment |
| UL 508 | Industrial control equipment<br>(Engineering conditions of acceptability by UL, → Kapitel 5.2.1, 🗎 30) |
| Product standards | |
| EN 50178 | Electronic equipment for use in power installations |
| IEC/EN 61131-2 | Programmable logic controllers, equipment requirements and tests |

Tab. 33 Applicable standards and regulations

## 9.9 Ambient conditions

| Property | XP-702 |
|---|---|
| Temperature | |
| Operation | |
| Devices without a hard disk | 0 … 50°C |
| Devices with consumer hard disk (optional, **not suitable** for continuous operation) | 0…45°C |
| Devices with industrial hard disk (optional, suitable for continuous operation) | 0 … 50°C |
| Storage / Transport | -20 … 60°C |
| Relative air humidity | 10 … 95%, non-condensing |
| Vibration in accordance with IEC/EN 60068-2-6 | Displacement:<br>■ 5…9 Hz: 3.5 mm<br>■ 9…60 Hz: 0.15 mm<br>Acceleration:<br>■ 60…150 Hz: 2 g |
| Schock in accordance with IEC/EN 60068-2-27 | 15 g / 11 ms |
| Fall test | In accordance with IEC/EN 60068-2-31 |

Tab. 34 Ambient conditions