Quantum 90

GAS-FIRED, DIRECT VENT, CONDENSING, HOT WATER

BOILERS

INSTALLATION INSTRUCTIONS

These instructions must be affixed on or adjacent to the boiler

WARNING

Improper installation, adjustment, alteration, service, or maintenance can cause injury or property damage. Refer to this manual. For assistance or additional information consult a qualified installer, service agency, or gas supplier.

DUNKIRK BOILERS

DUNKIRK, NEW YORK 14048 - 716 366-5500

Member: The Hydronics Institute

TABLE OF CONTENTS INTRODUCTION 3
BOILER RATINGS AND CAPACITIES 4
RULES FOR SAFE INSTALLATION AND OPERATION 7
BEFORE INSTALLING THE BOILER 7
A. codes 7
B. boiler sizing 8
C. considerations for boiler location 8
D. locating the boiler 8
E. combustion air and vent pipe requirements 9
F. condensate drain requirements 10
G. foundation requirements 11
H. removing existing boiler from common venting system 11
PLACING THE BOILER 11
NEAR BOILER PIPING 12
A. supply and return lines 12
B. pressure relief valve 16
C. expansion tank and make-up water 16
D. condensate drain piping 19
E. filling condensate trap 19
F. chilled water piping 20
COMBUSTION AIR AND VENT PIPE 21
A. connections and terminations 21
B. installation 22
GAS SUPPLY PIPING 25
A. check gas supply 25
B. connecting the gas piping 25
C. checking the gas piping 26
ELECTRICAL WIRING 27
A. electric power supply 27
B. install your thermostat. 28
C. field wiring connections 29
D. schematic wiring diagram 30
E. ladder wiring diagram 31
CONTROLS AND ACCESSORIES 32
A. UT 1013-10 integrated boiler control 32
B. gas control valve 32
C. hot surface igniter 32
D. L4006A high limit aquastat control 32
E. draft inducer temperature safety switch 32
F. casting temperature safety switch 33
G. differential pressure air proving switch 33

H. draft inducer 33
I. circulator pump 33
J. drain valve 33
K. relief valve 34
L. flame rollout safety shutoff 34
M. external condensate pump 34
START-UP 34
A. water treatment and freeze protection 34
B. filling boiler with water and purging air with diaphragm type expansion tanks 35
C. filling boiler with water and purging air with conventional closed type expansion tanks 35
D. boiler in placing 36
I. for your safety read before operating
II. operating instructions
III. to turn off gas to appliance
CHECK-OUT PROCEDURES AND ADJUSTMENTS 37
A. verify proper sequence of operation 37
B. inspect venting and air intake system 38
C. inspect condensate drain 38
D. inspect system piping 38
E. test ignition system safety shutoff 38
F. test high limit control and adjust 38
G. test other safety controls 39
H. set thermostat heat 39
1. measure the gas input rate 39
J. set thermostat to desired room temperature 41
K. review all instructions 41
L. installation and check-out certificate 41
MAINTENANCE AND CLEANING 43
A. beginning of each season 43
B. daily during heating season 43
C. monthly during heating 44
D. periodically during heating 44
E. end of each heating season -annual shut down procedure 44
F. annual examination and cleaning of boiler components 44
SERVICE HINTS 47
A flow chart/detailed sequence of operation 47
B. trouble shooting 50
C. differential air pressure switch check 58
REPAIR PARTS 59
A. jacket and base 59
B. condensate drain trap assembly 61
C. block and piping assembly 62
D. mixer and air pressure switch assembly 64
E. flue adapter and exhauster assembly 66

INTRODUCTION

This appliance is a gas-fired direct vent hot water boiler with cast aluminum boiler sections. A revolutionary cast aluminum heat exchanger means better heat transfer and thermal storage than similarly sized cast iron boilers, which results in higher efficiency. The heating system water absorbs large amounts of heat from the cast aluminum heat exchanger, cooling the flue gases and causing condensation. Sealed combustion, premix gas burner, and low flame temperature means drastically reduced CO and NOx emissions, which contribute to a cleaner and healthier environment.

This appliance, unlike normal residential atmospheric and induced draft units, takes its combustion air directly from the outdoors (sealed combustion) and does not compete with building occupants for fresh air. Sealed combustion (also known as “direct vent”) is the safest and best way to obtain plenty of clean combustion air. The induced draft fan draws in the outside combustion air, then takes the cooler flue gases from the boiler unit and provides a positive removal of the flue gases from the building through inexpensive and readily available PVC and CPVC pipes.

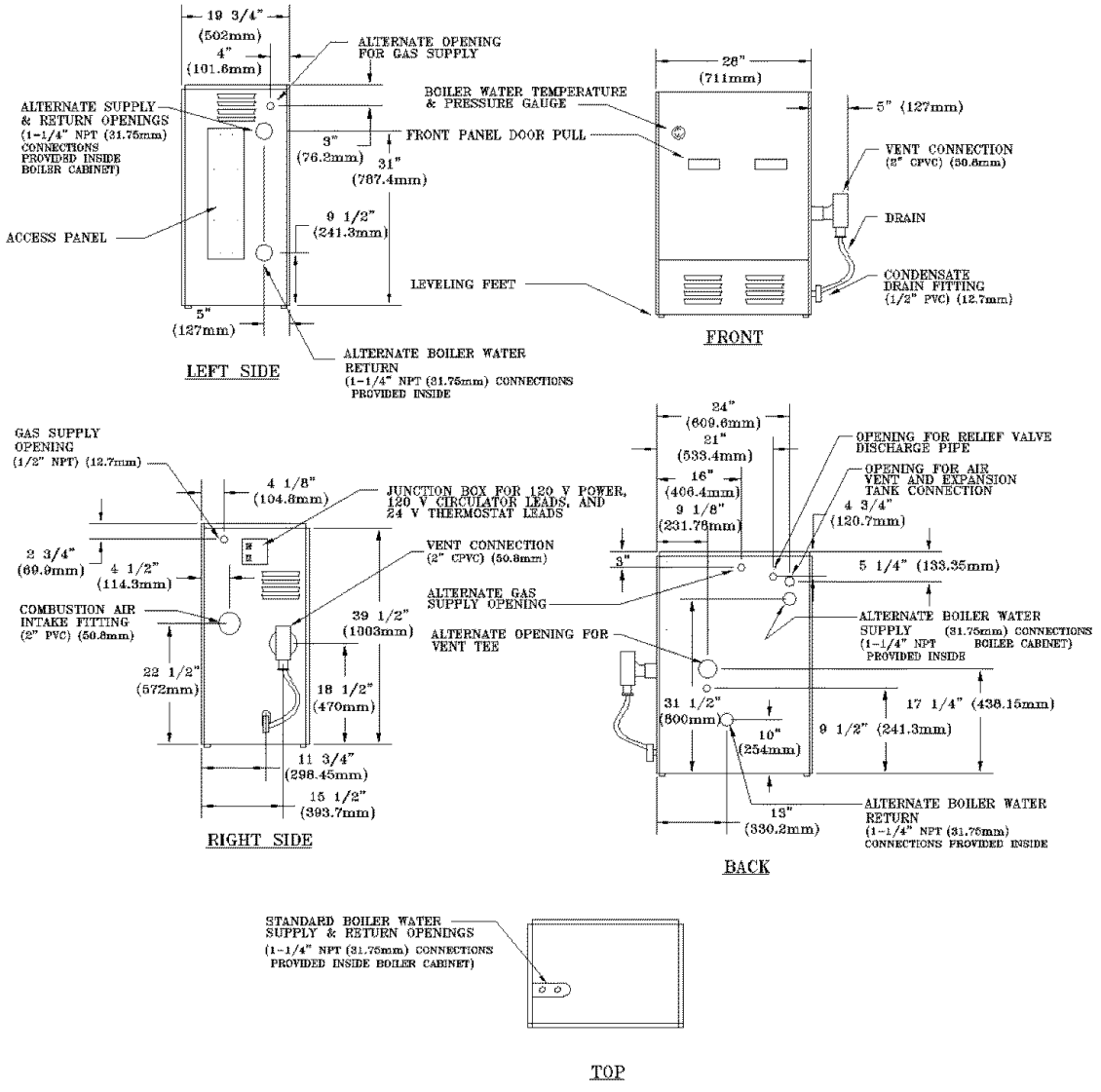

FIGURE 1

BOILER RATINGS AND CAPACITIES

TABLE 1 SEA LEVEL RATINGS - NATURAL AND PROPANE GASES					
Model	Input *(MBH)	++ Heating Capacity *(MBH)	Net I=B=R Rating *(MBH)	Shipping Weight (lbs.)	Flue Dia.
50	50	45	39	220	2" CPVC & PVC
75	75	68	59	220	2" CPVC & PVC
100	100	90	78	220	2" CPVC & PVC
* 1 MBH = 1,000 Btuh				Btuh = British Thermal Units Per Hour	

These low pressure gas-fired hot water boilers are design certified by CSA International for use with natural and propane gases. The boilers are constructed and hydrostatically tested for a maximum working pressure of 50 psig (pounds per square inch gage) in accordance with A.S.M.E. (American Society of Mechanical Engineers) Boiler and Pressure Vessel Code Section IV Standards for heating boilers.

++ AFUE (Annual Fuel Utilization Efficiency) and Heating Capacity is based on the D.O.E. (Department of Energy) test procedure.

The Boilers are certified in accordance with ANSI (American National Standards Institute) Z21.13 standards as gas-fired, direct vent, condensing, hot water boilers.

The **Heating Capacity** indicates the amount of heat available after subtracting the losses up the stack. Most of this heat is available to heat water. A small portion is heat from the jacket and surfaces of the boiler, and it is assumed that this heat stays in the structure. The **Net I=B=R Rating** represents the portion of the remaining heat that can be applied to heat the radiation or terminal units (i.e. finned tube baseboard, cast iron radiators, radiant floor, etc.). The difference between the Heating Capacity and the Net I=B=R Rating, called the piping and pickup allowance, establishes a reserve for heating the volume of water in the system and offsetting heat losses from the piping. The Net I=B R Ratings shown are based on a piping and pickup factor of 1.15 in accordance with the I=B=R Standard as published by the Hydronics Institute. The Net I=B=R Rating of the boiler selected should be greater than or equal to the calculated peak heating load (heat loss) for the building or area(s) served by the boiler and associated hot water heating systems. The manufacturer should be consulted before selecting a boiler for installations having unusual piping and pickup requirements.

BOILERS FOR USE AT HIGH ALTITUDE

The boilers are factory equipped for operation at altitudes ranging from 0-2,000 feet above sea level. For use of these boilers at altitudes above 2,000 feet above sea level, the gas input ratings (MBH) must be reduced.

U.S.A. ONLY: For altitudes above 2,000 feet above sea level, input ratings should be reduced as shown in tables IA, C, & E for natural gas boilers or in tables 1B, D & F for propane fired boilers. Reduced input ratings are achieved by the natural deration of the gas at higher elevations and fine tuned by adjusting the manifold pressure.

CANADA ONLY: For altitudes in the range of 2,000-4,500 feet above sea level, boilers may be field equipped for use at high altitude by using a certified high altitude conversion kit. The change in main burner orifice size results in a 10% reduction of the boiler gas input rating (MBH).

The conversion shall be carried out by a manufacturer's authorized representative, in accordance with the requirements of the manufacturer, provincial or territorial authorities having jurisdiction, and in accordance with the requirements of the CSA-B 149.1 and CSA-B 149.2 Installation Codes. The certified field conversion kit includes a conversion data plate, indicating that the boiler has been converted for high altitude use. The correct conversion information must be entered on the conversion data plate.

TABLE 1A MODEL-50 NATURAL GAS HIGH ALTITUDE RATINGS

ELEVATION (FEET)	0-2,000	3,000	4,000	5,000	6,000	7,000	7,500	8,500
NOMINAL INPUT (MBH)	50.0	48.0	47.8	47.5	46.0	44.0	43.5	42.0
HEAT CAPCITY (MBH)	45.0	43.2	43.0	42.8	41.4	39.6	39.2	37.8
NET I=B=R RATING (MBH)	39.0	37.4	37.3	37.1	35.9	34.3	34.0	32.8
GAS ORIFICE DRILL SIZE	.0615	.0615	.0615	.0615	.0615	.0615	.0615	.0615
MANIFOLD PRESSURE (INCHES WATER COLUMN)	2.5	2.7	3.0	3.2	3.1	3.0	2.8	2.7
PRESSURE SWITCH SETPOINT (INCHES WATER COLUMN)	1.55	1.55	1.55	1.55	1.55	1.55	1.55	1.55

TABLE 1B MODEL-50 PROPANE GAS HIGH ALTITUDE RATINGS

ELEVATION (FEET)	0-2,000	3,000	4,000	5,000	6,000	7,000	7,500	8,500
NOMINAL INPUT (MBH)	50.0	49.0	49.0	49.0	48.0	46.5	46.0	44.0
HEAT CAPCITY (MBH)	45.0	44.1	44.1	44.1	43.2	41.9	41.4	39.6
NET I=B=R RATING (MBH)	39.0	38.2	38.2	38.2	37.4	36.3	35.9	34.3
GAS ORIFICE DRILL SIZE	.0492	.0492	.0492	.0492	.0492	.0492	.0492	.0492
MANIFOLD PRESSURE (INCHES WATER COLUMN)	2.5	2.8	3.1	3.4	3.4	3.5	3.5	3.5
PRESSURE SWITCH SETPOINT (INCHES WATER COLUMN)	1.55	1.55	1.55	1.55	1.55	1.55	1.55	1.55

TABLE 1C MODEL-75 NATURAL GAS HIGH ALTITUDE RATINGS

ELEVATION (FEET)	0-2,000	3,000	4,000	5,000	6,000	7,000	7,500	8,500
NOMINAL INPUT (MBH)	75.0	70.0	69.0	68.0	63.5	58.0	56.5	52.0
HEAT CAPCITY (MBH)	68.0	63.0	62.1	61.2	57.2	52.2	50.9	46.8
NET I=B=R RATING (MBH)	58.9	54.6	53.8	53.0	49.6	45.2	44.1	40.6
GAS ORIFICE DRILL SIZE	.0760	.0760	.0760	.0760	.0760	.0760	.0760	.0760
MANIFOLD PRESSURE (INCHES WATER COLUMN)	2.5	2.7	2.8	3.0	2.8	2.6	2.3	2.1
PRESSURE SWITCH SETPOINT (INCHES WATER COLUMN)	1.35	1.35	1.35	1.35	1.35	1.35	1.35	1.35

TABLE 1D MODEL-75 PROPANE GAS HIGH ALTITUDE RATINGS

ELEVATION (FEET)	0-2,000	3,000	4,000	5,000	6,000	7,000	7,500	8,500
NOMINAL INPUT (MBH)	75.0	70.0	69.0	67.0	66.0	64.5	64.0	62.0
HEAT CAPCITY (MBH)	68.0	63.0	62.1	60.3	59.4	58.1	57.6	55.8
NET I=B=R RATING (MBH)	58.9	54.6	53.8	52.3	51.5	50.4	49.9	48.4
GAS ORIFICE DRILL SIZE	.0605	.0605	.0605	.0605	.0605	.0605	.0605	.0605
MANIFOLD PRESSURE (INCHES WATER COLUMN)	2.5	2.4	2.3	2.2	2.2	2.2	2.3	2.3
PRESSURE SWITCH SETPOINT (INCHES WATER COLUMN)	1.35	1.35	1.35	1.35	1.35	1.35	1.35	1.35

TABLE 1E MODEL-100 NATURAL GAS HIGH ALTITUDE RATINGS

ELEVATION (FEET)	0-2,000	3,000	4,000	5,000	6,000	7,000	7,500	8,500
NOMINAL INPUT (MBH)	100.0	97.0	96.0	95.0	90.0	84.0	82.0	76.0
HEAT CAPCITY (MBH)	90.0	87.3	86.4	85.5	81.0	75.6	73.8	68.4
NET I=B=R RATING (MBH)	78.0	75.7	74.9	74.1	70.2	65.5	64.0	59.3
GAS ORIFICE DRILL SIZE	.0860	.0860	.0860	.0860	.0860	.0860	.0860	.0860
MANIFOLD PRESSURE (INCHES WATER COLUMN)	2.5	2.9	3.3	3.7	3.4	3.2	2.9	2.6
PRESSURE SWITCH SETPOINT (INCHES WATER COLUMN)	1.17	1.17	1.17	1.17	1.17	1.17	1.17	1.17

TABLE 1F MODEL-100 PROPANE GAS HIGH ALTITUDE RATINGS

ELEVATION (FEET)	0-2,000	3,000	4,000	5,000	6,000	7,000	7,500	8,500
NOMINAL INPUT (MBH)	100.0	95.0	94.0	92.0	92.0	91.5	91.5	91.0
HEAT CAPCITY (MBH)	90.0	85.5	84.6	82.8	82.8	82.4	82.4	81.9
NET I=B=R RATING (MBH)	78.0	74.1	73.3	71.8	71.8	71.4	71.4	71.0
GAS ORIFICE DRILL SIZE	.0670	.0670	.0670	.0670	.0670	.0670	.0670	.0670
MANIFOLD PRESSURE (INCHES WATER COLUMN)	2.5	2.7	2.9	3.1	3.2	3.3	3.4	3.5
PRESSURE SWITCH SETPOINT (INCHES WATER COLUMN)	1.17	1.17	1.17	1.17	1.17	1.17	1.17	1.17

RULES FOR SAFE INSTALLATION AND OPERATION

1. Read the entire installation manual before beginning the installation. Failure to follow these rules for safe installation and operation and these instructions could cause a malfunction of the boiler and result in death, serious bodily injury, and/or property damage.
2. Check all applicable state and local building codes and utility company requirements before installation. The installation must conform with these requirements in their entirety. In the absence of these codes, use NFPA Installation Codes and good industry practice.
3. Before servicing the boiler - allow the boiler to cool. Always shut off any electricity and gas supply connected to the boiler prior to servicing.
4. Inspect gas line for leaks.
5. Be certain gas input rate is correct. Over firing may result in early failure of the boiler sections. This may cause dangerous operation. Under firing may result in too much air for the pre-mix burner causing poor or loss of combustion.
6. Never vent the products of combustion from this boiler to an enclosed space. Always vent to the outdoors. Never vent to another room or to inside a building.
7. Be sure there is adequate outdoor air supply to boiler.for complete combustion.
8. Follow a regular service and maintenance schedule for efficient and safe operation. 9. Keep boiler area clean of debris and free of combustible and flammable materials.
10. Proper through the wall or through the roof combustion venting shall be in accordance with the materials and methods described in this manual. Installation must comply with local codes.
11. This boiler and related hot water heating systems are not do it yourself items. They must be installed and serviced by qualified professionals.

WARNING

This boiler has been equipped for residential installations. If used for commercial applications, any additional code requirements must be adhered to for installation. This may require additional controls including but not limited to a low water cut off, a manual reset high temperature limit, and wiring and/or piping modifications. The manufacturer is not responsible for any field installation changes made to a boiler installation which are not described or acknowledged in this manual.

BEFORE INSTALLING THE BOILER

Complete all of the following prior to installing the boiler.

A. CODES

This boiler product is a gas-fired, direct vent, condensing boiler and must be installed in accordance with all applicable federal, state and local building codes including, but not limited to the following:

United States -Installation shall conform with National Fuel Gas Code (NFPA-54/ANSI Z223.1-latest edition)

Canada - Installation shall be in accordance with CSA B 149.1 and .2. installation codes.

Where required by the authority having jurisdiction, the installation must conform to the American Society of Mechanical Engineers Safety Code for Controls and Safety Devices for Automatically Fired Boilers, No.CSD-1.

The installation must conform to the requirements of the authority having jurisdiction or, in the absence of such requirements, to the National Fuel Gas Code, ANSI Z223.1 - latest revision.

Installers - Follow local regulations with respect to installation of CO (Carbon Monoxide) Detectors. Follow maintenance recommendations in this manual.

Techniciens -Veuillez vous conformer à la réglementation en vigueur concernant 1' installations des détecteurs d'oxyde de carbone. Suivre les consignes d'entretien figurant dans le manuel d'instruction ci-joint.

B. BOILER SIZING

- Check to be sure you have selected the boiler with the proper capacity before starting the installation. The I=B R Rating of the boiler selected should be greater than or equal to the calculated peak heating load (heat loss) for the building or area(s) served by the boiler and associated hot water heating systems. See the table "BOILER RATINGS AND CAPACITIES".
- Heat loss calculations should be based on approved industry methods.

C. CONSIDERATIONS FOR BOILER LOCATION

Before selecting a location for the boiler, the following should be considered. Each boiler considered.

- Supplied with the correct type of gas (natural gas or propane).
- Connected to a suitable combustion air intake piping system to supply the correct amounts of fresh (outdoor) air for combustion. (maximum length 80' for the Model-100 boiler, and maximum length 100' for the Model-75 and Model-50 boilers).
- Connected to a suitable venting system to remove the hazardous products of gas combustion (maximum length 80' for the Model-100 boiler, and maximum length 100' for the Model-75 and Model-50 boilers).
- Connected to a suitable hot water heating system
- Supplied with a suitable electrical supply for all boiler motors and controls.
- Connected to a properly located thermostat or operating control. (not included with boiler)
- Placed on level surface (must NOT be installed on carpeting)
- Condensate drain line must be pitched down to floor drain or external condensate pump with reservoir at ¼" per foot (wood frame or blocks may be used to raise boiler).

D. LOCATING THE BOILER

TABLE 2	BOILER CLEARANCES		
UNIT	COMBUSTIBLE CONSTRUCTION	ACCESSIBILITY/ CLEANING	SERVICING
TOP	1"	8"	8"
LEFT SIDE	1"	1"	1"
RIGHT SIDE	8"	-	-
BASE	1"	-	-
FRONT	0"	24"	24"
BACK	1"	-	-
INTAKE/VENT PIPING	0"	-	-
NEAR BOILER HOT WATER WATER PIPING	1"	-	-

1. Select a location which is level, central to the piping systems served and as close to the vent and air intake terminals as possible.
2. Accessibility clearances, if more stringent (i.e. larger clearances) than required fire protection clearances, must be used for the boiler installation. Accessibility clearances may be achieved with the use of removable walls or partitions.
3. The boiler is approved for installation in closets and on combustible floors. This boiler shall NOT be installed on carpeting.
4. The clearances shown in Table 2 indicate required clearances per IAS listing. A minimum 1" clearance must be maintained between combustible construction and each of the left, top and back surfaces of the boiler. A minimum 8" clearance is required on the right side, to allow room for the inlet air pipe. An 18" clearance must be maintained at a side where passage is required to access another side for cleaning or servicing, inspection or replacement of any parts that normally may require such attention. Allow at least 24" at the front and left side and 8" at the top for servicing. No clearances are required to venting or combustion air intake piping.
5. Equipment shall be installed in a location which facilitates the operation of venting and combustion air intake piping systems as described in this manual.
6. Advise owner of boiler to keep venting and combustion air intake passages free of obstructions. both the venting and combustion air intake piping systems connected to the outdoors must permit flow through the piping systems without restrictions for the boiler to operate.
7. The boiler shall be installed such that the automatic gas ignition system components are protected from water (dripping, spraying, rain, etc.) during operation and service (circulator replacement, control replacement, etc.).

E. COMBUSTION AIR AND VENT PIPE REQUIREMENTS

This boiler requires a dedicated direct vent system. In a direct vent system, all air for combustionis taken directly from outside atmosphere, and all flue products are discharged to outside atmosphere.

Combustion air and vent pipe connections must terminate together in the same atmospheric pressure zone, either through the roof or sidewall (roof termination preferred). See Fig.9 & 10 for required clearances.

CAUTION

KEEP BOILER AREA CLEAN OF DEBRIS AND FREE OF FLAMABLE AND COMBUSTIBLE MATERIALS, VAPORS AND LIQUIDS

WARNING

When vent pipe is exposed to temperatures below freezing, such as when it passes through an unheated space or when a chimney is used as a raceway, vent pipe must be insulated with 1/2" Armaflex or equivalent. In extreme cold climate areas, use 3/4" Armaflex or equivalent.

Combustion air must be clean outdoor air. Combustion air must not be taken from inside structure because that air frequently is contaminated by halogens, which include fluorides, chlorides, phosphates, bromides and iodides. These elements are found in aerosols, detergents, bleaches, cleaning solvents, salts, air fresheners, paints, adhesives and other household products.

Locate combustion air inlet as far away as possible from swimming pool and swimming pool pump house.

All combustion air and vent pipes must be airtight and watertight. Combustion air and vent piping must also terminate exactly as shown in **Fig.9 or 10.**

Vent connections serving appliances vented by natural draft shall not be connected into any portion of mechanical draft systems operating under positive pressure.

Solvent cements are combustible. Keep away from heat, sparks, and open flame. Use only in well ventilated areas. Avoid breathing in vapor or allowing contact with skin or eyes.

FAILURE TO FOLLOW THE AFOREMENTIONED WARNINGS COULD RESULT IN FIRE, PROPERTY DAMAGE, PERSONAL INJURY, OR DEATH.

F. CONDENSATE DRAIN REQUIREMENTS

Condensate drain line to be pitched down to floor drain at a minimum of 1/4" per foot. An external condensate pump (not furnished) may be used if floor drain is not available. The condensate pump must be designed for flue gas condensate application

NOTE:
1. Condensate trap is built into the boiler, an external trap is not required and should not be used.
2. Wood frame or blocks may be used to raise the boiler to maintain drain pitch or to be above external condensate pump reservoir.
3. There is a 115 volt AC receptacle provided on the service switch junction box which is located at the boiler right side, to provide power for an external condensate pump (if needed).

G. FOUNDATION REQUIREMENTS

Boiler must be placed on level surface. Boiler is NOT to be installed on carpeting.

NOTE: 1. If boiler is not level condensate drain lines will not function properly. Adjustable feet are located on the boiler to make up for minor surface irregularities or tilt.
2. Wood frame or blocks may be used to raise boiler to maintain drain pitch or to be above external condensate pump reservoir.

H. REMOVAL OF EXISTING BOILER FROM COMMON VENT SYSTEM

When an existing boiler is removed from a common venting system, the common venting system is likely to be too large for proper venting of the appliances remaining connected to it. At the time of removal of an existing boiler, the following steps shall be followed with each appliance remaining connected to the common venting system placed in operation, while the other appliances remaining connected to the common venting system are not in operation.

1. Seal any unused openings in the common venting system.
2. Visually inspect the venting system for proper size and horizontal pitch and determine there is no blockage. or restrictions, leakage, corrosion and other deficiencies which could cause an unsafe condition.
3. Insofar as is practical, close all. building doors and windows and all doors between the space in which the appliances remaining connected to the common venting system are located and other spaces of the building. Turn on clothes dryer and any appliance not connected to the common venting system. Turn on any exhaust fans, such as range hoods and bathroom exhaust, so they will operate at maximum speed. Do not operate a summer exhaust fan. Close fire dampers.
4. Place in operation the appliance being inspected. Follow the lighting instructions. Adjust thermostat so appliances will operate continuously.
5. Test for spillage at the draft hood relief opening after 5 minutes of main burner operation. Use the flame of a match or candle, or the smoke from a cigarette, cigar or pipe.
6. After it has been determined that each appliance remaining connected to the common venting system properly vents when tested as outlined above, return doors, windows, exhaust fans and any other gas-burning appliance to their previous condition of use.
7. Any improper operation of the common venting system should be corrected so the installation conforms with the National Fuel Code, NFPA-54/ANSI -Z223.1-latest revision, or section 5 of CSA-B 149 for Canadian standards. When resizing any portion of the common venting system, the common venting system should be resized to approach the minimum size as determined using the appropriate tables in part 11 in the National Fuel Gas Code, NFPA-54/ANSI- Z223.1-latest revision, or section 5 of CSA-B 149 for Canadian standards.

PLACING THE BOILER

The boiler should be placed to provide the most direct connections to the combustion air, vent and system piping as possible.

Place crated boiler as close to selected location as possible and uncrate boiler. The uncrated boiler may be moved into position with an appliance dolly or 2-wheel hand truck. The dolly or hand truck should be inserted under the **left hand side** of the boiler. It is possible to slide the boiler for a short distance on a smooth floor or surface.

NOTE: Refer to manual section “LOCATING THE BOILER” for required clearances for servic ing and maintenance.

NEAR BOILER PIPING

CAUTION

Copper supply and return piping. must NOT be installed directly into aluminum boiler section casings due to galvanic corrosion between dissimilar metals. Iron or steel bushings or pipe nipples should be used between copper system piping and boiler to make final connection to boiler. Also, the use of dielectric unions is acceptable. The packaged boiler is furnished with iron piping in the front boiler section for the supply and return connections.

When the installation of the boiler is for a new heating system, first install all of the radiation units (panels, radiators, baseboard, or tubing) and the supply and return mains. After all heating system piping and components have been installed, make final connection of the system piping to the boiler. A hot water boiler installed above radiation level must be equipped with a low water cut off device. A periodic inspection is necessary us is flushing of float type devices, per low water cut off manufacturers specific instructions.

A. SUPPLY AND RETURN LINES

The packaged boiler unit is set up to receive 1 1/4" NPT supply and return piping from top access. The boiler unit can also be piped from the left side by turning the supply elbow, and from the rear of the unit by removing plugs in the rear boiler section.

NOTE: The circulator pump and isolation valves are furnished within a carton inside the boiler cabinet and can be installed at the installer preferred location.

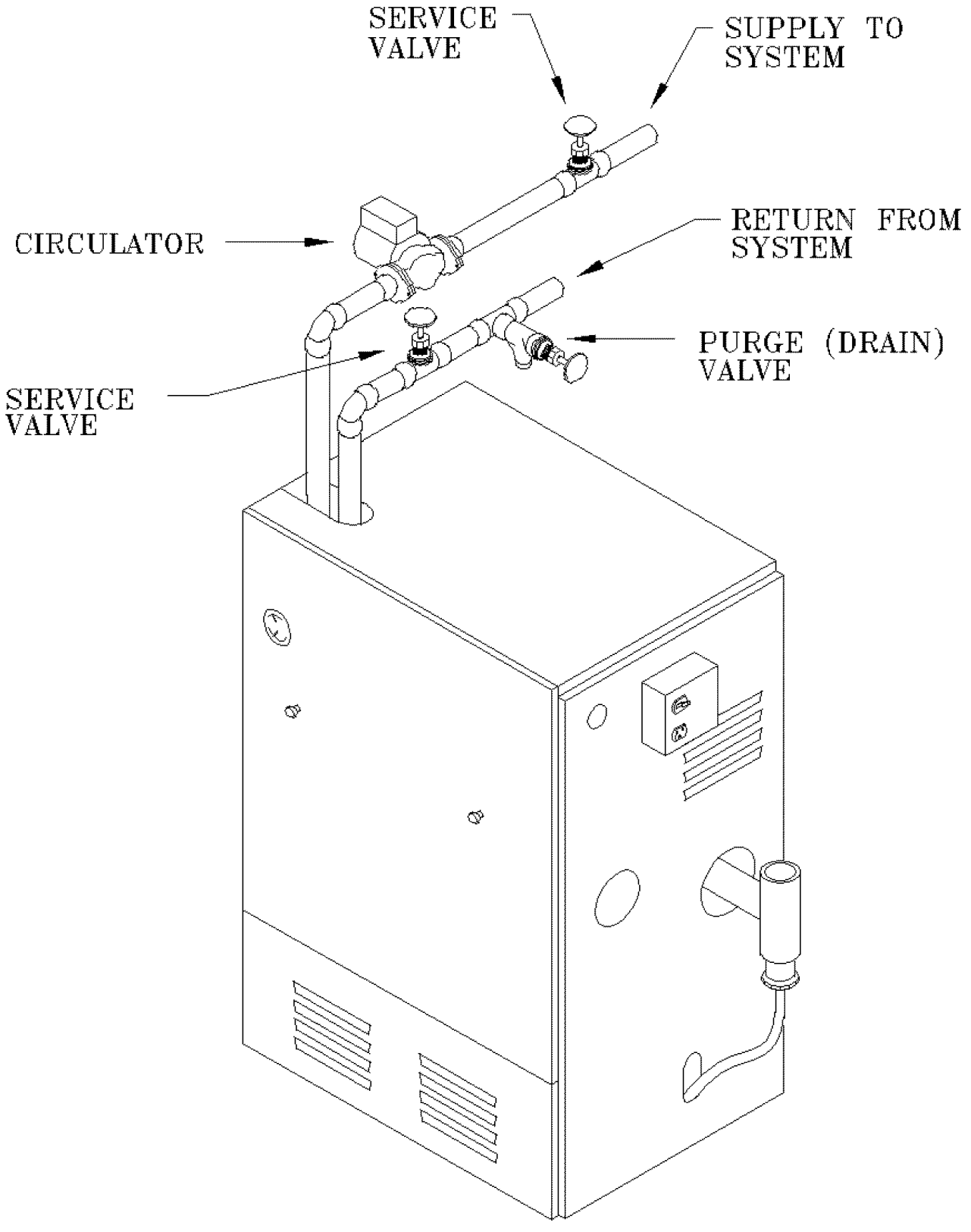

FIGURE 2 SINGLE ZONE BOILER PIPING

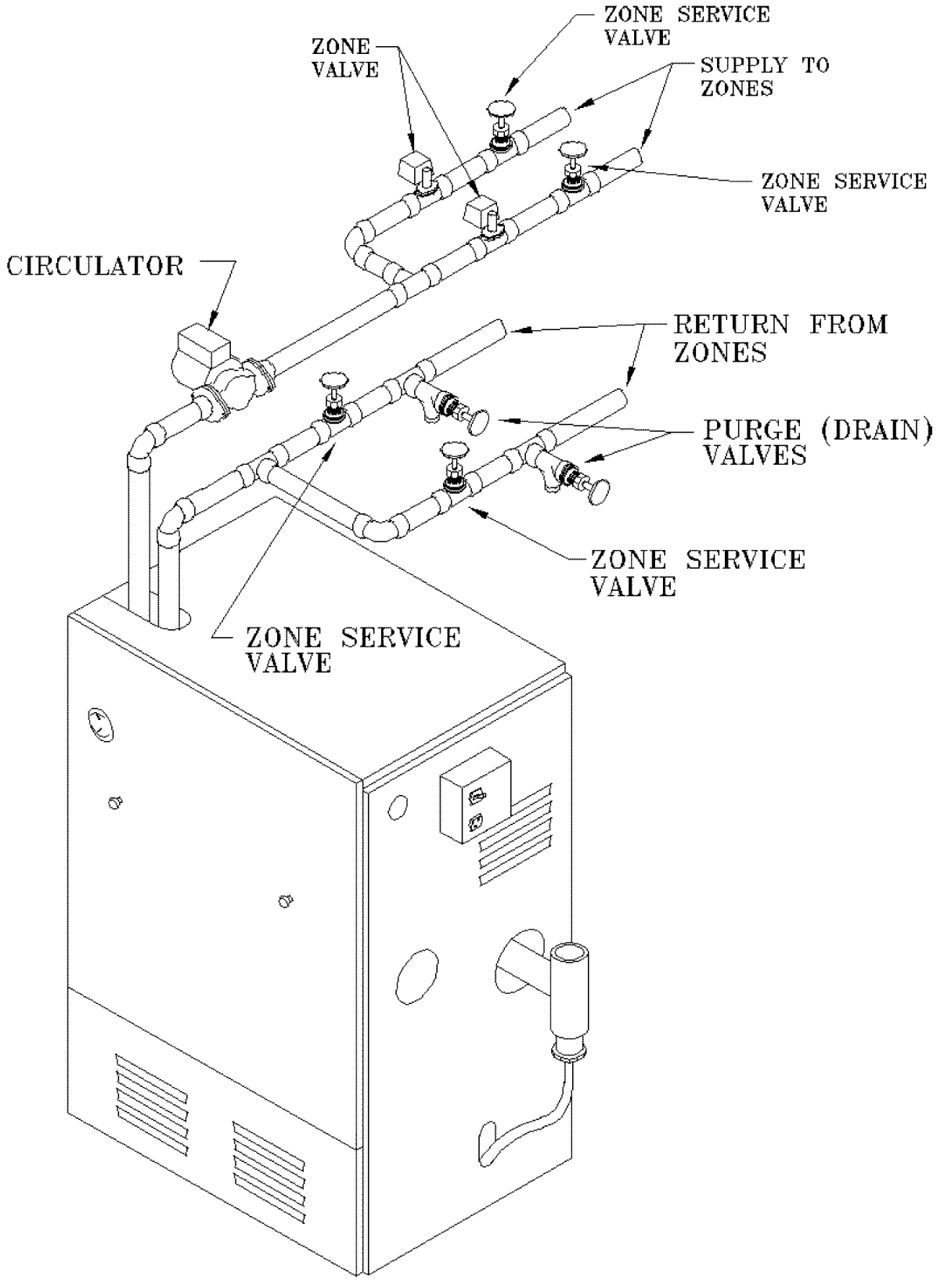

FIGURE 3 MULTI ZONE BOILER PIPING WITH ZONE VALVES

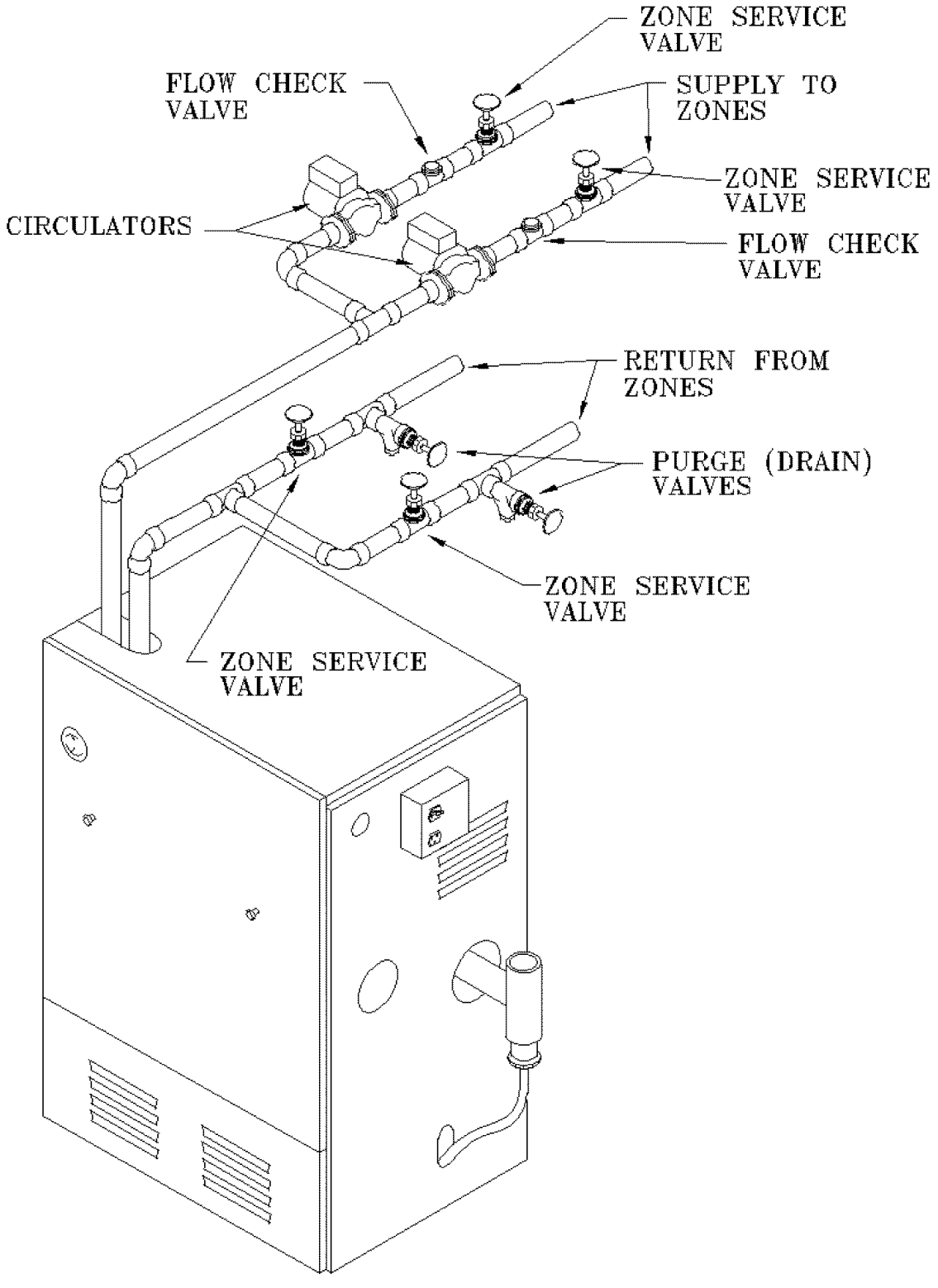

NOTE: When zoning with circulators, the furnished circulator pump should be used as one of the zone pumps. Each stripped end of the electrical wires for the circulator pump inside the junction box should be taped or wire nutted to prevent short circuits. Unplug the circulator pump wiring at the integrated boiler control.

FIGURE 4 MULTI ZONE BOILER PIPING WITH CIRCULATORS

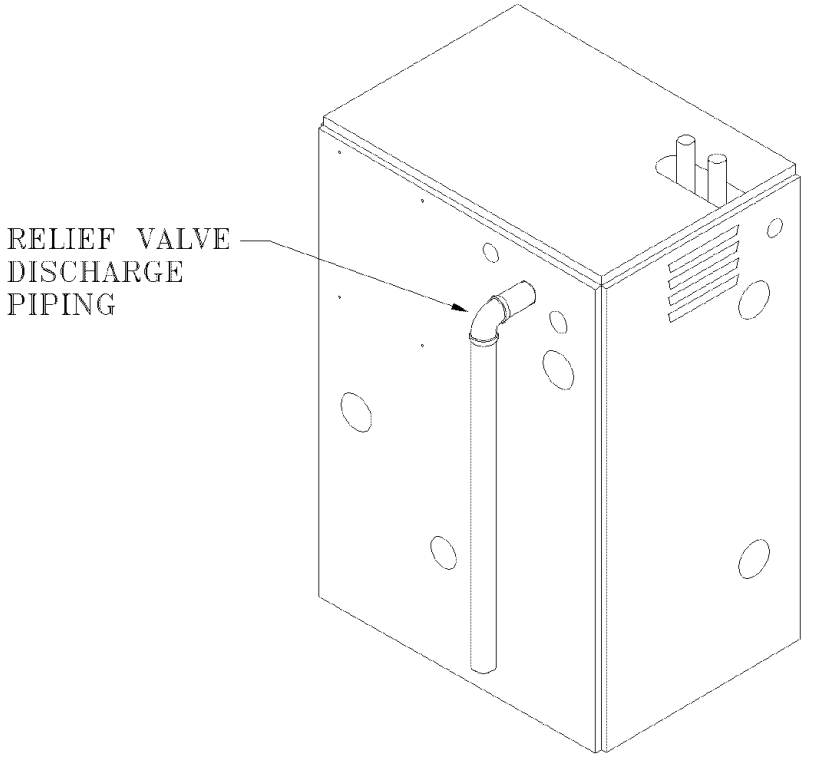

FIGURE 5 SINGLE ZONE BOILER PIPING

B. PRESSURE RELIEF VALVE

The boiler is furnished with a factory installed relief valve in the top of the boiler. Provide ¾" piping from the supplied relief valve to a local floor drain, but leave an air gap between piping and drain. No shutoff of any description shall be placed between safety relief valve and the boiler, or on the discharge pipes between such safety valve and the atmosphere. Installation of the safety relief valve shall conform to ANSI/ASME Boiler and Pressure Vessel Code, Section IV. The manufacturer is not responsible for any water damage.

C. EXPANSION TANK AND MAKE-UP WATER

Determine required system fill pressure, system design temperature, and system water content. Boiler contains 2.6 gallons (U.S.). Size expansion tank accordingly. Consult expansion tank manufacturer for proper sizing information. Connect properly sized expansion tank (not furnished) as shown in **Fig. 6** for diaphragm type expansion tank and **Fig. 7** for conventional closed type expansion tanks. For diaphragm type expansion tanks, adjust the tank air pressure to match the system fill pressure. Install air vent (furnished) as shown for diaphragm type expansion tank system only. Install make-up water connections as shown per local codes. If a pressure reducing valve is used, adjust to match the system fill pressure. In connecting the cold make-up water supply to the boiler, make sure that clean water supply is available. When the water supply is from a well or pump, sand strainer should be installed at the pump.

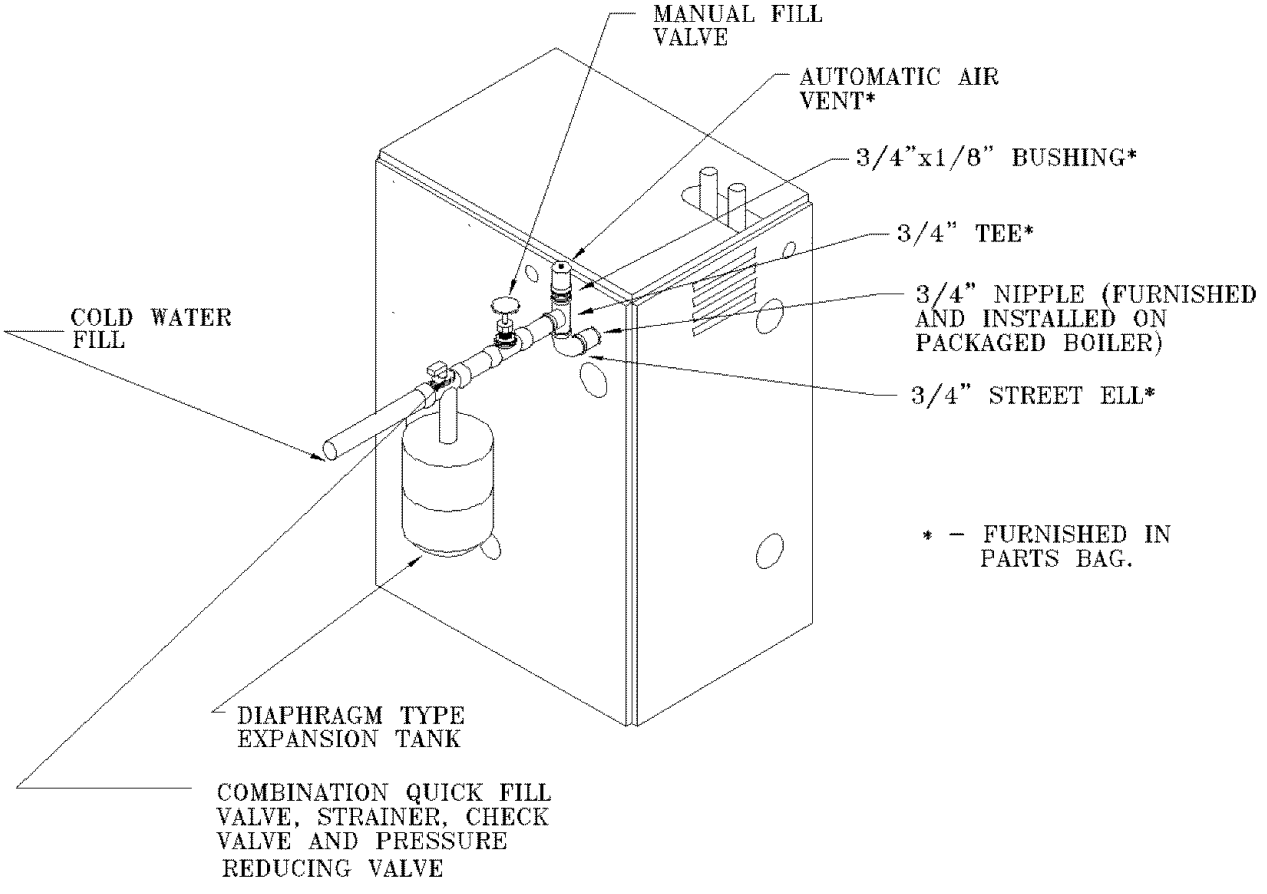

FIGURE 6 DIAPHRAGM TYPE EXPANSION TANK PIPING

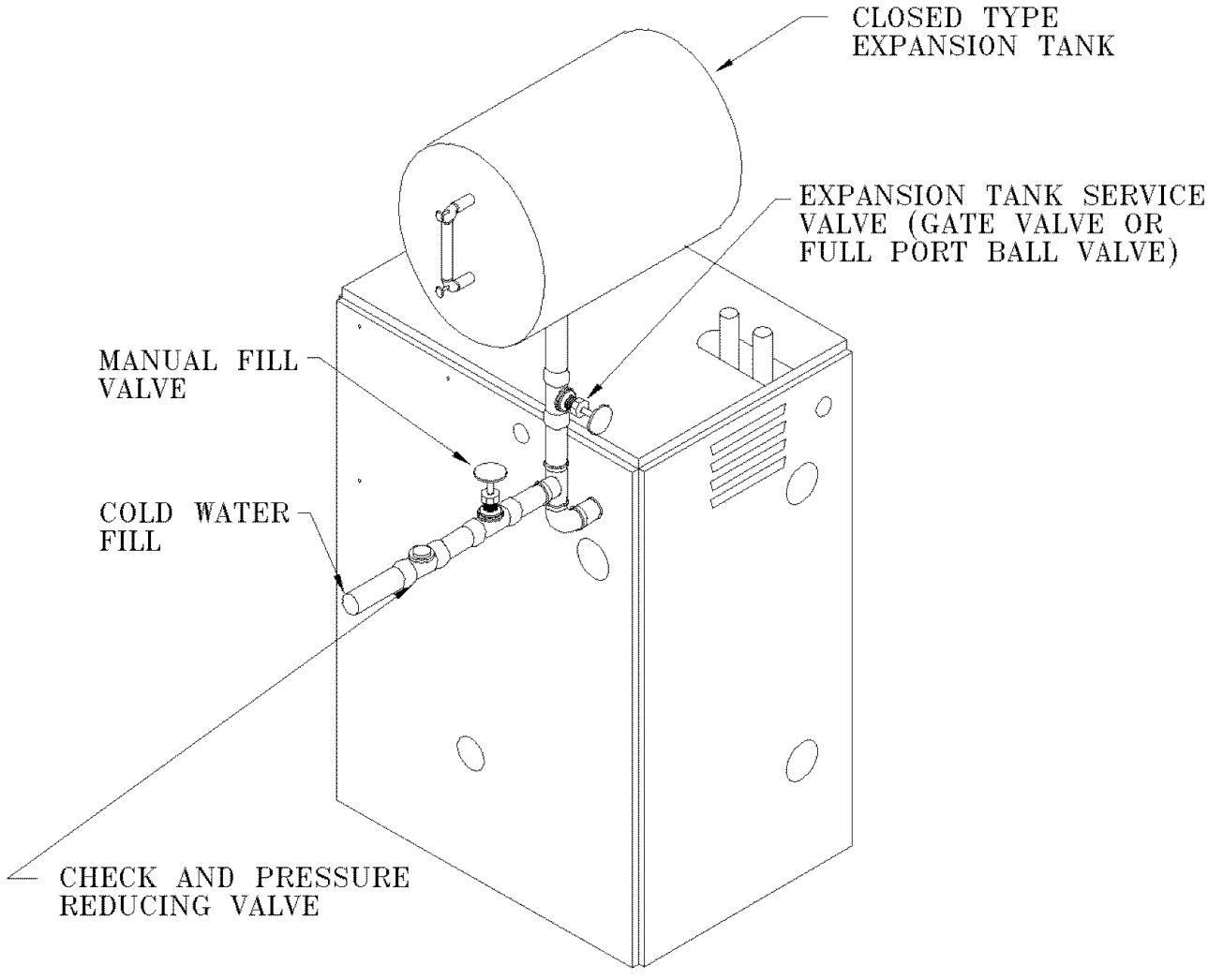

FIGURE 7 CONVENTIONAL (closed type) EXPANSION TANK PIPING

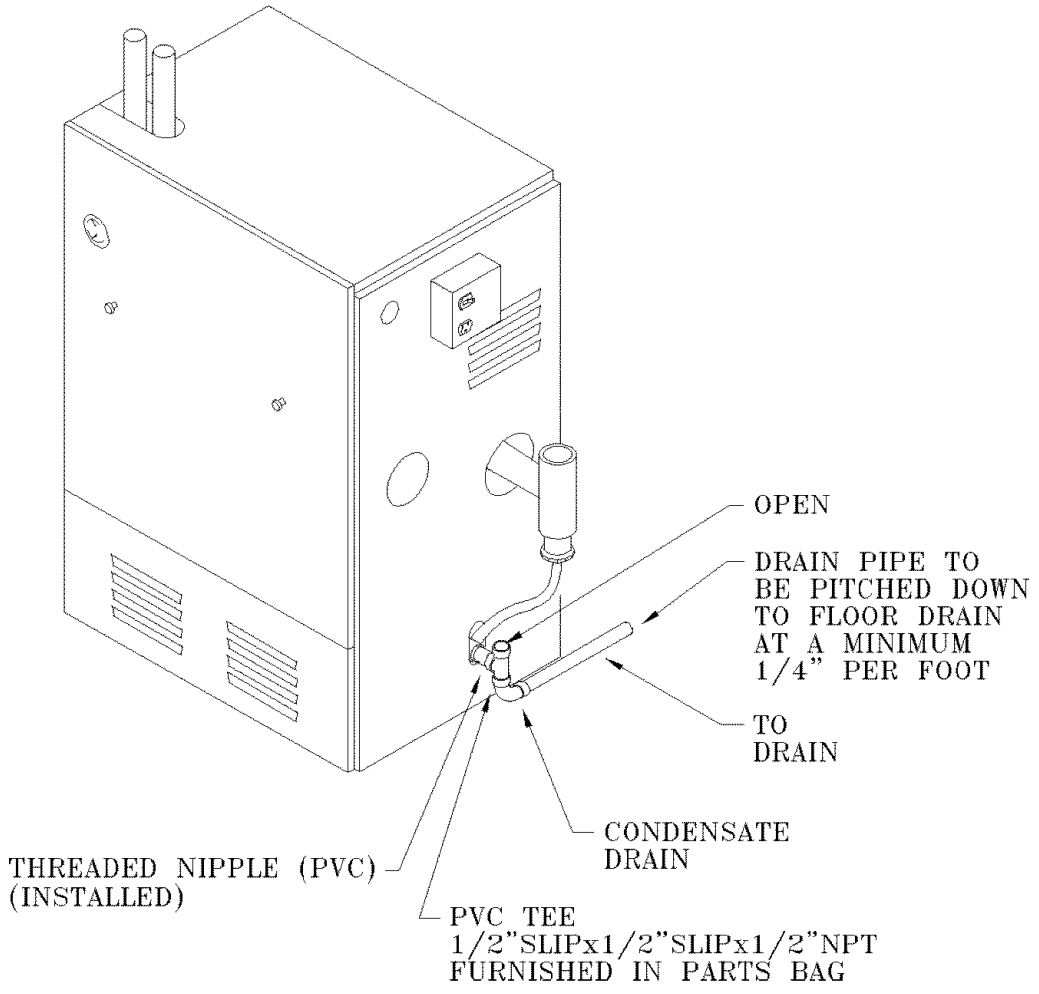

FIGURE 8 CONDENSATE - DRAIN PIPING

D. CONDENSATE DRAIN PIPING

The condensate trap is built into the boiler, an external trap is not required and should **NOT** be used.

Provide ½" PVC condensate drain and fittings. Condensate drain to be pitched down to floor drain at a minimum of ¼" per foot.

Install furnished ½" PVC tee to overflow fitting as shown in **Fig. 8**.

The ½" diameter schedule 40 PVC or CPVC condensate drain and pipe fittings must conform to ANSI standards and ASTM D 1785 or D2846. Schedule 40 PVC or CPVC cement and primer must conform to ASTM D2564 or F493. In Canada, use CSA or ULC certified schedule 40 PVC or CPVC drain pipe cement.

A condensate pump with a reservoir (not furnished) may be used to remove condensate to a drain line (sanitary line) above boiler if a floor drain is not available or its in accessible.

E. FILLING CONDENSATE TRAP WITH WATER ON THE INITIAL START UP THE CONDEN SATE TRAP MUST BE MANUALLY FILLED WITH WATER

The following are the steps required to initially fill the condensate trap for start up, these steps are only required at the initial start up or if maintenance requires draining of the condensate trap:

1. Disconnect the vent condensate drain line from the bottom of the vent tee on the boiler.
2. Pour about 1 cup of cold tap water into the vent drain line with a proper funnel.
3. Excess water should go through the overflow and out through the condensate drain line. Verify proper operation of the drain line (or external condensate pump if used).
4. Reinstall the vent drain line.

F. CHILLED WATER PIPING

The boiler, when used in connection with a refrigeration system, must be installed so the chiller medium is piped in parallel with the boiler with appropriate valves to prevent the chilled medium from entering the boiler.

The boiler piping system of a hot water boiler connected to heating coils is located in air handling units where they may be exposed to refrigerated air circulation must be equipped with flow control valves or other automatic means to prevent gravity circulation of the boiler water during cooling cycle.

COMBUSTION AIR AND VENT PIPE

A. CONNECTIONS AND TERMINATION

For boilers connected to gas vents or chimneys, vent installations shall be in accordance with part 7, Venting of Equipment, of the National Fuel Gas Code, ANSI 2223.1-latest revision, CAN/CGA-B 149.1 and B 149.2, and applicable provisions of the local building codes.

Provisions for combustion and ventilation air must be in accordance with section 5.3, Air For Combustion and Ventilation, of the National Fuel Gas Code,ANSI 2223.1-latest revision, CAN/CGA-B 149.1 and B 149.2, or applicable provisions of the local building code.

These boilers require a dedicated direct vent system. All air for combustion is taken directly from outdoors through the combustion air intake pipe. All flue products are discharged to the outdoors through the vent pipe.

1. See Fig.9 & 10 for combustion air and vent pipe roof and sidewall termination. (Roof termi nation is preferred) Combustion air and vent pipes must terminate together in same atmo spheric pressure zone as shown. Construction through which vent and air intake pipes may be installed is a maximum 24 inches, minimum 1/4" thickness.

2. Combustion air and vent pipe fittings must conform to American National Standards Insti tute (ANSI) standards and American Society for Testing and Materials (ASTM) standards D1784 (schedule-40 CPVC), D1785 (schedule-40 PVC), D2665 (PVC-DWV), D2241 (SDR-21 and SDR-26 PVC), D2661 (ABS-DWV), or F628 (schedule-40 ABS). Pipe cement and primer must conform to ASTM standards D2564 (PVC) or D2235 (ABS).

In Canada construct all combustion air and vent pipes for this unit of CSA or ULC certified schedule-40 CPVC, schedule-40 PVC, PVC-DWV or ABS-DWV pipe and pipe cement. SDR pipe is NOT approved in Canada.

3. Combustion air and vent piping connections on boiler are sized for 2" pipe. Any pipe size change (to 3") must be made outside of the boiler casing in a vertical run of pipe to allow for proper drainage of vent condensate. Due to potential for flue gas temperatures over 155°F, the first five (5) feet of vent pipe must be CPVC, the remaining vent pipe can be PVC. If any elbows are employed within the first 5 feet of vent, they must be CPVC too. Two (2) - 30" pieces of 2" CPVC pipe are furnished with the boiler.

   NOTE: The transition from 2" pipe to 3" pipe must be made in a vertical run.

4. **Combustion air and vent piping lengths,**

BOILER SIZE	2" PIPE MINIMUM VENTING	2" PIPE MAXIMUM VENTING	3" PIPE MINIMUM VENTING	3" PIPE MAXIMUM VENTING
100	2 FEET IN LENGTH + 4-90° ELBOWS	15 FEET IN LENGTH AND UP TO 4-90° ELBOWS	15 FEET IN LENGTH + 4-90° ELBOWS	80 FEET IN LENGTH AND UP TO 4-90° ELBOWS
75 & 50	2 FEET IN LENGTH + 4-90° ELBOWS	20 FEET IN LENGTH AND UP TO 4-90° ELBOWS	20 FEET IN LENGTH + 4-90° ELBOWS	100 FEET IN LENGTH AND UP TO 4-90° ELBOWS

The first 5 feet of ***"TOTAL EQUIVALENT LENGTH"*** of vent piping run **must be CPVC:**

The length of pipe is counted from the boiler jacket (air intake pipe) or from vent tee (vent pipe).For additional elbows, reduce the maximum vent length as shown:
2" 90 degree elbow -1 ½ feet per additional elbow.
3" 90 degree elbow - 3 feet per additional elbow.

Example: To add 2 additional 90 degree elbows to a 3" pipe for a 75 boiler. Each elbow is 3 additional feet per 90 degree elbow for a total of 6 feet. (1 elbow @ 3 feet + 1 elbow @ 3 feet = 6 additional feet of pipe) The total additional pipe is then subtracted from the maximum allowable pipe length to give the new maximum length of 94 feet with 6, 90 degree elbows. ***("TOTAL EQUIVALENT LENGTH":*** Original 100 feet max. - 6 feet for 2 additional elbows = new 94 feet maximum length).

5. Combustion air and vent piping to be pitched back to boiler at minimum ¼" per foot from intake and vent terminals so that all moisture in combustion air and vent piping drains to boiler. Pipes must be pitched continuously with no sags or low spots where moisture can accumulate and block the flow of air or flue gas. Combustion air and vent pipes must be airtight and watertight.

6. Consideration for the following should be used when determining an appropriate location for termination of combustion air and vent piping.
   - Comply with all clearances required as stated in paragraph 7.
   - Termination should be positioned where vent vapors will not damage plants/shrubs or air conditioning equipment.
   - Termination should be positioned so that it will not be effected by wind eddy, air born leaves, snow, or recirculated flue gases.
   - Termination should be positioned where it will not be subjected to potential damage by foreign objects, such as stones, balls, etc..
   - Termination should be positioned where vent vapors are not objectionable.
   - Put vent on a wall away from the prevailing winter wind. Locate or guard the vent to prevent accidental contact with people or pets.
   - Terminate the vent above normal snowline. Avoid locations where snow may drift and block the vent. Ice or snow may cause the boiler to shut down if the vent becomes obstructed.
   - Under certain conditions, flue gas will condense, forming moisture, and may be corrosive. In such cases, steps should be taken to prevent building materials at the vent from being damaged by exhaust of flue gas.
7. The venting system shall terminate at least 3 feet above any forced air inlet (except the boiler's combustion air inlet) within 10 feet. The venting system shall terminate at least 12 inches from any air opening into any building. The bottom of the vent shall be located at least 12 inches above grade. Termination of the vent shall be not less than 7 feet above an adjacent public walkway. The vent terminal shall not be installed closer than 3 feet from the inside corner of an L shaped structure. Termination of the vent should be kept at least 3 feet away from vegetation. The venting system shall terminate at least 4 feet horizontally from, and in no case above or below, unless a 4 foot horizontal distance is maintained, from electric meters, gas meters, regulators, and relief equipment.

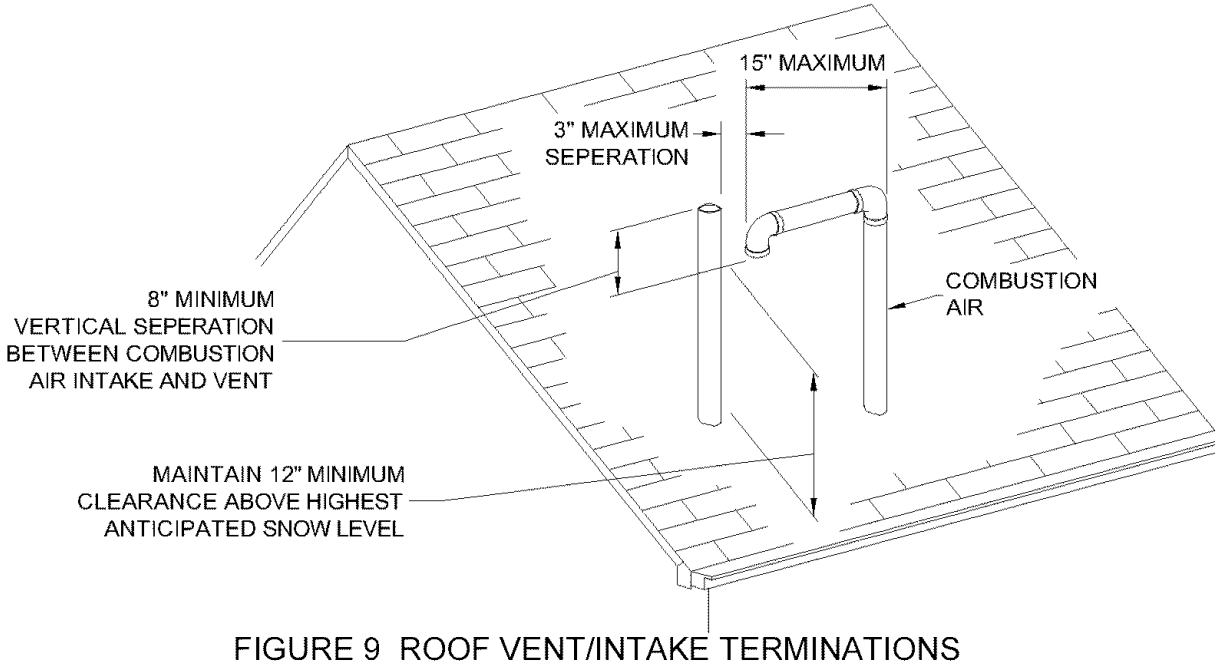

FIGURE 9 ROOF VENT/INTAKE TERMINATIONS

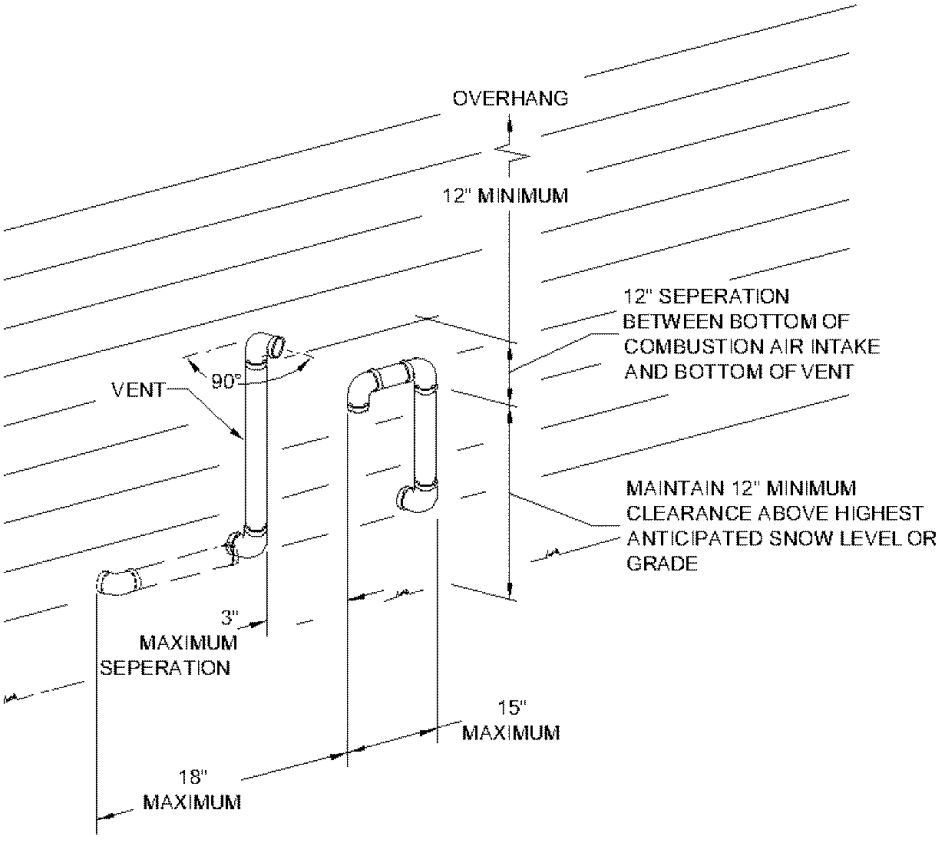

LESS THAN 12" CLEARANCE

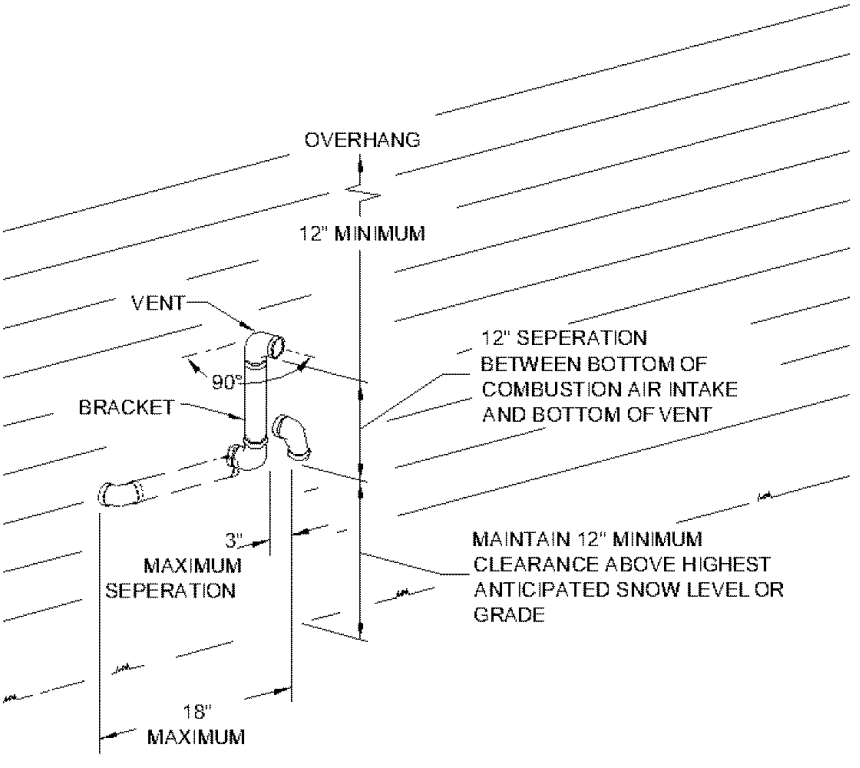

12" OR MORE CLEARANCE

FIGURE 10 SIDEWALL VENT/INTAKE TERMINATIONS

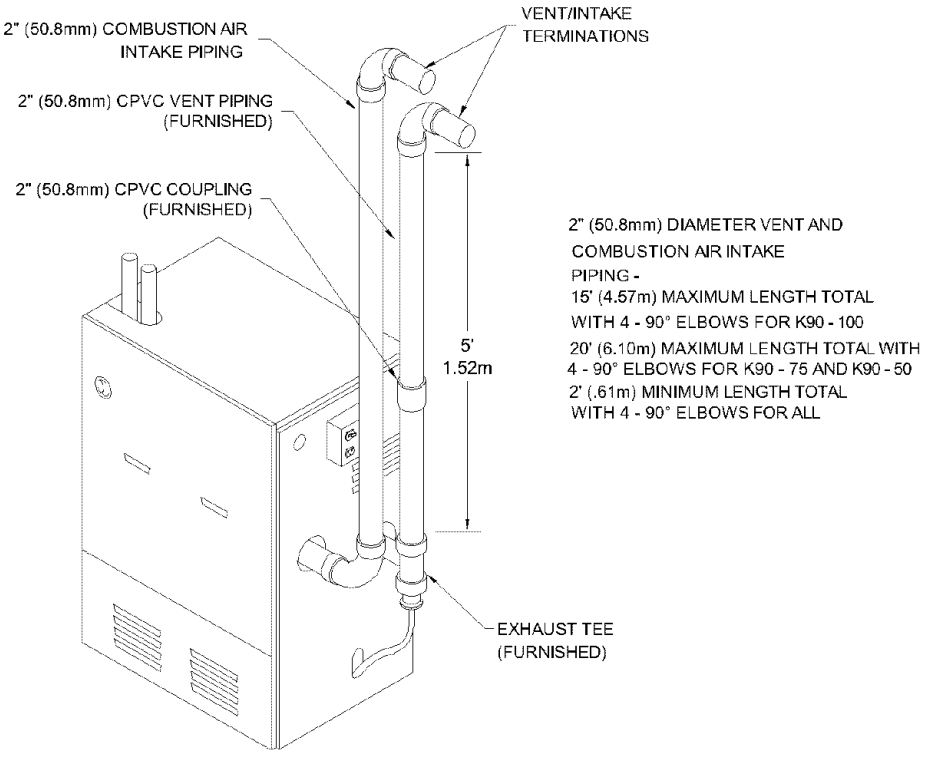

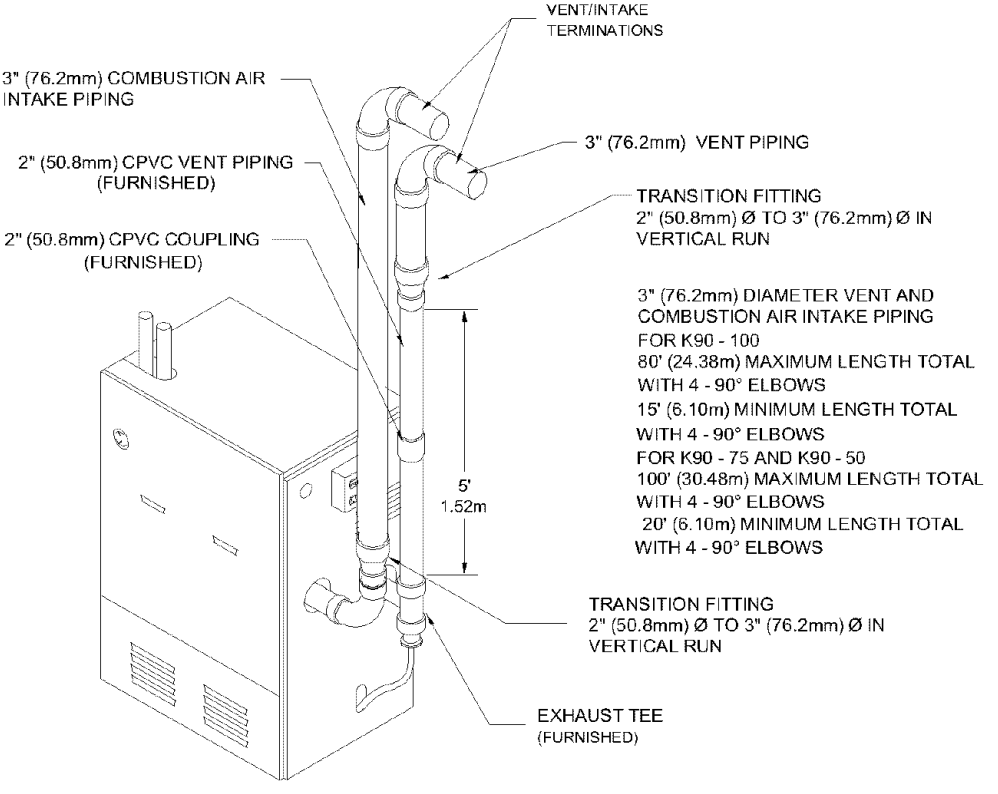

FIGURE 11 COMBUSTION AIR AND VENT PIPING

B. INSTALLATION

1. Attach combustion air intake piping to supplied Fernco 2" coupling on mixer. Attach vent piping to furnished 2" CPVC vent tee on draft inducer outlet.
   NOTE: All pipe joints are to be water tight.
2. Working from the boiler to the outside, cut pipe to required length(s).
3. Deburr inside and outside of pipe.
4. Chamfer outside edge of pipe for better distribution of primer and cement.
5. Clean and dry all surfaces to be joined.
6. Check dry fit of pipe and mark insertion depth on pipe.
   NOTE: It is recommended that all pipes be cut, prepared, and pre-assembled before permanently cementing any joint.
7. After pipes have been cut and pre-assembled, apply cement primer to pipe fitting socket and end of pipe to insertion mark. Quickly apply approved cement to end of pipe and fitting socket (over primer). Apply cement in light, uniform coat on the inside of socket to prevent buildup of excess cement. Apply second coat.
8. While cement is still wet, insert pipe into socket with a'/a turn twist. Be sure pipe is fully inserted into fitting socket.
9. Wipe excess cement from joint. A continuous bead of cement will be visible around perimeter of a properly made joint.
10. Handle pipe joint carefully until cement sets.
11. Support combustion air and vent piping a minimum of every 5 feet using pre-formed metal hanging straps. Do not rigidly support pipes. Allow movement due to expansion and contraction.
12. Slope combustion air and vent pipes toward boiler a minimum of 1/4" per linear foot with no sags between hangers.
13. Use appropriate methods to seal openings where vent and combustion air pipes pass through roof or side wall.

GAS SUPPLY PIPING

A. CHECK GAS SUPPLY

The gas pipe to your boiler must be the correct size for the length of run and for the total BTU per hour input of all gas utilization equipment connected to it. See Table 3 for the proper size. Be sure your gas line complies with local codes and gas company requirements.

The boiler and its individual shutoff valve must be disconnected from the gas supply piping system during any pressure testing of that system at test pressures in excess of '/z psig (3.5kpa).

The boiler must be isolated from the gas supply piping system by closing its individual manual shutoff valve during any pressure testing of the gas supply piping system at test pressures equal to or less than '/z psig (3.50ka).

	NATURAL GAS	PROPANE GAS
MAXIMUM GAS SUPPLY PRESSURE	10" w.c.	14" w.c.
MINIMUM GAS SUPPLY PRESSURE	7" w.c.	10" w.c.

B. CONNECTING THE GAS PIPING

Refer to **Fig.12** for the general layout at the boiler. It shows the basic fittings you will need. The gas line enters the boiler from the right side jacket panel. The boiler may receive the gas supply pipe through the left side, or rear jacket panel by relocating the gas valve connector and pipe assembly. The boiler is equipped with a '/z" NPT connection on the gas valve for supply piping. The following rules apply:

1. Use only those piping materials and joining methods listed as acceptable by the authority having jurisdiction, or in the absence of such requirements, by the National Fuel Gas Code, ANSI Z223.1- latest revision. In Canada, follow the CSA- B 149.1 and .2 Installation Codes for Gas Burning Appliances and Equipment.
2. Use pipe joint compound suitable for liquefied petroleum gas on male threads only.
3. Use ground joint unions.
4. Install a sediment trap upstream of gas controls.
5. Use two pipe wrenches when making the connection to the gas valve to keep it from turning.
6. Install a manual shutoff valve in the vertical pipe about 5 feet above floor.
7. Tighten all joints securely.
8. Propane gas connections should only be made by a licensed propane installer.
9. Two stage regulation should be used by the propane installer.
10. Propane gas piping should be checked out by the propane installer.

C. CHECKING THE GAS PIPING

After **all** connection have been made, check immediately for leaks. Open the manual shutoff valve. Test for leaks by applying soap suds (or a liquid detergent) to each joint. Bubbles forming indicate leak. **CORRECT EVEN THE SMALLEST LEAK AT ONCE.**

WARNING

NEVER USE A MATCH OR OPEN FLAME TO TEST FOR LEAKS.

TABLE 3 GAS PIPE SIZES

NATURAL GAS				
Length of Pipe - Ft.	**Pipe Capacity - BTU Per Hour Input Includes Fittings**			
	1/2"	**3/4"**	**1"**	**1 1/4"**
20	92,000	190,000	350,000	625,000
40	63,000	130,000	245,000	445,000
60	50,000	105,000	195,000	365,000
PROPANE GAS				
Length of Pipe - Ft.	**Pipe Capacity - BTU Per Hour Input Includes Fittings**			
	Copper Tubing*		**Iron Pipe**	
	5/8"	**3/4"**	**1/2"**	**3/4"**
20	131,000	216,000	189,000	393,000
40	90,000	145,000	129,000	267,000
60	72,000	121,000	103,000	217,000
* Outside diameter				

The length of pipe or tubing should be measured from the gas meter or propane second stage regulator.

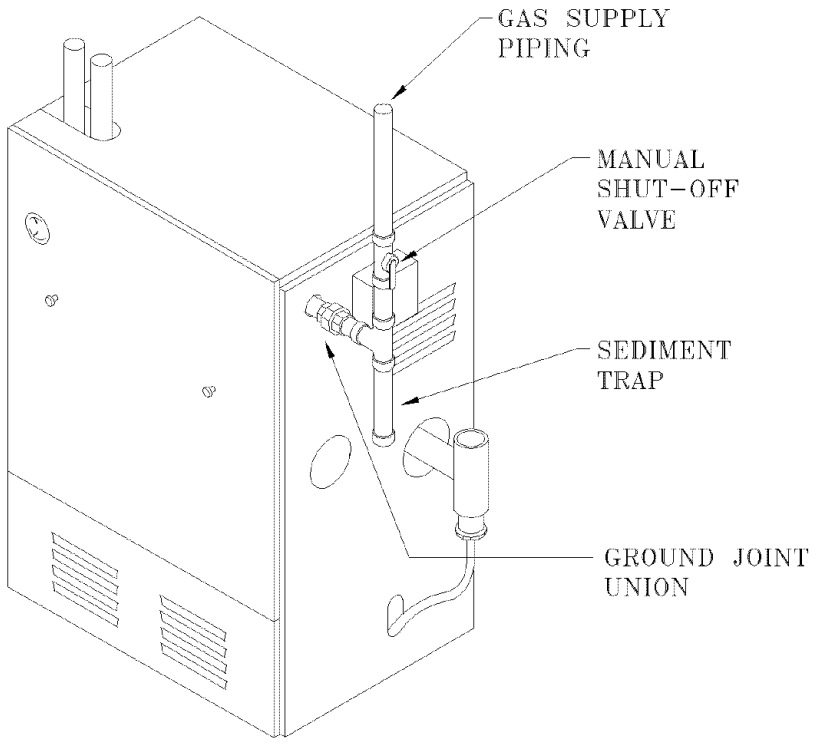

FIGURE 12 GAS PIPING

ELECTRICAL WIRING

WARNING

TURN OFF ELECTRICAL POWER AT FUSE BOX BEFORE MAKING ANY LINE VOLTAGE CONNECTIONS. FOLLOW LOCAL ELECTRICAL CODES.

All electrical work must conform to local codes as well as the National Electrical Code, ANSI/ NFPA70, latest revision. In Canada, electrical wiring shall comply with the Canadian Electrical Codes, CSAC22.1 and .2

A. ELECTRIC POWER SUPPLY

Prior to making any line voltage connections, service switch at boiler should be in the off position and the power turned off at the fuse box

Run a separate 120 volt circuit from a sperate over current protection device in the electrical service entrance panel. This should be a 15 ampere circuit. A service switch has been pre-wired and located on the exterior boiler jacket. See **Fig. 13** for diagram showing location of service switch junction box and power supply connection points. Connect black (hot) lead from the power supply

to either of the unused brass screws on the service switch. Connect the white (neutral) lead from the power supply to the white screw on the service switch. Connect the green (ground) lead from the power supply to the ground (green) screw on the service switch. The receptacle on the service switch is always powered regardless of whether the switch is on or off, and could be used as a power supply for an external condensate pump if one is used.

The boiler, when installed, must be electrically grounded in accordance with the requirements of the authority having jurisdiction or, in the absence of such requirements, with the National Electrical Code, ANSI/NFPA-70, latest revision. In Canada, electrical wiring shall comply with the Canadian Electrical Codes, CSA-C22.1 and .2.

Run a 14 gauge or heavier copper wire from the boiler to a grounded connection in the service panel or a properly driven and electrically grounded ground rod.

B. INSTALL YOUR THERMOSTAT

The thermostat location has an important effect on the operation of your boiler system. **BE SURE TO FOLLOW THE INSTRUCTIONS INCLUDED WITH YOUR THERMOSTAT.**

Locate the thermostat about five feet above the floor on an inside wall. It may be mounted directly on the wall or on a vertical mounted outlet box. It should be sensing average room temperature. Avoid the Following:

DEAD SPOTS:	COLD SPOTS:	HOT SPOTS:	
Behind doors	Concealed pipes or ducts	Concealed pipes	Lamps
Comers and alcoves	Stairwells - drafts	Fireplace	Direct sunlight
	Unheated rooms on other side of wall	TV sets	Kitchens
		Radios	

Set heat anticipator at 0.7 amps. Connect 24 volt thermostat leads to the two(2) yellow wires located in service switch junction box, located on outer jacket of boiler. See Fig.13 for service switch junction box and thermostat field wiring connections.

C. Connect Circulator Pump Wiring

See **Fig.13** for service switch junction box and circulator pump field wiring connections. A 5 feet wiring harness with flexible metal conduit is supplied to connect the circulator pump to the service switch junction box. If the two 120 volt circulator wire terminals inside the junction box are not used, please leave the two wire nuts to prevent the short circuit.

CAUTION

LABEL ALL WIRES PRIOR TO DISCONNECTION WHEN SERVICING CONTROLS. WIRING ERRORS CAN CAUSE IMPROPER AND DANGEROUS OPERATION. VERIFY PROPER OPERATION AFTER SERVICING.

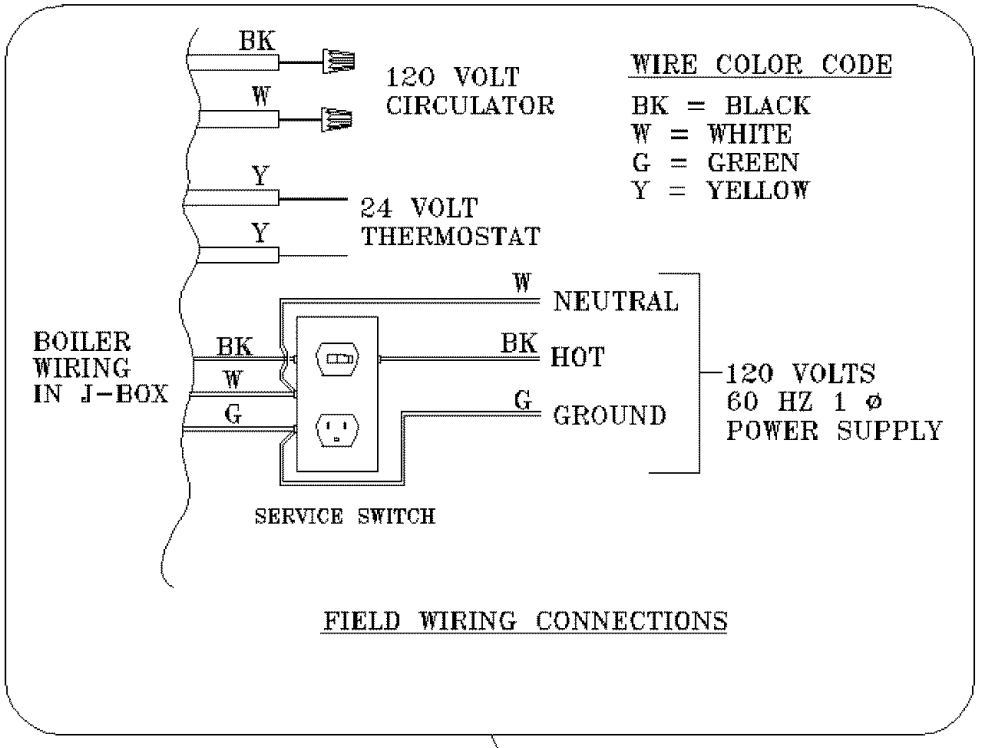

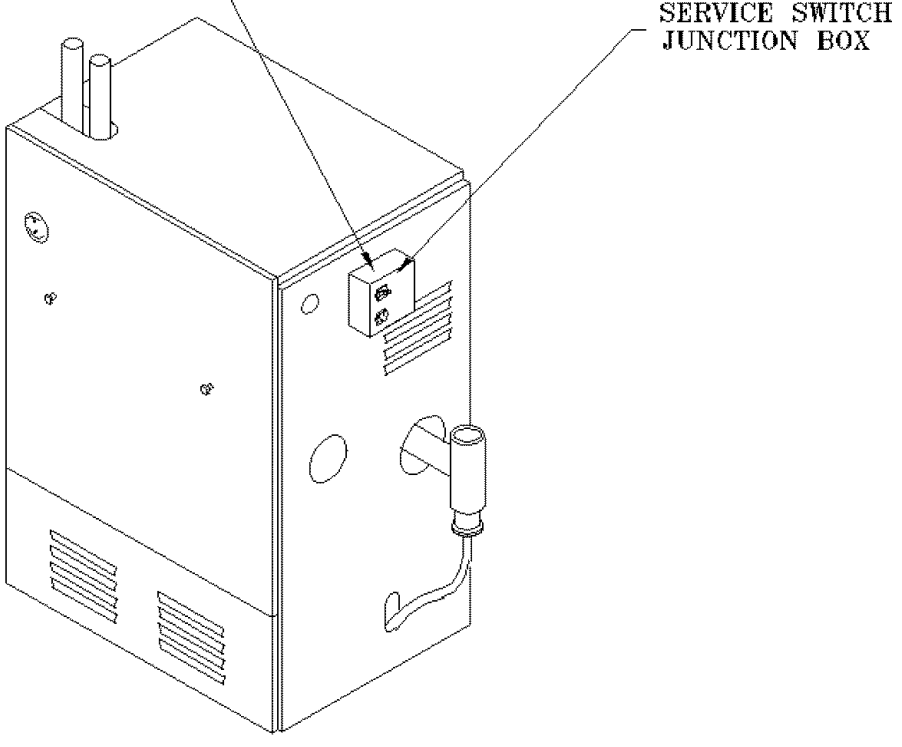

C. **FIGURE 13 FIELD WIRING CONNECTIONS**

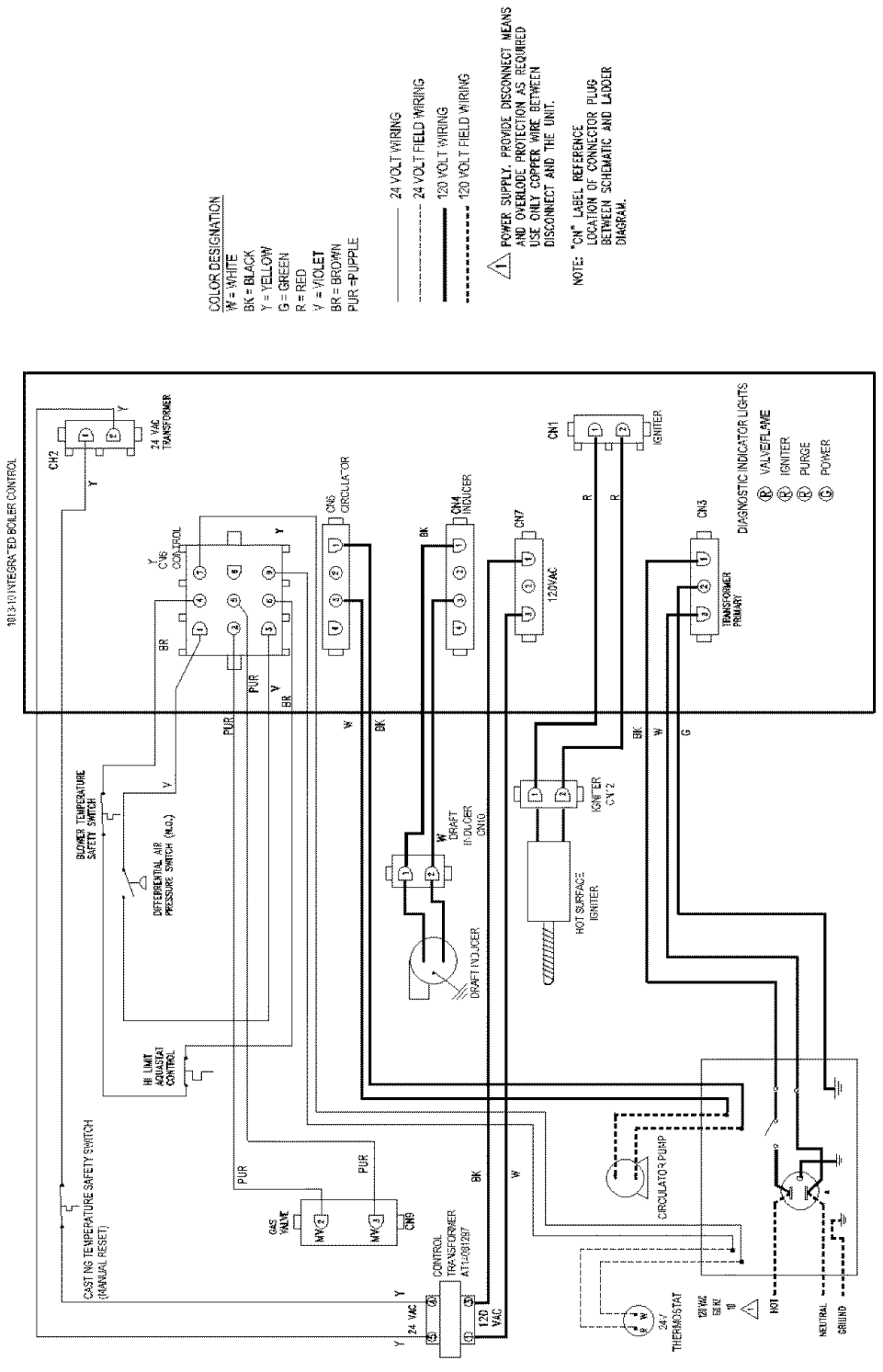

If any of the original wire as supplied with this appliance must be replaced, it must be replaced with type 150°C Thermoplastic wire or its equivalent

D. FIGURE 14 SCHEMATIC WIRING DIAGRAM

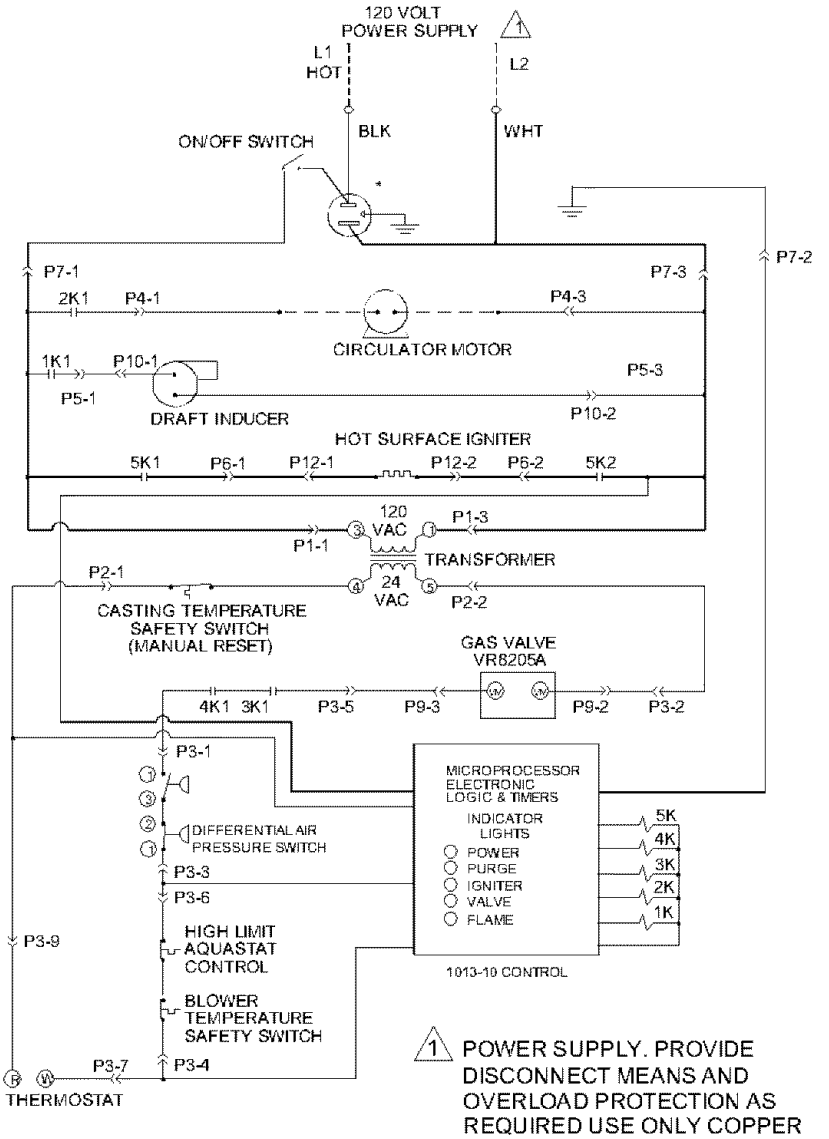

1 POWER SUPPLY. PROVIDE DISCONNECT MEANS AND OVERLOAD PROTECTION AS REQUIRED USE ONLY COPPER WIRE BETWEEN DISCONNECT AND THE UNIT

NOTE: "P" LABEL REFERENCE LOCATION OF CONNECTOR PLUG BETWEEN SCHEMATIC AND LADDER DIAGRAM

* CAUTION: RECEPTACLE IS LIVE WHEN BOILER SWITCH IS OFF

——»—— REFERENCES PLUG CONNECTION

E. FIGURE 15 LADDER WIRING DIAGRAM

CONTROLS AND ACCESSORIES

This section provides a brief description of the key controls and accessories found in this boiler.

See the Troubleshooting section of the Service Hints chapter of this installation manual for detailed sequences of operation and troubleshooting procedures. See the Repair Parts chapter of this manual for locations of all control components and accessories described.

A. INTEGRATED BOILER CONTROL (IBC)

The Integrated Boiler Control (IBC) is a microprocessor based controller for a high efficiency gas boiler that monitors all safety controls and which controls the operation of the combustion air blower, circulator pump, burner, and a combination hot surface igniter/flame sensor. This controller is not intended for use with a vent damper. This controller is mounted on the control panel inside of the boiler and contains four (5) diagnostic indicator lights.

B. GAS CONTROL VALVE

The electrically controlled 24 Volt Honeywell Model VR8205 Combination Gas Control Valve is designed to meet the requirements for use with hot surface ignition systems found in this boiler. The valve is piped to the gas/air mixer.

C. HOT SURFACE IGNITER

The 120 volt Hot Surface Igniter heats up to 1800 °F to initiate combustion of the gas in the burner. The igniter is mounted next to the burner through the gas/air mixer. The igniter also serves as a means for proving the main burner flame by flame rectification. In the event of a lack of flame signal on three (3) consecutive trials for ignition, the IBC will lockout. The “VALVE” and “FLAME” diagnostic indicator lamps (lamp “D” and “E” on the IBC, See Fig. 16) will blink indicating the failure mode as a lack of flame signal. The IBC is manually reset from lockout by either removing and reestablishing the thermostat’s call for heat, or by turning the service switch off, then back on.

D. HIGH LIMIT AQUASTAT CONTROL

The High Limit Aquastat Control determines the maximum boiler water temperature and also provides a means for protecting the boiler and heating system from unsafe operating conditions which could damage the boiler. The aquastat is mounted in the ½" NPT control well and ¾”x½” bushing on the top of the front boiler section at the hot water outlet. The aquastat is tied in with the IBC and is factory set at 180 °F water temperature. The high limit setpoint is field adjustable and may be set anywhere between 100 °F and 200 °F. The field setpoint adjustment for each installation depends on heating system requirements. The aquastat automatically resets when the boiler water temperature decreases (5-30 °F adjustable differential). The differential can be adjusted with the (white) Differential Adjustment Wheel on the aquastat and gives the flexibility for boiler operation. The larger the differential, the longer the run cycle of the boiler.

NOTE: The maximum setpoint of the Aquastat must not exceed 200 °F.

E. DRAFT INDUCER TEMPERATURE SAFETY SWITCH

The Draft Inducer Temperature Safety Switch is a disc thermostat (180 °F setpoint) located on the induced draft fan outlet port. The switch protects the inducer and vent pipe from a potential high temperature condition for the discharging flue gases. This condition would typically be a result of higher aquastat setting or over firing. The temperature safety switch automatically resets when the

higher aquastat setting or over firing. The temperature safety switch automatically resets when the vent temperature decreases. (15 °F switch differential).

F. CASTING TEMPERATURE SAFETY SWITCH

In the event of lack of or loss of water in the boiler, the Casting Temperature Safety Switch (300 °F setpoint) installed on the top of the aluminum boiler section shuts off the boiler by shutting off power to the Integrated Boiler Control (IBC) and causes the Power Indicator Light to go out. This fault requires manual reset of the casting temperature safety switch to restart the boiler. Verify that the boiler is properly filled with water before resetting this switch. WARNING-Never run cold water into a hot empty boiler.

G. DIFFERENTIAL PRESSURE AIR PROVING SWITCH

The diaphragm type differential pressure switch is connected by vinyl tubing to the pressure signal hose adapters. The pressure switch monitors air flow by sensing the diffential pressure measured in inches of water(“ w.c.). The factory settings on these switches are 1.00 “w.c. for Model-100, 1.35 “w.c. for Model-75 and 1.55 “w.c. for Model-50. The contacts are normally open, and close when the draft inducer is running and causing the diffential pressure at the switch to exceed the setting. The closed switch proves there is adequate air flow for combustion. The pressure switch shuts off the main burner if the differential pressure is inadequate due to a blocked vent pipe or a blocked air intake or blocked boiler sections or blocked draft inducer. After five (5) minutes of lack of the adequate differential pressure, the IBC will lockout. The “PURGE” indicator light will blink, indicating a failure to prove adequate combustion air flow or flue gas flow. The IBC is manually reset from lockout as described in the Sequence of Operation section of this chapter.

H. DRAFT INDUCER

The draft inducer (blower) provides a means for pulling combustion air into and through the mixer, the burner, the flue ways of the cast aluminum boiler sections and the flue adapter before being discharged through the vent piping to the outdoors. See applicable sections for proper sizing and installation of combustion air and vent piping in this manual.

I. CIRCULATOR PUMP

Every forced hot water system requires at least one circulating pump. The circulating pump imparts the necessary energy to move the water through the closed loop supply and return piping systems, terminal heating equipment (i.e. finned tube radiators, etc.) and back through the boiler for reheating. To provide the required hot water flow rates, the circulator pump must be properly sized to overcome frictional losses (usually measured in feet of water, also referred to as “pump head loss”) of the supply and return piping systems and boiler. The circulator pump is furnished in a carton within the boiler cabinet for a single zone or zone valve controlled heating system and should be correctly located on the downstream (i.e., pumping away) side of the expansion tank. For a pump controlled system (where there is a circulator for each zone) the circulator provided with the boiler can work for one zone. For more details on piping and circulators, see Near Boiler Piping section of this manual.

J. DRAIN VALVE

The manual drain valve provides a means of draining the water in the heating system, including the boiler and hot water supply and return piping systems installed above the drain valve. This drain valve is installed in the 3/4" tapping at the bottom of the front boiler section. Any piping installedbelow the elevation of this drain valve will require additional drain valves to be installed at low points in the piping systems in order to drain the entire system.

K. A.S.M.E. RATED PRESSURE RELIEF VALVE

Each boiler must have a properly sized and installed American Society of Mechanical Engineers rated pressure relief valve. Water expands as it is heated by the burner/boiler sections. If there is no place for the water to expand its volume, (i.e. a properly sized and properly functioning expansion tank) pressure on the inside of the boiler and heating system will increase. The furnished relief valve will automatically open at 30 psig pressure to relieve the strain on the boiler and heating system from the increasing pressure. The pressure relief valve discharge must be piped with piping same size as the valve discharge opening to an open drain, tub or sink, or other suitable drainage point not subject to freezing, in accordance with A.S.M.E. specifications. Failure to provide the pressure relief valve with piping as herein described may cause water damage and/or serious bodily injury. The boiler manufacturer is not responsible for any water damage or personal injury.

L. FLAME ROLLOUT SAFETY SHUTOFF

As required, this boiler is equipped with a manual reset flame rollout safety shutoff means, which shuts off main burner gas in the event that the flow of combustion products through the flueways is reduced. In the event of blocked flueways, enough air will not be available to support combustion, and the S9301 Integrated Boiler Control (IBC) will lockout due to loss of adequate air flow (after 3 trials for ignition). The “PURGE” diagnostic indicator lamp (lamp “B” on the IBC, see Fig.16) will blink indicating the failure mode as a lack of adequate air flow. The IBC is manually reset from lockout by either removing and reestablishing the thermostat’s call for heat, or by turning the service switch off, then back on. If the boiler cannot be restored to normal operating condition by resetting the control, contact a qualified service agency to check heat exchanger flueways for blockage.

M. (OPTIONAL) EXTERNAL CONDENSATE PUMP

For installations where there is no floor drain or other appropriate drainage receptacle available to receive condensate from the boiler, an external float activated condensate pump with integral sump is required. This unit can be installed to pump the condensate to a remote tie in point to a sanitary sewer system. For this application, the boiler must be installed so that proper pitch of piping to the external condensate reservoir (sump) can be accomplished. Use wood frame or blocks to raise boiler as required for proper installation.

START - UP

A. WATER TREATMENT AND FREEZE PROTECTION

1. When filling the boiler and heating system, water treatment is generally not required or desired. For localities where the water is unusually hard (above 7 grains hardness) or for low pH water conditions (below 7.0), consult a local water treatment specialist.
   a. This boiler is designed for use in a closed hydronic heating system ONLY!
   b. Excessive feeding of fresh make-up water to the boiler may lead to premature failure of the boiler sections.
2. Use clean fresh tap water for initial fill and make-up of boiler.
   a. A sand filter must be used if fill and make-up water from a well is to be used.
   b. Consideration should be given to cleaning the heating system, particularly in retrofit situations, where a new boiler is being installed in an older piping system.

c. In older system, obviously discolored, murky, or dirty water, or a pH reading below 7, are indications that the system should be cleaned.
d. A pH reading between 7 and 8 is preferred.

3. Antifreeze if needed, must be of a type specifically designed for use in closed hydronic heating systems and with aluminum.
   a. Choice and use of antifreeze must be in accordance with local plumbing codes.
   b Only INTERCOOL NFP-50 is approved for use.
      - Use of any antifreeze other than INTERCOOL NFP-50 will void warranty.
      - Antifreeze must be maintained per manufacturers specifications, failure to do so will result in the warranty being voided.
   c. Do not use automotive antifreeze as the type of corrosion inhibitors used will coat the boiler's heat transfer surfaces and greatly reduce capacity and efficiency.
   d. **Consult antifreeze manufacturer's literature for compatibility of antifreeze with aluminum boiler.** For approved manufactured antifreeze (INTERCOOL NFP-50 Coolant) please contact Interstate Chemical Co. New York Customer Service at 1-800-422-2436. Some brands have corrosion inhibitors that break down more rapidly or become ineffective at higher operating temperatures when used with aluminum. Follow the antifreeze manufacturers instructions on determining the proper ratio of antifreeze to water for the expected low temperature conditions, and for maintaining the quality of the antifreeze solutions from year to year.
   e. Use of antifreeze in any boiler will reduce capacity by as much as 10 to 20%, due to differing heat transfer and pumping characteristics. This must be taken into consideration when sizing the heating system, pump(s), and expansion tank. Consult antifreeze manufacturer's literature for specific information on reduced capacity.
   f. Water content of the boiler is 2.6 gallons. (10 liters)

B. FILLING BOILER WITH WATER AND PURGING ARE FOR SYSTEMS WITH DIAPHRAGM TYPE EXPANSION TANKS.

Refer to appropriate "Near Boiler Piping" diagrams.

1. Close all zone service valves on the supply and return piping. Open the feed valve and fill boiler with water. Make sure air vent is open. Hold relief valve open until water runs air free for five seconds to rapidly bleed air from boiler, then let the relief valve snap shut.
2. Open the zone service valve on the <u>supply</u> pipe for the first zone. Open the purge valve on the first zone. Feed water will fill the zone, pushing air out the purge valve. Close the purge valve when the water runs air free. Close the zone service valve.
3. Repeat step 2 for all remaining zones.
4. Open all service valves. Any air remaining trapped in the return lines between the service valves and the boiler will be pushed towards the air vent when the boiler is placed in operation.
5. Inspect piping system. Repair any leaks immediately.

C. FILLING BOILER WITH WATER AND PURGING AIR FOR SYSTEMS WITH CONVENTIONAL CLOSED TYPE EXPANSION TANKS

Refer to appropriate "Near Boiler Piping" diagrams.

1. Close all zone service valves on the supply and return piping and close the expansion tank service valve. Drain expansion tank. Open the feed valve and fill boiler with water. Hold relief valve open until water runs air free for five seconds to rapidly bleed air from boiler, then let the relief valve snap shut.
2. Open the zone service valve on the <u>supply</u> pipe for the first zone. Open the purge valve on the first zone. Feed water will fill the zone, pushing air out the purge valve. Close the purge valve when the water runs air free. Close the zone service valve.
3. Repeat step 2 for all remaining zones.

4. Open the expansion tank service valve and the tank vent. Fill the tank to the proper level and close the tank vent. Remove the handle from the expansion tank service valve so the homeowner doesn't accidentally close it.
5. Open all service valves. Any air remaining trapped in the return lines between the service valves and the boiler will be pushed towards the expansion tank when the boiler is placed in operation.
6. Inspect piping system. Repair any leaks immediately.

NOTE: DO NOT use stop leak compounds. Leaks in threaded connections in the aluminumboiler sections must be repaired immediately. Aluminum threads will not seal themselves.

D. PLACING BOILER IN OPERATION

FOR YOUR SAFETY READ BEFORE OPERATING

WARNING: If you do not follow these instructions exactly, a fire or explosion may result causing property damage, personal injury or loss of life

A. This appliance is equipped with an ignition device which automatically lights the pilot. **Do not** try to light the pilot by hand.

B. **BEFORE OPERATING** smell all around the appliance area for gas. Be sure to smell next to the floor because some gas is heavier than air and will settle on the floor.

WHAT TO DO IF YOU SMELL GAS

- Do not try to light any appliance.
- Do not touch any electrical switch; do not use any phone in your building.
- Immediately call your gas supplier from a neighbor's phone. Follow the gas supplier's instructions.
- If you cannot reach your gas supplier, call the fire department.

C. Use only your hand to move the system control switch. Never use tools. If the switch will not move by hand, don't try to repair it, call a qualified service technician. Force or attempted repair may result in a fire or explosion.

D. Do not use this appliance if any part has been under water. Immediately call a qualified service technician to inspect the appliance and to replace any part of the control system and any gas control which has been under water.

OPERATING INSTRUCTIONS

1. **STOP!** Read the safety information above on this label.
2. Set thermostat to lowest setting.
3. Turn off all electric power to the appliance.
4. This appliance is equipped with an ignition device which automatically lights the burner. DO NOT try to light the burner by hand.

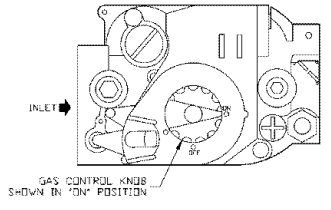

5. Remove the front jacket panel..
6. Turn the gas control knob clockwise to "OFF".
7. Wait five (5) minutes to clear out any gas. Then smell for gas, including near the floor. If you smell gas, STOP! Follow "B" in the safety information above on this label. If you don't smell gas go on to next step.
8. Turn the gas control knob counter clockwise to "ON".
9. Replace front jacket panel.
10. Turn on all electrical power to the appliance.
11. Set the thermostat to desired setting.
12. If the appliance will not operate, follow the instructions "To Turn Off Gas To Appliance" and call your service technician or gas supplier.

TO TURN OFF GAS TO APPLIANCE

1. Set the thermostat to lowest setting.
2. Turn off all electric power to the appliance if service is to be preformed.
3. Remove the front jacket panel.
4. Turn gas control knob clockwise to "OFF".
5. Replace the front jacket panel.

Safe lighting and other performance criteria were met with the gas manifold and control assembly provided on the boiler when the boiler underwent tests specified in ANSI Z21.13-latest revision.

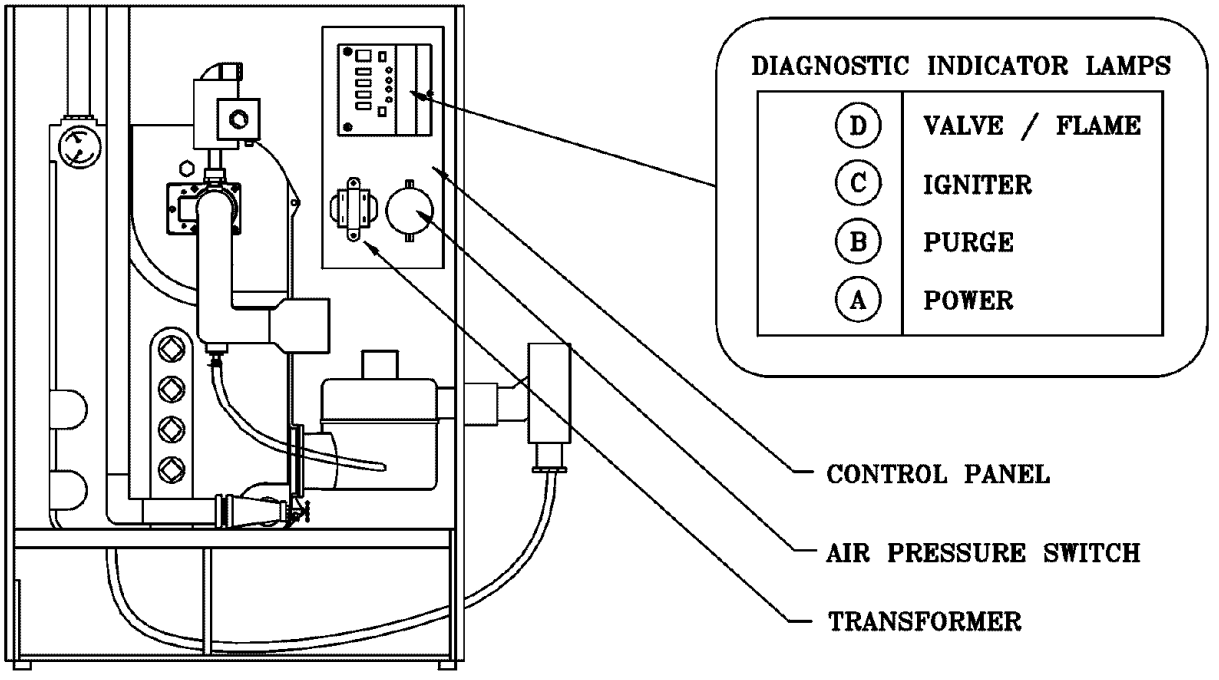

FIGURE 16 INDICATOR LAMPS

A. VERIFY PROPER SEQUENCE OF OPERATION

The sequence can be followed via the diagnostic indicator lamps on the Honeywell S9301A integrated boiler control in Fig. 16. This is the normal sequence of operation. A more detailed sequence of operation containing potential faults can be found in the service hints section.

SEQUENCE OF OPERATION	DIAGNOSTIC INDICATOR LAMPS
Power ON, boiler standing by. Lamp A is illuminated indicating 2 volt power is being supplied to the integrated control.	A. ● B. ○ C. ○ D. ○ E. ○
Thermostat calls for heat, energizing system circulator	A. ● B. ○ C. ○ D. ○ E. ○
Integrated boiler control goes through self check of internal circuitry (1-2 seconds) and energizes draft inducer	A. ● B. ○ C. ○ D. ○ E. ○
Draft inducer comes up to speed and establishes combustion airflow, causing the normally open differential pressure air proving switch contacts to close. Lamp B is illuminated indicating that combustion airflow is proved and the 15 second pre purge cycle is under way.	A. ● B. ● C. ○ D. ○ E. ○

After pre purge, Lamp B goes out and Lamp C illuminates, indicating the hot surface igniter is powered for the 20 second igniter warm-up period. The bright yellow orange glow of the hot surface igniter can be observed through the observation port in the front boiler section just above the igniter.	A. ○ B. ○ C. ● D. ○ E. ○
After igniter warm-up, the gas valve is energized, and opens on the normal firing rate regulator (2.5" w.c.) for a 6 second trial for ignition. Lamp D illuminates. The blue orange glow of the burner can be seen through the observation port.	A. ● B. ○ C. ● D. ● E. ⊙
Two seconds later, Lamp C goes out as power is turned off to the hot surface igniter. During the last two seconds of the 6 seconds trial for ignition, main burner flames is proven by flame rectification through the hot During surface igniter, providing flame rectification to the integrated boiler control and fully illuminating Lamp E.. The gas valve remains energized, and the boiler runs.	A. ● B. ○ C. ○ D. ● E. ●
Thermostat ends call for heat, de-energizing gas valve and system circulator. Burner stops firing, and Lamp D goes out. Draft inducers remains powered. Lamp B illuminates, indicating draft inducer is running for 30 second postpurge.	A. ● B. ● C. ○ D. ○ E. ○
After 30 seconds, draft inducer is de-energized. Lamp B goes out. Boiler stands by for next call for heat.	A. ● B. ○ C. ○ D. ○ E. ○

NOTE: First couple of cold starts may be rough due to gas line not being completely purged of air, causing low firing rate and high excess air levels..

B. INSPECT VENTING AND AIR INTAKE SYSTEM

Operate the boiler and verify that all vent/air intake connections are gastight and watertight. Repair any leaks immediately.

C. INSPECT CONDENSATE DRAIN

Verify that all connections are watertight, and that condensate flows freely. Repair any leaks immediately.

D. INSPECT SYSTEM PIPING

Verify that all connections are watertight. Repair any leaks immediately.

E. TEST IGNITION SYSTEM SAFETY SHUTOFF DEVICE

1. Turn off manual gas valve
2. Set thermostat to call for heat
3. Boiler begins normal sequence of operation
4. After approximately 40 seconds (pre purge and igniter warm-up period), lamp D illumi nates, indicating gas valve is powered
5. After 6 seconds, gas valve closes, lamp D goes out as integrated boiler control senses that flame is not present
6. To restart system, follow operating instructions under “START-UP PLACE IN OPERATION”

F. TEST HIGH LIMIT CONTROL AND ADJUST

While burner is operating, move indicator on high limit control below actual boiler water temperature. Burner should go off while circulator continues to operate. Raise limit setting above boiler water temperature and burner should reignite after pre purge and igniter warm-up period. Set the high limit control to the design temperature requirements of the system. Maximum high limit setting is 200°F. Minimum high limit setting is 100°F.

G. TEST OTHER SAFETY CONTROLS

If the boiler is equipped with a low water cut off, a manual reset high limit, or additional safety controls, test for operation as outlined by the control manufacturer. Burner should be operating and should go off when controls are tested. When safety controls are restored, burner should reignite.

H. SET THERMOSTAT HEAT ANTICIPATOR (IF USED) AND VERIFY THERMOSTAT OPERATION

For a single thermostat connected to the yellow thermostat lead wires in the furnished field wiring junction box, the heat anticipator should be set at 0.7 amps. For other wiring configurations, refer to the instructions provided by the thermostat manufacturer regarding adjustment of heat anticipator. Cycle boiler with thermostat. Raise the thermostat to the highest setting and verify boiler goes through normal start up cycle. Lower thermostat to lowest setting and verify boiler goes off.

I. MEASURE THE NATURAL GAS INPUT RATE

Correct input rate is essential for proper and efficient operation of the burner and boiler.

1. Determine elevation at installation site.
2. See page 4 and 5 of this manual to determine the correct input rate for the local elevation.
3. Obtain the yearly average heating value of the local gas supply from the gas utility. At sea level elevation, it should be approximately 1000 Btu's per standard cubic foot.
4. Operate boiler for 5 minutes.
5. Turn off all other gas appliances, extinguishing standing pilots where applicable.
6. At gas meter, measure time in seconds required to use one cubic foot of gas.
7. Calculate input rate according to the following formula:

$$\textit{Btuh}\ \textbf{input rate} = \frac{\textit{3600xheating value from step 3}}{\textit{time from step 6}}$$

8. Measured input rate should be within +/-2% of the input rating from step 2. If within 2%, go to step 9. If not, adjustment is required, proceed as follows:
   a. Turn boiler off
   b. Set up U-tube manometer or differential pressure gauge for measuring manifold pres sure, see **FIG. 17.**
   c. Manometer or gauge must be able to read at least 0.0 to 3.0 inches water column of pressure, and resolve to at least 0.1 inches water column.
   d. Turn boiler on.
   e. Manifold pressure has been nominally set at 2.5 inches w.c. Manifold pressure and input rate must always be measured with pressure regulator cover screw installed. Cover screw must be removed for adjustment. Manifold pressure reading will change (increase) when cover screw is removed.

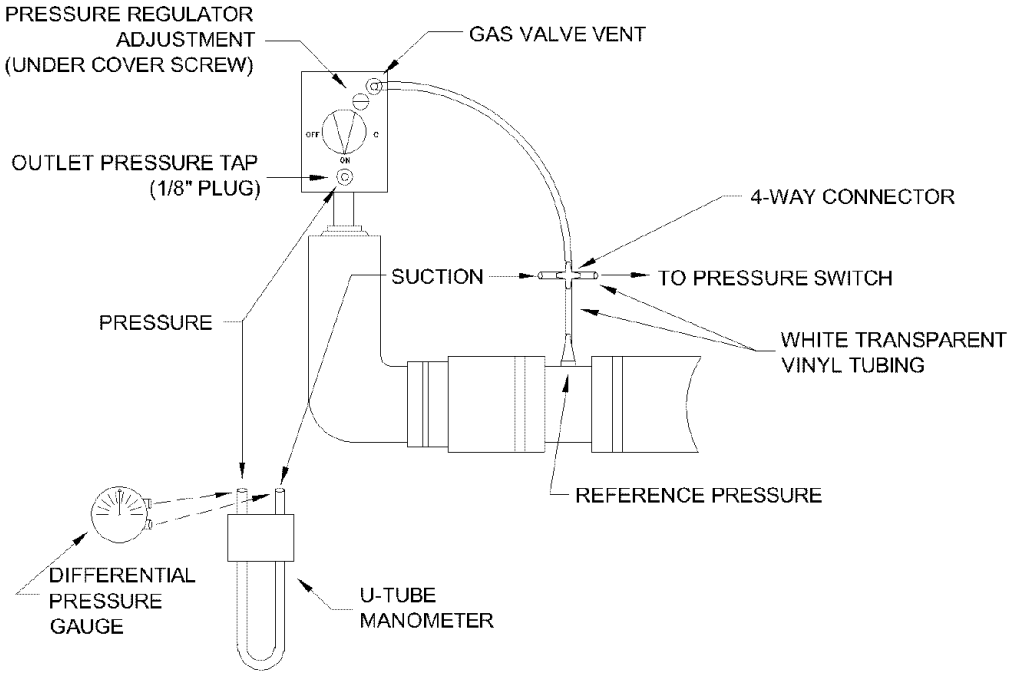

THE FOLLOWING STEPS AND DIAGRAM INDICATE THE LOCATION OF THE CONNECTION POINTS REQUIRED TO MEASURE THE MANIFOLD PRESSURE.

THE MANIFOLD PRESSURE MAY BE MEASURED USING A U-TUBE MANOMTERE OR A DIFFERENTILA PRESSURE GAUGE. THE DIAGRAM SHOWS THE CONNECTION OF BOTH MEASURING DEVICES BUT ONLY ONE DEVICE IS REQUIRED TO MEASURE THE MANIFOLD PRESSURE.

© REMOVE THE PLUG. INSTALL APPROPRIATE BARBED FITTING AND CONECT THE PRESSURE SIDE LINE FROM THE U-TUBE MANOMETER OR THE DIFFERENTIAL PRESSURE GAUGE.

REFER TO “CHECK OUT PROCEDURE AND ADJUSTMENTS” IN THIS MANUAL WHEN READING MANIFOLD PRESSURE.

WHEN MEASUREMENT IS COMPLETE, DISCONNECT U-TUBE MANOMETER OR DIFFERENTIAL PRESSURE GAUGE. BE SURE TO REINSTALL 1/8" PLUG, USING APPROPRIATE PIPE THREAD SEALANT APPROVED FOR USE WITH NATURAL AND LIQUIFIED PETROLEUM GASES.

FIGURE 17 MANIFOLD PRESSURE MEASUREMENT DETAIL

NOTE: Regulator cover screw must be installed at all times unless adjusting manifold pressure. Firing rate and manifold pressure must only be measured with cover screw firmly installed.

Top view of gas control

VR8205

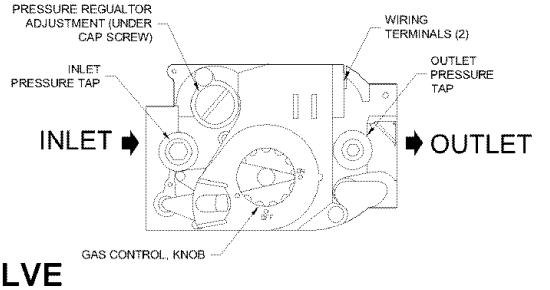

FIGURE 18 GAS VALVE

I. Remove regulator cover screw on top of gas valve, and insert an appropriate screwdriver into adjustment screw.
II. Turn adjustment screw clockwise to increase input rate, or counter clockwise to decrease input rate.
III. Replace cover screw, or cover hole temporarily with your finger to check new manifold pressure setting. Do not set manifold pressure lower than 2.0 inches w.c. or higher than 3.0 inches w.c. when adjusting input rate.
IV. Measure new input rate (cover screw must be installed). Repeat steps I.-IV until the input rate is within +/-2% of the nameplate input rating.
V. If the actual input rate can not be set to within 2% of the correct input rating by adjusting manifold pressure, a change in gas orifice size is required. Consult the boiler manufacturer for information on correct orifice sizing. The specific gravity (G) and the higher heating value (HHV) of the local natural gas must be obtained from the local gas utility in order to determine the proper orifice size.

f. After adjusting input rate, turn boiler off, remove manometer or pressure gauge, reinstall 1/8" plug on gas valve. Turn boiler on.

9. Restore all gas appliances that may have been shut off (while measuring boiler input rate) to normal operating conditions.

J. SET THERMOSTAT TO DESIRED ROOM TEMPERATURE

Observe several operating cycles to verify proper operation.

K REVIEW ALL INSTRUCTIONS

Review all instructions shipped with this boiler with owner or maintenance person. Instructions must be affixed on or adjacent to the boiler.

L. COMPLETE AND SIGN THE INSTALLATION AND CHECK-OUT CERTIFICATE ON THE FOLLOWING PAGE.

INSTALLATION AND CHECK-OUT CERTIFICATE

Boiler Model _____ Serial # _____ Date Installed_____

Measured BTU/HR input_____

- ○ **Installation instructions have been followed**
- ○ **Checkout procedure and adjustments performed**
- ○ **Maintenance and Service issues reviewed with owner/ maintenance person**
- ○ **Installation booklet affixed on or adjacent to boiler**

Installer (Company) _____

Address _____

Phone _____

Installer's Name _____

Signature _____

MAINTENANCE AND CLEANING

Maintenance as outlined below can be performed by the owner unless otherwise noted.

The acidic nature of flue gasses condensing on the aluminum boiler sections will cause the formation of aluminum oxide. This oxide formation is normal, is generally uniform throughout the boiler sections, and represents a negligible mass of aluminum that is consumed by oxidation during the life of the boiler. If left unchecked, this buildup may eventually cause blockage of the flue gas passages in the boiler sections, reducing efficiency, and ultimately shutting down the boiler due to lack of combustion air flow. Regular service and maintenance by a qualified service agency must be performed to assure safe trouble free operation and maximum efficiency.

A. BEGINNING OF EACH HEATING SEASON

1. Annual service call by a qualified service agency, which includes:
   a. Examine flue passages between boiler sections, burner, and condensate lines, and clean if necessary following the annual examination and cleaning instructions in para graph “F” on the next page.
   b. Visually inspect venting and air intake system for proper function, deterioration or leakage. If the vent or air intake show any signs of deterioration or leakage, repair or replace them, immediately. Insure proper reassembly and resealing of the vent and air intake system. c.Check for and remove any obstruction to the flow of combustion air or venting of flue gases. Check the air baffle located inside 1 1/2"x2" flexible coupling on the mixer, clean it if necessary and make sure to put it back. Refer to repair parts diagram of mixer and pressure switch assembly for exact location.
   d. Follow instructions for “PLACING BOILER IN OPERATION”.
   e. Follow instructions for” CHECK OUT PROCEDURE AND ADJUSTMENTS”.
   f. Visually inspect condensate drain line for proper operation and deterioration. Check for plugged condensate drain line.
   g. Check the silicone rubber seals between boiler sections. Insure that there are no leaks. Use RTV silicone rubber adhesive sealant (available in caulking gun tubes) rated for at least 400° F to replace or repair seals in locations where original seals have deteriorated.
   h. Check all gasketed joints for leakage, and tighten bolts or replace gaskets if necessary.
   i. Remove jacket front and top panels and check for piping leaks around relief valve and other fittings. Repair, if found. DO NOT use stop leak compounds.
2. Check that boiler area is free from combustible materials, gasoline, and other flammable vapors and liquids.
3. Circulator pump and blower motor furnished with boiler are permanently lubricated from factory and require no further lubrication. Additional or non-factory supplied pumps and/or motors should be lubricated according to the pump and/or motor manufacturer’s instruction.

B. DAILY DURING HEATING SEASON

1. Check for and remove any obstruction to the flow of combustion air or venting of flue gases.
2. Check that boiler area is free from combustible materials, gasoline, and other flammable vapors and liquids.

C. MONTHLY DURING HEATING SEASON

1. Remove jacket front and top panels and check for piping leaks around relief valve and other fittings. If found, contact a qualified service agency to repair. DO NOT use stop leak compounds.
2. Test relief valve. Refer to valve manufacturers instructions packaged with relief valve.
3. Visually inspect venting and air intake system for proper function, deterioration, or leakage. If the vent or air intake show any signs of deterioration or leakage, contact a qualified service agency to repair or replace them immediately and to insure proper reassembly and resealing of the vent and air intake system.
4. Visually inspect the clear vinyl condensate lines and the PVC condensate drain pipe for proper operation, leakage, and deterioration. If the condensate lines or drain pipe show any signs of blockage, leakage, or deterioration contact a qualified service agency to clean, repair, or replace them immediately.
5. Check the air baffle located inside 1 1/2"x 2" flexible coupling, clean it if necessary and make sure to put it back. Refer to repair parts diagram, mixer and pressure switch assembly.

D. PERIODICALLY DURING HEATING SEASON

1. Where low water cut offs are used, a periodic inspection of the low water cut off is necessary, including flushing of float type devices. Refer to low water cut off manufacturer's specific instructions.

E. END OF EACH HEATING SEASON - ANNUAL SHUTDOWN PROCEDUR

1. Follow instructions "TO TURN OFF GAS TO APPLIANCE".
2. If heating system is to remain out of service during freezing weather, and does not contain antifreeze, drain system completely. If boiler will be exposed to freezing temperatures, drain condensate lines. Otherwise, do not drain system or boiler.

F. ANNUAL EXAMINATION AND CLEANING OF BOILER COMPONENTS

The following service procedures must be performed only by a qualified service agency. Boiler owner should not attempt these procedures.

1. **Before Servicing,** turn off electrical power to boiler at service switch. Close manual gas valve to turn off gas supply to boiler.
2. **Cleaning Flue passages between boiler sections.**
   a. Any buildup of sediment or aluminum oxide (white powdery or flaky substance) in the flue passages must be cleaned as follows:
   b. Remove jacket front and top panels. Disconnect condensate drain line from the barbed fitting on the bottom of the boiler. Keep the open end of the drain line above the water level in the condensate trap to prevent the trap from draining. Disconnect pressure switch hose from barbed fitting on gas valve. Disconnect 1½ x 2" flexible coupling from air inlet. Disconnect air by-pass (½" transparent vinyl tube) from the bottom of the mixer.

c. Remove air baffle from 1%z" x2" flexible coupling and clean air baffle if necessary. Refer to repair parts diagram, mixer and pressure switch assembly.

d. Confirm that manual gas valve is closed and disconnect gas line to gas valve at union. Disconnect wires to gas valve. and igniter.

e. Loosen but do not remove five (5) nuts attaching mixer assembly to boiler. Remove two (2) igniter screws and very carefully remove the igniter. Use care when removing the igniter, it is very brittle!!

f. Remove five (5) nuts and remove mixer assembly. Remove burner and mixer gasket.

g. Aluminum oxide deposits are water soluble and may be rinsed away with spraying or running water. Before rinsing, connect a '/z" I.D. hose to the barbed fitting on the bottom of the boiler and run the hose to a bucket or drain.

h. After rinsing, remove any remaining loosened sediment using a shop vacuum with a snorkel attachment.

i Inspect burner for any foreign matter in the flame ports or inside the burner. Any foreign matter should be removed by blowing with compressed air or vacuuming.

j. Inspect interior of mixer for any signs of sediment or aluminum oxide and clean if necessary.

k. Reinstall burner and mixer gasket and position mixer assembly over studs. Install five (5) nuts but do not tighten. Reinstall igniter and igniter gasket and fasten with two (2) screws. Use care when installing the igniter. It is very brittle!! Tighten five (5) nuts holding mixer assembly.

l. Connect:
- gas line to gas valve
- condensate drain line to boiler
- pressure switch hose to gas valve
- air by-pass to mixer
- 1 1/2" x2" flexible coupling to air inlet and make sure to put air baffle back to **correct position**
- igniter wires
- gas valve wires

3. Visually inspect condensate lines leading from the boiler sections and the vent tee to the condensate trap. Refer to repair parts diagrams. Any foreign material or debris that is visible in the condensate lines needs to be cleaned out as follows: .

a. Raise condensate trap and drain condensate lines completely.

b. Once the condensate trap is emptied of water, disconnect condensate lines from the fittings on the boiler, the vent tee, and the condensate outlet.

c. Remove the condensate trap and run cold water through the condensate lines to thoroughly flush out any sediment or debris in the lines.

d. Reinstall and connect the condensate trap, using the hose clamps to secure the various condensate lines to their fittings.
e. Follow the instructions under “NEAR BOILER PIPING” for”filling condensate trap with water”

4. Inspection of the flue connector requires the following steps (Refer to the repair parts diagram.)

a. Loosen the clamp on the draft inducer end of the 2" flexible coupling that connects the vent tee to the draft inducer. Disconnect (unplug) wiring harness from draft inducer motor and draft inducer temperature safety switch. Remove four (4) bolts that attach draft in ducer to flue connector.

b. Remove draft inducer and gasket from top of flue connector.

c. Inspect interior of flue connector. Any buildup of sediment or aluminum oxide on the inside surface must be cleaned. Position the draft inducer gasket and the draft inducer and fasten with four (4) screws. Be sure to connect ground wire from draft inducer motor to one of the four mounting screws.

d. Connect wiring harness leads to the draft inducer motor and the draft inducer tempera ture safety switch.

e. Connect the 2" flexible coupling to the draft inducer outlet.

SERVICE HINTS

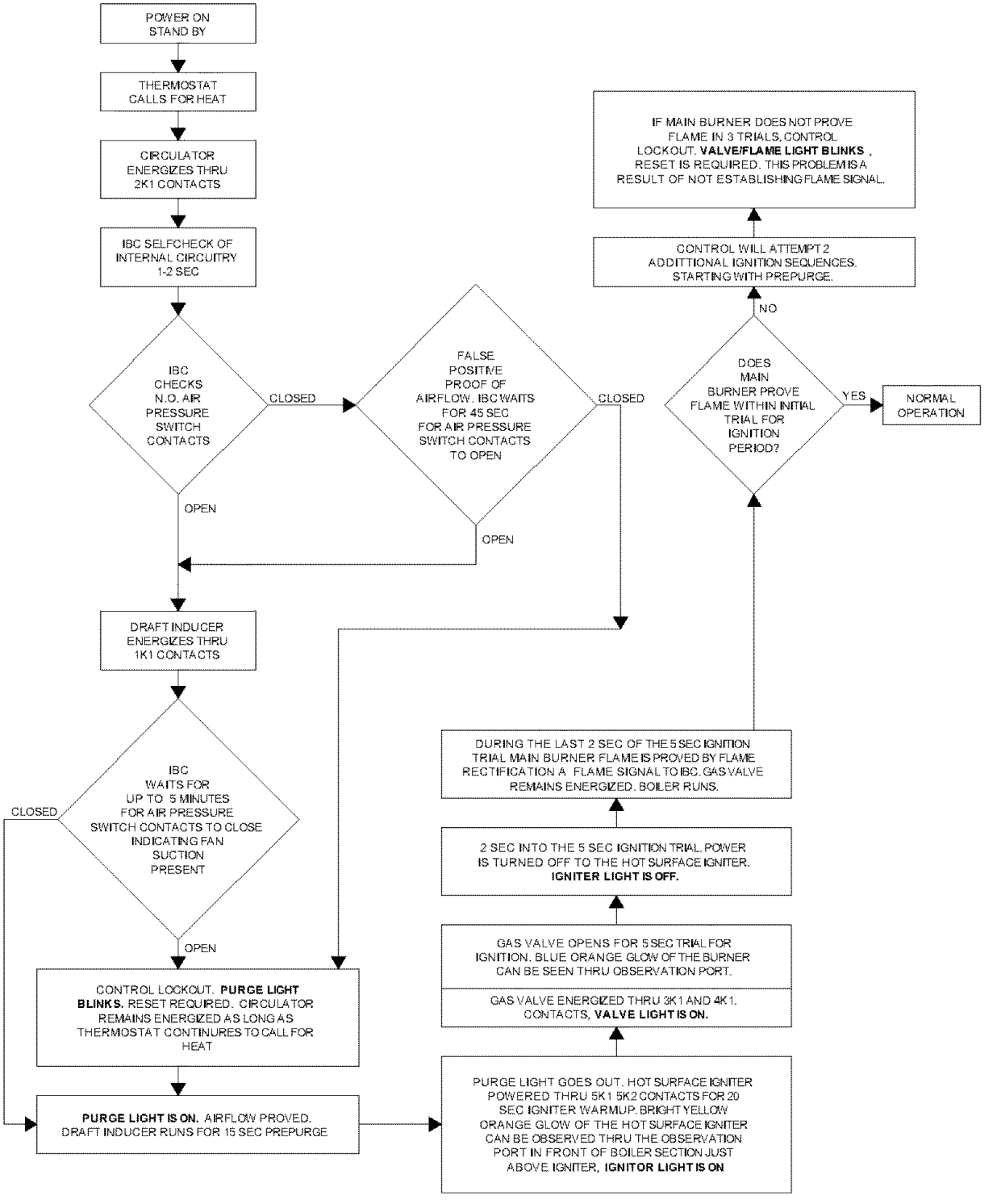

DETAILED SEQUENCE OF OPERATION

DRAFT INDUCER TEMPERATURE SAFETY SWITCH

IF DRAFTINDUCER TEMPERATURE REACHES TEMPERATURE SAFETY SWITCH SETPOINT, SAFETY SWITCH CONTACTS OPEN IMMEDIATELY CLOSING GAS VALVE (LIGHT GOES OUT)

↓

DRAFT INDUCER RUNS THRU 30 SECOND POST PURGE AND SWITCHES OFF.

↓

CIRCULATOR RUNS WITH THERMOSTAT ON CALL FOR HEAT.

↓

WHEN TEMPERATURE SAFETY SWITCH CONTACTS REMAKE BEFORE END OF CALL FOR HEAT, CONTROL GOES INTO NORMAL LIGHT-OFF SEQUENCE.

LOSS OF FLAME SIGNAL

IF AN ESTABLISHED FLAME SIGNAL IS LOST WHILE CONTROL EXPECTS THAT THE BURNER IS OPERATING, CONTROL WILL IMMEDIATELY DE-ENERGIZE GAS VALVE, **VALVE LIGHT GOES OUT**

↓

DRAFT INDUCER RUNS THRU 30 SECOND POST PURGE

↓

CONTROL WILL ATTEMPT TO RE-LIGHT BOILER 3 TIMES. IF FLAME IS NOT PROVEN, CONTROL LOCKOUT - PROBLEM ESTABLISHING A FLAME SIGNAL, **VALVE LIGHT IS BLINKING.**

LOSS OF COMBUSTION AIRFLOW

IF COMBUSTION AIRFLOW IS LOST WHILE BURNER IS FIRING (DIFFERENTIAL AIR PRESSURE SWITCH CONTACTS OPEN) GAS VALVE WILL BE DE-ENERGIZED, **VALVE LIGHT GOES OUT.**

↓

DRAFT INDUCER RUNS THRU 30 SECOND POST PURGE

↓

IF CALL FOR HEAT REMAINS, IBC WAITS 5 MINUTES FOR AIRFLOW TO BE RE-ESTABLISHED.

↓

IF AIR FLOW DOES NOT RE-ESTABLISH CONTROL LOCKOUT - PROBLEM WITH COMBUSTION AIRFLOW, **PURGE LIGHT BLINKS**

CASTING TEMPERATURE SAFETY SWITCH

IF BURNER OPERATES WHEN BOILER HAS NO WATER, ALUMINUM BOILER SECTIONS HEAT UP RAPIDLY.

↓

CASTING TEMPERATURE SAFETY SWITCH CONTACTS WILL OPEN BREAKING 24 VOLT POWER TO IBC. POWER INDICATOR LIGHT GOES OUT. REQUIRES MANUAL RESET TO RE-CLOSE CONTACTS, **POWER LIGHT GOES OUT.**

HI LIMIT CONTROL

IF BOILER WATER TEMPERATURE REACHES HI LIMIT (AQUASTAT) SETPOINT, HI LIMIT N.C. CONTACTS OPEN IMMEDIATELY, CLOSING GAS VALVE, **VALVE LIGHT GOES OUT.**

↓

DRAFT INDUCER CONTINUES TO RUN FOR 30 SECOND POST PURGE AND SWITCH OFF.

↓

CIRCULATOR RUNS AS LONG AS THERMOSTAT CALLS FOR HEAT.

↓

WHEN HI LIMIT CONTACTS REMAKE BEFORE END OF CALL FOR HEAT - CONTROL GOES INTO A NORMAL LIGHT OFF SEQUENCE.

CIRCULATOR PUMP

CIRCULATOR WILL BE ENERGIZED AS LONG AS THERMOSTAT CALLS FOR HEAT DURING LOCKOUT.

↓

RECOVERY FROM ANY LOCKOUT REQUIRES RESET WHICH IS ACCOMPLISHED BY REMOVING AND REAPPYING THE THERMOSTAT CALL FOR HEAT OR POWER TO CONTROL.

DETAILED SEQUENCE OF OPERATION

END OF NORMAL SEQUENCE OF OPERATION

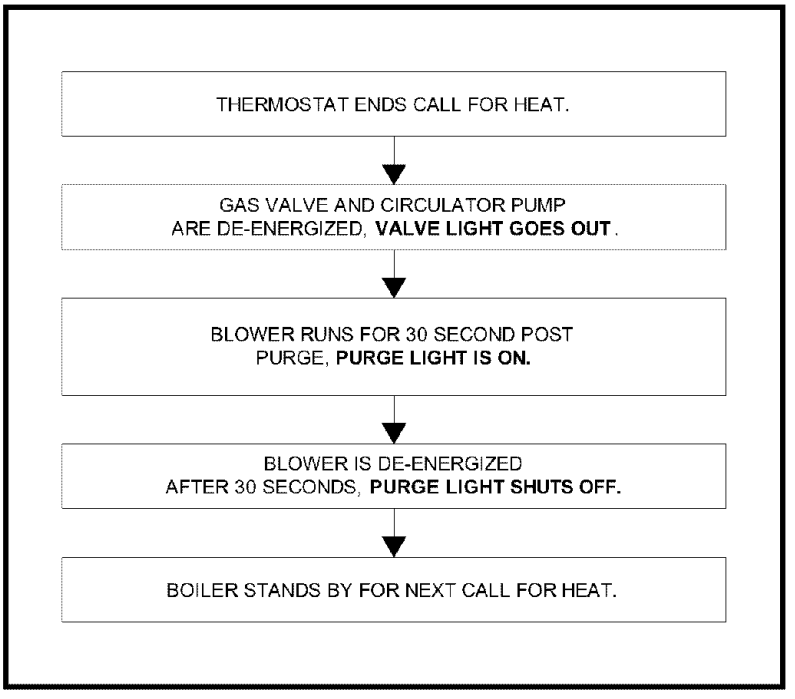

DETAILED SEQUENCE OF OPERATION

!!WARNING!!

FIRE, EXPLOSION OR SHOCK HAZARD MAY CAUSE PROPERTY DAMAGE, SEVERE INJURY OR DEATH.
DO NOT ATTEMPT TO MODIFY THE PHYSICAL OR ELECTRICAL CHARACTERISTICS OF THIS BOILER IN ANY WAY.

IMPORTANT

1. IN A RESET FROM LOCKOUT CONDITION, ALL ELECTRICAL METER READINGS AT THE GAS CONTROL VALVE (24 VAC) MUST BE TAKEN WITHIN THE TRIAL FOR IGNITION PERIOD.
2. IF ANY COMPONENT DOES NOT FUNCTION PROPERLY, MAKE SURE IT IS CORRECTLY INSTALLED AND WIRED BEFORE REPLACING IT.
3. STATIC ELECTRICITY DISCHARGE CAN DAMAGE THE INTEGRATED BOILER CONTROL (IBC). TOUCH METAL SURFACE TO DISCHARGE STATIC ELECTRICITY BEFORE TOUCHING IBC.
4. THE IBC CANNOT BE REPAIRED. IF IT MALFUNCTIONS IT MUST BE REPLACED.
5. ONLY TRAINED, EXPERIENCED SERVICE TECHNICIANS SHOULD SERVICE THE IBC SYSTEMS. FOLLOWING TROUBLESHOOTING, CHECK OUT THE SYSTEM FOLLOWING THE SEQUENCE OF OPERATION SECTION OF THIS CHAPTER FOR A NORMAL LIGHT OFF SEQUENCE.
6. ALL CONTROLS ARE FACTORY TESTED IN THE ASSEMBLY PROCESS AND A DEFECTIVE CONTROL IS GENERALLY THE LEAST LIKELY CAUSE. IF YOU SUSPECT YOU HAVE A DEFECTIVE CONTROL, READ THROUGH THE TROUBLESHOOTING CHART BEFORE YOU REPLACE IT.
7. IT IS EXTREMELY UNLIKELY THAT THE TWO CONSECUTIVE CONTROLS ARE DEFECTIVE. IF IT SEEMS TO BE HAPPENING, CHANCES ARE THAT EITHER THERE IS NOTHING WRONG WITH THE CONTORL OR IT IS BEING DAMAGED BY SOME OTHER PROBLEM (AN ELECTRICAL SHORT BURNING OUT A TRANSFORMER, FOR EXAMPLE).

INITIAL SERVICE CHECKS

1. BEFORE TROUBLESHOOTING:
   - A. MAKE SURE THAT CIRCUIT BREAKER IS ON OR FUSE IS OK AT ELECTRICAL PANEL.
   - B. MAKE SURE THAT SERVICE SWITCH IS ON.
   - C. MAKE SURE THAT GAS IS ON AT THE GAS METER, AT ALL APPROPRIATE MANUAL SHUTOFF VALVES AND AT THE GAS CONTROL VALVE.
   - D. MAKE SURE THAT THE THERMOSTAT IS CALLING FOR HEAT.
   - E. CHECK THAT WIRE CONNECTORS AT THE INTEGRATED BOILER CONTROL AND AT THE ORIGINATING CONTROL ARE SECURELY PLUGGED IN OR CONNECTED.
   - F. CHECK THAT HOSES ARE SECURELY CONNECTED AND ARE NOT PLUGGED IN OR DAMAGED.

2. TROUBLESHOOTING TOOLS:
   - A. VOLTMETER TO CHECK 120 VAC AND 24 VAC
   - B. CONTINUITY TESTER.
   - C. INCLINED MANOMETER OR PRESSURE GAUGE WITH 0-2.0" RANGE (0.01" SCALE) FOR MEASURING SUCTION PRESSURES AT PRESSURE SWITCH.
   - D. U-TUBE MANOMETER OR DIFFERENTIAL PRESSURE GAUGE WITH 0-14" RANGE (0.1" SCALE) FOR MEASURING INLET AND MANIFOLD GAS PRESSURES.

3. WHAT IS SYSTEM STATUS?
   - A. CONSULT THE CHART ON THE FOLLOWING PAGE.
   - B. FIGURE 15 ON PAGE 29 SHOWS THE LOCATION ON THE BOILER OF THE DIAGNOSTIC INDICATOR LAMPS.

TROUBLE SHOOTING

SYSTEM STATUS

THE INDICATOR LIGHTS TRACK THE OPERATING SEQUENCE. IF THE SYSTEM LOCKS OUT, THE LIGHTS INDICATE THE POINT IN THE SEQUENCE OF OPERATION WHERE LOCKOUT OCCURS. IF THIS TABLE DOES NOT READILY PROVIDE THE REASON FOR BOILER MALFUNCTION OR NON-OPERATION, REFER TO THE FOLLOWING PAGES FOR MORE DETAILED TROUBLESHOOTING PROCEDURES.

LIGHT	STATUS	INDICATES
POWER	ON	IBC IS ENERGIZED THROUGH 24 VOLT TRANSFORMER.
	OFF	IBC IS NOT ENERGIZED.
	BLINKING	IBC RECEIVES MORE THAN 40 VAC
PURGE	ON	IBC IS ENERGIZING THE DRAFT INDUCER AND AIR FLOW IS PROVEN.
	OFF	OFF DURING PURGE CYCLE-DRAFT INDUCER IS NOT POWERED OR AIR FLOW IS NOT PROVEN. OFF DURING IGNITER AND RUN CYCLE-NORMAL OPERATION, PURGE CYCLE COMPLETE.
	BLINKING	IBC IS LOCKED OUT. PROBLEM COULD INDICATE FALSE POSITIVE PROOF OF AIR FLOW. BLOCKED VENT OR INTAKE AIR PIPE OR FLUE WAY.
IGNITER	ON	IBC IS ENERGIZING IGNITER
	OFF	IGNITER IS NOT ENERGIZED
VALVE	ON	IBC IS ENERGIZING GAS CONTROL VALVE TO OPEN.
	OFF	GAS CONTROL VALVE IS CLOSED.
	BLINKING	IBC IS LOCKED OUT. PROBLEM IS FLAME HAS NOT BEEN PROVEN IN THREE (3) IGNITION ATTEMPTS. MAY BE DUE TO BROKEN IGNITER OR LACK OF OR LOW FLAME SIGNAL, OR NO GAS.
FLAME	ON	FLAME PROVEN
	OFF	FLAME UNPROVEN

TROUBLE SHOOTING

TROUBLESHOOTING CHART 1

!!WARNING!!

ELECTRICAL SHOCK HAZARD MAY CAUSE SERIOUS INJURY OR DEATH.

THE FOLLOWING PROCEDURES MAY EXPOSE YOU TO DANGEROUS LINE VOLTAGE. USE CAUTION TO AVOID TOUCHING LIVE ELECTRICAL CONTACTS. SERVICE MUST BE PERFORMED BY A TRAINED, EXPERIENCED SERVICE TECHNICIAN.

WHAT TO DO IF YOU SMELL GAS:

- DO NOT TRY TO LIGHT ANY APPLIANCE
- DO NOT TOUCH ANY ELECTRICAL SWITCH; DO NOT USE ANY PHONE IN YOUR BUILIDNG.
- IMMEDIATLEY CALL YOUR GAS SUPPLIER FROM A NEIGHBOR'S PHONE. FOLLOW THE GAS SUPPLIER'S INSTRUCTION.
- IF YOU CAN NOT REACH YOUR GAS SUPPLIER, CALL THE FIRE DEPARTMENT.

SHOULD OVERHEATING OCCUR OR THE GAS SUPPLY FAIL TO SHUT OFF, DO NOT TURN OFF OR DISCONNECT THE ELECTRICAL SUPPLY TO THE PUMP. INSTEAD, SHUT OFF THE GAS AT A LOCATION EXTERNAL TO THE APPLIANCE.

DO NOT USE THE BOILER IF ANY PART OF THE GAS CONTROL SYSTEM HAS BEEN UNDER WATER A QUALIFIED SERVICE TECHNICIAN SHOULD INSPECT THE BOILER AND REPLACE ANY PART OF THE CONTROL SYSTEM AND ANY GAS CONTROL WHICH HAS BEEN UNDER WATER.

USE ONLY YOUR HAND TO TURN THE GAS CONTROL KNOB. NEVER USE TOOLS. IF THE KNOB WILL NOT TURN BY HAND. DON'T TRY TO REPAIR IT. FORCE OR ATTEMPTED REPAIR MAY RESULT IN A FIRE OR EXPLOSION.

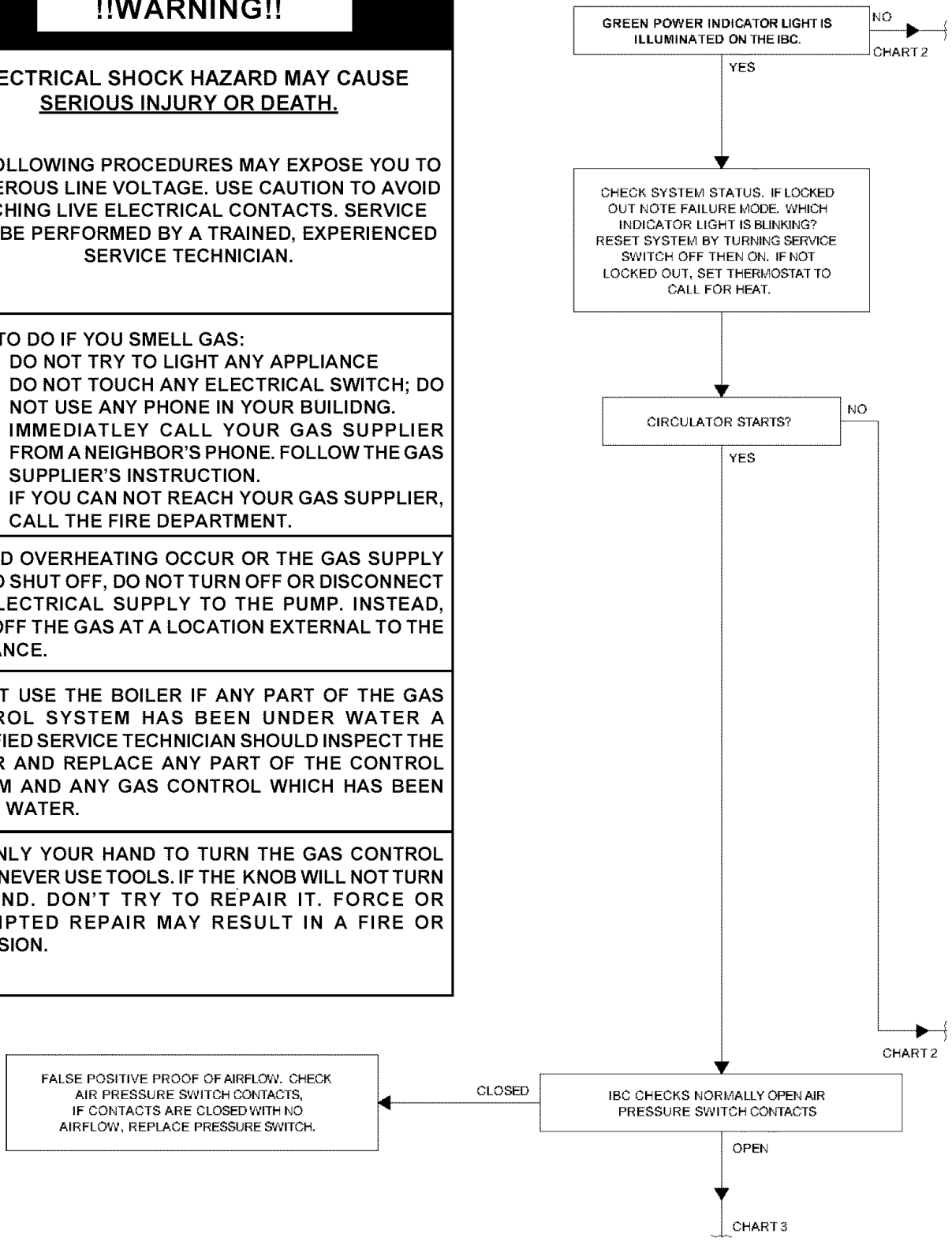

TROUBLESHOOTING CHART 2

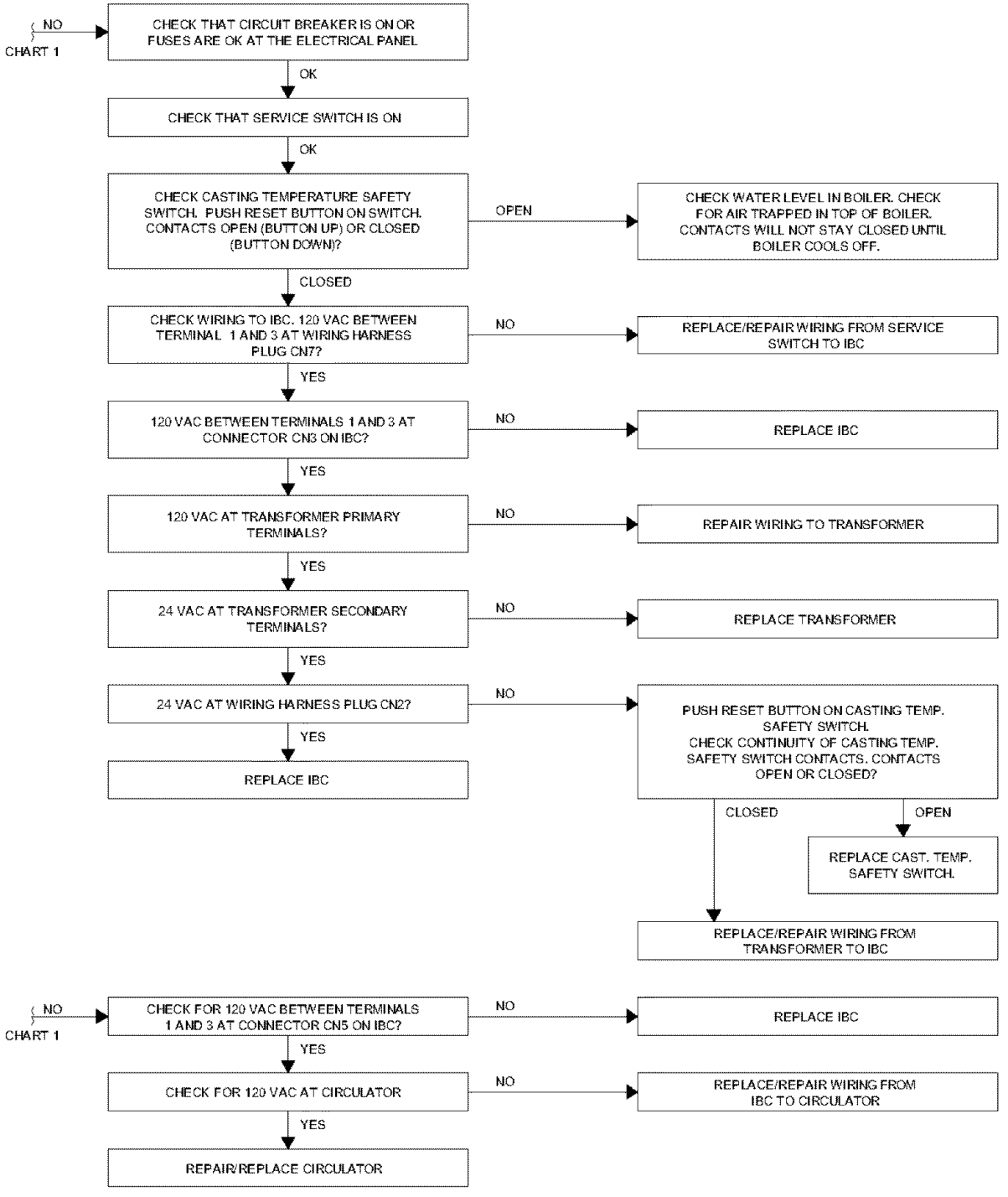

TROUBLESHOOTING CHART 3

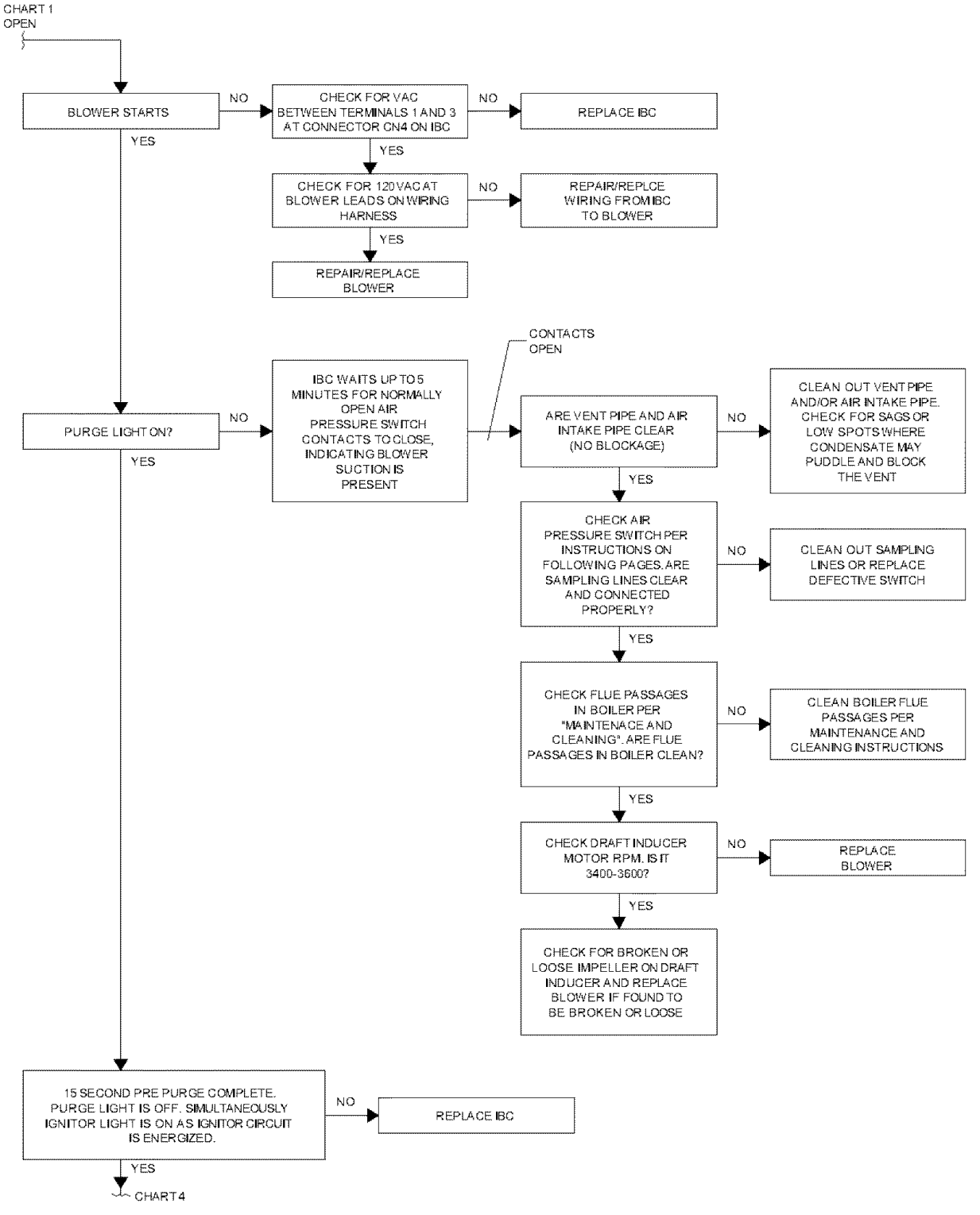

TROUBLE SHOOTING

TROUBLESHOOTING CHART 4

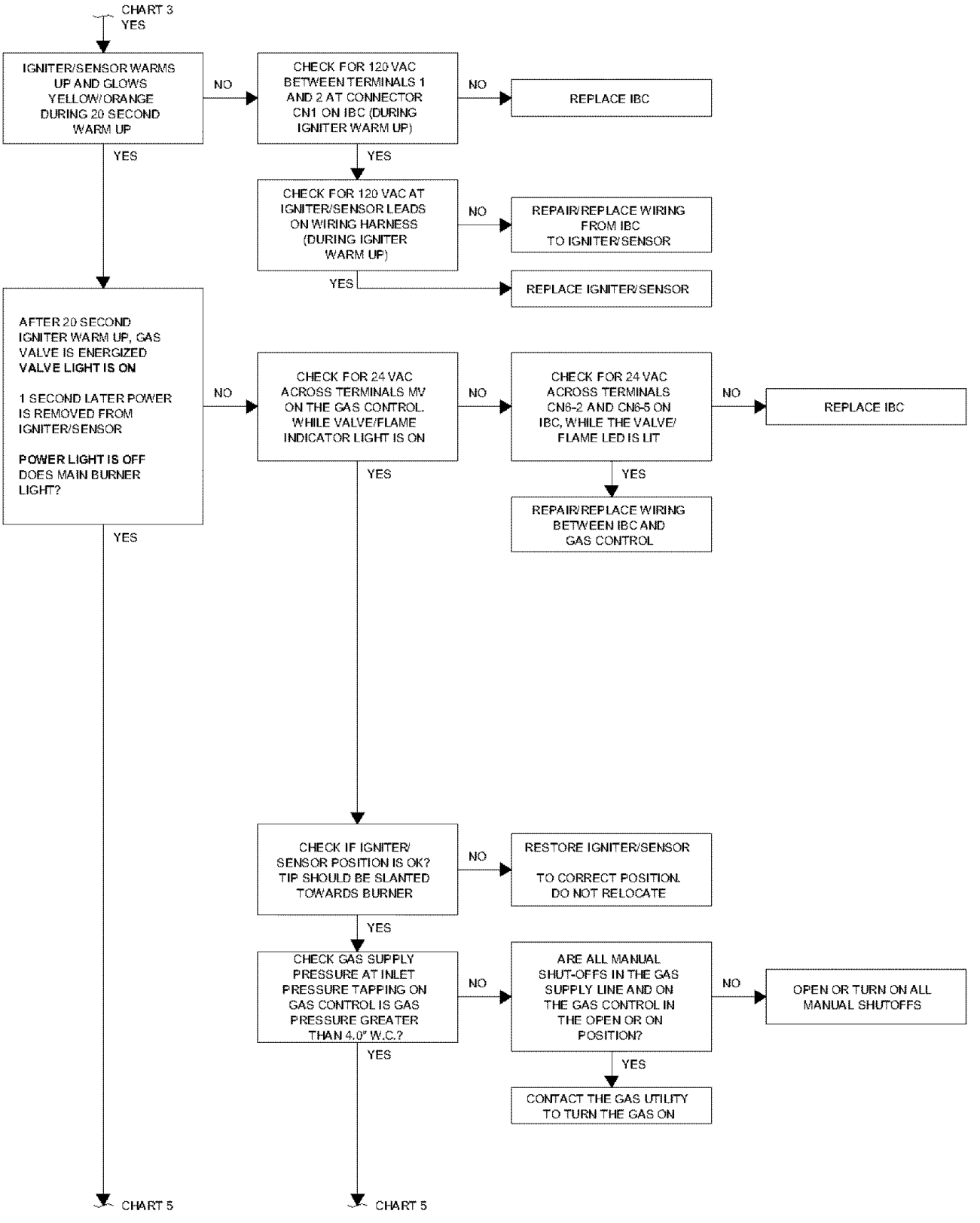

TROUBLESHOOTING CHART 5

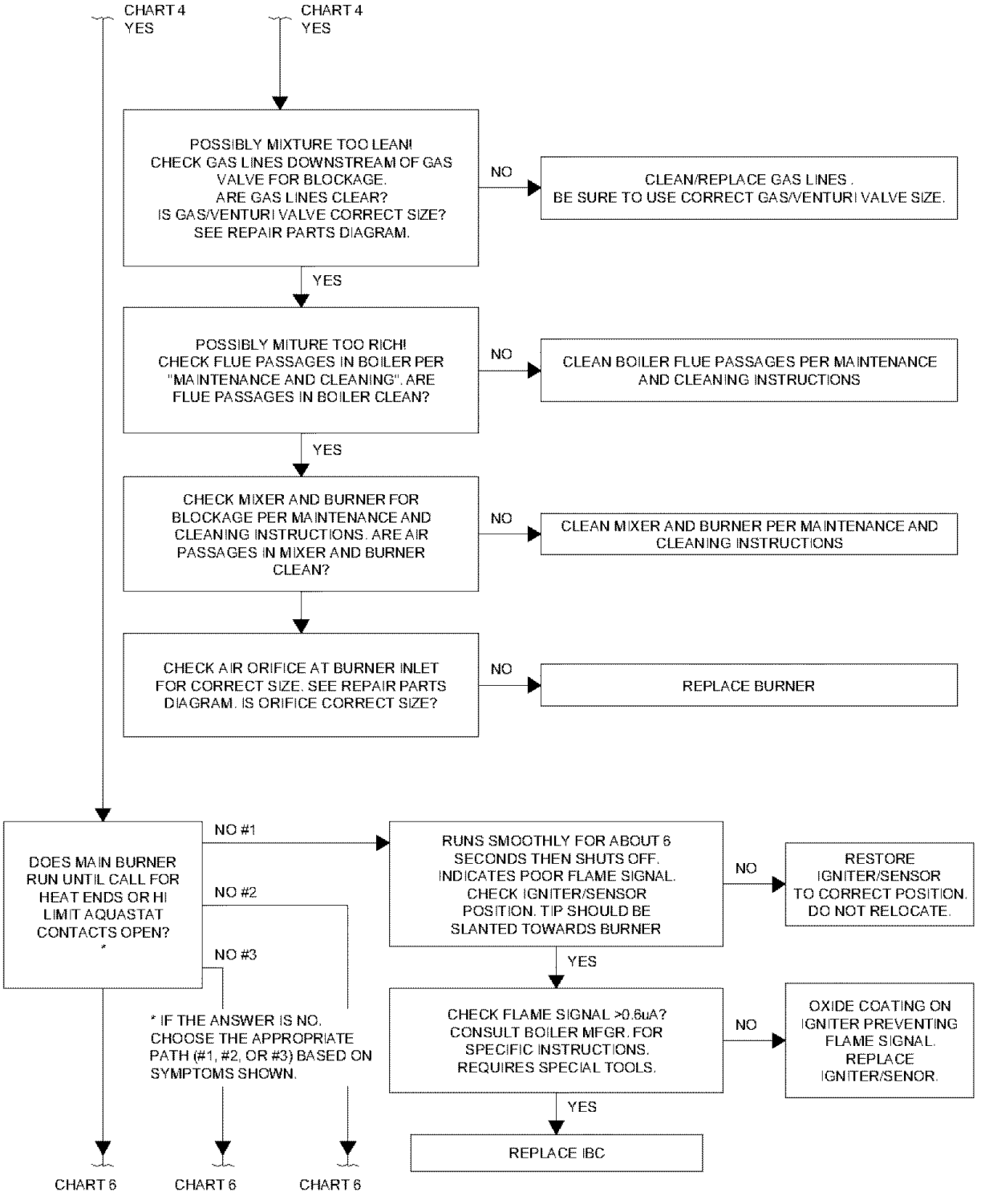

TROUBLESHOOTING CHART 6

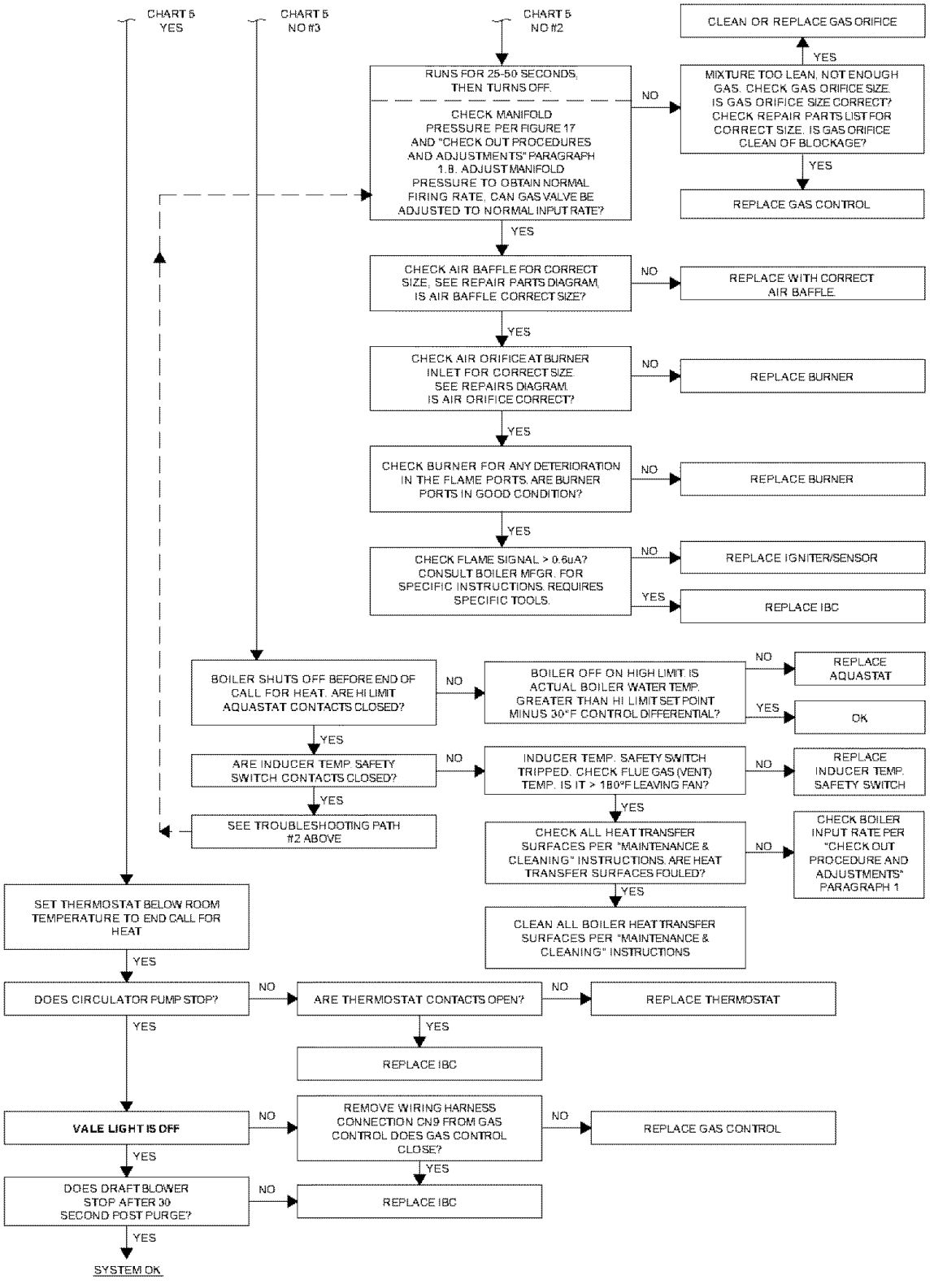

TROUBLE SHOOTING

The following steps and diagram indicate the locations of the connection points required to check the differential air pressure.

The differential air pressure switch is a safety device which will prevent the boiler from firing if there is an air intake, boiler heat exchanger or vent blockage.

Turn off service switch, or lower thermostat setting.

Remove vinyl caps from Tee and 4-way connector.

Install testing lines as shown to inclined manometer or differential pressure gauge with the ability to read 0.01" to 2.0" w.c.

Turn on service switch and set thermostat to call for heat.

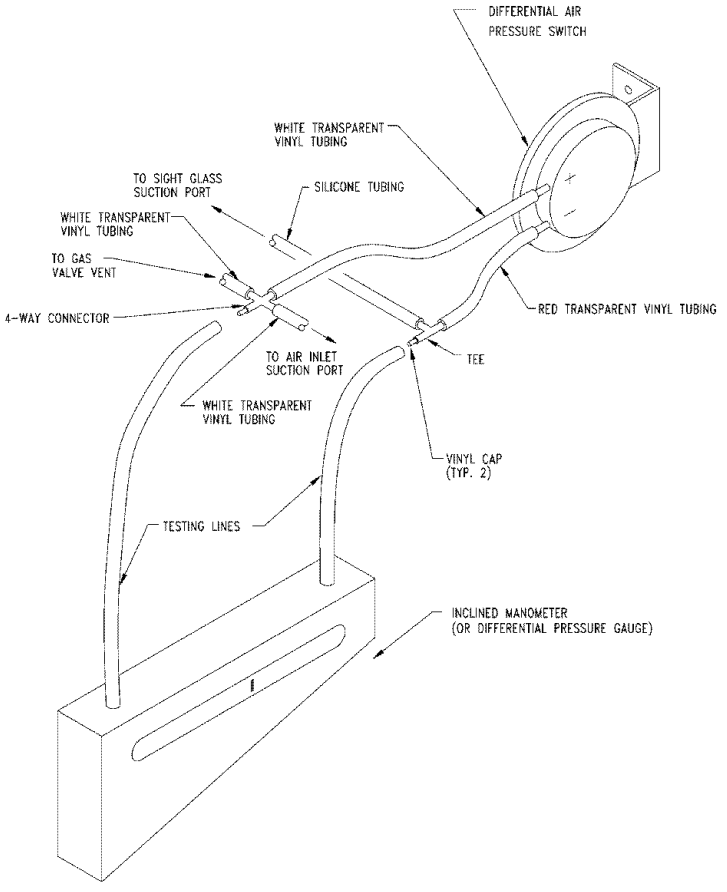

Boiler Status	Differential Pressure (w.c.)	Pressure Switch Connects
Not Running	0"	Normally Open
Setpoint	1.00" for Model-100 1.35" for Model-75 1.55" for Model-50	
Running Without Blockage	Greater Than Setpoints	Closed
Running With Blockage	Less Than or Equal to Setpoints	Open

If manometer readings do not correspond to the chart above, check for possible causes:

- Blockage or moisture in suction lines
- Blockage in air intake or vent pipes
- Undersized air intake or vent pipes
- Loose blower wheel or motor shaft
- Inncorect pressure switch or pressure switch setpoint

When pressure reading is proper and the pressure switch is operating properly, remove testing lines and reinstall vinyl caps to Tee and 4-way connector.

C.

DIFFERENTIAL AIR PRESSURE SWITCH CHECK

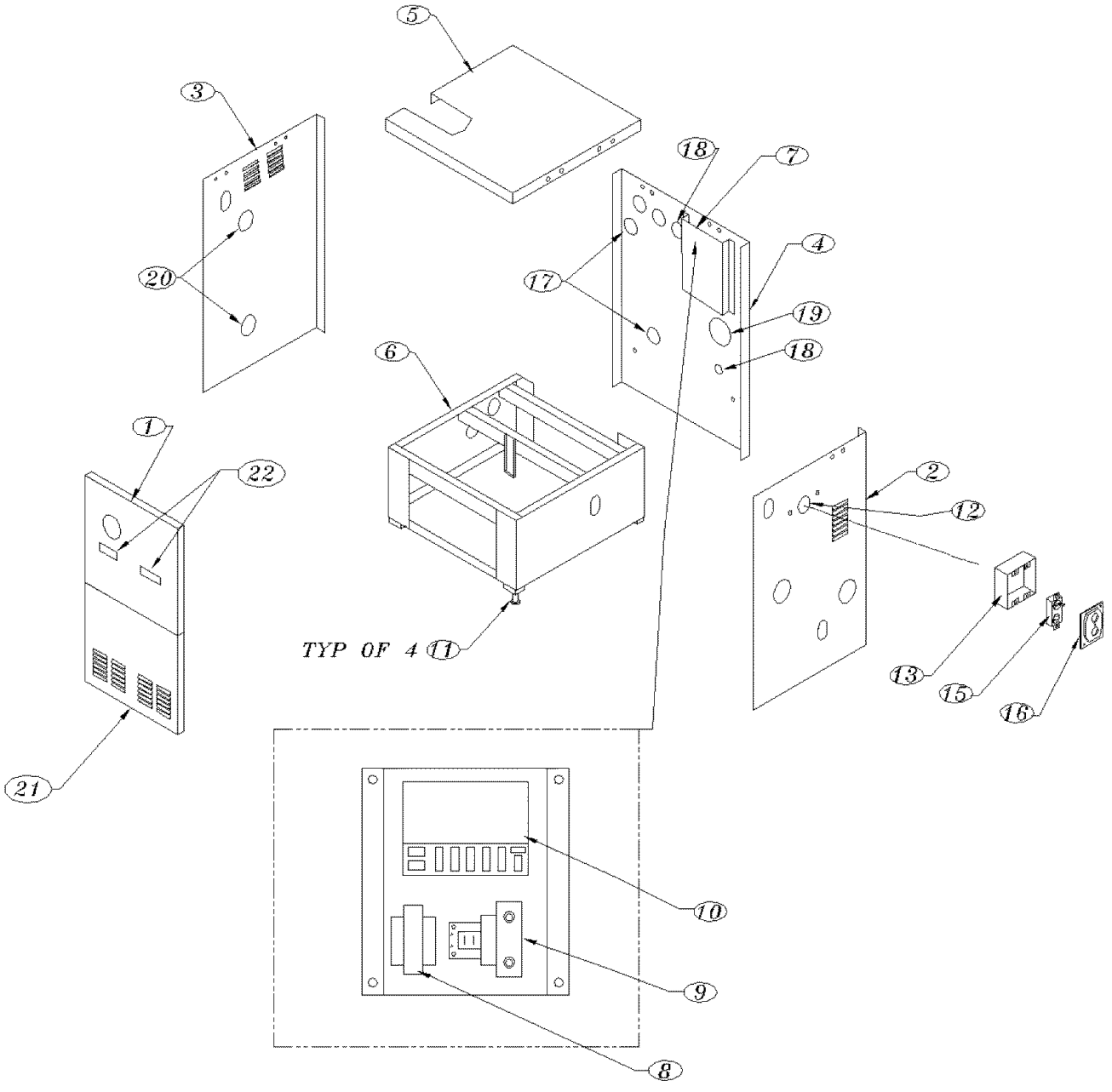

A. JACKET AND BASE ASSEMBLY

REPAIR PARTS

JACKET AND BASE ASSEMBLY			
KEY #	ITEM NUMBER	DESCRIPTION	QUANTITY
1	750001020	FRONT PANEL	1
2	750001021	RIGHT PANEL	1
3	750001022	LEFT PANEL	1
4	750001023	BACK PANEL	1
5	750001024	TOP PANEL	1
6	750001025	BASE	1
7	750001026	CONTROL PANEL	1
8	14662801	AT140B1016 TRANSFORMER 24 VAC	1
9A	14631312	PPS10111-2680 AIR PRESSURE SWITCH (100)	1
9B	14631010	PPS10111-2681 AIR PRESSURE SWITCH (75)	1
9C	14631044	PPS10111-2682 AIR PRESSURE SWITCH (50)	1
10	14662803	UT 1013-10 INTEGRATED BOILER CONTROL	1
11	14631091	CO-2366 GLIDE	4
12	14631120	HEYCO OCB-1500 BUSHING	1
13	14631316	RACO 232 4´4´2 BOX	1
14			
15	14631319	P&S SWITCH 691-I	1
16	14631318	COVER PLATE RACO 902-802	1
17	14631174	419-1AA1 2½" PLUG	2
18	14631171	415-1AA1 1½" PLUG	3
19	14631176	BPF 3 ½" PLUG	1
20	14631175	421-1AA1 3" PLUG	2
21	750001027	LOWER FRONT PANEL - BLUE	1
22	CI-001.03	TACO CIRCULATING PUMP	1
‡	14626043	TACO ISOLATION VALVE SET	1
‡	CI-006.01	GRUNDFOS CIRCULATING PUMP	1
‡	14626043	GRUNDFOS ISOLATION VALVE SET	1
‡	43300826	CIRCULATING PUMP HARNESS	1
‡	14631315	WIRING HARNESS	1
‡	750001002	JACKET COMPLETE	-

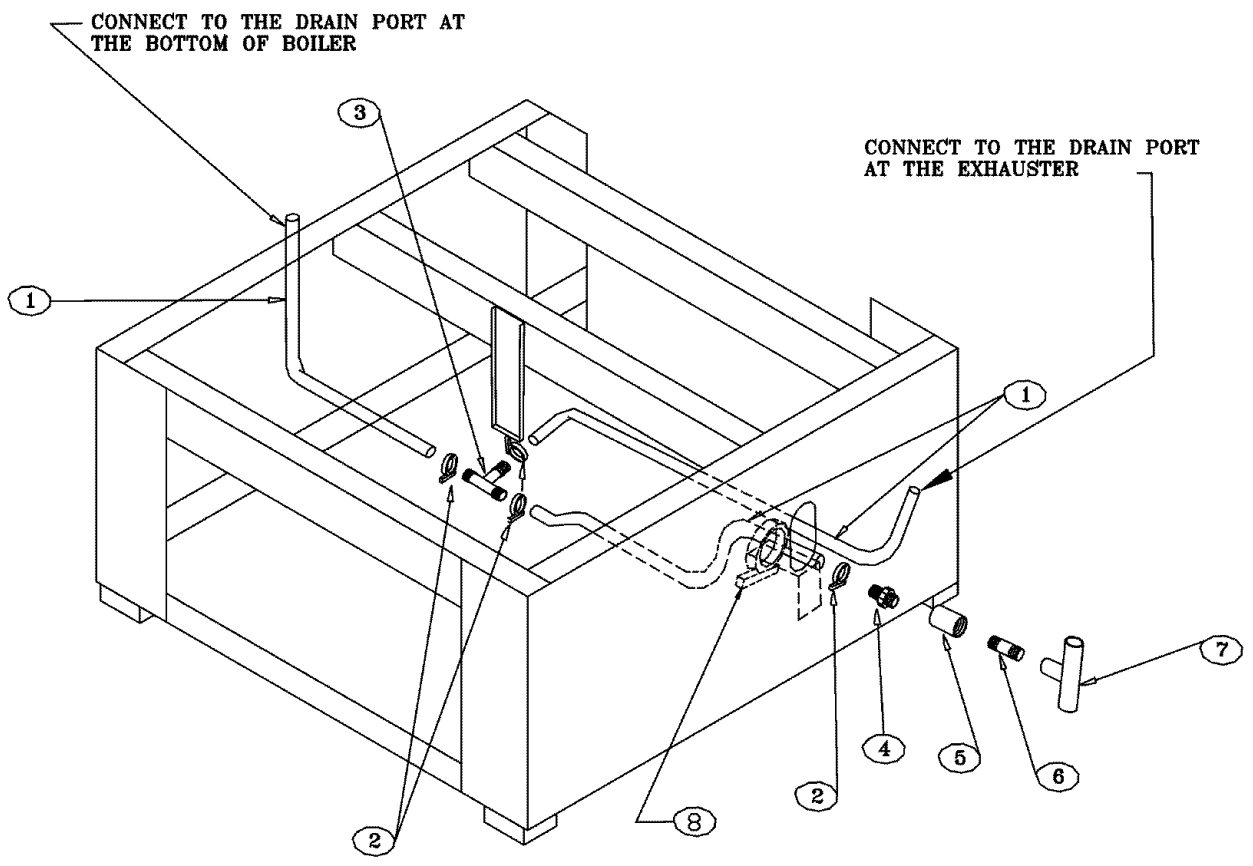

B. CONDENSATE DRAIN TRAP ASSEMBLY

CONDENSATE DRAIN TRAP ASSEMBLY			
KEY #	ITEM NUMBER	DESCRIPTION	QUANTITY
1	14631035	59019 ½"IDx1/8" THK VINYL TUBING	AS REQUIRED
2	14631141	57134 ¾" SNAP GRIP CLAMP	6
3	14631320	62067 ½"ID HOSE TEE	1
4	14631101	62017 ½"NPTx ½"ID TUBE STRAIGHT	1
5	14631321	½" PVC COUPLING, SCH 80	1
6	14631306	½"´4" PVC NIPPLE, SCH 80	1
7	14631020	½"ID´ ½"ID´ ½"NPT TUBE TEE	1
8	14631323	S. S. CLAMP, SIZE 16 (13/16"~1 ½")	1

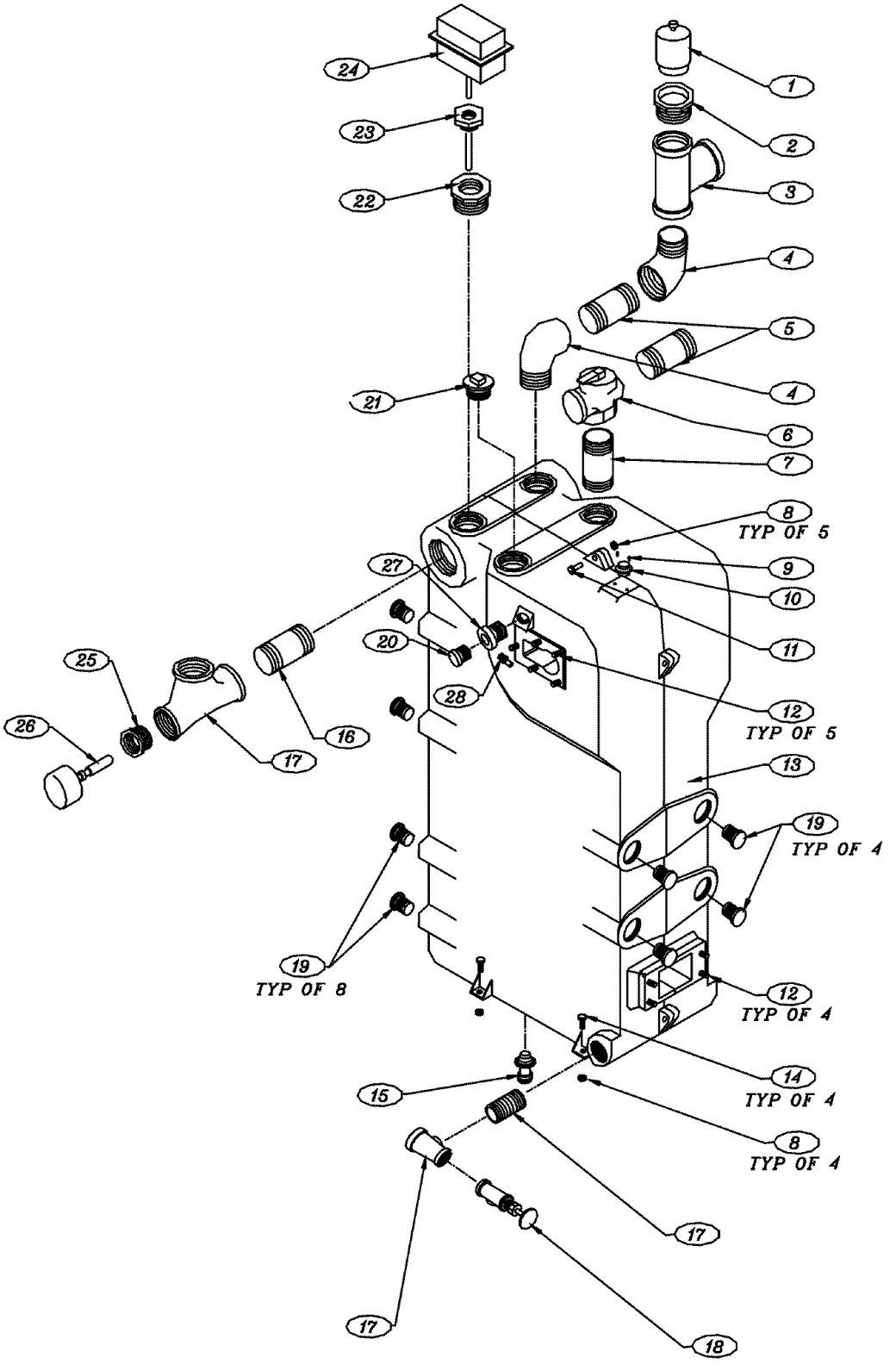

C. BOILER BLOCK AND PIPING ASSEMBLY

REPAIR PARTS

BOILER BLOCK AND PIPING ASSEMBLY			
KEY #	ITEM NUMBER	DESCRIPTION	QUANTITY
1	14631156	HOFFMAN VENT #77	1
2	14693001	¾" x 1/8" BUSHING	1
3	14693076	¾" BLACK TEE	1
4	14693040	¾" x 90º STREET ELBOW	2
5	14607002	¾" x 6½" NIPPLE	2
6	14622011	¾" ASME RELIEF VALVE	1
7	14607201	¾"x 2" NIPPLE	1
8	14695810	¼"-20 HEX NUT W/SERRATED WASHER HEAD	9
9	14695802	8-32 x 3/16" SOC HD CAP SCREW	2
10	14631000	36T26-42930 CASTING TEMP. SAFETY SWITCH	1
11	14695801	¼"-20 x 1½" SOC HD CAP SCREW	5
12	14695805	¼"-20 x 1¼" STUD THREADED	9
13	41800910	TESTED BLOCK (INCLUDES 8,11,14 AND 20,22)	1
14	14695040	¼" x 1¼" CARRIAGE BOLT	4
15	14631101	62017 ½" NPT x ½" ID TUBE STRAIGHT	1
16	14607044	1¼" x 2½" NIPPLE BLACK	2
17	1510001	1¼" x ¾" x 1¼" TEE	2
18	14622000	¾" DRAIN VALVE	1
19	14693056	1" SQ SOCKET PLUG	12
20	14619002	EMPIRE SIGHT GLASS	1
21	14693058	¾" SQ HD PLUG	1
22	14693004	¾" x ½" BUSHING	1
23	14662804	123869A CONTROL WELL ½" NPT	1
24	14631324	L4006A 2155B HI LIMIT AQUASTAT	1
25	14693001	¾" x 1/8" BUSHING	1
26	1260006	TEMP & PRESSURE GAUGE	1
27	14631004	SIGHT GLASS ADAPTER	1
28	14631005	1/8" NPT ¼" HOSE ID BRASS BARB FITTING	1

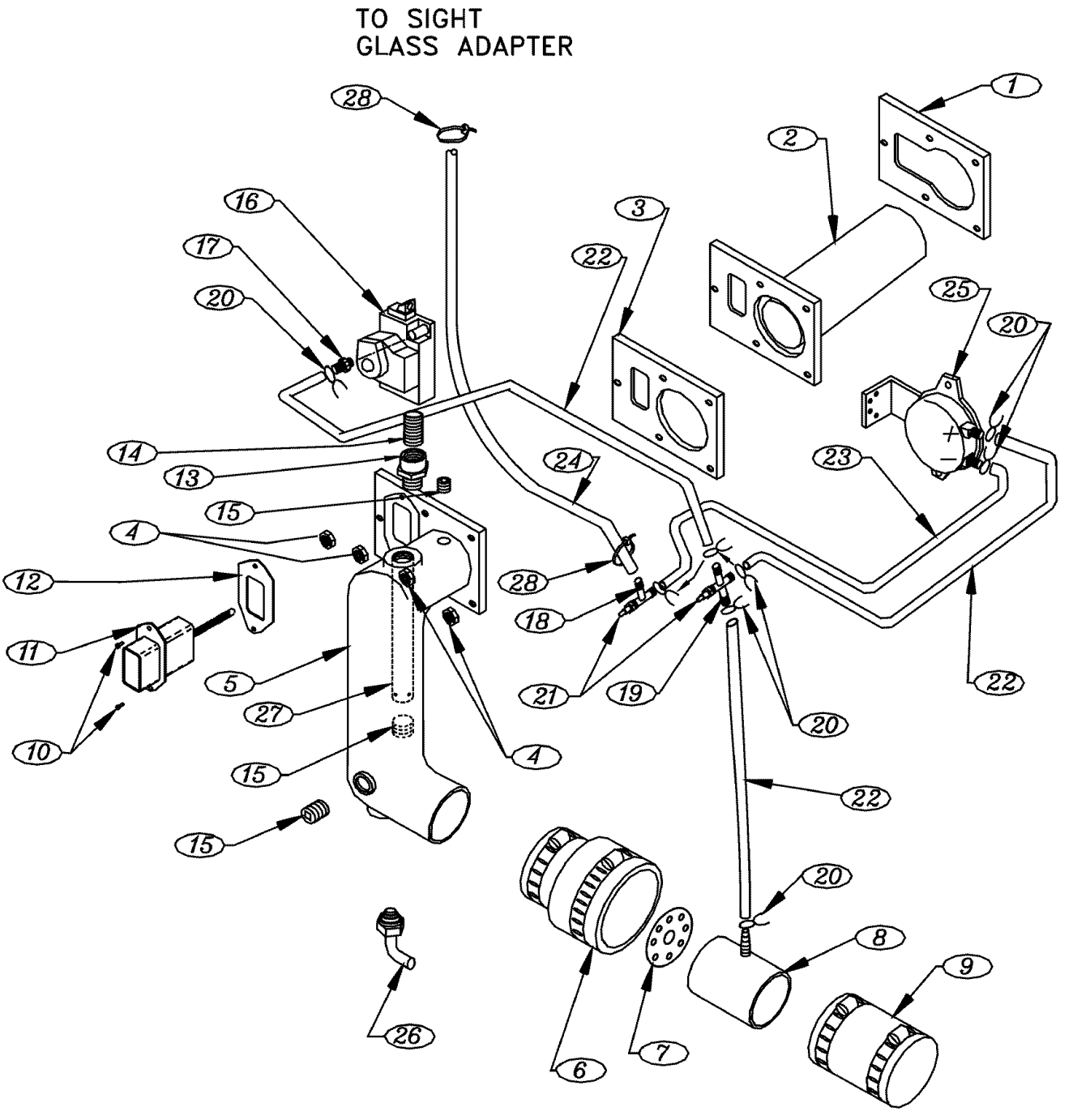

D. MIXER AND AIR PRESSURE SWITCH ASSEMBLY

MIXER AND AIR PRESSURE SWITCH ASSEMBLY			
KEY #	ITEM NUMBER	DESCRIPTION	QUANTITY
1	14631023	BURNER GASKET	1
2A	14631006	100 BURNER (BSI)	1
2B	14631007	75 BURNER (BSI)	1
2C	14631008	50 BURNER (BSI)	1
3	14631025	MIXER GASKET	1
4	14695810	¼"-20 HEX NUT W/SERRATED WASHER HEAD	5
5	12101008	MIXER CASTING MACHINED	1
6	14631311	2"´1½" FLEXIBLE COUPLING	1
7A	42531100	100 AIR BAFFLE	1
7B	42531101	75 AIR BAFFLE	1
7C	42531102	50 AIR BAFFLE	1
8	42531103	AIR INLET	1
9	14631015	2" FERNCO COUPLING	1
10	14695809	10-32"x3/8" MACHINE SCREW	2
11A	43800013	HOT SURFACE IGNITER (FOR 50/75)	1
11B	43800014	HOT SURFACE IGNITER (FOR 100)	1
12	14631024	HOT SURFACE IGNITER GASKET	1
13	14631309	MIXER BUSHING	1
14	14607301	½"´ 3" STD BLACK NIPPLE	1
15	14693805	1/8" NPT BRASS PLUG – 3/16" HEX SOCKET	3
16	14631307	HONEYWELL GAS VALVE VR8205	1
17	14631308	5/16-24´1/4 HOSE ID BRASS BARB FITTING	1
18	14631104	62064 ¼"ID TUBE TEE	1
19	14631313	¼"ID TUBE 4-WAY CONNECTOR	1
20	14631143	3/8" HOSE CLAMP HC-6ST	10
21	14631151	PC250-12VINYL CAP	2
22	14631033	59006 ¼"IDx3/8"OD VINYL TUBING	AS REQUIRED
23	14631314	1/4"ID´3/8"OD VINYL TUBING (RED)	AS REQUIRED
24	14629003	1/4" ID SILICONE TUBING	AS REQUIRED
25A	14631312	PPS10111-2680 AIR PRESSURE SWITCH (100)	1
25B	14631010	PPS10111-2681 AIR PRESSURE SWITCH (75)	1
25C	14631044	PPS10111-2682 AIR PRESSURE SWITCH (50)	1
26	14631103	62043 ½" NPT´1/2"ID TUBE ELBOW	1
27A	14631310	GAS ORIFICE – NATURAL, 100N (0.0860, #44)	1
27B	14631029	GAS ORIFICE – NATURAL, 75N (0.0760, #48)	1
27C	14631030	GAS ORIFICE – NATURAL, 50N (0.0615)	1
27D	14631032	GAS ORIFICE - PROPANE, 100P (0.0670, #51)	1
27E	14631036	GAS ORIFICE – PROPANE, 75P (0.0605)	1
27F	14631037	GAS ORIFICE – PROPANE, 50P (0.0492)	1

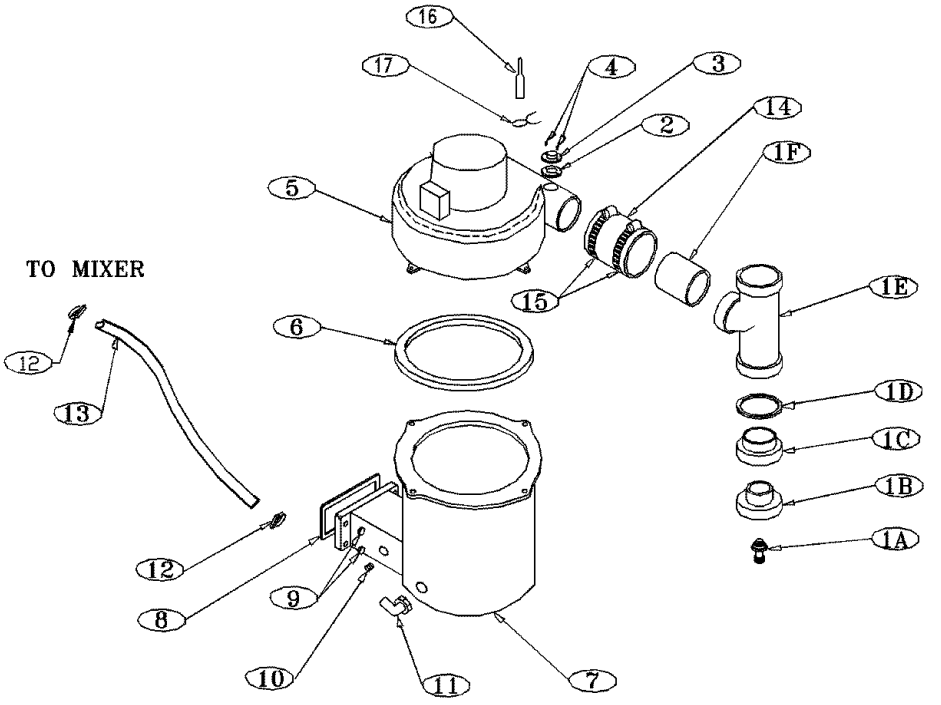

E. FLUE ADAPTER AND EXHAUST ASSEMBLY

FLUE ADAPTER AND EXHAUSTER ASSEMBLY			
KEY #	ITEM NUMBER	DESCRIPTION	QUANTITY
1	182009002	EXHAUST TEE ASSEMBLY - 1-A,B,C,D,E & F	1
1A	14631101	62017 1/2"NPTx1/2"ID TUBE STRAIGHT	1
1B	14631013	PVC 1 1/2" MALE SLIP x 1/2" FEMALE NPT	1
1C	14631014	PVC SCH 40 2"x1-1/2" REDUCER	1
1D	14695815	3/4'' ALUMINUM FLAT WASHER	1
1E	14631305	2" CPVC TEE, SCH 80	1
1F	14631304	2" CPVC PIPE´2-1/2'', SCH 40	1
2	14631028	VENT SWITCH GASKET	1
3	14631303	36TX11-22491 INDUCER TEMP SAFETY SWITCH	1
4	14695808	#4-20x1/4" HWH PLAST FORM SCREW	2
5	14631077	116516-11 INDUCED DRAFT BLOWER	1
6	14631026	BLOWER GASKET	1
7	12101021	FLUE CONNECTOR	1
8	14631027	RECOVERY COIL GASKET	1
9	14695810	1/4"-20 HEX NUT W/SERRATED WASHER BLOCK	4
10	14693804	1/8" NPT 1/4" HOSE ID BRASS BARB FITTING	1
11	14631103	62043 1/2'' NPT´1/2'' ID TUBE ELBOW	1
12	14631141	57134 3/4'' SNAP GRIP CLAMP	2
13	14631035	59019 ½'' ID´1/8 THK VINYL TUBE	AS REQUIRED
14	14631301	HOSE, 3" LONG 2-3/8" ID X 2-3/4" OD	1
15	14631302	S. S. CLAMP, SIZE 44	2
16	14631151	PC250-12 VINYL CAP	2
17	14631143	3/8" HOSE CLAMP HC-6ST	2