Dell™ UltraSharp U2417H

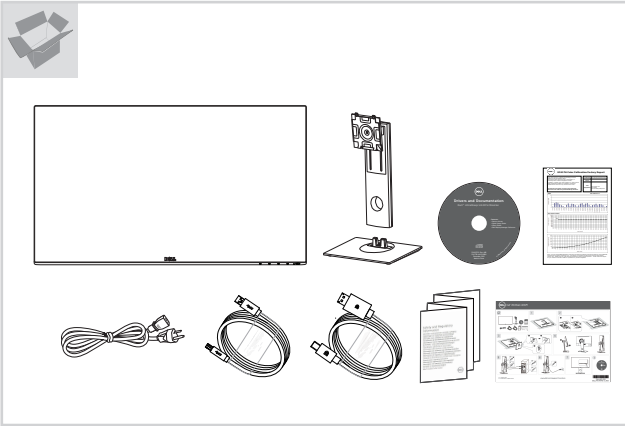

1

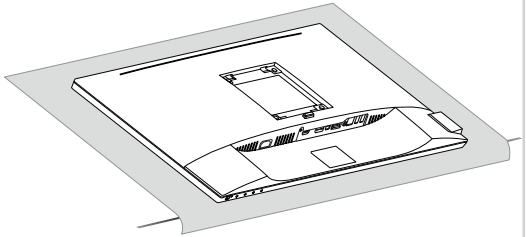

2

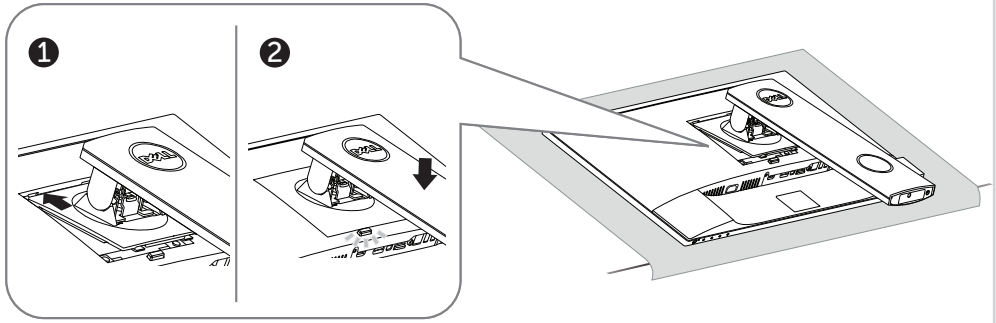

3

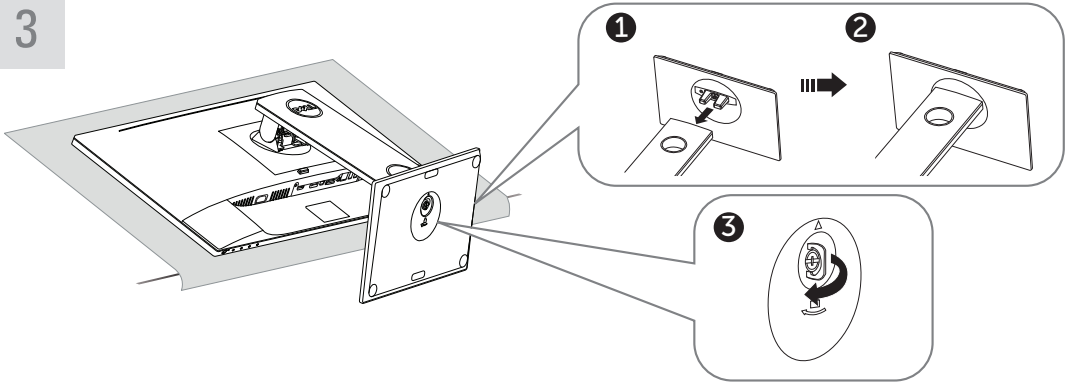

4

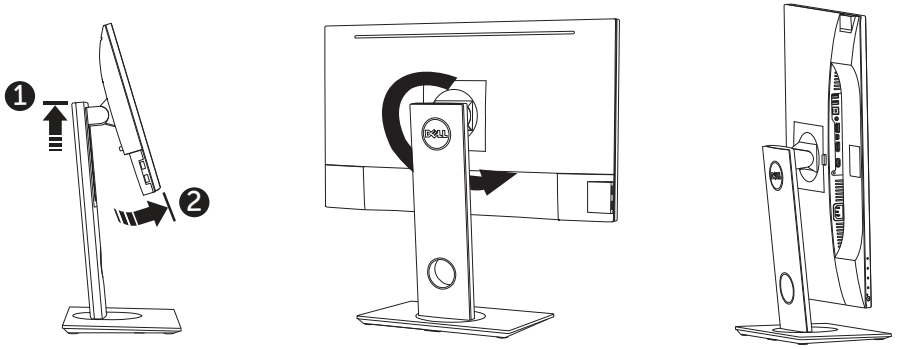

5

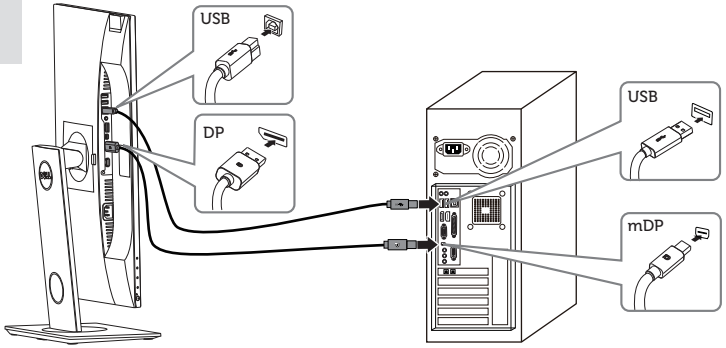

6

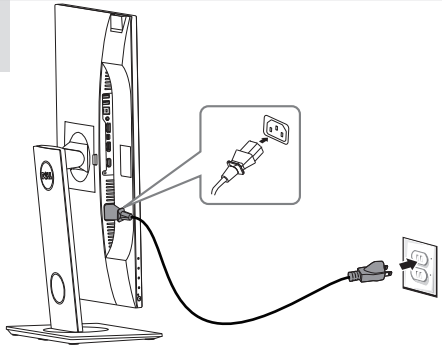

7

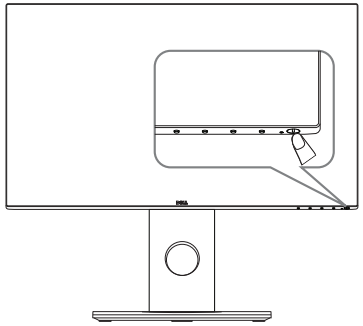

i

Printed in China.
© 2015 Dell Inc. All rights reserved.

www.dell.com/support/monitors

746.A1401.0001
(DELL P/N:YKTKK rev.A00)