Dialogue Flybook V5

User's Manual

Model No. *V5W1BB (without 3G)*
V5W1BBHA (with 3G)

Dialogue Technology Corporation
Copyright 2006-2007. All Rights Reserved
Version 1.0, Dec. 2006

Copyright and safety notices

Please read this section before using your computer. Retain this manual for future reference.

Copyright

This publication, including all photographs, illustrations and software, is protected under international copyright laws, with all rights reserved. Neither this manual, nor any of the material contained herein, may be reproduced without written consent of the manufacturer.

Copyright 2006 Dialogue Technology Corporation

Version 1.0, December 2006

Disclaimer

The information in this document is subject to change without notice. The manufacturer makes no representations or warranties with respect to the contents hereof and specifically disclaims any implied warranties of merchantability or fitness for any particular purpose. The manufacturer reserves the right to revise this publication and to make changes from time to time in the content hereof without obligation of the manufacturer to notify any person of such revision or changes.

Trademark recognition

Bluetooth is a trademark of the *Bluetooth SIG, Inc*. (Special Interest Group). The *Bluetooth* trademark is owned by *Bluetooth SIG, Inc. USA*. BlueSoleil is a trademark of IVT Corporation. Dialogue Technology Corporation is a registered trademark. FlyBook is a trademark of the Dialogue Technology Corporation. Windows is a registered trademark or trademark of Microsoft Corporation in the United States and/or other countries. All other product names used in this manual are the properties of their respective owners and are acknowledged.

Federal Communications Commission (FCC)

This equipment has been tested and found to comply with the limits for a Class A digital device, pursuant to Part 15 of the FCC Rules. These limits are designed to provide reasonable protection against harmful interference in a residential installation. This equipment generates, uses, and can radiate radio frequency energy and, if not installed and used in accordance with the instructions, may cause harmful interference to radio communications. However,

there is no guarantee that interference will not occur in a particular installation. If this equipment does cause harmful interference to radio or television reception, which can be determined by turning the equipment off and on, the user is encouraged to try to correct the interference by one or more of the following measures:

- Reorient or relocate the receiving antenna.
- Increase the separation between the equipment and the receiver.
- Connect the equipment onto an outlet on a circuit different from that to which the receiver is connected.
- Consult the dealer or an experienced radio/TV technician for help.

Shielded interconnect cables and a shielded AC power cable must be employed with this equipment to ensure compliance with the pertinent RF emission limits governing this device. Changes or modifications not expressly approved by the system's manufacturer could void the user's authority to operate the equipment.

Battery caution

Risk of explosion if battery is replaced by an incorrect type. Dispose of used batteries according to the instructions.

About this manual

This User's Manual provides information to help you operate and get the most from your V5 Flybook. Read the Quick Start Guide to quickly set up and begin using your computer.

Please read "Copyright and safety notices" on page i before using your computer.

Taking Care of the V5 Flybook

After you unpack your computer, store the packing materials in case you want to ship the computer or if you have to return it for servicing.

Your notebook computer is a precision instrument that should be handled with care. Use common sense and follow the guidelines below, and your computer will last you for many years.

Do's and don'ts with the V5 Flybook

- Do not twist the display counterclockwise.
- Do not place heavy objects such as books on the computer.
- Do not storage the computer to temperatures above 50° C or below 0° C.
- Keep the computer away from direct sunlight or heat sources.
- Do not expose the computer to rain or moisture.
- Do not spill water or any other liquid on the computer.
- Do not place the computer near magnetic fields.
- Avoid subjecting your computer to heavy shocks or vibrations.
- Do not expose the computer to dusty or dirty environments.
- Do not place the computer on uneven surfaces.
- Do not cover the air vents around the computer.
- Only use the ac adapter that is provided with your computer.

Safety Information

The V5 Flybook has been designed and tested to meet the most recent standards of safety in notebook technology equipment. To ensure safe use of the V5 Flybook, refer to the following safety instructions and any caution or warning messages on the equipment or in the user manual.

- Read and follow all instructions marked on the V5 Flybook and in the user manual before operating the V5. Store all safety information in a secure place for future reference.
- Do not use the V5 Flybook near water or a heat source such as a radiator.
- Always set the V5 Flybook on a stable surface.
- Only operate the V5 Flybook from the type of power source indicated on the rating label on the AC adapter.
- Ensure all ventilation openings are not blocked or covered. Keep an adequate space (around 6 inches or 15 cm) around the V5 Flybook. Never insert objects of any kind into the ventilation openings.
- When using an extension cord with the V5 Flybook, ensure that the total ampere rating on the equipment connected to the cord does not exceed the extension cord ampere rating maximum value.
- Only use the supplied power cord. Do not place anything on the power cord. Place the power cord where it will not be in the way of foot traffic.
- Avoid spilling any liquids on the V5 Flybook.
- Always unplug any modem, LAN, or power cables from the V5 Flybook before you clean it.
- Disconnect the V5 Flybook from power and contact qualified service personnel if any of the following occurs:
  - The power cord or adapter is damaged.
  - Liquid has been spilled on the V5 Flybook
  - The V5 Flybook does not operate correctly when operating instructions are followed.
  - The V5 Flybook has been dropped, or the case is broken open.
  - V5 Flybook performance is seriously degraded.

Table of Contents

Getting started with the V5 Flybook ----------1
Taking a tour of the V5 Flybook 2
Front-left view 2
Rear view 4
LED descriptions 5
Using the battery 7
Using the battery lock 7
Installing the battery 8
Removing the battery 8
Charging the battery 9
Connecting the AC adapter 9
Adjusting display characteristics 10
Changing the display orientation 10
Changing the display resolution and color 11
Changing the display brightness 12
Using the swivel screen 14
Using the fingerprint reader 17

Using V5 Flybook input devices ----------19
About the V5 Flybook input devices 19
Using the stick pointing device 20
Using the Stylus 21
Using the PenMount utility 21
Calibrating the stylus for the first time 23
Using the Keyboard 24
Using function (Fn) keys 24
Using the numeric keypad 26
Windows® keys and other keys 26

Connecting devices ----------27
Connecting audio devices 27
Connecting an earphone 27

Connecting a microphone 27
Connecting USB devices 29
Connecting an external display 30
Using an ExpressCard 31
Installing an ExpressCard: 31
Removing an ExpressCard: 32
Connecting to a TV 33

Using the V5 - 34

About Windows XP and Vista 34
Windows XP 34
Windows Vista 34
Flybook control center 36
Opening the control center 36
Using GPS 38

Securing your system - 39

Before you go online 39
Installing a firewall 40
Installing spyware blocker 40

Networking your computer - - - - - - - - - - - - - - - - - - 41

Connecting LAN 41
Determining IP address settings 41
Setting up a wired connection.. 42
Setting up wireless connections 43
Setting up a WLAN connection... 43
Setting up a wireless WAN (WWAN) connection....................... 45
Using the built-in Bluetooth module 46
Using the 3.5G module 48
Using 3G watcher for voice communications 48
Using the built-in modem 48

Using the built-in Webcam - - - - - - - - - - - - - - - - - - 49

Ergonomics - 50

Caring for your computer - - - - - - - - - - - - - - - - - - - 52
Things not to do with your computer 52
Cleaning the computer 53

The BIOS setup utility - 54
Accessing the BIOS setup 54
Updating the BIOS firmware 54
The Main BIOS menu 55
The Advanced menu 56
The Intel menu 56
The Security menu 57
The Boot menu 57
The Exit menu 58

Troubleshooting and specifications - - - - - - - - - - 59
Tips for troubleshooting 59
Identifying problems 59
General hardware problems 59
Having the V5 serviced 62
Specifications 63

Index - 65

Getting started with the V5 Flybook

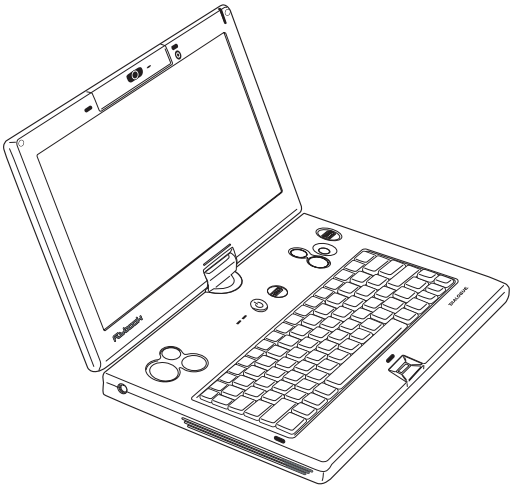

Congratulations on purchasing the V5 Flybook! The V5 is a powerful mobile computer which performs dual duty as a notebook or tablet PC. Advanced networking features include WLAN, WWAN, Bluetooth, and even an internal modem.

The V5 Flybook uses the Intelligent Stickpointer® with mouse buttons on both sides of the unit and a third mouse button and scroll bar for added convenience. The LCD monitor can be rotated and laid flat to enable you to use the V5 Flybook as a tablet PC. Using the stylus, you can write text and draw on the tablet as you would on conventional paper.

The built-in web cam enables you to be seen by contacts using Windows MSN or other messaging software. The camera can be rotated 270 degrees for maximum flexibility.

The powerful Li-ion rechargeable battery provides 3 hours of mobility, making the V5 Flybook the best choice for people on the go.

Taking a tour of the V5 Flybook

This section describes the major components of your new V5 Flybook.

Front-left view

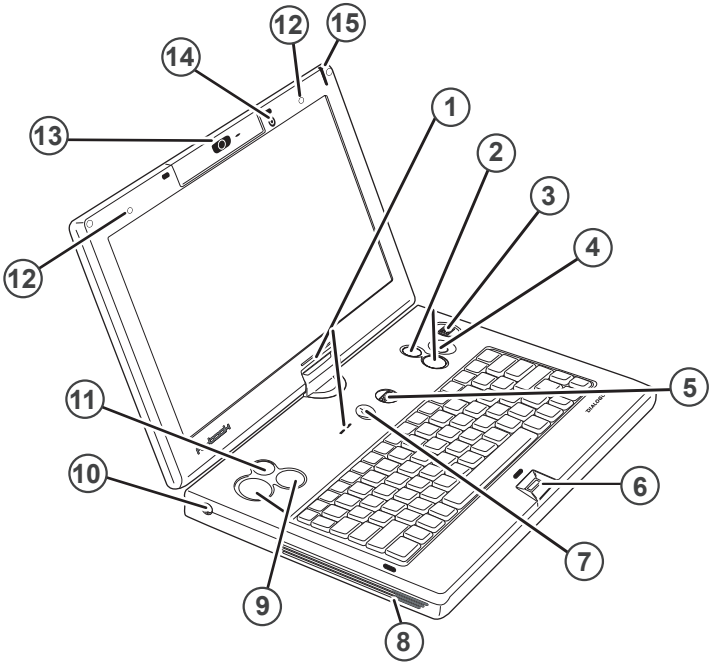

1. STATUS LEDS
   - These LEDs display when the AC is connected, when the HDD is being accessed, or when the WWAN, WLAN, or Bluetooth is activated.
2. POINTING DEVICE BUTTONS (RIGHT)
   - These pointing device buttons emulate mouse right and left buttons. The top button corresponds to a mouse right button. The lower button corresponds to a mouse left button. Refer to “About the V5 Flybook input devices” on page 19 for more information.

3. SCROLL BAR
    - This bar enables you to scroll up and down in web pages or word processing software. Refer to “About the V5 Flybook input devices” on page 19 for more information.
4. POINTING DEVICE
    - This pointing device stick moves the cursor in the direction of the pressure you apply with your finger.
5. RF KILL SWITCH
    - Wireless transmission uses power. Use this button to disable the wireless feature of your computer to save power or when instructed to do so, for example on an aircraft.
6. FINGERPRINT READER
    - When you set up fingerprint authentication, you can use the fingerprint reader to turn on the computer.
7. POWER BUTTON
    - Press and hold the power button for two seconds to turn on the computer.
8. LEFT SPEAKER
    - Stereo speakers are built into the computer.
9. POINTING DEVICE BUTTONS (LEFT)
    - These pointing device buttons emulate mouse right and left buttons. The right button corresponds to a mouse right button. The left button corresponds to a mouse left button. Refer to “About the V5 Flybook input devices” on page 19 for more information.
10. AC POWER CONNECTOR
    - Connect the AC adapter to this connector.
11. MIDDLE MOUSE BUTTON
    - This button corresponds to the center button on a conventional mouse.
12. STEREO MICROPHONES
    - Use the built-in stereo microphones for recording sound, and video conferencing with friends.
13. CAMERA AND CAMERA LED
    - Use the built-in camera for video conferencing with friends. The LED indicates when the camera is active
14. AMBIENT LIGHT SENSOR
    - This sensor detects ambient light and reduces screen brightness to adjust for optimum display quality.

15. STYLUS
    - Use the stylus in place of the mouse to interact with the V5 Flybook.

Rear view

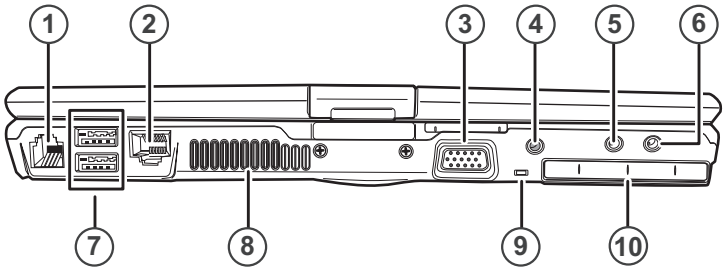

1. RJ-11 MODEM JACK
    - Connect a phone line to this jack to use the internal modem.
2. ETHERNET CONNECTOR
    - Connect the computer to your home or office network (LAN) with the Ethernet connector.
3. MONITOR (VGA) CONNECTOR
    - Connect an external display or projector to the monitor connector.
4. TV CONNECTOR
    - Connect a TV to this connector to use the TV as an external display.
5. HEADPHONE JACK
    - Connect headphones or external speakers to the headphone jack.
6. MICROPHONE JACK
    - Connect a microphone to the microphone jack.
7. USB CONNECTORS
    - Connect USB devices such as printers or flash drives to the USB connectors.
8. AIR VENT
    - Air vents help to prevent the interior of the computer from overheating. Do not block the air vents.
9. STRAP SLOT
    - This slot enables you to attach a strap to the V5 for safe carrying.
10. EXPRESSCARD SLOT
    - Install an ExpressCard in the ExpressCard slot.

LED descriptions

1. BATTERY
   - (No AC adapter connected)
   - **Green:** The battery is in use and has more than 10% capacity.
   - **Blinking red:** The battery has less than 10% capacity.
   - (AC adapter connected)
   - **Blinking green:** The battery is charging.
   - **Green:** The battery is charged.
   - **Red:** The battery has a problem and cannot be charged. Return the battery to your reseller for servicing.

NOTE: If no battery is installed, then the battery LED is always off.

2. HARD DRIVE
   - **Red:** The hard drive is being accessed.
3. WIRELESS LAN
   - **Off:** The wireless LAN module is turned off.
   - **On:** The wireless LAN module is turned on.
   - **Blinking:** Data is being transmitted or received.
4. WIRELESS WAN
   - **Off:** The wireless WAN module is turned off.
   - **On:** The wireless WAN module is turned on.
   - **Blinking:** Data is being transmitted or received.

NOTE: The wireless WAN module is available only on some V5 models.

5. BLUETOOTH
   - **Slow blinking:** The *Bluetooth* module is on standby.
   - **Fast blinking:** Data is being transmitted or received.

6. NUM LOCK
    - Lights when the numeric keypad is enabled.
7. CAPS LOCK
    - Lights when Caps Lock mode is enabled. When enabled you can type alphabetic characters without holding the Shift key.

Using the battery

When your V5 Flybook ships, the battery is not installed. You can begin using your V5 immediately with the AC adapter connected, while charging the battery at the same time.

Using the battery lock

There are two latches for securing the battery in place: the battery lock (**A**) and the battery release (**B**).

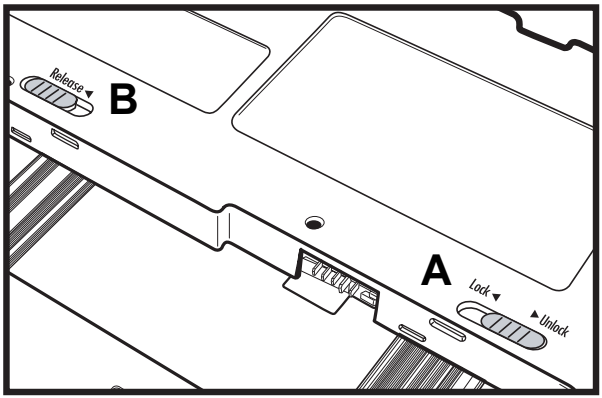

The battery lock must be manually closed. The battery release is spring loaded and closes automatically when you insert the battery.

CAUTION: Always close the battery lock after inserting the battery. If the battery lock is not closed, the battery could fall out when carrying the computer and cause injury or damage the battery.

Installing the battery

1. Slide the battery lock to the unlocked position.
2. Align the guides on the sides of the battery with the guides in the bay and then install the battery.

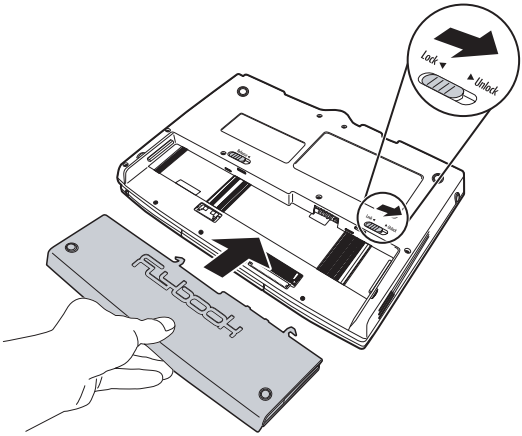

3. Slide the battery lock to the locked position.

Removing the battery

1. Slide the battery lock to the unlocked position.

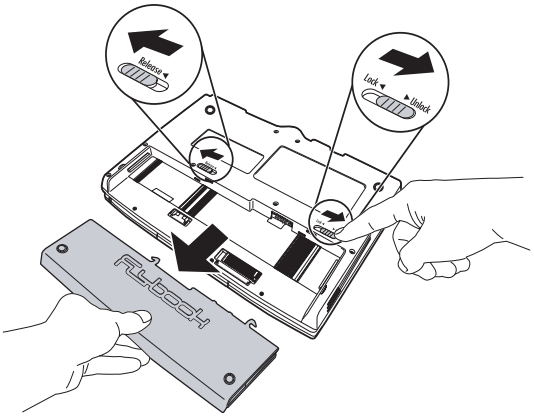

2. While holding the battery release in the open position, remove the battery.

Charging the battery

The first time you charge the battery, you should charge it for eight hours. Thereafter, the standard charging time is about three hours. To charge the battery, install it in the computer (see "Installing the battery" on page 8) and then connect the AC adapter (see "Connecting the AC adapter" on page 9).

Connecting the AC adapter

1. Connect the AC cable (**A**) to the AC adapter.

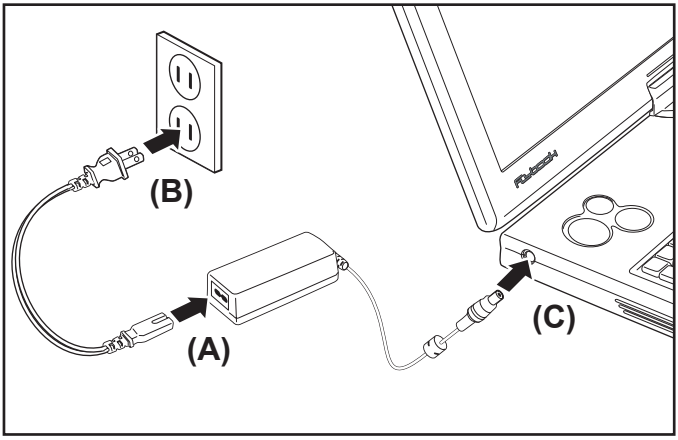

2. Connect the other end of the AC cable (**B**) to an electrical outlet.
3. Connect the AC adapter (**C**) to the AC jack on the computer.
   The battery charge LED lights.

Adjusting display characteristics

This section describes how to change display characteristics such as the orientation, resolution and color, and brightness.

Changing the display orientation

The V5 Flybook enables you to change the display orientation for optimum viewing. When using the V5 as a tablet PC, it is usually more convenient to view the display in portrait mode, as you would a book.

Open the Control Center by double-clicking the icon in the taskbar.

Click the orientation buttons in the left pane to select one of the following display orientations.

Orientation	Icon	Result
Landscape		Normal display
		Display is rotated 180 degrees.
Portrait		Display is rotated 90 degrees clockwise.
		Display is rotated 90 degrees counter-clockwise.

Changing the display resolution and color

You can change the display resolution and color for optimum view quality.

Click **start** | **Settings** | **Control Panel**, and then double-click the **Display** icon. The display properties screen appears.

Drag this slider to change the display resolution.

Click this arrow to select a color depth from the drop-down menu.

- Drag the screen resolution slider to change the screen size.
- Click the drop-down menu to select a color depth.

Changing the display brightness

Change the display brightness to conserve power when running on batteries.

MANUALLY CHANGING THE DISPLAY BRIGHTNESS

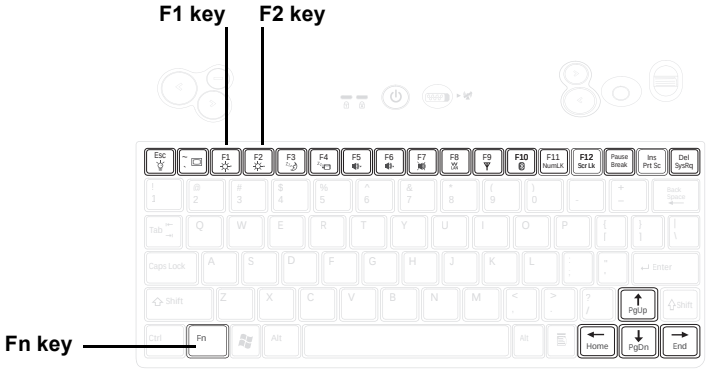

- Press Fn and then press F1 to decrease the screen brightness.
- Press Fn and then press F2 to increase the screen brightness.

Alternatively, open the Control Center and drag the slider up or down to increase or decrease the screen brightness.

ABOUT THE AUTOMATIC SENSOR

The automatic sensor detects ambient light and reduces or increases the screen brightness for optimal viewing.

Press Fn + A to enable or disable the automatic light sensor.

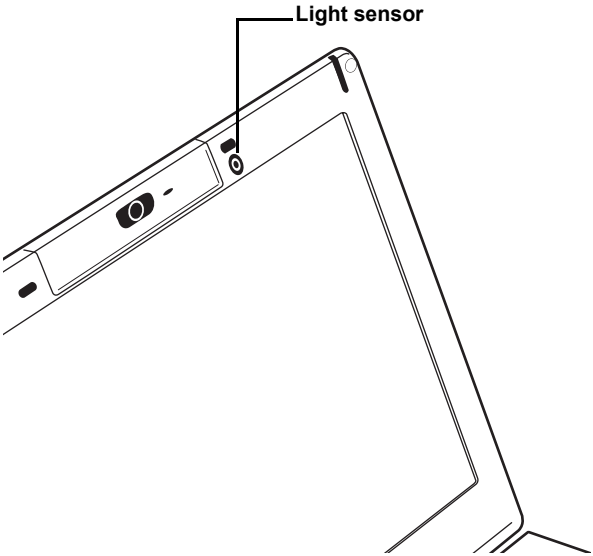

Using the swivel screen

Your V5 display can be adjusted vertically on the rear support and can also be rotated and closed to use the V5 Flybook as a tablet PC.

CAUTION: Take care when adjusting the display not to twist or force the display to an extreme angle. See “Things not to do with your computer” on page 52.

1. Open the display.

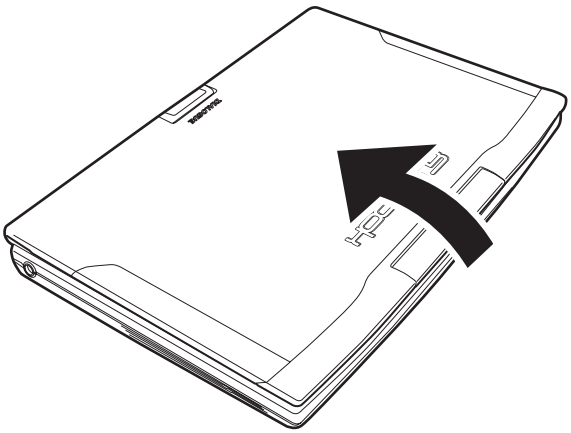

TIP! You can adjust the tilt of the display to adjust for glare, sunlight and other environmental factors to provide optimum viewing.

2. Tilt the display forwards until it is vertical.

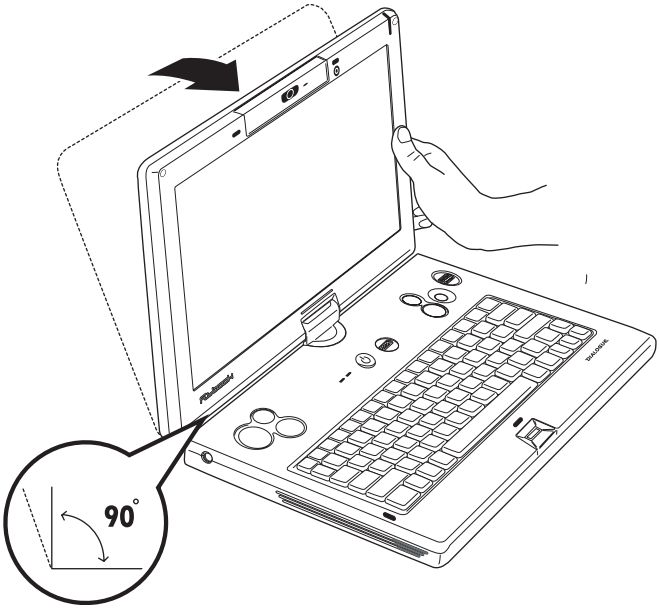

3. Twist the display clockwise 180 degrees.

CAUTION: Do NOT twist the display counter-clockwise. You will damage the LCD display.

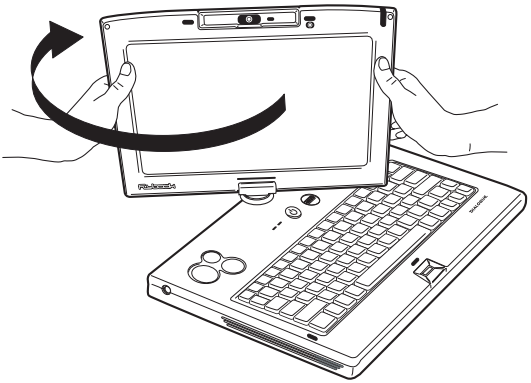

4. Flip the screen down as shown.

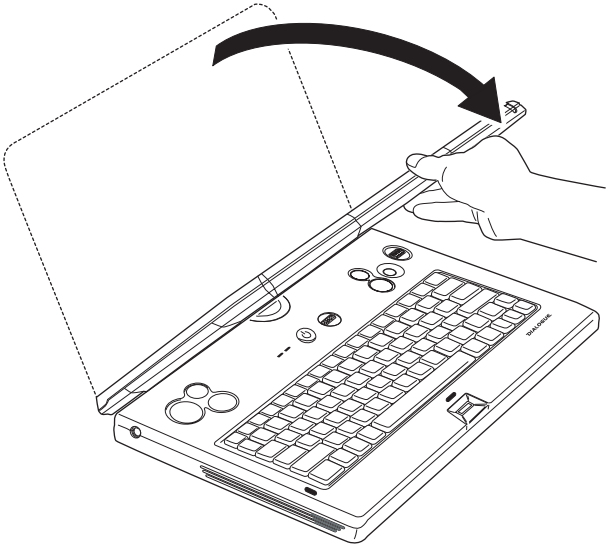

The V5 Flybook can now be used as a tablet PC.

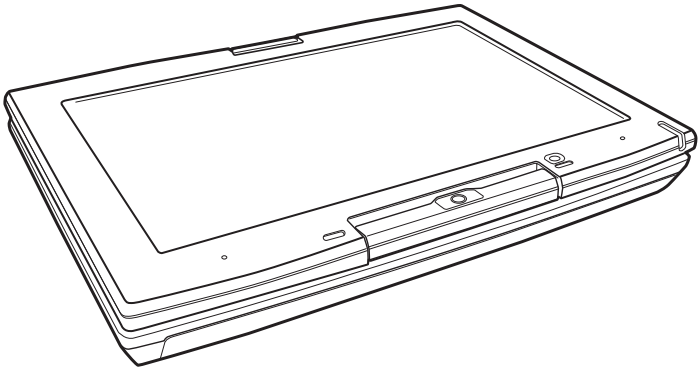

Using the fingerprint reader

The fingerprint reader allows you to control access to your computer.

To enroll your finger:

1. Click **start | All Programs | Fingerprint Application Suite | PCA250 | First-time Wizard**. You are prompted for your user password:

2. Enter your password and click **Accept**.

   The First Time Wizard screen appears.

3. Follow the instructions in the Wizard.

   You will be prompted to select which finger you wish to use for identification.

4. Place the tip of your finger above the fingerprint reader.

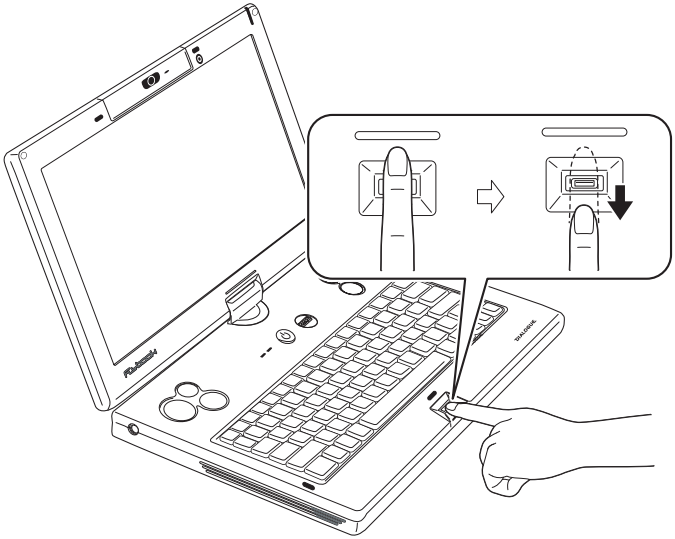

5. Press your finger down evenly on the reader, then in one smooth action swipe your finger across the reader.
   Repeat fingerprint enrollment as prompted in the Wizard.

Using V5 Flybook input devices

The V5 Flybook incorporates several ways to interact with the operating system. The V5 has a keyboard that emulates a standard keyboard with the addition of Fn hotkeys. The easy to use Intelligent Stickpointer enables you to perform the same function as a mouse or touchpad. Buttons are located on both the left and right side of the V5 for easy access. A scroll bar enables you to scroll up and down in web pages or word processing applications. Finally, the stylus enables you to use the V5 as a tablet PC with handwriting software.

About the V5 Flybook input devices

Your V5 Flybook comes with several input devices including a keyboard that emulates a standard PC keyboard, a Intelligent Stickpointer that functions as a pointing device with mouse buttons located conveniently on both sides of the unit, a scroll bar, and a stylus.

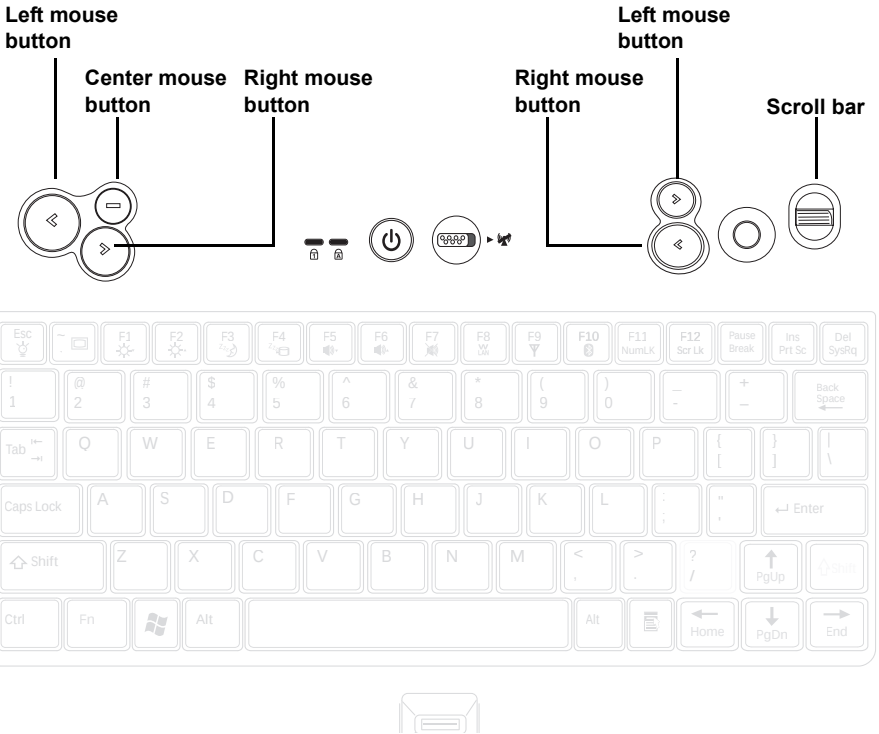

Using the Intelligent Stickpointer

The Intelligent Stickpointer consists of a stick and two sets of dual click-buttons located on the left and right side above the keyboard.

Press the button in the direction that you want the cursor to move.

Each set of buttons emulates a left and right button on a standard mouse. Additionally, on the left side is a button that functions as the middle button on a mouse.

To customize the pointing device, click **start | Control Panel** and then double-click the **Mouse** icon to open the pointing device configuration utility. The configuration utility lets you customize settings to your preference. Click **Help** in the pointing device utility for instructions on changing settings.

Using the Stylus

The stylus enables you to interact with the V5 Flybook as you would with paper and pen. You can navigate the OS, write, and draw on the screen.

Using the PenMount utility

The PenMount utility enables you to configure settings for when you use the stylus.

Click **start** | **All Programs** | **PenMount LPC Utilities** | **Control Panel**.
The PenMount utility opens. Click the tabs to set PenMount parameters or use PenMount utilities.

Calibrate	Click this tab and then click Standard Calibration or Advanced Calibration to calibrate the screen with the stylus. 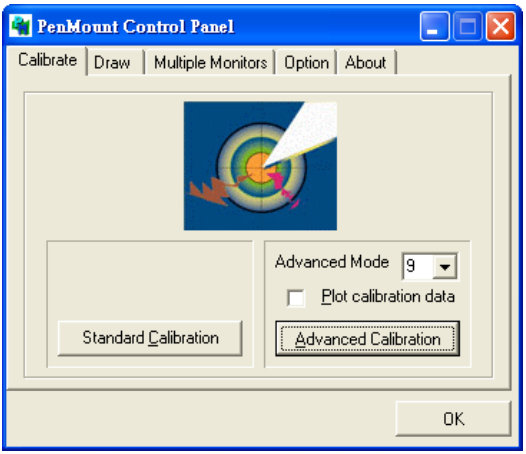

Draw	Click this tab to open a drawing utility. 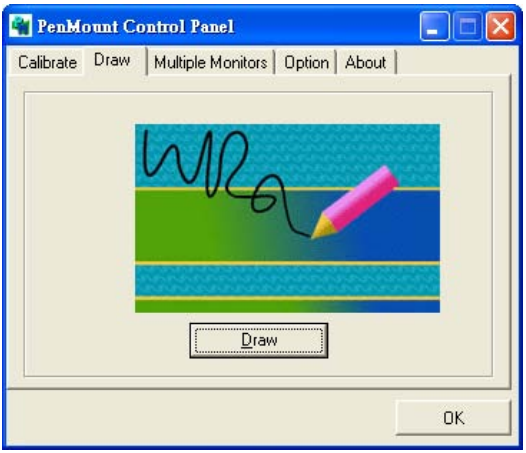
Multiple Monitors	Click this tab to configure the V5 PenMount for use with multiple monitors. 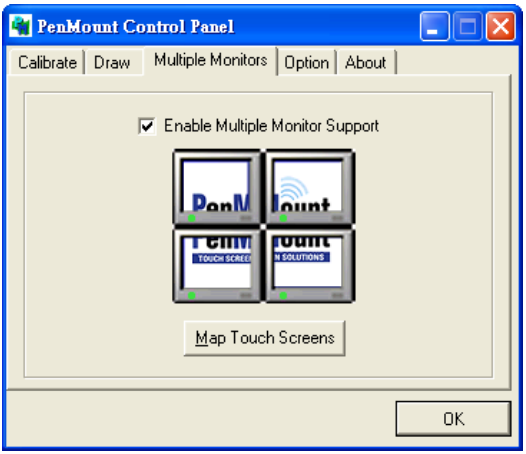

Option	Click Option to configure PenMount options. 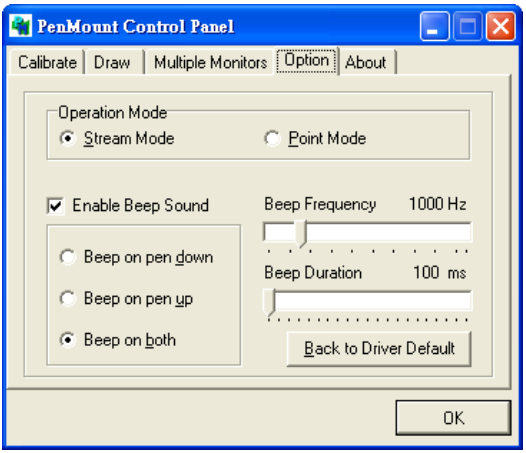
About	Click this tab to view the PenMount utility version and company information.

Calibrating the stylus for the first time

Before using the stylus with the V5 Flybook, you should first calibrate the display. Follow these instructions.

1. Click the Calibrate tab in the PenMount Control Panel.
2. Click Standard Calibration or Advanced Calibration

   Standard Calibration: calibrates the screen one time, with fewer calibration points.
   Advanced Calibration: calibrates the screen from 4 to 9 times, with more calibration points.
3. When either calibration screen appears, tap the red square with the stylus to set the calibration point.
4. Continue to tap calibration points until the screen displays a “Calibration Successful” message.

Using the Keyboard

The V5 keyboard emulates a standard-sized computer keyboard by incorporating function keys, a numeric keypad, and the Fn key.

Using function (Fn) keys

Using function keys is a quick way to carry out commands or enable features on your computer. Function keys have a blue icon or have blue text (such as on the **Home** and **PgDn** keys). To use this function, press and hold the **Fn** key (**1**) and then press a function key (**2**).

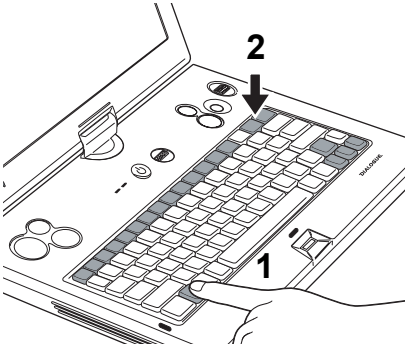

The **Fn** key functions are described as follows.

- **Fn + F1**: Turns the V5 LCD off.
- **Fn + F2**: Changes video output to an external display.
- **Fn + F3**: Decreases the display brightness.
- **Fn + F4**: Increases the display brightness.
- **Fn + F4**: Puts the computer in suspend mode.

- **Fn + F5**: Puts the computer in hibernation mode.
- **Fn + F6**: Decreases the volume.
- **Fn + F7**: Increases the volume.
- **Fn + F8**: Mutes/enables the volume.
- **Fn + F9**: Enables or disables the built-in wireless wide area networking (WWAN) feature.
- **Fn + F10**: Enables or disables the built-in wireless local area networking (WLAN) feature.
- **Fn + F11**: Enables or disables the built-in *Bluetooth* feature.
- **Fn + F12**: Turns on or off the built-in Web camera.
- **Fn + ScrLk**: Enables or disables scroll lock. When enabled, press the up or down arrow keys to scroll up or down one line respectively.
- **Fn + PrtSc**: Print screen captures the on-screen image to the clipboard. You can then copy the contents to an image editing program.
- **Fn + SysRq**: Terminal request. This key is rarely used.
- **Fn + Home**: Moves the pointer to the beginning of a line in text.
- **Fn + End**: Moves the pointer to the end of a line in text.
- **Fn + PgUp**: Moves text up one screen at a time.
- **Fn + PgDn**: Moves text down one screen at a time.
- **Fn + A**: Enables or disables the automatic light sensor.

Using the numeric keypad

The keyboard has an embedded numeric keyboard. When you enable it, the Num Lock LED lights. To enable or disable the numeric keypad, press **Num Lk**.

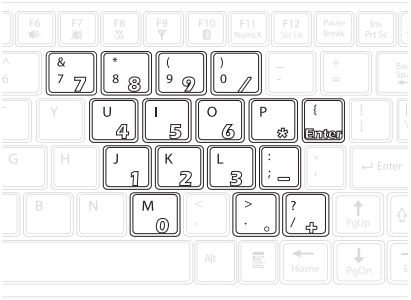

NOTE: The numpad numbers are printed larger in the illustration for your convenience. On the V5, the numbers are much smaller and on the front edge of the keys.

Windows® keys and other keys

Keys such as the Windows start and application keys, and the **Caps Lock** key function the same as on a standard keyboard in the Windows environment.

- : Opens the start menu. Use in combination with other keys to perform Windows shortcuts.
- : The application key has the same function as the right-mouse button.
- **Caps Lock**: Toggles uppercase on and off.

TIP! Refer to the Windows® start here booklet for additional keyboard shortcuts.

Connecting devices

This section covers peripheral devices that you can use with the V5.

Connecting audio devices

Your computer has a built-in microphone and speaker. You can also connect an external microphone and headset.

Connecting an earphone

Connect speakers or headphones to the headphone jack.

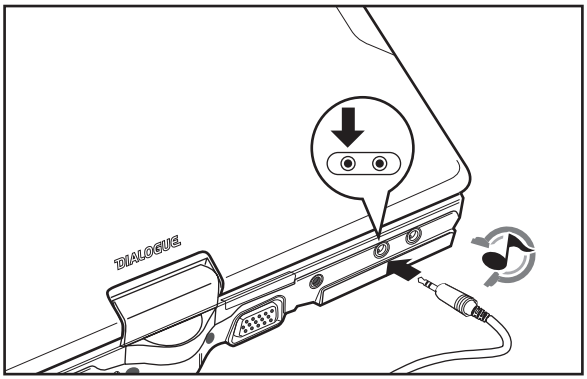

Connecting a microphone

Connect a microphone to the microphone jack.

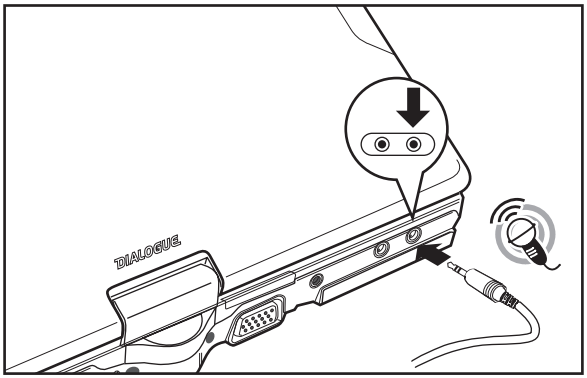

The Realtek Sound Manager automatically opens allowing you to configure audio devices.

NOTE: The built-in speakers and microphone are automatically disabled when you connect external speakers or a microphone.

Connecting USB devices

There are two Universal Serial Bus (USB) connectors on the V5 Flybook. You can connect USB devices such as printers or flash drives to either connector.

CAUTION: Be sure the USB icon on the connector is facing downwards as shown below. Connecting a USB cable incorrectly can damage the connector on the computer.

1. Connect the USB device to one of the USB connectors on the computer.

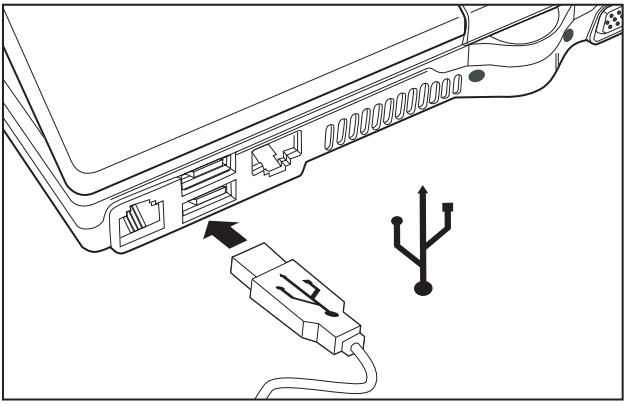

2. Install drivers for the device as prompted.

Connecting an external display

You can connect an external monitor, projector or LCD to your computer with a resolution up to 1800 x 1440. Check the user manual of the display to be sure it supports this resolution.

CAUTION: You can permanently damage a display if it does not support the resolution that your computer is set to. Match the resolution of the V5 to the external display before you attach it to the computer.

1. Connect the external display to the monitor connector on the computer.

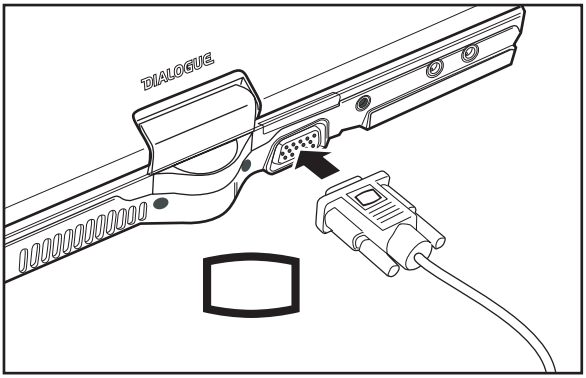

2. Connect the display to an electrical outlet and then turn on the display.
3. Press **Fn + F2** to switch to external display mode. Press **Fn + F1** to turn off the V5 LCD.

Using an ExpressCard

You can use 34 mm-wide and 54 mm-wide ExpressCards with your V5 Flybook.

CAUTION:

- Read the user guide that came with your ExpressCard before installing the card in the computer.
- Do not install or remove an ExpressCard when the computer is in standby or hibernate mode. If you do, when you try to resume the computer it may not respond.
- Static electricity in your body can damage ExpressCards. To reduce the static electricity in your body, touch a bare metal table or a grounded metal object before installing an ExpressCard.

Installing an ExpressCard:

1. Press and release the cover to the ExpressCard slot.

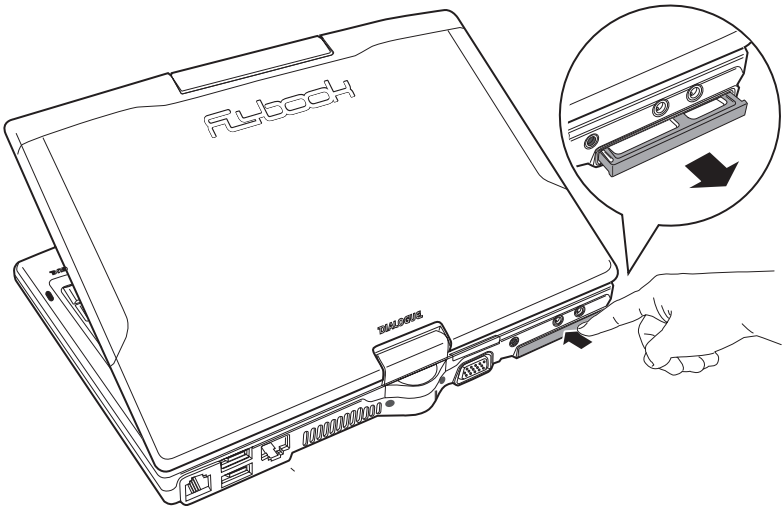

The card pops out.

2. Remove the “dummy” card from the slot.

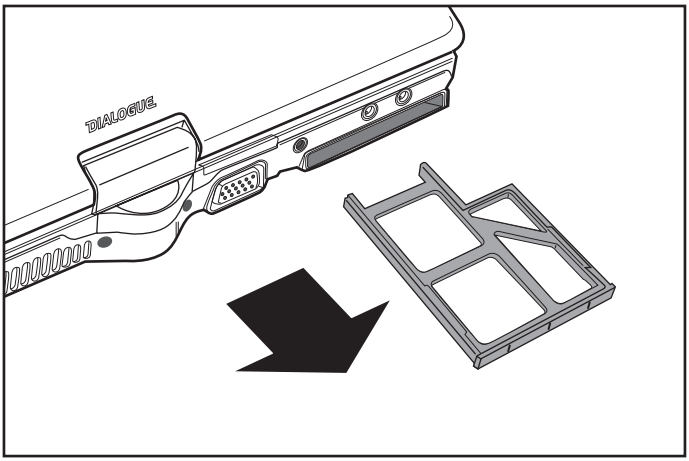

3. Insert the ExpressCard into the slot.

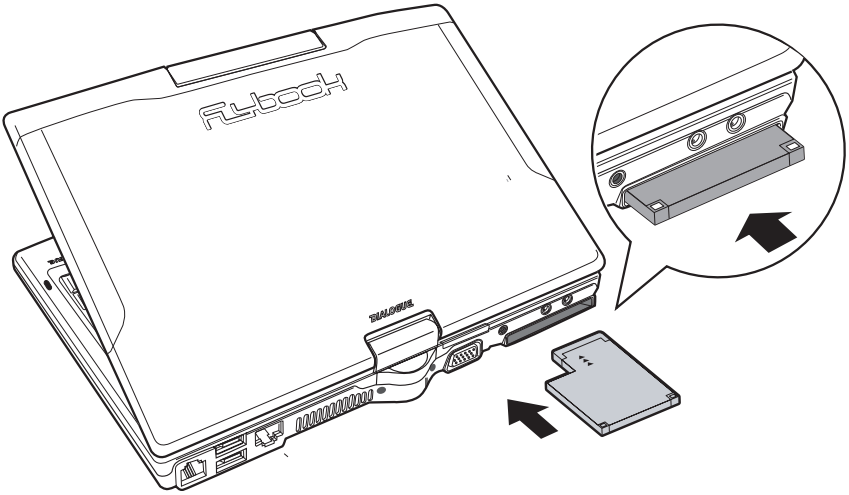

Removing an ExpressCard:

1. Click **Safely Remove Hardware** in the taskbar.
2. Select the card and click **Stop**.
3. Remove the card when prompted.

Connecting to a TV

You can connect a TV to the V5 Flybook to use as an external monitor.

1. Plug the 3.5 mm TV cable into the TV cable jack at the rear of the V5 Flybook.

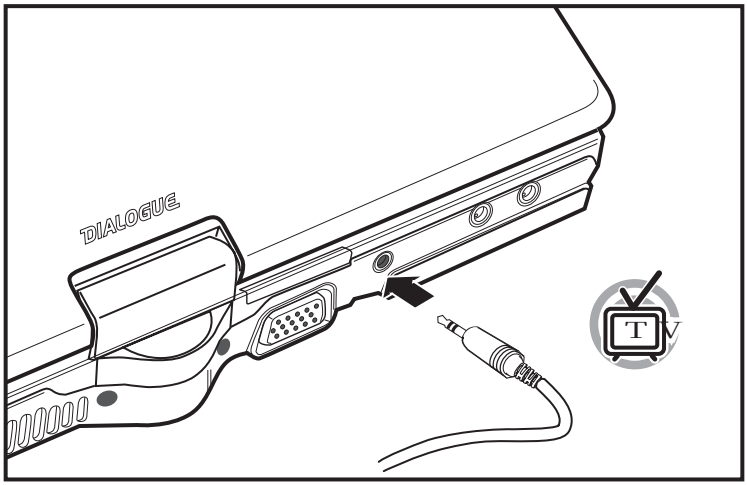

2. Connect the other end of the TV cable jack to a TV.

Using the V5

About Windows XP and Vista

The V5 Flybook comes with either Windows® XP™ Home Edition or Windows® Vista™.

Windows XP

Windows XP is a major upgrade to the client version of Windows 2000 with numerous changes to the user interface. XP provides improved support for gaming, digital photography, instant messaging and wireless networking.

Windows XP also incorporates a personal firewall for added security, and improves the sharing of Internet connections to the Internet.

XP Home Edition is designed for the consumer while XP Professional is aimed at the office worker with added security and administrative options. XP Pro can log onto a domain-based network in an office whereas XP Home cannot. XP Pro can be run from a remote location and supports Intel's Hyper-Threading.

Windows Vista

Windows Vista is the next version of Windows for clients and servers. Vista adds numerous features to preceding Windows versions, including improved security and advanced multimedia capabilities. Vista includes Trustworthy Computing which provides enhanced security features and greater support for digital rights management. Following are some of Vista's main features.

NEW USER INTERFACE

The Vista operating system incorporates the new "Aero" interface. Elements have a more sculpted look, which are based on Vista's Windows Presentation Foundation (WPF) graphics subsystem. WPF supports 3D vector graphics.

ENHANCED SEARCHING AND FILE MANAGEMENT

Vista speeds up indexed file searching in Windows XP and enables results to be stored in a virtual folder that is updated automatically if files are moved. The search also extends to syndication feeds. Developers can use the search capability in their own programs to enhance functionality.

New Document Interchange Format - XPS

Vista supports the XML Paper Specification (XPS) document format. XPS provides a way for digital signatures and digital rights to be applied to documents. XPS also keeps the page layout intact from computer to computer, similar to Adobe's PDF format.

Built-In Web Services - WCF/Indigo

Vista includes Windows Communication Foundation (WCF), a Web services-oriented messaging system.

Flybook control center

The Flybook Control Center lets you quickly enable or disable wireless options and change settings such as volume and display mode. You can also check system health with this utility.

Opening the control center

1. To open the Control Center, right-click the Flybook icon in the System Tray and select **Restore**.

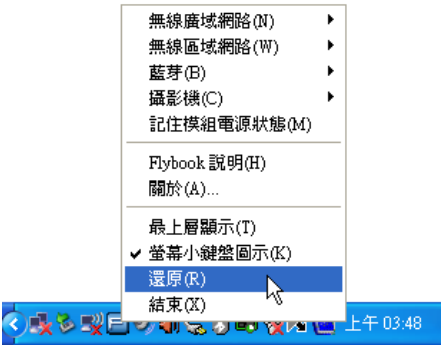

The Control Center Opens.

2. Click the arrow buttons to open the side panels.

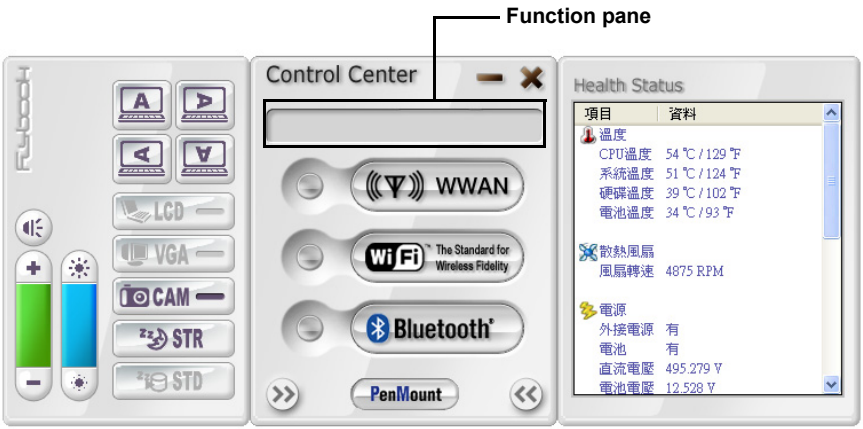

Move the pointer over the buttons on the Control Center panel; the function of the button is described in the **Function pane (1)**. For example, if you move the pointer over the **WiFi** button in the center of the panel, the message **Turn on/off the WiFi module** appears in the **Function pane**.

Using GPS

The V5 Flybook features GPS (Global Positioning System) capability. GPS is a satellite-based radio navigation system. Signals from at least four satellites compute the current latitude, longitude and elevation of a GPS receiver anywhere on earth to within a few meters.

Click **start** | **All Programs** | **Leadtek GPS Products** | **Navigator** to open the GPS software included with your V5.

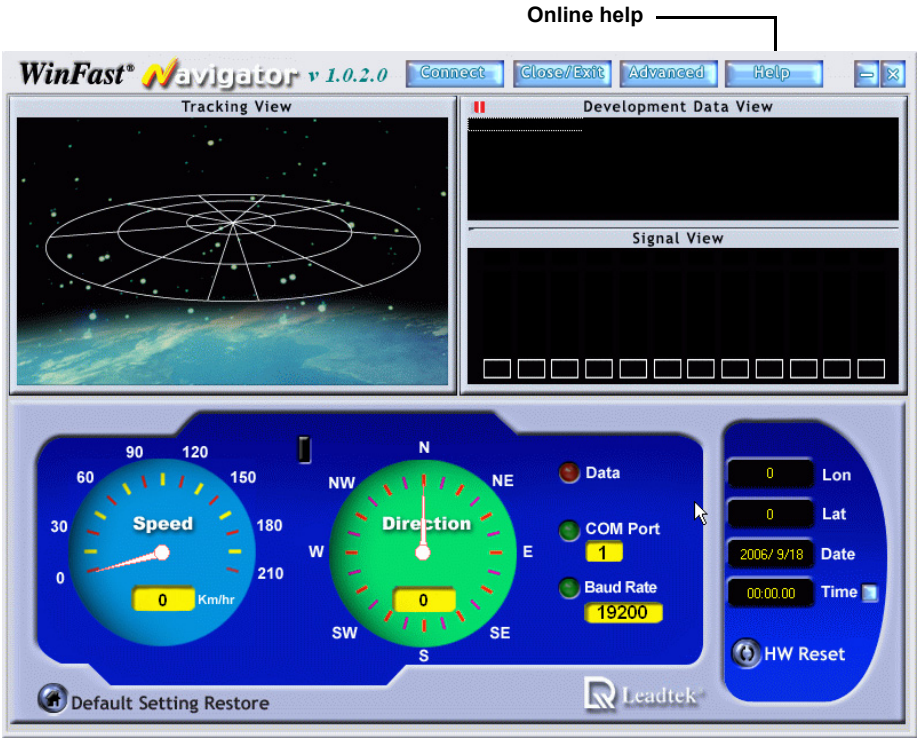

The WinFast® Navigator software provides you with information on your speed, direction, longitude and latitude. For more information on WinFast features, refer to the online help.

Securing your system

Before you go online

Connecting your computer to the Internet opens the way to potential threats such as viruses and spyware. To best secure your computer purchase security software (or download it from a secure system), and then install it on your computer before you connect it to the Internet.

To check your computer's security settings:

1. Click **start** | **Control Panel**, and then double-click **Security Center**. **Windows Security Center** opens.

2. Ensure **Firewall**, **Automatic Updates**, and **Virus Protection** are turned **ON**.

3. Click **Get help about Security Center** for more information.

Installing a firewall

A firewall protects your computer by blocking or allowing traffic between your computer and the Internet. Windows has a built-in firewall that helps to protect your computer. For better security, purchase a router that has a built-in firewall. You can also download free firewall software on the Internet.

Installing spyware blocker

Spyware typically retrieves information about your Web-surfing habits. It can be secretly installed on your computer with a free download and can even be installed just by visiting a Web site. Spyware can cause your Web searches to be redirected and pop up annoying adds. Once your computer is infected with spyware, it can be very difficult to remove. The key is to prevent infection in the first place by installing spyware blocker software. Spyware blocking software can be purchased online; and you can even download free spyware blocking programs.

Networking your computer

Your computer has an Ethernet connector that you can use to connect to a wired network at home or in the office. If you have a wireless access point, you can also get online using the built-in wireless LAN of your computer.

Connecting LAN

This section describes how to set up a local area network (LAN).

Determining IP address settings

To access a network, your V5 must have a network IP address. The IP address is either assigned manually (a static IP address), or it is assigned automatically by a DHCP router or server. If you already have a home network, you can check a computer on your network to determine if it is assigned an IP address automatically or manually.

1. Click **start** | **Run**.
2. Type **cmd** and click **OK**.
3. At the command prompt, type **ipconfig /all**.
4. Look for the line **DHCP Enabled** (you may have to scroll up to see it).

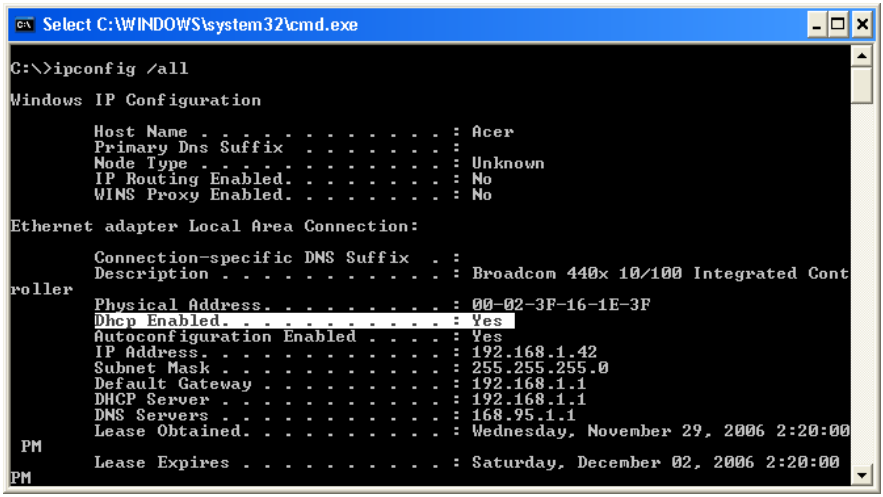

If DHCP is enabled, then your router assigns IP addresses automatically. You should enable DHCP during the initial Windows setup.

Setting up a wired connection

Wired connections are more secure and more stable than wireless connections. You can connect your computer to the network while it is turned on. Refer to the following to set up a wired connection:

1. Connect an Ethernet cable to the Ethernet connector on the computer.

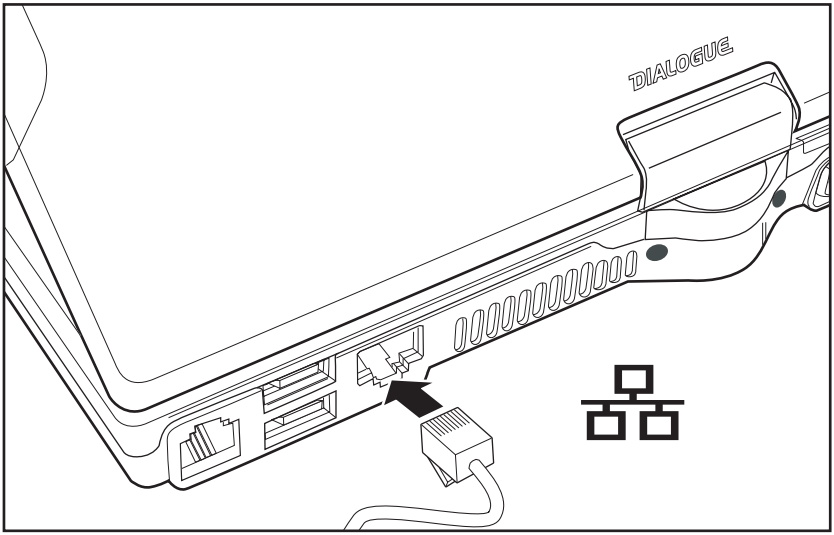

2. Connect the other end of the cable to your router or switch.
   It takes a few minutes for your router to assign an IP address to your computer. When your computer is connected, the following message appears over the LAN icon in the System Tray.

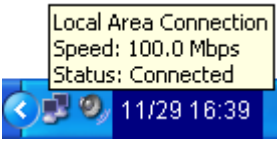

3. Double-click the LAN icon to view details for your connection.

Setting up wireless connections

This section describes how to set up a wireless lan (WLAN)

Setting up a WLAN connection

Use your computer's built-in wireless LAN module to access your home or office network. The wireless LAN module is powered by the Intel® PROSet/Wireless utility.

NOTE: Wireless systems work in infrastructure mode or peer-to-peer mode. In infrastructure mode, wireless devices communicate to a wired LAN via access points. In ad-hoc mode (also known as peer-to-peer mode), wireless devices communicate with each other directly and do not use an access point.

To connect to a wireless network:

1. Double-click the Flybook icon in the System Tray to open the Control Center.

2. Click the WiFi button
   The Intel(R) PROSet wireless module automatically scans for available networks.

TIP: Alternatively, press **Fn + F9** to enable the wireless LAN. The **WiFi On** sign appears briefly.

3. Follow the on-screen prompts to access a network.
   Click **Help** in the Intel® PROSet/Wireless utility for assistance.

Setting up a wireless WAN (WWAN) connection

A WWAN differs from a WLAN in that WWAN uses cellular carriers for transmission of data. Also called “wireless broadband” or “broadband wireless,” WWANs use cellular towers to transmit a wireless signal over a range of several miles to a mobile device compared to wireless WiFi LANs (WLANs), which span only a few hundred feet and generally to only stationary devices.

1. Double-click the Flybook icon in the System Tray to open the Control Center.

2. Click the WWAN button

.

   WWAN is activated.

TIP: Alternatively, press **Fn + F10** to enable the wireless LAN. The **WWAN On** sign appears briefly.

Using the built-in *Bluetooth* module

Your computer has a built-in *Bluetooth* module and is already installed with the IVT BlueSoleil utility. *Bluetooth* wireless technology allows communication between your computer and other *Bluetooth* wireless technology enabled devices such as cellphones, printers, and keyboards.

In order to connect and share services via *Bluetooth* wireless technology, the two devices must support the same *Bluetooth* Profile(s). One device must act as a server; the other must be the client.

To start using *Bluetooth* wireless technology, do the following:

1. Double-click the Flybook icon in the System Tray to open the Control Center.

2. Click the Bluetooth button

.

   Bluetooth is activated.

TIP: Alternatively, press **Fn + F11** to enable the wireless LAN. The **Bluetooth On** sign appears briefly.

3. Double-click the *Bluetooth* icon in the taskbar or click **start | All Programs | IVT BlueSoleil | BlueSoleil** to open the IVT BlueSoleil program.

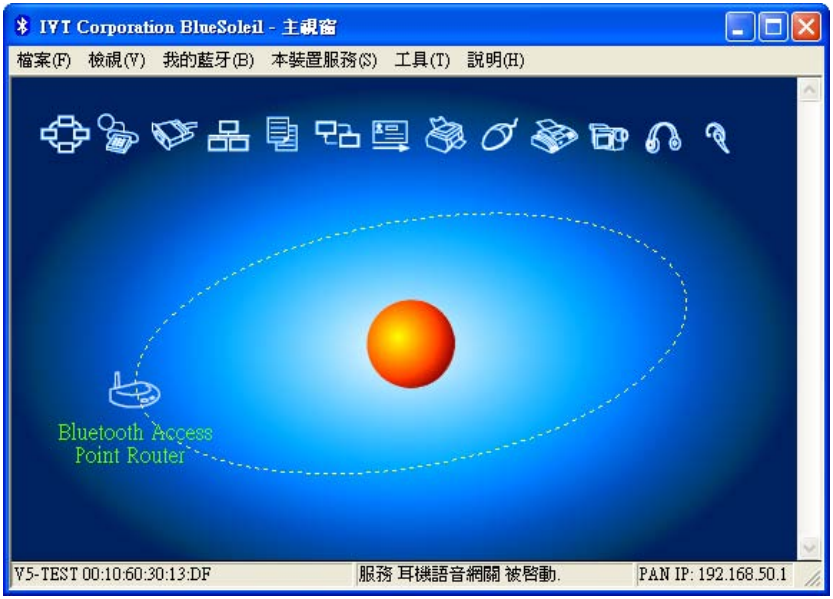

BlueSoleil helps you to configure and interact with Bluetooth devices. Click **Help** on the menu bar for more information on how to use BlueSoleil.

Using the 3.5G module

The evolution of cellular communication systems is commonly known by 1G, 2G and 3G designations. 3G is designed for high-speed data transmission such as VoIP. The 3.5 module enables you to conduct voice communications with your V5 Flybook.

1. Press Fn+F10 to activate the 3.5G module.
2. Click **start | All Programs | Sierra Wireless | 3G Watcher | 3G Watcher** to open the 3G Watcher utility.

Using 3G watcher for voice communications

3G watcher enables you to conveniently set up the 3G module for conducting voice communications with your favorite VoIP software.

Using the built-in modem

Connect a phone jack to the RJ-11 jack at the rear of the V5 Flybook to use the built-in modem.

Using the built-in Webcam

Your computer features a built-in Webcam that is already set up and ready to use. Use your Webcam to make live video calls and keep in touch with friends and family.

CAPTURING VIDEO

1. Press **Fn + F12** to enable the built-in Webcam.
   The camera LED lights.
2. Click **start | AMCap** or double-click the **AMCap** icon on your desktop to open the **AMCap** utility.
3. To start recording, click **Capture | Start Capture**.

LAUNCHING YOUR FAVORITE INSTANT MESSENGER

You can use the Webcam with an instant messenger such as MSN Messenger, Yahoo Messenger, or Skype. To begin messaging, open your instant messenger and then launch the Webcam.

Ergonomics

Ergonomics is the science of equipment design, particularly for working situations, with the intention of reducing discomfort. Ergonomic products, such as keyboards or mice, are designed to blend smoothly with your actions.

When using your computer try to develop good habits such as the following:

- Periodically get up, stretch and walk around the room.
- Look away from the display frequently. Don't face a wall so that you can look up from the screen and into the distance. This exercising of the eyes can help to prevent eye-strain.
- Do stretching exercises while you sit.
- Don't work in poor lighting. Position your computer display to minimize glare or reflection.

When sitting at your computer, use the following illustration and guidelines:

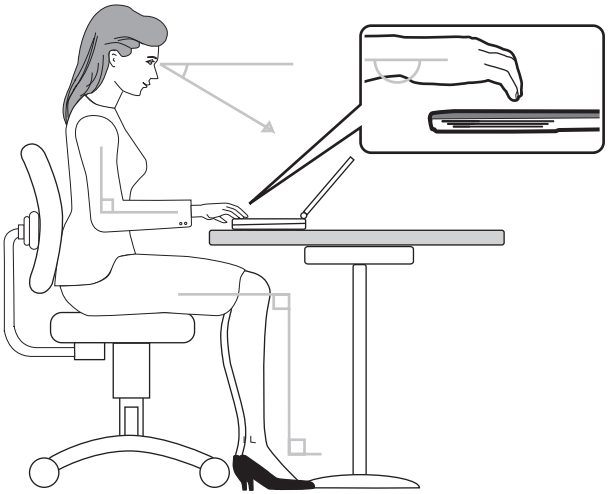

- Position the display to avoid glare from overhead lighting. Adjust the display to achieve an optimal viewing angle as shown above. (See "Using the swivel screen" on page 14.)
- Approximately arms-length is a good viewing distance to the display.
- Use a comfortable chair that provides good back support.

- Sit up straight, with your shoulders back in a relaxed position.
- Adjust your chair so that your thighs are parallel to the floor.
- When typing keep your arms, hands, and wrists relaxed and horizontal; type gently and do not rest your palms on the computer.

Caring for your computer

After you unpack your computer, store the packing materials in case you want to ship the computer or if you have to return it for servicing.

Your notebook computer is a precision instrument that should be handled with care. Use common sense and follow the guidelines below, and your computer will last you for many years.

Things not to do with your computer

- Do not twist the display sideways or bend it upwards by pulling only on one corner.
- Do not place heavy objects such as books on the computer.
- Do not expose the computer to temperatures above 50° C or below 0° C.
- Keep the computer away from direct sunlight or heat sources.
- Do not expose the computer to rain or moisture.
- Do not spill water or any other liquid on the computer.
- Do not place the computer near magnetic fields.
- Avoid subjecting your computer to heavy shocks or vibrations.
- Do not expose the computer to dusty or dirty environments.
- Do not place the computer on uneven surfaces.
- Do not cover the air vents around the computer.
- Only use the ac adapter that is provided with your computer.

Cleaning the computer

WARNING: Before cleaning the computer, turn it off, unplug the ac adapter, and then remove the battery.

Wipe the display with a clean soft cloth. If you use a mild glass cleaner to clean the display, spray a little on the cloth and then wipe the display. Do not spray cleaner directly onto the display.

Clean the outside of the computer case with a soft cloth. You can moisten the cloth with a non-alkaline detergent.

Use a vacuum cleaner to clean dust from the keyboard.

CAUTION: Do not wipe the keyboard Intelligent Stickpointer, Intelligent Stickpointer buttons, or fingerprint reader with a damp cloth.

The BIOS setup utility

The BIOS setup utility lets you change core settings on your computer such as the system time, boot order, and auto-repeat rate for your keyboard. Most users will find the default settings optimal for their needs.

CAUTION: Be sure you understand any changes you make to BIOS settings. Choosing incorrect settings can cause your computer not to boot up.

Accessing the BIOS setup

When you turn on your computer a message **Press F2 to enter BIOS** appears. Press F2 to enter the BIOS setup.

On the right side of the Setup screen is an area labeled **Item Specific Help**. This area lists navigation key shortcuts and information that is specific for the item that is selected.

Updating the BIOS firmware

You can download updated BIOS from the manufacturer's Web site and upgrade the BIOS on your computer. New BIOS may provide support for new peripherals, improvements in performance or fixes for known bugs.

To download firmware:

1. Go to http://www.dialogue.com.tw.
2. Click Download | Software or Firmware.
3. Download the firmware for the model of computer you have.
4. Follow the instructions in the firmware download to update your computer’s BIOS.

The Main BIOS menu

In the Main menu you can make the following changes:

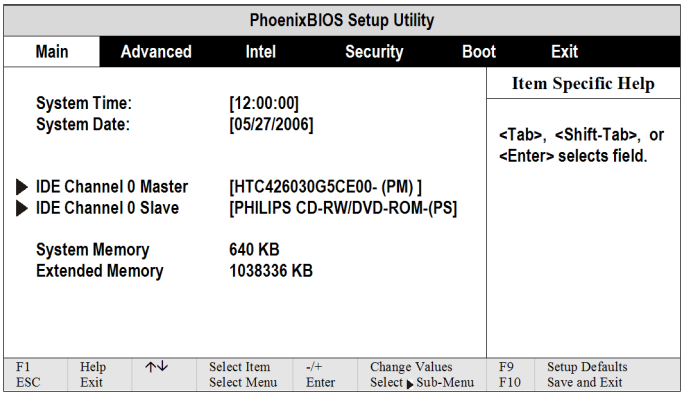

System Time

Sets your system to the time that you specify (usually the current time). The format is hour, minute, second. Insert the appropriate information. Use the **Tab** or **Shift** + **Tab** keys to move between the hour, minute, and second fields.

System Date

Sets your system to the date that you specify (usually the current date). The format is month, day, year. Type in the appropriate information. Use the **Tab** or **Shift** + **Tab** keys to move between the month, day, and year fields.

The Advanced menu

Select the item from the menu bar to display the following menu:

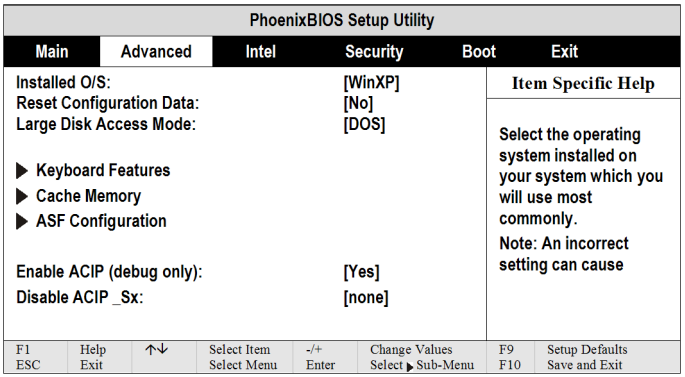

The Intel menu

Select the item from the menu bar to display the following menu:

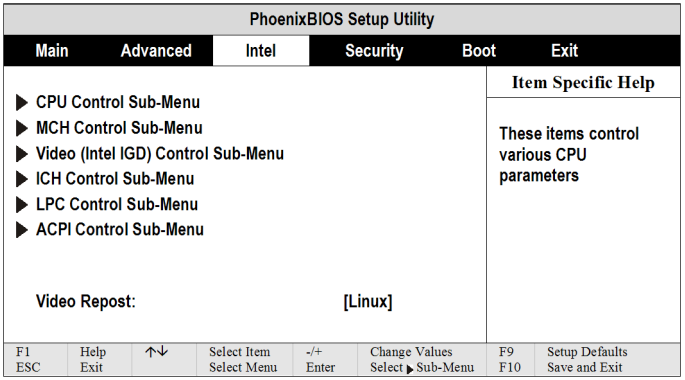

The Security menu

Select the item from the menu bar to display the following menu:

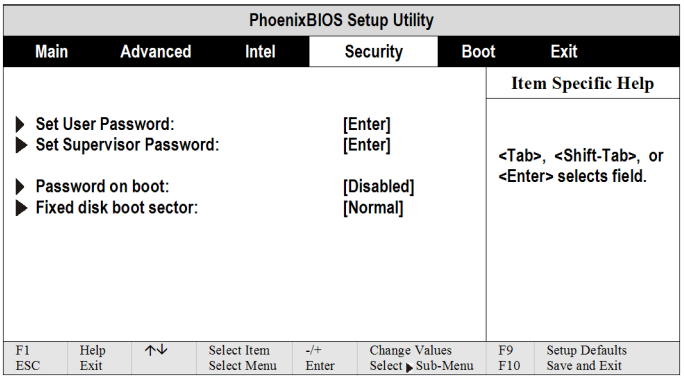

The Boot menu

Select the item from the menu bar to display the following menu:

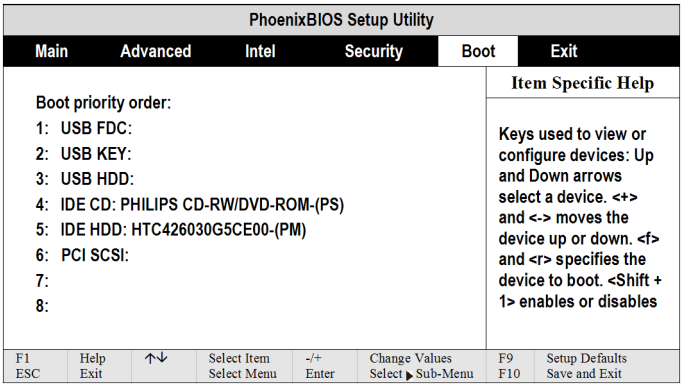

The Exit menu

After you finish making changes to the BIOS use the Exit menu to close the BIOS setup and restart your system. Select the item from the menu bar to display the following menu:

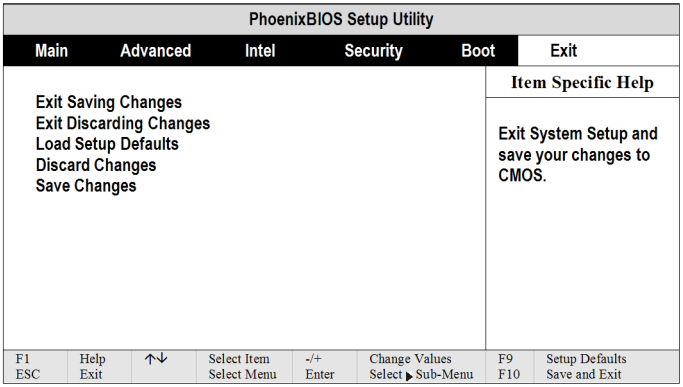

NOTE: To exit BIOS Setup without saving your changes, select **Exit Discarding Changes** and press **Enter**. When prompted to save, select **No** and press **Enter**.

Troubleshooting and specifications

Tips for troubleshooting

In each problem-specific section, try the steps in the order suggested. This may help you to solve the problem more quickly.

Try to pin point the problem and thus avoid replacing non-defective parts.

Keep a record of the steps you take when troubleshooting: The information may be useful when calling for technical support or for passing on to service personnel.

Identifying problems

Follow the steps below to identify your problems:

1. Turn off the computer.
2. Disconnect any peripheral devices such as an external mouse or printer.
3. Make sure that the AC adapter is properly connected to your computer and the power source is good. (Use some other electrical device to confirm that the electrical outlet is working.)
4. Leave the computer off for approximately 10 seconds, and then switch it on again. The computer should enter the boot sequence and start normally.
5. If the computer does not start normally, look for a screen message or other clue on the malfunction.

If failure is detected in an area other than the mainboard, an error message is displayed on the screen and testing is stopped.

If your system does not successfully start, but displays a blank screen, emits a series of beeps, or displays an error code, consult your dealer.

General hardware problems

A few common hardware problems and suggested solutions are presented below:

THE DISPLAY SCREEN IS DARK.

1. Adjust the screen brightness.
2. Make sure that the computer is not in suspend mode.

AN INCORRECT DATE AND TIME ARE DISPLAYED.

Correct the date and time using the DOS DATE and TIME commands or the options in the Setup Utility. (You can also set the date and time in Windows by double clicking the clock on the task bar or in the control panel.) If the date and time become incorrect after a short time, your CMOS battery may be depleted. Contact your dealer to change the battery.

THE COMPUTER DOES NOT START OR BOOT-UP

1. If the power indicator is not on, the computer is without power. Make sure you have properly attached the AC adapter and power cord, or have installed a charged battery.
2. If the computer is running on battery power, ensure that the battery charge is not low. If the battery appears to be charged, it may be faulty.
3. If the computer is using the AC adapter, ensure that the AC outlet, airplane seat jack, or car cigarette lighter are working. If the AC outlet power is working, the AC adapter may be faulty.

HARD DRIVE OR EXTERNAL BOOT-UP DEVICE IS INACCESSIBLE

1. If the hard disk indicator is lit, BIOS may be incorrectly set. Revise the BIOS settings for the Primary Master.
2. Security may be set to prevent starting the operating system.
3. If you choose to boot up your system from an external device through a USB port, make sure it is on and bootable media is inserted.

THE SCREEN IS BLANK OR THE DISPLAY IS ABNORMAL

1. The computer may be set to an external display device only. Press **Fn + F1** to switch to the V5 display.
2. The power management system may automatically blank the screen to save power, and is in video time-out, standby mode, or hibernation mode. Press any key, move the pointer, or push the power button to turn on the display.

3. The angle of the display and the brightness level is inadequate for the ambient lighting. Adjust the display angle and press **Fn + F2** or **Fn + F3** to adjust the brightness level.

4. The LCD screen has a default resolution of 1280 x 768 (WXGA). If you set the resolution lower than this, the screen expands to fill the display. When the system can not expand its display to full screen on the LCD screen or on an external display device, you can right click on Windows desktop and select **Properties** to open the **Display Properties** window. Then click the **Settings** tab and set the resolution to an appropriate value.

No Audio Output

1. The audio system is closed or the volume of audio system is too low. Use hot keys or Flybook Control Center to open the audio system and adjust the volume.

2. The audio output is disabled or too low for the audio application. Open the audio output and adjust the volume.

3. When plugging an earphone or external speaker into the earphone/line-out jack, the built-in speakers are disabled automatically. If you can not hear sound from the built-in speakers, ensure that nothing is plugged into the jack.

The Keyboard, Intelligent Stickpointer or Connected Mouse Does Not Work Properly

1. The system may have entered Suspend to RAM mode. Push the power button to resume the system.

2. An application may have locked out your input device. Restart your system.

3. If the keyboard or mouse does not respond on the USB port, ensure that the devices are installed properly and that drivers are installed.

Cannot Connect to a Wireless LAN

1. An incorrect network name (SSID) or network key may be used. Make sure you have set the network name (SSID) and key to the same values as the access point (infrastructure connection) or the computers to be connected (Ad Hoc connection) have.

2. The computer may be too far from other communication devices. Retry the connection after moving your computer closer to the computers to be connected with (Ad Hoc connection) or to the access point (infrastructure con-

nection). Also, check the wave condition in the Wireless Network Connection Status window.

3. Check if the wireless LAN module is turned on. Verify that Disable Radio is not checked in the Network setting window.
4. Make sure you have access rights or network authentication to the network you want to connect to.
5. Try changing channels to avoid active channel duplication.
6. Check the setting of the protocol, work group, shared setting, and IP address.

CANNOT CHARGE BATTERY OR LOSING POWER QUICKLY

1. Verify that the battery is properly installed and it is not too hot or too cold.
2. Calibrate the battery.
3. The installed battery may be faulty. Replace it with a new one.

Having the V5 serviced

If you are unable to solve the problem, you should have the computer serviced. Pack the computer in the original carton. Include a description of the problem and a checklist of the steps you took when trying to fix the problem. The information may be useful to the service personnel. Return the computer to the place you purchased it.

Specifications

Processor	Intel® Centrino® Duo ULV
Chipset	Mobile Intel® 945 GM Express Chipset
Main Memory	DDR2 SO-DIMM, up to 4GB
BIOS and Flash	Phoenix® TC BIOS
Operation System	Genuine Microsoft® Windows® Vista / XP
Wireless WAN (optional)	3.5G (HSDPA / UMTS / EDGE / GPRS / GSM) or 2.75G(EDGE / GPRS / GSM) with antenna built-in
Wireless LAN	802.11a/b/g (Intel® 3945 supported) with antenna built-in
Wireless PAN	Bluetooth® V2.0 with antenna built-in
GPS	GPS receiver with antenna built-in
LAN	10/100/1000 Mbps Ethernet
Fax / Modem	Azalia Compliant and V.92 / K56flex support
Swivel Hinge	For both Clam-shell and Tablet mode operation
Display	8.9", 16:9 wide-view Color LTPS TFT LCD with 1024 x 600 (WSVGA) high resolutions(32-bit colors)
External VGA Display	Up to 2048 x 1536 resolutions (highest to 32-bit colors)
External TV Display	NTSC / PAL support
Video Camera	1.3 mega pixel web camera, 180°
Audio	Array Microphone / Stereo Speaker built-in
Authentication	Finger-Print device and recognition built-in
Hard Disk	1.8" Ultra Slim Hard Disk, 40 GB (4200 rpm)
Input devices	Touch Panel; Landscape and Portrait dual mode Intelligent Stickpointer® with 2 sets of Mouse buttons 80 Key standard keyboard (Multiple languages support) with hot keys
Interface	USB 2.0 port x 2 RJ-45 LAN jack x 1 RJ-11 Modem jack x 1 Earphone jack x 1 Microphone jack x 1 54mm-wide PCI Express Card slot x 1 D-sub 15 pin VGA port x1 (for external monitor) TV-out jack x 1
Battery	Swappable Li-Ion rechargeable battery(6 x 1800mAH)
Dimensions	Dimensions: 235 x 165 x 29.5 mm Weight around 1270g (when fully equipped)
Color Selection	Gold / Pink / Black /Silver

DC-IN POWER SUPPLY (Through DC-IN Power Jack)

Input Rating: 15-19VDC, 2.64-3.34A, 50W.
Maximum Operating Temperature (Ambient): 38 degree C

AC ADAPTER

Model No: Delta ADP-50HH Rev. A.
Input Rating: 100-240VAC, 50-60Hz, 1.5A.
Output Rating: 19VDC, 2.64A, Class II, Marked LPS.

BATTERY

Battery Pack: 6 cell 3S2P 103450 Li-Ion rechargeable battery pack.
Charging: Direct DC charging.

Index

A

ac adapter, connect, 9
audio device, connect, 27

B

battery
- charge, 9
- charging time, 9
- install, 8
- locks, 7
- remove, 8

BIOS
- access, 54
- advanced menu, 56
- boot menu, 57
- description, 54
- exit menu, 58
- Intel menu, 56
- main menu, 55
- security menu, 57
- update firmware, 54

Bluetooth
- using, 46

C

caring for computer, iii, 52
charge battery, 9
cleaning computer, 53
computer
- caring for, iii, 52
- cleaning, 53

computer specifications, 63
connect
- audio device, 27
- external display, 30
- headset, 27
- microphone, 27
- USB device, 29

connect ac adapter, 9

D

display
- connect external, 30
- resolution, 30

E

enroll fingerprint, 17
ergonomics
- description, 50
- tips, 50

ExpressCard
- cautions, 31
- install, 31
- remove, 32
- stop, 32

types, 31

F

fingerprint reader, using, 17
fingerprint, enroll, 17
firewall, install, 40
firmware, update, 54
Flybook control center
description, 36
open, 36
use, 37
front-left view, 2

I

install
battery, 8
firewall, 40
spyware blocker, 40
install ExpressCard, 31
IP address, determine, 41

K

keys
application key, 26
caps lock, 26
fn, description, 24
fn, using, 24
function keys, description, 24
function, using, 24
numeric keypad, using, 26
Start key, 26
Windows keys, 26

L

LED description, 5

N

network
determine IP address, 41
wired setup, 42
wireless setup, 43

R

rear view 4
remove
battery, 8
ExpressCard, 32
resolution display, 30

S

security, checking, 39
service computer, 62
set up
wired network, 42
wireless network, 43
specifications, computer, 63
spyware blocker, install, 40

T

troubleshooting
general problems, 59
identify problem, 59

tips, 59

U

update BIOS firmware, 54
USB device, connect, 29
using
Bluetooth, 46
fn keys, 24
function keys, 24
numeric keypad, 26
Webcam, 49
using fingerprint reader, 17

V

view
front-left, 2
rear view, 4

W

Webcam
capturing video, 49
enable, 49
launching messenger, 49
using, 49

FCC Caution: Any changes or modifications not expressly approved by the party responsible for compliance could void the user's authority to operate this equipment.

This device complies with Part 15 of the FCC Rules. Operation is subject to the following two conditions: (1) This device may not cause harmful interference, and (2) this device must accept any interference received, including interference that may cause undesired operation.

RF Exposure Statement: This EUT is compliance with SAR for general population /uncontrolled exposure limits in ANSI/IEEE C95.1-1999 and had been tested in accordance with the measurement methods and procedures specified in OET Bulletin 65 Supplement C.

To maintain compliance with FCC RF exposure requirements, use only belt-clips, holsters or similar accessories that does not contain metallic components in its assembly. The use of accessories that do not satisfy these requirements may not comply with FCC RF exposure requirements, and should be avoided.

If this device is going to be operated in 5.15 ~ 5.25GHz frequency range, then it is restricted in indoor environment only

Memo

Memo

Memo

Memo

Memo

Memo