OmniDrive

The Corvus Service Manual

CORVUS

Corvus Systems, Inc. • 2100 Corvus Drive • San Jose, California 95124 • (408) 559-7000 • Telex 278976

DISCLAIMER OF ALL WARRANTIES AND LIABILITIES

Corvus Systems, Inc. makes no warranties, either expressed or implied, with respect to this manual or with respect to software described in this manual, its quality, performance, merchantability, or fitness for any particular purpose. Corvus Systems, Inc. software is sold or licensed "as is." The entire risk as to its quality or performance is with the buyer and not Corvus Systems, Inc., its distributor, or its retailer. The buyer assumes the entire cost of all necessary servicing, repair, or correction and any incidental or consequential damages. In no event will Corvus Systems, Inc. be liable for direct, indirect, incidental or consequential damages, even if Corvus Systems, Inc. has been advised of the possibility of such damages. Some states do not allow the exclusion or limitation of incidental or consequential damages, so the above limitation may not apply to you.

Every effort has been made to insure that this manual accurately documents the operation and servicing of Corvus products. However, due to ongoing modification and update of software and future products, Corvus Systems, Inc. cannot guarantee the accuracy of printed material after the date of publication, nor can Corvus Systems, Inc. accept responsibility for errors or omissions.

FCC WARNING

This equipment has been tested with a Class A computing device and has been found to comply with Part 15 of FCC Rules. Operation in a residential area may cause unacceptable interference to radio and TV reception requiring the operator to take whatever steps are necessary to correct the interference.

NOTICE

Corvus Systems, Inc. reserves the right to make changes in the product described in this manual at any time without notice. Revised manuals and update sheets will be published as needed and may be obtained from Corvus Customer Service.

This manual is copyrighted and contains proprietary information. All rights reserved. This document may not, in whole, or in part be copied, photocopied, reproduced, translated or reduced to any electronic medium or machine readable form without prior consent in writing from:

Corvus Systems, Inc.
2100 Corvus Drive
San Jose, CA 95124

Telephone: (408) 559-7000
TELEX: 278976

Copyright© 1984 by Corvus Systems, Inc. All rights reserved.

Corvus Systems,™ Corvus Concept,™ Transporter,™ Omninet,™ LogiCalc,™ EdWord,™ The Bank,™ Banktape,™ OmniDrive,™ Corvus Uniplex,™ ISYS,™ Constellation,® and Mirror® are trademarks of Corvus Systems, Inc.

Mirror,® U.S. Patent 4,380,047 International patents pending Corvus Concept,™ patent pending OMNINET,™ patent pending

CORVUS SYSTEMS
OMNIDRIVE
DISK DRIVE
SERVICE MANUAL

PART NO.: 7100-05687
RELEASE DATE: OCTOBER 1984

This document contains three types of notations. These are, in increasing order of importance, *NOTE,* **CAUTION,** and ***WARNING.*** The *NOTE* indicates some action to be taken to speed or simplify a procedure. The **CAUTION** indicates that potential damage to the equipment or user data exists, and care should be taken to avoid this. The ***WARNING*** indicates that potential harm or injury to the service technician or operator exists, and extreme care should be taken to avoid this.

TABLE OF CONTENTS

TABLE OF CONTENTS

List of Figures and Tables xi
Specifications xv

CHAPTER 1—GENERAL DESCRIPTION

1.0 Scope of Chapter 1
1.1 Introduction 1
1.2 General Description 1
1.2.1 Differences Between OmniDrive and H-Series Disk Systems 2
1.2.2 Protocol 2
1.2.3 Mechanism Manufacturers 3
1.2.4 Model Identification 3
1.3 Major Assemblies 3
1.3.1 Winchester SubAssembly 5
1.3.2 Controller Printed Circuit Assembly (PCA) 5
1.3.3 Power Supply 5
1.3.4 AC Panel 5
1.4 Installation 5
1.4.1 Receiving the Drive 5
1.4.2 Environmental Considerations 6
1.4.3 Omninet Address Switches 6
1.5 Operation 7
1.5.1 Power Switch 7
1.5.2 Power-On Sequence 8

CHAPTER 2—FUNCTIONAL DESCRIPTION

2.0 Scope of Chapter 11
2.1 Introduction 11
2.2 Winchester Disk Drive Mechanism 11
2.2.1 Winchester Drive Theory 15
2.2.2 Read/Write Printed Circuit Assembly (PCA) 16
2.2.3 Motor Control Printed Circuit Assembly (PCA) 16
2.3 Omninet Controller Printed Circuit Assembly (PCA) 16
2.3.1 Omninet Transporter and Disk Server Circuit 18
2.3.2 MC6801-1 Microprocessor 19
2.3.3 Monochip 20
2.3.4 Advanced Data Link Controller (ADLC) 20
2.3.5 WD 1010 Winchester Disk Controller 21
2.3.6 PROM 22
2.3.7 RAM 22
2.3.8 Transmitter and Receiver 23
2.4 Power Supply 23
2.5 AC Panel 24

CHAPTER 3—DISASSEMBLY AND ASSEMBLY

3.0 Scope of Chapter 27
3.1 Introduction 27
3.1.1 Tools Required 27
3.1.2 Space and Environmental Considerations 27
3.2 Disassembly Procedures 27
3.2.1 Top Cover 27
3.2.2 Controller PCA 28
3.2.3 Drive Mechanism 28
3.2.4 Power Supply 29
3.2.5 AC Panel 30
3.3 Reassembly 30

CHAPTER 4—CHECKS AND ADJUSTMENTS

4.0 Scope of Chapter 33
4.1 Introduction 33
4.2 Power Supply Voltage Check 33
4.2.1 Tools Required 33
4.2.2 Astec Power Supply Check 33
4.2.3 Boschert Power Supply Check 34
4.2.4 AC Power Check 35
4.3 Voltage Control Oscillator Adjustment 35
4.3.1 Tools Required 35
4.3.2 VCO Adjustment Procedures 36

CHAPTER 5—DIAGNOSTICS

5.0 Scope of Chapter 41
5.1 Introduction 41
5.2 CRC 41
5.2.1 C) Check For Bad Tracks 41
5.2.2 S) Spare Track Table 41
5.3 X) Exercise Heads 42
5.4 U) Update Firmware 42
5.5 V) Version Check 42
5.6 F) Format Drive 43
5.7 M) Modify Parameters 43
5.7.1 L) List Parameters 43
5.7.2 I) Interleave Specification 43
5.7.3 T) Spare Track Table 43
5.7.4 R) Read-After-Write 43
5.7.5 S) Save Changes 44
5.8 S) Select Drive 44
5.9 P) Park Heads for Shipment 44

CHAPTER 6—TROUBLESHOOTING

6.0 Scope of Chapter 47
6.1 Introduction 47
6.2 Troubleshooting 47
6.2.1 Tools and Equipment Required 47
6.2.2 Using the Troubleshooting Flow Chart 47
6.2.3 Quick Checks 48
6.2.4 Indicator LED Errors 51
6.2.5 Diagnostic Testing 52
6.2.5.1 Disk Parameters 52
6.2.5.2 Updating the Controller Firmware 52
6.2.5.3 Head Exercise 52
6.2.5.4 Cyclic Redundancy Check 52
6.2.5.5 Format 53
6.2.6 Error Codes 53
6.2.7 Interpreting Error Codes 53
6.3 Modular Substitution 56
6.3.1 Tools and Equipment Required 56
6.3.2 Controller PCA 56
6.3.3 Winchester Drive 56
6.3.4 Power Supply 56
6.4 Socketed Integrated Circuit (IC) Troubleshooting 57
6.4.1 75174 Line Driver/U57 57
6.4.2 75175 Line Receiver/U58 58
6.4.3 MC68A54 Advanced Data Link Controller (ADLC)/U23 58
6.4.4 Monochip/U27 59
6.4.5 MC6801-1 Microprocessor/U24 60
6.4.6 WD 1010 Winchester Disk Controller/U34 61
APPENDIX A Glossary 71
APPENDIX B OmniDrive Spares List 77
APPENDIX C OmniDrive Assembly Drawings and Schematics
Controller Schematic Revision 8 (1-4) 81
Printed Circuit Assembly Revision 8 89
Controller Schematic Revision A (1-4) 91
Printed Circuit Assembly Revision A 99
Assembly Drawing—Phase 1 (1-2) 101
Rear Panel Assembly—Phase 1 105
AC Input Harness Assembly—Phase 1 107
AC Distribution Harness Assembly—Phase 1 109
DC Harness Assembly—Phase 1 111
Ground Harness Assembly—Phase 1 113
Assembly Drawing—Phase 2 (1-2) 115
Rear Panel Assembly—Phase 2 119
AC Harness Assembly—Phase 2 121
DC Harness Assembly—Phase 2 123
Ground Harness Assembly—Phase 2 125
Assembly Drawing—Phase 3 (1-2) 127
Rear Panel Assembly—Phase 3 131
AC Harness Assembly—Phase 3 133
DC Harness Asembly—Phase 3 135
Ground Harness Assembly—Phase 3 137

APPENDIX D Controller PCA Jumper Layout 141
APPENDIX E Power Supply Specifications and Schematics
Astec Power Supply Specifications 145
Astec Power Supply Schematics 147
Boschert Power Supply Specifications 149
Boschert Power Supply Schematics 151
APPENDIX F IMI Winchester Mechanism Specifications and Schematics
Drive Specifications 155
Checks and Adjustments 156
Motor Control PCA Schematics 1-6 161
Read/Write PCA Schematics 1-8 169
APPENDIX G Rodime Winchester Mechanism Specifications and Schematics
Drive Specifications 183
Checks and Adjustments 184
Motor Control PCA Schematics 187
Master Electronics Board 189
APPENDIX H Future Winchester Mechanism Specifications and Schematics
APPENDIX I Future Winchester Mechanism Specifications and Schematics
APPENDIX J Future Winchester Mechanism Specifications and Schematics
APPENDIX K Future Winchester Mechanism Specifications and Schematics
APPENDIX L Future Winchester Mechanism Specifications and Schematics
APPENDIX M Future Addendum

LIST OF FIGURES AND TABLES

LIST OF FIGURES AND TABLES

Figures

1-1. OmniDrive 1
1-2. Rear Sticker 3
1-3. OmniDrive Exploded View 4
1-4. Omninet Address Switches 6
1-5. OmniDrive Power Switch 7
2-1. OmniDrive Block Diagram 11
2-2. IMI Drive Mechanism Components 12
2-3. Head To Disk Tolerances 13
2-4. Head Carriage Assembly 14
2-5. Track and Cylinder Configuration 15
2-6. Sectors 15
2-7. Controller Printed Circuit Assembly 17
2-8. Controller Block Diagram 18
2-9. Omninet Circuit Block Diagram 19
2-10. WD 1010 Architecture 21
2-11. DC Power Distribution 24
3-1. Controller PCA Cables 28
3-2. Drive Cable Layout 29
3-3. DC Harness 29
3-4. Insulation Washers Installation 30
4-1. Astec Power Supply Test Points 34
4-2. Boschert Power Supply Test Points 35
4-3. VCO Circuit 36
4-4. VCO Signal 37
6-1. Flow Chart Symbols 47
6-2. OmniDrive Convenience Cable 48
6-3. Troubleshooting Flowchart 49
6-4. Signal Illustrations (6-4A thru 6-4F) 64
6-5. Controller PCA Test Points (6-4A thru 6-4F) 65
6-6. Signal Illustrations (6-6A thru 6-6F) 66
6-7. Controller PCA Test Points (6-6A thru 6-6F) 67
F-1. IMI Read/Write PCA Removal 157
F-2. IMI Brake Assembly and Adjustment 158
F-3. IMI Index Assembly and Adjustment 160
G-1. Rodime Brake Assembly and Adjustment 185

Tables

2-1. RAM Layout 23
6-1. Front Panel LEDs 51
6-2. Decimal Error Codes 54
6-3. Hexidecimal Error Codes 55
6-4. 75174 Line Driver Test Points 57
6-5. 75175 Line Receiver Test Point 58
6-6. ADLC Test Points 58
6-7. Monochip Test Points 59
6-8. 6801-1 Test Points 60
6-9. WD 1010 Test Points 61
6-10. Drive Test Points 62

F-1. Controller PCA Switch Settings 156
F-2. Controller PCA Jumper Settings 156
G-1. Controller PCA Switch (U22) Settings 184
G-2. Controller PCA Jumper Settings 184

SPECIFICATIONS

OMNIDRIVE SPECIFICATIONS

PHYSICAL DIMENSIONS—Foam Cabinet

Height	
Inches	5.00
Centimeters	12.7
Width	
Inches	10.00
Centimeters	25.4
Length	
Inches	14.25
Centimeters	36.2
Weight	
Pounds	11.0 to 13.0
Kilograms	5.0 to 5.95

ENVIRONMENTAL

Internal Temperatures	
Degrees F	50° to 131°
Degrees C	10° to 55°
Ambient Temperatures	
Operating:	
Degrees F	50° to 122°
Degrees C	10° to 50°
Non-Operating:	
Degrees F	−40° to 140°
Degrees C	−40° to 60°
Storage Temperatures	
Degrees F	50° to 131°
Degrees C	10° to 55°
Relative Humidity (non-condensing)	
Operating (%)	20 to 80
Non-operating (%)	10 to 90
Operating Altitude	
Feet	−1000 to 10,000
Meters	−305 to 3,050

GENERAL DISK SPECIFICATIONS

Formatted Capacities	
Model 5	5.5 MB
Model 11	11.1 MB
Model 16	16.1 MB
Model 45	45.1 MB
MTBF	10,000 hours
MTTR	0.5 hours
Soft/Hard Error Rate	
Soft Errors	1 per 10^8 bits
Hard Errors	1 per 10^9 bits
Seek Errors	1 per 10^6 bits

Specifications for specific mechanisms can be found in the Appendix section of this manual (refer to the Table of Contents for specific appendix).

Power Supply specifications for the Astec and the Boshert Power Supplies can be found in Appendix E.

CHAPTER 1
GENERAL DESCRIPTION

CHAPTER 1
GENERAL DESCRIPTION

1.0 Scope of Chapter

This chapter provides a general description of the Corvus Systems™ OmniDrive™ disk drive system. Topics covered will include a product overview, product purpose, differences between OmniDrives and Corvus™ H-Series disk drives, protocol, mechanism manufacturers, model identification, major assemblies, receiving inspection, and installation.

1.1 Introduction

This document contains instructions for maintenance and repair of the Corvus Systems OmniDrive 5.25-inch disk drive system (hereafter referred to as an OmniDrive). Corvus Level I Service is on a modular replacement basis, and this manual is written in accordance with this policy.

Figure 1-1. OmniDrive

Included in this manual is documentation on the Service Center Diagnostic Utilities supplied to each Corvus Service Center. These utilities provide for burn-in testing, adjustment, and troubleshooting of all Corvus disk drives.

Instructions for troubleshooting and repair for all OmniDrives presently being manufactured are detailed in this document.

The information for installation or operation of the OmniDrive for specific computer systems is not covered in detail in this manual. For this information, refer to the appropriate Corvus documentation for the host microcomputer system in question.

1.2 General Description

The OmniDrive disk drive is a high-speed, intelligent mass-storage network peripheral device designed to provide the host microcomputer with storage and retrieval of digital information instantly. The OmniDrive consists of a 5.25-inch disk mechanism, an intelligent Controller with an integral Corvus Omninet™ local area network interface, and a modular power supply.

OmniDrives are presently manufactured in four capacities: 5.5 megabytes (Model 5), 11.1 megabytes (Model 11), 16.1 megabytes (Model 16), and 45.1 megabytes (Model 45). These drives all use the same high-impact foam-injection plastic cabinet.

1.2.1 Differences Between OmniDrive and H-Series Disk Systems

H-Series disk drives preceded the introduction of the OmniDrive into the Corvus line of mass storage devices. The H-Series drive utilized a 5.25-inch sealed Winchester disk drive mechanism in 6-MB, 12-MB and 18-MB capacities. Up to four H-Series drives could be 'daisy chained' to provide a maximum of 72 megabytes of mass storage on a network. H-Series drives were designed for use in single user (flat cable), Multiplexer, or Omninet network systems. An Omninet interface was provided by a separate unit, the Omninet Disk Server. (Details of the H-Series drives can be found in the H-Series Disk Drive Service Manual.)

The OmniDrive also uses a 5.25-inch mechanism, but is available in larger capacities. Additional storage can be achieved through the use of multiple OmniDrives on a single network. Designed only for use on an Omninet Local Area Network, the OmniDrive contains an internal disk server.

Backup for OmniDrives is provided by the Corvus Mirror Server.™ While the backup methods employed by the H-Series Mirror and Mirror Server are identical, the method by which they connect to Corvus drives differs. As previously mentioned, the H-Series Mirror was installed either internally or externally to the drive while the Mirror Server is connected to an Omninet network as an additional server device. Therefore, the Mirror Server may be installed with an OmniDrive or any H-Series drive connected to Omninet. Alternately, The Bank may be used to provide backup for OmniDrives.

Below is a summary of OmniDrive features as they differ from the H-Series drives.

PHYSICAL

- Smaller package
- Disk Server now integral to the sub-system (network ready)
- Removal of all front bezel switches
- Removal of Mirror switches
- Deletion of CORCOM (for AC line voltage input selection)
- Direct connection of sub-system to Omninet

FUNCTIONAL

- Does not support daisy-chaining
- Supports multiple servers
- Controller utilizes Western Digital WD 1010 controller chip
- Controller supports ST412 interface to support a wider variety of mechanisms
- Does not support Virtual Drive Offset (VDO) table
- Mirror function provided externally with Mirror Server
- Reduced power consumption by use of a high-efficiency switching power supply

1.2.2 Protocol

The OmniDrive Controller PCA utilizes an industry standard ST412 interface to communicate with the hard disk assembly. This permits a variety of drive mechanisms to be used in the OmniDrive.

The ST412 standard only specifies the electrical characteristics of the interface; mechanisms vary in other parameters (i.e. number of heads, number of cylinders, landing track, etc.).

OmniDrives support both the Constellation software used by earlier model Corvus drives and a new enhanced Constellation II software. New software is available which permits the mix of OmniDrives, H-Series and Revision B drives on the same network.

1.2.3 Mechanism Manufacturers

At the time of this writing, Corvus supports mechanisms manufactured by International Memories, Inc. (IMI) and Rodime PLC. The OmniDrive Controller PCA provides an 8-position DIP switch to select the type and size of mechanism being used.

1.2.4 Model Identification

The drive model, capacity, manufacture date, and brand of mechanism of an OmniDrive may be determined from the serial number tag located at the rear of the drive cabinet.

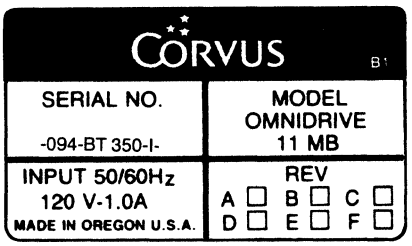

Figure 1-2. Rear Sticker

The sample serial number in Figure 1-2 for a Corvus Model 11 OmniDrive, using an IMI mechanism is decoded below:

09 represents the week of manufacture (week 09)
4 represents the year of manufacture (4 for 1984)
BT represents a Model 11 OmniDrive

AT represents a Model 5 OmniDrive
CT represents a Model 16 OmniDrive
FT represents a Model 21 OmniDrive
DT or ET represents a Model 45 OmniDrive

350 represents the sequence number of that week's manufacture
I represents an IMI mechanism; R represents a Rodime mechanism

Whenever communicating with Corvus in reference to Corvus products, include the complete serial number of the equipment involved.

1.3 Major Assemblies

The Corvus OmniDrive requires minimal software setup. Interfacing to the host computer(s) is via the Corvus Omninet network. The major assemblies which comprise the disk system are shown in figure 1-3.

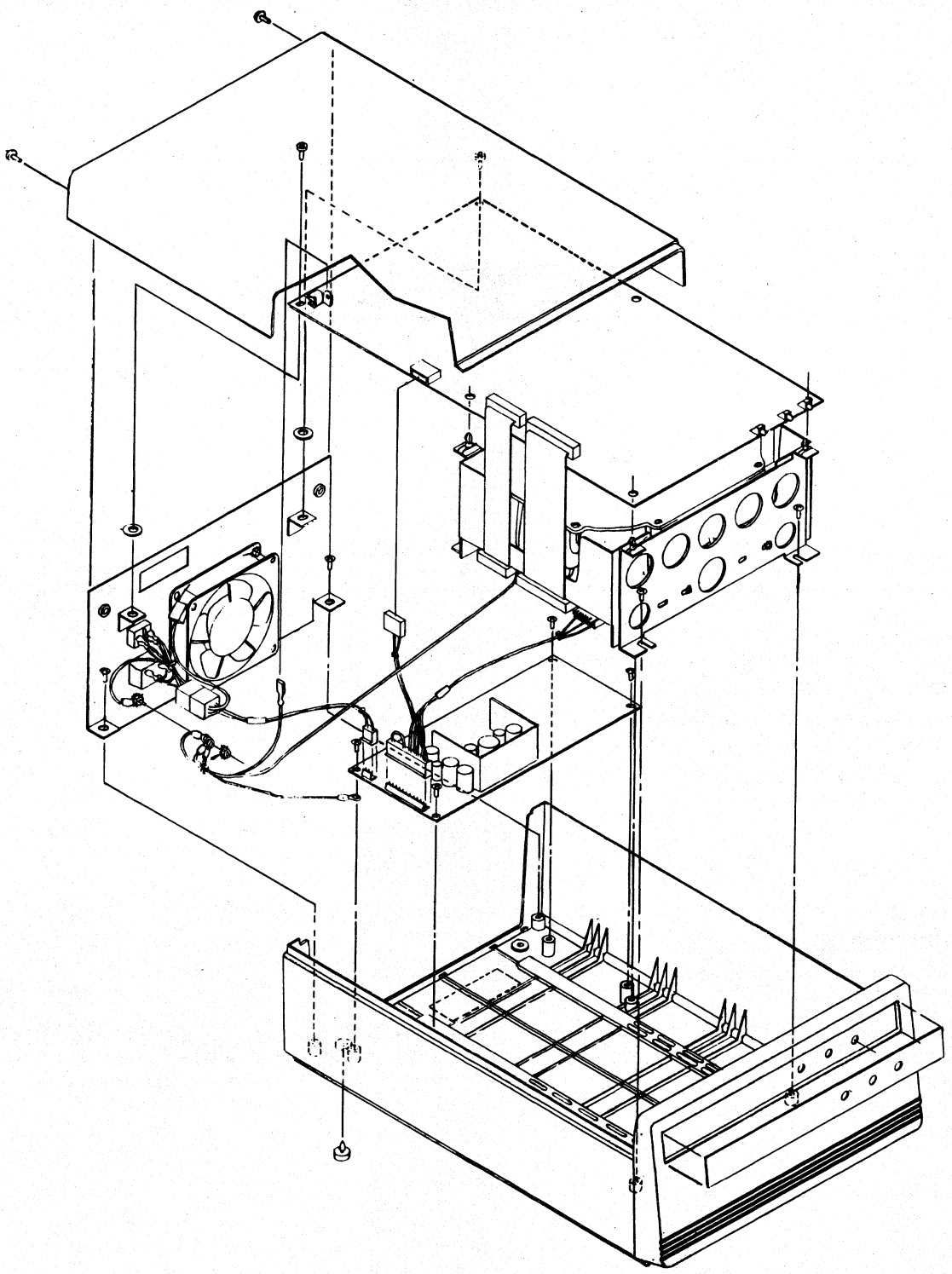

Figure 1-3. OmniDrive Exploded View

1.3.1 Winchester SubAssembly

The Winchester hard disk assembly (HDA) is comprised of a sealed mechanism containing aluminum platters (the number of which is dependent on the capacity of the mechanism), a read/write head-stack, a DC motor to rotate the platters, a stepper motor to position the head stack, a Read/Write Printed Circuit Assembly and a Motor Control Printed Circuit Assembly to monitor and adjust the speed of the DC motor.

1.3.2 Controller Printed Circuit Assembly (PCA)

The OmniDrive Controller PCA is comprised of three major sections; the Winchester controller, the Omninet Transporter,™ and a disk server. The Winchester controller section is responsible for control of the HDA, including formatting, reading, writing, and head positioning. The Omninet Transporter is the communication link between the disk server and network. The disk server section provides the link between the network and Winchester controller.

1.3.3 Power Supply

All OmniDrives operate at either 110-120 VAC, 60 Hz or 220-240 VAC, 50 Hz single-phase power, and use a single power supply. Two sources of power supplies have been used in the manufacture of OmniDrives, Astec, Inc. and Boschert, Inc. Note that the AC and DC harness assemblies are different for each of these power supplies and they are therefore not interchangeable. When replacement of the Astec supply is necessary, it will require the AC and DC harnesses to be replaced as well as the power supply itself.

1.3.4 AC Panel

This panel, located at the rear of the drive cabinet, contains the cooling fan (different fans are used in the 110v and 220v units), power switch, and AC line cord receptacle.

1.4 Installation

Installation instructions are summarized in this section. Details can be found in the Corvus manuals for the specific host microcomputer being used.

1.4.1 Receiving the Drive

Upon receipt, each drive should be checked for shipping damage, and tested for proper function. External evidence of rough handling may be symptomatic of damage to fragile mechanisms within the drive.

NOTE:

Any damage claims must be reported to the local office of the shipper so an inspection may be made, and a damage report filed. If the damaged equipment is a new product, the Corvus Order Processing Department must be contacted for proper return procedures. If the damaged equipment is a recently serviced product, contact Corvus Customer Service for proper instructions.

The hard disk assembly in the OmniDrive is an extremely sensitive device. Impacts to the drive enclosure are amplified within the hard disk assembly by a factor of approximately 100. Therefore a one-g force (one gravity) to the enclosure results in a 100-g force of the head against the platter. This necessitates very careful handling of the drive mechanism both during shipping and operation.

When a drive is received, check that all integrated circuits on the Controller PCA are firmly seated in their sockets. IC's coming loose during shipping account for a large number of failures upon receipt. Instructions for removal of the top cover and any necessary disassembly of subassemblies can be found in Chapter 3, Disassembly and Assembly.

The OmniDrive is manufactured for operation at either 110-120 VAC or 220-240 VAC. The voltage rating is written on the metallic label on the rear of the drive cabinet. If the voltage rating specified is not compatible with the local voltage available, contact Corvus Customer Service for proper instructions.

Diagnostics should be performed to verify proper operation after performing the receiving inspection. Details for these diagnostics can be found in Chapter 5, Diagnostics.

1.4.2 Environmental Considerations

All electronic equipment needs cooling and the Corvus OmniDrive is no exception. When installing, do not 'pigeon-hole' the drive. There should be sufficient open space both front and rear. Place the drive on a level, hard surface without foam or carpeting. There are air intake slots on the bottom of the cabinet, and these must not be blocked or restricted in any way. Do not place a video monitor on top of, or near the drive; electro-magnetic fields generated by this and similar electro-magnetic devices may cause a drive malfunction and loss of data.

The drive should not be placed in an environment where it may be subject to excessive amounts of static electricity. Areas of low humidity and warm temperatures should be avoided as they are likely to be high-static environments.

Additionally, drives are susceptible to failure due to inferior line voltage. Areas of concern are low voltage, high voltage, line noise, and spikes. If any of these are present, install the appropriate line conditioner to alleviate the problem.

All nodes on an Omninet should have a common ground to alleviate voltage potential differences which can affect network reliability.

1.4.3 Omninet Address Switches

At installation, each network device must be given a unique Omninet device address. For the OmniDrive, this is done by setting six of the eight microswitches, also called DIP switches, accessible through an opening on the rear of the cabinet immediately adjacent to the Omninet connector.

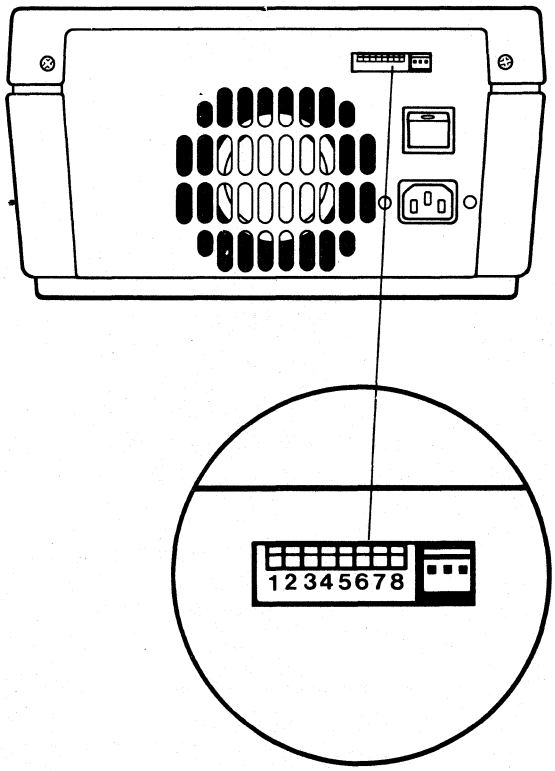

Figure 1-4. Omninet Address Switches

An address between 0 and 63 should be selected, with the recommended address for the first drive on the network being 0. Multiple drive networks will require that each drive have a unique network address. This can also be important later if a Corvus Utility Server is added to the network. This device only polls the server addressed as device 0.

The eighth switch is used to either enable or disable the network bias. Only one server or OmniDrive on the network should have the network bias switch on.

1.5 Operation

In contrast to H-Series drives, OmniDrives have no switches which require changing during normal operation. The LSI-11™ and Multiplexer switches have been removed as these options are no longer supported. The Format and Reset switches have been removed and their function supported in the Diagnostic software. Finally, since the OmniDrive does not support an internal Mirror, the Mirror switches, found on the rear of the cabinet of the older 5.25" disk drives, have been removed.

1.5.1 Power Switch

This switch is located on the rear of the drive cabinet and is the only switch that will be used during normal operation.

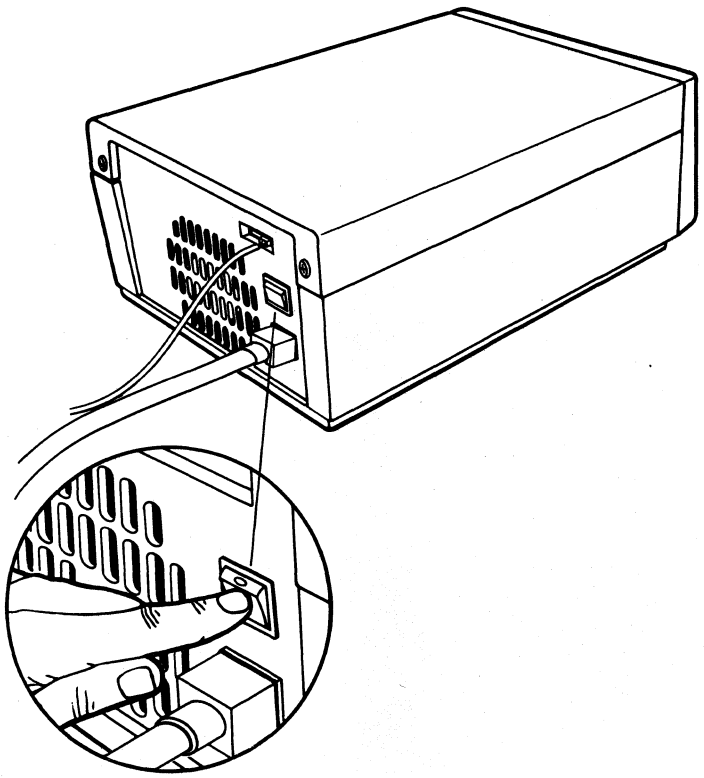

Figure 1-5. OmniDrive Power Switch

1.5.2 Power-on Sequence

When powering up a network, the following power-on sequence should be observed:

1. Disk Server(s) or OmniDrives
2. Disk Drive(s)
3. Utility Server(s) (if any)
4. Bank(s) (if any)
5. Computer(s)—Must be powered off during power-on

If any Disk Servers are used on the network, power them on first and then wait for approximately 30 seconds. This allows each Disk Server to complete its power-on diagnostic. The Disk Server will also broadcast a sign-on message to the network and update the Active User Table. The Active User Table is a list of the user names and devices associated with that particular server. Failure to observe this sequence can result in network failure or erratic operation.

CHAPTER 2
FUNCTIONAL DESCRIPTION

CHAPTER 2
FUNCTIONAL DESCRIPTION

2.0 Scope of Chapter

This chapter contains a functional description of the Corvus OmniDrive. Provided is a detailed description of the the drive mechanism, and circuitry within the Controller PCA. Because the OmniDrive can accommodate the Winchester mechanisms of various manufacturers, our approach to these mechanisms is generic; When appropriate, an International Memories, Inc. (IMI) 5.25-inch sealed Winchester mechanism is used for illustration.

2.1 Introduction

The Corvus OmniDrive has been designed to interface directly to the Omninet local area network without the need for a separate Disk Server to provide communication with the network. The built-in disk server circuit shares the 6801-1 intelligent controller with the drive control electronics. The OmniDrive uses industry standard protocols making it possible to utilize the Winchester hard disk drive mechanisms of several manufacturers. Specifications of mechanisms currently being supported can be found in their associated appendix. (Refer to the table of contents for specific appendices.)

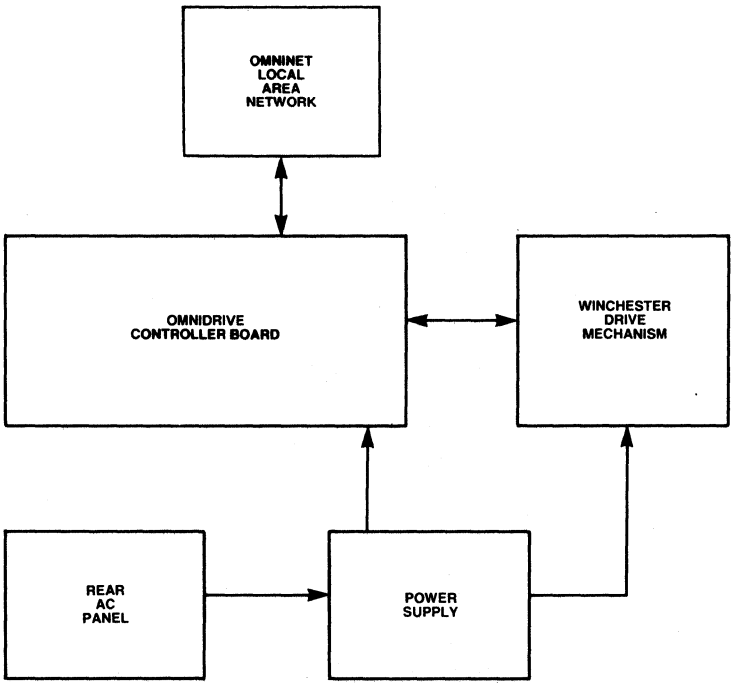

Figure 2-1. OmniDrive Block Diagram

2.2 Winchester Disk Drive Mechanism

Winchester disk mechanism manufacturers develop designs which allow them to present unique products. These disk drives share industry standard electrical interfaces of which Corvus has taken advantage. Disk drive mechanisms are described in general terms which are common to mechanisms that Corvus uses in the OmniDrive.

The drive mechanism contains the media on which the data is written to and read from. Data is stored on aluminum platters which are either coated with an oxide or plated with nickel oxide and have the properties necessary to hold magnetic charges. The read/write heads are also contained in the sealed mechanism assembly and perform the reading and writing of data. A sealed environment is maintained to eliminate contamination which can cause media and head damage.

Figure 2-2 illustrates an IMI Winchester mechanism and is used to show the interior of a sealed mechanism.

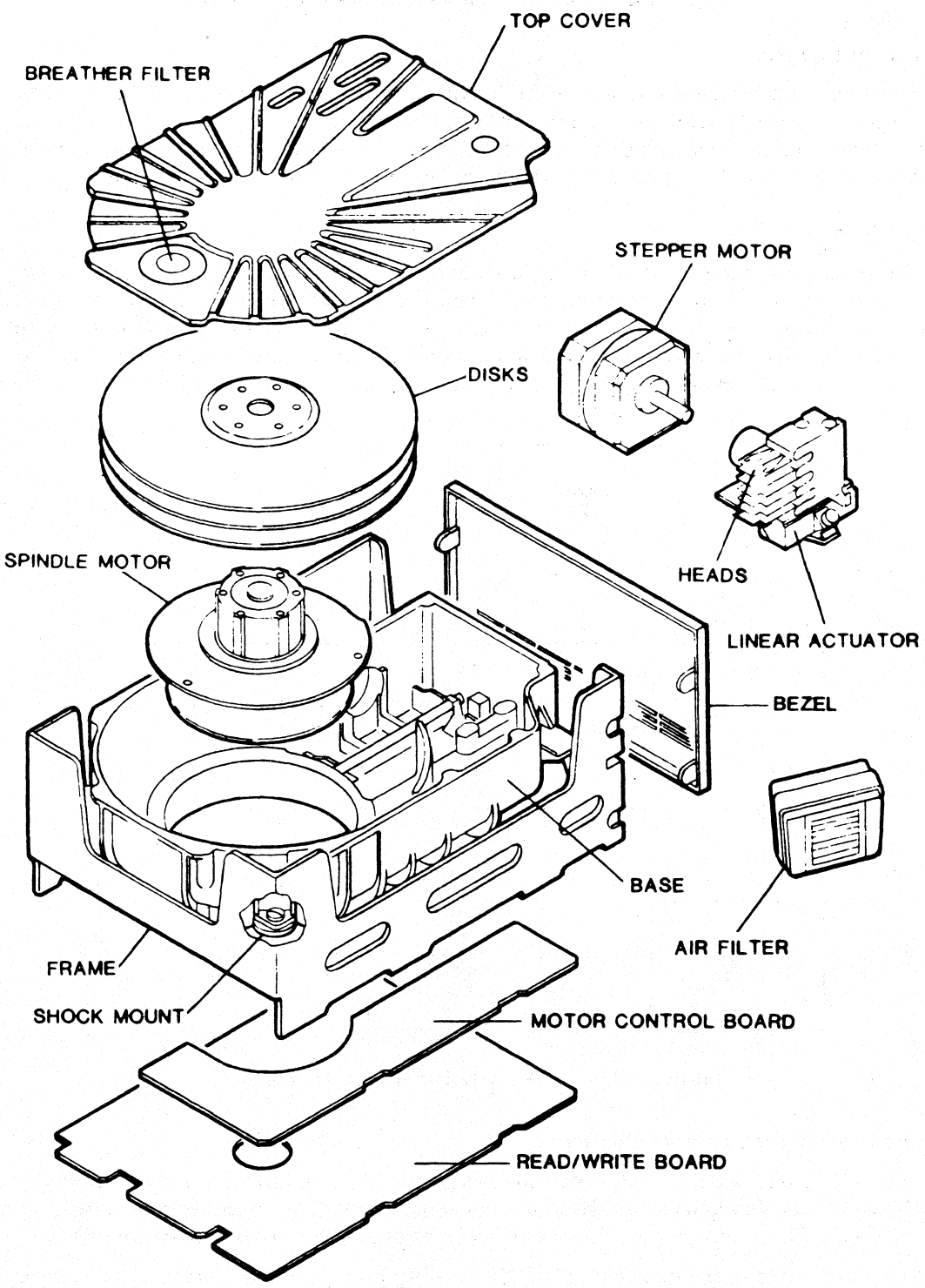

Figure 2-2. IMI Drive Mechanism Components

Each platter of OmniDrive disk drives measures 5.25 inches and has two data surfaces. There is one 5.25-inch platter in the Model 5 OmniDrive, two platters in the Model 11 drive, three in the Model 16, and four platters in the Model 45. All platter surfaces are utilized for data storage.

The platters revolve on a common spindle, driven by a brushless DC motor at 3600 RPM. Motor speed is monitored by the Motor Control PCA, located beneath the drive mechanism, and is independent of AC line frequency. An index signal is generated by the magnetic index detector marking a fixed reference point relative to the disk. The solenoid brake, also located adjacent to the motor hub, engages immediately after the drive is powered off.

There are two data surfaces per platter and one read/write head for each platter surface. When operating, each head is suspended above the platter surface on a cushion of air. The heads are aerodynamically designed and lift off the disk as the disk begins to spin creating an air bearing of approximately 18 to 20 microinches. A particle of smoke, dust, or a human hair could easily play havoc with these critical tolerances, and cause catastrophic failure of the disk device. The sealed environment of the drive mechanism prevents this from occurring by keeping the internal atmosphere contaminant-free. A seal is placed on the drive mechanism to prevent tampering within the sealed mechanism. Breaking this seal for any reason voids the warranty.

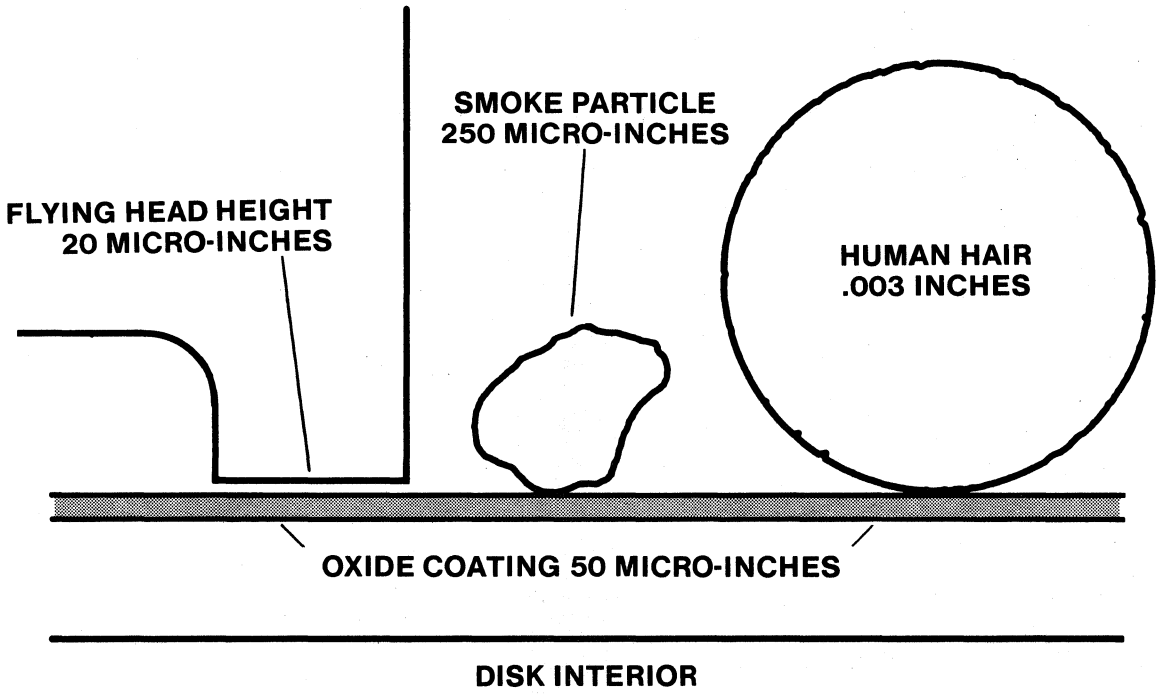

Figure 2-3. Head to Disk Tolerances

The heads are attached to a common head stack and are positioned over the appropriate cylinder by a stepper motor. Seeking to a specific cylinder is accomplished by rotation of the motor through four phases for each cylinder traveled. Reversing the sequence of these motor phases will result in reverse head movement.

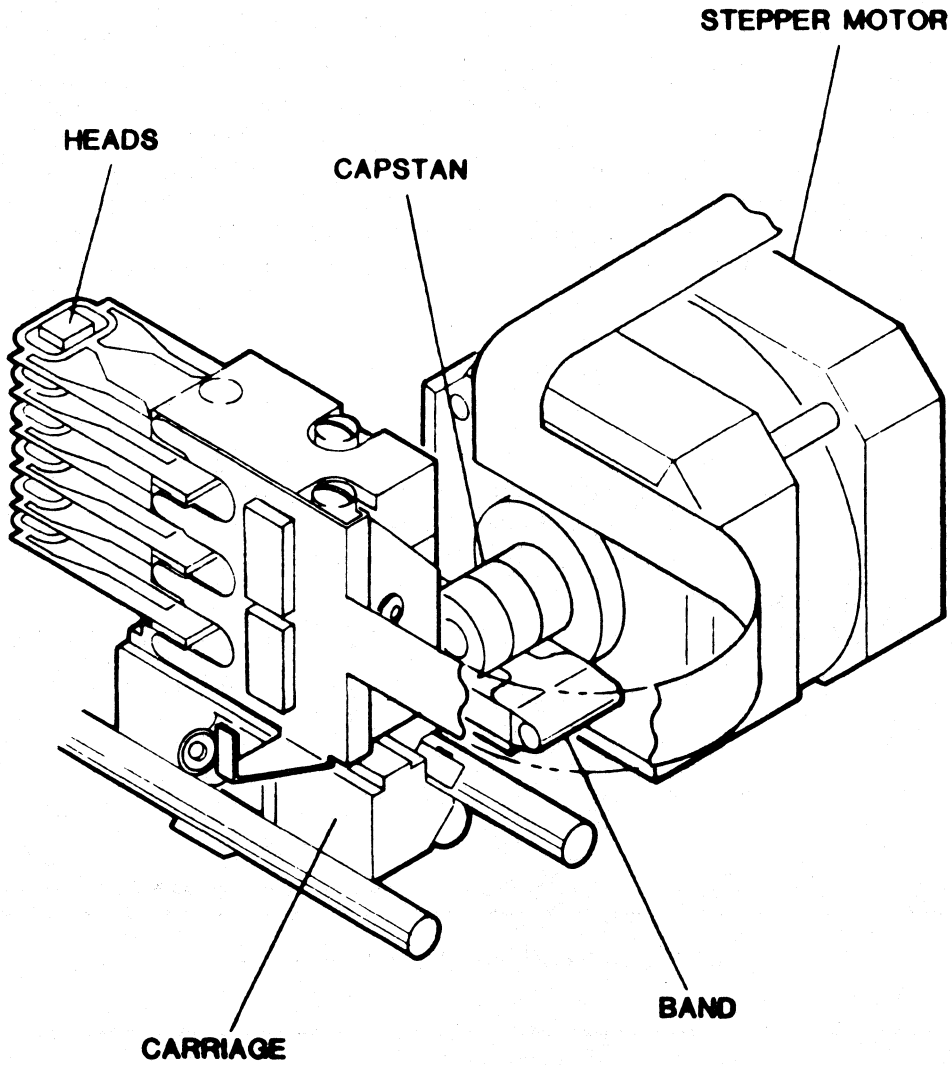

Figure 2-4. Head Carriage Assembly

Two Printed Circuit Assemblies are mounted beneath the sealed drive mechanism. These are the Read/Write PCA and the Motor Control PCA. The Read/Write PCA, contains a microprocessor which makes the drive mechanism itself an intelligent device. It accepts interface signals, transfers data to and from the Controller PCA and sends data to and receives data from the drive mechanism. Many motor control signals are also generated on the Read/Write PCA. The Motor Control PCA is responsible for monitoring the spindle motor speed and altering it as necessary.

2.2.1 Winchester Drive Theory

Data is stored magnetically on circular tracks, which are configured as concentric circles on each platter. The term track refers to a single head surface of a cylinder, each cylinder consisting of all tracks in common vertical alignment on all data surfaces.

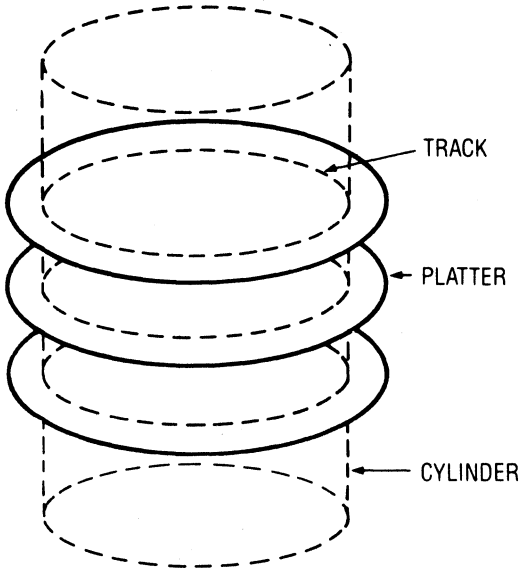

Figure 2-5. Track and Cylinder Configuration

The number of cylinders differs with the type of mechanism installed. Refer to the appropriate appendix for individual drive specifications. Cylinder zero is located furthest from the platter center.

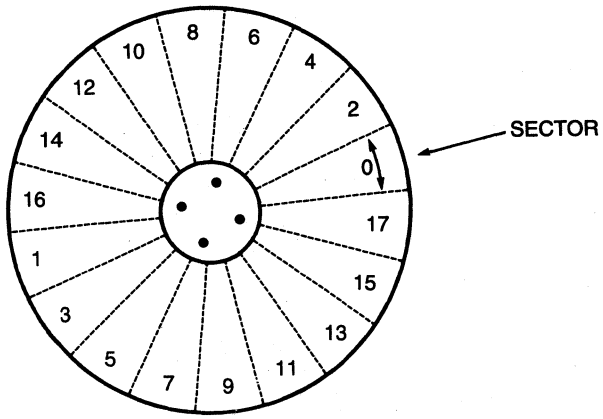

Figure 2-6. Sectors

A block is the smallest addressable unit within the drive. Internally, each track is formatted with 18 sectors per data surface, of 512-byte blocks per sector and is independent of drive manufacturer. Externally, the drive handles data in sectors as defined by the host computer.

Typically, each host operating system defines a sector as 128 bytes, 256 bytes or 512 bytes. The Corvus interface software uses the appropriate read/write commands (one each for writing and reading 128, 256 or 512 bytes) depending on the requirements of the host operating system.

This does not cause a conflict, since the Corvus software and hardware can accommodate 1,2 or 4 host-defined sectors for each disk drive block. Read/write commands using various sector sizes are transparent to the host system, due to the intelligent controller's ability to handle data blocking and deblocking internally.

2.2.2 Read/Write Printed Circuit Assembly (PCA)

The Read/Write PCA is located beneath the drive mechanism. It is responsible for buffering, amplification, noise filtering of the read data, and supplying write current. Also, the sector and track 0 signals are generated here. The 6801-1 intelligent controller located on the Controller PCA of the OmniDrive, dictates control signals to and from the Read/Write PCA. The Read/Write PCAs of some Winchester disk manufacturers utilize microprocessors to handle some of the more rudimentary read/write routines such as head positioning, motor speed monitoring and fault detection.

The Read/Write PCA handles much of the stepper motor control, write current control, and most of the drive mechanism control functions.

2.2.3 Motor Control Printed Circuit Assembly (PCA)

The Motor Control PCA is located beneath the Read/Write PCA. Spindle motor speed is monitored by the circuitry on the Motor Control PCA. A tachometer feedback loop helps maintain spindle speed within 1% of 3600 RPM. The magnetic index detector delivers pulses to the Motor Control PCA, which generates the index signal. The Motor Control PCA monitors this signal, and adjusts motor speed as required.

2.3 Omninet Controller Printed Circuit Assembly (PCA)

The Omninet Controller PCA is responsible for communication to and from the Omninet local area network. It contains most of the hardware and logic of the OmniDrive.

The Omninet Controller PCA performs multiple functions for the OmniDrive. It is responsible for communication to and from the Omninet local area network, controlling disk transfers, and controlling the disk mechanism. It also performs data error checking and indicates drive status through the indicator LEDs which are mounted onto the front portion of the PCA and project through the front panel.

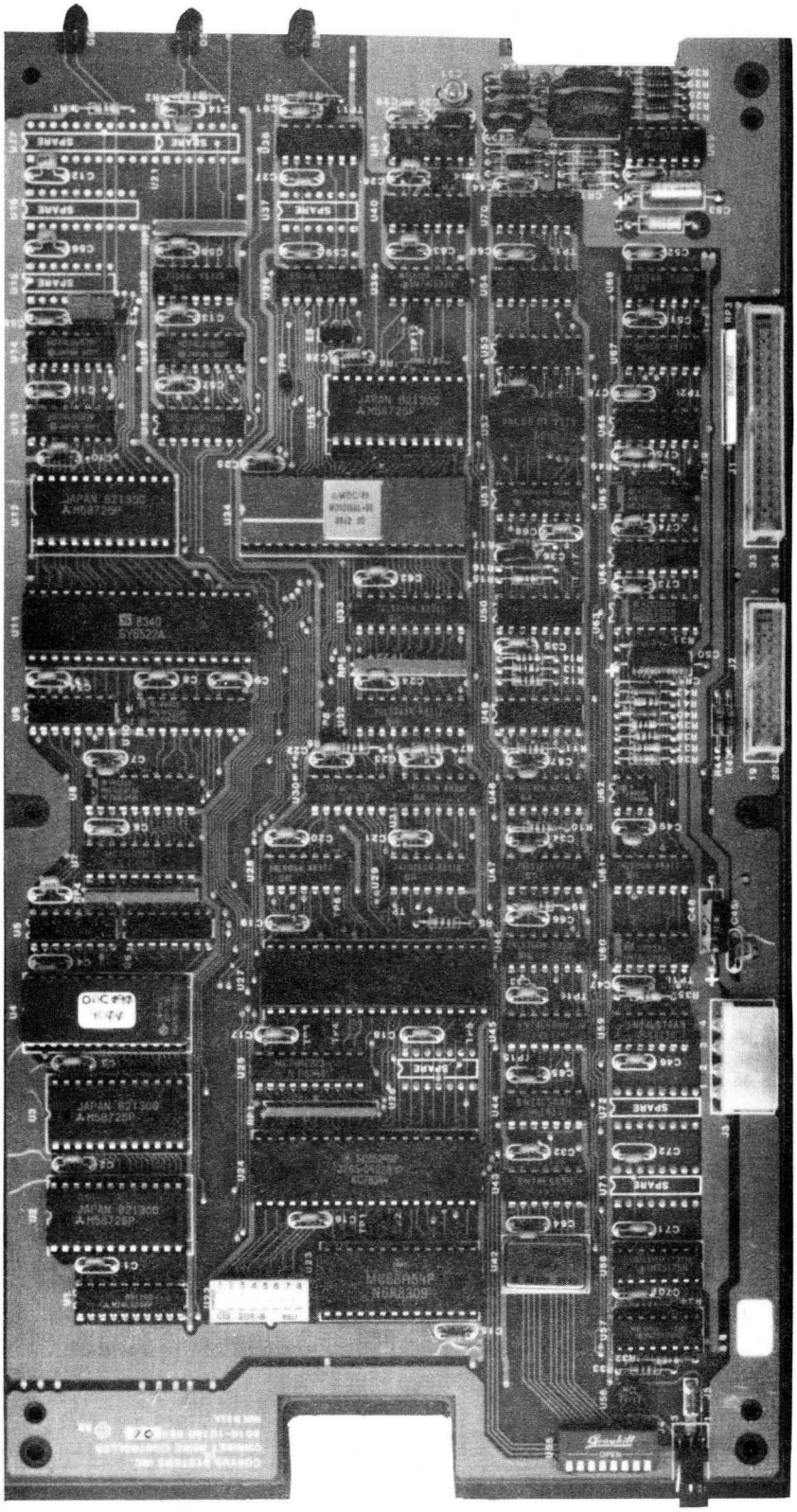

Figure 2-7. Controller Printed Circuit Assembly

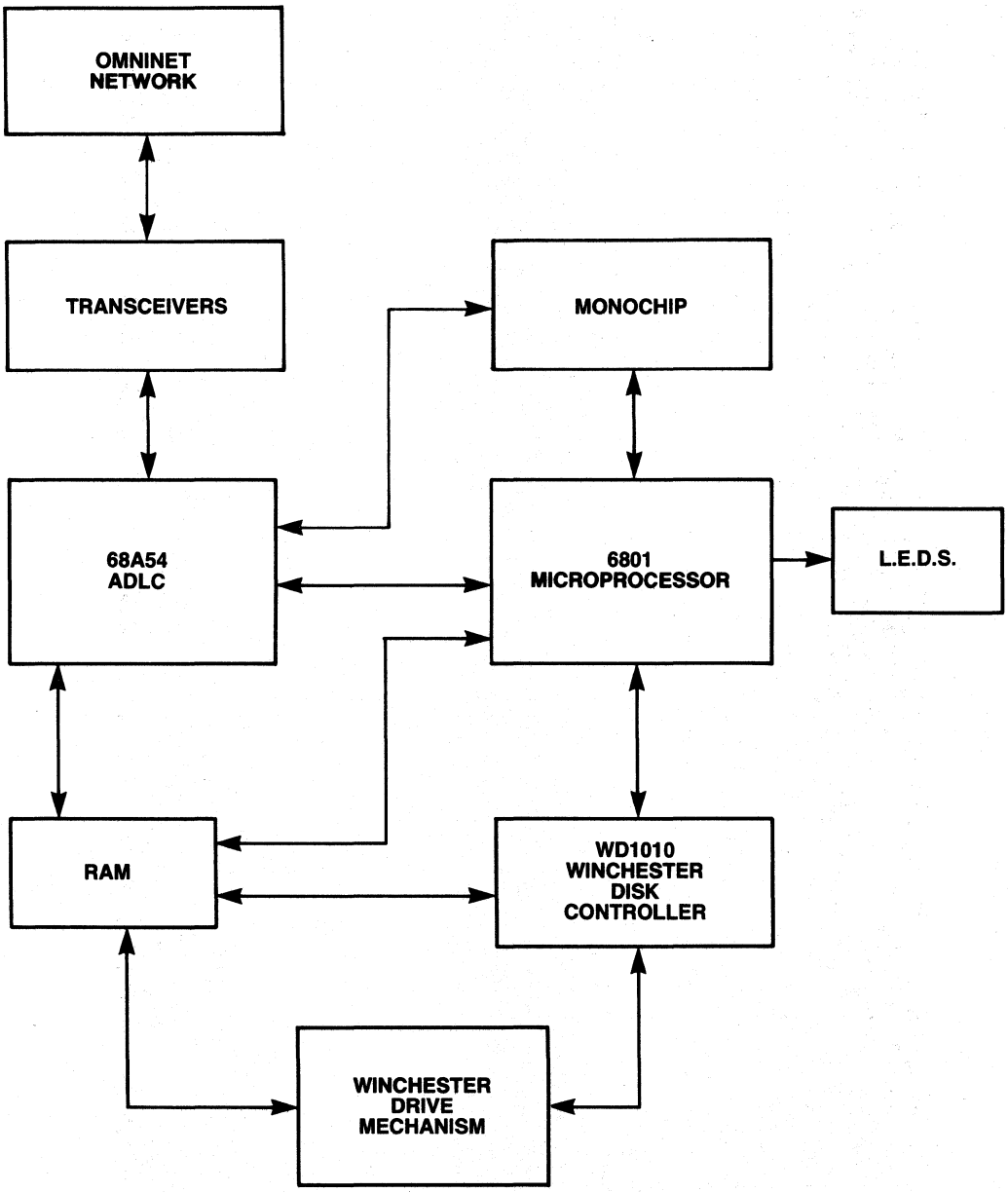

Figure 2-8. Controller Block Diagram

2.3.1 Omninet Transporter and Disk Server Circuit

The Transporter and disk server section of the Controller PCA share and utilize the standard Omninet chip set:

- 6801-1 Microprocessor
- 3131 Corvus Monochip
- MC68A54 Advanced Data Link Controller (ADLC)
- 75174 and 75175 RS-422 Transmitter and Receiver

The Omninet Transporter circuit interfaces the Controller PCA to the Omninet local area network and uses a Carrier Sense Multiple Access (CSMA) scheme for communicating.

The disk server circuit interprets Constellation protocols and issues commands and addresses to the WD 1010 Winchester controller which in turn controls the disk drive through read and write commands.

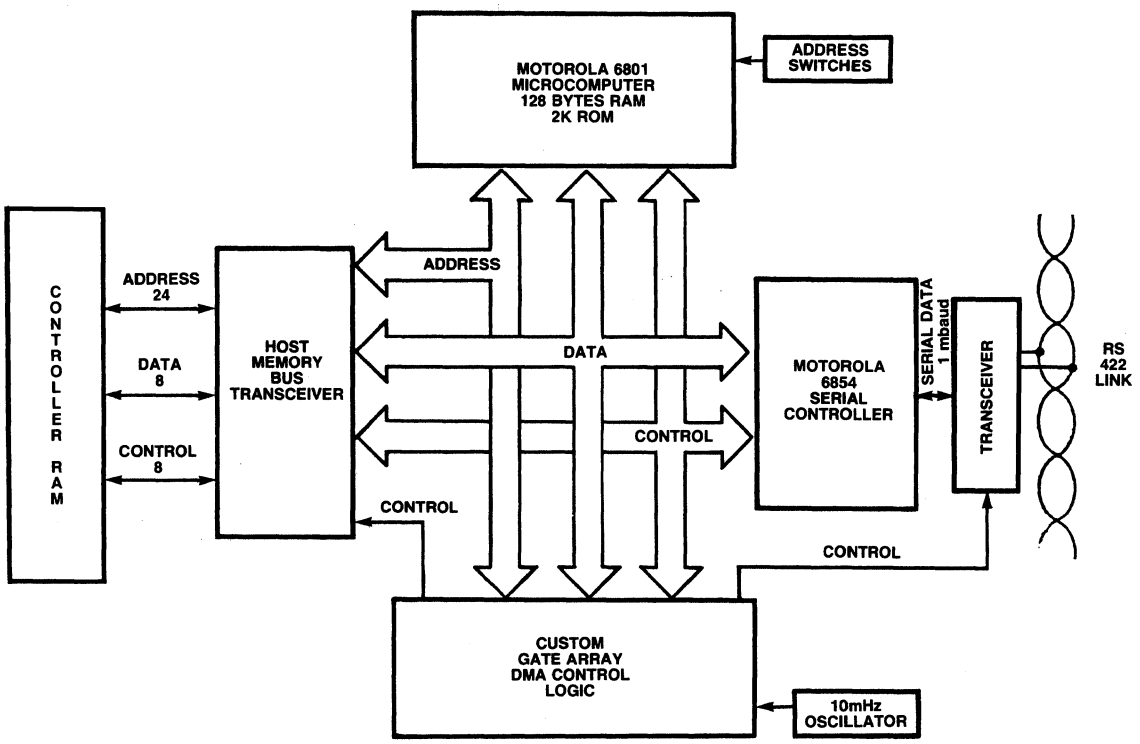

Figure 2-9. Omninet Circuit Block Diagram

The MC6801-1 is the heart of the Omninet chip set. The MC68A54 Advanced Data Link Controller (ADLC) interfaces to the RS-422 transmitter and receiver and the remainder of the Omninet interface. The Corvus Monochip is a chip which provides timing and control for all data transfers and decodes 6801-1 activity. It also controls DMA activity and the collision avoidance scheme. Other socketed chips included in the basic chip set are the transmitter and receiver. A 75174 line driver provides the transmitter functions and a 75175 line receiver provides the receive functions in RS-422 format. For further information on the Omninet Chip Set refer to the Networks Service Manual.

2.3.2 MC6801-1 Microprocessor

The MC6801-1 microprocessor is an 8-bit, single-chip microcomputer containing 2K bytes of ROM. This microprocessor is shared with the Omninet disk server circuitry. It is responsible for interpreting commands from the host computer and for controlling the WD 1010 Winchester disk controller. It controls the ADLC, the WD 1010 and the Monochip. The Omninet firmware resides in the internal ROM of the 6801-1.

The microprocessor also controls the 8-bit bi-directional, tri-state data bus (D0—D7) used to communicate data to and from host memory or the Omninet interface circuitry. It also controls 16 address lines (A0—A15) which are also tri-state devices used for address vectoring. Address lines A0—A7 are multiplexed with data lines D0-D7.

The major outputs of the 6801-1 microprocessor are:

E—The Monochip provides a 5-MHz clock input to the processor which in turn is divided down to produce an 800-nanosecond instruction cycle, E cycle.

AUTO—This signal is an active high output used by the Monochip to decode which of the 6 DMA modes are selected.

IN/OUT—The IN/OUT signal is an output used by the Monochip to decode which DMA mode is selected. A high signal indicates an IN and a low signal indicates an OUT data transfer by the ADLC.

RS0—The Register Select 0 (RS0) signal and the Register Select 1 (RS1) signal are outputs used by the ADLC to determine which of its internal registers has been selected for reading and writing.

READY—The READY signal is generated by the Monochip and is an active high input signal. It travels to the host as well as to the 6801-1 and indicates to the host that the Transporter is ready to receive another command vector address.

R/W—The R/W signal is used to decode which DMA mode is to begin. A high indicates that the 6801-1 is reading data from the bus and a low indicates a write.

AS—The Address Strobe is the strobe signal for the multiplexed address/data bus.

2.3.3 Monochip

The Corvus Monochip is a custom gate array designed by Corvus to handle timing and control for data transfers outside the 6801-1 microprocessor. It selects the direction of the data flow via Direct Memory Access (DMA), provides the interface to the host for DMA cycles, and generates DMA addresses using an internal 3-bit register.

The major Monochip outputs are:

BITCLK—This Bit Clock is a 1-MHz output which the ADLC uses for timing during bit transmission or reception. During transmission it is free running and during reception it is resynchronized to the source every time a line transition occurs on Omninet.

EOUT—The EOUT signal is a 1.25-MHz clock signal which is used by the ADLC for timing internal events, i.e. loading the 3 bit address register.

HACLK—The HACLK signal is an active high signal which latches the DMA address bits 15-0 externally and indicates that a DMA cycle has begun. This signal remains high when the 6801-1 is frozen.

EXTAL2—The EXTAL2 signal is a 5-MHz clock signal output to the 6801-1. It is halted during DMA cycles shortly after the HACLK signal is generated and remains frozen until the ADLC sends a TDSR or a RDSR signal. The 6801-1 is also frozen when the EXTAL2 signal is frozen.

DMARQ—The Transporter drives the DMARQ signal high to request a DMA cycle with the host. The signal returns to a low after DMAGO is asserted low by the host microcomputer.

DMAGO—The DMAGO signal is an active low signal input to the Monochip as a response to the DMAREQ. It indicates that the shared RAM host is ready to proceed with a DMA transfer.

TXENA—The TXENA signal is the Transmit Enable signal. If the collision avoidance circuit has not been triggered by RXD, then the Monochip will assert TXENA high on the leading edge of RTS. This enables the 75174 line driver to gate data onto the Omninet trunk cable.

2.3.4 Advanced Data Link Controller (ADLC)

The ADLC provides the interface between the 75174 line driver and 75175 line receiver and the remainder of the disk server circuitry. The main function of the ADLC during transmission operations are converting of data to serial form during a transmit, converting data to parallel form during a receive, zero insertion, packet framing, CRC check generating and data byte buffering.

Major ADLC signals are:

TDSR—The Transmitter Data Service Request from the ADLC indicates that the transmit FIFO (First In First Out) buffer of the ADLC is empty and ready for the next byte of data. TDSR is an active high signal.

RDSR—The Receive Data Service Request from the ADLC chip indicates that the receive FIFO buffer of the ADLC is full and ready to transfer the byte to the 6801-1 or the shared RAM via DMA. RDSR is an active high signal.

RXD—The Receive Transmitted Data signal is an input from the 75175 line receiver. RXD receives the data sampled during packet reception and detects zero bits for resynchronizing BITCLK. RXD is also used to trigger the collision avoidance circuit before packet transmission.

TXD—The Transmit Data signal is serial data output from the ADLC to the 75174 line driver. It contains flag bits and CRC bytes added to the data by the ADLC.

RTS—The Request To Send signal is received from the ADLC. On the leading edge of RTS, the Monochip asserts either an TXENA (Transmit Enable) for no collisions or IRQ (Interrupt Request) for collisions.

2.3.5 WD 1010 Winchester Disk Controller

The Corvus interface for Winchester disk drives uses a WD 1010, 40-pin, MOS/LSI chip as the main controller. The WD 1010 is manufactured by Western Digital Corporation and is designed to control Winchester disk drives. The 6801-1 microprocessor directly issues commands to the WD 1010. The commands are: Restore, Seek, Read, Write, Scan ID, and Format. Before issuing these commands, the WD 1010 must be informed of parameters for these commands. This is accomplished via Task Files. Task Files are registers within the WD 1010 that can be directly accessed by the 6801-1. Task Files specify on which cylinder, head, sector, etc., to perform the specific command. For instance, a Task File can be set up for track 4 and if followed by a Format command; only track 4 would be formatted.

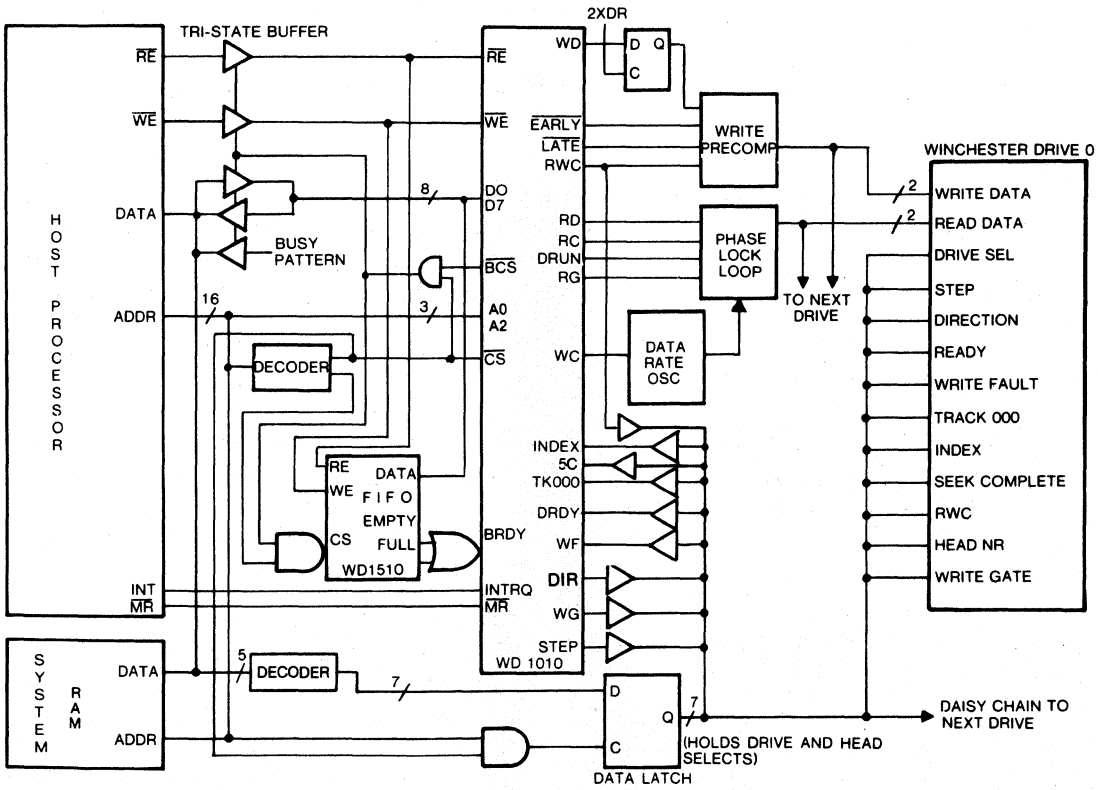

Figure 2-10. WD 1010 Architecture

The WD 1010 uses an internal microcontroller called a programmable logic array (PLA). It controls the flow of data throughout the WD 1010, formats the data, and recognizes and processes commands.

A Magnitude Comparator is also internal to the WD 1010. This 10-bit comparator calculates drive step, direction, and present and target track position.

The Modified Frequency Modulated (MFM) data is encoded and decoded by the WD 1010. The frequency of the encoder is equivalent to the write clock and the bit rate, while the decoder frequency is generated by the read clock of the data separator.

The Cyclic Redundancy Check (CRC) generator/checker adds a CRC byte to the data during a write to the disk and performs a CRC check of the byte during a read from the drive.

The Address Mark detector (AM Detect) checks the incoming data stream for a unique clock pattern used in each ID and data field.

The Interface Circuit controls and monitors all lines to and from the disk with the exception of the read/write lines.

The major signals of the WD 1010 are:

RG—The Read Gate signal is a logic high output when data is being read from the disk and should be low when the WD is not reading data. It can be monitored at pin 38 of the WD 1010.

WG—The Write Gate signal must be set high by the WD 1010 in order for data to be written to the disk.

WE—The Write Enable signal is a tri-state bi-directional signal which is used as an output when the WD 1010 is writing to a buffer.

WD—The Write Data signal contains Modified Frequency Modulated (MFM) formatted data pulses which are to be written to the disk.

STEP—The Step Pulse is used for stepping the drive heads to a track. A high signal is generated when a new track is to be accessed.

DIR—The Direction signal which specifies the direction in which the stepper motor will move the heads.

2.3.6 PROM

A Programmable Read Only Memory (PROM) is used in the OmniDrive Controller PCA to provide boot codes for the MC6801-1 microprocessor. It contains initialization codes, disk server codes, low level diagnostic routines and drive information tables. It also initializes the Versatile Interface Adaptor (VIA) IC chip, resets the WD 1010 Winchester controller and initializes the Random Access Memory (RAM) with firmware when the OmniDrive is powered on.

This PROM is programmed at Corvus and can be ordered from Corvus Customer Service.

2.3.7 RAM

There are 4 RAM sockets on the Controller PCA. Each of the sockets can accommodate 2K X 8-bit static RAM chips. Two of these are used as shared RAMs and two are used as scratch RAMs. The Omninet Monochip accesses the shared RAM to and from the network under DMA. The 6801-1 can also perform reads and writes to the shared RAM.

Only the 6801-1 microprocessor can access the scratch RAM. The following table illustrates how the RAMs are utilized:

SHARED RAM	
Disk Server Buffer	2K Bytes
Read / Write Buffer to WD1010	2K Bytes
SCRATCH RAM	
Disk Server Scratch RAM	1K Byte
Disk Controller Scratch RAM and Semaphore Table	1K Byte
Pipes Table	1K Byte
Downloaded Controller Code	1K Byte

Table 2-1. RAM Layout

2.3.8 Transmitter and Receiver

The transmitter (driver) and receiver ICs provide the link from/to the Omninet RS-422 twisted pair wire.

The 75174 line driver receives the serial data input from the ADLC and converts it to a differential voltage signal. This signal is output to the Omninet tap cable.

+OUT—This signal is the positive output of the RS-422 transmitter to the twisted pair. It should be monitored with the −OUT signal.

−OUT—This signal is the negative output of the RS-422 transmitter to the twisted pair. It should be monitored with the +OUT signal.

The 75175 line receiver receives RS-422 formatted data from the Omninet twisted pair tap cable and sends it to the ADLC in digital format.

RXD—This is an input from the RS-422 receiver. RXD receives the data sampled during packet reception and detects zero bits for resynchronizing BITCLK. RXD is also used to trigger the collision avoidance circuit before packet transmission.

2.4 Power Supply

Corvus installs two types of power supplies on the OmniDrive. One is manufactured by Astec, Inc. and the other is manufactured by Boschert, Inc.

Both the Astec and the Boschert power supplies provide +5 VDC for the Controller PCA electronics and the drive electronics, and +12 VDC for the Winchester drive mechanism. They are both switching power supplies. Schematics for both these power supplies can be found in Appendix E.

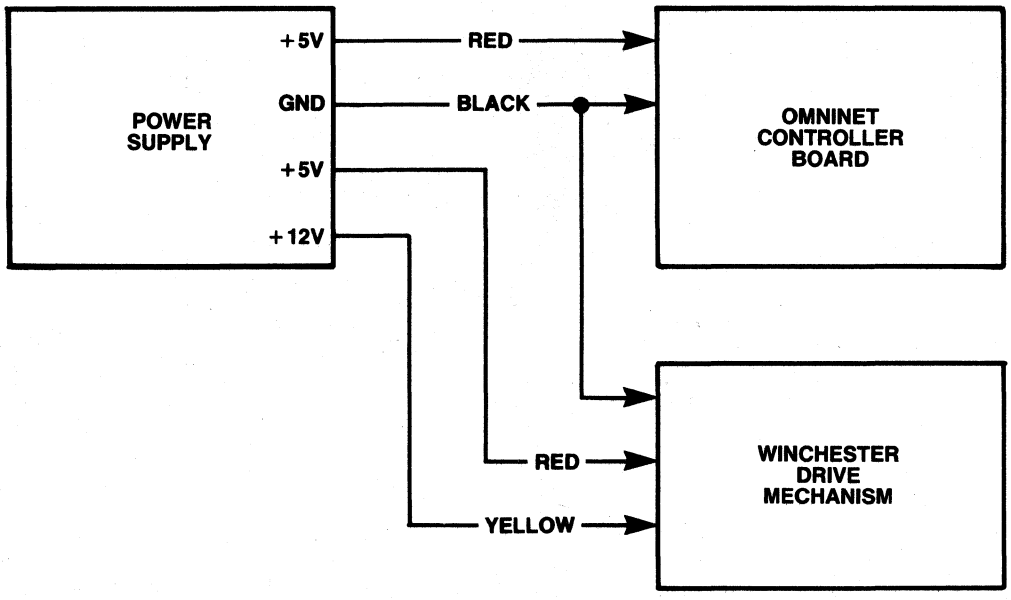

Figure 2-11. DC Power Distribution

2.5 AC Panel

This assembly consists of a panel onto which the fan, power switch, and the AC input connector are mounted. Slots for air circulation, Omninet connector and address switch access are also located on the AC panel.

Different AC panels exist for 110-120 VAC and for 220-240 VAC operation. They are not interchangeable.

CHAPTER 3
DISASSEMBLY AND ASSEMBLY

CHAPTER 3
DISASSEMBLY AND ASSEMBLY

3.0 Scope of Chapter

This chapter contains disassembly instructions for OmniDrive disk drives. All drive models are physically identical, and the instructions that follow apply to all models.

3.1 Introduction

The Corvus OmniDrive cabinet consists of a high-impact plastic shell, the top and bottom halves held together with two screws at the rear of the cabinet. The hard disk assembly and power supply are both attached to the cabinet base-pan. The Controller PCA is mounted to the mechanism using plastic standoffs and to the rear AC panel with two metal screws.

WARNING:

Before disassembling any electronic equipment, be sure the AC power is disconnected from the unit.

3.1.1 Tools Required

The only tool required for disassembly of all Corvus OmniDrives is a #2 Phillip screwdriver.

3.1.2 Space and Environmental Considerations

A few precautions should be observed when disassembling or assembling an OmniDrive.

The most important of these is to remember that this is a static sensitive device, and as such, appropriate care should be taken to avoid damaging it by static electricity. Preferably, the service area should not have a carpeted floor, if it does, either a static mat or wrist strap should be used to discharge the technician of static electricity prior to performing any work on the drive. Low humidity environments should also be avoided as these contribute to increased static electricity.

The bench area should have sufficient room for all equipment to be used, including any test equipment (i.e. oscilloscope, digital voltmeter, etc.). Insufficient room on the bench can lead to accidental damage.

3.2 Disassembly Procedures

The following steps will detail how to completely disassemble an OmniDrive. Step-by-step, these include removing the top cover, Controller PCA, drive mechanism, power supply, and AC Panel. Instructions specifying the 'right' or 'left' of an assembly should be interpreted as viewed from the front of the OmniDrive.

3.2.1 Top Cover

1. Remove the two Phillip screws at the rear of the cover.
2. Remove the cover by simultaneously lifting it up and sliding it back.

3.2.2 Controller PCA

1. Disconnect the two drive mechanism flat cables, J1 and J2 from the left side of the Controller PCA (when viewed from the front bezel). Note the red stripe on each cable is towards the front bezel of the enclosure.

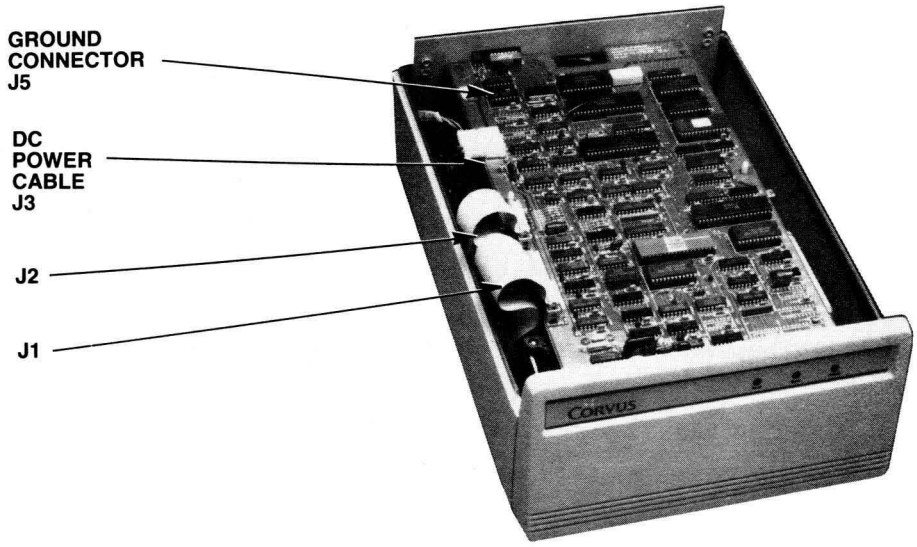

Figure 3-1. Controller PCA Cables

2. Disconnect the ground wire from the rear left of the Controller PCA (connector J5). Refer to Note below.
3. Disconnect the DC power connector located at the left rear of the Controller PCA (connector J3).
4. Remove the two Phillip screws from the left and right rear of the Controller PCA. Refer to Note below.
5. Gently push in the retaining clip on the four nylon standoffs supporting the Controller PCA on the mechanism.
6. Remove the Controller PCA by gently lifting the back of it up and sliding it back.

3.2.3 Drive Mechanism

1. Remove the two Phillip screws securing the rear drive mechanism mounting bracket to the basepan.
2. Loosen the two Phillip screws securing the front drive mechanism mounting bracket to the basepan.
3. Lift the rear of the drive mechanism while simultaneously sliding it backwards. Once the front mounting bracket has cleared the two Phillip screws, continue to lift the mechanism straight up to provide access to the cables beneath.
4. Disconnect the ground wire between the drive mechanism and the rear panel. Noting the orientation of the DC power cable and flat cables, disconnect them from the drive mechanism.

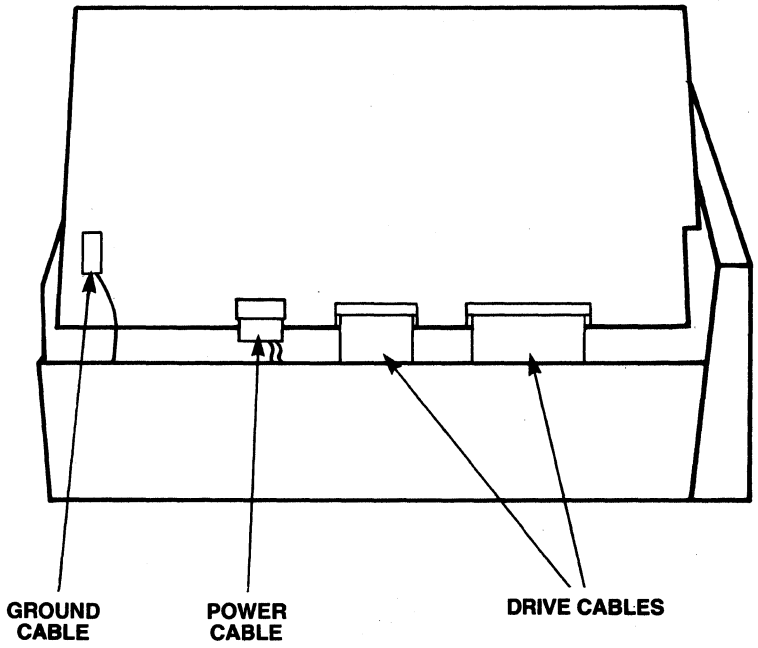

Figure 3-2. Drive Cable Layout

5. Remove the drive mechanism, with its brackets, gently lifting up and out of the basepan.
6. Remove the four Phillip screws securing the brackets to the drive mechanism, and remove the brackets.

3.2.4 Power Supply

1. Disconnect the AC wiring harness connector from the left rear of the power supply (connector TB1).

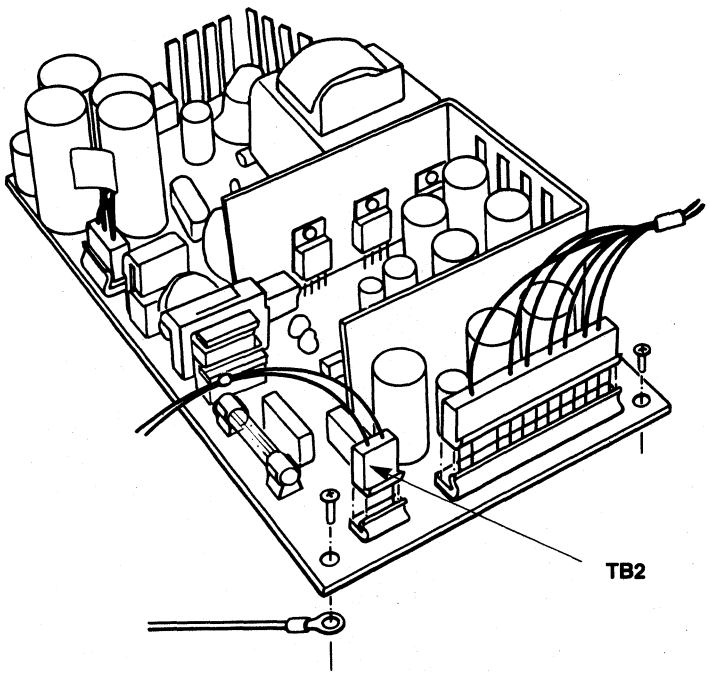

Figure 3-3. DC Harness

2. Disconnect the DC wiring harness from the left front of the power supply (connector TB2).
3. Remove the four Phillip screws securing the power supply to the basepan. Note the Astec Power Supply has an AC ground connection on the left rear screw; be sure to reconnect this when reinstalling the power supply.
4. Remove the power supply by lifting straight up and out of the basepan.

3.2.5 AC Panel

1. Remove the two Phillip screws securing the AC panel to the base pan.
2. Remove the AC panel by lifting straight out of the basepan.

3.3 Reassembly

To reassemble the OmniDrive, reverse the procedures in section 3.2 being sure to reinstall the nylon insulating washers between the AC panel and Controller PCA, if necessary. Refer to Note below.

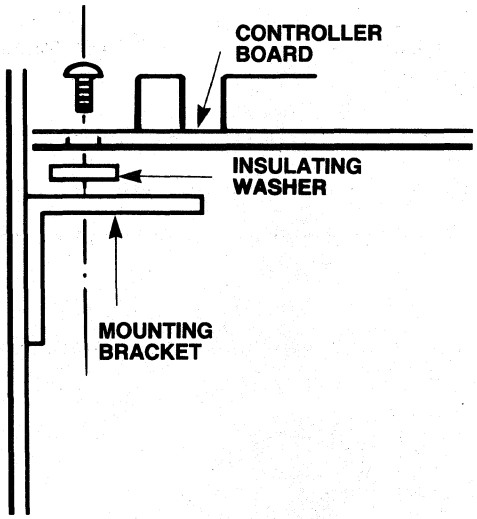

Figure 3-4. Insulation Washers Installation

NOTE:

Several revisions of Controller PCA exist with different mounting and grounding criteria. All controllers revision "10" and lower require insulating washers to be installed between the PCA and the two metal mounting brackets on the AC panel. Also, a ground wire should be connected at connector position J5. The other revision controller, marked Revision "A" does not require any insulating washers or the PCA ground connection. Failure to observe these items can cause damage to the Controller PCA and/or power supply.

CHAPTER 4
CHECKS AND ADJUSTMENTS

CHAPTER 4
CHECKS AND ADJUSTMENTS

4.0 Scope of Chapter

Procedures for all adjustments and checks within the OmniDrive are detailed in this chapter. Tools required, set up procedures and specific steps also are described. Some of the procedures require disassembly and reassembly. In these cases you will be referred to the appropriate section of this manual for instructions.

4.1 Introduction

The design of the Corvus OmniDrive requires that only two items ever need to be checked and only a single adjustment necessary. Both the switching power supply and the voltage controlled oscillator circuit (VCO) on the Controller PCA may be checked. The VCO circuit is the only adjustment that may be performed on the OmniDrive.

Mechanism-specific checks and adjustments can be found in the appropriate Appendix in the rear of this manual.

4.2 Power Supply Voltage Check

The OmniDrive is shipped with one of two types of power supplies: Astec and Boschert. Procedures for performing voltage checks on both types are provided below. Voltage should be checked with the DC harness connected to the Controller PCA and the drive mechanism.

4.2.1 Tools Required

A digital voltage meter (± 0.1% accuracy) is the only tool required to check either the Astec or Boschert power supplies.

WARNING:

Extreme caution should be exercised when checking the power supply. High voltage presents a potential danger.

4.2.2 Astec Power Supply Check

The power supply must be exposed in order to gain access to the voltage test points.

1. Follow the disassembly procedures from section 3.2.1 to 3.2.2.
2. Position the Controller PCA near the OmniDrive so that the DC cable can reach the DC input of the Controller PCA and where there is no contact between the exposed circuitry of the PCA and any metal.
3. Reconnect the DC power connector and the ground wire to the Controller PCA.
4. Reconnect the AC power connector and power up the OmniDrive.

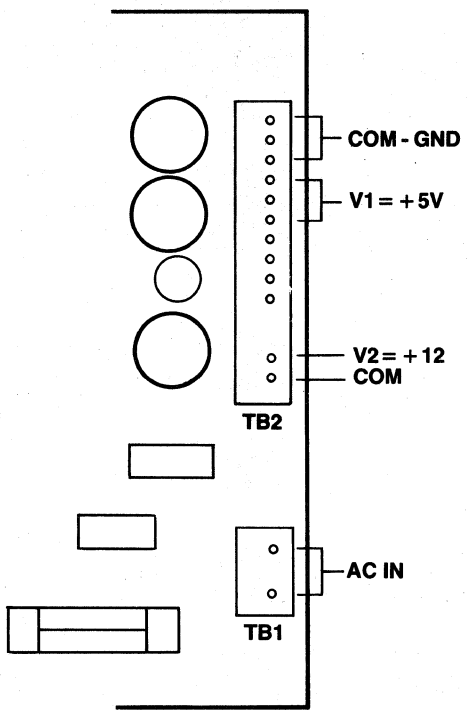

Figure 4-1. Astec Power Supply Test Points

5. Using a digital voltmeter, check for +5 VDC (± .1 VDC) at V1 of connector TB2. The negative probe should be grounded at COM of TB2.
6. Check for +12 VDC (± .3 VDC) at V2 of connector TB2 with the negative probe grounded at COM of connector TB2.
7. If the voltages are not in tolerance, the power supply must be replaced.

4.2.3 Boschert Power Supply Check

The power supply must be exposed in order to gain access to the voltage test points.

1. Follow the disassembly procedures from section 3.2.1 to 3.2.2.
2. Position the Controller PCA near the OmniDrive so that the DC cable can reach the DC input of the Controller PCA and where there is no contact between the exposed circuitry of the PCA and any metal.
3. Reconnect the DC power connector and the ground wire to the Controller PCA.
4. Reconnect the AC power connector and power up the OmniDrive.

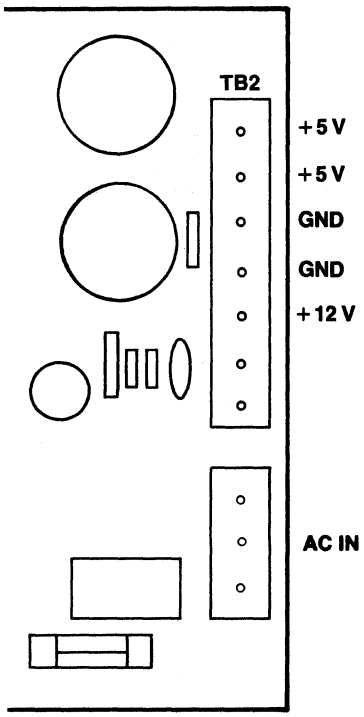

Figure 4-2. Boschert Power Supply Test Points

5. Using a digital voltmeter, check for +5 VDC (± .1 VDC) at Pin 8 of connector TB1. The negative probe should be grounded at Pin 5 of connector TB1.
6. Check for +12 VDC (± .3 VDC) at Pin 3 of connector TB2 with the negative probe grounded at Pin 5 of connector TB2.
7. If the voltages are not in tolerance, the power supply must be changed.

4.2.4 AC Power Check

If the power supply is not producing any voltages, the incoming AC power may not be present.

1. Check to see that the incoming AC plug is firmly attached to the rear panel.
2. Check the internal fuse of the power supply and replace if necessary.
3. Perform a continuity check of the AC wire harness to verify that it is delivering AC power to the power supply.
4. If all the steps above check out good, replace the power supply (see section 6.3.4).

4.3 Voltage Control Oscillator Adjustment

The OmniDrive Controller PCA contains a Voltage Control Oscillator (VCO) circuit which is an analog circuit that synchronizes the read/write clock to the incoming data stream.

4.3.1 Tools Required

The VCO adjustment requires some specific equipment.

- 100-MHz oscilloscope
- Plastic or wood adjustment tool*

*Some Controller PCAs utilize tuneable capacitors which require a small square-head adjustment tool. This tool (Corvus Part Number 9000-00083-00) is available through Customer Service.

4.3.2 VCO Adjustment Procedures

The adjustment of the VCO circuit is a critical adjustment and may take some time to adjust correctly. One adjustment will affect the other and checks must be repeated to insure that all test points are within specification.

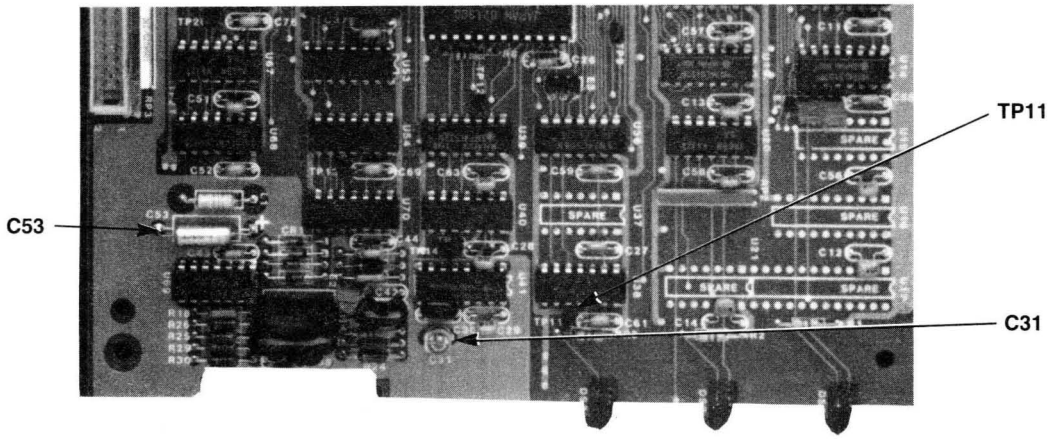

Figure 4-3. VCO Circuit

1. Set the oscilloscope as follows:

Channel A:	Test Point 11 (next to U38)
Ground:	C53 (negative side)
Display:	Channel Al 1—normal
Volts/Div:	0.2 VDC (X10 probe)
Trigger Source:	Channel A
Trigger Mode:	normal-positive
Time/Div:	50 nsec

2. Power on the OmniDrive and allow the drive to come ready.
3. Remove jumper E2.
4. Adjust C31 for a 91 nsec cycle, leading edge to leading edge across the entire display. The display should be fairly stable.

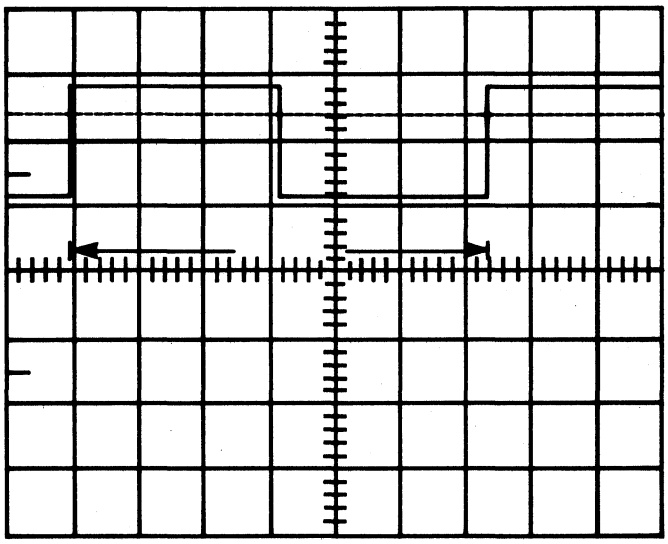

Figure 4-4. VCO Signal

5. Reinstall jumper E2. The frequency should change to a 100 nsec cycle time (10 MHz) and should remain stable.

CHAPTER 5
DIAGNOSTICS

CHAPTER 5
DIAGNOSTICS

5.0 Scope of Chapter

This chapter provides an overview of the OmniDrive Diagnostic utilities. Details can be found in the OmniDrive Diagnostic Guide. Omninet Diagnostics are covered in the Networks Service Manual.

5.1 Introduction

The Diagnostic utilities aid in the tracing faults in the OmniDrive disk drive system, and speed the correction of these faults. These utilities will help the technician exercise and diagnose the OmniDrive disk and network systems using a floppy drive and a host computer.

Diagnostics permit the verification of media integrity, head positioning, and Corvus firmware version installed. Individual routines are used to update Corvus firmware, format a drive, and to park the read/write heads for shipment.

CAUTION:

Selecting certain options may destroy data. The F) Format option will erase all data present on the drive. While the M) Modify Parameters option does not actually destroy data, changing these values will change the relative sector addresses and spared tracks which will in turn make data inaccessible.

5.2 CRC

The Cyclic Redundancy Check (CRC) is a non-destructive test which reads each block of data, and checks it against its CRC value. If for any reason, the CRC value in that sector does not match the block of data, the CRC checker/generator signals the controller that an error has been detected, and the processor halts operation. Any errors will be reported at the end of the program. CRC errors encountered during normal drive operation will halt disk drive operation with the error code displayed. Error listings and interpretations may be found in section 6.2.7.

A good sector is defined as one capable of retaining all bits in the order in which they were written. When a block is read from a sector, the CRC value is read with it and tested. Bit errors may occur due to a bad sector, damaged in one of two ways:

1. Physically (faulty media resulting in dropped bits and mismatched CRC bytes).

2. Magnetically (miscellaneous bits written to the block resulting in a mismatched CRC value).

5.2.1 C) Check for Bad Tracks

This option verifies media integrity and reports any faulty tracks. Run this test five times to determine whether detected errors are due to faulty media, where specific sectors will repeatedly show errors or random magnetic bit changes, where sectors will show one-time errors. Tracks containing sectors with repeated errors should be spared following the procedures outlined in section 5.2.2.

5.2.2 T) Spare Track Table

This option gives access to the drive's spare track table. Options include adding a track, removing a track, clearing the table, and listing the table.

The table is accessed by selecting option M) Modify Parameters from the main menu and then option T) Spare Track Table. The technician may now select one of the four options for modifying the Spare Track Table.

5.3 X) Exercise Heads

This option seeks between random sectors and reads the header information from that sector to verify the success of the seek. Periods print to the video display for successful operations and asterisks are printed for hard errors, errors that exist after ten retries. Question marks represent soft errors, signifying that the operations succeed after at least one retry.

After the test is complete, **pressing** [RETURN] displays the error list, consisting of the total number of seeks and hard and soft errors. Any hard errors reported should be followed by a CRC test to check for faulty sectors. A soft error represents a recovered error and a hard error represents a fatal error.

5.4 U) Update Firmware

This option writes a new copy of Controller Firmware onto each of the first four tracks of the drive. Current firmware versions may be found in the Customer Service Update.

It is not possible to update the firmware from the boot drive; the system must first be booted from another Corvus drive or floppy diskette. Information regarding updating firmware on the OmniDrive may be found in either the OmniDrive Diagnostic Guide or the System Manager's Guide for the computer system being used.

This option will ask if you wish to CHANGE DRIVE TABLES. A negative answer to this question will not endanger data resident on the drive.

CAUTION:

Although this option is non-destructive to the data itself, answering affirmatively to this will result in these tables being rewritten with default values: Interleave factor to 9, read-after-write to OFF, and clear the spare track table. Changing these tables may prevent the user from accessing the data.

Next, the program will request the Controller Firmware file name. This will be in the form of:

ENTER CONTROLLER CODE FILE: FODRX.X

The current level of Controller Firmware for OmniDrives is listed in the Customer Service Update. If another version is to be used, it should be entered now. The version of Controller Firmware used on the drive should be that supplied with the Corvus initialization diskettes that are to be used in installing the drive.

5.5 V) Version Check

This option displays the current versions of the Controller Firmware and Controller ROM (located on the OmniDrive Controller board at position U4) along with other drive information.

Information displayed will include:

Drv	Drive number
P/V	Indicates whether the drive is either Physical or Virtual and will always be P for an OmniDrive
Capacity	Total number of 512-byte sectors available
Size/Rev	Drive capacity in megabytes and the type of drive which will always be O for an OmniDrive
SPT	Sectors per track
TPC	Tracks per cylinder
CPD	Cylinders per drive
ROM	Level of ROM chip installed on the OmniDrive Controller at position U4
DIAG	Version of default firmware data block
Firmware	Version and date of firmware presently installed

5.6 F) Format Drive

The Format option should be used only as a last resort when attempting to reestablish normal drive operations. This diagnostic-level, or bottom-level format writes the rudimentary magnetic pattern to the media required before data may be retained properly. This format must be intact before the drive may be initialized for any operating system or data storage.

CAUTION:

This option will destroy data on the drive. Be sure to back up using the Corvus Mirror Server or Bank if data is to be retained.

Upon selecting option F the program will warn you that data is about to be destroyed and inquire if you wish to continue. Next the format password will be requested; enter ODFORMAT. When formatting is complete, the program will request the firmware file name. If the default name is correct, simply **press** [RETURN] , otherwise, enter the correct file name.

The program will now rewrite the Controller Firmware using the file name displayed. Use only the Controller Firmware version appropriate for the drive (see option U above).

The Format program writes default Drive Parameters to the drive:

Spare Track table = No Tracks Spared
Read-After-Write = OFF
Interleaving Spec = 9

5.7 M) Modify Parameters

This option allows the modification of the interleave specification, the spare track table, and the read-after-write option.

5.7.1 L) List Parameters

Selecting this option displays the current setting of the drive parameters.

5.7.2 I) Interleave Specification

Selecting this option permits modifying the interleave factor. This determines the frequency at which data is read/written to sectors on the data surface. The default interleave factor is 9.

CAUTION:

Modifying the interleave factor will render the existing data unreadable. This default value should only be changed when instructed to do so by a Corvus Customer Service Representative.

5.7.3 T) Spare Track Table

The Spare Track Table contains a list of those tracks which have been identified as having media defects. Options have been provided to A) Add a Track, R) Remove a Track, C) Clear the Spare Track Table, and L) List the Spare Track Table.

CAUTION:

A written record should be kept with the drive listing all tracks which are spared. In the event that the drive needs to be formatted or the table is accidently cleared, this information will be needed to restore the table.

5.7.4 R) Read-After-Write

This option permits toggling the setting of the read-after-write option. Setting this to ON will enable a read-after-write verification and will have the effect of slowing down write operations. Setting this to OFF will disable the feature.

5.7.5 S) Save Changes

This option permits the saving of any parameter changes which are made. It should always be selected prior to exiting the Modify Parameters option if the changes are to be retained.

5.8 S) Select Drive

This option allows the operator to select a different OmniDrive on a network to test without exiting from the program.

5.9 P) Park Heads for Shipment

Whenever OmniDrives are to be transported, the heads must first be parked off the data area. The Park Heads command accomplishes this by moving the heads to a non-critical area of the drive's data surface. All drive indicator LEDs will be off after executing this Diagnostic option. This indicates that the heads are parked; the drive should then be powered off immediately. To remove the drive from this mode, the drive need only be powered back on.

CHAPTER 6
TROUBLESHOOTING

CHAPTER 6
TROUBLESHOOTING

6.0 Scope of Chapter

This chapter is a troubleshooting guide for the Corvus OmniDrive. Instructions for service and repair of the OmniDrive are provided.

A list of tools and equipment required is provided as is a troubleshooting flowchart which guides the servicing technician to the appropriate procedures to be performed.

6.1 Introduction

When performing troubleshooting, time is of the essence and it is imperative that the equipment be repaired in the shortest amount of time. The technician must be well equipped to handle problems ranging from operator errors, to software and hardware problems.

6.2 Troubleshooting

An initial diagnosis should be done in order to verify proper installation and operation; a quick check list has been provided to assist in isolating these types of problems. More indepth diagnostic procedures are also discussed in this chapter.

The troubleshooting flowchart will assist the problem isolation process through quick checks, diagnostics, modular, and socketed chip troubleshooting.

6.2.1 Tools and Equipment Required

Troubleshooting and repair of the OmniDrive can be done with the following equipment and tools:

- Host microcomputer
- Transporter for Omninet interface
- OmniDrive Diagnostics
- Digital voltage meter (± 0.1% accuracy), with test leads
- #2 Phillip screwdriver

6.2.2 Using the Troubleshooting Flowchart.

The flowchart has been designed in a logical format using standard algorithmic symbols.

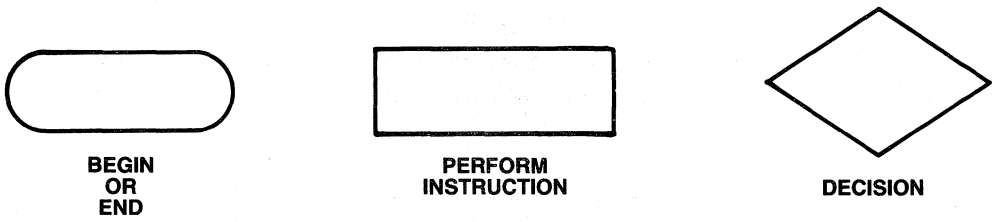

Figure 6-1. Flowchart Symbols

Each step in the flowchart should be performed as instructed without omitting any steps and possibly missing the solution. Each step will refer you to a section in this manual where fault isolation procedures will be described. These procedures will be in the format of quick checks and detailed troubleshooting instructions.

6.2.3 Quick Checks

The first step in determining the problem is reproduce the problem.

1. Verify that the installation of the system is correct (see section 1.4).
2. Verify that the proper power up sequence and operating procedures are observed.
3. If the drive will not go to a Ready state, only the Ready LED continually lit, reset the drive by powering it off and then powering it on again.
4. If resetting the drive does not produce a Ready state, disconnect the Omninet tap cable from the rear of the OmniDrive and reset the drive by powering off and on.

If the Ready LED does turn on, the problem is with the network. See the troubleshooting sections of the Corvus Network Service Manual for troubleshooting procedures.

5. Connect the host microcomputer directly to the OmniDrive using the OmniDrive convenience cable supplied with the drive.

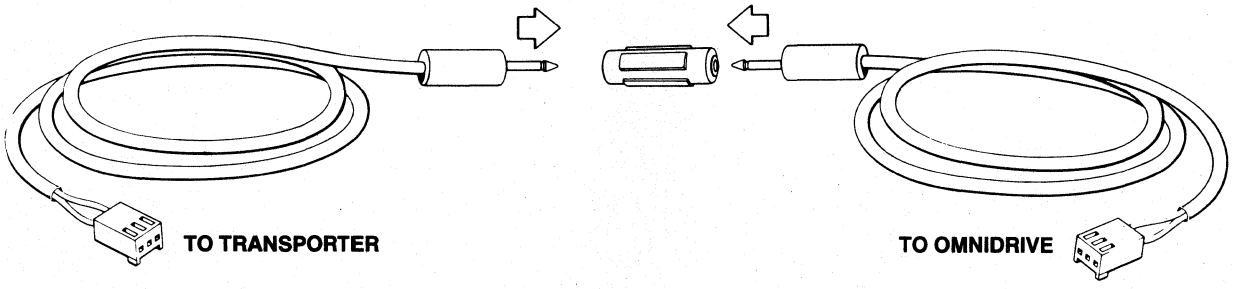

Figure 6-2. OmniDrive Convenience Cable

6. Check the voltage of the power supply as described in section 4.2. If the voltage is not present, check the internal fuse of the power supply and replace if necessary.

   If this still does not produce a ready state go to section 6.3 Modular Substitution.

7. With the Ready LED on, continue the boot procedure. If the drive will not boot properly, the problem may be due to software corruption. Run the Diagnostic Utilities. The options that should be run are U)pdate Firmware, C)RC checks and as a last resort, F)ormat drive.

CAUTION:

The F)ormat drive option is destructive to data on the drive and an Update Firmware as well as a reinitialization of the operating system will have to be performed following a Format drive.

8. If the diagnostic check of the drive indicates no errors, the possibility exists that the software package is not compatible with the OmniDrive. Check the Corvus software directory for a list of compatible software.

TROUBLESHOOTING FLOWCHART

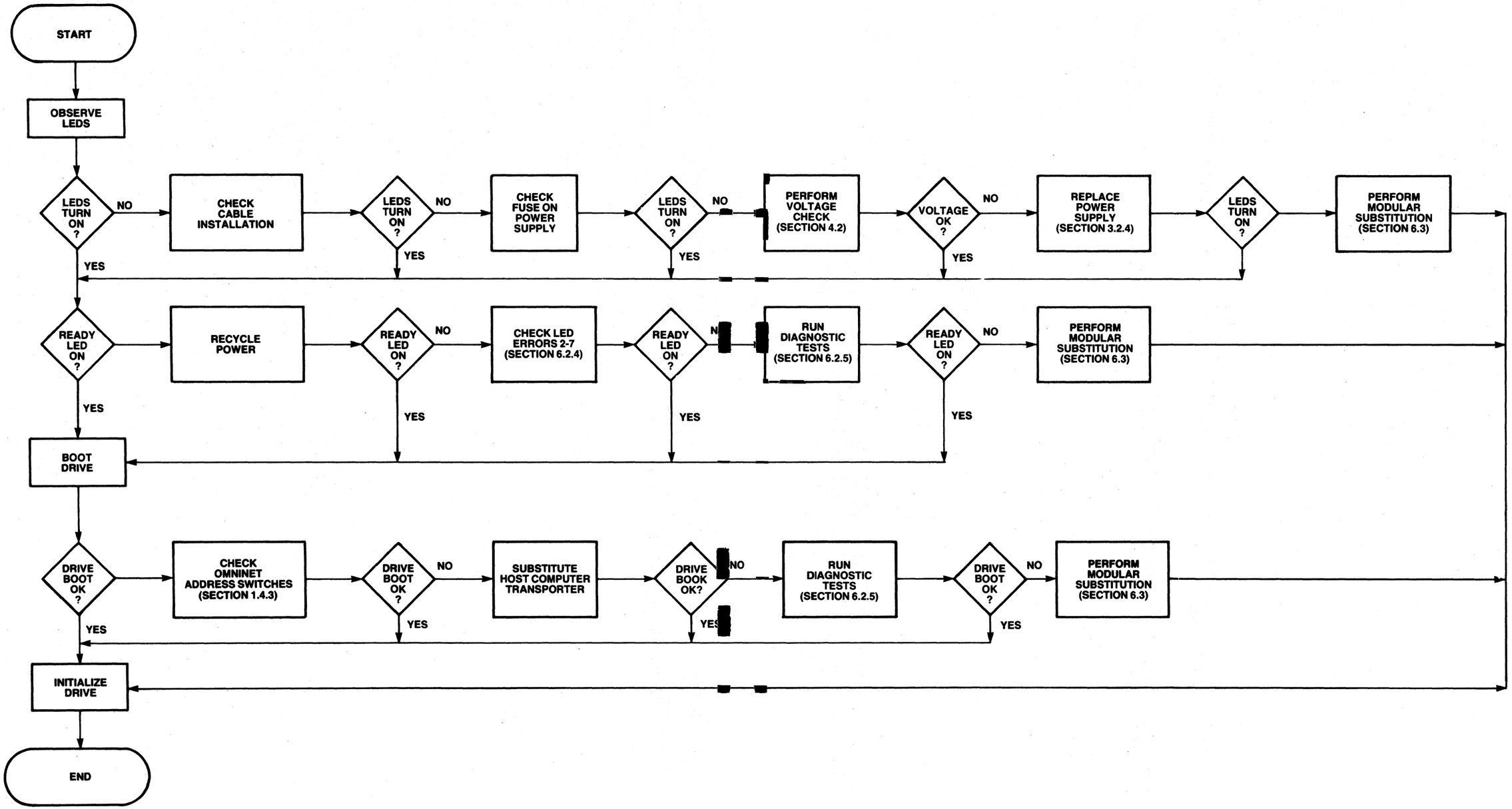

Figure 6-3. Troubleshooting Flowchart

6.2.4 Indicator LED Errors

The front panel LED indicators can aid in troubleshooting. If at power-up, the Ready LED does not go to a ready state or if the indicators do not perform normally during operation, an error has occurred and troubleshooting will be necessary. The following conditions chart will help to diagnose the problem:

	FAULT LED	BUSY LED	READY LED
• Condition 1	Off	Off	On
• Condition 2	Off	Off	Off
• Condition 3	On	On	Off
• Condition 4	On	On	On
• Condition 5	Off	On	On
• Condition 6	Flash	Off	Off
• Condition 7	Flash	Flash	Flash

Table 6-1. Front Panel LEDs

Condition 1—Fault LED is off, Busy LED is off and the Ready LED is on.

- Indicates the desired panel LED condition for OmniDrive operation. With this condition the drive is 'Ready' for operation.
- If the the Ready LED is on but the drive cannot be accessed from your computer, the problem may be in the hardware link. Check to see that the Omninet address switches are set properly.
- Check to see that the host computer and the Omninet Transporter are in working order.
- Verify that the OmniDrive is being recognized by the network. This can be done by running the Activenet or the Who option of Omnitest from the drive Diagnostics which will report all active nodes on the network. Additional information about Omninet tests can be found in the Network Service Manual.
- A hardware failure may also prevent communication between the OmniDrive and the computer. Modular substitution should be performed in order to attain a ready state and isolate the problem.

Condition 2—All front panel LEDs are off. There are various situations which may cause this condition such as:

- Electrical problem—Power may not be present. Perform the procedures for the power supply voltage check.
- The LEDs on the front panel may have blown. This would require that the Controller PCA be replaced.
- Another hardware malfunction may also cause this type of indication. Modular substitution should be performed following the sequence in section 6.3.

Condition 3—Fault LED on, Busy LED on, and the Ready LED is off.

- Firmware may not be installed on the drive or it may have been corrupted. In this case, the firmware will have to be updated using the OmniDrive Diagnostic program.
- May indicate a fatal hardware error. A modular replacement will have to be performed in order to isolate the defective module.

Condition 4—All LEDs are on.

- This indication may be caused by the duplication of Omninet network addresses. In this case an Omninet address not assigned to any other device must be selected as the OmniDrive unique address.
- This condition may also indicate a hardware failure and modular replacement will be required.

Condition 5—Fault LED is off, Busy LED is on, and the Ready LED is on.

- This may indicate the OmniDrive needs to be formatted.

Condition 6—Fault LED flashes, Busy LED off and the Ready LED is off.

- This type of error may indicate there is a hardware mismatch. Check PROM and ROM version levels for compatibility.

Condition 7—Each LED flashes briefly in succession, giving the appearance of "rolling LEDs."

- This indicates a RAM error. The Controller PCA should be replaced.

6.2.5 Diagnostic Testing

It may be necessary to perform some analysis of the drive using the Diagnostic Utilities. Most utilities require that the drive be in a ready state in order for the host microcomputer to communicate with the drive.

If this condition does not exist, run the following Diagnostics Utilities from the Diagnostic diskette.

WARNING:

Some diagnostic tests are destructive to data. Back up the data prior to running the Diagnostic Utilities.

6.2.5.1 Disk Parameters

If the disk parameters are altered, data on the drive may become inaccessible. List the parameters to verify that:

- Interleaving Specification is set to: 9
- Bad tracks are spared

If any parameters require modification, do not forget to Save the changes.

Consult section 5.7 for a detailed description and operating instructions of the parameters option.

6.2.5.2 Updating the Controller Firmware

If the firmware has been corrupted, or if it contains bad blocks, the drive will not go to ready after the power up is complete.

If the firmware is suspected of being damaged, new firmware should be rewritten from the diagnostic diskette to the OmniDrive. The procedure for this can be found in section 5.4.

6.2.5.3 Head Exercise

This option will exercise the heads to verify proper head positioning by accessing random tracks and checking for proper track access by reading the track header.

See section 5.3 for a detailed description and operation instructions of the Exercise option.

6.2.5.4 Cyclic Redundancy Check (CRC)

The CRC option writes and checks a byte of data on the disk and verifies the integrity of the media.

If a bad track is found it must be added to the spare track table. The spare track table resides in the firmware and instructs the controller not to access any track which is listed. Spare tracks will be utilized in their place (see section 5.2).

6.2.5.5 Format

This option should be used only if all other diagnostic have failed. The Format option erases all data on the disk; therefore, the firmware, parameters and operating system must be restored (See section 5.6).

6.2.6 Error Codes

The OmniDrive signals the host operating system with a one byte error code when an error has been encountered. Errors reported by the Corvus Diagnostic Utilities are represented in hexidecimal notation. The bit format for the error code is:

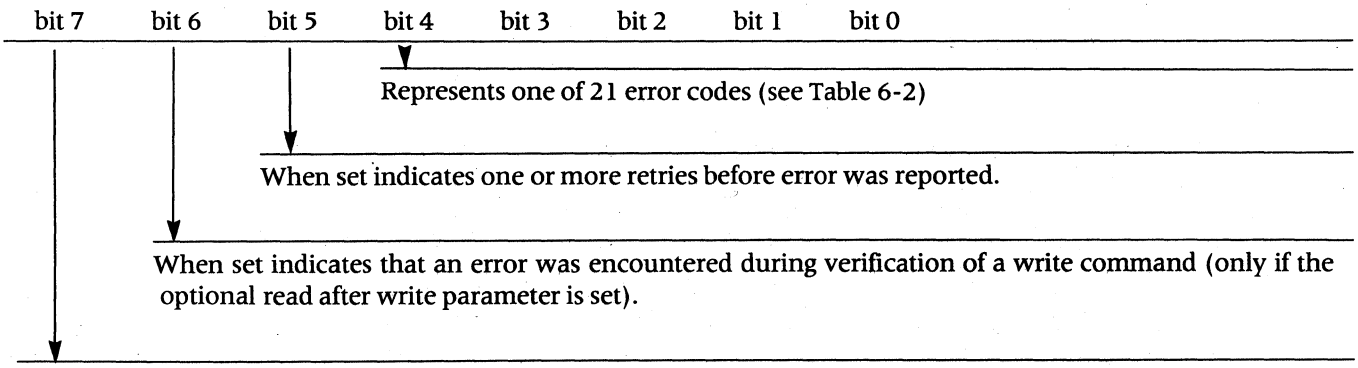

When set indicates that a fatal error has occurred.

Errors less than or equal to 127 are non-fatal while errors greater than 127 are fatal.

6.2.7 Interpreting Error Codes

There are four different error codes for each error condition. To determine the error condition, these procedures should be followed:

These evaluations follow if the error code value is equal to or greater than 128, a fatal error has occurred. Subtract 128 from the value.

1. If the difference of the value is less than 64, the error occurred during a disk read.
2. If the difference of the value is equal to or greater than 64, the error occurred during the verification of a write command.
3. If the remaining difference of the value is less than 32, no retries were attempted.
4. If the value is equal to or greater than 32, at least one retry was attempted.

If a consistent error 171 or 235 is encountered at the same block location, there is probably a media defect in that area. A Cyclic Redundancy Check (CRC) should be run to check the media integrity. See the section 5.2 of this manual for instructions.

When a consistent 255 error appears, it may be an indication that the Controller PCA is not responding to the host computer and may need repair.

≤127 Non Fatal		≥128 Fatal		
32				soft error
	128	160	192	224 error in preparing R/W
	129	161	193	225 seek timeout
	130	162	194	226 seek fault
	131	163	195	227 seek error
	132	164	196	228 header CRC error
	133	165	197	229 rezero timeout
	134	166	198	230 rezero fault
	135	167	199	231 drive not online
	136	168	200	232 write fault
	137	169	201	233 format protected
	138	170	202	234 read fault
	139	171	203	235 data CRC error
	140	172	204	236 sector locate error
	141	173	205	237 write protected
	142	174	206	238 illegal sector address
	143	175	207	239 illegal command op code
	144	176	208	240 spare track table overflow
	145	177	209	241 overlay failure
				254 verify error (burn-in test)
				255 controller timeout (diagnostic utility)

Table 6-2. Decimal Error Codes

≤ 7FH Non Fatal		≥ 80H Fatal		
20				soft error
	80	A0	C0	E0	error in preparing R/W
	81	A1	C1	E1	seek timeout
	82	A2	C2	E2	seek fault
	83	A3	C3	E3	seek error
	84	A4	C4	E4	header CRC error
	85	A5	C5	E5	rezero timeout
	86	A6	C6	E6	rezero fault
	87	A7	C7	E7	drive not on line
	88	A8	C8	E8	write fault
	89	A9	C9	E9	format protected
	8A	AA	CA	EA	read fault
	8B	AB	CB	EB	data CRC error
	8C	AC	CC	EC	sector locate error
	8D	AD	CD	ED	write protected
	8E	AE	CE	EE	illegal sector address
	8F	AF	CF	EF	illegal command op code
	90	B0	D0	F0	spare track overflow
	91	B1	D1	F1	overlay failure
				FE	verify error (burn-in test)
				FF	controller timeout (diagnostic utilities)

Table 6-3. Hexidecimal Error Codes

6.3 Modular Substitution

Troubleshooting of the Corvus OmniDrive can be performed in a short amount of time due to its modular design. Isolation of the defective subassembly can be readily accomplished by substituting known good modules from your OmniDrive spares kit.

The substitution of modular subassemblies is easily performed on OmniDrive because there are only four major modules. These are:

- Controller PCA
- Winchester Disk Mechanism
- Power Supply
- AC Panel

6.3.1 Tools and Equipment Required

- OmniDrive Spares Kit (order from the Corvus Customer Service department).
- #2 Phillip screwdriver
- Digital voltage meter (± 0.1% accuracy), with test leads

6.3.2 Controller PCA

The OmniDrive Controller PCA is located on the topmost section of the drive base unit, above the disk drive mechanism and the power supply. It is the first PCA seen as the top cover is removed.

Modular replacement of this PCA is as follows:

1. Remove the Controller PCA as described in sections 3.2.1 and 3.2.2.
2. Replace with a known good Controller PCA. Check to see (if necessary) that the insulating washers between the Controller PCA and the rear board support are in place.

CAUTION:

Failure to replace the insulating washers between a Controller PCA below Revision 10 and the rear support will short the 5 VDC plane to the chassis and cause severe damage to the Controller PCA and the power supply.

3. With a known good Controller PCA in place, connect the power cable and the Omninet tap cable. Power up the OmniDrive and run the Diagnostic Utilities on the drive as instructed in section 6.2.5. If all tests pass, load the operating system onto the drive.

6.3.3 Winchester Drive

The Winchester hard disk drive mechanism is located in the base of the OmniDrive enclosure, beneath the Controller PCA. The following section will describe modular replacement of the Winchester disk drive.

1. Follow the disassembly instructions as described in sections 3.2.1, 3.2.2 and 3.2.3.
2. Replace the drive mechanism with a known good drive mechanism.
3. Replace the Controller PCA. Verify the drive select switches are set for the type of drive which is installed (see Appendix).
4. With a known good disk mechanism installed, connect the power cable and the Omninet tap cable. Power up the OmniDrive and run the Diagnostic Utilities on the drive as instructed in section 6.2.5. If all tests pass, load the operating systems onto the drive.

6.3.4 Power Supply

Corvus uses two types of power supplies in the OmniDrive: Astec and Boschert. They are interchangeable, but the AC and DC power harnesses must be changed when the power supply type is changed. The procedure for modular substitution of the power supply is:

1. Follow the procedures for power supply removal as described in sections 3.2.1, 3.2.2, and 3.2.4.
2. Replace the old power supply with a known good power supply.

CAUTION:

If the power supply is replaced with that of a different manufacturer, the AC & DC power harnesses must also be replaced.

3. With a known good power supply installed, connect the power cable and the Omninet tap cable. Power up the OmniDrive and check the voltages as described in section 4.2.

6.4 Socketed Integrated Circuit (IC) Troubleshooting

Authorized Service Centers are authorized to troubleshoot to the socketed IC level only. Removal of any soldered IC will void the warranty of the PCA and Exchange Prices will not be authorized.

For Authorized Service Centers who wish to troubleshoot to the socketed component level, a troubleshooting flowchart has been included which identifies important device signals. Signal illustrations as well as oscilloscope settings and test point locations can be found in this chapter. A knowledge of digital troubleshooting techniques is necessary to perform these checks.

For Service Center troubleshooting you will need:

- 100-MHz oscilloscope
- OmniDrive spare chip set

When checking the output signals of an IC certain modes of operation must be observed. For example, when monitoring a signal which has a DMA function, DMA must be asserted by performing transfer to or from the host computer. Other modes can be controlled by performing a read or write to the disk, transfer and receive to and from Omninet, seeks, etc. A static mode is one where the OmniDrive is powered on but is not performing a command.

If output signals are not proper, check inputs to the IC from the other LSI socketed ICs. If these inputs are good, the IC should be replaced. If the replacement of the IC does not remedy the problem, the probable cause is with a soldered IC and the Controller PCA should be replaced.

6.4.1 75174 Line Driver/U57

The 75174 line driver receives the serial data input from the ADLC and converts it to a differential voltage signal. This signal is output to the Omninet tap cable.

A detailed description of the receiver and transmitter signals can be found in section 2.3.8.

Check the following outputs of the transmitter. Test point locations and modes of operation are given in the table below. Oscilliscope settings and signal illustrations can be found at the end of this chapter. Compare the signal with those in the test point signal illustration.

SIGNAL	LOCATION	MODE	SIGNAL STATE
+ OUT	U57/Pin 2	Omninet Transmit	Signal Illustration 6-4A Top
− OUT	U57/Pin 3	Omninet Transmit	Signal Illustration 6-4A Bottom

Table 6-4. 75174 Line Driver Test Points

If the differential voltage signal is not being output from the driver, check Pin 4 of the driver (U57) to determine if it is being enabled. The Enable signal is an active high signal. If it is present, check the input (TXD) from the ADLC. Also, check VCC voltages and clock input. If these are found to be present, the 75174 line driver should be replaced.

6.4.2 75175 Line Receiver/U58

The 75175 line receiver receives RS-422 formatted data from the Omninet twisted-pair tap cable and sends it to the ADLC in digital format.

Check the following output of the receiver. The test point location and modes of operation are given in the table below. Oscilliscope settings and signal illustrations can be found at the end of this chapter. Compare the signal with those in the test point signal illustration.

SIGNAL	LOCATION	MODE	SIGNAL STATE
RXD	TP 1	Omninet Receive	Signal Illustration 6-4B

Table 6-5. 75175 Line Receiver Test Point

If data is not being output from the 75175 line receiver, check the differential voltage inputs from the tap cable. If those are present replace the 75175 line receiver.

6.4.3 MC68A54 Advanced Data Link Controller (ADLC)/U23

The ADLC provides an interface to the Omninet transceivers and the remainder of the Transporter circuitry. It converts data from the bus to a serial format to be transmitted over the twisted-pair trunk line and converts incoming serial data to an 8-bit parallel format.

Check the following outputs of the ADLC. Test point locations and modes of operations are given in the table below. Oscilliscope settings and signal illustrations can be found at the end of this chapter. Compare signals with those in the test point signal illustration.

Refer to section 2.3.4 for ADLC signal descriptions.

SIGNAL	LOCATION	MODE	SIGNAL STATE
TXD	TP 2	Omninet Transmit	Signal Illustration 6-4C
TDSR	U23/Pin 24	Omninet Transmit	Signal Illustration 6-4D
RDSR	U23/Pin 23	Omninet Receive	Signal Illustration 6-4E

Table 6-6. ADLC Test Points

If output signals are not as they should be, check inputs to the IC, i.e. VCC, clock input, data lines and input signals from other socketed chips.

6.4.4 Monochip/U27

In the circuitry, the Monochip performs some very important functions. It provides timing and controls DMA, data flow, direction of the data flow and decodes the intended action of the 6801 microprocessor.

Check the following outputs of the Monochip. Test point locations and modes of operations are given in the table below. Oscilliscope settings and signal illustrations can be found at the end of this chapter. Compare signals with those in the test point signal illustration.

Section 2.3.3 describes the major Monochip signal descriptions.

SIGNAL	LOCATION	MODE	SIGNAL STATE
BITCLK	U27/Pin 27	Static	Signal Illustration 6-4F
EIN	U27/Pin 6	Static	Signal Illustration 6-6A Top
EOUT	U27/Pin 7	Static	Signal Illustration 6-6A Bottom
XTAL2	U27/Pin 23	Disk Exercise	Signal Illustration 6-6B
DMAREQ	TP 6	Disk Exercise	Signal Illustration 6-6C
DMAGO	U27/Pin 35	Disk Exercise	Signal Illustration 6-6C
TXENA	TP 7	Omninet Transmit	High

Table 6-7. Monochip Test Points

If output signals are not as they should be, check inputs to the IC, i.e. VCC, clock input, data lines and input signals from other socketed chips.

6.4.5 MC6801-1 Microprocessor/U24

The MC6801-1 microprocessor provides the intelligence for the OmniDrive Controller PCA. It controls the ADLC, the WD 1010 and the Monochip. The Omninet firmware resides in the internal 2Kx8 ROM of the 6801-1.

Check the following outputs of the 6801-1. Test point locations and modes of operations are given in the table below. Oscilliscope settings and signal illustrations can be found at the end of this chapter. Compare signals with those in the test point signal illustration.

See section 2.3.2 for 6801-1 Microprocessor signal descriptions.

SIGNAL	LOCATION	MODE	SIGNAL STATE
AUTO	U24/Pin 13	Static	Low
		Activenet	High
E	TP 4	Static	Signal Illustration 6-6A Top
R/W	TP 3	Read	High
		Write	Low
AS	TP 5	Read	High/Low Activity
		Write	High/Low Activity
RESET	U24/Pin 6	Power-Up	Low
		Static	High
IN/OUT	U24/Pin 14	Read	High
		Write	Low

Table 6-8. 6801-1 Test Points

If output signals are not as they should be, check inputs to the IC i.e. VCC, clock input, data lines and input signals from other socketed chips.

6.4.6 WD 1010 Winchester Disk Controller/U34

The WD 1010 operates independently of the 6801-1 and the Transporter circuitry. It interfaces to the 6801-1, upper Static RAM and the disk mechanism.

Check the following outputs of the WD 1010. Test point locations and modes of operations are given in the table below. Oscilliscope settings and signal illustrations can be found at the end of this chapter. Compare signals with those in the test point signal illustration.

See section 2.3.5 for WD 1010 signal descriptions.

SIGNAL	LOCATION	MODE	SIGNAL STATE
RG	TP 9	Read	High
		Write	Low
WG	TP 20	Read	Low
		Write	High
WE	U34/Pin 7	Read	High
		Write	Low
RE	U34/Pin 6	Read	Low
		Write	High
WD	U34/Pin 21	Read	Low
		Write	Serial Data Stream
DIR	U34/Pin 26	Seek Out	Low
		Seek In	High
STEP	U34/Pin 27	Disk Exercise	Signal Illustration 6-6D

Table 6-9. WD 1010 Test Points

If output signals are not as they should be, check inputs to the IC i.e. VCC, clock input, data lines and input signals from other socketed chips.

The WD 1010 will not operate correctly if the drive mechanism is not functioning properly. Check the following outputs of the drive mechanism. Test point locations and modes of operations are given in the table below. Oscilliscope settings and signal illustrations can be found at the end of this chapter. Compare signals with those in the test point signal illustration.

TRK0—The Track Zero signal notifies the WD 1010 when the heads are positioned over cylinder zero. This signal must be high at power up to signal the WD 1010 that the heads are in position for seeking.

WF—The Write Fault signal notifies the WD 1010 when a write error has occurred. It is an active high signal and should be low for proper operation.

RDY—The Ready signal is an active high signal letting the WD 1010 know that the drive mechanism is ready for a command.

RCLK—The Read Clock signal is sent to the WD 1010 to synchronize data being read from the disk.

IND—The Index signal provides information to the WD 1010 for it to determine the location of sector zero.

SC—Seek Complete signals the WD 1010 that the heads are positioned over the correct cylinder, have stablized and are ready for a read or a write.

Check the following inputs of the WD 1010. Test point locations, oscilloscope settings and modes of operations are given in the table below. Compare signals with those in the test point signal illustration.

SIGNAL	LOCATION	MODE	SIGNAL STATE
TRK0	U34/Pin 31	Power Up	High
WF	U34/Pin 30	Write	Low
RDY	U34/Pin 28	Static	High
RCLK	U34/Pin 39	Read	2-MHZ Signal
IND	U34/Pin 29	Static	Signal Illustration 6-6E
SC	U34/Pin 32	Seek	Low
		Static	High
DRUN	U34/Pin 34	Static	Signal Illustration 6-6F

Table 6-10. Drive Test Points

This page intentionally left blank.

Signal: +OUT
Channel: A
Volts/Division: 2V
Time/Division: 1us

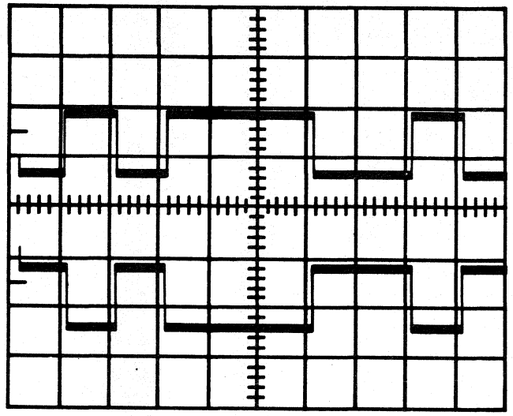

Signal: −OUT
Channel: B
Volts/Division: 2V
Time/Division: 1us

Figure 6-4A

Signal: RXD
Channel: A
Volts/Division: 2V
Time/Division: 5us

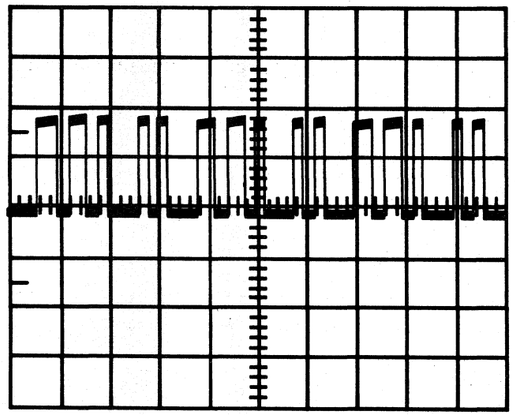

Figure 6-4B

Signal: TXD
Channel: A
Volts/Division: 2V
Time/Division: 5us

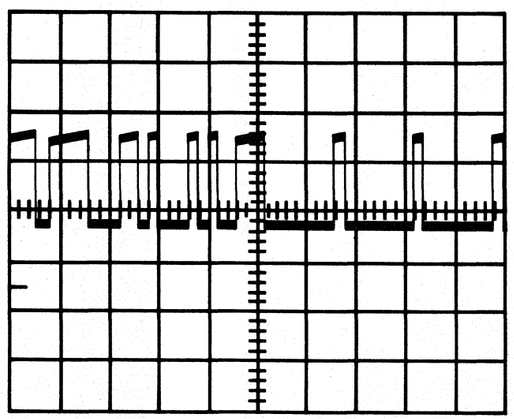

Figure 6-4C

Signal: TDSR
Channel: A
Volts/Division: 2V
Time/Division: 5us

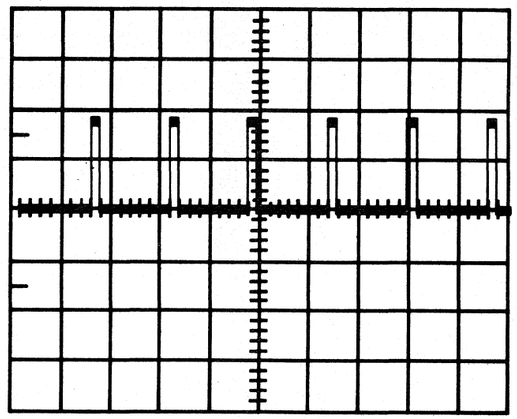

Figure 6-4D

Signal: RDSR
Channel: A
Volts/Division: 2V
Time/Division: 5us

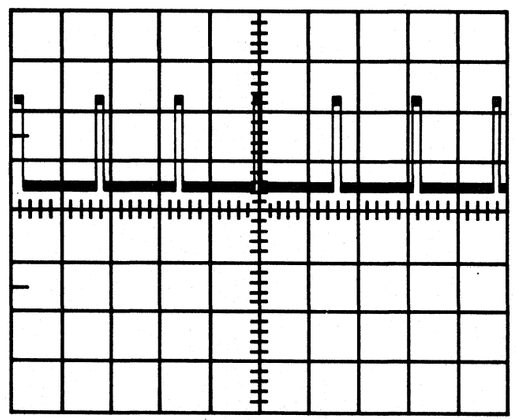

Figure 6-4E

Signal: BITCLK
Channel: A
Volts/Division: 2V
Time/Division: 200ns

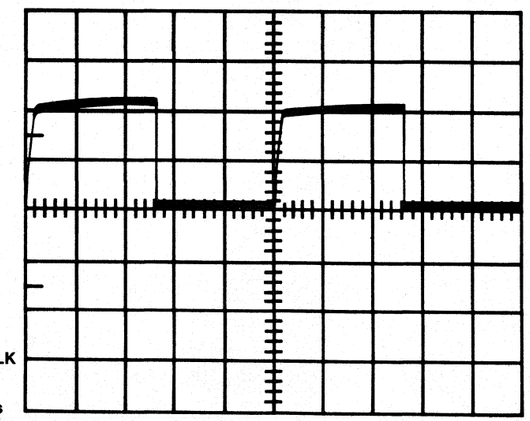

Figure 6-4F

Figure 6-4. Signal Illustrations (6-4A thru 6-4F)

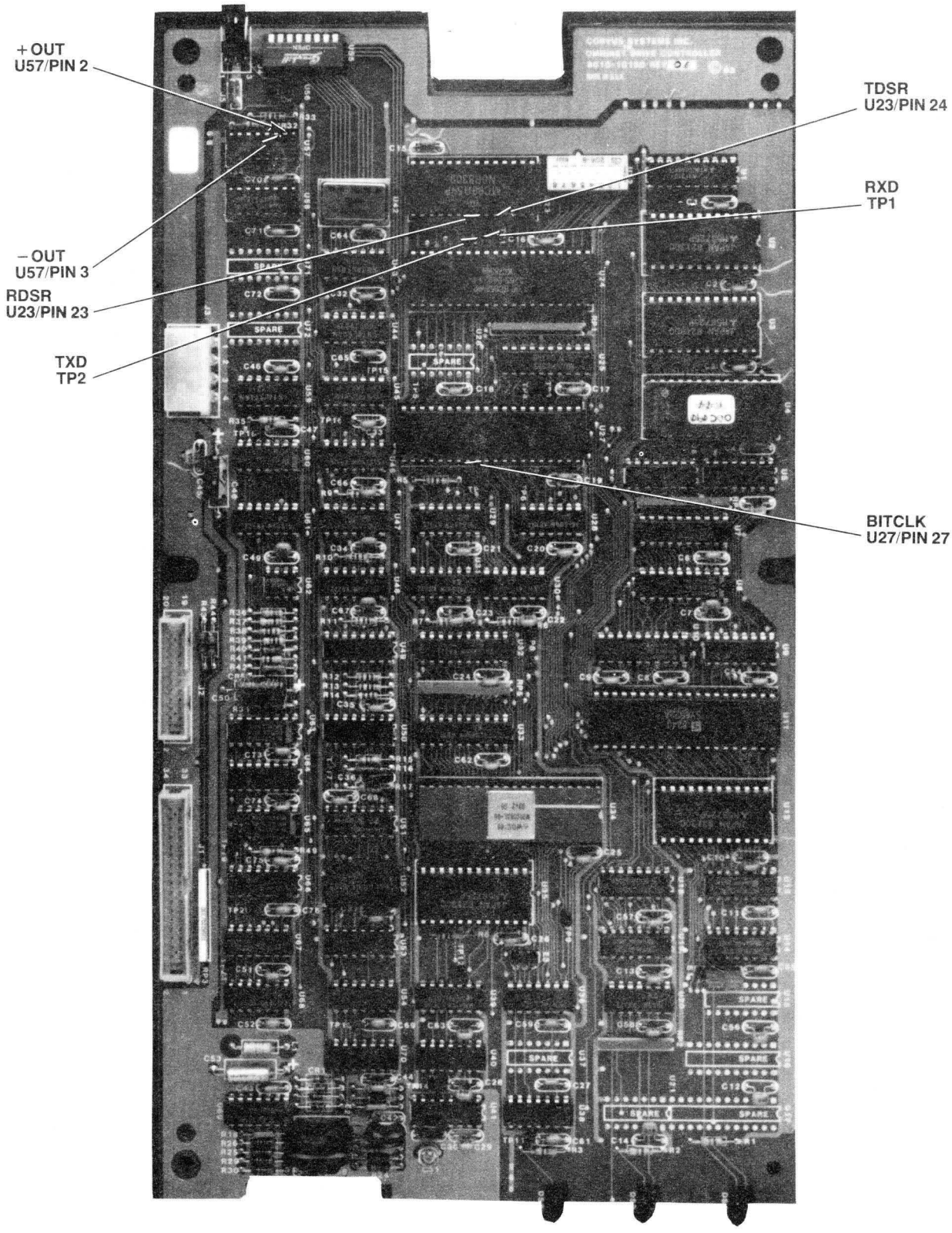

Figure 6-5. Controller PCA Test Points (6-4A thru 6-4F)

Signal: EIN
Channel: A
Volts/Division: 2V
Time/Division: 200ns

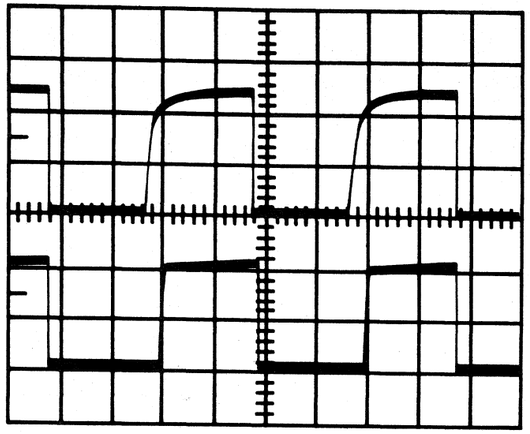

Signal: EOUT
Channel: B
Volts/Division: 2V
Time/Division: 200ns

Figure 6-6A

Signal: XTAL2
Channel: A
Volts/Division: 2V
Time/Division: 100ns

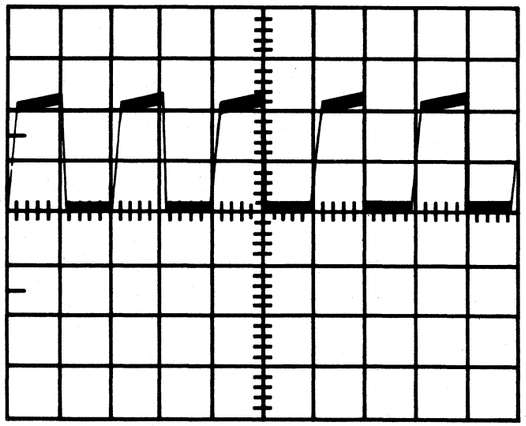

Figure 6-6B

Signal: DMAREQ
Channel: A
Volts/Division: 2V
Time/Division: 200ns

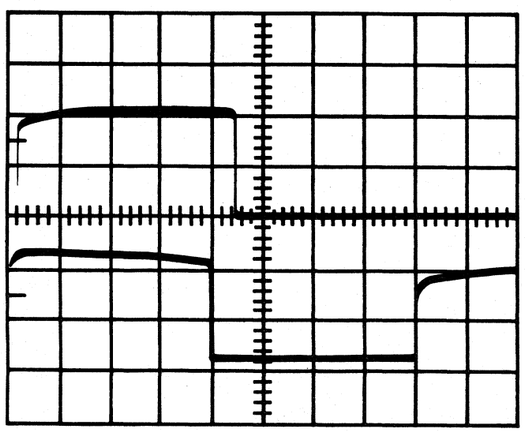

Signal: DMAGO
Channel: B
Volts/Division: 2V
Time/Division: 200ns

Figure 6-6C

Signal: STEP
Channel: A
Volts/Division: 2V
Time/Division: 10us

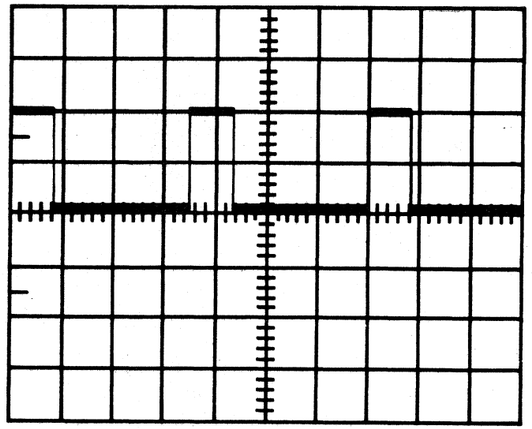

Figure 6-6D

Signal: IND
Channel: A
Volts/Division: 2V
Time/Division: 2ms

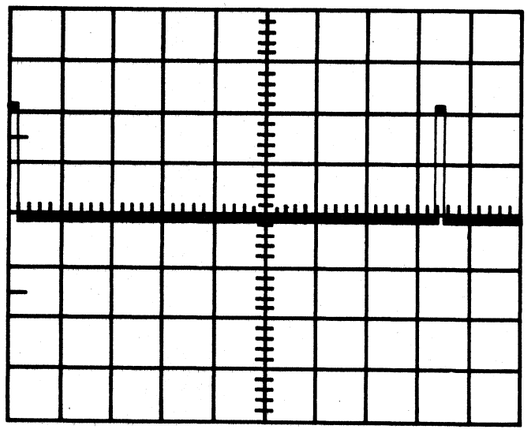

Figure 6-6E

Signal: DRUN
Channel: A
Volts/Division: 2V
Time/Division: 100ns

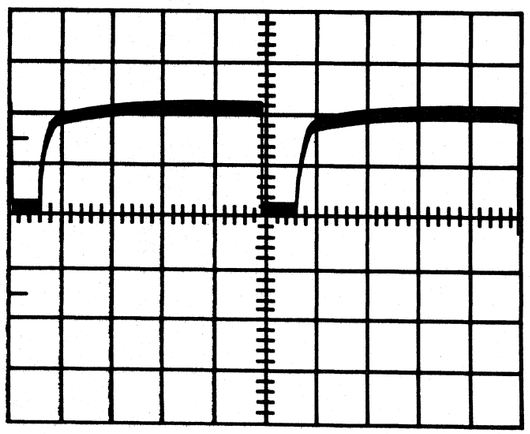

Figure 6-6F

Figure 6-6. Signal Illustrations (6-6A thru 6-6F)

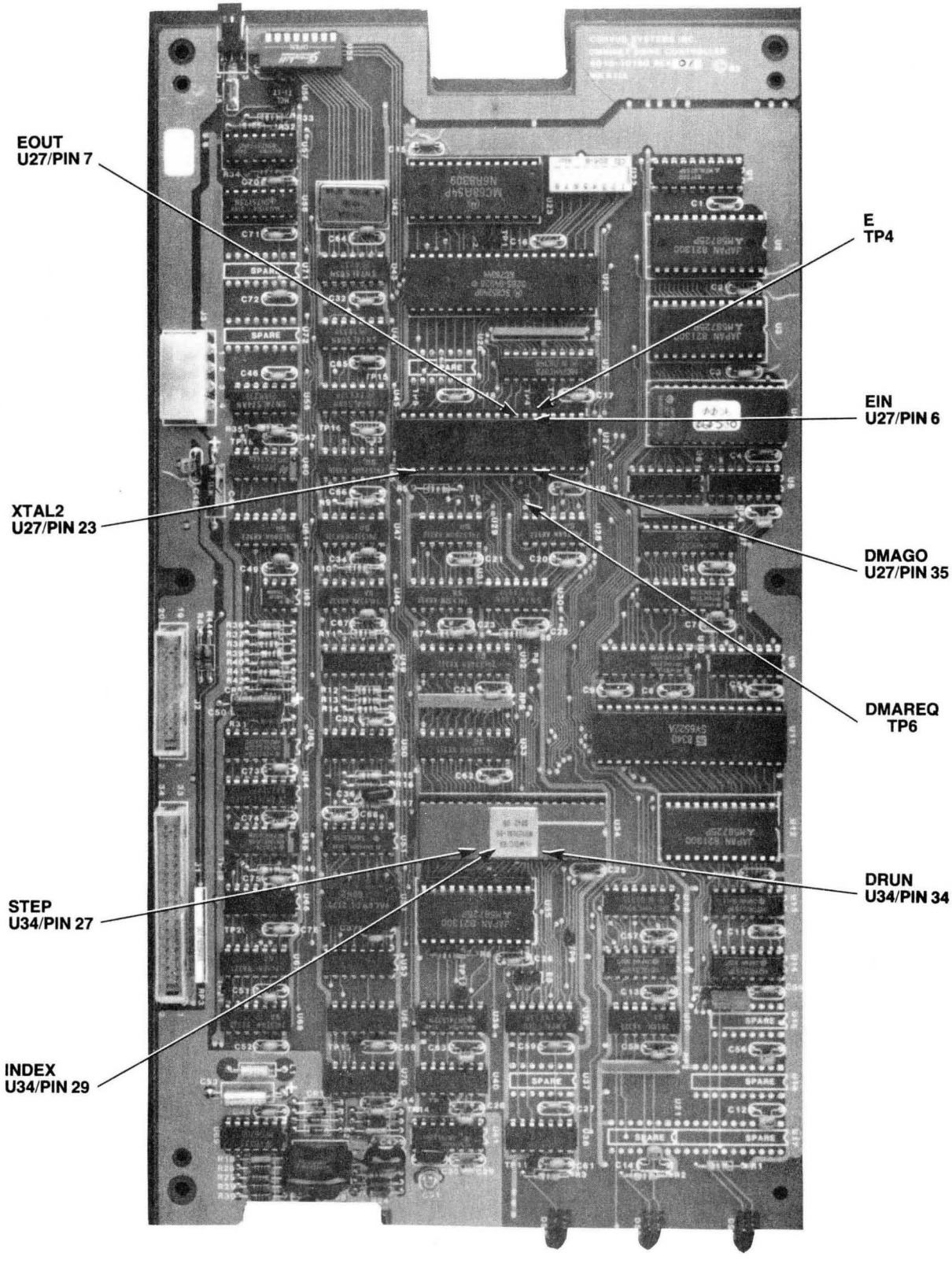

Figure 6-7. Controller PCA Test Points (6-6A thru 6-6F)

APPENDIX A
GLOSSARY

APPENDIX A
GLOSSARY OF TERMS

ADDRESS MARK DETECTOR—Checks the incoming data stream for missing clock. Patterns used in indentifying the start of ID and data fields.

ADLC—Advance Data Link Controller, used in OMNINET circuitry to format data to and from the line tranceivers.

BANK—A Corvus product which backs up network storage devices onto either 100 MB or 200 MB cartridge tape.

BIT—Single binary digit. Smallest representative unit of data, several of which make up characters (A-Z, 0-9, etc.). Bits may be either a one or a zero, on or off, set or reset. This may be shown by either a signal being present or not, or by a signal changing states or being constant.

BLOCK—A unit of storage space on a Corvus mass storage system equal to 512 bytes or 4K bits. Two thousand and forty-eight blocks equal one megabyte.

BOOT—Short for bootstrap, the procedure which loads the operating system from a storage device into a computer.

BRAKE OR SOLENOID BRAKE—Immediately after power down, this mechanism engages, so as to minimize contact time between heads and disk surface, and brings the platters to a stop.

BUFFER—Temporary storage used to compensate for a difference in the rate of data flow or time in the occurrence of an event.

BYTE—8 bits of data.

CONSTELLATION II—Also written as Constellation or Const II, network software managing a number of users and computers and their access to one or more Corvus mass storage systems.

CRC—Cyclic Redundancy Check. An error detection method in serial data handling systems.

CSMA—Carrier Sense Multiple Access. A collision avoidance method which senses for network activity prior to data transmission.

CYLINDER—Vertically aligned tracks on all platter surfaces.

DEFAULT—A value the computer automatically assumes if no other value is specified.

DESPOOL—Method of transferring a file from the PIPES volume to a user's console, a file of his own or a printer.

DIP SWITCHES—Dual Inline Packaged switches. These two-position switches are used to set operational parameters such as the network address of a device or the drive size.

DIRECTORY—A list of files on a specific volumes.

DIRECT MEMORY ACCESS (DMA)—The ability to read or write data to a disk without involving the Central Processing Unit (CPU). In a network environment, the Transporter circuitry takes temporary control of the host bus and directly reads or writes to a location in host memory without host processor intervention.

DISK SERVER—Device which interfaces Winchester disk to and from the Omninet network.

DOWN-LOAD—The transfer of code from a host system to a target system. In an OmniDrive system, code is downloaded from the host computer to the drive Controller RAM to be executed by the Controller processor.

FILE—A collection of data.

FIRMWARE—Programs stored in read-only memory devices. Corvus Controller Firmware resides on the first four tracks of OmniDrives.

FLOWCHART—Algorithmic chart depicting logical sequences used in this manual for troubleshooting procedures.

H-SERIES—A line of Corvus drives using 5¼" Winchester disk technology with 6-MB, 12-MB and 18-MB capacities.

HDA—Hard Disk Assembly or sealed Winchester drive mechanism.

INDEX DETECTOR—A sensor which monitors the the index tab of the spindle motor to determine the RPM of a drive.

INTERLEAVING SPECIFICATION—Dictates the number of sectors which will be skipped between reads and writes on a disk platter.

K—Short for kilo or 1000. In terms of computer storage, 1024.

LINE CONDITIONER—Device positioned on incoming AC line to filter high and low voltage spikes to provide noise-free power.

LSI—Large Scale Integration. An IC manufacturing technology which allows thousands of gates to be contained on a single silicon wafer.

MAGNITUDE COMPARATOR—Comparator internal to the Western Digital Winchester controller (WD 1010) which calculates drive step, direction, present and target track position.

MASTER ELECTRONICS PCA—Printed circuit board used within a Rodime Winchester disk drive to control reading/writing, head selection, fault detection, and stepper motor control.

MB—Short for megabyte, one million bytes.

MFM (Modified Frequency Modulation)—Analog representation of data used by storage devices.

MIRROR—Corvus device which changes data to a video format for the purpose of backing up data to a video cartridge.

MIRROR SERVER—A Corvus product which backs up network storage devices onto video cassettes.

MOS—Metal Oxide Semiconductor.

MOTOR CONTROL PCA—Printed circuit board responsible for monitoring the spindle motor speed and adjusting this as necessary.

MULTIPLEXER—Corvus' original networking system. Also referred to as Constellation.

NETWORKING—The ability to connect multiple microcomputers to each other or to one or more mass storage devices and allowing the sharing of peripheral devices.

NRZ (Non-Return to Zero)—Digital representation of information used by microprocessors.

OMNINET—Corvus' present local area network system.

PRINTED CIRCUIT ASSEMBLY (PCA)—A Printed Circuit Board completely assembled with components.

PIPE—A volume on a disk primarily used as a FIFO (First In First Out) buffer for Spooling and Despooling within a network.

PLA—Programmable Logic Array within the WD1010 Winchester Controller IC which controls the flow of data, recognizes and processes commands from the 6801-1 controller.

PROM—Programmable Read Only Memory. A device which has read only functions and usually contains boot codes and parameters used in start up processes. This device can be reprogrammed by first erasing it using either ultraviolet light or an electrical pulse.

PROTOCOL—Software and hardware communication specifications.

READ/WRITE PCA—The printed circuit board assembly responsible for changing the data received from the heads in MFM format and amplifying and shaping the data signal before passing it on to the Controller circuitry for manipulation.

ROM—Read Only Memory. A device which has read only functions and usually contains boot code and parameters used in start up processes. This device may only be programmed once.

SEMAPHORES—Flags or signals generally used to prevent two or more users from changing data at the same time.

SERVER—A network device linking the network and other devices, such as printers, which perform specific tasks.

SPARED TRACKS—Tracks no longer used because defects were found on them.

SPOOLING—A method of sharing information among users by temporarily sending a file to a storage area. Corvus software lets network stations spool files to a PIPES volume. A user may then retrieve the information by despooling.

STEPPER MOTOR—Four phase motor which is controlled by the WD 1010 Winchester Controller and positions the read and write heads to appropriate tracks.

SYSGEN—Short for system generation, a process which must be performed prior to using the system. This process structures the system to accept volumes according to the requirements of a particular operating system.

TAP BOX—Device used for connecting Omninet network devices to the network trunk cable.

TASK FILE—Registers within the WD 1010 Winchester Controller which specify which track sector is read from or written to. They can be directly accessed by the 6801 micoprocessor.

TRACKS—Concentric circles on a disk platter within which data can be magneticly written to or read from by the read/write heads.

TRANSPORTER—Hardware interface to and from the Omninet Local Area Network.

TRUNK CABLE—Cable which is used as the common bus for connecting Omninet network devices.

UTILITY SERVER—A Corvus device which permits sharing printers on an Omninet network.

VCO—Voltage Controlled Oscillator circuit in the OmniDrive Controller PCA which is an analog circuit which synchronizes the read/write clock with the incoming data stream.

VERSION—A number used to identify the individual releases of equipment and software. Version numbers may vary, though the function of each product remains basically the same.

VOLUME—An area of the Corvus system formatted for a particular operating system.

WD 1010—Western Digital IC designed for controlling Winchester disk drive mechanisms.

APPENDIX B
OMNIDRIVE SPARES LIST

APPENDIX B
OMNIDRIVE SPARES LIST

DESCRIPTION	PART NO.	QUANTITY
16-MB Drive Mechanism	2200-04939	1
11-MB Drive Mechanism	2200-04938	1
5-MB Drive Mechanism	2200-04937	1
Drive-to-Controller Cable (20-pin)	8010-10365	1
Drive-to-Controller Cable (34-pin)	8010-10366	1
Ground Harness	8015-11404-01	1
Fan Harness	8010-10707	1
DC Harness	8010-10799	1
AC Harness	8010-10798	1
Convenience Connector	2100-05690	1
Mechanism Mounting Bracket	2400-04328	2
OmniDrive Bracket/Shield	2400-06175	1
Fan	2600-04961	1
AC Receptacle	2400-04323	1
Switching Power Supply	4000-05203	1
Controller PCA—Phase 2	8010-11180-02	1
Service Repair Tags	7200-04618	10
75174 Line Driver	3210-01271	1
75175 Line Receiver	3210-01272	1
MC68A54 ADLC	3210-01274	1
58725 2K x 8 Static RAM	3250-01458	4
6801 T9.B OMNINET ROM	3265-04928	1
WD1010-5 Disk Controller	3265-04934	1
3131 OMNINET Monochip	8115-03023	1
6-32 x ½ Screw	2800-02666	10
6-32 x 5/16 with/Star Washer	2800-02764	10
Controller Standoffs	2850-04955	10
#6 Nylon Washers	2800-01197	10
AC Power Switch	5100-02420	1
Rubber Feet	2800-02283	10
6-32 Kepnut	2800-01188	10

APPENDIX C
OMNIDRIVE ASSEMBLY
DRAWINGS AND SCHEMATICS

REVISIONS				
PCO	REV	DESCRIPTION	DATE	APPROVED
	01	PRE-PROD	5-3-83	
		UPDATE	5-23-83	
	02	CHNGS + ADDITIONS	6-29-83	
	03	ENG CHG	8-12-83	
	04	ENG UPDATE (SHT. 2 OF 4)	9-26-83	
	05	ENG CHG MCO # 134	10-25-83	
	06	ENG CHG. MCO #167	1-18-84	
1336	07	REL TO PRODUCTION	4-19-84	
1355	B	REVISED PER ECN.	5-1-84	

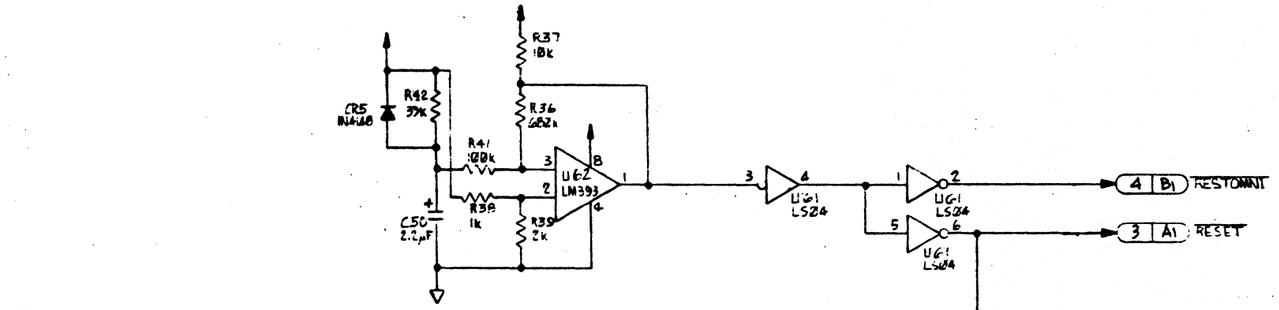

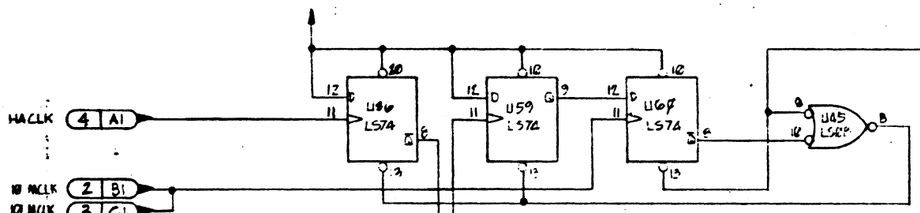

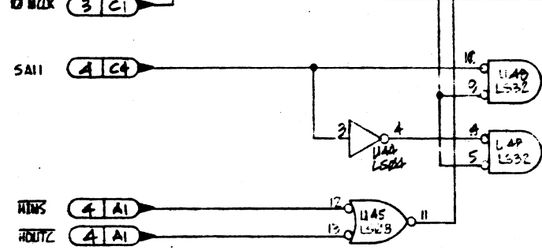

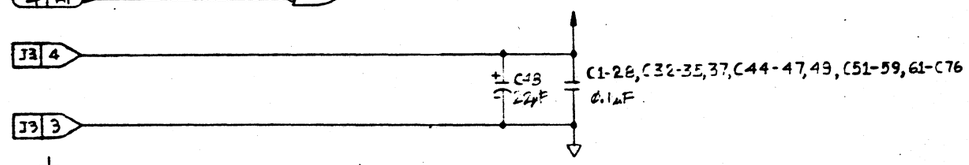

9. DENOTES EARTH GND.

8. DENOTES ANALOG GND.

7. DENOTES LOGIC GND

6. 2 A1 — SHEET NO. / SHEET ZONE; DENOTES SHEET-TO-SHEET DESIGNATOR; DIRECTION (NO ARROWHEAD DENOTES BI-DIRECTIONAL)

5. DENOTES +5V

4. ALL RES. ARE 5%, 1/4 WATT

3.

PIN 20	OF ALL	20-PIN IC	IS VCC
PIN 10	OF ALL	20-PIN IC	IS GND
PIN 16	OF ALL	16-PIN IC	IS VCC
PIN 8	OF ALL	16-PIN IC	IS GND
PIN 14	OF ALL	14-PIN IC	IS VCC
PIN 7	OF ALL	14-PIN IC	IS GND

2. INSTALL ONE 0.1 CAP PER IC OF 20 PINS OR MORE

1. INSTALL ONE 0.1 CAP PER 2 IC'S OF 14 AND 16 PINS

NOTES (UNLESS OTHERWISE SPECIFIED):

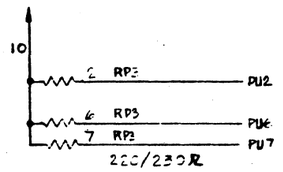

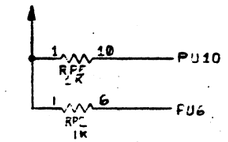

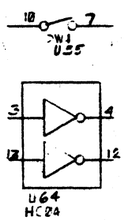

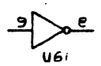

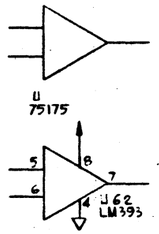

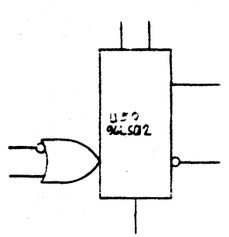

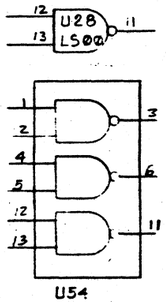

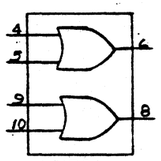

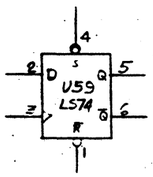

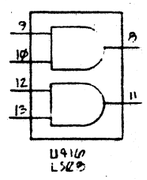

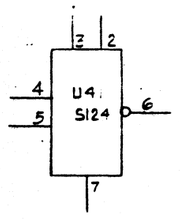

| | | | |

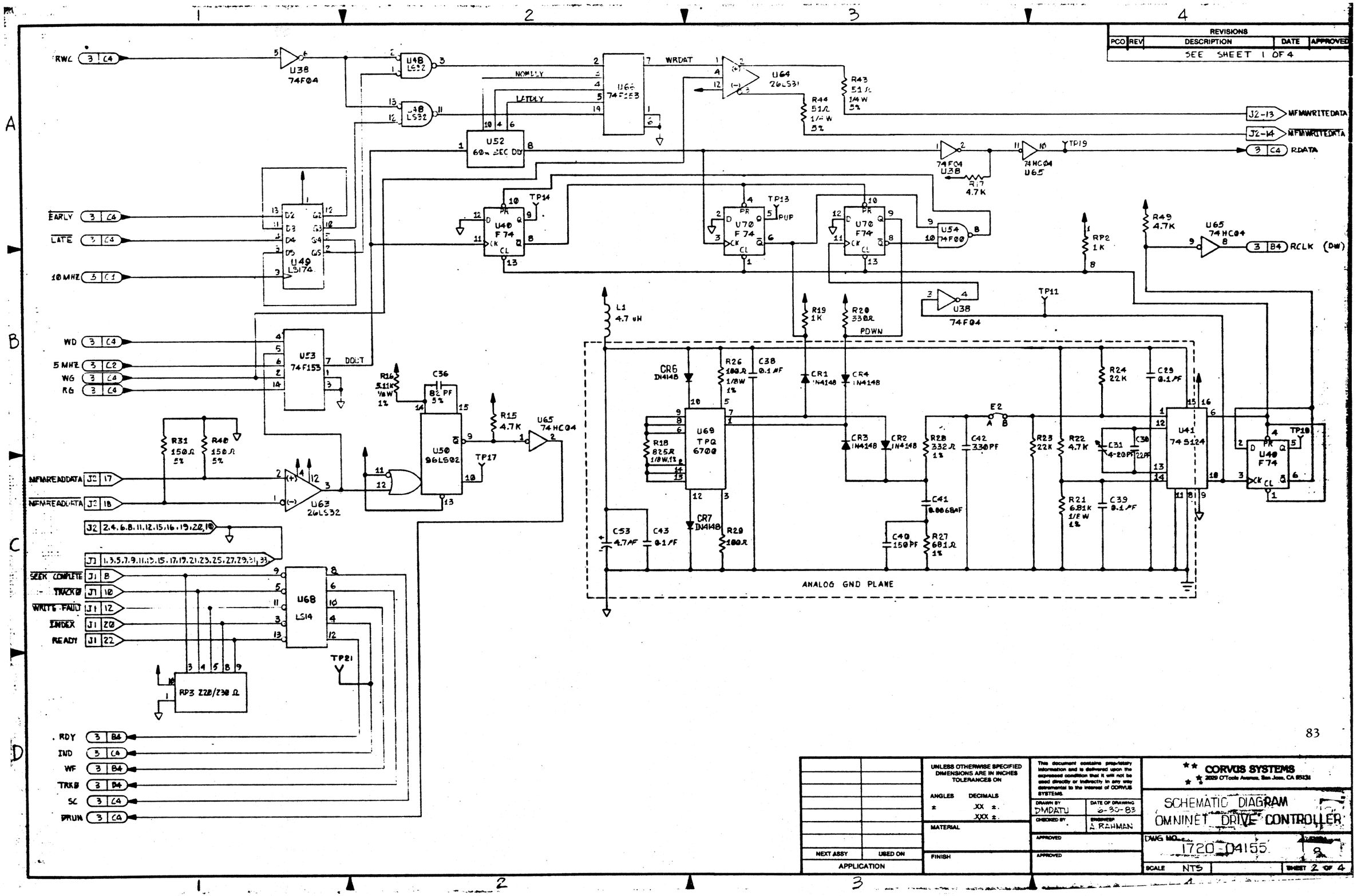
REVISIONS
PCO REV DESCRIPTION DATE APPROVED
SEE SHEET 1 OF 4
RWC
U38 74F04
U48 LS32
U48 LS32
NOMDLY
LATDLY
U66 74F153
WRDAT
U64 26LS31
R43 51Ω 1/4W 5%
R44 51Ω 1/4W 5%
J2-13 MFMWRITEDATA
J2-14 MFMWRITEDATA
U52 60n SEC DIV
74F04 U38
R17 4.7K
74HC04 U65
TP19
RDATA
EARLY
LATE
10MHZ
U49 LS174
U40 F74
TP14
U70 F74
TP13
PUP
U54 74F00
RP2 1K
R49 4.7K
U65 74HC04
RCLK (DW)
U38 74F04
TP11
WD
5MHZ
WG
RG
U53 74F153
DOUT
L1 4.7 uH
R19 1K
R20 330Ω
PDWN
CR6 IN4148
R26 100Ω 1/8W 1%
C38 0.1 μF
CR1 IN4148
CR4 IN4148
R24 22K
C29 0.1 μF
R16 5.11K 1/8W 1%
C36 82 PF 5%
R15 4.7K
U65 74HC04
U50 96LS02
TP17
R31 150Ω 5%
R40 150Ω 5%
MFMREADDATA
MFMREADDATA
U63 26LS32
U69 TPQ 6700
R18 825Ω 1/8W,1%
CR3 IN4148
CR2 IN4148
R28 332Ω 1%
C42 330PF
E2
R23 22K
R22 4.7K
C31 4-20PF
C30 22PF
U41 74S124
U40 F74
TP10
C41 0.0068μF
R21 6.81K 1/8W 1%
C39 0.1 μF
C53 4.7μF
C43 0.1 μF
CR7 IN4148
R29 100Ω
C40 150PF
R27 681Ω 1%
ANALOG GND PLANE
SEEK COMPLETE
TRACK0
WRITE FAULT
INDEX
READY
U68 LS14
TP21
RP3 220/230 Ω
RDY
IND
WF
TRK0
SC
PRUN
UNLESS OTHERWISE SPECIFIED DIMENSIONS ARE IN INCHES TOLERANCES ON
ANGLES ± DECIMALS .XX ± .XXX ±
MATERIAL
FINISH
NEXT ASSY USED ON
APPLICATION
This document contains proprietary information and is delivered upon the expressed condition that it will not be used directly or indirectly in any way detrimental to the interest of CORVUS SYSTEMS.
DRAWN BY DMDATU
DATE OF DRAWING 6-30-83
CHECKED BY
ENGINEER A. RAHMAN
APPROVED
APPROVED
CORVUS SYSTEMS
2029 O'Toole Avenue, San Jose, CA 95131
SCHEMATIC DIAGRAM
OMNINET DRIVE CONTROLLER
DWG NO. 1720-04155
SCALE NTS
SHEET 2 OF 4

REVISIONS				
PCO	REV	DESCRIPTION	DATE	APPROVED
		SEE SHEET 1 OF 4		

DMAREQ 4 A1
EOUT 4 A2
RESET 1 A3
DMAGO 4 A1
IN/OUT 4 A1
RSTRCVTR 4 D1
FAULT
READY
BUSY
CSVIA 4 D4
CSHT 1 B3
R/W 4 A1
E 4 D1
AD0-7 4 D4
A0-6 4 D4
5 MHZ 2 B1
10 MHZ 4 A1
10 MCLK 1 B1
10MCLK 2 B1
CSWD 4 D4
ENWDBUS 4 D1

4 B4 SA0-11
4 D4 DMAD0-7
1 B3 CSLO

2 D1 TRK0
2 D1 WF
2 D1 RDY
2 B4 RCLK
2 A4 RCLATA
2 B1 R0
2 D1 DRLN
2 A1 RWC
2 B1 WD
2 A1 EARLY
2 A1 LATE
2 D1 IND
2 D1 SC
2 B1 WG
J1 2 HEADSEL3/RWC
J1 26 DRVSEL
J1 30 WRITE GATE
J1 34 DIRECTION
J1 24 STEP
J1 14 HEADSEL0
J1 16 HEADSEL1
J1 4 HEADSEL2

U46 LS74
U44 LS04
U30 LS20
U47 LS125
U32 LS08
U29 LS08
U61 LS04
U14 LS157
U13 LS157
U19 LS157
U15 74HC4040
U16 6116 2K x 8
U35 6116 2K x 8
U38 74F04
U20 7406
U14 LS14
U39 LS32
U36 LS08
U33 5380 SCSI (ZMH3)
U44 LS04
U20 7406
U34 WD1010
U33 LS245
U35 LS245
U37 7406
U60 74LS74
U65 74HC04
U31 LS32
U29 LS08
U25 LS04
U28 LS04
U47 LS125
U44 LS04
U47 LS125
U57 LS75
U20 7406
U37 7406

RP1 1K
RP2 1K
RP3 470Ω
RP4 4.7K
RP5 4.7K
R1 470Ω
R2 470Ω
R5 1.7K
R6 1K
R7 1K
R8 1K
R9 1K
R10 1K
R11 1K
R12 1K
R13 1K
R14 1K
R15 1K

DS0 DS1 DS2 DS3

TP6 TP10 TP12 TP18 TP20 TP22 TP8 TP9

RST WDCMD

WDDEFSEL

NEXT ASSY	USED ON
APPLICATION	

UNLESS OTHERWISE SPECIFIED DIMENSIONS ARE IN INCHES TOLERANCES ON
ANGLES ± DECIMALS .XX ± .XXX ±
MATERIAL
FINISH

This document contains proprietary information and is delivered upon the expressed condition that it will not be used directly or indirectly in any way detrimental to the interest of CORVUS SYSTEMS

DRAWN BY DMD | DATE OF DRAWING 4-26-85
CHECKED BY | ENGINEER AE
APPROVED
APPROVED

CORVUS SYSTEMS
2029 O'Toole Avenue, San Jose, CA 95131

SCHEMATIC DIAGRAM
OMNINET DRIVE CONTROLLER

DWG NO. 1720-04155 REV 8
SCALE NTS
SHEET 3 OF 4

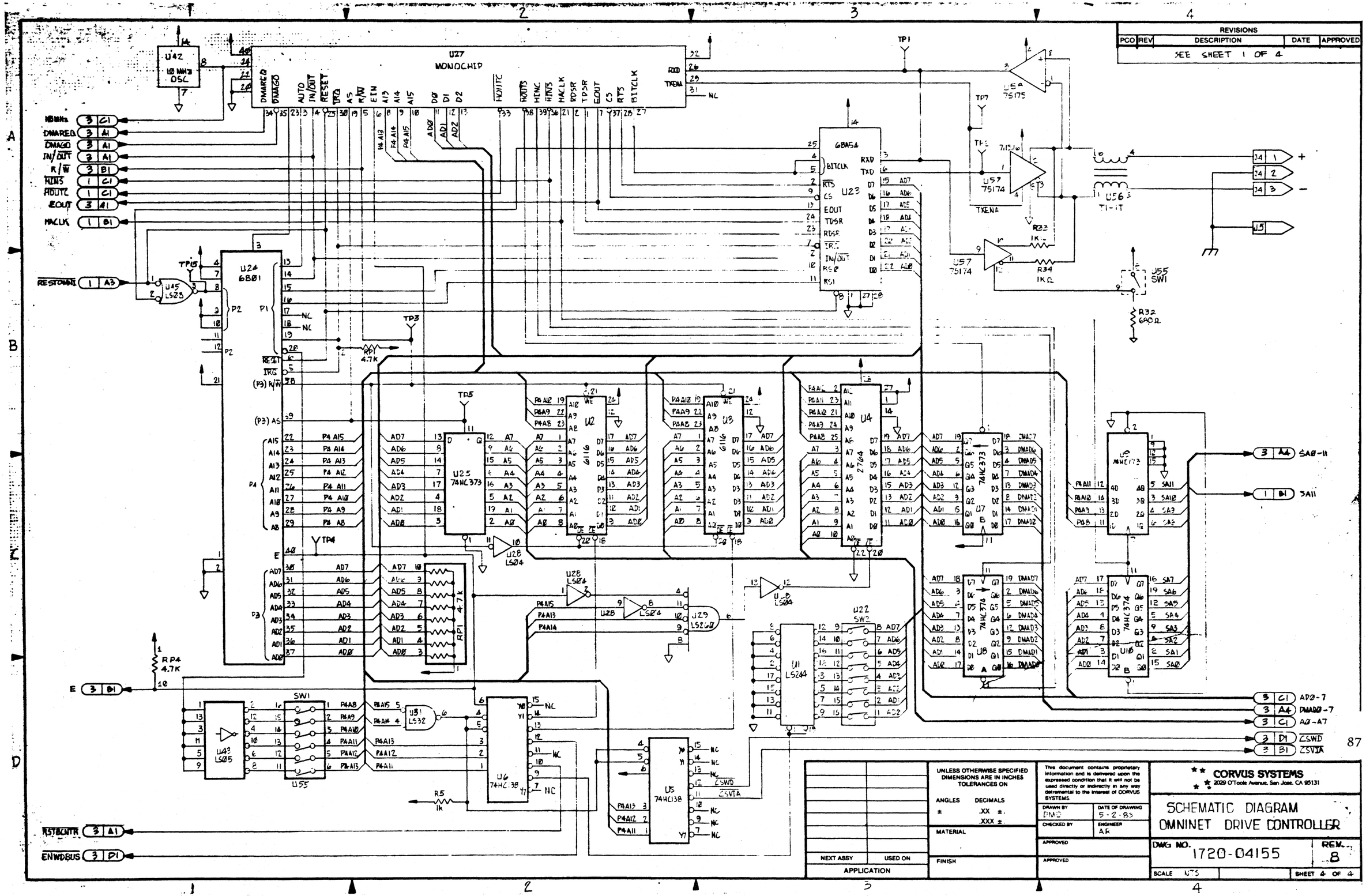

87

NEXT ASSY	USED ON	UNLESS OTHERWISE SPECIFIED DIMENSIONS ARE IN INCHES TOLERANCES ON	This document contains proprietary information and is delivered upon the expressed condition that it will not be used directly or indirectly in any way detrimental to the interest of CORVUS SYSTEMS	CORVUS SYSTEMS 2029 O'Toole Avenue, San Jose, CA 95131
APPLICATION		ANGLES ± DECIMALS .XX ± .XXX ±	DRAWN BY DMD DATE OF DRAWING 5-2-83	SCHEMATIC DIAGRAM OMNINET DRIVE CONTROLLER
		MATERIAL	CHECKED BY ENGINEER AR	DWG NO. 1720-04155 REV. 8
		FINISH	APPROVED	SCALE NTS SHEET 4 OF 4

CORVUS SYSTEMS INC.
OMNINET DRIVE CONTROLLER
8010-10160 REV [redacted] ©83
MADE IN U.S.A.

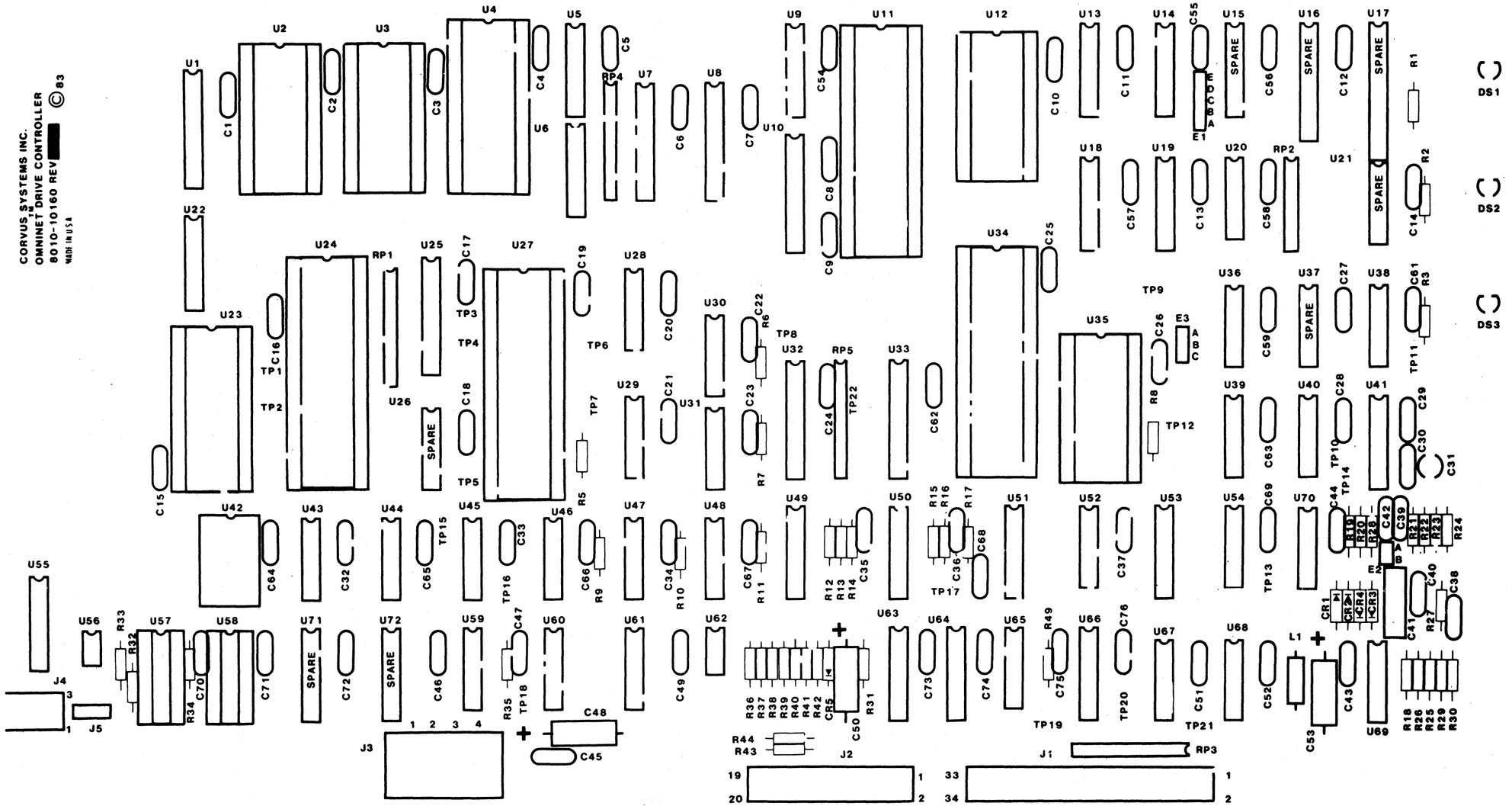

	CORVUS SYSTEMS
	OMNINET™ DRIVE CONTROLLER
	1740-04155 — 04
	DO NOT SCALE DWG — SHEET

REVISIONS				
PCO	REV	DESCRIPTION	DATE	APPROVED
1427	A	REL. FOR PROD.		

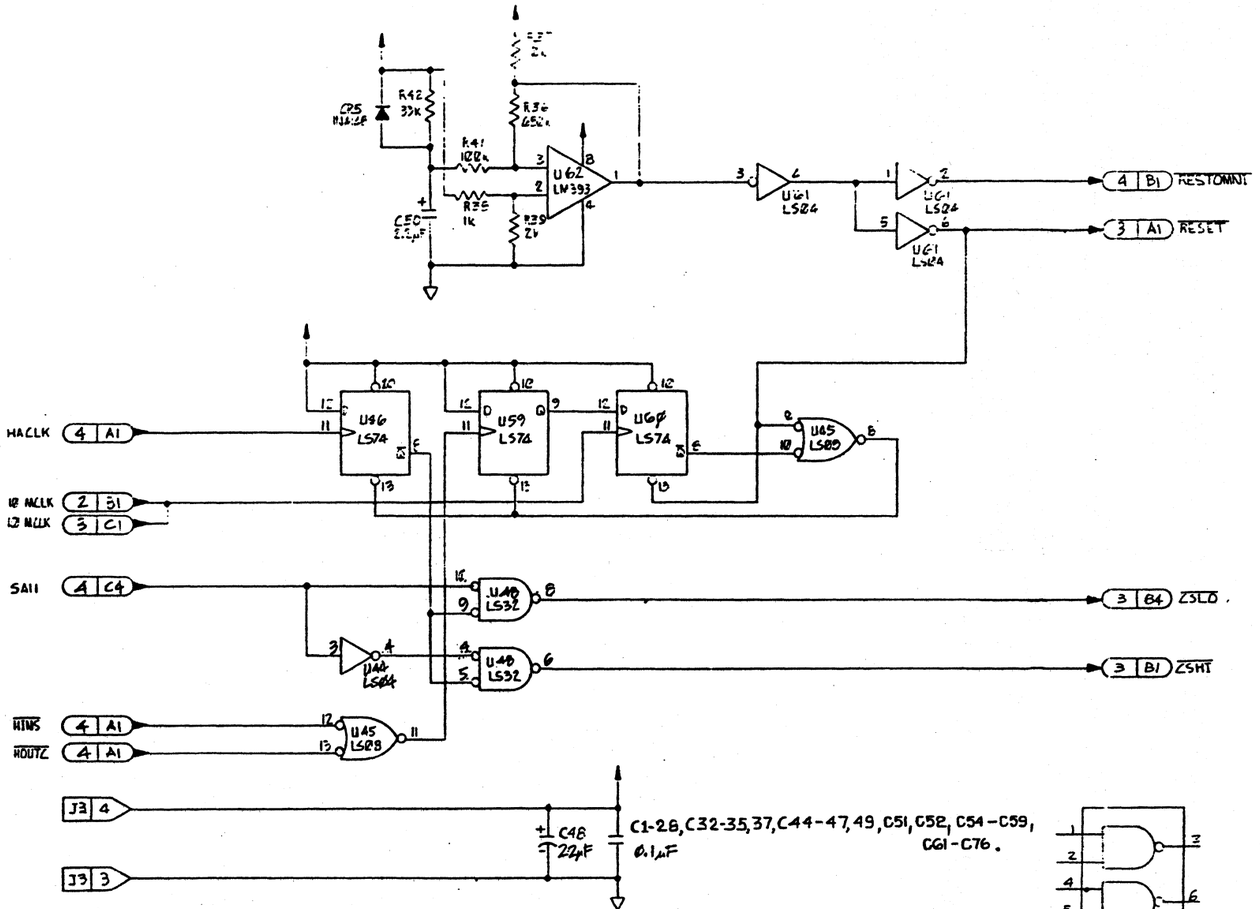

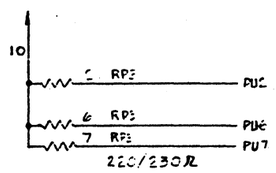

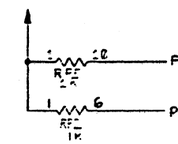

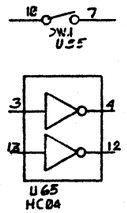

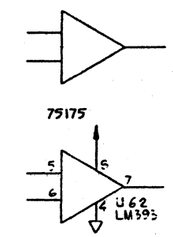

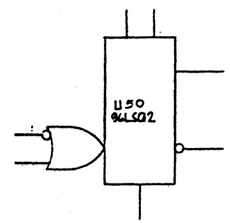

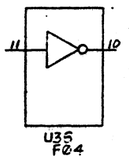

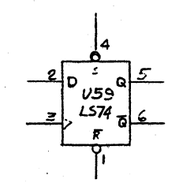

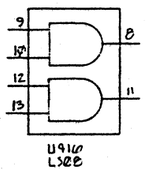

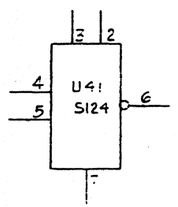

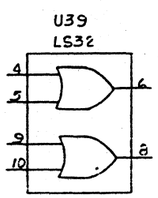

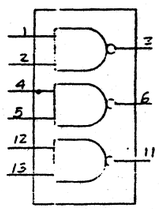

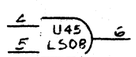

9. DENOTES EARTH GND.

8. DENOTES ANALOG GND.

7. DENOTES LOGIC GND

6. 2 A1 — SHEET NO. / SHEET ZONE — DENOTES SHEET-TO-SHEET DESIGNATOR / DIRECTION (NO ARROWHEAD DENOTES BI-DIRECTIONAL)

5. DENOTES +5V

4. ALL RES. ARE 5%, 1/4 WATT

3.

PIN 20	OF	ALL	20-PIN	IC
PIN 10	OF	ALL	20-PIN	IC
PIN 16	OF	ALL	16-PIN	IC
PIN 8	OF	ALL	16-PIN	IC
PIN 16	OF	ALL	16-PIN	IC
PIN 7	OF	ALL	16-PIN	IC

IS VCC
IS GND
IS VCC
IS GND
IS VCC
IS GND

2. INSTALL ONE 0.1 CAP PER IC OF 20 PINS OR MORE

1. INSTALL ONE 0.1 CAP PER 2 IC'S OF 14 AND 16 PINS

NOTES (UNLESS OTHERWISE SPECIFIED):

91

800-11180-01	OMNI DE CONT
NEXT ASSY	USED ON
APPLICATION	

UNLESS OTHERWISE SPECIFIED DIMENSIONS ARE IN INCHES TOLERANCES ON

ANGLES ± DECIMALS .XX ±. .XXX ±.

MATERIAL

FINISH

This document contains proprietary information and is delivered upon the expressed condition that it will not be used directly or indirectly in any way detrimental to the interest of CORVUS SYSTEMS

DRAWN BY VMD — DATE OF DRAWING 5-15-83

CHECKED BY — ENGINEER

APPROVED

APPROVED

CORVUS SYSTEMS
2029 O'Toole Avenue, San Jose, CA 95131

TITLE: OMNINET DRIVE CONTROLLER PHASE 2

REV: A

SCHEMATIC — 1720-05845

SCALE NTS — SHEET 1 OF 2

RELEASED JUN 29 1984

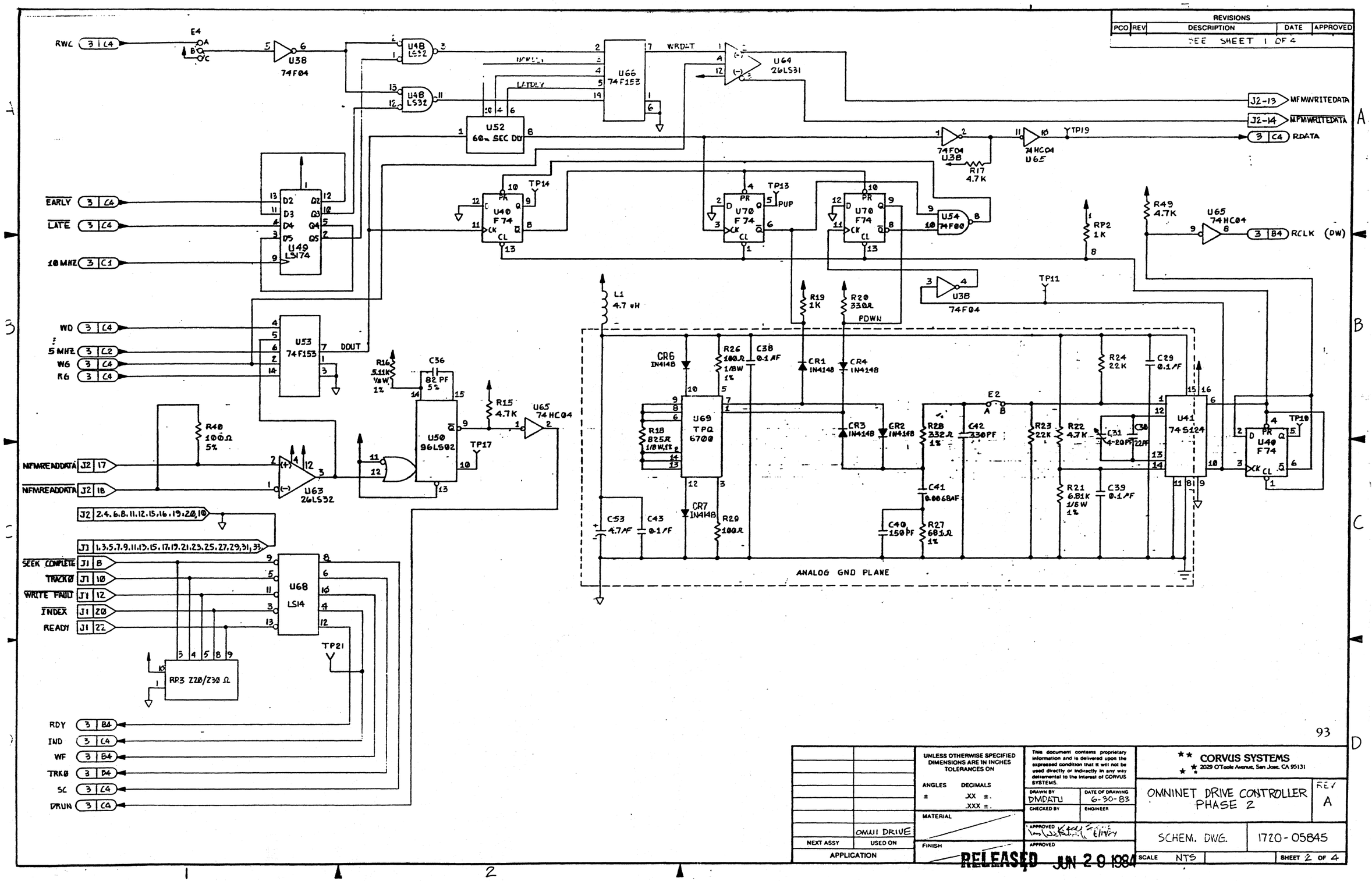

93

		UNLESS OTHERWISE SPECIFIED DIMENSIONS ARE IN INCHES TOLERANCES ON	This document contains proprietary information and is delivered upon the expressed condition that it will not be used directly or indirectly in any way detrimental to the interest of CORVUS SYSTEMS.	★★ CORVUS SYSTEMS ★★ 2029 O'Toole Avenue, San Jose, CA 95131
		ANGLES ± DECIMALS .XX ±. .XXX ±.	DRAWN BY DMDATU DATE OF DRAWING 6-30-83	OMNINET DRIVE CONTROLLER PHASE 2 REV A
		MATERIAL	CHECKED BY ENGINEER	
	OMNI DRIVE		APPROVED	SCHEM. DWG. 1720-05845
NEXT ASSY	USED ON	FINISH	APPROVED	
APPLICATION				SCALE NTS SHEET 2 OF 4

RELEASED JUN 29 1984

PCO	REV	DESCRIPTION	DATE	APPROVED
		SEE SHEET 1 OF 4		

(SEE SHT 1 OF 4)	
NEXT ASSY	USED ON
APPLICATION	

UNLESS OTHERWISE SPECIFIED DIMENSIONS ARE IN INCHES
TOLERANCES ON
ANGLES ± DECIMALS .XX ±. .XXX ±.
MATERIAL
FINISH

This document contains proprietary information and is delivered upon the expressed condition that it will not be used directly or indirectly in any way detrimental to the interest of CORVUS SYSTEMS.

DRAWN BY DMD — DATE OF DRAWING 4-20-83
CHECKED BY — ENGINEER AR
APPROVED
APPROVED

CORVUS SYSTEMS
2029 O'Toole Avenue, San Jose, CA 95131

TITLE: OMNINET DRIVE CONTROLLER PHASE 2
REV A
SCHEMATIC
1720-05845
SCALE NTS
SHEET 2 OF 4

RELEASED JUN 29 1984

REVISIONS				
PCO	REV	DESCRIPTION	DATE	APPROVED
		SEE SHEET 1 OF 4		

SWITCH CLOSE MEANS BIAS IS "ON"

SWITCH OPEN MEANS BIAS IS "OFF"

NEXT ASSY	USED ON
APPLICATION	

SEE SHT 1OF4

UNLESS OTHERWISE SPECIFIED DIMENSIONS ARE IN INCHES TOLERANCES ON

ANGLES ± DECIMALS .XX ±. .XXX ±.

MATERIAL

FINISH

This document contains proprietary information and is delivered upon the expressed condition that it will not be used directly or indirectly in any way detrimental to the interest of CORVUS SYSTEMS

DRAWN BY	DATE OF DRAWING
DMD	5-2-83
CHECKED BY	ENGINEER
	AR

APPROVED 6/14/84

APPROVED

RELEASED JUN 29 1984

CORVUS SYSTEMS
2029 O'Toole Avenue, San Jose, CA 95131

TITLE: OMNINET DRIVE CONTROLLER PHASE 2

REV: A

SCHEMATIC

1720-05845

SCALE NTS

SHEET 4 OF 4

97

ECN	ZONE	REV	DESCRIPTION	DATE	APPROVED
1427		A	RELEASED FOR PROD.	5-29-84	

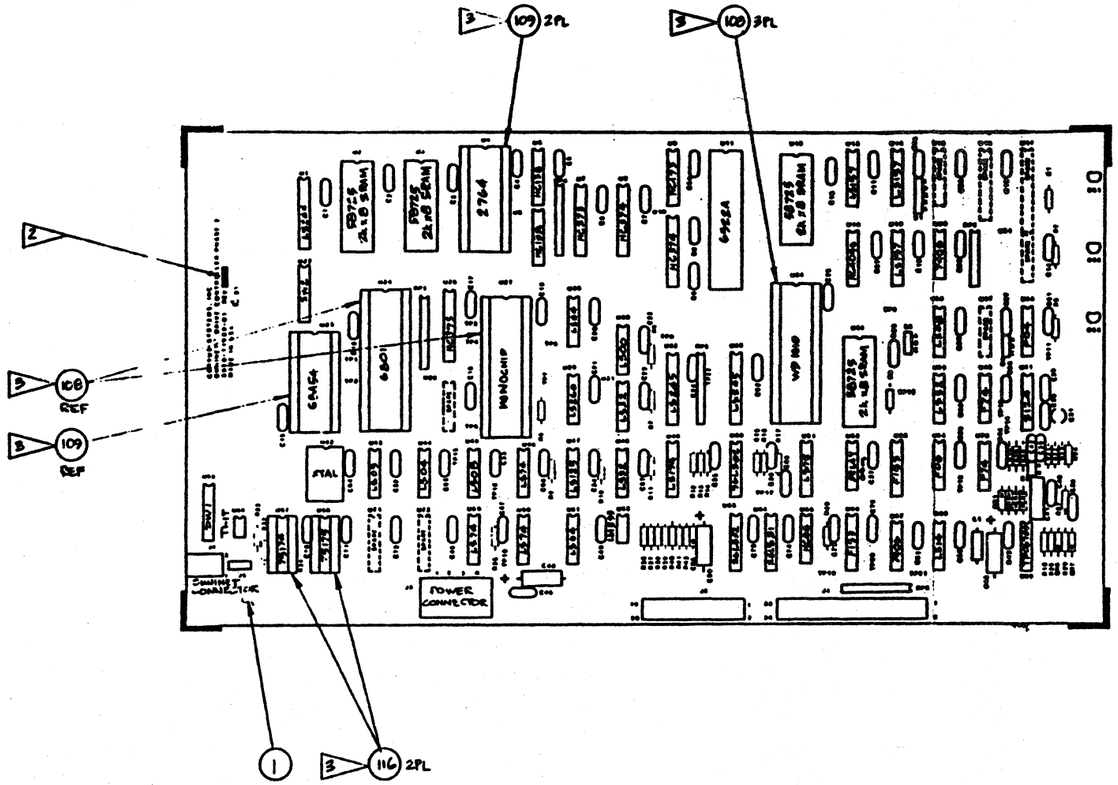

4. ASSEMBLY NUMBER IS 8010-11180-01.

3 SOCKETS TO BE INSTALLED DURING ASSY. DEVICES TO BE INSTALLED DURING TEST OR AFTER PROGRAMMING.

2 PERMANENTLY MARK CURRENT REVISION LEVEL WHERE SHOWN.

1. SQUARE PAD DENOTES PIN 1 OF IC AND CONNECTOR, POSITIVE END OF CAPACITOR, CATHODE END OF DIODE.

NOTES:

QTY	ITEM NO	PART NO	DESCRIPTION
			PARTS LIST

NEXT ASSY	USED ON
8010-11204-02	
-11205-02	
-11206-02	
-11207-02	
-11208-02	
-11209-02	
-11212-02	
-11213-02	OMNIDRIVE

APPLICATION

UNLESS OTHERWISE SPECIFIED DIMENSIONS ARE IN INCHES TOLERANCES ARE

ANGLES ± DECIMALS .XX ±. .XXX ±.

MATERIAL

FINISH

This document contains proprietary information and is delivered upon the expressed condition that it will not be used directly or indirectly in any way detrimental to the interest of CORVUS SYSTEMS

DRAWN BY DAVE DATLI DATE 5-25-84

CHECKED BY DATE

DESIGN ENGINEER DATE

MFG ENG JAMES WILLIAM DATE 6/20/84

APPROVED DATE 6/4/84

CORVUS SYSTEMS
2029 O'Toole Avenue, San Jose, CA 95131

PRINTED CIRCUIT ASSY, OMNINET DRIVE CONT. PHASE 2

SIZE D DWG NO. 8010-11180 REV A

SCALE 1/1 DO NOT SCALE DWG SHEET 1 OF 1

RELEASED 2 JUN 20 1984

List of Materials for Phase 1 OmniDrive Top Assembly

110v Units		220v Units	
8010-10835	5 MB	8010-10836	5 MB
8010-10837	11 MB	8010-10838	11 MB
8010-10839	16 MB	8010-10840	16 MB
8010-10845	45 MB	8010-10846	45 MB

Item	Description	Part Number	Quantity
1	Mechanism	See Note 1	1
2	Mechanism Mounting Bracket	2400-04328	2
3	Controller Standoffs	2850-04955	4
4	Top Cover	3150-04327	1
5	Controller PCA	8010-10160	1
6	Rubber Feet	2800-02283	4
7	Base Pan	3150-05779-01	1
8	Switching Power Supply	4000-05025	1
9	Not Available		
10	6-32 Kepnut	2800-01188	1
11	Nylon Washer	2800-01197	2
12	6-32 x 5/16 Screw	2800-02764	16
14	Ground Harness	8010-10689	1
15	Drive/Controller Cable (20-pin)	8010-10365	1
16	Drive/Controller Cable (34-pin)	8010-10366	1
17	DC Harness	8010-10356	1
18	Rear Panel Assembly	See Note 2	1
19	6-32 x ½ Screw	2800-02666	2
22	Not Available		
23	Not Available		
24	Not Available		

Note 1: Mechanism Part Number is dependent on capacity of OmniDrive.

2200-04937	5 MB
2200-04938	11 MB
2200-04939	16 MB
2200-05639	45 MB

Note 2: AC Panel Part Number is dependent on voltage of drive.

8010-10198	110v
8010-10339	220v

REVISIONS					
ECN	ZONE	REV	DESCRIPTION	DATE	APPROVED
1331		A	REL. FOR PROD.	4-12-84	DJW

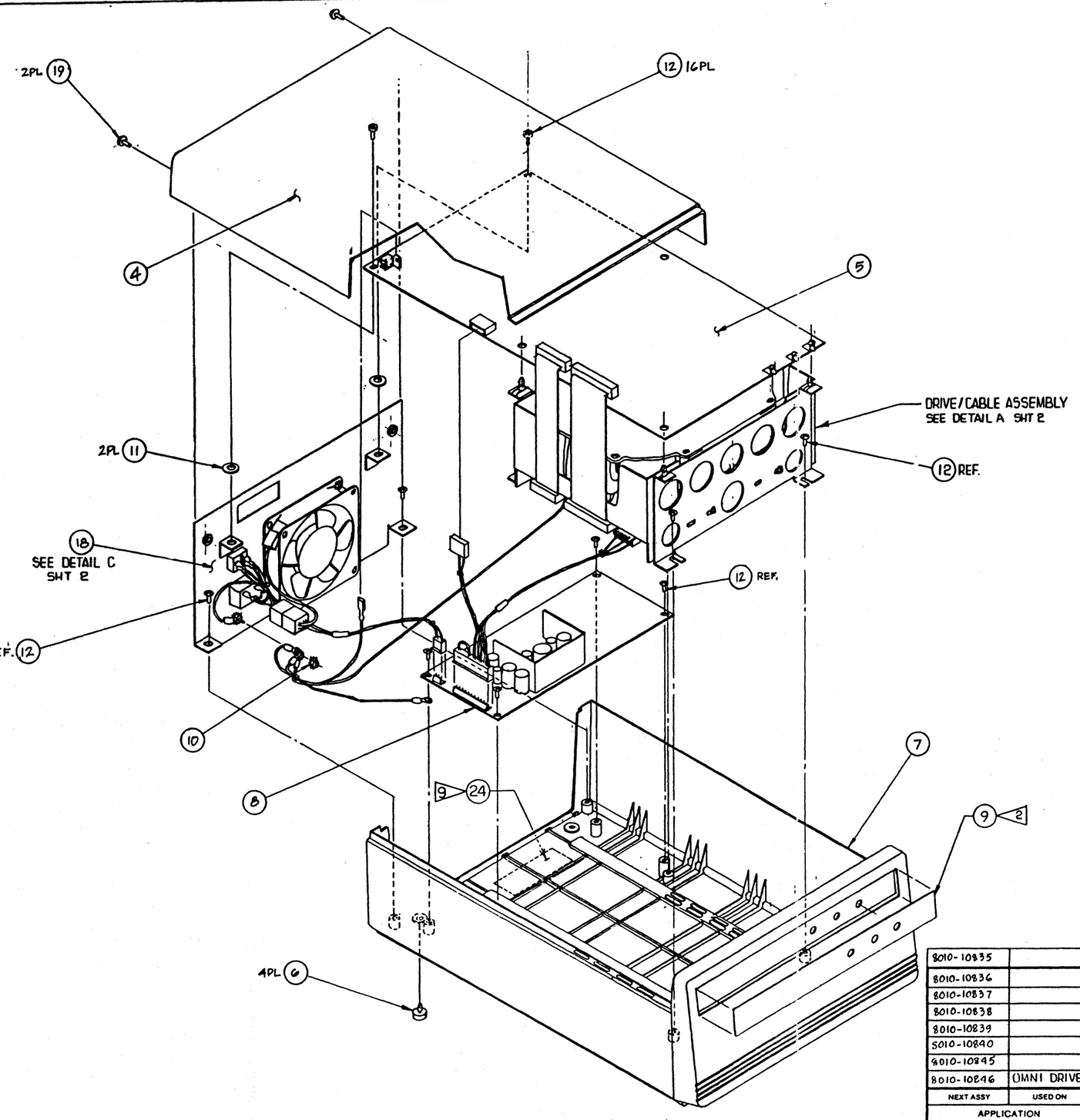

10 CENTER UL LABEL APPROX. WHERE SHOWN.

9 CENTER FCC LABEL APPROX. WHERE SHOWN (FAR SIDE).

8 ALTERNATE IMI GROUND TAB (NOT SHOWN) MAY FACE UP, IN THAT CASE GROUND CABLE TO PLUG FROM TOP.

7 DETAIL B REFLECTS A TYPICAL RODIME DRIVE POWER AND GROUND INTERCONNECT SCHEME.

6 DETAIL A REFLECTS A TYPICAL IMI DRIVE AND ITS INTERCONNECT SCHEME.

5 FOR OMNI DRIVE ASSEMBLY LM'S REFERING TO THIS DRAWING, SEE TABLE I SHT. 2.

4 ORIENT STANDOFFS WITH BOARD MOUNTING LATCH FACING THE REAR OF THE DRIVE AS SHOWN

3. FOR OMNI DRIVE SYSTEM WIRING DIAGRAM, SEE 1720-04155

2 CENTER OVERLAY IN RECESSED AREA.

1 CENTER MOUNTING SCREWS BY ADJUSTING BRACKET.

NOTES:

APR 2 ... 84

101

QTY	ITEM NO.	PART NO.	DESCRIPTION

PARTS LIST

NEXT ASSY	USED ON
8010-10835	
8010-10836	
8010-10837	
8010-10838	
8010-10839	
8010-10840	
8010-10845	
8010-10846	OMNI DRIVE

APPLICATION

UNLESS OTHERWISE SPECIFIED DIMENSIONS ARE IN INCHES TOLERANCES ARE

ANGLES ± DECIMALS .XX ±. .XXX ±.

MATERIAL

FINISH

This document contains proprietary information and is delivered upon the expressed condition that it will not be used directly or indirectly in any way detrimental to the interest of CORVUS SYSTEMS

DRAWN BY DAVE & HUY DATE 2-29-84

CHECKED BY DATE

DESIGN ENGINEER DAVE WILLHEIM DATE 4-16-84

MFG ENG DATE

APPROVED [signature] DATE 4/15/84

CORVUS SYSTEMS
2029 O'Toole Avenue, San Jose, CA 95131

REFERENCE DRAWING
OMNI DRIVE ASSEMBLY

SIZE D DWG NO. 1780-05674 REV A

SCALE NONE DO NOT SCALE DWG SHEET 1 OF 2

REV. A DWG NO. 1780-05674

REVISIONS					
ECN	ZONE	REV	DESCRIPTION	DATE	APPROVED
(SEE SHT 1 OF 2)					

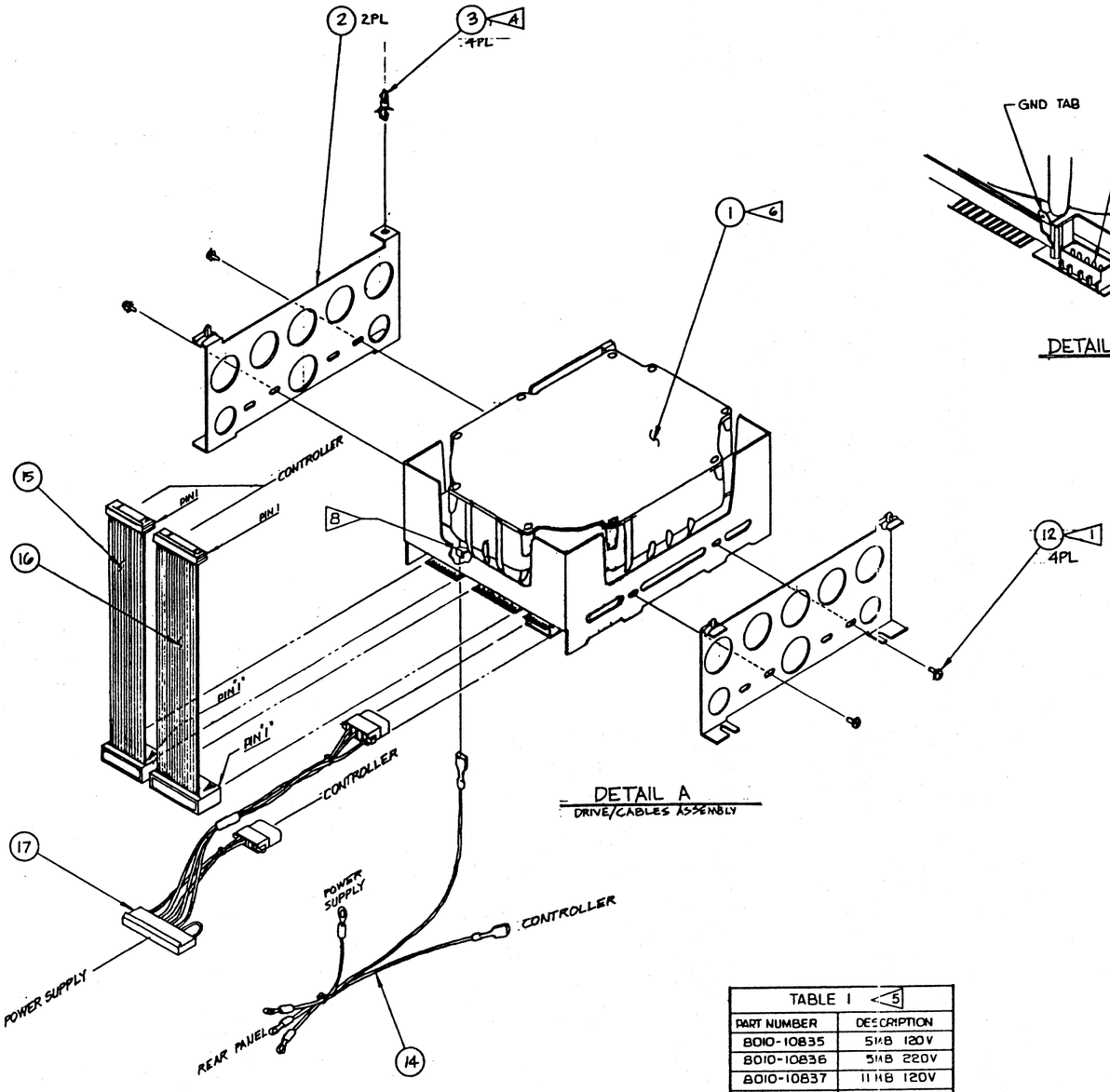

DETAIL A
DRIVE/CABLES ASSEMBLY

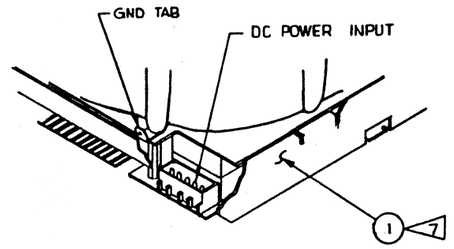

DETAIL B

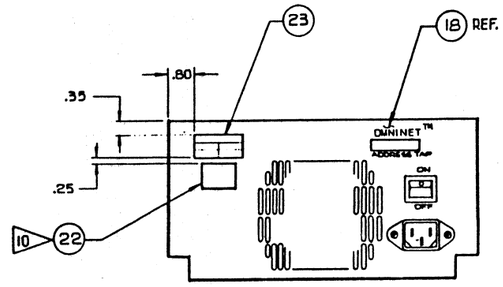

DETAIL 'C'
REAR PANEL LABELLING

TABLE I <5>	
PART NUMBER	DESCRIPTION
8010-10835	5MB 120V
8010-10836	5MB 220V
8010-10837	11MB 120V
8010-10838	11MB 220V
8010-10839	16MB 120V
8010-10840	16MB 220V
8010-10845	45MB 120V
8010-10846	45MB 220V

APR 2 [illegible]

RELEASED

SIZE	DWG NO	REV
D	1780-05674	A
SCALE NONE	DO NOT SCALE DWG	SHEET 2 OF 2

REV A DWG NO 1780-05674

List of Materials for Phase 1 OmniDrive Rear Panel

8010-10198 110v
8010-10339 220v

Item	Description	Part Number	Quantity
2	AC Switch	5100-02420	1
4	Fan	See Note 1	1
11	Not Available		
13	6-32 Kepnut	2800-01188	4
14	AC Receptacle	2100-05173	1
15	6-32 x ½ Screw	2800-02666	2
16	AC Input Harness	8010-10631	1
17	AC Distribution Harness	8010-10707	1

Note 1: Fan Part Number is dependent on voltage of OmniDrive.

2600-04961 110v
2600-04962 220v

REVISIONS					
ECN	ZONE	REV	DESCRIPTION	DATE	APPROVED
1331		A	REL. FOR PROD.	4-12-84	DJW

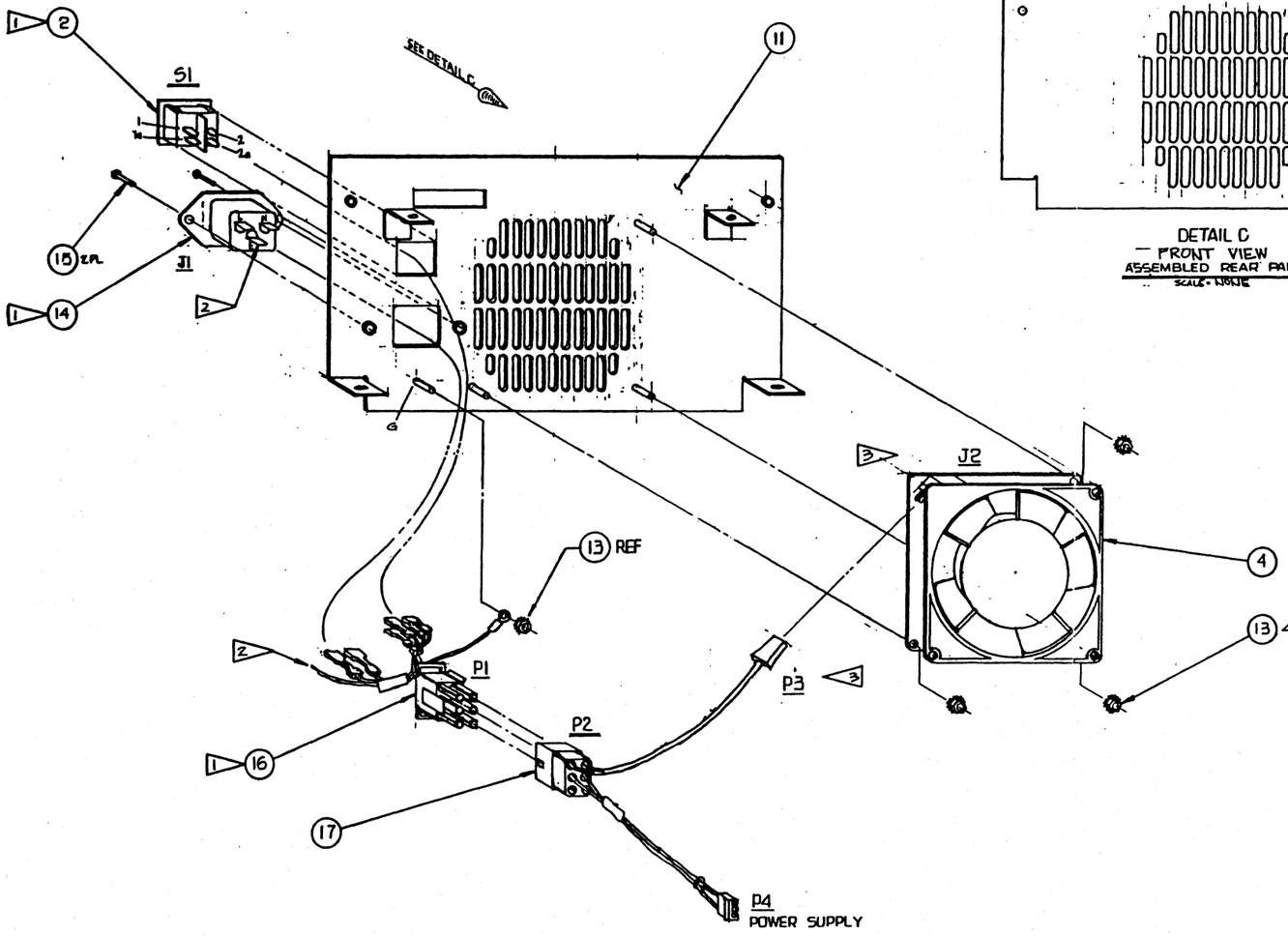

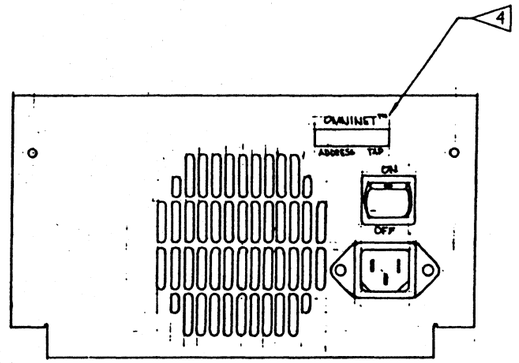

DETAIL C
FRONT VIEW
ASSEMBLED REAR PANEL
SCALE - NONE

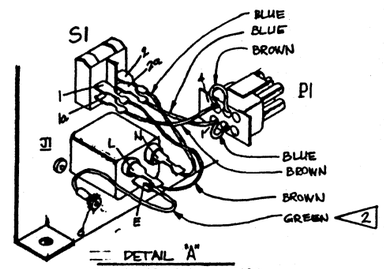

DETAIL "A"
MINI-MARKER AND TIE WRAPS OMITTED FOR CLARITY.

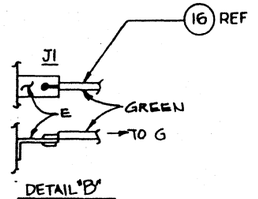

DETAIL "B"
P1-E SOLDER CONNECT.

DETAIL "D"

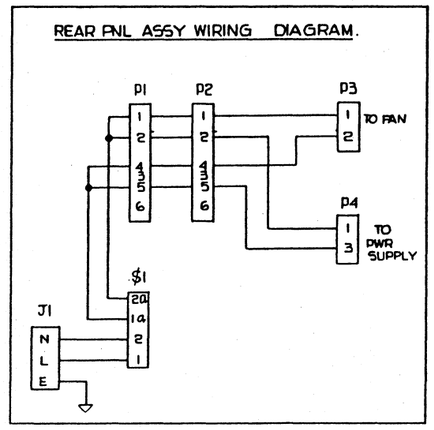

RELEASED

105

4 FOR SILKSCREEN REFERENCE P/N 1750-04323.
3 J2 AND P3 ARE NOT POLARIZED. CONNECTOR CAN BE REVERSED.
2 SEE DETAIL "B". FOR SOLDER CONNECTION.
1 SEE DETAIL "A". FOR HARNESS INSTALLATION DETAIL.

NOTES:

WIRE CONNECTION		
	P3	J2
	P1	P2
GREEN	J1 -E	G
BLUE	S1-2a	P1-1
BLUE	S1-2	J1 -L
BROWN	S1-1a	P1-4
BROWN	S1-1	J1 -L
COLOR	FROM	TO

APPLICATION	
8010-10835	
8010-10837	
8010-10839	
8010-10845	OMNI DRIVE
NEXT ASSY	USED ON

QTY	ITEM NO.	PART NO.	DESCRIPTION
PARTS LIST			

UNLESS OTHERWISE SPECIFIED DIMENSIONS ARE IN INCHES
TOLERANCES ARE
ANGLES ± DECIMALS .XX ±. .XXX ±.
MATERIAL
FINISH

This document contains proprietary information and is delivered upon the expressed condition that it will not be used directly or indirectly in any way detrimental to the interest of CORVUS SYSTEMS.

DRAWN BY	DAVE PATU	DATE 1-19-84
CHECKED BY		DATE
DESIGN ENGINEER	DAVE WILLHEIM	DATE 4-16-84
MFG ENG		DATE
APPROVED		DATE 4/17/84

CORVUS SYSTEMS
2029 O'Toole Avenue, San Jose, CA 95131

ASSEMBLY, REAR PANEL
OMNI DRIVE 120V

SIZE	DWG NO.	REV
D	8010-10198	A

SCALE NONE | DO NOT SCALE DWG | SHEET 1 OF 1

REVISIONS					
ECN	ZONE	REV	DESCRIPTION	DATE	APPROVED
1331		A	REL. TO PROD. Huy	4-11-84	DJW

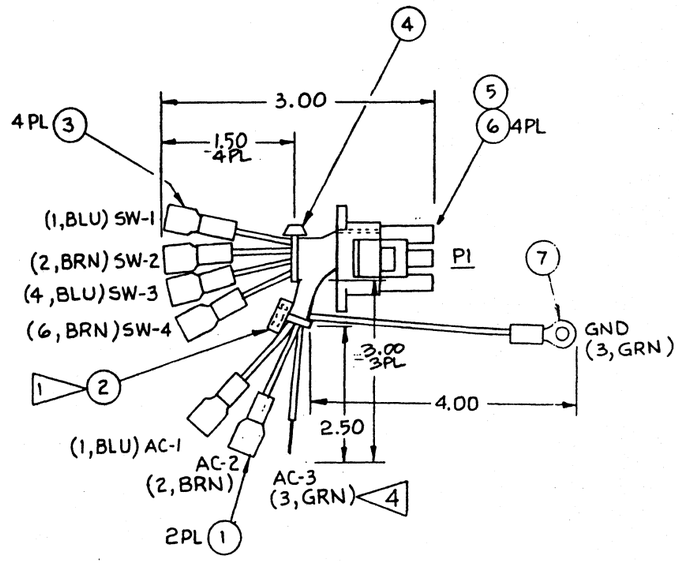

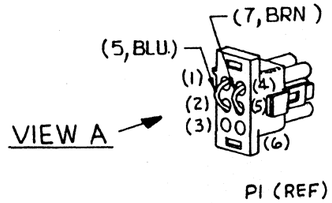

P1 (REF)

WIRE LIST						
WIRE NO.	ITEM NO.	COLOR	FROM	TO	FUNCTION	NOTES
1	10	BLU	AC-1	SW-1	NEUTRAL	
2	8	BRN	AC-2	SW-2	+120 V	
3	9	GRN	AC-3	GND	GND	
4	10	BLU	SW-3	P1-1	NEUTRAL	DOUBLE CRIMP
5	10	BLU	P1-2		NEUTRAL	
6	8	BRN	P1-4	SW-4	+120V	DOUBLE CRIMP
7	8	BRN		P1-5	+120V	

QTY	ITEM NO.	PART NO.	DESCRIPTION
6.75	10	6000-02229	WIRE, 18 AWG, BLU
6.25	9	6000-02228	WIRE, 18 AWG, GRN
6.75	8	6000-02224	WIRE, 18 AWG, BRN
1	7	2800-01131	LUG, RING, #6
4	6	2105-05176	SOCKET, 20-14 AWG
1	5	2100-05097	PLUG, 6 POS (UNIVERSAL MATE & LOCK)
1	4	2800-01452	CABLE TIE
4	3	2800-02090	FASTON, .187
1	2	2800-02036	CABLE TIE MARKER
2	1	2800-02331	FASTON, .250

PARTS LIST 107

4 STRIP WIRE END .50 INCH AND TIN.

3. WIRE TO BE UL 1430 OR EQUIV.

2. THIS HARNESS MAY BE USED AS A MANUFACTURING TOOL. ALL CHANGES MUST BE MADE TO SCALE. A FULL-SIZED PRINT MUST BE USED WHEN DRAWING IS TO BE USED AS A TOOL.

1 MARK ASSY. NO. & REV. LEVEL IN PERMANENT INK OF A CONSTRASTING COLOR APPROX. WHERE SHOWN.

NOTES:

8010-10198	
8010-10335	OMNI DRIVE
NEXT ASSY	USED ON
APPLICATION	

UNLESS OTHERWISE SPECIFIED DIMENSIONS ARE IN INCHES TOLERANCES ARE

ANGLES ± DECIMALS .XX ±.25 .XXX ±.

MATERIAL 3

FINISH

This document contains proprietary information and is delivered upon the expressed condition that it will not be used directly or indirectly in any way detrimental to the interest of CORVUS SYSTEMS.

DRAWN BY	Peter Rabin	DATE 11-8-83
CHECKED BY		DATE
DESIGN ENGINEER	DAVE WILLHOITM	DATE 4-6-84
MFG ENG		DATE
APPROVED	Tom Stockdale	DATE 4/19/84

★★ CORVUS SYSTEMS
★ 2029 O'Toole Avenue, San Jose, CA 95131

HARNESS ASSEMBLY, AC INPUT, OMNI DRIVE

SIZE	DWG NO.	REV
C	8010-10631	A

SCALE 1:1 | DO NOT SCALE DWG | SHEET 1 OF 1

REV A | DWG NO. 8010-10631

BRUNING 40-327

REVISIONS					
ECN	ZONE	REV	DESCRIPTION	DATE	APPROVED
1331		A	REL. TO PROD. Huy	4-11-84	DJW

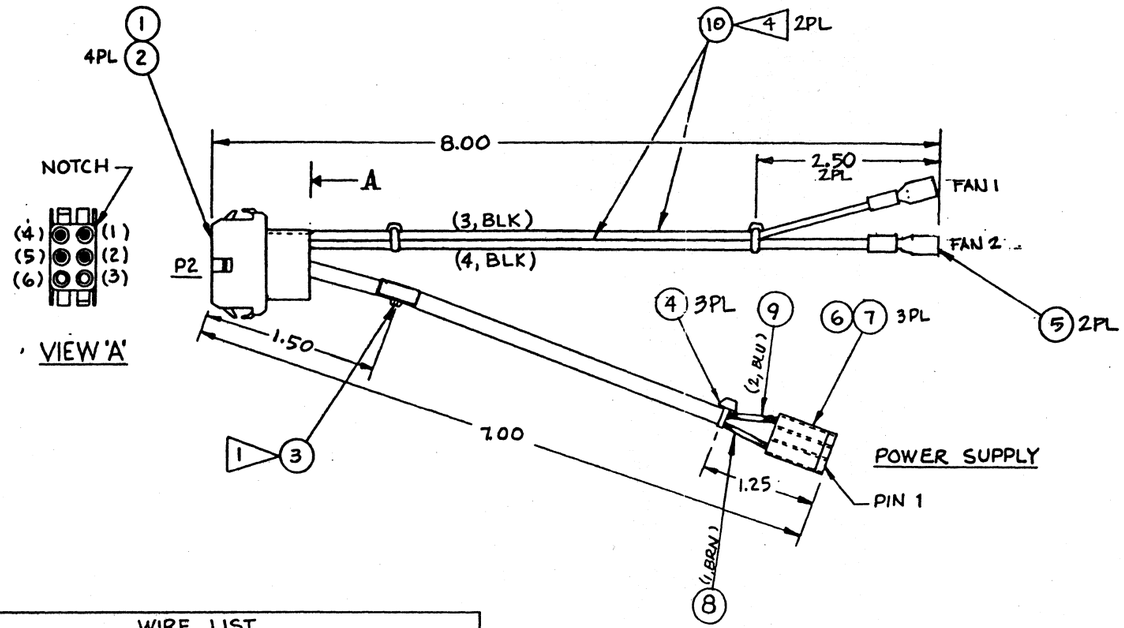

WIRE LIST						
WIRE NO.	ITEM NO.	COLOR	FROM	TO	CUT LENGTH	FUNCTION
1	8	BRN	P2-5	PS-1		+120 V
2	9	BLU	P2-2	PS-3		NEUTRAL
3	10	BLK	P2-1	FAN 1		NEUTRAL
4	10	BLK	P2-4	FAN 2		+120 V

RELEASED

QTY	ITEM NO.	PART NO.	DESCRIPTION
14.0"	10	6000-02223	WIRE, 18 AWG, BLK
6.0"	9	6000-02229	WIRE, 18 AWG, BLU
6.0"	8	6000-02224	WIRE, 18 AWG, BRN
3	7	2800-01132	CONTACT, 18-24 AWG
1	6	2100-01065	CONNECTOR, 3 POS
2	5	2800-05655	FASTON .110 x .020
3	4	2800-01452	CABLE TIE
1	3	2800-02036	CABLE TIE MARKER
4	2	2100-05096	PIN, 20-14 AWG
1	1	2100-05172	RECEPTACLE, 6 POS (UNIV. MATE & LOCK)

PARTS LIST

109

5. TIE WRAP DIMENSION TOLERANCE IS ±.50

4. FAN CORD POLARITY IS NOT CRITICAL, THE WIRES ARE REVERSIBLE. FAN WIRES TO BE TERMINATED AT ASSEMBLER'S DISCRECTION.

3. WIRE TO BE UL 1430 OR EQUIV.

2. THIS HARNESS MAY BE USED AS A MANUFACTURING TOOL. ALL CHANGES MUST BE MADE TO SCALE. A FULL-SIZED PRINT MUST BE USED WHEN DRAWING IS TO BE USED AS A TOOL.

1. MARK ASSY. NO. & REV. LEVEL IN PERMANENT INK OF A CONTRASTING COLOR APPROX. WHERE SHOWN.

NOTES:

NEXT ASSY	USED ON
8010-10198	
8010-10339	OMNI DRIVE

APPLICATION

UNLESS OTHERWISE SPECIFIED DIMENSIONS ARE IN INCHES TOLERANCES ARE

ANGLES ± DECIMALS .XX ±.25 .XXX ±.

MATERIAL 3

FINISH —

This document contains proprietary information and is delivered upon the expressed condition that it will not be used directly or indirectly in any way detrimental to the interest of CORVUS SYSTEMS.

DRAWN BY Peter Radis DATE 11-10-83
CHECKED BY DATE
DESIGN ENGINEER DAVE WILLHEIM DATE 4/16/84
MFG ENG DATE
APPROVED Jan Stockdale DATE 4/19/84

CORVUS SYSTEMS
2029 O'Toole Avenue, San Jose, CA 95131

HARNESS ASSEMBLY
AC DISTRIBUTION
OMNI DRIVE

SIZE C DWG NO. 8010-10707 REV A

SCALE 1:1 DO NOT SCALE DWG SHEET 1 OF 1

REV. A DWG NO. 8010-10707

BRUNING 40-522

WIRE CONNECTION CHART						
WIRE NO.	ITEM NO.	CLR	FROM	TO	CUT LENGTH	FUNCTION
1	5	BLK	P1-2	P1-5		+12V
2	7	YEL	P1-6	P2-1		+12V
3	6	RED	P1-8	P2-4		+5
4	6	RED	P1-9	P3-4		+5
5	5	BLK	P1-11	P2-2		GND
6	5	BLK	P1-12	P3-3		GND

REVISIONS					
ECN	ZONE	REV	DESCRIPTION	DATE	APPROVED
1331		A	PRODUCT RELEASED (Mal)	4-12-84	DJW

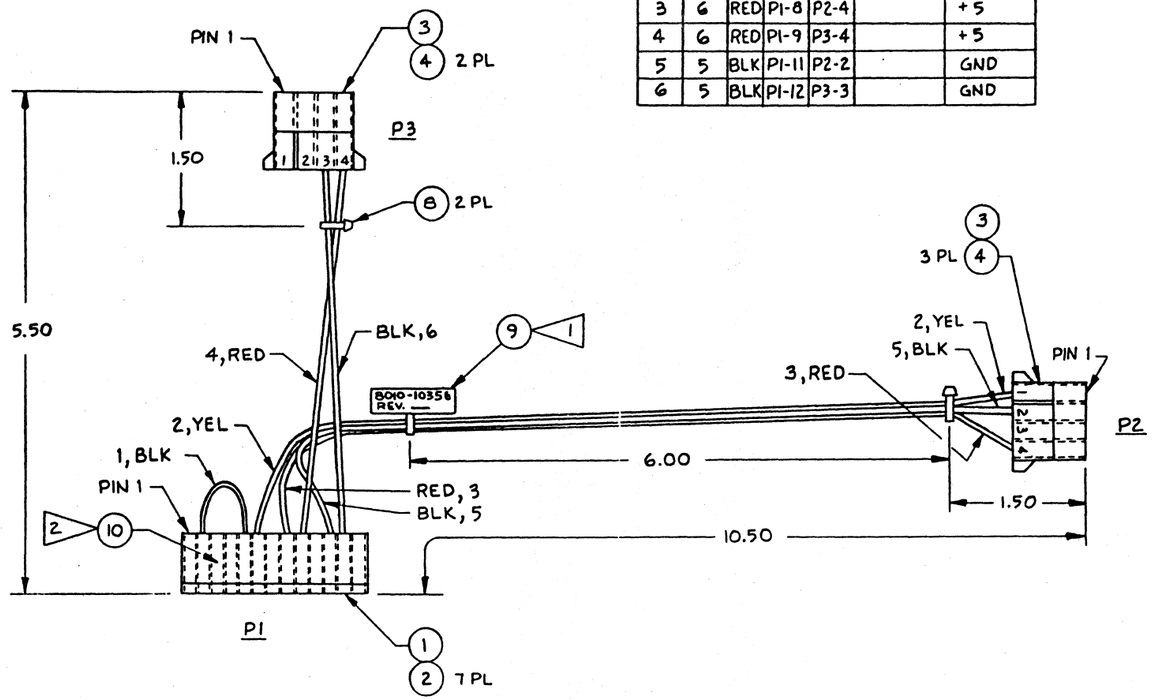

APR 27 1984

RELEASED

QTY	ITEM NO.	PART NO.	DESCRIPTION
1	10	2105-05152	POLARIZING KEY
1	9	2800-02036	CABLE TIE MARKER
2	8	2800-01452	CABLE TIE
10.00"	7	6000-02220	WIRE, 22 AWG, YEL
15.00"	6	6000-02219	WIRE, 22 AWG, RED
16.50"	5	6000-02218	WIRE, 22 AWG, BLK
5	4	2800-02093	CONTACT
2	3	2100-02905	CONNECTOR, HSG, 4 POS
7	2	2800-01132	CONTACT, 18-24 AWG
1	1	2100-05114	CONNECTOR, HSG, 13 POS

PARTS LIST

111

5. THIS DRAWING MAY BE USED AS A PRODUCTION TOOL. A FULL-SIZED PRINT MUST BE USED WHEN DRAWING IS USED AS A TOOL.
4. ALL CHANGES MUST BE MADE TO SCALE.
3. WIRE TO BE UL 1430 OR EQUIV.
2. LOCATE POLARIZING KEY IN SLOT 3 OF P1 CONNECTOR AS SHOWN.
1. MARK ASSY NO. AND REV. LEVEL IN PERMANENT INK OF A CONTRASTING COLOR AS SHOWN.

NOTES:

NEXT ASSY	USED ON
8010-10835	
8010-10836	
8010-10837	
8010-10838	
8010-10839	
8010-10840	
8010-10845	
8010-10846	OMNI DRIVE

APPLICATION

UNLESS OTHERWISE SPECIFIED DIMENSIONS ARE IN INCHES
TOLERANCES ARE
ANGLES ± —
DECIMALS .XX ±.25 .XXX ±.—

MATERIAL —

FINISH —

This document contains proprietary information and is delivered upon the expressed condition that it will not be used directly or indirectly in any way detrimental to the interest of CORVUS SYSTEMS.

DRAWN BY	Peter Radin	DATE 10-26-83
CHECKED BY		DATE
DESIGN ENGINEER	DAVE WILLHEIM	DATE 4/6/84
MFG ENG.		DATE
APPROVED		DATE 4/12/84

CORVUS SYSTEMS
2029 O'Toole Avenue, San Jose, CA 95131

HARNESS ASSEMBLY, DC OMNI DRIVE

SIZE	DWG NO.	REV
C	8010-10356	A

SCALE 1:1 | DO NOT SCALE DWG | SHEET 1 OF 1

REV A | DWG NO. 8010-10356 B

BRUNING 40-327

WIRE CONNECTION						
NO.	ITEM	COLOR	FROM	TO	LENGTH	FUNCTION
1	3	GRN	PNL 1	CTLR		GND
2	3	GRN	PNL 2	DRIVE		GND
3	3	GRN	PNL 3	PS		GND

REVISIONS					
ECN	ZONE	REV	DESCRIPTION	DATE	APPROVED
1331		A	PRODUCT RELEASED	4-12-84	DSN

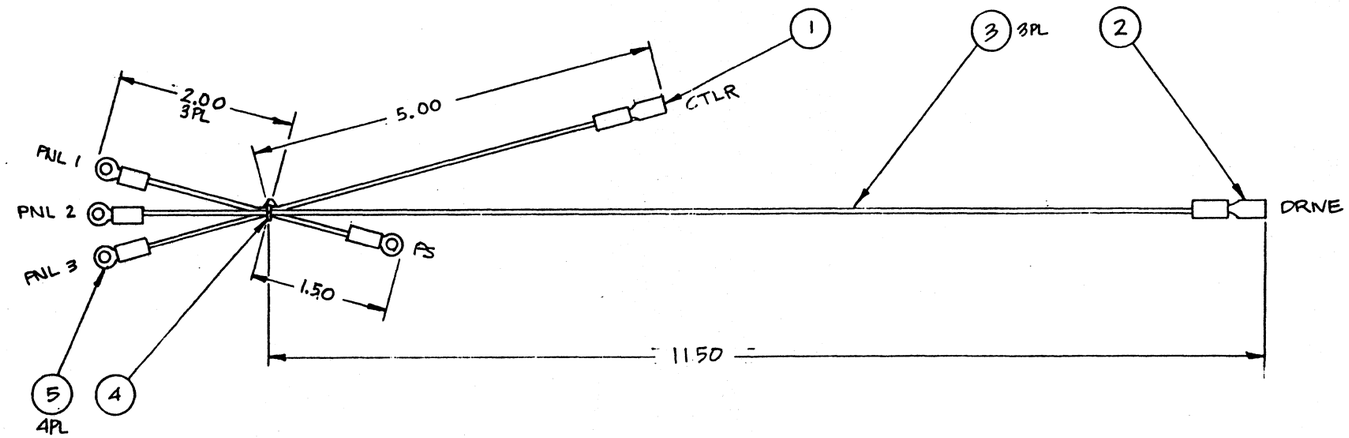

2. WIRE TO BE UL 1430 OR EQUIV.
1. BAG AND TAG WITH ASSEMBLY NO. AND REVISION LEVEL.

NOTES:

4	5	2800-01131	RING LUG #6
1	4	2800-01452	TIE WRAP
24.0"	3	6000-02228	WIRE 18 ANG GRN
1	2	2800-05670	FASTON .187x.020
1	1	2800-02331	FASTON .250
QTY	ITEM NO.	PART NO.	DESCRIPTION

PARTS LIST

113

8010-10835	
8010-10836	
8010-10837	
8010-10838	
8010-10839	
8010-10840	
8010-10845	
8010-10846	OMNI DRIVE
NEXT ASSY	USED ON

APPLICATION

UNLESS OTHERWISE SPECIFIED DIMENSIONS ARE IN INCHES
TOLERANCES ARE
ANGLES ± DECIMALS .XX ±.25 .XXX ±.

MATERIAL

FINISH

This document contains proprietary information and is delivered upon the expressed condition that it will not be used directly or indirectly in any way detrimental to the interest of CORVUS SYSTEMS.

DRAWN BY	DAVE DATU	DATE 11-8-83
CHECKED BY		DATE
DESIGN ENGINEER	DAVE WILHEIM	DATE 4-16-84
MFG ENG		DATE
APPROVED		DATE 4/19/84

CORVUS SYSTEMS
2029 O'Toole Avenue, San Jose, CA 95131

ASSY, GND HARNESS
OMNI DRIVE

SIZE	DWG NO.	REV
C	8010-10689	A

SCALE 1:1 | DO NOT SCALE DWG | SHEET 1 OF 1

REV A
DWG NO 8010-10689

APR 27 1984

BASED

BRUNING 40-527

List of Materials for Phase 2 OmniDrive Top Assembly

110v Units		220v Units	
8010-11204-01	5 MB	8010-11205-01	5 MB
8010-11206-01	11 MB	8010-11207-01	11 MB
8010-11208-01	16 MB	8010-11209-01	16 MB
8010-11212-01	45 MB	8010-11213-01	45 MB

Item	Description	Part Number	Quantity
1	Mechanism	See Note 1	1
2	Mechanism Mounting Bracket	2400-04328	2
3	Controller Standoffs	2850-04955	4
4	Top Cover	3150-04327	1
5	Controller PCA	8010-10160	1
6	Rubber Feet	2800-02283	4
7	Base Pan	3150-05779-01	1
8	Switching Power Supply	4000-05203	1
9	Not Available		
10	6-32 Kepnut	2800-01188	1
11	Nylon Washer	2800-01197	2
12	6-32 x 5/16 Screw	2800-02764	16
14	Ground Harness	8010-11218-01	1
15	Drive/Controller Cable (20-pin)	8010-10365	1
16	Drive/Controller Cable (34-pin)	8010-10366	1
17	DC Harness	8010-10799	1
18	Rear Panel Assembly	See Note 2	1
19	6-32 x ½ Screw	2800-02666	2
22	Not Available		
23	Not Available		
24	Not Available		

Note 1: Mechanism Part Number is dependent on capacity of OmniDrive.

2200-04937	5 MB
2200-04938	11 MB
2200-04939	16 MB
2200-05639	45 MB

Note 2: AC Panel Part Number is dependent on voltage of drive.

8010-11216-01	110v
8010-11217-01	220v

REVISIONS					
ECN	ZONE	REV	DESCRIPTION	DATE	APPROVED
1370		A	REL. FOR PROD.	5.18.84	

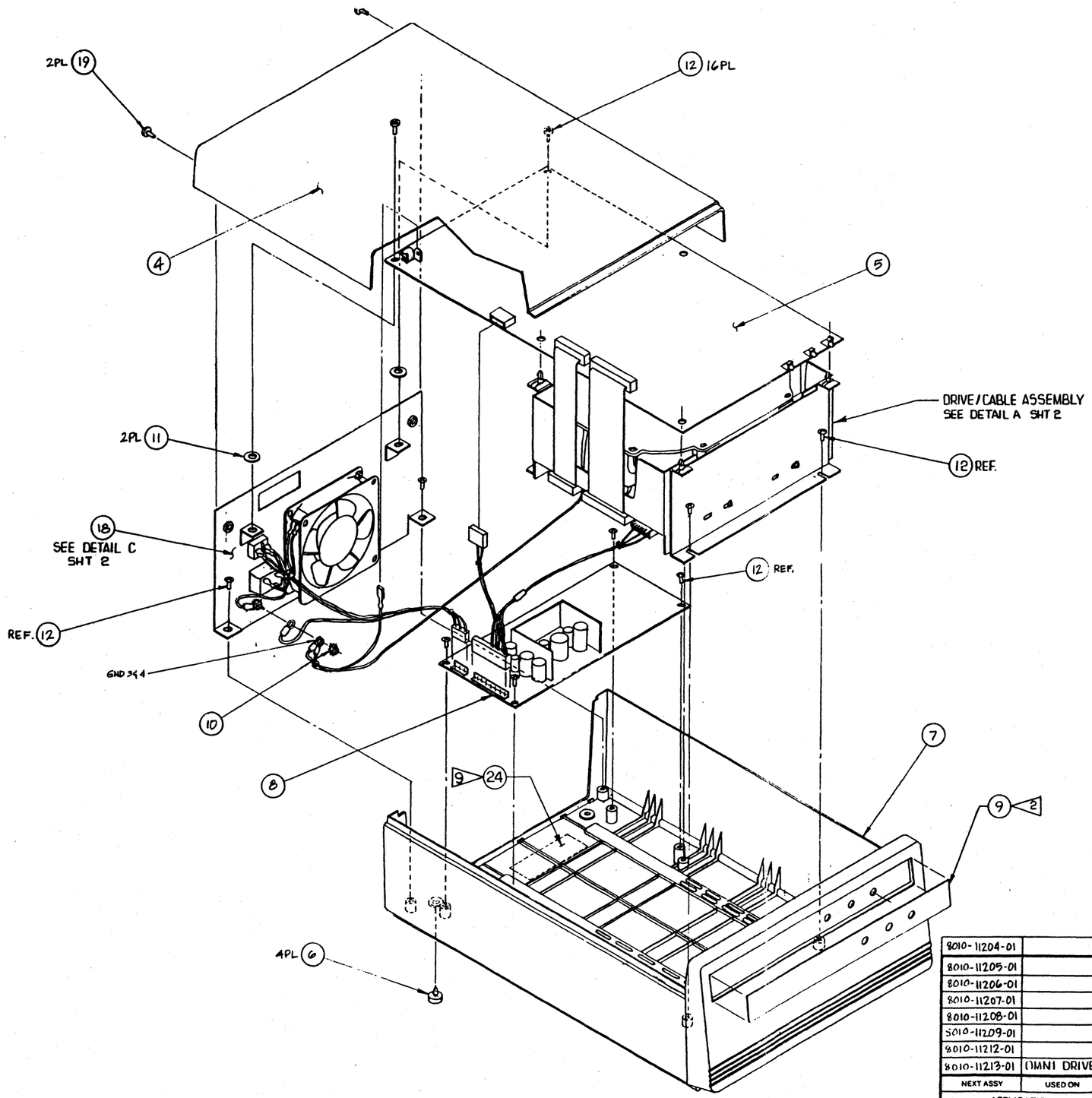

10 CENTER UL LABEL APPROX. WHERE SHOWN.

9 CENTER FCC LABEL APPROX. WHERE SHOWN (FAR SIDE).

8 ALTERNATE IMI GROUND TAB (NOT SHOWN) MAY FACE UP, IN THAT CASE GROUND CABLE TO PLUG FROM TOP.

7 DETAIL B REFLECTS A TYPICAL RODIME DRIVE POWER AND GROUND INTERCONNECT SCHEME.

6 DETAIL A REFLECTS A TYPICAL IMI DRIVE AND ITS INTERCONNECT SCHEME.

5 FOR OMNI DRIVE ASSEMBLY LM'S REFERING TO THIS DRAWING, SEE TABLE I SHT. 2.

4 ORIENT STANDOFFS WITH BOARD MOUNTING LATCH FACING THE REAR OF THE DRIVE AS SHOWN

3. FOR OMNI DRIVE SYSTEM WIRING DIAGRAM, SEE 1730-05895

2 CENTER OVERLAY IN RECESSED AREA.

1 CENTER MOUNTING SCREWS BY ADJUSTING BRACKET.

NOTES :

115

QTY	ITEM NO.	PART NO	DESCRIPTION
			PARTS LIST
		8010-11204-01	
		8010-11205-01	
		8010-11206-01	
		8010-11207-01	
		8010-11208-01	
		8010-11209-01	
		8010-11212-01	
		8010-11213-01	OMNI DRIVE
NEXT ASSY		USED ON	
APPLICATION			

UNLESS OTHERWISE SPECIFIED DIMENSIONS ARE IN INCHES
TOLERANCES ARE
ANGLES ± DECIMALS .XX ±. .XXX ±.
MATERIAL
FINISH

This document contains proprietary information and is delivered upon the expressed condition that it will not be used directly or indirectly in any way detrimental to the interest of CORVUS SYSTEMS

DRAWN	DAVE DATU	DATE 2-29-84
CHECKED BY		DATE
DESIGN ENGINEER	DAVE WILLHELM	DATE 6/22/84
MFG ENG		DATE
APPROVED		DATE

CORVUS SYSTEMS
2029 O'Toole Avenue, San Jose, CA 95131

REFERENCE DRAWING
OMNI DRIVE ASSEMBLY
PHASE 2

SIZE	DWG NO.	REV
D	1780-05894	A

SCALE NONE | DO NOT SCALE DWG | SHEET 1 OF 2

RELEASED MAY 25 1984

1780-05894

REVISIONS					
ECN	ZONE	REV	DESCRIPTION	DATE	APPROVED
SEE SHT 1 OF 2					

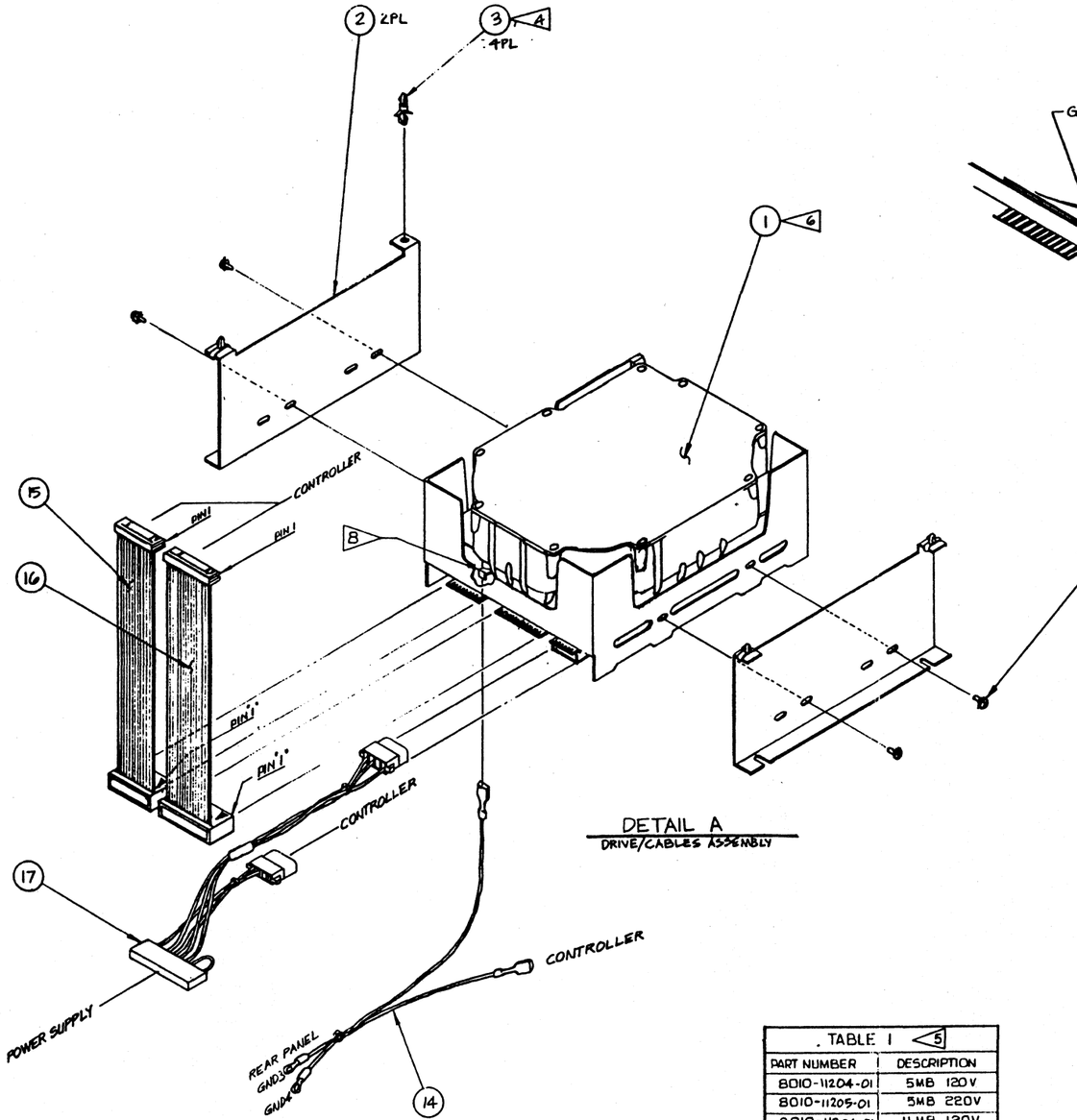

DETAIL A
DRIVE/CABLES ASSEMBLY

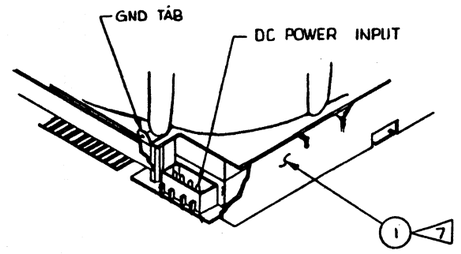

DETAIL B

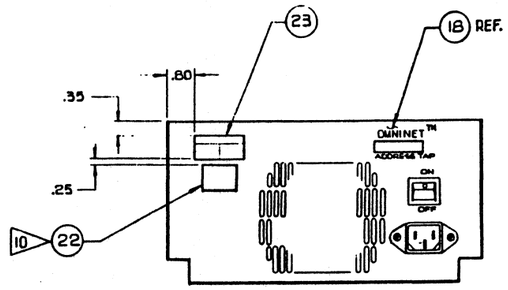

DETAIL 'C'
REAR PANEL LABELLING

TABLE 1 <5>	
PART NUMBER	DESCRIPTION
8010-11204-01	5MB 120V
8010-11205-01	5MB 220V
8010-11206-01	11MB 120V
8010-11207-01	11MB 220V
8010-11208-01	16MB 120V
8010-11209-01	16MB 220V
8010-11212-01	45MB 120V
8010-11213-01	45MB 220V

SIZE	DWG NO.	REV
D	1780-05894	A
SCALE NONE	DO NOT SCALE DWG	SHEET 2 OF 2

RELEASED MAY 25 1984

List of Materials for Phase 2 OmniDrive Rear Panel

8010-11216-01 110v
8010-10217-01 220v

Item	Description	Part Number	Quantity
1	Not Available		
2	AC Switch	5100-02420	1
4	Fan	See Note 1	1
13	6-32 Kepnut	2800-01188	4
14	AC Receptacle	2100-05173	1
15	6-32 x ½ Screw	2800-02666	2
16	AC Harness	8010-10798	1

Note 1: Fan Part Number is dependent on voltage of OmniDrive.

2600-04961 110v
2600-04962 220v

REVISIONS					
ECN	ZONE	REV	DESCRIPTION	DATE	APPROVED
1370		A	REL. FOR PROD.	5.18.84	

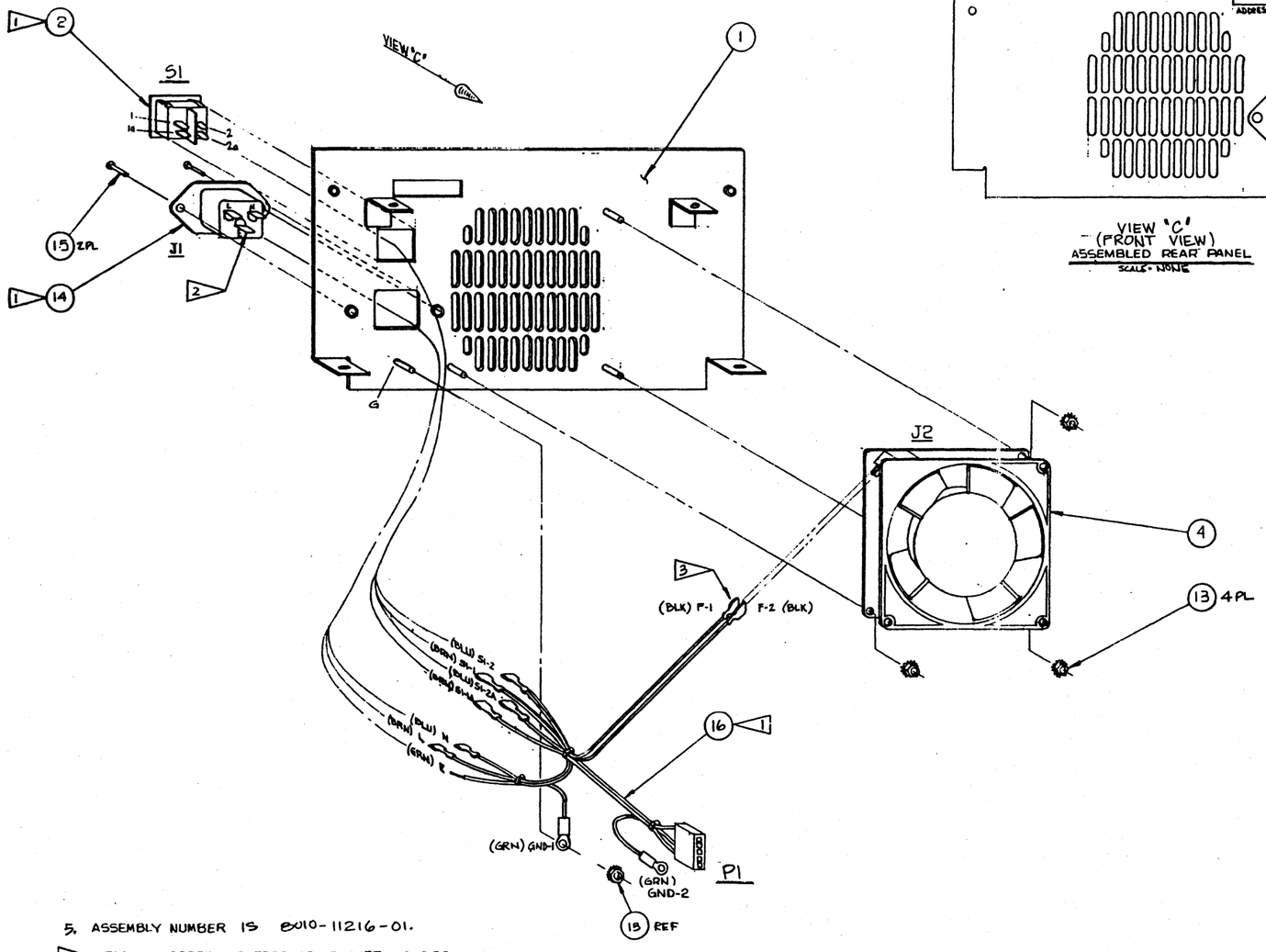

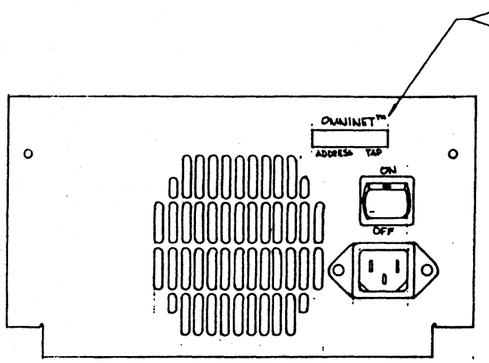

VIEW 'C'
(FRONT VIEW)
ASSEMBLED REAR PANEL
SCALE - NONE

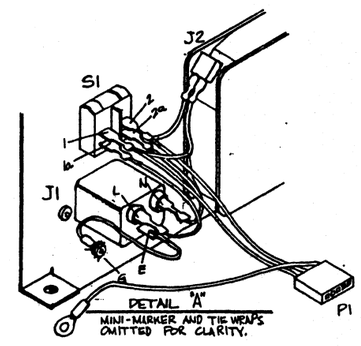

DETAIL "A"
MINI-MARKER AND TIE WRAPS OMITTED FOR CLARITY.

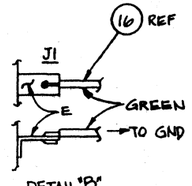

DETAIL "B"
J1-E
SOLDER CONNECTION

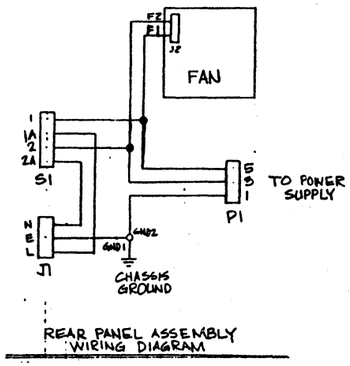

REAR PANEL ASSEMBLY
WIRING DIAGRAM

5. ASSEMBLY NUMBER IS 8010-11216-01.

4 FOR SILKSCREEN REFERENCE P/N 1750-04323.

3 FAN CONNECTIONS ARE NOT POLARIZED. INTERCONNECTS CAN BE REVERSED.

2 SEE DETAIL "B". FOR SOLDER CONNECTION.

1 SEE DETAIL "A". FOR HARNESS INSTALLATION DETAIL.

NOTES:

COLOR	FROM	TO	NOTES
GRN	GND 2	P1-1	
BLK / BLU	S1-2	F2 / P1-3	DBLCRIMP
BRN / BLK	S1-1	P1-5 / F1	DBLCRIMP
BLU	N	S1-2A	
BRN	L	S1-1A	
GRN	E	GND 1	

CONNECTION CHART

NEXT ASSY	USED ON
8010-11204-01	
8010-11206-01	
8010-11208-01	
8010-11212-01	OMNI DRIVE

APPLICATION

QTY	ITEM NO	PART NO	DESCRIPTION

PARTS LIST

UNLESS OTHERWISE SPECIFIED DIMENSIONS ARE IN INCHES
TOLERANCES ARE
ANGLES ± DECIMALS .XX ± .XXX ±

MATERIAL

FINISH

This document contains proprietary information and is delivered upon the expressed condition that it will not be used directly or indirectly in any way detrimental to the interest of CORVUS SYSTEMS

DRAWN BY	DATE
DAVE PATU	1-19-84
CHECKED BY	DATE
DESIGN ENGINEER	DATE
MFG ENG	DATE
APPROVED	DATE

CORVUS SYSTEMS
2029 O'Toole Avenue, San Jose, CA 95131

ASSEMBLY, REAR PANEL
OMNI DRIVE 120V

SIZE	DWG NO	REV
D	8010-11216	A

SCALE NONE | DO NOT SCALE DWG | SHEET 1 OF 1

RELEASED MAY 25 1984

8010-11216 A

REVISIONS					
ECN	ZONE	REV	DESCRIPTION	DATE	APPROVED
1370		A	REL FOR PROD.	5-18-84	CJW

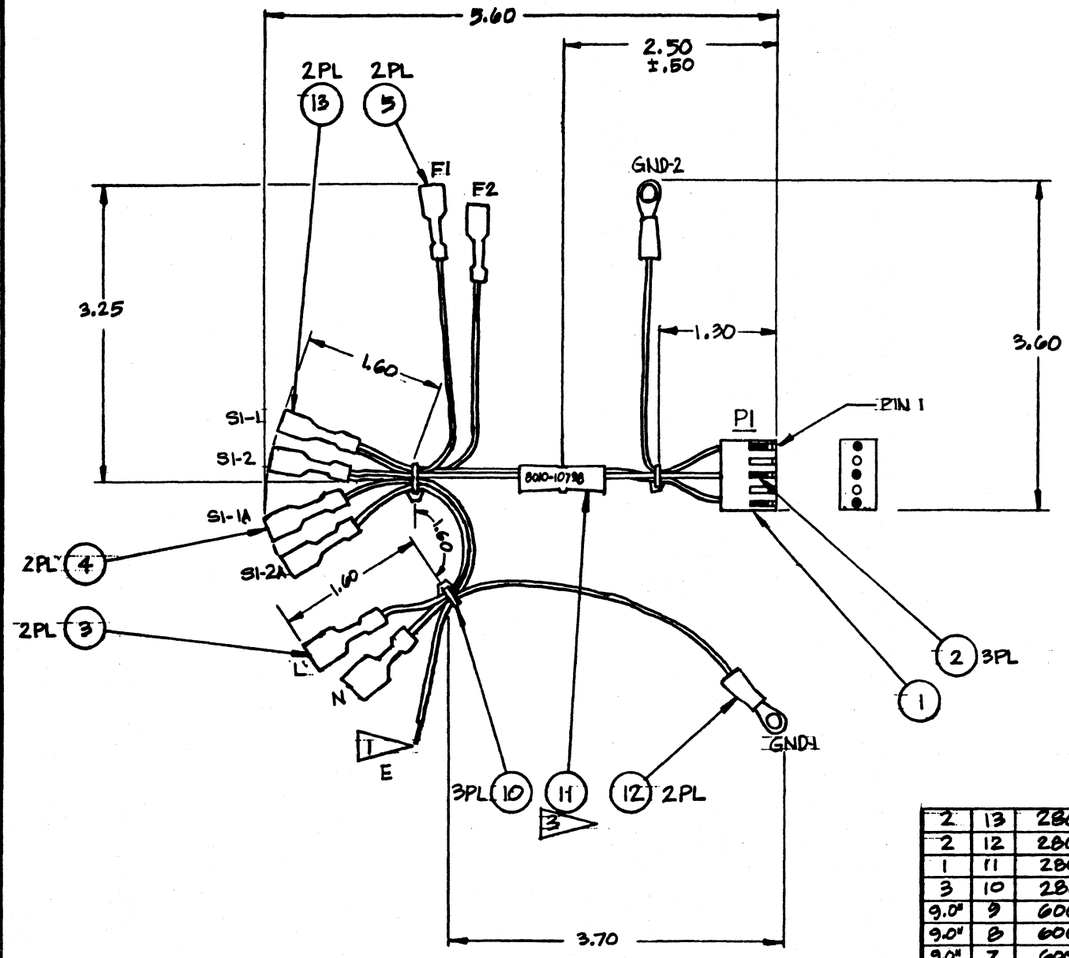

WIRE CONNECTION CHART							
WIRE #	ITEM #	COLOR	LENGTH	FROM	TO	NOTES	FUNCTION
1	6	BLK		S1-1	F1	DBL CRIMP	+120V
2	9	BRN			P1-5		
3	6	BLK		S1-2	F2	DBL CRIMP	NEUTRAL
4	8	BLU			P1-3		
5	9	BRN		S1-1A	L		+120V
6	8	BLU		S1-2A	N		NEUTRAL
7	7	GRN		GND-2	P1-1		GND
8	7	GRN		E	GND-1		GND

QTY	ITEM NO.	PART NO.	DESCRIPTION	
2	13	2800-05636	FASTON .187x.032	
2	12	2800-01131	LUG RING #6	
1	11	2800-02036	CABLE TIE MARKER	
3	10	2800-01452	CABLE TIE	
9.0"	9	6000-02224	WIRE, BRN 18AWG	
9.0"	8	6000-02229	WIRE, BLU 18AWG	
9.0"	7	6000-02228	WIRE, GRN 18 AWG	
8.5"	6	6000-02223	WIRE, BLK 18 AWG	
2	5	2800-05655	FASTON .110x.020	
2	4	2800-02090	FASTON .187x.020	
2	3	2800-05255	FASTON .250x.032	
3	2	2800-01132	CRIMP TERM, 18-24 AWG	
1	1	2100-05755	CONN, 3-POS	

PARTS LIST

4. THIS DRAWING TO BE USED FOR LAYOUT AND FABRICATION OF THIS HARNESS ASSEMBLY.
3. MARK ASSY NO. & REV. LEVEL IN PERMANENT INK OF A CONTRASTING COLOR APPROX. WHERE SHOWN.
2. ALL WIRES TO UL 1430 OR EQUIV.
1. STRIP .50 INCH AND TIN.

NOTES:

8010-11216-01	
8010-11217-01	OMNI DRIVE
NEXT ASSY	USED ON
APPLICATION	

UNLESS OTHERWISE SPECIFIED DIMENSIONS ARE IN INCHES
TOLERANCES ARE
ANGLES ± DECIMALS .XX ±.25 .XXX ±.

MATERIAL

FINISH

This document contains proprietary information and is delivered upon the expressed condition that it will not be used directly or indirectly in any way detrimental to the interest of CORVUS SYSTEMS.

DRAWN BY	DAVE DATU	DATE 1-25-84
CHECKED BY		DATE
DESIGN ENGINEER	DAVE WILLHEM	DATE 5/22/84
MFG ENG		DATE
APPROVED		DATE

CORVUS SYSTEMS
2029 O'Toole Avenue, San Jose, CA 95131

HARNESS ASSEMBLY
OMNI DRIVE AC POWER

SIZE	DWG NO.	REV
C	8010-10798	A

SCALE 1/1 | DO NOT SCALE DWG | SHEET 1 OF 1

RELEASED 1 MAY 25 1984

REV A | DWG NO. 8010-10798 | B

DRAWING 40-322

REVISIONS						
ECN	ZONE	REV	DESCRIPTION		DATE	APPROVED
1370		A	REL. FOR PROD.	Hug	5.17.84	DW

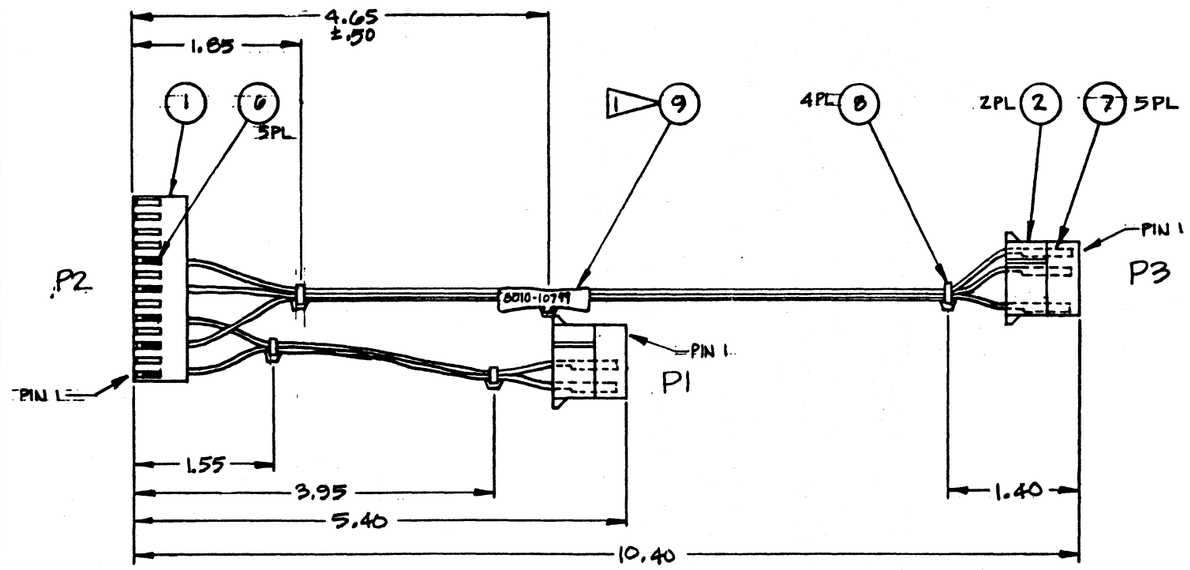

WIRE CONNECTION CHART

WIRE#	ITEM#	CLR	LENGTH	FROM	TO	NOTES	FUNCTION
1	3	RED		P2-1	P1-4		+5V
2	4	BLK		P2-5	P1-3		GND
3	5	YEL		P2-9	P3-1		+12V
4	4	BLK		P2-7	P3-2		GND
5	3	RED		P2-3	P3-4		+5V

QTY	ITEM NO.	PART NO.	DESCRIPTION
1	9	2800-02036	CABLE TIE MARKER
4	8	2800-01452	CABLE TIE
5	7	2800-02093	CRIMP SOCKET 20-14 AWG
5	6	2800-01132	CRIMP TERM 20-14 AWG
10.0"	5	6000-02220	WIRE, YEL 22 AWG
15.0"	4	6000-02218	WIRE, BLK 22 AWG
15.0"	3	6000-02219	WIRE, RED 22 AWG
2	2	2100-02905	CONN 4-POS
1	1	2100-05286	CONN 13-POS

PARTS LIST

123

4. THIS DRAWING TO BE USED FOR LAYOUT AND FABRICATION OF THIS HARNESS ASSEMBLY.

3. ALL TIE WRAP DIMENSIONS TO BE TOLERANCED @ ±.50.

2. ALL WIRES TO BE UL 1430 OR EQUIV.

1. MARK ASSY. NO. & REV. LEVEL IN PERMANENT INK OF A CONTRASTING COLOR APPROX. WHERE SHOWN.

NOTES:

NEXT ASSY	USED ON
8010-11204-01	
8010-11205-01	
8010-11206-01	
8010-11207-01	
8010-11208-01	
8010-11209-01	
8010-11212-01	
8010-11213-01	OMNI DRIVE

APPLICATION

UNLESS OTHERWISE SPECIFIED DIMENSIONS ARE IN INCHES TOLERANCES ARE

ANGLES ± DECIMALS .XX ±.25 .XXX ±.

MATERIAL

FINISH

This document contains proprietary information and is delivered upon the expressed condition that it will not be used directly or indirectly in any way detrimental to the interest of CORVUS SYSTEMS.

DRAWN BY DAVE DATU DATE 1-25-84
CHECKED BY DATE
DESIGN ENGINEER DAVE WILLHEIM DATE 5/25/84
MFG ENG DATE
APPROVED DATE

CORVUS SYSTEMS
2029 O'Toole Avenue, San Jose, CA 95131

HARNESS ASSEMBLY
OMNI DRIVE DC POWER

SIZE C DWG NO. 8010-10799 REV A

SCALE 1/1 DO NOT SCALE DWG SHEET 1 OF 1

RELEASED 1 MAY 25 1984

REV A DWG NO 8010-10799

BRUNING 40-522

WIRE CONNECTION						
NO.	ITEM	COLOR	FROM	TO	LENGTH	FUNCTION
1	3	GRN	GND3	CTLR		GND
2	3	GRN	GND 4	DRIVE		GND

REVISIONS					
ECN	ZONE	REV	DESCRIPTION	DATE	APPROVED
1370		A	REL. FOR PROD. Hwy	5-17-84	DJW

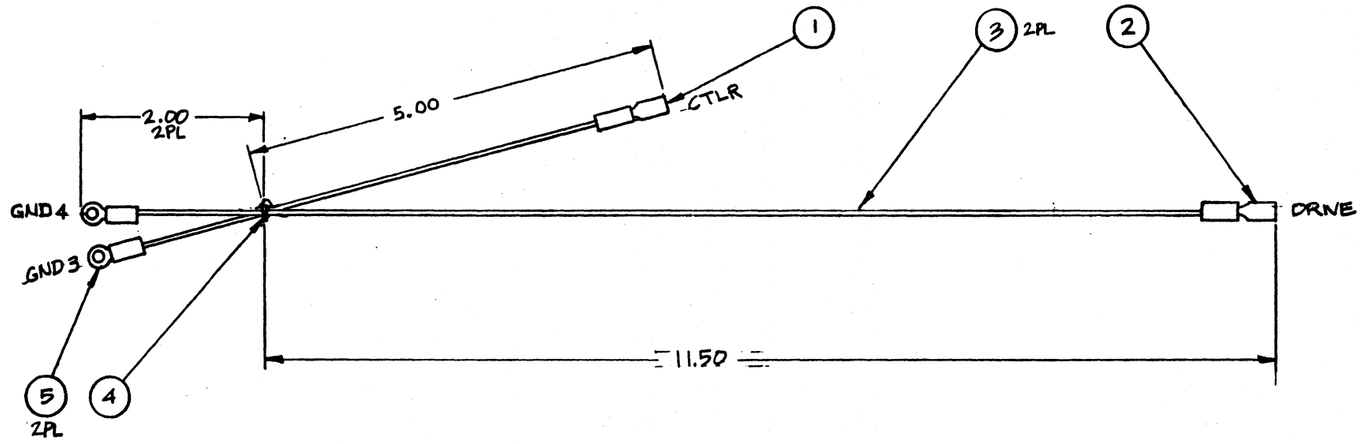

QTY	ITEM NO.	PART NO.	DESCRIPTION
2	5	2800-01131	RING LUG #6
1	4	2800-01432	TIE WRAP
19.50	3	6000-02228	WIRE 18 ANG GRN
1	2	2800-05670	FASTON .187x.020
1	1	2800-02331	FASTON .250

PARTS LIST

125

NEXT ASSY	USED ON
8010-11204-01	
8010-11205-01	
8010-11206-01	
8010-11207-01	
8010-11208-01	
8010-11209-01	
8010-11212-01	
8010-11213-01	OMNI DRIVE

APPLICATION

NOTES:
1. BAG AND TAG WITH ASSEMBLY NO. 8010-11218-01 AND REVISION LEVEL.
2. WIRE TO BE UL 1430 OR EQUIV.
3. ASSEMBLY NUMBER IS 8010-11218-01.

UNLESS OTHERWISE SPECIFIED DIMENSIONS ARE IN INCHES
TOLERANCES ARE
ANGLES ±
DECIMALS .XX ±.25 .XXX ±.

MATERIAL

FINISH

This document contains proprietary information and is delivered upon the expressed condition that it will not be used directly or indirectly in any way detrimental to the interest of CORVUS SYSTEMS.

DRAWN BY	DAVE DATU	DATE 11-8-83
CHECKED BY		DATE
DESIGN ENGINEER	DAVE WILLHELM	DATE 5/22/84
MFG ENG		DATE
APPROVED		DATE

CORVUS SYSTEMS
2029 O'Toole Avenue, San Jose, CA 95131

ASSY, GND HARNESS
OMNI DRIVE PHASE 2

SIZE	DWG NO.	REV
C	8010-11218	A

SCALE 1:1 | DO NOT SCALE DWG | SHEET 1 OF 1

NEXT ASSY 8010-11218 REV A

RELEASED MAY 25 1984

BRUNING 40-522

List of Materials for Phase 3 OmniDrive Top Assembly

110v Units		220v Units	
8010-11204-02	5 MB	8010-11205-02	5 MB
8010-11206-02	11 MB	8010-11207-02	11 MB
8010-11208-02	16 MB	8010-11209-02	16 MB
8010-11212-02	45 MB	8010-11213-02	45 MB

Item	Description	Part Number	Quantity
1	Mechanism	See Note 1	1
2	Mechanism Mounting Bracket	2400-04328	1
3	Controller Standoffs	2850-04955	4
4	Top Cover	3150-04327	1
5	Controller PCA	8010-11180-01	1
6	Rubber Feet	2800-02283	4
7	Base Pan	3150-05779-01	1
8	Switching Power Supply	4000-05203	1
9	Not Available		
10	6-32 Kepnut	2800-01188	2
12	6-32 x 5/16 Screw	2800-02764	16
14	Ground Harness	8010-11054	1
15	Drive/Controller Cable (20-pin)	8010-10365	1
16	Drive/Controller Cable (34-pin)	8010-10366	1
17	DC Harness	8010-10799	1
18	Rear Panel Assembly	See Note 2	1
19	6-32 x ½ Screw	2800-02666	2
22	Not Available		
23	Not Available		
24	Not Available		
26	EMI Drive Shield	2400-06175-01	1

Note 1: Mechanism Part Number is dependent on capacity of OmniDrive.

2200-04937 5 MB
2200-04938 11 MB
2200-04939 16 MB
2200-05639 45 MB

Note 2: AC Panel Part Number is dependent on voltage of drive.

8010-11216-01 110v
8010-11217-01 220v

ECN	ZONE	REV	DESCRIPTION	DATE	APPROVED
			(SEE SHT 1 OF 4)		

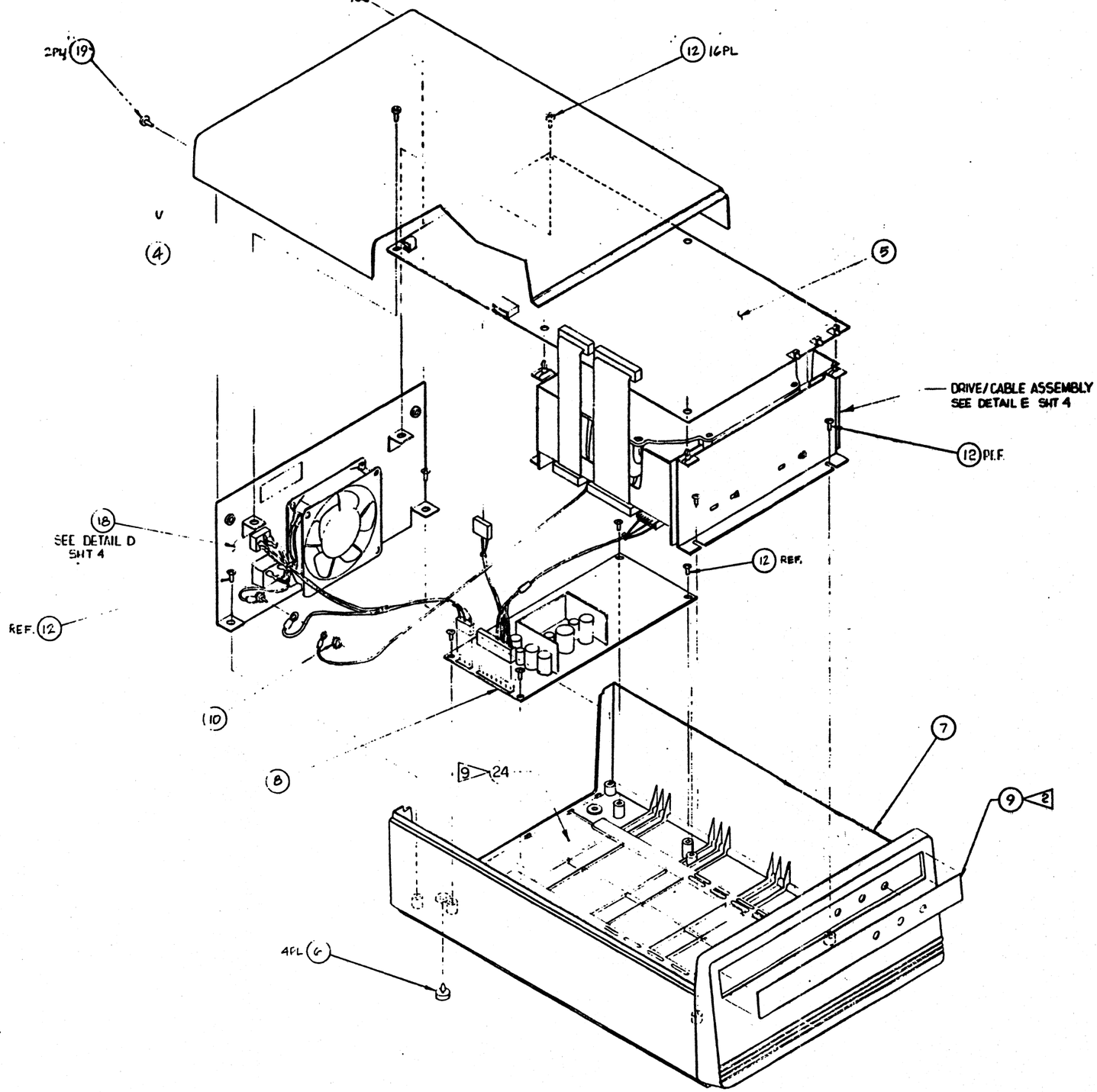

SIZE	DWG NO	REV
D	1780-05894	B
SCALE NONE	DO NOT SCALE DWG	SHEET 3 OF 4

RELEASED JUN 29 1984

REVISIONS					
ECN	ZONE	REV	DESCRIPTION	DATE	APPROVED
			(SEE SHT 1 OF 4)		

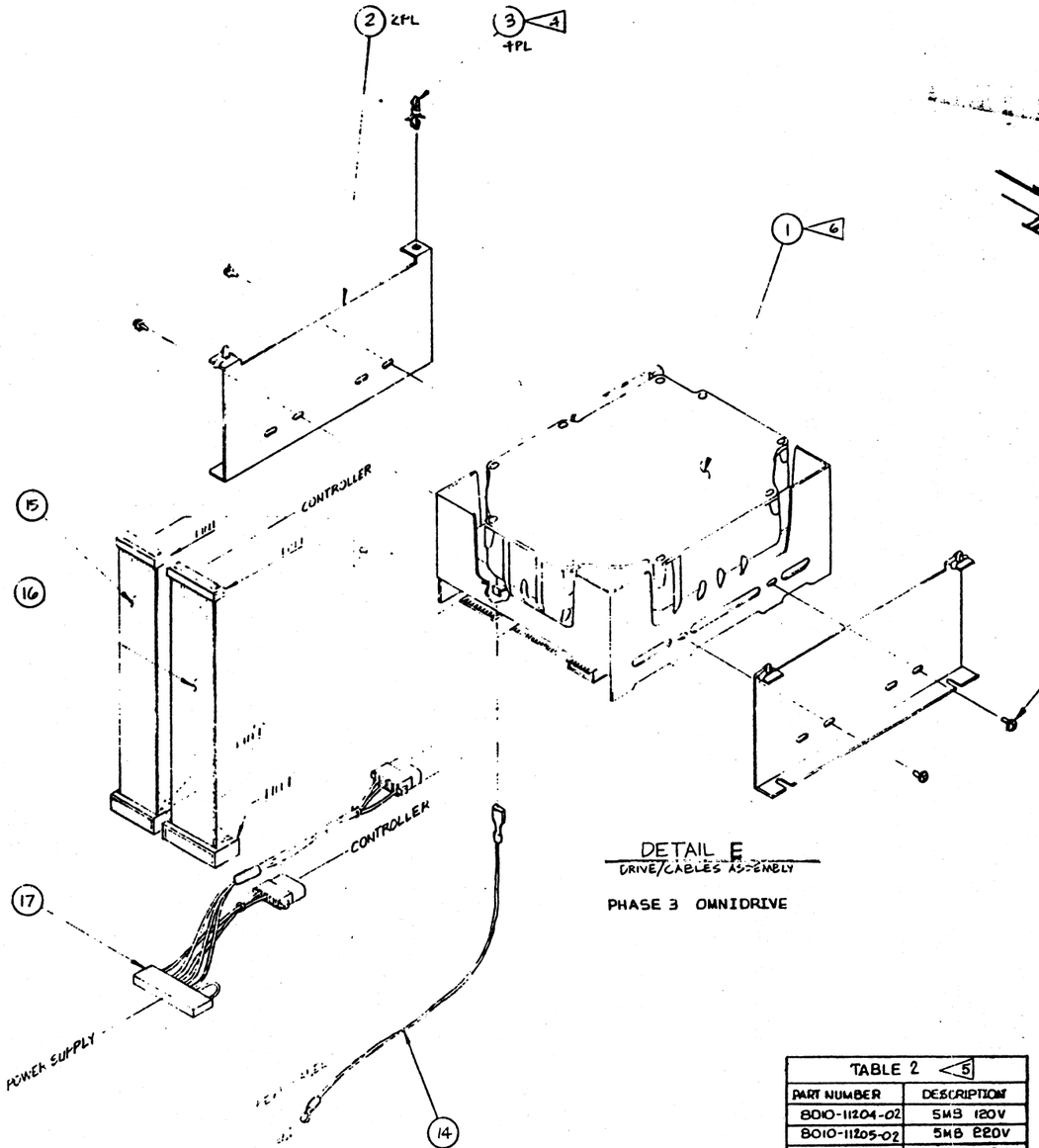

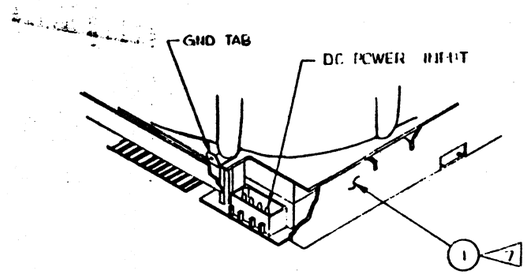

DETAIL F
PHASE 3 OMNIDRIVE

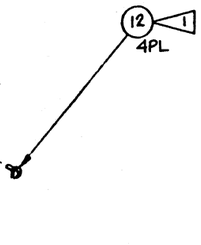

DETAIL E
DRIVE/CABLES ASSEMBLY
PHASE 3 OMNIDRIVE

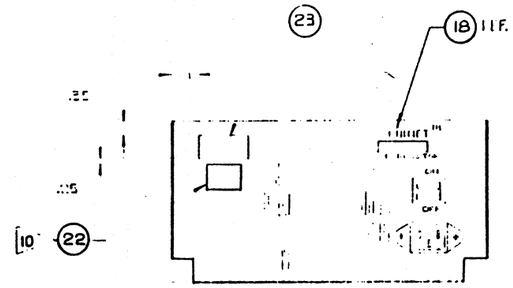

DETAIL "D"
REAR PANEL LABELLING

TABLE 2 <5>	
PART NUMBER	DESCRIPTION
8010-11204-02	5MB 120V
8010-11205-02	5MB 220V
8010-11206-02	11MB 120V
8010-11207-02	11MB 220V
8010-11208-02	16MB 120V
8010-11209-02	16MB 220V
8010-11212-02	45MB 120V
8010-11213-02	45MB 220V

SIZE	DWG NO	REV
D	1780-05894	B
SCALE	DO NOT SCALE DWG	SHEET 4 OF 4

RELEASED JUN 29 1984

List of Materials for Phase 3 OmniDrive Rear Panel

8010-11216-01 110v
8010-10217-01 220v

Item	Description	Part Number	Quantity
1	Not Avilable		
2	AC Switch	5100-02420	1
4	Fan	See Note 1	1
13	6-32 Kepnut	2800-01188	4
14	AC Receptacle	2100-05173	1
15	6-32 x ½ Screw	2800-02666	2
16	AC Harness	8010-10798	1

Note 1: Fan Part Number is dependent on voltage of OmniDrive.

2600-04961 110v
2600-04962 220v

REVISIONS					
ECN	ZONE	REV	DESCRIPTION	DATE	APPROVED
1370		A	REL. FOR PROD.	5.18.84	

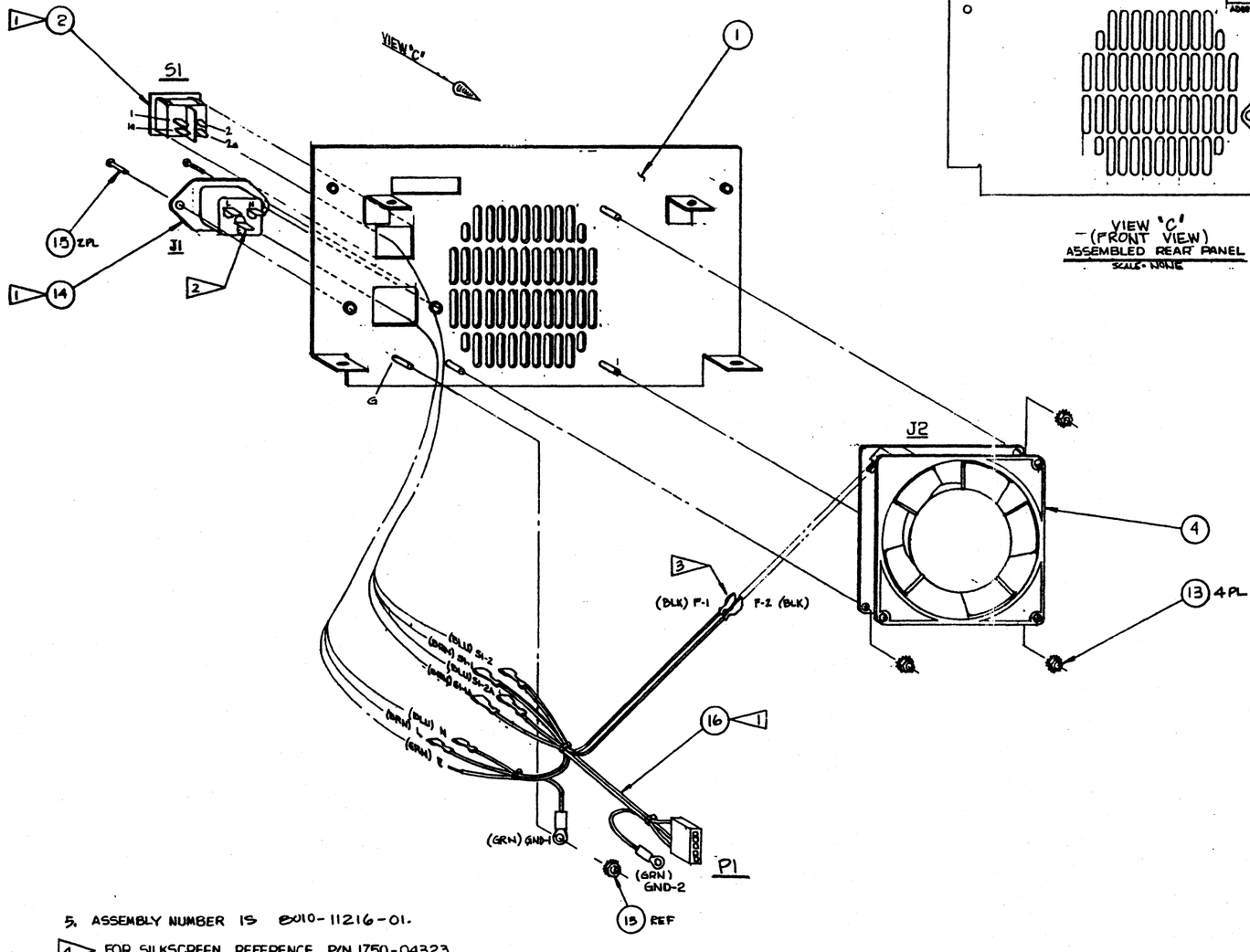

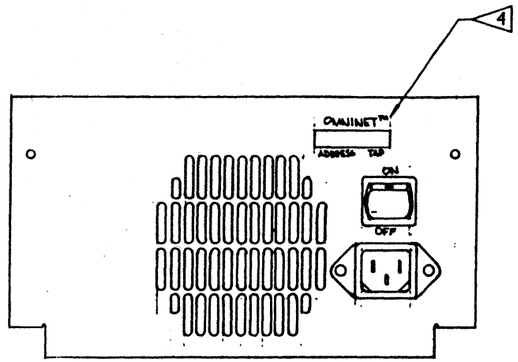

VIEW 'C'
(FRONT VIEW)
ASSEMBLED REAR PANEL
SCALE: NONE

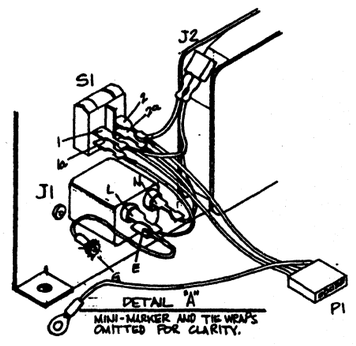

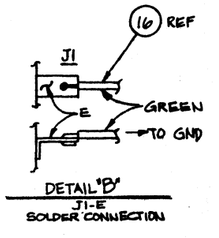

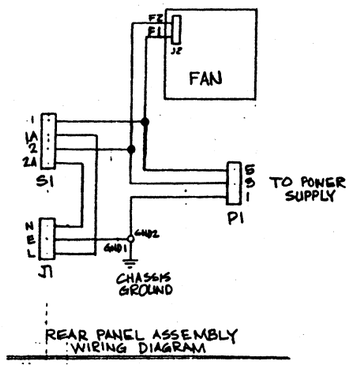

5. ASSEMBLY NUMBER IS 8010-11216-01.

4 FOR SILKSCREEN REFERENCE P/N 1750-04323.

3 FAN CONNECTIONS ARE NOT POLARIZED. INTERCONNECTS CAN BE REVERSED.

2 SEE DETAIL "B". FOR SOLDER CONNECTION.

1 SEE DETAIL "A". FOR HARNESS INSTALLATION DETAIL.

NOTES:

CONNECTION CHART			
COLOR	FROM	TO	NOTES
GRN	GND 2	P1-1	
BLK / BLU	S1-2	P2 / P1-3	DBLCRIMP
BRN / BLK	S1-1	P1-5 / P1	DBLCRIMP
BLU	N	S1-2A	
BRN	L	S1-1A	
GRN	E	GND 1	

APPLICATION	
NEXT ASSY	USED ON
8010-11204-01	
8010-11206-01	
8010-11208-01	
8010-11212-01	OMNI DRIVE

QTY	ITEM NO.	PART NO	DESCRIPTION

PARTS LIST

UNLESS OTHERWISE SPECIFIED DIMENSIONS ARE IN INCHES TOLERANCES ARE

ANGLES ± DECIMALS .XX ± .XXX ±

MATERIAL

FINISH

This document contains proprietary information and is delivered upon the expressed condition that it will not be used directly or indirectly in any way detrimental to the interest of CORVUS SYSTEMS

DRAWN BY	DAVE PATU	DATE 1-19-84
CHECKED BY		DATE
DESIGN ENGINEER	DAVE WILLMOTT	DATE 5/22/84
MFG ENG		DATE
APPROVED		DATE

CORVUS SYSTEMS
2029 O'Toole Avenue, San Jose, CA 95131

ASSEMBLY, REAR PANEL
OMNI DRIVE 120V

SIZE	DWG NO.	REV
D	8010-11216	A

SCALE NONE | DO NOT SCALE DWG | SHEET 1 OF 1

RELEASED MAY 25 1984

REV A 8010-11216

REVISIONS					
ECN	ZONE	REV	DESCRIPTION	DATE	APPROVED
1370		A	REL FOR PROD.	5-18-84	CRW

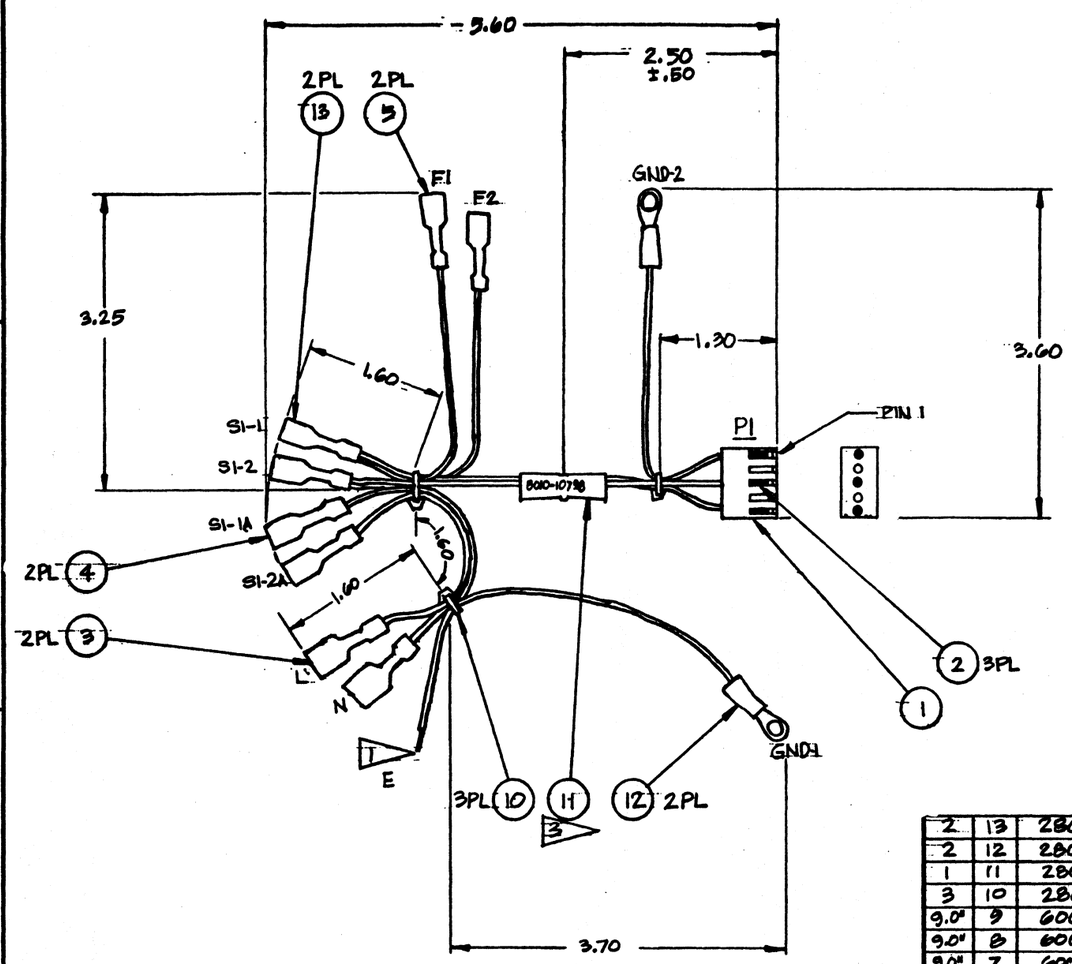

WIRE CONNECTION CHART

WIRE #	ITEM #	COLOR	LENGTH	FROM	TO	NOTES	FUNCTION
1	6	BLK		S1-1	F1	DBL CRIMP	+120V
2	9	BRN			P1-5		
3	6	BLK		S1-2	F2	DBL CRIMP	NEUTRAL
4	8	BLU			P1-3		
5	9	BRN		S1-1A	L		+120V
6	8	BLU		S1-2A	N		NEUTRAL
7	7	GRN		GND-2	P1-1		GND
8	7	GRN		E	GND-1		GND

QTY	ITEM NO.	PART NO.	DESCRIPTION	
2	13	2800-05636	FASTON .187x.032	
2	12	2800-01131	LUG RING #6	
1	11	2800-02036	CABLE TIE MARKER	
3	10	2800-01452	CABLE TIE	
9.0"	9	6000-02224	WIRE, BRN 18AWG	
9.0"	8	6000-02229	WIRE, BLU 18AWG	
9.0"	7	6000-02228	WIRE, GRN 18 AWG	
8.5"	6	6000-02223	WIRE, BLK 18 AWG	
2	5	2800-05655	FASTON .110x.020	
2	4	2800-02090	FASTON .187x.020	
2	3	2800-05255	FASTON .250x.032	
3	2	2800-01132	CRIMP TERM, 18-24 AWG	
1	1	2100-05755	CONN, 3-POS	

PARTS LIST

133

4. THIS DRAWING TO BE USED FOR LAYOUT AND FABRICATION OF THIS HARNESS ASSEMBLY.
3. MARK ASSY NO. & REV. LEVEL IN PERMANENT INK OF A CONTRASTING COLOR APPROX. WHERE SHOWN.
2. ALL WIRES TO UL 1430 OR EQUIV.
1. STRIP .50 INCH AND TIN.

NOTES:

NEXT ASSY	USED ON
8010-11216-01	
8010-11217-01	OMNI DRIVE

APPLICATION

UNLESS OTHERWISE SPECIFIED DIMENSIONS ARE IN INCHES
TOLERANCES ARE
ANGLES ± DECIMALS .XX ±.25 .XXX ±.

MATERIAL

FINISH

This document contains proprietary information and is delivered upon the expressed condition that it will not be used directly or indirectly in any way detrimental to the interest of CORVUS SYSTEMS.

		DATE
DRAWN BY	DAVE DATU	1-23-84
CHECKED BY		DATE
DESIGN ENGINEER	DAVE WILLHEM	DATE 4/22/84
MFG ENG		DATE
APPROVED		DATE

CORVUS SYSTEMS
2029 O'Toole Avenue, San Jose, CA 95131

HARNESS ASSEMBLY
OMNI DRIVE AC POWER

SIZE	DWG NO.	REV
C	8010-10798	A

SCALE 1/1 | DO NOT SCALE DWG | SHEET 1 OF 1

RELEASED 1 MAY 25 1984

REV A
DWG NO. 8010-10798
B

DRAWING 40-322

REVISIONS					
ECN	ZONE	REV	DESCRIPTION	DATE	APPROVED
1370		A	REL. FOR PROD. Hug	5.17.84	[illegible]

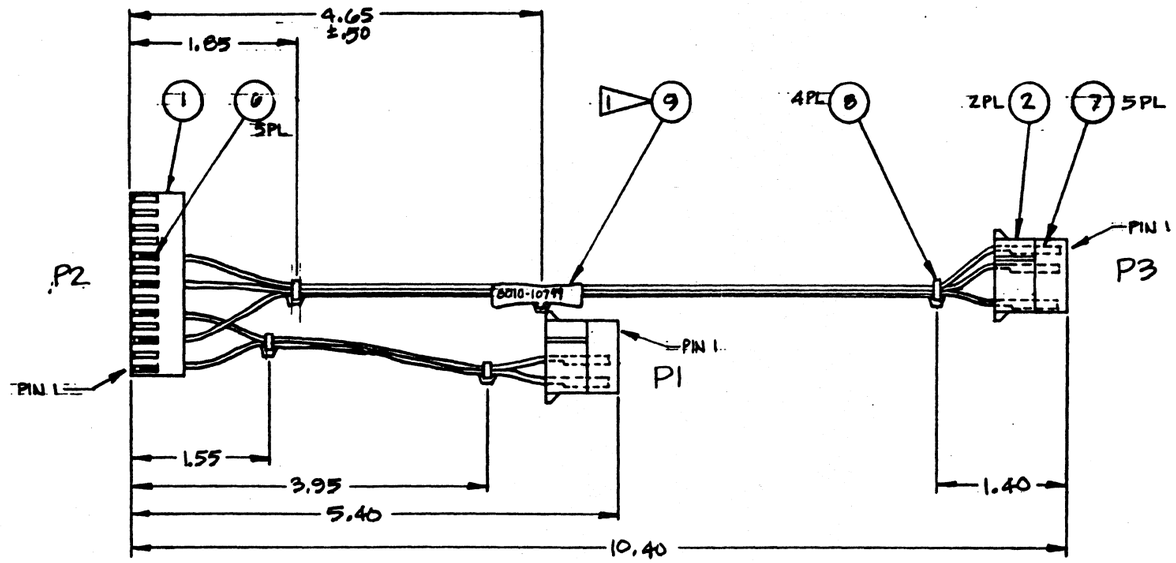

WIRE CONNECTION CHART							
WIRE#	ITEM#	CLR	LENGTH	FROM	TO	NOTES	FUNCTION
1	3	RED		P2-1	P1-4		+5V
2	4	BLK		P2-5	P1-3		GND
3	5	YEL		P2-9	P3-1		+12V
4	4	BLK		P2-7	P3-2		GND
5	3	RED		P2-3	P3-4		+5V

QTY	ITEM NO.	PART NO.	DESCRIPTION
1	9	2800-02036	CABLE TIE MARKER
4	8	2800-01452	CABLE TIE
5	7	2800-02093	CRIMP SOCKET 20-14 AWG
5	6	2800-01132	CRIMP TERM 20-14 AWG
10.0"	5	6000-02220	WIRE, YEL 22 AWG
15.0"	4	6000-02218	WIRE, BLK 22 AWG
15.0"	3	6000-02219	WIRE, RED 22 AWG
2	2	2100-02905	CONN 4-POS
1	1	2100-05286	CONN 13-POS

PARTS LIST

135

4. THIS DRAWING TO BE USED FOR LAYOUT AND FABRICATION OF THIS HARNESS ASSEMBLY.
3. ALL TIE WRAP DIMENSIONS TO BE TOLERANCED @ ±.50.
2. ALL WIRES TO BE UL 1430 OR EQUIV.
1. MARK ASSY. NO. & REV. LEVEL IN PERMANENT INK OF A CONTRASTING COLOR APPROX. WHERE SHOWN.

NOTES:

NEXT ASSY	USED ON
8010-11204-01	
8010-11205-01	
8010-11206-01	
8010-11207-01	
8010-11208-01	
8010-11209-01	
8010-11212-01	
8010-11213-01	OMNI DRIVE

APPLICATION

UNLESS OTHERWISE SPECIFIED DIMENSIONS ARE IN INCHES TOLERANCES ARE

ANGLES ± DECIMALS .XX ±.25 .XXX ±.

MATERIAL

FINISH

This document contains proprietary information and is delivered upon the expressed condition that it will not be used directly or indirectly in any way detrimental to the interest of CORVUS SYSTEMS.

DRAWN BY DAVE DATU DATE 1-25-84
CHECKED BY DATE
DESIGN ENGINEER DAVE WILLSHEM DATE [illegible]
MFG ENG DATE
APPROVED DATE

CORVUS SYSTEMS
2029 O'Toole Avenue, San Jose, CA 95131

HARNESS ASSEMBLY
OMNI DRIVE DC POWER

SIZE C DWG NO. 8010-10799 REV A

SCALE 1/1 DO NOT SCALE DWG SHEET 1 OF 1

RELEASED 1 MAY 25 1984

REVISIONS					
ECN	ZONE	REV	DESCRIPTION	DATE	APPROVED
1331		A	REL. TO PROD.	4/11/84	DJW

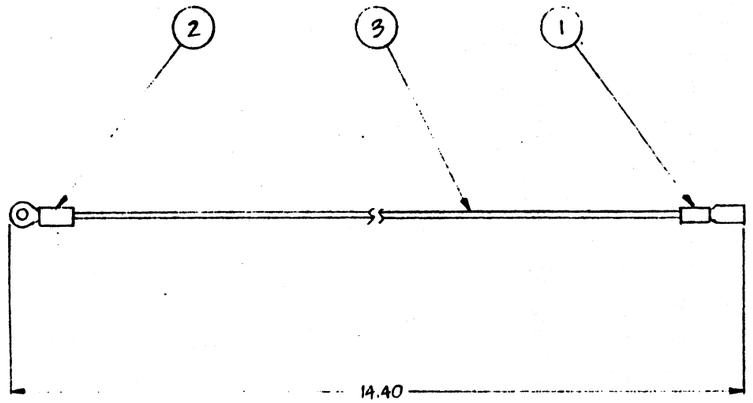

M.40"	3	6000-02228	WIRE 18AWG GRN
1	2	2800-01191	RINGLUG #6
1	1	2800-05670	FASTON
QTY	ITEM NO.	PART NO.	DESCRIPTION

PARTS LIST

137

2. WIRE TO BE UL1430 OR EQUIVALENT.

1. BAG AND TAG WITH ASSEMBLY NUMBER AND CURRENT REVISION LEVEL.

NOTES:

8010-10845	
8010-10846	OMNI DRIVE
NEXT ASSY	USED ON
APPLICATION	

UNLESS OTHERWISE SPECIFIED DIMENSIONS ARE IN INCHES TOLERANCES ARE

ANGLES ± DECIMALS .XX ±.25 .XXX ±.

MATERIAL 2

FINISH

This document contains proprietary information and is delivered upon the expressed condition that it will not be used directly or indirectly in any way detrimental to the interest of CORVUS SYSTEMS.

DRAWN BY DAVE DATU	DATE 4-2-84
CHECKED BY	DATE
DESIGN ENGINEER DAVE WILLHEIM	DATE 4/16/84
MFG ENG	DATE
APPROVED	DATE

CORVUS SYSTEMS
2029 O'Toole Avenue, San Jose, CA 95131

WIRE ASSEMBLY, GROUND
45 MB OMNI DRIVE

SIZE	DWG NO.	REV
C	8010-11054	A

SCALE NONE | DO NOT SCALE DWG | SHEET 1 OF 1

REV A DWG NO. 8010-11054

BRUNING 40-527

APPENDIX D
CONTROLLER PCA JUMPER LAYOUT

CORVUS SYSTEMS INC.
OMNINET DRIVE CONTROLLER
8010-10160 REV [redacted] © 83

E4
(REV A ONLY)

	CORVUS SYSTEMS
	OMNINET™ DRIVE CONTROLLER
	1740-04155 — 04

APPENDIX E
POWER SUPPLY SPECIFICATIONS AND SCHEMATICS

ASTEC POWER SUPPLY SPECIFICATIONS

Input Characteristics

AC Input Voltage — 95 to 135 VAC (Jumper Selectable)
190 to 270 VAC (Jumper Selectable)

AC Input Frequency — 47 to 400 HZ

Output Characteristics

Output Voltage	Load min	Load max	Tolerance Ripple	Output
+5 VDC	1.3A	6.0A	± 3%	50 mV p-p
+12 VDC	0.6A	1.5A	±5%	120 mV p-p

General Characteristics

Operating Temperature — 0° C to 50° C

Overvoltage Protection — +5V output trip voltage
5.9 to 7.0V

Hold-up time — 24-msec at full load

Input Surge Current — 30 amps @ 115 VAC at 25° C
60 amps @ 230 VAC at 25° C

R	R1 R2,3 R7,5,6 8 9,10 R11 R13,14,15,16,17 18,19 R22 R23,24 R25 26,27,28,29,30 R31 R32 33 34 R35 36 37,38,39,40
C	C1 C2 C3,4 C5,6 C7,8 C9 C10 C12 C41 C42 C13 C14 C15 C16,17,18 19 20 21,22 23,24,25 26 27,28 29,30,31,32 33 34,35 C37,38,39,40
L/T	T1 L1 L2 T2 T3 L5,6,7,8
D/Q	D26,24,25,1,2 3,23,27 Q1 Q2 D4 D5 Q3 D6 D7 D8 Q5 D9 D10,28 D11 D12— D19 Q6 D20 D21 D22
MISC	F1 VDR1 DB1 TM1 TM2 HS1 Z2 IC1 SCR1, Z3, F2, F3, F4

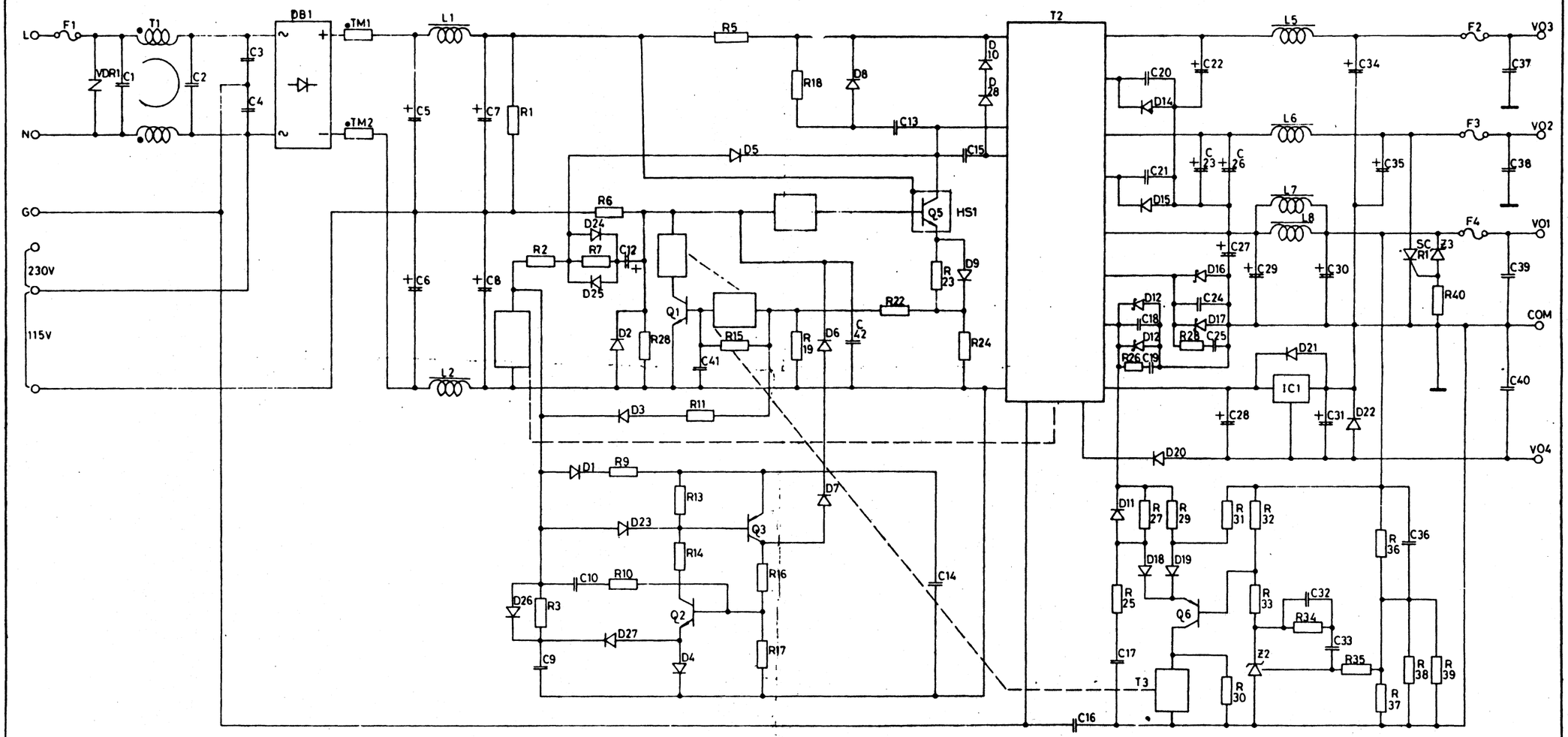

ISSUE	REVISIONS	DATE	CHK	APPD	ECN
2	ADD HEATSINK SYMBOL HS1				E11663
1	PRELIMINARY				

UNLESS OTHERWISE SPECIFIED ALL DIMENSIONS ARE IN MM TOLERANCES WHOLE NO ± ANGLE ± DECIMAL .x ± .xx ±	DO NOT SCALE DRAWING	TITLE	(REPAIR MANUAL) CIRCUIT DIAGRAM
	DRN Y. F CHAN DATE 10.OCT.88		
	CHK DATE	FIRST USED ON AC 9561/9531	PART NO
	APPD DATE 10.OCT.88	MATERIAL	FINISH
ASTEC COMPONENT LTD. HONG KONG		SH 1 OF 1	A1

BOSCHERT POWER SUPPLY SPECIFICATIONS

Input Characteristics

AC Input Voltage — 90 to 132 VAC (Jumper Selectable)
180 to 264 VAC (Jumper Selectable)

AC Input Frequency — 47 to 440 HZ

Output Characteristics

Output Voltage	Load min	Load max	Tolerance Ripple	Output
+5 VDC	2.0A	15.0A	± 3%	100 mv p-p
+12 VDC	1.0A	5.0A	± 4%	80 mv p-p

General Characteristics

Operating Temperature — 0° C to 70° C

Overvoltage Protection — +5V output trip voltage
5.50V to 7.0V

Hold-up Time — 16-msec minimum

Input Surge Current — 32 amps

REV	DESCRIPTION	ECO	DATE	APPROVED
A	REL TO PROD		[illegible]	[illegible]
B		7960		
C	REL TO PROD	8478	7-12-83	SH, KN
D	INCORPORATED		1-30-84	[illegible]

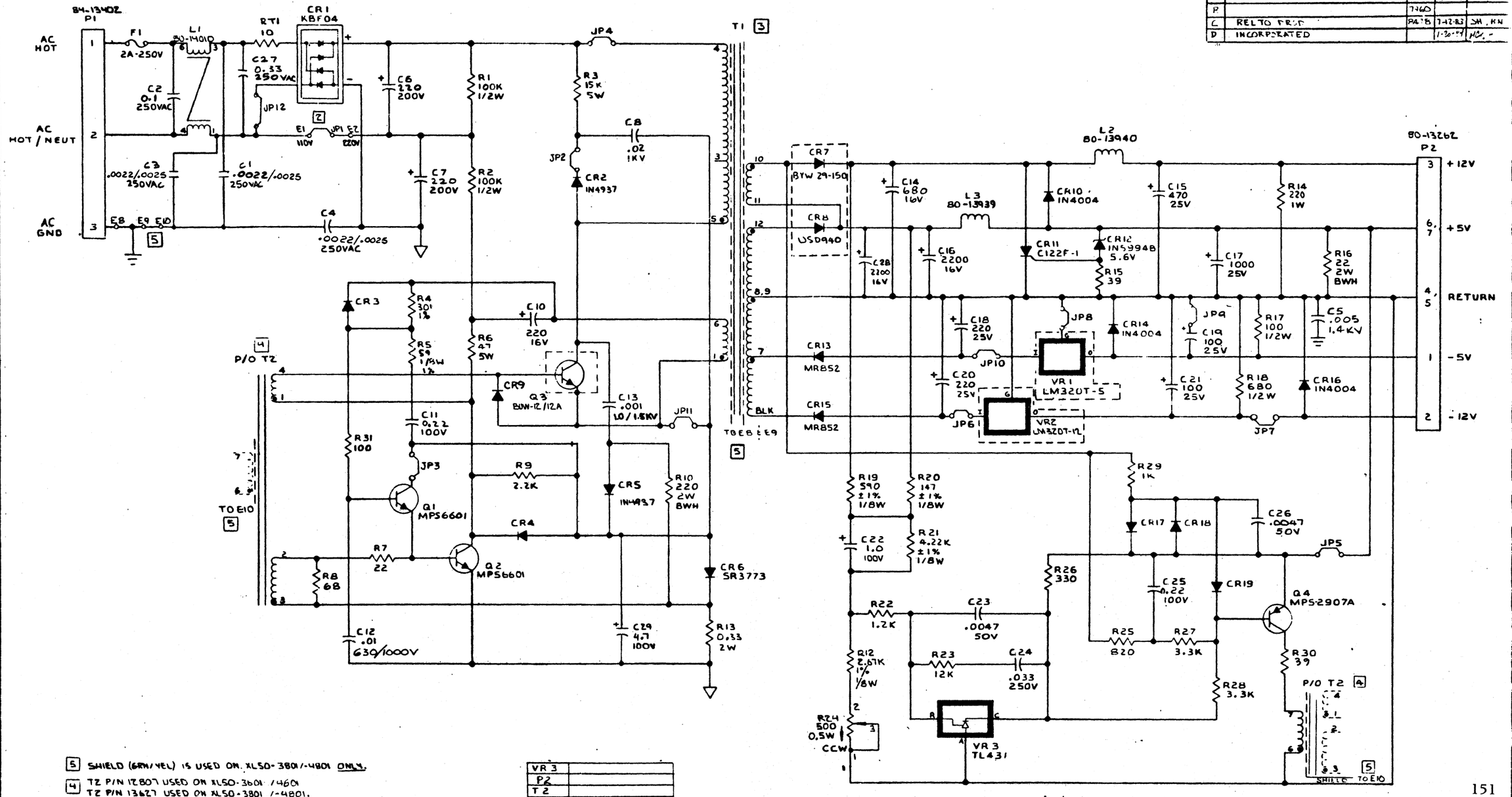

5 SHIELD (GRN/YEL) IS USED ON XLSO-3801/-4801 ONLY.

4 T2 P/N 12807 USED ON XLSO-3601 /4601
T2 P/N 13627 USED ON XLSO-3801 /-4801.

3 T1 P/N 14374 USED ON XLSO-3601 /4601.
T1 P/N 14375 USED ON XLSO-3801 /-4801.

2 FOR 220V OPERATION CONNECT JP1 TO E2
FOR 110V OPERATION CONNECT JP1 TO E1

1. RESISTORS ARE IN OHMS, ± 5%, 1/4W
DIODES ARE 1N4448
CAPACITORS ARE IN MICROFARADS, VOLTAGE RATINGS ARE IN D.C.

NOTES: UNLESS OTHERWISE SPECIFIED;

VR3	
P2	
T2	
RT1	
R32	R11
Q4	
L3	
JP12	
F1	
E10	E3, E4, E5, E6, E7
CR19	
C29	C9
LAST USED	NOT USED
REFERENCE DESIGNATORS	

ITEM	QTY	PART NUMBER	DESCRIPTION	REF DESIGNATION

UNLESS OTHERWISE SPECIFIED DIMENSIONS ARE IN INCHES
TOLERANCES
DECIMALS (.XX) — FRACTIONS —
DECIMALS (.XXX) — ANGLES —

NEXT ASSY | MOD NO
45-[illegible]
45-[illegible]
45-[illegible]
45-[illegible]

DO NOT SCALE DRAWING

All drawings supplied for the BOSCHERT power supply are the property of BOSCHERT INCORPORATED and shall not be reproduced or copied or used in whole or in part as the basis for manufacture or sale of the items shown therein without the express written permission of an officer of BOSCHERT INCORPORATED

APPROVALS | DATE
DRAWN LINH VO 8-9-83
CHECKED S. HIGUERA 7-[illegible]
ENG H. NGUYEN 7-[illegible]
ENG MGR H. NGUYEN 7-[illegible]
MFG MGR [illegible]
QA MGR S. WEBEYER 7-[illegible]
RELEASED [illegible]

boschert BOSCHERT INC. SUNNYVALE CALIFORNIA

SCHEMATIC
POWER SUPPLY
XLSO- 3601 /4601
3801 /4801

D | DWG NO 90-13860 | REV D
SCALE N/A | SHEET 1 OF 1

APPENDIX F
IMI WINCHESTER MECHANISM SPECIFICATIONS AND SCHEMATICS

APPENDIX F
IMI WINCHESTER MECHANISM SPECIFICATIONS AND SCHEMATICS

Operational Specifications	5006H (5 MB)	5012H (10 MB)	5018H (16 MB)
Disks per Drive	1	2	3
Disk Diameter (in/mm)	5.25/133	5.25/133	5.25/133
Data Surfaces per Drive	2	4	6
Heads per Surface	1	1	1
Heads per Drive	2	4	6
Number of Data Cylinders/Drive (including all spare tracks)	306	306	306
Sectors per Track	18	18	18
Track Density	303	303	303
Bytes per Sector (Formatted)	512	512	512
Bytes per Track (Formatted)	9,216	9,216	9,216
Bytes per Drive	5.5MB	11.1MB	16.1MB
Capacity (blocks)	10,728	21,600	32,472
Bit Density, maximum (BPI)	9,706	9,706	9,706
Recording Format	MFM	MFM	MFM
Average Latency (ms)	8.3	8.3	8.3
Access Times (ms)			
Track-to-Track	3	3	3
Average	49	49	49
Maximum	99	99	99
Data Transfer Rate (Kb/s)	625	625	625
Rotational Speed (rpm)	3600	3600	3600

Environmental Requirements	
Operating Temperature	
Degrees C	4° to 50°
Degrees F	39° to 122°
Non-Operating Temperature	
Degrees C	−40° to 60°
Degrees F	−40° to 140°
Operating Relative Humidity (%)	8 to 80
Non-Operating Relative Humidity (%)	8 to 80
Operating Altitude (ft)	−1,000 to +10,000
Non-Operating Altitude (ft)	−1,000 to +50,000
Operating Vibration (g)	0.1 (5 cps linear increase to 100 cps)
Non-Operating Vibration (g)	1.0 (2 cps linear increase to 100 cps)
Non-Operating Shock (g)	5.0 for 5 ms duration

	Switch Position							
	1	2	3	4	5	6	7	8
5006H	C	C	C	C	C	C	C	C
5012H	O	C	C	C	C	C	C	C
5018H	C	O	C	C	C	C	C	C

Table F-1. Controller PCA Switch (U22) Settings

C = CLOSED
O = OPEN

	Jumper E3	Jumper E4*
5006H	A—B	A—B
5012H	A—B	A—B
5018H	A—B	A—B

Table F-2. Controller PCA Jumper Settings

*Jumper E4 need only be checked on Revision A or later controllers

Brake Check and Adjustment

The drive motor brake must be checked to insure that the brake is not in contact with the motor hub during drive operation. A misadjusted brake will inhibit the motor from reaching the proper speed or will not stop the motor at the appropriate time.

Tools Required

The following tools are required to perform a brake check and adjustment:

- 5/64" Allen wrench
- 0.015" feeler gauge

Brake Adjustment Procedures

The brake adjustment must be performed accurately and rechecked for compliance with the tolerances specified.

1. Using the drive Diagnostic program, park the heads of the drive mechanism.
2. The drive mechanism must be removed from the cabinet and disassembled as detailed in section 3.2.3 of this manual.
3. With the mechanism out of the cabinet, turn the mechanism upside down and remove the standoffs which attach the Read/Write PCA to the mechanism.

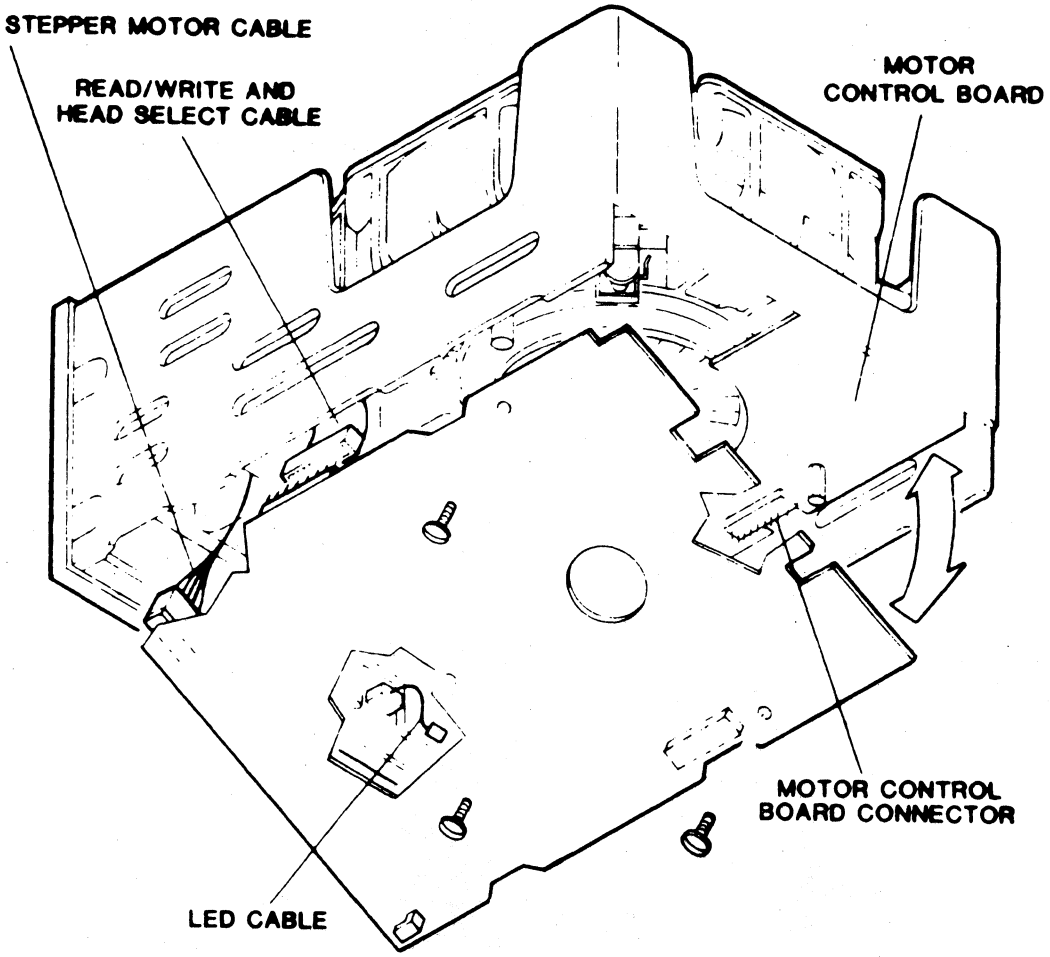

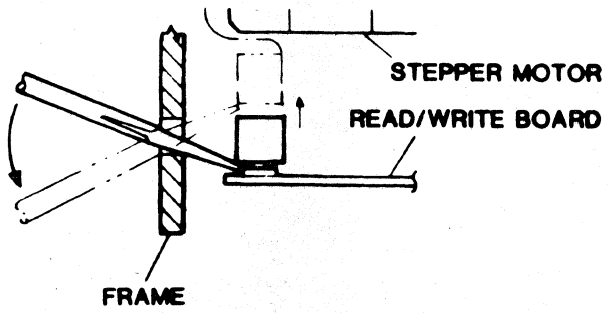

Figure F-1. IMI Read/Write PCA Removal

4. Carefully disconnect the Read/Write PCA from the Motor Control PCA connector.
5. Disconnect the stepper motor cable.
6. Disconnect the Read/Write Head Select cable. This is a fragile mylar flat cable.

CAUTION:

Do not stretch the Read/Write Head Select cable. It is very fragile and may tear. If the cable tears, the drive mechanism must be replaced, and the WARRANTY WILL BE VOID.

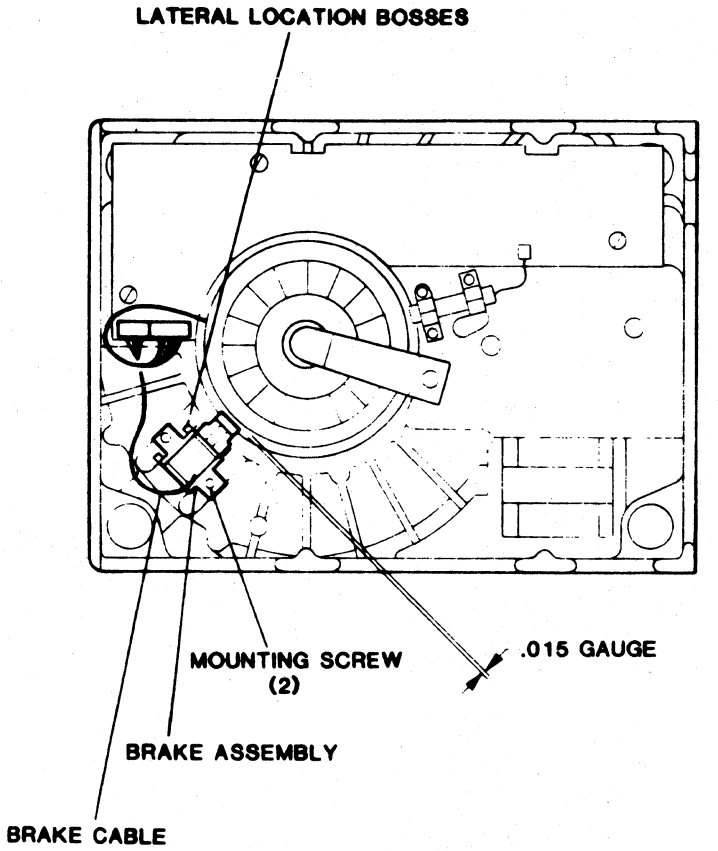

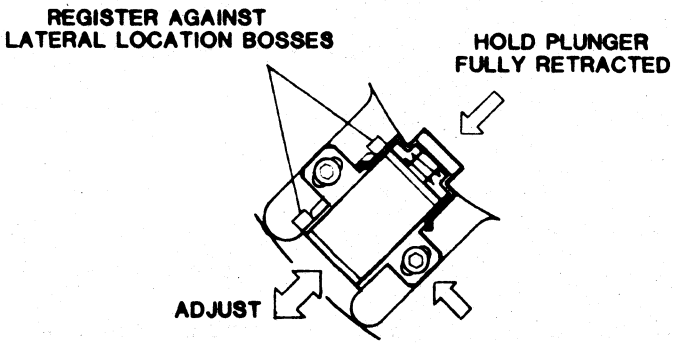

Figure F-2. IMI Brake Assembly and Adjustment

7. Loosen the brake assembly mounting screws.
8. Hold the brake assembly against the lateral location bosses.
9. Place the .015 inch feeler gauge between the brake friction shoe and the motor hub.
10. While holding the brake plunger fully retracted, move the brake assembly against the feeler gauge and the motor hub, and tighten the brake mounting screws. Do not overtighten these screws.
11. Recheck the brake clearance with the brake plunger retracted.
12. Reinstall the Read/Write PCA, being careful when reattaching the Read/Write Head Select cable.
13. Reinstall the disk mechanism; reassemble the system observing the cautions in section 3.3.

Index Check and Adjustment

The Index Sensor sends a pulse to the Motor Control PCA each time the index tab rotates past the sensor. The Motor Control PCA monitors these magnetic pulses and adjusts the current to provide a constant speed of the spindle drive motor.

Tools Required

The following tools are required to perform an index check and adjustment:

- 5/64" Allen wrench
- 0.015" feeler gauge

Index Adjustment Procedures

The correct distance between the index sensor and the index tab is necessary for proper operation of the drive mechanism. If the index sensor is too far away from the tab, it may not sense the magnetic pulse. If it is too close to the tab, it may inhibit the motor from turning freely.

1. Using the drive Diagnostic program, park the heads of the drive mechanism.
2. Disassemble the OmniDrive as described in Chapter 3.
3. With the mechanism out of the cabinet, turn it upside down and remove the standoffs which attach the Read/Write PCA to the mechanism (see Figure 4.3).
4. Carefully disconnect the Read/Write PCA from the Motor Control PCA connector.
5. Disconnect the stepper motor cable.
6. Disconnect the Read/Write Head Select cable. This is a fragile mylar flat cable.

CAUTION:

Do not stretch the read/write Head Select cable. It is very fragile and may tear. If the cable tears, the drive mechanism must be replaced and the WARRANTY WILL BE VOID.

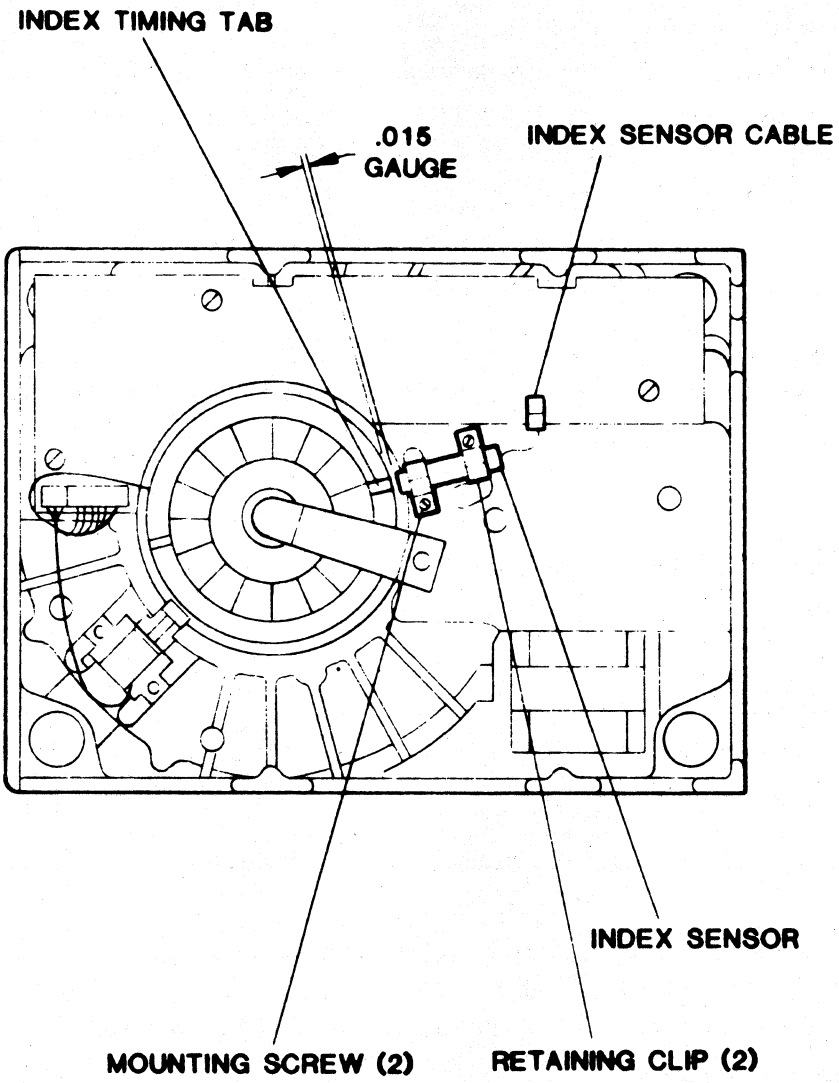

Figure F-3. IMI Index Assembly and Adjustment

7. Loosen the two index sensor assembly screws.
8. Rotate the motor until the silver colored timing tab lines up with the index sensor.

CAUTION:

Rotate the drive motor in a clockwise direction when viewed from the bottom. Incorrect rotation may cause damage to the recording media.

9. Place a 0.015" feeler gauge between the index tab and the index sensor.
10. Move the index sensor against the feeler gauge and tighten the mounting screws.
11. Recheck the alignment of the index sensor to insure that the index gap is correct.
12. Reinstall the Read/Write PCA, being careful when reattaching the Read/Write Head Select cable.
13. Reassemble the system observing the cautions in section 3.3.

THIS DRAWING AND THE INFORMATION IT CONTAINS ARE THE PROPERTY OF IMI AND ARE TO BE USED ONLY FOR THE PURPOSE OF MANUFACTURING PARTS FOR IMI.

REV	DATE	EC NO
AA	11-17-92	480
BB	1-25-93	491

REV	DATE	EC NO

263-02410-001

SHEET ASSEMBLY	USED ON

J25-1 MAG. PICK UP
J25-2 -MAG. PICK UP
+6.2V
R11 4.7K
R23 1.2K
C5 10nF
R14 4.7K
R13 18K
R12 4.7K
U1 1/2 LM392
R10 4.7K
TP-1
360µs
-INDEX SH-2

J22-1 MOTOR TAC
R37, 1.2K +6.2V
+5V
R13 1.2K
U8 LS14
R17 1.2K
U8 LS14
R38 1.2K
R18 1.2K
C2 .1µF
R21 1.2K
R22 4.7K
Q1 PN2907
C1 .22µF
R3 2.7MEG
CR2 IN4148
CR1 IN4148
R9 1.2K
R7 1.2K
R20 1.2K
Q2 PN2222
R1 100K
R8 4.7K
R2 4.7K
U1 1/2 LM392
R4 1.2K
CR5 IN4148
CR6 IN4148
U2 ULN 2074B
R6 1Ω 25W 5%
R5 33Ω
C3 1mF
C11 1mF
COIL 1 J22-5
COIL 2 J22-6

256µs
-DEC SPEED
INC SPEED
MOTOR

+12V
R15 8.2Ω 2W, 5%
BRAKE J22-7
CR4 IN5818
BRAKE RET J22-8
MOTOR +12V J22-4
C4 10mF
MOTOR RET J22-2
MOTOR J22-3
+5V

U3 1 MHz
U10 LS02
U11 CD4020
U12 LS30
U5 LS14
R34 270K
C14 10mF
U13 339
R36 8.2K
R95 3.3K

U9 1/2 LS175
U8 LS14
J24-15
J24-16
J24-7
J24-8
J24-14
J24-11
J24-12
+12V
C6 10µF
C7,8 100nF

SH-2 -POWER LOSS
SH-2
1 MHz CLK J24-4
U7 LS02
U8 LS14
-CPU RESET J24-9

MATERIAL:	SCALE NONE	IMI	
FINISH	DRAWN M. LIFF 8-10-92	MOTOR CONTROL 5000 H	
UNLESS OTHERWISE SPECIFIED ALL DIMENSIONS INCHES TOLERANCES	CKD DATE	D	263-02410-001 BB
DECIMAL .XX ± .XXX ± FRACTIONAL ± ANGULAR ±	ENG APPROVED 1/25/93 DATE	SHEET 1 OF 2	REV.
	RELEASED DATE		

161

THIS DRAWING AND THE INFORMATION IT CONTAINS ARE THE PROPERTY OF IMI AND ARE TO BE USED ONLY FOR THE PURPOSE OF MANUFACTURING PARTS FOR IMI.

NO.	DATE	EC NO
AA	11-17-82	480
BB	1-26-83	491

REV	DATE	EC NO.

263-02410-001

NEXT ASSEMBLY | USED ON

+5V
R39 4.7K

U6 LS163 | U5 LS163 | U4 LS163

SH-1 1 MHz CLK

SH-1 -INDEX
360µS

U9 1/2 LS175

U8 LS14

U7 LS02

SECTOR → J24-2

INDEX CLK → J24-5

INDEX → J24-6

GND

TP-3 GND

J23-4 DIODE 1
J23-3 AMP RET
J23-2 DIODE RET

R32 220Ω +5V

+12V
R28 220Ω
CR3 1N5234 6.2V 2%

R27 24K | R33 18K | R30 10K
U13 339
R25 4.7K
C10 10µF

SPARE → J24-10,13

+6.2V → SH-1

SH-1

-POWER LOSS → J24-1

R29 24K
U13 339

+12V
R31 270K
+5V
R24 4.7K
J23-1 Ø SENSE
U13 339

TP-2 CYL ØØ

CYL Ø → J24-3

NOTES: UNLESS OTHERWISE SPECIFIED.

1. ALL RESISTORS ARE IN OHMS(Ω), 1/4W, 5%.
2. ALL CAPACITORS ARE MICROFARADS(µF).
3. NOT USED: C9, R16

MATERIAL	SCALE NONE	IMI
FINISH	DRAWN M.LIFF 9-19-82	MOTOR CONTROL 5000 H
UNLESS OTHERWISE SPECIFIED ALL DIMENSIONS INCHES TOLERANCES	CKD / ENGR T Stark 20 Jan 83 / APPROVED	D 263-02410-001 BB
DECIMAL XX ± .01 XXX ± .005 FRACTIONAL ± 1/64 ANGULAR ± 1°	RELEASED	SHEET 2 OF 2 REV.

THIS DRAWING AND THE INFORMATION IT CONTAINS ARE THE PROPERTY OF IMI AND ARE TO BE USED ONLY FOR THE PURPOSE OF MANUFACTURING PARTS FOR IMI.

REV	DATE	EC NO.
AA	11-23-82	466

REV	DATE	EC NO.

263-01908-101

NEXT ASSEMBLY	USED ON

J25-1 MAG. PICK UP
J25-2 -MAG. PICK UP
C5 10nF
R23 1.2K
R11 4.7K
R14 4.7K
R13 18K
R12 4.7K
R10 4.7K
U1 1/2 LM392
TP-1
360µs
-INDEX SH-2

J22-1 MOTOR TAC
R19 1.2K
U8 LS14
R17 1.2K
R37, 1.2K +6.2V
R38 1.2K
R18 1.2K
C2 .1µF
C1 .22µF
R3 1.2 MEG
CR2 IN4148
CR1 IN4148
CR5 IN4148
CR6 IN4148
U2 ULN 2074B
R5 24Ω
C3 1µF
C11 1µF
COIL 1 J22-5
COIL 2 J22-6
R6 1Ω 1W
R21 1.2K
R22 4.7K
Q1 2N2907
R9 1.2K
R7 1.2K
R20 1.2K
Q2 2N2222
R1 47K
R8 4.7K
R2 4.7K
R4 1.2K
256µs
-DEC SPEED
INC SPEED
MOTOR
U3 1 MHz
U10 LS02
U11 CD4020
U9 1/2 LS175
U12 LS30
U13
R34 270K
C14 10µF
R36 8.2K
R35 3.3K
+12V
R15 8.2Ω 1W
BRAKE J22-7
CR4 IN5818
BRAKE RET J22-8
MOTOR +12V J22-4
C4 10µF
MOTOR RET J22-2
MOTOR J22-3
J24-15
J24-16
J24-7
J24-8
J24-14
J24-11
J24-12
C6 10µF
C7,8 100nF
SH-2 1 MHz CLK J24-4
SH-2 -POWER LOSS

MATERIAL:	SCALE NONE	IMI INTERNATIONAL MEMORIES INCORPORATED	
FINISH:	DRAWN M. LIFF DATE 9-10-82	MOTOR CONTROL 5000H	
UNLESS OTHERWISE SPECIFIED ALL DIMENSIONS INCHES TOLERANCES: DECIMAL .XX ± .XXX ± FRACTIONAL ± ANGULAR ±	CKD. DATE / ENGR. DATE / APPROVED DATE / RELEASED DATE	D 263-01908-201	AA
		SHEET 1 OF 2	REV.

BISHOP GRAPHICS/ACCUPRESS REORDER NO. A16765

THIS DRAWING AND THE INFORMATION IT CONTAINS ARE THE PROPERTY OF IMI AND ARE TO BE USED ONLY FOR THE PURPOSE OF MANUFACTURING PARTS FOR IMI.

REV	DATE	EC NO.
AA	11-23-82	466

REV	DATE	EC NO.

263-01908-101

NEXT ASSEMBLY	USED ON

U8 LS14

U6 LS163 · U5 LS163 · U4 LS163

U7 LS02

SH-1 1 MHz CLK

SH-1 -INDEX

360µs

U9 1/2 LS175

SECTOR → J24-2

INDEX CLK → J24-5

INDEX → J24-6

GND

TP-3 GND

SPARE → J24-9, 10, 13

+6.2V → SH-1

SH-1

-POWER LOSS → J24-1

CYL Ø → J24-3

TP-2 CYL ØØ

J23-4 DIODE 1 — R32 220Ω → +5V

J23-9 AMP RET

J23-2 DIODE RET

CR3 IN5234 6.2V 2%

R28 220Ω · R33 18K · R27 24K · R30 10K · R25 4.7K · C10 10µF

U13 339

U8 LS14 SPARES

R29 24K

J23-1 Ø SENSE — R31 270K · R24 4.7K

+12V · +5V

NOTES: UNLESS OTHERWISE SPECIFIED.

1. ALL RESISTORS ARE IN OHMS (Ω), 1/4W, 5%.
2. ALL CAPACITORS ARE MICROFARADS (µF).
3. NOT USED: C9, R16

MATERIAL	SCALE NONE	IMI INTERNATIONAL MEMORIES INCORPORATED
	DRAWN M.LIFF 9-13-82 DATE	
FINISH	CKD. DATE	MOTOR CONTROL 5000 H
UNLESS OTHERWISE SPECIFIED ALL DIMENSIONS INCHES TOLERANCES:	ENGR. DATE	
DECIMAL .XX ± .XXX ± FRACTIONAL ± ANGULAR ±	APPROVED DATE	D 263-01908-201 AA
	RELEASED DATE	SHEET 2 OF 2 REV.

BISHOP GRAPHICS/ACCUPRESS REORDER NO. X1878

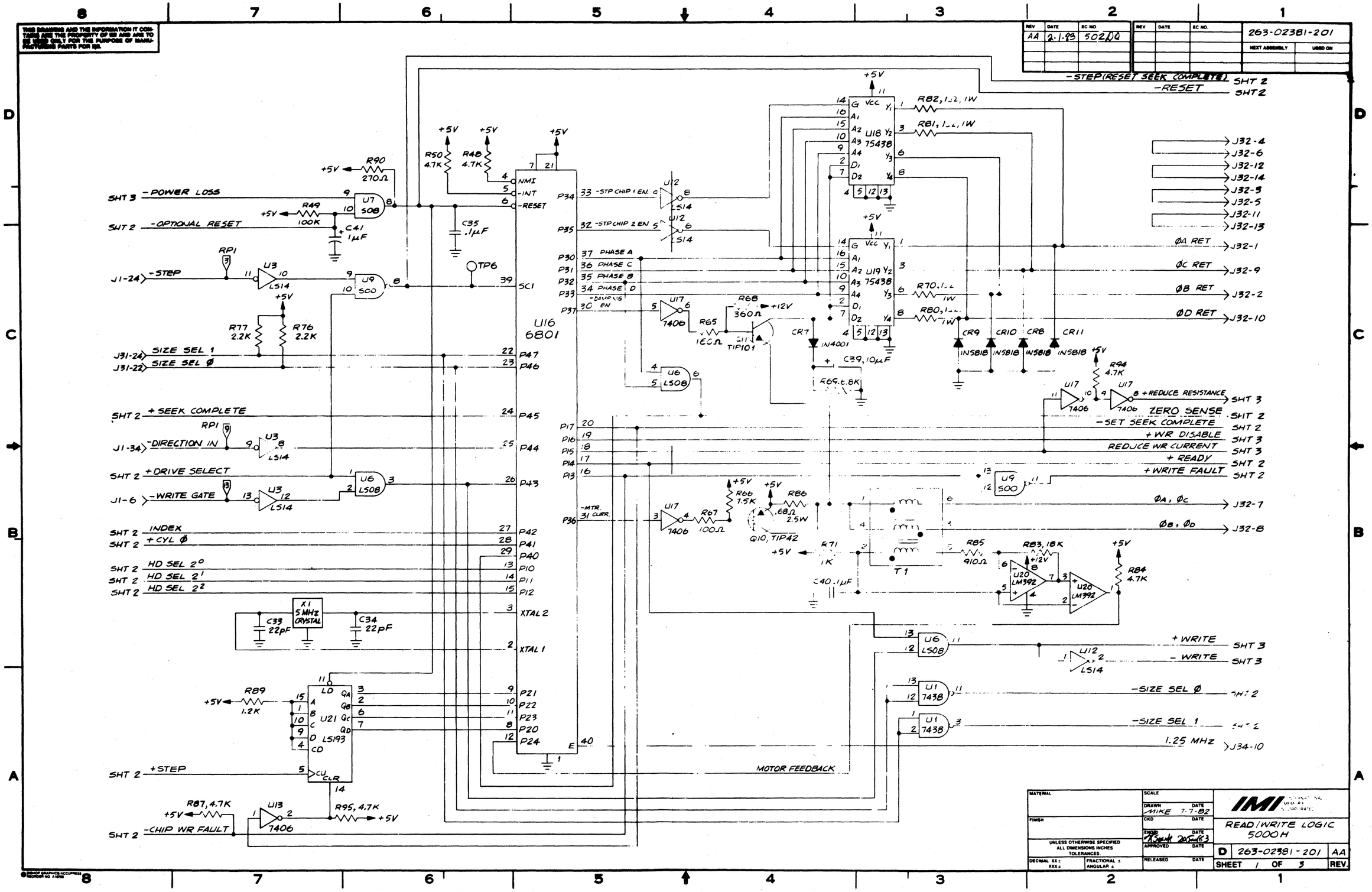

THIS DRAWING AND THE INFORMATION IT CONTAINS ARE THE PROPERTY OF IMI AND ARE TO BE USED ONLY FOR THE PURPOSE OF MANUFACTURING PARTS FOR IMI.
REV AA DATE 2-1-83 EC NO. 502DQ
263-02381-201
NEXT ASSEMBLY
USED ON
-STEP (RESET SEEK COMPLETE) SHT 2
-RESET SHT 2
SHT 3 -POWER LOSS
SHT 2 -OPTIONAL RESET
J1-24 -STEP
J31-24 SIZE SEL 1
J31-22 SIZE SEL Ø
SHT 2 +SEEK COMPLETE
J1-34 -DIRECTION IN
SHT 2 +DRIVE SELECT
J1-6 -WRITE GATE
SHT 2 INDEX
SHT 2 +CYL Ø
SHT 2 HD SEL 2⁰
SHT 2 HD SEL 2¹
SHT 2 HD SEL 2²
SHT 2 +STEP
SHT 2 -CHIP WR FAULT
U16 6801
U18 75438
U19 75438
U21 LS193
U20 LM392
U7 S08
U9 S00
U6 LS08
U17 7406
U13 7406
U1 7438
U12 LS14
U3 LS14
X1 5 MHz CRYSTAL
TP6
-STP CHIP 1 EN.
-STP CHIP 2 EN
PHASE A
PHASE C
PHASE B
PHASE D
-DAMPING EN
-MTR. CURR.
MOTOR FEEDBACK
Q10, TIP42
T1
CR7 1N4001
CR9 1N5818
CR10 1N5818
CR8 1N5818
CR11 1N5818
ØA RET J32-1
ØC RET J32-9
ØB RET J32-2
ØD RET J32-10
+REDUCE RESISTANCE SHT 3
ZERO SENSE SHT 2
-SET SEEK COMPLETE SHT 2
+WR DISABLE SHT 3
REDUCE WR CURRENT SHT 3
+READY SHT 2
+WRITE FAULT SHT 2
ØA, ØC J32-7
ØB, ØD J32-8
+WRITE SHT 3
-WRITE SHT 3
-SIZE SEL Ø SHT 2
-SIZE SEL 1 SHT 2
1.25 MHz J34-10
MATERIAL
FINISH
UNLESS OTHERWISE SPECIFIED ALL DIMENSIONS INCHES TOLERANCES
DECIMAL XX ± XXX ±
FRACTIONAL ± ANGULAR ±
SCALE
DRAWN MIKE DATE 7-7-82
CKD DATE
ENGR DATE
APPROVED DATE
RELEASED DATE
IMI
READ/WRITE LOGIC 5000H
D 263-02381-201 AA
SHEET 1 OF 3 REV.

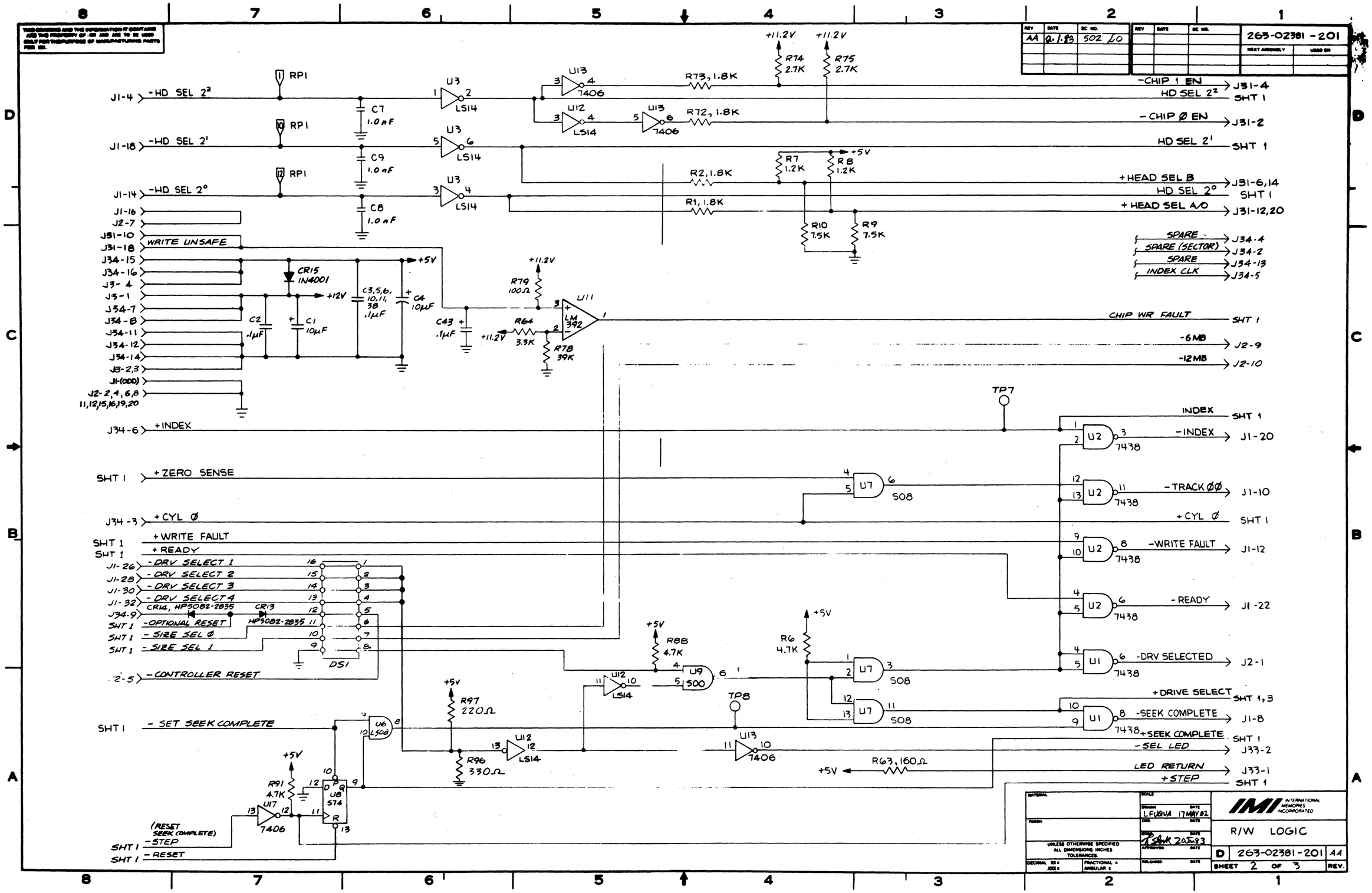

263-02381-201
AA 2.1.83 502 LO
J1-4 -HD SEL 2²
J1-18 -HD SEL 2¹
J1-14 -HD SEL 2⁰
RP1
C7 1.0nF
C9 1.0nF
C8 1.0nF
U3 LS14
U13 7406
U12 LS14
R73, 1.8K
R72, 1.8K
R74 2.7K
R75 2.7K
+11.2V
-CHIP 1 EN J31-4
HD SEL 2² SHT 1
-CHIP Ø EN J31-2
HD SEL 2¹ SHT 1
R7 1.2K
R8 1.2K
+5V
R2, 1.8K
R1, 1.8K
R10 7.5K
R9 7.5K
+HEAD SEL B J31-6,14
HD SEL 2⁰ SHT 1
+HEAD SEL A/O J31-12,20
SPARE J34-4
SPARE (SECTOR) J34-2
SPARE J34-13
INDEX CLK J34-5
J1-16
J2-7
J31-10
J31-18 WRITE UNSAFE
J34-15
J34-16
J3-4
J3-1
J34-7
J34-8
J34-11
J34-12
J34-14
J3-2,3
J1-(ODD)
J2-2,4,6,8 11,12,15,16,19,20
CR15 1N4001
+12V
C2 .1µF
C1 10µF
C3,5,6, 10,11, 38 .1µF
C4 10µF
C43 .1µF
R79 100Ω
R64 3.3K
R78 39K
U11 LM 392
CHIP WR FAULT SHT 1
-6MB J2-9
-12MB J2-10
TP7
J34-6 +INDEX
INDEX SHT 1
-INDEX J1-20
SHT 1 +ZERO SENSE
U7 S08
-TRACK ØØ J1-10
J34-3 +CYL Ø
+CYL Ø SHT 1
SHT 1 +WRITE FAULT
SHT 1 +READY
-WRITE FAULT J1-12
J1-26 -DRV SELECT 1
J1-28 -DRV SELECT 2
J1-30 -DRV SELECT 3
J1-32 -DRV SELECT 4
J34-9 CR14, HP5082-2835
CR13 HP5082-2835
SHT 1 -OPTIONAL RESET
SHT 1 -SIZE SEL Ø
SHT 1 -SIZE SEL 1
DS1
-READY J1-22
-DRV SELECTED J2-1
J2-5 -CONTROLLER RESET
R88 4.7K
U9 S00
R6 4.7K
U12 LS14
+DRIVE SELECT SHT 1,3
-SEEK COMPLETE J1-8
+SEEK COMPLETE SHT 1
SHT 1 -SET SEEK COMPLETE
U6 LS08
R97 220Ω
R96 330Ω
TP8
U13 7406
-SEL LED J33-2
R63, 160Ω
LED RETURN J33-1
+STEP SHT 1
R91 4.7K
U17 7406
U8 S74
(RESET SEEK COMPLETE)
SHT 1 -STEP
SHT 1 -RESET
INTERNATIONAL MEMORIES INCORPORATED
R/W LOGIC
D 263-02381-201 AA
SHEET 2 OF 3

REV	DATE	EC NO.
AA	2.1.83	5021C.

REV	DATE	EC NO.

263-02381-201

NEXT ASSEMBLY | USED ON

SHT 1 +REDUCE RESISTANCE

+12V R53 100Ω C36 1μF TP2

C42 120pF R55 240Ω R54 240Ω

L2, 5.6μH L1, 5.6μH C25, .1μF C27 120pF C26 22pF C23 .1μF C24 .1μF

R45 470Ω R44 24K R43 24K

+5V

+12V R93, 1K CR12 HP5082-2835

Q12 J110 G D S

R92 82Ω R42 200Ω C22, 240pF

U14 592

TP1 R23 220Ω C21 .1μF

R26, 510Ω R27, 1.0K R24 510Ω R22 510Ω R25 510Ω R28 1.0K C15 .1μF

U10 116

R51 2.7K R52 2.7K C20 .1μF C16 220pF C17 220pF

R33 510Ω R34 510Ω R31 510Ω R32 510Ω R29 330Ω R30 330Ω

+12V R13 820Ω R14 820Ω C12, 220pF

Q1 Q2 2N5771

U9 500

U5 LS31

+RD DATA J2-17

-RD DATA J2-18

R16 270Ω R15 270Ω

SHT 2 +DRIVE SELECT

+12V R46 1.2K CR4 IN5234 C28 .1μF

R37 270Ω C18 470pF

U15 CA3054

TP4 J31-8,16 DX R61 220Ω R58 820Ω C37 10nF R57 +70Ω R56 820Ω

TP5 R62 220Ω J31-5,13 DY R60 510Ω R59 510Ω

TP3

R36, 4.7K R35, 4.7K R38, 2.7K CR2, IN4148

Q3 Q4 MPS2369

R18, 2.7K C13 47 pF R17 4.7K

U11 392

FALSE GND (+5V)

+12V R47, 20Ω CR5 IN5234 Q9 LM 340 5V C31 .1μF C30 .1μF

VEE (+7) J31-11

CR6, IN4001 VCC (+11.2V) J31-9,17

FALSE GND (+5V) J31-3

+WR CURRENT J31-7,15

+12V C32 .1μF Q8 LM 340 5V

(5TO8.5) WR SELECT J31-1,19

R40 680Ω C19 10nF R39 360Ω

GND J31-21,23

R21, 2.7K Q7 2222A

J2-14 -WRITE DATA R5 100Ω

J2-13 +WRITE DATA

SHT 1 +WRITE

U4 LS32

U8 S74

R3, 2.2K +5V

CR3 HP 5082-2835 R41 1.5K

R20, 2.7K Q6 2222A

CR1 IN4148 R11 150Ω 1% R12 20Ω 1%

R19 2K 1% Q5 2222A

J34-1 - POWER LOSS

SHT 1 + WR DISABLE

SHT 1 + REDUCE WR CURRENT

SHT 1 -WRITE

U13 7406

- POWER LOSS SHT 1

MATERIAL		SCALE	IMI INTERNATIONAL MEMORIES INCORPORATED
FINISH		DRAWN LFUQUA 17MAY82	R/W LOGIC
UNLESS OTHERWISE SPECIFIED ALL DIMENSIONS INCHES TOLERANCES		CHK'D	D 263-02381-201 AA
DECIMAL XX ± XXX ±	FRACTIONAL ± ANGULAR ±	APPROVED	SHEET 3 OF 3 REV.

173

THIS DRAWING AND THE INFORMATION IT CONTAINS ARE THE PROPERTY OF IMI AND ARE TO BE USED ONLY FOR THE PURPOSE OF MANUFACTURING PARTS FOR IMI.

REV	DATE	EC NO
AA	NEW RELEASE	465 VB

REV	DATE	EC NO

263-02157-201

NEXT ASSEMBLY	USED ON

-STEP(RESET SEEK COMPLETE) SHT 2
-RESET SHT 2

SHT 3 -POWER LOSS
SHT 2 DS1-12
J1-24 -STEP
J31-24 SIZE SEL 1
J31-22 SIZE SEL Ø
SHT 2 + SEEK COMPLETE
J1-34 -DIRECTION IN
SHT 2 +DRIVE SELECT
J1-6 -WRITE GATE
SHT 2 INDEX
SHT 2 + CYL Ø
SHT 2 HD SEL 2⁰
SHT 2 HD SEL 2¹
SHT 2 HD SEL 2²
SHT 2 -CHIP WR FAULT

+5V R90 270Ω
R49 100K
C41 1µF
RP1
U3 LS14
U9 SCC
R77 2.2K
R76 2.2K
R50 4.7K
R48 4.7K
C35 .1µF
TP6
U7 S08
U6 LS08
R95, 4.7K
R89 1.2K
R87, 4.7K
X1 5 MHz CRYSTAL
C33 22pF
C34 22pF

U16 6801
NMI
-INT
-RESET
SCI
P47
P46
P45
P44
P43
P42
P41
P40
P10
P11
P12
XTAL 2
XTAL 1
P21
P22
P23
P20
P24

P34 33 -STP CHIP 1 EN.
P35 32 -STP CHIP 2 EN
P30 37 PHASE A
P31 36 PHASE C
P32 35 PHASE B
P33 34 PHASE D
P37 30 -DRIVE SELECT EN
P17 20
P16 19
P15 18
P14 17
P13 16
-MTR. 31 CURR.
P36
E 40

U12 LS14
U17 7406
U6 LS08
R68 360 +12V
R65 160
Q11 TIP101
CR7 IN4001
C39, 10µF
R69, 6.8K
R66 1.5K
R67 100Ω
R86 .68Ω 2.5W
Q10, TIP42
R71 1K
C40 .1µF
T1
R85 910Ω
R83, 18K +12V
U20 LM392
R84 4.7K
U18 75438
U19 75438
R82, 1Ω, 1W
R81, 1Ω, 1W
R70, 1Ω 1W
R80, 1Ω 1W
CR9 IN5818
CR10 IN5818
CR8 IN5818
CR11 IN5818
R94 4.7K
U9 S00
U1 7438

ØA RET J32-1
ØC RET J32-9
ØB RET J32-2
ØD RET J32-10
J32-4
J32-6
J32-12
J32-14
J32-3
J32-5
J32-11
J32-13
ØA, ØC J32-7
ØB, ØD J32-8
8 +REDUCE RESISTANCE SHT 3
ZERO SENSE SHT 2
-SET SEEK COMPLETE SHT 2
+WR DISABLE SHT 3
REDUCE WR CURRENT SHT 3
+READY SHT 2
+WRITE FAULT SHT 2
+WRITE SHT 3
-WRITE SHT 3
-SIZE SEL Ø SHT 2
-SIZE SEL 1 SHT 2
1.25 MHz J34-10
MOTOR FEEDBACK

MATERIAL		SCALE	IMI INTERNATIONAL MEMORIES INCORPORATED
FINISH		DRAWN MIKE 7-7-82	READ/WRITE LOGIC 5000H
UNLESS OTHERWISE SPECIFIED ALL DIMENSIONS INCHES TOLERANCES: DECIMAL XX ± XXX ± FRACTIONAL ± ANGULAR ±		CKD / ENGR / APPROVED / RELEASED	D 263-02157-201 AA
			SHEET 1 OF 3 REV.

BISHOP GRAPHICS ACCURPRESS REORDER NO. A1016

THIS DRAWING AND THE INFORMATION IT CONTAINS ARE THE PROPERTY OF IMI AND ARE TO BE USED SOLELY FOR THE PURPOSES OF MANUFACTURING PARTS FOR IMI.

REV	DATE	EC NO.
AA	MAY 17,82	465 rB

REV	DATE	EC NO.

263-02157-201

NEXT ASSEMBLY | USED ON

J1-4 -HD SEL 2² — RP1 1 — C7 1.0nF — U3 1,2 LS14 — U13 3,4 7406 — R73, 1.8K — R74 2.7K (+11.2V) — R75 2.7K (+11.2V) — -CHIP 1 EN → J31-4; HD SEL 2² → SHT 1

J1-18 -HD SEL 2¹ — RP1 10 — C9 1.0nF — U3 5,6 LS14 — U12 3,4 LS14 — U13 5,6 7406 — R72, 1.8K — -CHIP Ø EN → J31-2; HD SEL 2¹ → SHT 1

J1-14 -HD SEL 2° — RP1 12 — C8 1.0nF — U3 3,4 LS14 — R2, 1.8K — R7 1.2K — R8 1.2K (+5V) — +HEAD SEL B → J31-6,14; HD SEL 2° → SHT 1

R1, 1.8K — R10 7.5K — R9 7.5K — +HEAD SEL A → J31-12,20

+12V → J3-1; +5V → J3-4, J3-2, J3-4

J31-10 / J31-18 WRITE UNSAFE — +5V — +12V — C1 10µF — C2,3,5,6,10,11,38 .1µF — + C4 10µF

C43 .1µF — +11.2V — R79 100Ω — R64 3.3K — R78 39K — U11 LM 392 — CHIP WR FAULT → SHT 1

J34-4 SPARE

J34-2 SPARE (SECTOR)

J34-13 SPARE

J34-5 INDEX CLK

J34-6 +INDEX — TP7 — U2 7438 — INDEX → SHT 1; -INDEX → J1-20

SHT 1 +ZERO SENSE — U7 LS08 — U2 7438 — -TRACK ØØ → J1-10

J34-3 +CYL Ø — +CYL Ø → SHT 1

SHT 1 +WRITE FAULT — U2 7438 — -WRITE FAULT → J1-12

-SIZE SELECT Ø → J2-9

-OPTIONAL RESET → SHT 1

-SIZE SELECT 1 → J2-10

SHT 1 +READY — U2 7438 — -READY → J1-22

HPS082-2835

J34-9

SW1 (DS1)

J1-26 -DRV SELECTED 1

J1-28 -DRV SELECTED 2

J1-30 -DRV SELECTED 3

J1-32 -DRV SELECTED 4

SHT 1 J2-5 SHT 1 -SIZE SELECT 1

SHT 1 -SET SEEK COMPLETE

R88 4.7K — U9 S00 — U12 LS14 — R6 4.7K (+5V) — U7 LS08 — U1 7438 — -DRV SELECTED → J2-1

+DRIVE SELECT → SHT 1, 3

TP8 — U13 7406 — U1 7438 — -SEEK COMPLETE → J1-8; +SEEK COMPLETE → SHT 1 J33-2

R63, 160Ω — +STEP → SHT 1 J33-1

J1-16

J2-7

J1 (ODD) / J2-2,4,6,8,11,12,15,16,19,20

(SEEK COMPLETE CLOCK)

SHT 1 -STEP

SHT 1 -RESET

R91 4.7K — U17 7406 — U8 S74

6 RP1 — U12 13,12 LS14 — U6 LS08 9,10,8

MATERIAL	SCALE	IMI INTERNATIONAL MEMORIES INCORPORATED	
FINISH	DRAWN LFUQVA 17MAY82	R/W LOGIC	
UNLESS OTHERWISE SPECIFIED ALL DIMENSIONS INCHES TOLERANCES. DECIMAL .XX ± .XXX ± FRACTIONAL ± ANGULAR ±	CHD DATE; ENGR DATE; APPROVED DATE; RELEASED DATE	D 263-02157-201 AA	
		SHEET 2 OF 3	REV.

177

REV	DATE	EC NO.	REV	DATE	EC NO.	263-02157-201	
AA	NOV 16/87	465 V8				NEXT ASSEMBLY	USED ON

SHT 1 +REDUCE RESISTANCE

+12V
R53 100Ω
C36 .1μF
C42 120pF
R55 240Ω
R54 240Ω
L2, 5.6μH
L1, 5.6μH
C27 120pF
C26 22pF
C25, .1μF
R45 470Ω
R44 24K
C23 .1μF
C24 .1μF
R43 24K
+5V
R93, 1K
CR12 HP5082-2835
Q12 J110
R98 82Ω
R42 300Ω
C22, 240pF
U14 592
R51 2.7K
R52 2.7K
TP 1
R23 220Ω
C21 .1μF
C20 .1μF
C16 220pF
C17 220pF
R26, 510Ω
R27, 1.0K
R24 510Ω
C15 .1μF
R22 510Ω
R25 510Ω
R28 1.0K
U10 116
R33 510Ω
R34 510Ω
R31 510Ω
R32 510Ω
R29 330Ω
R30 330Ω
R13 820Ω
R14 820Ω
C12, 220pF
Q1 Q2 2N5771
R16 270Ω
R15 270Ω
U9 S00
U5 LS31
+RD DATA → J2-17
-RD DATA → J2-18

SHT 2 +DRIVE SELECT
+12V
R46 1.2K
CR4 IN5234
C28 .1μF
U15 CA3054
TP 4
J31-8,16 DX
R61 220Ω
C37 10nF
R57 +70Ω
R58 820Ω
R56 820Ω
TP5
R62 220Ω
J31-5,13 DY
R60 510Ω
R59 510Ω
R37 270Ω
C18 470pF
TP 3
R36, 4.7K
R35, 4.7K
R38, 2.7K
CR2, IN4148
Q3 Q4 2N2369
R18, 2.7K
U11 392
C13 47 pF
R17 4.7K
FALSE GND (+5V)

+12V
R47, 20Ω
CR5 IN5234
Q9 LM340 5V
C31 .1μF
C30 .1μF
VEE (+.7) → J31-11
CR6, IN4001 VCC (+11.2V) → J31-9,17
FALSE GND (+5V) → J31-3

+ WR CURRENT → J31-7,15
+12V
Q8 LM340 5V
C32 .1μF
(5TO8.5)
WR SELECT → J31-1,19
J31-10
J31-18
GND → J31-21,23
R40 680Ω
C19 10nF
R39 360Ω
Q7 2222A
R21, 2.7K

J2-14 -WRITE DATA
J2-13 +WRITE DATA
SHT 1 +WRITE
R5 220Ω
U4 LS32
U8 74S74
R3, 2.2K
+5V
CR3 HP 5082-2835
R41 1.5K
R20, 2.7K
Q6 2222A
CR1 IN4148
R11 150Ω 1%
Q5 2222A
R12 20Ω 1%
R19 2K 1%

J34-1 - POWER LOSS → SHT 1
SHT-1 + WR DISABLE
SHT 1 + REDUCE WR CURRENT
SHT 1 -WRITE
U13 7406
U13 7406

MATERIAL	SCALE	IMI INTERNATIONAL MEMORIES INCORPORATED	
FINISH	DRAWN LFUQUA 17MAY82	R/W LOGIC	
UNLESS OTHERWISE SPECIFIED ALL DIMENSIONS INCHES TOLERANCES:	CHK	D 263-02157-201	AA
DECIMAL .XX ± .XXX ± FRACTIONAL ± ANGULAR ±	APPROVED	SHEET 3 OF 3	REV.

APPENDIX G
RODIME WINCHESTER MECHANISM SPECIFICATIONS AND SCHEMATICS

APPENDIX G
RODIME WINCHESTER MECHANISM SPECIFICATIONS AND SCHEMATICS

Operational Specifications	5.5 MB 201	11 MB 202	16.1 MB 203	45 MB 204E
Disks per Drive	1	2	3	4
Disk Diameter (in/mm)	5.25/133	5.25/133	5.25/133	5.25/133
Data Surfaces per Drive	2	4	6	8
Heads per Surface	1	1	1	1
Heads per Drive	2	4	6	8
Number of Data Cylinders/Drive (including all spare tracks)	306	306	306	823
Sectors per Track	18	18	18	18
Track Density	356	356	356	600
Bytes per Sector (Formatted)	512	512	512	512
Bytes per Track (Formatted)	9,216	9,216	9,216	9,216
Bytes per Drive	5.5MB	11.1MB	16.1MB	45.1MB
Capacity (blocks)	10,728	21,600	32,472	88,300
Bit Density, maximum (BPI)	8,900	8,900	8,900	10,200
Recording Format	MFM	MFM	MFM	MFM
Average Latency (ms)	8.3	8.3	8.3	8.3
Access Times (ms)				
Track-to-Track	18	18	18	8
Average	90	90	90	55
Maximum	215	215	215	130
Data Transfer Rate (Kb/s)	625	625	625	625
Rotational Speed (rpm)	3,600	3,600	3,600	3,600

Environmental Requirements

Operating Temperature	
Degrees C	10° to 50°
Degrees F	50° to 122°
Operating Relative Humidity (%)	10 to 85
Non-Operating Relative Humidity (%)	
Operating Vibration (g)	1g package acceleration 60-500 Hz
Non-Operating Vibration (g)	2g package acceleration 30-500 Hz
Non-Operating Shock (g)	30g peak less than 10ms (max 1/10 seconds)

	Switch Position							
	1	2	3	4	5	6	7	8
201	O	O	C	C	C	C	C	C
202	C	C	O	C	C	C	C	C
203	O	C	O	C	C	C	C	C
204	C	O	O	C	C	C	C	C
204E	O	C	C	C	O	C	C	C

C = CLOSED
O = OPEN

Table G-1. Controller PCA Switch (U22) Settings

	Jumper E3	Jumper E4*
201	A—B	B—C
202	A—B	B—C
203	A—B	B—C
204	A—B	B—C
204E**	A—B	A—B

Table G-2. Controller PCA Jumper Settings

*Jumper E4 need only be checked on Revision A or later controllers
**Rodime 204E 45MB mechanisms require a Controller PROM version of ODC100 or greater

Brake Check and Adjustment

The drive motor brake must be checked to insure that the brake is not in contact with the motor hub during drive operation. A misadjusted brake will inhibit the motor from reaching the proper speed or will not stop the motor at the appropriate time.

Tools Required

The following tools are required to perform a brake check and adjustment:

- 5/64" Allen wrench
- #2 Phillip Screwdriver
- 0.015" feeler gauge

Brake Adjustment Procedures

The brake adjustment must be performed accurately and rechecked for compliance with the tolerances specified.

1. Using the drive Diagnostic program, park the heads of the drive mechanism.
2. The drive mechanism must be removed from the cabinet and disassembled as detailed in sections 3.2.1, 3.2.2, and 3.2.3 of this manual.
3. Remove the four screws securing the black plastic cover and remove from the drive.
4. Remove the five 5/64" allen screws securing the Master Electronics PCA to the bottom of the drive mechanism. Carefully, lift the board free of the mechanism. Disconnect the flat cable connecting the Master Electronics PCA to the Motor Control PCA.

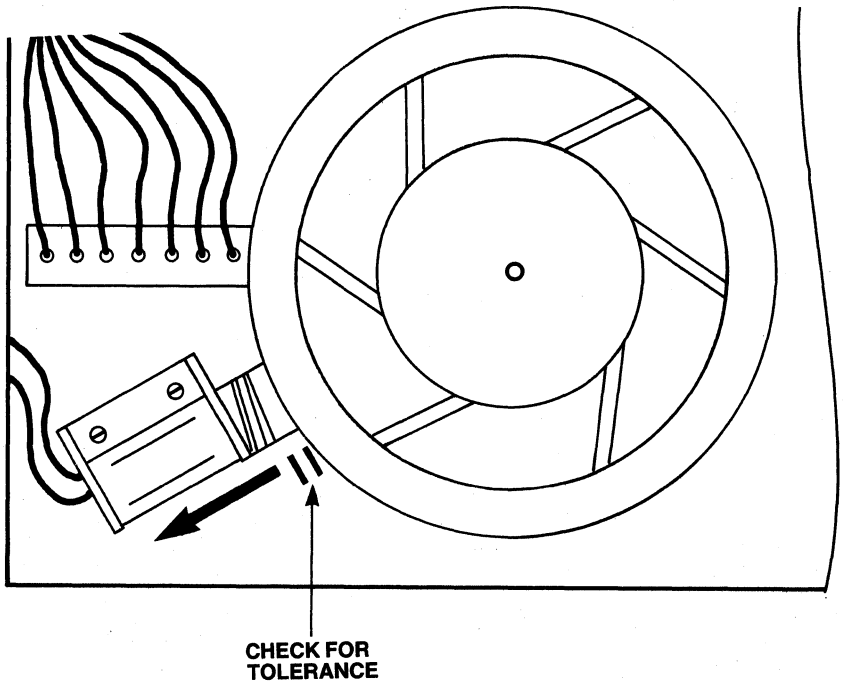

Figure G-1. Rodime Brake Assembly and Adjustment

5. Loosen the brake assembly mounting screws.
6. Place the 0.015 inch feeler gauge between the motor hub and the brake pad.
7. While holding the brake plunger fully retracted, move the brake assembly against the feeler gauge and the motor hub ensuring the center line of the brake plunger lines up with the motor hub center and tighten the brake mounting screws.
8. Recheck the brake clearance with the brake plunger retracted.
9. Reattach the flat cable between the Master Electronics PCA and the Motor Control PCA. Reinstall the Master Electronics PCA to the drive mechanism.
10. Reinstall the disk mechanism; reassemble the system observing the cautions in section 3.3.

ADDITIONAL INFORMATION

Indicator LEDs

Rodime mechanisms provide two LEDs for verifying proper operation of the HDA. These LEDs are located on the Master Electronics PCA and may be viewed with the mechanism either installed or removed from the OmniDrive enclosure.

The "Power-On" LED is positioned closest to the center of the black plastic cover and is on when the drive is READY and no error conditions are present. It is also used to indicate fault conditions in the mechanism.

The "Select" LED is located closest to the edge of the mechanism frame and is on when the drive is selected to perform an operation and READY.

LED Codes

The "Power-On" LED is used to flash error messages should certain fault conditions arise on the drive. A four bit binary code is used (long flash = 1, short flash = 0).

For example, two short flashes followed by two long flashes would be an error code of 0011.

Fault Code Number	Fault Pattern	Nature of Failure
1	0001	No index track data burst
2	0010	No Flag zero
3	0011	Motor speed outside ± 1% tolerance at end of power-up sequence
4	0100	Motor speed outside ± 10% tolerance during normal operation
5	0101	Flag zero stays TRUE
6	0110	STEP received while Write Gate is TRUE
7	0111	WRITE FAULT
8	1000	Not used at this time
9	1001	Not used at this time
10	1010	No index
11	1011	Motor not up to speed

Fault codes 1, 2, 3, 5, 10, and 11 are monitored during the initial power-up sequence of the drive. The remaining codes, namely 4, 6, and 7 are constantly monitored during normal operation. All fault codes are latched by the processor and the drive must be powered down and back up to clear the error condition. Codes 3, 4, 10, and 11 generate a WRITE FAULT signal to the OmniDrive controller.

Should any of these fault conditions be displayed, the entire HDA should be replaced.

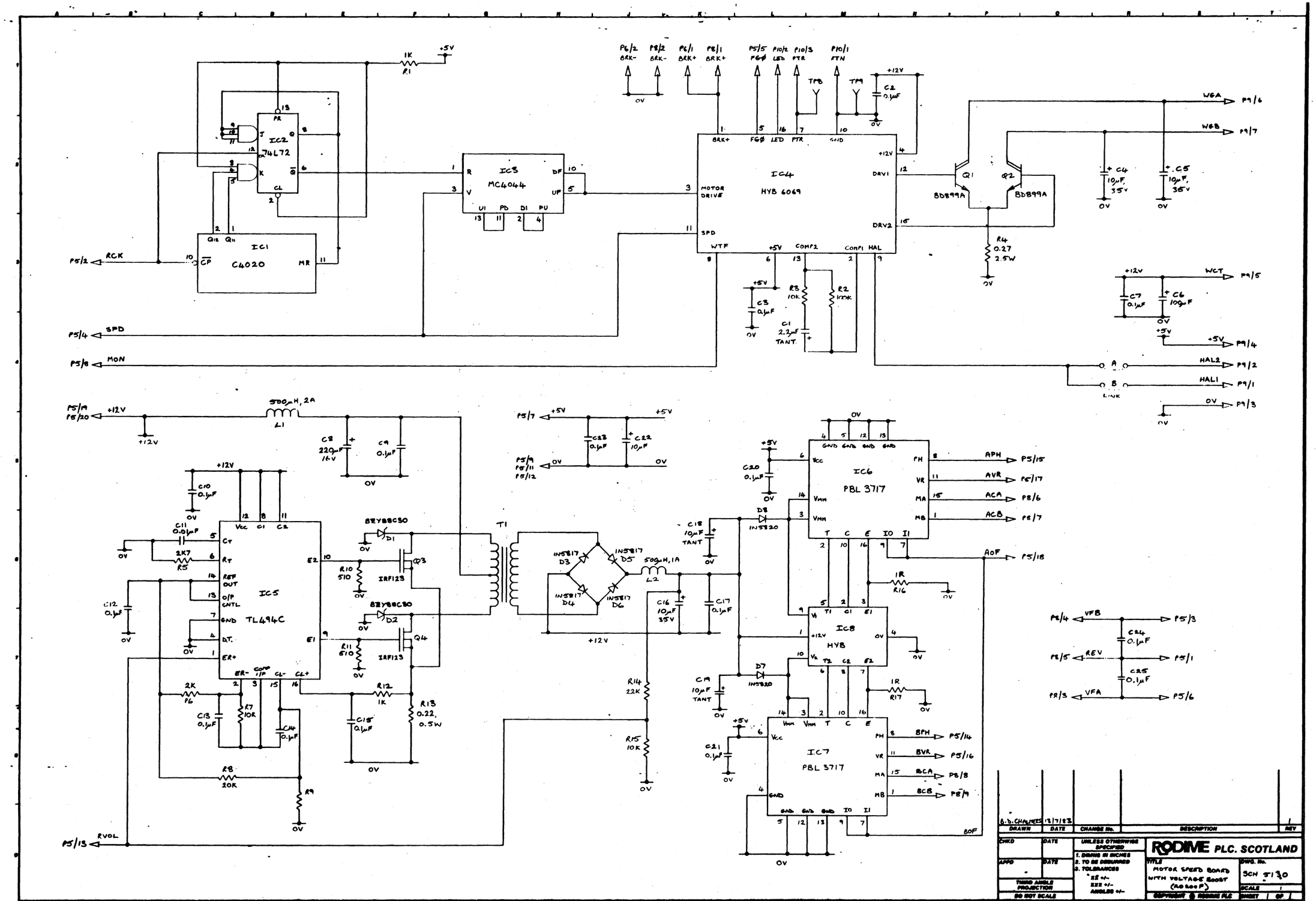
IC1
C4020
IC2
74L72
IC3
MC4044
IC4
HYB 6069
IC5
TL494C
IC6
PBL 3717
IC7
PBL 3717
IC8
HYB
Q1
Q2
BD899A
BD899A
Q3
Q4
IRF123
IRF123
T1
L1
L2
RCK
SPD
MON
RVOL
WGA
WGB
WCT
HAL2
HAL1
APH
AVR
ACA
ACB
AOF
BPH
BVR
BCA
BCB
VFB
REV
VFA
LINK
B.D. CHALMERS
13/7/83
DRAWN
DATE
CHANGE No.
DESCRIPTION
REV
CHKD
APPD
UNLESS OTHERWISE SPECIFIED
1. DIMS IN INCHES
2. TO BE DEBURRED
3. TOLERANCES
THIRD ANGLE PROJECTION
DO NOT SCALE
RODIVE PLC. SCOTLAND
TITLE
MOTOR SPEED BOARD WITH VOLTAGE BOOST (RO200F)
DWG. No.
SCH 5130
SCALE
SHEET
OF

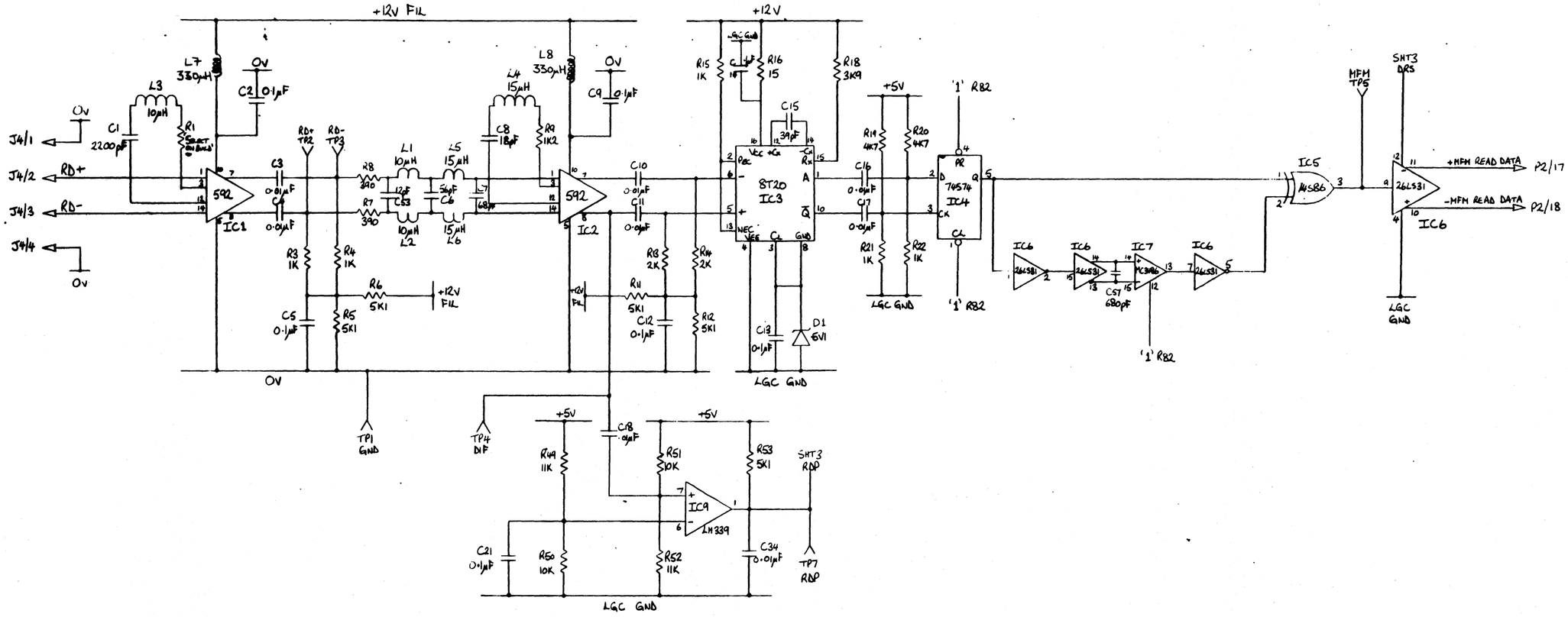

DRAWN	DATE	CHANGE No.	DESCRIPTION	REV
K SILLAR	6/2/84	00 327	R1 WAS 510Ω	11
R. SILLAR	5/1/84	00 299	ADD C57, C1 WAS 0·1µ, L3 WAS 15µH, L5 AND L6 WER 22µH TOLERANCE ON R98, R100 CHANGED TO ½%	10
N MACLEOD	5/9/83	00 244	L7, L8 WERE 10Ω. L9 WAS 3R3	9
D. RUXTON	25/8/83	00 228	R23 WAS 2Ω, C28 WAS 10µ, R104 WAS 3R3	7
D RUXTON	9/8/83	00 216	R45 & R48 ARE SOT WERE 5K1	6
R. SILLAR	28-6-83	00165	REDRAWN.	5

CHKD / DATE	UNLESS OTHERWISE SPECIFIED: 1. DIMNS IN INCHES 2. TO BE DEBURRED 3. TOLERANCES XX +/- XXX +/- ANGLES +/-	RODIME PLC. SCOTLAND	
APPD / DATE		TITLE: SCHEMATIC R0 200E MASTER ELECTRONICS BOARD	DWG. No. SCH 5056
THIRD ANGLE PROJECTION			SCALE:
DO NOT SCALE		COPYRIGHT © RODIME PLC	SHEET 1 OF 1

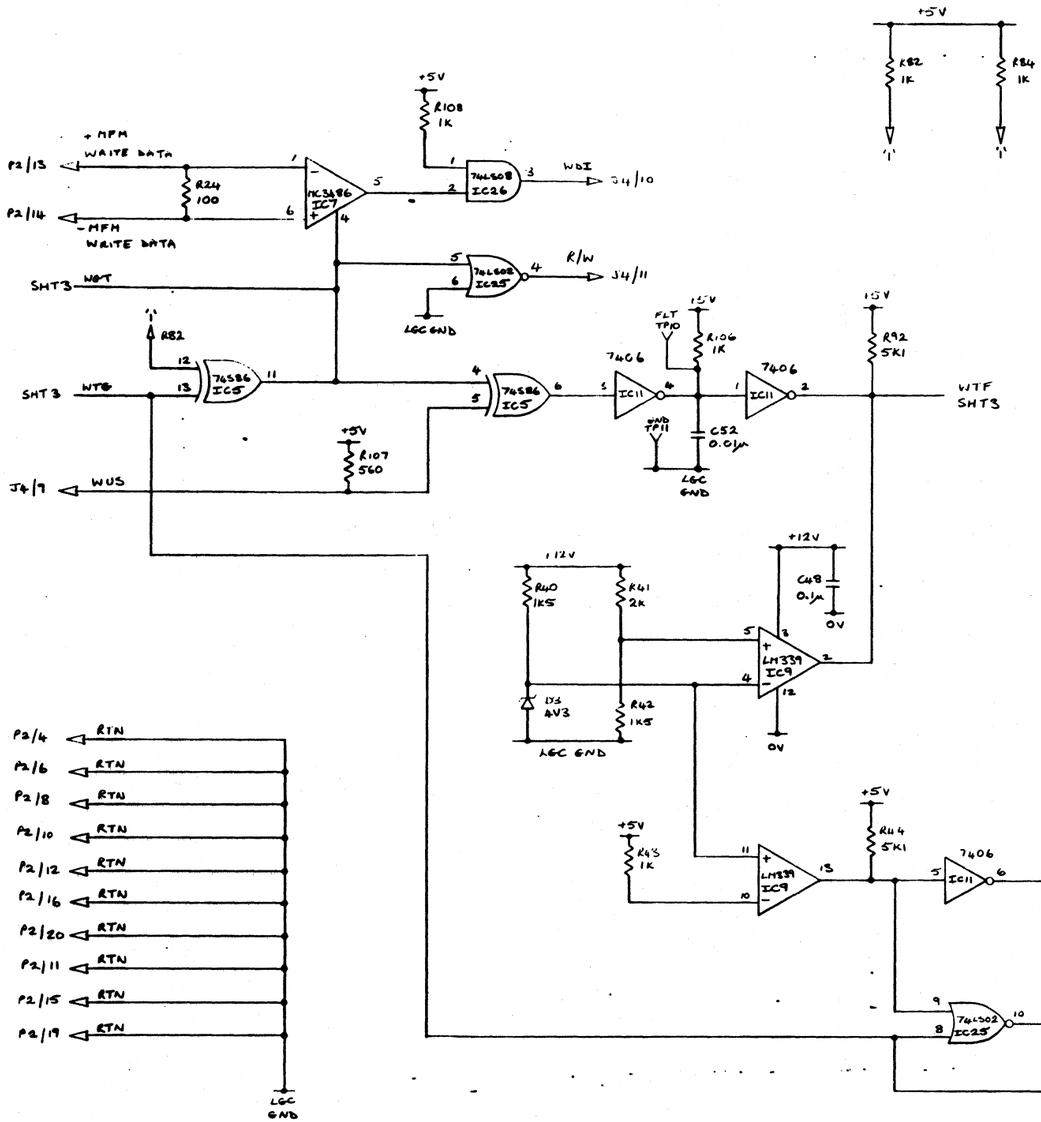

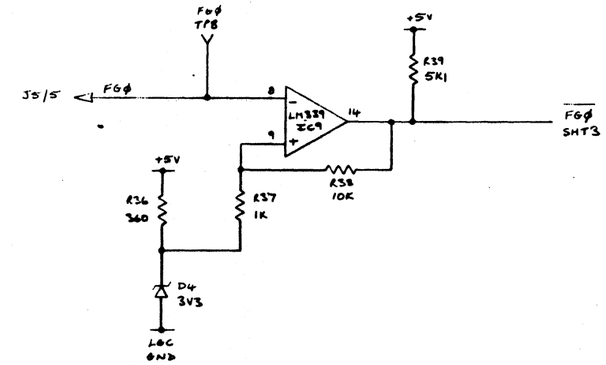

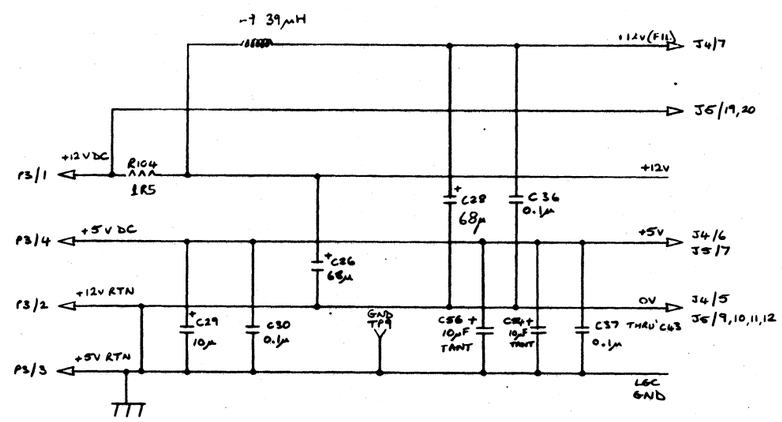

R. SILLAR	6.2.84	00327		11
R. SILLAR	5/1/84			10
N. MACLEOD	5/9/85			9
D. RUXTON	25/9/85			7
D RUXTON	9/9/85			6
[illegible]				5
DRAWN	DATE	CHANGE No.	DESCRIPTION	REV

CHKD | DATE | APPD. | DATE | THIRD ANGLE PROJECTION | DO NOT SCALE

UNLESS OTHERWISE SPECIFIED
1. DIMNS IN INCHES
2. TO BE DEBURRED
3. TOLERANCES
XX +/-
XXX +/-
ANGLES +/-

RODIME PLC. SCOTLAND

TITLE: SCHEMATIC RO208 MASTER ELECTRONICS BOARD

DWG. No. SCH 5086

SCALE 1

SHEET 2 OF 4

COPYRIGHT © RODIME

LGC GND
C31 1.0µF
C32 18pF
C33 18pF
X110 300
4MHz
SHT2 RST
J5/2 RCK
P2/5 RST
RESET LINK
+5V
R88 10K
R91 5K1
R90 2K
IC17 LM339
J5/4 SPD
R89 820
LGC GND
74LS74 IC24
C51 0.1µF
R86 10K
R109 5K1
WTF
74LS122 IC19
'1' R84
LGC GND
LINK A
R35 1K
8749 IC22
SHT2 WGT
SHT1 RDP
SHT4 POK
SHT2 FGD
SHT4 VDS
TP6 IDX
R82 '1'
74S86 IC5
74LS02 IC25
STP
74LS74 IC24
C50 0.1µF
C49 0.1µF
SCT
IDX
R67 1K
R68 1K
'1' R108
74LS08 IC26
HS0 J4/13
HS1 J4/14
HS2 J4/15
HS3 J4/16
LGC GND
P9
DRV. SELECT 1 P1/26
DRV. SELECT 2 P1/28
DRV. SELECT 3 P1/30
DRV. SELECT 4 P1/32
R105 1K
BDV SHT4
BPH J5/14
ADV SHT4
APH J5/15
BFB SHT4
BFB SHT4
AFB SHT4
AFB SHT4
AOF J5/13
BOF J5/18
MON J5/8
DRS SHT1
TKO
RDY
SIL 1
LGC GND
+5V
P1/3 RTN
P1/2 REDUCED WRITE CURRENT
P1/1 RTN
P1/6 WRITE GATE
P1/5 RTN
P1/14 HEAD SELECT 0
P1/13 RTN
P1/18 HEAD SELECT 1
P1/15 RTN
P1/4 HEAD SELECT 2
P1/17 RTN
P1/34 DIRECTION IN
P1/33 RTN
P1/24 STEP
P1/23 RTN
220 / 330
R66 220
R65 330
74LS244 IC20
N/C
SHT2 WTG
+5V R80 100 RED LED1 PWR
IC11 7406
+5V R81 100 RED LED2 RDY. DRS
IC21 74LS244
P1/16
P2/7
LGC GND
SEEK COMPLETE P1/8
RTN P1/7
TRACK 000 P1/10
RTN P1/9
INDEX P1/20
RTN P1/19
READY P1/22
RTN P1/21
WRITE FAULT P1/12
RTN P1/11
DRIVE SELECTED P2/1
RTN P2/2

R. SILLAR	5/11/84			10
N MACLEOD	15/9/83			9
D. RUXTON	25/8/83			7
D. RUXTON	9/8/83			6
R. SILLAR	28-6-83			5
DRAWN	DATE	CHANGE No.	DESCRIPTION	REV

CHKD | DATE | APPD | DATE | THIRD ANGLE PROJECTION | DO NOT SCALE

UNLESS OTHERWISE SPECIFIED
1. DRAWN IN INCHES
2. TO BE DEBURRED
3. TOLERANCES
XX +/-
XXX
ANGS

RODIME PLC. SCOTLAND

TITLE: SCHEMATIC R0208 MASTER ELECTRONICS BOARD
DWG. No.: SCH 5056
SCALE:
COPYRIGHT © RODIME PLC
SHEET 3 OF 4

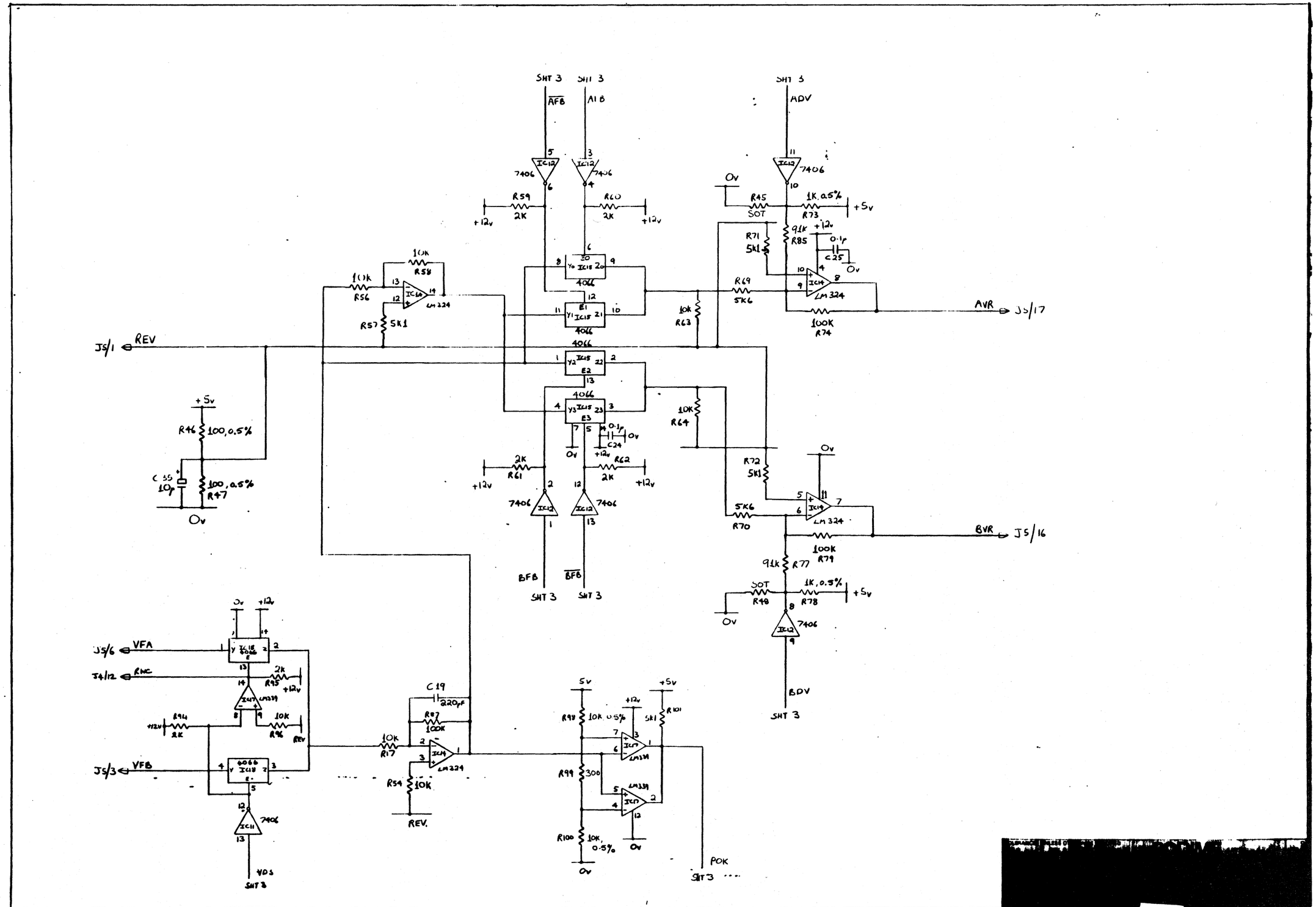
SHT 3
AFB
AIB
ADV
7406
R59
2K
R60
2K
+12v
0v
R45
SOT
R73
1K, 0.5%
+5v
R71
5K1
R85
91K
C25
0.1p
R69
5K6
LM324
100K
R74
AVR
J5/17
10K
R58
R56
R57
5K1
4066
R63
10K
R64
R72
5K1
R70
5K6
BVR
J5/16
R77
91K
R79
100K
R48
SOT
R78
1K, 0.5%
BDV
BFB
BFB
J5/1
REV
R46
100, 0.5%
C35
10p
R47
100, 0.5%
R61
2K
R62
2K
C24
0.1p
J5/6
VFA
J4/12
RWC
R95
2K
R94
2K
R96
10K
REV
J5/3
VFB
C19
220pF
R87
100K
R17
10K
R54
10K
REV.
R98
10K 0.5%
R99
300
R100
10K, 0.5%
R101
5K1
POK
VDS
SHT 3

APPENDIX H
FUTURE WINCHESTER MECHANISM SPECIFICATIONS AND SCHEMATICS

APPENDIX I
FUTURE WINCHESTER MECHANISM SPECIFICATIONS AND SCHEMATICS

APPENDIX J
FUTURE WINCHESTER MECHANISM SPECIFICATIONS AND SCHEMATICS

APPENDIX K
FUTURE WINCHESTER MECHANISM SPECIFICATIONS AND SCHEMATICS

APPENDIX L
FUTURE WINCHESTER MECHANISM SPECIFICATIONS AND SCHEMATICS

APPENDIX M
FUTURE ADDENDUM