PARADYNE™

9261 Dual T1 Network Access Module (NAM)
Installation Instructions

Document Number 9261-A2-GN10-00

September 1997

Before You Begin

Make sure you have:

- ❑ An operable T1 network connection
- ❑ An async (VT100-compatible) terminal emulation
- ❑ Housing and other associated hardware
- ❑ Applicable cables

Package Checklist

Verify that your package contains the following:

- ❑ T1 NAM and associated I/O card
- ❑ Affidavit Requirements for Connection to Digital Service
- ❑ Warranty
- ❑ *Safety, Regulatory, Warranty and Service Information* (Document No. 9000-A2-GX41)

Available Option

The following option is separately orderable:

- ❑ RJ48C modular cable for network access (14′)

What Does a T1 NAM Do?

The T1 NAM acts as an interface between the T1 digital network and the customer premises equipment, converting signals received from the DTE to bipolar signals that can be transmitted over T1 and Fractional T1 lines. The 9261 T1 NAM also provides an additional T1 network interface connector. Typical applications include:

- Wide Area Networks (WANs)
- Channel extension
- Video teleconferencing

Cables You May Need to Order

The following cables are specifically for this product. See page A of either the *Model 916x/926x T1 Access Mux User's Guide* (Document No. 9161-A2-GB20) or the *Model 916x/926x T1 Access Mux Technical Reference* (Document No. 9161-A2-GH30) for ordering information. You can also see the *Technical Reference* for cable pin-out information.

If connecting to a . . .	**Order a . . .**
Terminal or printer (DB25 interface/connector)	COM Port-to-Terminal/Printer cable (14′)
PC (DB9 interface/connector – EIA-232 connection)	COM Port-to-PC cable (14′)
DTE with a V.35 interface/connector	MS34 to DB25 adapter cable for each port: Port 1 and/or Port 2 (1′)
DTE with a RS-449 interface/connector	DB37 to DB25 DTE adapter cable for each port: Port 1 and/or Port 2 (1′)
DTE with a V.11/X.21 interface/connector	DB15 to DB25 adapter cable for each port: Port 1 and/or Port 2 (1′)
LAN Adapter	COM Port-to-LAN Adapter cable (14′)

Recommended Order of Installation

1. First, install the I/O card.
2. Connect all cables into the I/O card.
3. Install the NAM.
4. Go to the *2-Slot Housing Installation Instructions* (Document No. 9000-A2-GN15), *5-Slot Housing with AC Power Supply Installation Instructions* (Document No. 9000-A2-GN16), or *5-Slot Housing with DC Power Supply Installation Instructions* (Document No. 9000-A2-GN1C) for power-up verification procedures.

Tools Required

- A small Phillips screwdriver (#1 or #2) to install the T1 NAM
- A small, flat-blade screwdriver to install the:
  - I/O card
  - Cable connections

Installing the I/O Card

The NAM's I/O card provides the COM port, network, and DTE connections. The I/O card inserts directly behind the NAM that it supports. Slot numbers are identical (in this case, Slot 01) to facilitate correct installation.

1. Remove the I/O card from the shipping box. Handle only by the top and bottom edges to avoid damaging the card.
2. At the rear of the housing, align the I/O card with the upper and lower tracks of the slot. Push gently towards the midplane until it stops and you cannot push the card any further.

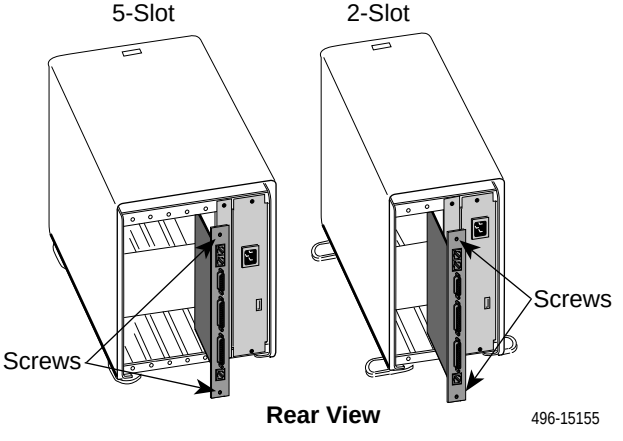

3. There are two captive screws on the I/O card. Using a screwdriver, alternately tighten each screw until the screws are all the way in.

NAM
Rear Panel

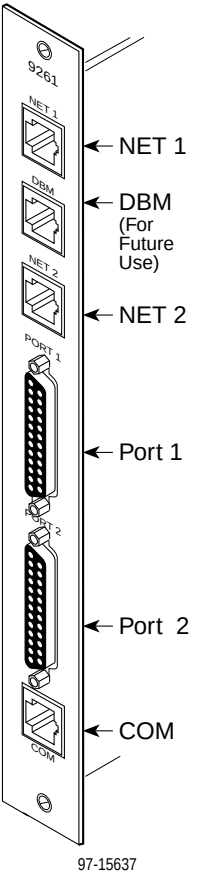

Connecting to the Network

1. Insert the 8-pin connector on the RJ48C network cable into the NET 1 and/or NET 2 interface.
2. Insert the other end of the cable into the RJ48C modular jack.

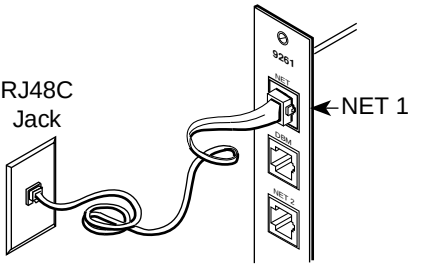

97-15638

Connecting to a DTE

If the DTE cable type is V.35, RS449, or V.11/X.21 (separately orderable):

1. Connect the plug to the V.35, RS449, or V.11/X.21 end of the adapter cable (as appropriate).
2. Connect the EIA 530A end of the adapter cable to PORT 1 or PORT 2.

If the DTE cable type is EIA 530A:

1. Connect the EIA-530A end of the DTE cable to PORT 1 or PORT 2.

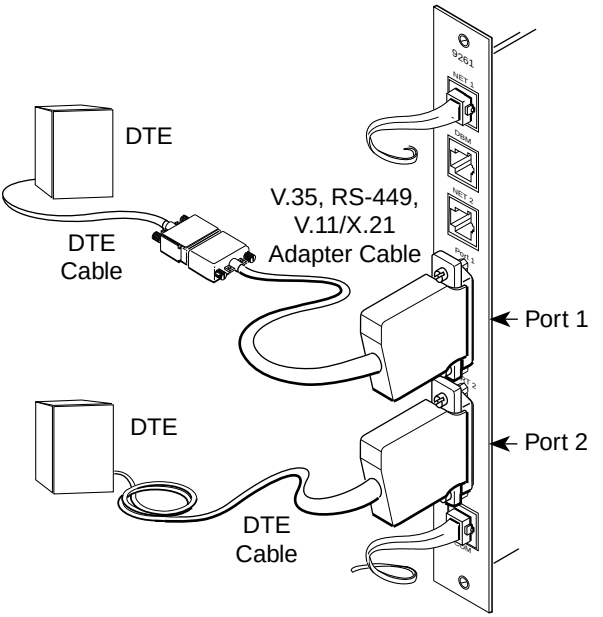

97 -15639

Connecting the COM Port to a User Interface

1. Insert the 8-pin end of the cable into the COM port.
2. Insert the other end of the cable into the user interface (VT100-compatible terminal emulation) connector.
3. Press Return on the keyboard to display the Main Menu. If you need to configure for other than a direct link, see the *Technical Reference*.

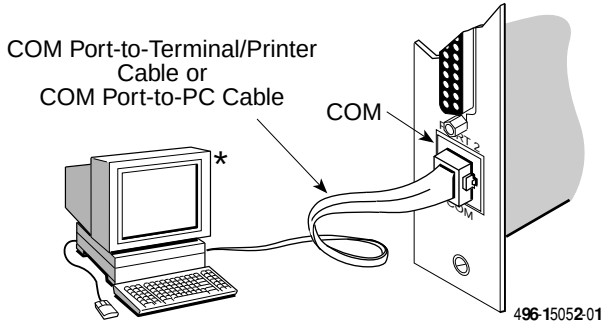

* Set the speed of the async (VT100-compatible) terminal so it matches the NAM's factory-loaded data rate of 19.2 kbps, character length set to 8, parity set to None, and stop bits set to 1. The flow control should be set to None or Hardware.

Installing the T1 NAM

WARNING:

Do NOT remove any jumpers located on the battery. To do so can cause non-volatile memory loss. Should a jumper become separated from the battery, contact your service representative immediately.

HANDLING PRECAUTIONS FOR STATIC-SENSITIVE DEVICES

This product is designed to protect sensitive components from damage due to electrostatic discharge (ESD) during normal operation. When performing installation procedures, however, take proper static control precautions to prevent damage to equipment. If you are not sure of the proper static control precautions, contact your nearest sales or service representative.

The NAM is always installed in Slot 01.

CAUTION:

Be sure that you install the NAM in the correct slot so that it mates with its matching I/O card. Otherwise, you could damage your card.

1. Remove the housing's bezel, if applicable. See the housing installation instructions for information.
2. Remove the NAM from the shipping box. Handle only by the top and bottom edges to avoid damaging the card.
3. At the front of the housing, align the NAM with the upper and lower tracks of Slot 01.

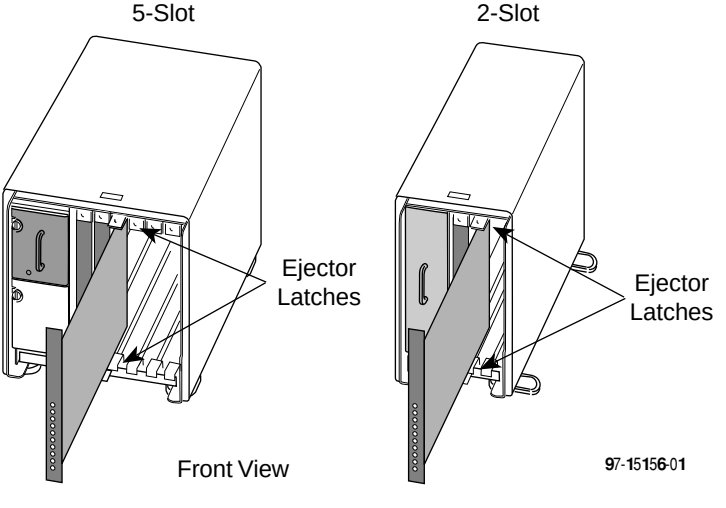

4. Slide into the tracks until the NAM seats with the midplane connectors. Be careful not to force the card or bend any pins.
5. Close both the upper and lower ejector latches on the housing to lock in place, then tighten the captive screws on the ejector latches.
6. Replace the housing's bezel, if applicable.

Removing/Replacing a Card

Card removal procedures differ, depending on whether you are removing the card from the front or rear of the housing.

If you are removing the . . .	Then go to . . .
NAM	*Removing/Replacing the NAM*.
I/O card	*Removing/Replacing the I/O Card*.

Removing/Replacing the NAM

1. Remove the housing's bezel, if applicable. See the housing installation instructions for information.
2. Remove the captive screws from the ejector latches on front of the housing.
3. Press open the ejector latches to disengage the card.
4. Supporting the card by its edges, pull straight out until the card clears the housing.
5. Align the replacement card with the upper and lower tracks of the slot. Slide forward until the NAM seats. Be careful not to force or bend any pins.
6. Close both the upper and lower ejector latches on the housing to lock in place, then tighten the captive screws.
7. Replace the housing's bezel, if applicable.

Removing/Replacing the I/O Card

1. Remove the NAM from the housing (see *Removing/Replacing the NAM*).
2. Remove the network, DTE, and COM port cables from the I/O card (if applicable).
3. Using a screwdriver, loosen the upper and lower screws fastening the card to the housing's frame.
4. Gently pull the I/O card away from the midplane until it clears the housing.
5. Align the replacement card with the upper and lower tracks of the slot. Push gently towards the midplane until it stops and you cannot push the card any further.
6. Alternately tighten each captive screw until the screws are all the way in.
7. Reattach the cables as appropriate.

Power-Up

Go to your housing instructions to perform power-up, if needed. The housing instructions also contain troubleshooting information.

Front Panel LEDs and Test Jacks

The T1 NAM has 12 LED (light-emitting diode) status indicators and four sets of test jacks.

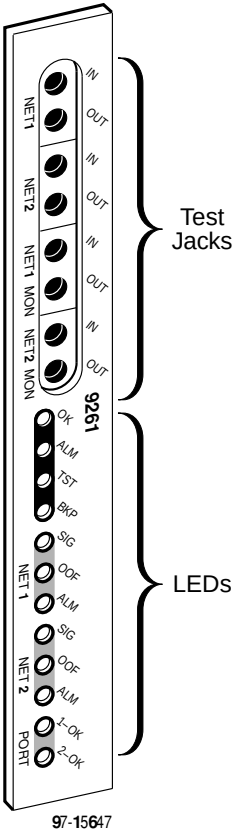

Test Jacks

The NAM contains four sets of test jacks. Use these for:

- Accessing and testing towards the Network 1 interface
- Accessing and testing towards the Network 2 interface

Refer to *Troubleshooting and Maintenance* in the *Technical Reference* for more information on the test jacks.

General Status LEDs

Label	Indication	Color	What It Means
OK	Power and Operational Status	Green	ON – NAM has power and is operational. OFF – NAM is in a power-up self-test, or there is a failure. CYCLING – The unit is in Minimum mode. Requires an FTP download.
ALM	System Failure/ Self-Test	Red	ON – NAM has just been reset, or an error or fault has been detected. OFF – No failures have been detected.
TST	Test Mode	Yellow	ON – Loopback or test pattern in progress, initiated locally, remotely, or from the network. OFF – No tests are active.
BKP	Backup	Yellow	Not supported. Remains off except during a Lamp Test.

Network 1 and Network 2 Interface LEDs

Label	Indication	Color	What It Means
SIG	Signal	Green	ON – A recoverable signal is present on the Network 1/Network 2 interface. OFF – The signal cannot be recovered from the Network 1/Network 2 interface. An LOS condition exists.
OOF	Out of Frame	Yellow	ON – At least one OOF was detected during the sampling period. OFF – No OOFs were detected during the sampling period.
ALM	Alarm	Yellow	ON – An alarm condition is present on the Network 1/Network 2 interface. Current alarm conditions: ■ Loss of Signal (LOS) ■ Loss of Frame (LOF) ■ Excessive Error Rate (EER) ■ Yellow Alarm ■ Alarm Indication Signal (AIS) OFF – No alarm condition is present on the Network 1/Network 2 interface.

Port 1 and Port 2 LEDs

Label	Indication	Color	What It Means
1-OK 2-OK	Operational Status	Green	ON – The interchange circuits for the port are in the correct state to transmit and receive data. OFF – The port is idle. Occurs if the port is disabled, if an EDL Out of Frame or EER condition is present, if a DCLB is active, or if the port is configured to monitor DTR and/or RTS and the lead(s) is not asserted.

Troubleshooting

Symptom	Possible Cause	Solutions
No power, or none of the system LEDs are lit.	For DC power source, DC power is not present. For AC power source, the wall receptacle has no power, or the housing's power cord is not securely plugged into the wall receptacle or the back of the housing. LED is burned out.	Check the DC power source. 1. Check the wall receptacle power by plugging in some equipment that is known to be working. 2. Check that the power cord is securely attached at both ends. 3. Check the circuit breaker. Run the Lamp Test. If the LED in question does not flash with the other LEDs, then contact your service representative.
Power-Up Self-Test fails. Only Alarm LED is on after power-up.	The NAM has detected an internal hardware failure.	1. Reset the NAM and try again (see the User's Guide). 2. Contact your service representative.
Cannot access the NAM or the user interface.	Login or password is incorrect, COM port is misconfigured, or the NAM is otherwise configured so it prevents access.	1. Reset the NAM (see the User's Guide). 2. Contact your service representative.
Device Fail appears on the System Health and Status screen.	The NAM detects an internal hardware failure.	Record the 8-digit code from the System Health and Status screen, then contact your service representative.
Not receiving data at DTE interface.	Not cross-connected to the correct timeslot(s).	Verify cross connections using the Cross Connect configuration option.

Technical Specifications

Specification	Criteria
Weight	
T1 NAM T1 I/O card	1 lb. 2 oz. (.51 kg) 6 oz. (.17 kg)
Size	
T1 NAM T1 I/O card	11.58″ x 8.00″ (29.41 cm x 20.32 cm) 2.90″ x 10.15″ (7.37 cm x 25.78 cm)
Power Consumption	9.4 watts, 0.78 amps input current at 12 volts
Physical Environment	
Operating temperature	35°F to 122°F (1.7°C to 50°C)
Storage temperature	–4°F to 158°F (–20°C to 70°C)
Relative humidity	5% to 85% (noncondensing)
Shock and vibration	Withstands normal shipping and handling
Network 1/2 T1 Interface	
Physical Interface (USA) Physical Interface (Canada) Framing Format Coding Format Line Build-Out (LBO) ANSI PRM Bit Stuffing Yellow Alarm Generation	RJ48C CA81A using adapter cable D4, ESF AMI, B8ZS 0.0 dB, –7.5 dB, –15 dB, –22.5 dB Selectable FCC Part 68, AT&T TR 62411 Selectable
DTE Ports/Interfaces	
Standards Rates	EIA 530A, V.35, RS-449, V.11, X.21 Nx64 – 64K to 1.536 Mb Nx56 – 56K to 1.344 Mb
COM Port/Interface	
Data Rates	9.6, 14.4, 19.2, 28.8, 38.4 , 57.6, and 115.2 kbps 57.6 or 115.2 kbps are recommended for FTP download only
DBM (Backup) connector (reserved for future use)	One 8-position modular keyed USOC RJ45 jack

Specification	Criteria
Clocking Sources	T1 network interface (1 or 2), any port, internal clock, or external clock
Loopbacks Standard Additional	 Network Line Loopback, Network Payload Loopback, V.54 Loop 2 (DCLB) and V.54 Loop 3 (DTPLB) Network Repeater Loopback, DTE Loopback

Pin Assignments

NET 1/2 Ports/Interfaces

Function	Circuit	Pin #
Receive ring from the network	R1	1
Receive tip from the network	T1	2
Transmit ring to the network	R	4
Transmit tip to the network	T	5

COM Port/Interface

Signal	Direction	Pin #
DCE Transmit Clock (TXC)	Out	1
DCE Receive Data (RXD)	Out	2
Signal Ground (SG)	—	3
DCE Transmit Data (TXD)	In	4
DCE Data Terminal Ready (DTR)	In	5
DCE Carrier Detect (CD)	Out	6
DCE Request to Send (RTS)	In	7
DCE Receive Clock (RXC)	Out	8

DTE Ports/Interfaces

Signal	Circuit Mnemonic	ITU/ CCITT #	Direction	25-Pin Pin #
Shield	—	—	—	1
Transmitted Data (TXD)	BA	103	To DCE	2 (A) 14 (B)
Received Data (RXD)	BB	104	From DCE	3 (A) 16 (B)
Request to Send (RTS)	CA	105	To DCE	4 (A) 19 (B)
Clear to Send (CTS)	CB	106	From DCE	5 (A) 13 (B)
Data Set (or DCE) Ready (DSR)	CC	107	From DCE	6
Signal Ground/Common (SG)	AB	102A	—	7
Received Line Signal Detector (RLSD or LSD)	CF	109	From DCE	8 (A) 10 (B)
Transmit Signal Element Timing (TXC – DTE Source)	DA	113	To DCE	11 (B) 24 (A)
Transmitter Signal Element Timing (TXC – DCE Source)	DB	114	From DCE	12 (B) 15 (A)
Receiver Signal Element Timing (RXC – DCE Source)	DD	115	From DCE	17 (A) 9 (B)
Local Loopback (LL)	LL	141	To DCE	18
Data Terminal (or DTE) Ready (DTR)	CD	108/1, /2	To DCE	20
Remote Loopback (RL)	RL	140	To DCE	21
Signal Common	AC	102B	—	22, 23
Test Mode Indicator (TM)	TM	142	From DCE	25