Whirlpool

Service Manual

Washer dryer
Frontloader
AWZ 410

Model AWZ 410
Version 8575 410 01000

	Page
Technical data	2
Spare part list	3 - 4
Exploded view	5 - 7
Wiring diagram	8
Circuit diagram	9
Program diagram	10 - 13

This documentation is only intended for qualified technicians who are aware of the respective safety regulations.

Date: 31.10.2002 Subject to modification
Document-No.: 4812 713 12675

Technical data

Dimension

Height	85	cm
Width	59.5	cm
Depth	53	cm

Weight

Gross	82	kg
Net	79	kg

Main connection

Voltage	230 +6% -10%	V
Frequency	50	Hz
Power Consumption	2200	W
Fuse rating	10	A

Drum data

Volume	42.5	l
Cotton/synthetics (washing-rinsing)	50 - 60	rpm
Pre-spinning	100	rpm
Low spinning	500	rpm
High spinning	1000	rpm

Capacity of dry laundry

Loading - washing max.	5.0	kg
Loading - drying max.	2.5	kg

Heating

Rated power draft:		
- washing	1950	W
- drying(2)	1150	W

Drain-pump

Power consumption	34	W
Capacity	20 - 25	l/min.
Rotation speed	~ 2800	rpm
Height of drain hose :		
max.	0.90	m
min.	0.60	m

Motor

Type	Universal

Timer washing

Type	1837-01
Basic cycles	3
	- normal washing
	- delicate washing

Thermostat

A- washing fixed thermostat	90	˚C
B- drying fixed thermostat	107	˚C
C- safety thermostat	142	˚C
D- safety thermostat	170	˚C
E- adjustable thermostat	10 - 90	˚C

Pressostat (without laundry)

Low level	7	l
High level	12.5	l
Very high level (wool)	15	l
Overflow level	35	l

Push button switch unit

Version with 5 buttons
- On/off
- Low/High speed
- Rinse hold
- Intensiv rinse
- Half load

Timer drying

Type	Eaton 8403-01	
Voltage	220/240	V
Frequency	50	Hz
drying time	2 to 120	min
cooling time	20	min

Drying motor

Type	Plaset 63318	
Voltage	220/240	V
Frequency	50	Hz

Spare part list

Model	**AWZ 410**
Service No.	**857541001000**
Version	**857541001000**

Pos. No.	12NC Code	Description
001 0	**4812 440 10616**	Cabinet
003 0	**4819 404 43391**	Bearer hook crosspiece
011 0	**4819 462 47014**	Foot adjustable
024 0	**4819 903 03649**	Panel, rear
030 0	**4812 440 10614**	Table top
041 0	**4819 417 19534**	Hinge
054 0	**4812 462 28312**	Cover filter
061 0	**4819 466 88802**	Counter weight
061 1	**4819 466 89461**	Counter weight bottom
061 2	**4819 404 79294**	Bracket
065 0	**4812 325 18002**	Insulation
083 0	**4819 466 47003**	Friction plate
086 0	**4819 492 68576**	Spring
086 1	**4819 502 18407**	Fastener counter weight
086 2	**4819 310 39573**	Kit fixation
086 3	**4819 466 89132**	Fastener counter weight
086 5	**4812 904 48018**	Friction pad unit
110 0	**4819 498 78431**	Handle
110 1	**4819 498 78432**	Handle cpl
131 0	**4819 903 10159**	Lock Plate
133 0	**4819 903 10175**	Door latch
133 1	**4819 903 10174**	Pin handle
133 2	**4819 903 10176**	Door catch lever
140 0	**4819 450 58178**	Door glass
141 1	**4819 466 98878**	Protector
143 0	**4819 903 02494**	Strap
144 0	**4819 903 10179**	Frame,door glas
144 1	**4812 416 18441**	Frame,door glas
144 2	**4819 532 88054**	Collarring
190 0	**4819 468 18285**	Door bellow
200 0	**4812 418 18233**	Tub
201 0	**4812 310 18587**	Bearing unit
201 1	**4819 903 02529**	Ring tub
201 3	**4819 532 38088**	Ring kit
210 0	**4819 404 49869**	Crosspiece,drum
220 0	**4819 418 18251**	Drum
220 1	**4819 418 18303**	Drum with cross piece
271 0	**4812 358 18182**	Belt
272 0	**4812 528 88098**	Pulley
278 0	**4812 535 98097**	Rod,pull dispenser
291 0	**4819 903 03668**	Gasket tub
301 0	**4812 464 69009**	Control panel
303 1	**4812 498 78213**	Handle, drawer
331 0	**4812 412 58947**	Knob,changeover Timer
331 1	**4812 413 78646**	Knob disc timer
331 2	**4812 413 78645**	Knob,timer
332 0	**4812 410 28854**	Button,push
335 0	**4812 412 58919**	Knob thermostat
338 0	**4812 412 58949**	Knob,timer drying
351 0	**4819 134 48503**	Pilot lamp
351 1	**4812 381 18276**	Lamp screen
401 0	**4812 361 78017**	Motor
401 1	**4812 361 78019**	Motor fan
421 0	**4812 121 18212**	Interf.filter
422 0	**4812 214 78504**	Tachometer

Pos. No.	12NC Code	Description
430 0	**4819 360 18217**	Pump,draining
432 0	**4812 480 58146**	Filter body
443 0	**4812 515 48011**	Fan wheel
451 0	**4819 259 28799**	Heating element
451 1	**4812 418 38086**	Heating chamber
451 3	**4812 259 28712**	Heating element drying
483 0	**4812 321 78151**	Cable harness
490 0	**4812 321 18122**	Cable,mains
491 0	**4819 401 18738**	Clamp
501 0	**4812 282 18663**	Timer 1837/1
501 1	**4812 282 19288**	Timer 8403-01, dryer
521 0	**4812 214 58074**	Unit electrical
551 0	**4819 282 28627**	Thermostat MRTL 170 ˚C
551 1	**4812 282 28214**	Thermostat 100 ˚C
551 2	**4812 282 28215**	Thermostat 47 ˚C
551 9	**4812 271 28445**	Thermostat
554 0	**4819 903 08226**	Potentiometer
572 0	**4812 271 28443**	Valve,magnet cold
583 0	**4812 271 28421**	Pressostat
620 0	**4819 276 18368**	Switch
630 0	**4812 280 58028**	Door lock
701 0	**4819 530 28932**	Hose, inlet 1.5 m cold water
708 4	**4819 530 28545**	Drainhose inner
711 0	**4819 418 78886**	Dispenser
711 1	**4819 462 79036**	Cover dispenser housing
711 2	**4812 462 28316**	Cover dispenser complete
712 0	**4819 418 78067**	Drawer
713 0	**4819 418 78989**	Accessory deterg. fluid
714 0	**4819 418 78988**	Container liquid detergent
714 1	**4819 418 78166**	Tray bleach
718 0	**4819 360 69849**	Nozzle
718 1	**4819 310 38651**	Accessories liquid detergent
742 0	**4812 360 78054**	Cover
743 0	**4819 466 69941**	Hose
743 1	**4812 310 38436**	Air guide
743 2	**4812 526 48046**	Air guide
743 3	**4812 526 48045**	Air guide upper
754 0	**4819 530 28862**	Drainhose
760 0	**4819 480 58082**	Filter
760 1	**4819 462 78861**	Grip filter
781 0	**4812 530 29045**	Hose,draining
781 1	**4819 903 02515**	Hose
781 2	**4812 903 08205**	Container Non-Overflow
781 3	**4812 903 08206**	Tube Non-Overflow-Filter cas.
783 0	**4819 530 28861**	Hose pressostat
783 1	**4819 526 48213**	Air guide
783 2	**4812 530 28926**	Hose
783 3	**4812 530 28927**	Hose
783 4	**4812 530 28928**	Hose
783 5	**4819 903 10156**	Hose
792 0	**4812 466 68593**	Seal for blower
794 0	**4819 903 04978**	Gasket
794 1	**4819 310 38057**	Gasket
794 2	**4819 532 68309**	Cover filter
900 0	**4819 401 13348**	Hook

Spare part list

Model	**AWZ 410**
Service No.	**857541001000**
Version	**857541001000**

Pos. No.	12NC Code	Description
900 1	**4819 466 98528**	Clamping piece
900 4	**4819 401 13349**	Hook
900 5	**4819 466 89459**	Holder
900 7	**4819 535 38151**	Hook
901 0	**4822 401 10258**	Clamp,hose 10-18 mm
901 1	**4812 401 18458**	Strap
901 2	**4812 401 18576**	Clamp,hose
901 3	**4819 401 18351**	Clamp,hose
901 4	**4819 401 18174**	Clamp,hose 25-45 mm
901 5	**4819 492 68475**	Strap
901 6	**4819 401 18817**	Clamp,hose
902 0	**4819 903 02468**	Lever
902 1	**4812 418 79639**	Holder unit electrical
902 2	**4812 404 48664**	Holder
902 3	**4812 418 78991**	Holder Modul
903 0	**4819 492 68392**	Clamp
903 1	**4819 903 02535**	Silent bloc
903 2	**4819 401 18348**	Holder,hose
903 3	**4819 903 02466**	Lever
903 4	**4819 903 10167**	Door glass insert
903 5	**4819 903 02469**	Rocker
903 6	**4819 492 68488**	Clip
903 7	**4819 401 18429**	Clamp
903 8	**4819 401 18883**	Staple
910 1	**4819 502 18347**	Screw
910 2	**4819 502 18406**	Screw
910 3	**4819 502 33254**	Screw
910 6	**4812 502 18415**	Screw
910 7	**4812 502 18417**	Screw
912 0	**4819 502 18414**	Screw
912 2	**4819 440 19616**	Cover Screw
914 0	**4819 505 13084**	Nut
921 0	**4819 532 13433**	Washer pulley
921 1	**4819 532 38083**	Washer
923 0	**4819 532 68726**	Washer
931 0	**4819 903 10178**	Spring
931 2	**4819 903 02471**	Spring
931 3	**4819 492 68872**	Spring,tension
931 5	**4819 903 10172**	Spring,ret.
932 0	**4812 492 68142**	Spring Thermostat
932 1	**4812 526 48047**	Spring
933 0	**4819 903 03659**	Spring,tension
941 1	**4812 530 68027**	Shaft seal
951 1	**4819 530 57019**	Gasket
952 0	**4819 466 69816**	Gasket
952 1	**4819 903 02447**	Gasket thermostat
993 0	**4819 401 18345**	Bow

Exploded view

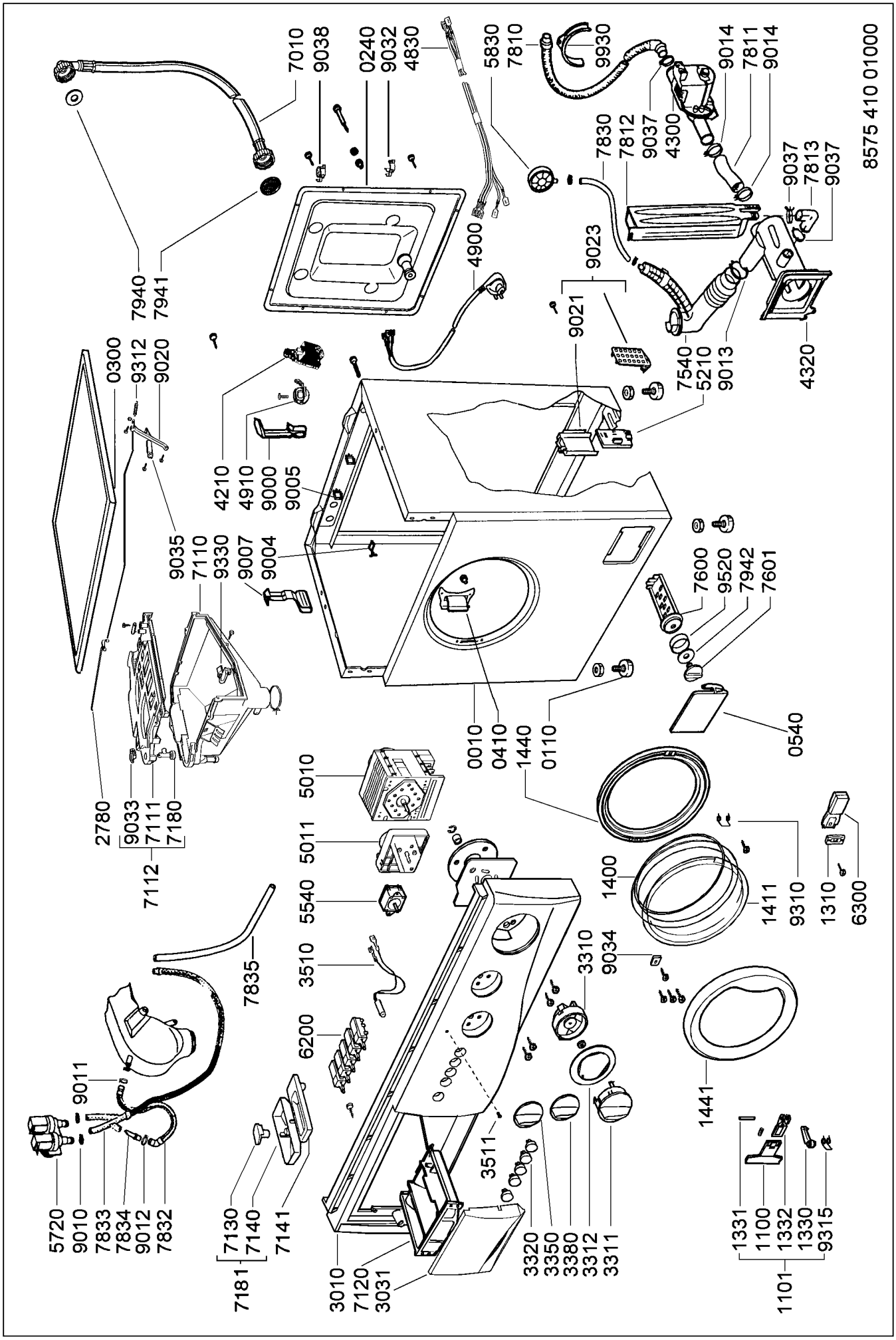

Exploded view

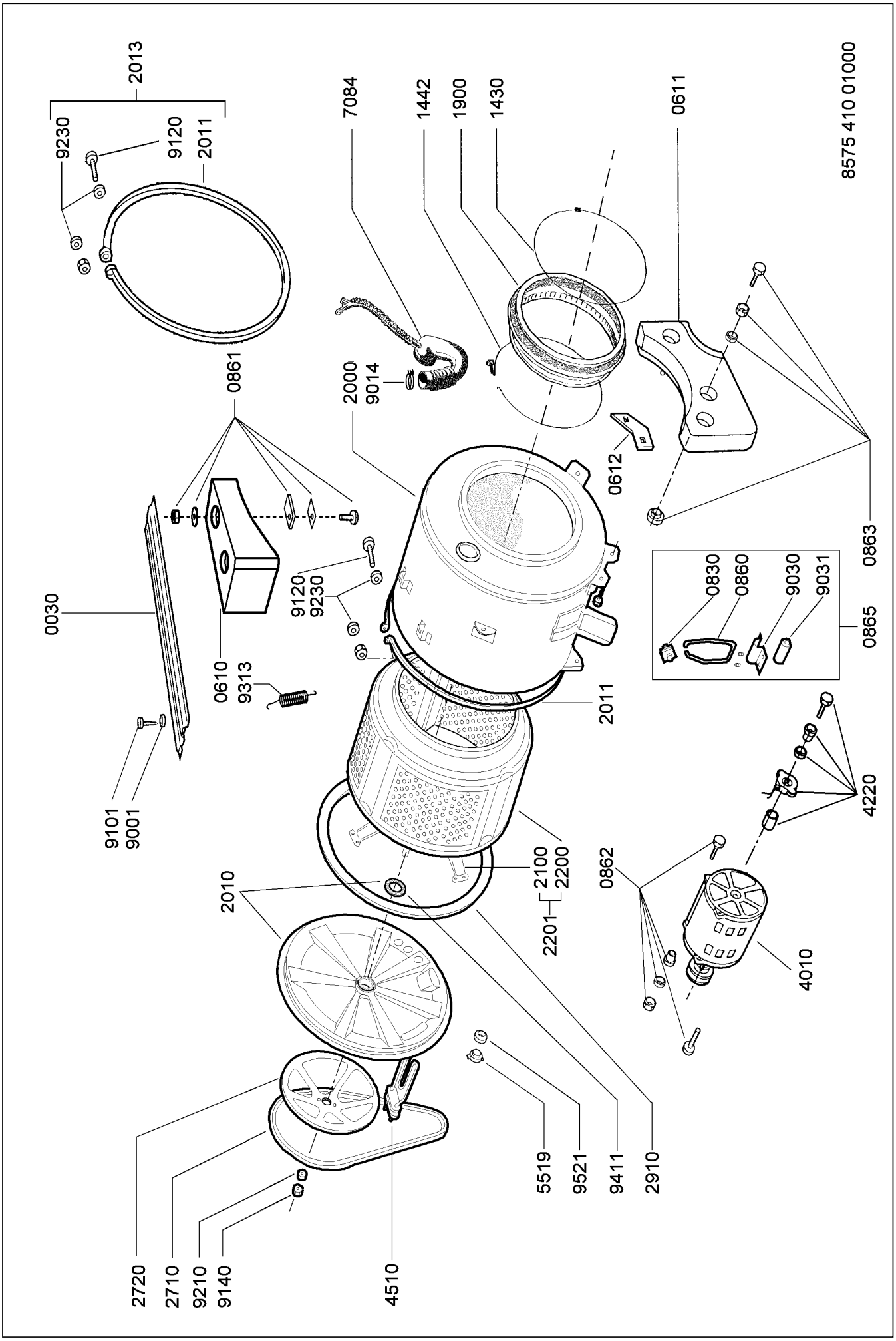

Exploded view

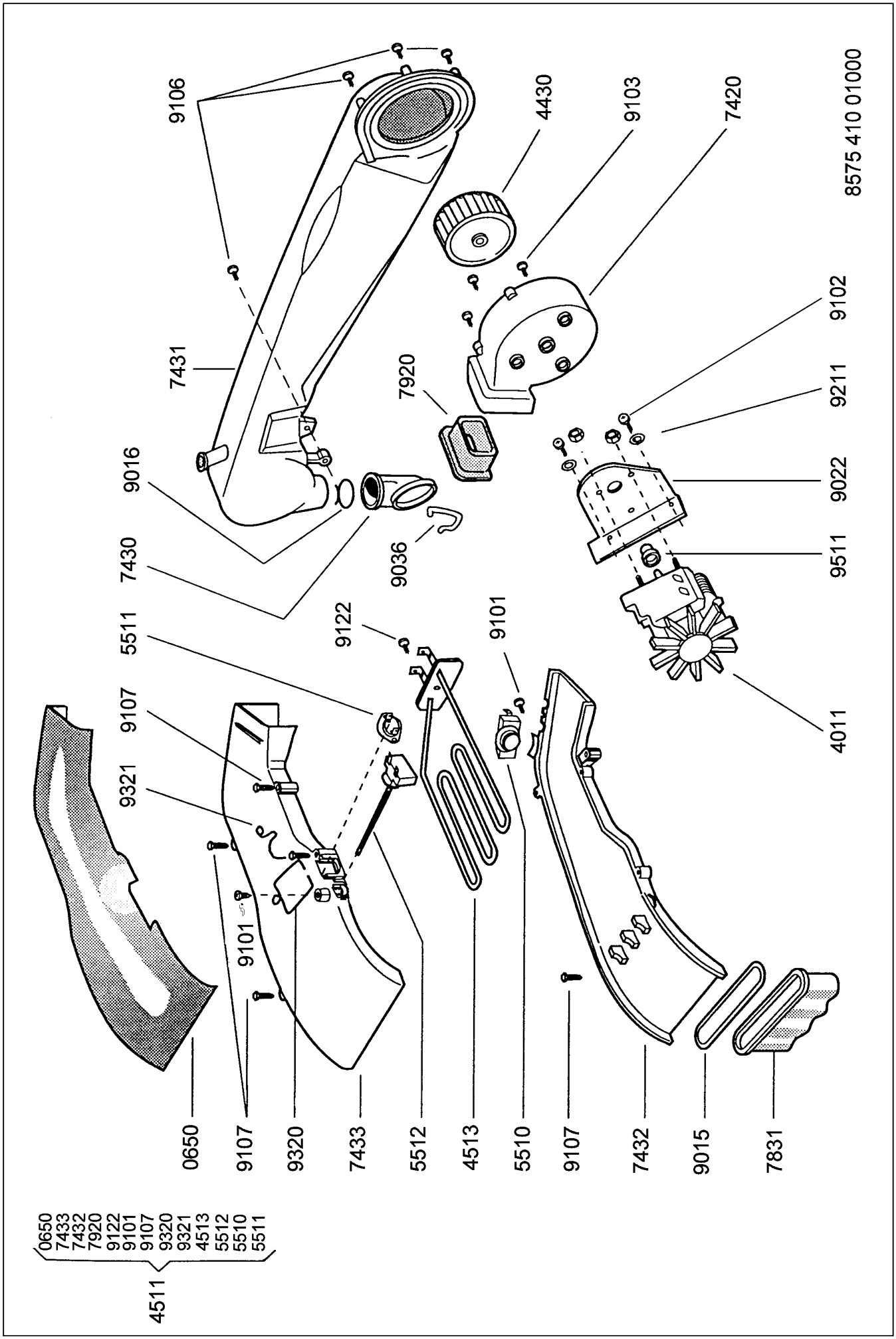

Wiring diagram

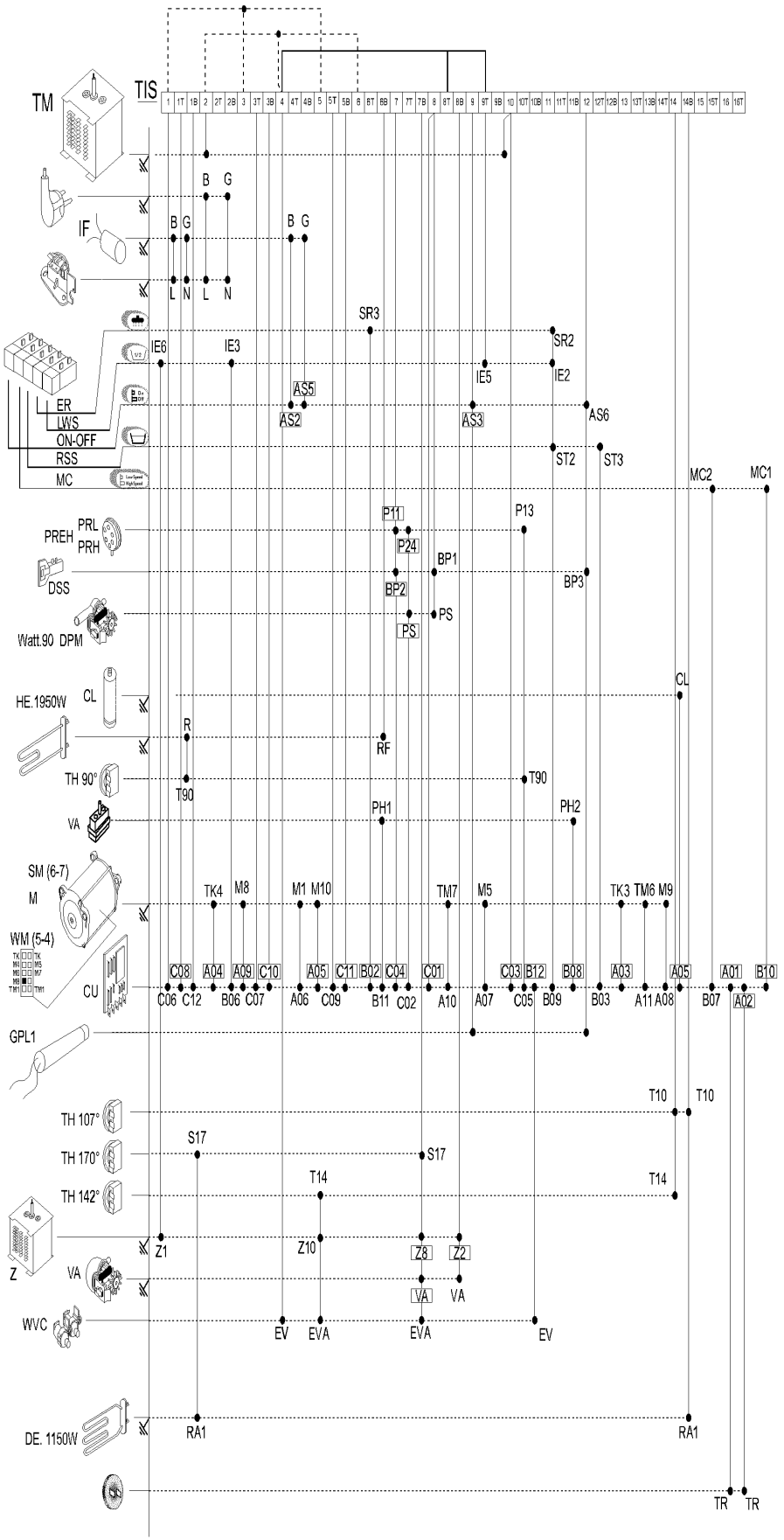

TM	Timer Motor
EM	Thermostop
IF	Interference Filter
RSS	Spin delay button
SDE	No spin button
LWS	Half load button
e	Eco button
CWS	Cold wash button
PRL	Low level pressostat
PRH	High level pressostat
WVC	Water valve (cold fill)
WVW	Water valve (hot fill)
PREH	Pressostat
DSS	Micro delay switch
DPM	Drain motor pump
VAT	Variable temperature
VSS	Variable spin speed
TR	Thermal resistivity
TK	Tachometer
WV	Water valve
CC	Spin capacitor
CL	Wash capacitor
HE	Heating element
RE	Relay
RF	Heating Protector
AS	ON-OFF button
ER	Extra rinse button
TH(10°-90°C)	Adjustable thermostat
TH	Fixed thermostat 90°C
TH	Fixed thermostat 107°C
TH	Fixed thermostat 142°C
TH	Fixed thermostat 170°C
M	Main motor
SM	Spin dry motor
WM	Wash motor
CU	Control unit
Z	Drying timer
VA	Dryer motor
EVA	Dryer water valve
MC	Low/high speed
GPL1	Pilot lamp
GPL2	Door pilot lamp
ZM	Drying timer motor
DE	Drying element
PS	Drain pump
R	Heating element
P	Pressure switch

B	Brown
G	Blue
⏚	Yellow-Green

552011900

Circuit diagram

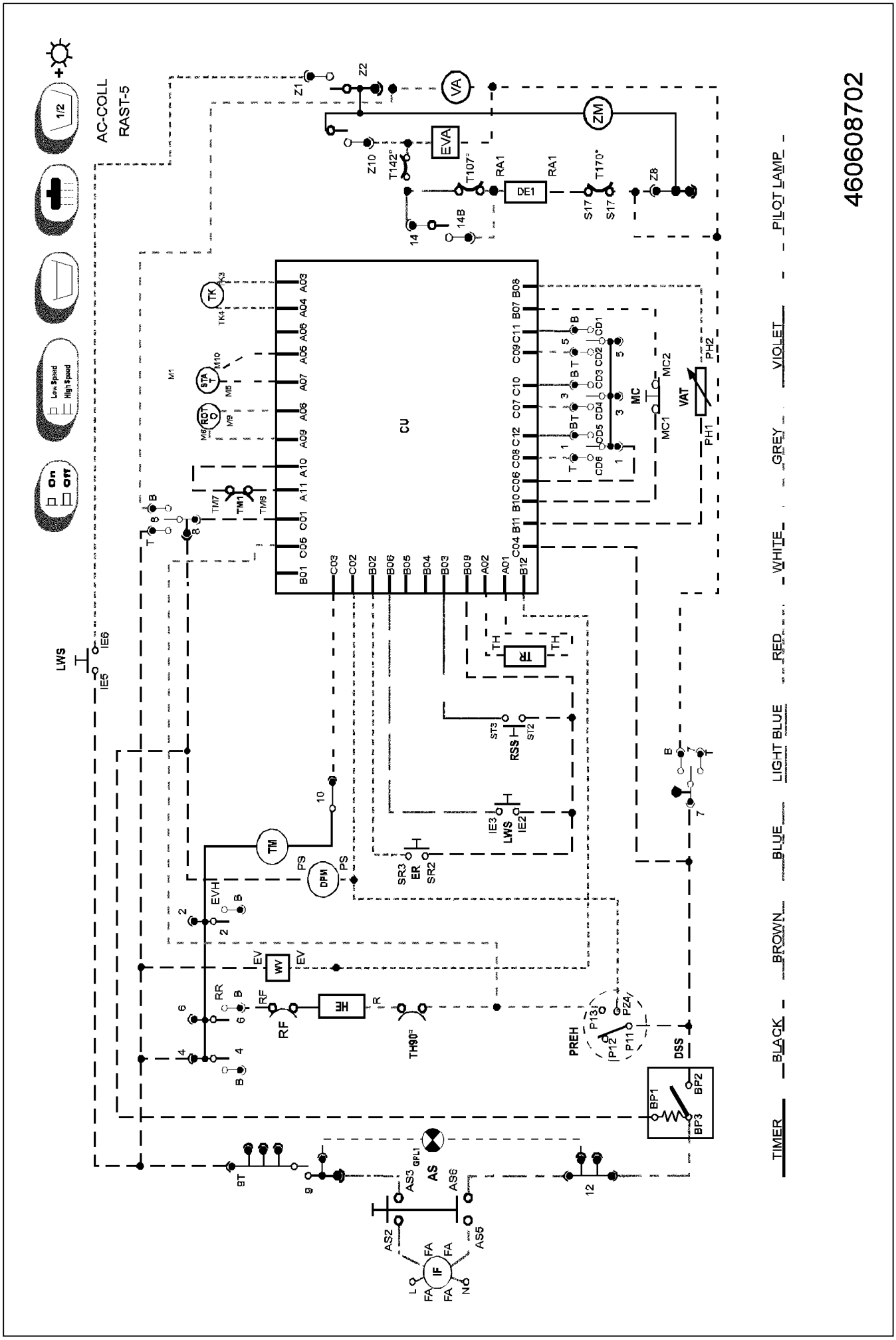

Program diagram

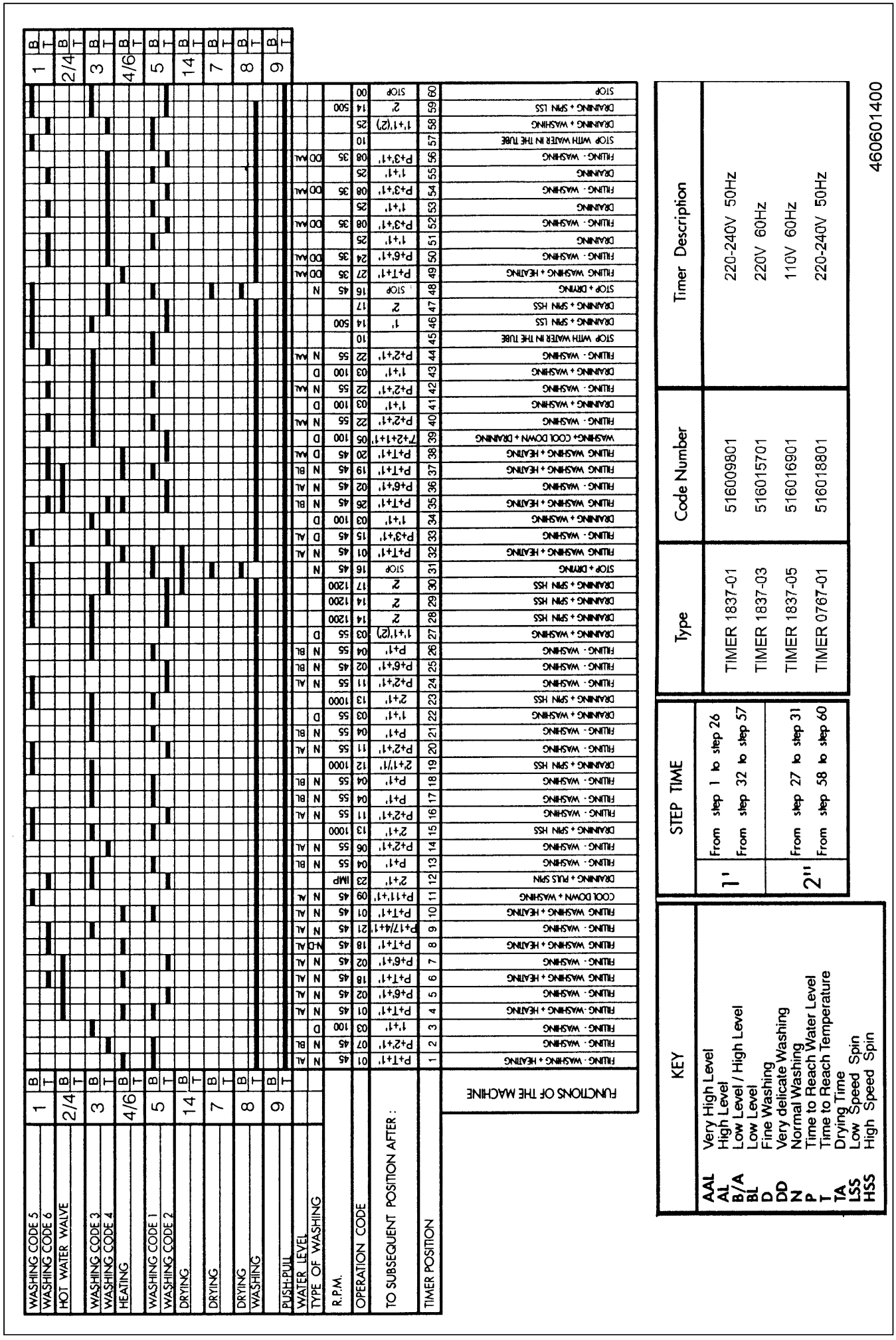

Program diagram

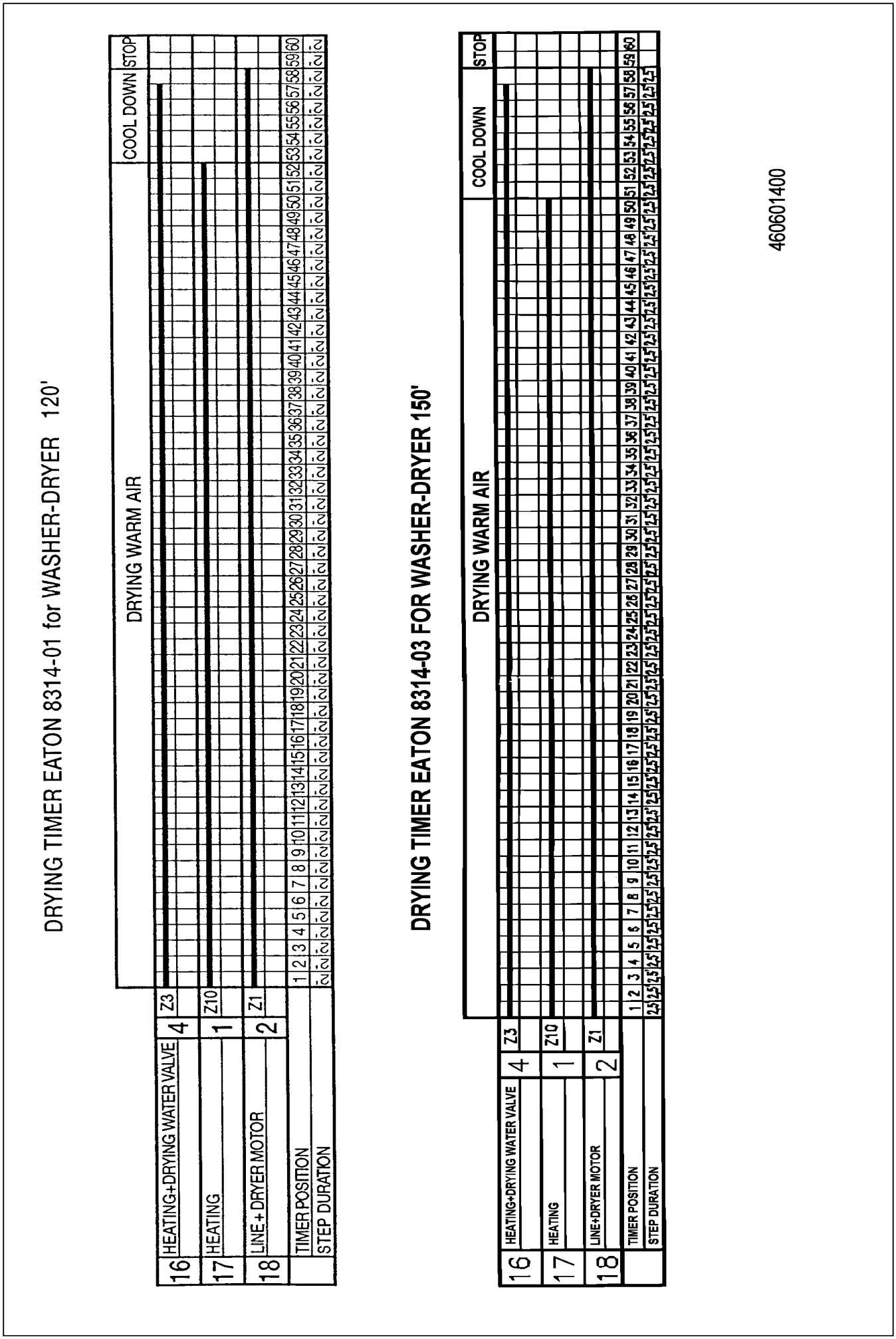

Program diagram

SEQUENSE CHART

CAM POSITIONS	8314-08	8314-09	8314-10-11	ADVANCING		CAM POSITIONS
1	INF TO	INF TO	INF TO		STOP	1
2	2	222	230		DRYING	2
3	2	222	230		DRYING	3
4	2	222	230		DRYING	4
5	2	222	230		DRYING	5
6	2	222	230		DRYING	6
7	2	222	230		DRYING	7
8	2	222	230		DRYING	8
9	2	222	230		DRYING	9
10	2	222	230		DRYING	10
11	2	222	230		DRYING	11
12	2	222	230		DRYING	12
13	2	222	230		DRYING	13
14	2	222	230		DRYING	14
15	2	222	230		DRYING	15
16	2	222	230		DRYING	16
17	2	222	230		DRYING	17
18	2	222	230		DRYING	18
19	2	222	230		DRYING	19
20	2	222	230		DRYING	20
21	2	222	230		DRYING	21
22	2	222	230		DRYING	22
23	2	222	230		DRYING	23
24	2	222	230		DRYING	24
25	2	222	230		DRYING	25
26	2	222	230		DRYING	26
27	2	222	230		DRYING	27
28	2	222	230		DRYING	28
29	2	222	230		DRYING	29
30	2	222	230		DRYING	30
31	2	222	230		DRYING	31
32	2	222	230		DRYING	32
33	2	222	230		DRYING	33
34	2	222	230		DRYING	34
35	2	222	230		DRYING	35
36	2	222	230		DRYING	36
37	2	222	230		DRYING	37
38	2	222	230		DRYING	38
39	2	222	230		DRYING	39
40	2	222	230		DRYING	40
41	2	222	230		DRYING	41
42	2	222	230		DRYING	42
43	2	222	230		DRYING	43
44	2	222	230		DRYING	44
45	2	222	230		DRYING	45
46	2	222	230		DRYING	46
47	2	222	230		DRYING	47
48	2	222	230		DRYING	48
49	2	222	230		DRYING	49
50	2	222	230		DRYING	50
51	2	222	230		DRYING	51
52	2	222	230		DRYING	52
53	2	222	230		DRYING	53
54	2	222	230		DRYING	54
55	2	222	230		COOL DOWN	55
56	2	222	230		COOL DOWN	56
57	2	222	230		COOL DOWN	57
58	2	222	230		COOL DOWN	58
59	2	222	230		COOL DOWN	59
60	2	222	230		COOL DOWN	60

CONTACTS NUMBERING	1	2	10	3	5	3	8
CONTACTS POSITIONS							

MAIN CAM

CONTACTS NUMBERING	1	2	10	3	5	3	8
CONTACTS POSITIONS							
TRACE ON TRAK Nr							

IMPULSE

CAM POSITIONS	2	10	3	5	3	8
LINE						
DRYING			----------			
PREFERENTIAL						

STOP meccanico in posizione 1

TECHNICAL FUATURE 8314-08

VOLTAGE : 220 - 240V 50Hz
FAST CAM : a 50 Hz 1 turn in 24',
Nr. tooth= 48, nr. mark = 12

SLOW CAM : a 50 Hz 1 turn in 2 hours,
Nr. tooth = 60.
Contact current carrying capacity = 15A

CONTACT 1-2: Close :118' - Open: 2'
CONTACT 1-10: Close :106' - Open: 14'

TECHNICAL FUATURE 8314-09

VOLTAGE : 220/240 V - 50 Hz
FAST CAM : a 50 Hz 1 turn in 26',
Nr. tooth= 52, nr. mark = 11

SLOW CAM : a 50 Hz 1 turn in 142',
Nr. tooth = 60.
Contact current carrying capacity = 15A

CONTACT 1-2: Close :140' - Open: 2'.
CONTACT 1-10: Close: 114' - Open: 26'.

TECHNICAL FUATURE 8314-10-11

VOLTAGE : See below
FAST CAM : a 50 Hz 1 turn in 25',
Nr. tooth = 60, nr. mark = 10
SLOW CAM : a 50 Hz 1 turn in 2h30',
Nr. tooth = 60.
Contact current carrying capacity = 15A

CONTACT 1-2: Close 147'(177') - Open:
CONTACT 1-10: Close 102'(145') - Open:

ZBN 8314.10 8314.11
Voltage 220V 60Hz 110V 60Hz
Motor M904 M908

Type	Code Number	Timer Description
TEMP 8314-08	536002300	220-240V 50Hz
TEMP 8314-09	536002400	220-240V 50Hz
TEMP 8314-10	536002500	220V 60Hz
TEMP 8314-11	536002600	110V 60Hz

460601400
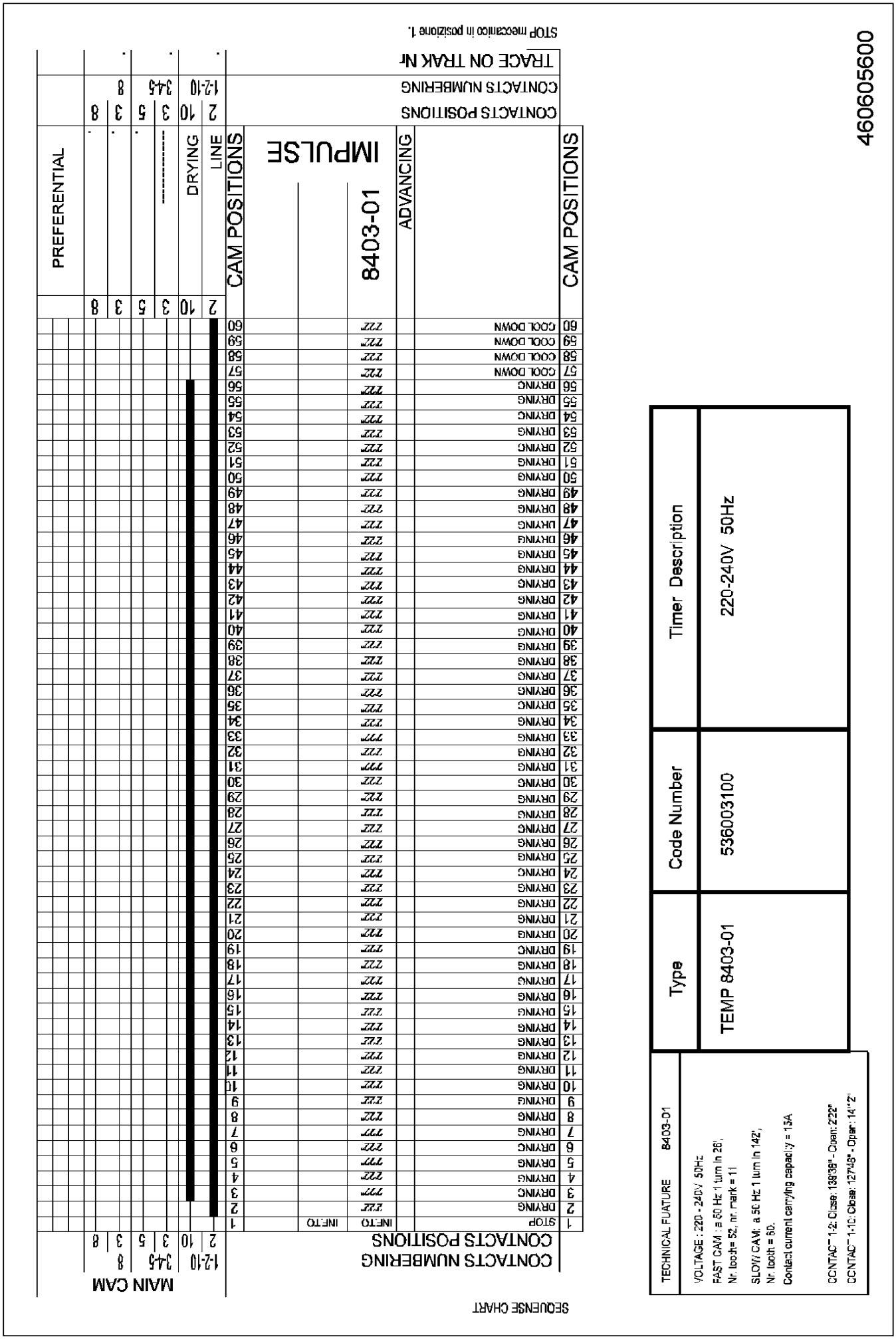
Program diagram