COMPAL CONFIDENTIAL

MODEL NAME : ***IBQ00***

PCB NO : ***LA-3301P (DA80000771L)***

BOM P/N : ***45144631L01***

M08 (UMA) Briscoe

uFCPGA Mobile Merom
Intel Crestline + ICH8M

2007-03-07

REV : 1.0 (A00)

DAZ P/N:DAZZGX0010L

MB PCB

Part Number	Description
DA80000771L	PCB ZGX LA-3301P REV1 M/B UMA

PCB1
IBQ00
LS-3301P REV1
LED/B
LS-3301P REV1 LED/B

PCB1
IBQ00
LS-3302P REV1
IO/B
LS-3302P I/O Board

BOM NO. 45144631L01

PCB P/N: DA80000771L

DELL CONFIDENTIAL/PROPRIETARY

PROPRIETARY NOTE: THIS SHEET OF ENGINEERING DRAWING AND SPECIFICATIONS CONTAINS CONFIDENTIAL TRADE SECRET AND OTHER PROPRIETARY INFORMATION OF DELL INC. ("DELL") THIS DOCUMENT MAY NOT BE TRANSFERRED OR COPIED WITHOUT THE EXPRESS WRITTEN AUTHORIZATION OF DELL. IN ADDITION, NEITHER THIS SHEET NOR THE INFORMATION IT CONTAINS WAY BE USED BY OR DISCLOSED TO ANY THIRD PARTY WITHOUT DELL'S EXPRESS WRITTEN CONSENT.

hexainf@hotmail.com
GRATIS - FOR FREE

Compal Electronics, Inc.		
Title: Cover Sheet		
Size	Document Number: LA-3301P	Rev 1.0
Date: Wednesday, March 07, 2007	Sheet 1 of 58	

Block Diagram
Compal confidential
Model : IBQ00

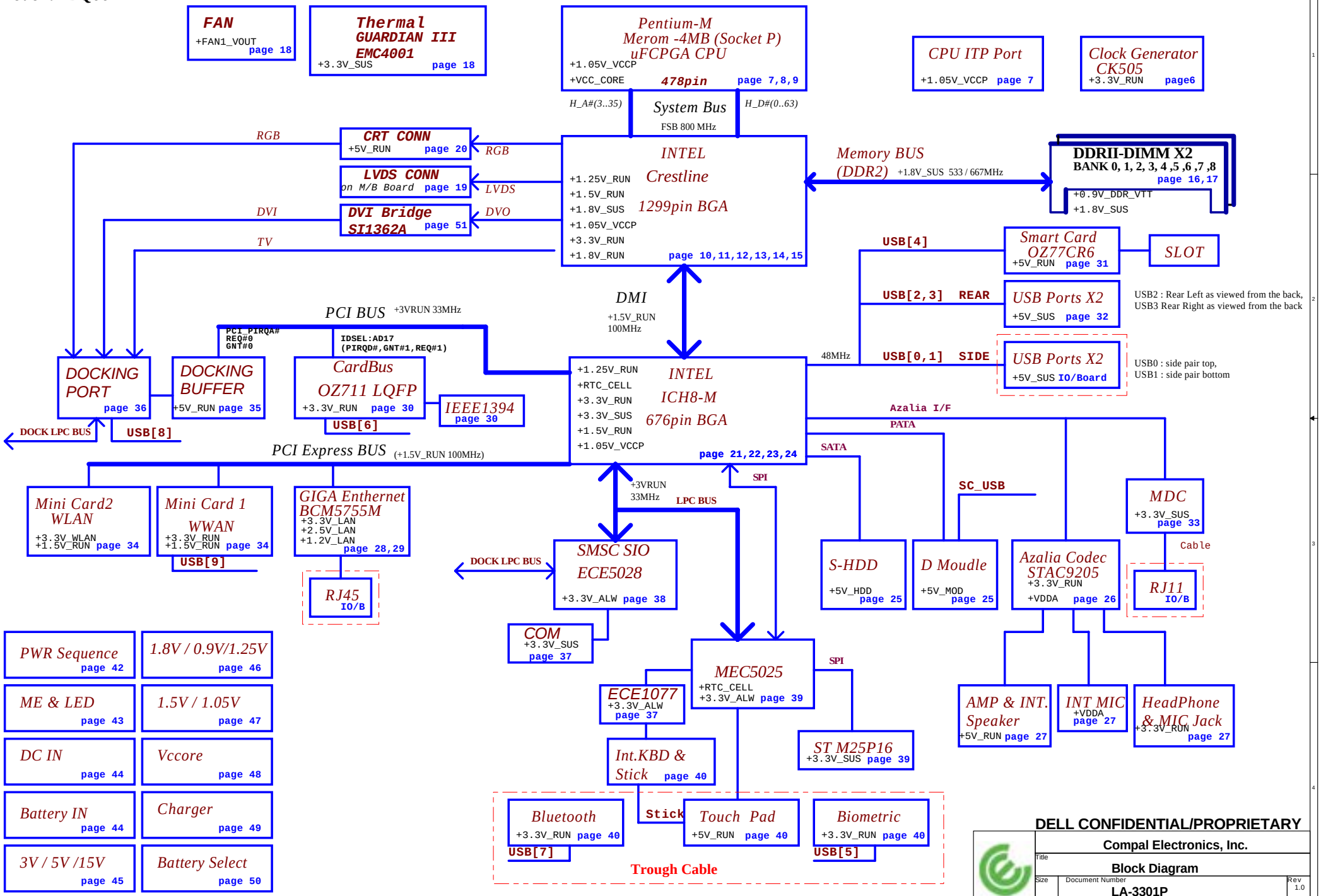

DELL CONFIDENTIAL/PROPRIETARY

Compal Electronics, Inc.	
Title: Block Diagram	
Size	Document Number: LA-3301P	Rev 1.0
Date: Wednesday, February 14, 2007	Sheet 2 of 58

POWER STATES

State \ Signal	SLP S3#	SLP S4#	SLP S5#	S4 STATE#	SLP M#	ALWAYS PLANE	M PLANE	SUS PLANE	RUN PLANE	CLOCKS
S0 (Full ON) / M0	HIGH	HIGH	HIGH	HIGH	HIGH	ON	ON	ON	ON	ON
S3 (Suspend to RAM) / M1	LOW	HIGH	HIGH	HIGH	HIGH	ON	ON	ON	OFF	ON
S4 (Suspend to DISK) / M1	LOW	HIGH	HIGH	LOW	HIGH	ON	ON	ON	OFF	ON
S5 (SOFT OFF) / M1	LOW	HIGH	LOW	LOW	HIGH	ON	ON	ON	OFF	ON
S3 (Suspend to RAM) / M-OFF	LOW	HIGH	HIGH	HIGH	LOW	ON	OFF	ON	OFF	OFF
S4 (Suspend to DISK) / M-OFF	LOW	LOW	HIGH	LOW	LOW	ON	OFF	OFF	OFF	OFF
S5 (SOFT OFF) / M-OFF	LOW	LOW	LOW	LOW	LOW	ON	OFF	OFF	OFF	OFF

PM TABLE

State \ power plane	+15V_ALW +5V_ALW +3.3V_ALW +3.3V_RTC_LDO	+5V_SUS +3.3V_SUS +1.8V_SUS	+5V_RUN +3.3V_RUN +2.5V_RUN +1.8V_RUN +1.5V_RUN +0.9V_DDR_VTT +VCC_CORE +1.05V_VCCP +1.25V_RUN
S0	ON	ON	ON
S3	ON	ON	OFF
S5 S4/AC	ON	OFF	OFF
S5 S4/AC don't exist	OFF	OFF	OFF

PCI TABLE

PCI DEVICE	IDSEL	REQ#/GNT#	PIRQ
OZ711	AD17	REQ#1 / GNT#1	PIRQD
Docking	AD24	REQ#0 / GNT#0	PIRQA

	USB PORT#	DESTINATION
ICH8-M	0	Side Top
	1	Side Bottom
	2	Rear Left
	3	Rear Right
	4	Smart Card
	5	Biometric
	6	Card Bus
	7	Bluetooth
	8	Docking
	9	WWAN
ECE 5028	1	None
	2	None
	3	None
	4	None

PCI EXPRESS	DESTINATION
Lane 1	MINI CARD-1 WWAN
Lane 2	MINI CARD-2 WLAN
Lane 3	None
Lane 4	None
Lane 5	None
Lane 6	GIGA LAN

hexainf@hotmail.com
GRATIS - FOR FREE

PROPRIETARY NOTE: THIS SHEET OF ENGINEERING DRAWING AND SPECIFICATIONS CONTAINS CONFIDENTIAL TRADE SECRET AND OTHER PROPRIETARY INFORMATION OF DELL INC. ("DELL") THIS DOCUMENT MAY NOT BE TRANSFERRED OR COPIED WITHOUT THE EXPRESS WRITTEN AUTHORIZATION OF DELL. IN ADDITION, NEITHER THIS SHEET NOR THE INFORMATION IT CONTAINS WAY BE USED BY OR DISCLOSED TO ANY THIRD PARTY WITHOUT DELL'S EXPRESS WRITTEN CONSENT.

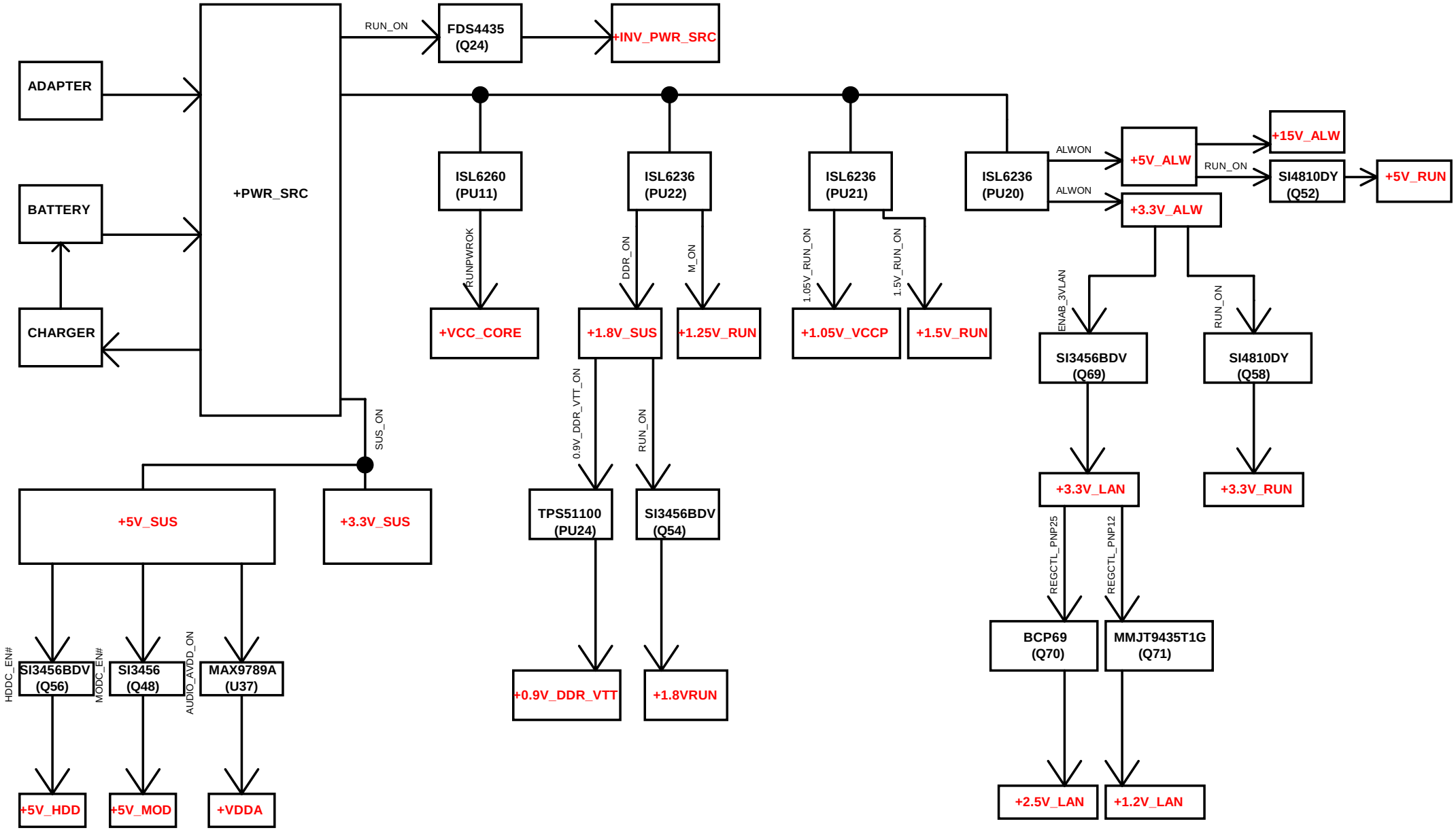

DELL CONFIDENTIAL/PROPRIETARY

PROPRIETARY NOTE: THIS SHEET OF ENGINEERING DRAWING AND SPECIFICATIONS CONTAINS CONFIDENTIAL TRADE SECRET AND OTHER PROPRIETARY INFORMATION OF DELL INC. ("DELL") THIS DOCUMENT MAY NOT BE TRANSFERRED OR COPIED WITHOUT THE EXPRESS WRITTEN AUTHORIZATION OF DELL. IN ADDITION, NEITHER THIS SHEET NOR THE INFORMATION IT CONTAINS WAY BE USED BY OR DISCLOSED TO ANY THIRD PARTY WITHOUT DELL'S EXPRESS WRITTEN CONSENT.

Compal Electronics, Inc.

Title: Power Rail

Size: | Document Number: LA-3301P | Rev: 1.0

Date: Wednesday, February 14, 2007 | Sheet 4 of 58

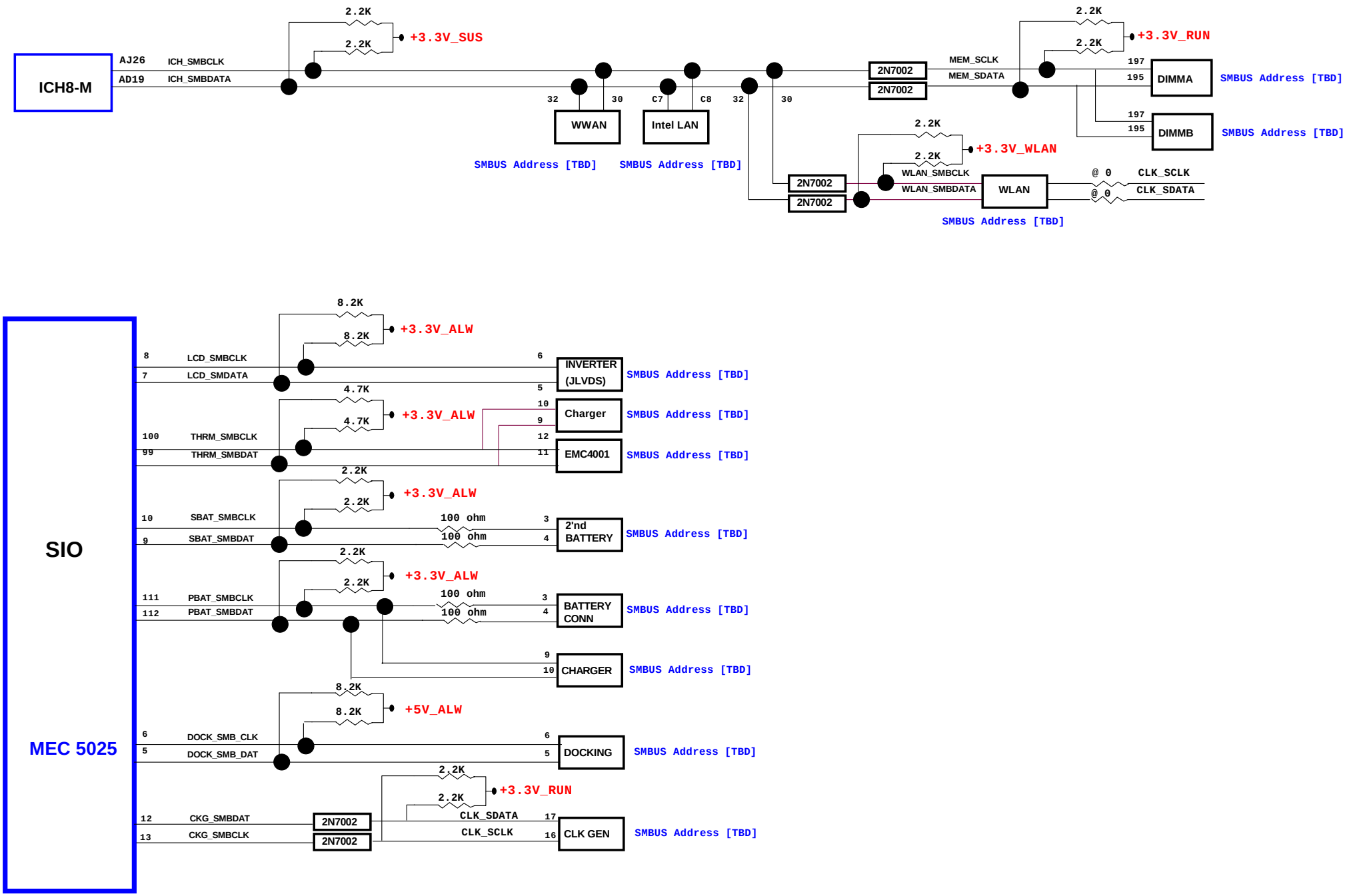

hexainf@hotmail.com
GRATIS - FOR FREE

Compal Electronics, Inc.	
Title	SMBUS TOPOLOGY
Size / Document Number	LA-3301P
Rev	1.0
Date: Wednesday, February 14, 2007	Sheet 5 of 58

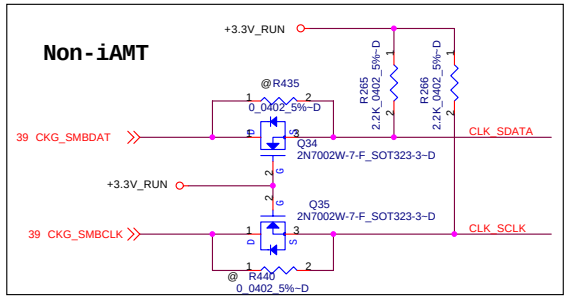

FSC CLKSEL2	FSB CLKSEL1	FSA CLKSEL0	CPU MHz	SRC MHz	PCI MHz
0	0	0	266	100	33.3
0	0	1	133	100	33.3
* 0	1	0	200	100	33.3
0	1	1	166	100	33.3
1	0	0	333	100	33.3
1	0	1	100	100	33.3
1	1	0	400	100	33.3
1	1	1	200	100	33.3

Table : ICS954305AK

CPU_BSEL	CPU_BSEL2(FSC)	CPU_BSEL1(FSB)
133	0	0
166	0	1

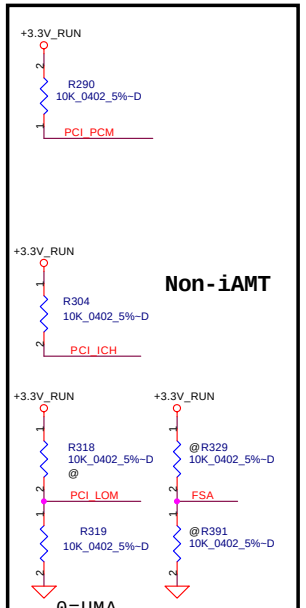

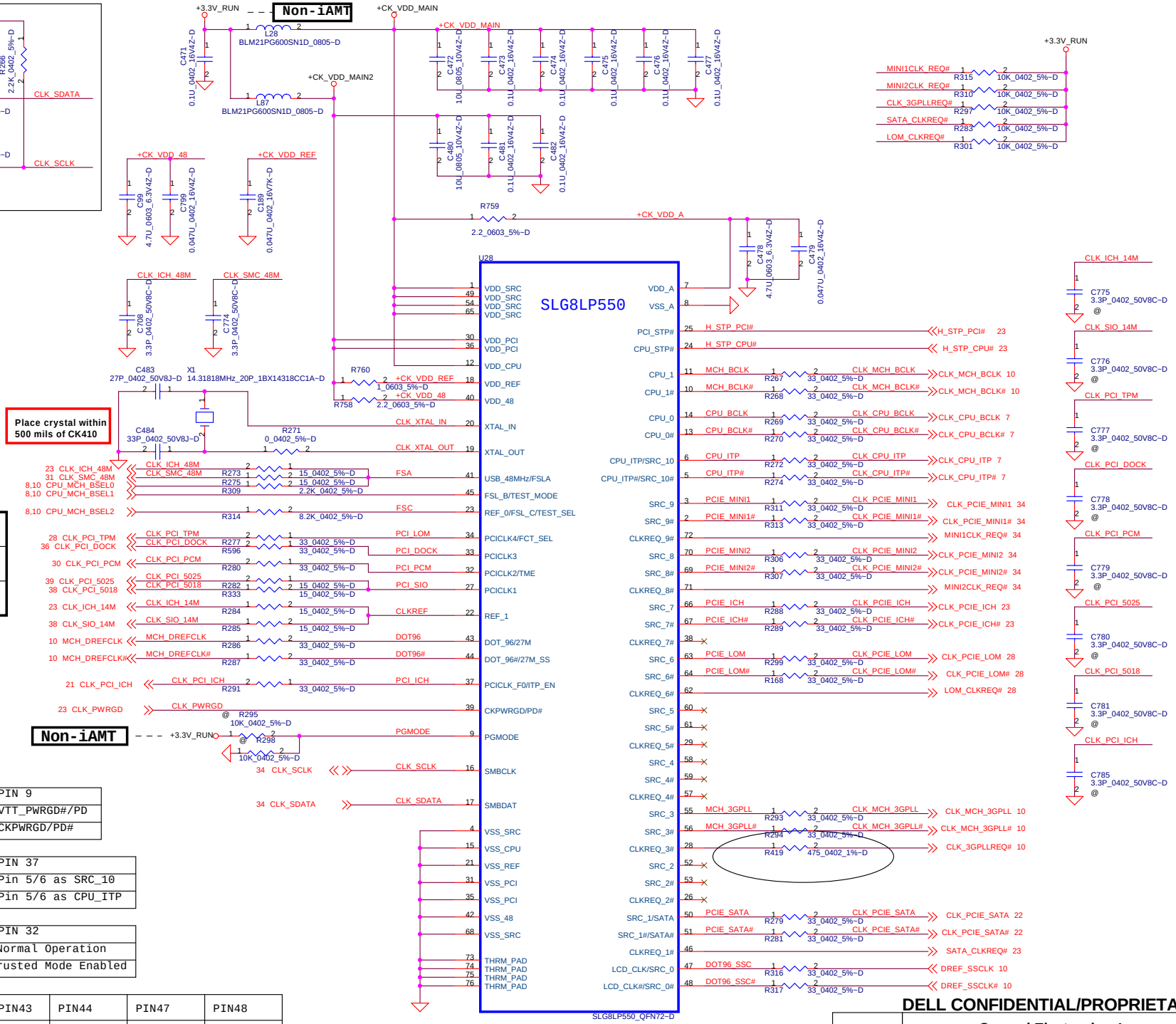

PGMODE	PIN 9
0	VTT_PWRGD#/PD
1	CKPWRGD/PD#

ITP_EN	PIN 37
0	Pin 5/6 as SRC_10
* 1	Pin 5/6 as CPU_ITP

TME	PIN 32
0	Normal Operation
* 1	Trusted Mode Enabled

FCTSEL1	PIN43	PIN44	PIN47	PIN48
0=UMA	DOT96T	DOT96C	96/100M_T	96/100M_C
* 1=DIS	27M_out	27M SSout	SRCT0	SRCC0

PROPRIETARY NOTE: THIS SHEET OF ENGINEERING DRAWING AND SPECIFICATIONS CONTAINS CONFIDENTIAL TRADE SECRET AND OTHER PROPRIETARY INFORMATION OF DELL INC. ("DELL") THIS DOCUMENT MAY NOT BE TRANSFERRED OR COPIED WITHOUT THE EXPRESS WRITTEN AUTHORIZATION OF DELL. IN ADDITION, NEITHER THIS SHEET NOR THE INFORMATION IT CONTAINS WAY BE USED BY OR DISCLOSED TO ANY THIRD PARTY WITHOUT DELL'S EXPRESS WRITTEN CONSENT.

DELL CONFIDENTIAL/PROPRIETARY

Compal Electronics, Inc.

Title: Clock Generator

Size | Document Number: LA-3301P | Rev 1.0

Date: Monday, February 26, 2007 | Sheet 6 of 58

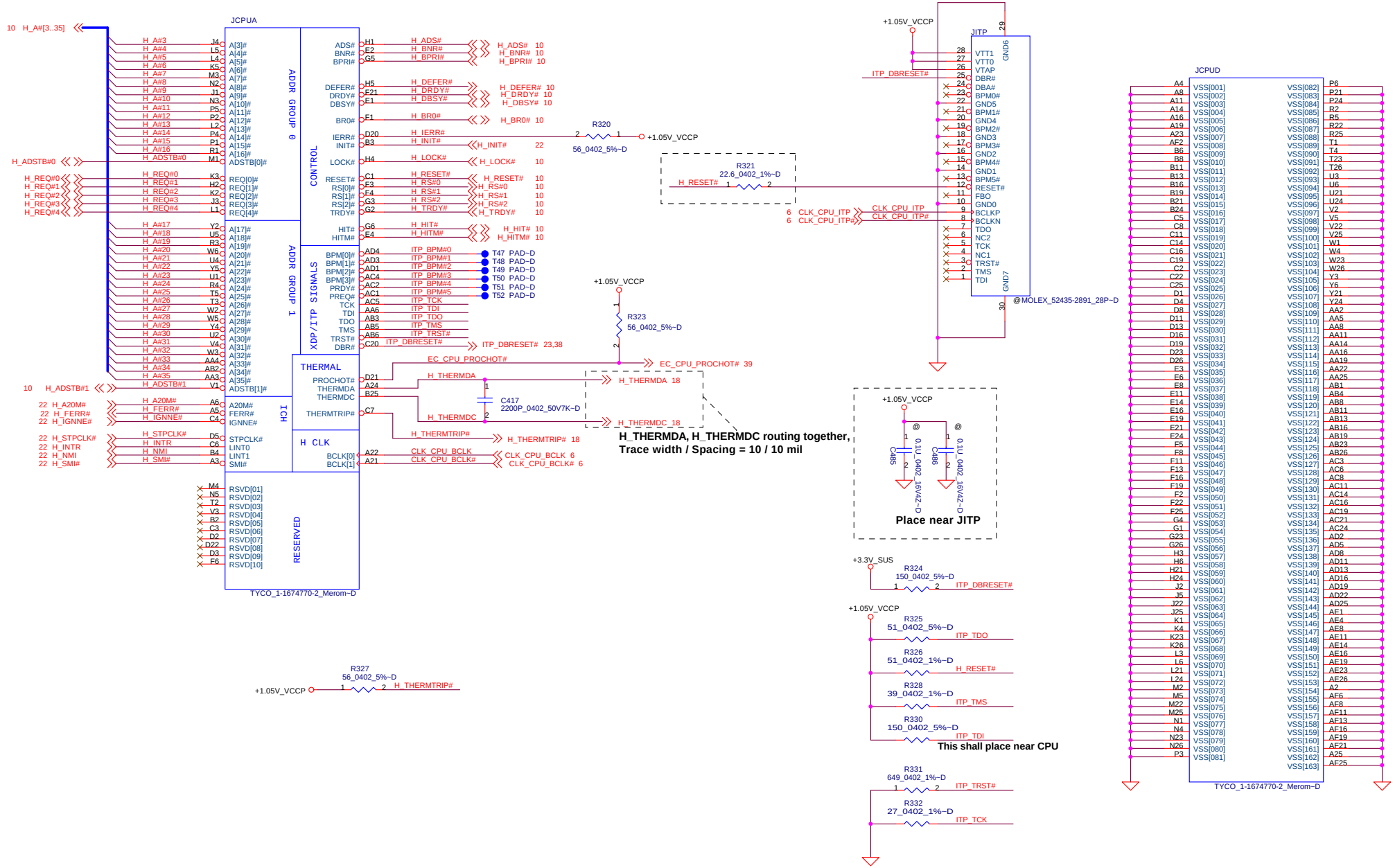

hexainf@hotmail.com
GRATIS - FOR FREE

PROPRIETARY NOTE: THIS SHEET OF ENGINEERING DRAWING AND SPECIFICATIONS CONTAINS CONFIDENTIAL TRADE SECRET AND OTHER PROPRIETARY INFORMATION OF DELL INC. ("DELL") THIS DOCUMENT MAY NOT BE TRANSFERRED OR COPIED WITHOUT THE EXPRESS WRITTEN AUTHORIZATION OF DELL. IN ADDITION, NEITHER THIS SHEET NOR THE INFORMATION IT CONTAINS WAY BE USED BY OR DISCLOSED TO ANY THIRD PARTY WITHOUT DELL'S EXPRESS WRITTEN CONSENT.

DELL CONFIDENTIAL/PROPRIETARY

Compal Electronics, Inc.

Title: Merom Processor(1/2)

Size: | Document Number: LA-3301P | Rev: 1.0

Date: Monday, February 26, 2007 | Sheet 7 of 58

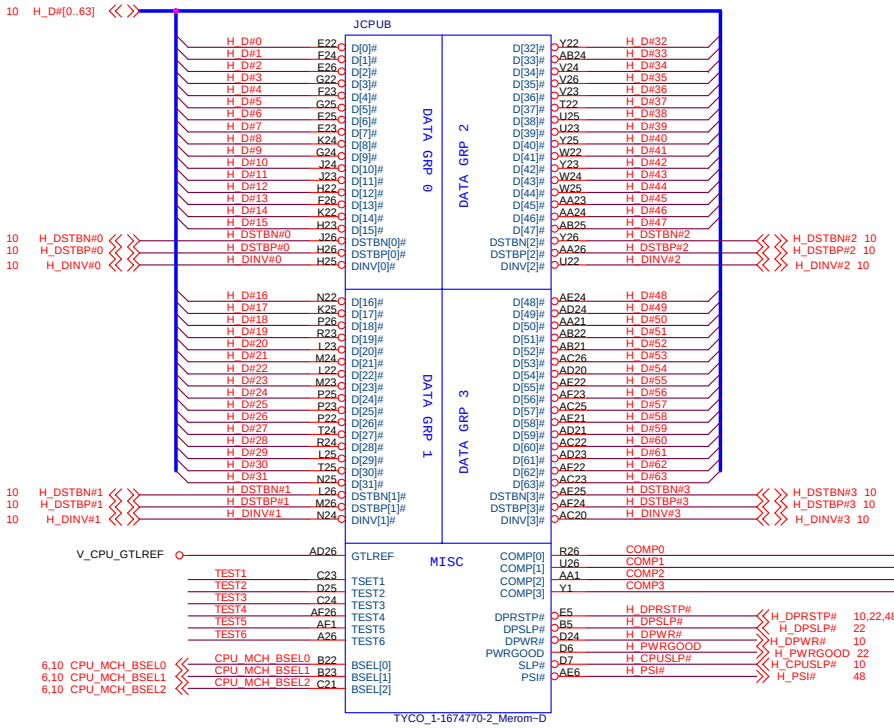

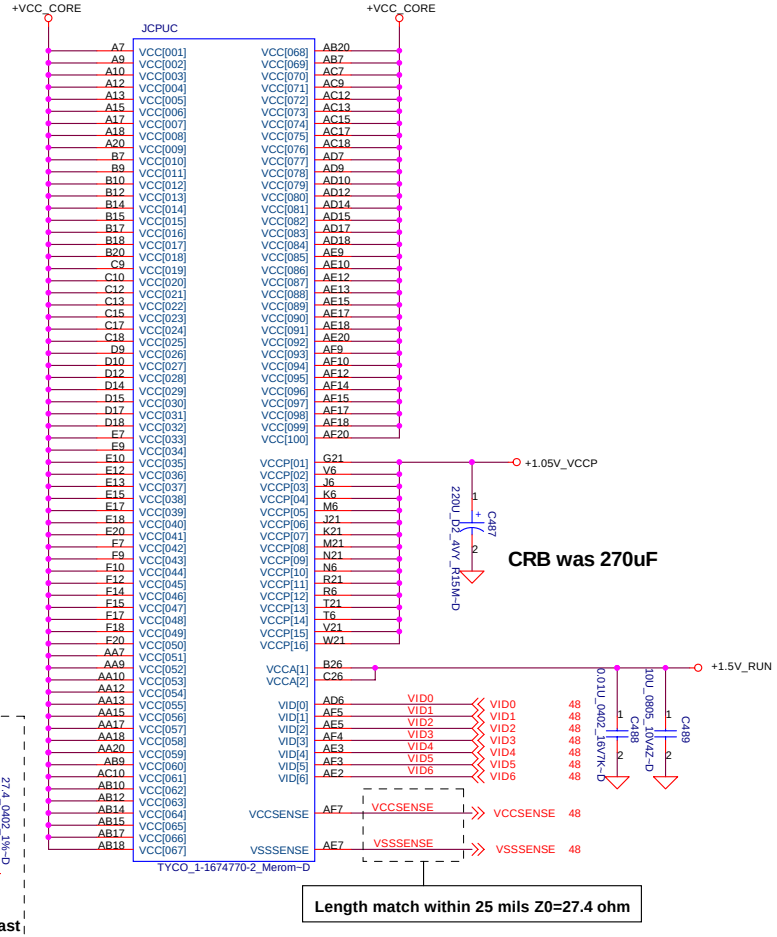

Resistor placed within 0.5" of CPU pin.Trace should be at least 25 mils away from any other toggling signal. COMP0, COMP2 trace should be 27.4 ohm. COMP1, COMP3 should be 55 ohm.

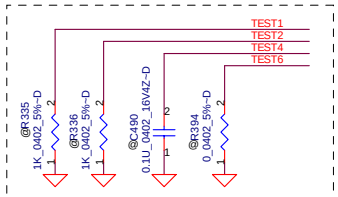

Place C close to the CPU_TEST4 pin. Make sure CPU_TEST4 routing is reference to GND and away from other noisy signal.

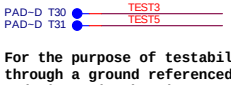

For the purpose of testability, route these signals through a ground referenced Z0 = 55ohm trace that ends in a via that is near a GND via and is accessible through an oscilloscope connection.

FSB	BCLK	BSEL2	BSEL1	BSEL0
533	133	0	0	1
667	166	0	1	1
800	200	0	1	0

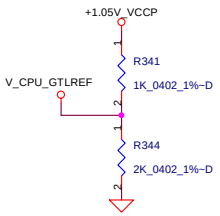

Layout close CPU PIN AD26
55 ohm, 0.5 inch (max)

Place R342 and R343 near CPU

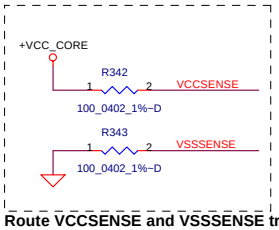

Route VCCSENSE and VSSSENSE trace at 27.4 ohms, 7 mils spacing and 1 inch (max)

PROPRIETARY NOTE: THIS SHEET OF ENGINEERING DRAWING AND SPECIFICATIONS CONTAINS CONFIDENTIAL TRADE SECRET AND OTHER PROPRIETARY INFORMATION OF DELL INC. ("DELL") THIS DOCUMENT MAY NOT BE TRANSFERRED OR COPIED WITHOUT THE EXPRESS WRITTEN AUTHORIZATION OF DELL. IN ADDITION, NEITHER THIS SHEET NOR THE INFORMATION IT CONTAINS WAY BE USED BY OR DISCLOSED TO ANY THIRD PARTY WITHOUT DELL'S EXPRESS WRITTEN CONSENT.

DELL CONFIDENTIAL/PROPRIETARY

Compal Electronics, Inc.

Title: Merom Processor(2/2)

Size | Document Number: LA-3301P | Rev 1.0

Date: Monday, February 26, 2007 | Sheet 8 of 58

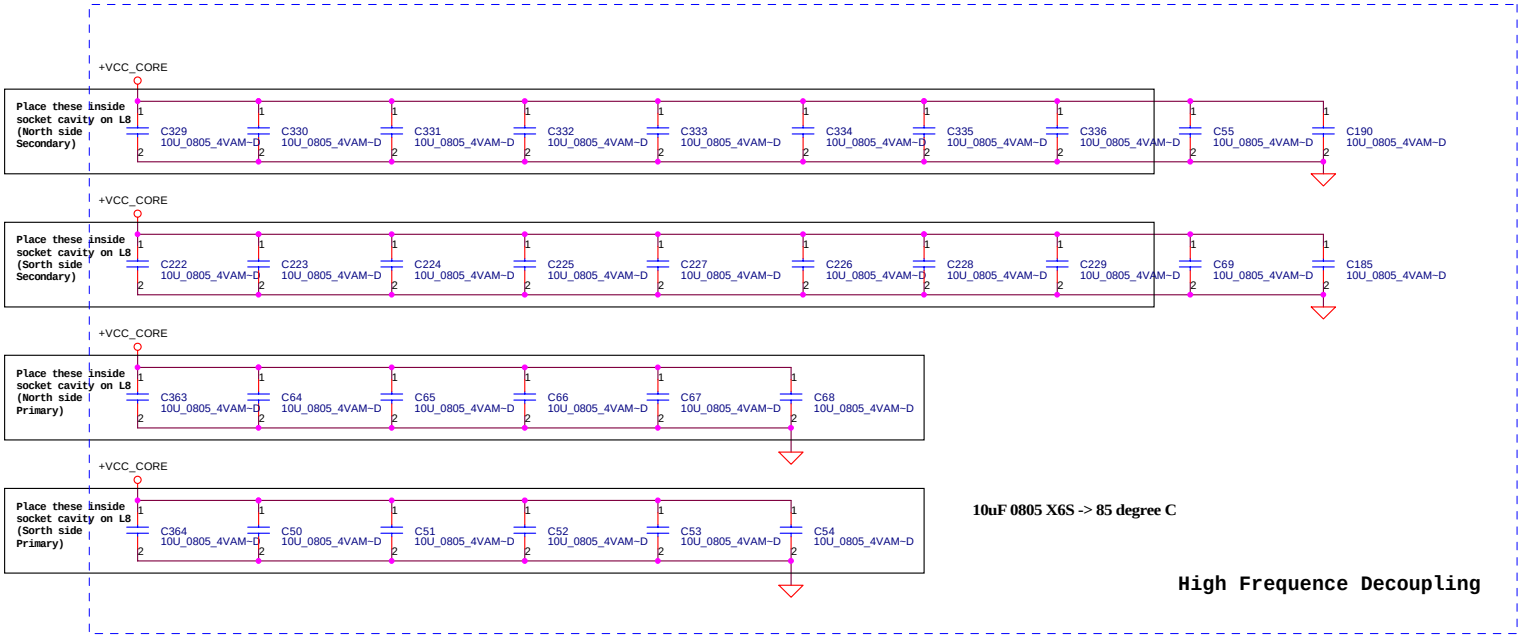

Near VCORE regulator.

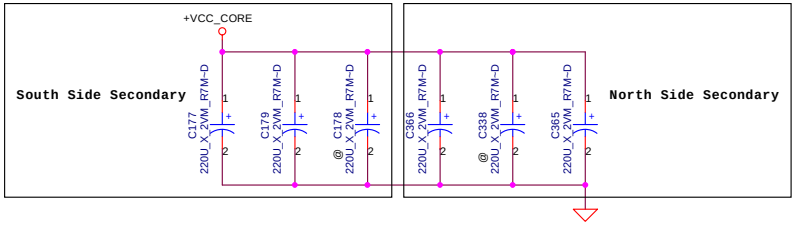

ESR <= 1.5m ohm
Capacitor > 1980uF

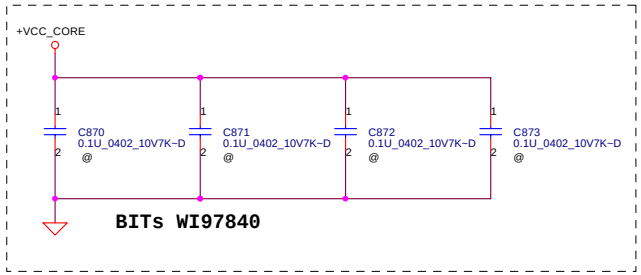

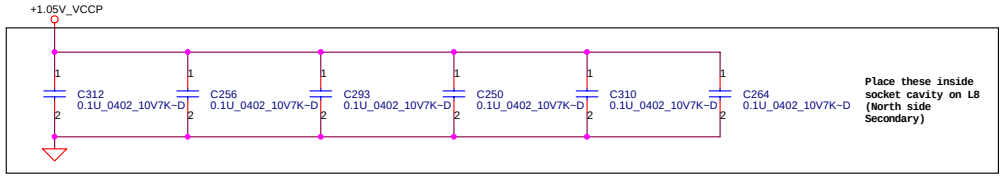

hexainf@hotmail.com
GRATIS - FOR FREE

PROPRIETARY NOTE: THIS SHEET OF ENGINEERING DRAWING AND SPECIFICATIONS CONTAINS CONFIDENTIAL TRADE SECRET AND OTHER PROPRIETARY INFORMATION OF DELL INC. ("DELL") THIS DOCUMENT MAY NOT BE TRANSFERRED OR COPIED WITHOUT THE EXPRESS WRITTEN AUTHORIZATION OF DELL. IN ADDITION, NEITHER THIS SHEET NOR THE INFORMATION IT CONTAINS WAY BE USED BY OR DISCLOSED TO ANY THIRD PARTY WITHOUT DELL'S EXPRESS WRITTEN CONSENT.

DELL CONFIDENTIAL/PROPRIETARY

Compal Electronics, Inc.		
Title: CPU Bypass		
Size	Document Number: LA-3301P	Rev 1.0
Date: Wednesday, February 14, 2007	Sheet 9 of 58	

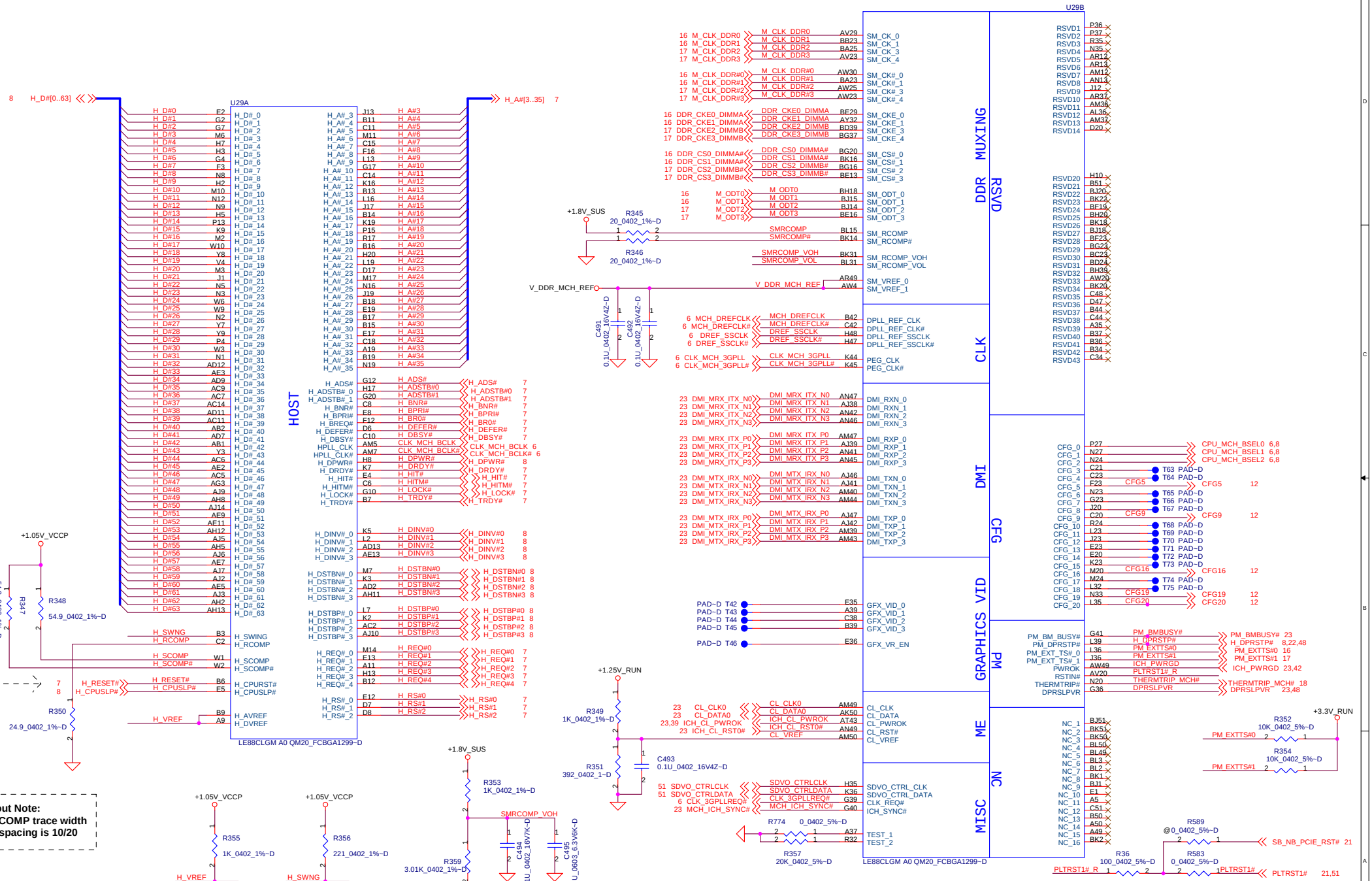

DELL CONFIDENTIAL/PROPRIETARY

PROPRIETARY NOTE: THIS SHEET OF ENGINEERING DRAWING AND SPECIFICATIONS CONTAINS CONFIDENTIAL TRADE SECRET AND OTHER PROPRIETARY INFORMATION OF DELL INC. ("DELL") THIS DOCUMENT MAY NOT BE TRANSFERRED OR COPIED WITHOUT THE EXPRESS WRITTEN AUTHORIZATION OF DELL. IN ADDITION, NEITHER THIS SHEET NOR THE INFORMATION IT CONTAINS WAY BE USED BY OR DISCLOSED TO ANY THIRD PARTY WITHOUT DELL'S EXPRESS WRITTEN CONSENT.

Compal Electronics, Inc.

Title: Crestline(1 of 6)

Size: | Document Number: LA-3301P | Rev: 1.0

Date: Monday, February 26, 2007 | Sheet 10 of 58

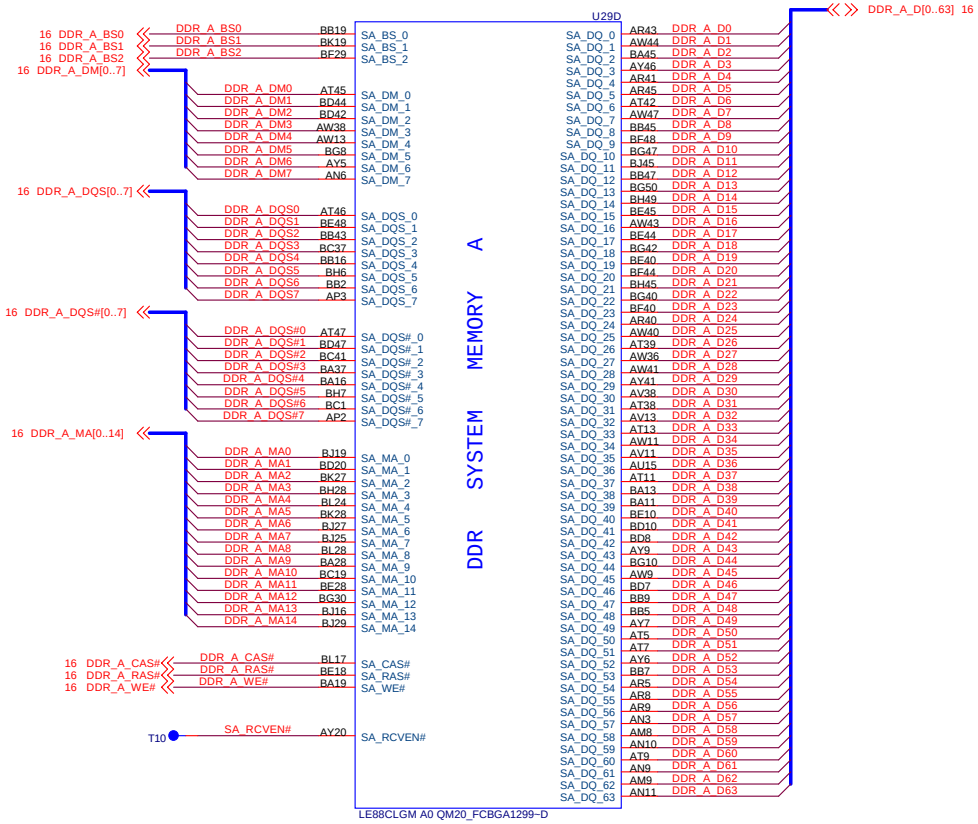

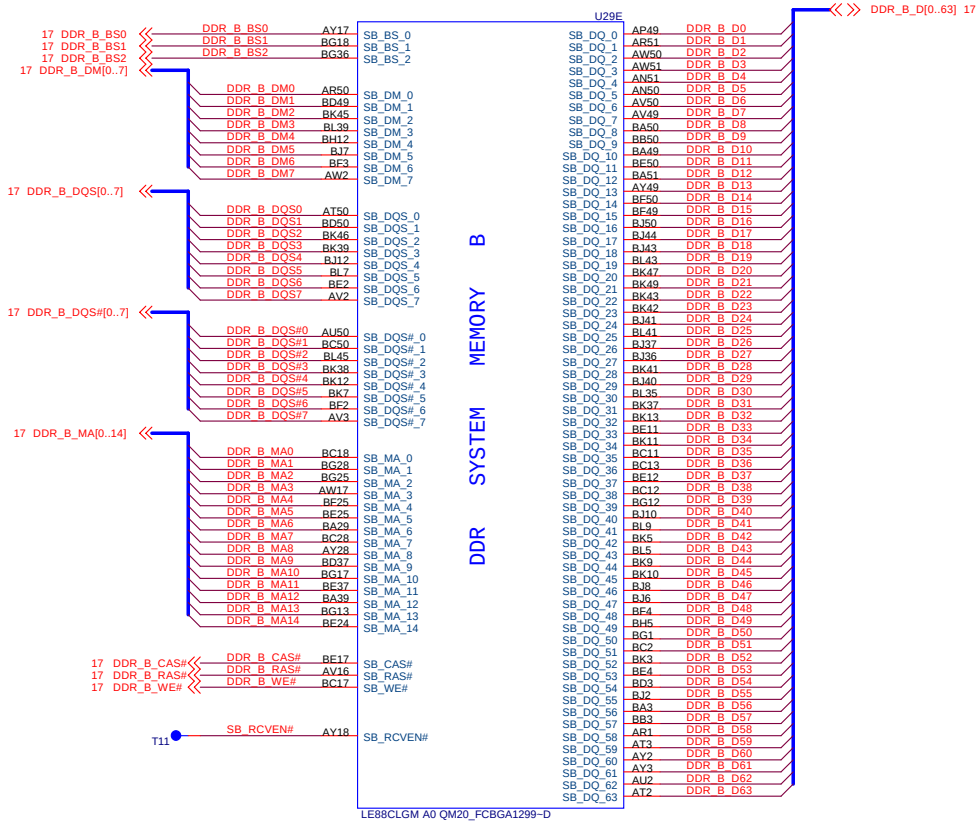

hexainf@hotmail.com
GRATIS - FOR FREE

PROPRIETARY NOTE: THIS SHEET OF ENGINEERING DRAWING AND SPECIFICATIONS CONTAINS CONFIDENTIAL TRADE SECRET AND OTHER PROPRIETARY INFORMATION OF DELL INC. ("DELL") THIS DOCUMENT MAY NOT BE TRANSFERRED OR COPIED WITHOUT THE EXPRESS WRITTEN AUTHORIZATION OF DELL. IN ADDITION, NEITHER THIS SHEET NOR THE INFORMATION IT CONTAINS WAY BE USED BY OR DISCLOSED TO ANY THIRD PARTY WITHOUT DELL'S EXPRESS WRITTEN CONSENT.

DELL CONFIDENTIAL/PROPRIETARY

Compal Electronics, Inc.

Title: **Crestline(2 of 6)**

Size | Document Number: **LA-3301P** | Rev: 1.0

Date: Monday, February 26, 2007 | Sheet 11 of 58

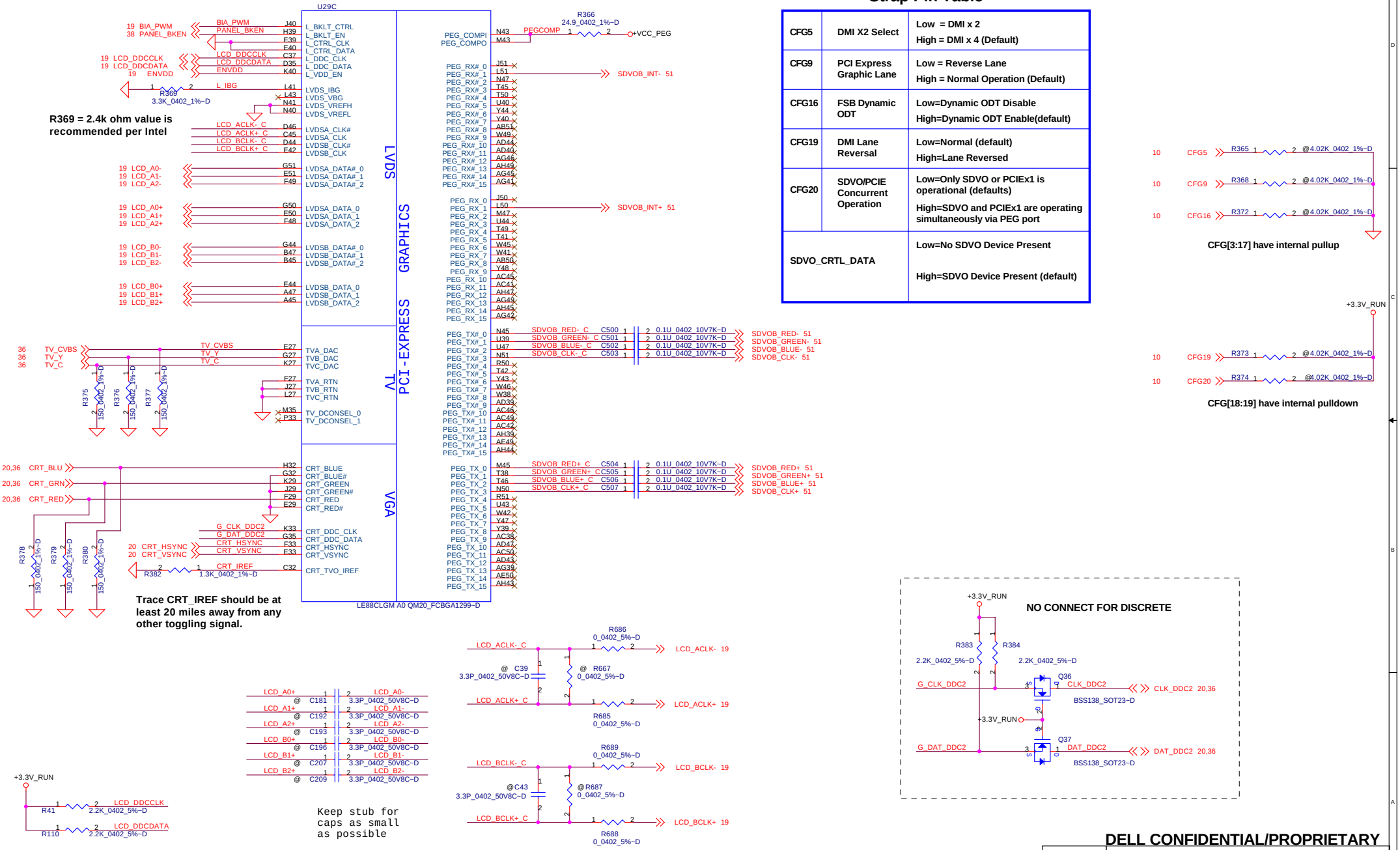

Strap Pin Table

CFG5	DMI X2 Select	Low = DMI x 2 High = DMI x 4 (Default)
CFG9	PCI Express Graphic Lane	Low = Reverse Lane High = Normal Operation (Default)
CFG16	FSB Dynamic ODT	Low=Dynamic ODT Disable High=Dynamic ODT Enable(default)
CFG19	DMI Lane Reversal	Low=Normal (default) High=Lane Reversed
CFG20	SDVO/PCIE Concurrent Operation	Low=Only SDVO or PCIEx1 is operational (defaults) High=SDVO and PCIEx1 are operating simultaneously via PEG port
SDVO_CRTL_DATA		Low=No SDVO Device Present High=SDVO Device Present (default)

PROPRIETARY NOTE: THIS SHEET OF ENGINEERING DRAWING AND SPECIFICATIONS CONTAINS CONFIDENTIAL TRADE SECRET AND OTHER PROPRIETARY INFORMATION OF DELL INC. ("DELL") THIS DOCUMENT MAY NOT BE TRANSFERRED OR COPIED WITHOUT THE EXPRESS WRITTEN AUTHORIZATION OF DELL. IN ADDITION, NEITHER THIS SHEET NOR THE INFORMATION IT CONTAINS WAY BE USED BY OR DISCLOSED TO ANY THIRD PARTY WITHOUT DELL'S EXPRESS WRITTEN CONSENT.

DELL CONFIDENTIAL/PROPRIETARY

Compal Electronics, Inc.

Title: Crestline(3 of 6)

Size | Document Number: LA-3301P | Rev 1.0

Date: Monday, February 26, 2007 | Sheet 12 of 58

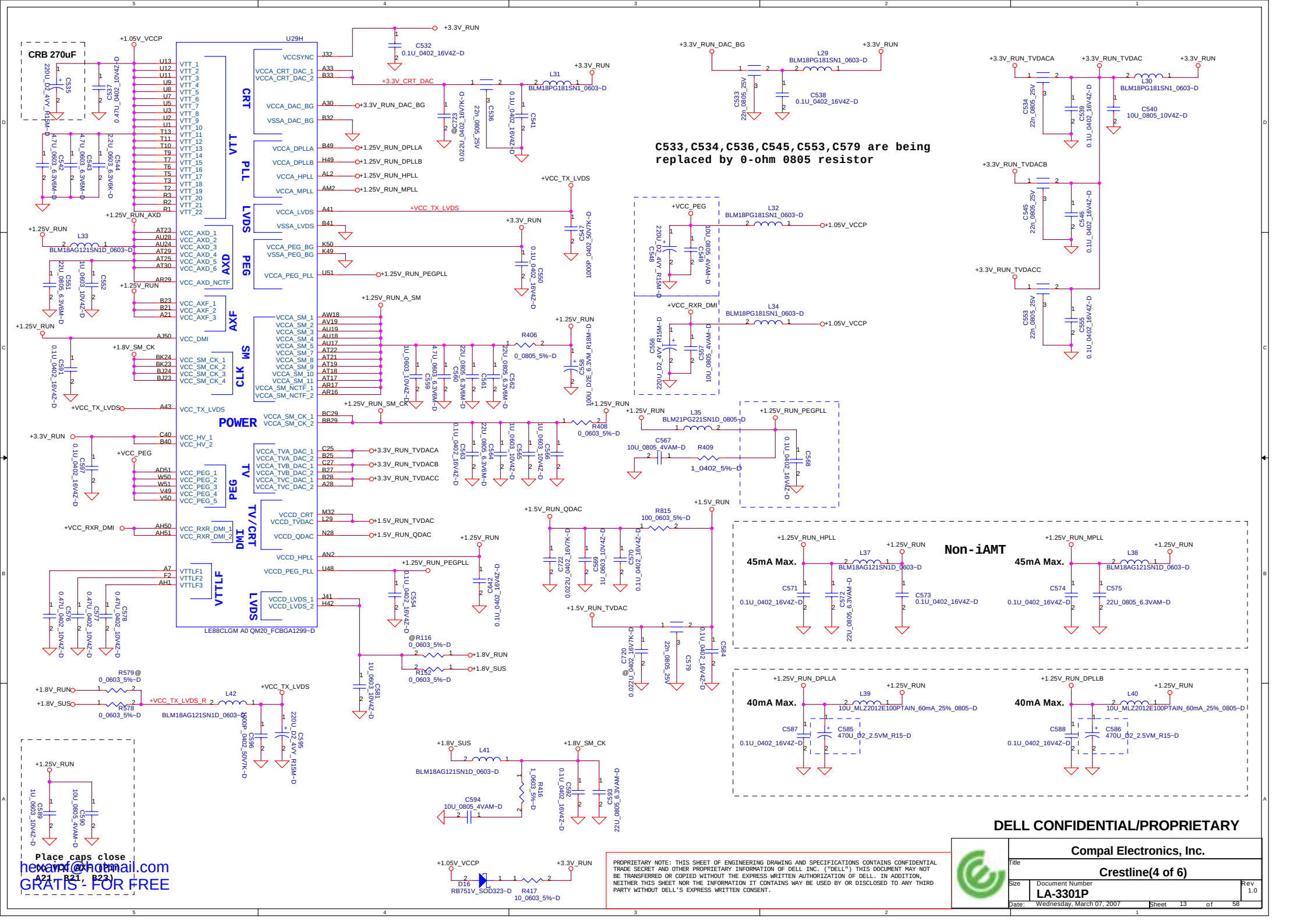

heavyd@hotmail.com
GRATIS - FOR FREE

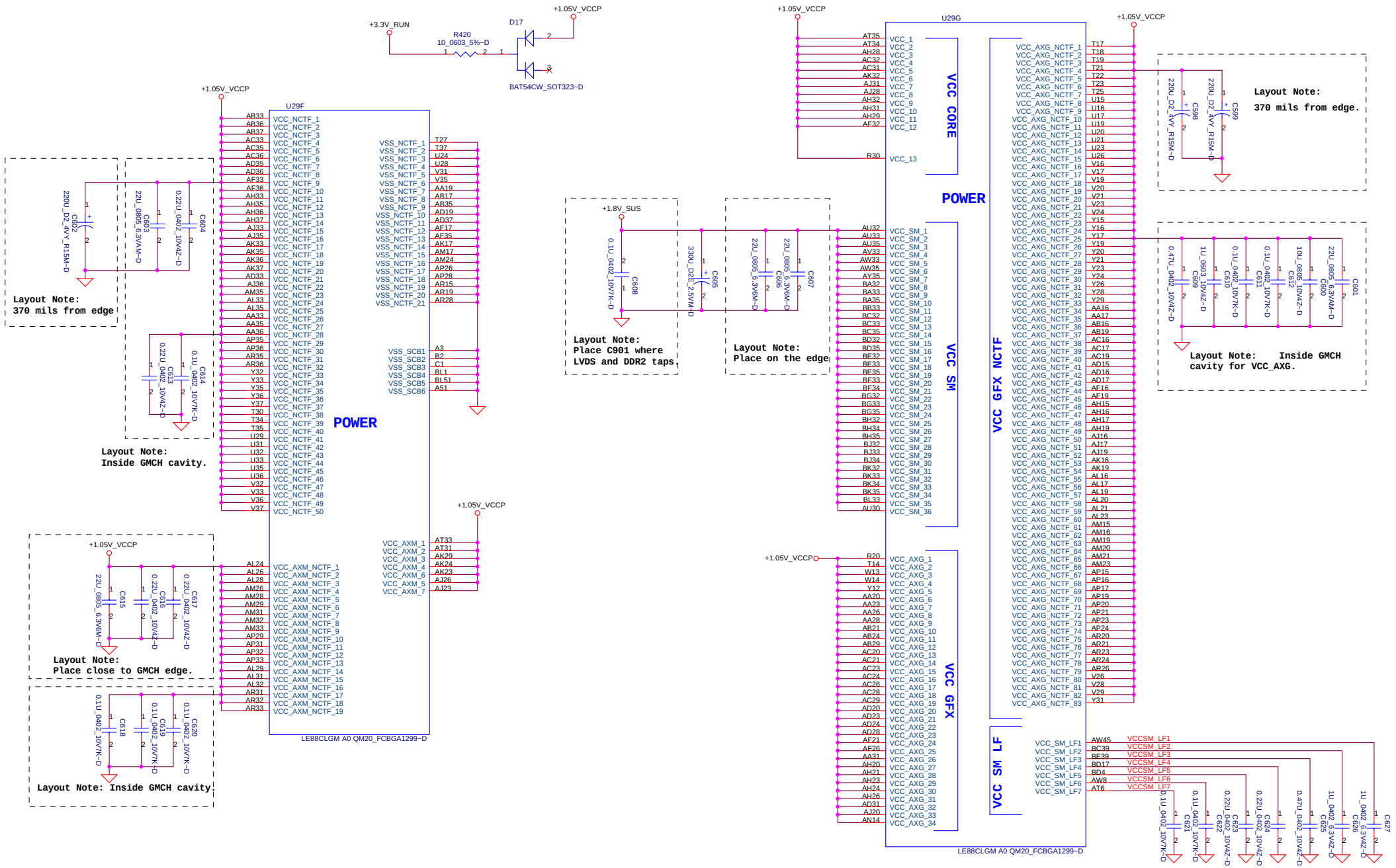

PROPRIETARY NOTE: THIS SHEET OF ENGINEERING DRAWING AND SPECIFICATIONS CONTAINS CONFIDENTIAL TRADE SECRET AND OTHER PROPRIETARY INFORMATION OF DELL INC. ("DELL") THIS DOCUMENT MAY NOT BE TRANSFERRED OR COPIED WITHOUT THE EXPRESS WRITTEN AUTHORIZATION OF DELL. IN ADDITION, NEITHER THIS SHEET NOR THE INFORMATION IT CONTAINS WAY BE USED BY OR DISCLOSED TO ANY THIRD PARTY WITHOUT DELL'S EXPRESS WRITTEN CONSENT.

DELL CONFIDENTIAL/PROPRIETARY

Compal Electronics, Inc.

Title: Crestline(5 of 6)

Size: | Document Number: LA-3301P | Rev: 1.0

Date: Wednesday, February 28, 2007 | Sheet 14 of 58

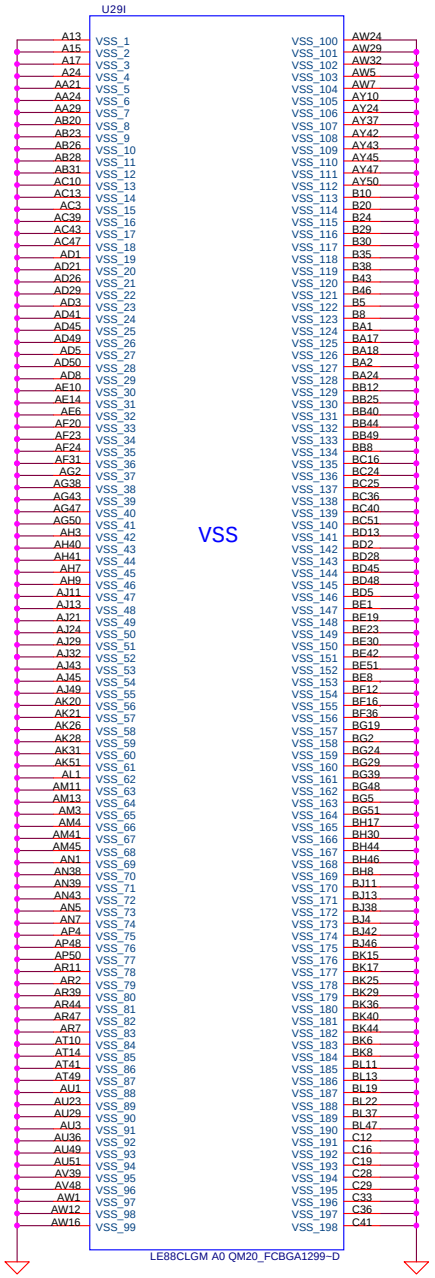

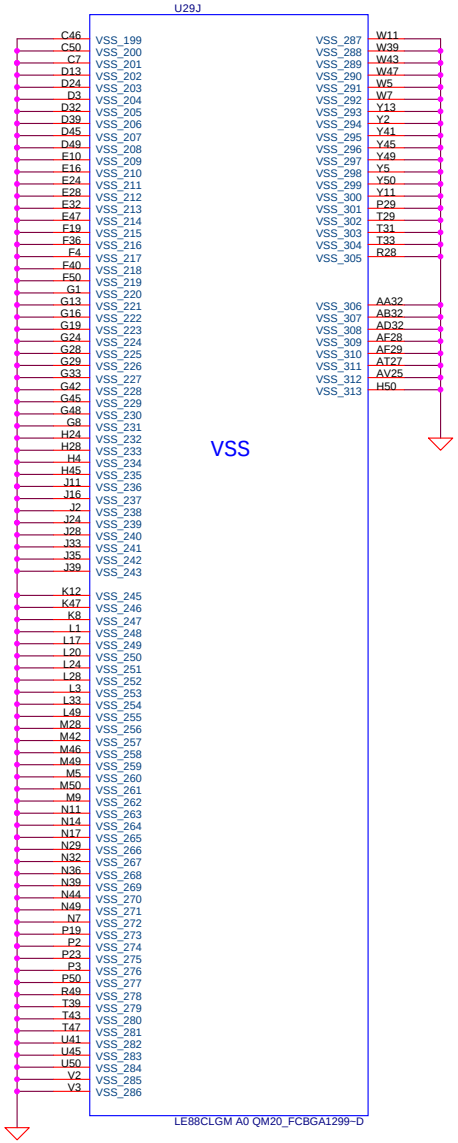

hexainf@hotmail.com
GRATIS - FOR FREE

PROPRIETARY NOTE: THIS SHEET OF ENGINEERING DRAWING AND SPECIFICATIONS CONTAINS CONFIDENTIAL TRADE SECRET AND OTHER PROPRIETARY INFORMATION OF DELL INC. ("DELL") THIS DOCUMENT MAY NOT BE TRANSFERRED OR COPIED WITHOUT THE EXPRESS WRITTEN AUTHORIZATION OF DELL. IN ADDITION, NEITHER THIS SHEET NOR THE INFORMATION IT CONTAINS WAY BE USED BY OR DISCLOSED TO ANY THIRD PARTY WITHOUT DELL'S EXPRESS WRITTEN CONSENT.

DELL CONFIDENTIAL/PROPRIETARY

	Compal Electronics, Inc.
Title	Crestline(6 of 6)
Size / Document Number	LA-3301P
Rev	1.0
Date: Wednesday, February 14, 2007	Sheet 15 of 58

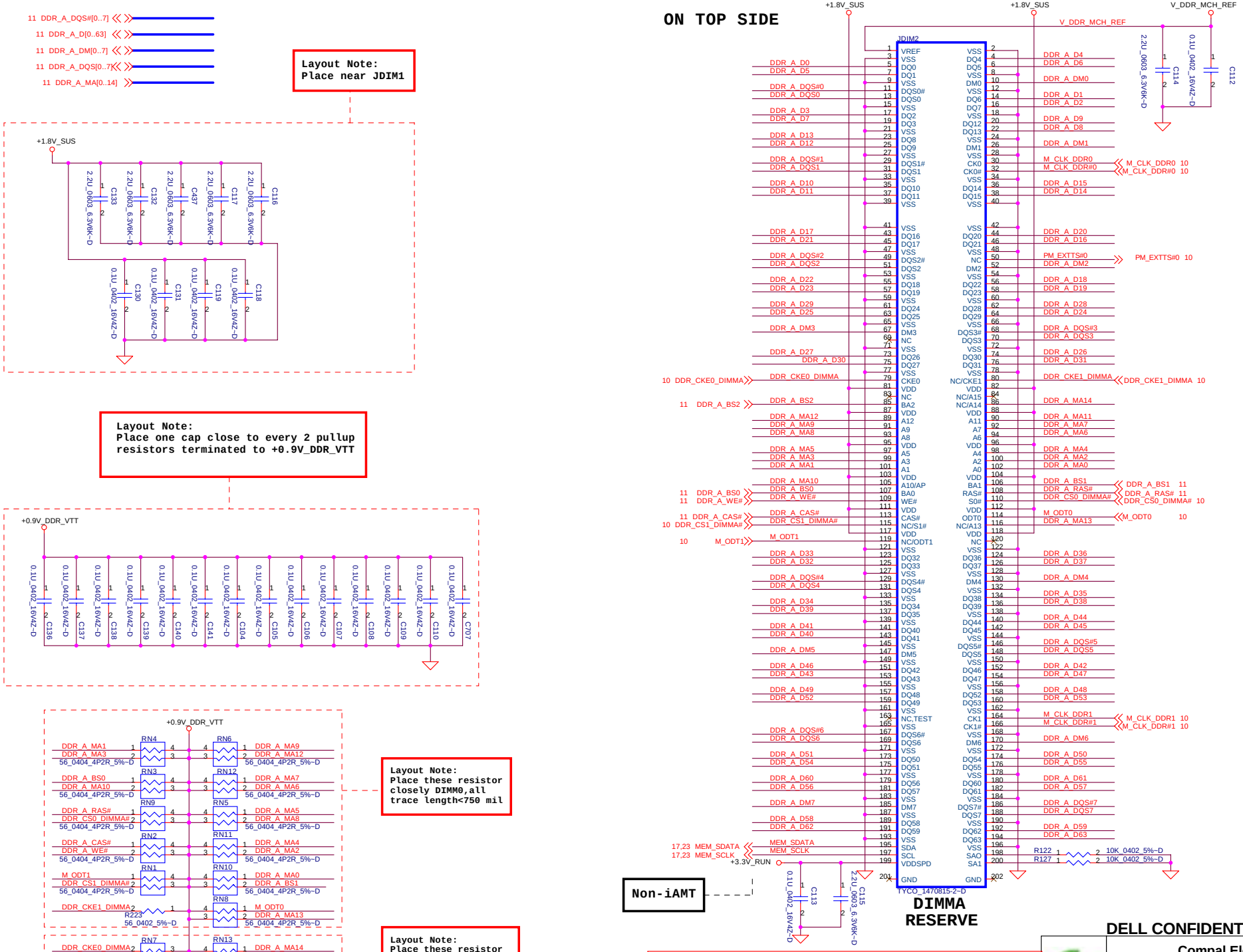

PROPRIETARY NOTE: THIS SHEET OF ENGINEERING DRAWING AND SPECIFICATIONS CONTAINS CONFIDENTIAL TRADE SECRET AND OTHER PROPRIETARY INFORMATION OF DELL INC. ("DELL") THIS DOCUMENT MAY NOT BE TRANSFERRED OR COPIED WITHOUT THE EXPRESS WRITTEN AUTHORIZATION OF DELL. IN ADDITION, NEITHER THIS SHEET NOR THE INFORMATION IT CONTAINS WAY BE USED BY OR DISCLOSED TO ANY THIRD PARTY WITHOUT DELL'S EXPRESS WRITTEN CONSENT.

DELL CONFIDENTIAL/PROPRIETARY

Compal Electronics, Inc.

Title: DDRII-SODIMM SLOT1

Size | Document Number: LA-3301P | Rev 1.0

Date: Monday, February 26, 2007 | Sheet 16 of 58

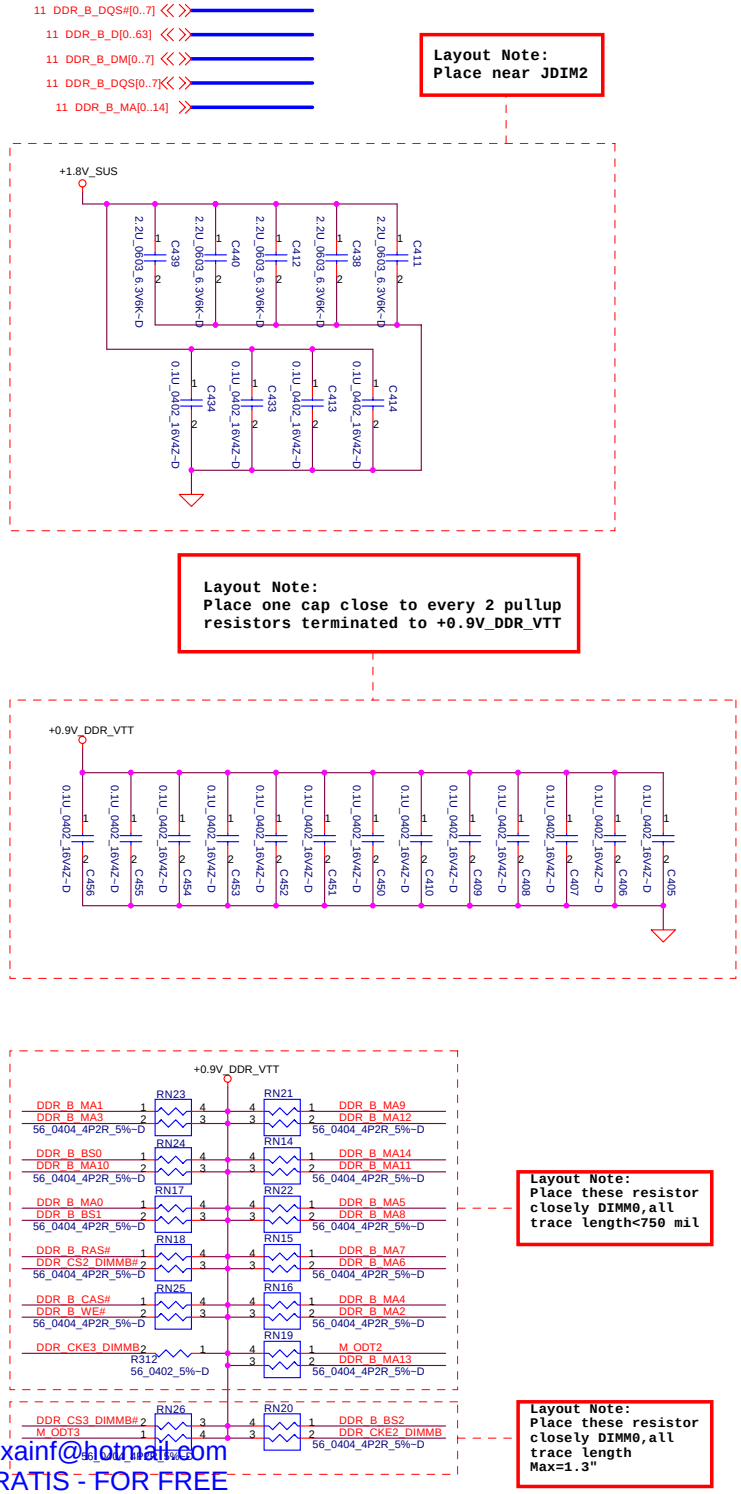

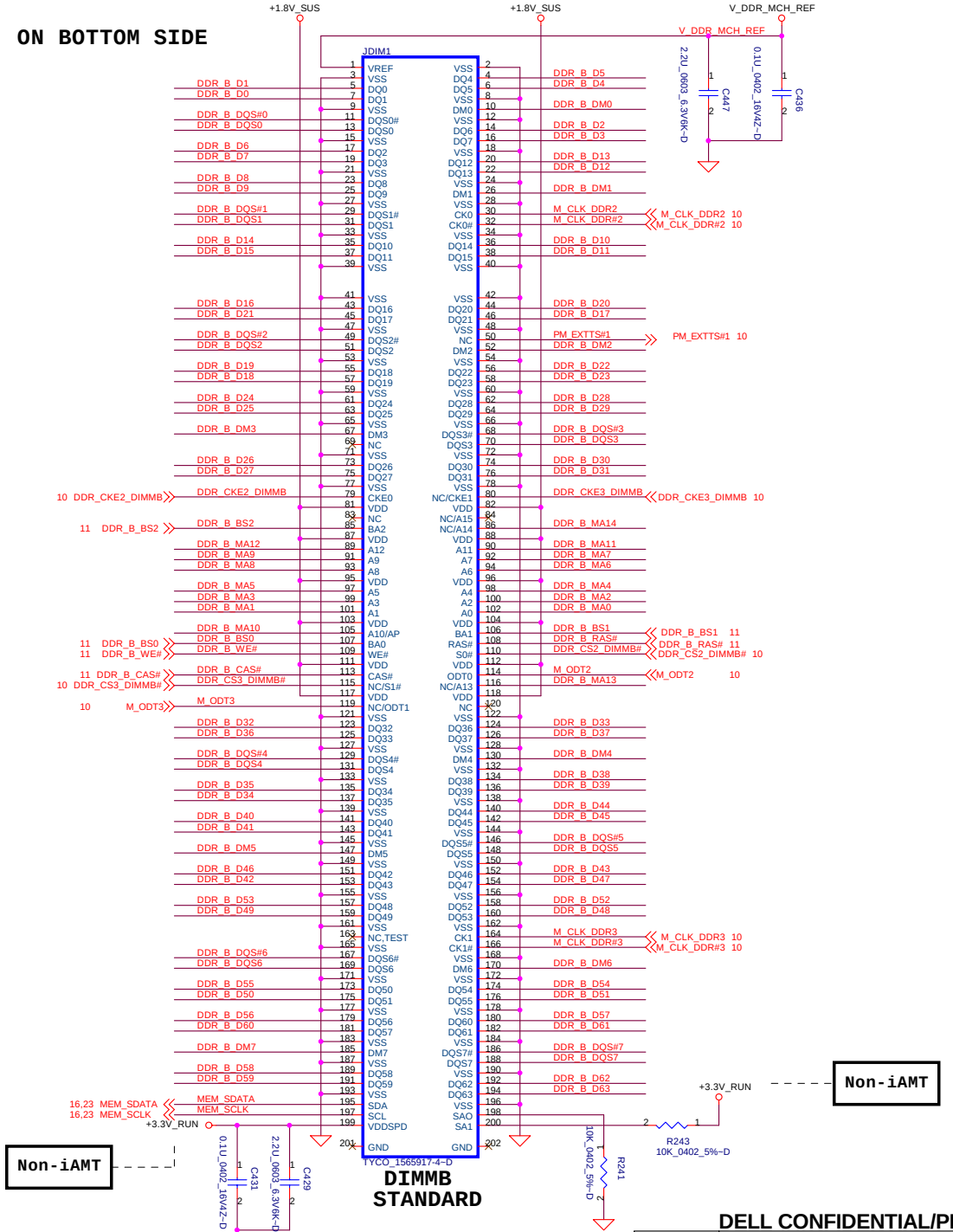

PROPRIETARY NOTE: THIS SHEET OF ENGINEERING DRAWING AND SPECIFICATIONS CONTAINS CONFIDENTIAL TRADE SECRET AND OTHER PROPRIETARY INFORMATION OF DELL INC. ("DELL") THIS DOCUMENT MAY NOT BE TRANSFERRED OR COPIED WITHOUT THE EXPRESS WRITTEN AUTHORIZATION OF DELL. IN ADDITION, NEITHER THIS SHEET NOR THE INFORMATION IT CONTAINS WAY BE USED BY OR DISCLOSED TO ANY THIRD PARTY WITHOUT DELL'S EXPRESS WRITTEN CONSENT.

DELL CONFIDENTIAL/PROPRIETARY

Compal Electronics, Inc.

Title	DDRII-SODIMM SLOT2	
Size	Document Number: LA-3301P	Rev 1.0
Date: Monday, February 26, 2007	Sheet 17 of 58	

FAN1 Control and Tachometer

$$VSET = \frac{R438}{R436+R438} \times 3.3V = 0.865V$$

$$VSET = \left(\frac{Tp-70}{21}\right) \Rightarrow Tp = 88.2\ C$$

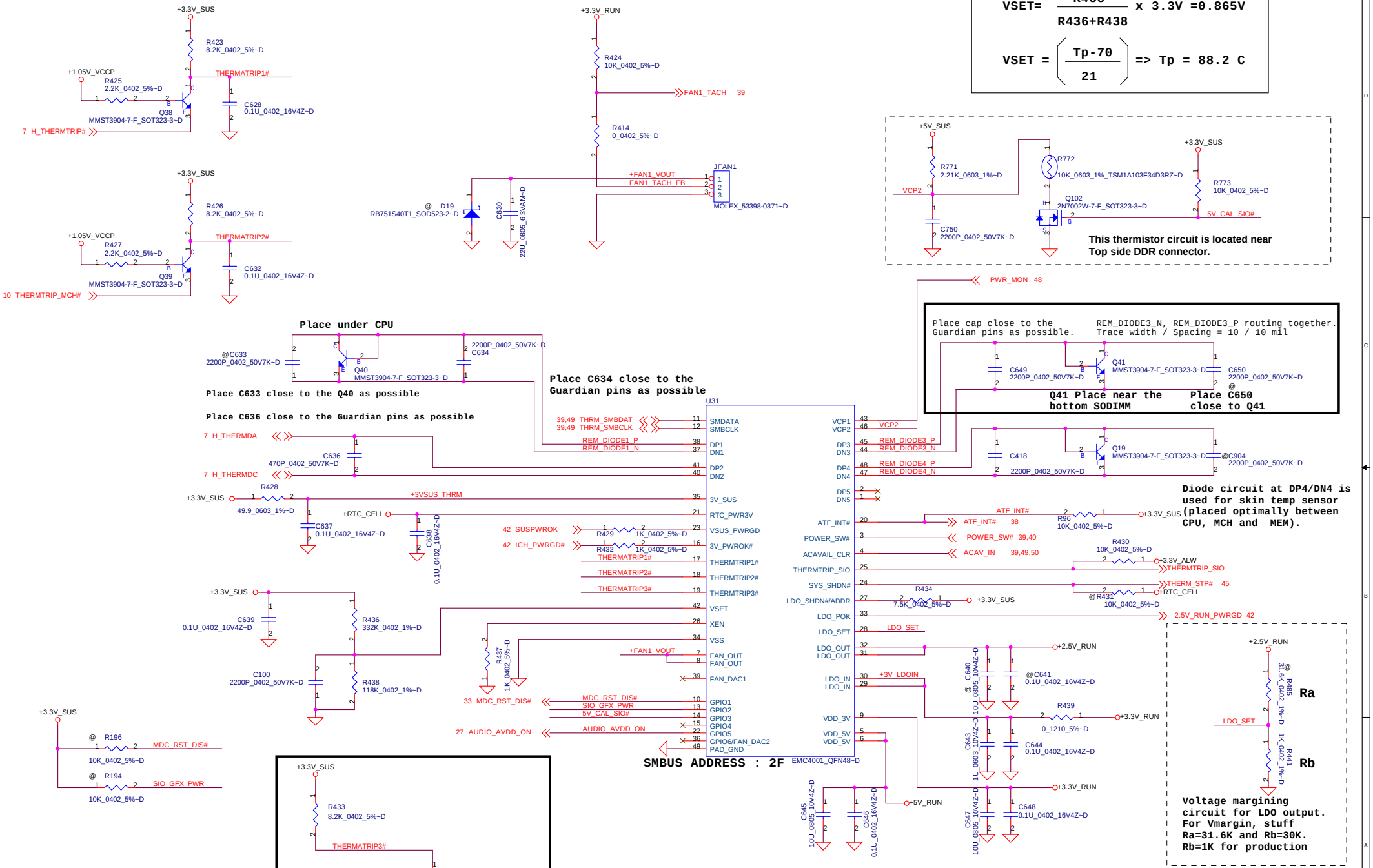

PROPRIETARY NOTE: THIS SHEET OF ENGINEERING DRAWING AND SPECIFICATIONS CONTAINS CONFIDENTIAL TRADE SECRET AND OTHER PROPRIETARY INFORMATION OF DELL INC. ("DELL") THIS DOCUMENT MAY NOT BE TRANSFERRED OR COPIED WITHOUT THE EXPRESS WRITTEN AUTHORIZATION OF DELL. IN ADDITION, NEITHER THIS SHEET NOR THE INFORMATION IT CONTAINS WAY BE USED BY OR DISCLOSED TO ANY THIRD PARTY WITHOUT DELL'S EXPRESS WRITTEN CONSENT.

DELL CONFIDENTIAL/PROPRIETARY

Compal Electronics, Inc.

Title: FAN & Thermal Sensor

Size | Document Number: LA-3301P | Rev 1.0

Date: Wednesday, March 07, 2007 | Sheet 18 of 58

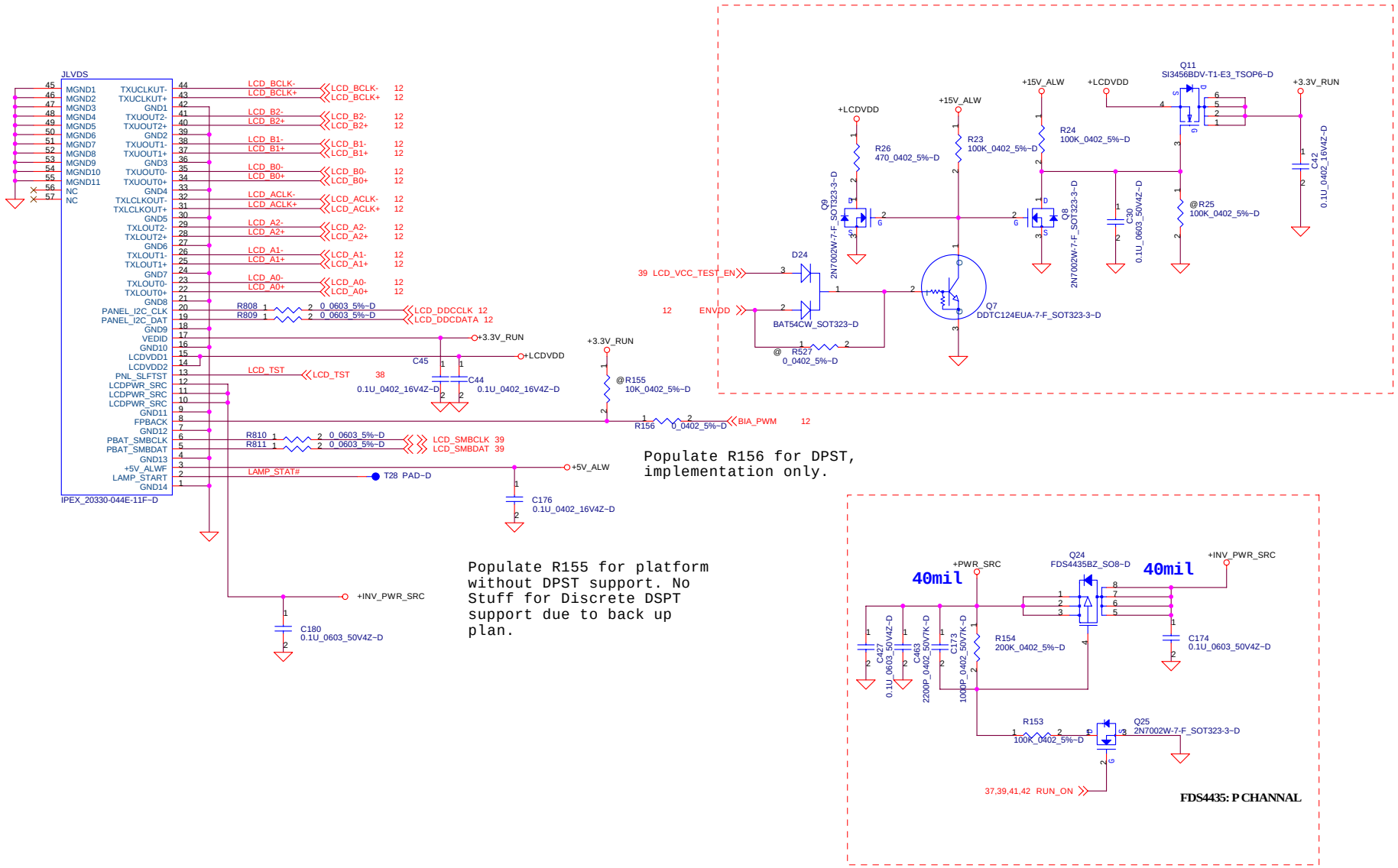

hexainf@hotmail.com
GRATIS - FOR FREE

PROPRIETARY NOTE: THIS SHEET OF ENGINEERING DRAWING AND SPECIFICATIONS CONTAINS CONFIDENTIAL TRADE SECRET AND OTHER PROPRIETARY INFORMATION OF DELL INC. ("DELL") THIS DOCUMENT MAY NOT BE TRANSFERRED OR COPIED WITHOUT THE EXPRESS WRITTEN AUTHORIZATION OF DELL. IN ADDITION, NEITHER THIS SHEET NOR THE INFORMATION IT CONTAINS WAY BE USED BY OR DISCLOSED TO ANY THIRD PARTY WITHOUT DELL'S EXPRESS WRITTEN CONSENT.

DELL CONFIDENTIAL/PROPRIETARY

Compal Electronics, Inc.

Title: Internal LVDS

Size | Document Number: LA-3301P | Rev 1.0

Date: Wednesday, February 28, 2007 | Sheet 19 of 58

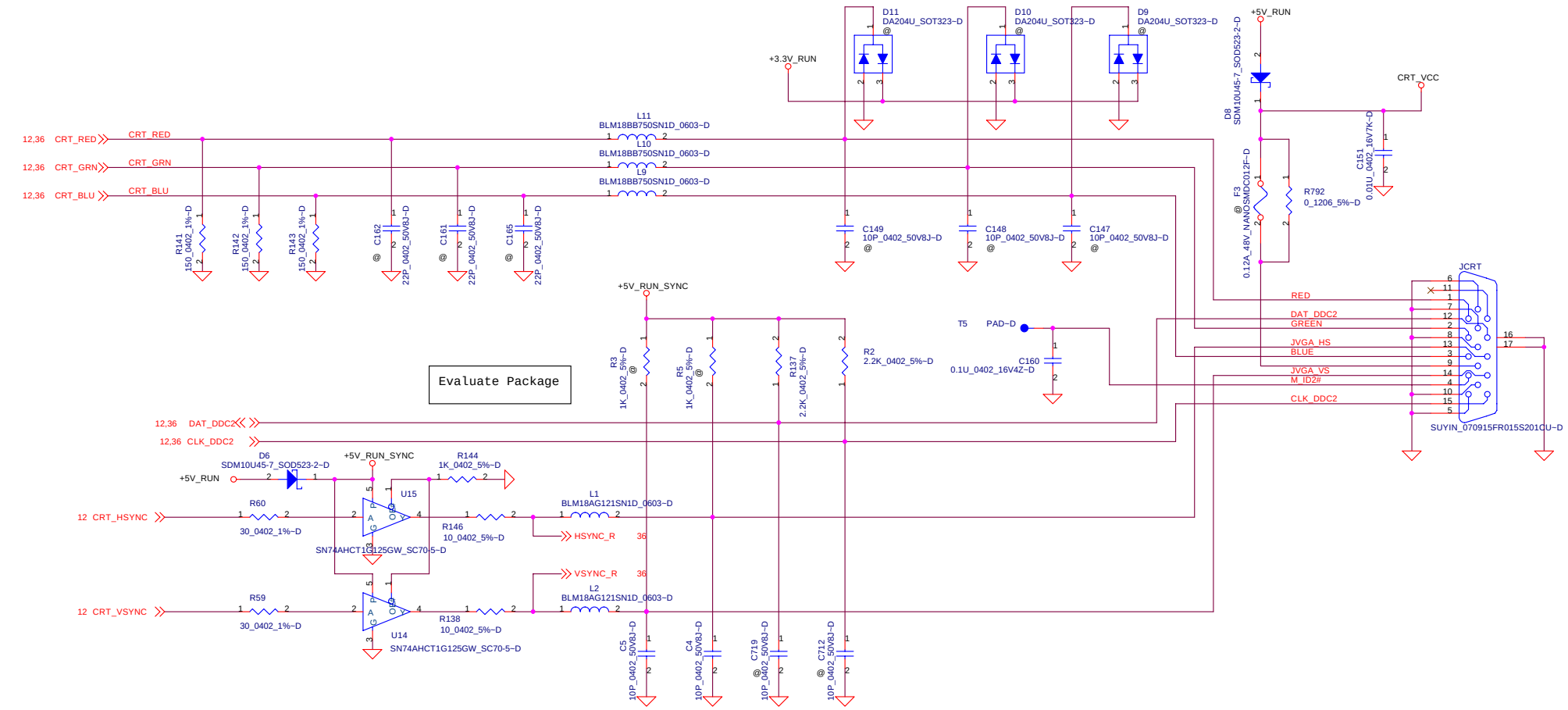

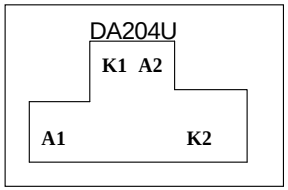

PROPRIETARY NOTE: THIS SHEET OF ENGINEERING DRAWING AND SPECIFICATIONS CONTAINS CONFIDENTIAL TRADE SECRET AND OTHER PROPRIETARY INFORMATION OF DELL INC. ("DELL") THIS DOCUMENT MAY NOT BE TRANSFERRED OR COPIED WITHOUT THE EXPRESS WRITTEN AUTHORIZATION OF DELL. IN ADDITION, NEITHER THIS SHEET NOR THE INFORMATION IT CONTAINS WAY BE USED BY OR DISCLOSED TO ANY THIRD PARTY WITHOUT DELL'S EXPRESS WRITTEN CONSENT.

DELL CONFIDENTIAL/PROPRIETARY

Compal Electronics, Inc.

Title: **CRT**

Size | Document Number: **LA-3301P** | Rev: 1.0

Date: Monday, February 26, 2007 | Sheet 20 of 58

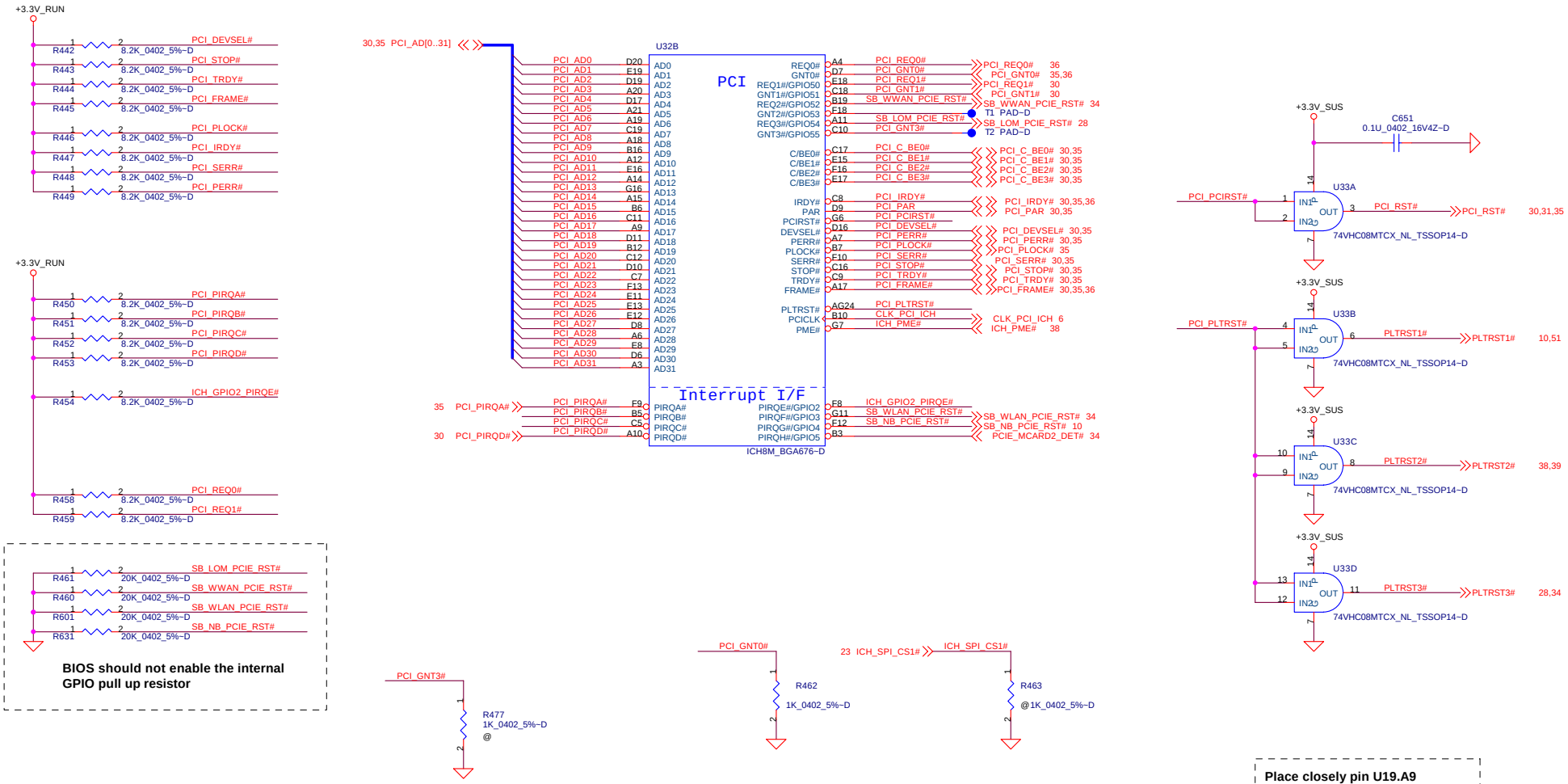

A16 away override strap.	
PCI_GNT3#	Low = A16 swap override enabled. High = Default.

*

Boot BIOS Strap		
PCI_GNT0#	SPI_CS1#	Boot BIOS Location
0	1	SPI
1	0	PCI
1	1	LPC

hexainf@hotmail.com
GRATIS - FOR FREE

PROPRIETARY NOTE: THIS SHEET OF ENGINEERING DRAWING AND SPECIFICATIONS CONTAINS CONFIDENTIAL TRADE SECRET AND OTHER PROPRIETARY INFORMATION OF DELL INC. ("DELL") THIS DOCUMENT MAY NOT BE TRANSFERRED OR COPIED WITHOUT THE EXPRESS WRITTEN AUTHORIZATION OF DELL. IN ADDITION, NEITHER THIS SHEET NOR THE INFORMATION IT CONTAINS WAY BE USED BY OR DISCLOSED TO ANY THIRD PARTY WITHOUT DELL'S EXPRESS WRITTEN CONSENT.

DELL CONFIDENTIAL/PROPRIETARY

Compal Electronics, Inc.

Title: ICH8(1/4)

Size | Document Number: LA-3301P | Rev 1.0

Date: Monday, February 26, 2007 | Sheet 21 of 58

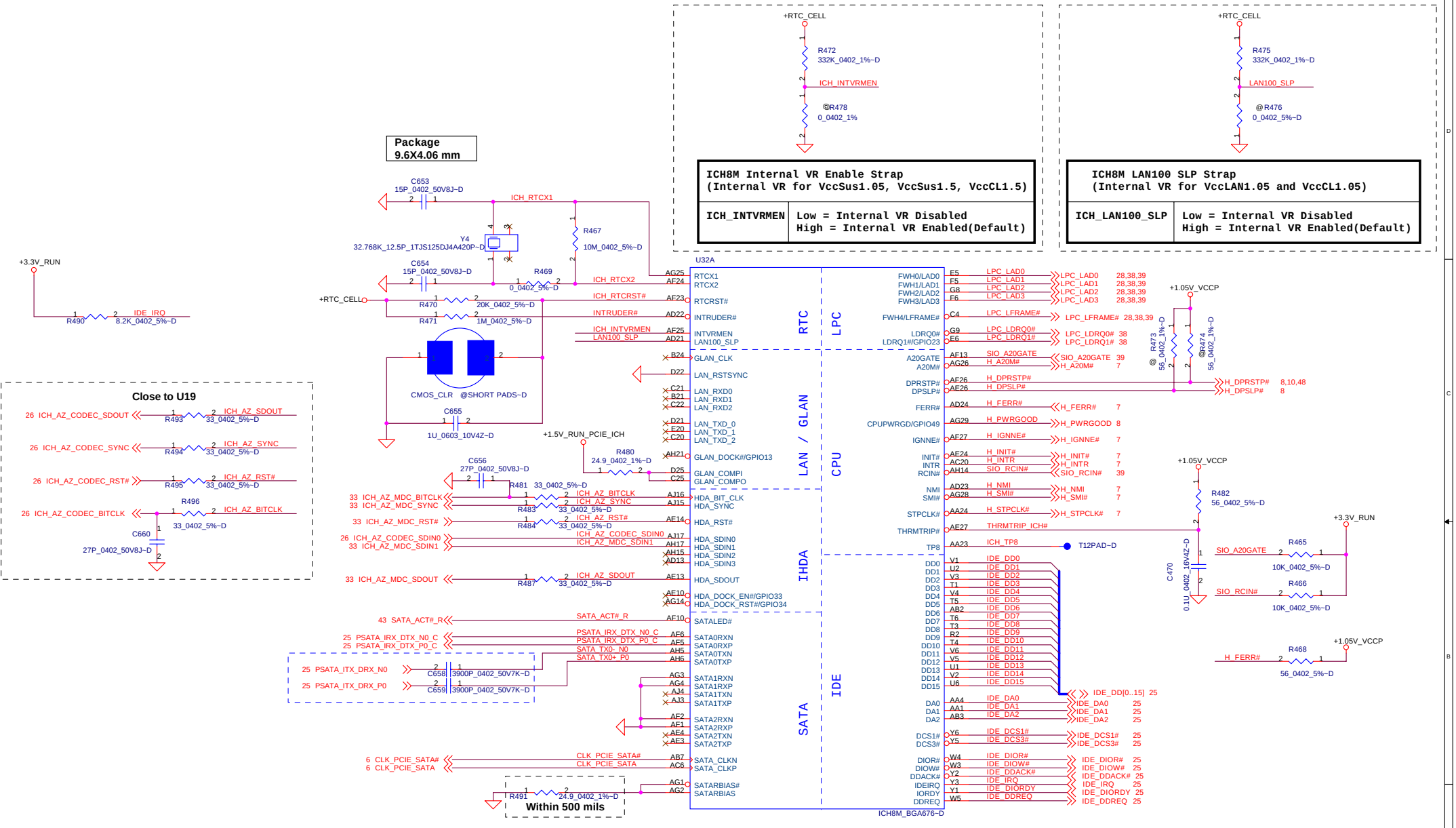

XOR Chain Entrance Strap		
ICH RSVD	HDA SDOUT	Description
0	0	RSVD
0	1	Enter XOR Chain
1	0	Normal Operation (Default)
1	1	Set PCIE port config bit 1

PROPRIETARY NOTE: THIS SHEET OF ENGINEERING DRAWING AND SPECIFICATIONS CONTAINS CONFIDENTIAL TRADE SECRET AND OTHER PROPRIETARY INFORMATION OF DELL INC. ("DELL") THIS DOCUMENT MAY NOT BE TRANSFERRED OR COPIED WITHOUT THE EXPRESS WRITTEN AUTHORIZATION OF DELL. IN ADDITION, NEITHER THIS SHEET NOR THE INFORMATION IT CONTAINS WAY BE USED BY OR DISCLOSED TO ANY THIRD PARTY WITHOUT DELL'S EXPRESS WRITTEN CONSENT.

DELL CONFIDENTIAL/PROPRIETARY

Compal Electronics, Inc.

Title: ICH8(2/4)

Size: | Document Number: LA-3301P | Rev: 1.0

Date: Monday, February 26, 2007 | Sheet 22 of 58

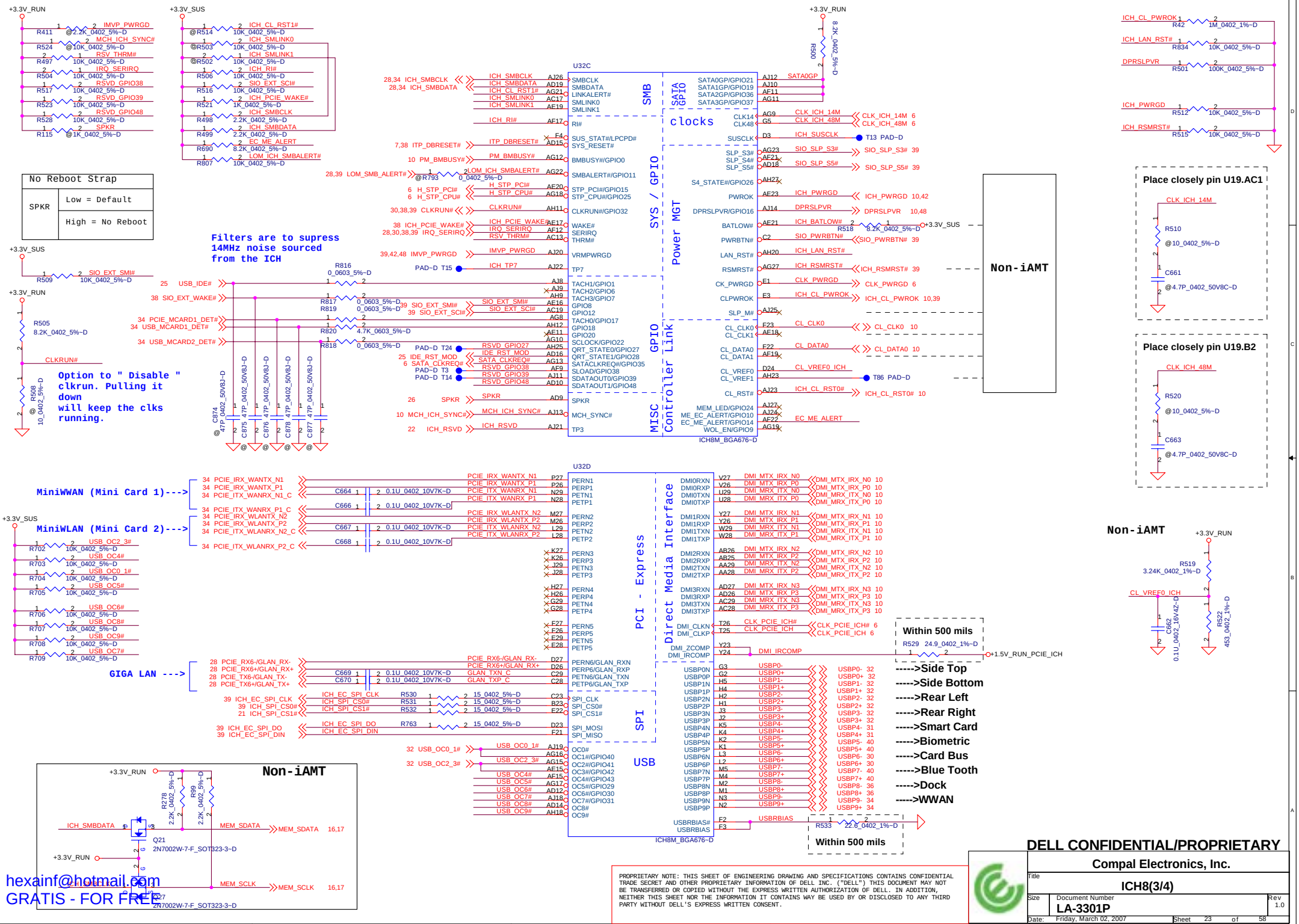

PROPRIETARY NOTE: THIS SHEET OF ENGINEERING DRAWING AND SPECIFICATIONS CONTAINS CONFIDENTIAL TRADE SECRET AND OTHER PROPRIETARY INFORMATION OF DELL INC. ("DELL") THIS DOCUMENT MAY NOT BE TRANSFERRED OR COPIED WITHOUT THE EXPRESS WRITTEN AUTHORIZATION OF DELL. IN ADDITION, NEITHER THIS SHEET NOR THE INFORMATION IT CONTAINS WAY BE USED BY OR DISCLOSED TO ANY THIRD PARTY WITHOUT DELL'S EXPRESS WRITTEN CONSENT.

DELL CONFIDENTIAL/PROPRIETARY

Compal Electronics, Inc.

Title: ICH8(3/4)

Size: | Document Number: LA-3301P | Rev: 1.0

Date: Friday, March 02, 2007 | Sheet 23 of 58

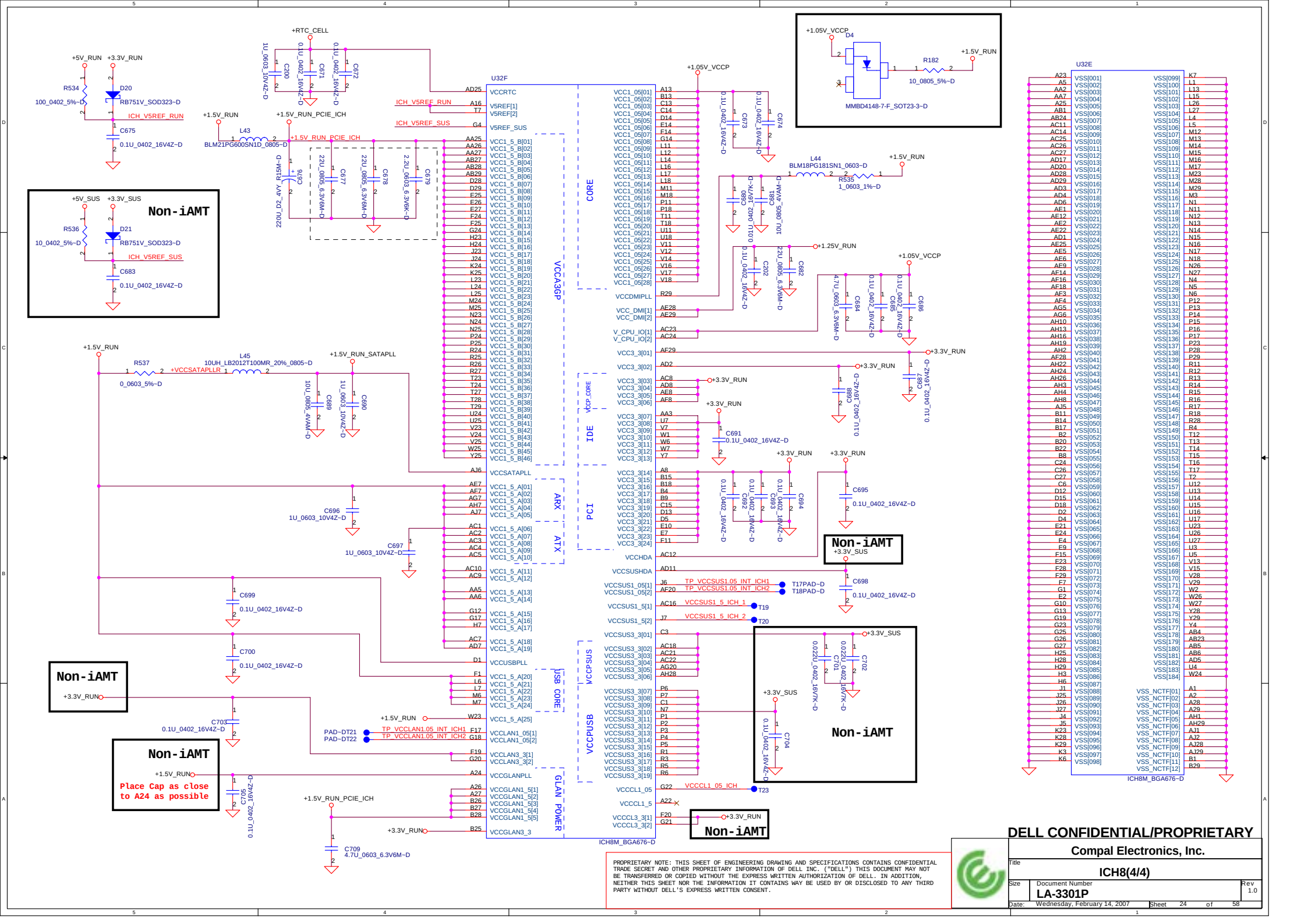

PROPRIETARY NOTE: THIS SHEET OF ENGINEERING DRAWING AND SPECIFICATIONS CONTAINS CONFIDENTIAL TRADE SECRET AND OTHER PROPRIETARY INFORMATION OF DELL INC. ("DELL") THIS DOCUMENT MAY NOT BE TRANSFERRED OR COPIED WITHOUT THE EXPRESS WRITTEN AUTHORIZATION OF DELL. IN ADDITION, NEITHER THIS SHEET NOR THE INFORMATION IT CONTAINS WAY BE USED BY OR DISCLOSED TO ANY THIRD PARTY WITHOUT DELL'S EXPRESS WRITTEN CONSENT.

DELL CONFIDENTIAL/PROPRIETARY

Compal Electronics, Inc.

Title	ICH8(4/4)
Size	
Document Number	LA-3301P
Rev	1.0
Date: Wednesday, February 14, 2007	Sheet 24 of 58

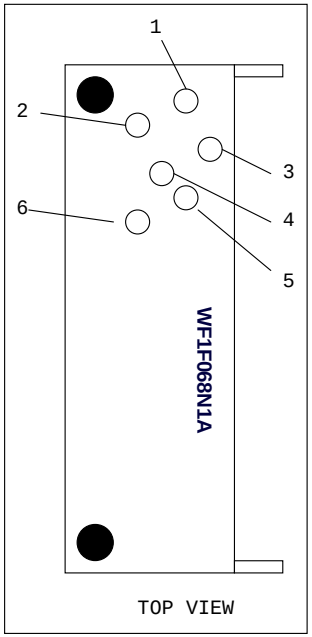

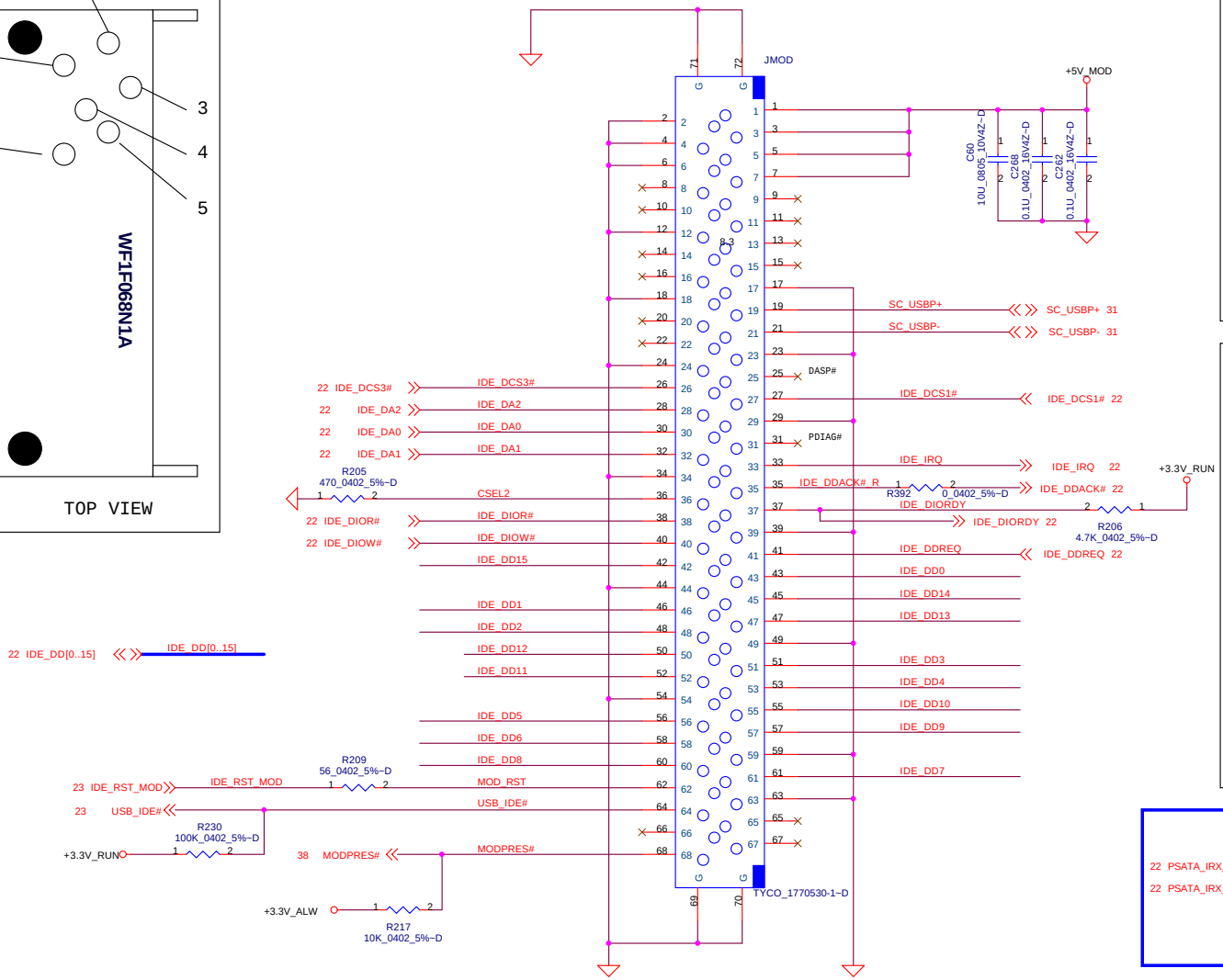

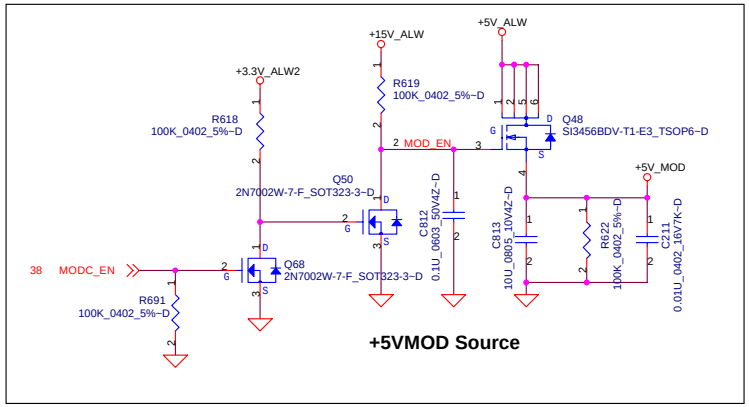

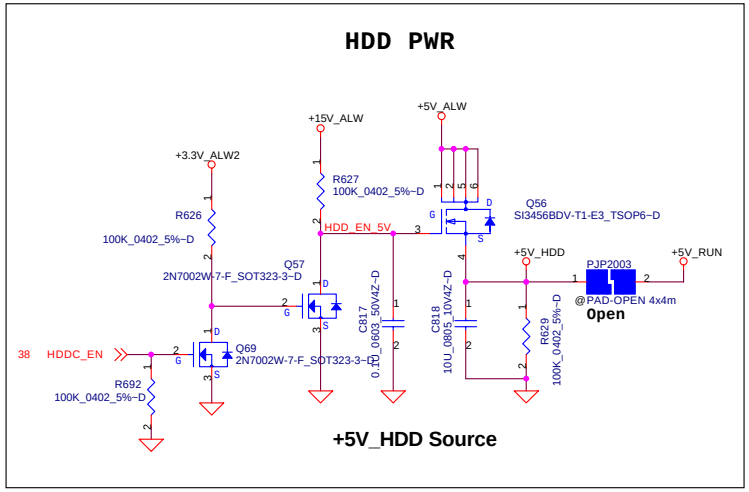

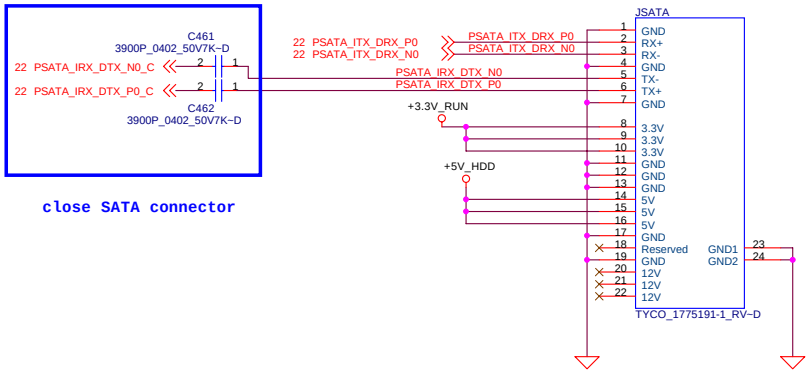

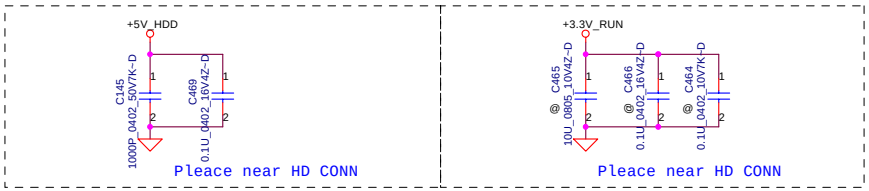

hexainf@hotmail.com
GRATIS - FOR FREE

PROPRIETARY NOTE: THIS SHEET OF ENGINEERING DRAWING AND SPECIFICATIONS CONTAINS CONFIDENTIAL TRADE SECRET AND OTHER PROPRIETARY INFORMATION OF DELL INC. ("DELL") THIS DOCUMENT MAY NOT BE TRANSFERRED OR COPIED WITHOUT THE EXPRESS WRITTEN AUTHORIZATION OF DELL. IN ADDITION, NEITHER THIS SHEET NOR THE INFORMATION IT CONTAINS WAY BE USED BY OR DISCLOSED TO ANY THIRD PARTY WITHOUT DELL'S EXPRESS WRITTEN CONSENT.

DELL CONFIDENTIAL/PROPRIETARY

Compal Electronics, Inc.	
Title	DVD MODULE
Size / Document Number	LA-3301P
Rev	1.0
Date: Monday, February 26, 2007	Sheet 25 of 58

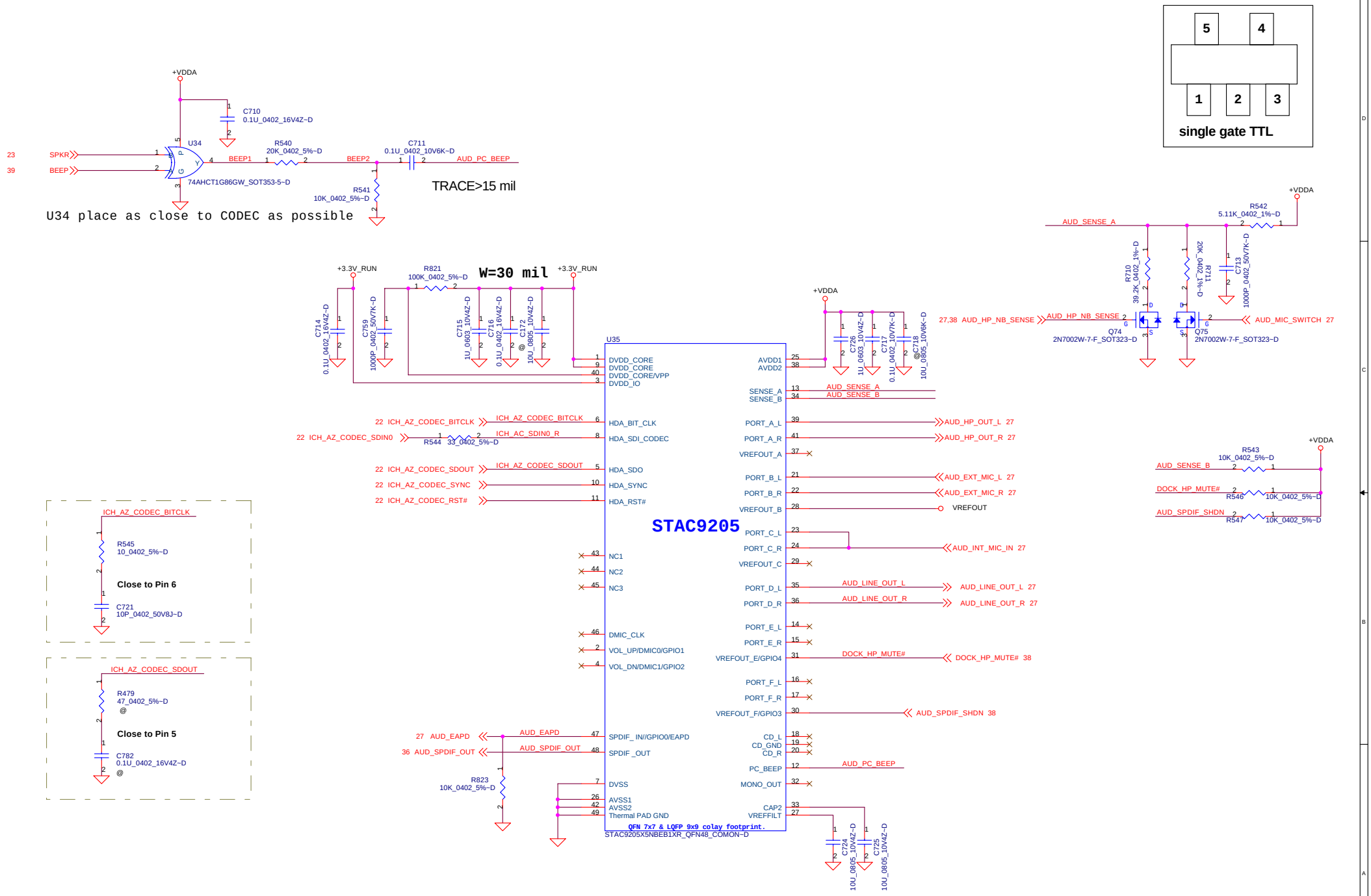

PROPRIETARY NOTE: THIS SHEET OF ENGINEERING DRAWING AND SPECIFICATIONS CONTAINS CONFIDENTIAL TRADE SECRET AND OTHER PROPRIETARY INFORMATION OF DELL INC. ("DELL") THIS DOCUMENT MAY NOT BE TRANSFERRED OR COPIED WITHOUT THE EXPRESS WRITTEN AUTHORIZATION OF DELL. IN ADDITION, NEITHER THIS SHEET NOR THE INFORMATION IT CONTAINS WAY BE USED BY OR DISCLOSED TO ANY THIRD PARTY WITHOUT DELL'S EXPRESS WRITTEN CONSENT.

DELL CONFIDENTIAL/PROPRIETARY

Compal Electronics, Inc.

Title: Azalia (HD) Codec

Size: | Document Number: LA-3301P | Rev: 1.0

Date: Monday, February 26, 2007 | Sheet 26 of 58

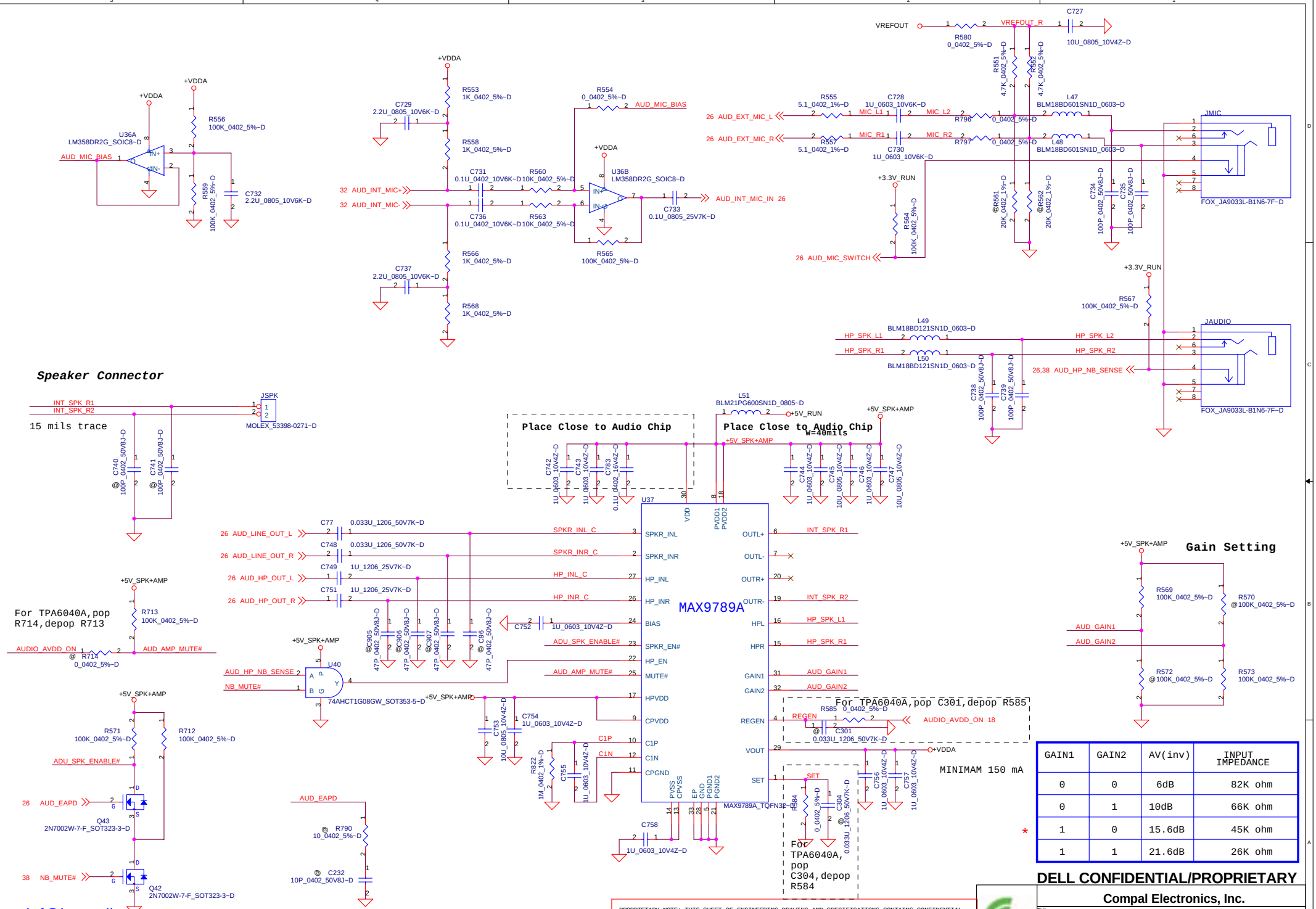

GAIN1	GAIN2	AV(inv)	INPUT IMPEDANCE
0	0	6dB	82K ohm
0	1	10dB	66K ohm
1	0	15.6dB	45K ohm
1	1	21.6dB	26K ohm

*

DELL CONFIDENTIAL/PROPRIETARY

PROPRIETARY NOTE: THIS SHEET OF ENGINEERING DRAWING AND SPECIFICATIONS CONTAINS CONFIDENTIAL TRADE SECRET AND OTHER PROPRIETARY INFORMATION OF DELL INC. ("DELL") THIS DOCUMENT MAY NOT BE TRANSFERRED OR COPIED WITHOUT THE EXPRESS WRITTEN AUTHORIZATION OF DELL. IN ADDITION, NEITHER THIS SHEET NOR THE INFORMATION IT CONTAINS WAY BE USED BY OR DISCLOSED TO ANY THIRD PARTY WITHOUT DELL'S EXPRESS WRITTEN CONSENT.

Compal Electronics, Inc.

Title: AMP and PHONE JACK

Size | Document Number: LA-3301P | Rev 1.0

Date: Wednesday, March 07, 2007 | Sheet 27 of 58

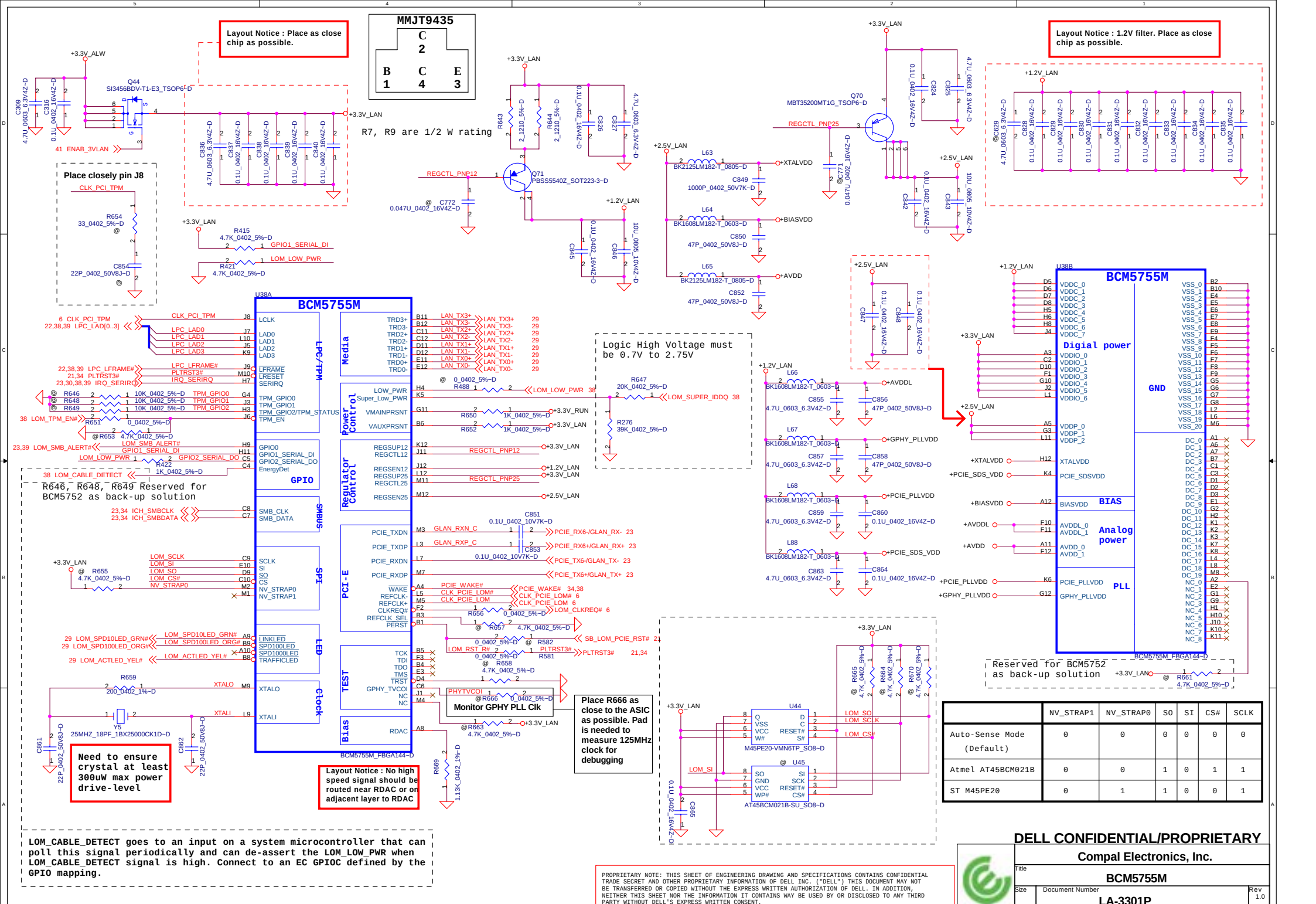

	NV_STRAP1	NV_STRAP0	SO	SI	CS#	SCLK
Auto-Sense Mode (Default)	0	0	0	0	0	0
Atmel AT45BCM021B	0	0	1	0	1	1
ST M45PE20	0	1	1	0	0	1

PROPRIETARY NOTE: THIS SHEET OF ENGINEERING DRAWING AND SPECIFICATIONS CONTAINS CONFIDENTIAL TRADE SECRET AND OTHER PROPRIETARY INFORMATION OF DELL INC. ("DELL") THIS DOCUMENT MAY NOT BE TRANSFERRED OR COPIED WITHOUT THE EXPRESS WRITTEN AUTHORIZATION OF DELL. IN ADDITION, NEITHER THIS SHEET NOR THE INFORMATION IT CONTAINS WAY BE USED BY OR DISCLOSED TO ANY THIRD PARTY WITHOUT DELL'S EXPRESS WRITTEN CONSENT.

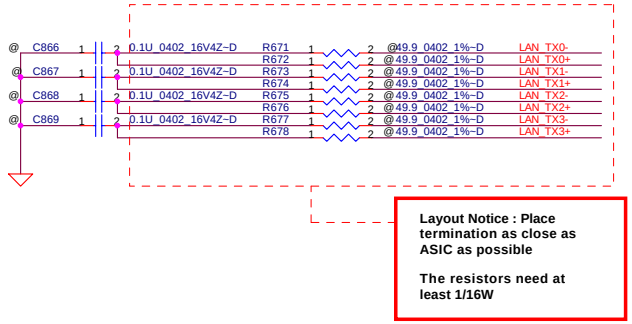

Layout Notice : Place termination as close as ASIC as possible

The resistors need at least 1/16W

LAN ANALOG SWITCH

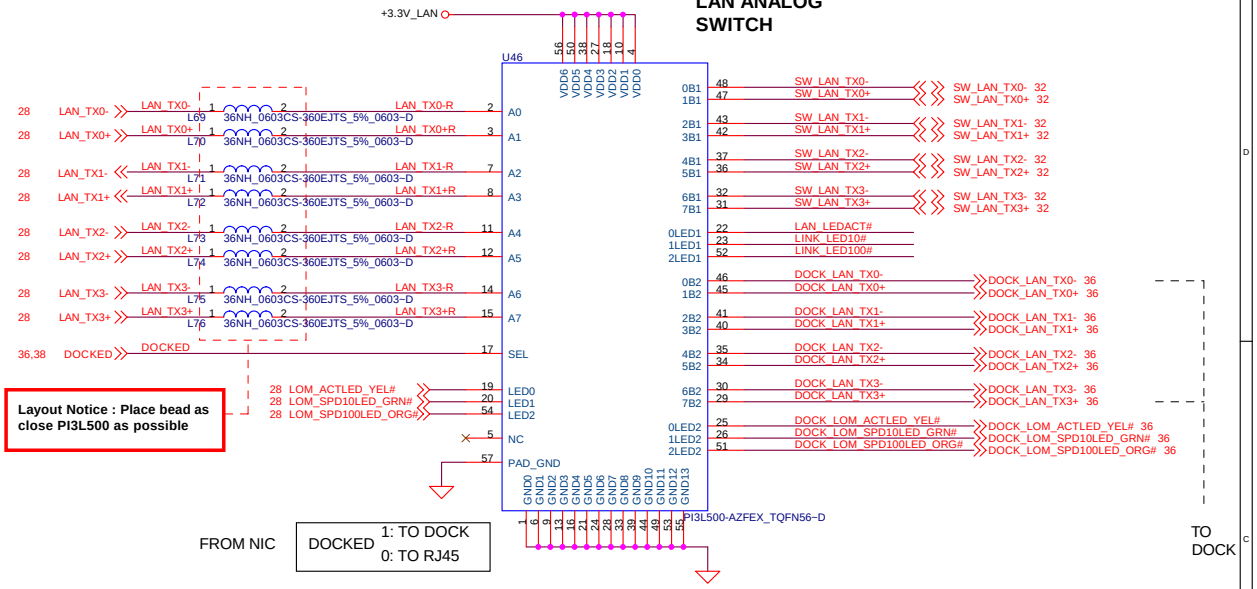

Layout Notice : Place bead as close PI3L500 as possible

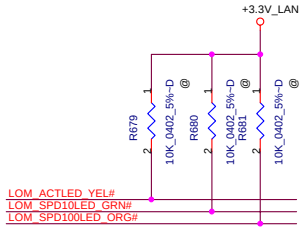

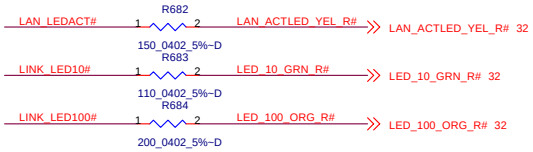

hexainf@hotmail.com
GRATIS - FOR FREE

PROPRIETARY NOTE: THIS SHEET OF ENGINEERING DRAWING AND SPECIFICATIONS CONTAINS CONFIDENTIAL TRADE SECRET AND OTHER PROPRIETARY INFORMATION OF DELL INC. ("DELL") THIS DOCUMENT MAY NOT BE TRANSFERRED OR COPIED WITHOUT THE EXPRESS WRITTEN AUTHORIZATION OF DELL. IN ADDITION, NEITHER THIS SHEET NOR THE INFORMATION IT CONTAINS WAY BE USED BY OR DISCLOSED TO ANY THIRD PARTY WITHOUT DELL'S EXPRESS WRITTEN CONSENT.

DELL CONFIDENTIAL/PROPRIETARY

Compal Electronics, Inc.

Title: LAN TRANSFOMER

Size: Document Number: LA-3301P Rev: 1.0

Date: Monday, February 26, 2007 Sheet 29 of 58

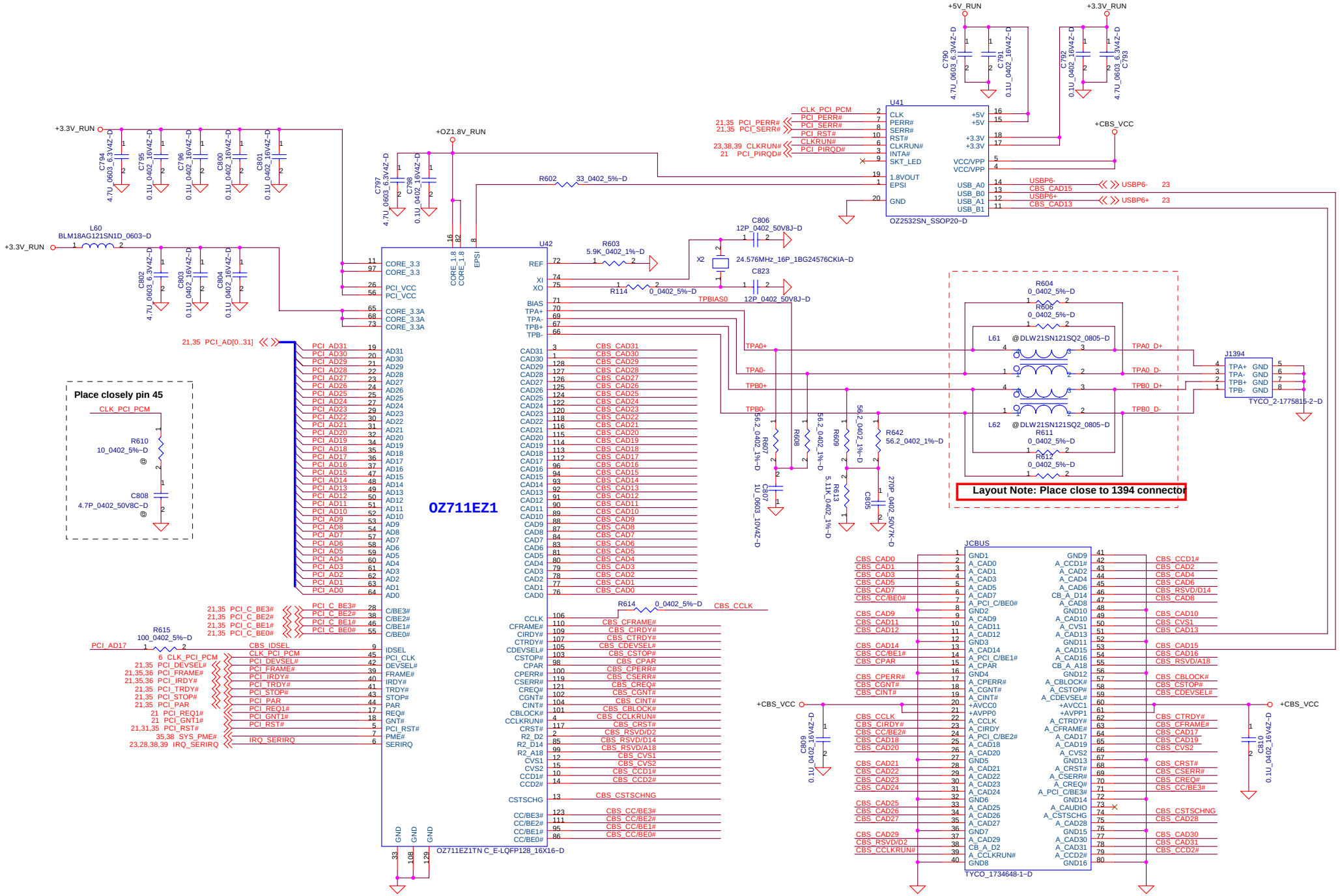

Ground pin 129 exposed die pad, dimension 5.72mm x 5.72mm, should connect to PCB solder pad of same dimension

PROPRIETARY NOTE: THIS SHEET OF ENGINEERING DRAWING AND SPECIFICATIONS CONTAINS CONFIDENTIAL TRADE SECRET AND OTHER PROPRIETARY INFORMATION OF DELL INC. ("DELL") THIS DOCUMENT MAY NOT BE TRANSFERRED OR COPIED WITHOUT THE EXPRESS WRITTEN AUTHORIZATION OF DELL. IN ADDITION, NEITHER THIS SHEET NOR THE INFORMATION IT CONTAINS WAY BE USED BY OR DISCLOSED TO ANY THIRD PARTY WITHOUT DELL'S EXPRESS WRITTEN CONSENT.

DELL CONFIDENTIAL/PROPRIETARY

Compal Electronics, Inc.

Title: Cardbus and 1394 OZ711EZ1 Controller

Size: | Document Number: LA-3301P | Rev: 1.0

Date: Monday, February 26, 2007 | Sheet 30 of 58

USB SMARTCARD READER.
TYPE A (5V), B (3V), AB (5V/3V)
& USB SMARTCARDS ARE SUPPORTED.

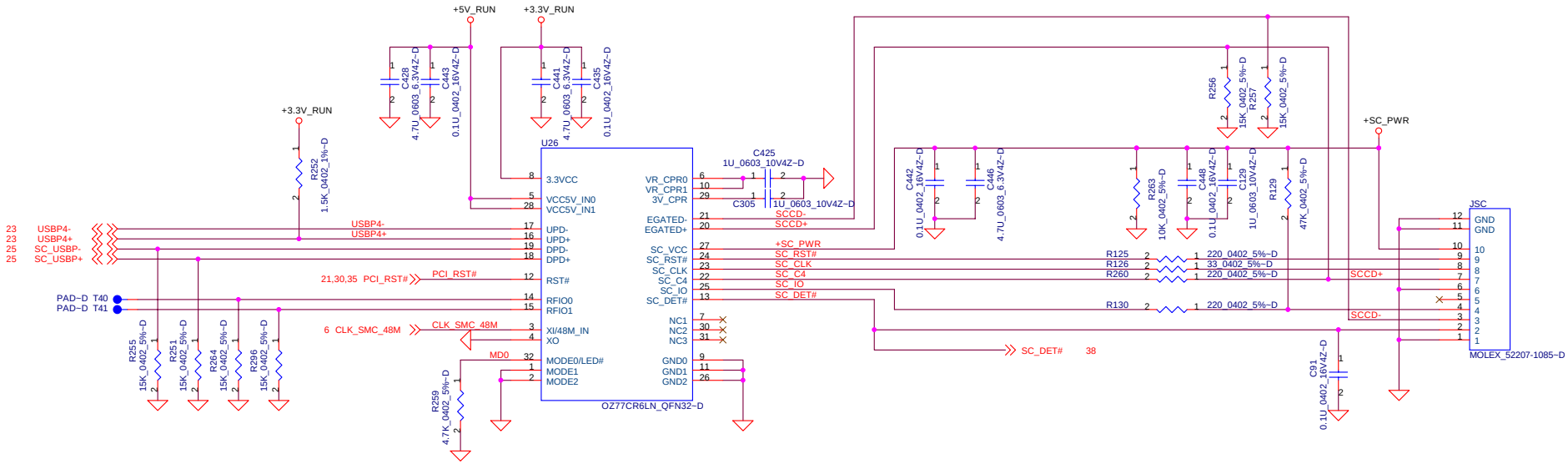

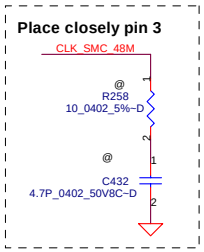

hexainf@hotmail.com
GRATIS - FOR FREE

PROPRIETARY NOTE: THIS SHEET OF ENGINEERING DRAWING AND SPECIFICATIONS CONTAINS CONFIDENTIAL TRADE SECRET AND OTHER PROPRIETARY INFORMATION OF DELL INC. ("DELL") THIS DOCUMENT MAY NOT BE TRANSFERRED OR COPIED WITHOUT THE EXPRESS WRITTEN AUTHORIZATION OF DELL. IN ADDITION, NEITHER THIS SHEET NOR THE INFORMATION IT CONTAINS WAY BE USED BY OR DISCLOSED TO ANY THIRD PARTY WITHOUT DELL'S EXPRESS WRITTEN CONSENT.

DELL CONFIDENTIAL/PROPRIETARY

Compal Electronics, Inc.	
Title	Smart Card OZ77CR6
Size	Document Number: LA-3301P — Rev 1.0
Date: Monday, February 26, 2007	Sheet 31 of 58

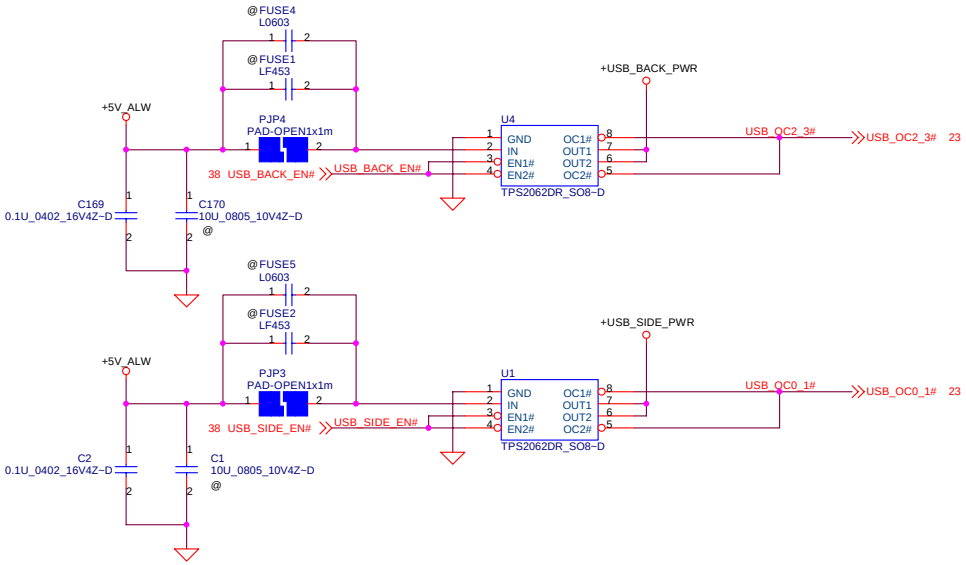

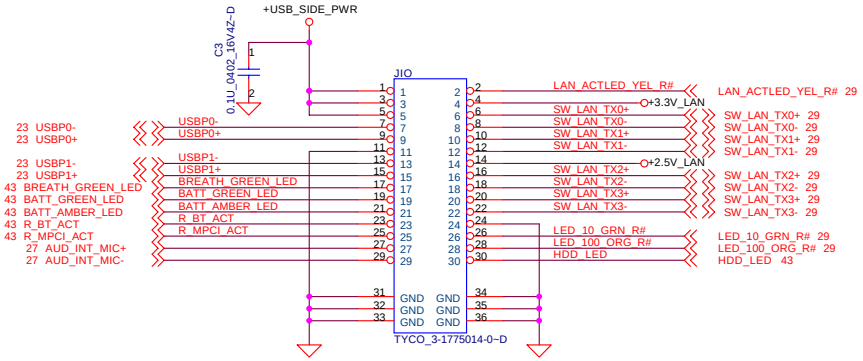

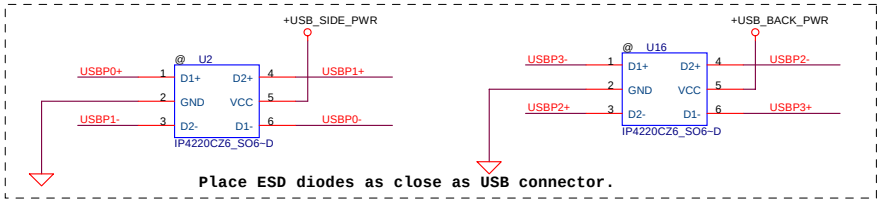

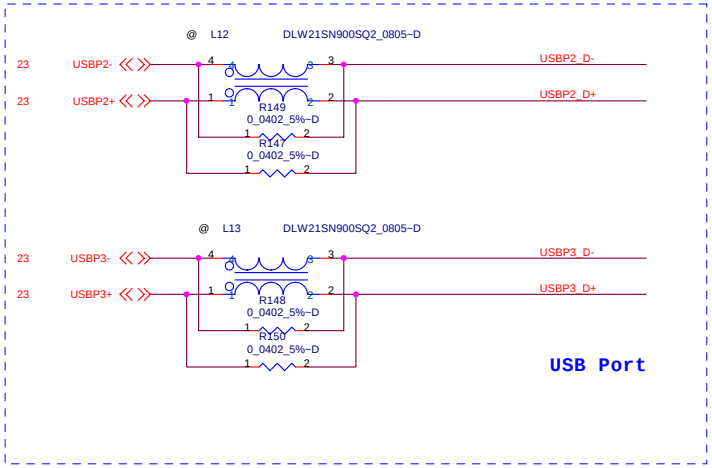

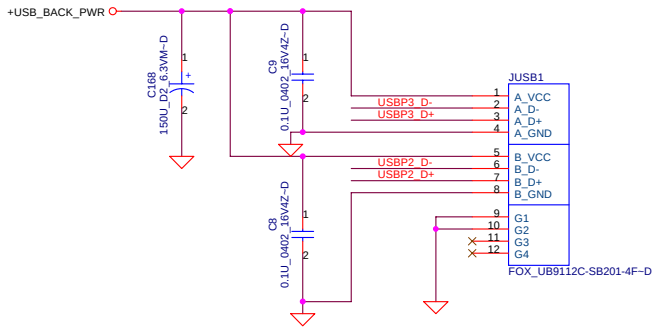

Rear USB Ports

DELL CONFIDENTIAL/PROPRIETARY

PROPRIETARY NOTE: THIS SHEET OF ENGINEERING DRAWING AND SPECIFICATIONS CONTAINS CONFIDENTIAL TRADE SECRET AND OTHER PROPRIETARY INFORMATION OF DELL INC. ("DELL") THIS DOCUMENT MAY NOT BE TRANSFERRED OR COPIED WITHOUT THE EXPRESS WRITTEN AUTHORIZATION OF DELL. IN ADDITION, NEITHER THIS SHEET NOR THE INFORMATION IT CONTAINS WAY BE USED BY OR DISCLOSED TO ANY THIRD PARTY WITHOUT DELL'S EXPRESS WRITTEN CONSENT.

Compal Electronics, Inc.
Title: USB 2.0 Port
Size
Document Number: LA-3301P
Rev 1.0
Date: Monday, February 26, 2007
Sheet 32 of 58

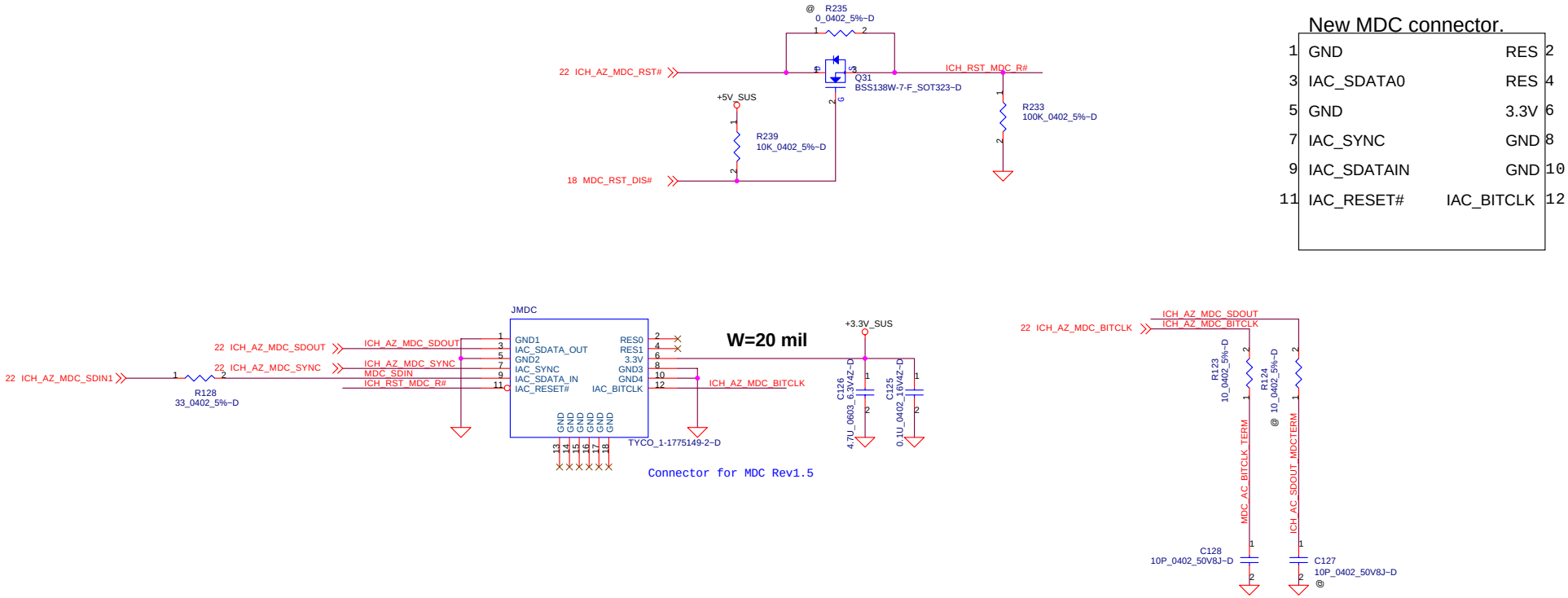

hexainf@hotmail.com
GRATIS - FOR FREE

PROPRIETARY NOTE: THIS SHEET OF ENGINEERING DRAWING AND SPECIFICATIONS CONTAINS CONFIDENTIAL TRADE SECRET AND OTHER PROPRIETARY INFORMATION OF DELL INC. ("DELL") THIS DOCUMENT MAY NOT BE TRANSFERRED OR COPIED WITHOUT THE EXPRESS WRITTEN AUTHORIZATION OF DELL. IN ADDITION, NEITHER THIS SHEET NOR THE INFORMATION IT CONTAINS WAY BE USED BY OR DISCLOSED TO ANY THIRD PARTY WITHOUT DELL'S EXPRESS WRITTEN CONSENT.

DELL CONFIDENTIAL/PROPRIETARY

Compal Electronics, Inc.

Title: **BT PORT and MDC**

Size: | Document Number: **LA-3301P** | Rev: 1.0

Date: Monday, February 26, 2007 | Sheet 33 of 58

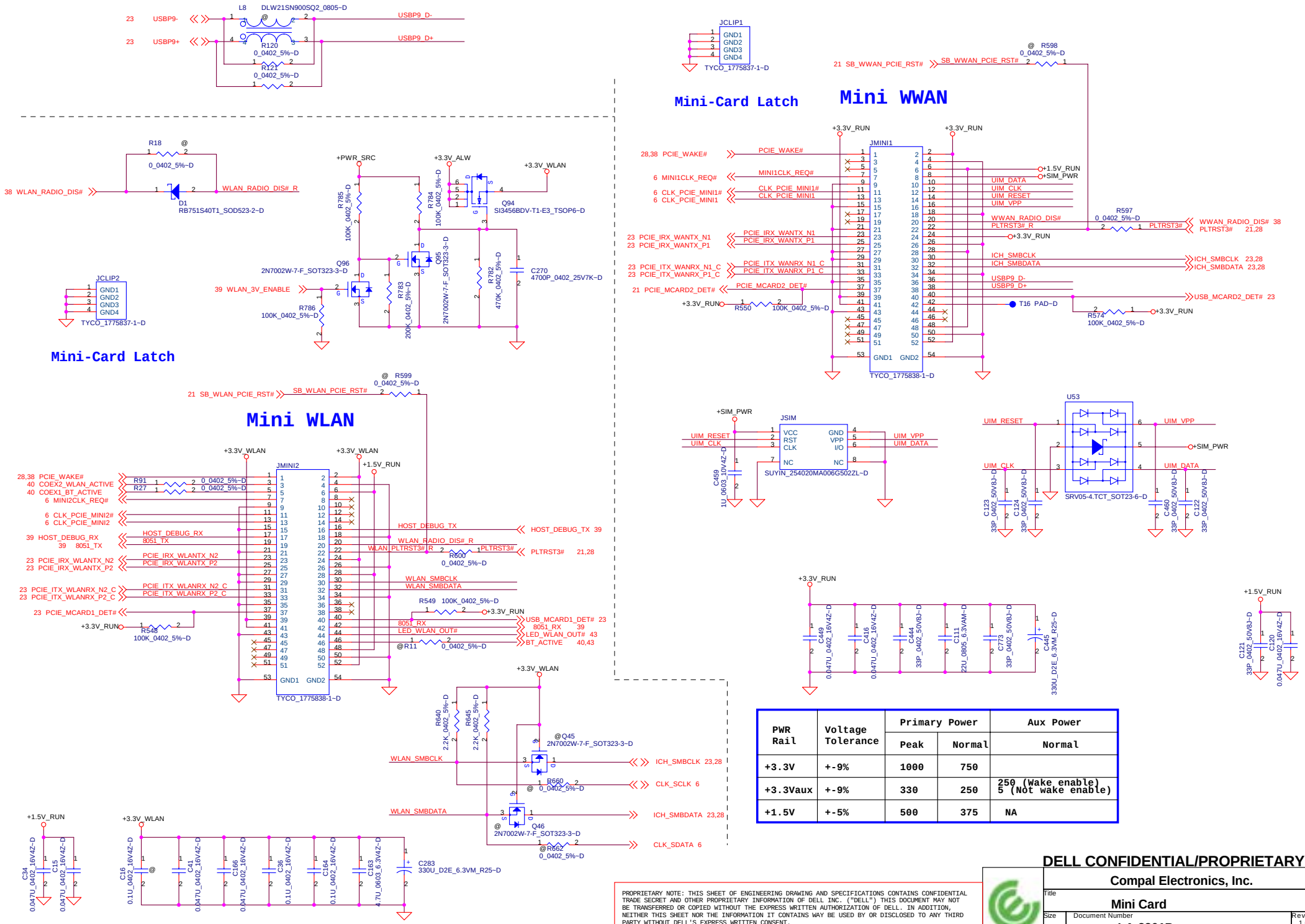

PWR Rail	Voltage Tolerance	Primary Power		Aux Power
		Peak	Normal	Normal
+3.3V	+-9%	1000	750	
+3.3Vaux	+-9%	330	250	250 (Wake enable) 5 (Not wake enable)
+1.5V	+-5%	500	375	NA

PROPRIETARY NOTE: THIS SHEET OF ENGINEERING DRAWING AND SPECIFICATIONS CONTAINS CONFIDENTIAL TRADE SECRET AND OTHER PROPRIETARY INFORMATION OF DELL INC. ("DELL") THIS DOCUMENT MAY NOT BE TRANSFERRED OR COPIED WITHOUT THE EXPRESS WRITTEN AUTHORIZATION OF DELL. IN ADDITION, NEITHER THIS SHEET NOR THE INFORMATION IT CONTAINS WAY BE USED BY OR DISCLOSED TO ANY THIRD PARTY WITHOUT DELL'S EXPRESS WRITTEN CONSENT.

DELL CONFIDENTIAL/PROPRIETARY

Compal Electronics, Inc.

Title: Mini Card

Size: Document Number: LA-3301P Rev: 1.0

Date: Monday, February 26, 2007 Sheet 34 of 58

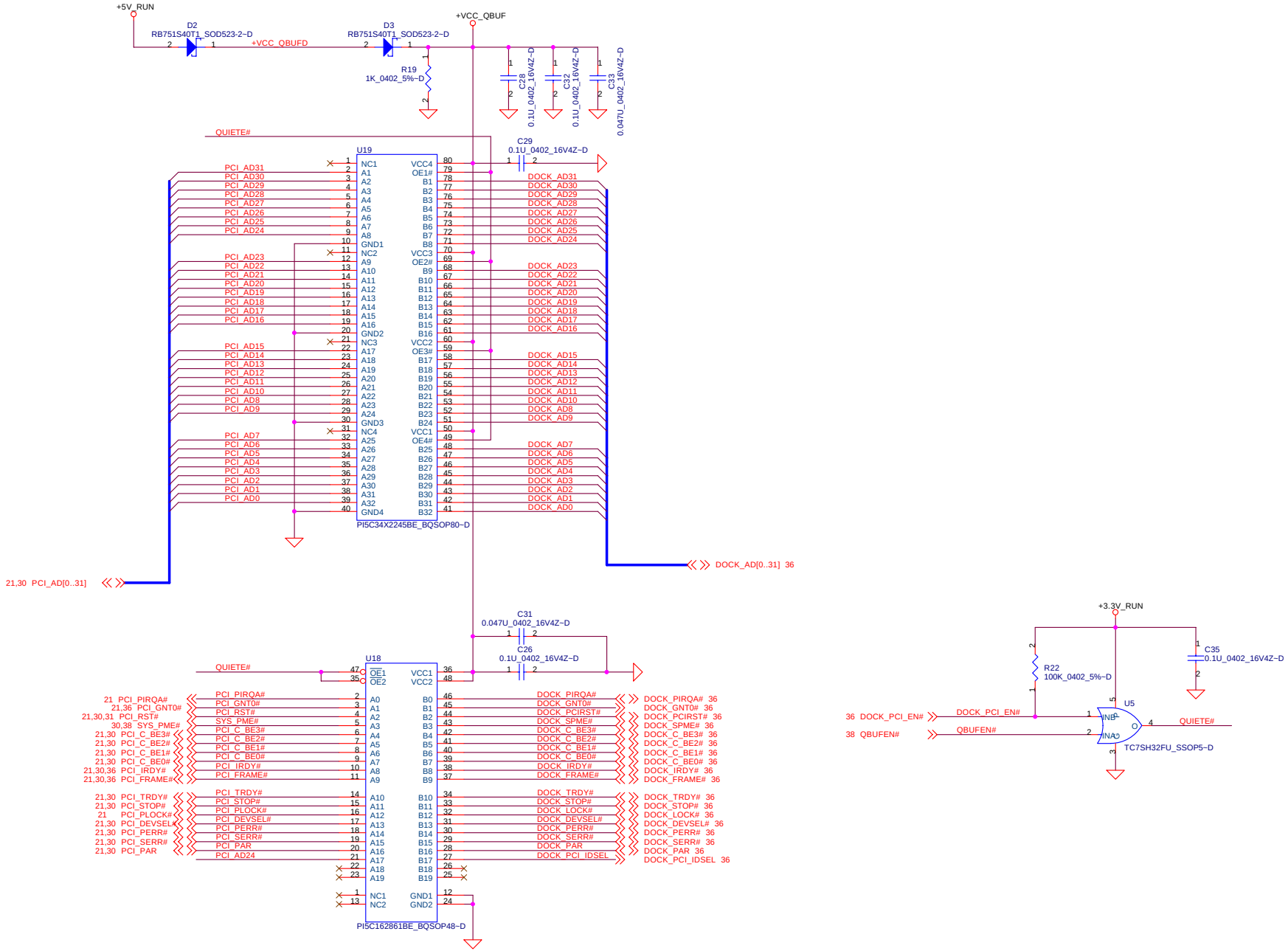

hexainf@hotmail.com
GRATIS - FOR FREE

PROPRIETARY NOTE: THIS SHEET OF ENGINEERING DRAWING AND SPECIFICATIONS CONTAINS CONFIDENTIAL TRADE SECRET AND OTHER PROPRIETARY INFORMATION OF DELL INC. ("DELL") THIS DOCUMENT MAY NOT BE TRANSFERRED OR COPIED WITHOUT THE EXPRESS WRITTEN AUTHORIZATION OF DELL. IN ADDITION, NEITHER THIS SHEET NOR THE INFORMATION IT CONTAINS WAY BE USED BY OR DISCLOSED TO ANY THIRD PARTY WITHOUT DELL'S EXPRESS WRITTEN CONSENT.

DELL CONFIDENTIAL/PROPRIETARY

Compal Electronics, Inc.

Title: **DOCKING BUFFER**

Size | Document Number: **LA-3301P** | Rev 1.0

Date: Monday, February 26, 2007 | Sheet 35 of 58

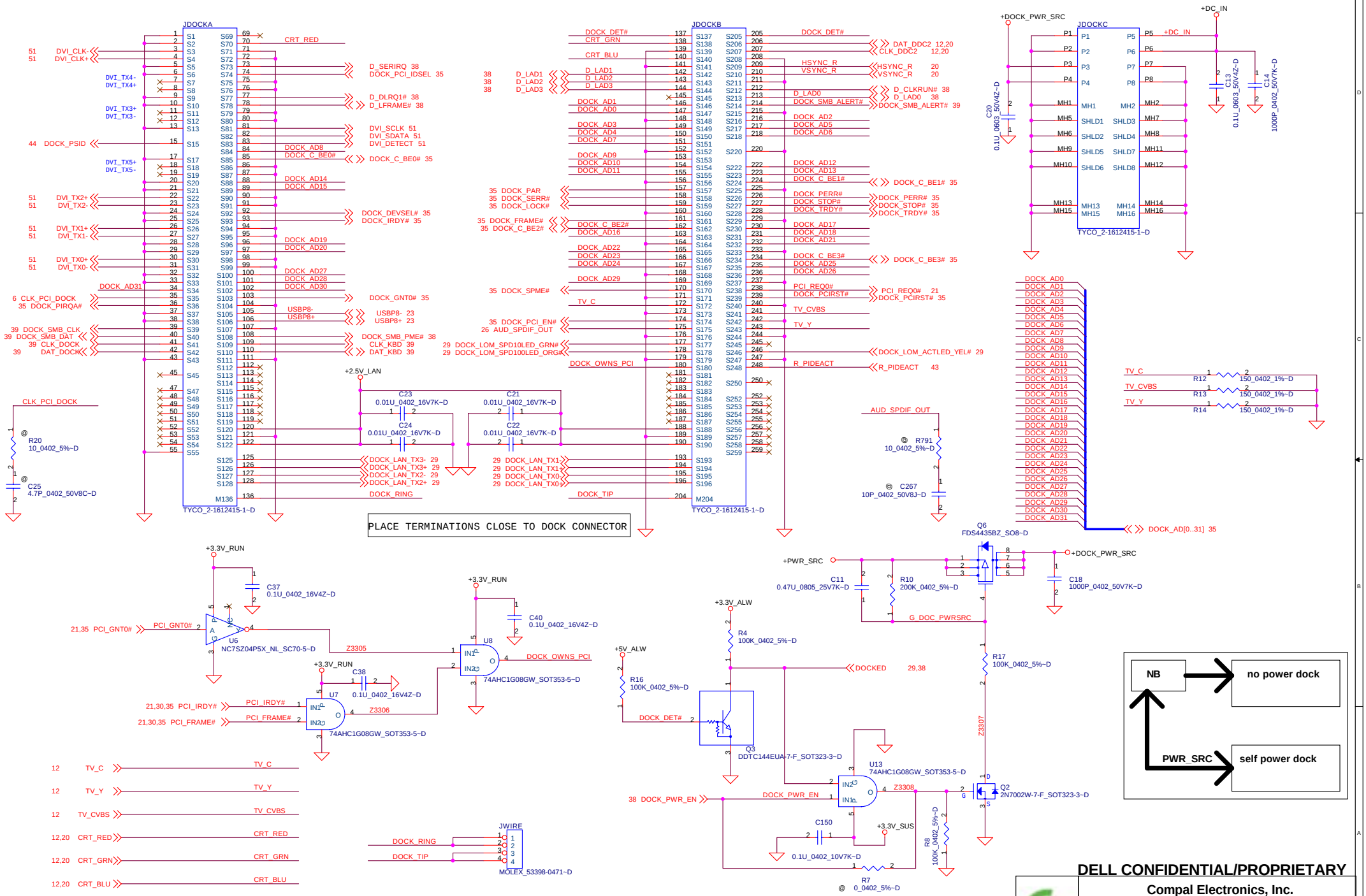

PROPRIETARY NOTE: THIS SHEET OF ENGINEERING DRAWING AND SPECIFICATIONS CONTAINS CONFIDENTIAL TRADE SECRET AND OTHER PROPRIETARY INFORMATION OF DELL INC. ("DELL") THIS DOCUMENT MAY NOT BE TRANSFERRED OR COPIED WITHOUT THE EXPRESS WRITTEN AUTHORIZATION OF DELL. IN ADDITION, NEITHER THIS SHEET NOR THE INFORMATION IT CONTAINS WAY BE USED BY OR DISCLOSED TO ANY THIRD PARTY WITHOUT DELL'S EXPRESS WRITTEN CONSENT.

DELL CONFIDENTIAL/PROPRIETARY

Compal Electronics, Inc.

Title: DOCKING CONN

Size: | Document Number: LA-3301P | Rev: 1.0

Date: Tuesday, February 27, 2007 | Sheet 36 of 58

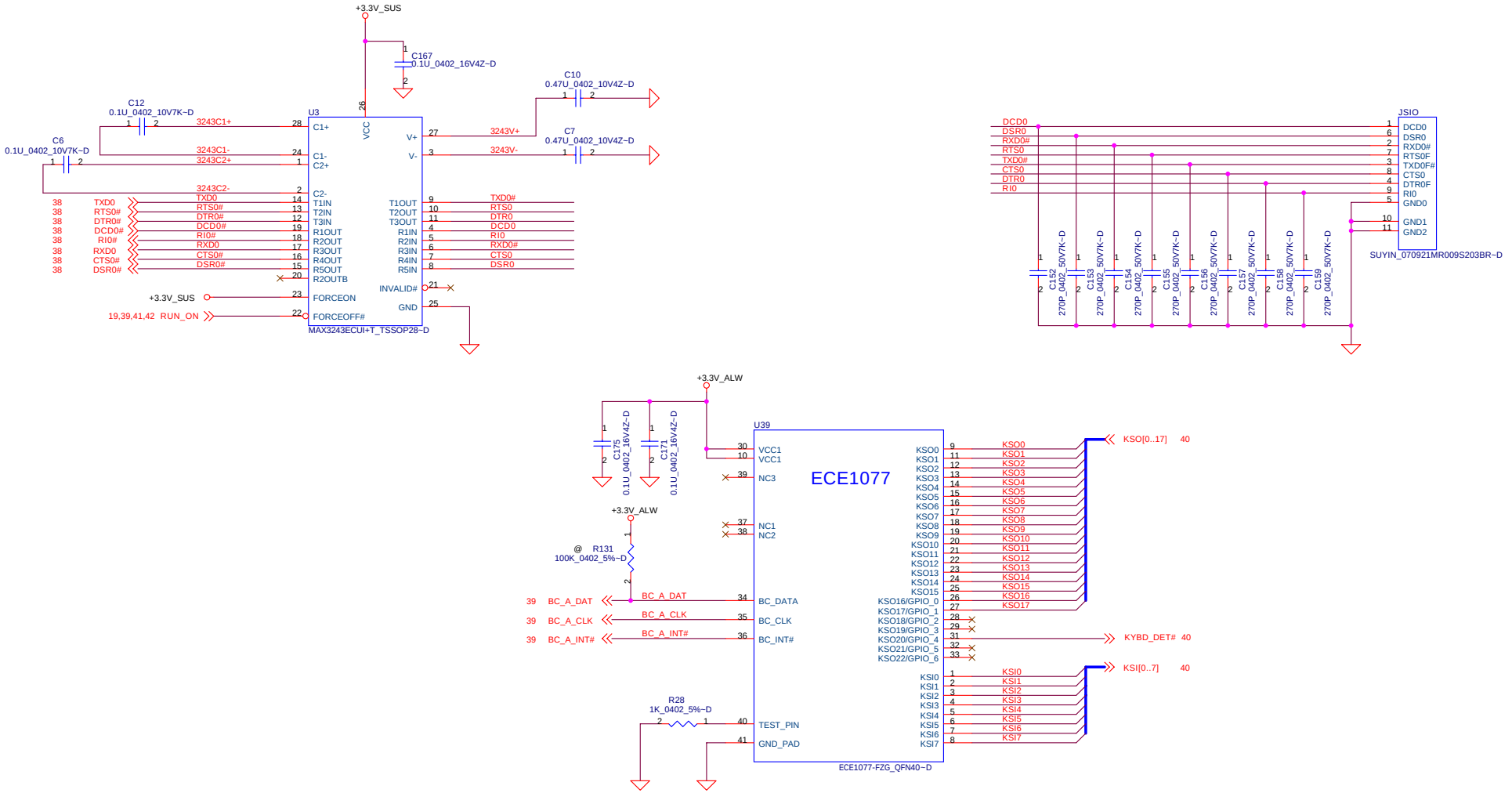

DELL CONFIDENTIAL/PROPRIETARY

PROPRIETARY NOTE: THIS SHEET OF ENGINEERING DRAWING AND SPECIFICATIONS CONTAINS CONFIDENTIAL TRADE SECRET AND OTHER PROPRIETARY INFORMATION OF DELL INC. ("DELL") THIS DOCUMENT MAY NOT BE TRANSFERRED OR COPIED WITHOUT THE EXPRESS WRITTEN AUTHORIZATION OF DELL. IN ADDITION, NEITHER THIS SHEET NOR THE INFORMATION IT CONTAINS WAY BE USED BY OR DISCLOSED TO ANY THIRD PARTY WITHOUT DELL'S EXPRESS WRITTEN CONSENT.

hexainf@hotmail.com
GRATIS - FOR FREE

Compal Electronics, Inc.	
Title: Serial & FIR	
Size	Document Number: LA-3301P	Rev: 1.0
Date: Monday, February 26, 2007	Sheet 37 of 58

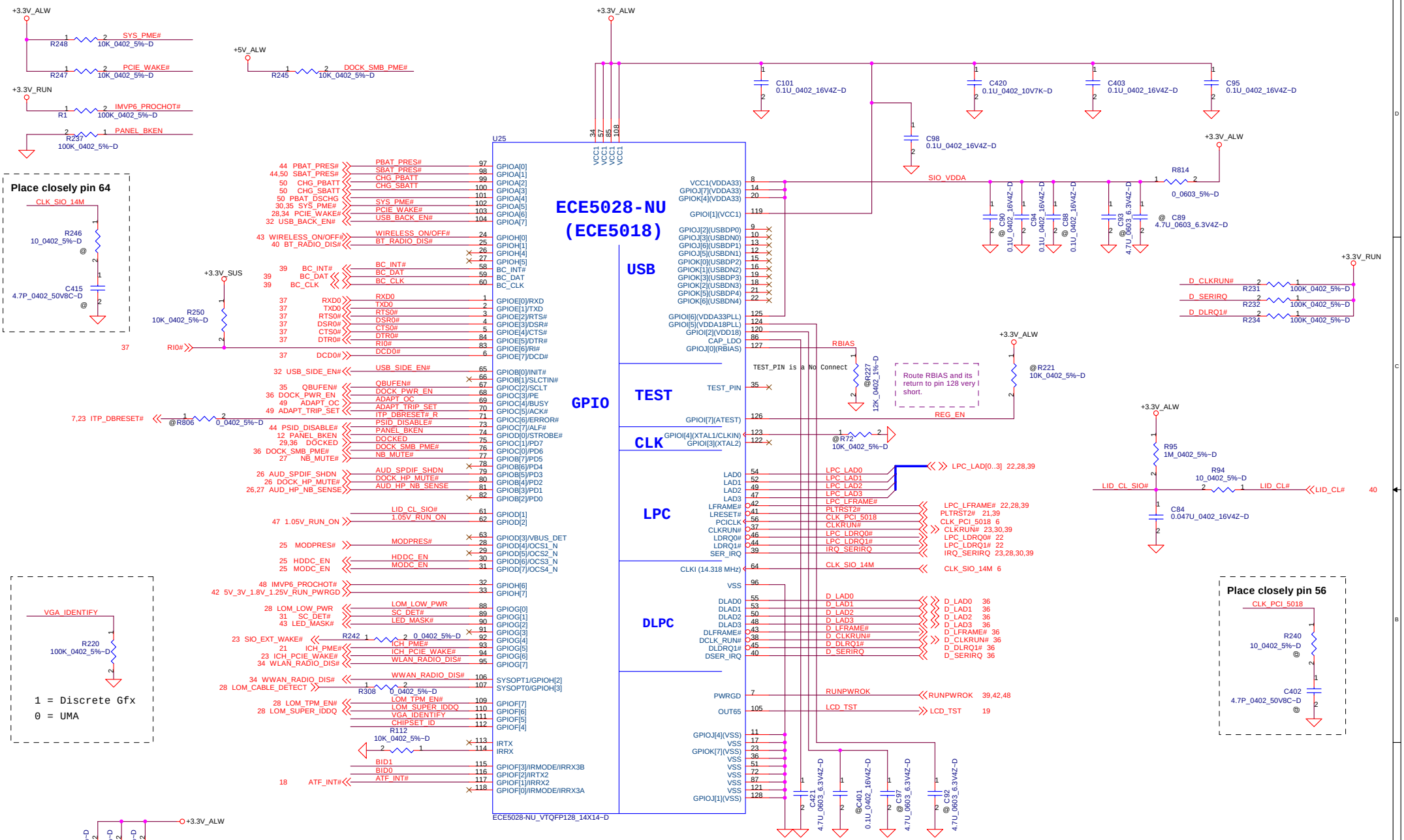

REV	BID1	BID0
X00	0	0
X01	0	1
X02	1	0
X03	1	1
A00	0	0

PROPRIETARY NOTE: THIS SHEET OF ENGINEERING DRAWING AND SPECIFICATIONS CONTAINS CONFIDENTIAL TRADE SECRET AND OTHER PROPRIETARY INFORMATION OF DELL INC. ("DELL") THIS DOCUMENT MAY NOT BE TRANSFERRED OR COPIED WITHOUT THE EXPRESS WRITTEN AUTHORIZATION OF DELL. IN ADDITION, NEITHER THIS SHEET NOR THE INFORMATION IT CONTAINS WAY BE USED BY OR DISCLOSED TO ANY THIRD PARTY WITHOUT DELL'S EXPRESS WRITTEN CONSENT.

DELL CONFIDENTIAL/PROPRIETARY

Compal Electronics, Inc.

Title: ECE5028

Size: | Document Number: LA-3301P | Rev: 1.0

Date: Monday, February 26, 2007 | Sheet 38 of 58

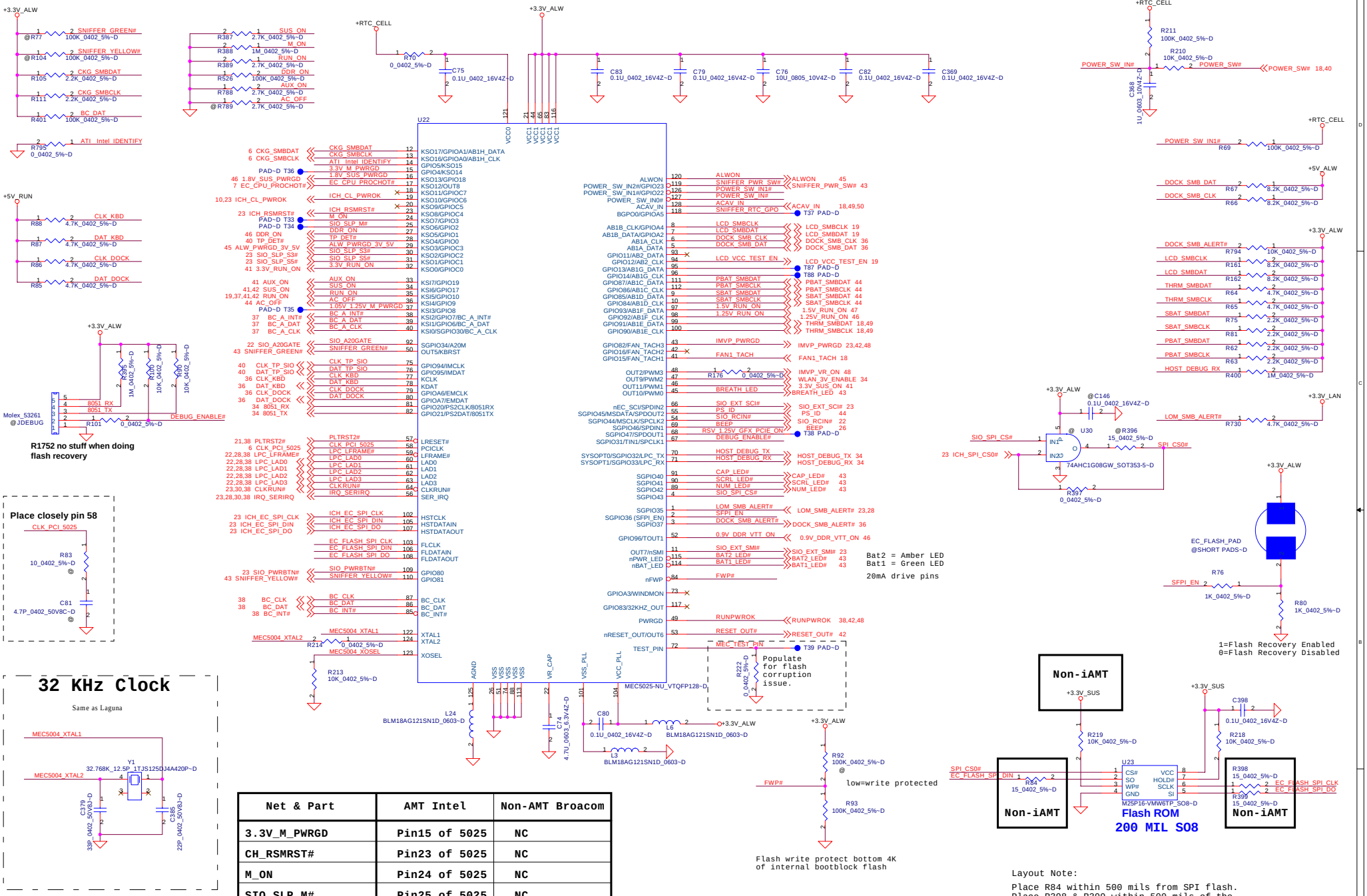

Net & Part	AMT Intel	Non-AMT Broacom
3.3V_M_PWRGD	Pin15 of 5025	NC
CH_RSMRST#	Pin23 of 5025	NC
M_ON	Pin24 of 5025	NC
SIO_SLP_M#	Pin25 of 5025	NC
1.05V_1.25V_M_PWRGD	Pin37 of 5025	NC
R238	Pin24 of 5025	NC
LOM_SUPER_IDDQ	NC	Refer to UMA
LOM_LOW_PWR	NC	Refer to UMA
LOM_CABLE_DETECT	NC	Refer to UMA

hexainf@hotmail.com
GRATIS - FOR FREE

PROPRIETARY NOTE: THIS SHEET OF ENGINEERING DRAWING AND SPECIFICATIONS CONTAINS CONFIDENTIAL TRADE SECRET AND OTHER PROPRIETARY INFORMATION OF DELL INC. ("DELL") THIS DOCUMENT MAY NOT BE TRANSFERRED OR COPIED WITHOUT THE EXPRESS WRITTEN AUTHORIZATION OF DELL. IN ADDITION, NEITHER THIS SHEET NOR THE INFORMATION IT CONTAINS WAY BE USED BY OR DISCLOSED TO ANY THIRD PARTY WITHOUT DELL'S EXPRESS WRITTEN CONSENT.

DELL CONFIDENTIAL/PROPRIETARY
Compal Electronics, Inc.
Title: EMC5025
Size: Document Number: LA-3301P
Rev: 1.0
Date: Thursday, March 01, 2007
Sheet 39 of 58

Touch PAD

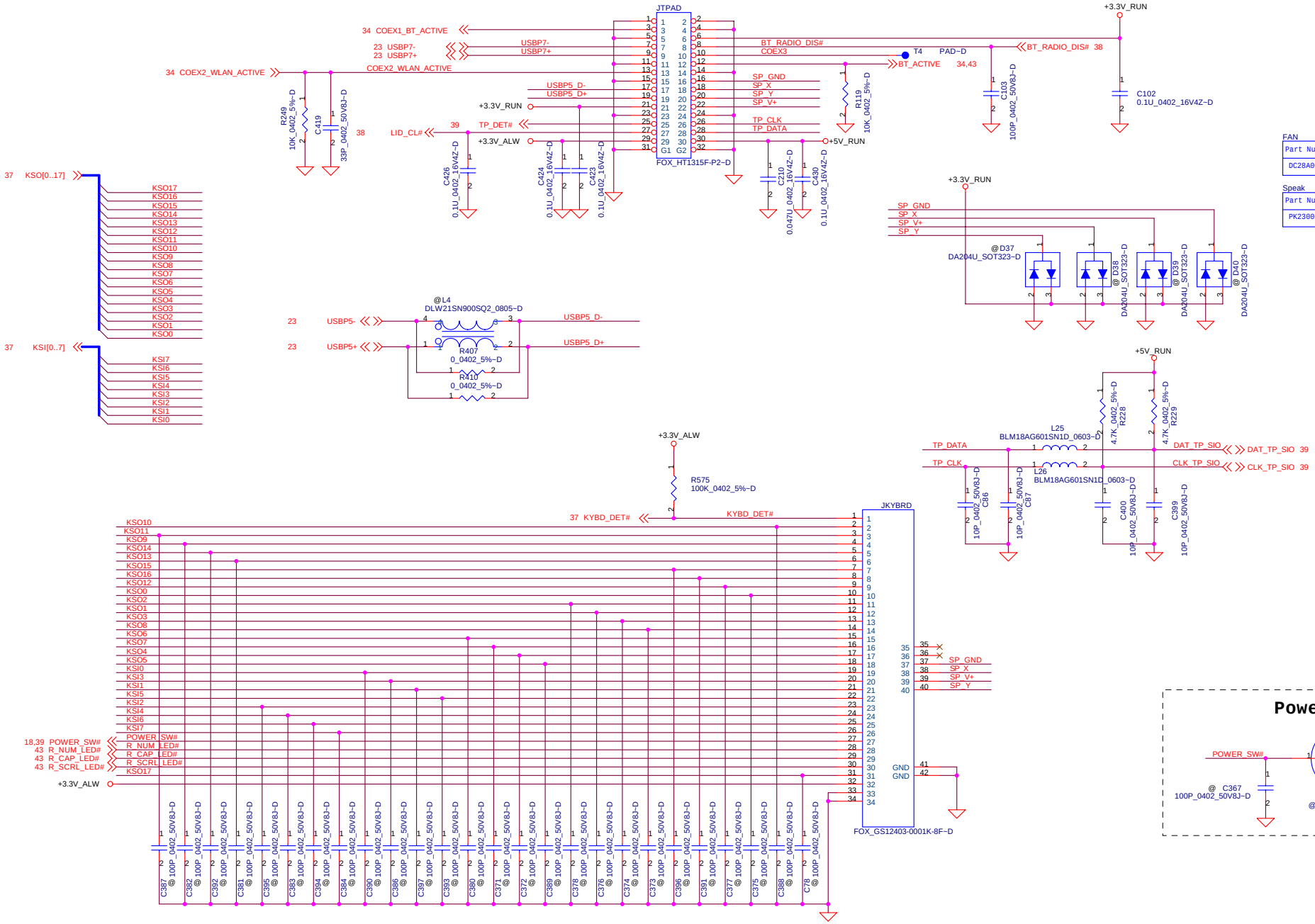

Power Switch

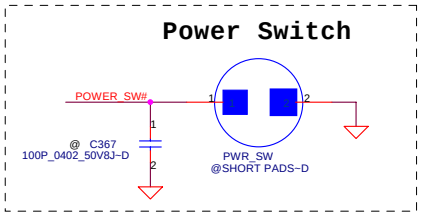

FAN

Part Number	Description
DC28A000800	FAN SET DAQ20 DC5V AB7405HB-HB3 ADDA

Speak

Part Number	Description
PK230003Q0L	SPK PACK ZJX 2.0W 4 OHM FG

SM CARD BODY

Part Number	Description
SP070007V0L	S SOCKET TYCO 1770551-1 10P H5.9 SMART

PCMCIA BODY

Part Number	Description
DC000001Q0L	PCMCIA TYCO 1759096-1

MDC wire set cable

Part Number	Description
DC02000CS0L	H-CONN SET ZGX MB-MDC

T/P wire set cable

Part Number	Description
DC02000840L	H-CONN SET ZJX MB-B/T-TP-FP

LVDS cable

Part Number	Description
DC020003Y0L	H-CONN SET ZJX MB-LCD 14 WXGA+(-1ch)

LVDS cable

Part Number	Description
DC02000870L	H-CONN SET ZJX MB-LCD 14 WXGA+(-2ch)

RTC BATT

Part Number	Description
GC20323MX00	BATT CR2032 3V 220MAH MAXELL

PROPRIETARY NOTE: THIS SHEET OF ENGINEERING DRAWING AND SPECIFICATIONS CONTAINS CONFIDENTIAL TRADE SECRET AND OTHER PROPRIETARY INFORMATION OF DELL INC. ("DELL") THIS DOCUMENT MAY NOT BE TRANSFERRED OR COPIED WITHOUT THE EXPRESS WRITTEN AUTHORIZATION OF DELL. IN ADDITION, NEITHER THIS SHEET NOR THE INFORMATION IT CONTAINS WAY BE USED BY OR DISCLOSED TO ANY THIRD PARTY WITHOUT DELL'S EXPRESS WRITTEN CONSENT.

DELL CONFIDENTIAL/PROPRIETARY

Compal Electronics, Inc.

Title: INT KB

Size | Document Number: LA-3301P | Rev: 1.0

Date: Monday, February 26, 2007 | Sheet 40 of 58

DC/DC Interface

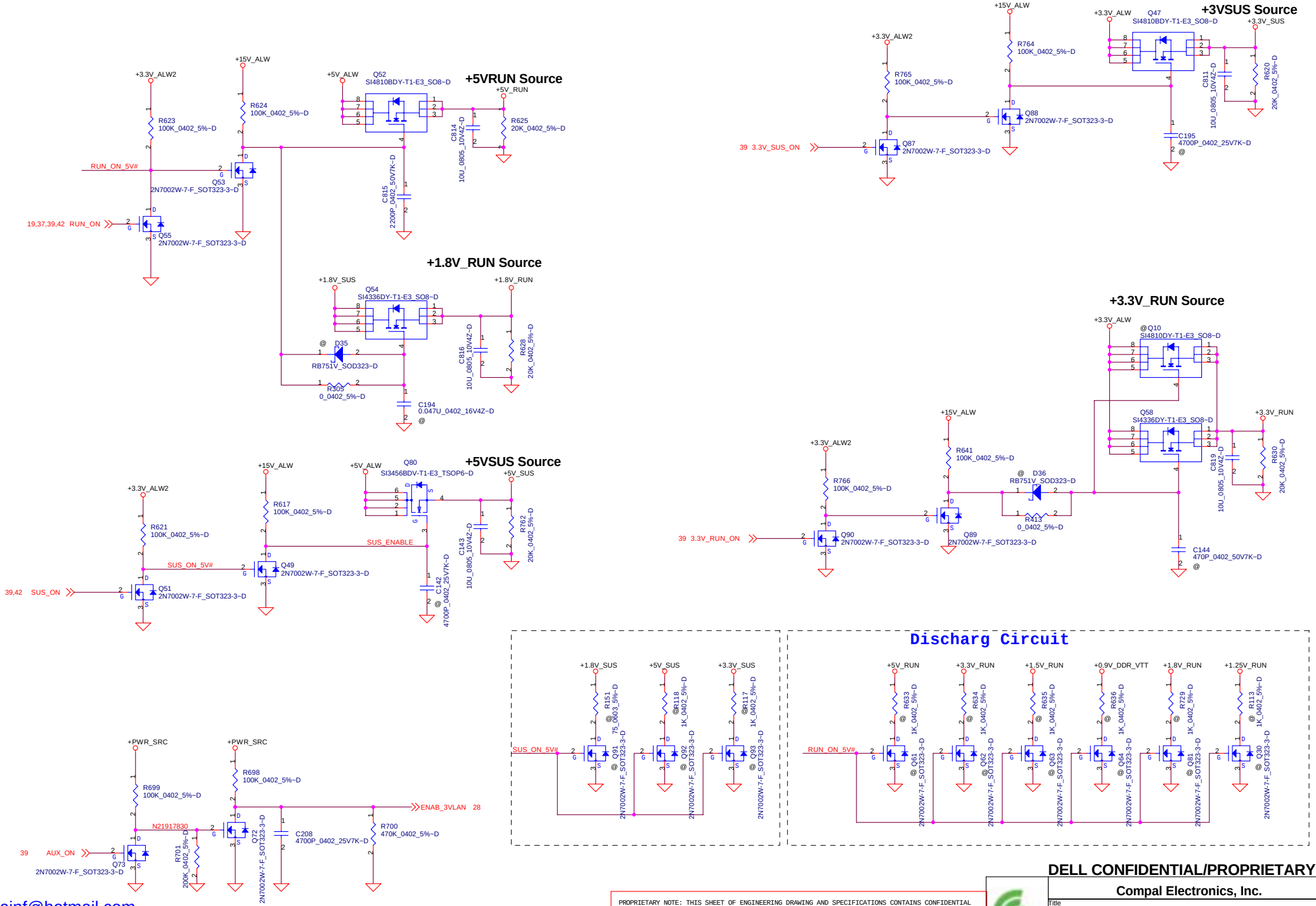

hexainf@hotmail.com
GRATIS - FOR FREE

PROPRIETARY NOTE: THIS SHEET OF ENGINEERING DRAWING AND SPECIFICATIONS CONTAINS CONFIDENTIAL TRADE SECRET AND OTHER PROPRIETARY INFORMATION OF DELL INC. ("DELL") THIS DOCUMENT MAY NOT BE TRANSFERRED OR COPIED WITHOUT THE EXPRESS WRITTEN AUTHORIZATION OF DELL. IN ADDITION, NEITHER THIS SHEET NOR THE INFORMATION IT CONTAINS WAY BE USED BY OR DISCLOSED TO ANY THIRD PARTY WITHOUT DELL'S EXPRESS WRITTEN CONSENT.

DELL CONFIDENTIAL/PROPRIETARY

Compal Electronics, Inc.

Title: POWER CONTROL

Size | Document Number: LA-3301P | Rev 1.0

Date: Monday, February 26, 2007 | Sheet 41 of 58

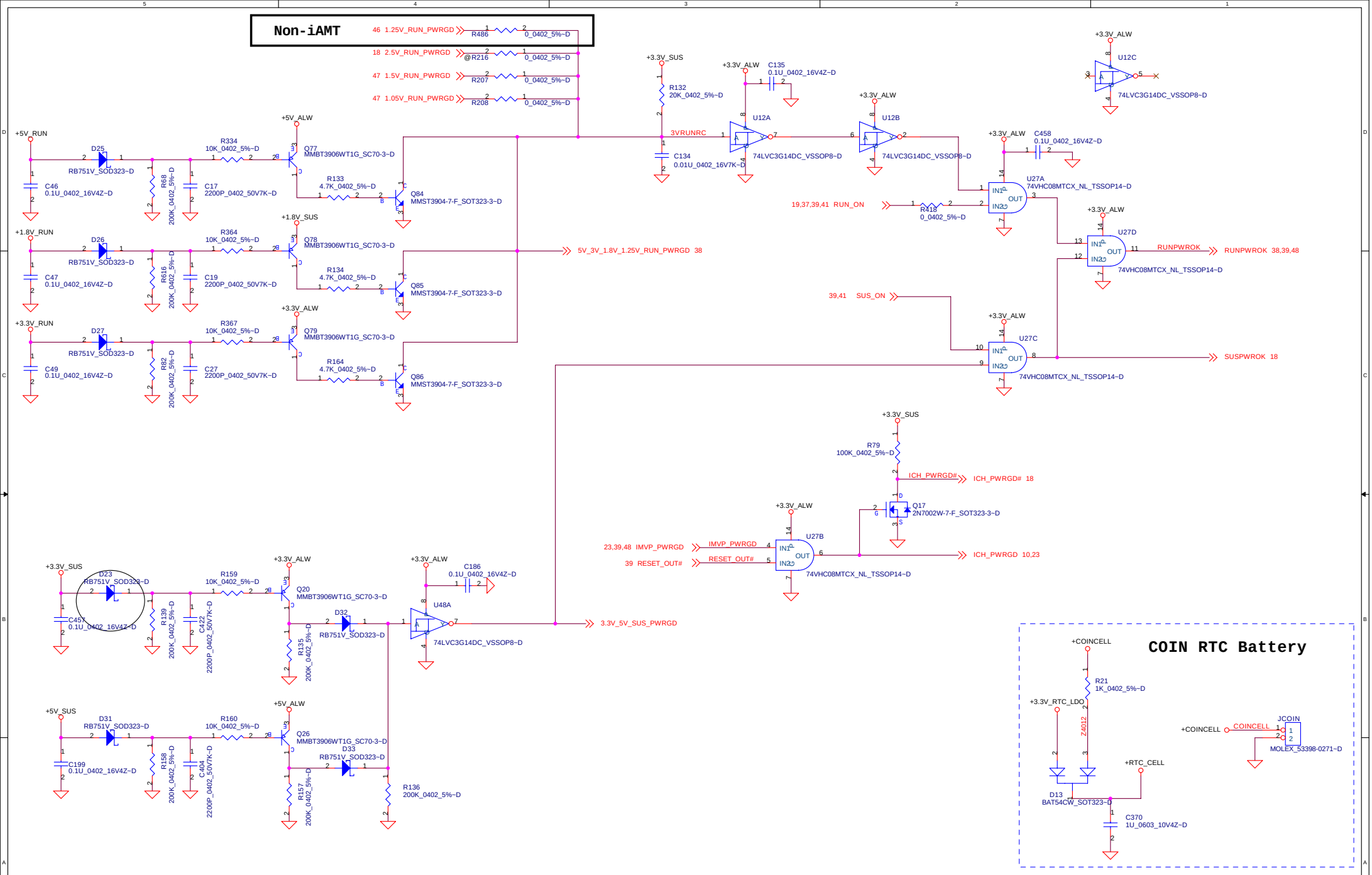

PROPRIETARY NOTE: THIS SHEET OF ENGINEERING DRAWING AND SPECIFICATIONS CONTAINS CONFIDENTIAL TRADE SECRET AND OTHER PROPRIETARY INFORMATION OF DELL INC. ("DELL") THIS DOCUMENT MAY NOT BE TRANSFERRED OR COPIED WITHOUT THE EXPRESS WRITTEN AUTHORIZATION OF DELL. IN ADDITION, NEITHER THIS SHEET NOR THE INFORMATION IT CONTAINS WAY BE USED BY OR DISCLOSED TO ANY THIRD PARTY WITHOUT DELL'S EXPRESS WRITTEN CONSENT.

DELL CONFIDENTIAL/PROPRIETARY

Compal Electronics, Inc.

Title: Power Good

Size | Document Number: LA-3301P | Rev: 1.0

Date: Monday, February 26, 2007 | Sheet 42 of 58

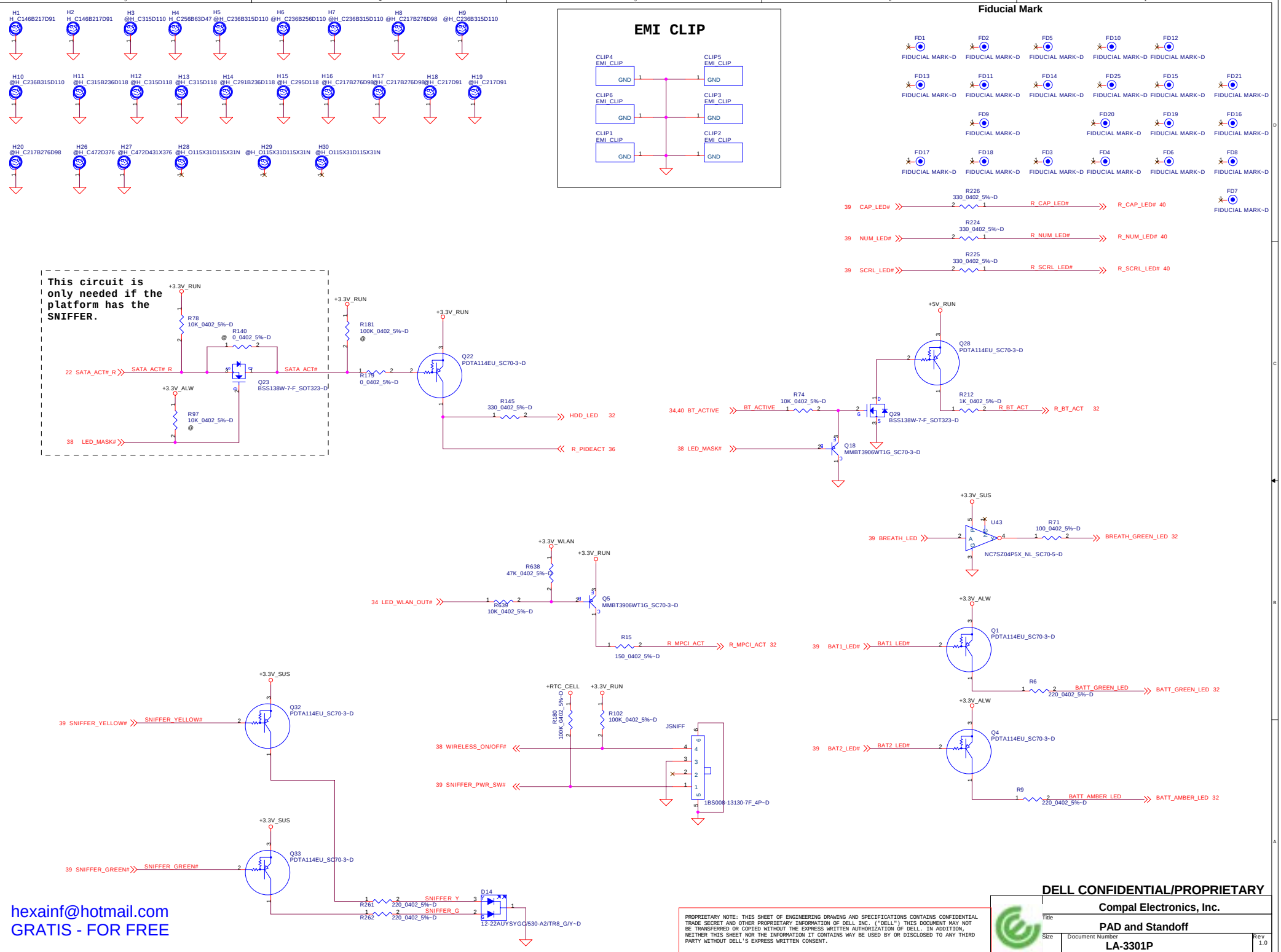
Fiducial Mark
EMI CLIP
This circuit is only needed if the platform has the SNIFFER.
hexainf@hotmail.com
GRATIS - FOR FREE
DELL CONFIDENTIAL/PROPRIETARY
Compal Electronics, Inc.
Title
PAD and Standoff
Size
Document Number
LA-3301P
Rev
1.0
Date: Monday, February 26, 2007
Sheet 43 of 58

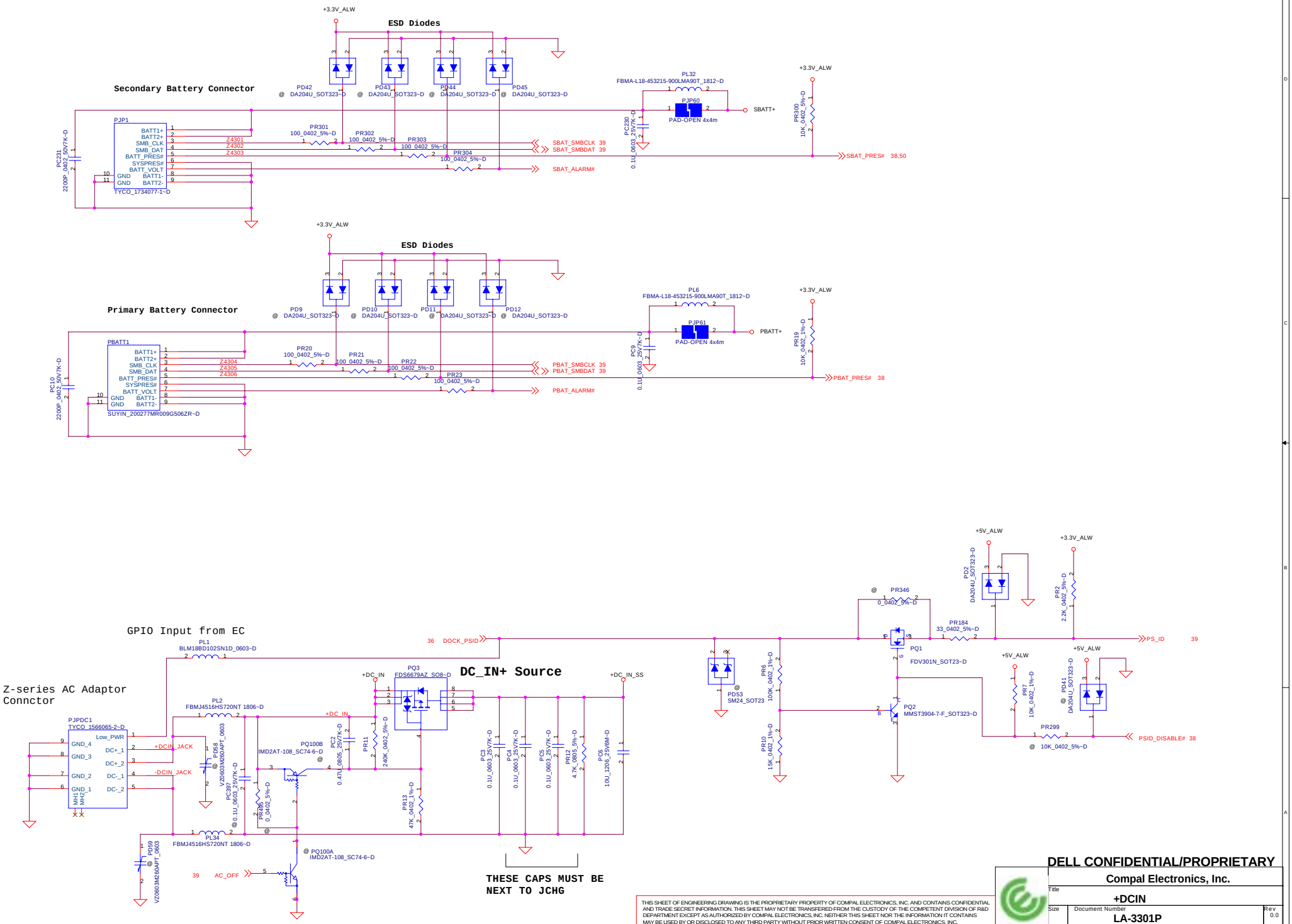

THIS SHEET OF ENGINEERING DRAWING IS THE PROPRIETARY PROPERTY OF COMPAL ELECTRONICS, INC. AND CONTAINS CONFIDENTIAL AND TRADE SECRET INFORMATION. THIS SHEET MAY NOT BE TRANSFERED FROM THE CUSTODY OF THE COMPETENT DIVISION OF R&D DEPARTMENT EXCEPT AS AUTHORIZED BY COMPAL ELECTRONICS, INC. NEITHER THIS SHEET NOR THE INFORMATION IT CONTAINS MAY BE USED BY OR DISCLOSED TO ANY THIRD PARTY WITHOUT PRIOR WRITTEN CONSENT OF COMPAL ELECTRONICS, INC.

DELL CONFIDENTIAL/PROPRIETARY

Compal Electronics, Inc.

Title	+DCIN	
Size	Document Number: LA-3301P	Rev 0.0
Date: Monday, February 26, 2007	Sheet 44 of 58	

+3.3V_ALWP/ +5V_ALWP/ +5V_ALW2 / +15V_ALWP

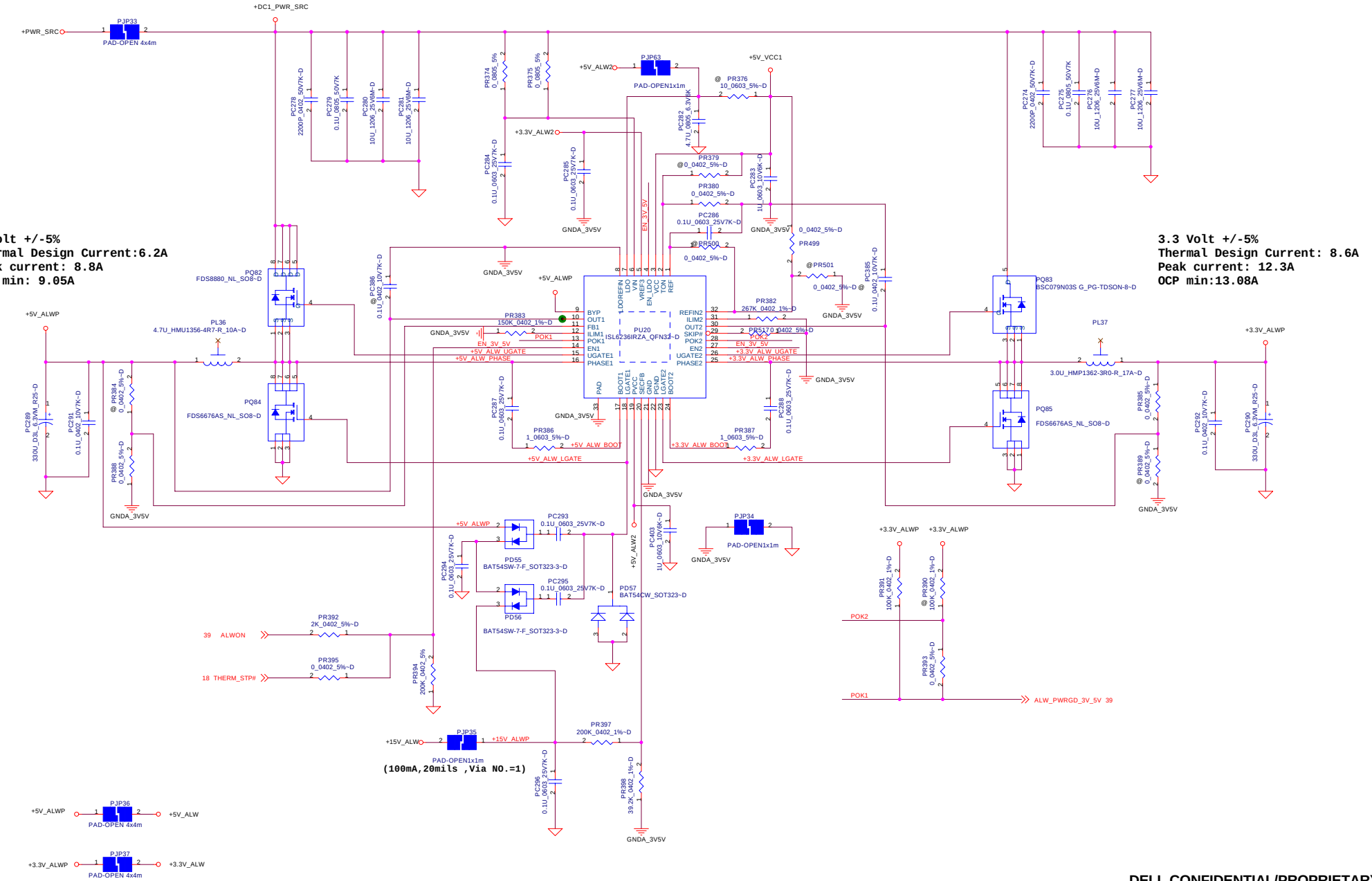

5 Volt +/-5%
Thermal Design Current:6.2A
Peck current: 8.8A
OCP min: 9.05A

3.3 Volt +/-5%
Thermal Design Current: 8.6A
Peak current: 12.3A
OCP min:13.08A

hexainf@hotmail.com
GRATIS - FOR FREE

THIS SHEET OF ENGINEERING DRAWING IS THE PROPRIETARY PROPERTY OF COMPAL ELECTRONICS, INC. AND CONTAINS CONFIDENTIAL AND TRADE SECRET INFORMATION. THIS SHEET MAY NOT BE TRANSFERED FROM THE CUSTODY OF THE COMPETENT DIVISION OF R&D DEPARTMENT EXCEPT AS AUTHORIZED BY COMPAL ELECTRONICS, INC. NEITHER THIS SHEET NOR THE INFORMATION IT CONTAINS

DELL CONFIDENTIAL/PROPRIETARY

Compal Electronics, Inc.			
Title: DC/DC +3V/ +5V			
Size	Document Number: LA-3301P		Rev 0.0
Date: Monday, February 26, 2007	Sheet 45 of 58		

1.8V/1.25V/0.9V VTT

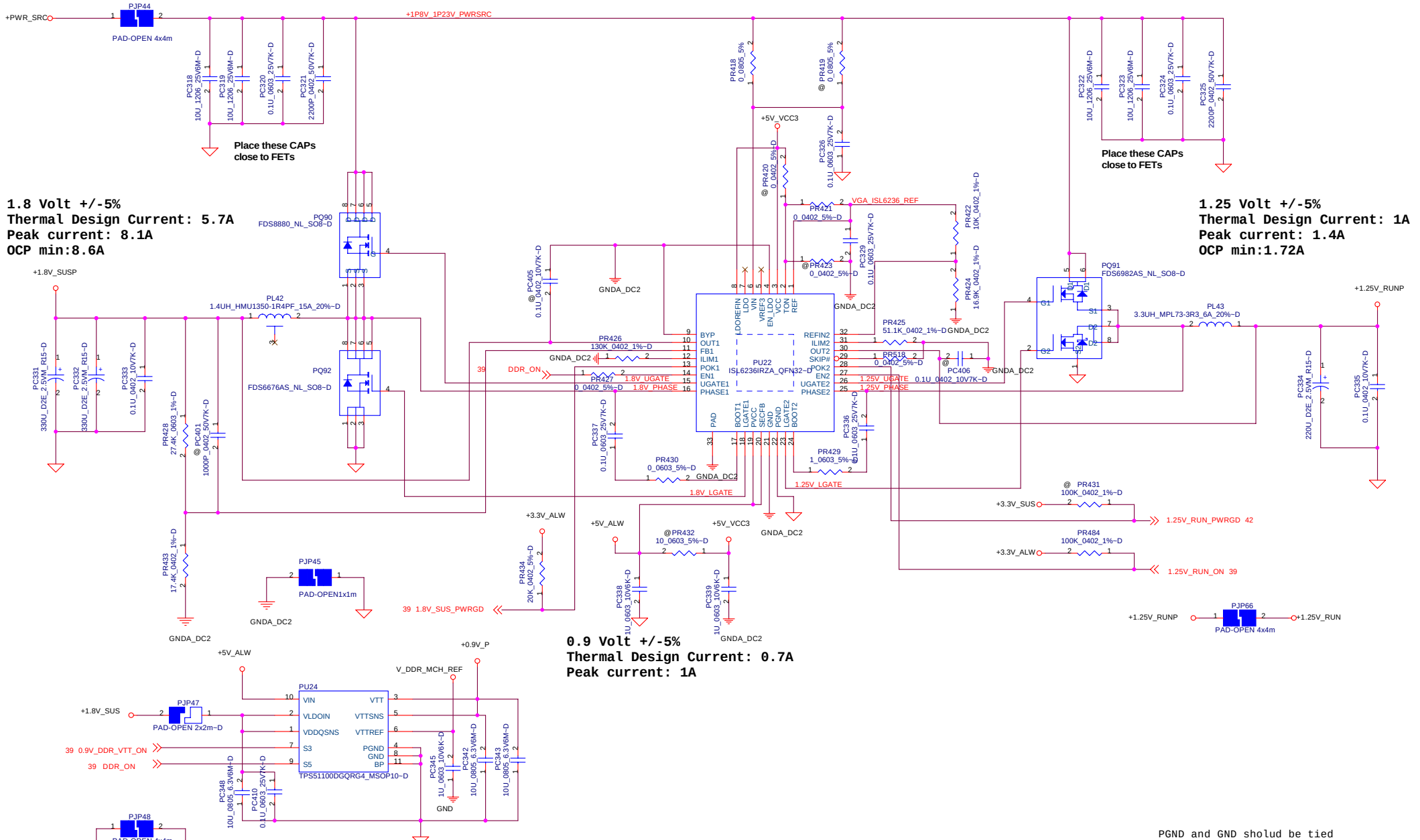

PGND and GND shoulud be tied
together at one point near the GND Pin

DELL CONFIDENTIAL/PROPRIETARY

PROPRIETARY NOTE: THIS SHEET OF ENGINEERING DRAWING AND SPECIFICATIONS CONTAINS CONFIDENTIAL TRADE SECRET AND OTHER PROPRIETARY INFORMATION OF DELL INC. ("DELL") THIS DOCUMENT MAY NOT BE TRANSFERRED OR COPIED WITHOUT THE EXPRESS WRITTEN AUTHORIZATION OF DELL. IN ADDITION, NEITHER THIS SHEET NOR THE INFORMATION IT CONTAINS WAY BE USED BY OR DISCLOSED TO ANY THIRD PARTY WITHOUT DELL'S EXPRESS WRITTEN CONSENT.

Compal Electronics, Inc.	
Title	P47-PWR_1.25V/1.8V/LDO Vtt 0.9V
Size	Document Number: LA-3301P
Rev	0.0
Date: Monday, February 26, 2007	Sheet 46 of 58

+1.5V_RUN / +1.05V_VCCP / +3.3V_ALW / +3.3V_RTC_LDO

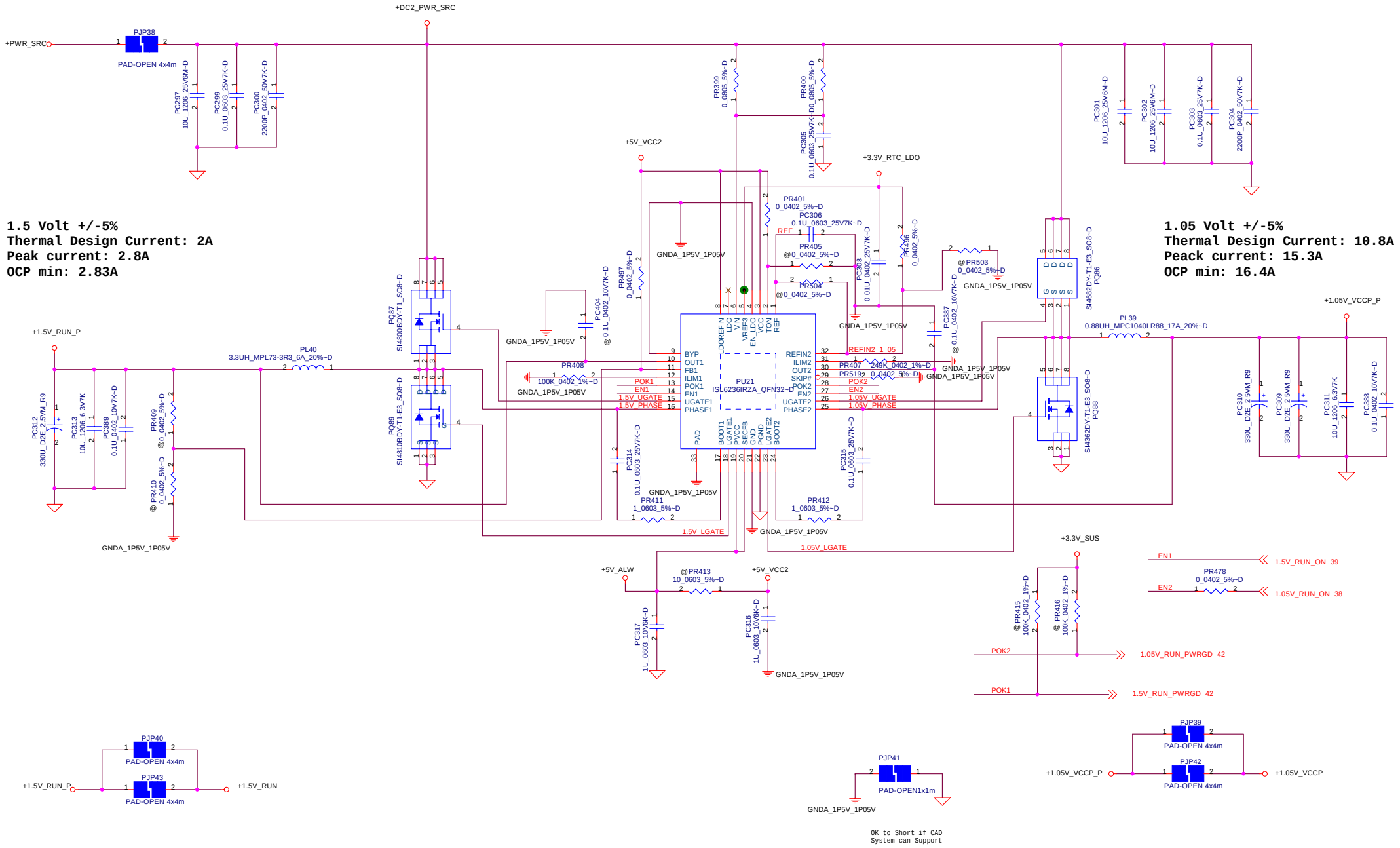

PROPRIETARY NOTE: THIS SHEET OF ENGINEERING DRAWING AND SPECIFICATIONS CONTAINS CONFIDENTIAL AND TRADE SECRET INFORMATION OF DELL INC. ("DELL") THIS DOCUMENT MAY NOT BE TRANSFERRED OR COPIED WITHOUT THE EXPRESS WRITTEN AUTHORIZATION OF DELL. IN ADDITION, THIS SHEET NOR THE INFORMATION IT CONTAINS WAY BE USED BY OR DISCLOSED TO ANY THIRD PARTY WITHOUT DELL'S EXPRESS WRITTEN CONSENT.

hexinfo@hotmail.com
QQ:1317101002

THIS SHEET OF ENGINEERING DRAWING IS THE PROPRIETARY PROPERTY OF COMPAL ELECTRONICS, INC. AND CONTAINS CONFIDENTIAL AND TRADE SECRET INFORMATION. THIS SHEET MAY NOT BE TRANSFERED FROM THE CUSTODY OF THE COMPETENT DIVISION OF R&D DEPARTMENT EXCEPT AS AUTHORIZED BY COMPAL ELECTRONICS, INC. NEITHER THIS SHEET NOR THE INFORMATION IT CONTAINS

DELL CONFIDENTIAL/PROPRIETARY

Compal Electronics, Inc.		
Title: +1.5V_RUN / +1.05V_VCCP		
Size	Document Number: LA-3301P	Rev: 0.0
Date: Monday, February 26, 2007	Sheet 47 of 58	

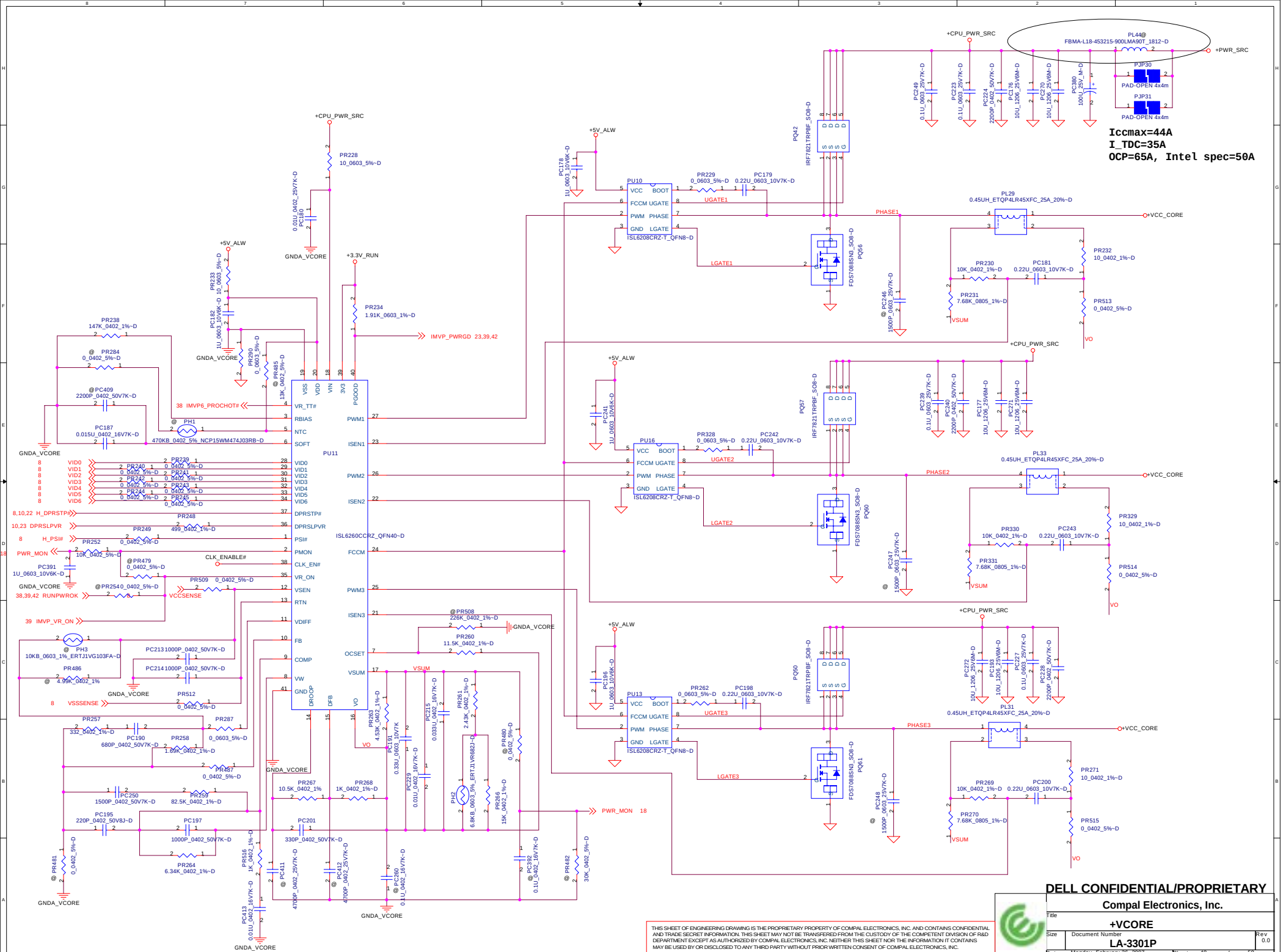

DELL CONFIDENTIAL/PROPRIETARY

Compal Electronics, Inc.

Title: +VCORE

Size | Document Number: LA-3301P | Rev: 0.0

Date: Monday, February 26, 2007 | Sheet 48 of 58

THIS SHEET OF ENGINEERING DRAWING IS THE PROPRIETARY PROPERTY OF COMPAL ELECTRONICS, INC. AND CONTAINS CONFIDENTIAL AND TRADE SECRET INFORMATION. THIS SHEET MAY NOT BE TRANSFERED FROM THE CUSTODY OF THE COMPETENT DIVISION OF R&D DEPARTMENT EXCEPT AS AUTHORIZED BY COMPAL ELECTRONICS, INC. NEITHER THIS SHEET NOR THE INFORMATION IT CONTAINS MAY BE USED BY OR DISCLOSED TO ANY THIRD PARTY WITHOUT PRIOR WRITTEN CONSENT OF COMPAL ELECTRONICS, INC.

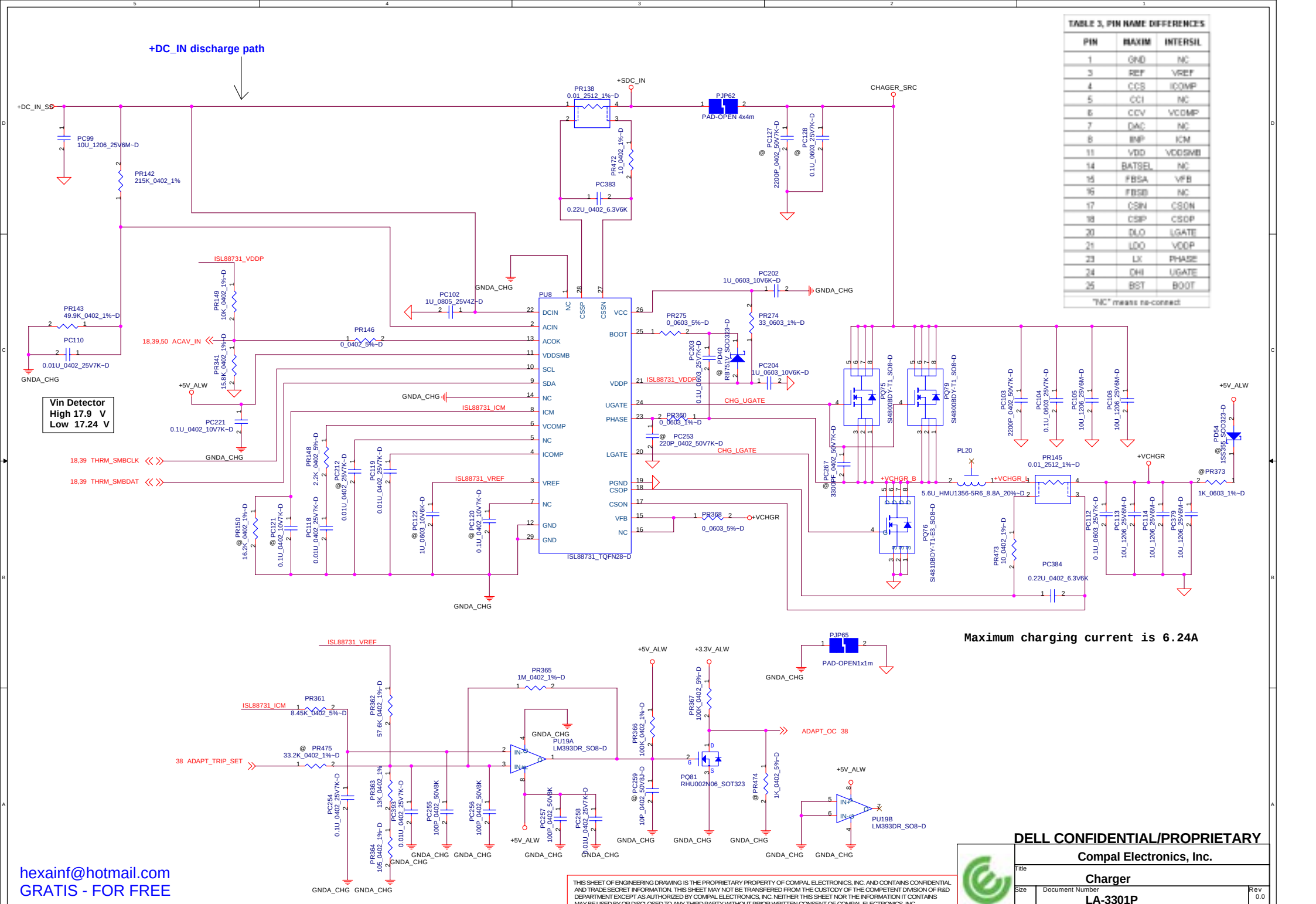

TABLE 3. PIN NAME DIFFERENCES		
PIN	MAXIM	INTERSIL
1	GND	NC
3	REF	VREF
4	CCS	ICOMP
5	CCI	NC
6	CCV	VCOMP
7	DAC	NC
8	INP	ICM
11	VDD	VDDSMB
14	BATSEL	NC
15	FBSA	VFB
16	FBSB	NC
17	CSIN	CSON
18	CSIP	CSOP
20	DLO	LGATE
21	LDO	VDDP
23	LX	PHASE
24	DHI	UGATE
25	BST	BOOT

"NC" means no-connect

THIS SHEET OF ENGINEERING DRAWING IS THE PROPRIETARY PROPERTY OF COMPAL ELECTRONICS, INC. AND CONTAINS CONFIDENTIAL AND TRADE SECRET INFORMATION. THIS SHEET MAY NOT BE TRANSFERED FROM THE CUSTODY OF THE COMPETENT DIVISION OF R&D DEPARTMENT EXCEPT AS AUTHORIZED BY COMPAL ELECTRONICS, INC. NEITHER THIS SHEET NOR THE INFORMATION IT CONTAINS MAY BE USED BY OR DISCLOSED TO ANY THIRD PARTY WITHOUT PRIOR WRITTEN CONSENT OF COMPAL ELECTRONICS, INC.

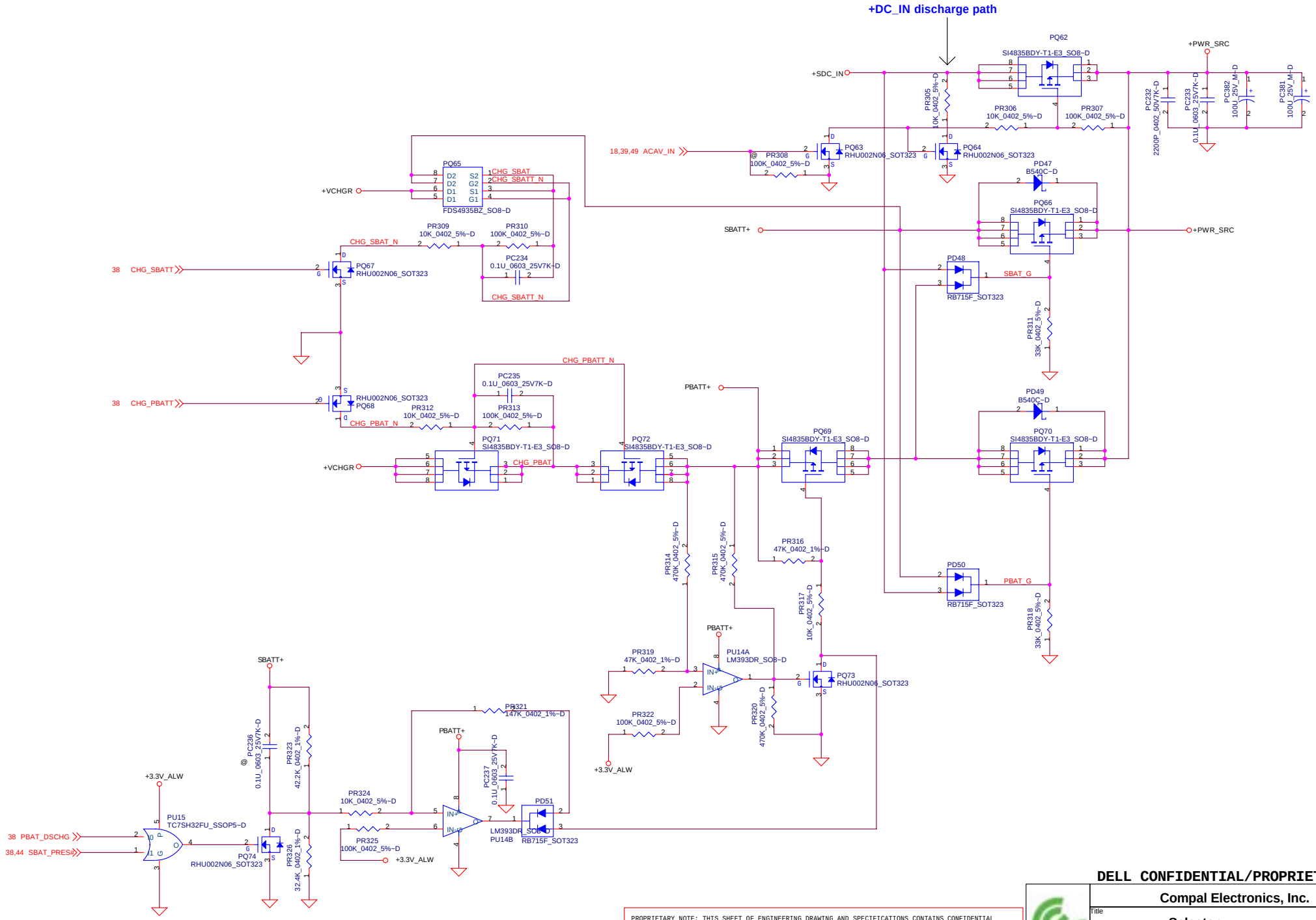

PROPRIETARY NOTE: THIS SHEET OF ENGINEERING DRAWING AND SPECIFICATIONS CONTAINS CONFIDENTIAL TRADE SECRET AND OTHER PROPRIETARY INFORMATION OF DELL INC. ("DELL") THIS DOCUMENT MAY NOT BE TRANSFERRED OR COPIED WITHOUT THE EXPRESS WRITTEN AUTHORIZATION OF DELL. IN ADDITION, NEITHER THIS SHEET NOR THE INFORMATION IT CONTAINS WAY BE USED BY OR DISCLOSED TO ANY THIRD PARTY WITHOUT DELL'S EXPRESS WRITTEN CONSENT.

DELL CONFIDENTIAL/PROPRIETARY

Compal Electronics, Inc.

Title	**Selector**	
Size	Document Number **LA-3301P**	Rev 0.0
Date: Wednesday, February 28, 2007	Sheet 50 of 58	

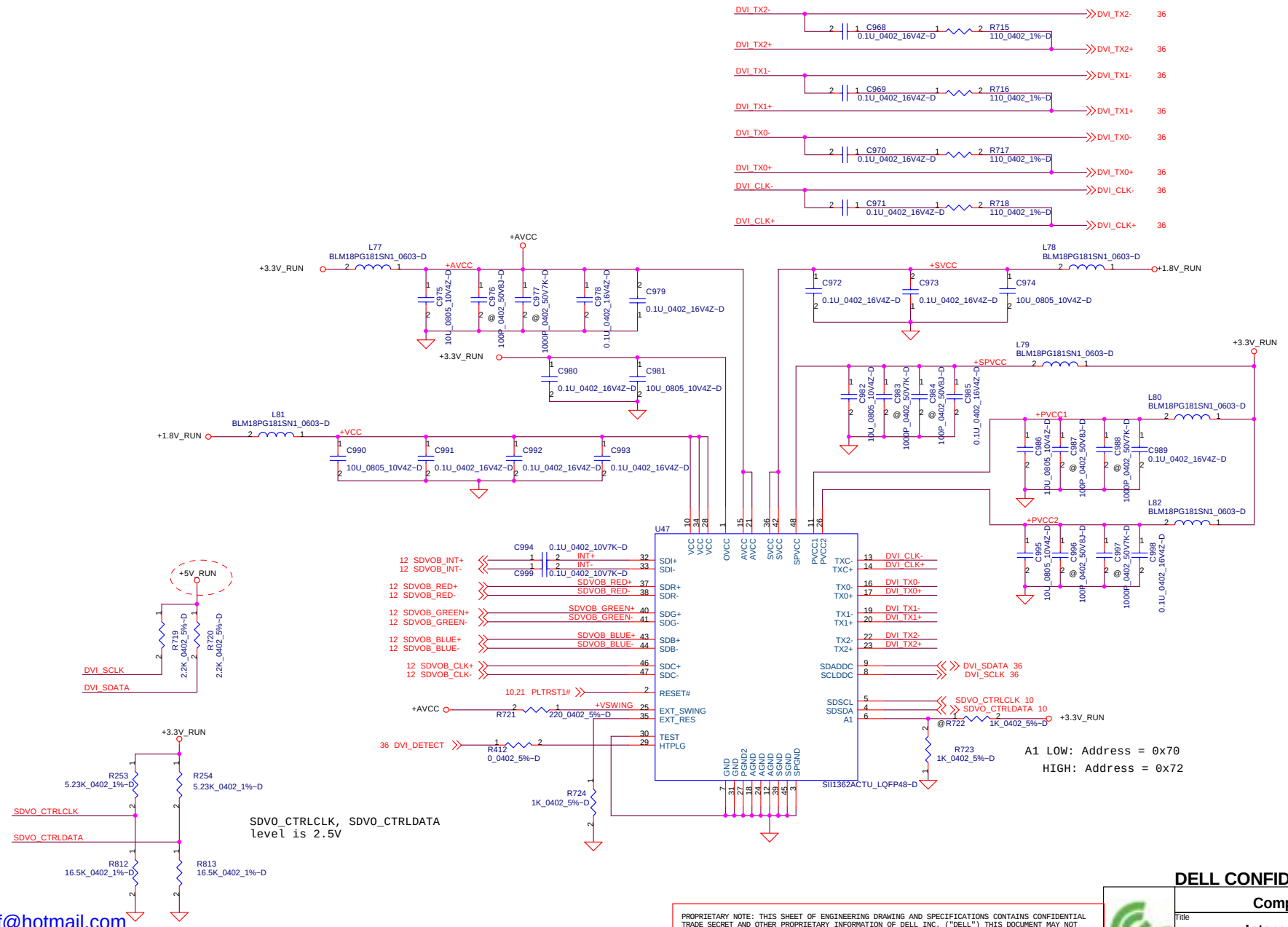

hexainf@hotmail.com
GRATIS - FOR FREE

PROPRIETARY NOTE: THIS SHEET OF ENGINEERING DRAWING AND SPECIFICATIONS CONTAINS CONFIDENTIAL TRADE SECRET AND OTHER PROPRIETARY INFORMATION OF DELL INC. ("DELL") THIS DOCUMENT MAY NOT BE TRANSFERRED OR COPIED WITHOUT THE EXPRESS WRITTEN AUTHORIZATION OF DELL. IN ADDITION, NEITHER THIS SHEET NOR THE INFORMATION IT CONTAINS WAY BE USED BY OR DISCLOSED TO ANY THIRD PARTY WITHOUT DELL'S EXPRESS WRITTEN CONSENT.

DELL CONFIDENTIAL/PROPRIETARY

Compal Electronics, Inc.

Title: Internal LVDS

Size | Document Number: LA-3301P | Rev: 1.0

Date: Monday, February 26, 2007 | Sheet 51 of 58

Version Change List (P. I. R. List)

Item	Page#	Title	Date	Request Owner	Issue Description	Solution Description	Rev.
1	38	HW	08/2/2006	Compal	BID change to X01	Pop R108, depop R106	X01
2	18	HW	08/10/2006	Compal	Change SOT23 package to SOT323 package	Change Q102, to SOT323 package	X01
3	7	HW	08/21/2006	Compal	BITS issue WI86517 (S5 state back driver issue)	Change R324 pin1 connect from +3.3V_ALW to +3.3V_SUS	X01
4	41	HW	08/21/2006	Compal	Bits issue WI84312 (Derating issue)	Change R151 from 30 ohm to 75 ohm	X01
5	23	HW	08/21/2006	Compal	Bits issue WI86509	Populate R761 and change value from 100k to 10k. Change R761 pin1 connect from +3.3V_ALW to +3.3V_SUS	X01
6	12	HW	08/21/2006	Compal	Bits issue WI86510	Remove R390, R393. Connect LCTLA_CLK and LCTLB_DATA to GND	X01
7	39	HW	08/21/2006	Compal	Bits issue WI86511	Add R401 (100K) for signal BC_DAT pull up to +3.3V_ALW	X01
8	37	HW	08/21/2006	Compal	Bits issue WI86512	Change R131 to no-stuff and from 4.7k to 100k per SMSC	X01
9	23	HW	08/21/2006	Compal	Bits issue WI86516	R509 PU for SIO_EXT_SMI# change from +3.3V_ALW to +3.3V_SUS to prevent backdrive through the ICH in S4/S5	X01
10	38,39	HW	08/21/2006	Compal	Bits issue WI86518	Swap PSID GPIO from ECE5018 pin 71 with MEC5025 ITP_DBRESET#/HDT_RESET# pin 55	X01
11	38,39	HW	08/21/2006	Compal	Bits issue WI86531	Move BEEP (ECE5018 GPIOB[6]) to SGPIO46 of MEC5025	X01
12	18	HW	08/21/2006	Compal	Bits issue WI86752	Change pull-up rail for R773 from +5V_SUS to +3.3V_SUS	X01
13	21	HW	08/30/2006	Compal	Bits issue WI86530	Move SB_NB_PCIE_RST# to GPIO4/PIRQG# pinF12 per M08 design, add R631 (20K ohm) for pull down	X01
14	21	HW	09/7/2006	Compal	Bits issue WI86529	Move SB_WLAN_PCIE_RST# to GPIO3/PIRQF# U32 pin G11 per M08 direction, add test point T1 on pin F18	X01
15	39	HW	09/7/2006	Compal	Bits issue WI86376. Due to increase in number of payloads the BIOS is carrying	Change U23 from (ST M25P80 8M bit) to) MXIC MX25L1605AM2C 16M bit)	X01
16	43	HW	09/11/2006	Compal	Bits issue WI90535	Change Q5 to MMBT3906WT1G, R15 to 150 ohm. Add R638 on LED_WLAN_OUT# pull up to +3.3V_WLAN. Add R639 (10K ohm) in series on LED_WLAN_OUT#	X01
17	7	HW	09/14/2006	Compal	Briscoe ESD/EMI Improvement Requests on PT	Remove ITP port and just keep ITP test point	X01
18	43	HW	09/14/2006	Compal	Bits issue WI90709	Remove R73, R178, C192, and C193	X01
19	34	HW	09/14/2006	Compal	Bits issue WI90705	Add SMBus isolation circuit for WLAN, R640,R645,R660,R662,Q45,Q46	X01
20	34	HW	09/14/2006	Compal	Bits issue WI90691	JMINI1 connect to +3.3V_RUN. Removed C427	X01
21	12	HW	09/14/2006	Compal	Shunt caps on LVDS for improving WWAN	Add C181,C192,C193,C196,C207,C209,R667,R685,R686, R687,R688 cross LVDS signals	X01
22	27	HW	09/14/2006	Compal	Bits issue WI90516	Remove C759 from mic amp bias circuit	X01
23	26	HW	09/14/2006	Compal	Bits issue WI90487	Populate R541to cut BEEP level in half	X01
24	43	HW	09/14/2006	Compal	Bits issue WI89631	populate EMI Clips Clip1, Clip2, Clip3, Clip4, Clip5, Clip6	X01

PROPRIETARY NOTE: THIS SHEET OF ENGINEERING DRAWING AND SPECIFICATIONS CONTAINS CONFIDENTIAL TRADE SECRET AND OTHER PROPRIETARY INFORMATION OF DELL INC. ("DELL") THIS DOCUMENT MAY NOT BE TRANSFERRED OR COPIED WITHOUT THE EXPRESS WRITTEN AUTHORIZATION OF DELL. IN ADDITION, NEITHER THIS SHEET NOR THE INFORMATION IT CONTAINS WAY BE USED BY OR DISCLOSED TO ANY THIRD PARTY WITHOUT DELL'S EXPRESS WRITTEN CONSENT.

Version Change List (P. I. R. List)

Item	Page#	Title	Date	Request Owner	Issue Description	Solution Description	Rev.
25	23	HW	09/14/2006	Compal	Bits issue WI89409	No stuff R516, add R690 (8.2K ohm) for pull up ICH8 pin AF22 to +3.3V_SUS	X01
26	25	HW	09/14/2006	Compal	Bits issue WI89407	Add Q68, Q69, R691, R692 for HDDC_EN and MODC_EN circuits	X01
27	41	HW	09/14/2006	Compal	Bits issue WI89394	Change connect R765 pin1, R623 pin1, R621 pin1, R766 pin1 from +5V_ALW to +5V_ALW2	X01
28	37,39	HW	09/14/2006	Compal	Bits issue WI89379	Change R387,R389 from 1M to 2.7K. Add R778,R779 for AUX_ON,AC_OFF	X01
29	34	HW	09/15/2006	Compal	Bits issue WI90698	No stuff C16	X01
30	39	HW	09/15/2006	Compal	Bits issue WI92249	Change R730 from 100K to 4.7K ohm	X01
31	34	HW	09/15/2006	Compal	Bits issue WI92288,WI90714	R660 and R662 connected to CLK_SCLK and CLK_SDATA.	X01
32	37,22, 33,28, 19,20	HW	09/15/2006	Compal	EMI solutions	Populate RS232 C152,153,154,155,156,157,158,159. Resume ICH_AZ_MDC_BITCLK C656,R123,C128. Add R790,R791,C232, C267. Change L63,L65 from 0603size to 0805size. Add C309,C316 for LOM. Add C427,C463 for LVDS. Add fuse F3, R792 for CRT. Populate C660, R545 (10 ohm),C721 (10P)	X01
33	23,36	HW	09/18/2006	Compal	Bits issue WI92298	Move SIO_EXT_SCI# from to ICH8 GPIO11/SMBALERT# pin AG22 to GPO12 pin AC19. Remove D22 and R761 and net DOCK_DET#	X01
34	23	HW	09/18/2006	Compal	Bits issue WI92299	ICH8 Pin AG22 tie to LOM_ICH_SMBALERT#. Add R793 (0 ohm) series on LOM_ICH_SMBALERT# and LOM_SMB_ALERT#. Change R730 pull up rail from +3.3V_ALW to +3.3V_LAN. Add R807 pull up to +3.3V_SUS for LOM_ICH_SMBALERT#	X01
35	39	HW	09/18/2006	Compal	Bits issue WI92301	Move ALW_PWRGD_3V_5V from MEC5025 pin 18 to MEC5025 pin 29. Remove 3.3V_5V_SUS_PWRGD from MEC5025 pin 29	X01
36	38,39	HW	09/18/2006	Compal	Bits issue WI92305	Swap DOCK_SMB_PME and DOCK_SMB_ALERT# from MEC5025 pin3 and ECE5028 pin76	X01
37	39,42	HW	09/18/2006	Compal	Bits issue WI92308	Removed 3.3V_LAN_PWRGD from MEC5025 KSO15/GPIO5. Remove U52,Q83,D29,R89,R98,R381,C784,C182,C183,C184	X01
38	39	HW	09/18/2006	Compal	Bits issue WI92312	Add R795 (0 ohm) pull down for MEC5025 pin 14	X01
39	29	HW	09/19/2006	Compal	EMI issue	Populate R671~R678 and C866~C869. Change L69~L76 from 24NH to 36NH inductor	X01
40	27	HW	09/19/2006	Compal	Bits issue WI90510	Add R796,R797 (0ohm) between L47/L48 and C728/C730	X01
41	6	HW	09/20/2006	Compal	Bits issue WI93162	NC JITP pin 1,2,3,5,7,11,12,13,15,17,19,21,23. Add test point T47~T52 for ITP_BPM#0~ITP_BPM#5. Remove R322	X01
42	28	HW	09/20/2006	Compal	Bits issue WI92858	Change R669 to from 1.15K to 1.13K. Depop C771 & C772. Change C861 and C862 to 22pF	X01
43	38	HW	09/20/2006	Compal	Bits issue WI92857	Add no-stuff series 0-ohm for ITP_DBRESET# on ECE5028	X01
44	19	HW	09/20/2006	Compal	WWAN noise issue	Add R808,R809,R810,R811 series for LCD_DDCCLK, LCD_DDCDATA, LCD_SMBCLK, LCD_SMBDAT	X01
45	33	HW	09/21/2006	Compal	Bits issue WI93157	Remove R586 and make JMDC pin2 NC	X01

hexainf@hotmail.com
GRATIS - FOR FREE

PROPRIETARY NOTE: THIS SHEET OF ENGINEERING DRAWING AND SPECIFICATIONS CONTAINS CONFIDENTIAL TRADE SECRET AND OTHER PROPRIETARY INFORMATION OF DELL INC. ("DELL") THIS DOCUMENT MAY NOT BE TRANSFERRED OR COPIED WITHOUT THE EXPRESS WRITTEN AUTHORIZATION OF DELL. IN ADDITION, NEITHER THIS SHEET NOR THE INFORMATION IT CONTAINS WAY BE USED BY OR DISCLOSED TO ANY THIRD PARTY WITHOUT DELL'S EXPRESS WRITTEN CONSENT.

Version Change List (P. I. R. List)

Item	Page#	Title	Date	Request Owner	Issue Description	Solution Description	Rev.
46	34	HW	09/21/2006	Compal	Bits issue WI93158	Depop Q45, Q46	X01
47	51	HW	09/22/2006	Compal	Bits issue WI93586	Add R812,R813 (9.09K ohm) and chagne R253,R254 to 2.94K ohm for SDVO_CTRLCLK /DAT voltage divider	X01
48	6	HW	09/25/2006	Compal	Bits issue WI93403	C484 change to 33pF, C861/C862 change to 22pF	X01
49	29	HW	09/26/2006	Compal	Bits issue DF86424	No Populate C866-C869/R671-R678	X01
50	40	HW	09/26/2006	Compal	EMI request	Add D37-D40 for stick point signals	X01
51	32	HW	09/27/2006	Compal	EMI request	Add FUSE4,FUSE5	X01
52	18	HW	10/05/2006	Compal	Bits issue WI94892	Populate R771, C750, R772, Q102, R773	X01
53	30	HW	10/05/2006	Compal	Bits issue WI95910	Change R603 from 6.2k to 5.9k. Change C805 from 820pF to 270pF	X01
54	38,23 12,27,6	HW	10/05/2006	Compal	Bits issue WI95932	No stuff R227, R221, C89, C93, C97, c401, C92, r72, C90, C88. Change R369 to 3.3K 1%. No stuff C775-C781, C785. No stuff R514 (no iAMT). Populate R515.	X01
55	36	HW	10/14/2006	Dell	Bits issue WI97539	Added signal DOCK_DET# to JDOCKBpin137, pin205 and Q3pin2	X02
56	9	HW	10/17/2006	Dell	Bits issue WI97840	Add 0.1 uf (0402) caps on +Vcc_Core to Gnd. Four total, bottom of board. (C870 ~ C873)	X02
57	23	HW	10/18/2006	Dell	Bits issue WI98222 (Change for ASF2.0 due to ICH8M errata)	1. No stuff R502, R503 2. Connect the pad of R503.2 to the pad of R498.2 3. Connect the pad of R502.1 to the pad of R499.2	X02
58	38	HW	10/24/2006	Dell	Board ID Changed to X02	Populated R106, R107. Depopulated R108, R109.	X02
59	13	HW	10/27/2006	Dell	Bits issue WI100037. Intel CRT noise issue	Change L36 to 100 ohm resistor and change C722 to 22nF. Replace C569 with a 0603 1uF cap	X02
60	23	HW	10/30/2006	Dell	Bits issue WI100049	Add R816,C874 for USB_IDE#. R817,C875 for SIO_EXT_WAKE#. R819,C876 for PCIE_MCARD1_DET#. R820,C878 for USB_MCARD1_DET#. R818,C877 for USB_MCARD2_DET#. Remove net RSVD_GPIO6 and R513	X02
61	51	HW	11/2/2006	Dell	Bits issue WI100826	Change Change R812, R813 from 9.09K_1% to 13.7K_1%. Change R253, R254 from 2.94K_1% to 4.32K_1%	X02
62	28	HW	11/7/2006	Dell	Bits issue WI102451	Change L64,L66,L67,L68 from BLM18AG601SN1D to BK1608LM182. Change R668 to L88 BK1608LM182.Change L63, L65 from BLM21AG601SN1D to BK2125LM182. Chagne C850,C852,C856,C858 to 47pF caps. Change C849 to 1000pF. Populate C863, C864	X02
63	6,23,34	HW	11/8/2006	Dell	Bits issue WI103311	Change R309 from 8.2K to 2.2K. No stuff R820. No stuff R550	X02
64	2	HW	11/8/2006	Dell	Correct Block diagram	Correct block diagram	X02
65	39	HW	11/14/2006	Dell	Bits issue WI103986	Change C379 from 22pF to 33pF per KDS X'tal report	X02

PROPRIETARY NOTE: THIS SHEET OF ENGINEERING DRAWING AND SPECIFICATIONS CONTAINS CONFIDENTIAL TRADE SECRET AND OTHER PROPRIETARY INFORMATION OF DELL INC. ("DELL") THIS DOCUMENT MAY NOT BE TRANSFERRED OR COPIED WITHOUT THE EXPRESS WRITTEN AUTHORIZATION OF DELL. IN ADDITION, NEITHER THIS SHEET NOR THE INFORMATION IT CONTAINS WAY BE USED BY OR DISCLOSED TO ANY THIRD PARTY WITHOUT DELL'S EXPRESS WRITTEN CONSENT.

Version Change List (P. I. R. List)

Item	Page#	Title	Date	Request Owner	Issue Description	Solution Description	Rev.
89	19	HW	2/28/2007	Compal	Bits issue WI125145.DPST enablement for UMA	Populate R156 (0_0402_5%)	A00
90	39	HW	3/1/2007	Compal	Bits issue WI125577	Populate R92. Depop R93	A00
91	13	HW	3/1/2007	Compal	Bits issue WI125883	Add note "C533,C534,C536,C545,C553,C579 are being replaced by 0-ohm 0805 resistor" on page 13	A00
92	18	HW	3/7/2007	Compal	Bits issue WI127297	Populate R441	A00
93	27	HW	3/7/2007	Dell	Bits issue WI127300	Change U40 from 74AHC1G08 to 74AHCT1G08	A00

hexainf@hotmail.com
GRATIS - FOR FREE

PROPRIETARY NOTE: THIS SHEET OF ENGINEERING DRAWING AND SPECIFICATIONS CONTAINS CONFIDENTIAL TRADE SECRET AND OTHER PROPRIETARY INFORMATION OF DELL INC. ("DELL") THIS DOCUMENT MAY NOT BE TRANSFERRED OR COPIED WITHOUT THE EXPRESS WRITTEN AUTHORIZATION OF DELL. IN ADDITION, NEITHER THIS SHEET NOR THE INFORMATION IT CONTAINS WAY BE USED BY OR DISCLOSED TO ANY THIRD PARTY WITHOUT DELL'S EXPRESS WRITTEN CONSENT.

Version Change List (P. I. R. List)

Item	Page#	Title	Date	Request Owner	Issue Description	Solution Description	Rev.
66	25,41	HW	11/20/2006	Compal	Bits issue WI105207	Change net name from +5V_ALW2 to +3.3V_ALW2 at R618.1, R626.1, R623.1, R621.1, R766.1, R765.1	X03
67	38,39	HW	11/21/2006	Dell	Bits issue WI105754	Change R794 pin1 from +5V_ALW to +3.3V_ALW. Change R245 pin1 from +3.3V_ALW to +5V_ALW	X03
68	26	HW	11/21/2006	Dell	Bits issue WI105758. Updates for potential Back Drive	Add 100kohm resistor R721 between U35 pin 40 and +3.3V_RUN and 1000pF cap C759	X03
69	51	HW	12/1/2006	Dell	Bits issue WI100826	Change R253, R254 from 2.94K_1% to 5.23K_1%. Change R812, R813 from 9.09K_1% to 16.5K_1%	X03
70	21,23,34	HW	12/1/2006	Dell	Bits issue WI106999	Please populate R820 with a 4.7k-ohm resistor. Move signal PCIE_MCARD2_DET# from ICH8m GPIO20 pinAE11 to PIRQH#/GPIO5 pinB3. Delete R457 and net ICH_GPIO5_PIRQH#. Populate R550	X03
71	41	HW	12/1/2006	Dell	Bits issue WI107466. +2.5V_LAN in-rush current test fai.	Populate C208	X03
72	27	HW	12/6/2006	Dell	Bits issue WI107896	Change R554 from 10K to 0 ohm	X03
73	36,38	HW	12/6/2006	Dell	Bits issue WI108259. Per M08 GPIO map rev A15 Change list	Change net DOCK_SMB_PME to DOCK_SMB_PME#	X03
74	9	HW	12/6/2006	Dell	Bits issue WI108223	Change C177,C179,C178,C366,C338,C365 to EEFSX0D221E7 220uF	X03
75	38	HW	12/11/2006	Dell	Change Board ID from X02 to X03	Populate R108, Depop R106	X03
76	39	HW	12/14/2006	Dell	Bits issue WI110179	Add EC_FLASH_PAD pin1 connect to +3.3V_ALW,pin2 connect to R76 pin1 and R80 pin1	X03
77	27	HW	12/15/2006	Dell	Bits issue WI110158	Add R822 (1M_0402) from Pin 10 (C1P) pin of MAX9789A to ground	X03
78	13,14	HW	12/15/2006	Dell	Bits issue WI109712	Change C544,C560,C615,C551,C564,C593 to X6S SPEC	X03
79	26	HW	12/18/2006	Dell	Bits issue WI110749	Add R823 (10K_0402) to ground on pin 47 of STAC9205 (U37)	X03
80	29	HW	12/20/2006	Dell	Bits issue WI111288	Change R683 from 150ohms to 110 ohms, R684from 150ohms to 200ohms	X03
81	12,23 28	HW	12/25/2006	Dell	Change AC Coupling Cap SPEC for PCIE	Change C500~C507,C664,C666~C670,C851,C853,C994,C999 from 0.1uF Y5V to 0.1uF X7R	X03
82	38	HW	1/26/2007	Dell	Bits issue WI115658. M08 GPIO map rev A16 change	Change ECE5028 GPIOF4 from BID2 to CHIPSET_ID.	A00
83	38	HW	1/26/2007	Dell	Change BID to from X03 to A00	Depop R107,R108. Populate R106,R109	A00
84	23	HW	2/12/2007	Dell	Bits issue WI121957	Add R834 (1M_0402_1%) for ICH_LAN_RST#	A00
85	27	HW	2/12/2007	Dell	Bits issue WI121438	Change R565 from 10K to 100k ohm	A00
86	41	HW	2/12/2007	Dell	Bits issue DF116813	Depop C194, changed C815 from 4700pF to 2200pF	A00
87	13	HW	2/27/2007	Dell	Bits issue WI109712. Because can't find 2nd source	Change C560 and (C615, C551, C564) Back to X5R	A00
88	23	HW	2/27/2007	Dell	Bits issue WI125173. Per Intel's latest recommendation	Change R834 from 1M to 10K	A00

PROPRIETARY NOTE: THIS SHEET OF ENGINEERING DRAWING AND SPECIFICATIONS CONTAINS CONFIDENTIAL TRADE SECRET AND OTHER PROPRIETARY INFORMATION OF DELL INC. ("DELL") THIS DOCUMENT MAY NOT BE TRANSFERRED OR COPIED WITHOUT THE EXPRESS WRITTEN AUTHORIZATION OF DELL. IN ADDITION, NEITHER THIS SHEET NOR THE INFORMATION IT CONTAINS WAY BE USED BY OR DISCLOSED TO ANY THIRD PARTY WITHOUT DELL'S EXPRESS WRITTEN CONSENT.

Version Change List (P. I. R. List)

Item	Page#	Title	Date	Request Owner	Issue Description	Solution Description	Rev.
1	48/50	PWR	9/14	Elick	change the AL CAP to 2000hr	change PC380 from SF10004M08L to SF000000S8L. change PC381 from SF10004M08L to SF000000S8L. change PC382 from SF10004M08L to SF000000S8L.	0.1
2	45	PWR	9/14	DELL	BITS-WI91007 change to correct part for 15ALW.	change PD55 from SCSB717F08L to SCS00001U8L. change PD56 from SCSB717F08L to SCS00001U8L.	0.1
3	48	PWR	9/14	DELL	change to PSL of DELL	change PH2 from SL20000030L to SL200000F8L	0.1
4	44	PWR	9/14	DELL	change to PSL of DELL	change PL1 from SM01001680L to SM010008U0L.	0.1
5	44	PWR	9/14	DELL	change to PSL of DELL	change PL2 from SM01001418L to SM010009C8L. change PL34 from SM01001418L to SM010009C8L.	0.1
6	46	PWR	9/14	DELL	BITS-WI89364 The 0.9V_DDR_VTT_PWRGD net is not used at the MEC5025. The 0.9V_DDR_VTT_PWRGD net should be no connect at the MEC5025 pin 73.	remove PR437, PR438, PR441, PQ93 and PQ94.	0.1
7	45	PWR	9/14	DELL	BITS-WI90985 following DELL rule	Change PC285 pin 2 pad connection from PGND to AGND.	0.1
8	45	PWR	9/14	DELL	BITS-WI90999 Change PQ83 from FDS8880 to BSC079N03SG PPAK	Change PQ83 from SB000004U8L to SB000004D8L.	0.1
9	45	PWR	9/14	DELL	BITS-WI91012 change to correct current limits	Change PR383 from 124k(SD03412438L) to 150K(SD03415038L). Change PR382 from 187k(SD03418738L) to 226K(SD03422638L).	0.1
10	47	PWR	9/14	DELL	BITS-WI91287 following DELL rule	Depopulate PR415 and PR416 resistors.	0.1
11	47	PWR	9/14	DELL	BITS-WI91288 Change PQ86 from SI4392DY to SI4682DY.	change PQ86 from SB54392008L to SB000006N0L	0.1
12	49	PWR	9/14	DELL	BITS-WI91291 be compliant with the reference schematic.	Change PR274 from 4.7 ohm(SD000006T8L) to 33 ohm(SD014330A8L). Populate PR373 and PD54.	0.1
13	47	PWR	9/14	DELL	BITS-WI91374 following DELL rule	Change PR408 from 75K(SD03475028L) to 82.5K(SD00000278L).	0.1
14	46	PWR	9/14	DELL	BITS-WI91672 Change in 1.25V_RUN_PWRGD circuit.	Change the node name connected to pin 2 of PR431from +3.3V_ALW to +3.3V_SUS. Depopulate PR431.	0.1
15	44	PWR	9/14	DELL	BITS-WI91689 DC IN schematic changes.	Change PL1 from SM01001680L to SM010008U0L. Change PQ100 from SI2301BDS(SB923010020) to PQ100A depopulated IMD2A(SB000009N8L). Change PQ101 from SI2301BDS(SB923010020) to PQ100B depopulated IMD2A(SB000009N8L). Change PR12 from 10K,0603(SD01310028L) to 4.7K,0805(SD00247018L).	0.1

hexainf@hotmail.com
GRATIS - FOR FREE

PROPRIETARY NOTE: THIS SHEET OF ENGINEERING DRAWING AND SPECIFICATIONS CONTAINS CONFIDENTIAL TRADE SECRET AND OTHER PROPRIETARY INFORMATION OF DELL INC. ("DELL") THIS DOCUMENT MAY NOT BE TRANSFERRED OR COPIED WITHOUT THE EXPRESS WRITTEN AUTHORIZATION OF DELL. IN ADDITION, NEITHER THIS SHEET NOR THE INFORMATION IT CONTAINS WAY BE USED BY OR DISCLOSED TO ANY THIRD PARTY WITHOUT DELL'S EXPRESS WRITTEN CONSENT.

Version Change List (P. I. R. List)

Item	Page#	Title	Date	Request Owner	Issue Description	Solution Description	Rev.
16	46	PWR	9/15	DELL	BITS-WI92156 correct the current limit on 1.25V output	change PR425 from 39.2K(SD03439228L) to 51.1K (SD03451128L)	0.1
17	46	PWR	9/15	DELL	BITS-WI91655 Add 0.1uF connected to the pins 1 and 2 of PU24	Add PC410(SE042104K8L). One pad connected to the pins 1 and 2 of PU24 . The other pad is connected to PGND.	0.1
18	46	PWR	9/15	DELL	BITS-WI91929 correct the current limit on 1.8V output	change PR426 from 110K(SD03411038L) to 130K (SD03413038L)	0.1
19	48	PWR	9/18	DELL	BITS-WI92465 improve transients at load dump. and reduce jittering.	Add depopulate PR516(SD03410018L) and depopulate PC413(SE076103K8L) between pin 9 of PU11 and AGND. Add depopulated PC411(SE075472K8L),4700pF between pin 14 of PU11 and AGND . Add depopulated PC412(SE075472K8L),4700pF between pin 15 of PU11 and AGND	0.1
20	44	PWR	9/21	DELL	BITS-WI91689 change PL1 from BK1608HM to BLM18BD102SN1D.	change PL1 from SM010008U0L to SM010007C8L.	0.1
21	48/50	PWR	9/21	DELL	BITS-WI87563 change populate PC380 from 25CE100AX to 25CE100LS change PC381 from 25CE100AX to 25CE100LS change PC382 from 25CE100AX to 25CE100LS	change populate PC380 from SF000000S8L to SF000000T8L. change PC381 from SF000000S8L to SF000000T8L. change PC382 from SF000000S8L to SF000000T8L.	0.1
22	49	PWR	9/29	DELL	match Maxim's response time of ICM input to comparator.	change PR361 from 0 Ohm (SD02800008L) to 8.45K (SD00000068L). change PC254 from 0.01uF 25V (SE068103K8L) to 0.1uF 16V (SE076104K8L).	0.1
23	49	PWR	9/29	DELL	ICM is voltage source and does not need this component.	depopulate PR150.	0.1
24	49	PWR	9/29	DELL	Increase BW from 20kHz to 25kHz while maintaining 80degrees phase margin.	change PR148 from 4.7K (SD03447018L) to 10K (SD03410028L).	0.1
25	49	PWR	9/29	DELL	following DELL rule	depopulate PD54 and PR373	0.1
26	48	PWR	10/27	DELL	Add bead to connect +PWR_SRC to +CPU_PWR_SRC	Add PL44(SM01002078L) to parallel PJP30.	0.2
27	45,46,47	PWR	10/27	DELL	BITS-WI99902 This is to add an optional ultrasonic mode in case the regulators experience an audible noise.	Add PR517(SD02800008L) between pin 29 of PU20 and AGND . Add PR518(SD02800008L) between pin 29 of PU22 and AGND . Add PR519(SD02800008L) between pin 29 of PU21 and AGND .	0.2
28	46	PWR	10/31	DELL	BITS-WI100140 Change PR429 from 0 ohm to 1 ohm	change PR429 from 0 Ohm (SD01300008L) to 1 Ohm(SD013100B8L).	0.2

PROPRIETARY NOTE: THIS SHEET OF ENGINEERING DRAWING AND SPECIFICATIONS CONTAINS CONFIDENTIAL TRADE SECRET AND OTHER PROPRIETARY INFORMATION OF DELL INC. ("DELL") THIS DOCUMENT MAY NOT BE TRANSFERRED OR COPIED WITHOUT THE EXPRESS WRITTEN AUTHORIZATION OF DELL. IN ADDITION, NEITHER THIS SHEET NOR THE INFORMATION IT CONTAINS WAY BE USED BY OR DISCLOSED TO ANY THIRD PARTY WITHOUT DELL'S EXPRESS WRITTEN CONSENT.

Version Change List (P. I. R. List)

Item	Page#	Title	Date	Request Owner	Issue Description	Solution Description	Rev.
29	49	PWR	11/16	DELL	BITS: WI102613 Change PR148 from 10K_0402_1% to 2.2K_0402_5%	change PR148 from 10K 0402 1% (SD03410028L) to 2.2k 0402 5%(SD02822018L)	0.3
30	45	PWR	11/20	DELL	BITS-WI105401 Add node name +3.3V_ALW2 for the trace connected to the pin 5 (VREF3) of PU20. Populate PC285 with 0.1uF cap.	Add node name +3.3V_ALW2 between pin5 of PU20 and PC285. Populate PC285.	0.3
31	49	PWR	12/06	DELL	BITS-WI106278 make sure that PC113, PC114 and PC379 are X5R/X75 caps, need to stuff PC379.	change PC379 is populated.	0.3
32	48	PWR	12/06	DELL	BITS-WI108223 Change PC187 from 10nF to 15nF. Change PR258 from 2.21K to 1.69K. Populate PR516 with 1K resistor. Populate C413 with 0.01uF.	change PR187 from 10nF(SE076103K8L) to 15nF(SE076153K8L). change PR258 from 2.21K(SD03422118L) to 1.69K(SD00000JB8L). populate PC413. populate PR516.	0.3
33	49	PWR	01/25	ELICK	change to new part number for PSL	change PR138 from SD021100D8L to SD021100D3L(S RES 1W .01 +-1% 2512 FOR M08 PROJECTS) change PR145 from SD021100D8L to SD021100D3L(S RES 1W .01 +-1% 2512 FOR M08 PROJECTS)	0.4
34	45/47	PWR	02/05	DELL	BITS-WI119945 Increase current limits for 3.3V and 1.5V regulators.	change PR382 from 226K to 267k (SD02822018L). Change PR408 from 82.5K to 100K(SD03410038L).	0.4
35	49	PWR	02/06	DELL	additional 1206 resistor on +VCHGR for Maxim solution.	add an unpopulation PR520 (1.8K 1206 1%(SD00000JN8L))between +VCHGR to PGND.	0.4
36	49	PWR	02/12	DELL	delete 1206 resistor on +VCHGR not to implement for Maxim solution.	delete an unpopulate PR520 (1.8K 1206 1%(SD00000JN8L))between +VCHGR to PGND.	0.4

delete
not to

hexainf@hotmail.com
GRATIS - FOR FREE

PROPRIETARY NOTE: THIS SHEET OF ENGINEERING DRAWING AND SPECIFICATIONS CONTAINS CONFIDENTIAL TRADE SECRET AND OTHER PROPRIETARY INFORMATION OF DELL INC. ("DELL") THIS DOCUMENT MAY NOT BE TRANSFERRED OR COPIED WITHOUT THE EXPRESS WRITTEN AUTHORIZATION OF DELL. IN ADDITION, NEITHER THIS SHEET NOR THE INFORMATION IT CONTAINS WAY BE USED BY OR DISCLOSED TO ANY THIRD PARTY WITHOUT DELL'S EXPRESS WRITTEN CONSENT.