Ref. No. 4019
Aug, 2007

Integra SERVICE MANUAL

AV RECEIVER
MODEL DTR-6.8

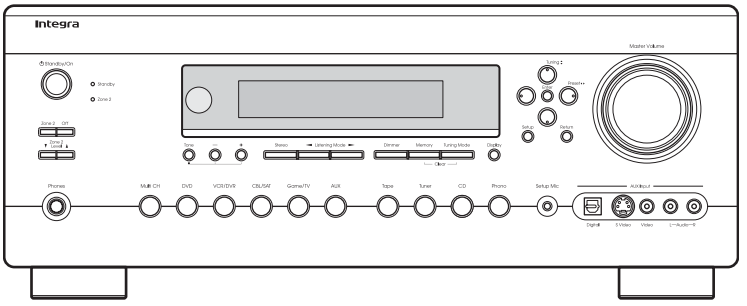

RC-694M

Black model

B MDD	120V AC, 60Hz
B MMA	220V~240V AC, 50Hz

SAFETY-RELATED COMPONENT WARNING!!

COMPONENTS IDENTIFIED BY MARK ⚠ ON THE SCHEMATIC DIAGRAM AND IN THE PARTS LIST ARE CRITICAL FOR RISK OF FIRE AND ELECTRIC SHOCK. REPLACE THESE COMPONENTS WITH ONKYO PARTS WHOSE PART NUMBERS APPEAR AS SHOWN IN THIS MANUAL.
MAKE LEAKAGE-CURRENT OR RESISTANCE MEASUREMENTS TO DETERMINE THAT EXPOSED PARTS ARE ACCEPTABLY INSULATED FROM THE SUPPLY CIRCUIT BEFORE RETURNING THE APPLIANCE TO THE CUSTOMER.

EXPLODED VIEWS-1

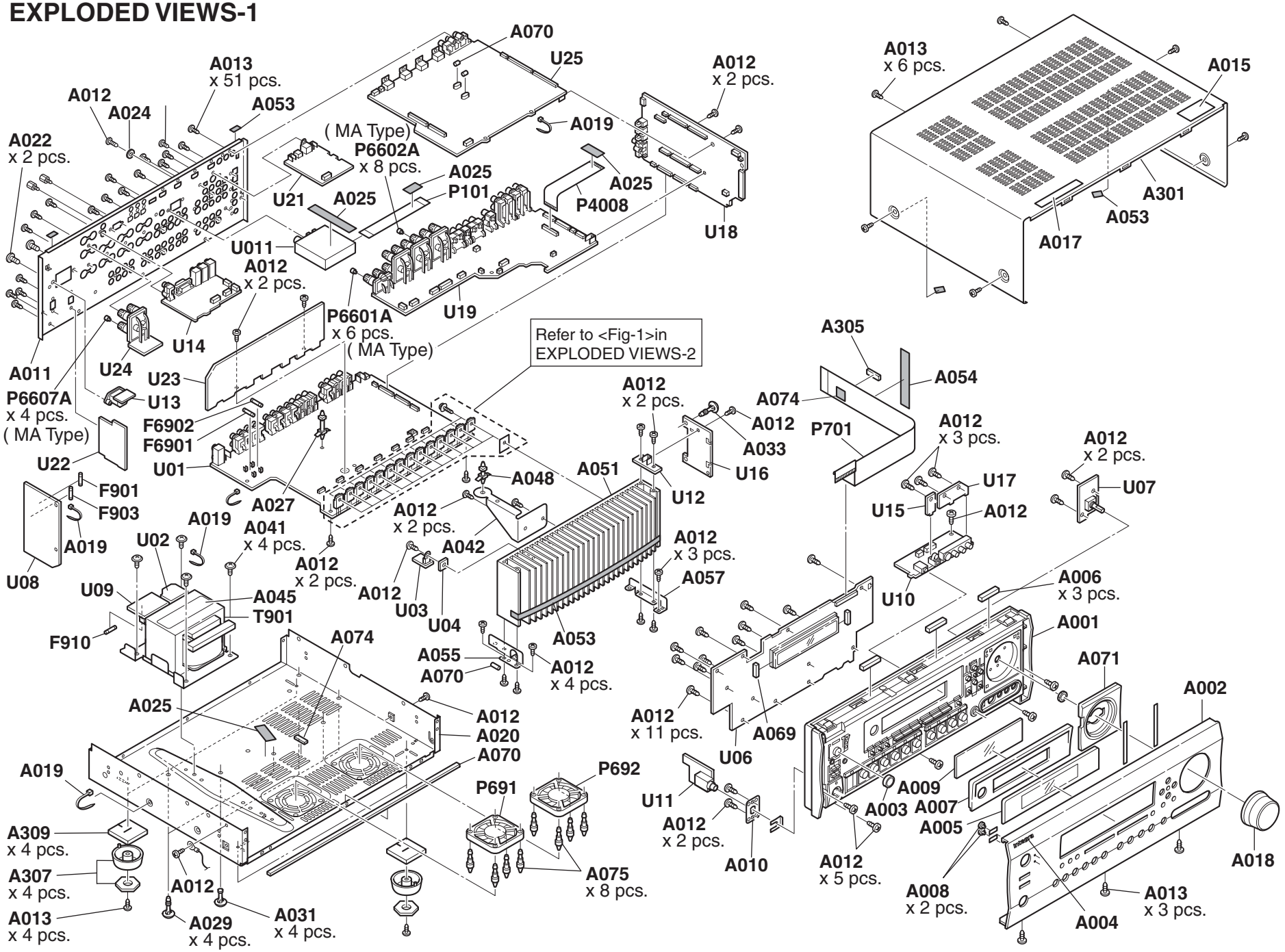

EXPLODED VIEWS-2

<Fig-1>

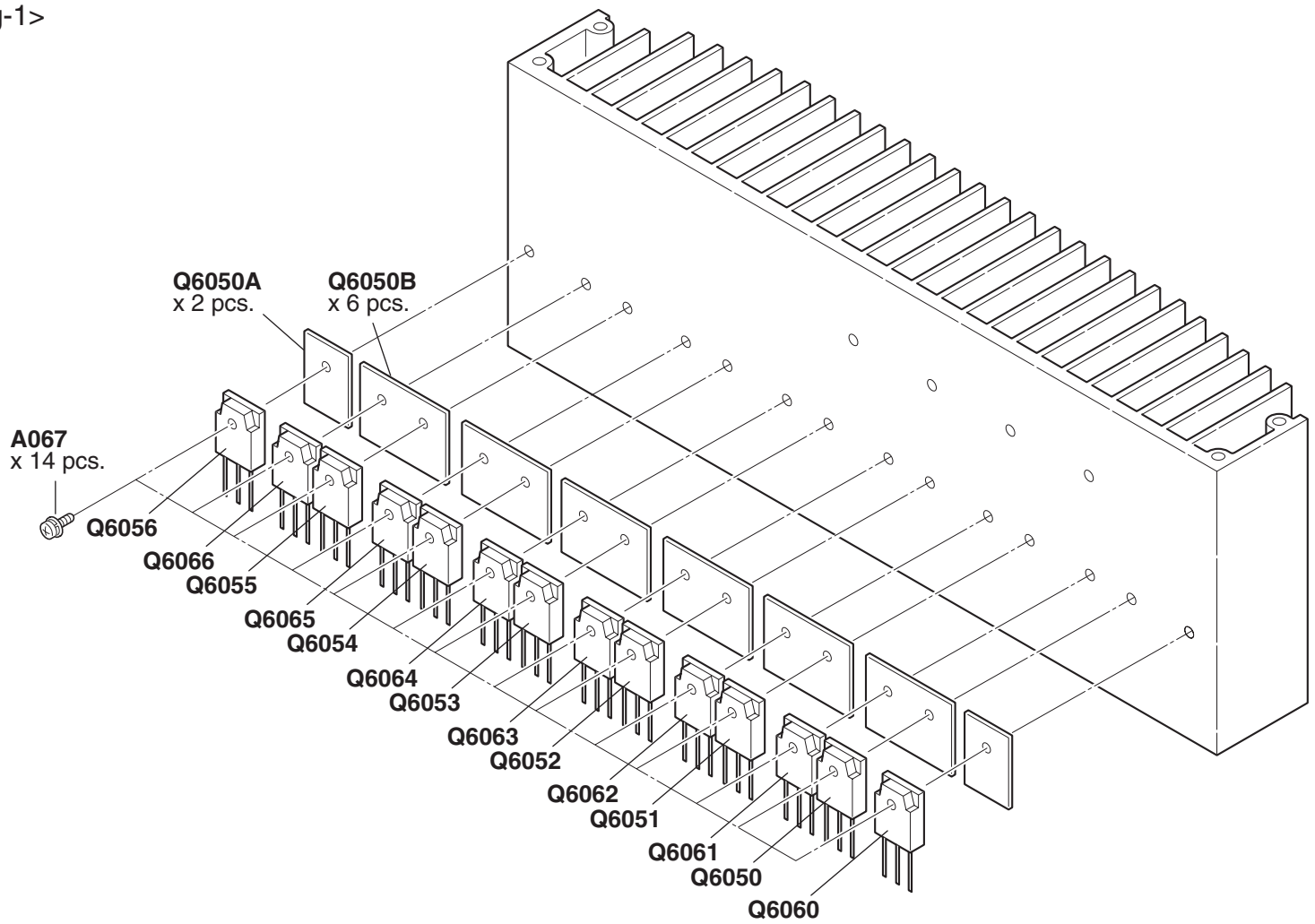

DTR-6.8

BLOCK DIAGRAMS-1

AUDIO SECTION

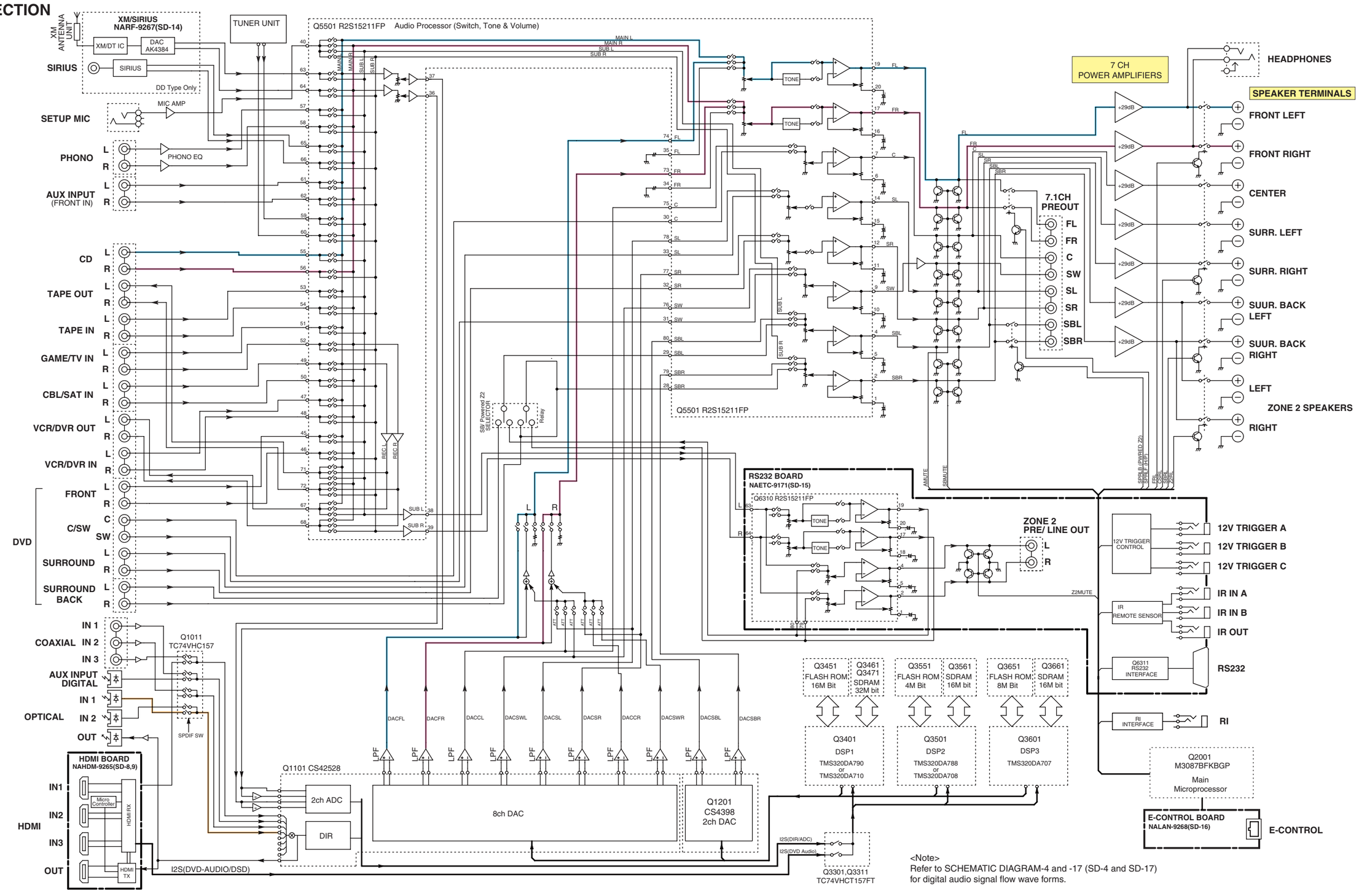

<Note>
Refer to SCHEMATIC DIAGRAM-4 and -17 (SD-4 and SD-17) for digital audio signal flow wave forms.

BLOCK DIAGRAMS-2
VIDEO AND HDMI SECTION

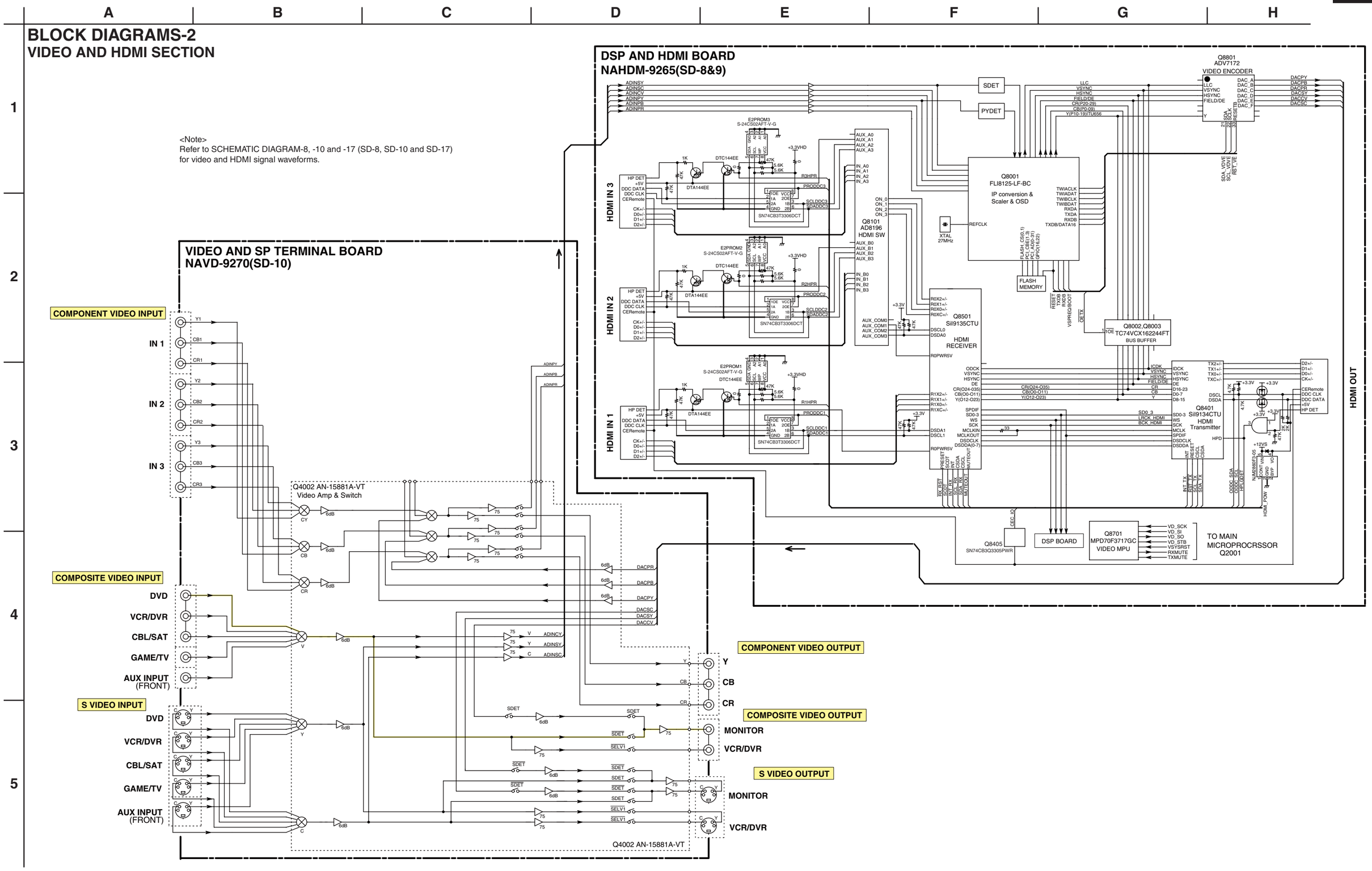

SCHEMATIC DIAGRAMS-1(SD-1)
AUDIO SECTION

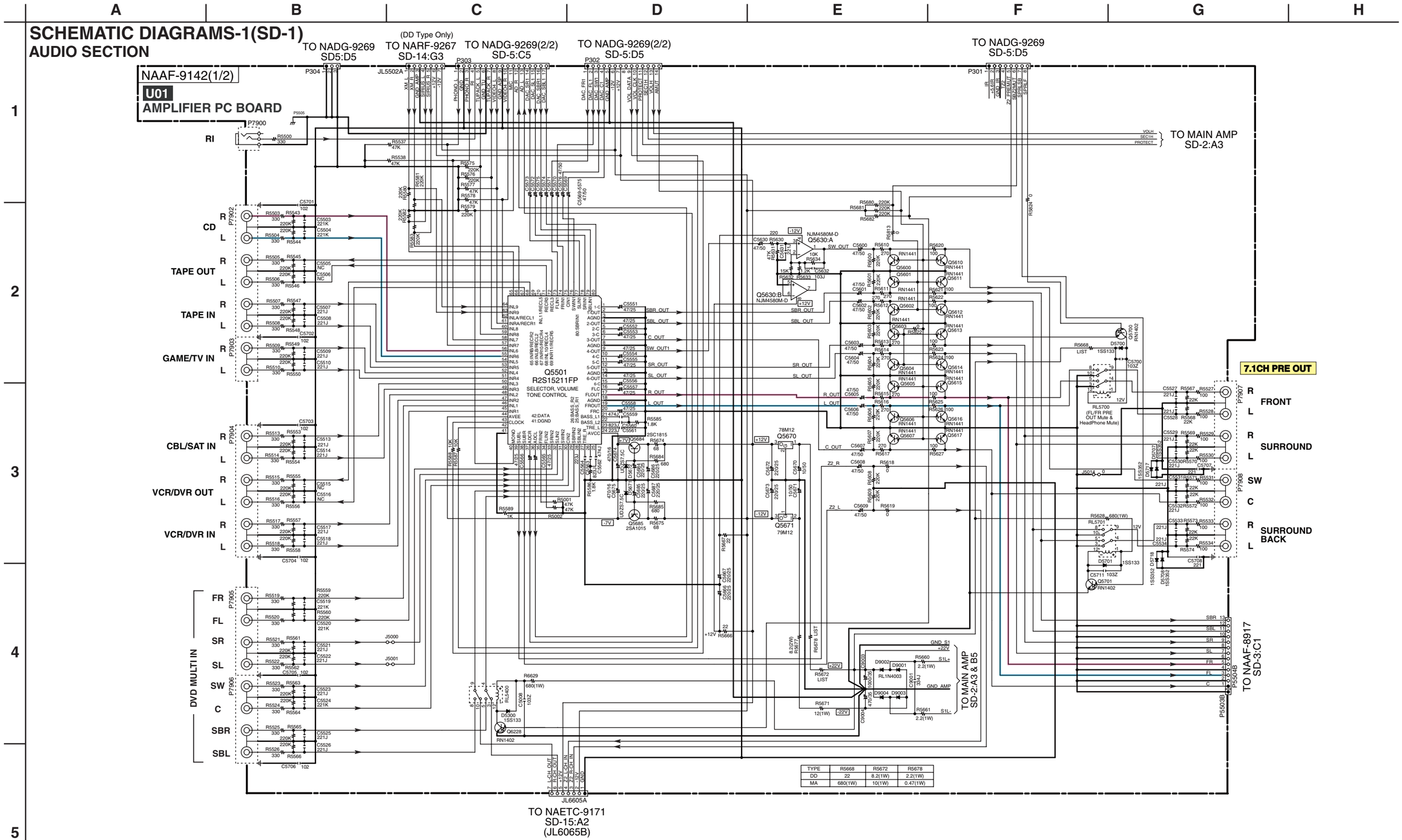

TYPE	R5668	R5672	R5678
DD	22	8.2(1W)	2.2(1W)
MA	680(1W)	10(1W)	0.47(1W)

<Note>
SD-x:XY is short for Shcematic Diagram-x and each socket's location, X=A to H, Y=1 to 5.

SCHEMATIC DIAGRAMS-2 (SD-2)
POWER AMP SECTION-1

NOTE
- THE COMPONENTS IDENTIFIED BY MARK ⚠ ARE CRITICAL FOR SAFETY. REPLACE ONLY WITH PART NUMBER SPECIFIED.
- VOLTAGE (MEASURED WITH VOLTMETER) ▭ IS DC VOLTAGE.(NO INPUT SIGNAL).
- ALL PNP TRANSISTORS ARE EQUIVALENT TO 2SA1015-GR UNLESS OTHERWISE NOTED.
- ALL NPN TRANSISTORS ARE EQUIVALENT TO 2SC1815-GR UNLESS OTHERWISE NOTED.
- ALL DIODES ARE EQUIVALENT TO 1SS133 UNLESS OTHERWISE NOTED.
- ELECTROLYTIC CAPACITORS ( ) ARE IN uF/WV.
- ALL CAPACITORS ARE IN pF/50WV UNLESS OTHERWISE NOTED. EX) 030- 3pF, 330- 33pF, 331- 330pF, 333- 0.033uF
- ALL RESISTORS ARE IN OHMS 1/4WATTS UNLESS OTHERWISE NOTED.
- THE THICK LINES ON PC BOARD ARE THE PRINTING SIDE OF THE PARTS. EX) PRINTING SIDE
- CIRCUIT IS SUBJECT TO CHANGE FOR IMPROVEMENT.

Driver Transistor List

Type / C. NO	ALL	ALL (or)
Q6030-36	2SC5171	2SC5993
Q6040-46	2SA1930	2SA2140

Power Transistor List

Type / C. NO	ALL	ALL (or)
Q6050-56	2SC5242	MN150S
Q6060-66	2SA1962	MP150S

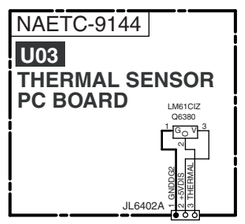

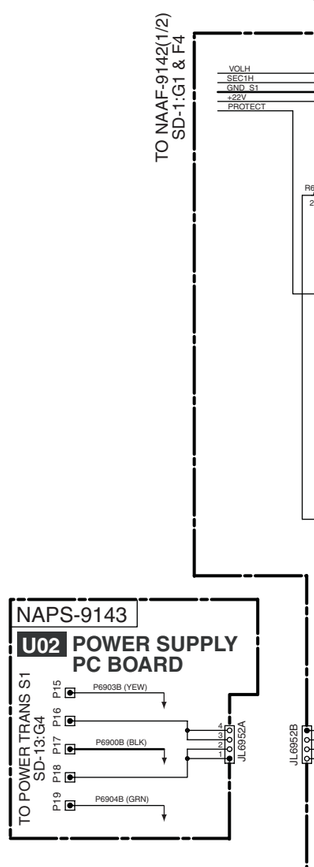

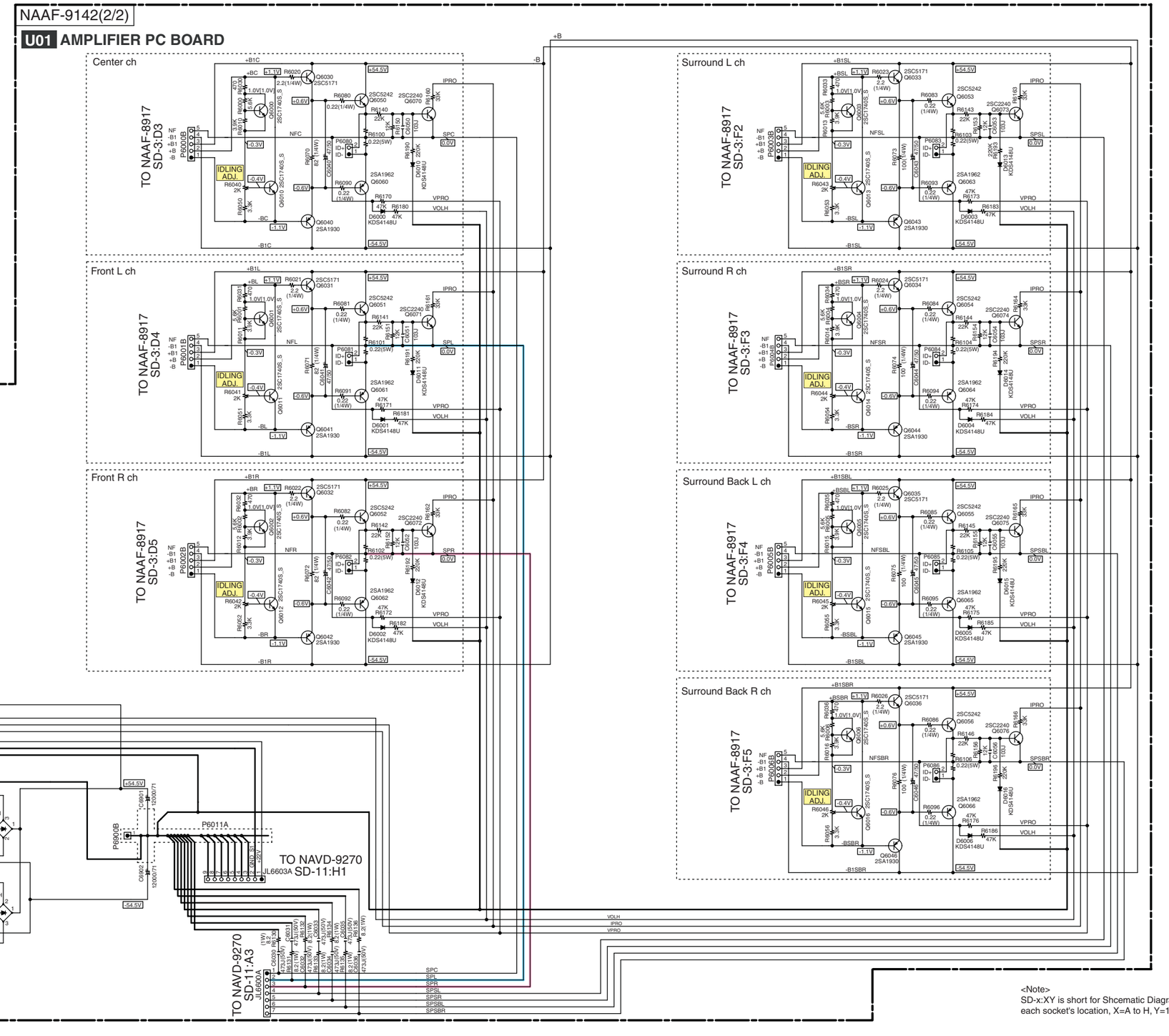

<Note>
SD-x:XY is short for Shcematic Diagram-x and each socket's location, X=A to H, Y=1 to 5.

SCHEMATIC DIAGRAMS-3 (SD-3)
POWER AMP SECTION-2

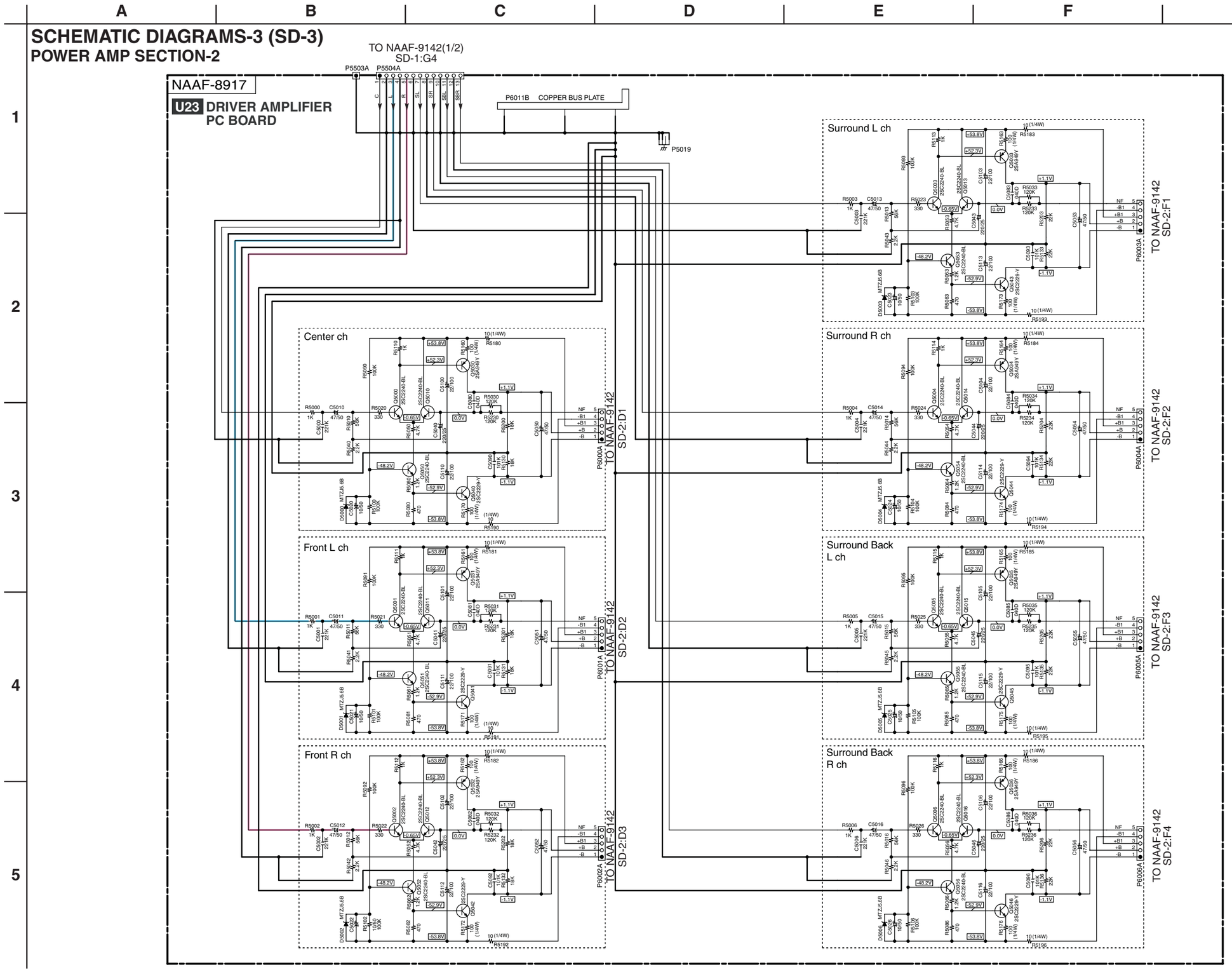

NOTE

- THE COMPONENTS IDENTIFIED BY MARK ⚠ ARE CRITICAL FOR SAFETY. REPLACE ONLY WITH PART NUMBER SPECIFIED.
- VOLTAGE (MEASURED WITH VOLTMETER) ▭ IS DC VOLTAGE.(NO INPUT SIGNAL).
- ALL PNP TRANSISTORS ARE EQUIVALENT TO 2SA1015-GR UNLESS OTHERWISE NOTED.
- ALL NPN TRANSISTORS ARE EQUIVALENT TO 2SC1815-GR UNLESS OTHERWISE NOTED.
- ALL DIODES ARE EQUIVALENT TO 1SS133 UNLESS OTHERWISE NOTED.
- ELECTROLYTIC CAPACITORS ( ) ARE IN uF/WV.
- ALL CAPACITORS ARE IN pF/50WV UNLESS OTHERWISE NOTED. EX) 030- 3pF, 330- 33pF, 331- 330pF, 333- 0.033uF
- ALL RESISTORS ARE IN OHMS 1/4WATTS UNLESS OTHERWISE NOTED.
- THE THICK LINES ON PC BOARD ARE THE PRINTING SIDE OF THE PARTS. EX) ▭ PRINTING SIDE
- CIRCUIT IS SUBJECT TO CHANGE FOR IMPROVEMENT.

<Note>
SD-x:XY is short for Shcematic Diagram-x and each socket's location, X=A to H, Y=1 to 5.

SCHEMATIC DIAGRAMS-4 (SD-4)
DAC SECTION

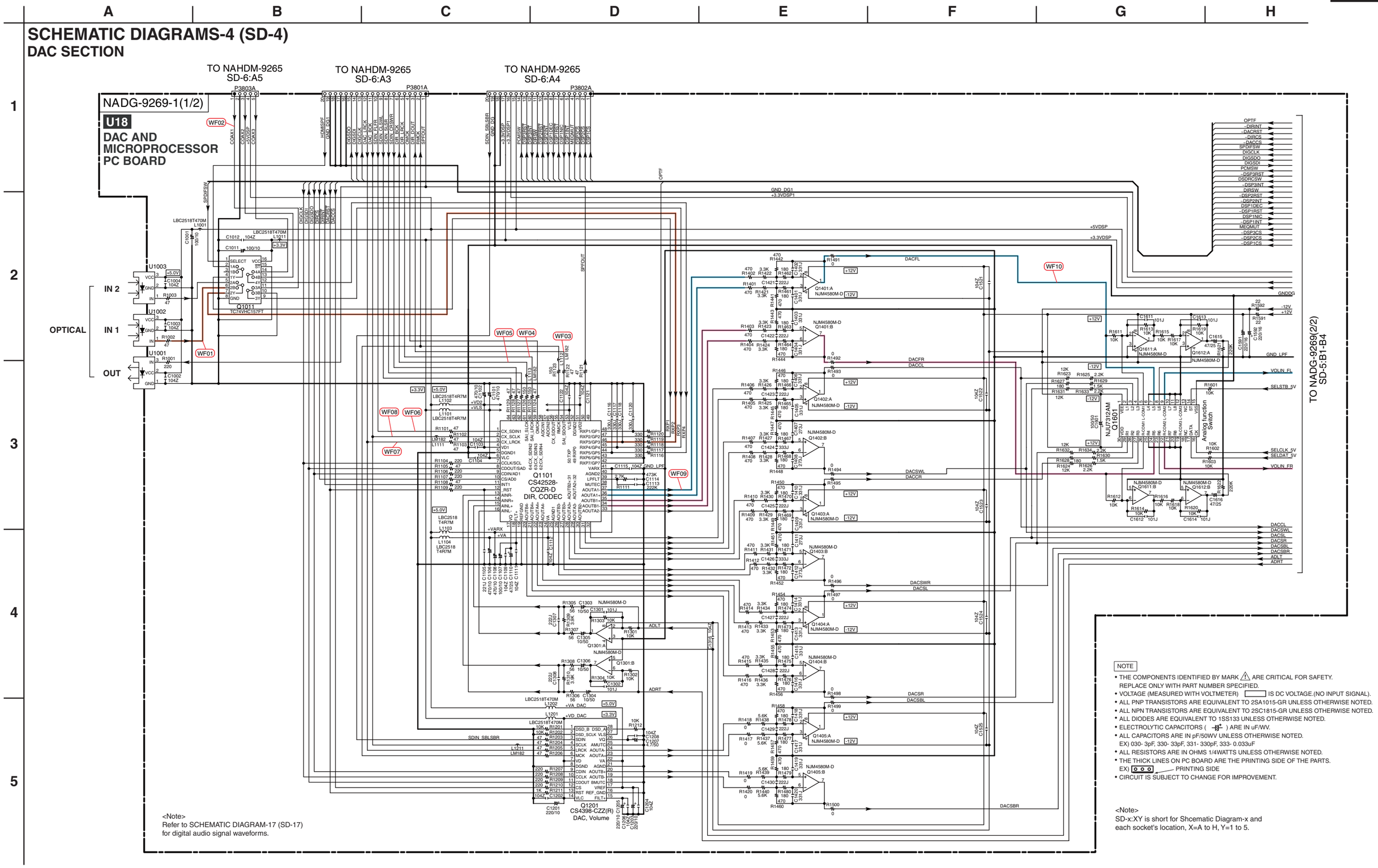

<Note>
Refer to SCHEMATIC DIAGRAM-17 (SD-17) for digital audio signal waveforms.

NOTE

- THE COMPONENTS IDENTIFIED BY MARK ⚠ ARE CRITICAL FOR SAFETY. REPLACE ONLY WITH PART NUMBER SPECIFIED.
- VOLTAGE (MEASURED WITH VOLTMETER) ▭ IS DC VOLTAGE.(NO INPUT SIGNAL).
- ALL PNP TRANSISTORS ARE EQUIVALENT TO 2SA1015-GR UNLESS OTHERWISE NOTED.
- ALL NPN TRANSISTORS ARE EQUIVALENT TO 2SC1815-GR UNLESS OTHERWISE NOTED.
- ALL DIODES ARE EQUIVALENT TO 1SS133 UNLESS OTHERWISE NOTED.
- ELECTROLYTIC CAPACITORS ( ) ARE IN uF/WV.
- ALL CAPACITORS ARE IN pF/50WV UNLESS OTHERWISE NOTED. EX) 030- 3pF, 330- 33pF, 331- 330pF, 333- 0.033uF
- ALL RESISTORS ARE IN OHMS 1/4WATTS UNLESS OTHERWISE NOTED.
- THE THICK LINES ON PC BOARD ARE THE PRINTING SIDE OF THE PARTS. EX) PRINTING SIDE
- CIRCUIT IS SUBJECT TO CHANGE FOR IMPROVEMENT.

<Note>
SD-x:XY is short for Shcematic Diagram-x and each socket's location, X=A to H, Y=1 to 5.

SCHEMATIC DIAGRAMS-5 (SD-5)
MICROPROCESSOR SECTION

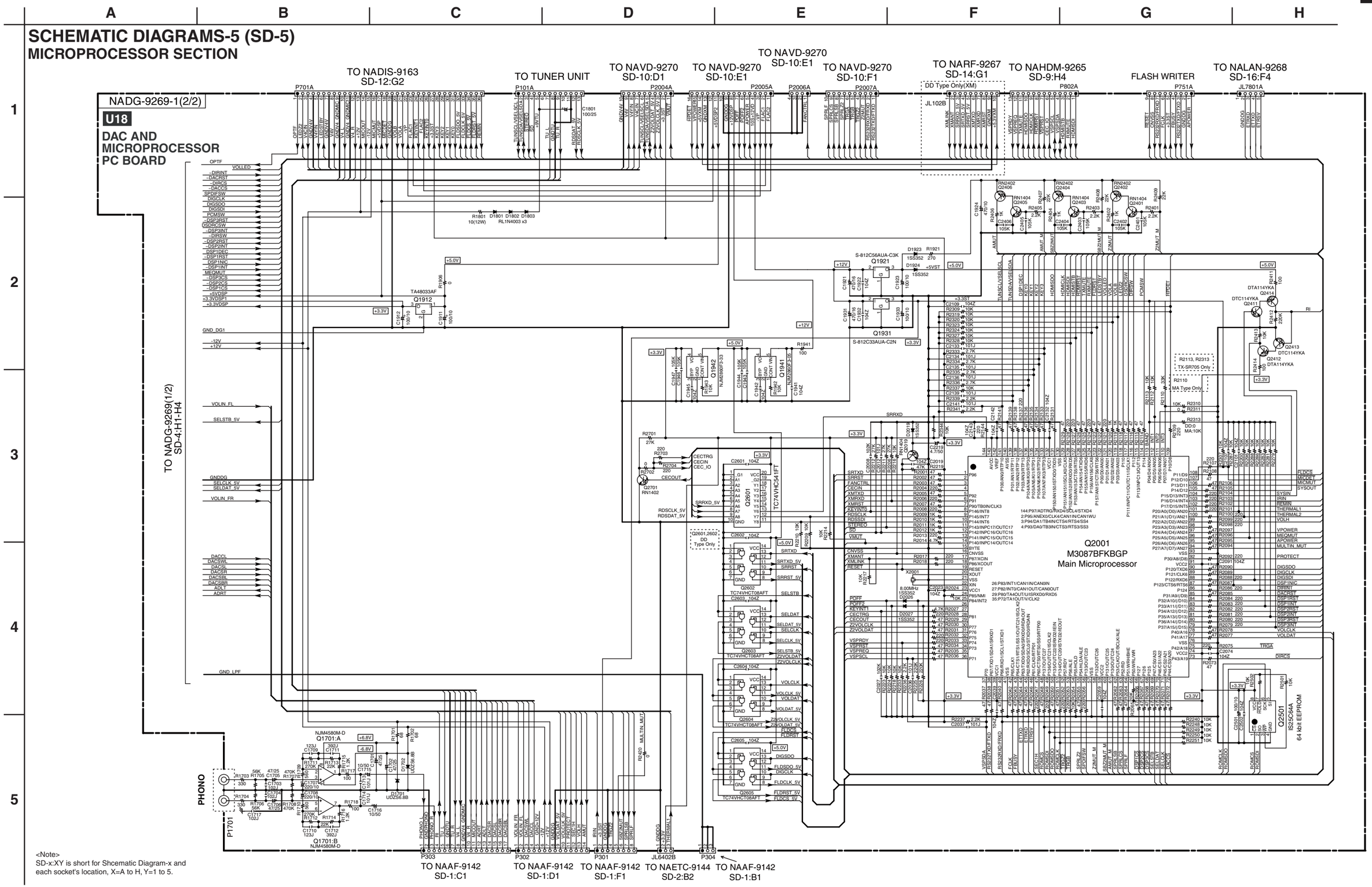

<Note>
SD-x:XY is short for Shcematic Diagram-x and each socket's location, X=A to H, Y=1 to 5.

SCHEMATIC DIAGRAMS-6 (SD-6)

DSP SECTION-1

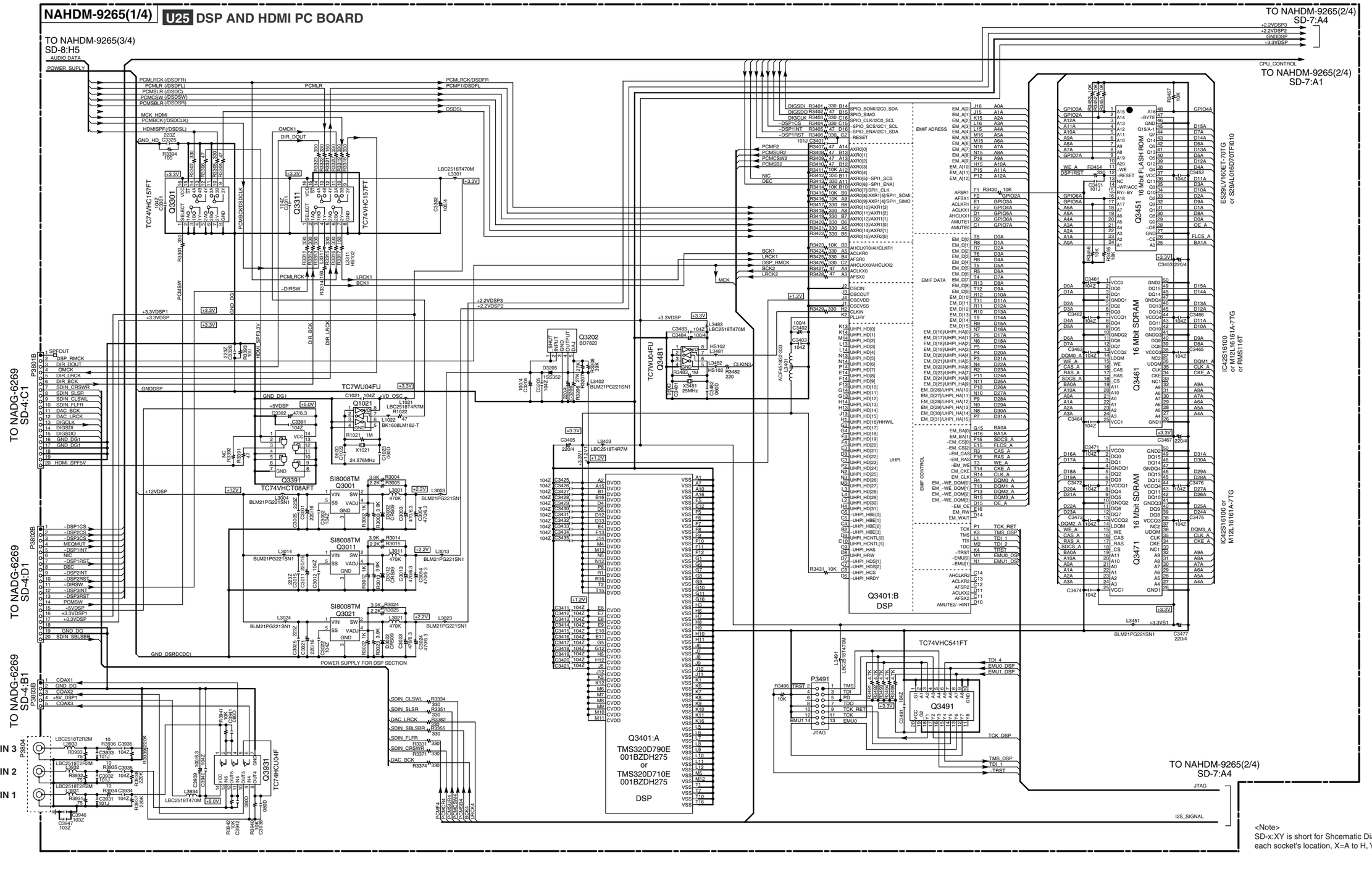

<Note>
SD-x:XY is short for Shcematic Diagram-x and each socket's location, X=A to H, Y=1 to 5.

SCHEMATIC DIAGRAMS-7 (SD-7)
DSP SECTION-2

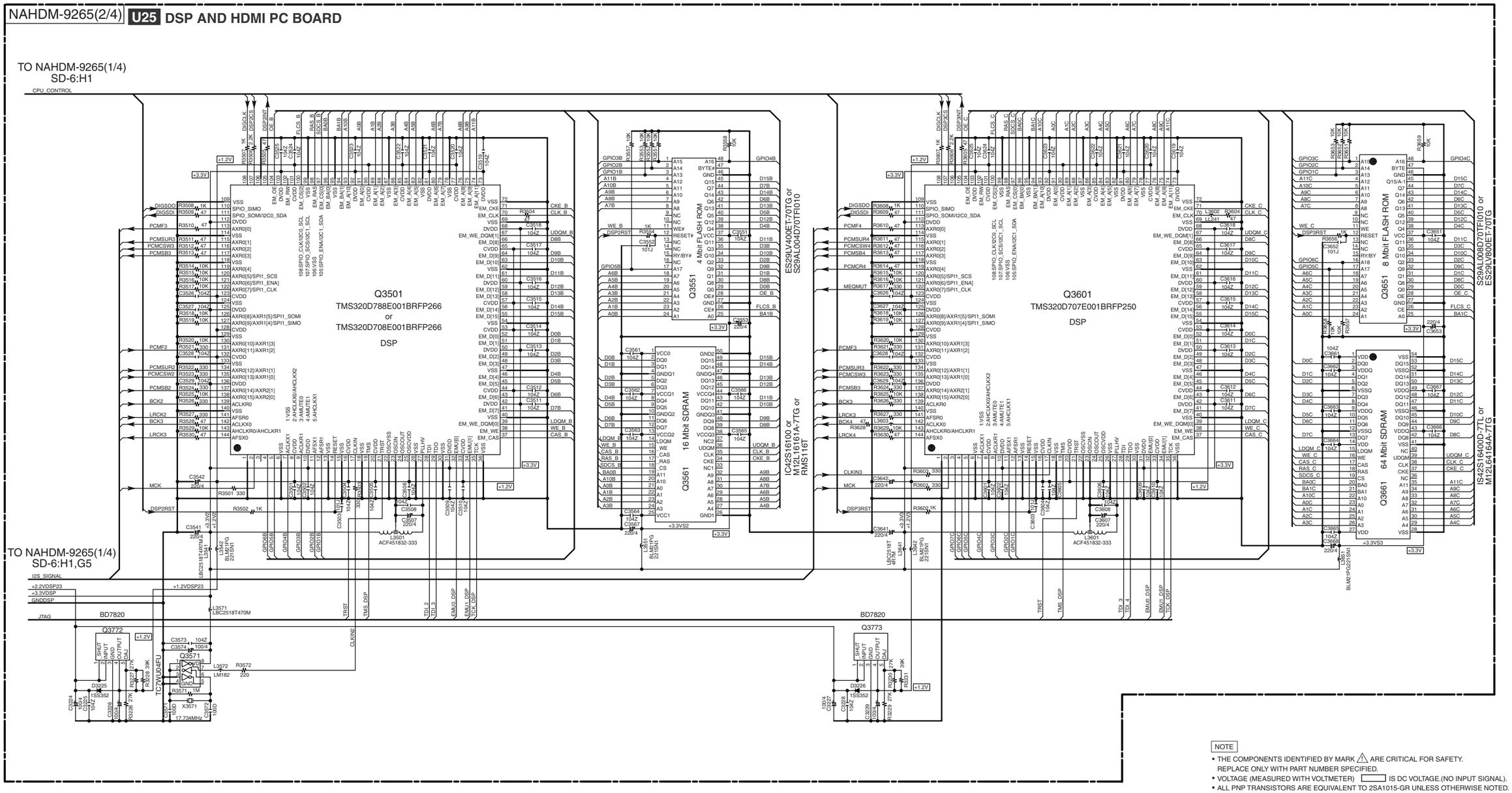

NOTE

- THE COMPONENTS IDENTIFIED BY MARK ⚠ ARE CRITICAL FOR SAFETY. REPLACE ONLY WITH PART NUMBER SPECIFIED.
- VOLTAGE (MEASURED WITH VOLTMETER) ▭ IS DC VOLTAGE.(NO INPUT SIGNAL).
- ALL PNP TRANSISTORS ARE EQUIVALENT TO 2SA1015-GR UNLESS OTHERWISE NOTED.
- ALL NPN TRANSISTORS ARE EQUIVALENT TO 2SC1815-GR UNLESS OTHERWISE NOTED.
- ALL DIODES ARE EQUIVALENT TO 1SS133 UNLESS OTHERWISE NOTED.
- ELECTROLYTIC CAPACITORS ( ) ARE IN uF/WV.
- ALL CAPACITORS ARE IN pF/50WV UNLESS OTHERWISE NOTED.
  EX) 030- 3pF, 330- 33pF, 331- 330pF, 333- 0.033uF
- ALL RESISTORS ARE IN OHMS 1/4WATTS UNLESS OTHERWISE NOTED.
- THE THICK LINES ON PC BOARD ARE THE PRINTING SIDE OF THE PARTS.
  EX) ooo PRINTING SIDE
- CIRCUIT IS SUBJECT TO CHANGE FOR IMPROVEMENT.

<Note>
SD-x:XY is short for Shcematic Diagram-x and each socket's location, X=A to H, Y=1 to 5.

SCHEMATIC DIAGRAMS-8 (SD-8)
HDMI SECTION-1

<Note>
SD-x:XY is short for Shcematic Diagram-x and each socket's location, X=A to H, Y=1 to 5.

NAHDM-9265(3/4)

U25
DSP AND HDMI PC BOARD

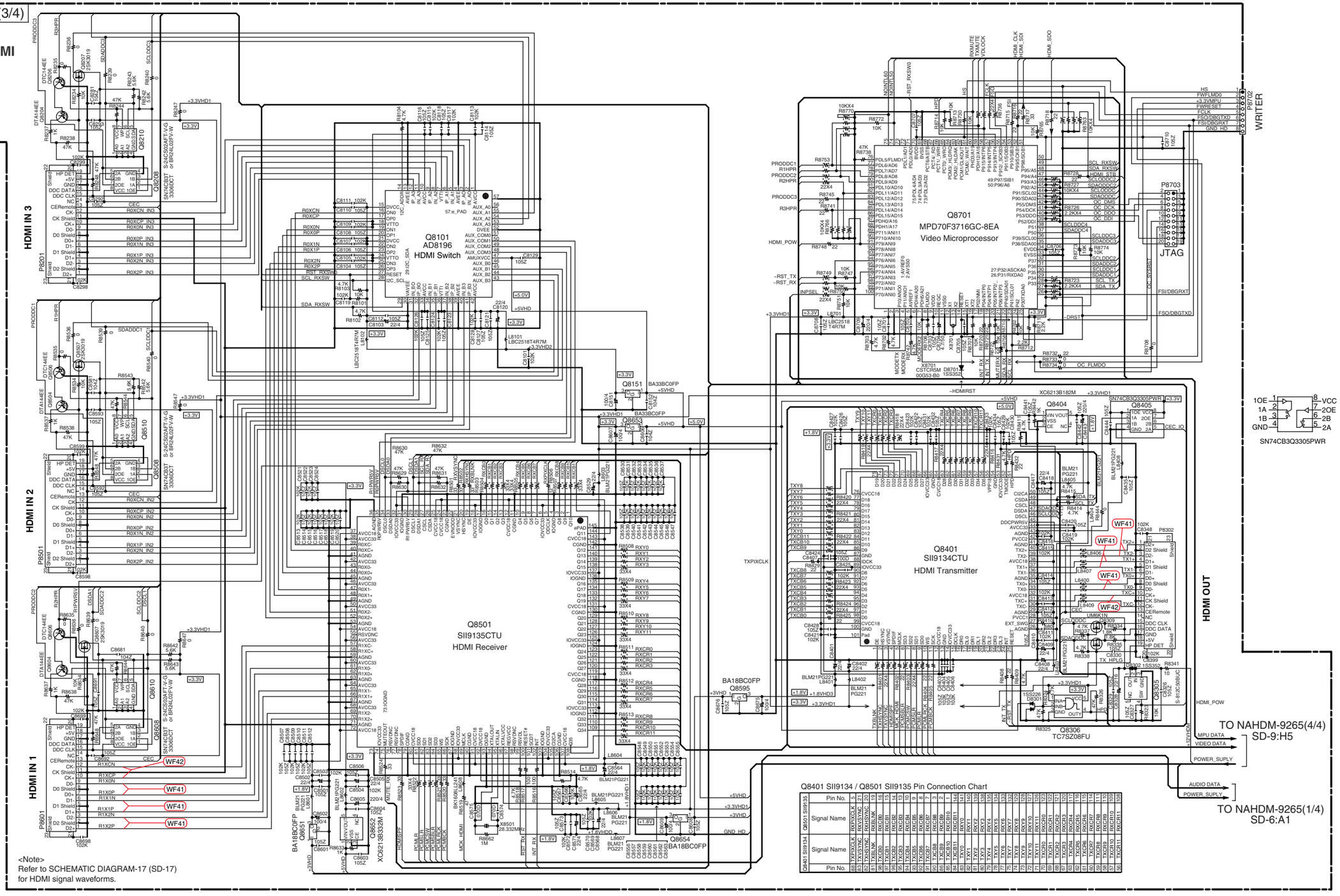

Q8401 SII9134 / Q8501 SII9135 Pin Connection Chart

Q8401 SII9134	Pin No.	86	87	88	89	90	91	92	93	94	95	96	97	98	99	100	101	102	103	104	105	106	107	108	109	110	111	112	113	114	115	116	117	118	119	120	121	122	123	124	125	126	127	128
	Signal Name	TXPXCLK	TXCB0	TXCB1	TXCB2	TXCB3	TXCB4	TXCB5	TXCB6	TXCB7	TXCB8	TXCB9	TXCB10	TXY0	TXY1	TXY2	TXY3	TXY4	TXY5	TXY6	TXY7	TXY8	TXY9	TXY10	TXY11	TXCR0	TXCR1	TXCR2	TXCR3	TXCR4	TXCR5	TXCR6	TXCR7	TXCR8	TXCR9	TXCR10	TXCR11	RXCB0	RXCB1	RXCB2	RXCB3	RXCB4	RXCB5	RXCB6
Q8501 SII9135	Pin No.	5	6	7	8	9	10	11	12	13	14	15	16	17	18	19	20	21	22	23	24	25	26	27	28	29	30	31	32	33	34	35	36	37	38	39	40	41	42	43	44	45	46	47
	Signal Name	RXPXCLK	RXCB0	RXCB1	RXCB2	RXCB3	RXCB4	RXCB5	RXCB6	RXCB7	RXCB8	RXCB9	RXCB10	RXCB11	RXY0	RXY1	RXY2	RXY3	RXY4	RXY5	RXY6	RXY7	RXY8	RXY9	RXY10	RXY11	RXCR0	RXCR1	RXCR2	RXCR3	RXCR4	RXCR5	RXCR6	RXCR7	RXCR8	RXCR9	RXCR10	RXCR11	TXCB0	TXCB1	TXCB2	TXCB3	TXCB4	TXCB5	TXCB6
	Pin No.	48	49	50	51	52	53	54	55	56	57	58	59	60	61	62	63	64	65	66	67	68	69	70	71	72	73	74	75	76	77	78	79	80	81	82	83	84	85	86	87	88	89	90

<Note>
Refer to SCHEMATIC DIAGRAM-17 (SD-17) for HDMI signal waveforms.

SCHEMATIC DIAGRAMS-9 (SD-9)
HDMI SECTION-2

<Note>
SD-x:XY is short for Shcematic Diagram-x and each socket's location, X=A to H, Y=1 to 5.

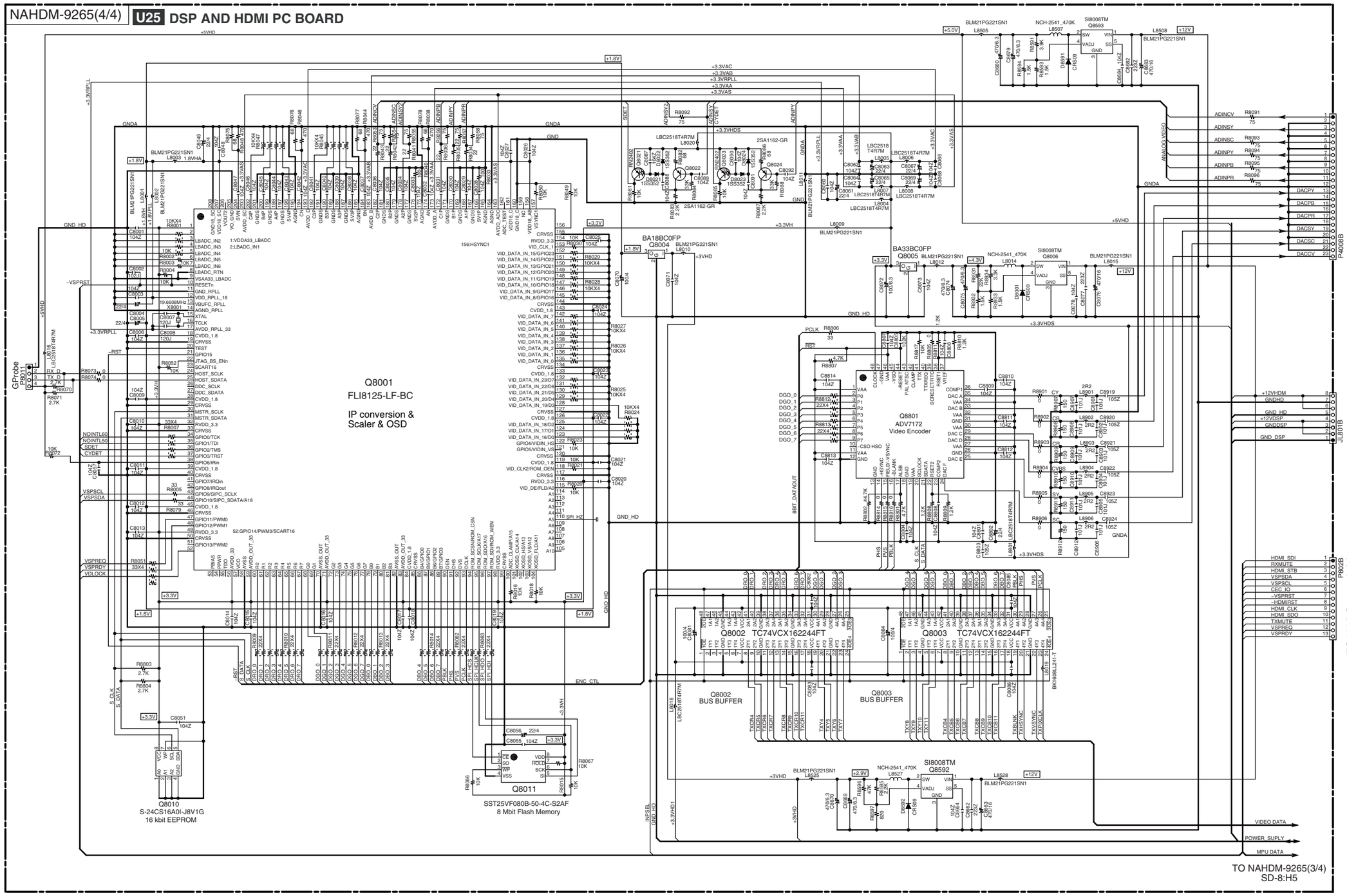

SCHEMATIC DIAGRAMS-10 (SD-10)
VIDEO SECTION

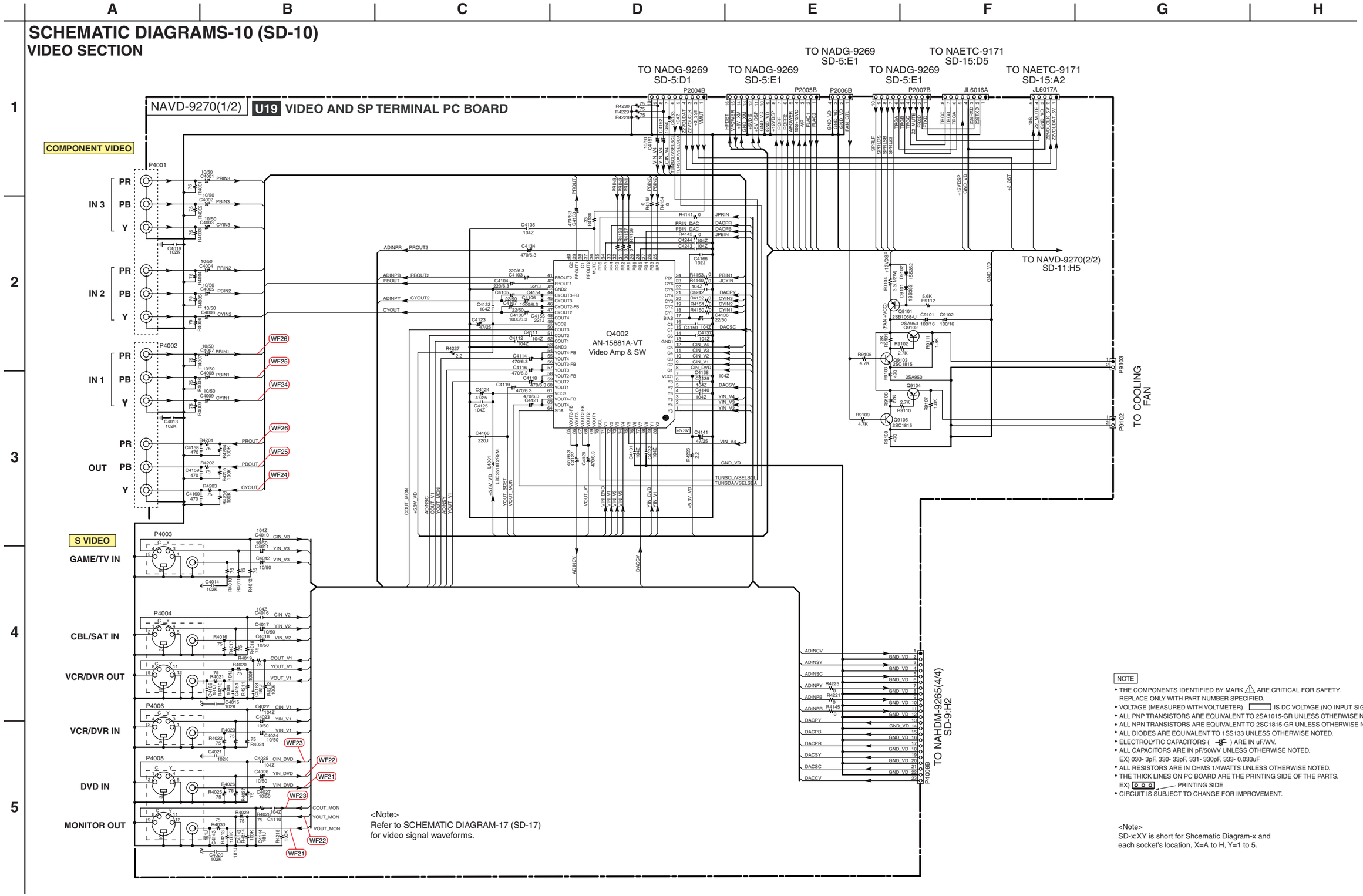

<Note>
Refer to SCHEMATIC DIAGRAM-17 (SD-17)
for video signal waveforms.

NOTE

- THE COMPONENTS IDENTIFIED BY MARK ⚠ ARE CRITICAL FOR SAFETY. REPLACE ONLY WITH PART NUMBER SPECIFIED.
- VOLTAGE (MEASURED WITH VOLTMETER) ▭ IS DC VOLTAGE.(NO INPUT SIGNAL).
- ALL PNP TRANSISTORS ARE EQUIVALENT TO 2SA1015-GR UNLESS OTHERWISE NOTED.
- ALL NPN TRANSISTORS ARE EQUIVALENT TO 2SC1815-GR UNLESS OTHERWISE NOTED.
- ALL DIODES ARE EQUIVALENT TO 1SS133 UNLESS OTHERWISE NOTED.
- ELECTROLYTIC CAPACITORS (⊣⊢) ARE IN uF/WV.
- ALL CAPACITORS ARE IN pF/50WV UNLESS OTHERWISE NOTED.
  EX) 030- 3pF, 330- 33pF, 331- 330pF, 333- 0.033uF
- ALL RESISTORS ARE IN OHMS 1/4WATTS UNLESS OTHERWISE NOTED.
- THE THICK LINES ON PC BOARD ARE THE PRINTING SIDE OF THE PARTS.
  EX) ⊙⊙⊙ PRINTING SIDE
- CIRCUIT IS SUBJECT TO CHANGE FOR IMPROVEMENT.

<Note>
SD-x:XY is short for Shcematic Diagram-x and
each socket's location, X=A to H, Y=1 to 5.

SCHEMATIC DIAGRAMS-11 (SD-11)
SPEAKER TREMINAL SECTION

<Note>
SD-x:XY is short for Shcematic Diagram-x and each socket's location, X=A to H, Y=1 to 5.

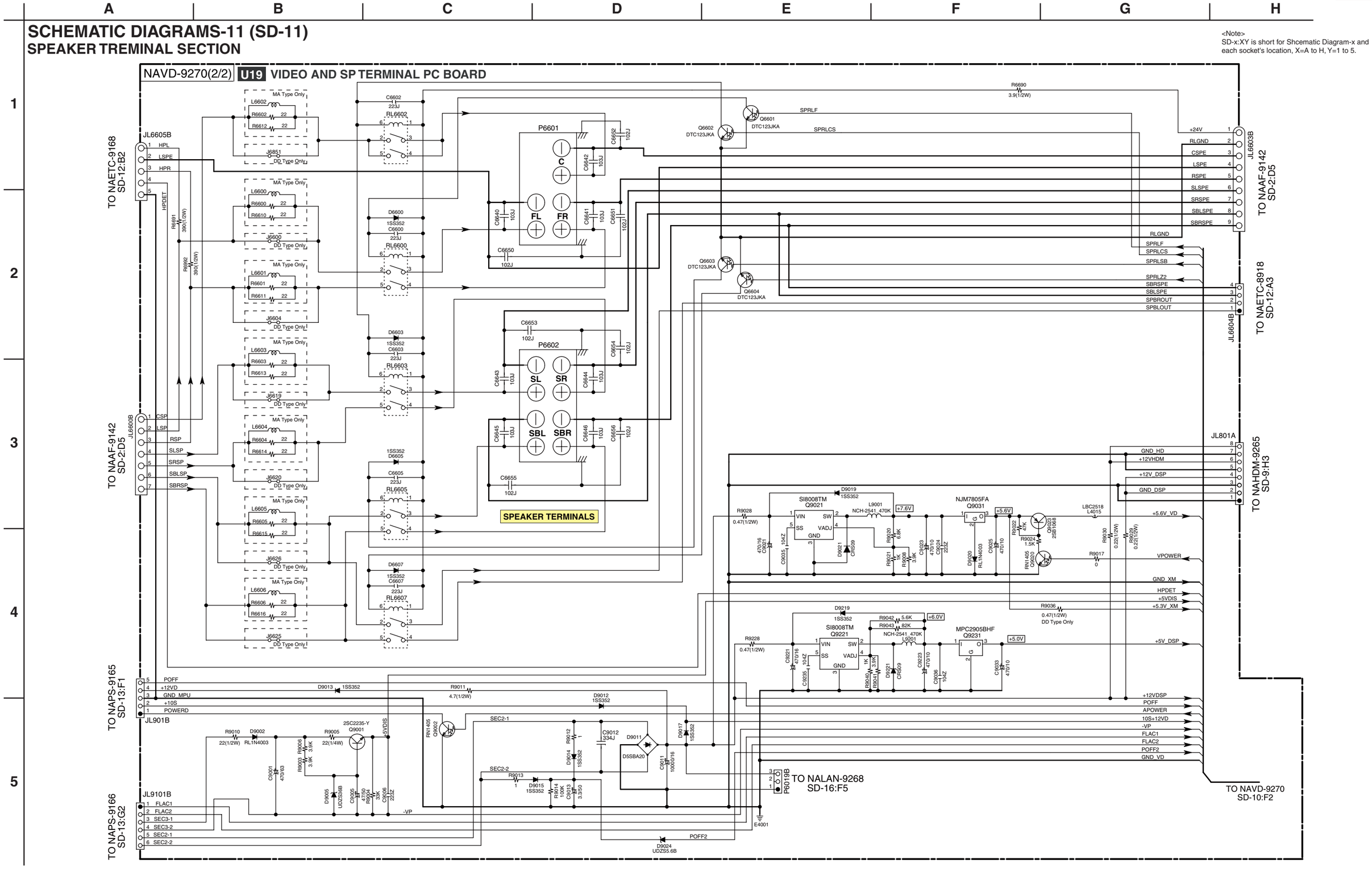

SCHEMATIC DIAGRAMS-12 (SD-12)
DISPLAY SECTION

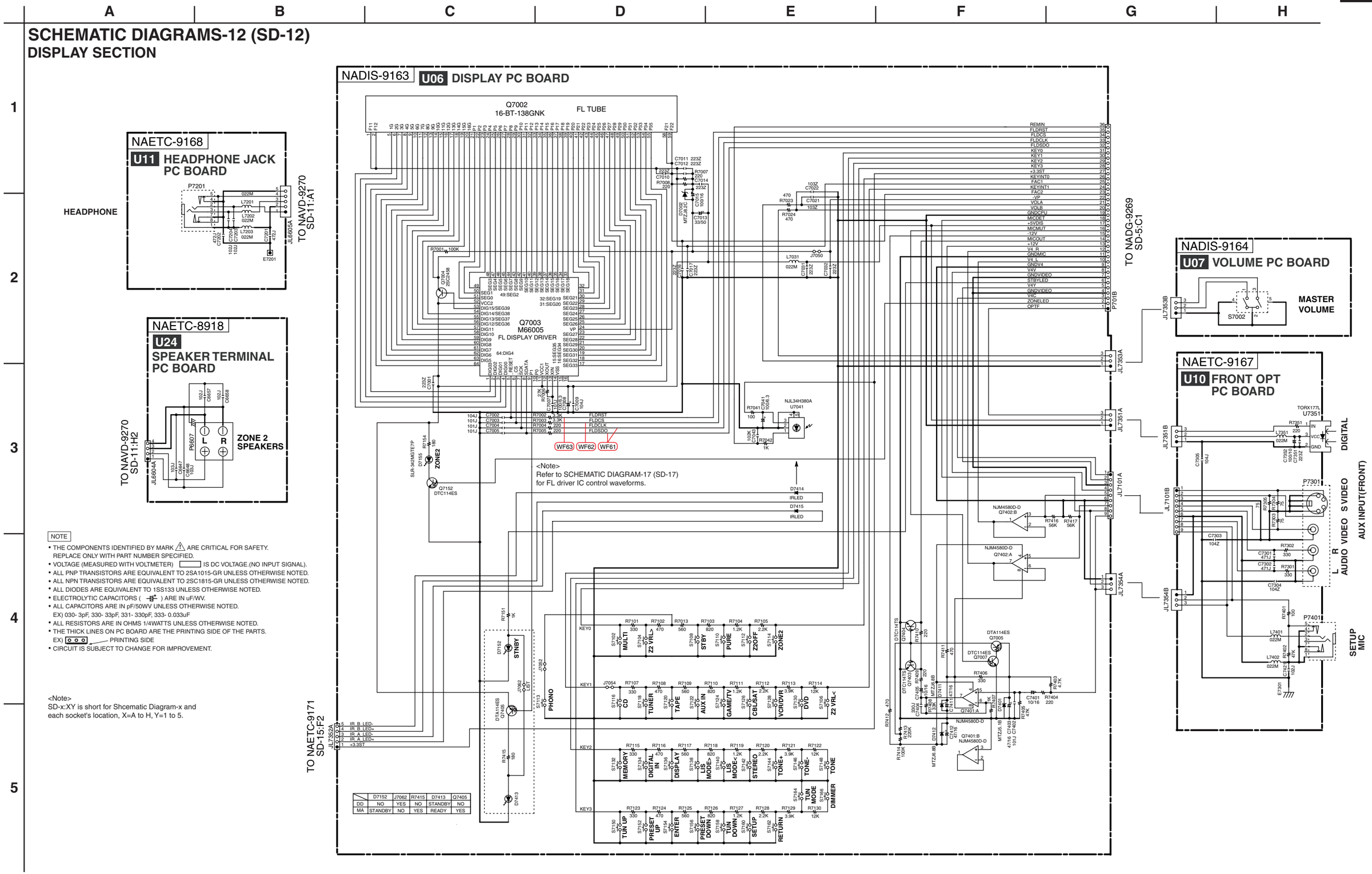

NOTE

- THE COMPONENTS IDENTIFIED BY MARK ⚠ ARE CRITICAL FOR SAFETY. REPLACE ONLY WITH PART NUMBER SPECIFIED.
- VOLTAGE (MEASURED WITH VOLTMETER) [ ] IS DC VOLTAGE.(NO INPUT SIGNAL).
- ALL PNP TRANSISTORS ARE EQUIVALENT TO 2SA1015-GR UNLESS OTHERWISE NOTED.
- ALL NPN TRANSISTORS ARE EQUIVALENT TO 2SC1815-GR UNLESS OTHERWISE NOTED.
- ALL DIODES ARE EQUIVALENT TO 1SS133 UNLESS OTHERWISE NOTED.
- ELECTROLYTIC CAPACITORS ( ) ARE IN uF/WV.
- ALL CAPACITORS ARE IN pF/50WV UNLESS OTHERWISE NOTED.
  EX) 030- 3pF, 330- 33pF, 331- 330pF, 333- 0.033uF
- ALL RESISTORS ARE IN OHMS 1/4WATTS UNLESS OTHERWISE NOTED.
- THE THICK LINES ON PC BOARD ARE THE PRINTING SIDE OF THE PARTS.
  EX) PRINTING SIDE
- CIRCUIT IS SUBJECT TO CHANGE FOR IMPROVEMENT.

<Note>
SD-x:XY is short for Shcematic Diagram-x and each socket's location, X=A to H, Y=1 to 5.

	D7152	J7062	R7415	D7413	Q7405
DD	NO	YES	NO	STANDBY	NO
MA	STANDBY	NO	YES	READY	YES

SCHEMATIC DIAGRAMS-13 (SD-13)
POWER SUPPLY SECTION

NOTE
- THE COMPONENTS IDENTIFIED BY MARK ⚠ ARE CRITICAL FOR SAFETY REPLACE ONLY WITH PART NUMBER SPECIFIED.
- VOLTAGE (MEASURED WITH VOLTMETER) ▭ IS DC VOLTAGE.(NO INPUT SIGNAL).
- ALL PNP TRANSISTORS ARE EQUIVALENT TO 2SA1015-GR UNLESS OTHERWISE NOTED.
- ALL NPN TRANSISTORS ARE EQUIVALENT TO 2SC1815-GR UNLESS OTHERWISE NOTED.
- ALL DIODES ARE EQUIVALENT TO 1SS133 UNLESS OTHERWISE NOTED.
- ELECTROLYTIC CAPACITORS (⊣⊢) ARE IN uF/WV.
- ALL CAPACITORS ARE IN pF/50WV UNLESS OTHERWISE NOTED. EX) 030- 3pF 330- 33pF 331- 330pF 333- 0.033uF
- ALL RESISTORS ARE IN OHMS 1/4WATTS UNLESS OTHERWISE NOTED.
- THE THICK LINES ON PC BOARD ARE THE PRINTING SIDE OF THE PARTS. EX) ▭ PRINTING SIDE
- CIRCUIT IS SUBJECT TO CHANGE FOR IMPROVEMENT.

<Note>
SD-x:XY is short for Shcematic Diagram-x and each socket's location, X=A to H, Y=1 to 5.

Type	AC Volt/Freq.
DD	120V / 60HZ
MA	220-240V / 50HZ

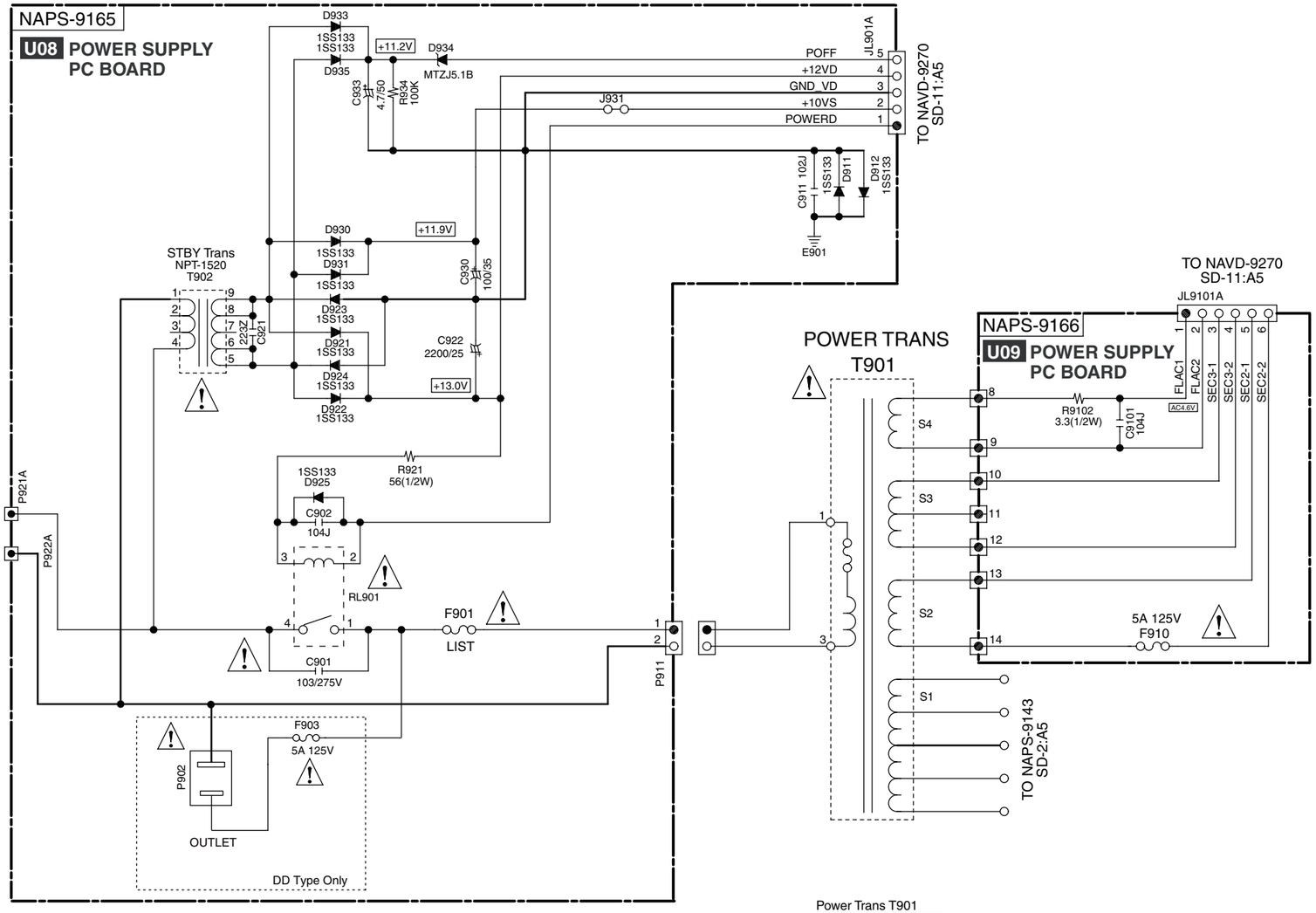

Power Trans T901

Type	Rating
DD	NPT-1563D
MA	NPT-1563M

STBY Trans T902

Type	Rating
DD	NPT-1520JQ
MA	NPT-1520GQ

Fuse F901

Type	Rating
DD	10A 125V
MA	5A 250V

CAUTION

FOR CONTINUED PROTECTION AGAINST FIRE HAZARD, REPLACE ONLY WITH FUSE OF SAME TYPE AND RATING INDICATED.

ATTENTION

CAUTIONF AFIN D'ASSURER UNE PROTECTION PERMANENTE CONTRE LES RISQUES D'INCENDIE, REMPLACER UNIQUEMENT PAR UN FUSIBLE DE MEME TYPE ET CALIBRATION COMME INDIQUE.

THIS SYMBOL LOCATED NEAR THE FUSE INDICATES THAT THE FUSE USED IS SLOW OPERATING TYPE FOR CONTINUED PROTECTION AGAINST FIRE FUSE HAZARD,REPLACE WITH SAME TYPE FUSE. FOR FUSE RATING REFER TO THE MAKING ADJACENT TO THE SYMBOL.

CE SYMBOLE INDIQUE QUE LE FUSIBLE UTLISE EST A LENT, E POUR UNE PROTECTION PERMANENTE,N'UTILISER QUE DES FUSIBLES DE MEME TYPE. CE DARNIER EST INDIQUE LA QU LE PRESENT SYMBOL EST APPOSE.

SCHEMATIC DIAGRAMS-14 (SD-14)
XM SECTION

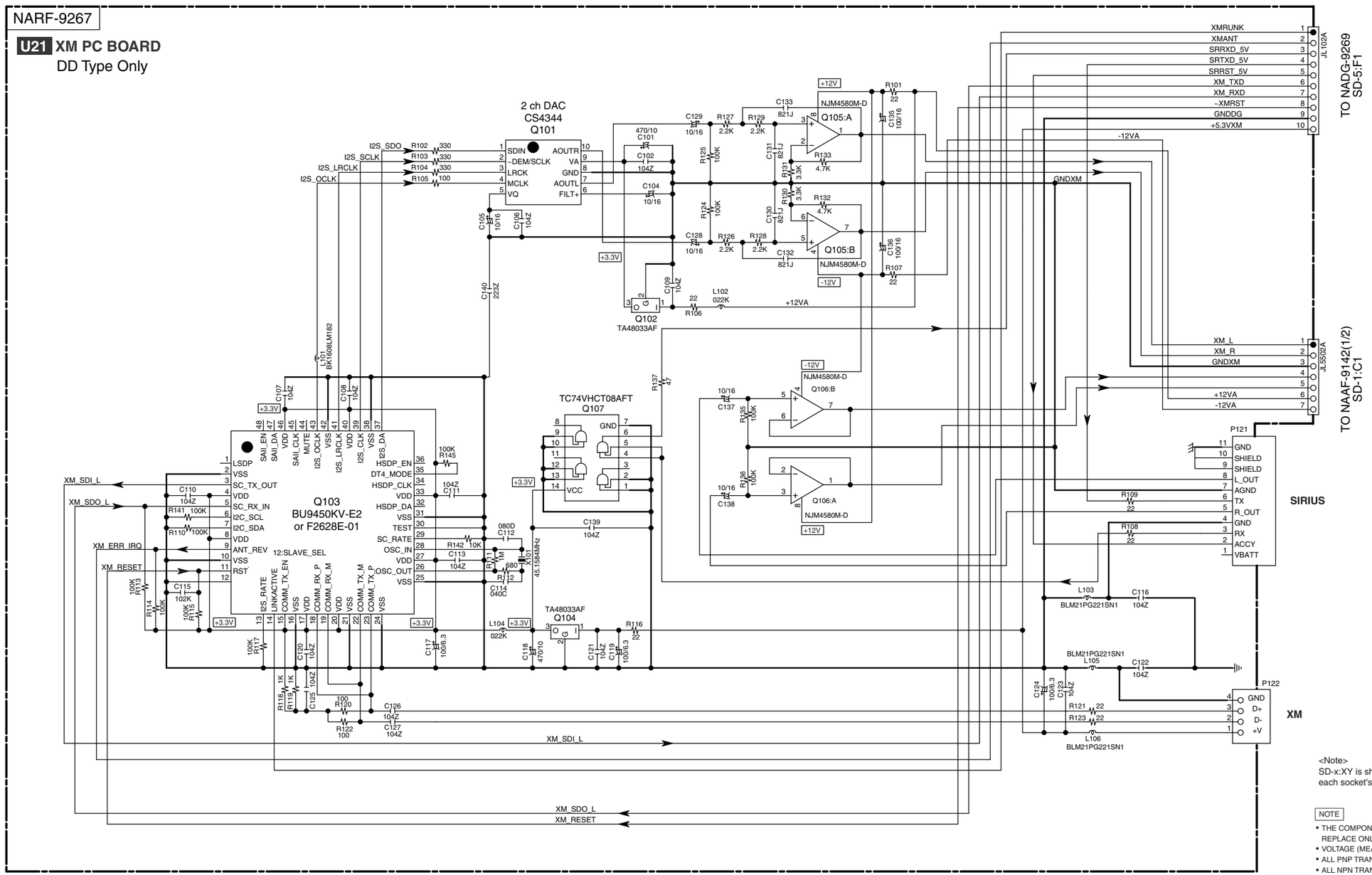

<Note>
SD-x:XY is short for Shcematic Diagram-x and
each socket's location, X=A to H, Y=1 to 5.

NOTE

- THE COMPONENTS IDENTIFIED BY MARK ⚠ ARE CRITICAL FOR SAFETY. REPLACE ONLY WITH PART NUMBER SPECIFIED.
- VOLTAGE (MEASURED WITH VOLTMETER) [ ] IS DC VOLTAGE.(NO INPUT SIGNAL).
- ALL PNP TRANSISTORS ARE EQUIVALENT TO 2SA1015-GR UNLESS OTHERWISE NOTED.
- ALL NPN TRANSISTORS ARE EQUIVALENT TO 2SC1815-GR UNLESS OTHERWISE NOTED.
- ALL DIODES ARE EQUIVALENT TO 1SS133 UNLESS OTHERWISE NOTED.
- ELECTROLYTIC CAPACITORS ( ) ARE IN uF/WV.
- ALL CAPACITORS ARE IN pF/50WV UNLESS OTHERWISE NOTED.
  EX) 030- 3pF, 330- 33pF, 331- 330pF, 333- 0.033uF
- ALL RESISTORS ARE IN OHMS 1/4WATTS UNLESS OTHERWISE NOTED.
- THE THICK LINES ON PC BOARD ARE THE PRINTING SIDE OF THE PARTS.
  EX) PRINTING SIDE
- CIRCUIT IS SUBJECT TO CHANGE FOR IMPROVEMENT.

SCHEMATIC DIAGRAMS-15 (SD-15)
RS232 SECTION

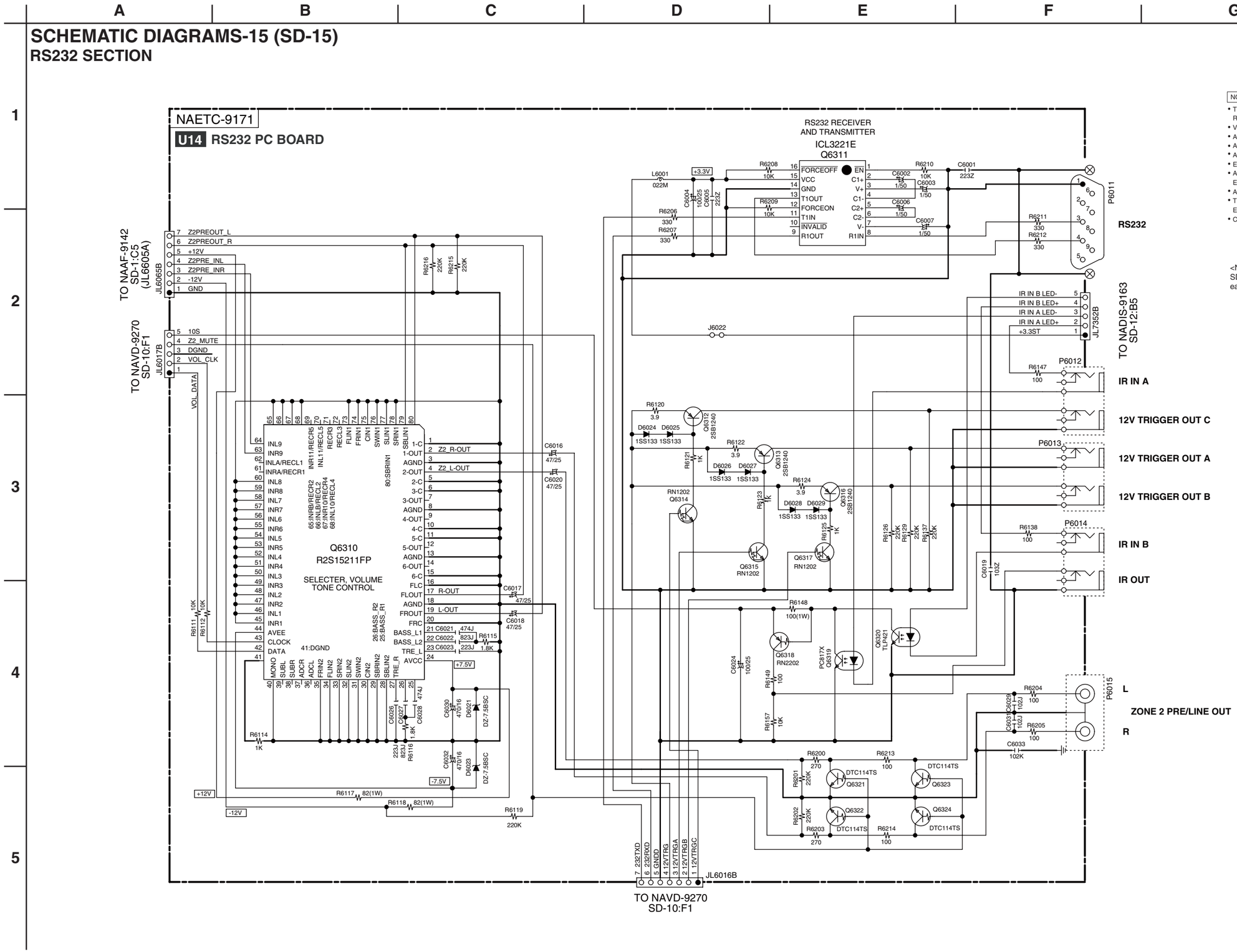

NOTE

- THE COMPONENTS IDENTIFIED BY MARK ⚠ ARE CRITICAL FOR SAFETY. REPLACE ONLY WITH PART NUMBER SPECIFIED.
- VOLTAGE (MEASURED WITH VOLTMETER) ▭ IS DC VOLTAGE.(NO INPUT SIGNAL).
- ALL PNP TRANSISTORS ARE EQUIVALENT TO 2SA1015-GR UNLESS OTHERWISE NOTED.
- ALL NPN TRANSISTORS ARE EQUIVALENT TO 2SC1815-GR UNLESS OTHERWISE NOTED.
- ALL DIODES ARE EQUIVALENT TO 1SS133 UNLESS OTHERWISE NOTED.
- ELECTROLYTIC CAPACITORS ( ) ARE IN uF/WV.
- ALL CAPACITORS ARE IN pF/50WV UNLESS OTHERWISE NOTED. EX) 030- 3pF, 330- 33pF, 331- 330pF, 333- 0.033uF
- ALL RESISTORS ARE IN OHMS 1/4WATTS UNLESS OTHERWISE NOTED.
- THE THICK LINES ON PC BOARD ARE THE PRINTING SIDE OF THE PARTS. EX) PRINTING SIDE
- CIRCUIT IS SUBJECT TO CHANGE FOR IMPROVEMENT.

<Note>
SD-x:XY is short for Shcematic Diagram-x and each socket's location, X=A to H, Y=1 to 5.

SCHEMATIC DIAGRAMS-16 (SD-16)
E-CONTROL SECTION

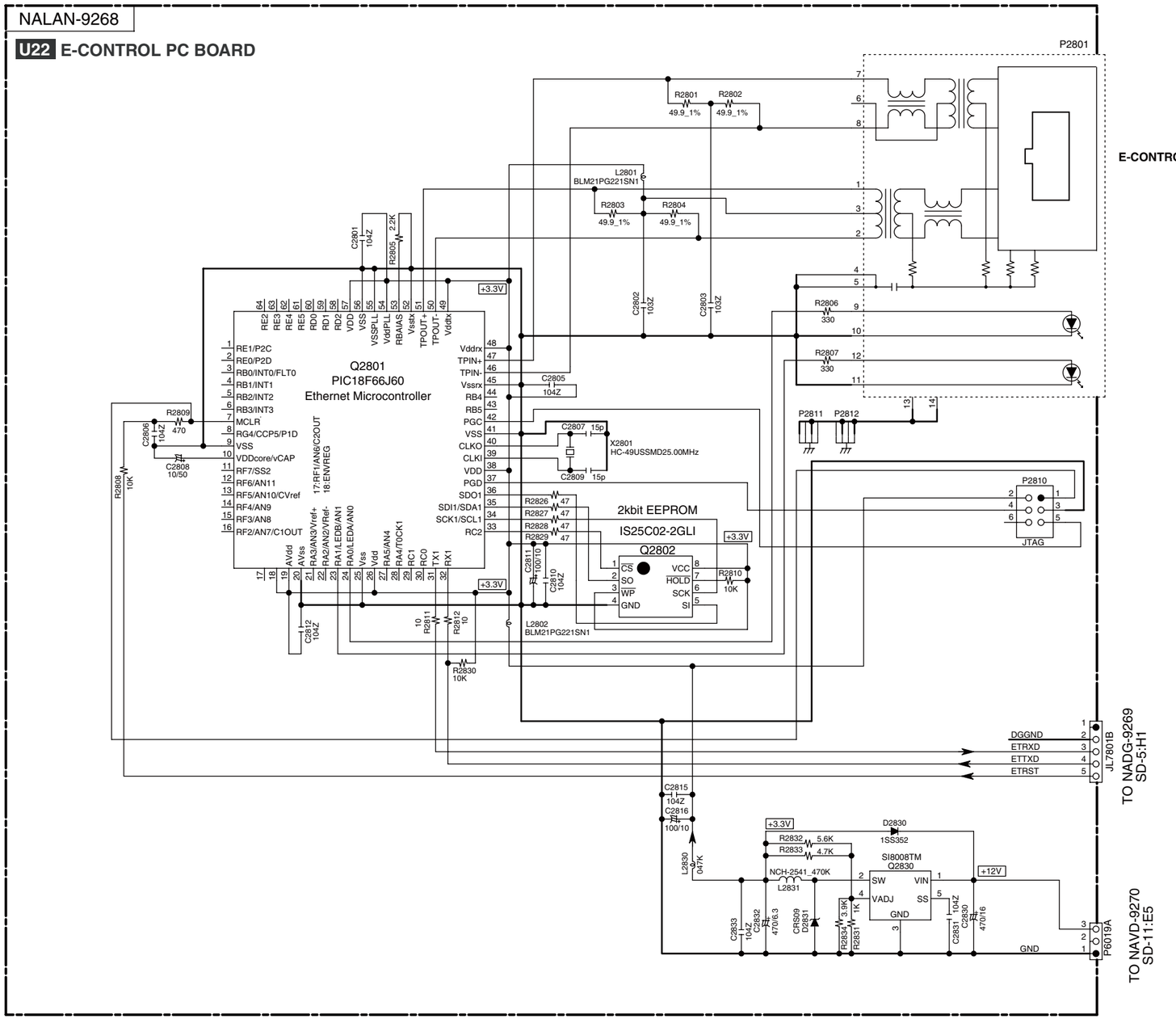

NOTE

- THE COMPONENTS IDENTIFIED BY MARK ⚠ ARE CRITICAL FOR SAFETY. REPLACE ONLY WITH PART NUMBER SPECIFIED.
- VOLTAGE (MEASURED WITH VOLTMETER) ▭ IS DC VOLTAGE.(NO INPUT SIGNAL).
- ALL PNP TRANSISTORS ARE EQUIVALENT TO 2SA1015-GR UNLESS OTHERWISE NOTED.
- ALL NPN TRANSISTORS ARE EQUIVALENT TO 2SC1815-GR UNLESS OTHERWISE NOTED.
- ALL DIODES ARE EQUIVALENT TO 1SS133 UNLESS OTHERWISE NOTED.
- ELECTROLYTIC CAPACITORS ( ) ARE IN uF/WV.
- ALL CAPACITORS ARE IN pF/50WV UNLESS OTHERWISE NOTED.
  EX) 030- 3pF, 330- 33pF, 331- 330pF, 333- 0.033uF
- ALL RESISTORS ARE IN OHMS 1/4WATTS UNLESS OTHERWISE NOTED.
- THE THICK LINES ON PC BOARD ARE THE PRINTING SIDE OF THE PARTS.
  EX) ooo ← PRINTING SIDE
- CIRCUIT IS SUBJECT TO CHANGE FOR IMPROVEMENT.

<Note>
SD-x:XY is short for Shcematic Diagram-x and each socket's location, X=A to H, Y=1 to 5.

SCHEMATIC DIAGRAMS-17(SD-17)
WAVEFORM SECTION

Digital Audio Waveform Part

NOTE:
1. (WF01) is short for (Waveform01)
2. Refer to SD-4(SCHEMATIC DIAGRAM-4) for the location of each waveform on circuit.
3. SD-x:XY is short for Shcematic Diagram-x and each socket's location, X=A to H, Y=1 to 5.

LR CLOCK (SAI_LRCK, CX_LRCK)
Fs=48kHz : DVD, Clock width=20.8us
Fs=44.1kHz : CD, Clock width=22.7us

BIT CLOCK (SAI_SLCK, CX_SLCK)
64Fs=3072kHz : DVD, Clock width=325ns
64Fs=2822.4kHz : CD, Clock width=354ns

(WF01) OPT1 (SD-4:B2)

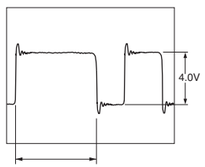

Duty varies according to audio data

(WF02) COAX1 (SD-4:B1)

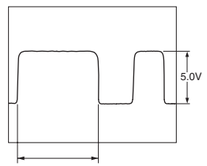

Duty always varies according to audio data

(WF03) SAI_SDOUT (SD-4:D2)

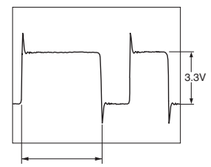

Duty varies according to audio data

(WF04) SAI_LRCK (SD-4:C2)

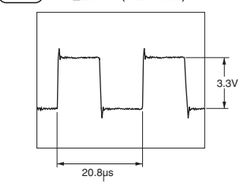

(WF05) SAI_SLCK (SD-4:C2)

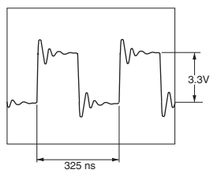

(WF06) CX_SDIN1 (SD-4:C3)

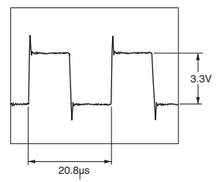

(WF07) CX_LRCK (SD-4:C3)

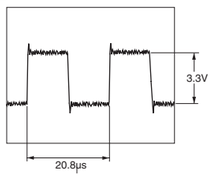

(WF08) CX_SCLK (SD-4:C3)

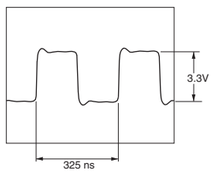

(WF09) DAC_OUT- (SD-4:D3)

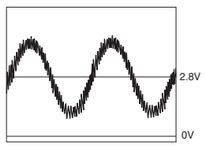

Analog audio waveform with aliasing noise

(WF10) AUDIO_FL (SD-4:G2)

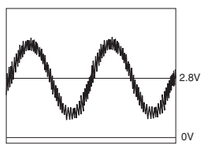

Analog audio waveform with aliasing noise

(WF10) AUDIO_FL (SD-4:G2)

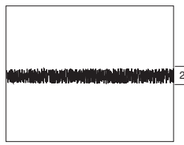

Aliasing noise in no audio data

Video Waveform Part

Video source color and pattern

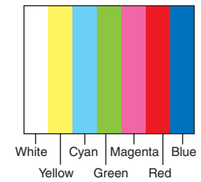

NOTE:
1. (WF21) is short for (Waveform21)
2. Refer to SD-10(SCHEMATIC DIAGRAM-10) for the location of each waveform on circuit.
3. SD-x:XY is short for Shcematic Diagram-x and each socket's location, X=A to H, Y=1 to 5.
4. In the case that video outputs are not connected to video devices, video signal output levels are doubled.

Composite waveform
(WF21) SD-10:B5

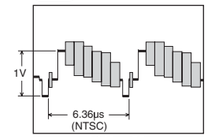

1.2 Vp-p (H)

S-Video Y waveform
(WF22) SD-10:B5

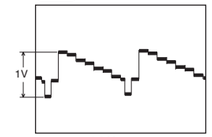

1.0 Vp-p

S-Video C waveform
(WF23) SD-10:B5

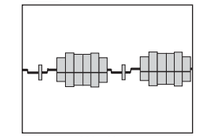

280 mVp-p

Component Y waveform
(WF24) SD-10:B3

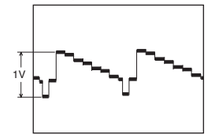

1.0 Vp-p

Component PB waveform
(WF25) SD-10:B3

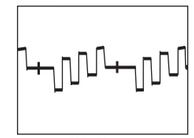

720 mVp-p

Component PR waveform
(WF26) SD-10:B2, B3

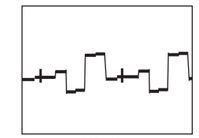

728 mVp-p

HDMI Waveform Part

HDMI D0,D1,D2 waveform
(WF41) SD-8:B5, G4

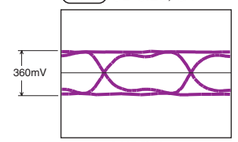

2,227.5MHz
(1080p,12bit)

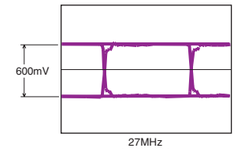

27MHz
(480i, 8bit)

D0,D1,D2 Eye-pattern waveform, frequency and level vary according to video resolution, aspect and profile. Waveforms above are examples.

HDMI CK waveform
(WF42) SD-8:B5, G4

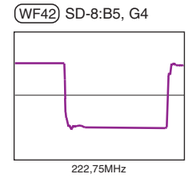

222,75MHz
(1080p,12bit)

CK waveform, frequency and level differ according to video resolution, aspect and profile.
D0,D1,D2 are just CK x10.

FL Driver IC Control Waveform Part

SCK/SDATA waveform
(WF61) SD-12:D3

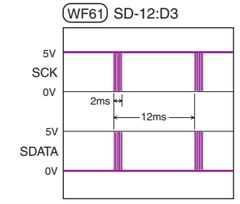

SCK/SDATA waveform
(WF61) SD-12:D3

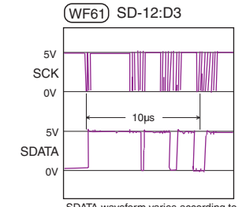

SDATA waveform varies according to the data content

SCK/CS waveform
(WF62) SD-12:D3

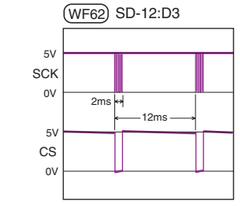

SCK/RESET waveform
(WF63) SD-12:D3

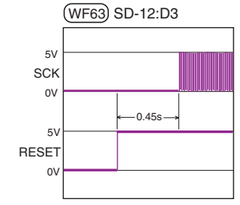

When power on

SCK/RESET waveform
(WF63) SD-12:D3

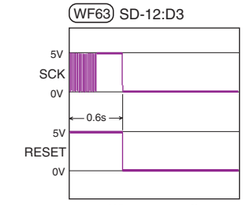

When power off

PACKING PROCEDURE

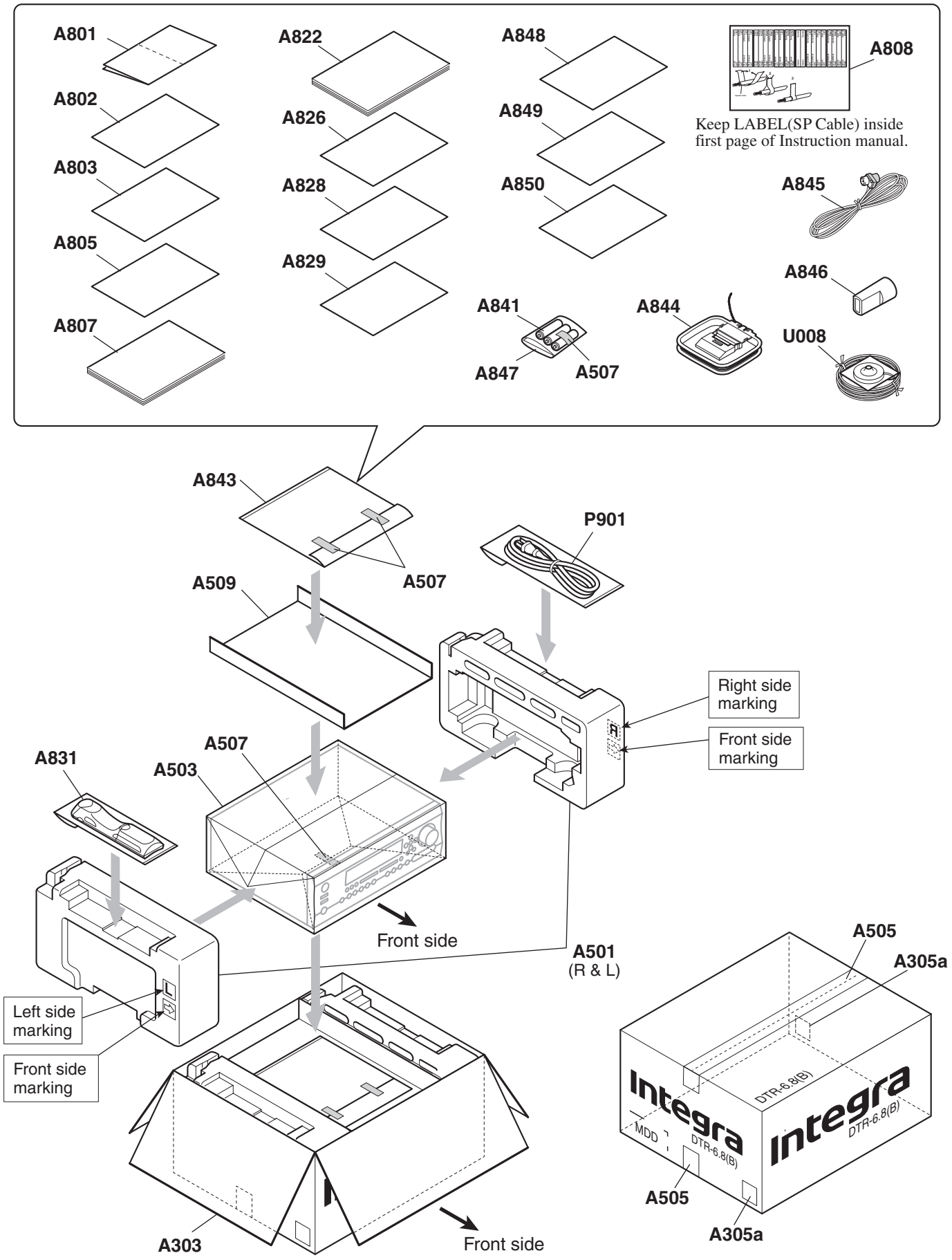

PRINTED CIRCUIT BOARD VIEWS-1

U01 AMPLIFIER PC BOARD (NAAF-9142)

Component side

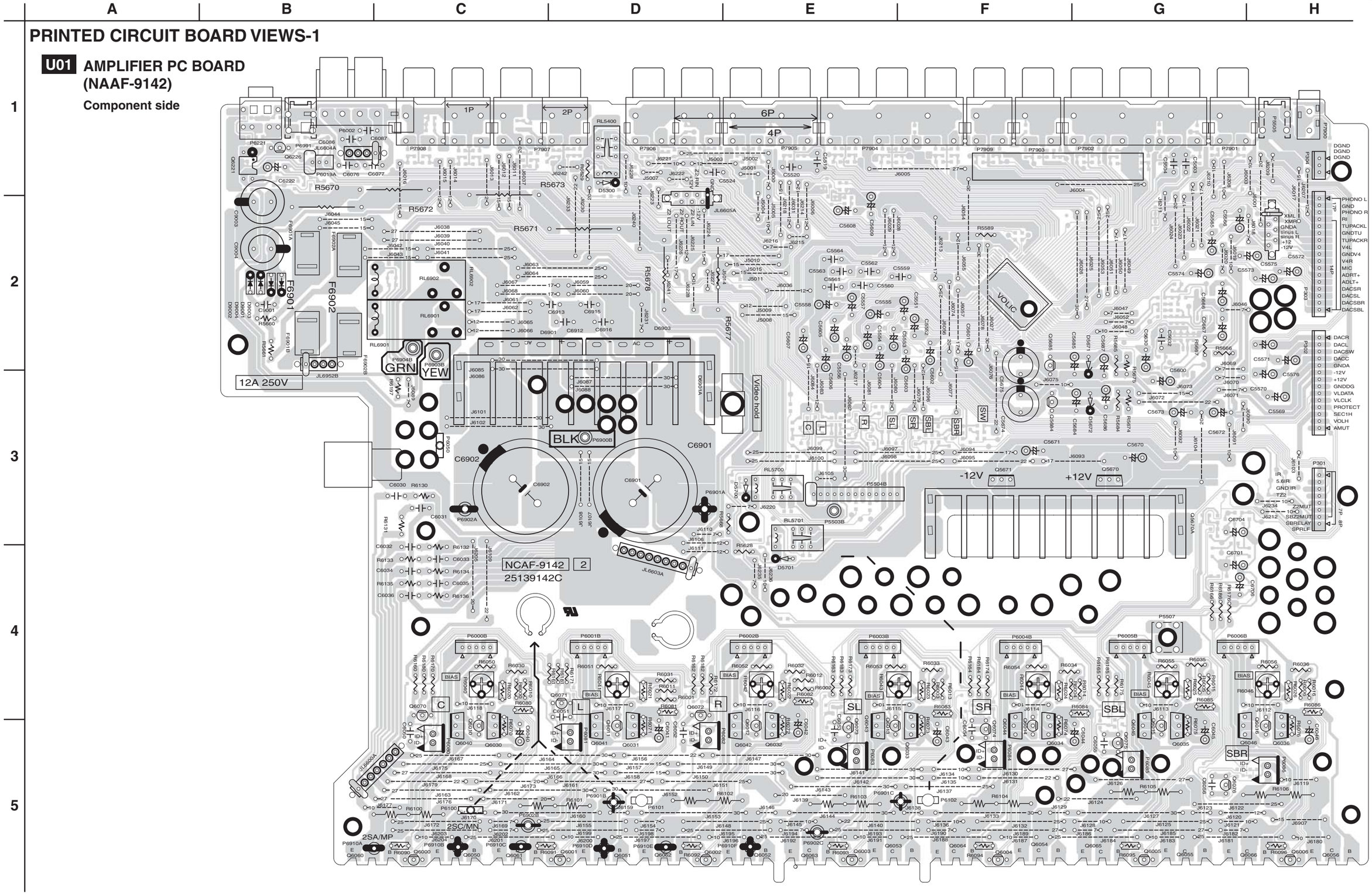

PRINTED CIRCUIT BOARD VIEWS-2

U01 AMPLIFIER PC BOARD (NAAF-9142)

Soldering side

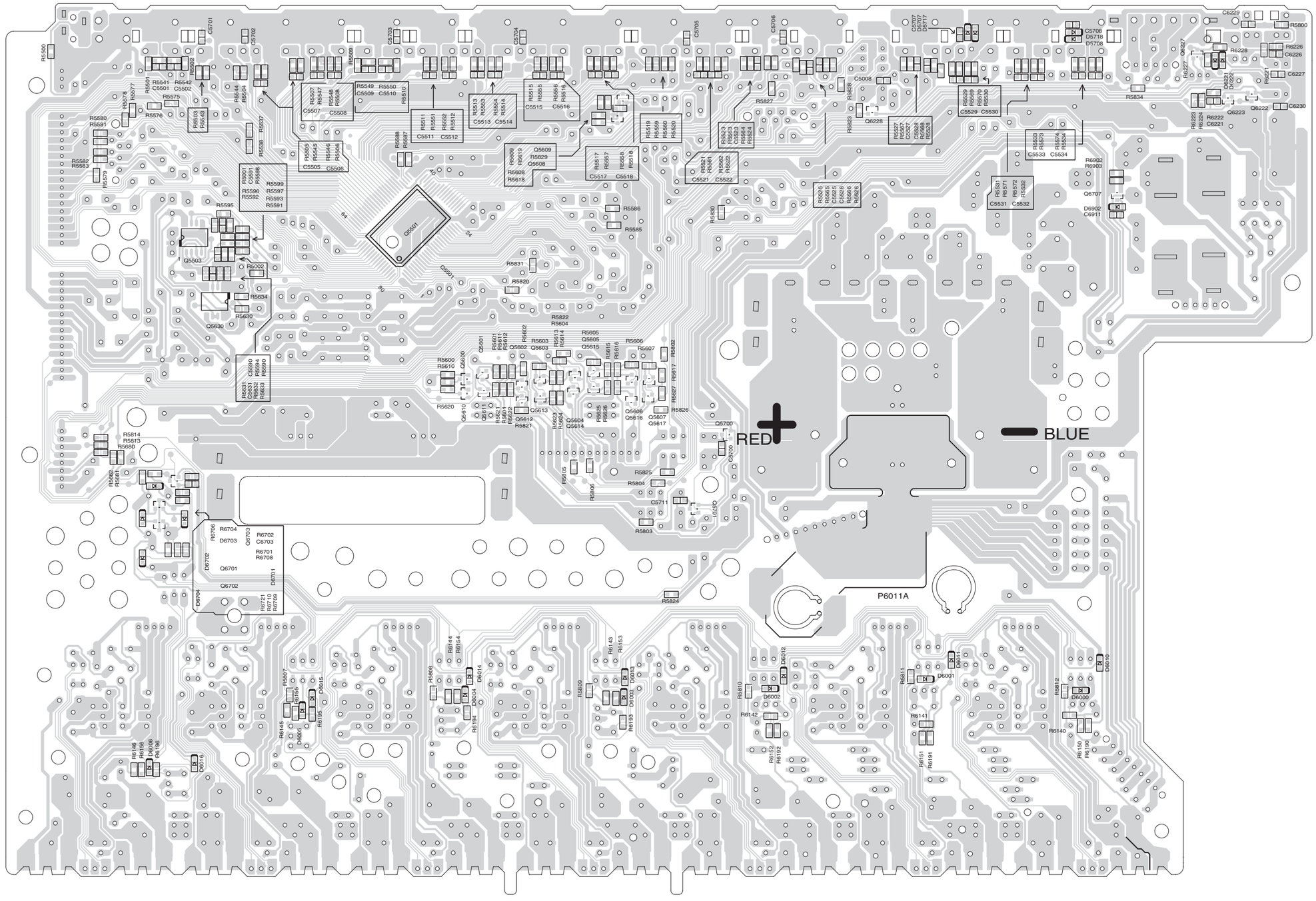

PRINTED CIRCUIT BOARD VIEWS-3

U02 POWER SUPPLY PC BOARD (NAPS-9143)

Component side

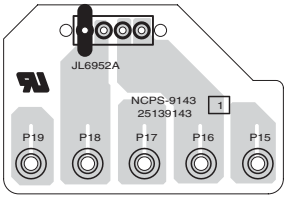

Soldering side

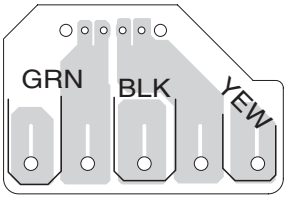

U03 THERMAL SENSOR PC BOARD (NAETC-9144)

Component side

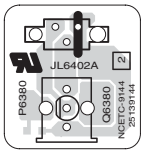

Soldering side

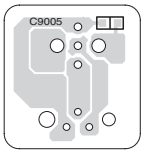

U10 FRONT OPT PC BOARD (NAETC-9167)

Component side

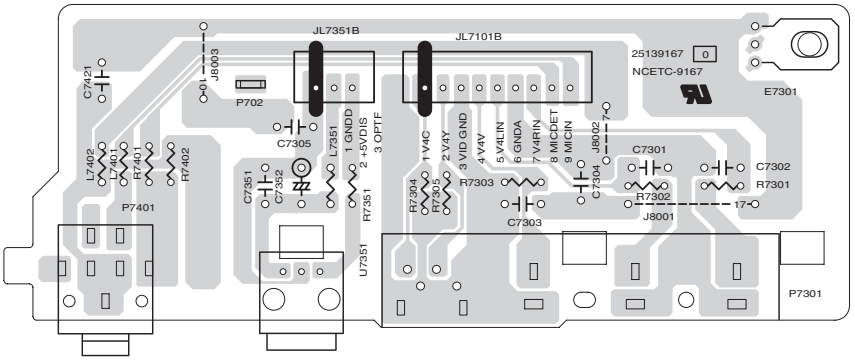

U11 HEADPHONE JACK PC BOARD (NAETC-9168)

Component side

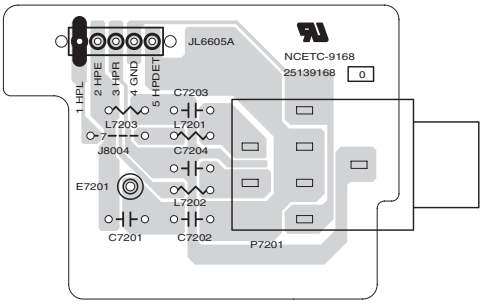

PRINTED CIRCUIT BOARD VIEWS-4

U06 DISPLAY PC BOARD (NADIS-9163)

Component side

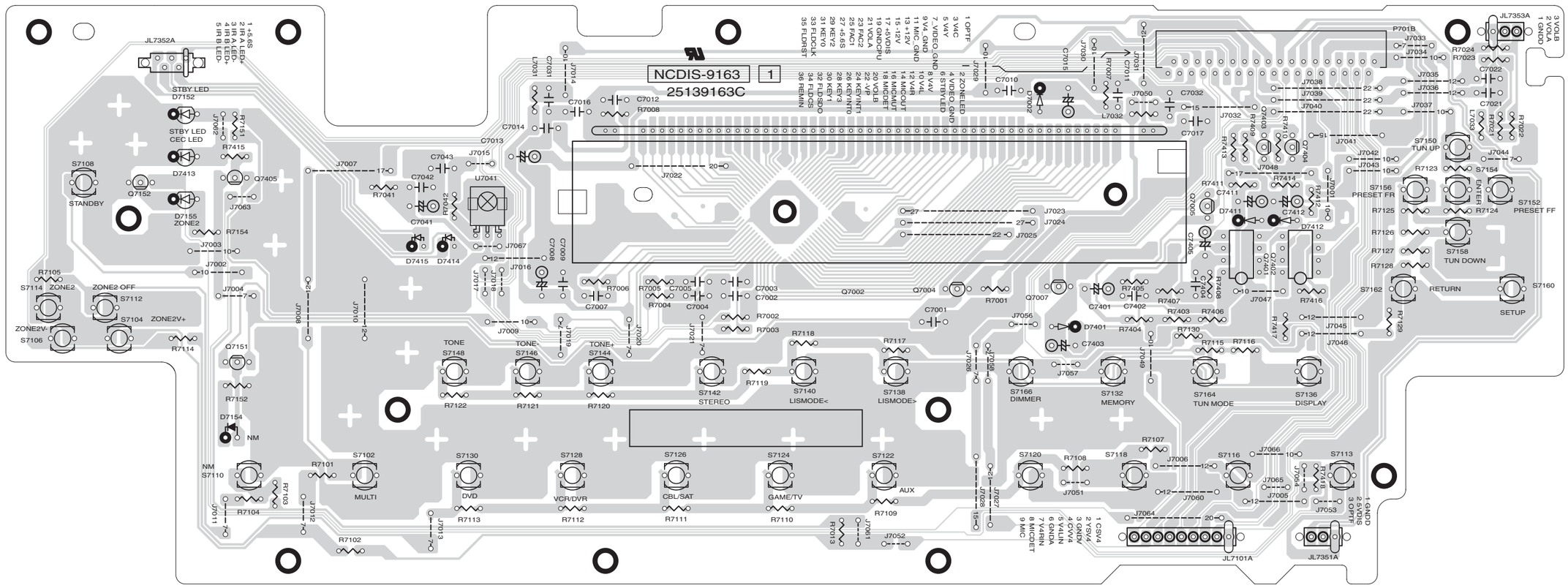

U13 INLET PC BOARD (NAETC-9170)

Component side

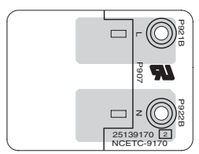

PRINTED CIRCUIT BOARD VIEWS-5

U07 VOLUME PC BOARD (NADIS-9164)

Component side

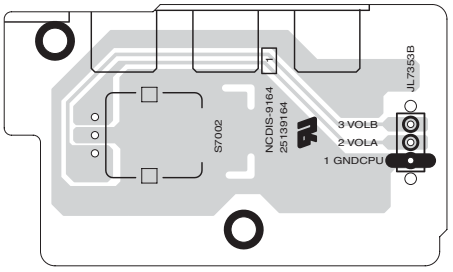

U08 POWER SUPPLY PC BOARD (NAPS-9165)

Component side

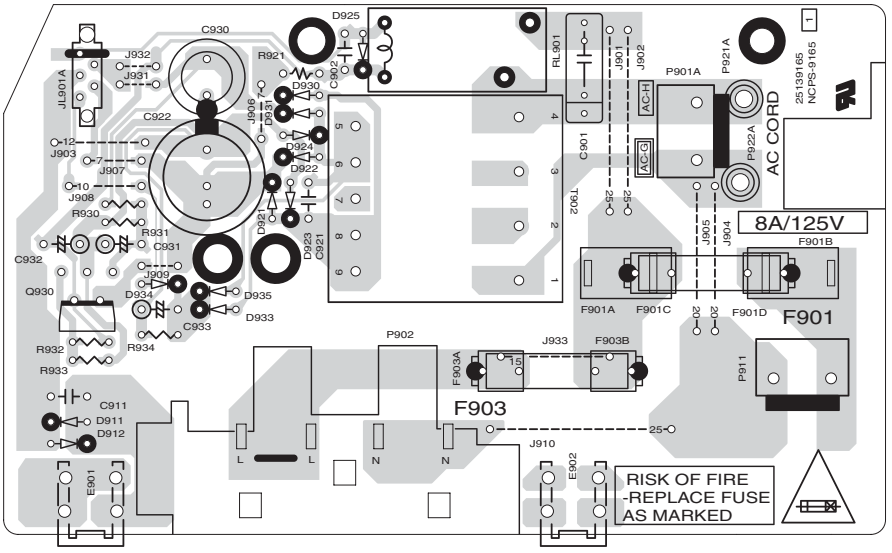

U09 POWER SUPPLY PC BOARD (NAPS-9166)

Component side

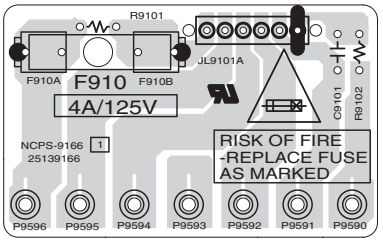

PRINTED CIRCUIT BOARD VIEWS-6

U14 RS232 PC BOARD (NAETC-9171)

Component side

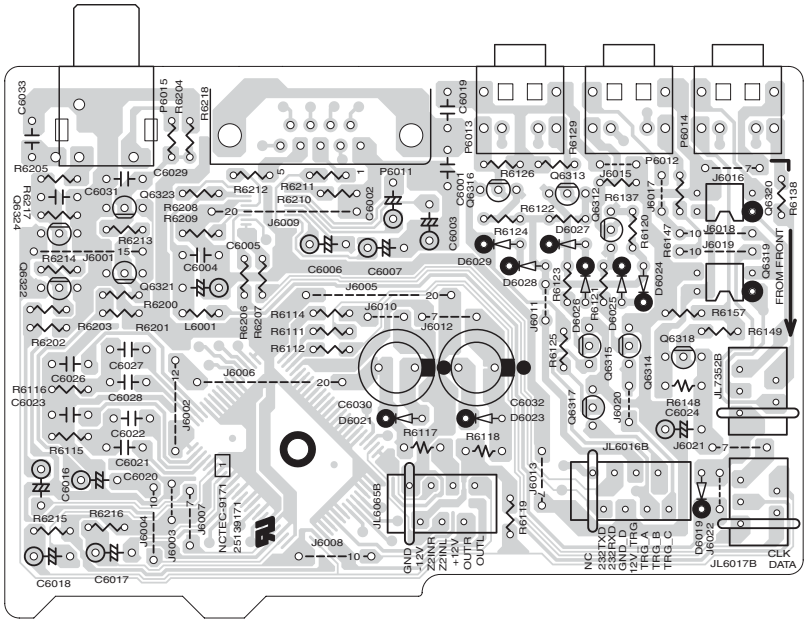

Soldering side

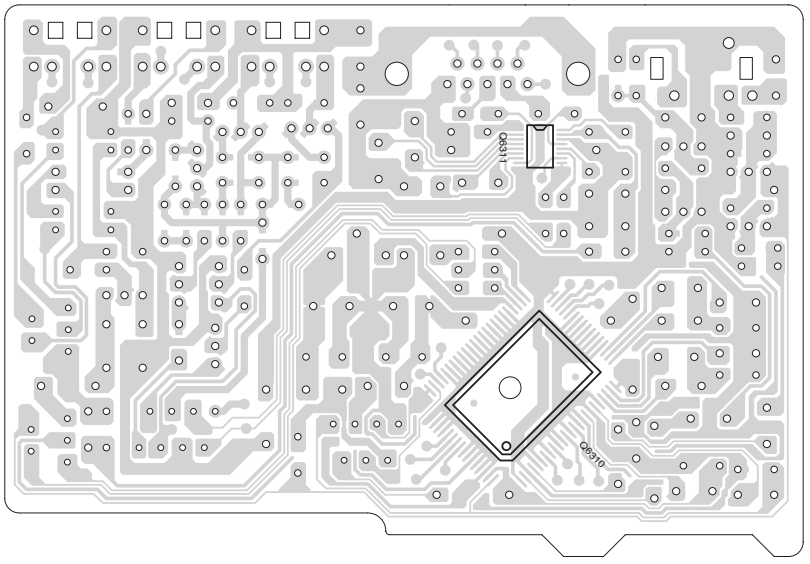

PRINTED CIRCUIT BOARD VIEWS-7

U18 DAC AND MICROPROCESSOR PC BOARD (NADG-9269)

Side-A

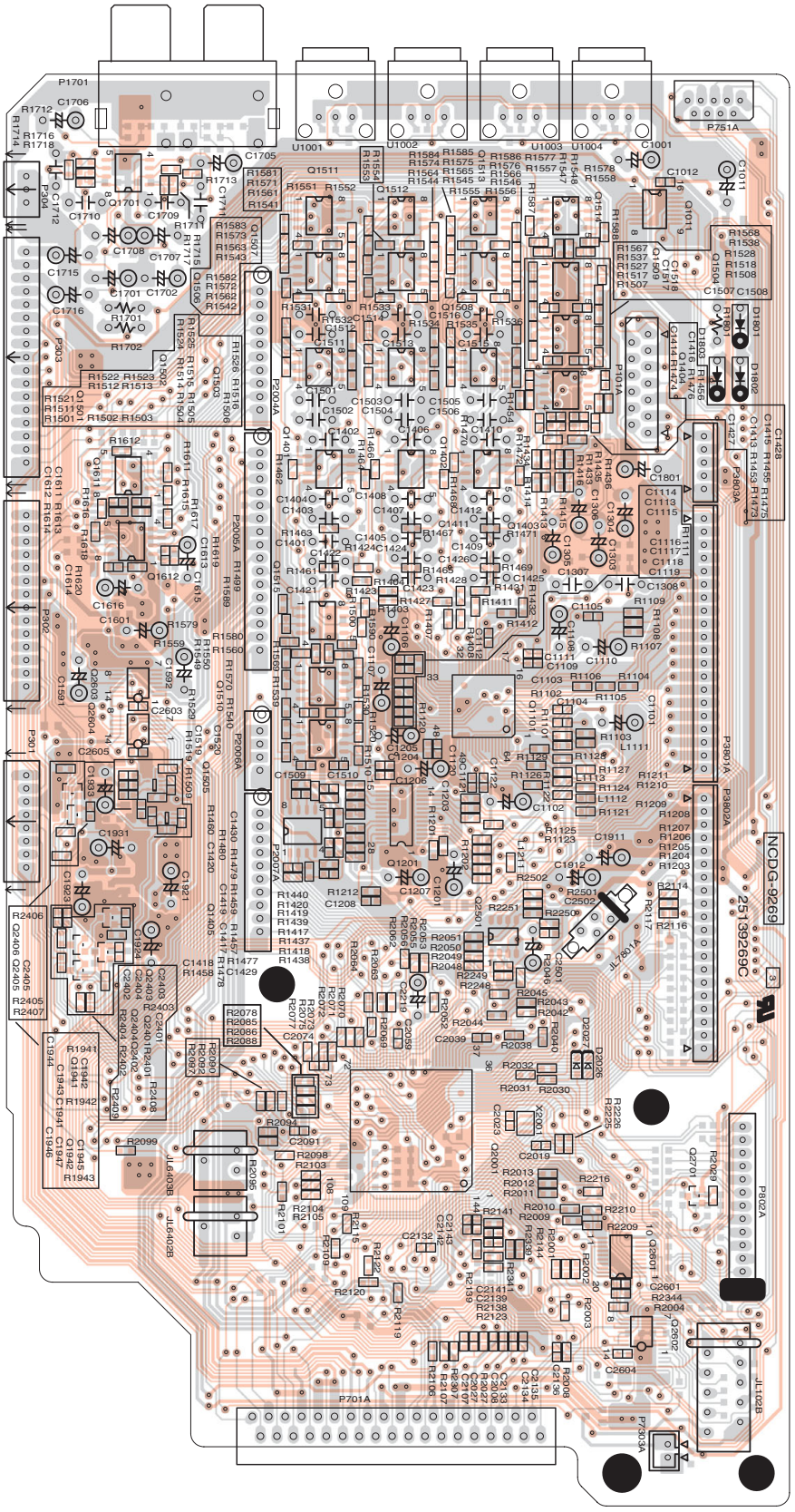

PRINTED CIRCUIT BOARD VIEWS-8

U18 DAC AND MICROPROCESSOR PC BOARD (NADG-9269)

Side-B

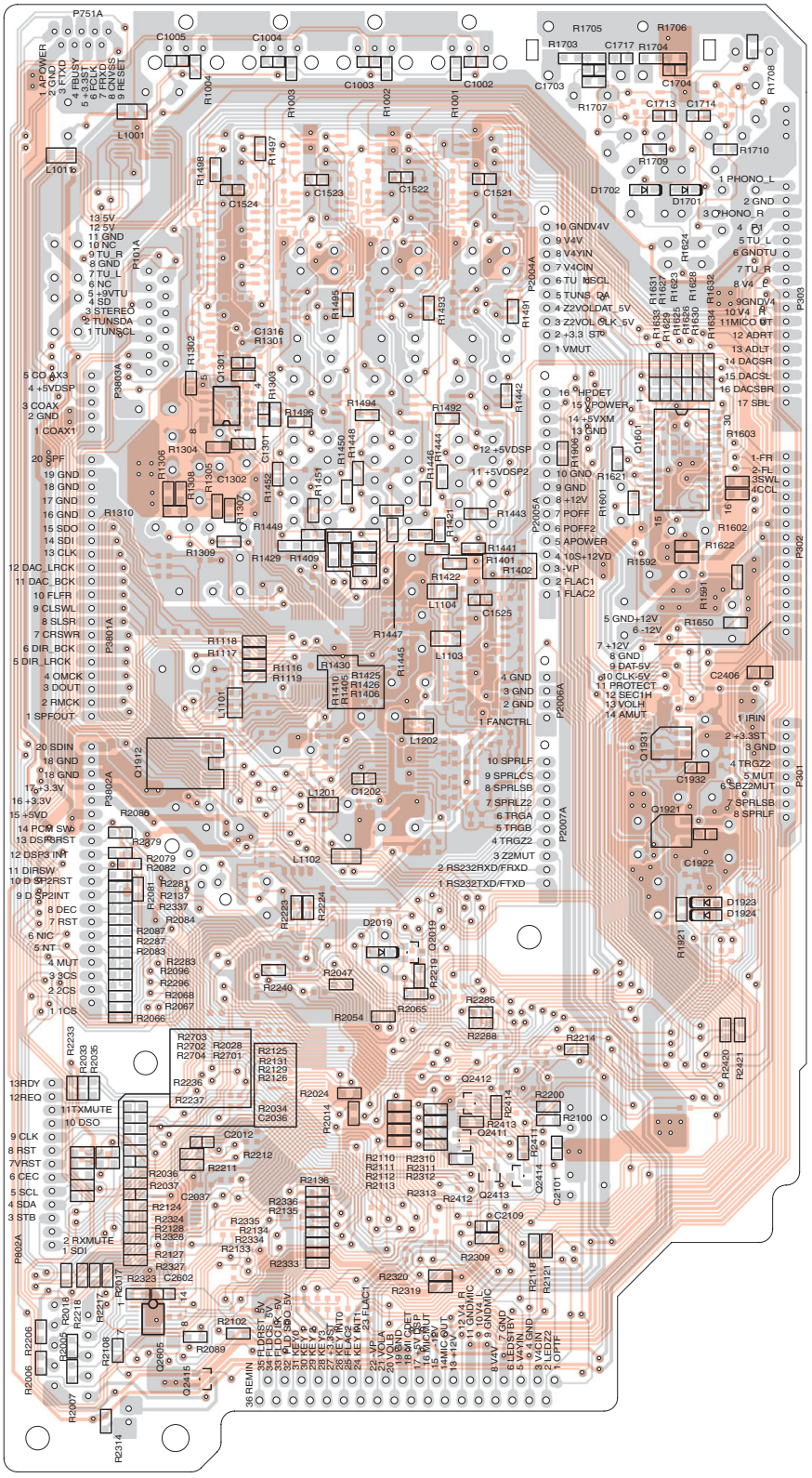

PRINTED CIRCUIT BOARD VIEWS-9

U19 VIDEO AND SP TERMINAL PC BOARD (NAVD-9270)

Side-A

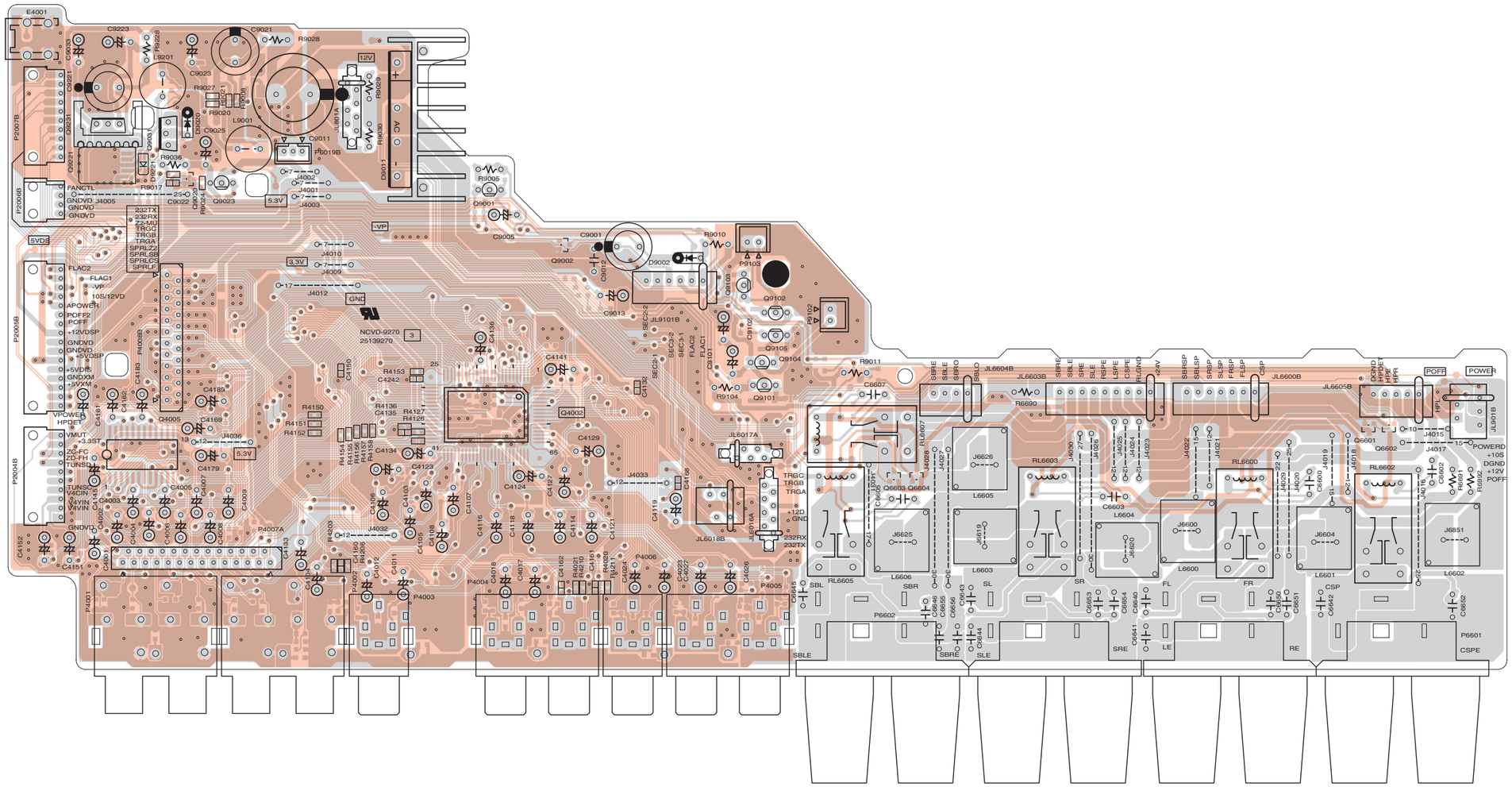

A B C D E F G H

1 2 3 4 5

PRINTED CIRCUIT BOARD VIEWS-10

U19 VIDEO AND SP TERMINAL PC BOARD (NAVD-9270)

Side-B

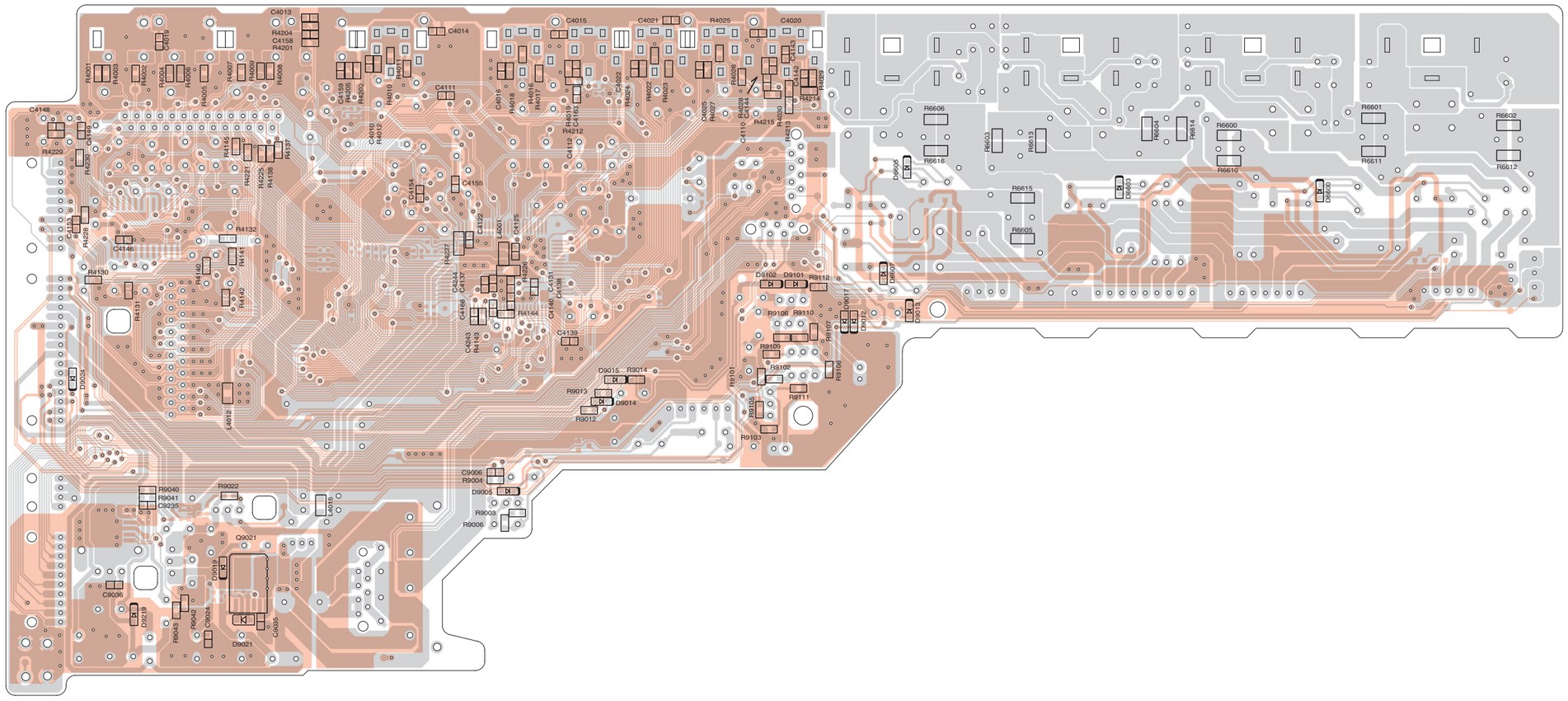

A B C D

PRINTED CIRCUIT BOARD VIEWS-11

U21 XM PC BOARD (NARF-9267)

Component side

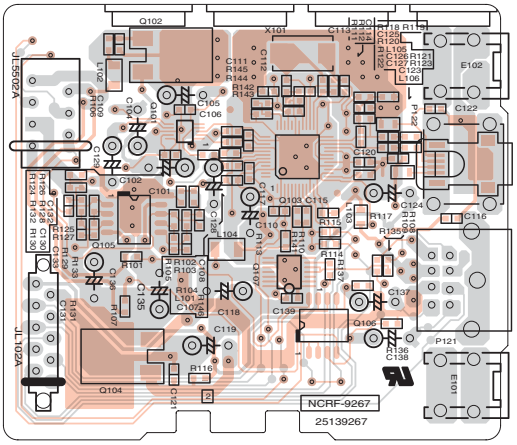

Soldering side

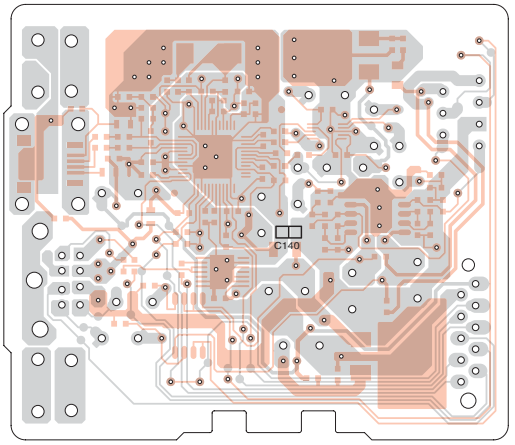

U22 E-CONTROL PC BOARD (NALAN-9268)

Component side

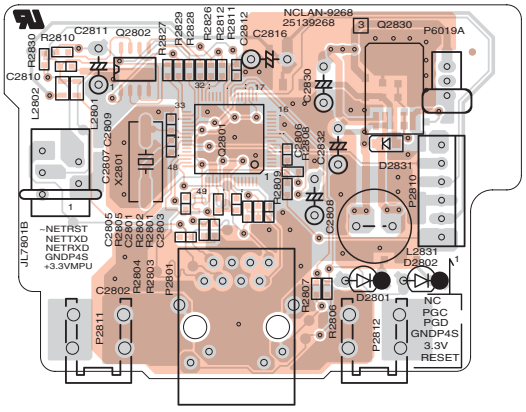

Soldering side

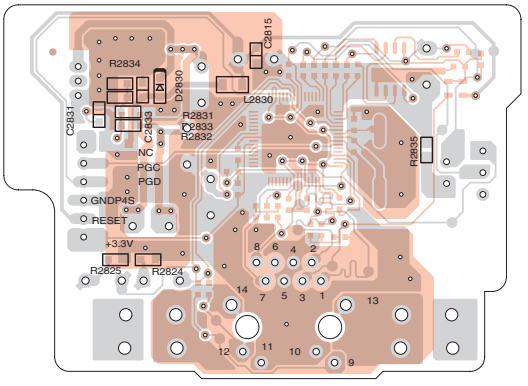

A B C D E F G H

1 2 3 4 5

PRINTED CIRCUIT BOARD VIEWS-12

U23 DRIVER AMPLIFIER PC BOARD (NAAF-8917)

Component side

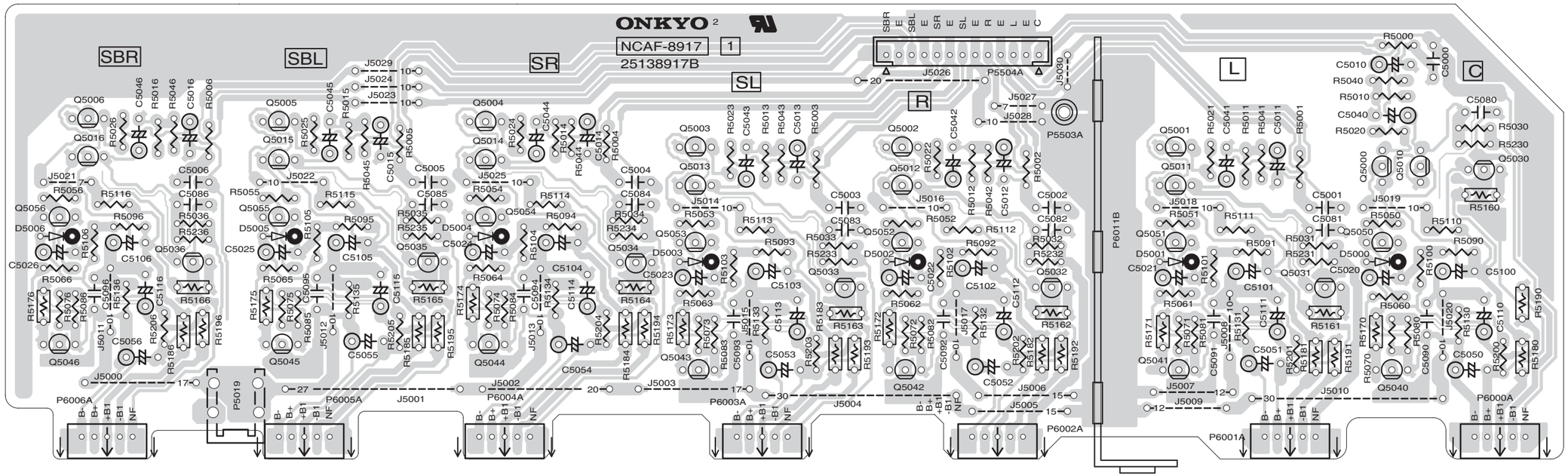

U24 SPEAKER TERMINAL PC BOARD (NAETC-8918)

Component side

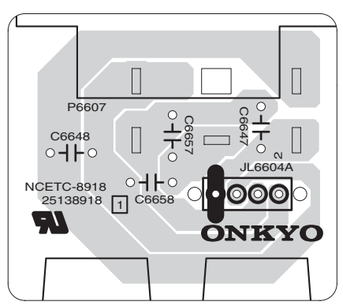

PRINTED CIRCUIT BOARD VIEWS-13

U25 DSP AND HDMI PC BOARD (NAHDM-9265)

Side-A

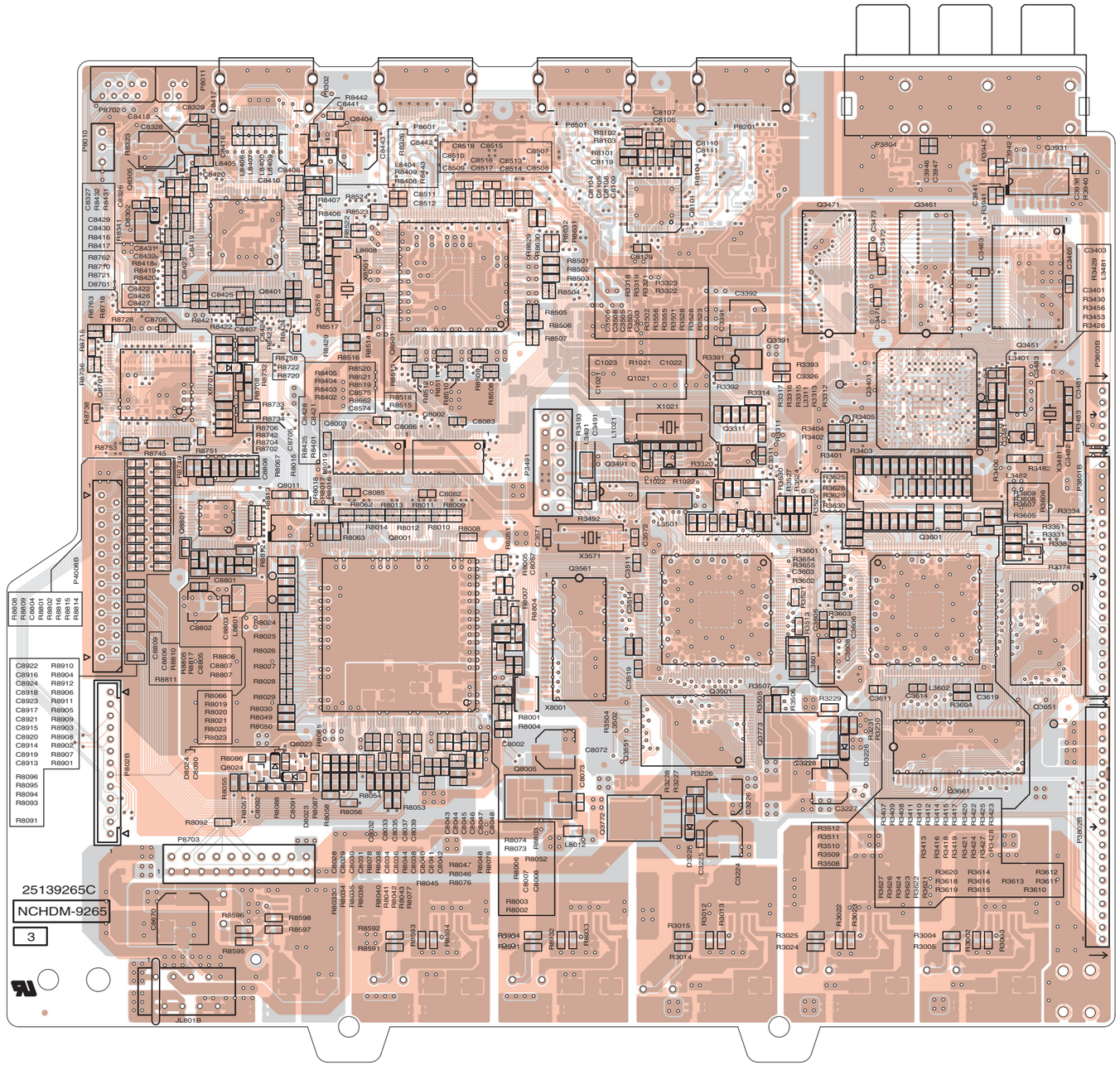

A B C D E F G H

1 2 3 4 5

PRINTED CIRCUIT BOARD VIEWS-14

U25 DSP AND HDMI PC BOARD (NAHDM-9265)

Side-B

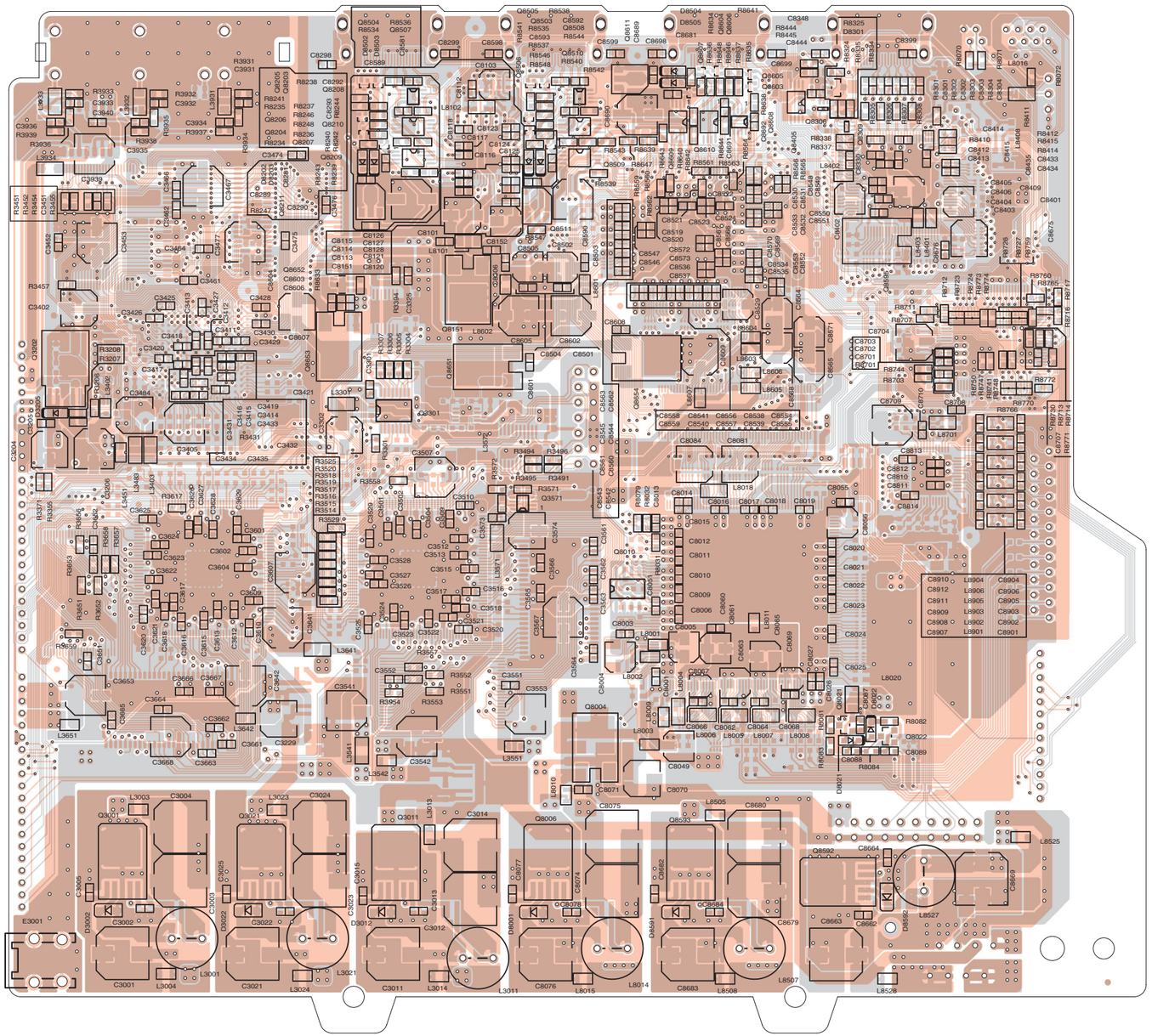

IC BLOCK DIAGRAMS AND TERMINAL DESCRIPTIONS -1

Q5501, Q6310: R2S15211FP (8 ch Electronic Volume, 11 Input Selector and Tone Control)

SYSTEM BLOCK DIAGRAM

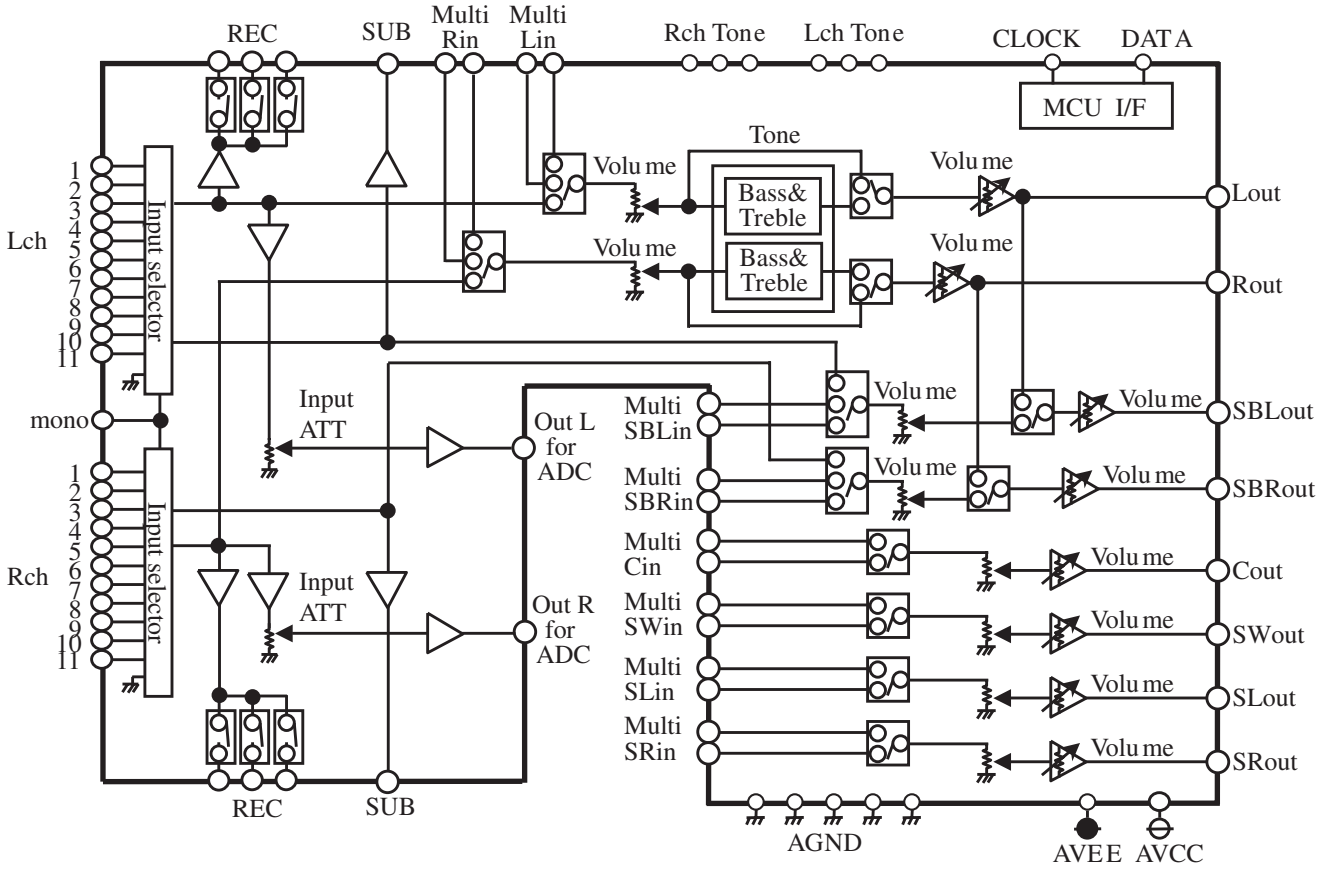

IC BLOCK DIAGRAMS AND TERMINAL DESCRIPTIONS -2

Q5501, Q6310: R2S15211FP (8 ch Electronic Volume, 11 Input Selector and Tone Control)

BLOCK DIAGRAM AND PIN CONFIGURATION

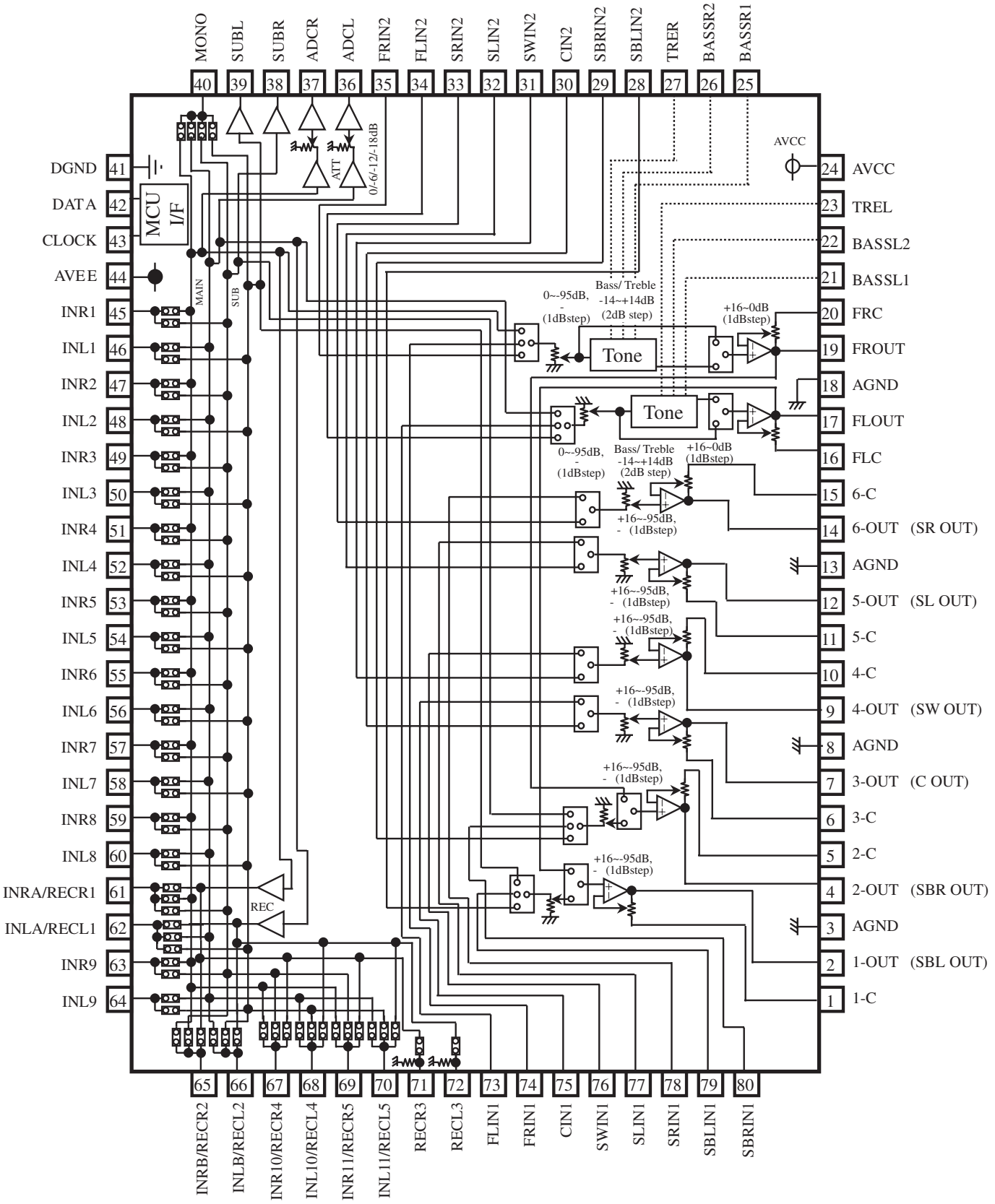

IC BLOCK DIAGRAMS AND TERMINAL DESCRIPTIONS -3

Q5501, Q6310: R2S15211FP (8 ch Electronic Volume, 11 Input Selector and Tone Control)

TERMINAL DESCRIPTION

PIN No.	Name	Function
19,17, 14,12, 9,7, 4,2	FROUT,FLOUT, 6-OUT,5-OUT, 4-OUT, 3-OUT, 2-OUT,1-OUT	Output pin of FL/FR/C/SW/SL/SR/SBL/SBR channel
20,16, 15,11, 10,6, 5,1	FRC,FLC, 6-C,5-C, 4-C,3-C, 2-C,1-C	Connects capacitor for reducing click noise of L/R/C/SW/SL/SR/SBL/SBR channel volume
3,8, 13,18	AGND	Analog ground of internal circuit
23,27	TREL, TRER	Frequency characteristic setting pin of L/R channel tone control (Treble)
21,22, 25,26	BASSL1,BASSL2 BASSR1,BASSR2	Frequency characteristic setting pin of L/R channel tone control (Bass)
24	AVCC	Positive power supply to internal circuit
35,34, 33,32, 31,30, 29,28	FRIN2, FLIN2, SRN2,SLIN2, SWIN2,CIN2, SBRIN2,SBLIN2	Input pin of L/R/C/SW/SL/SR/SBL/SBR channel (Multi IN 1/2)
73,74, 75,76, 77,78, 79,80	FLIN1, FRIN1, CIN1,SWIN1, SLIN1,SRIN1, SBLIN1,SBRIN1	
41	DGND	Digital ground of internal circuit
42	DATA	Input pin of control data
43	CLOCK	Input pin of control clock
44	AVEE	Negative power supply to internal circuit
46,48,50, 52,54,56, 58,60,64	INL1,INL2, INL3, INL4,INL5,INL6, INL7,INL8,INL9	Input pin of L/R channel (Input Selector)
45,47,49, 51,53,55, 57,59,63	INR1,INR2, INR3, INR4,INR5,INR6, INR7,INR8,INR9	
40	MONO	Input pin of monaural (Input Selector)
38,39	SUBL,SUBR	Output pin for L/R channel SUB Output
36,37	ADCL, ADCR	Output pin for L/R channel ADC
72	RECL3	Output pin for L/R channel REC Output
71	RECR3	
61,62, 65,66, 67,68, 69,70	INRA/RECR1,INLA/RECL1, INRB/RECR2,INLB/RECL2, INR10/RECR4,INL10/RECL4, INR11/RECR5,INL11/RECL5	Input pin of L/R channel (Input Selector)/ Output pin for L/R channel REC Output

IC BLOCK DIAGRAMS AND TERMINAL DESCRIPTIONS -4

Q1101: CS42528(8 ch CODEC with S/PDIF Receiver)

BLOCK DIAGRAM

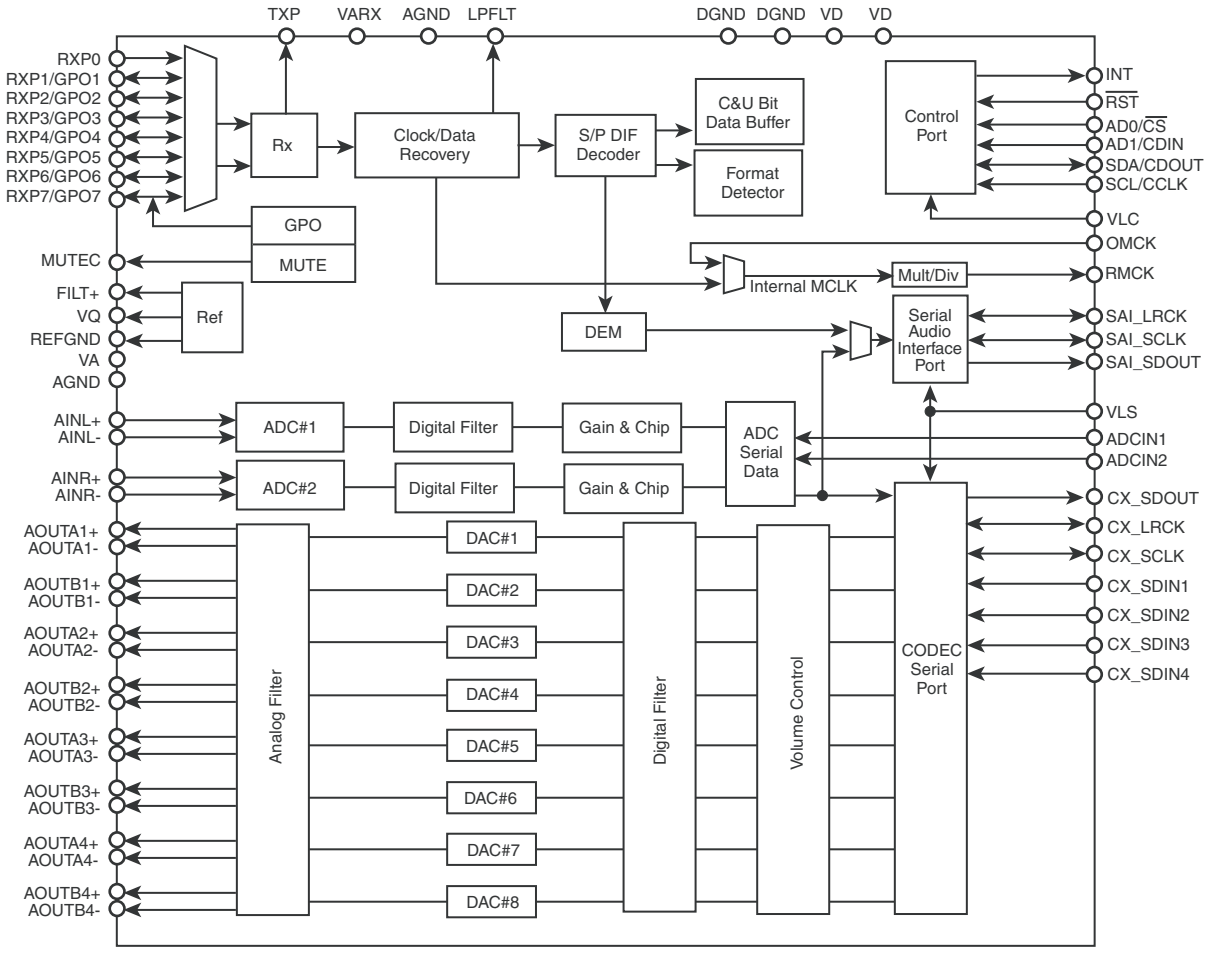

PIN CONFIGURATION

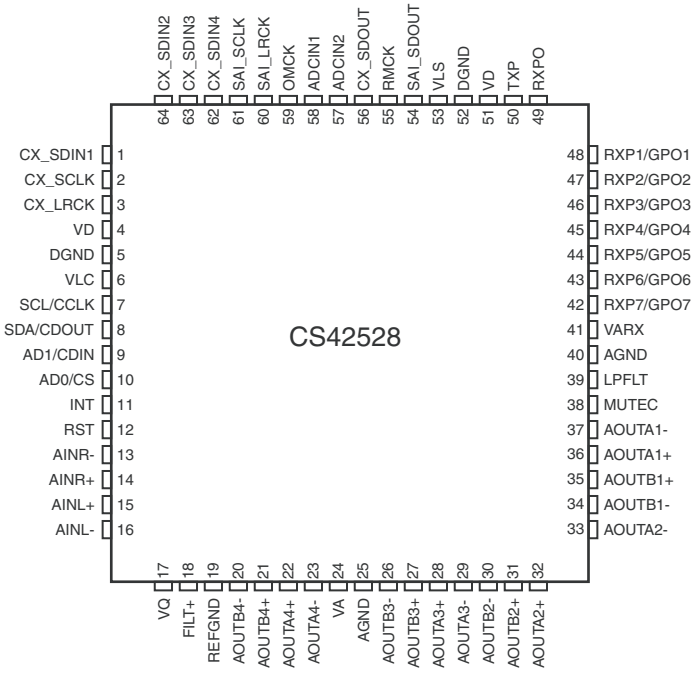

IC BLOCK DIAGRAMS AND TERMINAL DESCRIPTIONS -5

Q1101: CS42528(8 ch CODEC with S/PDIF Receiver)

TERMINAL DESCRIPTION (1/2)

Pin Name	#	Pin Description
CX_SDIN1 CX_SDIN2 CX_SDIN3 CX_SDIN4	1 64 63 62	Codec Serial Audio Data Input (Input) - Input for two's complement serial audio data.
CX_SCLK	2	CODEC Serial Clock (Input/Output) - Serial clock for the CODEC serial audio interface
CX_LRCK	3	CODEC Left Right Clock (Input/ Output) - Determines which channel, Left or Right, is currently active on the CODEC serial audio data line.
VD	4 51	Digital Power (Input) - Positive power supply for the digital section.
DGND	5 52	Digital Ground (Input) - Ground reference. Connects to digital ground.
VLC	6	Control Port Power (Input) - Determines the required signal level for the control port.
SCL/CCLK	7	Serial Control Port Clock (Input) - Serial clock for the serial control port.
SDA/CDOUT	8	Serial Control Data (Input/Output) - SDA is a data I/O line in IC mode and requires an external pull-up resistor to the logic interface voltage. CDOUT is the output data line for the control port interface in SPI mode.
AD1/CDIN	9	Address Bit 1 (I^2C)/Serial Control Data (SPI) (Input) - AD1 a chip address pin in I^2C mode; CDIN is the input data line for control port interface in SPI mode.
AD0/$\overline{CS}$	10	Address Bit 0 (I^2C)/Control Port Chip Select (SPI) (Input) - AD0 is a chip address pin in I^2C mode; CS is the chip select signal in SPI mode.
INT	11	Interrupt (Output) - The CS42528 will generate an interrupt condition as per the Interrupt Mask register.
$\overline{RST}$	12	Reset (Input) - The device enters a low power mode and all internal registers are reset to their default settings when low.
AINR- AINR+	13 14	Differential right Channel Analog Input (Input) - Signals are presented differentially to the delta-sigma modulators via the AINR+/- pins.
AINL- AINL+	15 16	Differential right Channel Analog Input (Input) - Signals are presented differentially to the delta-sigma modulators via the AINR+/- pins.
VQ	17	Quiescent Voltage (Output) - Filter connection for internal quiescent reference voltage.
FILT+	18	Positive Voltage Reference (Output) - Positive reference voltage for the internal sampling circuits.
REFGND	19	Reference Ground (Input) - Ground reference for the internal sampling circuits.
AOUTA1 +, - AOUTB1 +, - AOUTA2 +, - AOUTB2 +, - AOUTA3 +, - AOUTB3 +, - AOUTA4 +, - AOUTB4 +, -	36, 37 35, 34 32, 33 31, 30 28, 29 27, 26 22, 23 21, 20	Differential Analog Output (Output) - The full-scale differential analog output level is specified in the Analog Characteristics specification table.
VA VARX	24 41	Analog Power (Input) - Positive power supply for the analog section.
AGND	25 40	Analog Ground (Input) - Ground reference. Connectes to analog ground.

IC BLOCK DIAGRAMS AND TERMINAL DESCRIPTIONS -6

Q1101: CS42528(8 ch CODEC with S/PDIF Receiver)

TERMINAL DESCRIPTION (2/2)

Pin Name	#	Pin Description
VA VARX	24 41	Analog Power (Input) - Positive power supply for the analog section.
AGND	25 40	Analog Ground (Input) - Ground reference. Connects to analog ground.
MUTEC	38	Mute Control (Output) - The Mute Control pin outputs high impedance following an initial power -on condition or whenever the PDN bit is set to a "1", forcing the codec into power -down mode. The signal will remain in a high impedance state as long as the part is in power-down mode. The Mute Control pin goes to the selected "active" state during reset, muting, or if the master clock to left/right clock frequency ratio is incorrect. This pin is intended to be used as a control for external mute circuits to prevent the clicks and pops that can occur in any single supply system. The use of external mute circuits are not mandatoy but may be desired for designs requiring the absolute minimum in extraneous clicks and pops.
LPFLT	39	PLL Loop Filer (Output) - An RC network should be connected between this pin and ground.
RXP7/GPO7 RXP6/GPO6 RXP5/GPO5 RXP4/GPO4 RXP3/GPO3 RXP2/GPO2 RXP1/GPO1	42 43 44 45 46 47 48	S/PDIF Receiver Input/ General Purpose Output (Input/ Output) - Receiver inputs for S/PDIF encoded data. The CS42528 has an internal 8:2 multiplexer to select the active receiver port, according to the Receiver Mode Control 2 resister. These pins can also be configured as general purpose output pins, ADC Overflow indicators or Mute Control outputs according to the RXP/General Purpose Pin Control resisters.
RXP0	49	S/PDIF Receiver Input (Input) - Dedicated receiver input for S/PDIF encoded data.
TXP	50	S/PDIF Transmitter Output (Output) - S/PDIF encoded data output, mapped directly from one of the receiver inputs as indicated by the Receiver Mode Control 2 resister.
VLP	53	Serial Port Interface Power (Input) - Determines the required signal level for the serial port interfaces.
SAI_SDOUT	54	Serial Audio Interface Serial Data Output (Output) - Output for two's complement serial audio PCM data from the S/PDIF incoming stream. This pin can also be configured to transmit the output of the internal and external ADCs.
RMCK	55	Recovered Master Clock (Output) - Recovered master clock output from the External Clock Reference
CX_SDOUT	56	CODEC Serial Data Output (Output) - Output for two's complement serial audio data the internal and external ADCs.
ADCIN1 ADCIN2	58 57	External ADC Serial Input (Input) - The CS42528 provides for up two external stereo analog to digital converter inputs to provide a maximum of six channels on serial data output line when the CS42528 is placed in One Line mode.
OMCK	59	External Reference Clock (Input) - External clock reference that must be within the ranges specified in currently active on the serial audio data line.
SAI_LRCK	60	Serial Audio Interface Left/Right Clock (Input/Output) - Determines which channel, Left of Right, is currently active on the serial audio data line.
SAI_SCLK	61	Serial Audio Interface Serial Clock (Input/Output) - Serial clock for the Serial Audio Interface

IC BLOCK DIAGRAMS AND TERMINAL DESCRIPTIONS -7

Q1201: CS4398-CZZ(Multi-bit DAC with Volume Control)

BLOCK DIAGRAM

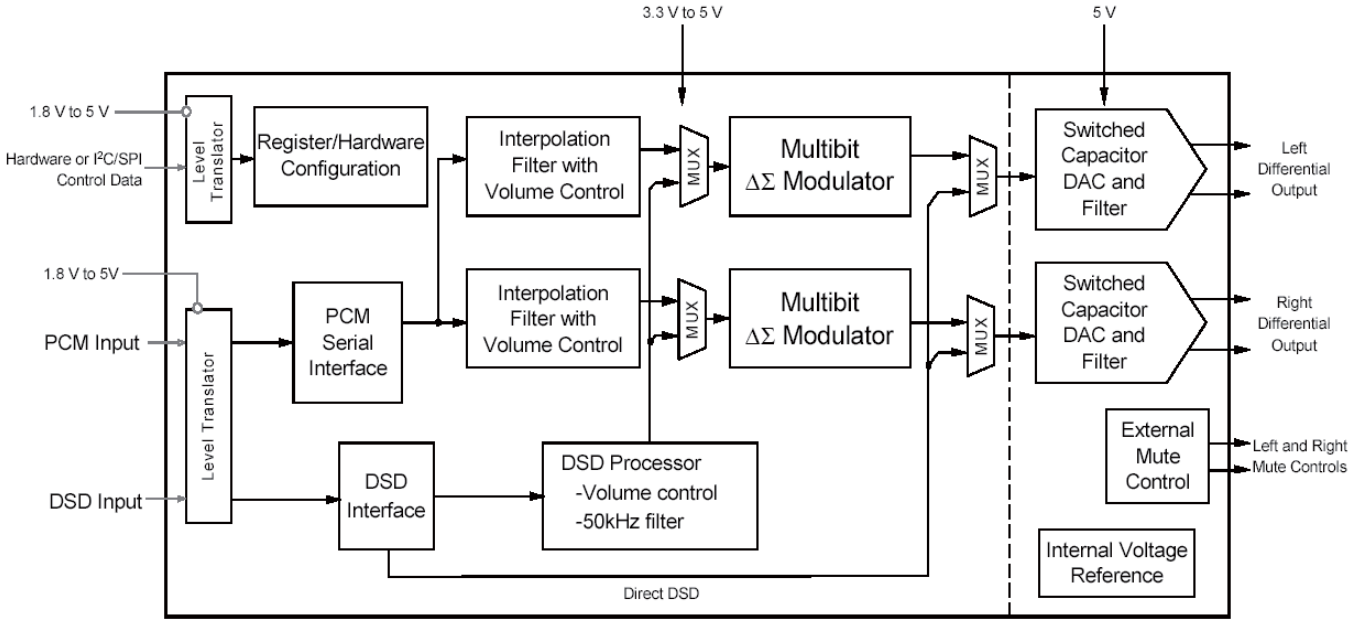

PIN CONFIGURATION

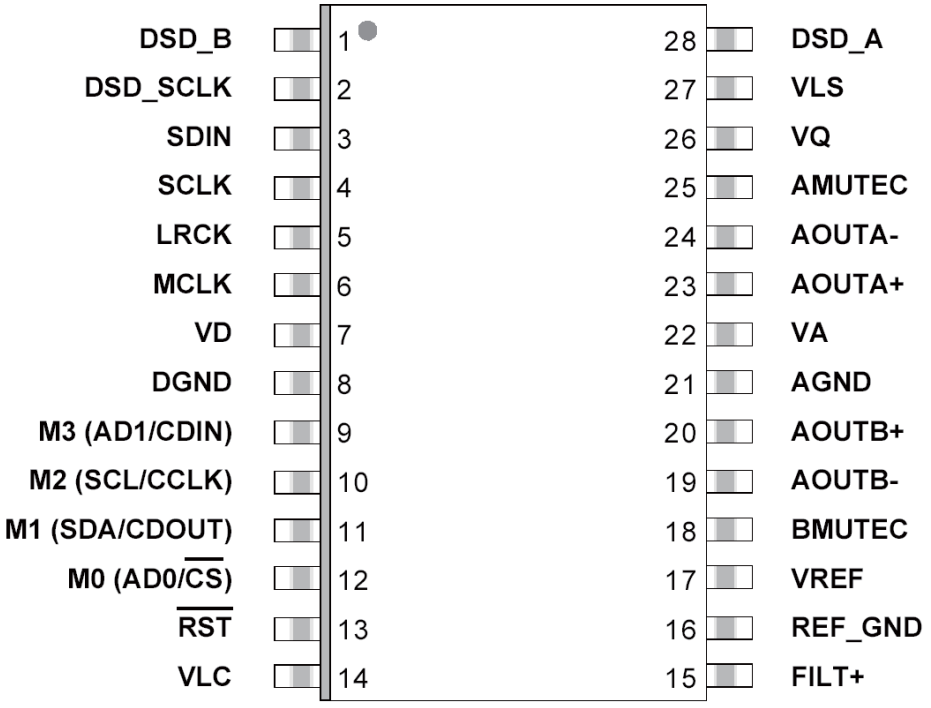

IC BLOCK DIAGRAMS AND TERMINAL DESCRIPTIONS -8

Q1201: CS4398-CZZ(Multi-bit DAC with Volume Control)

TERMINAL DESCRIPTION

Pin Name	Pin #	Pin Description
DSD_A DSD_B	28 1	**Direct Stream Digital Input** (*Input*) - Input for Direct Stream Digital serial audio data.
DSD_SCLK	2	**DSD Serial Clock** (*Input*) - Serial clock for the Direct Stream Digital audio interface.
SDIN	3	**Serial Audio Data Input** (*Input*) - Input for two's complement serial audio data.
SCLK	4	**Serial Clock** (*Input*) - Serial clock for the serial audio interface.
LRCK	5	**Left Right Clock** (*Input*) - Determines which channel, Left or Right, is currently active on the serial audio data line.
MCLK	6	**Master Clock** (*Input*) - Clock source for the delta-sigma modulator and digital filters.
VD	7	**Digital Power** (*Input*) **-** Positive power for the digital section.
DGND	8	**Digital Ground** (*Input*) - Ground reference for the digital section.
RST	13	**Reset** (*Input*) - The device enters system reset when enabled.
VLC	14	**Control Port Power** (*Input*) **-** Positive power for Control Port I/O.
FILT+	15	**Positive Voltage Reference** (*Output*) **-** Positive reference voltage for the internal sampling circuits.
REF_GND	16	**Reference Ground** (*Input*) - Ground reference for the internal sampling circuits.
VREF	17	**Voltage Reference** (*Input*) - Positive voltage reference for the internal sampling circuits.
BMUTEC AMUTEC	18 25	**Mute Control** (*Output*) - The Mute Control pin is active during power-up initialization, muting, power-down or if the master clock to left/right clock frequency ratio is incorrect. During reset, these outputs are set to a high impedance.
AOUTB+ AOUTB-	20 19	**Differential Right Channel Analog Output** (*Output*) - The full-scale differential analog output level is specified in the Analog Characteristics specification table.
AGND	21	**Analog Ground** (*Input*) - Ground reference for the analog section.
VA	22	**Analog Power** (*Input*) **-** Positive power for the analog section.
AOUTA+ AOUTA-	23 24	**Differential Left Channel Analog Output** (*Output*) - The full-scale differential analog output level is specified in the Analog Characteristics specification table.
VQ	26	**Quiescent Voltage** (*Output*) - Filter connection for internal quiescent voltage.
VLS	27	**Serial Audio Interface Power** (*Input*) **-** Positive power for serial audio interface I/O.
Stand-Alone Mode Definitions		
M3 M2 M1 M0	9 10 11 12	**Mode Selection** (*Input*) - Determines the operational mode of the device.
Control Port Mode Definitions		
AD1/CDIN	9	**Address Bit 1 (I²C) / Control Data Input (SPI)** (*Input*) - AD1 is a chip address pin in I²C mode; CDIN is the input data line for the Control Port interface in SPI mode.
SCL/CCLK	10	**Serial Control Port Clock** (*Input*) - Serial clock for the serial Control Port.
SDA/CDOUT	11	**Serial Control Data (I²C) / Control Data Output (SPI)** (*Input/Output*) - SDA is a data I/O line in I²C mode. CDOUT is the output data line for the Control Port interface in SPI mode.
AD0/$\overline{CS}$	12	**Address Bit 0 (I²C) / Control Port Chip Select (SPI)** (*Input*) - AD0 is a chip address pin in I²C mode; $\overline{CS}$ is the chip select signal for SPI format.

IC BLOCK DIAGRAMS AND TERMINAL DESCRIPTIONS -9

Q1601: NJU7312AM(Analog Function Switch)

BLOCK DIAGRAM

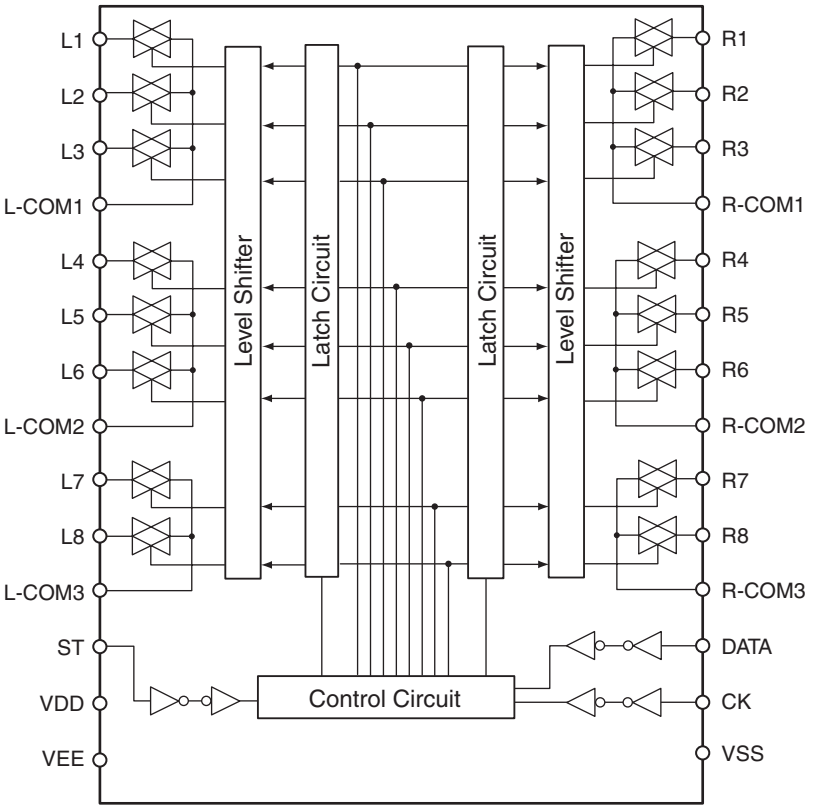

TERMINAL DESCRIPTION

Pin No.	Pin Name	Description
1	VEE	Negative Voltage Supply
2	L1	Analog switch input/output
3	L2	Analog switch input/output
4	L3	Analog switch input/output
5	L-COM1	L1, L2, L3 Common
6	L4	Analog switch input/output
7	L5	Analog switch input/output
8	L6	Analog switch input/output
9	L-COM2	L4, L5, L6 common
10	L7	Analog switch input/output
11	L8	Analog switch input/output
12	L-COM3	L7, L8 Common
14	ST	Chip enable
15	VSS	GND

Pin No.	Pin Name	Description
16	CK	Clock input/output
17	DATA	Data input
19	R-COM3	R7, R8 Common
20	R8	Analog switch input/output
21	R7	Analog switch input/output
22	R-COM2	R4, R5, R6 Common
23	R6	Analog switch input/output
24	R5	Analog switch input/output
25	R4	Analog switch input/output
26	R-COM1	R1, R2, R3 Common
27	R3	Analog switch input/output
28	R2	Analog switch input/output
29	R1	Analog switch input/output
30	VDD	Positive voltage supply

IC BLOCK DIAGRAMS AND TERMINAL DESCRIPTIONS -10

Q3401: D790E001BZDH275/D710E001BZDH275 (Audio DSP)

BLOCK DIAGRAM

Device Block Diagram

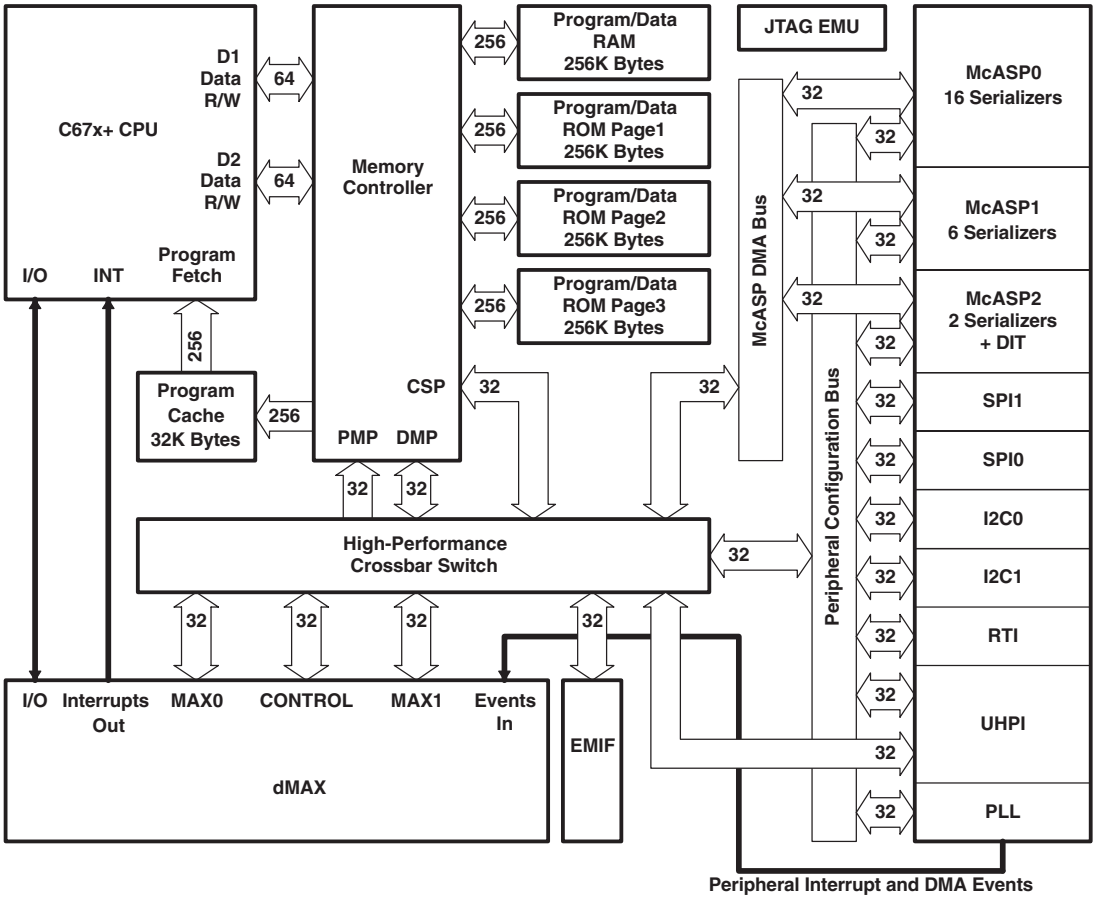

System Diagram

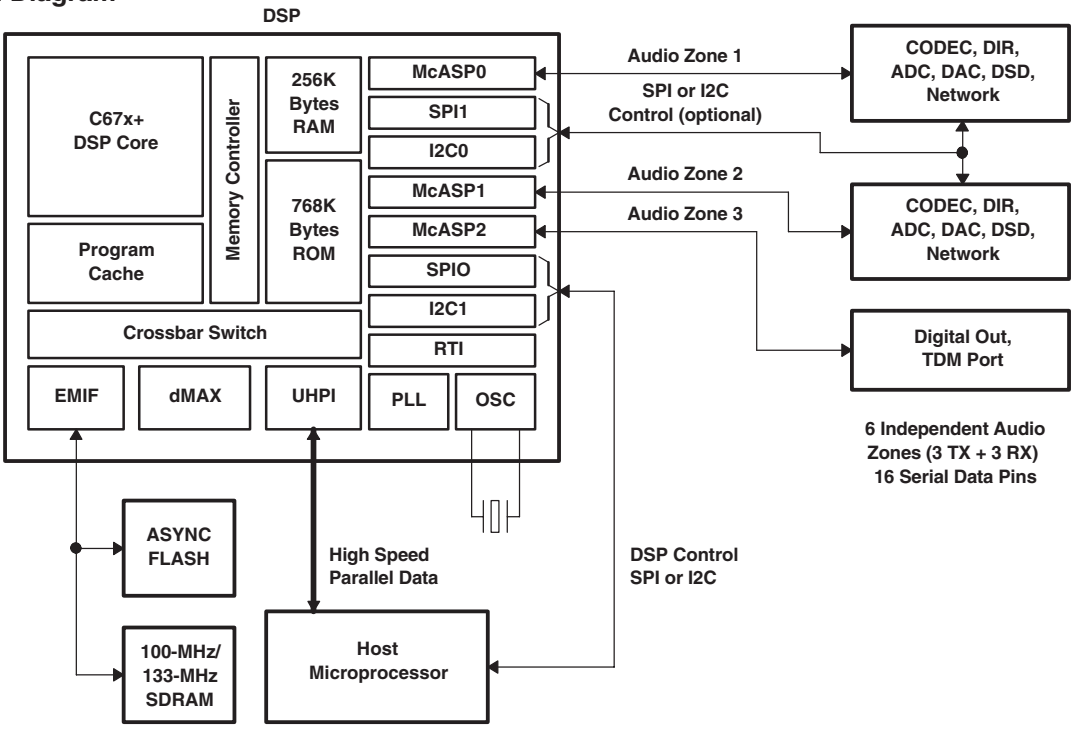

IC BLOCK DIAGRAMS AND TERMINAL DESCRIPTIONS -11

Q3401: D790E001BZDH275/D710E001BZDH275 (Audio DSP)

PIN CONFIGURATION(1/2)

PIN MAP

	1	2	3	4	5	6	7	8	9	10	11	12	13	14	15	16
T	V_{SS}	DV_{DD}	$\overline{EM\_WE}$	EM_D[7]	EM_D[5]	EM_D[3]	V_{SS}	EM_D[0]	EM_D[14]	V_{SS}	EM_D[11]	EM_D[9]	EM_$\overline{WE}$_DQM[1]	EM_CKE	DV_{DD}	V_{SS}
R	DV_{DD}	EM_D[23]/UHPI_HA[7]	$\overline{EM\_CAS}$	EM_$\overline{WE}$_DQM[0]	EM_D[6]	EM_D[4]	EM_D[2]	EM_D[1]	EM_D[15]	EM_D[13]	EM_D[12]	EM_D[10]	EM_D[8]	EM_CLK	EM_$\overline{WE}$_DQM[3]	DV_{DD}
P	TCK	UHPI_HD[24]	EM_D[21]/UHPI_HA[5]	EM_D[20]/UHPI_HA[4]	EM_D[19]/UHPI_HA[3]	EM_D[17]/UHPI_HA[1]	EM_D[31]/UHPI_HA[15]	DV_{DD}	EM_D[28]/UHPI_HA[12]	EM_D[26]/UHPI_HA[10]	EM_D[24]/UHPI_HA[8]	EM_A[12]	EM_$\overline{WE}$_DQM[2]	UHPI_HD[7]	EM_A[11]	EM_A[9]
N	$\overline{EMU[1]}$	UHPI_HD[25]	UHPI_HD[26]	EM_D[22]/UHPI_HA[6]	DV_{DD}	EM_D[18]/UHPI_HA[2]	EM_D[16]/UHPI_HA[0]	EM_D[30]/UHPI_HA[14]	EM_D[29]/UHPI_HA[13]	EM_D[27]/UHPI_HA[11]	EM_D[25]/UHPI_HA[9]	DV_{DD}	UHPI_HD[5]	UHPI_HD[6]	EM_A[8]	EM_A[7]
M	$\overline{EMU[0]}$	TDO	UHPI_HD[27]	DV_{DD}	V_{SS}	CV_{DD}	CV_{DD}	CV_{DD}	CV_{DD}	CV_{DD}	CV_{DD}	V_{SS}	DV_{DD}	UHPI_HD[2]	EM_A[6]	EM_A[5]
L	TDI	UHPI_HD[30]	UHPI_HD[28]	UHPI_HD[29]	V_{SS}	V_{SS}	V_{SS}	V_{SS}	V_{SS}	V_{SS}	V_{SS}	V_{SS}	UHPI_HD[3]	UHPI_HD[4]	EM_A[4]	EM_A[3]
K	V_{SS}	PLLHV	TMS	$\overline{TRST}$	CV_{DD}	V_{SS}	V_{SS}	V_{SS}	V_{SS}	V_{SS}	V_{SS}	CV_{DD}	UHPI_HD[0]	UHPI_HD[1]	EM_A[2]	V_{SS}
J	$OSCV_{SS}$	OSCIN	OSCOUT	$OSCV_{DD}$	CV_{DD}	V_{SS}	V_{SS}	V_{SS}	V_{SS}	V_{SS}	V_{SS}	CV_{DD}	UHPI_HD[15]	DV_{DD}	EM_A[1]	EM_A[0]
H	UHPI_HD[16]/HHWIL	CLKIN	V_{SS}	UHPI_HD[31]	CV_{DD}	V_{SS}	V_{SS}	V_{SS}	V_{SS}	V_{SS}	V_{SS}	CV_{DD}	UHPI_HD[14]	UHPI_HD[13]	EM_A[10]	EM_BA[1]
G	V_{SS}	$\overline{RESET}$	UHPI_HD[17]	UHPI_HD[18]	CV_{DD}	V_{SS}	V_{SS}	V_{SS}	V_{SS}	V_{SS}	V_{SS}	CV_{DD}	UHPI_HD[12]	UHPI_HD[11]	EM_BA[0]	V_{SS}
F	AFSR1	AFSX1	UHPI_HD[19]	UHPI_HD[20]	V_{SS}	V_{SS}	V_{SS}	V_{SS}	V_{SS}	V_{SS}	V_{SS}	V_{SS}	UHPI_HD[10]	UHPI_HD[9]	$\overline{EM\_CS[0]}$	$\overline{EM\_RAS}$
E	ACLKR1	ACLKX1	UHPI_HD[21]	DV_{DD}	V_{SS}	CV_{DD}	CV_{DD}	CV_{DD}	CV_{DD}	CV_{DD}	CV_{DD}	V_{SS}	DV_{DD}	UHPI_HD[8]	$\overline{EM\_CS[2]}$	EM_$\overline{RW}$
D	AHCLKX1	AMUTE1	UHPI_HD[22]	DV_{DD}	DV_{DD}	$\overline{UHPI\_HRDY}$	$\overline{UHPI\_HDS[1]}$	UHPI_$\overline{HRW}$	UHPI_HCNTL[0]	AMUTE2/$\overline{HINT}$	ACLKX2	DV_{DD}	DV_{DD}	EM_WAIT	$\overline{EM\_OE}$	$\overline{SPI0\_ENA}$/I2C1_SDA
C	AMUTE0	AHCLKX0/AHCLKX2	UHPI_HD[23]	$\overline{UHPI\_HBE[2]}$	$\overline{UHPI\_HBE[1]}$	$\overline{UHPI\_HBE[0]}$	$\overline{UHPI\_HDS[2]}$	$\overline{UHPI\_HCS}$	$\overline{UHPI\_HAS}$	UHPI_HCNTL[1]	AFSX2	AFSR2	ACLKR2	AHCLKR2	$\overline{SPI0\_SCS}$/I2C1_SCL	SPI0_CLK/I2C0_SCL
B	DV_{DD}	$\overline{UHPI\_HBE[3]}$	AHCLKR0/AHCLKR1	AFSR0	AXR0[15]/AXR2[0]	AXR0[13]/AXR1[0]	AXR0[12]/AXR1[1]	AXR0[10]/AXR1[3]	AXR0[8]/AXR1[5]/SPI1_SOMI	AXR0[7]/SPI1_CLK	AXR0[5]/$\overline{SPI1\_SCS}$	AXR0[3]	AXR0[1]	SPI0_SOMI/I2C0_SDA	SPI0_SIMO	DV_{DD}
A	V_{SS}	DV_{DD}	AFSX0	ACLKX0	ACLKR0	AXR0[14]/AXR2[1]	V_{SS}	AXR0[11]/AXR1[2]	AXR0[9]/AXR1[4]/SPI1_SIMO	V_{SS}	AXR0[6]/$\overline{SPI1\_ENA}$	AXR0[4]	AXR0[2]	AXR0[0]	DV_{DD}	V_{SS}

IC BLOCK DIAGRAMS AND TERMINAL DESCRIPTIONS -12

Q3401: D790E001BZDH275/D710E001BZDH275 (Audio DSP)

PIN CONFIGURATION(2/2)

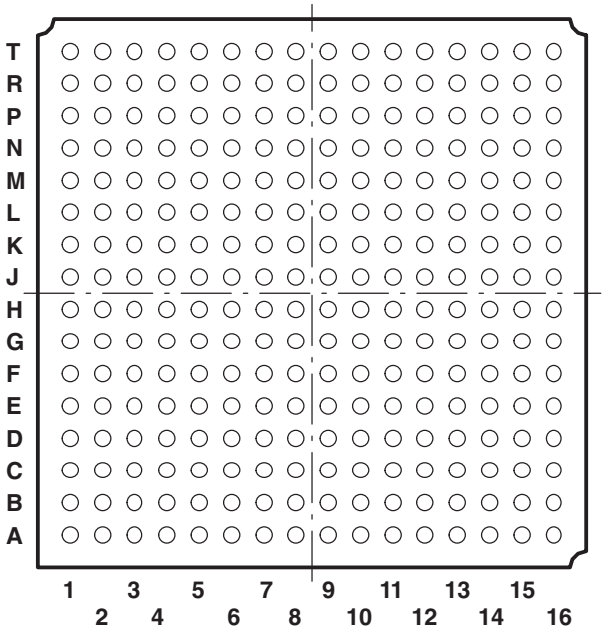

Bottom View

TERMINAL DESCRIPTION(1/5)

SIGNAL NAME	BALL NO.	TYPE(1)	PULL(2)	GPIO(3)	DESCRIPTION
Clocks					
OSCIN	J2	I	-	N	1.2-V Oscillator Input
OSCOUT	J3	O	-	N	1.2-V Oscillator Output
$OSCV_{DD}$	J4	PWR	-	N	Oscillator 1.2-V V_{DD} tap point (for filter only)
$OSCV_{SS}$	J1	PWR	-	N	Oscillator V_{SS} tap point (for filter only)
CLKIN	H2	I	-	N	Alternate clock input (3.3-V LVCMOS Input)
PLLHV	K2	PWR	-	N	PLL 3.3-V Supply Input (requires external filter)
Device Reset					
$\overline{RESET}$	G2	I	-	N	Device reset pin
Emulation/JTAG Port					
TCK	P1	I	IPU	N	Test Clock
TMS	K3	I	IPU	N	Test Mode Select
TDI	L1	I	IPU	N	Test Data In
TDO	M2	OZ	IPU	N	Test Data Out
$\overline{TRST}$	K4	I	IPD	N	Test Reset
$\overline{EMU[0]}$	M1	IO	IPU	N	Emulation Pin 0
$\overline{EMU[1]}$	N1	IO	IPU	N	Emulation Pin 1
Power Pins					
Core Supply (CV_{DD})	E6, E7, E8, E9, E10, E11, G5, G12, H5, H12, J5, J12, K5, K12, M6, M7, M8, M9, M10, M11				
IO Supply (DV_{DD})	A2, A15, B1, B16, D4, D5, D12, D13, E4, E13, J14, M4, M13, N5, N12, P8, R1, R16, T2, T15				
Ground (V_{SS})	A1, A7, A10, A16, E5, E12, F5, F6, F7, F8, F9, F10, F11, F12, G1, G6, G7, G8, G9, G10, G11, G16, H3, H6, H7, H8, H9, H10, H11, J6, J7, J8, J9, J10, J11, K1, K6, K7, K8, K9, K10, K11, K16, L5, L6, L7, L8, L9, L10, L11, L12, M5, M12, T1, T7, T10, T16				

IC BLOCK DIAGRAMS AND TERMINAL DESCRIPTIONS -13

Q3401: D790E001BZDH275/D710E001BZDH275 (Audio DSP)

TERMINAL DESCRIPTION(2/5)

SIGNAL NAME	BALL NO.	TYPE(1)	PULL(2)	GPIO(3)	DESCRIPTION
External Memory Interface (EMIF) Address and Control					
EM_A[0]	J16	O	-	N	EMIF Address Bus
EM_A[1]	J15	O	-	N	
EM_A[2]	K15	O	-	N	
EM_A[3]	L16	O	-	N	
EM_A[4]	L15	O	-	N	
EM_A[5]	M16	O	-	N	
EM_A[6]	M15	O	-	N	
EM_A[7]	N16	O	-	N	
EM_A[8]	N15	O	-	N	
EM_A[9]	P16	O	-	N	
EM_A[10]	H15	O	-	N	
EM_A[11]	P15	O	-	N	
EM_A[12]	P12	O	IPD	N	
EM_BA[0]	G15	O	-	N	SDRAM Bank Address and Asynchronous Memory Low-Order Address
EM_BA[1]	H16	O	-	N	
$\overline{\text{EM\_CS[0]}}$	F15	O	-	N	SDRAM Chip Select
$\overline{\text{EM\_CS[2]}}$	E15	O	-	N	Asynchronous Memory Chip Select
$\overline{\text{EM\_CAS}}$	R3	O	-	N	SDRAM Column Address Strobe
$\overline{\text{EM\_RAS}}$	F16	O	-	N	SDRAM Row Address Strobe
$\overline{\text{EM\_WE}}$	T3	O	-	N	SDRAM Write Enable
EM_CKE	T14	O	-	N	SDRAM Clock Enable
EM_CLK	R14	O	-	N	SDRAM Clock
EM_$\overline{\text{WE}}$_DQM[0]	R4	O	-	N	Write Enable or Byte Enable for EM_D[7:0]
EM_$\overline{\text{WE}}$_DQM[1]	T13	O	-	N	Write Enable or Byte Enable for EM_D[15:8]
EM_$\overline{\text{WE}}$_DQM[2]	P13	O	IPU	N	Write Enable or Byte Enable for EM_D[23:16]
EM_$\overline{\text{WE}}$_DQM[3]	R15	O	IPU	N	Write Enable or Byte Enable for EM_D[31:24]
$\overline{\text{EM\_OE}}$	D15	O	-	N	SDRAM Output Enable
EM_R$\overline{\text{W}}$	E16	O	-	N	Asynchronous Memory Read/not Write
EM_WAIT	D14	I	IPU	N	Asynchronous Wait Input (Programmable Polarity) or Interrupt (NAND)

(1) TYPE column refers to pin direction in functional mode. If a pin has more than one function with different directions, the functions are separated with a slash (/).
(2) PULL column:
IPD = Internal Pulldown resistor
IPU = Internal Pullup resistor
(3) If the GPIO column is 'Y', then in GPIO mode, the pin is configurable as an IO unless otherwise marked.

IC BLOCK DIAGRAMS AND TERMINAL DESCRIPTIONS -14

Q3401: D790E001BZDH275/D710E001BZDH275 (Audio DSP)

TERMINAL DESCRIPTION(3/5)

SIGNAL NAME	BALL NO.	TYPE(1)	PULL(2)	GPIO(3)	DESCRIPTION
External Memory Interface (EMIF) Data Bus / Universal Host-Port Interface (UHPI) Address Bus Option					
EM_D[0]	T8	IO	-	N	EMIF Data Bus [Lower 16 Bits]
EM_D[1]	R8	IO	-	N	
EM_D[2]	R7	IO	-	N	
EM_D[3]	T6	IO	-	N	
EM_D[4]	R6	IO	-	N	
EM_D[5]	T5	IO	-	N	
EM_D[6]	R5	IO	-	N	
EM_D[7]	T4	IO	-	N	
EM_D[8]	R13	IO	-	N	
EM_D[9]	T12	IO	-	N	
EM_D[10]	R12	IO	-	N	
EM_D[11]	T11	IO	-	N	
EM_D[12]	R11	IO	-	N	
EM_D[13]	R10	IO	-	N	
EM_D[14]	T9	IO	-	N	
EM_D[15]	R9	IO	-	N	
EM_D[16]/UHPI_HA[0]	N7	IO/I	IPD	N	EMIF Data Bus [Upper 16 Bits (IO)] or UHPI Address Input (I)
EM_D[17]/UHPI_HA[1]	P6	IO/I	IPD	N	
EM_D[18]/UHPI_HA[2]	N6	IO/I	IPD	N	
EM_D[19]/UHPI_HA[3]	P5	IO/I	IPD	N	
EM_D[20]/UHPI_HA[4]	P4	IO/I	IPD	N	
EM_D[21]/UHPI_HA[5]	P3	IO/I	IPD	N	
EM_D[22]/UHPI_HA[6]	N4	IO/I	IPD	N	
EM_D[23]/UHPI_HA[7]	R2	IO/I	IPD	N	
EM_D[24]/UHPI_HA[8]	P11	IO/I	IPD	N	
EM_D[25]/UHPI_HA[9]	N11	IO/I	IPD	N	
EM_D[26]/UHPI_HA[10]	P10	IO/I	IPD	N	
EM_D[27]/UHPI_HA[11]	N10	IO/I	IPD	N	
EM_D[28]/UHPI_HA[12]	P9	IO/I	IPD	N	
EM_D[29]/UHPI_HA[13]	N9	IO/I	IPD	N	
EM_D[30]/UHPI_HA[14]	N8	IO/I	IPD	N	
EM_D[31]/UHPI_HA[15]	P7	IO/I	IPD	N	

IC BLOCK DIAGRAMS AND TERMINAL DESCRIPTIONS -15

Q3401: D790E001BZDH275/D710E001BZDH275 (Audio DSP)

TERMINAL DESCRIPTION(4/5)

SIGNAL NAME	BALL NO.	TYPE(1)	PULL(2)	GPIO(3)	DESCRIPTION
Universal Host-Port Interface (UHPI) Data and Control					
UHPI_HD[0]	K13	IO	IPD	Y	UHPI Data Bus [Lower 16 Bits]
UHPI_HD[1]	K14	IO	IPD	Y	
UHPI_HD[2]	M14	IO	IPD	Y	
UHPI_HD[3]	L13	IO	IPD	Y	
UHPI_HD[4]	L14	IO	IPD	Y	
UHPI_HD[5]	N13	IO	IPD	Y	
UHPI_HD[6]	N14	IO	IPD	Y	
UHPI_HD[7]	P14	IO	IPD	Y	
UHPI_HD[8]	E14	IO	IPD	Y	
UHPI_HD[9]	F14	IO	IPD	Y	
UHPI_HD[10]	F13	IO	IPD	Y	
UHPI_HD[11]	G14	IO	IPD	Y	
UHPI_HD[12]	G13	IO	IPD	Y	
UHPI_HD[13]	H14	IO	IPD	Y	
UHPI_HD[14]	H13	IO	IPD	Y	
UHPI_HD[15]	J13	IO	IPD	Y	
UHPI_HD[16]/HHWIL	H1	IO/I	IPD	Y	UHPI Data Bus [Upper 16 Bits (IO)] in the following modes: • Fullword Multiplexed Address and Data • Fullword Non-Multiplexed UHPI_HHWIL (I) on pin UHPI_HD[16]/HHWIL and GPIO on other pins in the following mode: • Half-word Multiplexed Address and Data In this mode, UHPI_HHWIL indicates whether the high or low half-word is being addressed.
UHPI_HD[17]	G3	IO	IPD	Y	
UHPI_HD[18]	G4	IO	IPD	Y	
UHPI_HD[19]	F3	IO	IPD	Y	
UHPI_HD[20]	F4	IO	IPD	Y	
UHPI_HD[21]	E3	IO	IPD	Y	
UHPI_HD[22]	D3	IO	IPD	Y	
UHPI_HD[23]	C3	IO	IPD	Y	
UHPI_HD[24]	P2	IO	IPD	Y	
UHPI_HD[25]	N2	IO	IPD	Y	
UHPI_HD[26]	N3	IO	IPD	Y	
UHPI_HD[27]	M3	IO	IPD	Y	
UHPI_HD[28]	L3	IO	IPD	Y	
UHPI_HD[29]	L4	IO	IPD	Y	
UHPI_HD[30]	L2	IO	IPD	Y	
UHPI_HD[31]	H4	IO	IPD	Y	
Universal Host-Port Interface (UHPI) Control					
$\overline{\text{UHPI\_HBE[0]}}$	C6	I	IPD	Y	UHPI Byte Enable for UHPI_HD[7:0]
$\overline{\text{UHPI\_HBE[1]}}$	C5	I	IPD	Y	UHPI Byte Enable for UHPI_HD[15:8]
$\overline{\text{UHPI\_HBE[2]}}$	C4	I	IPD	Y	UHPI Byte Enable for UHPI_HD[23:16]
$\overline{\text{UHPI\_HBE[3]}}$	B2	I	IPD	Y	UHPI Byte Enable for UHPI_HD[31:24]
UHPI_HCNTL[0]	D9	I	IPD	Y	UHPI Control Inputs Select Access Mode
UHPI_HCNTL[1]	C10	I	IPD	Y	
$\overline{\text{UHPI\_HAS}}$	C9	I	IPD	Y	UHPI Host Address Strobe for Hosts with Multiplexed Address/Data bus
UHPI_HR$\overline{\text{W}}$	D8	I	IPD	Y	UHPI Read/not Write Input
$\overline{\text{UHPI\_HDS[1]}}$	D7	I	IPU	Y	UHPI Select Signals which create the internal $\overline{\text{HSTROBE}}$ active when: ($\overline{\text{UHPI\_HCS}}$ == '0') & ($\overline{\text{UHPI\_HDS[1]}}$!= $\overline{\text{UHPI\_HDS[2]}}$)
$\overline{\text{UHPI\_HDS[2]}}$	C7	I	IPU	Y	
$\overline{\text{UHPI\_HCS}}$	C8	I	IPU	Y	
$\overline{\text{UHPI\_HRDY}}$	D6	O	IPD	Y	UHPI Ready Output

IC BLOCK DIAGRAMS AND TERMINAL DESCRIPTIONS -16

Q3401: D790E001BZDH275/D710E001BZDH275 (Audio DSP)

TERMINAL DESCRIPTION(5/5)

SIGNAL NAME	BALL NO.	TYPE(1)	PULL(2)	GPIO(3)	DESCRIPTION
McASP0, McASP1, McASP2, and SPI1 Serial Ports					
AHCLKR0/AHCLKR1	B3	IO	-	Y	McASP0 and McASP1 Receive Master Clock
ACLKR0	A5	IO	-	Y	McASP0 Receive Bit Clock
AFSR0	B4	IO	-	Y	McASP0 Receive Frame Sync (L/R Clock)
AHCLKX0/AHCLKX2	C2	IO	-	Y	McASP0 and McASP2 Transmit Master Clock
ACLKX0	A4	IO	-	Y	McASP0 Transmit Bit Clock
AFSX0	A3	IO	-	Y	McASP0 Transmit Frame Sync (L/R Clock)
AMUTE0	C1	O	-	Y	McASP0 MUTE Output
AXR0[0]	A14	IO	-	Y	McASP0 Serial Data 0
AXR0[1]	B13	IO	-	Y	McASP0 Serial Data 1
AXR0[2]	A13	IO	-	Y	McASP0 Serial Data 2
AXR0[3]	B12	IO	-	Y	McASP0 Serial Data 3
AXR0[4]	A12	IO	-	Y	McASP0 Serial Data 4
AXR0[5]/$\overline{\text{SPI1\_SCS}}$	B11	IO	-	Y	McASP0 Serial Data 5 or SPI1 Slave Chip Select
AXR0[6]/$\overline{\text{SPI1\_ENA}}$	A11	IO	-	Y	McASP0 Serial Data 6 or SPI1 Enable (Ready)
AXR0[7]/SPI1_CLK	B10	IO	-	Y	McASP0 Serial Data 7 or SPI1 Serial Clock
AXR0[8]/AXR1[5]/ SPI1_SOMI	B9	IO	-	Y	McASP0 Serial Data 8 or McASP1 Serial Data 5 or SPI1 Data Pin Slave Out Master In
AXR0[9]/AXR1[4]/ SPI1_SIMO	A9	IO	-	Y	McASP0 Serial Data 9 or McASP1 Serial Data 4 or SPI1 Data Pin Slave In Master Out
AXR0[10]/AXR1[3]	B8	IO	-	Y	McASP0 Serial Data 10 or McASP1 Serial Data 3
AXR0[11]/AXR1[2]	A8	IO	-	Y	McASP0 Serial Data 11 or McASP1 Serial Data 2
AXR0[12]/AXR1[1]	B7	IO	-	Y	McASP0 Serial Data 12 or McASP1 Serial Data 1
AXR0[13]/AXR1[0]	B6	IO	-	Y	McASP0 Serial Data 13 or McASP1 Serial Data 0
AXR0[14]/AXR2[1]	A6	IO	-	Y	McASP0 Serial Data 14 or McASP2 Serial Data 1
AXR0[15]/AXR2[0]	B5	IO	-	Y	McASP0 Serial Data 15 or McASP2 Serial Data 0
ACLKR1	E1	IO	-	Y	McASP1 Receive Bit Clock
AFSR1	F1	IO	-	Y	McASP1 Receive Frame Sync (L/R Clock)
AHCLKX1	D1	IO	-	Y	McASP1 Transmit Master Clock
ACLKX1	E2	IO	-	Y	McASP1 Transmit Bit Clock
AFSX1	F2	IO	-	Y	McASP1 Transmit Frame Sync (L/R Clock)
AMUTE1	D2	O	-	Y	McASP1 MUTE Output
AHCLKR2	C14	IO	IPD	Y	McASP2 Receive Master Clock
ACLKR2	C13	IO	IPD	Y	McASP2 Receive Bit Clock
AFSR2	C12	IO	IPD	Y	McASP2 Receive Frame Sync (L/R Clock)
ACLKX2	D11	IO	IPD	Y	McASP2 Transmit Bit Clock
AFSX2	C11	IO	IPD	Y	McASP2 Transmit Frame Sync (L/R Clock)
AMUTE2/$\overline{\text{HINT}}$	D10	O	IPD	Y	McASP2 MUTE Output or UHPI Host Interrupt
SPI0, I2C0, and I2C1 Serial Port Pins					
SPI0_SOMI/I2C0_SDA	B14	IO	-	Y	SPI0 Data Pin Slave Out Master In or I2C0 Serial Data
SPI0_SIMO	B15	IO	-	Y	SPI0 Data Pin Slave In Master Out
SPI0_CLK/I2C0_SCL	C16	IO	-	Y	SPI0 Serial Clock or I2C0 Serial Clock
$\overline{\text{SPI0\_SCS}}$/I2C1_SCL	C15	IO	-	Y	SPI0 Slave Chip Select or I2C1 Serial Clock
$\overline{\text{SPI0\_ENA}}$/I2C1_SDA	D16	IO	-	Y	SPI0 Enable (Ready) or I2C1 Serial Data

IC BLOCK DIAGRAMS AND TERMINAL DESCRIPTIONS -17

Q3501: D788E001BRFP266/D708E001BRFP266 (Audio DSP)

BLOCK DIAGRAM

Device Block Diagram

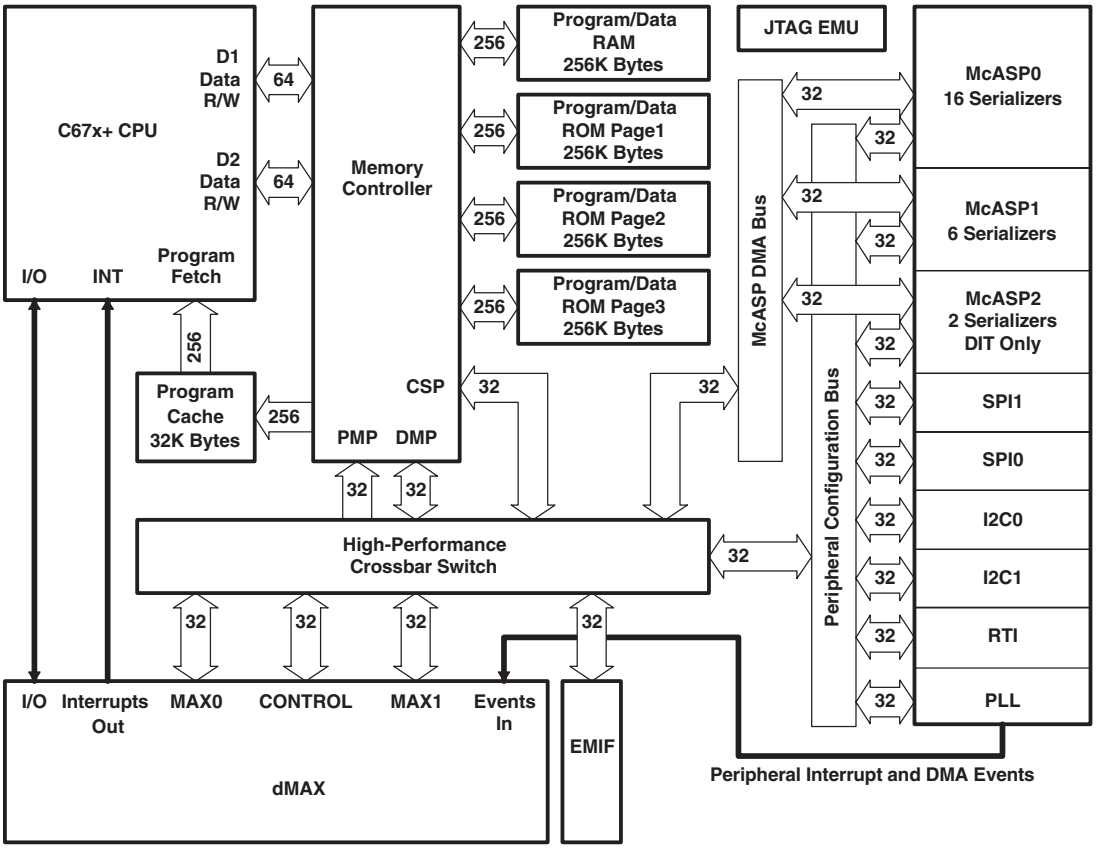

System Diagram

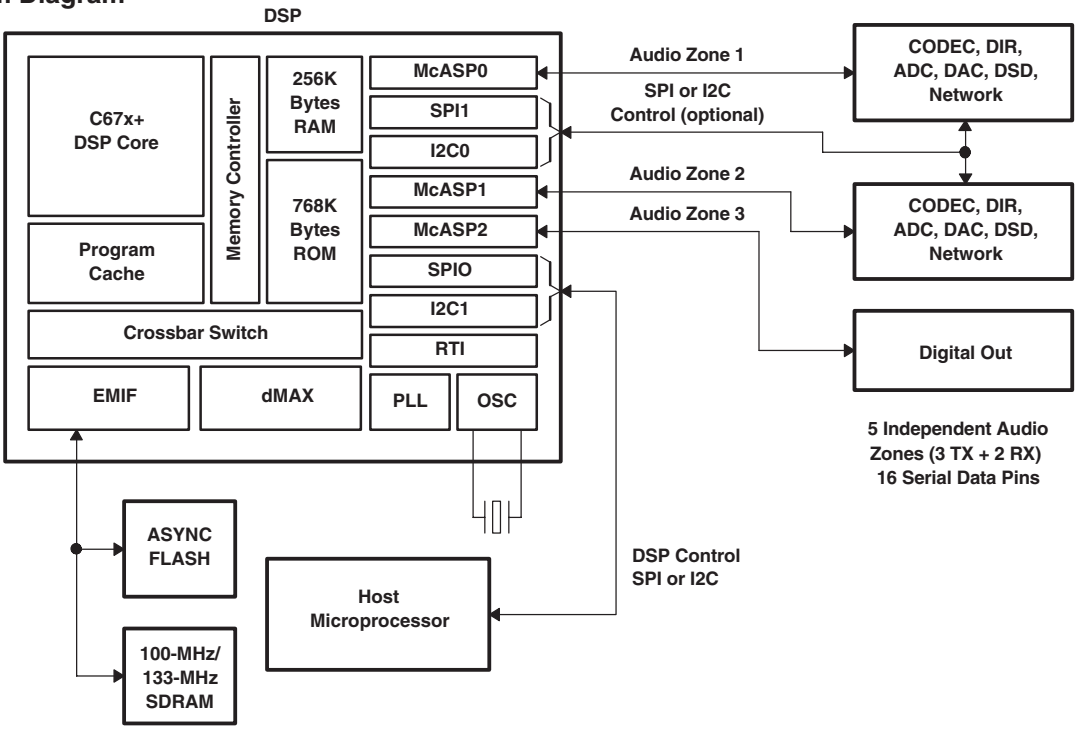

IC BLOCK DIAGRAMS AND TERMINAL DESCRIPTIONS -18

Q3501: D788E001BRFP266/D708E001BRFP266 (Audio DSP)

PIN CONFIGURATION

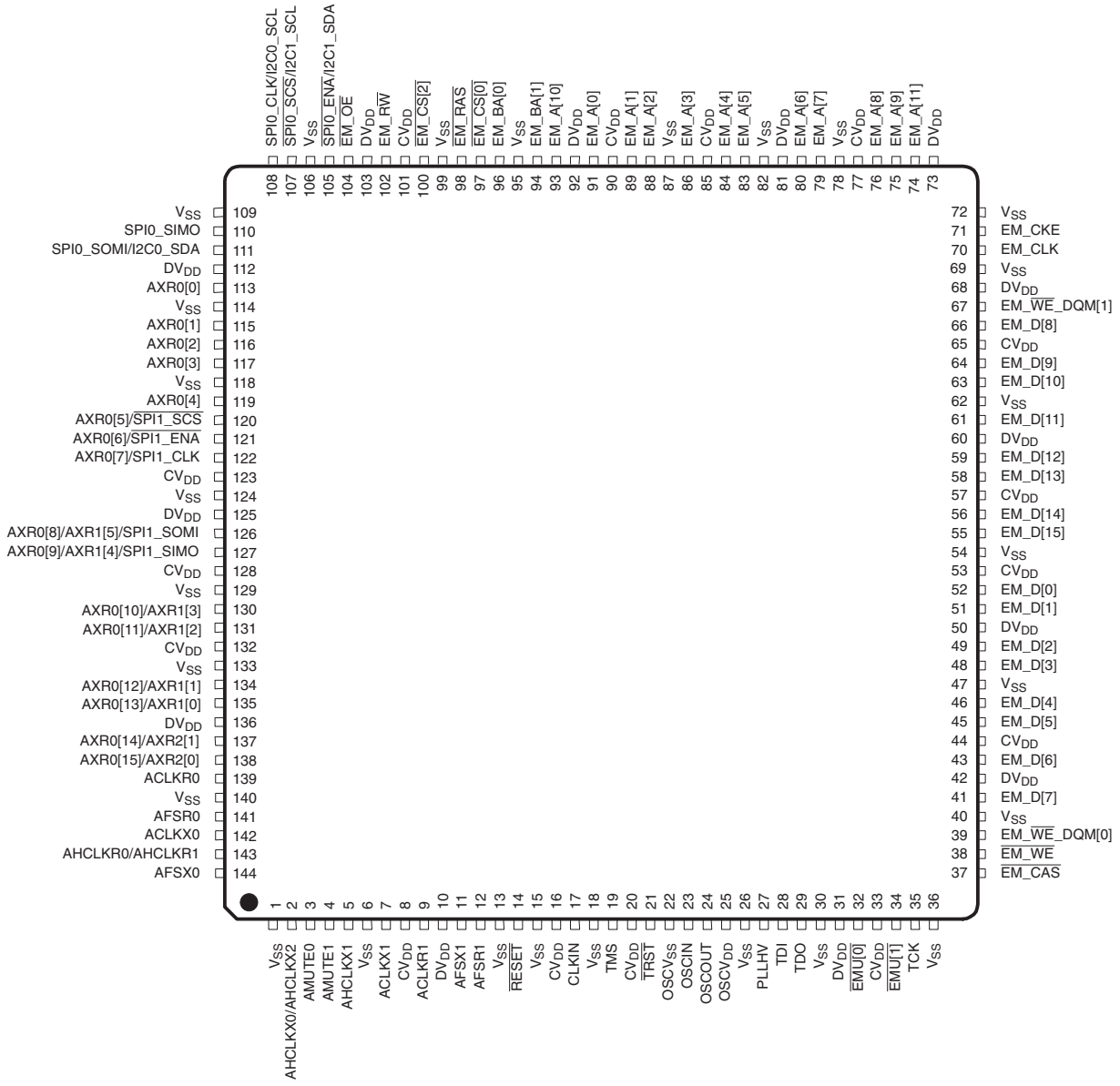

IC BLOCK DIAGRAMS AND TERMINAL DESCRIPTIONS -19

Q3501: D788E001BRFP266/D708E001BRFP266 (Audio DSP)

TERMINAL DESCRIPTION(1/3)

SIGNAL NAME	PIN NO.	TYPE(1)	PULL(2)	GPIO(3)	DESCRIPTION
External Memory Interface (EMIF) Address and Control					
EM_A[0]	91	O	-	N	EMIF Address Bus
EM_A[1]	89	O	-	N	
EM_A[2]	88	O	-	N	
EM_A[3]	86	O	-	N	
EM_A[4]	84	O	-	N	
EM_A[5]	83	O	-	N	
EM_A[6]	80	O	-	N	
EM_A[7]	79	O	-	N	
EM_A[8]	76	O	-	N	
EM_A[9]	75	O	-	N	
EM_A[10]	93	O	-	N	
EM_A[11]	74	O	-	N	
EM_BA[0]	96	O	-	N	SDRAM Bank Address and Asynchronous Memory Low-Order Address
EM_BA[1]	94	O	-	N	
$\overline{\text{EM\_CS[0]}}$	97	O	-	N	SDRAM Chip Select
$\overline{\text{EM\_CS[2]}}$	100	O	-	N	Asynchronous Memory Chip Select
$\overline{\text{EM\_CAS}}$	37	O	-	N	SDRAM Column Address Strobe
$\overline{\text{EM\_RAS}}$	98	O	-	N	SDRAM Row Address Strobe
$\overline{\text{EM\_WE}}$	38	O	-	N	SDRAM Write Enable
EM_CKE	71	O	-	N	SDRAM Clock Enable
EM_CLK	70	O	-	N	SDRAM Clock
EM_$\overline{\text{WE}}$_DQM[0]	39	O	-	N	Write Enable or Byte Enable for EM_D[7:0]
EM_$\overline{\text{WE}}$_DQM[1]	67	O	-	N	Write Enable or Byte Enable for EM_D[15:8]
$\overline{\text{EM\_OE}}$	104	O	-	N	SDRAM Output Enable
EM_R$\overline{\text{W}}$	102	O	-	N	Asynchronous Memory Read/not Write

(1) TYPE column refers to pin direction in functional mode. If a pin has more than one function with different directions, the functions are separated with a slash (/).
(2) PULL column:
IPD = Internal Pulldown resistor
IPU = Internal Pullup resistor
(3) If the GPIO column is 'Y', then in GPIO mode, the pin is configurable as an IO unless otherwise marked.

IC BLOCK DIAGRAMS AND TERMINAL DESCRIPTIONS -20

Q3501: D788E001BRFP266/D708E001BRFP266 (Audio DSP)

TERMINAL DESCRIPTION(2/3)

SIGNAL NAME	PIN NO.	TYPE(1)	PULL(2)	GPIO(3)	DESCRIPTION
McASP0, McASP1, McASP2, and SPI1 Serial Ports					
AHCLKR0/AHCLKR1	143	IO	-	Y	McASP0 and McASP1 Receive Master Clock
ACLKR0	139	IO	-	Y	McASP0 Receive Bit Clock
AFSR0	141	IO	-	Y	McASP0 Receive Frame Sync (L/R Clock)
AHCLKX0/AHCLKX2	2	IO	-	Y	McASP0 and McASP2 Transmit Master Clock
ACLKX0	142	IO	-	Y	McASP0 Transmit Bit Clock
AFSX0	144	IO	-	Y	McASP0 Transmit Frame Sync (L/R Clock)
AMUTE0	3	O	-	Y	McASP0 MUTE Output
AXR0[0]	113	IO	-	Y	McASP0 Serial Data 0
AXR0[1]	115	IO	-	Y	McASP0 Serial Data 1
AXR0[2]	116	IO	-	Y	McASP0 Serial Data 2
AXR0[3]	117	IO	-	Y	McASP0 Serial Data 3
AXR0[4]	119	IO	-	Y	McASP0 Serial Data 4
AXR0[5]/$\overline{\text{SPI1\_SCS}}$	120	IO	-	Y	McASP0 Serial Data 5 or SPI1 Slave Chip Select
AXR0[6]/$\overline{\text{SPI1\_ENA}}$	121	IO	-	Y	McASP0 Serial Data 6 or SPI1 Enable (Ready)
AXR0[7]/SPI1_CLK	122	IO	-	Y	McASP0 Serial Data 7 or SPI1 Serial Clock
AXR0[8]/AXR1[5]/ SPI1_SOMI	126	IO	-	Y	McASP0 Serial Data 8 or McASP1 Serial Data 5 or SPI1 Data Pin Slave Out Master In
AXR0[9]/AXR1[4]/ SPI1_SIMO	127	IO	-	Y	McASP0 Serial Data 9 or McASP1 Serial Data 4 or SPI1 Data Pin Slave In Master Out
AXR0[10]/AXR1[3]	130	IO	-	Y	McASP0 Serial Data 10 or McASP1 Serial Data 3
AXR0[11]/AXR1[2]	131	IO	-	Y	McASP0 Serial Data 11 or McASP1 Serial Data 2
AXR0[12]/AXR1[1]	134	IO	-	Y	McASP0 Serial Data 12 or McASP1 Serial Data 1
AXR0[13]/AXR1[0]	135	IO	-	Y	McASP0 Serial Data 13 or McASP1 Serial Data 0
AXR0[14]/AXR2[1]	137	IO	-	Y	McASP0 Serial Data 14 or McASP2 Serial Data 1
AXR0[15]/AXR2[0]	138	IO	-	Y	McASP0 Serial Data 15 or McASP2 Serial Data 0
ACLKR1	9	IO	-	Y	McASP1 Receive Bit Clock
AFSR1	12	IO	-	Y	McASP1 Receive Frame Sync (L/R Clock)
AHCLKX1	5	IO	-	Y	McASP1 Transmit Master Clock
ACLKX1	7	IO	-	Y	McASP1 Transmit Bit Clock
AFSX1	11	IO	-	Y	McASP1 Transmit Frame Sync (L/R Clock)
AMUTE1	4	O	-	Y	McASP1 MUTE Output
SPI0, I2C0, and I2C1 Serial Port Pins					
SPI0_SOMI/I2C0_SDA	111	IO	-	Y	SPI0 Data Pin Slave Out Master In or I2C0 Serial Data
SPI0_SIMO	110	IO	-	Y	SPI0 Data Pin Slave In Master Out
SPI0_CLK/I2C0_SCL	108	IO	-	Y	SPI0 Serial Clock or I2C0 Serial Clock
$\overline{\text{SPI0\_SCS}}$/I2C1_SCL	107	IO	-	Y	SPI0 Slave Chip Select or I2C1 Serial Clock
$\overline{\text{SPI0\_ENA}}$/I2C1_SDA	105	IO	-	Y	SPI0 Enable (Ready) or I2C1 Serial Data

IC BLOCK DIAGRAMS AND TERMINAL DESCRIPTIONS -21

Q3501: D788E001BRFP266/D708E001BRFP266 (Audio DSP)

TERMINAL DESCRIPTION(3/3)

SIGNAL NAME	PIN NO.	TYPE(1)	PULL(2)	GPIO(3)	DESCRIPTION
External Memory Interface (EMIF) Data Bus					
EM_D[0]	52	IO	-	N	EMIF Data Bus [Lower 16 Bits]
EM_D[1]	51	IO	-	N	
EM_D[2]	49	IO	-	N	
EM_D[3]	48	IO	-	N	
EM_D[4]	46	IO	-	N	
EM_D[5]	45	IO	-	N	
EM_D[6]	43	IO	-	N	
EM_D[7]	41	IO	-	N	
EM_D[8]	66	IO	-	N	
EM_D[9]	64	IO	-	N	
EM_D[10]	63	IO	-	N	
EM_D[11]	61	IO	-	N	
EM_D[12]	59	IO	-	N	
EM_D[13]	58	IO	-	N	
EM_D[14]	56	IO	-	N	
EM_D[15]	55	IO	-	N	

SIGNAL NAME	PIN NO.	TYPE(1)	PULL(2)	GPIO(3)	DESCRIPTION
Clocks					
OSCIN	23	I	-	N	1.2-V Oscillator Input
OSCOUT	24	O	-	N	1.2-V Oscillator Output
$OSCV_{DD}$	25	PWR	-	N	Oscillator 1.2-V V_{DD} tap point (for filter only)
$OSCV_{SS}$	22	PWR	-	N	Oscillator V_{SS} tap point (for filter only)
CLKIN	17	I	-	N	Alternate clock input (3.3-V LVCMOS Input)
PLLHV	27	PWR	-	N	PLL 3.3-V Supply Input (requires external filter)
Device Reset					
$\overline{RESET}$	14	I	-	N	Device reset pin
Emulation/JTAG Port					
TCK	35	I	IPU	N	Test Clock
TMS	19	I	IPU	N	Test Mode Select
TDI	28	I	IPU	N	Test Data In
TDO	29	OZ	IPU	N	Test Data Out
$\overline{TRST}$	21	I	IPD	N	Test Reset
$\overline{EMU[0]}$	32	IO	IPU	N	Emulation Pin 0
$\overline{EMU[1]}$	34	IO	IPU	N	Emulation Pin 1
Power Pins					
Core Supply (CV_{DD})	8, 16, 20, 33, 44, 53, 57, 65, 77, 85, 90, 101, 123, 128, 132				
IO Supply (DV_{DD})	10, 31, 42, 50, 60, 68, 73, 81, 92, 103, 112, 125, 136				
Ground (V_{SS})	1, 6, 13, 15, 18, 26, 30, 36, 40, 47, 54, 62, 69, 72, 78, 82, 87, 95, 99, 106, 109, 114, 118, 124, 129, 133, 140				

IC BLOCK DIAGRAMS AND TERMINAL DESCRIPTIONS -22

Q3601 : D707E001BRFP250 (32 bit Floating-Point Digital Signal Processor)

BLOCK DIAGRAM

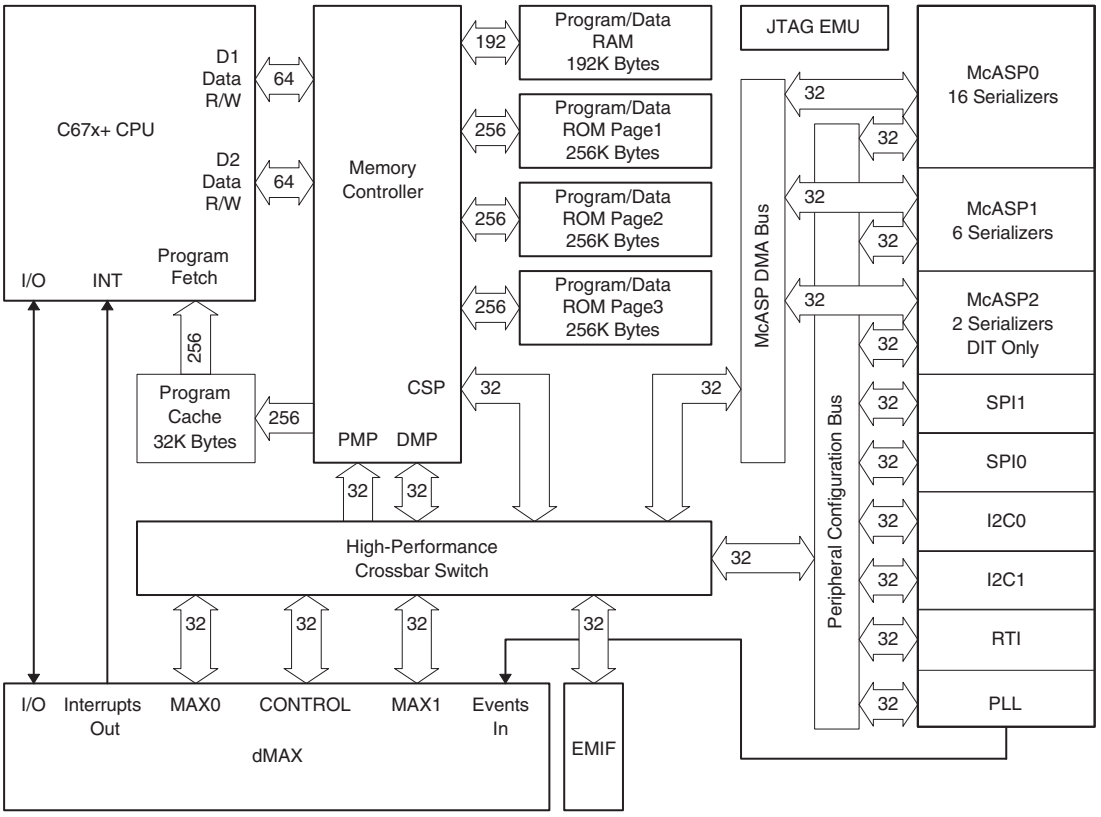

SYSTEM DIAGRAM

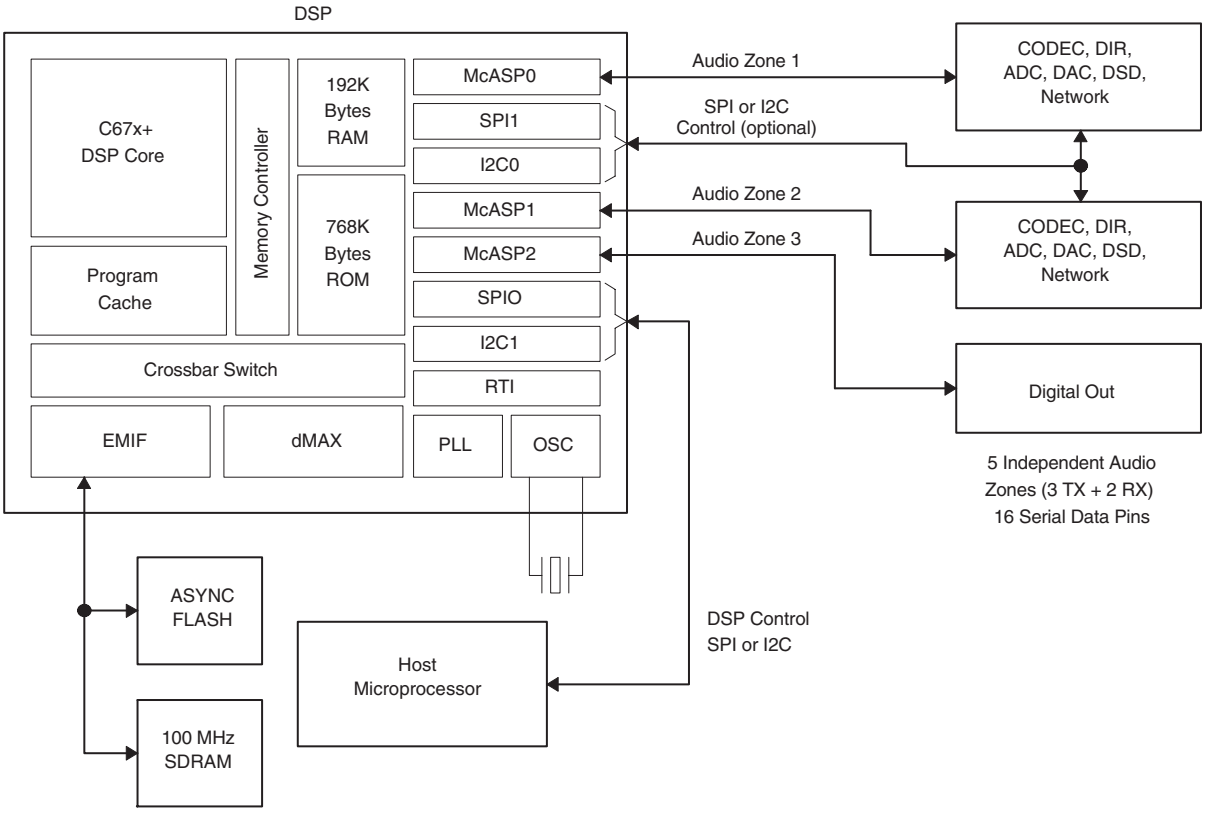

IC BLOCK DIAGRAMS AND TERMINAL DESCRIPTIONS -23

Q3601 : D707E001BRFP250 (32 bit Floating-Point Digital Signal Processor)

PIN CONFIGURATION

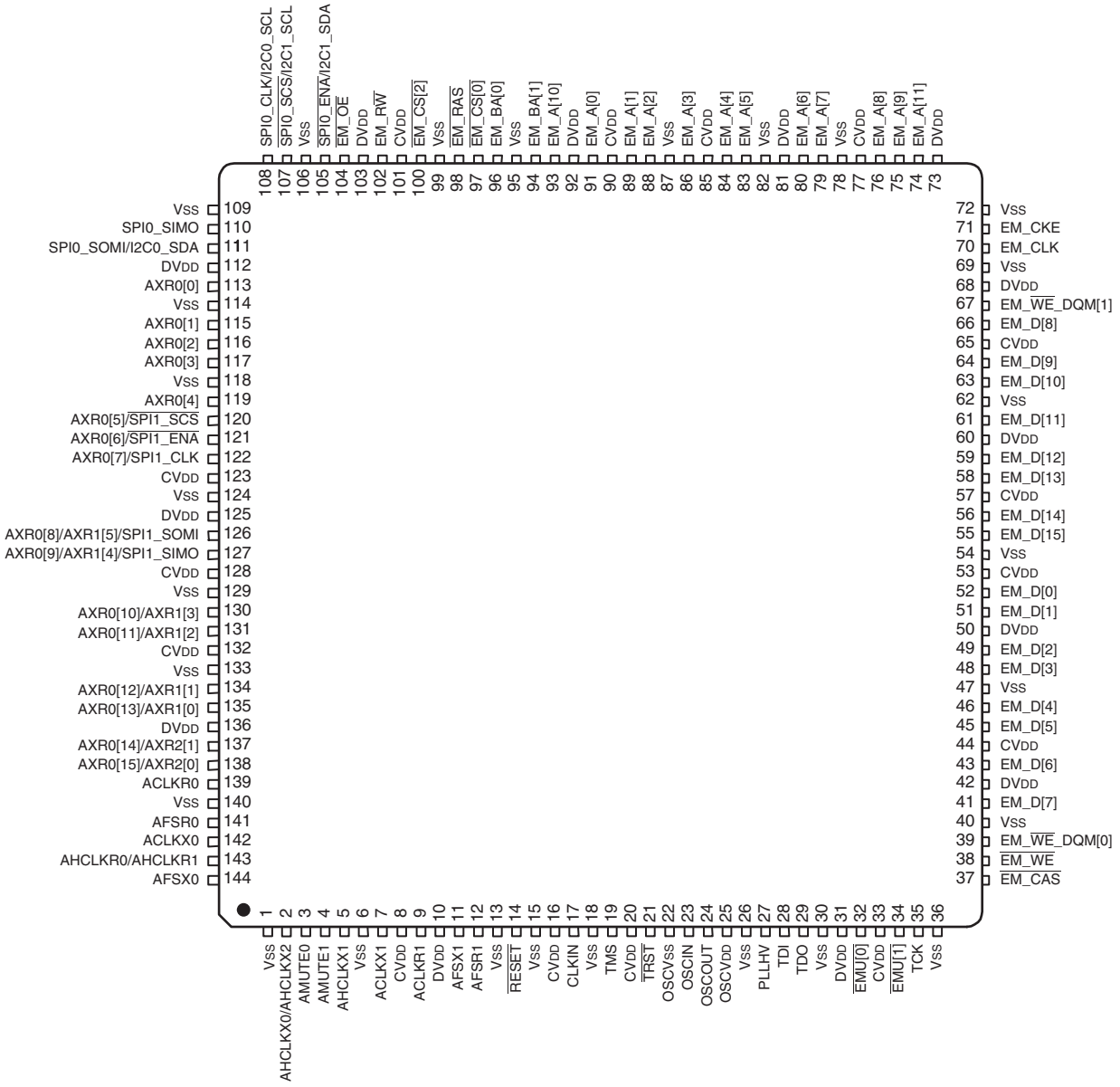

IC BLOCK DIAGRAMS AND TERMINAL DESCRIPTIONS -24

Q3601 : D707E001BRFP250 (32 bit Floating-Point Digital Signal Processor)

TERMINAL DESCRIPTION(1/3)

SIGNAL NAME	PIN NO.	TYPE	DESCRIPTION
External Memory Interface (EMIF) Addressand Control			
EM_A[0]	91	O	EMIF Address Bus
EM_A[1]	89	O	
EM_A[2]	88	O	
EM_A[3]	86	O	
EM_A[4]	84	O	
EM_A[5]	83	O	
EM_A[6]	80	O	
EM_A[7]	79	O	
EM_A[8]	76	O	
EM_A[9]	75	O	
EM_A[10]	93	O	
EM_A[11]	74	O	
EM_BA[0]	96	O	SDRAM Bank Address and Asynchronous Memory Low-Order Address
EM_BA[1]	94	O	
$\overline{\text{EM\_CS[0]}}$	97	O	SDRAM Chip Select
$\overline{\text{EM\_CS[2]}}$	100	O	Asynchronous Memory Chip Select
$\overline{\text{EM\_CAS}}$	37	O	SDRAM Column Address Strobe
$\overline{\text{EM\_RAS}}$	98	O	SDRAM Row Address Strobe
$\overline{\text{EM\_WE}}$	38	O	SDRAM Write Enable
EM_CKE	71	O	SDRAM Clock Enable
EM_CLK	70	O	SDRAM Clock
EM_$\overline{\text{WE}}$_DQM[0]	39	O	Write Enable or Byte Enable for EM_D[7:0]
EM_$\overline{\text{WE}}$_DQM[1]	67	O	Write Enable or Byte Enable for EM_D[15:8]
$\overline{\text{EM\_OE}}$	104	O	SDRAM Output Enable
EM_$\overline{\text{RW}}$	102	O	Asynchronous Memory Read/not Write
External Memory Interface (EMIF) Data Bus			
EM_D[0]	52	IO	EMIF Data Bus [Lower 16 Bits]
EM_D[1]	51	IO	
EM_D[2]	49	IO	
EM_D[3]	48	IO	
EM_D[4]	46	IO	
EM_D[5]	45	IO	
EM_D[6]	43	IO	
EM_D[7]	41	IO	
EM_D[8]	66	IO	
EM_D[9]	64	IO	
EM_D[10]	63	IO	
EM_D[11]	61	IO	
EM_D[12]	59	IO	
EM_D[13]	58	IO	
EM_D[14]	56	IO	
EM_D[15]	55	IO	

IC BLOCK DIAGRAMS AND TERMINAL DESCRIPTIONS -25

Q3601 : D707E001BRFP250 (32 bit Floating-Point Digital Signal Processor)

TERMINAL DESCRIPTION(2/3)

SIGNAL NAME	PIN NO.	TYPE	DESCRIPTION
McASP0, McASP1, McASP2, and SPI1 Serial Ports			
AHCLKR0/AHCLKR1	143	IO	McASP0 and McASP1 Receive Master Clock
ACLKR0	139	IO	McASP0 Receive Bit Clock
AFSR0	141	IO	McASP0 Receive Frame Sync (L/R Clock)
AHCLKX0/AHCLKX2	2	IO	McASP0 and McASP2 Transmit Master Clock
ACLKX0	142	IO	McASP0 Transmit Bit Clock
AFSX0	144	IO	McASP0 Transmit Frame Sync (L/R Clock)
AMUTE0	3	O	McASP0 MUTE Output
AXR0[0]	113	IO	McASP0 Serial Data 0
AXR0[1]	115	IO	McASP0 Serial Data 1
AXR0[2]	116	IO	McASP0 Serial Data 2
AXR0[3]	117	IO	McASP0 Serial Data 3
AXR0[4]	119	IO	McASP0 Serial Data 4
AXR0[5]/$\overline{\text{SPI1\_SCS}}$	120	IO	McASP0 Serial Data 5 or SPI1 Slave Chip Select
AXR0[6]/$\overline{\text{SPI1\_ENA}}$	121	IO	McASP0 Serial Data 6 or SPI1 Enable (Ready)
AXR0[7]/SPI1_CLK	122	IO	McASP0 Serial Data 7 or SPI1 Serial Clock
AXR0[8]/AXR1[5]/ SPI1_SOMI	126	IO	McASP0 Serial Data 8 or McASP1 Serial Data 5 or SPI1 Data Pin Slave Out Master In
AXR0[9]/AXR1[4]/ SPI1_SIMO	127	IO	McASP0 Serial Data 9 or McASP1 Serial Data 4 or SPI1 Data Pin Slave In Master Out
AXR0[10]/AXR1[3]	130	IO	McASP0 Serial Data 10 or McASP1 Serial Data 3
AXR0[11]/AXR1[2]	131	IO	McASP0 Serial Data 11 or McASP1 Serial Data 2
AXR0[12]/AXR1[1]	134	IO	McASP0 Serial Data 12 or McASP1 Serial Data 1
AXR0[13]/AXR1[0]	135	IO	McASP0 Serial Data 13 or McASP1 Serial Data 0
AXR0[14]/AXR2[1]	137	IO	McASP0 Serial Data 14 or McASP2 Serial Data 1
AXR0[15]/AXR2[0]	138	IO	McASP0 Serial Data 15 or McASP2 Serial Data 0
ACLKR1	9	IO	McASP1 Receive Bit Clock
AFSR1	12	IO	McASP1 Receive Frame Sync (L/R Clock)
AHCLKX1	5	IO	McASP1 Transmit Master Clock
ACLKX1	7	IO	McASP1 Transmit Bit Clock
AFSX1	11	IO	McASP1 Transmit Frame Sync (L/R Clock)
AMUTE1	4	O	McASP1 MUTE Output
SPI0, I2C0, and I2C1 Serial Port Pins			
SPI0_SOMI/I2C0_SDA	111	IO	SPI0 Data Pin Slave Out Master In or I2C0 Serial Data
SPI0_SIMO	110	IO	SPI0 Data Pin Slave In Master Out
SPI0_CLK/I2C0_SCL	108	IO	SPI0 Serial Clock or I2C0 Serial Clock
$\overline{\text{SPI0\_SCS}}$/I2C1_SCL	107	IO	SPI0 Slave Chip Selector I2C1 Serial Clock
$\overline{\text{SPI0\_ENA}}$/I2C1_SDA	105	IO	SPI0 Enable (Ready) or I2C1 Serial Data

IC BLOCK DIAGRAMS AND TERMINAL DESCRIPTIONS -26

Q3601 : D707E001BRFP250 (32 bit Floating-Point Digital Signal Processor)

TERMINAL DESCRIPTION(3/3)

SIGNAL NAME	PIN NO.	TYPE	DESCRIPTION
Clocks			
OSCIN	23	I	1.2-V OscillatorInput
OSCOUT	24	O	1.2-V OscillatorOutput
OSCVDD	25	PWR	Oscillator 1.2-V VDD tap point (for filter only)
OSCVSS	22	PWR	Oscillator VSS tap point (for filter only)
CLKIN	17	I	Alternate clock input (3.3-V LVCMOS Input)
PLLHV	27	PWR	PLL 3.3-V Supply Input (requires external filter)
Device Reset			
$\overline{\text{RESET}}$	14	I	Device reset pin
Emulation/JTAG Port			
TCK	35	I	Test Clock
TMS	19	I	Test Mode Select
TDI	28	I	Test Data In
TDO	29	OZ	Test Data Out
$\overline{\text{TRST}}$	21	I	Test Reset
$\overline{\text{EMU[0]}}$	32	IO	Emulation Pin 0
$\overline{\text{EMU[1]}}$	34	IO	Emulation Pin 1
Power Pins			
Core Supply (CVDD)	8, 16, 20, 33, 44, 53, 57, 65, 77, 85, 90, 101, 123, 128, 132		
IO Supply (DVDD)	10, 31, 42, 50, 60, 68, 73, 81, 92, 103, 112, 125, 136		
Ground (VSS)	1, 6, 13, 15, 18, 26, 30, 36, 40, 47, 54, 62, 69, 72, 78, 82, 87, 95, 99, 106, 109, 114, 118, 124, 129, 133, 140		

IC BLOCK DIAGRAMS AND TERMINAL DESCRIPTIONS -27

Q3451: ES29LV160ET-70TG (16 Mbit Flash Memory)

BLOCK DIAGRAM

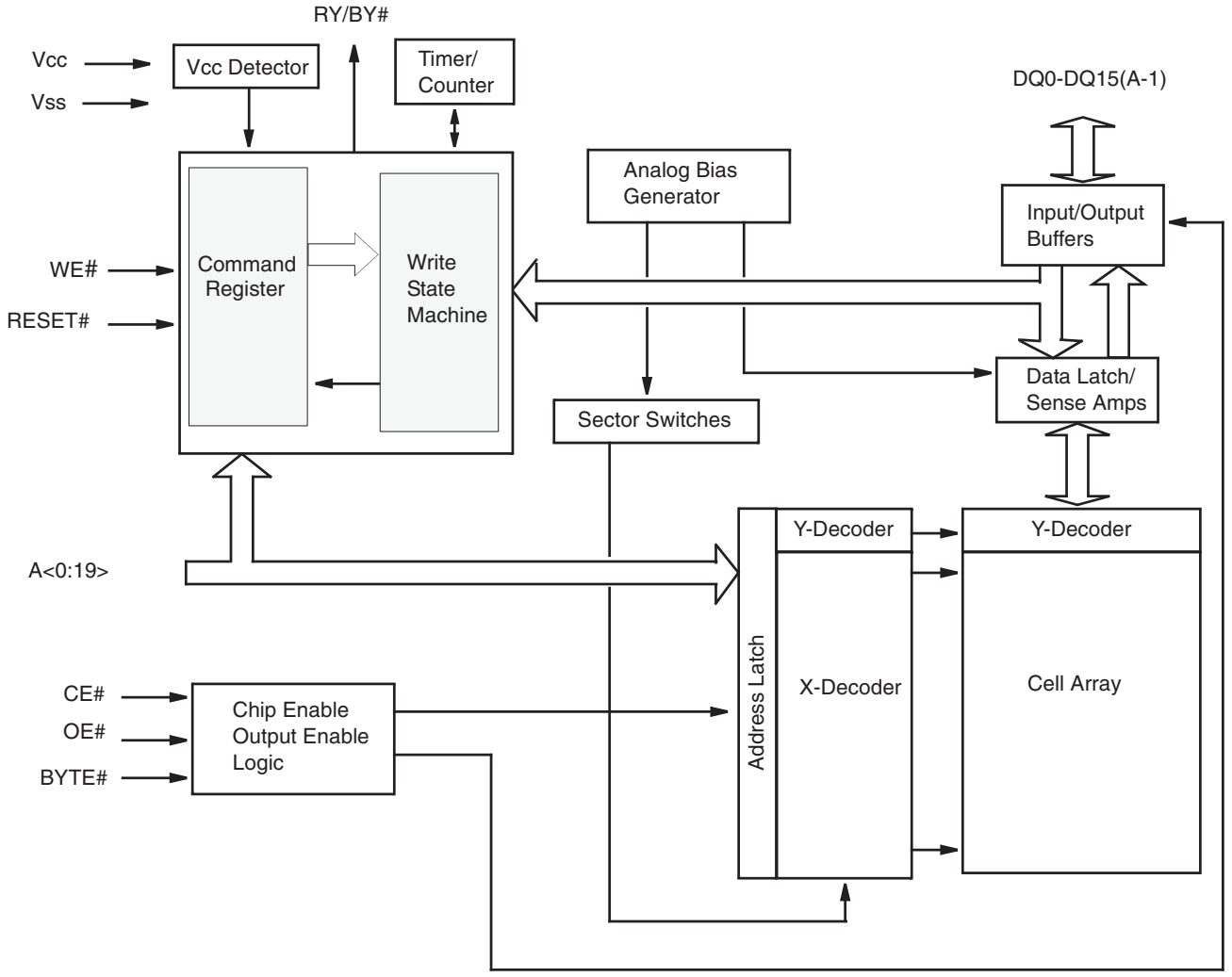

PIN CONFIGURATION

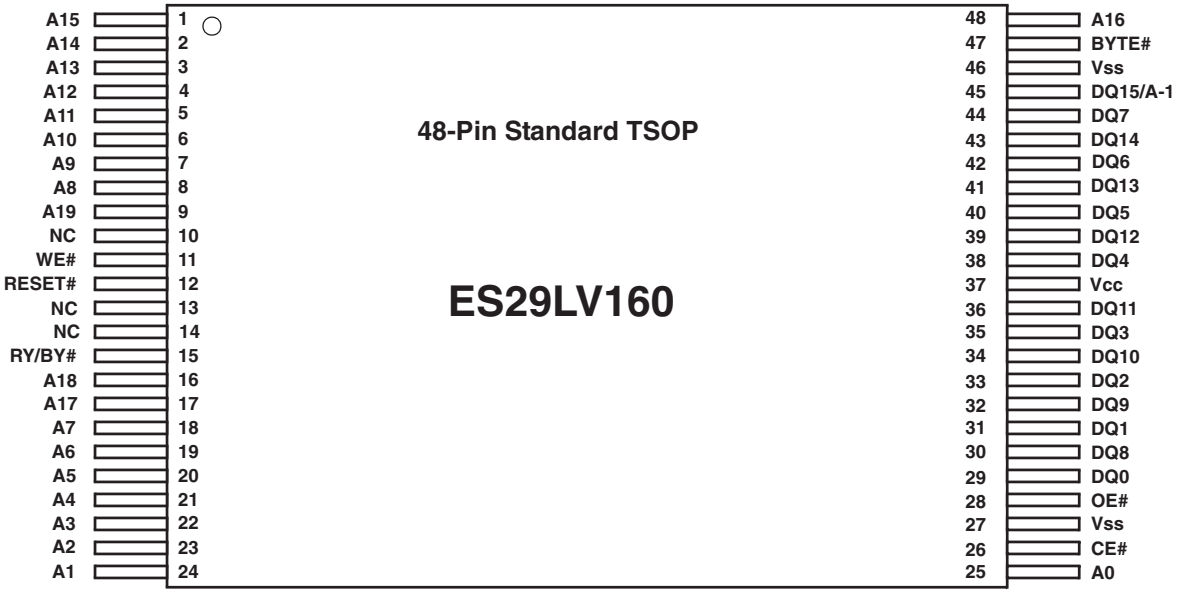

IC BLOCK DIAGRAMS AND TERMINAL DESCRIPTIONS -28

Q3451: ES29LV160ET-70TG (16 Mbit Flash Memory)

TERMINAL DESCRIPTION

Pin	Description
A0-A19	20 Addresses
DQ0-DQ14	15 Data Inputs/Outputs
DQ15/A-1	DQ15 (Data Input/Output, Word Mode) A-1 (LSB Address Input, Byte Mode)
CE#	Chip Enable
OE#	Output Enable
WE#	Write Enable
RESET#	Hardware Reset Pin, Active Low
BYTE#	Selects 8-bit or 16-bit mode
RY/BY#	Ready/Busy Output (N/A SO 044)
Vcc	3.0 volt-only single power supply (see Product Selector Guide for speed options and voltage supply tolerances)
Vss	Device Ground
NC	Pin Not Connected Internally

LOGIC SYMBOL

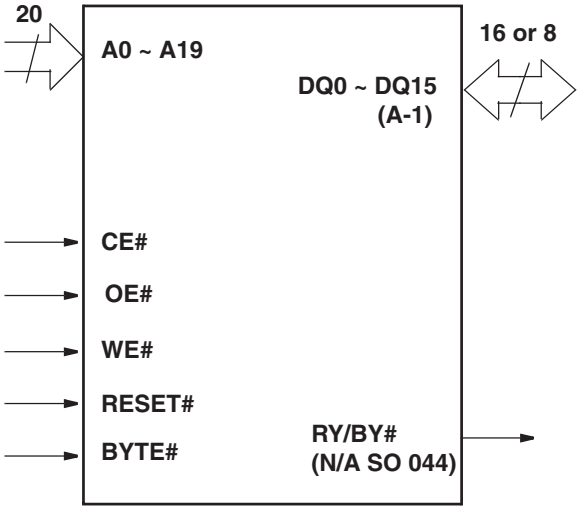

IC BLOCK DIAGRAMS AND TERMINAL DESCRIPTIONS -29

Q3551 : ES29LV400ET-70TG (4 Mbit Flash Memory)

BLOCK DIAGRAM

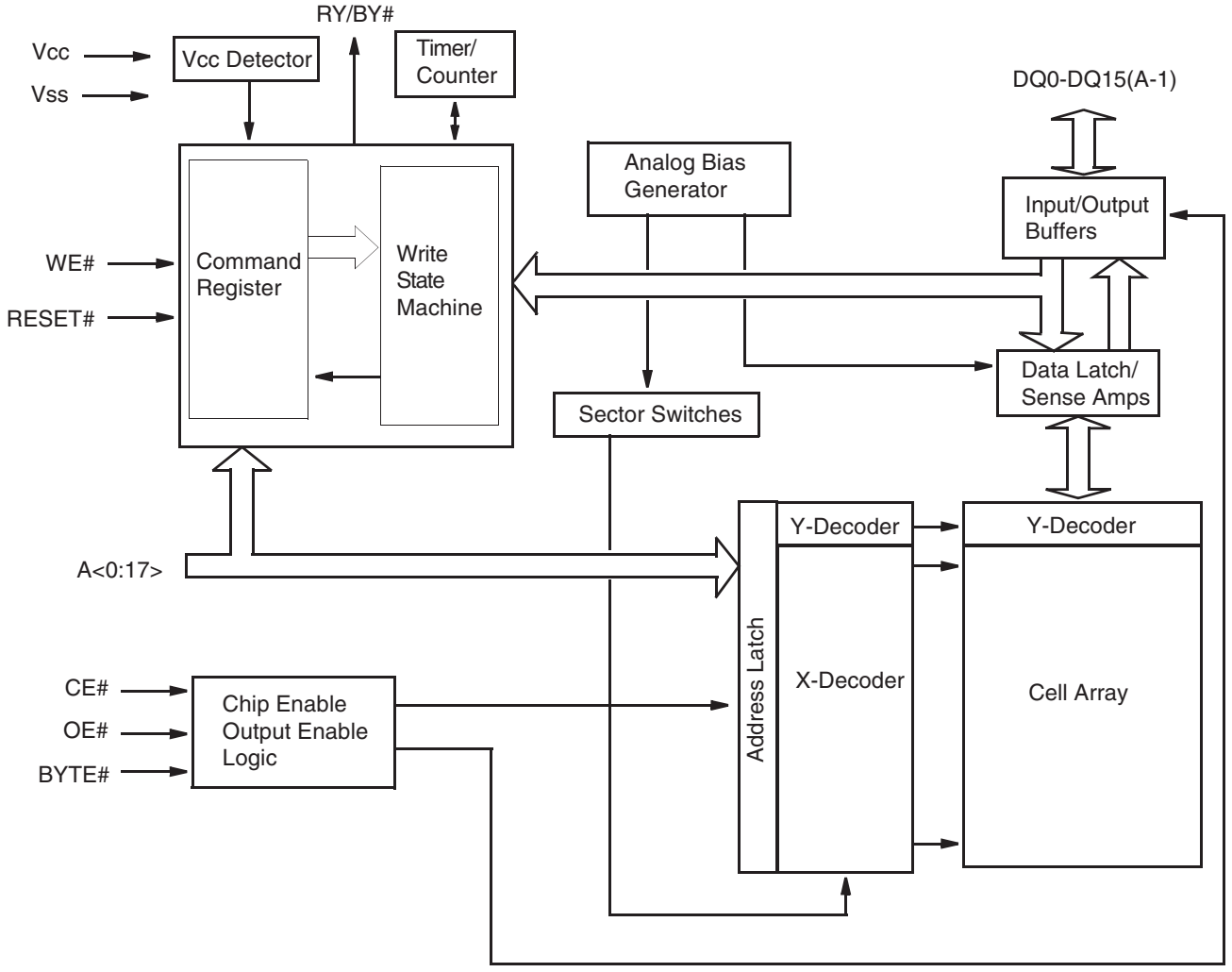

IC BLOCK DIAGRAMS AND TERMINAL DESCRIPTIONS -30

Q3551 : ES29LV400ET-70TG (4 Mbit Flash Memory)

PIN CONFIGURATION

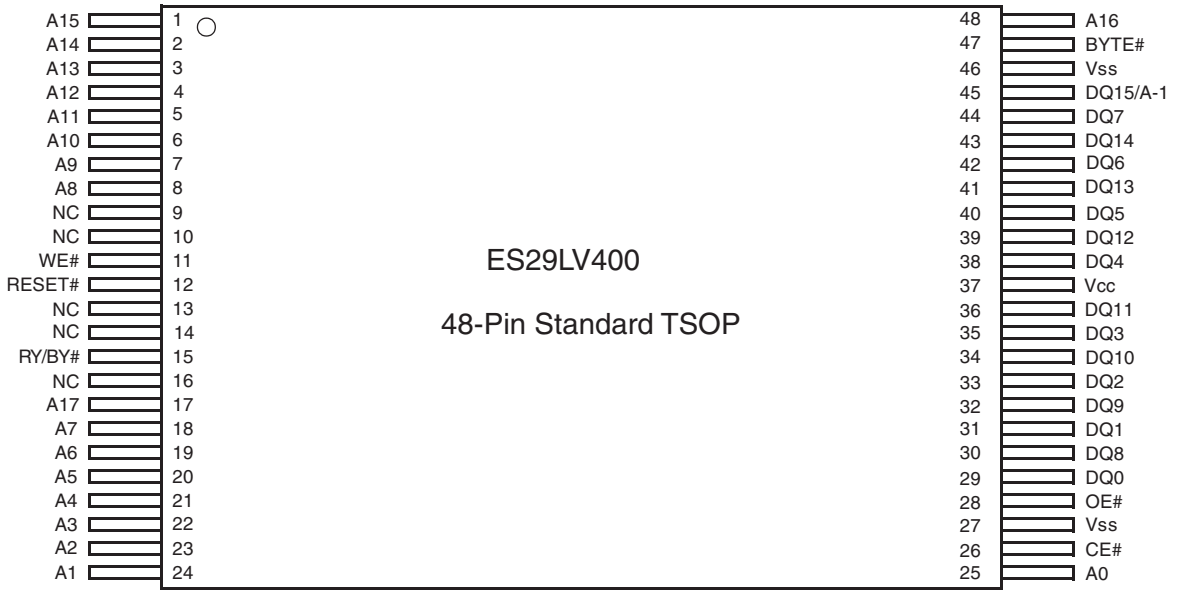

TERMINAL DESCRIPTION

Terminal	Description
A0-A17	18 Addresses
DQ0-DQ14	15 Data Inputs/Outputs
DQ15/A-1	DQ15 (Data Input/Output, Word Mode) A-1 (LSB Address Input, Byte Mode)
CE#	Chip Enable
OE#	Output Enable
WE#	Write Enable
RESET#	Hardware Reset Pin, Active Low
BYTE#	Selects 8-bit or 16-bit mode
RY/BY#	Ready/Busy Output
Vcc	3.0 volt-only single power supply (see Product Selector Guide for speed options and voltage supply tolerances)
Vss	Device Ground
NC	Pin Not Connected Internally

IC BLOCK DIAGRAMS AND TERMINAL DESCRIPTIONS -31

Q3651 : ES29LV800ET-70TG (8 Mbit Flash Memory)

BLOCK DIAGRAM

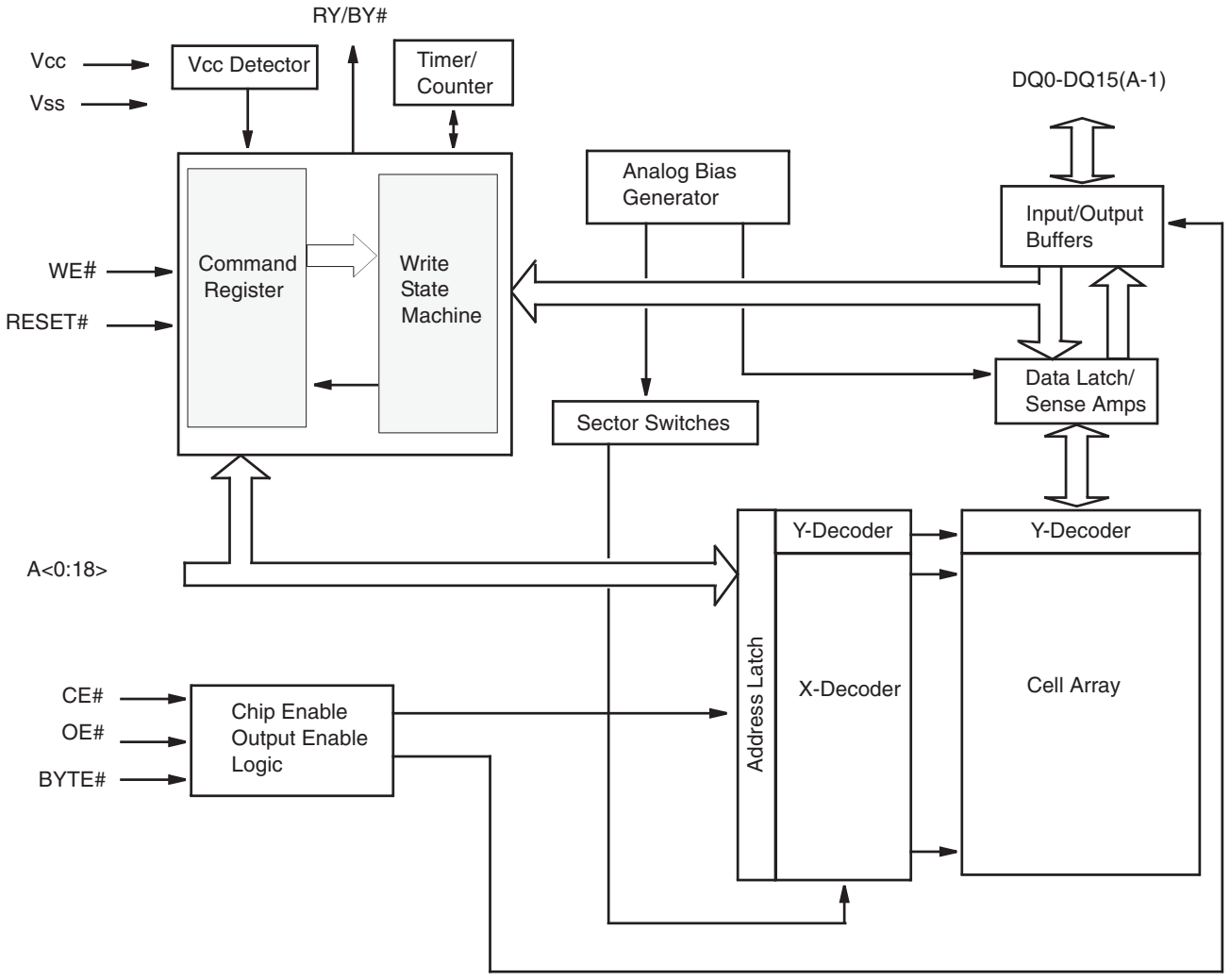

IC BLOCK DIAGRAMS AND TERMINAL DESCRIPTIONS -32

Q3651 : ES29LV800ET-70TG (8 Mbit Flash Memory)

PIN CONFIGURATION

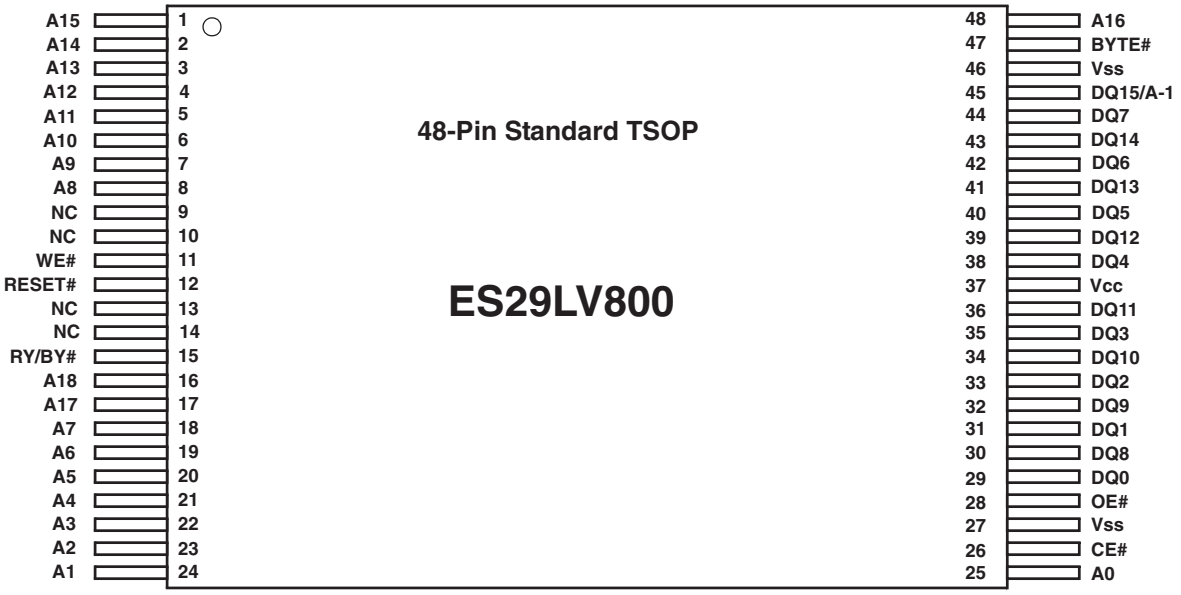

TERMINAL DESCRIPTION

Pin	Description
A0-A18	19 Addresses
DQ0-DQ14	15 Data Inputs/Outputs
DQ15/A-1	DQ15 (Data Input/Output, Word Mode) A-1 (LSB Address Input, Byte Mode)
CE#	Chip Enable
OE#	Output Enable
WE#	Write Enable
RESET#	Hardware Reset Pin, Active Low
BYTE#	Selects 8-bit or 16-bit mode
RY/BY#	Ready/Busy Output
Vcc	3.0 volt-only single power supply (see Product Selector Guide for speed options and voltage supply tolerances)
Vss	Device Ground
NC	Pin Not Connected Internally

IC BLOCK DIAGRAMS AND TERMINAL DESCRIPTIONS -33

Q7391: IS25C64A(64kbit EEPROM)

BLOCK DIAGRAM

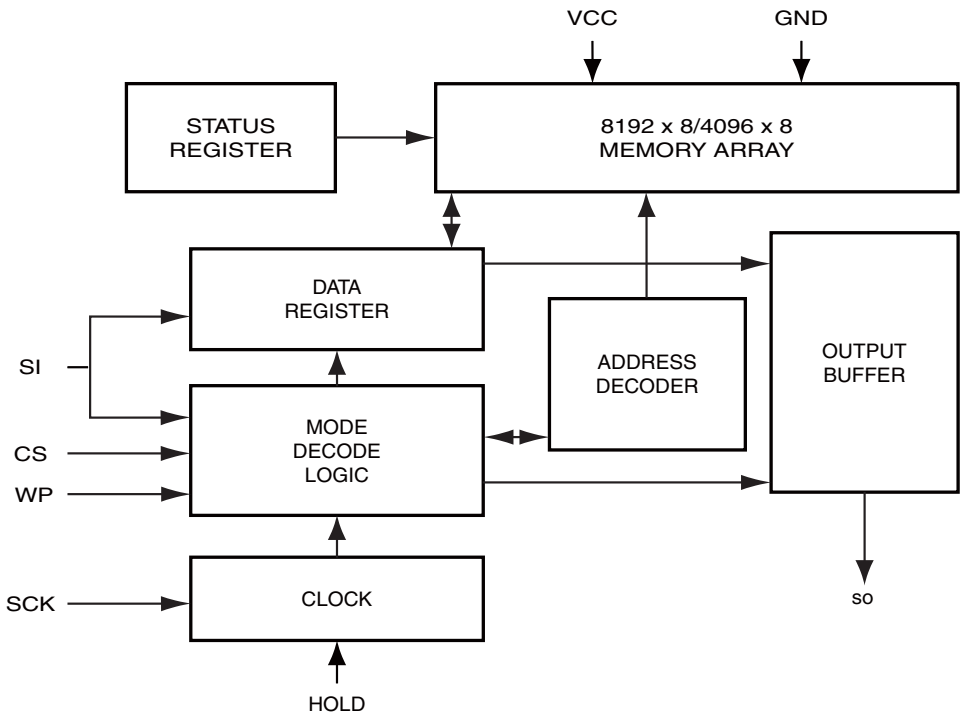

PIN CONFIGURATION

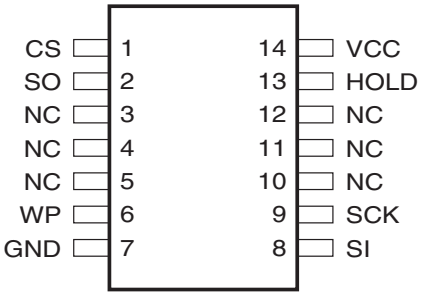

TERMINAL DESCRIPTION

CS	Chip Select
SCK	Serial Data Clock
SI	Serial Data Input
SO	Serial Data Output
GND	Ground
Vcc	Power
WP	Write Protect
HOLD	Suspends Serial Input
NC	No Connect

IC BLOCK DIAGRAMS AND TERMINAL DESCRIPTIONS -34

Q3461, Q3471, Q3561: IC42S16100 (16-Mbit Synchronous Dynamic RAM)

BLOCK DIAGRAM

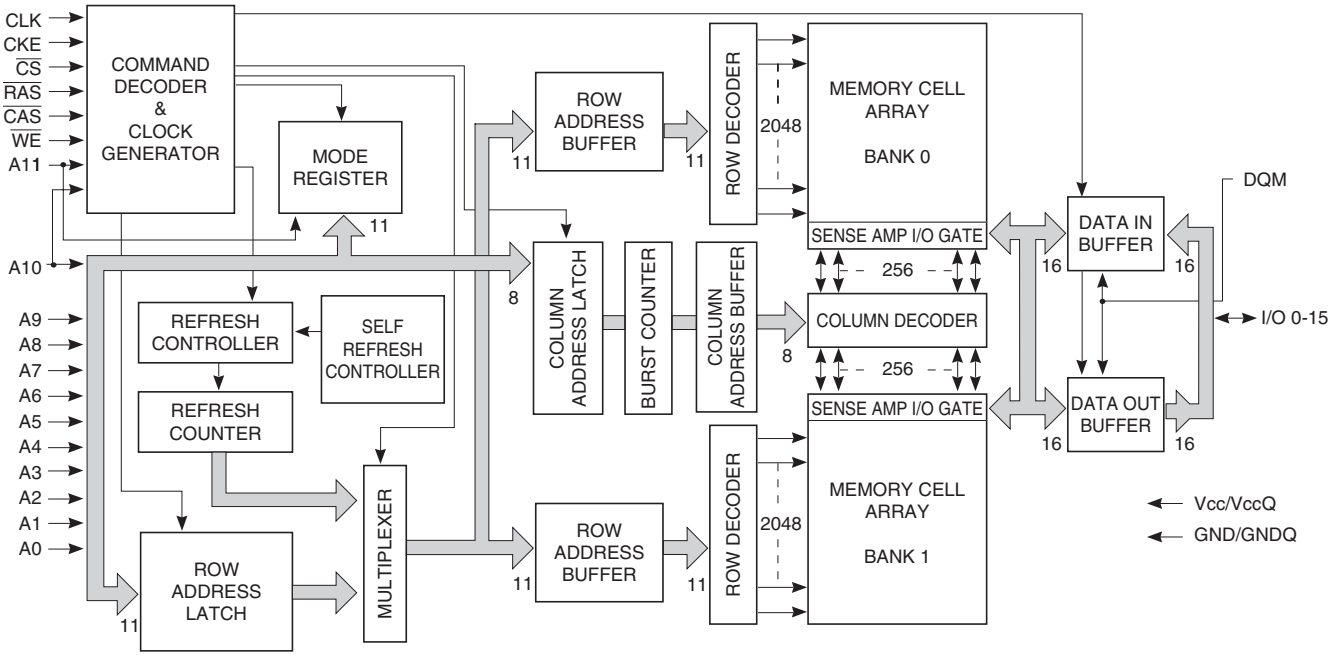

PIN CONFIGURATION

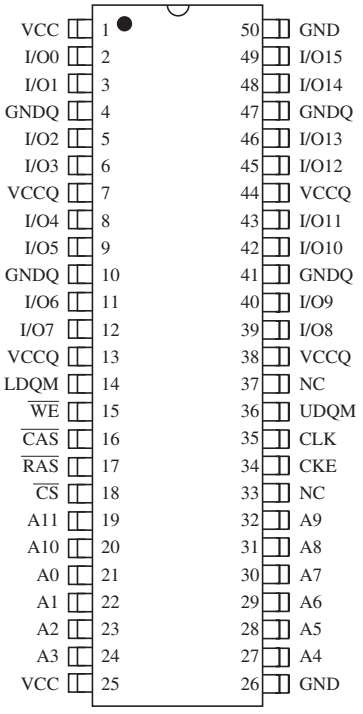

IC BLOCK DIAGRAMS AND TERMINAL DESCRIPTIONS -35

Q3461, Q3471, Q3561: IC42S16100 (16-Mbit Synchronous Dynamic RAM)

TERMINAL DESCRIPTION

Pin No.	Pin name	Function (In Detail)
20 to 24 27 to 32	A0-A10	A0 to A10 are address inputs. A0-A10 are used as row address inputs during active command input and A0-A7 as column address inputs during read or write command input. A10 is also used to determine the precharge mode during other commands. If A10 is LOW during precharge command, the bank selected by A11 is precharged, but if A10 is HIGH, both banks will be precharged. When A10 is HIGH in read or write command cycle, the precharge starts automatically after the burst access. These signals become part of the OP CODE during mode register set command input.
19	A11	A11 is the bank selection signal. When A11 is LOW, bank 0 is selected and when high, bank 1 is selected. This signal becomes part of the OP CODE during mode register set command input.
16	$\overline{CAS}$	$\overline{CAS}$, in conjunction with the $\overline{RAS}$ and $\overline{WE}$, forms the device command. See the "Command Truth Table" item for details on device commands.
34	CKE	The CKE input determines whether the CLK input is enabled within the device. When is CKE HIGH, the next rising edge of the CLK signal will be valid, and when LOW, invalid. When CKE is LOW, the device will be in either the power-down mode, the clock suspend mode, or the self refresh mode. The CKE is an asynchronous input.
35	CLK	CLK is the master clock input for this device. Except for CKE, all inputs to this device are acquired in synchronization with the rising edge of this pin.
18	$\overline{CS}$	The $\overline{CS}$ input determines whether command input is enabled within the device. Command input is enabled when $\overline{CS}$ is LOW, and disabled with $\overline{CS}$ is HIGH. The device remains in the previous state when $\overline{CS}$ is HIGH.
2, 3, 5, 6, 8, 9, 11, 12, 39, 40, 42, 43, 45, 46, 48, 49	I/O0 to I/O15	I/O0 to I/O15 are I/O pins. I/O through these pins can be controlled in byte units using the LDQM and UDQM pins.
14, 36	LDQM, UDQM	LDQM and UDQM control the lower and upper bytes of the I/O buffers. In read mode, LDQM and UDQM control the output buffer. When LDQM or UDQM is LOW, the corresponding buffer byte is enabled, and when HIGH, disabled. The outputs go to theHIGH impedance state when LDQM/UDQM is HIGH. This function corresponds to $\overline{OE}$ in conventional DRAMs. In write mode, LDQM and UDQM control the input buffer. When LDQM or UDQM is LOW, the corresponding buffer byte is enabled, and data can be written to the device. When LDQM or UDQM is HIGH, input data is masked and cannot be written to the device.
17	$\overline{RAS}$	$\overline{RAS}$, in conjunction with $\overline{CAS}$ and $\overline{WE}$, forms the device command. See the "Command Truth Table" item for details on device commands.
15	$\overline{WE}$	$\overline{WE}$, in conjunction with $\overline{RAS}$ and $\overline{CAS}$, forms the device command. See the "Command Truth Table" item for details on device commands.
7, 13, 38, 44	VccQ	VccQ is the output buffer power supply.
1, 25	Vcc	Vcc is the device internal power supply.
4, 10, 41, 47	GNDQ	GNDQ is the output buffer ground.
26, 50	GND	GND is the device internal ground.

IC BLOCK DIAGRAMS AND TERMINAL DESCRIPTIONS -36

Q4002: AN15881A (Video SW for TV with Multi-signal 14 Inputs and 4 Outputs)

BLOCK DIAGRAM

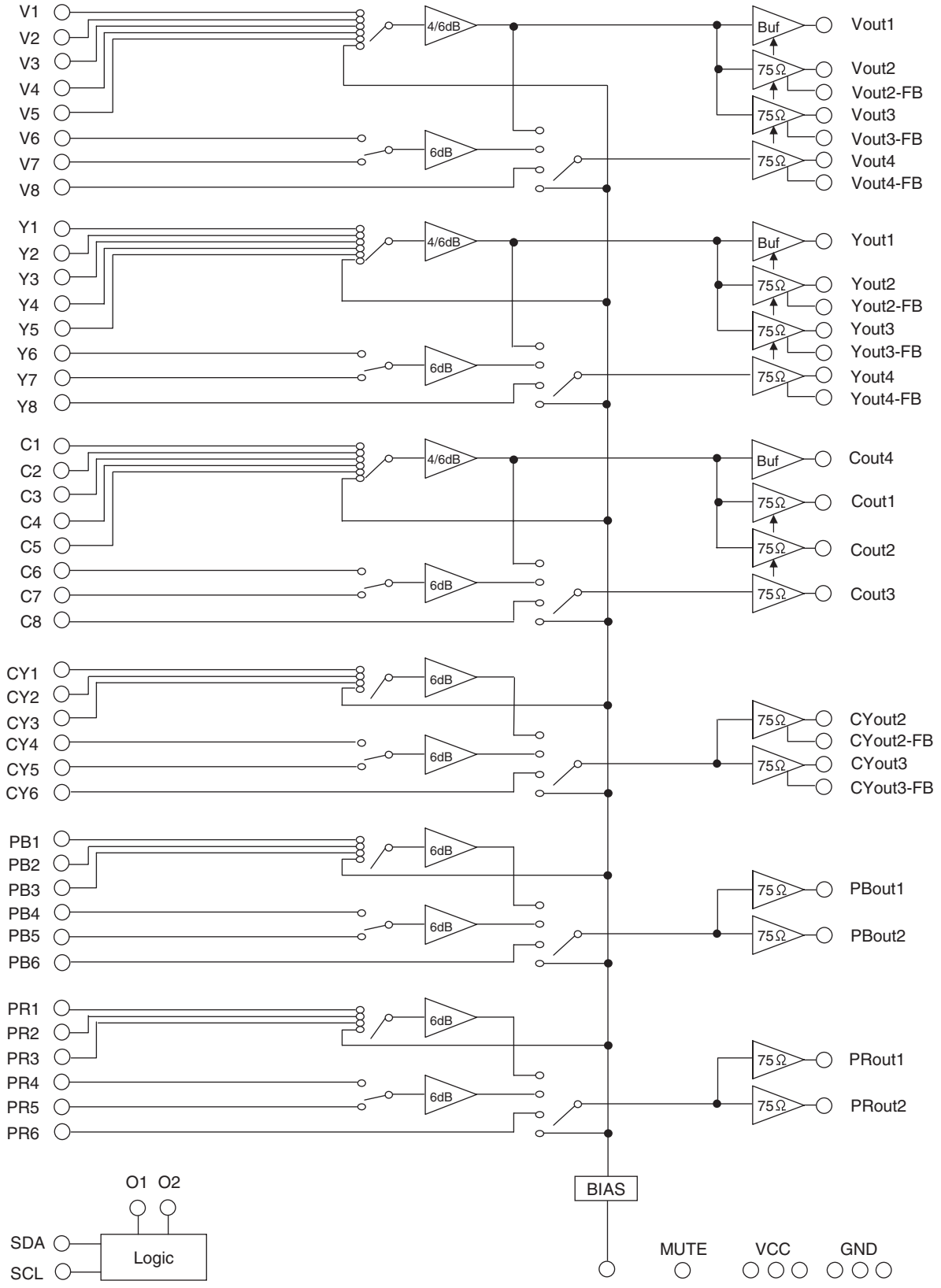

IC BLOCK DIAGRAMS AND TERMINAL DESCRIPTIONS -37

Q4002: AN15881A (Video SW for TV with Multi-signal 14 Inputs and 4 Outputs)

TERMINAL DESCRIPTION (1/3)

Pin No.	Pin name	Type	Description
1	Y3	In	Luminance signal input 3
2	Y4	In	Luminance signal input 4
3	Y5	In	Luminance signal input 5
4	Y6	In	Luminance signal input 6
5	Y7	In	Luminance signal input 7
6	Y8	In	Luminance signal input 8
7	VCC1	Power supply	5.0V power supply
8	C1	In	Chrominance signal input 1
9	C2	In	Chrominance signal input 2
10	C3	In	Chrominance signal input 3
11	C4	In	Chrominance signal input 4
12	C5	In	Chrominance signal input 5
13	GND1	Ground	Ground
14	C6	In	Chrominance signal input 6
15	C7	In	Chrominance signal input 7
16	C8	In	Chrominance signal input 8
17	BIAS	Output	Bias voltage
18	CY1	In	CY1 signal input
19	CY2	In	CY2 signal input
20	CY3	In	CY3 signal input
21	CY4	In	CY4 signal input
22	CY5	In	CY5 signal input
23	CY6	In	CY6 signal input
24	PB1	In	PB1 signal input
25	PB2	In	PB2 signal input
26	PB3	In	PB3 signal input
27	PB4	In	PB4 signal input
28	PB5	In	PB5 signal input
29	PB6	In	PB6 signal input
30	PR1	In	PR1 signal input
31	PR2	In	PR2 signal input
32	PR3	In	PR3 signal input
33	PR4	In	PR4 signal input
34	PR5	In	PR5 signal input
35	PR6	In	PR6 signal input

IC BLOCK DIAGRAMS AND TERMINAL DESCRIPTIONS -38

Q4002: AN15881A (Video SW for TV with Multi-signal 14 Inputs and 4 Outputs)

TERMINAL DESCRIPTION (2/3)

Pin No.	Pin name	Type	Description
36	MUTE	In	Mute control pin
37	PROUT2	Out	PROUT2 signal output
38	O1	Out	General output 1
39	PROUT1	Out	PROUT1 signal output
40	O2	Out	General output 2
41	PBOUT2	Out	PBOUT2 signal output
42	PBOUT1	Out	PBOUT1 signal output
43	GND2	Ground	Ground
44	CYOUT3-FB	In	CYOUT3 feedback input
45	CYOUT3	Out	CYOUT3 signal output
46	CYOUT2-FB	In	CYOUT2 feedback input
47	CYOUT2	Out	CYOUT2 signal output
48	COUT4	Out	COUT4 signal output
49	VCC2	Power supply	5.0V power supply
50	COUT3	Out	COUT3 signal output
51	COUT2	Out	COUT2 signal output
52	COUT1	Out	COUT1 signal output
53	GND3	Ground	Ground
54	YOUT4-FB	In	YOUT4 feedback input
55	YOUT4	Out	YOUT4 signal output
56	YOUT3-FB	In	YOUT3 feedback input
57	YOUT3	Out	YOUT3 signal output
58	YOUT2-FB	In	YOUT2 feedback input
59	YOUT2	Out	YOUT2 signal output
60	YOUT1	Out	YOUT1 signal output
61	VCC3	Power supply	5.0V power supply
62	VOUT4-FB	In	VOUT4 feedback input
63	VOUT4	Out	VOUT4 signal output
64	SDA	In	I^2C bus data input
65	VOUT3-FB	In	VOUT3 feedback input
66	VOUT3	Out	VOUT3 signal output
67	VOUT2-FB	In	VOUT2 feedback input
68	VOUT2	Out	VOUT2 signal output
69	VOUT1	Out	VOUT1 signal output
70	SCL	In	I^2C bus clock input

IC BLOCK DIAGRAMS AND TERMINAL DESCRIPTIONS -39

Q4002: AN15881A (Video SW for TV with Multi-signal 14 Inputs and 4 Outputs)

TERMINAL DESCRIPTION (3/3)

Pin No.	Pin name	Type	Description
71	V1	In	Video composite signal input 1
72	V2	In	Video composite signal input 2
73	V3	In	Video composite signal input 3
74	V4	In	Video composite signal input 4
75	V5	In	Video composite signal input 5
76	V6	In	Video composite signal input 6
77	V7	In	Video composite signal input 7
78	V8	In	Video composite signal input 8
79	Y1	In	Luminance signal input 1
80	Y2	In	Luminance signal input 2

PIN CONFIGURATION

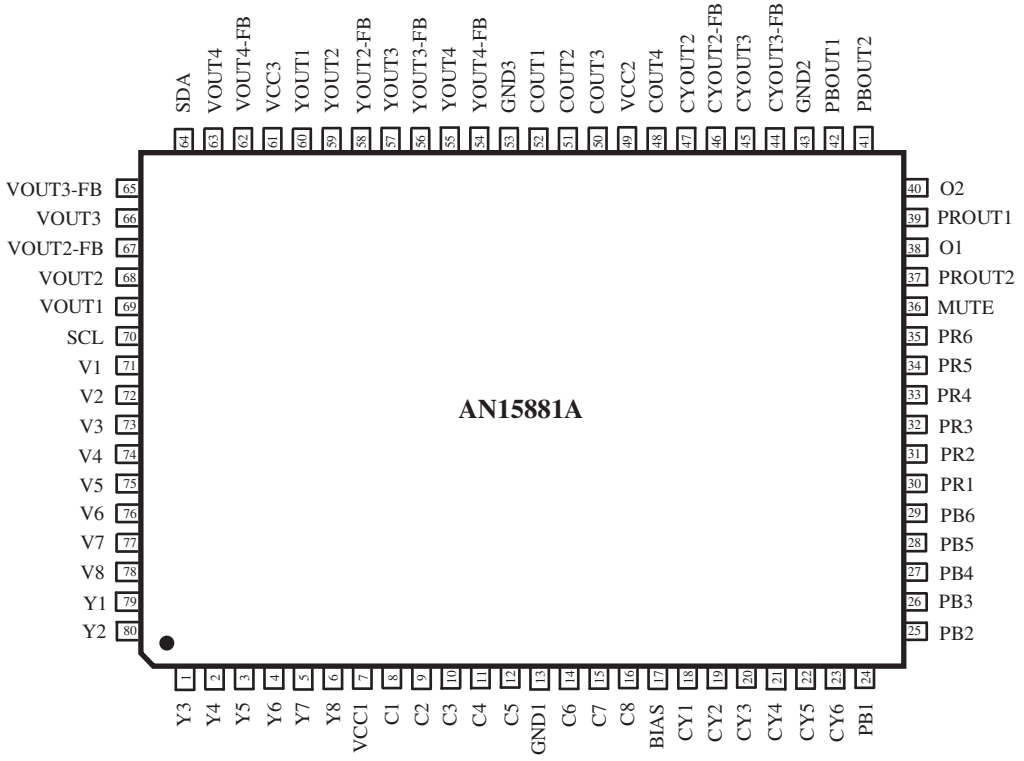

IC BLOCK DIAGRAMS AND TERMINAL DESCRIPTIONS -40

Q8001: FLI8125-LF-BC (Video Processor)

BLOCK DIAGRAM

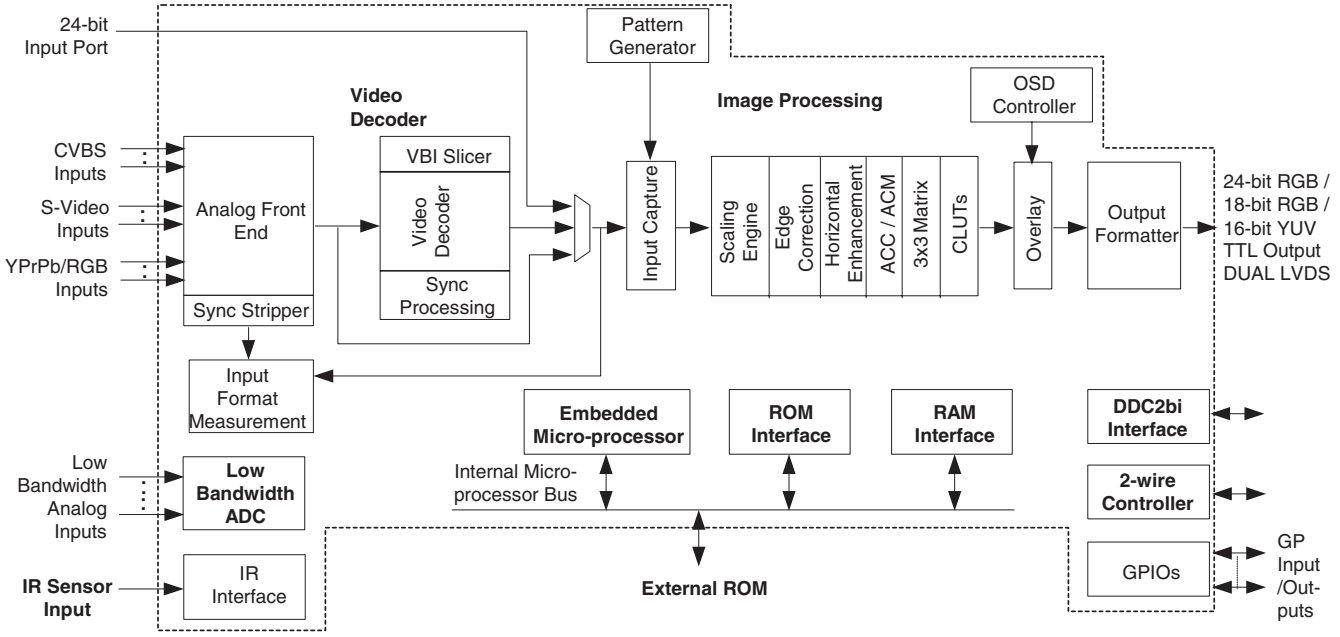

FEATURES

INTEGRATED TRIPLE ADC

- RGB / YPbPr support up to 135MHz
- SCART – RGB + Fast Blank support
- Interlaced and progressive scan
- External OSD support

DIGITAL INPUT PORT

- 24-bit re-configurable input port

INTEGRATED 2D VIDEO DECODER

- Worldwide NTSC/PAL/SECAM support
- Macrovision / VCR trick mode support

EMBEDDED MICROPROCESSOR

- Turbo 186 core
- Internal RAM / ROM
- Serial Flash / Parallel ROM support
- 2-wire slave controller, UART / JTAG support
- Internal RESET Controller
- GPIOs , Low Bandwidth ADC – 6 input
- Infra-red Interface

SCALING ENGINE

- Independent H & V scaling factors
- 4:2:2 YPbPr or 4:4:4 RGB scaling
- Anamorphic scaling (non-linear)

FAROUDJA DCDI – EDGE™

- Edge Correction
  - Eliminates objectionable stair casing
  - Enhances clarity and realism
- Horizontal Enhancement
- Adaptive Contrast and Color
- Active Color Management

DIGITAL OUTPUT

- 18/24-bit 85Mhz TTL output
- Dual LVDS up to SXGA
- Energy Spectrum Management for reducing EMI
- Programmable CLUT for gamma correction

OSD CONTROLLER

- Up to 4 windows: 1, 2 or 4-bits per pixel color
- Programmable Font scalar to meet Teletext requirements.

VBI SLICER

- V-Chip, Closed Captioning, XDS, CGMS, WSS decode
- Teletext 1.5 support

JTAG SUPPORT

- Boundary Scan support

IC BLOCK DIAGRAMS AND TERMINAL DESCRIPTIONS -41

Q8001: FLI8125-LF-BC (Video Processor)

PIN CONFIGURATION

IC BLOCK DIAGRAMS AND TERMINAL DESCRIPTIONS -42

Q8001: FLI8125-LF-BC (Video Processor)

TERMINAL DESCRIPTION(1/8)

Analog Input Port

Pin Name	No.	I/O	Description
VDD18_AB	158	AP	Analog Power (1.8V) for A & B Channels. Must be bypassed with 0.1uF capacitor to the analog system ground plane.
NC	159		No Connection. Leave this pin open for normal operation.
GND18_C	160	AG	Analog Ground (1.8V Return) for C channel. Must be directly connected to the analog system ground plane on board.
VDD18_C	161	AP	Analog Power (1.8V) for C Channel. Must be bypassed with 0.1uF capacitor to the analog system ground plane.
ADC_TEST	162	O	Analog Front End Test O/P. Leave this Pin open. Used for factory testing purpose only.
AVDD_ADC	163	AP	Analog Power (3.3V) for ADC. Must be bypassed with 0.1uF capacitor to the analog system ground plane.
AGND	164	AG	Analog Ground. Must be directly connected to the analog system ground plane on board.
AGND	165	AG	Analog Ground. Must be directly connected to the analog system ground plane on board.
SV1P	166	AI	Positive analog sync input for channel 1. The input has to be AC coupled using a series 20 Ohm resistor and 0.1uF Capacitor network.
GNDS	167	AG	Analog Ground. Must be directly connected to the analog system ground plane on board.
A1P	168	AI	Positive analog input ‘A’ for channel 1. The input has to be AC coupled using a series 20 Ohm resistor and 0.1uF Capacitor network.
GNDS	169	AG	Analog Ground. Must be directly connected to the analog system ground plane on board.
B1P	170	AI	Positive analog input ‘B’ for channel 1. The input has to be AC coupled using a series 20 Ohm resistor and 0.1uF Capacitor network.
GNDS	171	AG	Analog Ground. Must be directly connected to the analog system ground plane on board.
C1P	172	AI	Positive analog input ‘C’ for channel 1. The input has to be AC coupled using a series 20 Ohm resistor and 0.1uF Capacitor network.
AVDD_A	173	AP	Analog Power (3.3V) for ADC of Channel-A. Must be bypassed with 0.1uF capacitor to the analog system ground plane.
AN	174	AI	Negative analog input ‘A’ for channels 1 through 4. This acts as the return Path for the Sources connected to Channel-A Inputs. This has to be AC coupled using a series 57.6 Ohm resistor and 0.1uF Capacitor network to Analog Ground Plane on board.
AGND	175	AG	Analog Ground. Must be directly connected to the analog system ground plane on board.
SV2P	176	AI	Positive analog sync input for channel 2. The input has to be AC coupled using a series 20 Ohm resistor and 0.1uF Capacitor network.
GNDS	177	AG	Analog Ground. Must be directly connected to the analog system ground plane on board.
A2P	178	AI	Positive analog input ‘A’ for channel 2. The input has to be AC coupled using a series 20 Ohm resistor and 0.1uF Capacitor network.
GNDS	179	AG	Analog Ground. Must be directly connected to the analog system ground plane on board.
B2P	180	AI	Positive analog input ‘B’ for channel 2. The input has to be AC coupled using a series 20 Ohm resistor and 0.1uF Capacitor network.
GNDS	181	AG	Analog Ground. Must be directly connected to the analog system ground plane on board.
C2P	182	AI	Positive analog input ‘C’ for channel 2. The input has to be AC coupled using a series 20 Ohm resistor and 0.1uF Capacitor network.
AVDD_B	183	AP	Analog Power (3.3V) for ADC of Channel-B. Must be bypassed with 0.1uF capacitor to the analog system ground plane.
BN	184	AI	Negative analog input ‘B’ for channels 1 through 4. This acts as the return Path for the Sources connected to Channel-B Inputs. This has to be AC coupled using a series 57.6 Ohm resistor and 0.1uF Capacitor network to Analog Ground Plane on board.
AGND	185	AG	Analog Ground. Must be directly connected to the analog system ground plane on board.

IC BLOCK DIAGRAMS AND TERMINAL DESCRIPTIONS -43

Q8001: FLI8125-LF-BC (Video Processor)

TERMINAL DESCRIPTION(2/8)

Analog Input Port

Pin Name	No.	I/O	Description
SV3P	186	AI	Positive analog sync input for channel 3. The input has to be AC coupled using a series 20 Ohm resistor and 0.1uF Capacitor network.
GNDS	187	AG	Analog Ground. Must be directly connected to the analog system ground plane on board.
A3P	188	AI	Positive analog input 'A' for channel 3. The input has to be AC coupled using a series 20 Ohm resistor and 0.1uF Capacitor network.
GNDS	189	AG	Analog Ground. Must be directly connected to the analog system ground plane on board.
B3P	190	AI	Positive analog input 'B' for channel 3. The input has to be AC coupled using a series 20 Ohm resistor and 0.1uF Capacitor network.
GNDS	191	AG	Analog Ground. Must be directly connected to the analog system ground plane on board.
C3P	192	AI	Positive analog input 'C' for channel 3. The input has to be AC coupled using a series 20 Ohm resistor and 0.1uF Capacitor network.
AVDD_C	193	AP	Analog Power (3.3V) for ADC of Channel-C. Must be bypassed with 0.1uF capacitor to the analog system ground plane.
CN	194	AI	Negative analog input 'C' for channels 1 through 4. This acts as the return Path for the Sources connected to Channel-C Inputs. This has to be AC coupled using a series 57.6 Ohm resistor and 0.1uF Capacitor network to Analog Ground Plane on board.
AGND	195	AG	Analog Ground. Must be directly connected to the analog system ground plane on board.
SV4P	196	AI	Positive analog sync input for channel 4. The input has to be AC coupled using a series 20 Ohm resistor and 0.1uF Capacitor network.
GNDS	197	AG	Analog Ground. Must be directly connected to the analog system ground plane on board.
A4P	198	AI	Positive analog input 'A' for channel 4. The input has to be AC coupled using a series 20 Ohm resistor and 0.1uF Capacitor network.
GNDS	199	AG	Analog Ground. Must be directly connected to the analog system ground plane on board.
B4P	200	AI	Positive analog input 'B' for channel 4. The input has to be AC coupled using a series 20 Ohm resistor and 0.1uF Capacitor network.
GNDS	201	AG	Analog Ground. Must be directly connected to the analog system ground plane on board.
C4P	202	AI	Positive analog input 'C' for channel 4. The input has to be AC coupled using a series 20 Ohm resistor and 0.1uF Capacitor network.
AVDD_SC	203	AP	Analog Power (3.3V) for ADC of SYNC Channel. Must be bypassed with 0.1uF capacitor to the analog system ground plane.
SVN	204	AI	Negative analog sync input for channels 1 through 4. This acts as the return Path for the Sources connected to SV Channel Inputs. This has to be AC coupled using a series 57.6 Ohm resistor and 0.1uF Capacitor network to Analog Ground Plane on board.
VO_GND	205	AG	Analog Ground. Must be directly connected to the analog system ground plane on board.
VOUT2	206	AO	Analog VOUT signal This is the Analog Video Output from the Decoder in the Composite Video format. This can be amplified and be fed to any video display device.
VDD18_SC	207	AP	Analog Power (1.8V) for SYNC Channel. Must be bypassed with 0.1uF capacitor to the analog system ground plane.
GND18_SC	208	AG	Analog Ground (1.8V Return) for SYNC channel. Must be directly connected to the analog system ground plane on board.

Low Bandwidth ADC Input Port

Pin Name	No	I/O	Description
VDDA33_LBADC	1	AP	Analog Power (3.3V) for Low Bandwidth ADC Block. Must be bypassed with 0.1uF capacitor.
LBADC_IN1	2	AI	Low Bandwidth Analog Input-1. The Input signal connected to this Pin, must be bypassed with a 0.1uF capacitor and could be in the range of 0V to 3.3V (peak to peak).
LBADC_IN2	3	AI	Low Bandwidth Analog Input-2. The Input signal connected to this Pin, must be bypassed with a 0.1uF capacitor and could be in the range of 0V to 3.3V (peak to peak).
LBADC_IN3	4	AI	Low Bandwidth Analog Input-3. The Input signal connected to this Pin, must be bypassed with a 0.1uF capacitor and could be in the range of 0V to 3.3V (peak to peak).
LBADC_IN4	5	AI	Low Bandwidth Analog Input-4. The Input signal connected to this Pin, must be bypassed with a 0.1uF capacitor and could be in the range of 0V to 3.3V (peak to peak).
LBADC_IN5	6	AI	Low Bandwidth Analog Input-5. The Input signal connected to this Pin, must be bypassed with a 0.1uF capacitor and could be in the range of 0V to 3.3V (peak to peak).

IC BLOCK DIAGRAMS AND TERMINAL DESCRIPTIONS -44

Q8001: FLI8125-LF-BC (Video Processor)

TERMINAL DESCRIPTION(3/8)

Low Bandwidth ADC Input Port

Pin Name	No	I/O	Description
			a 0.1uF capacitor and could be in the range of 0V to 3.3V (peak to peak).
LBADC_IN6	7	AI	Low Bandwidth Analog Input-6. The Input signal connected to this Pin, must be bypassed with a 0.1uF capacitor and could be in the range of 0V to 3.3V (peak to peak).
LBADC_RTN	8	AG	This Pin provides the Return Path for LBADC inputs. Must be directly connected to the analog system ground plane on board.
VSSA33_LBADC	9	AG	Analog Ground for Low Bandwidth ADC Block. Must be directly connected to the analog system ground plane on board.

RCLK PLL Pins

Pin Name	No	I/O	Description
GND_RPLL	11	DG	Digital GND for ADC clocking circuit. Must be directly connected to the digital system ground plane.
VDD_RPLL_18	12	DP	Digital power (1.8V) for ADC digital logic. Must be bypassed with capacitor to Ground Plane.
VBUFC_RPLL	13	O	Test Output. Leave this Pin Open. This is reserved for Factory Testing Purpose.
AGND_RPLL	14	AG	Analog ground for the Reference DDS PLL. Must be directly connected to the analog system ground plane.
XTAL	15	AO	Crystal oscillator output. Connect to external crystal.
TCLK	16	AI	Reference clock (TCLK) from the 19.6608 MHz crystal oscillator. Connect to external crystal/ oscillator.
AVDD_RPLL_33	17	AP	Analog Power (3.3V) for RCLK PLL. Must be bypassed with 0.1uF capacitor.

Digital Video Input Port

Pin Name	No	I/O	Description
VID_CLK_1	153	I	Video port data clock input meant for Video Input – 1. Up to 135Mhz [Input, 5V-tolerant]
VIDIN_HS	122	I	When Video Input – 1 is in BT656 Mode, this Pin acts as Horizontal Sync Input for Video Input – 2. OR when Video Input – 1 is in 16 Bit Mode this Pin acts as Horizontal Sync Input for Video Input – 1. OR this Pin acts as Horizontal Sync Input for 24 Bit Video Input
VIDIN_VS	121	I	When Video Input – 1 is in BT656 Mode, this Pin acts as Vertical Sync Input for Video Input – 2. OR when Video Input – 1 is in 16 Bit Mode this Pin acts as Vertical Sync Input for Video Input – 1. OR this Pin acts as Vertical Sync Input for 24 Bit Video Input
VID_DATA_IN_0 VID_DATA_IN_1 VID_DATA_IN_2 VID_DATA_IN_3 VID_DATA_IN_4 VID_DATA_IN_5 VID_DATA_IN_6 VID_DATA_IN_7	135 136 137 138 139 140 141 142	IO	Input YUV data in 8-bit BT656 of Video Input – 1 [Bi-Directional, 5V-tolerant] OR Input Y Data in case of 16 Bit Video Input (CCIR601) of Video Input – 1 OR Input Green Data in case of 24 Bit Video Input
VID_DATA_IN_8 VID_DATA_IN_9 VID_DATA_IN_10 VID_DATA_IN_11 VID_DATA_IN_12 VID_DATA_IN_13 VID_DATA_IN_14 VID_DATA_IN_15	145 146 147 148 149 150 151 152	IO	Input Pr / Pb Data in case of 16 Bit Video Input (CCIR601) of Video Input – 1 OR Input Blue/ Pb Data in case of 24 Bit Video Input
VID_DATA_IN_16 VID_DATA_IN_17 VID_DATA_IN_18 VID_DATA_IN_19 VID_DATA_IN_20 VID_DATA_IN_21 VID_DATA_IN_22	123 124 125 128 129 130 131	IO	Input Red / Pr Data in case of 24 Bit Video Input OR Video Input – 2 in 8-bit with Embedded Sync / Separate Sync

IC BLOCK DIAGRAMS AND TERMINAL DESCRIPTIONS -45

Q8001: FLI8125-LF-BC (Video Processor)

TERMINAL DESCRIPTION(4/8)

Digital Video Input Port

Pin Name	No	I/O	Description
VID_DATA_IN_23	132		
VID_CLK2	118	I	Video port data clock input meant for Video Input – 2. Up to 135Mhz [Input, 5V-tolerant]
VID_DE/FLD	115	I	Video Active Signal Input or the Field Signal Input from external Digital Video Source.

System Interface

Pin Name	No	I/O	Description
RESETn	10	I	Hardware Reset (active low) [Schmitt trigger, 5v-tolerant] Connect to ground with 0.01uF capacitor.
TEST	20	I	For normal mode of operation connect this Pin to Ground. Has an internal pulldown resistor of 50 K ohm.
GPIO15	21	IO	This pin is available as a general-purpose input/output port. Also it is optionally programmable to give out the external chip select signal meant for external SRAM. Connect pullup resistor to supply if external SRAM used. It is also address line A19 when 1MB parallel flash is used.
JTAG_BS_ENn	22	I	JTAG Boundary Scan enabling pin. Has an internal pulldown resistor of 50 K ohm. If this pin is left open or pulled down, Boundary Scan Mode is enabled. If this pin is pulled high, Boundary Scan functionality is not available, and pins 34~37 are available as GPIO 0~3
SCART16	23	I	This pin can be programmed to sense the Fast Blank Input signal from a SCART I/P source
HOST_SCLK	24	IO	Host input clock or 186 UART Data In or JTAG clock signal. [Input, Schmitt trigger, 5V-tolerant]
HOST_SDATA	25	IO	Host input data or 186 UART Data Out or JTAG mode signal. [Bi-directional, Schmitt trigger, slew rate limited, 5V-tolerant]
DDC_SCLK	26	IO	DDC2Bi clock for VGA Port
DDC_SDATA	27	IO	DDC2Bi data for VGA Port
MSTR_SCLK	30	O	Clock signal from Master Serial 2 Wire Interface Controller
MSTR_SDATA	31	IO	Data signal meant for Master Serial 2 Wire interface Controller
GPIO0/TCK	34	IO	This Pin accepts the Input Clock signal in case of Boundary Scan Mode. Else, this pin is available as General Purpose Input/output Port.
GPIO1/TDI	35	IO	This Pin accepts the Input Data signal in case of Boundary Scan Mode. Else, this pin is available as General Purpose Input/output Port.
GPIO2/TMS	36	IO	This Pin accepts the Input Test Mode Select signal in case of Boundary Scan Mode. Else, this pin is available as General Purpose Input/output Port.
GPIO3/TRST	37	IO	This Pin accepts the Boundary Scan Reset signal in case of Boundary Scan Mode. Else, this pin is available as General Purpose Input/output Port.
GPIO6/IRin	38	IO	Input from Infra Red Decoder can be connected to this Pin. Else, this pin is available as General Purpose Input/output Port.
GPIO7/IRQin	41	IO	Input Interrupt Request signal can be connected to this Pin. Else, this pin is available as General Purpose Input/output Port.
GPIO8/IRQout	42	IO	This Pin will give out the Interrupt Signal to interrupt external Micro. Else, this pin is available as General Purpose Input/output Port.
GPIO9/SIPC_SCLK	43	IO	This Pin accepts the Clock signal from External Serial 2 Wire interface Bus if FLI8125 is programmed to be in Slave mode. Else, this pin is available as General Purpose Input/output Port.
GPIO10/SIPC_SDATA/ A18	44	IO	This Pin acts as the Data I/O signal when used with External Serial 2 Wire interface Bus if FLI8125 is programmed to be in Slave mode. Or this Pin is programmable to give out Address line 18 from the Internal Micro when used with 512K External Memory. Else, this pin is available as General Purpose Input/output Port.
GPIO11/PWM0	47	IO	This Pin can be programmed to give out Pulse Width Modulated Output Pulses for external use. Else, this pin is available as General Purpose Input/output Port.
GPIO12/PWM1	48	IO	This Pin can be programmed to give out Pulse Width Modulated Output Pulses for external use. Else, this pin is available as General Purpose Input/output Port.

IC BLOCK DIAGRAMS AND TERMINAL DESCRIPTIONS -46

Q8001: FLI8125-LF-BC (Video Processor)

TERMINAL DESCRIPTION(5/8)

System Interface

Pin Name	No	I/O	Description
GPIO13/PWM2	51	IO	This Pin can be programmed to give out Pulse Width Modulated Output Pulses for external use. Else, this pin is available as General Purpose Input/output Port.
GPIO14/PWM3/ SCART16	52	IO	This Pin can be programmed to give out Pulse Width Modulated Output Pulses for external use. Or it can be programmed to sense the Fast Blank Input signal from a SCART I/P source. Else, this pin is available as General Purpose Input/output Port.
TDO	55	O	This Pin provides the Output Data in case of Boundary Scan Mode.
HSYNC1	156	I	Horizontal Sync signal Input-1. Used when Analog RGB component signal carries separate HSYNC signal. Has programmable Schmitt trigger.
VSYNC1	157	I	Vertical Sync signal Input-1. Used when Analog RGB component signal carries separate VSYNC signal. Has programmable Schmitt trigger.
XOSD_CLK	101	O	Clock Output meant for External OSD Controller
XOSD_HS	102	O	Horizontal Sync Output meant for External OSD Controller
XOSD_VS	103	O	Vertical Sync Output meant for External OSD Controller
XOSD_FLD	104	O	Field Signal Output meant for External OSD Controller
PD20/B4/GPIO0 PD21/B5/GPIO1 PD22/B6/GPIO2 PD23/B7/GPIO3	86 87 88 89	IO	These Pins provide the Panel Data as shown in the TTL Display Interface Table below. These are available as General Purpose Input / Output Pins when not used as Panel Data.

LVDS Display Interface

Pin Name	No	I/O	Description
PBIAS	53	O	Panel Bias Control (backlight enable) [Tri-state output, 5V- tolerant]
PPWR	54	O	Panel Power Control [Tri-state output, 5V- tolerant]
AVDD_LV_33	56	DP	Digital Power for LVDS Block. Connect to digital 3.3V supply.
VCO_LV	57	O	Reserved. Output for Testing Purpose only at Factory.
AVSS_LV	58	G	Ground for LVDS outputs.
AVDD_OUT_LV_33	59	DP	Digital Power for LVDS outputs. Connect to digital 3.3V supply.
CH3P_LV_E	60	O	These form the Differential Data Output for Channel – 3 (Even).
CH3N_LV_E	61	O	
CLKP_LV_E	62	O	These form the Differential Clock Output Even Channel.
CLKN_LV_E	63	O	
CH2P_LV_E	64	O	These form the Differential Data Output for Channel – 2 (Even).
CH2N_LV_E	65	O	
CH1P_LV_E	66	O	These form the Differential Data Output for Channel – 1 (Even).
CH1N_LV_E	67	O	
CH0P_LV_E	68	O	These form the Differential Data Output for Channel – 0 (Even).
CH0N_LV_E	69	O	
AVSS_OUT_LV	70	G	Ground for LVDS outputs.
AVDD_OUT_LV_33	71	DP	Digital Power for LVDS outputs. Connect to digital 3.3V supply.
CH3P_LV_O	72	O	These form the Differential Data Output for Channel – 3 (Odd).
CH3N_LV_O	73	O	
CLKP_LV_O	74	O	These form the Differential Clock Output Odd Channel.
CLKN_LV_O	75	O	
CH2P_LV_O	76	O	These form the Differential Data Output for Channel – 2 (Odd).
CH2N_LV_O	77	O	
CH1P_LV_O	78	O	These form the Differential Data Output for Channel – 1 (Odd).
CH1N_LV_O	79	O	
CH0P_LV_O	80	O	These form the Differential Data Output for Channel – 0 (Odd).
CH0N_LV_O	81	O	

IC BLOCK DIAGRAMS AND TERMINAL DESCRIPTIONS -47

Q8001: FLI8125-LF-BC (Video Processor)

TERMINAL DESCRIPTION(6/8)

LVDS Display Interface

Pin Name	No	I/O	Description
AVSS_OUT_LV	82	G	Ground for LVDS outputs.
AVDD_OUT_LV_33	83	DP	Digital Power for LVDS outputs. Connect to digital 3.3V supply.

TTL Display Interface

Pin Name	No	I/O	Description For 8-bit panels	For 6-bit panels
PBIAS	53	O	Panel Bias Control (backlight enable) [Tri-state output, 5V- tolerant]	
PPWR	54	O	Panel Power Control [Tri-state output, 5V- tolerant]	
AVDD_LV_33	56	DP	Digital Power for TTL Block. Connect to digital 3.3V supply.	
VCO_LV	57	O	Reserved. Output for Testing Purpose only at Factory.	
AVSS_LV	58	G	Ground for TTL outputs.	
AVDD_OUT_LV_33	59	DP	Digital Power for TTL outputs. Connect to digital 3.3V supply.	
R0	60	O	Red channel bit 0 (Even)	Not used.
R1	61	O	Red channel bit 1 (Even)	Not used.
R2	62	O	Red channel bit 2 (Even)	Red channel bit 0 (Even)
R3	63	O	Red channel bit 3 (Even)	Red channel bit 1 (Even)
R4	64	O	Red channel bit 4 (Even)	Red channel bit 2 (Even)
R5	65	O	Red channel bit 5 (Even)	Red channel bit 3 (Even)
R6	66	O	Red channel bit 6 (Even)	Red channel bit 4 (Even)
R7	67	O	Red channel bit 7 (Even)	Red channel bit 5 (Even)
G0	68	O	Green channel bit 0 (Even)	Not used.
G1	69	O	Green channel bit 1 (Even)	Not used.
AVSS_OUT_LV	70	G	Ground for TTL outputs.	
AVDD_OUT_LV_33	71	DP	Digital Power for TTL outputs. Connect to digital 3.3V supply.	
G2	72	O	Green channel bit 2 (Even)	Green channel bit 0 (Even)
G3	73	O	Green channel bit 3 (Even)	Green channel bit 1 (Even)
G4	74	O	Green channel bit 4 (Even)	Green channel bit 2 (Even)
G5	75	O	Green channel bit 5 (Even)	Green channel bit 3 (Even)
G6	76	O	Green channel bit 6 (Even)	Green channel bit 4 (Even)
G7	77	O	Green channel bit 7 (Even)	Green channel bit 5 (Even)
B0	78	O	Blue channel bit 0 (Even)	Not used.
B1	79	O	Blue channel bit 1 (Even)	Not used.
B2	80	O	Blue channel bit 2 (Even)	Blue channel bit 0 (Even)
B3	81	O	Blue channel bit 3 (Even)	Blue channel bit 1 (Even)
AVSS_OUT_LV	82	G	Ground for TTL outputs.	
AVDD_OUT_LV_33	83	DP	Digital Power for TTL outputs. Connect to digital 3.3V supply.	
PD20/B4	86	O	Blue channel bit 4 (Even)	Blue channel bit 2 (Even)
PD21/B5	87	O	Blue channel bit 5 (Even)	Blue channel bit 3 (Even)
PD22/B6	88	O	Blue channel bit 6 (Even)	Blue channel bit 4 (Even)
PD23/B7	89	O	Blue channel bit 7 (Even)	Blue channel bit 5 (Even)
DEN	90	O	Display Data Enable	
DHS	91	O	Display Horizontal Sync.	
DVS	92	O	Display Vertical Sync.	
DCLK	93	O	Display Pixel Clock	
PD24	115	O	Red channel bit 0 (Odd)	Not used.
PD25	114	O	Red channel bit 1 (Odd)	Not used.
PD26	113	O	Red channel bit 2 (Odd)	Red channel bit 0 (Odd)
PD27	112	O	Red channel bit 3 (Odd)	Red channel bit 1 (Odd)

IC BLOCK DIAGRAMS AND TERMINAL DESCRIPTIONS -48

Q8001: FLI8125-LF-BC (Video Processor)

TERMINAL DESCRIPTION(7/8)

TTL Display Interface

Pin Name	No	I/O	Description For 8-bit panels	For 6-bit panels
PD28	111	O	Red channel bit 4 (Odd)	Red channel bit 2 (Odd)
PD29	110	O	Red channel bit 5 (Odd)	Red channel bit 3 (Odd)
PD30	109	O	Red channel bit 6 (Odd)	Red channel bit 4 (Odd)
PD31	108	O	Red channel bit 7 (Odd)	Red channel bit 5 (Odd)
PD32	107	O	Green channel bit 0 (Odd)	Not used.
PD33	106	O	Green channel bit 1 (Odd)	Not used.
PD34	105	O	Green channel bit 2 (Odd)	Green channel bit 0 (Odd)
PD35	104	O	Green channel bit 3 (Odd)	Green channel bit 1 (Odd)
PD36	103	O	Green channel bit 4 (Odd)	Green channel bit 2 (Odd)
PD37	102	O	Green channel bit 5 (Odd)	Green channel bit 3 (Odd)
PD38	101	O	Green channel bit 6 (Odd)	Green channel bit 4 (Odd)
PD39	123	O	Green channel bit 7 (Odd)	Green channel bit 5 (Odd)
PD40	124	O	Blue channel bit 0 (Odd)	Not used.
PD41	125	O	Blue channel bit 1 (Odd)	Not used.
PD42	128	O	Blue channel bit 2 (Odd)	Blue channel bit 0 (Odd)
PD43	129	O	Blue channel bit 3 (Odd)	Blue channel bit 1 (Odd)
PD44	130	O	Blue channel bit 4 (Odd)	Blue channel bit 2 (Odd)
PD45	131	O	Blue channel bit 5 (Odd)	Blue channel bit 3 (Odd)
PD46	132	O	Blue channel bit 6 (Odd)	Blue channel bit 4 (Odd)
PD47	118	O	Blue channel bit 7 (Odd)	Blue channel bit 5 (Odd)

Parallel/Serial ROM/ SRAM Interface

Pin Name	No	I/O	Description
A19	21	O	Address Signal A19 for 1M X 8 PROM. This pin also acts as Chip select for external SRAM when PROM of 512KB or less is used. Else this pin acts as GPIO15.
A18	44	O	Address Signal A18 for 512K X 8 PROM / SRAM. Else this pin acts as GPIO10.
A17 A16 A15 A14 A13 A12 A11 A10 A9 A8 A7 A6 A5 A4 A3 A2 A1 A0	95 96 100 101 102 103 104 105 106 107 108 109 110 111 112 113 114 115	O	256K x8 PROM /SRAM Address. Some of these pins also have bootstrap functionality. For serial SPI ROM interface: - ROM_ADDR17 will be Serial Clock (ROM_SCLK) - ROM_ADDR16 will be Serial Data Output (ROM_SDO)
D7 D6 D5 D4 D3 D2 D1 D0	132 131 130 129 128 125 124 123	IO	External PROM / SRAM data input.

IC BLOCK DIAGRAMS AND TERMINAL DESCRIPTIONS -49

Q8001: FLI8125-LF-BC (Video Processor)

TERMINAL DESCRIPTION(8/8)

Parallel/Serial ROM/ SRAM Interface

ROM_OEN	118	O	External PROM / SRAM data Output Enable.
ROM_SDI/ ROM_WEN	97	O	External PROM / SRAM data Write Enable (for In-System-Programming of FLASH) or Serial Data Input (SDI) for SPI ROM interface.
ROM_SCSN/ ROM_CSN	94	O	External PROM / SRAM data Chip Select or Serial PROM Chip Select (ROM_SCSN) for SPI ROM interface.

Digital Power and Ground

Pin Name	No	I/O	Description
RVDD_3.3	32 49 98 116 154	P	Ring VDD. Connect to digital 3.3V.
CVDD_1.8	18 28 39 45 84 119 126 133 143	P	Core VDD. Connect to digital 1.8V.
CRVSS	19 29 33 40 46 50 85 99 117 120 127 134 144 155	G	Chip ground for core and ring.

JTAG Boundary Scan

Pin Name	No	I/O	Description
TCK	34	I	JTAG Boundary Scan TCK signal
TDO	55	O	JTAG Boundary Scan TDO signal
TDI	35	I	JTAG Boundary Scan TDI signal. Pad has internal 50K pull-up resistor.
TMS	36	I	JTAG Boundary Scan TMS signal. Pad has internal 50K pull-up resistor.
TRST	37	I	JTAG Boundary Scan RST signal. Pad has internal 50K pull-up resistor.

IC BLOCK DIAGRAMS AND TERMINAL DESCRIPTIONS -50

Q8101 : AD8196 (HDMI/DVI Switch with Equalization)

BLOCK DIAGRAM

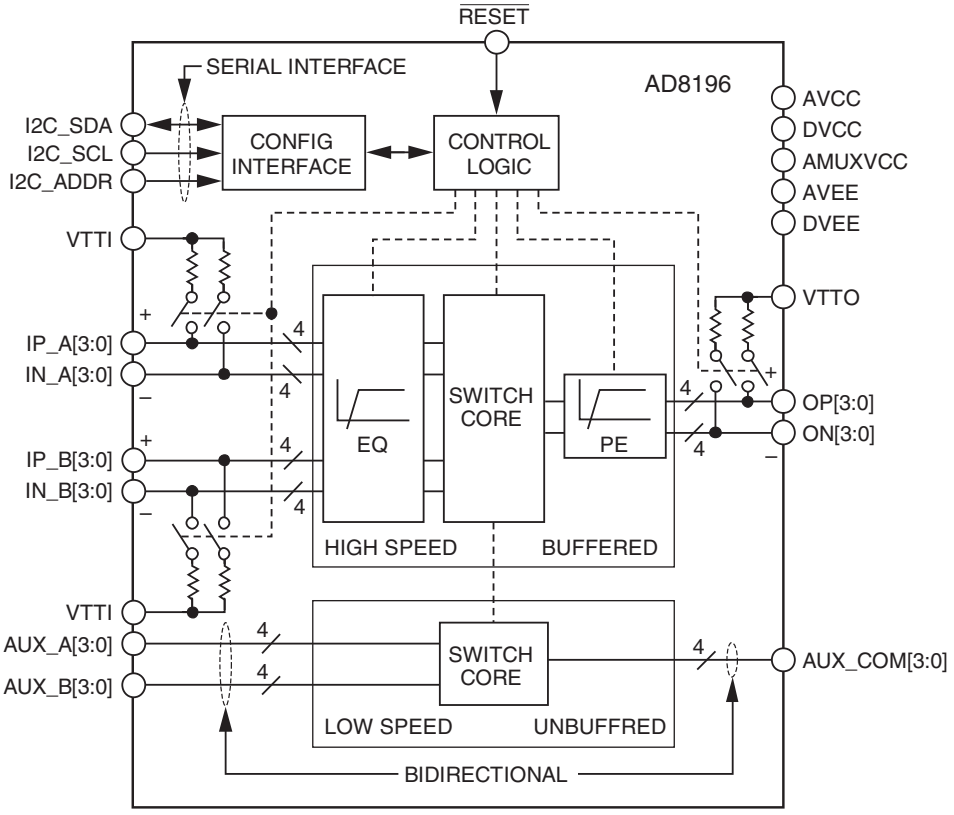

PIN CONFIGURATION

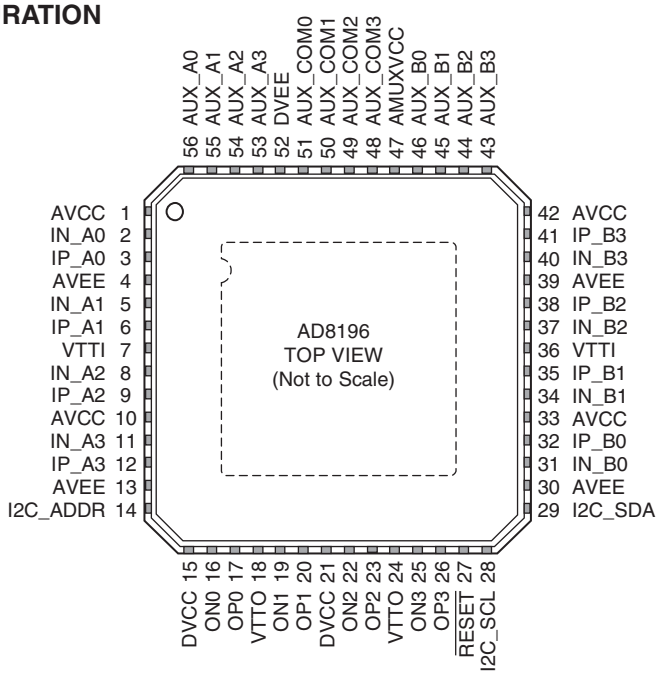

IC BLOCK DIAGRAMS AND TERMINAL DESCRIPTIONS -51

Q8101 : AD8196 (HDMI/DVI Switch with Equalization)

TERMINAL DESCRIPTION

Pin No.	Mnemonic	Type	Description
1, 10, 33, 42	AVCC	Power	Positive Analog Supply. 3.3 V nominal.
2	IN_A0	HS I	High Speed Input Complement.
3	IP_A0	HS I	High Speed Input.
4, 13, 30, 39, ePAD	AVEE	Power	Negative Analog Supply. 0 V nominal.
5	IN_A1	HS I	High Speed Input Complement.
6	IP_A1	HS I	High Speed Input.
7, 36	VTTI	Power	Input Termination Supply. Nominally connected to AVCC.
8	IN_A2	HS I	High Speed Input Complement.
9	IP_A2	HS I	High Speed Input.
11	IN_A3	HS I	High Speed Input Complement.
12	IP_A3	HS I	High Speed Input.
14	I2C_ADDR	Control	I^2C Address LSB.
15, 21	DVCC	Power	Positive Digital Power Supply. 3.3 V nominal.
16	ON0	HS O	High Speed Output Complement.
17	OP0	HS O	High Speed Output.
18, 24	VTTO	Power	Output Termination Supply. Nominally connected to AVCC.
19	ON1	HS O	High Speed Output Complement.
20	OP1	HS O	High Speed Output.
22	ON2	HS O	High Speed Output Complement.
23	OP2	HS O	High Speed Output.
25	ON3	HS O	High Speed Output Complement.
26	OP3	HS O	High Speed Output.
27	$\overline{\text{RESET}}$	Control	Configuration Registers Reset. This pin is normally pulled up to DVCC.
28	I2C_SCL	Control	I^2C Clock.
29	I2C_SDA	Control	I^2C Data.
31	IN_B0	HS I	High Speed Input Complement.
32	IP_B0	HS I	High Speed Input.
34	IN_B1	HS I	High Speed Input Complement.
35	IP_B1	HS I	High Speed Input.
37	IN_B2	HS I	High Speed Input Complement.
38	IP_B2	HS I	High Speed Input.
40	IN_B3	HS I	High Speed Input Complement.
41	IP_B3	HS I	High Speed Input.
43	AUX_B3	LS I/O	Low Speed Input/Output.
44	AUX_B2	LS I/O	Low Speed Input/Output.
45	AUX_B1	LS I/O	Low Speed Input/Output.
46	AUX_B0	LS I/O	Low Speed Input/Output.
47	AMUXVCC	Power	Positive Auxiliary Switch Supply. 5 V typical.
48	AUX_COM3	LS I/O	Low Speed Common Input/Output.
49	AUX_COM2	LS I/O	Low Speed Common Input/Output.
50	AUX_COM1	LS I/O	Low Speed Common Input/Output.
51	AUX_COM0	LS I/O	Low Speed Common Input/Output.
52	DVEE	Power	Negative Digital and Auxiliary Switch Power Supply. 0 V nominal.
53	AUX_A3	LS I/O	Low Speed Input/Output.
54	AUX_A2	LS I/O	Low Speed Input/Output.
55	AUX_A1	LS I/O	Low Speed Input/Output.
56	AUX_A0	LS I/O	Low Speed Input/Output.

HS = high speed, LS = low speed, I = input, O = output.

IC BLOCK DIAGRAMS AND TERMINAL DESCRIPTIONS -52

Q8801: ADV7172 (Digital PAL/NTSC Video Encoder with six DACs)

BLOCK DIAGRAM

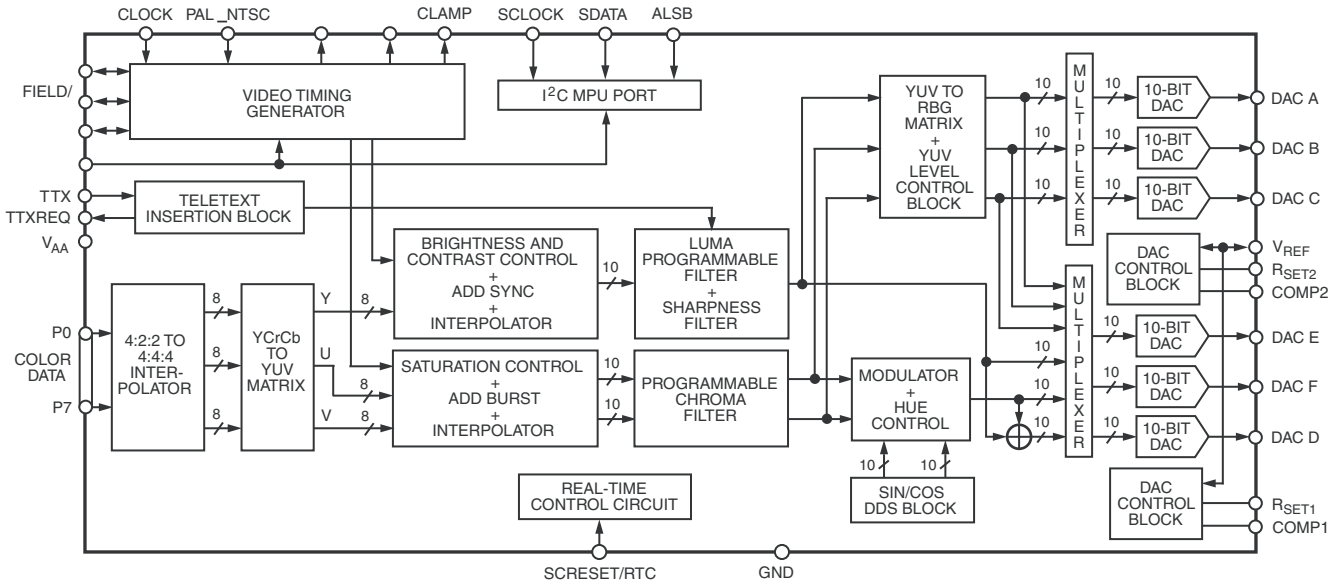

PIN CONFIGURATION

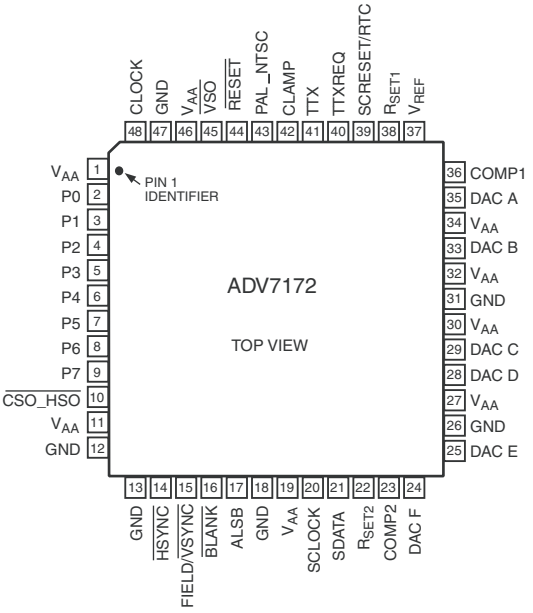

IC BLOCK DIAGRAMS AND TERMINAL DESCRIPTIONS -53

Q8801: ADV7172 (Digital PAL/NTSC Video Encoder with six DACs)

TERMINAL DESCRIPTION

Mnemonic	Input/Output	Function
P7–P0	I	8-Bit 4:2:2 Multiplexed YCrCb Pixel Port (P7ÐP0) P0 represents the LSB.
CLOCK	I	TTL Clock Input. Requires a stable 27 MHz reference clock for standard operation. Alternatively, a 24.5454 MHz (NTSC) or 29.5 MHz (PAL) can be used for square pixel operation.
$\overline{\text{HSYNC}}$	I/O	$\overline{\text{HSYNC}}$ (Modes 1 and 2) Control Signal. This pin may be configured to output (Master Mode) or as an input and accept (Slave Mode) Sync signals.
FIELD/$\overline{\text{VSYNC}}$	I/O	Dual Function FIELD (Mode 1) and $\overline{\text{VSYNC}}$ (Mode 2) Control Signal. This pin may be configured to output (Master Mode) or as an input (Slave Mode) and accept these control signals.
$\overline{\text{BLANK}}$	I/O	Video Blanking Control Signal. The pixel inputs are ignored when this is Logic Level "0." This signal is optional.
SCRESET/RTC	I	This pin can be configured as an input by setting MR42 and MR41 of Mode Register 4. It can be configured as a subcarrier reset pin, in which case a low-to-high transition on this pin will reset the subcarrier phase to Field 0. Alternatively it may be configured as a Real-Time Control (RTC) Input.
V_{REF}	I/O	Voltage Reference Input for DACs or Voltage Reference Output (1.235 V).
R_{SET1}	I	A 150 resistor connected from this pin to GND is used to control full-scale amplitudes of the Video Signals from DACs A, B, and C (the "large" DACs).
R_{SET2}	I	A 600 resistor connected from this pin to GND is used to control full-scale amplitudes of the Video Signals from DACs D, E, and F (the "small" DACs).
COMP1	O	Compensation Pin for DACs A, B, and C. Connect a 0.1 uF Capacitor from COMP to V_{AA}. For Optimum Dynamic Performance in Low Power Mode, the value of the COMP1 capacitor can be lowered to as low as 2.2 nF.
COMP2	O	Compensation Pin for DACs D, E, and F. Co nnect a 0.1 uF Capacitor from COMP to V_{AA} .
DAC A	O	GREEN/Composite/Y Analog Output. This DAC is capable of providing 34.66 mA output.
DAC B	O	BLUE/S-Video Y/U Analog Output. This DAC is capable of providing 34.66 mA output.
DAC C	O	RED/S-Video C/V Analog Output. This DAC is capable of providing 34.66 mA output.
DAC D	O	GREEN/Composite/Y Analog Output. This DAC is capable of providing 8.66 mA output.
DAC E	O	BLUE/S-Video Y/U Analog Output. This DAC is capable of providing 8.66 mA output.
DAC F	O	RED/S-Video C/V Analog Output. This DAC is capable of providing 8.66 mA output.
SCLOCK	I	MPU Port Serial Interface Clock Input.
SDATA	I/O	MPU Port Serial Data Input/Output.
CLAMP	O	TTL Output Signal to external circuitry to enable clamping of all video signals.
PAL_NTSC	I	Input signal to select PAL or NTSC mode of operation, pin set to Logic "1" selects PAL.
$\overline{\text{VSO}}$	O	$\overline{\text{VSO}}$ TTL Output Sync Signal.
$\overline{\text{CSO\_HSO}}$	O	Dual Function $\overline{\text{CSO}}$ or $\overline{\text{HSO}}$ TTL Output Sync Signal.
ALSB	I	TTL Address Input. This signal sets up the LSB of the MPU address.
$\overline{\text{RESET}}$	I	The input resets the on-chip timing generator and sets the ADV7172/ADV7173 into default mode. This is NTSC operation, Timing Slave Mode 0, DACs A, B, and C powered OFF, DACs D, E, and F powered ON, Composite and S-Video out.
TTX	I	Teletext Data Input Pin.
TTXREQ	O	Teletext Data Request output signal used to control teletext data transfer.
V_{AA}	I	Power Supply (3 V to 5 V).
GND	G	Ground Pin.

IC BLOCK DIAGRAMS AND TERMINAL DESCRIPTIONS -54

Q8210, Q8510, Q8610: BR24L02FV-W(256x8 bit EEPROM)

BLOCK DIAGRAM AND PIN CONFIGURATION

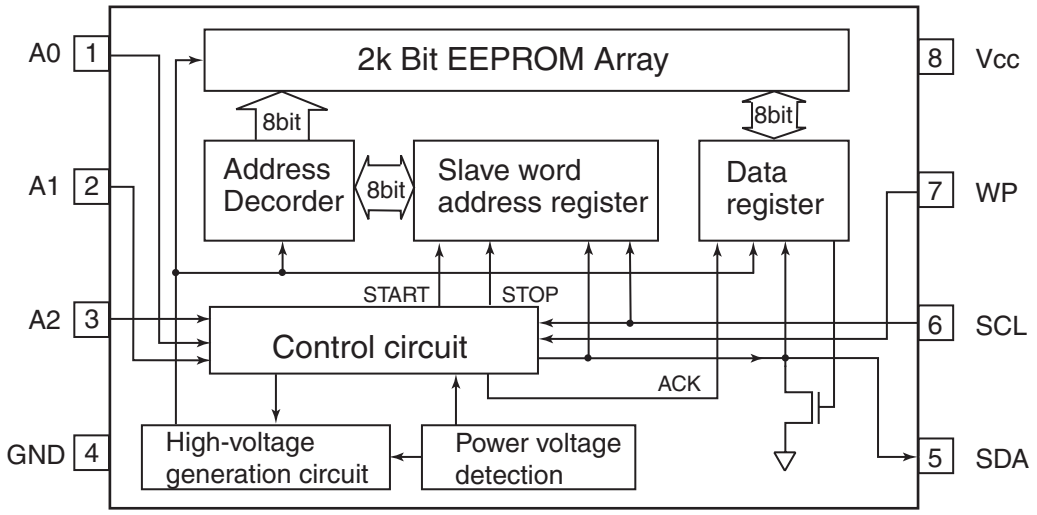

TERMINAL DESCRIPTION

Terminal	I/O	Function
Vcc	-	Apply a power source
GND	-	Ground terminal
A0,A1,A2	I	Slave address setting terminal
SCL	I	Serial clock input
SDA	I/O	Slave and word address. Serial data input and output
WP	I	Write protect terminal

IC BLOCK DIAGRAM AND TERMINAL DESCRIPTIONS -55

Q7003: M66005-0001AHP (FL Tube Driver)

BLOCK DIAGRAM

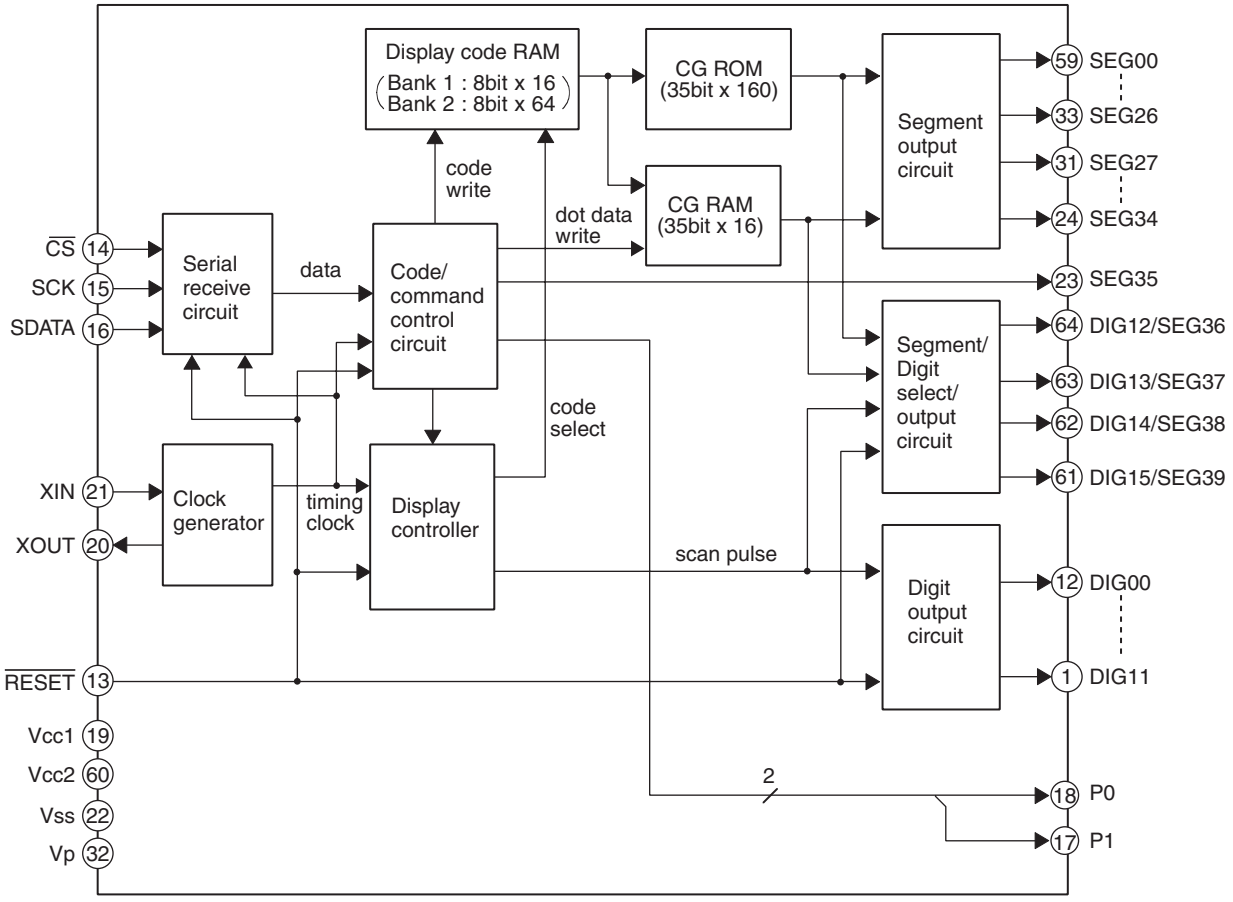

TERMINAL DESCRIPTION

PIN NO.	SYMBOL	PIN NAME	DESCRIPTION
13	$\overline{\text{RESET}}$	Reset input	This pin is used to initialize the internal state of the M66004.
14	$\overline{\text{CS}}$	Chip select input	"L" : Communication with the MCU is possible. "H" : Any instruction from the MCU is neglected.
15	SCK	Shift clock input	At the rising edge from "L" to "H", input data is shifted.
16	SDATA	Serial data input	Character code or command data to display is input from MSB.
21, 20	XIN, XOUT	Clock input Clock output	This pin is used to connect a resister and a capacitor externally to set oscillation frequency.
1~12 61~64	DIG00 ~ DIG15	Digit output	These pins are used to connect to digit pins of VFD.
23~31 33~59	SEG00 ~ SEG39	Segment output	These pins are used to connect to segment pins of VFD.
17, 18	P0, P1		Output port (static operation)
19	VCC1		Positive power supply for internal logic.
60	VCC2		Positive power supply for high-pressure-resistant output port.
22	VSS		GND
32	VP		Negative power supply for VFD drive.

IC BLOCK DIAGRAMS AND TERMINAL DESCRIPTIONS -56

Q8010: S-24CS16A01 (16 kbit EEPROM)

BLOCK DIAGRAM

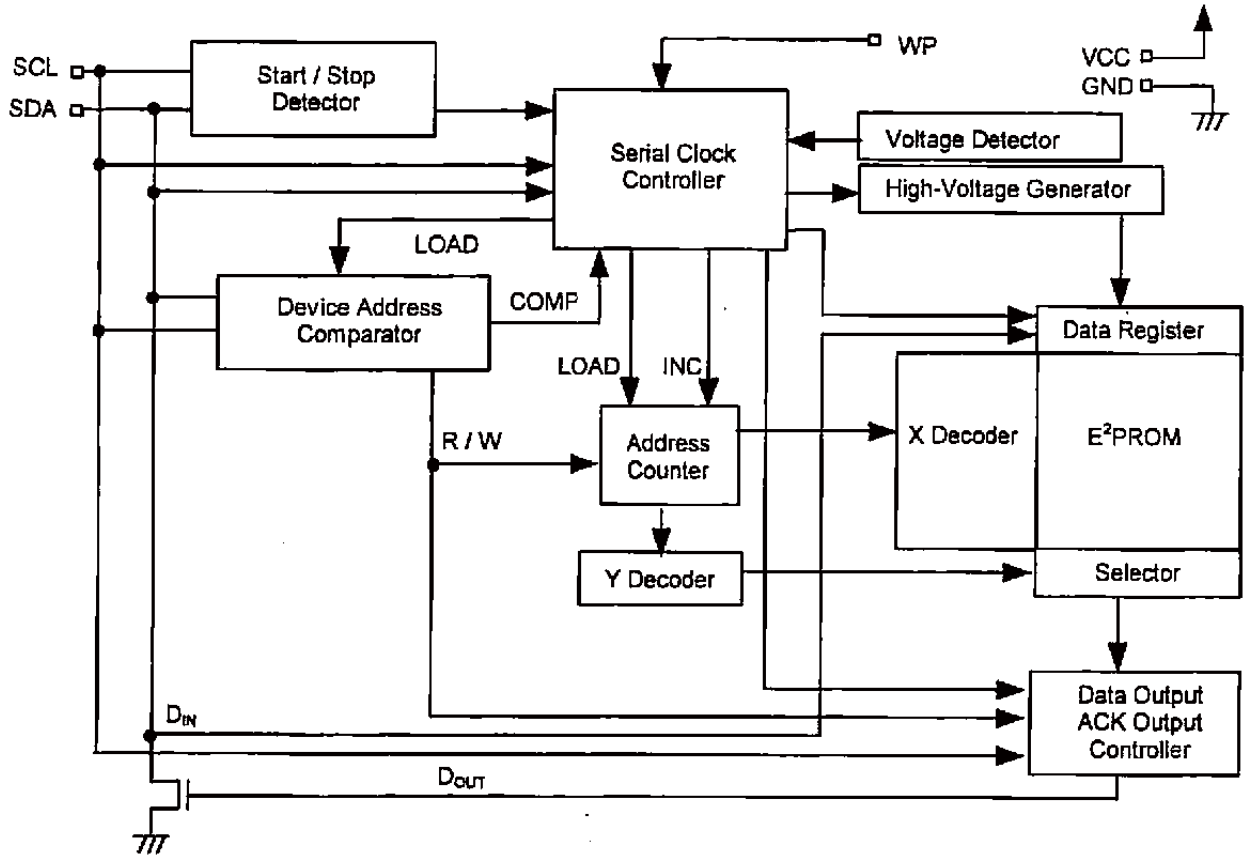

PIN CONFIGURATION

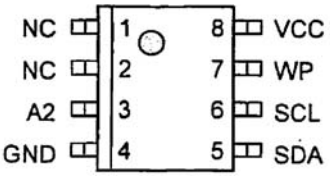

TERMINAL DESCRIPTION

Pin Number	Pin Name	Function
1	NC	No connection*1
2	NC	No connection*1
3	A2	TEST pin*2
4	GND	Ground
5	SDA	Serial data input / output
6	SCL	Serial clock input
7	WP	Write protection input Connected to V_{CC}: Protection valid Connected to GND: Protection invalid
8	VCC	Power supply

*1. Connect to GND or V_{CC}.
*2. Connect to GND.

IC BLOCK DIAGRAMS AND TERMINAL DESCRIPTIONS -57

Q8401: SII9134CTU (HDMI TRANSMITTER)

BLOCK DIAGRAM

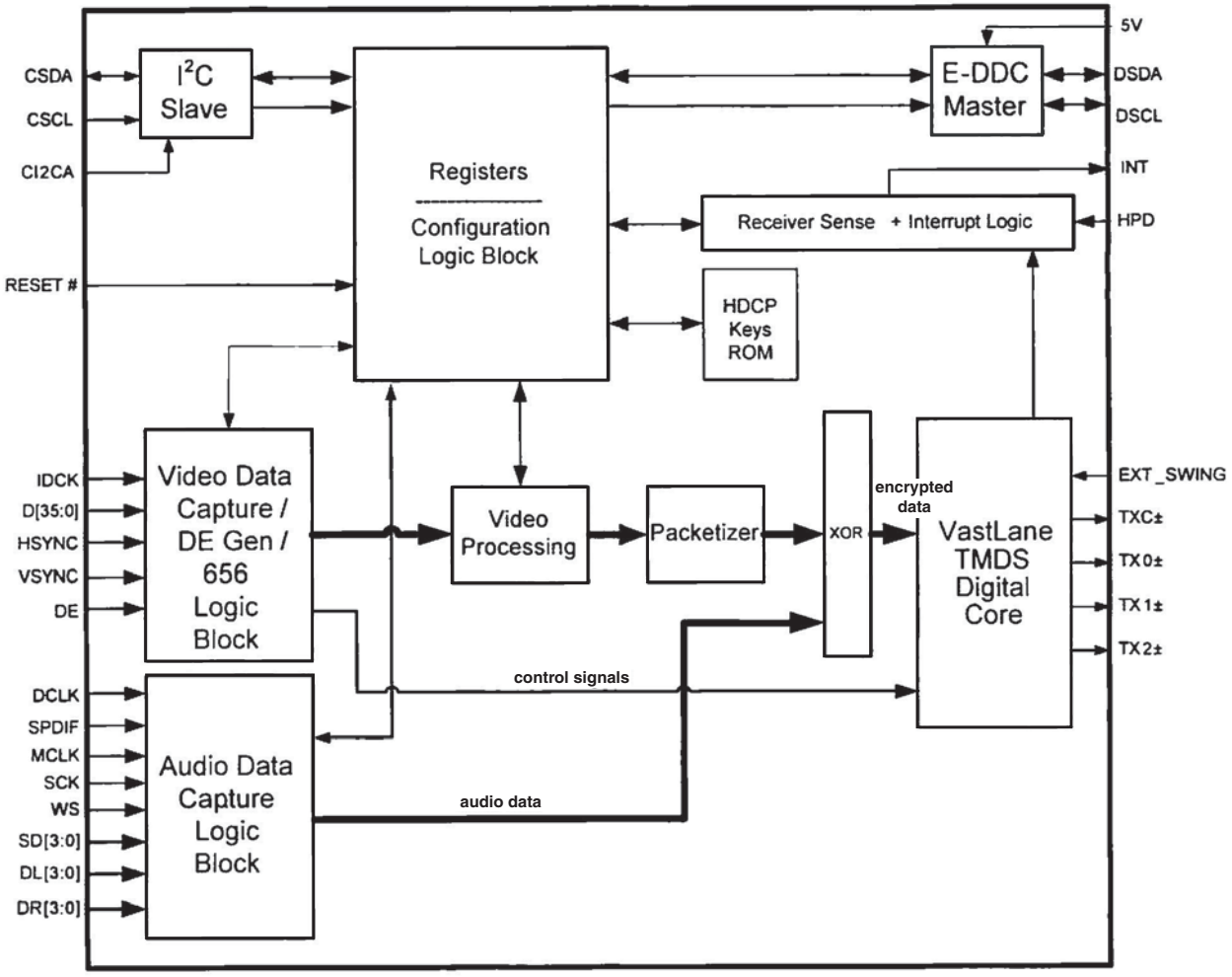

IC BLOCK DIAGRAMS AND TERMINAL DESCRIPTIONS -58

Q8401: SII9134CTU (HDMI TRANSMITTER)

PIN CONFIGURATION

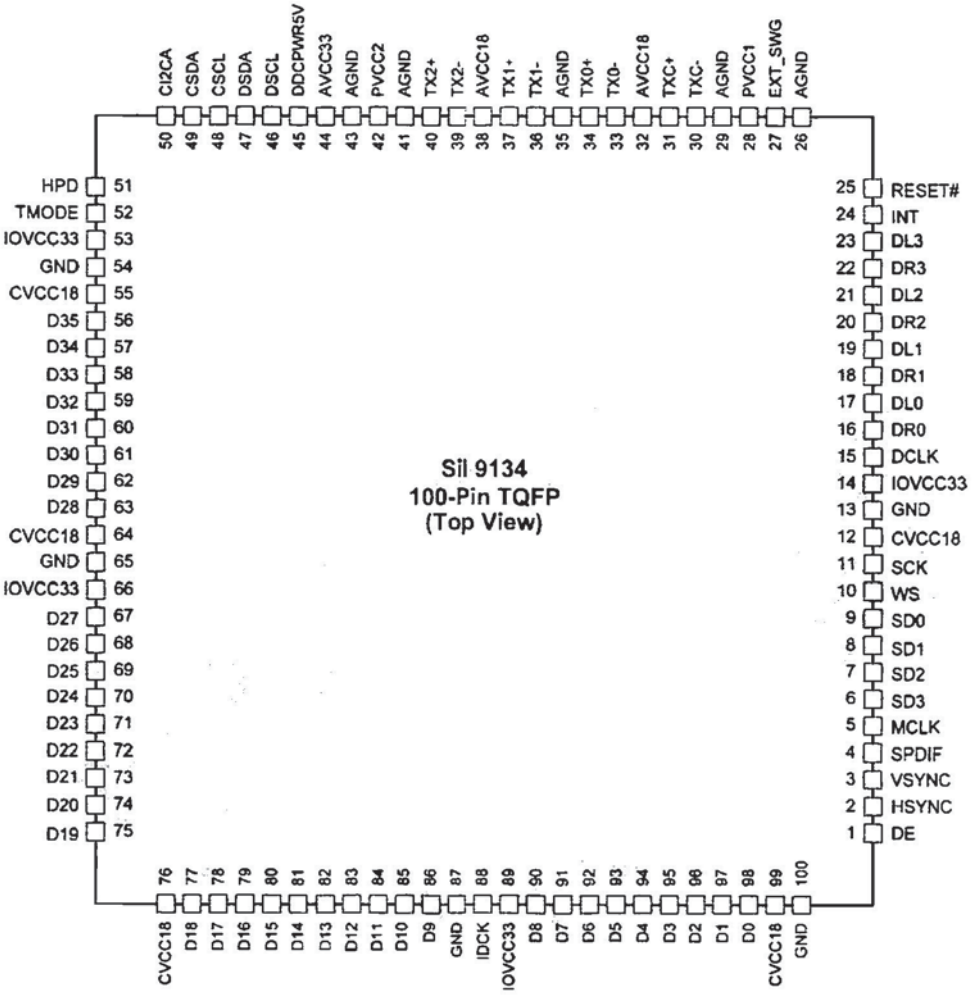

TERMINAL DESCRIPTION(1/3)

Configuration/Programing Pins

Pin Name	Pin #	Type	Dir	Description
HPD	51	LVTTL	Input	Hot Plug Detect Input
RSVDL	52	LVTTL	Input	Reserved for use by Silicon Image and must be tied LOW.
INT	24	LVTTL	Output	Interrupt Output.

Control Pins

Pin Name	Pin #	Type	Dir	Description
CI2CA	50	LVTTL	Input	I^2C device address select (see page 11)
RESET#	25	LVTTL Schmidt	Input	Reset Pin (Active LOW) 5V Tolerant
CSCL	48	Schmitt	Input	I^2C Clock
CSDA	49	Schmitt-Open Drain	Bi-Di	I^2C Data (Open drain output.)
DSCL	46	Schmitt-Open Drain	Bi-Di	DDC Clock (Open Drain Output)
DSDA	47	Schmitt-Open Drain	Bi-Di	DDC Data (Open drain output.)

IC BLOCK DIAGRAMS AND TERMINAL DESCRIPTIONS -59

Q8401: SII9134CTU (HDMI TRANSMITTER)

TERMINAL DESCRIPTION(2/3)

Video and Audio Pins-1

Pin Name	Pin #	Type	Dir	Description
D0	98	LVTTL	Input	These are the lower 12 bits of the 36-bit pixel bus. These pins are highly configurable, and support multiple RGB and YCbCr formats. See Data Bus Mappings on page 30 for complete information.
D1	97	LVTTL	Input	
D2	96	LVTTL	Input	
D3	95	LVTTL	Input	
D4	94	LVTTL	Input	
D5	93	LVTTL	Input	
D6	92	LVTTL	Input	
D7	91	LVTTL	Input	
D8	90	LVTTL	Input	
D9	86	LVTTL	Input	
D10	85	LVTTL	Input	
D11	84	LVTTL	Input	
D12	83	LVTTL	Input	These are the middle 12 bits of the 36-bit pixel bus.
D13	82	LVTTL	Input	
D14	81	LVTTL	Input	
D15	80	LVTTL	Input	
D16	79	LVTTL	Input	
D17	78	LVTTL	Input	
D18	77	LVTTL	Input	
D19	75	LVTTL	Input	
D20	74	LVTTL	Input	
D21	73	LVTTL	Input	
D22	72	LVTTL	Input	
D23	71	LVTTL	Input	
D24	70	LVTTL	Input	These are the upper 12 bits of the 36-bit pixel bus.
D25	69	LVTTL	Input	
D26	68	LVTTL	Input	
D27	67	LVTTL	Input	
D28	63	LVTTL	Input	
D29	62	LVTTL	Input	
D30	61	LVTTL	Input	
D31	60	LVTTL	Input	
D32	59	LVTTL	Input	
D33	58	LVTTL	Input	
D34	57	LVTTL	Input	
D35	56	LVTTL	Input	

Power and Ground Pins

Pin Name	Pin #	Type	Description
CVCC18	12, 55, 64, 76, 99	Power	Digital Core VCC. Connect to 1.8V supply.
IOVCC33	14, 53, 66, 89	Power	IO Pin VCC. Connect to 3.3V supply.
AVCC33	44	Power	Analog VCC. Connect to 3.3V supply.
AVCC18	32, 38,	Power	Analog VCC. Connect to 1.8V supply.
AGND	26, 29, 35, 41,43	Ground	Analog GND.
PVCC1	28	Power	TMDS Core PLL Power. Connect to 1.8V supply.
PVCC2	42	Power	Filter PLL Power. Connect to 1.8V supply.
DDCPWR5V	45	Power	Power reference signal. Used to supply power to the DDC I2C pads when chip is powered off. Connect to 5V supply.
Gnd	13, 54, 65, 87,100	Ground	Digital Ground

IC BLOCK DIAGRAMS AND TERMINAL DESCRIPTIONS -60

Q8401: SII9134CTU (HDMI TRANSMITTER)

TERMINAL DESCRIPTION(3/3)

Video and Audio Pins-2

Pin Name	Pin #	Type	Dir	Description
IDCK	88	LVTTL	Input	Input Data Clock
DE	1	LVTTL	Input	Data enable
HSYNC	2	LVTTL	Input	Horizontal Sync input control signal
VSYNC	3	LVTTL	Input	Vertical Sync input control signal
SCK	11	LVTTL	Input	I^2S Serial Clock
WS	10	LVTTL	Input	I^2S Word Select
SD0	9	LVTTL	Input	I^2S Serial Data
SD1	8	LVTTL	Input	I^2S Serial Data
SD2	7	LVTTL	Input	I^2S Serial Data
SD3	6	LVTTL	Input	I^2S Serial Data
DL0	17	LVTTL	Input	One-bit Audio Data Left 0
DR0	16	LVTTL	Input	One-bit Audio Data Right 0
DL1	19	LVTTL	Input	One-bit Audio Data Left 1
DR1	18	LVTTL	Input	One-bit Audio Data Right 1
DL2	21	LVTTL	Input	One-bit Audio Data Left 2
DR2	20	LVTTL	Input	One-bit Audio Data Right 2
DL3	23	LVTTL	Input	One-bit Audio Data Left 3
DR3	22	LVTTL	Input	One-bit Audio Data Right 3
DCLK	15	LVTTL	Input	One-bit Audio Clock Input
MCLK	5	LVTTL	Input	Audio Input Master Clock
SPDIF	4	LVTTL	Input	S/PDIF Audio Input.

Differetial Signal Data Pins

Pin Name	Pin #	Type	Dir	Description
TX0+	34	TMDS	Output	TMDS output data pairs.
TX0-	33	TMDS	Output	
TX1+	37	TMDS	Output	
TX1-	36	TMDS	Output	
TX2+	40	TMDS	Output	
TX2-	39	TMDS	Output	
TXC+	31	TMDS	Output	TMDS output clock pair.
TXC-	30	TMDS	Output	
EXT_SWING	27	Analog	Input	Voltage Swing Adjust. A resistor is tied from this pin to AVCC. This resistor determines the amplitude of the voltage swing. Recommend 698 Ω 1% when source termination and leakage bias is on and 845 Ω 1% when source termination and leakage bias is off.

IC BLOCK DIAGRAMS AND TERMINAL DESCRIPTIONS -61

Q8501: SII9135CTU (HDMI RECEIVER)

BLOCK DIAGRAM

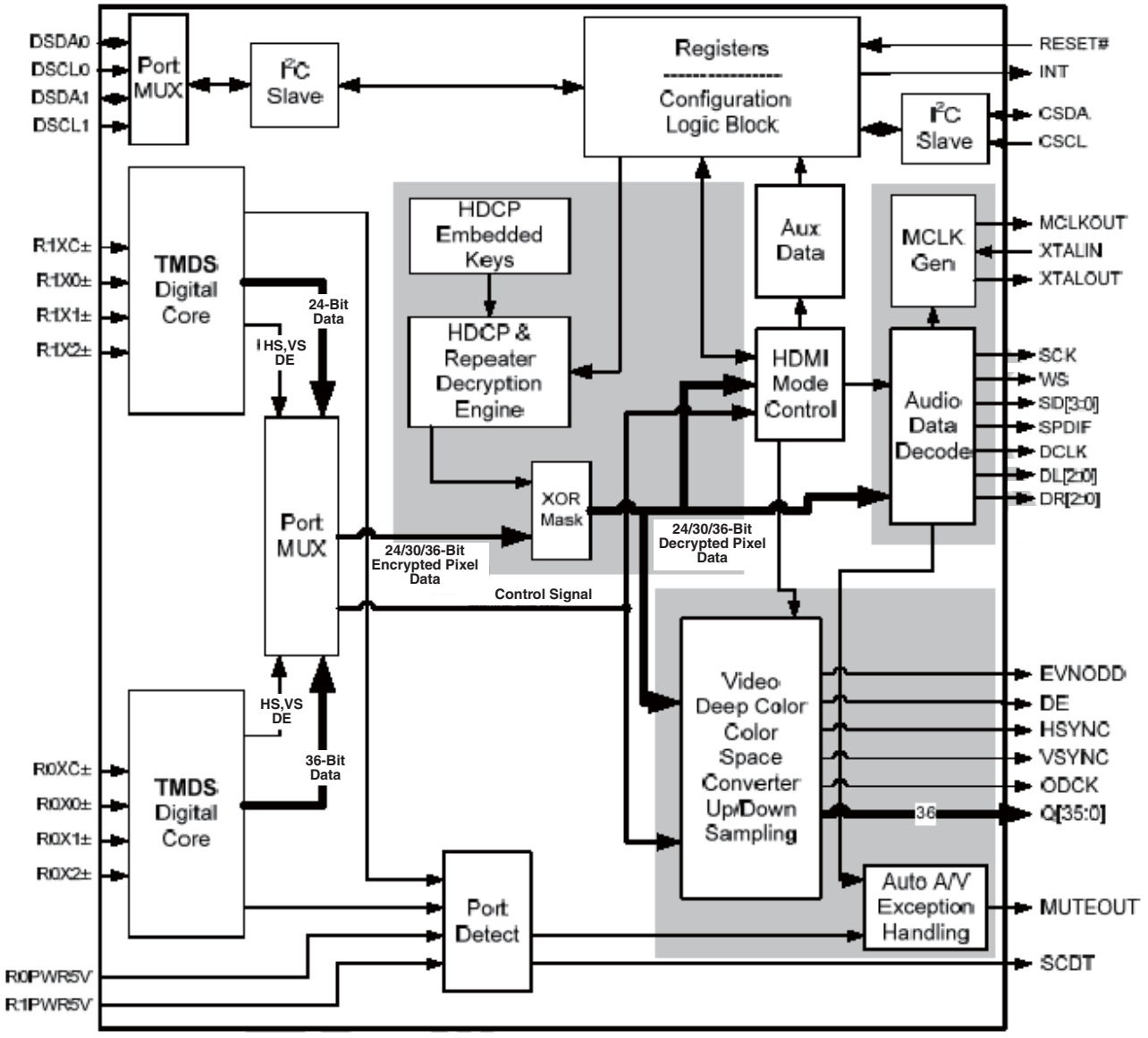

IC BLOCK DIAGRAMS AND TERMINAL DESCRIPTIONS -62

Q8501: SII9135CTU (HDMI RECEIVER)

PIN CONFIGURATION

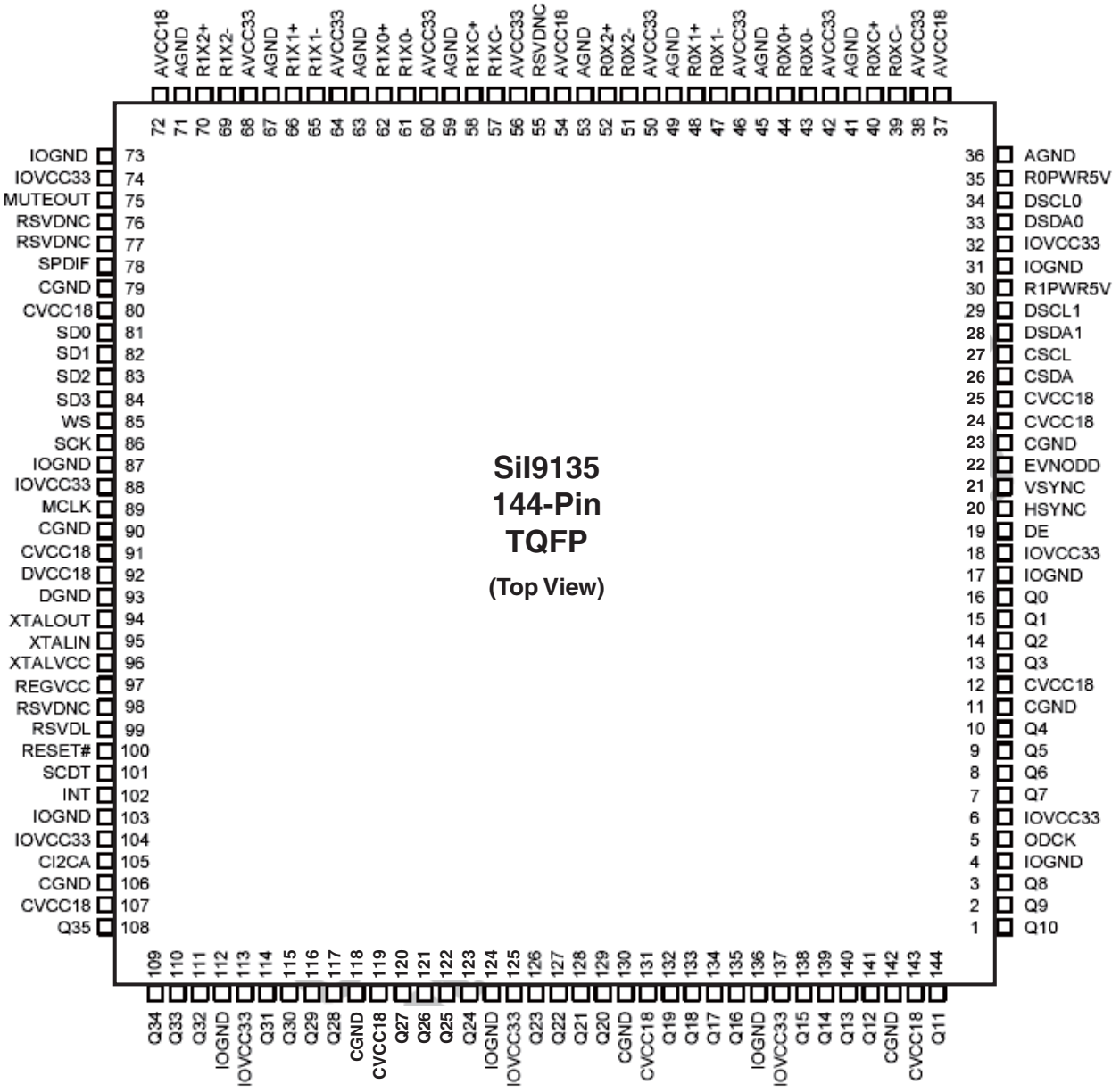

IC BLOCK DIAGRAMS AND TERMINAL DESCRIPTIONS -63

Q8501: SII9135CTU (HDMI RECEIVER)

TERMINAL DESCRIPTION(1/4)

Video and Audio Pins

Pin Name	Pin #	Strength	Type	Dir	Description
Q0	16	8 mA	LVTTL	Output	36-Bit Output Pixel Data Bus. Q35:0 is highly configurable using the VDD_CONFIG register. It supports a wide array of output formats, including multiple RBG and YCbCr bus formats. Using the appropriate bits in the PD register, the output drivers can be put into a high impedance (tri-state) mode. A weak, internal pull-down device brings each output to ground.
Q1	15		LVTTL	Output	
Q2	14		LVTTL	Output	
Q3	13		LVTTL	Output	
Q4	10		LVTTL	Output	
Q5	9		LVTTL	Output	
Q6	8		LVTTL	Output	
Q7	7		LVTTL	Output	
Q8	3		LVTTL	Output	
Q9	2		LVTTL	Output	
Q10	1		LVTTL	Output	
Q11	144		LVTTL	Output	
Q12	141		LVTTL	Output	
Q13	140		LVTTL	Output	
Q14	139		LVTTL	Output	
Q15	138		LVTTL	Output	
Q16	135		LVTTL	Output	
Q17	134		LVTTL	Output	
Q18	133		LVTTL	Output	
Q19	132		LVTTL	Output	
Q20	129		LVTTL	Output	
Q21	128		LVTTL	Output	
Q22	127		LVTTL	Output	
Q23	126		LVTTL	Output	
Q24	123		LVTTL	Output	
Q25	122		LVTTL	Output	
Q26	121		LVTTL	Output	
Q27	120		LVTTL	Output	
Q28	117		LVTTL	Output	
Q29	116		LVTTL	Output	
Q30	115		LVTTL	Output	
Q31	114		LVTTL	Output	
Q32	111		LVTTL	Output	
Q33	110		LVTTL	Output	
Q34	109		LVTTL	Output	
Q35	108		LVTTL	Output	
DE	19	8 mA	LVTTL	Output	Data Enable
HSYNC	20	8 mA	LVTTL	Output	Horizontal Sync Output
VSYNC	21	8 mA	LVTTL	Output	Vertical Sync Output
EVNODD	22	8 mA	LVTTL	Output	Indicates Even or Odd Field for Interlaced Formats
ODCK	5	12 mA	LVTTL	Output	Output Data Clock

IC BLOCK DIAGRAMS AND TERMINAL DESCRIPTIONS -64

Q8501: SII9135CTU (HDMI RECEIVER)

TERMINAL DESCRIPTION(2/4)

Digital Audio Output Pins

Pin Name	Pin #	Strength	Type	Dir	Description
XTALIN	95	---	5V Tolerant LVTTL	In	Crystal Clock Input. Also allows LVTTL input. Frequency required: 26-28.5 MHz
XTALOUT	94	4 mA	LVTTL	Out	Crystal Clock Output
MCLK	89	8 mA	LVTTL	Out	Audio Master Clock Output
SCK/DCLK	86	4 mA	LVTTL	Out	I2S Serial Clock Output.
					DSD Clock Out.
WS/DR0	85	4 mA	LVTTL	Out	I2S Word Select Output.
					DSD Serial Right Ch0 Data Output
SD0/DL0	81	4 mA	LVTTL	Out	I2S Serial Data Output / DSD Audio Output Configurable to be shared with DSD. SD0 = DSD Serial Left Ch0 Data Output SD1 = DSD Serial Right Ch1 Data Output SD2 = DSD Serial Left Ch1 Data Output
SD1/DR1	82	4 mA	LVTTL	Out	
SD2/DL1	83	4 mA	LVTTL	Out	
SD3/DR2	84	4 mA	LVTTL	Out	
SPDIF/DL2	78	4 mA	LVTTL	Out	S/PDIF Audio Output. Configurable to be shared with DSD
					DSD Serial Left Ch2 Data Output
MUTEOUT	75	4 mA	LVTTL	Out	Mute Audio Output. Signal to the external downstream audio device, audio DAC, etc. to downstream audio device, audio DAC, etc. to mute audio output.

Differential Signal Data Pins

Pin Name	Pin #	Type	Description	
R0XC+	40	Analog	TMDS Input Clock Pair	HDMI Port 0
R0XC-	39	Analog		
R0X0+	44	Analog	TMDS Input Data Pair	
R0X0-	43	Analog		
R0X1+	48	Analog	TMDS Input Data Pair	
R0X1-	47	Analog		
R0X2+	52	Analog	TMDS Input Data Pair	
R0X2-	51	Analog		
R1XC+	58	Analog	TMDS Input Clock Pair	HDMI Port 1
R1XC-	57	Analog		
R1X0+	62	Analog	TMDS Input Data Pair	
R1X0-	61	Analog		
R1X1+	66	Analog	TMDS Input Data Pair	
R1X1-	65	Analog		
R1X2+	70	Analog	TMDS Input Data Pair	
R1X2-	69	Analog		

IC BLOCK DIAGRAMS AND TERMINAL DESCRIPTIONS -65

Q8501: SII9135CTU (HDMI RECEIVER)

TERMINAL DESCRIPTION(3/4)

Configuration/Programming Pins

Pin Name	Pin #	Strength	Type	Dir	Description
INT	102	4 mA	LVTTL	Out	Interrupt Output. Configurable polarity and pushpull output. Multiple sources of interrupt can be enabled through the INT_EN register. See Note 1.
RESET#	100	---	Schmitt	In	Reset Pin. Active LOW. 5V Tolerant
DSCL0	34	---	SchmittOD	In	DDC I2C Clock for Port 0. 5V Tolerant. HDCP KSV, An and Ri values are exchanged over an I2C port during authentication. True open drain, so does not pull to GND if R0PWR5V is not applied.
DSDA0	33	3 mA	SchmittOD	Bi-Di	DDC I2C Data for Port 0. 5V Tolerant. HDCP KSV, An and Ri values are exchanged over an I2C during authentication. True open drain, so does not pull to GND if R0PWR5V is not applied.
DSCL1	29	---	SchmittOD	In	DDC I2C Clock for Port 1. 5V Tolerant. 5V Tolerant. HDCP KSV, An and Ri values are exchanged over an I2C port during authentication. True open drain, so does not pull to GND if R1PWR5V is not applied.
DSDA1	28	3 mA	SchmittOD	Bi-Di	DDC I2C Data for Port 1. 5V Tolerant. 5V Tolerant. HDCP KSV, An and Ri values are exchanged over an I2C port during authentication. True open drain, so does not pull to GND if R1PWR5V is not applied.
CSCL	27	---	Schmitt	In	Configuration/Status I2C Clock. 5V Tolerant. Chip configuration/status, CEA-861 support and downstream HDCP repeater-specific registers are accessed via this I2C port. True open drain, so does not pull to GND if power is not applied.
CSDA	26	3 mA	Schmitt	Bi-Di	Configuration/Status I2C Data. 5V Tolerant. Chip configuration/status, CEA-861 support and downstream HDCP repeater-specific registers are accessed via this I2C port. True open drain, so does not pull to GND if power is not applied.
CI2CA	105		LLVTTL	In	Local I2C Address Select. 5V Tolerant. Low = Addresses 0x60/0x68 High = Addresses 0x62/0x6A
SCDT	101	12 mA	LLVTTL	Out	Indicates Active Video at HDMI Input Port. Sync detection indicator.
R0PWR5V	35	---	LLVTTL	In	Port 0 Transmitter Detect. 5V Tolerant. Used for MUTEIN function. See Note 2, 3.
R1PWR5V	30	---	LLVTTL	In	Port 1 Transmitter Detect. 5V Tolerant. Used for MUTEIN function. See Note 2,3.
RSVDNC	98,77,76,55				Reserved, must be left unconnected
RSVDL	99			In	Reserved, must be tied to ground

IC BLOCK DIAGRAMS AND TERMINAL DESCRIPTIONS -66

Q8501: SII9135CTU (HDMI RECEIVER)

TERMINAL DESCRIPTION(4/4)

Power and Ground Pins

Pin Name	Pin #	Type	Description	Supply
CVCC18	12,24,25,80,91,107,119,131,143	Power	Digital Logic VCC	1.8V
CGND	11,23,79,90,106,118,130,142	Ground	Digital Logic GND	
IOVCC33	6,18,32,74,88,104,113,125,137	Power	Input/Output Pin VCC	3.3V
IOGND	4,17,31,73,87,103,112,124,136	Ground	Input/Output Pin GND	
AVCC33	38,42,46,50,56,60,64,68	Power	TMDS Analog VCC 3.3V	3.3V
AGND	36,41,45,49,53,59,63,67,71	Ground	TMDS Analog GND	
AVCC18	37,54,72	Power	TMDS Analog VCC 1.8V	1.8V
DVCC18	92	Power	Audio Clock Regeneration PLL Analog VCC. Must be connected to 1.8V	1.8V
DGND	93	Ground	Audio Clock Regeneration PLL Analog Ground	
XTALVCC	96	Power	Audio Clock Regeneration PLL Crystal Oscillator Power. Must be connected to 3.3V	3.3V
REGVCC	97	Power	Audio Clock Regeneration PLL Crystal Oscillator Power. Must be connected to 3.3V	3.3V

IC BLOCK DIAGRAMS AND TERMINAL DESCRIPTIONS -67

Q8011: SST25VF080B (8 Mbit Serial Flash Memory)

BLOCK DIAGRAM

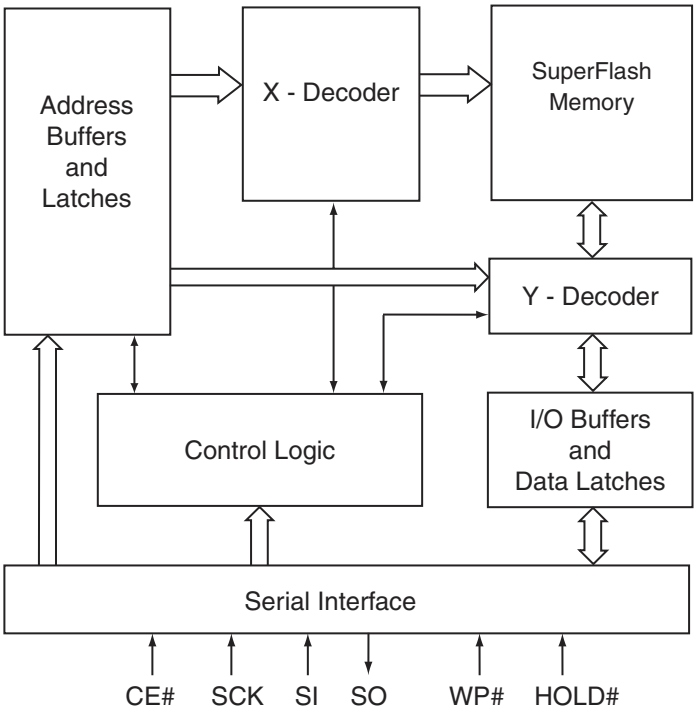

PIN CONFIGURATION

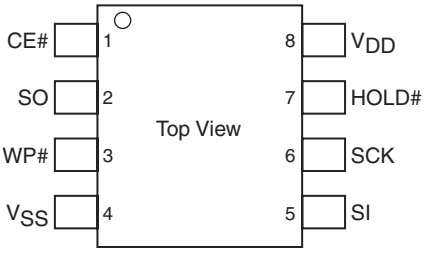

TERMINAL DESCRIPTION

Symbol	Pin Name	Functions
SCK	Serial Clock	To provide the timing of the serial interface. Commands, addresses, or input data are latched on the rising edge of the clock input, while output data is shifted out on the falling edge of the clock input.
SI	Serial Data Input	To transfer commands, addresses, or data serially into the device. Inputs are latched on the rising edge of the serial clock.
SO	Serial Data Output	To transfer data serially out of the device. Data is shifted out on the falling edge of the serial clock.
CE#	Chip Enable	The device is enabled by a high to low transition on CE#. CE# must remain low for the duration of any command sequence.
WP#	Write Protect	The Write Protect (WP#) pin is used to enable/disable BPL bit in the status register.
HOLD#	Hold	To temporarily stop serial communication with SPI flash memory without resetting the device.
V_{DD}	Power Supply	To provide power supply voltage: 2.7-3.6V for SST25VF080
V_{SS}	Ground	

IC BLOCK DIAGRAMS AND TERMINAL DESCRIPTIONS -68

Q101: CS4344-CZZR (24bit, 192kHz, Stereo, DAC)

BLOCK DIAGRAM

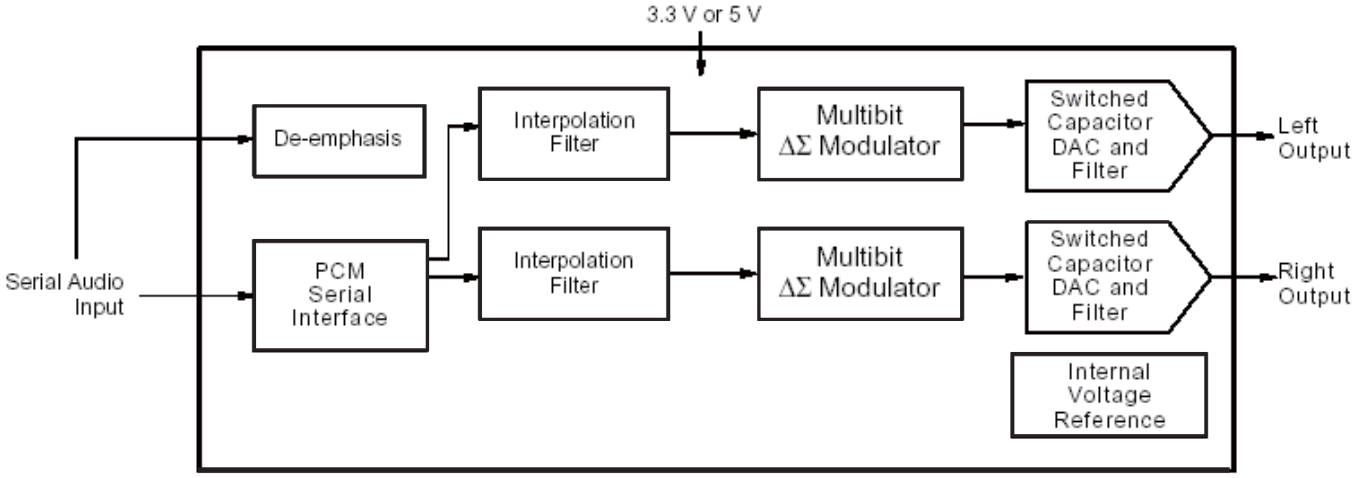

PIN CONFIGURATION

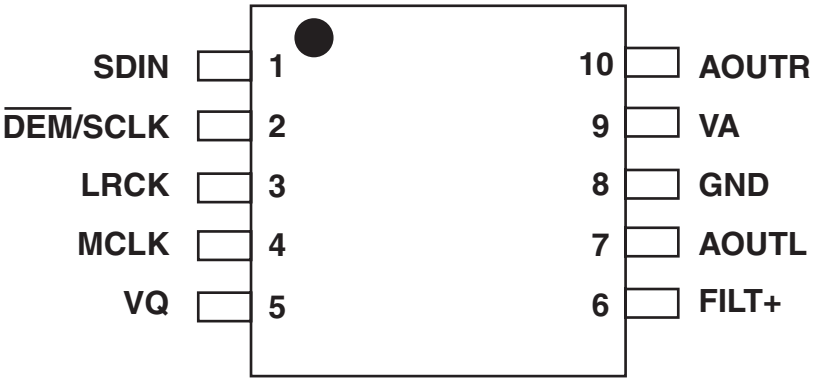

TERMINAL DESCRIPTION

Pin Name	#	Pin Description
SDIN	1	**Serial Audio Data Input** (*Input*) - Input for two's complement serial audio data.
$\overline{\text{DEM}}$/SCLK	2	**De-Emphasis/External Serial Clock Input** (*Input*) - used for de-emphasis filter control or external serial clock input.
LRCK	3	**Left Right Clock** (*Input*) - Determines which channel, Left or Right, is currently active on the serial audio data line.
MCLK	4	**Master Clock** (*Input*) - Clock source for the delta-sigma modulator and digital filters.
VQ	5	**Quiescent Voltage** (*Output*) - Filter connection for internal quiescent voltage.
FILT+	6	**Positive Voltage Reference** (*Output*) **-** Positive reference voltage for the internal sampling circuits.
AOUTL	7	**Left Channel Analog Output** (*Output*) - The full scale analog output level is specified in the Analog Characteristics specification table.
GND	8	**Ground** (*Input*) - ground reference.
VA	9	**Analog Power** (*Input*) **-** Positive power for the analog and digital sections.
AOUTR	10	**Right Channel Analog Output** (*Output*) - The full scale analog output level is specified in the Analog Characteristics specification table.

IC BLOCK DIAGRAMS AND TERMINAL DESCRIPTIONS -69

Q103 : F2628E-01 (XM Digital Transceiver)

BLOCK DIAGRAM

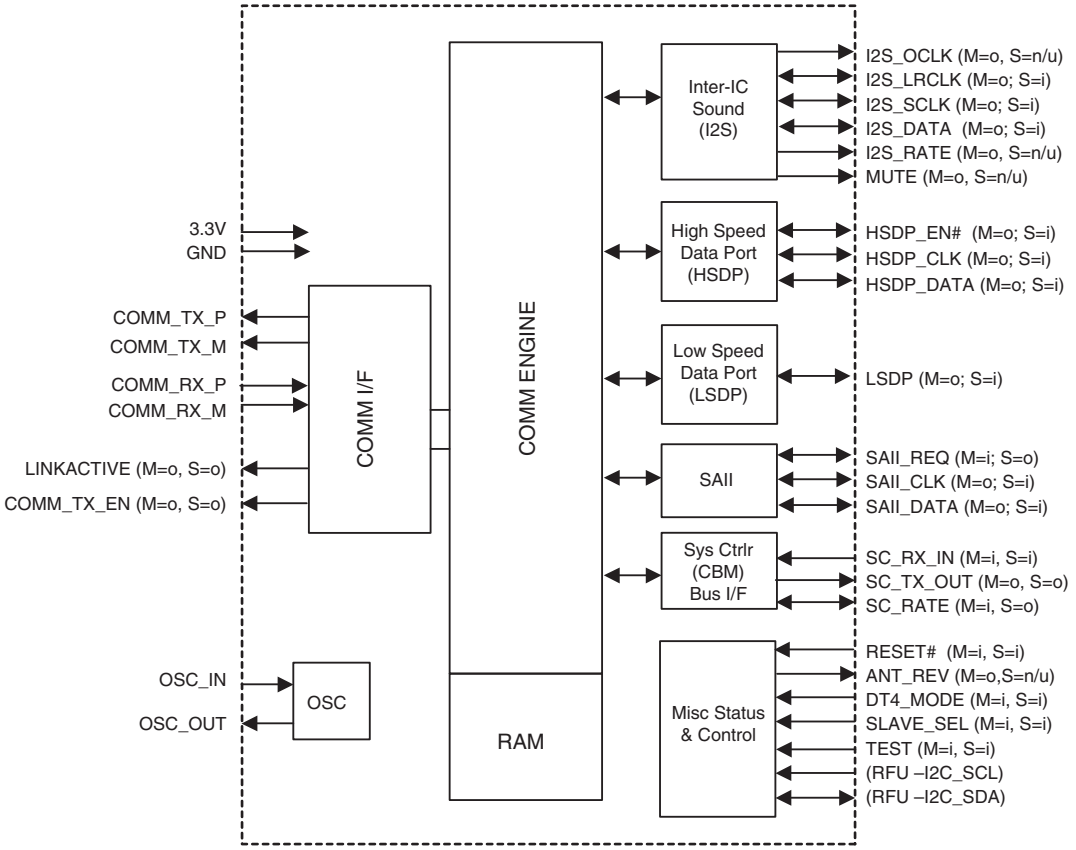

PIN CONFIGURATION

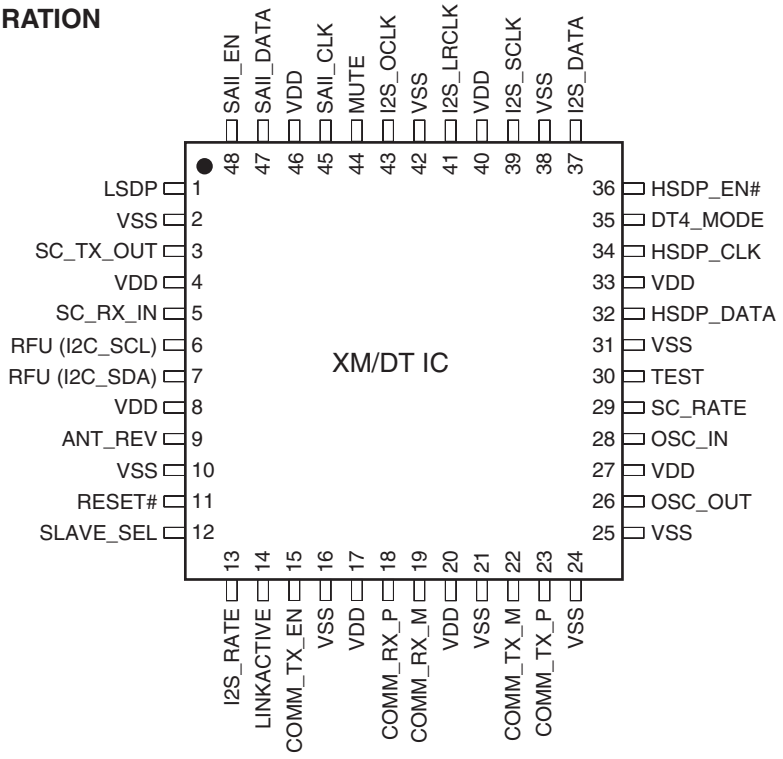

IC BLOCK DIAGRAMS AND TERMINAL DESCRIPTIONS -70

Q103 : F2628E-01 (XM Digital Transceiver)

TERMINAL DESCRIPTION(1/2)

Pin No.	Pin Name	Direction	Function in Slave Mode	Function in Master Mode	Notes
1	LSDP	S=In M=Out	Low Speed Data Port Input	Low Speed Data Port Output	Out= 4mA, SLC In=LVTTL S/T
3	SC_TX_OUT	S=Out M=Out	System Controller Bus (CBM) Transmit Data Out	System Controller Bus (CBM) Transmit Data Out	4mA, SLC
5	SC_RX_IN	S=In M=In	System Controller Bus (CBM) Receive Data In	System Controller Bus (CBM) Receive Data In	LVTTL S/T
6	RFU (I2C-SCL)	S=In M=In	Reserved for Future Use (pull down with a 100k resistor to Ground)	Reserved for Future Use (pull down with a 100k resistor to Ground)	LVTTL S/T
7	RFU (I2C-SDA)	S=In M=In	Reserved for Future Use (pull down with a 100k resistor to Ground)	Reserved for Future Use (pull down with a 100k resistor to Ground)	LVTTL S/T
9	ANT_REV	S=n/u M=Out	Not used in Slave mode, leave unconnected	Indication of incompatible antenna (refer to section 4.3.2 for usage)	4mA, SLC
11	RESET#	S=In M=In	Asynchronous Reset In, (Active Low)	Asynchronous Reset In, (Active Low)	LVTTL S/T
12	SLAVE_SEL	S=In M=In	Master/Slave Mode Select In (High = Slave Mode)	Master/Slave Mode Select In (Low = Master Mode)	LVTTL S/T
13	I2S_RATE	S=Out M=Out	Output driven high, leave unconnected	Indicator of incoming I2S data rate (see section 4.4.2)	4mA, SLC
14	LINKACTIVE	S=Out M=Out	Link Active indicator (High = DT bus link is active and data is flowing)	Link Active indicator (High = DT bus link is active and data is flowing)	4mA, SLC
15	COMM_TX_EN	S=Out M=Out	DT Comm Bus External Transceiver Direction Control Output (0=Tx, 1=Rx)	DT Comm Bus External Transceiver Direction Control Output (0=Tx, 1=Rx)	4mA, SLC
18	COMM_RX_P	S=In M=In	DT Differential Comm Bus Internal Receiver Positive In	DT Differential Comm Bus Internal Receiver Positive In	LVDS in+
19	COMM_RX_M	S=In M=In	DT Differential Comm Bus Internal Receiver Negative In	DT Differential Comm Bus Internal Receiver Negative In	LVDS in–
22	COMM_TX_M	S=Out M=Out	DT Differential Comm Bus Internal Transmitter Negative Out	DT Differential Comm Bus Internal Transmitter Negative Out	LVDS out–
23	COMM_TX_P	S=Out M=Out	DT Differential Comm Bus Internal Transmitter Positive Out	DT Differential Comm Bus Internal Transmitter Positive Out	LVDS out+
26	OSC_OUT	S=Out M=Out	Crystal Driver Output	Crystal Driver Output	
28	OSC_IN	S=In M=In	Crystal/ Ext. Clock Input	Crystal/ Ext. Clock Input	
29	SC_RATE (Rev 4A only, pull down for rev 3B)	S=Out M=In	SC interface baud rate Output (High = DT4_MODE is high and the Master DTIC is operating at 115.2K baud)	SC interface baud rate select Input (High = 115.2K baud, Low = 9600 baud)	Out= 4mA, SLC In=LVTTL S/T
30	TEST	S=In M=In	Factory Test Mode Select (1=Test, 0= Normal Oper.)	Factory Test Mode Select (1=Test, 0= Normal Oper.)	LVTTL S/T

IC BLOCK DIAGRAMS AND TERMINAL DESCRIPTIONS -71

Q103 : F2628E-01 (XM Digital Transceiver)

TERMINAL DESCRIPTION(2/2)

Pin No.	Pin Name	Direction	Function in Slave Mode	Function in Master Mode	Notes
32	HSDP_DATA	S=In M=Out	High Speed Data Port Data Input	High Speed Data Port Data Output	Out= 4mA, SLC In=LVTTL S/T
34	HSDP_CLK	S=In M=Out	High Speed Data Port Clock Input	High Speed Data Port Clock Output	Out= 4mA, SLC In=LVTTL S/T
35	DT4_MODE	S=In M=In	Enables/Disables driver on SC_RATE and ANT_REV (High = enable driver) This pin was VSS on rev 3 XM/DT IC	Enables/Disables drivers on MUTE and ANT_REV (High = enable drivers) This pin was VSS on rev 3 XM/DT IC	In=LVTTL S/T
36	HSDP_EN#	S=In M=Out	High Speed Data Port Enable Input (Active low)	High Speed Data Port Enable Output (Active low)	Out= 4mA, SLC In=LVTTL S/T
37	I2S_DATA	S=In M=Out	I2S Digital Audio Port Data In	I2S Digital Audio Port Data Out	Out= 4mA, SLC In=LVTTL S/T
39	I2S_SCLK	S=In M=Out	I2S Digital Audio Port Bit Clock In	I2S Digital Audio Port Bit Clock Out	Out= 4mA, SLC In=LVTTL S/T
41	I2S_LRCLK	S=In M=Out	I2S Digital Audio Port Left/Right Clock In	I2S Digital Audio Port Left/Right Clock Out	Out= 4mA, SLC In=LVTTL S/T
43	I2S_OCLK	S=In M=Out	I2S Digital Audio Port Oversample Clock (not used, leave unconnected)	I2S Digital Audio Port Oversample Clock Out	Out= 4mA, SLC
44	MUTE	S=n/u M=Out	Not used in Slave mode, leave unconnected	Provides a mechanism for muting the audio during an I2S rate change (High=mute)	Out= 4mA, SLC
45	SAII_CLK	S=Out M=In	SAII Port Clock Output	SAII Port Clock Input	Out= 4mA, SLC In=LVTTL S/T
47	SAII_DATA	S=Out M=In	SAII Port Data Output	SAII Port Data Input	Out= 4mA, SLC In=LVTTL S/T
48	SAII_REQ	S=In M=Out	SAII Port Request Input	SAII Port Request Output	Out= 4mA, SLC In=LVTTL S/T

Pin#	Pin Name	Type	Function in Slave Mode	Function in Master Mode	Notes
4, 8, 17, 20, 27, 33, 40, 46	VDD	PWR	+3.3V Supply Voltage	+3.3V Supply Voltage	
2, 10, 16, 21, 24, 25, 31, 38, 42	VSS	GND	Digital Ground	Digital Ground	

IC BLOCK DIAGRAMS AND TERMINAL DESCRIPTIONS -72

Q2801: PIC18F66(1 Mbit Flash Microcontroller with Ethernet)

BLOCK DIAGRAM

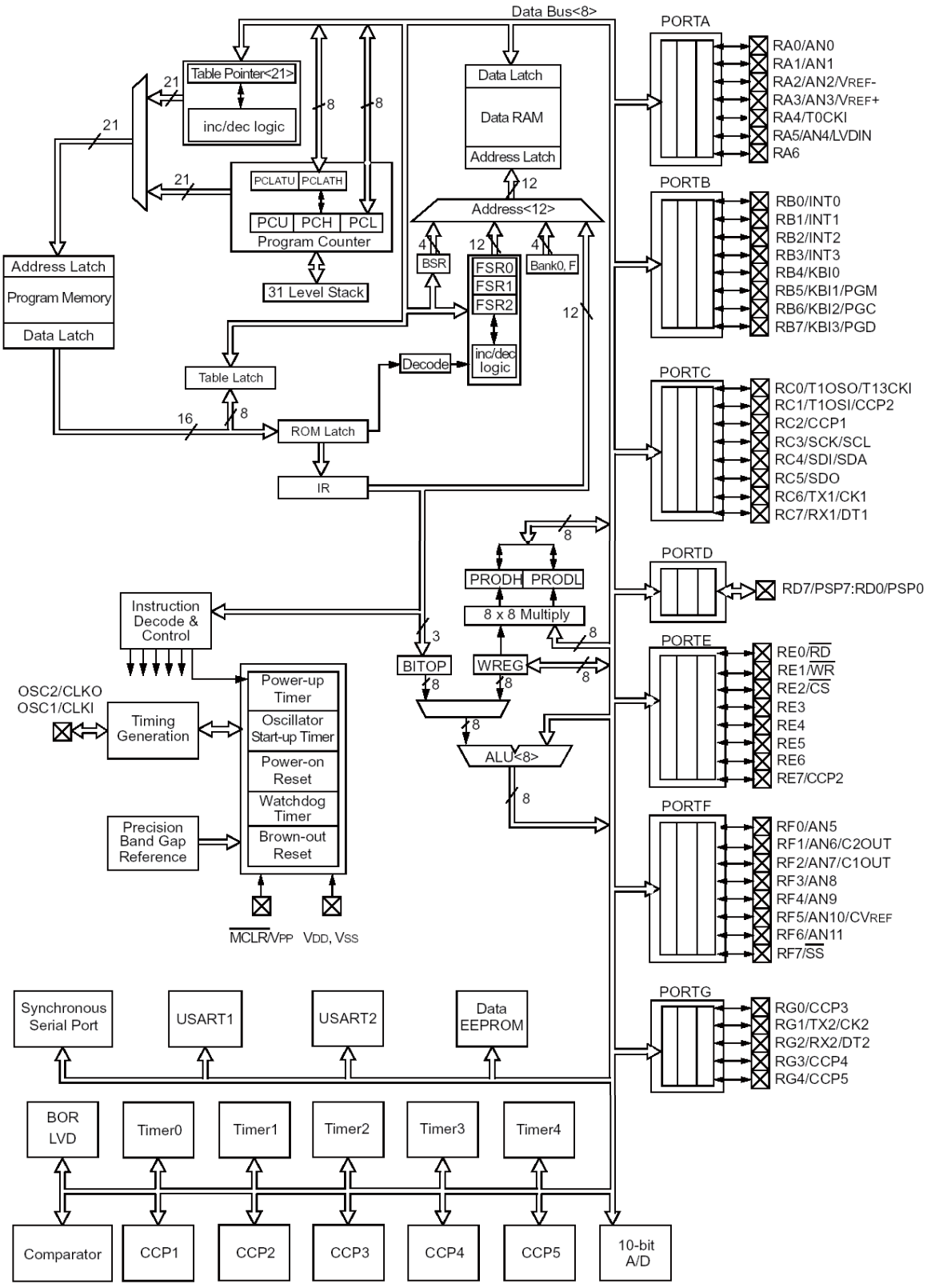

IC BLOCK DIAGRAMS AND TERMINAL DESCRIPTIONS -73

Q2801: PIC18F66(1 Mbit Flash Microcontroller with Ethernet)

PIN CONFIGURATION

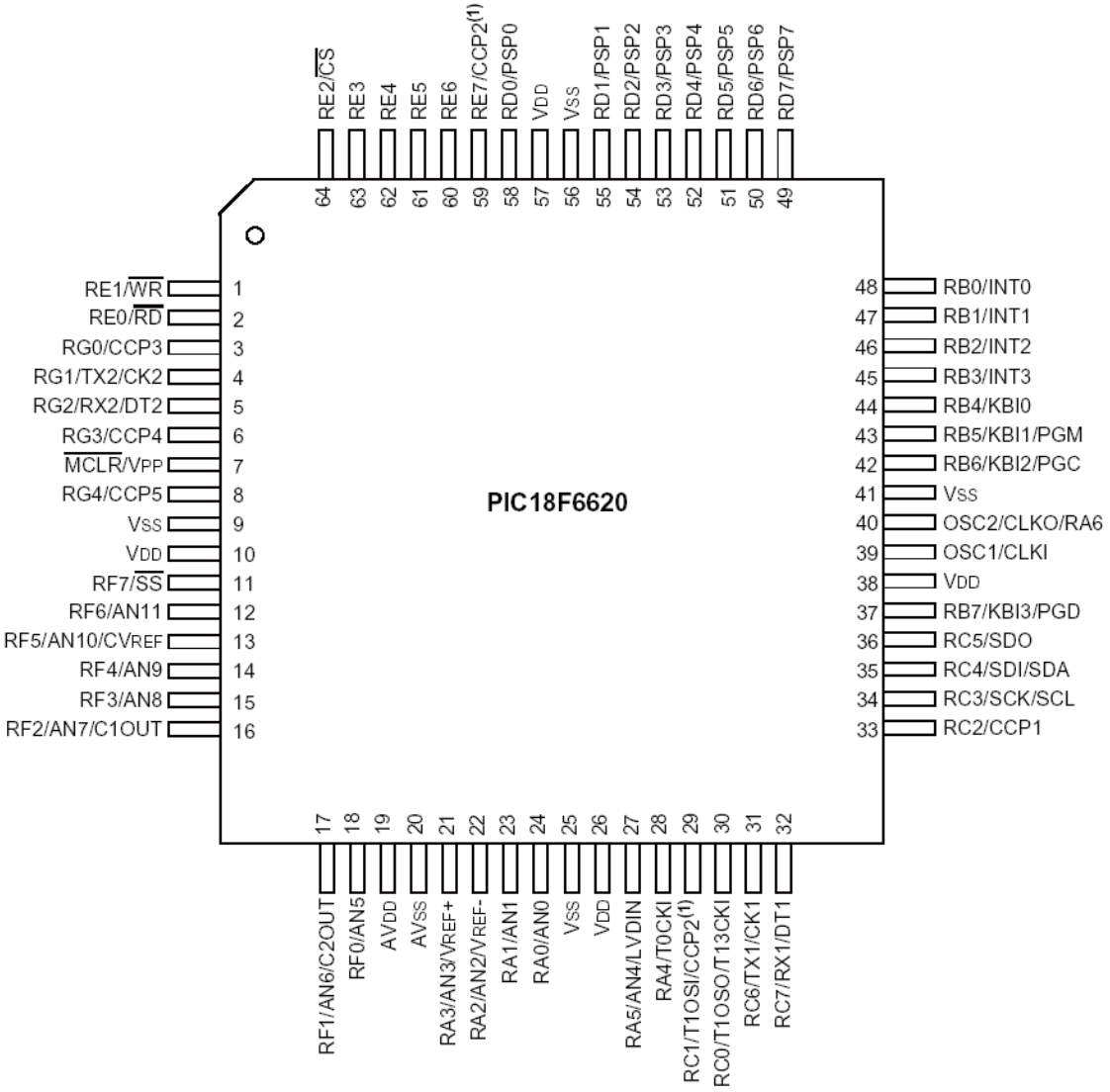

IC BLOCK DIAGRAMS AND TERMINAL DESCRIPTIONS -74

Q2801: PIC18F66(1 Mbit Flash Microcontroller with Ethernet)

TERMINAL DESCRIPTION(1/8)

Pin Name	Pin Number		Pin Type	Buffer Type	Description
	PIC18F6X20	PIC18F8X20			
$\overline{MCLR}$/VPP	7	9			Master Clear (input) or programming voltage (output).
$\overline{MCLR}$			I	ST	Master Clear (Reset) input. This pin is an active-low Reset to the device.
VPP			P		Programming voltage input.
OSC1/CLKI	39	49			Oscillator crystal or external clock input.
OSC1			I	CMOS/ST	Oscillator crystal input or external clock source input. ST buffer when configured in RC mode; otherwise CMOS.
CLKI			I	CMOS	External clock source input. Always associated with pin function OSC1 (see OSC1/CLKI, OSC2/CLKO pins).
OSC2/CLKO/RA6	40	50			Oscillator crystal or clock output.
OSC2			O	—	Oscillator crystal output. Connects to crystal or resonator in Crystal Oscillator mode.
CLKO			O	—	In RC mode, OSC2 pin outputs CLKO, which has 1/4 the frequency of OSC1 and denotes the instruction cycle rate.
RA6			I/O	TTL	General purpose I/O pin.

Legend: TTL = TTL compatible input; ST = Schmitt Trigger input with CMOS levels; I = Input; P = Power; CMOS = CMOS compatible input or output; Analog = Analog input; O = Output; OD = Open-Drain (no P diode to VDD)

Pin Name	Pin Number		Pin Type	Buffer Type	Description
	PIC18F6X20	PIC18F8X20			
					PORTA is a bidirectional I/O port.
RA0/AN0	24	30			
RA0			I/O	TTL	Digital I/O.
AN0			I	Analog	Analog input 0.
RA1/AN1	23	29			
RA1			I/O	TTL	Digital I/O.
AN1			I	Analog	Analog input 1.
RA2/AN2/VREF-	22	28			
RA2			I/O	TTL	Digital I/O.
AN2			I	Analog	Analog input 2.
VREF-			I	Analog	A/D reference voltage (Low) input.
RA3/AN3/VREF+	21	27			
RA3			I/O	TTL	Digital I/O.
AN3			I	Analog	Analog input 3.
VREF+			I	Analog	A/D reference voltage (High) input.
RA4/T0CKI	28	34			
RA4			I/O	ST/OD	Digital I/O – Open-drain when configured as output.
T0CKI			I	ST	Timer0 external clock input.
RA5/AN4/LVDIN	27	33			
RA5			I/O	TTL	Digital I/O.
AN4			I	Analog	Analog input 4.
LVDIN			I	Analog	Low-Voltage Detect input.
RA6					See the OSC2/CLKO/RA6 pin.

IC BLOCK DIAGRAMS AND TERMINAL DESCRIPTIONS -75

Q2801: PIC18F66(1 Mbit Flash Microcontroller with Ethernet)

TERMINAL DESCRIPTION(2/8)

Pin Name	Pin Number		Pin Type	Buffer Type	Description
	PIC18F6X20	PIC18F8X20			
					PORTB is a bidirectional I/O port. PORTB can be software programmed for internal weak pull-ups on all inputs.
RB0/INT0	48	58			
RB0			I/O	TTL	Digital I/O.
INT0			I	ST	External interrupt 0.
RB1/INT1	47	57			
RB1			I/O	TTL	Digital I/O.
INT1			I	ST	External interrupt 1.
RB2/INT2	46	56			
RB2			I/O	TTL	Digital I/O.
INT2			I	ST	External interrupt 2.
RB3/INT3/CCP2	45	55			
RB3			I/O	TTL	Digital I/O.
INT3			I/O	ST	External interrupt 3.
CCP2(1)			I/O	ST	Capture2 input, Compare2 output, PWM2 output.
RB4/KBI0	44	54			
RB4			I/O	TTL	Digital I/O.
KBI0			I	ST	Interrupt-on-change pin.
RB5/KBI1/PGM	43	53			
RB5			I/O	TTL	Digital I/O.
KBI1			I	ST	Interrupt-on-change pin.
PGM			I/O	ST	Low-Voltage ICSP Programming enable pin.
RB6/KBI2/PGC	42	52			
RB6			I/O	TTL	Digital I/O.
KBI2			I	ST	Interrupt-on-change pin.
PGC			I/O	ST	In-Circuit Debugger and ICSP programming clock.
RB7/KBI3/PGD	37	47			
RB7			I/O	TTL	Digital I/O.
KBI3			I/O	ST	Interrupt-on-change pin.
PGD					In-Circuit Debugger and ICSP programming data.

IC BLOCK DIAGRAMS AND TERMINAL DESCRIPTIONS -76

Q2801: PIC18F66(1 Mbit Flash Microcontroller with Ethernet)

TERMINAL DESCRIPTION(3/8)

Pin Name	Pin Number		Pin Type	Buffer Type	Description
	PIC18F6X20	PIC18F8X20			
					PORTC is a bidirectional I/O port.
RC0/T1OSO/T13CKI	30	36			
RC0			I/O	ST	Digital I/O.
T1OSO			O	—	Timer1 oscillator output.
T13CKI			I	ST	Timer1/Timer3 external clock input.
RC1/T1OSI/CCP2	29	35			
RC1			I/O	ST	Digital I/O.
T1OSI			I	CMOS	Timer1 oscillator input.
CCP2(2)			I/O	ST	Capture2 input/Compare2 output/ PWM2 output.
RC2/CCP1	33	43			
RC2			I/O	ST	Digital I/O.
CCP1			I/O	ST	Capture1 input/Compare1 output/ PWM1 output.
RC3/SCK/SCL	34	44			
RC3			I/O	ST	Digital I/O.
SCK			I/O	ST	Synchronous serial clock input/output for SPI mode.
SCL			I/O	ST	Synchronous serial clock input/output for I^2C mode.
RC4/SDI/SDA	35	45			
RC4			I/O	ST	Digital I/O.
SDI			I	ST	SPI data in.
SDA			I/O	ST	I^2C data I/O.
RC5/SDO	36	46			
RC5			I/O	ST	Digital I/O.
SDO			O	—	SPI data out.
RC6/TX1/CK1	31	37			
RC6			I/O	ST	Digital I/O.
TX1			O	—	USART 1 asynchronous transmit.
CK1			I/O	ST	USART 1 synchronous clock (see RX1/DT1).
RC7/RX1/DT1	32	38			
RC7			I/O	ST	Digital I/O.
RX1			I	ST	USART 1 asynchronous receive.
DT1			I/O	ST	USART 1 synchronous data (see TX1/CK1).

IC BLOCK DIAGRAMS AND TERMINAL DESCRIPTIONS -77

Q2801: PIC18F66(1 Mbit Flash Microcontroller with Ethernet)

TERMINAL DESCRIPTION(4/8)

Pin Name	Pin Number		Pin Type	Buffer Type	Description
	PIC18F6X20	PIC18F8X20			
					PORTD is a bidirectional I/O port. These pins have TTL input buffers when external memory is enabled.
RD0/PSP0/AD0	58	72			
RD0			I/O	ST	Digital I/O.
PSP0			I/O	TTL	Parallel Slave Port data.
AD0(3)			I/O	TTL	External memory address/data 0.
RD1/PSP1/AD1	55	69			
RD1			I/O	ST	Digital I/O.
PSP1			I/O	TTL	Parallel Slave Port data.
AD1(3)			I/O	TTL	External memory address/data 1.
RD2/PSP2/AD2	54	68			
RD2			I/O	ST	Digital I/O.
PSP2			I/O	TTL	Parallel Slave Port data.
AD2(3)			I/O	TTL	External memory address/data 2.
RD3/PSP3/AD3	53	67			
RD3			I/O	ST	Digital I/O.
PSP3			I/O	TTL	Parallel Slave Port data.
AD3(3)			I/O	TTL	External memory address/data 3.
RD4/PSP4/AD4	52	66			
RD4			I/O	ST	Digital I/O.
PSP4			I/O	TTL	Parallel Slave Port data.
AD4(3)			I/O	TTL	External memory address/data 4.
RD5/PSP5/AD5	51	65			
RD5			I/O	ST	Digital I/O.
PSP5			I/O	TTL	Parallel Slave Port data.
AD5(3)			I/O	TTL	External memory address/data 5.
RD6/PSP6/AD6	50	64			
RD6			I/O	ST	Digital I/O.
PSP6			I/O	TTL	Parallel Slave Port data.
AD6(3)			I/O	TTL	External memory address/data 6.
RD7/PSP7/AD7	49	63			
RD7			I/O	ST	Digital I/O.
PSP7			I/O	TTL	Parallel Slave Port data.
AD7(3)			I/O	TTL	External memory address/data 7.

IC BLOCK DIAGRAMS AND TERMINAL DESCRIPTIONS -78

Q2801: PIC18F66(1 Mbit Flash Microcontroller with Ethernet)

TERMINAL DESCRIPTION(5/8)

Pin Name	Pin Number		Pin Type	Buffer Type	Description
	PIC18F6X20	PIC18F8X20			
					PORTE is a bidirectional I/O port.
RE0/$\overline{RD}$/AD8	2	4			
RE0			I/O	ST	Digital I/O.
$\overline{RD}$			I	TTL	Read control for Parallel Slave Port (see $\overline{WR}$ and $\overline{CS}$ pins).
AD8(3)			I/O	TTL	External memory address/data 8.
RE1/$\overline{WR}$/AD9	1	3			
RE1			I/O	ST	Digital I/O.
$\overline{WR}$			I	TTL	Write control for Parallel Slave Port (see $\overline{CS}$ and $\overline{RD}$ pins).
AD9(3)			I/O	TTL	External memory address/data 9.
RE2/$\overline{CS}$/AD10	64	78			
RE2			I/O	ST	Digital I/O.
$\overline{CS}$			I	TTL	Chip select control for Parallel Slave Port (see $\overline{RD}$ and $\overline{WR}$).
AD10(3)			I/O	TTL	External memory address/data 10.
RE3/AD11	63	77			
RE3			I/O	ST	Digital I/O.
AD11(3)			I/O	TTL	External memory address/data 11.
RE4/AD12	62	76			
RE4			I/O	ST	Digital I/O.
AD12			I/O	TTL	External memory address/data 12.
RE5/AD13	61	75			
RE5			I/O	ST	Digital I/O.
AD13(3)			I/O	TTL	External memory address/data 13.
RE6/AD14	60	74			
RE6			I/O	ST	Digital I/O.
AD14(3)			I/O	TTL	External memory address/data 14.
RE7/CCP2/AD15	59	73			
RE7			I/O	ST	Digital I/O.
CCP2(1,4)			I/O	ST	Capture2 input/Compare2 output/ PWM2 output.
AD15(3)			I/O	TTL	External memory address/data 15.

IC BLOCK DIAGRAMS AND TERMINAL DESCRIPTIONS -79

Q2801: PIC18F66(1 Mbit Flash Microcontroller with Ethernet)

TERMINAL DESCRIPTION(6/8)

Pin Name	Pin Number		Pin Type	Buffer Type	Description
	PIC18F6X20	PIC18F8X20			
					PORTF is a bidirectional I/O port.
RF0/AN5	18	24			
RF0			I/O	ST	Digital I/O.
AN5			I	Analog	Analog input 5.
RF1/AN6/C2OUT	17	23			
RF1			I/O	ST	Digital I/O.
AN6			I	Analog	Analog input 6.
C2OUT			O	ST	Comparator 2 output.
RF2/AN7/C1OUT	16	18			
RF2			I/O	ST	Digital I/O.
AN7			I	Analog	Analog input 7.
C1OUT			O	ST	Comparator 1 output.
RF3/AN8	15	17			
RF1			I/O	ST	Digital I/O.
AN8			I	Analog	Analog input 8.
RF4/AN9	14	16			
RF1			I/O	ST	Digital I/O.
AN9			I	Analog	Analog input 9.
RF5/AN10/CVREF	13	15			
RF1			I/O	ST	Digital I/O.
AN10			I	Analog	Analog input 10.
CVREF			O	Analog	Comparator VREF output.
RF6/AN11	12	14			
RF6			I/O	ST	Digital I/O.
AN11			I	Analog	Analog input 11.
RF7/$\overline{SS}$	11	13			
RF7			I/O	ST	Digital I/O.
$\overline{SS}$			I	TTL	SPI slave select input.

IC BLOCK DIAGRAMS AND TERMINAL DESCRIPTIONS -80

Q2801: PIC18F66(1 Mbit Flash Microcontroller with Ethernet)

TERMINAL DESCRIPTION(7/8)

Pin Name	Pin Number		Pin Type	Buffer Type	Description
	PIC18F6X20	PIC18F8X20			
					PORTG is a bidirectional I/O port.
RG0/CCP3	3	5			
RG0			I/O	ST	Digital I/O.
CCP3			I/O	ST	Capture3 input/Compare3 output/ PWM3 output.
RG1/TX2/CK2	4	6			
RG1			I/O	ST	Digital I/O.
TX2			O	—	USART 2 asynchronous transmit.
CK2			I/O	ST	USART 2 synchronous clock (see RX2/DT2).
RG2/RX2/DT2	5	7			
RG2			I/O	ST	Digital I/O.
RX2			I	ST	USART 2 asynchronous receive.
DT2			I/O	ST	USART 2 synchronous data (see TX2/CK2).
RG3/CCP4	6	8			
RG3			I/O	ST	Digital I/O.
CCP4			I/O	ST	Capture4 input/Compare4 output/ PWM4 output.
RG4/CCP5	8	10			
RG4			I/O	ST	Digital I/O.
CCP5			I/O	ST	Capture5 input/Compare5 output/ PWM5 output.

Pin Name	Pin Number		Pin Type	Buffer Type	Description
	PIC18F6X20	PIC18F8X20			
					PORTH is a bidirectional I/O port(5).
RH0/A16	—	79			
RH0			I/O	ST	Digital I/O.
A16			O	TTL	External memory address 16.
RH1/A17	—	80			
RH1			I/O	ST	Digital I/O.
A17			O	TTL	External memory address 17.
RH2/A18	—	1			
RH2			I/O	ST	Digital I/O.
A18			O	TTL	External memory address 18.
RH3/A19	—	2			
RH3			I/O	ST	Digital I/O.
A19			O	TTL	External memory address 19.
RH4/AN12	—	22			
RH4			I/O	ST	Digital I/O.
AN12			I	Analog	Analog input 12.
RH5/AN13	—	21			
RH5			I/O	ST	Digital I/O.
AN13			I	Analog	Analog input 13.
RH6/AN14	—	20			
RH6			I/O	ST	Digital I/O.
AN14			I	Analog	Analog input 14.
RH7/AN15	—	19			
RH7			I/O	ST	Digital I/O.
AN15			I	Analog	Analog input 15.

IC BLOCK DIAGRAMS AND TERMINAL DESCRIPTIONS -81

Q2801: PIC18F66(1 Mbit Flash Microcontroller with Ethernet)

TERMINAL DESCRIPTION(8/8)

Pin Name	Pin Number		Pin Type	Buffer Type	Description
	PIC18F6X20	PIC18F8X20			
					PORTJ is a bidirectional I/O port(5).
RJ0/ALE	—	62			
RJ0			I/O	ST	Digital I/O.
ALE			O	TTL	External memory address latch enable.
RJ1/$\overline{OE}$	—	61			
RJ1			I/O	ST	Digital I/O.
$\overline{OE}$			O	TTL	External memory output enable.
RJ2/$\overline{WRL}$	—	60			
RJ2			I/O	ST	Digital I/O.
$\overline{WRL}$			O	TTL	External memory write low control.
RJ3/$\overline{WRH}$	—	59			
RJ3			I/O	ST	Digital I/O.
$\overline{WRH}$			O	TTL	External memory write high control.
RJ4/BA0	—	39			
RJ4			I/O	ST	Digital I/O.
BA0			O	TTL	External memory Byte Address 0 control.
RJ5/$\overline{CE}$	—	40			
RJ5			I/O	ST	Digital I/O.
$\overline{CE}$			O	TTL	External memory chip enable control.
RJ6/$\overline{LB}$	—	41			
RJ6			I/O	ST	Digital I/O.
$\overline{LB}$			O	TTL	External memory low byte select.
RJ7/$\overline{UB}$	—	42			
RJ7			I/O	ST	Digital I/O.
$\overline{UB}$			O	TTL	External memory high byte select.

IC BLOCK DIAGRAMS AND TERMINAL DESCRIPTIONS -82

Q2802: IS25C02(2 kbit EEPROM)

BLOCK DIAGRAM

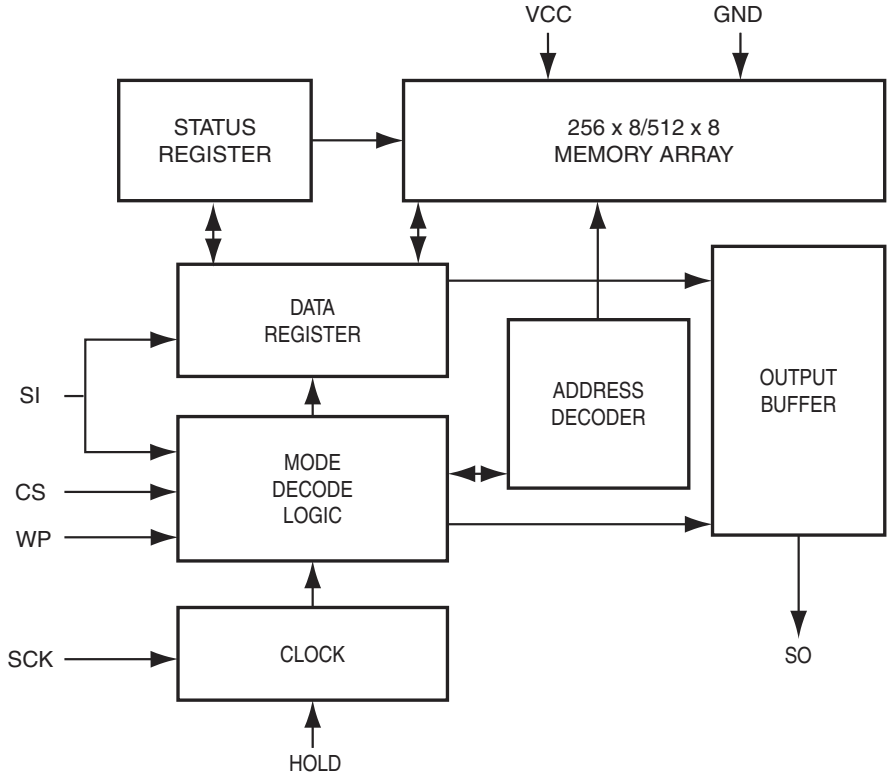

PIN CONFIGURATION

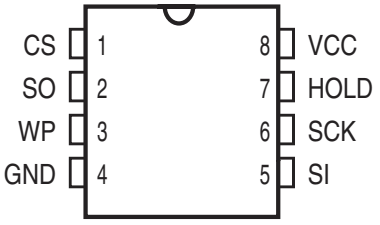

TERMINAL DESCRIPTION

CS	Chip Select
SCK	Serial Data Clock
SI	Serial Data Input
SO	Serial Data Output
GND	Ground
V_{CC}	Power
WP	Write Protect
HOLD	Suspends Serial Input

FL TUBE VIEW

Q7002: 16-BT-138GNK

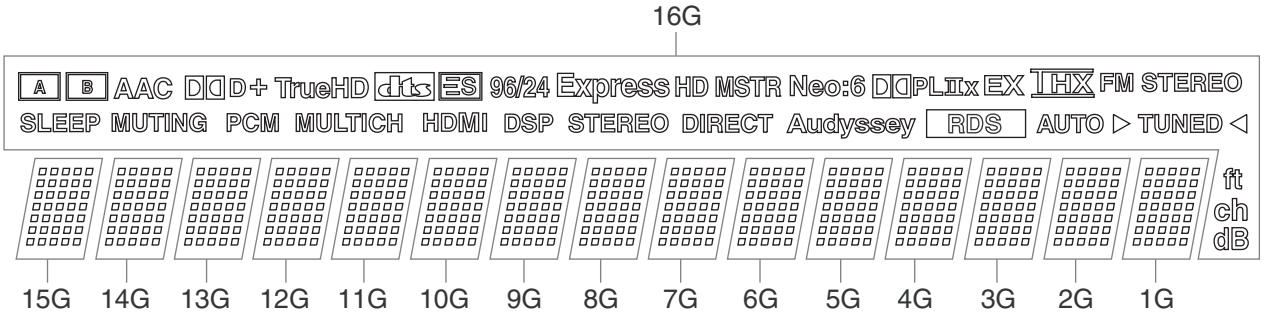

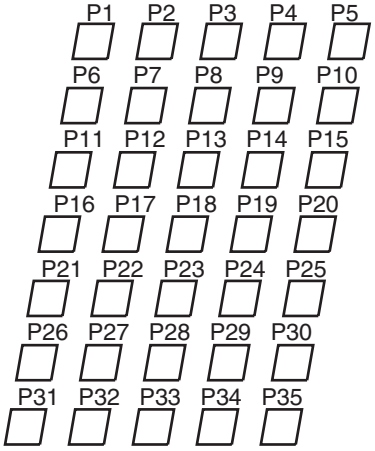

(1G-15G)

	16G	15G-1G
P1	SLEEP	1-1
P2	MUTING	2-1
P3	PCM	3-1
P4	MULTI CH	4-1
P5	HDMI	5-1
P6	DSP	1-2
P7	STEREO	2-2
P8	DIRECT	3-2
P9	Audyssey	4-2
P10	RDS	5-2
P11	AUTO	1-3
P12	▷ ◁	2-3
P13	TUNED	3-3
P14	A	4-3
P15	B	5-3
P16	AAC	1-4
P17	D D	2-4
P18	D	3-4

	16G	15G-1G
P19	+	4-4
P20	TrueHD	5-4
P21	dts	1-5
P22	ES	2-5
P23	96/24	3-5
P24	Express	4-5
P25	HD	5-5
P26	MSTR	1-6
P27	Neo:6	2-6
P28	D D	3-6
P29	PL II	4-6
P30	x	5-6
P31	EX	1-7
P32	THX	2-7
P33	FM STEREO	3-7
P34	ch	4-7
P35	dB	5-7

MICROPROCESSOR TERMINAL DESCRIPTIONS -1

Q2001: M3087BFKBGP

Pin No.	Pin Name	I/O	Act.	Description
1	SRTXD	O	H	SIRIUS UART data output
2	SRRST	O	H	SIRIUS IC reset
3	FANCTRL	O	D/A	Fan control
4	CECIN	I	H	CEC input
5	XMTXD	O	H	XM UART data output
6	XMRXD	I	H	XM UART data input
7	XMRST	O	L	XM IC reset
8	~KEYINT0	I	L	KEY Interrupt input
9	RDSCLK	I	CLK	RDS serial clock input
10	RDSSDI	I	H	RDS serial data input
11	~STEREO	I	L	FM STEREO detect
12	~SD	I	L	FM Tuned detect
13	---	O	L	No Use
14	~VMUT	O	L	Video Mute
15	BYTE	I	---	Connect to Vss
16	CNVss	I	---	Connect to Vss
17	XMANT	I	L	XM IC 3B/4A input
18	XMLINK	I	H	XM IC 3B/4A input
19	~RESET	I	L	Reset input
20	Xout	O	CLK	Oscillator output
21	Vss	I	---	GND
22	Xin	I	CLK	Oscillator input
23	Vcc	I	---	Power supply
24	~NMI	I	L	Connect to Vcc
25	~POFF	I	L	POFF input
26	~POFF2	I	L	POFF input
27	~KEYINT1	I	L	KEY Interrupt input
28	CECTRG	I	H	CEC trigger input
29	CECOUT	O	H	CEC output
30	Z2VOLCLK	O	H	Clock output to Zone2 Volume IC
31	Z2VOLDAT	O	H	Data output to Zone2 Volume IC
32	---	O	H	No use
33	VSPRDY	I/O	H	Request input from Hudson FLI8125
34	~VSPRST	O	L	Hudson FLI8125 reset output
35	VSPREQ	O	H	Request output from Hudson FLI8125
36	VSPSCL	I/O	H	Hudson FLI8125 I2C clock output
37	VSPSDA	I/O	H	Hudson FLI8125 I2C data input/output
38	RS232TxD/FTxD	O	H	RS232 data output/Flash rewriter pin
39	Vcc	I	H	Power supply
40	RS232RxD/FRxD	I	H	RS232 data input/Flash rewriter pin
41	Vss	I	H	GND
42	FCLK	O	H	Flash rewriter pin
43	FBUSY	O	H	Flash rewriter pin
44	ETHERTX	O	H	ETHERNET data output
45	ETHERRX	I	H	ETHERNET data input
46	ETHERRST	O	H	ETHERNET reset output
47	SEC1H	O	H	Power Supply Voltage control
48	ROMCS	O	L	EEPROM chip select
49	ROMSDI	I	H	EEPROM data input
50	ROMSDO	O	H	EEPROM data output

MICROPROCESSOR TERMINAL DESCRIPTIONS -2

Q2001: M3087BFKBGP

Pin No.	Pin Name	I/O	Act.	Description
51	ROMCLK	O	CLK	EEPROM clock output
52	~TRGZ2	O	H	12 V Trigger Zone2 output
53	~TRGB	O	H	12 V Trigger B output
54	---	I	H	Connect to Vss
55	SPRLZ2	O	H	Zone2 Speaker relay control
56	SPDIFSW	O	H	S/PDIF Switch
57	Vss	I	H	GND
58	Z2MUTE	O	H	Zone2 mute control
59	Vcc	I	H	Power supply
60	SBZ2MUTE	O	H	Surround Back/Powered Zone2 mute control
61	AMUTE	O	H	Main audio mute control
62	SPRLSB	O	H	Surround Back SP relay control
63	SPRLCS	O	H	Center/Surround SP relay control
64	SPRLF	O	H	Front SP relay control
65	FCS	I	H	Connect to Vcc
66	~DSP1CS	O	L	DSP1 chip select output
67	~DSP2CS	O	L	DSP2 chip select output
68	~DSP3CS	O	L	DSP3 chip select output
69	SELSTB	O	H	Audio input selector IC strobe output
70	SELDAT	O	H	Audio input selector IC data output
71	SELCLK	O	CLK	Audio input selector IC clock output
72	~DSCCS	O	L	CS4398 chip select output
73	~DIRCS	O	L	CS42528 chip select output
74	Vcc	I	---	Power supply
75	~TRGA	O	H	12V Trigger A output
76	Vss	I	---	GND
77	VOLDAT	O	H	Volume IC data output
78	VOLCLK	O	CLK	Volume IC clock output
79	~DSP3INT	I	L	DSP3 BUSY detect input
80	~DSP3RST	O	L	DSP3 reset output
81	~DSP2INT	I	L	DSP2 BUSY detect input
82	~DSP2RST	O	L	DSP2 reset output
83	~DSP1INT	I	L	DSP1 BUSY detect input
84	~DSP1RST	O	L	DSP1 reset output
85	~DACRST	O	L	DAC reset output
86	~DIRINT	I	H	DIRCODEC Error detect input
87	DSP1NIC	I	L	DSP1 status change input
88	DIGSDI	I	H	DIR/DSP/DAC/FLD data input
89	DIGCLK	O	CLK	DIR/DSP/DAC/FLD clock output
90	DIGSDO	O	H	DIR/DSP/DAC/FLD data output
91	Vcc	I	---	Power supply
92	PROTECT	I	H	PROTECT detect input
93	Vss	I	---	GND
94	---	O	H	No use
95	APOWER	O	H	Main Power trans control output
96	MEQMUTE	I	H	3rd DSP Audyssey mute detect input
97	VPOWER	O	H	Video power supply control output
98	---	O	H	No use
99	VOLH	I	A/D	Power output level detect input
100	THERMAL2	I	A/D	Thermal sensor2 input

MICROPROCESSOR TERMINAL DESCRIPTIONS -3

Q2001: M3087BFKBGP

Pin No.	Pin Name	I/O	Act.	Description
101	THERMAL1	I	A/D	Thermal sensor1 input
102	~REMIN	I	L	Remote control signal input
103	IRIN	I	H	IR interrupt
104	SYSIN	I	H	RI input
105	SYSOUT	O	L	RI output
106	MICMUTE	O	H	Setup Mic mute control
107	~MICDET	I	L	Setup Mic detect input
108	~FLDCS	O	H	(FL driver chip select output)
109	~HPDET	I	H	Headphone detect input
110	INIT3	I	A/D	Initial setup input 3
111	INIT2	I	A/D	Initial setup input 2
112	INIT1	I	A/D	Initial setup input 1
113	BAND	I	A/D	Initial setup input
114	PCMSW	O	H	PCM switch
115	---	O	H	No use
116	~DIRSW	O	H	DIR switch
117	DSDRCSW	O	H	No use
118	LEDZ2	O	H	Zone2 LED control output
119	VOLB	I	H	Master volume data input
120	VOLA	I	H	Master volume data input
121	VOLLED	O	H	Volume LED control output
122	LEDSTBY	O	H	STANDBY LED control output
123	~FLDRST	O	L	FL driver IC reset control
124	RXMUTE	I	H	HDMI Receiver mute input
125	TXMUTE	O	H	HDMI Transmitter mute output
126	~HDMIRST	O	L	HDMI reset control
127	HDMISTB	I	H	HDMI Strobe input
128	HDMISDI	I	H	HDMI data input
129	HDMICLK	O	CLK	HDMI clock output
130	Vss	I	---	GND
131	HDMISDO	O	H	HDMI data output
132	Vcc	I	---	Power supply
133	KEY3	I	A/D	Selector Key voltage input
134	KEY2	I	A/D	Selector Key voltage input
135	KEY1	I	A/D	Selector Key voltage input
136	KEY0	I	A/D	Selector Key voltage input
137	~DSP1DEC	I	L	DSP1 decode status input
138	---	O	H	No use
139	TUNSDA/VSELSDA	I/O	H	Tuner PLL/Video Sel I2C data input/output
140	AVss	I	---	GND
141	TUNSCL/VSELSCL	I/O	H	Tuner PLL/Video Sel I2C clock output
142	Vref	I	---	Connect to Vcc
143	AVcc	I	---	Power supply
144	SRRxD	I	H	SIRIUS UART data input

SERVICE PROCEDURES-1

1. Replacing the fuses

This symbol located near the fuse indicates that the fuse used is show operating type, For continued protection against fire hazard, replace with same type fuse, For fuse rating, refer to the marking adjacent to the symbol.

Ce symbole indique que le fusible utilise est e lent. Pour une protection permanente, n'utiliser que des fusibles de meme type. Ce demier est indique la qu le present symbol est apposre.

<Notes>

<DD> : DTR-6.8 USA model
<MA> : DTR-6.8 Australian model

REF NO.	PART NAME	DESCRIPTION	PART NO.	REMARKS
F901	FUSE	10A-UL/T-233	252330GR	!, <DD>
F901	FUSE	5A-SE-EAK	252078GR	!, <MA>
F903	FUSE	5A-UL/ T-233	252326GR	!, <DD>
F910	FUSE	5A-UL/T-233	252326GR	!, <DD>
F910	FUSE	5A-SE-EAK	252078GR	!, <MA>
F6901	FUSE	12A-TUL-250V	252301GR	!
F6902	FUSE	12A-TUL-250V	252301GR	!

2. To initialize the unit

1. Press and hold down VCR/DVR button, then press STANDBY/ON button when the unit is powered on.
2. After " Clear " is displayed, the preset memory and each mode stored in the memory are initialized and will return to the factory settings, and turn to Standby mode.

3. Safety check out

(U.S.A. model only)
After correcting the original service problem, perform the following safety check before releasing the unit to the customer.

Leakage current Check

Measure the leakage current to a known earth ground (water pipe or conduct etc.) by connecting a leakage current tester between the earth ground and exposed metal parts of the unit (input/output ground terminals, screw heads or metal overlays etc.).
Plug the power supply cord directly into a 120Vac 60Hz wall socket and turn STANDBY/ON button on.
Any current measured must not exceed 0.5mA.

4. Memory Backup

This model uses not a capacitor but a EEPROM IC in order to retain radio presets and other settings. So, memory contents will be kept eternally with no care.

5. Replacing Power Amplifier Parts

When a power amplifier of certain channel is broken and goes into Protect mode, the following parts in the channel must be replaced at the same time, because these parts get damage together in most cases.

Front L ch	Front R ch	Center ch	Surround L ch	Surround R ch	Surround Back L ch	Surround Back R ch
Q6051,Q6061	Q6052,Q6062	Q6050,Q6060	Q6053,Q6063	Q6054,Q6064	Q6055,Q6065	Q6056,Q6066
Q6031,Q6041	Q6032,Q6042	Q6030,Q6040	Q6033,Q6043	Q6034,Q6044	Q6035,Q6045	Q6036,Q6046
Q6011,Q6001	Q6012,Q6002	Q6010,Q6000	Q6013,Q6003	Q6014,Q6004	Q6015,Q6005	Q6016,Q6006
C6041,R6101	C6042,R6102	C6040,R6100	C6043,R6103	C6044,R6104	C6045,R6105	C6046,R6106
R6081,R6091	R6082,R6092	R6080,R6090	R6083,R6093	R6084,R6094	R6085,R6095	R6086,R6096
R6071,R6021	R6072,R6022	R6070,R6020	R6073,R6023	R6074,R6024	R6075,R6025	R6076,R6026

SERVICE PROCEDURES-2

6. Replacing microprocessors and flash memories

These descriptions are about writing programs to a new IC which is replaced with broken one.

1. Main microprocessor
   Target IC: Q2001
   No need to write the program directly to a chip by a specific ROM writer. Mount the chip on pcb and the pcb on the unit.
   Refer to FIRMWARE UPDATE-2 for the way to write the program.

2. Video (HDMI) microprocessor
   Target IC: Q8701
   No need to write the program directly to a chip by a specific ROM writer. Mount the chip on pcb and the pcb on the unit.
   Refer to FIRMWARE UPDATE-3 to 10 for the way to write the program.

3. 1st DSP ROM
   Target IC: Q3451
   Must write the program directly to a chip by a specific ROM writer before mounting on pcb.
   ROM writer example: AF9708 (Ando Electric) and compatibles.

4. 2nd DSP ROM
   Target IC: Q3551
   Must write the program directly to a chip by a specific ROM writer before mounting on pcb.
   ROM writer example: AF9708 (Ando Electric) and compatibles.

5. 3rd DSP ROM
   Target IC: Q3651
   Must write the program directly to a chip by a specific ROM writer before mounting on pcb.
   ROM writer example: AF9708 (Ando Electric) and compatibles.

6. Video processor (HUDSON)
   Target IC: Q8011
   No need to write the program directly to a chip by a specific ROM writer. Mount the chip on pcb and the pcb on the unit.
   Refer to FIRMWARE UPDATE-5 to 10 for the way to write the program.
   This procesure is through Gprobe socket P8011 on pcb: NAHDM-9265s.

7. Network (E-Control)
   Target IC: Q2801, Q2802
   No need to write the program directly to a chip. Mount the chip on pcb and the pcb on the unit.
   Need the writer “ PICkit 2 (MICROCHIP) ” and PC application to write.
   This procesure is through JTAG socket on pcb: NALAN-9268.

FIRMWARE UPDATE -1

How to Check Versions of Main, DSP(1st to 3rd), HDMI and Video

1. Press and hold down [DISPLAY] button, then press [STANDBY/ON] button when the unit is power on.
   The main microprocessor version will be displayed on Front Display for about 3 seconds.

   <e.g.> Main1.03/07905A

2. Press [Tone +] button while the version is displayed. Then, "DSP 1st SR8051/07601A" will be displayed.
   Press [Tone +] button again while "DSPS8051:07601A" is displayed. Then, "DSP 2nd: SR8052/07518A" will be displayed. In this way, as [Tone +] button is pressed while a version is displayed, the next information will be displayed.
   If [Tone -] button is pressed, the order will be reversed.

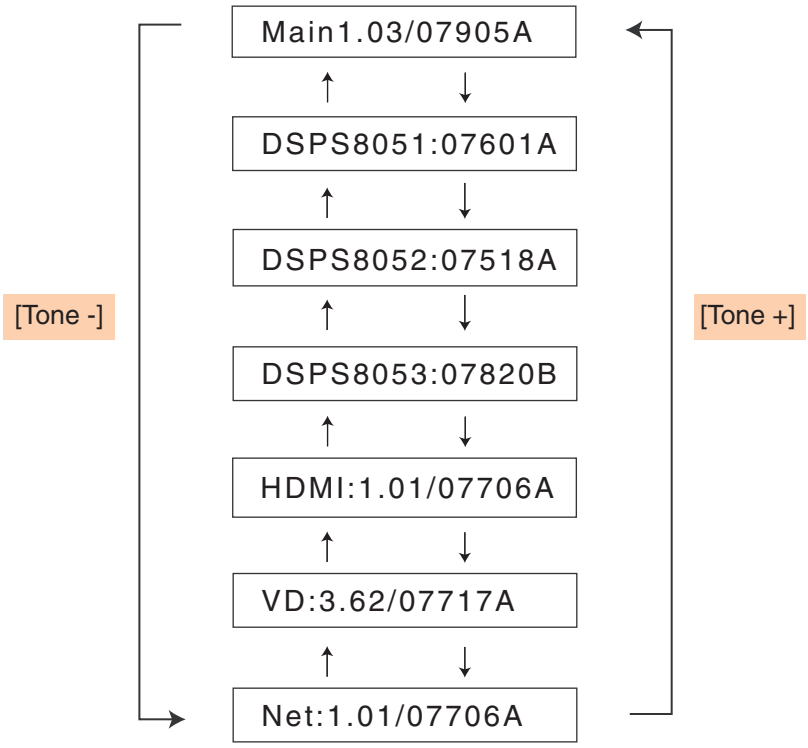

Note: These versions are the latest as of October 1, 2007.

FIRMWARE UPDATE -2

Preparation for Update (Main)

A: Hardware and Software

1. Personal computer(PC) with Windows XP or 2000
2. Flashwriter jig: 0JFLASH and 0JFLASHEX for Main
3. Writing soft: "flasta_exe.zip" and Manual: "Flash Writer M16 Manual.pdf"
   Download and unzip “flasta_exe.zip” to extract "FlashSta.exe" etc. in advance.
4. Program & ID: Download the latest ".mot" and ".id" files for TX-SR705/TX-SA705/DTR-6.8 and store in the same folder as “FlashSta.exe.”

B: Connection and Setup

1. While the target unit is off, connect 0JFLASH and 0JFLASHEX to RS232 port of the PC.
2. Connect the FFC of the jig to the connector slot on the rear panel of DTR-6.8.
3. Power on the unit.

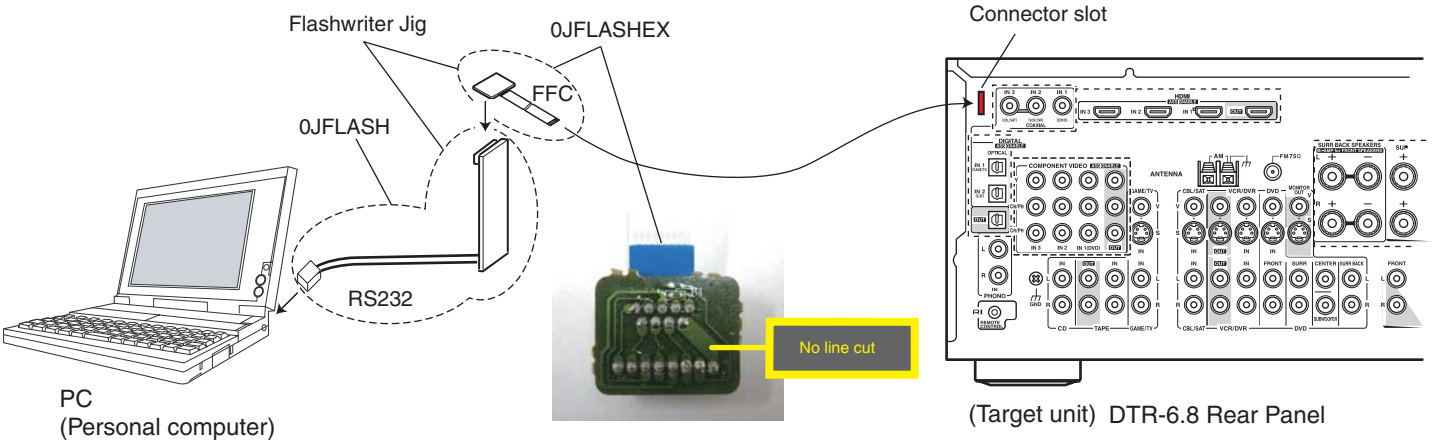

Main Microprocessor Update Procedure

1. Start "FlashSta.exe" and update the unit referring to "Flash Writer M16 Manual.pdf."
   MCU Type is M16C/80 M32. It takes about 5 minutes.
2. After Program and Read Check are finished, click "Exit" button to end "FlastSta.exe".
3. Turn off the main power switch or pull the power cord off the wall socket.
   Pay attention that pushing STANDBY/ON button to power off is not perfect.
4. Remove the jig from the unit and power on the unit again. Confirm the new version number.

FIRMWARE UPDATE -3

Preparation for Update (HDMI)

A: Hardware and Software

1. Personal computer(PC) with Windows XP or 2000.
2. Cable: RS232 straight cable or Flashwriter jig: 0JFLASH and 0JFLASHEX for HDMI.
3. Writing soft: "HDMIUpdater_SR805_07706A.zip" for HDMI microprocessor. (File name depends on the version)
   Unzip "HDMIUpdater_SR805_07706A.zip" in advance.

B: Connection and Setup

1. While the target unit is off, connect the unit and PC with RS232 straight through cable.
   If RS232 cable is not available, connect 0JFLASH and 0JFLASHEX to RS232 port of the PC, and then connect the FFC of the jig to the connector slot on the rear panel of DTR-6.8.
2. Power on the PC.

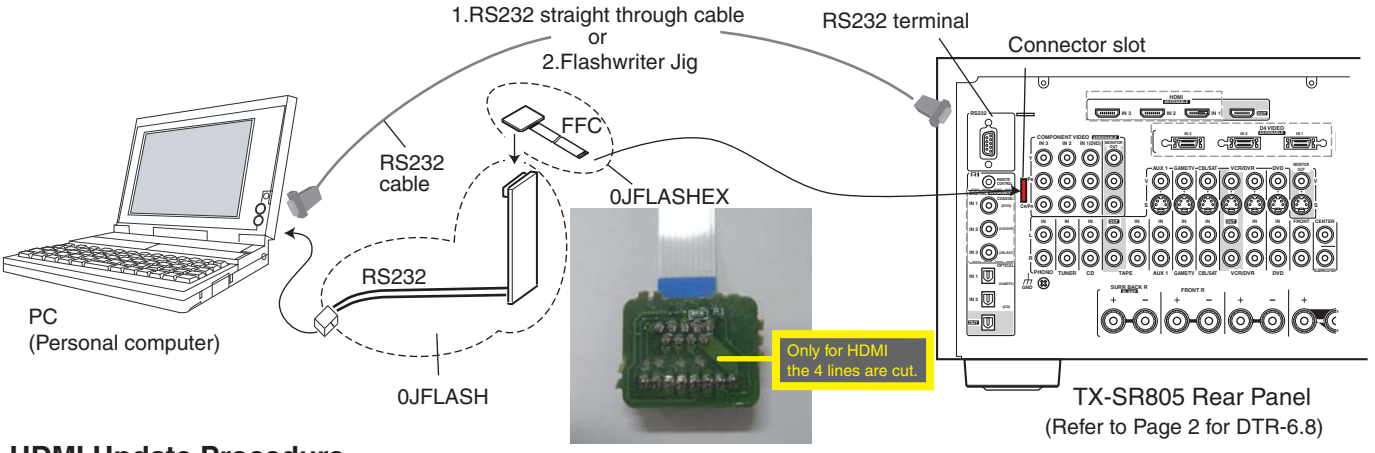

HDMI Update Procedure

1. Double click "Update.exe" in the unzipped folder "HDMIUpdater_SR805_07706A" (Folder name depends on the version.)
   The following window will appear.

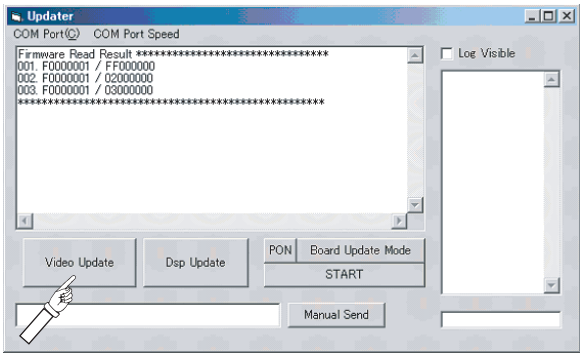

2. Click "Video Update" button. The update takes about 5 minutes.
   The message on Front Display will change as follows.

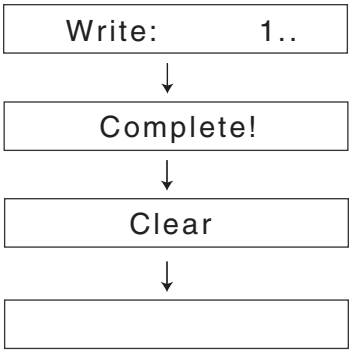

The unit is put into the Standby mode.

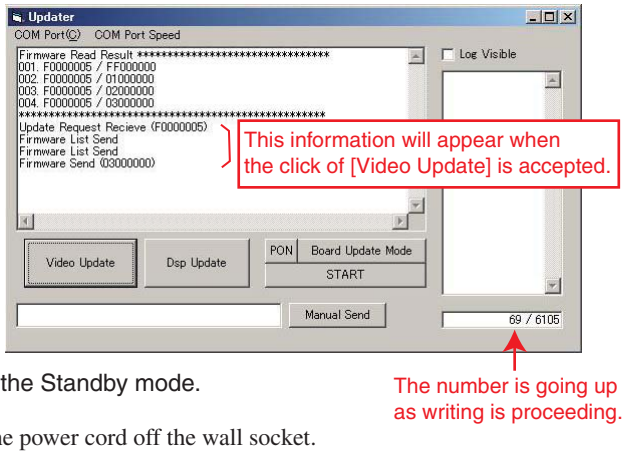

3. After the update ends, turn off the unit's main power switch or pull the power cord off the wall socket.
4. Remove the jig from the unit and power on the unit again. Confirm the new version number.

FIRMWARE UPDATE -4

Preparation for Update (DSP, all in one)

A: Hardware and Software

1. Blank CD-R, PC, CD-R writing software.
2. Writing soft: "CD_SR805123_07601A_07518A_07820B.wav"
   (File name depends on the version.)
   Store it in a blank CD-R as a music CD in advance.
3. CD player with Optical output terminal.
   Note: Some CD players and a lot of DVD players process audio signal before output. Such players cannot be used for this update.
4. Optical cable.

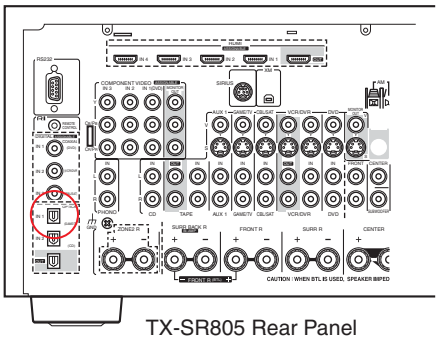

TX-SR805 Rear Panel
(Refer to Page 2 for DTR-6.8)

B: First Procedure

1. Connect a CD player with the target unit via Optical Input 1.
2. Power on the unit and wait for more than 10 seconds.

DSP Update Procedure

1. Press and hold down [DISPLAY] button and then press [STANDBY/ON] button to show Main FW version when the unit is powered on.

<e.g.>

```
Main:
8 1.05/07903A
```

2. Press [Tone +] button while the Main version is displayed. Then, 1st DSP FW version will be displayed.

<e.g.>

```
DSP 1st:
SR8051:07601A
```

3. Press [Return] button while the target DSP version is displayed. Then, the following message will appear.

```
S/PDIF Update..
```

4. Play the DSP FW CD-R with the CD player. After playback starts, the messages will change as below.

Estimated Time in CD player

0:15	0:30	0:42	0:52	1:04
Writing... 1st DSP	S/PDIF Update..	Writing... 2nd DSP	S/PDIF Update..	Writing... 3rd DSP

If playback is finished without the above message, please try again.
Note: Some DVD players are not suitable for this update. If writing results in failure, use another model of player.
DURING WRITING, DO NOT TURN OFF THE POWER and DO NOT DISCONNECT OPTICAL CABLE.
If writing is stopped in the middle, Flash IC may need replacing.

After writing of 3rd DSP ends, the message in Step 3 will appear again.
Make sure that no more "Writing..." will appear.

```
S/PDIF Update..
```

Check Points:
1. "Writing... 1st DSP" was shown.
2. CD player has been playing for more than 1 minutes + 4 seconds and finishes playback.

5. Press [Standby/On] button and see Front Display change as below.

↓

```
Clear
```

↓

The unit is put into the Standby mode.

6. Turn on the unit and confirm the new version number.

FIRMWARE UPDATE -5

Preparation for Update (Video)

A: Hardware

1. PC with RS232 terminal
2. RS232 straight through cable
3. 0JHUDSON (Adaptor Jig)

or

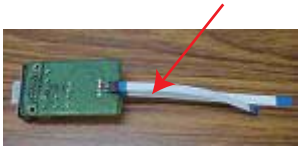

B: Software

GProbe 5[1].4.0.3.zip
Unzip it and install the software by clicking “GProbe5.4.0.3.exe” in advance referring to FIRMWARE UPDATE-9-10.

C: First Procedure

1. Create a folder in C drive and name it “Batch_File.”
   C:\Batch_File

2. Store 3 provided files in the folder.
   <e.g.>

sst25vf080b_istemp_spi.hex : for communication
VD***_******_OSD******.bat : Batch file
VD***_******_OSD******.hex : Program file

D: Connection and Setup

1. While the target unit is off, connect 0JHUDSON & RS232 cable to RS232 port of the PC.
2. Connect the FFC of the jig to the connector slot on the rear panel of DTR-6.8.
3. Power on the unit.

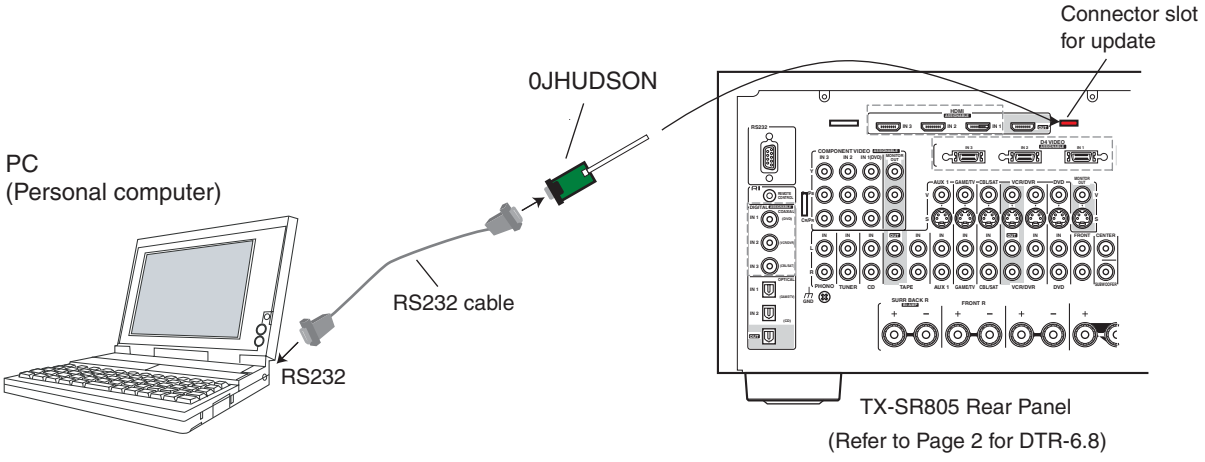

FIRMWARE UPDATE -6

Video Update Procedure

1. Start GProbe by clinking the icon.

2. Turn on the unit and make sure that some information appears in the bottom right corner of the window.
   If nothing appears in this area, the PC does not communicate with the unit.

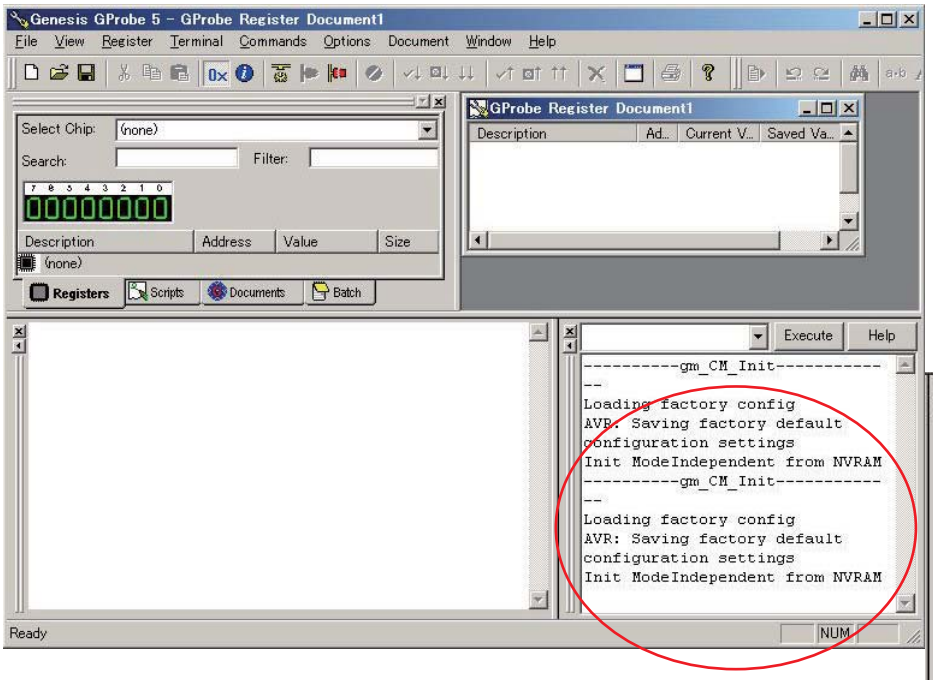

Wait until reading stops.

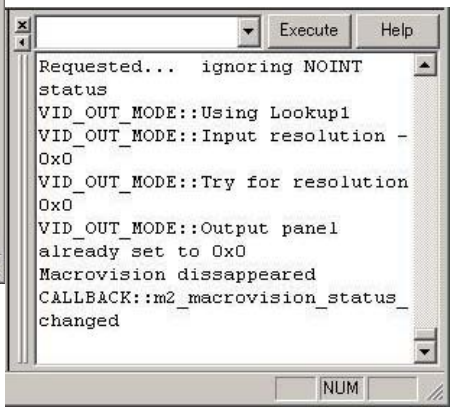

3. Click “Commands” in the menu bar and select “Batch.”

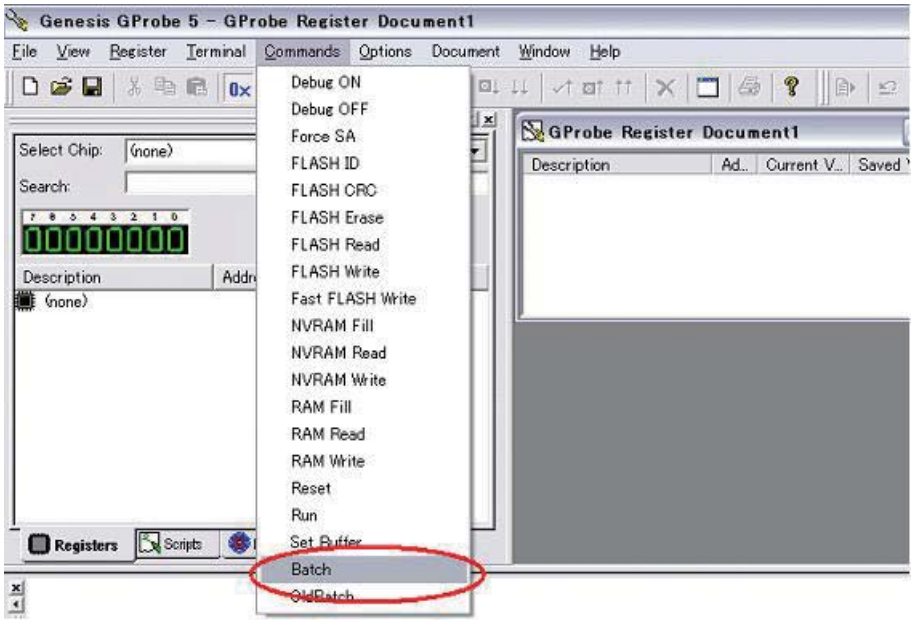

FIRMWARE UPDATE -7

Video Update Procedure(Continued)

4. Start Batch file by selecting the batch file stored in First Procedure.

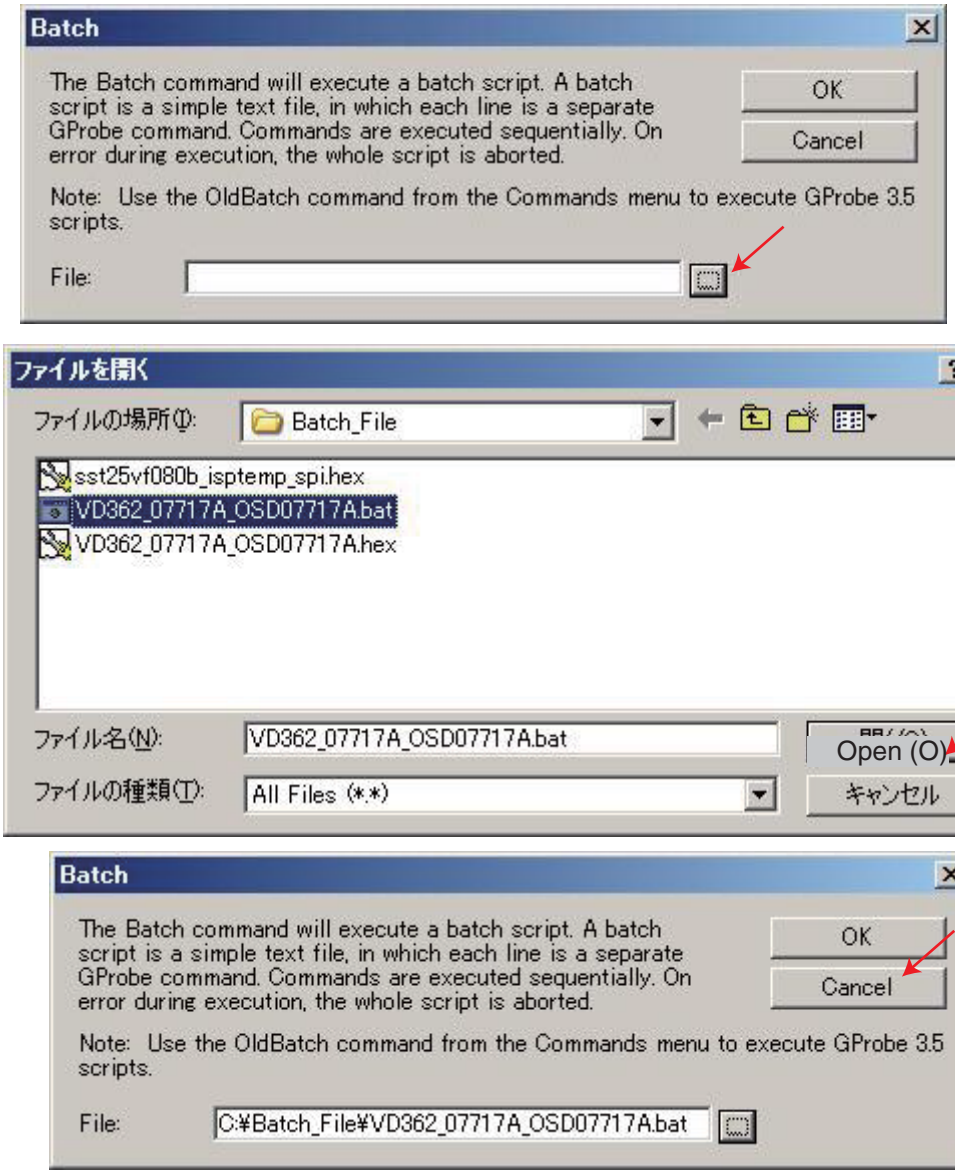

5. Make sure that " Command Successful. Writing FLASH..." appears in the bottom right corner of the window.

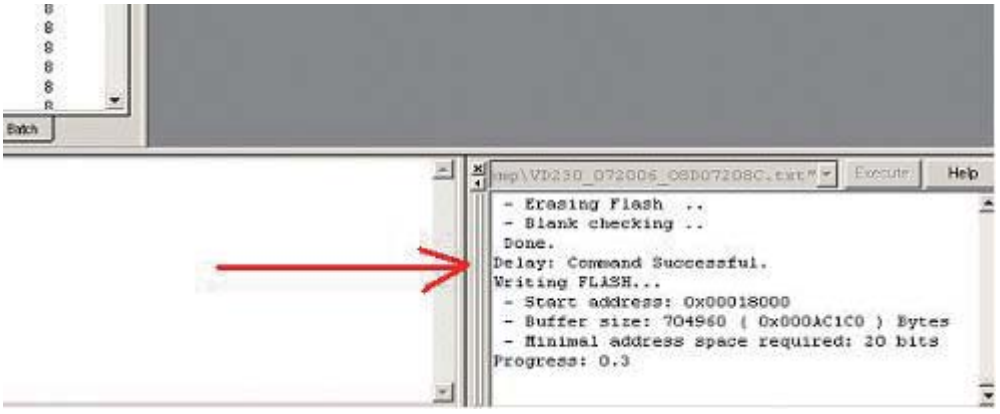

Note:
Front Display on the unit will show no information about writing but continue to display what was shown before.

FIRMWARE UPDATE -8

Video Update Procedure(Continued)

6. Make sure that “Progress: 100.0 ..... Command Successful” is shown as below.

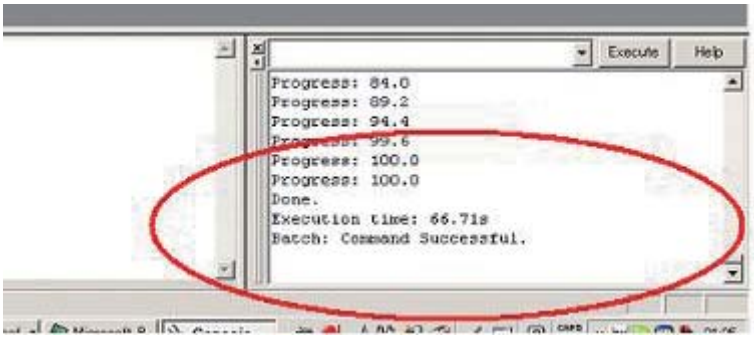

7. Turn off and on the unit.

8. Confirm the new version number.

NOTE:
If “Command Successful Writing FLASH...” does not appear,
turn off and on the unit, and try again from Step 1.

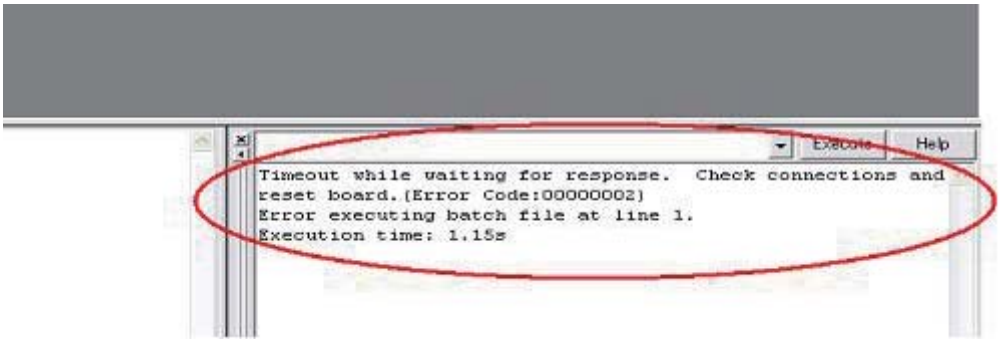

FIRMWARE UPDATE -9

How to install GProbe

This procedure is necessary to start Video Upudate (See FIRMWARE UPDATE -5)

1. Unzip “GProbe 5[1].4.0.3.zip” and double-click the extracted file “GProbe5.4.0.3.exe.”

2. Follow the instructions on the window as below.
   Note: Not all the windows are shown in this procedure.

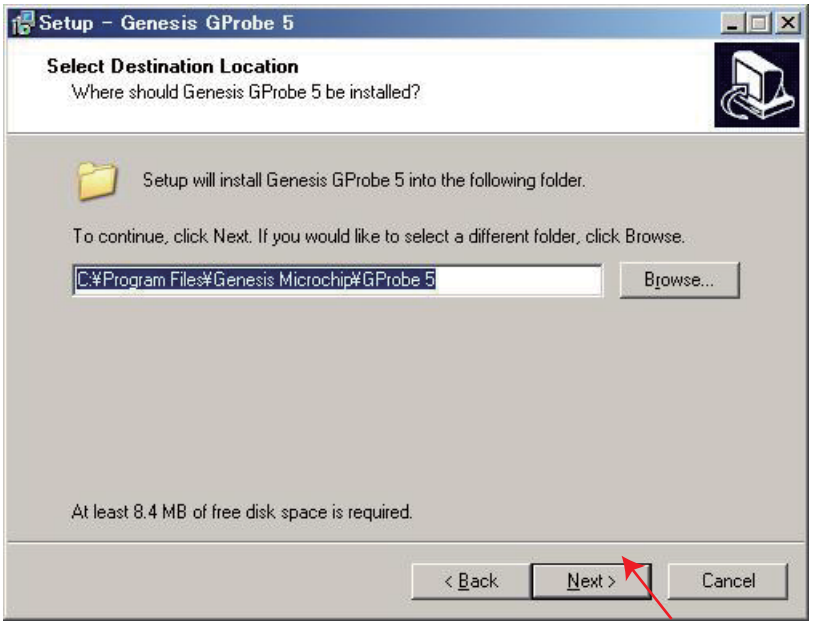

FIRMWARE UPDATE -10

How to install GProbe(Continued)

3. Another Setup Wizard starts.

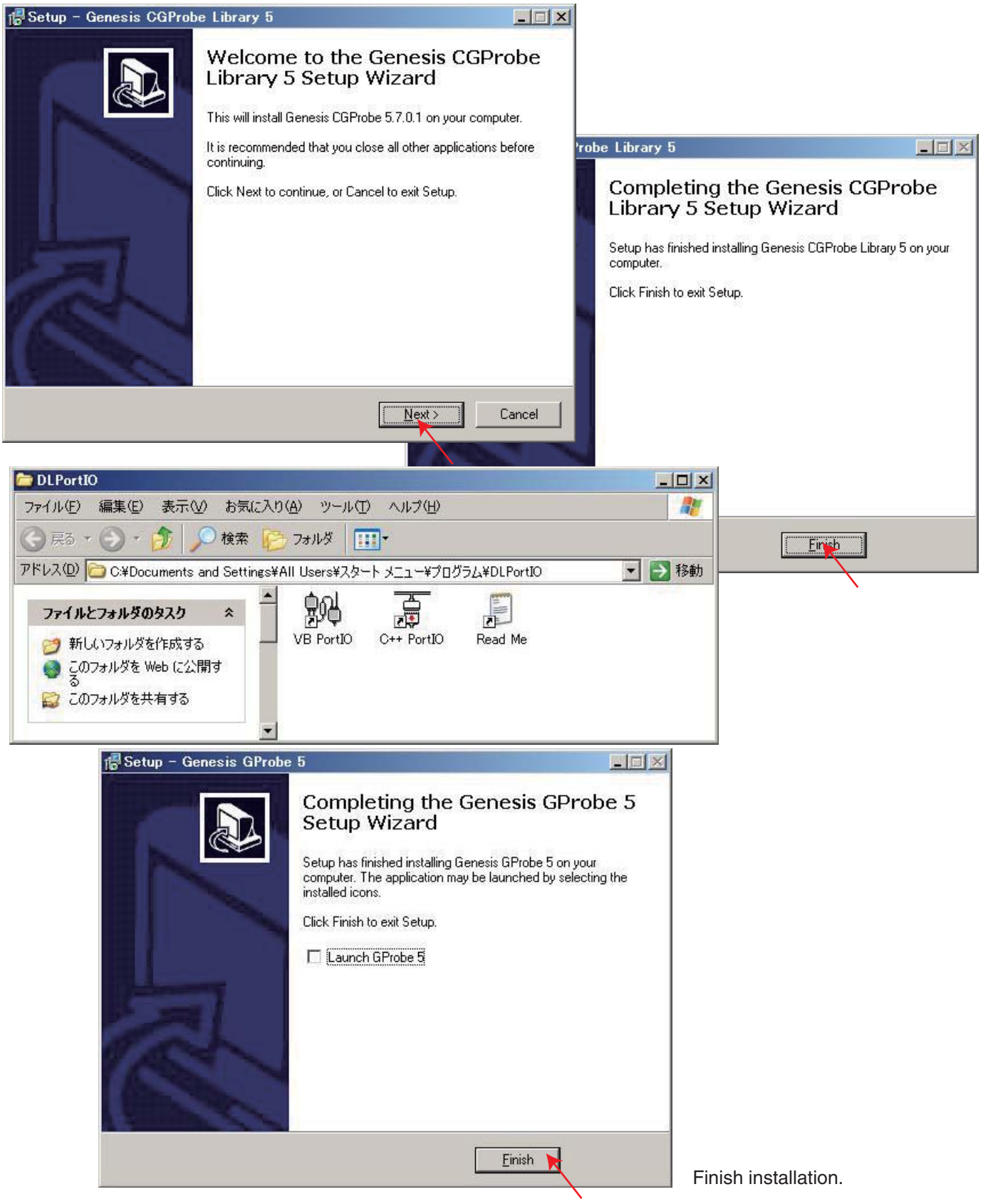

Finish installation.

OPERATION CHECK-1

SPEAKER PROTECT-1 (DC VOLTAGE DETECTION)

[When]

1. Exchange power transistors (Q6050 - Q6056, Q6060 - Q6066).
2. Exchange amplifier PC board ass'y (NAAF-9142).

[Procedure]

<Note>
No load. No input.

1. Press and hold down CD button, then press STANDBY/ON button while the unit is powered on.
   " Test - _ " will be displayed only for 5 seconds.

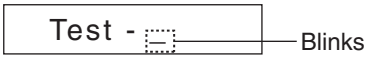

2. Press GAME/TV button, while the characters of " Test - _ " will be displayed.
   The unit is in the state of " Test-4-00 ".

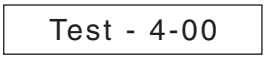

3. Repeatedly press TONE + button until the characters of " Test-4-22 " are displayed.

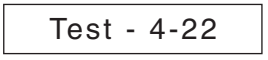

Check whether the operation starts and continues automatically as follows.

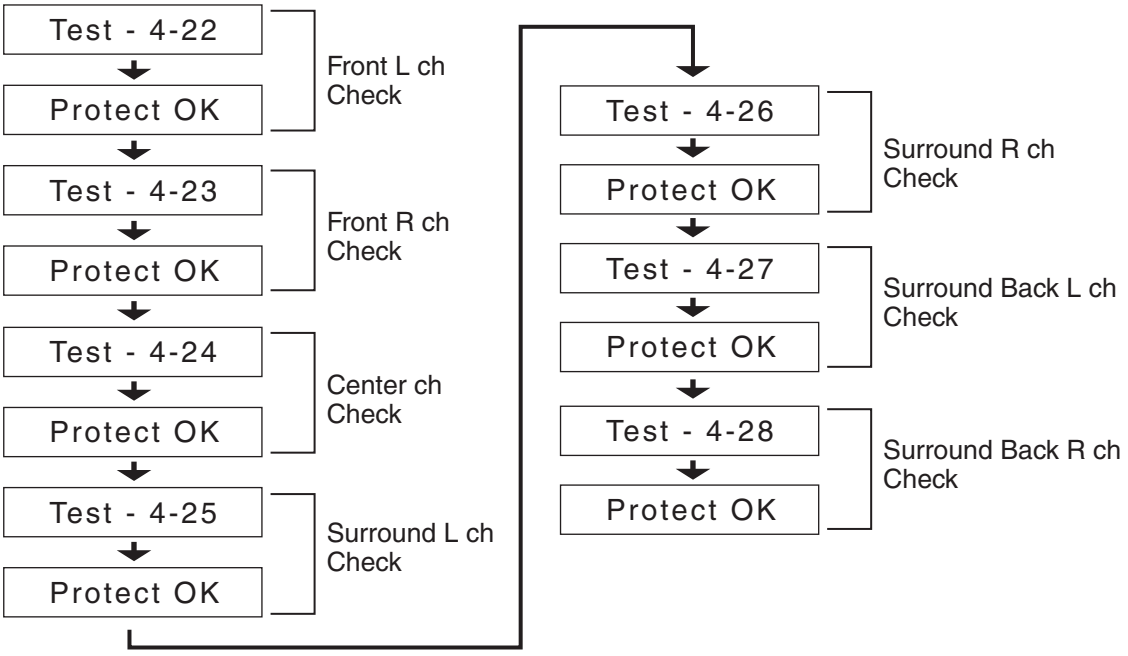

If all channels are OK, the characters of " Test - 4 - 36 " will be displayed.

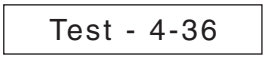

4. Press STANDBY/ON button.

OPERATION CHECK-2

SPEAKER PROTECT-2 (CURRENT DETECTION)

[When]

1. Exchange power transistors (Q6050 - Q6056, Q6060 - Q6066).
2. Exchange amplifier PC board ass'y (NAAF-9142).

[Procedure]

<Note>
No input.
Do not check two or more channels at the same time.
Do not connect a dummy load to speaker terminals longer than 2 seconds.

1. Press and hold down CD button, then press STANDBY/ON button while the unit is powered on.
   " Test - _ " will be displayed only for 5 seconds.

   Test - _ Blinks

2. Press GAME/TV button, while " Test - _ " is displayed.
   The unit will be in the state of " Test-4-00 ".

   Test - 4-00

3. Repeatedly press TONE + button until " Test-4-36 " is displayed.

   Test - 4-36

4. Connect the dummy load of 3 ohms to the Front L ch speaker terminals.
   At this time, confirm that the speaker relay is not turned off.

   Test - 4-36

5. Connect the dummy load of 1 ohm to the Front L ch speaker terminals.
   At this time, confirm that the speaker relay is turned off and" Protect " is displayed.

   Protect

   Disconnect the dummy load immediately after checking the display of " Protect ".

   Test - 4-36

6. Check other channels according to the same procedure as 4 and 5.
   Front R, Center, Surround L, Surround R, Surround Back L, Surroun Back R

7. Press STANDBY/ON button.

   Clear → Turn off

OPERATION CHECK-3

CONTROL OF POWER SUPPLY (OUTPUT SENSOR AND THERMAL SENSOR)

[When]

1. Exchange power transistors (Q6050 - Q6056, Q6060 - Q6066).
2. Exchange power amplifier PC board ass'y (NAAF-9142).
3. Exchange thermal sensor PC board ass'y (NAETC-9144).

[Procedure]

<Note>
No output. No input.

Output sensor

1. Press and hold down CD button, then press STANDBY/ON button while the unit is powered on.
   " Test - _ " will be displayed only for 5 seconds.

   Test - _ (Blinks)

2. Press GAME/TV button while " Test - _ " is displayed.
   The unit will be in the state of " Test-4-00 ".

   Test - 4-00

3. Repeatedly press TONE + button until " Test-4-37 " is displayed.

   Test - 4-37

4. At this time, confirm that the red characters of " FM STEREO " is displayed.
   And, check relay RL6901 and RL6902 are turned off in 2 or 3 seconds.

   Test - 4-37 (FM STEREO) (Front R, Center, Surround L ch check)

5. press TONE + button, then " Test-4-38 " will be displayed.

   Test - 4-38

6. At this time, confirm that the red characters of " FM STEREO " is displayed.
   And, check relay RL6901 and RL6902 are turned off in 2 or 3 seconds.

   Test - 4-38 (FM STEREO) (Surround R, Surround Back L, Surroun R ch check)

7. Press STANDBY/ON button.

   Clear → (Turn off)

Thermal sensor

1. Press and hold down DISPLAY button, then press STANDBY/ON button when the unit is powered on.
   The main microprocessor version will be displayed only for 3 seconds.

   <Ex.> Main1. 04/07X02A

2. Press TONE button while the version is displayed. The temperature of thermal sensor will be displayed.

   <Ex.> T: 44 °C/ 111 °F

3. Confirm that the displayed temperature is within +/-20 ℃ from the ambient temperatures.

4. Press STANDBY/ON button.

   Clear → (Turn off)

OPERATION CHECK-4

Condition of Protect Mode

The unit will go into Protect mode under the following conditions.
(T: Thermal sensor temperature)

1. Thermal condition
   After 10 minutes of T >= 100 ℃
   or
   Immediately T <= -30 ℃
   or
   Immediately T > 150 °C
   or
   Immediately T >= 90° C (if T > 40° C when power is on)
   or
   Immediately T >= 90 ℃ (if the unit is powered on longer than 24 hours)

2. DC voltage condition
   The sum of dc voltage of 7 channnel speaker outputs is more than 7 V.

3. Current condition
   Protect will be on if speaker output ac current >= 35 A.
   Protect will not be on if speaker output ac current >= 11.7 A.

   This condition is equivalent to OPERATION CHECK-2.
   Test wave form:

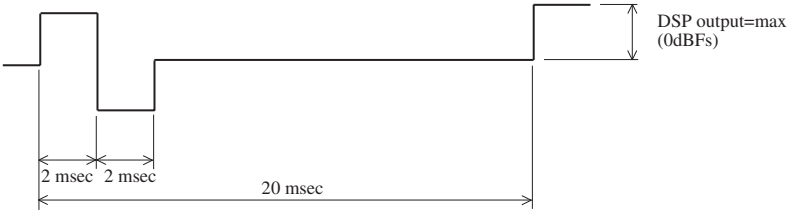

Condition of Power Supply Control

The power supply voltage(VH or VL) for power amplifiers is changed by the relays: RL6901 and RL6902.
VH > VL (At VL, the maxmum speaker outputs are reduced for safety)
T: Thermal sensor temperature
VOLH: Pin #99 input voltage of Main microprocessor: Q2001 (Refer to SD-2:A3 and SD-5:G3 of Schematic Diagram.

VL: VOLH >= 0.45V and T >= 65 ℃
or
VOLH >= 2.6V (Longer than 240ms)

VH: Conditions except above

Condition of Cooling Fan Operation

The cooling fan will stop or rotate under the following conditions.

STOP:
VOLH < 0.35V

LOW SPEED:
VOLH >= 0.35V

MID SPEED:
VOLH > =0.55V or T >= 55 ℃

HIGH SPEED:
VOLH >= 0.45V and T >= 65 ℃

DEBUG MODE-1

The operations of DSP and DIR etc are able to be checked by the information displayed on FL in this DEBUG MODE.
This information may help to pursue the cause of trouble.

To set in DSP debug mode

1. Press and hold down DISPLAY button, then press STANDBY/ON button while the unit is powered ON.
   The version number of microprocessor is displayed only for 3 seconds.

<Ex.>

```
Main:
 8 1.05/07903A
```

2. Press TONE+ button within 3 seconds above, the version number of 1st DSP is displayed.

<Ex.>

```
DSP 1st:
SR8051:07601A
```

3. Press DISPLAY button while the 1st DSP version is displayed. The status of DSP and DIR will be displayed.

<Ex.>

```
E1A48K0N/0FFPo
FFFFFF0   0  000
```

To exit
Press STANDBY/ON button.

Content of display

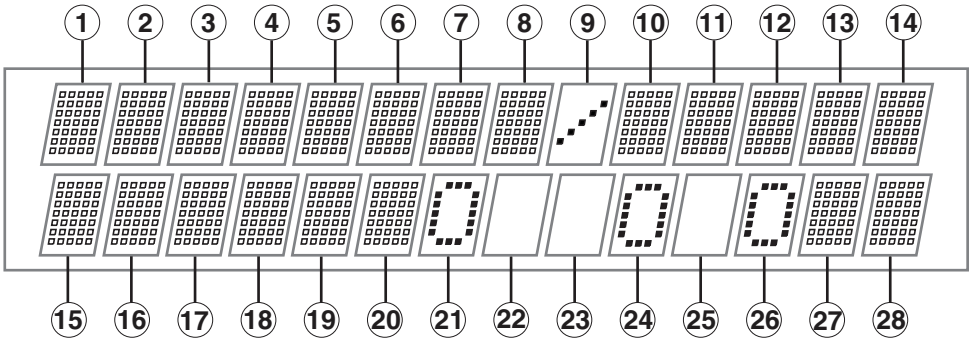

① DIR Input Lock
- E = UNLOCK
- = LOCK

② DIR Input RX
- 0 = None
- 1 = COAX1
- 2 = COAX2
- 3 = COAX3
- 4 = OPT 1
- 5 = OPT 2
- 6 = OPT 3(Not Used)
- 7 = OPT(FRONT)
- 8 = HDMI1
- 9 = HDMI2
- A = HDMI3
- B = HDMI4
- C = NET(Not Used)

③ DIR/ADC
- D = Digital(SPDIF)
- A = Analog
- M= Anolog Multich
- p = PCM Fixed
- d = DTS Fixed
- I = Digital(I2S_1)
- S = Digital(I2S_4)
- d = Digital(DSD)

⑦ DIR Detect Type
- 0 = Analog
- 1 = PCM
- 2 = Not PCM
- 3 = Data
- 4 = DTS CD (Not used)
- 5 = Multich
- 6 = Not Decided

④ - ⑥ Sampling Frequency and Emphasis
- 32K = 32 kHz without Emphasis
- 44K = 44.1 kHz without Emphasis
- 48K = 48kHz without Emphasis
- 64K = 64 kHz
- 88K = 88.2 kHz
- 96K = 96 kHz
- 176 = 176.4 kHz
- 192 = 192 kHz
- 32e = 32 kHz with Emphasis
- 44e = 44.1 kHz with Emphasis
- 48e = 48 kHz with Emphasis

DEBUG MODE-2

Content of display(Continued)

⑧ CODEC CLOCK MODE
- N = Normal
- U = Up Sampling
- H = High Sampling (Double Rate)
- D = Down Sampling
- Q = Quad Rate

⑨ Not Used(Slash)

⑩ DSP Port
- bit0 = NIC —(Normal state)
- bit1 = DEC
- bit2 = BUSY
- bit3 = Exec Wait
- (Abnormal state)

⑪-⑫ DSP Sequence
- 26 = Not Free
- 2F = Mute Control
- FF = Free

⑬ DSP Detect Format
- P = PCM (Analog)
- D = Dolby Digital
- d = DTS
- A = AAC
- S = DSD
- p = Dolby Digital+
- T = TrueHD
- H = DTS-HD High Resolution
- M = DTS-HD Master Audio
- ? = UNKNOWN

⑭ DSP Decode
- o = Decode OK
- x = Decode NG

⑮-⑯ 1st DSP Sequence
- 04-0D = Boot
- 10-17 = Update Mode
- 20-33 = DSP Setting
- FF = Free

⑰-⑱ 2nd DSP Sequence
- 04-0D = Boot
- 10-17 = Update Mode
- 20-33 = DSP Setting
- FF = Free

⑲-⑳ 3rd DSP Sequence
- 04-0D = Boot
- 10-17 = Update Mode
- 20-33 = DSP Setting
- E0-E2 = Auto Speaker Setup
- FF = Free

㉑-㉖ Not Used

⑲-⑳ MPU MUTE Output Cause
- bit0 = Selector IC
- bit1 = Effector
- bit2 = DSP
- bit3 = DIR
- bit4 = HDMI
- bit5 = XM
- bit6 = Auto Speaker Setup
- bit7 = Speaker Config

Trouble Shooting by DEBUG MODE

This debug mode will help in digital audio no sound trouble.
Check information on FL display and the related devices or circuits.

Note:
MPU is short for Micro Processor: Q7001.
1st DSP: Q3401, 2nd DSP: Q3501, 3rd DSP: Q3601
DIR: Q3041
DAC: Q3701, Q3721, Q3741, Q3761, Q3781
Flash ROM: Q3451, Q3551, Q3651
SDRAM: Q3461, Q3471, Q3561, Q3661
Audio Selector: Q4029

Digit no on FL	Symptom on display	Cause	Check
①	"E" is displayed	No input signal to DIR.	Related devices from digital input to DIR.
④ - ⑥	Displayed freq. is different from input	No input signal to DIR.	Related devices from digital input to DIR.
⑦	Displayed format is different from input	No input signal to DIR.	Related devices from digital input to DIR.
⑬	Displayed format is different from input	Input signal to DSP is no good.	Related devices from DIR to DSP.
⑭	"x" is displayed	Interface between DSP and MPU is no good.	Related devices from MPU to DSP.

DEBUG MODE-3

Trouble Shooting by Debug Mode-2

(Continued)

Digit no on FL	Symptom on display	Cause	Check
⑲ - ⑳	This identifies IC which outputs error	Some IC outputs error to MPU.	Audio Selector, DSP, DIR & related devices.
⑩	Continue to display “1”	Interface between DSP and MPU is no good.	Related devices from MPU to DSP.
	Continue to display “2”	Connection from DIR to DSP is no good.	Related devices from DIR to DSP.
	Continue to display “3” to ”7”	Interface between DSP and MPU is no good.	Related devices from MPU to DSP.
	Continue to display “8” to ”F”	DSP Sequence is no good.	Check ⑮ - ⑳ items.
⑮ - ⑳	Continue to display “03”	Communication between DSP and MPU is no good.	Check connection between DSP and MPU. Power supply pin, reset port and clock input of DSP. Flash ROM program may be no good. DSP or MPU is broken.
	Continue to display “05”	Writing from MPU to DSP is no good.	Flash ROM program is no good, upgrade. DSPSDO pin of MPU. Flash ROM or SDRAM is no good, replace. DSP or MPU is broken, replace.
	Continue to display “08”	DSP program is no good.	Flash ROM program is no good, upgrade. Flash ROM or SDRAM is broken, replace. Check connection between DSP and Flash ROM.
	Continue to display “09” to “0C”	DSP program is no good.	Flash ROM program is no good, upgrade. Flash ROM or SDRAM is broken, replace. Check connection between DSP and Flash ROM.
	Continue to display “17”	Powered off during DSP program update.	Press STANDBY/ON button while pushing. VCR/DVR button when the unit is powered on.
	Display “21”, then return and signal format indicator is flashing	DSP program is no good.	Flash ROM program is no good, upgrade. Flash ROM or SDRAM is broken, replace. Check connection between DSP and Flash ROM. Clock freq. to DSP.
	Continue to display “22” to “24”	DSP program is no good or Audio clock to DSP is no good.	Flash ROM program is no good, upgrade. Flash ROM or SDRAM is broken, replace. Check connection between DSP and Flash ROM. Clock freq. to DSP or Audio clock to DSP.
	Continue to display “30” to “33”	DSP program is no good or Audio clock to DSP is no good.	Flash ROM program is no good, upgrade. Flash ROM or SDRAM is broken, replace. Check connection between DSP and Flash ROM.
	Continue to display “26” to “2F”	DSP setting is failured.	Flash ROM program is no good, upgrade. Flash ROM or SDRAM is broken, replace. Check connection between DSP and Flash ROM.

DEBUG MODE-4

Trouble Shooting by displaying Service Information

This service information display system is helpful in analysing the status when the unit goes into Protect mode and is powered off. Pay attention that the status will change if a button is pushed.

1. Press and hold down DISPLAY button, then press STANDBY/ON button while the unit is powered ON. The version number of microprocessor is displayed only for 3 seconds.

<Ex.>

```
Main:
 8 1.05/07903A
```

2. Press SETUP button within 3 seconds above, the following informations are displayed.

<Ex.>

```
- 50° C   30   0D
01:23       10hour
```

Information displayed

Power off Cause : P : Protect
: - : Other
Temperature : xxx °F or xxx °C
Volume Level : xx
Listenning Mode : xx (Refer to the code list below)
Time after Power on : xx:xx
Time after Initialize : xxhour

4. Press RETURN button. The information will be cleared.

<Ex.>

```
ProtectDataCLR
```

Listening Mode Code List

Listening Mode	Code	Listening Mode	Code	Listening Mode	Code	Listening Mode	Code
Pure Audio	01	PLII Music	21	Dolby Digital	30	+Neo:6	37
Direct	02	PLII Game	22	DTS	30	DTS Matrix	31
Stereo	03	PLIIx Movie	23	DTS96/24	3B	DTS Discrete	31
Mono	04	PLIIx Music	24	AAC	30	THX Cinema	50
Mono Movie	07	PLIIx Game	25	MultiCh	30	THX Surround EX	58
Orchestra	09	Neo:6 Cinema	26	Dolby Digital Plus	30	THX Ultra2 Cinema	5C
Unplugged	0A	Neo:6 Music	27	Dolby TrueHD	30	THX Music Mode	5D
Studio-Mix	0B	Neural Surround	28	DTS-HD High Resolution	30	THX Games	5E
TV Logic	0C	PLII Movie THX	40	DTS-HD Master Audio	30	+PLIIx Movie THX	59
All CH Stereo	0D	PLIIx Movie THX	41	DSD	30	+Neo:6 THX	57
Full Mono	0E	Neo:6 Cinema THX	42	+PLIIx Movie	39	+Neural-THX	3D
PLII Movie T-D	0F	PLII Movie THX Games	43	+PLIIx Music	3A	DTX Matrix THX	51
PLII Movie	20	Neo:6 Cinema THX Games	44	Dolby EX	38	DTS Discrete THX	52
		Neural-THX	29				

ADJUSTMENT PROCEDURE-1

IDLING CURRENT ADJUSTMENT

[When]

Exchange Power transistor (Q6050 - Q6056, Q6060 - Q6066) and/or Amplifier PC board (NAAF-9142).

[Procedure]

<Note> No load and No signal

Refer to <Fig-1> in " ADJUSTMENT PROCEDURE-2 " for the adjustment points and the test points.

1. Before idling adjustment, turn the trimming resistors to counter clockwise.
2. Connect the dc voltmeter to test points,
   using two 100 ohm resistors between the poles of the jig terminal and the dc voltmeter terminals.

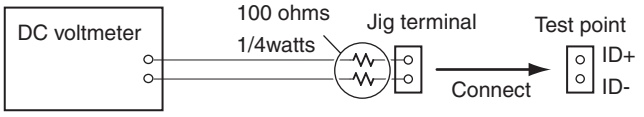

3. Connect the ac power cord to wall outlet.
4. Press STANDBY/ON button to turn the power on.
5. Adjust the trimming resistors as the following procedure immediately after power on.

Channel	Mark	Adjustment point (Trimming resistor)	Measuring point (Test point)	Adjustment value
Center	C	R6040	P6080	2.5 mV
Front Left	L	R6041	P6081	2.5 mV
Front Right	R	R6042	P6082	2.5 mV
Surround Left	SL	R6043	P6083	1.5 mV
Surround Right	SR	R6044	P6084	1.5 mV
Surround Back Left	SBL	R6045	P6085	1.5 mV
Surround Back Right	SBR	R6046	P6086	1.5 mV

6. Wait for 4 - 6 minutes. (Heat running)
7. Re-adjust the trimming resistors as the following procedure.

Channel	Adjustment point	Measured value →	Adjustment value	Specifications (＊In a stable state)
Front Left, Right and Center	R6041, R6042 and R6040	In case below 9 mV →	9 mV	12 +/- 3 mV
		In case 9 - 11 mV →	No re-adjustment	
		In case over 11 mV →	11 mV	
Surround Left Surround Right Surround Back Left Surround Back Right	R6043, R6044, R6045 and R6046	In case below 6 mV →	6 mV	9 +/- 3 mV
		In case 6 - 8 mV →	No re-adjustment	
		In case over 8 mV →	8 mV	

8. Disconnect the dc voltmeter.
9. Press the STANDBY/ON button to turn the power off.
10. Disconnect the ac power cord of the unit.

＊ Idling currents are stabilized in about 10 minutes after power on.

ADJUSTMENT PROCEDURE-2

IDLING CURRENT ADJUSTMENT

<Fig-1>

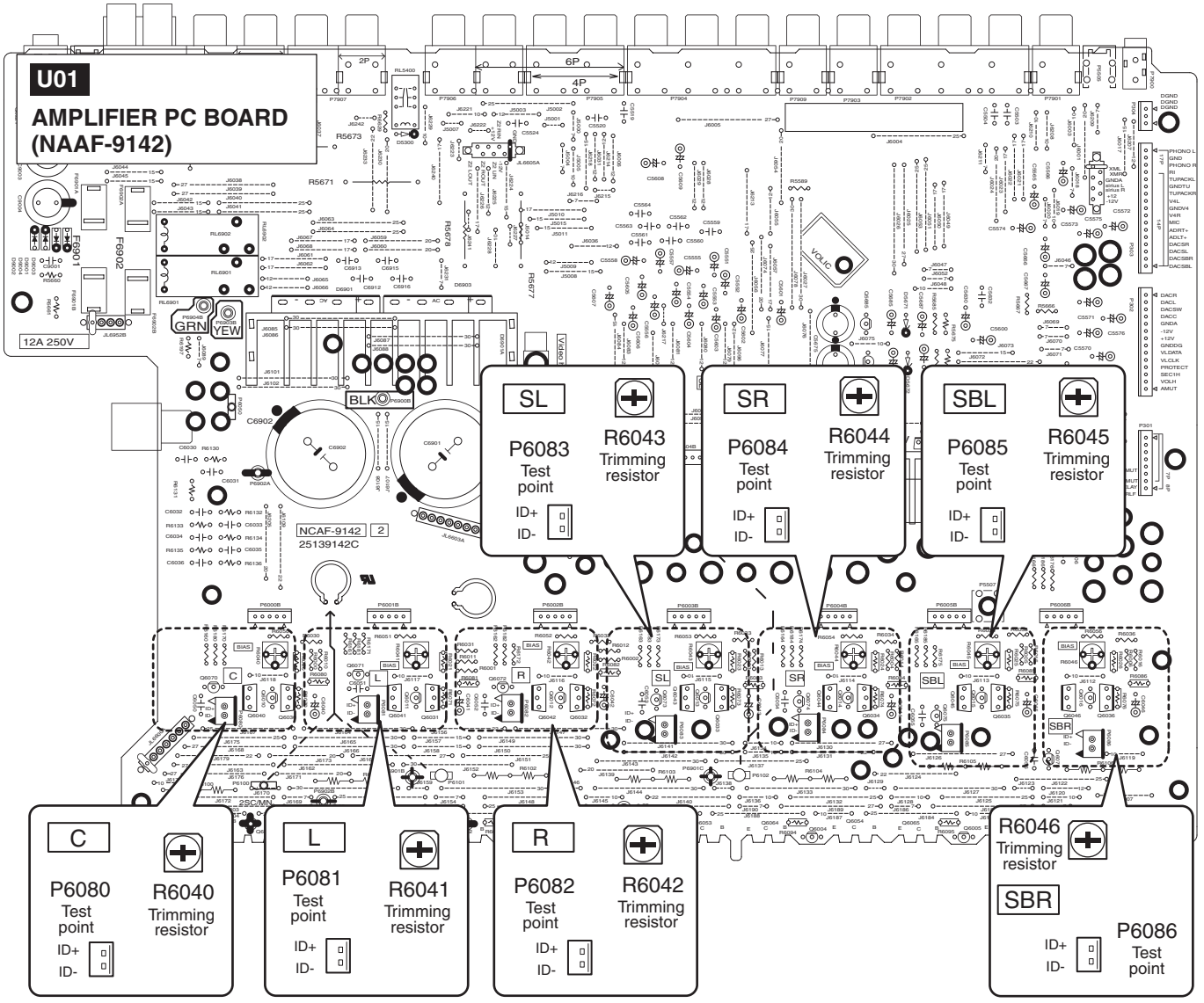

ADJUSTMENT PROCEDURE-3
VIDEO PROCESSOR CALIBRATION

Video processor Q8001 must be calibrated before mounting on the unit.

[When]

1. Exchange Video processor IC (Q8001, FLI8125-LF-BC).
2. Exchange HDMI PC board ass'y (NAHDM-9107).

[Preparation]

1. Prepare a standard video signal generator(SG).
2. Set the SG to output 100% color bar of 8 colors and 480i at component video terminals.
3. Connect the unit(DTR-6.8) and SG as shown in the figure.

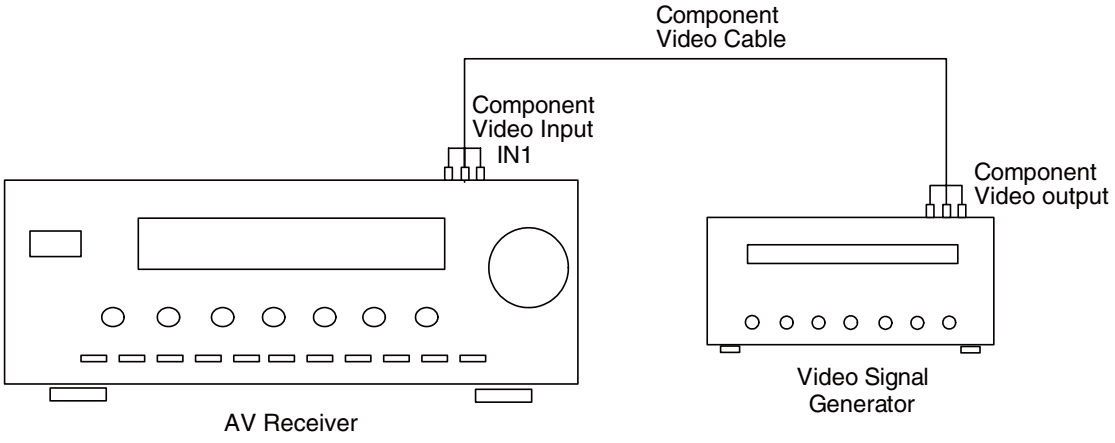

[Procedure]

1. Press and hold down CD button, then press STANDBY/ON button.
   " Test - _ " is displayed only for 5 seconds.
2. Press AUX button within 5 seconds above.
3. Press ENTER button.
4. Calibration of ADC part in FLI8125-LF-BC starts and proceeds.
5. The unit will be powered off automatically when succeeds.
6. If failed, “ Calibration Error ” will be displayed.
   Check SG and signal, then return to Item 1.

<Note>

1.Parts marked by "**NSP**" are generally unavailable because they are not in our Master Spare Parts List.

2.ICs marked by "**NRP**" are not replaceable because some pins on bottom are unable to see and unsolder.

NOTE : THE COMPONENTS IDENTIFIED BY THE MARK ! ARE CRITICAL FOR RISK OF FIRE AND ELECTRIC SHOCK. REPLACE ONLY WITH PART NUMBER SPECIFIED.

<Notes>

<DD> : DTR-6.8 USA model

<MA> : DTR-6.8 Australian model

EXPLODED VIEW PARTS LIST

REF. NO	NAME	DESCRIPTION	Q'TY	PART NO(SN)	REMARKS
A001	F BRACKET	.	1	27111427E	
A002	F PANEL	DTR6.8(B)MDD	1	27213049	<DD>
A002	F PANEL	DTR6.8(B)MMA	1	27213050	<MA>
A003	KNOB	(STANDBY)	1	28325756	
A004	BADGE	.	1	28135278	
A005	CLEAR PLT	.	1	28192078	
A006	CUSHION	.	3	28141650	
A007	DECO FRM	.	1	27215377	
A008	FACET	.	2	28198905	<DD>
A008	FACET	.	3	28198905	<MA>
A009	B PLATE	.	1	28133418	
A010	RETAINER	(HP)	1	27141787	
A011	REAR PANEL	DTR6.8MDD	1	27123758	<DD>
A011	REAR PANEL	DTR6.8MMA	1	27123759	<MA>
A012	SCREW	3TTB+8B(3CM)SR	49	801637	
A013	SCREW	3TTB+8B(3BC)	57	838430088GR	<DD>
A013	SCREW	3TTB+8B(3BC)	54	838430088GR	<MA>
A014	SCREW	3P+6FN(3BC)	4	82143006GR	<DD>
A014	SCREW	3P+6FN(3BC)	3	82143006GR	<MA>
A015	LABEL	(COVER)	1	29364123	
A017	LABEL	HOOKUP-INTEGRA	1	29363195	<DD>
A018	KNOB	(VOL)AS	1	28326231	
A019	WIRE TIE	BSK-1	13	260208	
A020	CHASSIS	DTR6.8	1	-------	NSP
A021	CUSHION	.	4	28141637	
A022	SCREW	4TTB+8C(3BC)	2	838440089GR	
A024	WASHER	W3*10F(3BC)	1	87643010GR	
A025	TAPE	TAPE(CLOTH-16U)	1	29110083	<DD>
A027	HOLDER	KGLS-22S	1	27190369	
A029	HOLDER	KGLS-16RT	2	27190511	
A031	HOLDER	KGPS-16RF	4	27190991	
A033	HOLDER	KGLS-10RT	1	27190428A	
A041	SCREW	4TTC+8C(3BC)	4	830440089GR	
A042	BRACKET	(HDMI)	1	27131033	

A045	LABEL	(PT)	1	29364345	
A048	HOLDER	HOLDER KGLS-8S	1	27190480	
A051	HEAT SINK	.	1	27160609A	
A053	TAPE	TAPE(CLOTH-8U)	1	29110082	
A054	TAPE	TAPE(CLOTH-16U)	1	29110083	
A055	BRACKET	(HT-L)	1	27131029	
A057	BRACKET	(HT-R)	1	27131030	
A067	SCREW	3SMS8W.SW+14B(CU)	14	801634	
A068	CUSHION	.	1	28141697	
A069	IB CUSHION	W15*3t TAPE	1	28141585	
A070	CUSHION	(BUTYL)	1	28141748	
A071	GUIDE	(VOL)	1	27268211	
A074	CUSHION	.	1	28141688	
A075	HOLDER	(FAN)	8	27191302	
A301	COVER	.	1	28184997Z	
A304	LABEL	(MMA)	2	29364968	<MA>
A305	CUSHION	.	1	28141681	
A307	LEG	AS	4	27175418	
A309	CUSHION	.	4	28141647	
A315	CUSHION	.	3	28141749	
F6901	FUSE	12A-TUL-250V	1	252301GR	!
F6902	FUSE	12A-TUL-250V	1	252301GR	!
F901	FUSE	10A-UL/T-233	1	252330GR	!, <DD>
F901 or	FUSE	10A-T/UL-ST2	(1)	252333GR	!, <DD>
F901	FUSE	5A-SE-EAK FUSE	1	252078GR	!, <MA>
F901 or	FUSE	5A-SE-TL250V	(1)	252278GR	!, <MA>
F903	FUSE	5A-UL/T-233	1	252326GR	!, <DD>
F903 or	FUSE	5A-T/UL-ST2	(1)	252258GR	!, <DD>
F910	FUSE	5A-UL/T-233	1	252326GR	!, <DD>
F910 or	FUSE	5A-T/UL-ST2	(1)	252258GR	!, <DD>
F910	FUSE	5A-SE-EAK FUSE	1	252078GR	!, <MA>
F910 or	FUSE	5A-SE-TL250V	(1)	252278GR	!, <MA>
P101	FFC	NCFC7-131112	1	2047131112	
P4008	FFC	NCFC7-232512	1	2047232512	
P6601A	P RIVET	JB-407A-C	6	880052	<MA>
P6602A	P RIVET	JB-407A-C	8	880052	<MA>
P6607A	P RIVET	JB-407A-C	4	880052	<MA>
P691	FAN	DO5X-12T	1	24502321	
P692	FAN	DO5X-12T	1	24502321	
P701	FFC	NCFC3-36032	1	204336032	
Q6050	TR	2SC5242-R	1	2202842	
Q6050 or	TR	2SC5242-O	(1)	2202843	
Q6050 or	TR	MN150S-P	(1)	2203686	
Q6050 or	TR	MN150S-O	(1)	2203683	
Q6050 or	TR	MN150S-Y	(1)	2203684	
Q6050A	ISO SHEET	AC238	2	223024	
Q6050B	ISO SHEET	ISO SHEET	6	223041	
Q6051	TR	2SC5242-R	1	2202842	
Q6051 or	TR	2SC5242-O	(1)	2202843	
Q6051 or	TR	MN150S-P	(1)	2203686	
Q6051 or	TR	MN150S-O	(1)	2203683	
Q6051 or	TR	MN150S-Y	(1)	2203684	
Q6052	TR	2SC5242-R	1	2202842	
Q6052 or	TR	2SC5242-O	(1)	2202843	

Q6052 or	TR	MN150S-P	(1)	2203686
Q6052 or	TR	MN150S-O	(1)	2203683
Q6052 or	TR	MN150S-Y	(1)	2203684
Q6053	TR	2SC5242-R	1	2202842
Q6053 or	TR	2SC5242-O	(1)	2202843
Q6053 or	TR	MN150S-P	(1)	2203686
Q6053 or	TR	MN150S-O	(1)	2203683
Q6053 or	TR	MN150S-Y	(1)	2203684
Q6054	TR	2SC5242-R	1	2202842
Q6054 or	TR	2SC5242-O	(1)	2202843
Q6054 or	TR	MN150S-P	(1)	2203686
Q6054 or	TR	MN150S-O	(1)	2203683
Q6054 or	TR	MN150S-Y	(1)	2203684
Q6055	TR	2SC5242-R	1	2202842
Q6055 or	TR	2SC5242-O	(1)	2202843
Q6055 or	TR	MN150S-P	(1)	2203686
Q6055 or	TR	MN150S-O	(1)	2203683
Q6055 or	TR	MN150S-Y	(1)	2203684
Q6056	TR	2SC5242-R	1	2202842
Q6056 or	TR	2SC5242-O	(1)	2202843
Q6056 or	TR	MN150S-P	(1)	2203686
Q6056 or	TR	MN150S-O	(1)	2203683
Q6056 or	TR	MN150S-Y	(1)	2203684
Q6060	TR	2SA1962-R	1	2202832
Q6060 or	TR	2SA1962-O	(1)	2202833
Q6060 or	TR	MP150S-P	(1)	2203696
Q6060 or	TR	MP150S-O	(1)	2203693
Q6060 or	TR	MP150S-Y	(1)	2203694
Q6061	TR	2SA1962-R	1	2202832
Q6061 or	TR	2SA1962-O	(1)	2202833
Q6061 or	TR	MP150S-P	(1)	2203696
Q6061 or	TR	MP150S-O	(1)	2203693
Q6061 or	TR	MP150S-Y	(1)	2203694
Q6062	TR	2SA1962-R	1	2202832
Q6062 or	TR	2SA1962-O	(1)	2202833
Q6062 or	TR	MP150S-P	(1)	2203696
Q6062 or	TR	MP150S-O	(1)	2203693
Q6062 or	TR	MP150S-Y	(1)	2203694
Q6063	TR	2SA1962-R	1	2202832
Q6063 or	TR	2SA1962-O	(1)	2202833
Q6063 or	TR	MP150S-P	(1)	2203696
Q6063 or	TR	MP150S-O	(1)	2203693
Q6063 or	TR	MP150S-Y	(1)	2203694
Q6064	TR	2SA1962-R	1	2202832
Q6064 or	TR	2SA1962-O	(1)	2202833
Q6064 or	TR	MP150S-P	(1)	2203696
Q6064 or	TR	MP150S-O	(1)	2203693
Q6064 or	TR	MP150S-Y	(1)	2203694
Q6065	TR	2SA1962-R	1	2202832
Q6065 or	TR	2SA1962-O	(1)	2202833
Q6065 or	TR	MP150S-P	(1)	2203696
Q6065 or	TR	MP150S-O	(1)	2203693
Q6065 or	TR	MP150S-Y	(1)	2203694
Q6066	TR	2SA1962-R	1	2202832

Q6066 or	TR	2SA1962-O	(1)	2202833	
Q6066 or	TR	MP150S-P	(1)	2203696	
Q6066 or	TR	MP150S-O	(1)	2203693	
Q6066 or	TR	MP150S-Y	(1)	2203694	

<Notes>

When replacing the following the transistors, use ones of the same Hfe rank as the original type.

Ref. No. : Q6050 - 6060, Q6051 - 6061, Q6052 - 6062, Q6053 - 6063, Q6054 - 6064, Q6055 - 6065, Q6056 - 6066

T901	P TRANS	NPT-1563D	1	2301920	!, <DD>
T901	P TRANS	NPT-1563M	1	2301921	!, <MA>
U01	**AMPLIFIER PC board ass'y**	NAAF-9142-2F	1	1B187542-2F	<DD>
		NAAF-9142-2G	1	1B187542-2G	<MA>
U02	POWER SUPPLY PC board ass'y	NAPS-9143-2F	1	1B187543-2F	<DD>
		NAPS-9143-2G	1	1B187543-2G	<MA>
U03	THERMAL SENSOR PC board ass'y	NAETC-9144-2F	1	1B187544-2F	<DD>
		NAETC-9144-2G	1	1B187544-2G	<MA>
U04	HOLDER PC board ass'y	NAETC-9145-2F	1	1B187545-2F	<DD>
		NAETC-9145-2G	1	1B187545-2G	<MA>
U06	**DISPLAY PC board ass'y**	NADIS-9163-2F	1	1B187563-2F	<DD>
		NADIS-9163-2G	1	1B187563-2G	<MA>
U07	VOLUME PC board ass'y	NADIS-9164-2F	1	1B187564-2F	<DD>
		NADIS-9164-2G	1	1B187564-2G	<MA>
U08	POWER SUPPLY PC board ass'y	NAPS-9165-2F	1	1B187565-2F	<DD>
		NAPS-9165-2G	1	1B187565-2G	<MA>
U09	POWER SUPPLY PC board ass'y	NAPS-9166-2F	1	1B187566-2F	<DD>
		NAPS-9166-2G	1	1B187566-2G	<MA>
U10	FRONT OPT PC board ass'y	NAETC-9167-2F	1	1B187567-2F	<DD>
		NAETC-9167-2G	1	1B187567-2G	<MA>
U11	HEADPHONE JACK PC board ass'y	NAETC-9168-2F	1	1B187568-2F	<DD>
		NAETC-9168-2G	1	1B187568-2G	<MA>
U12	HOLDER PC board ass'y	NAETC-9169-2F	1	1B187569-2F	<DD>
		NAETC-9169-2G	1	1B187569-2G	<MA>
U13	INLET PC board ass'y	NAETC-9170-2F	1	1B187570-2F	<DD>
		NAETC-9170-2G	1	1B187570-2G	<MA>
U14	RS232 PC board ass'y	NAETC-9171-2F	1	1B187571-2F	<DD>
		NAETC-9171-2G	1	1B187571-2G	<MA>
U15	HOLDER PC board ass'y	NCETC-9172-2F	1	------	NSP
		NCETC-9172-2G	1	------	NSP
U16	HOLDER PC board ass'y	NCETC-9173-2F	1	------	NSP
		NCETC-9173-2G	1	------	NSP
U17	HOLDER PC board ass'y	NCETC-9174-2F	1	------	NSP
		NCETC-9174-2G	1	------	NSP
U18	**DAC AND MICROPROCESSOR PC board ass'y**	NADG-9269-1F	1	1B187569-1F	<DD>
		NADG-9269-1G	1	1B187569-1G	<MA>
U19	VIDEO AND SP TERMINAL PC board ass'y	NAVD-9270-1F	1	1B187570-1F	<DD>
		NAVD-9270-1G	1	1B187570-1G	<MA>
U21	XM PC board ass'y	NADG-9267-1F	1	1B187567-1F	<DD>
U22	E-CONTROL PC board ass'y	NALAN-9268-1F	1	1B187568-1F	<DD>
		NALAN-9268-1G	1	1B187568-1G	<MA>
U23	**DRIVER AMPLIFIER PC board ass'y**	NAAF-8917-3A	1	1B187517-3A	
U24	SPEAKER TERMINAL PC board ass'y	NAETC-8918-3A	1	1B187518-3A	
U25	**DSP AND HDMI PC board ass'y**	NAHDM-9265-1B	1	1B187565-1B	
U011	TUNER UNIT	FAE385-A11US	1	240152	<DD>
U011 or	TUNER UNIT	ENG06507QFUS	(1)	240156	<DD>
U011	TUNER UNIT	ENG07506QFEX	1	240159	<MA>

U011 or	TUNER UNIT	FAE485-E12EX	(1)	240155	<MA>

PC BOARD PARTS LIST

U01 AMPLIFIER PC BOARD(NAAF-9142-2F/2G)
U02 POWER SUPPLY PC BOARD(NAPS-9143-2F/2G)
U03 THERMAL SENSOR PC BOARD(NAETC-9144-2F/2G)
U04 HOLDER PC BOARD(NAETC-9145-2F/2G)

CIRCUIT	PART NAME	DESCRIPTION	Q'TY	PART NO. (SN)	REMARKS
Q5501	IC	R2S15211FP	1	22242297R3	
Q5600	TR	RN1441	1	2215410R2	
Q5601	TR	RN1441	1	2215410R2	
Q5602	TR	RN1441	1	2215410R2	
Q5603	TR	RN1441	1	2215410R2	
Q5604	TR	RN1441	1	2215410R2	
Q5605	TR	RN1441	1	2215410R2	
Q5606	TR	RN1441	1	2215410R2	
Q5607	TR	RN1441	1	2215410R2	
Q5610	TR	RN1441	1	2215410R2	
Q5611	TR	RN1441	1	2215410R2	
Q5612	TR	RN1441	1	2215410R2	
Q5613	TR	RN1441	1	2215410R2	
Q5614	TR	RN1441	1	2215410R2	
Q5615	TR	RN1441	1	2215410R2	
Q5616	TR	RN1441	1	2215410R2	
Q5617	TR	RN1441	1	2215410R2	
Q5630	IC	NJM4580M-D	1	22241448R2	
Q5670	IC	78M12HF(NJM78M12FA)	1	222780125JRC	
Q5670 or	IC	MPC78M12AHF-AZ	(1)	222780125NEC	
Q5670 or	IC	78M12(AN78M12F)	(1)	222780125MAT	
Q5670A	HEAT SINK	RAD-196	1	27160545	
Q5670B	SCREW	3P+10FN(3BC)	1	82143010GR	
Q5670C	TAPE	TAPE(CLOTH-8U)	1	29110082	
Q5671	IC	79M12HF(NJM79M12FA)	1	222790125JRC	
Q5671 or	IC	79M12HF(MPC79M12HF)	(1)	222790125NEC	
Q5671 or	IC	79M12F(AN79M12F)	(1)	222790125MAT	
Q5671B	SCREW	3P+10FN(3BC)	1	82143010GR	
Q5684	TR	2SC1815-GR	1	2211255T	
Q5685	TR	2SA1015-GR	1	2211455T	
Q5700	TR	RN1402	1	2214470R2	
Q5701	TR	RN1402	1	2214470R2	
Q6000	TR	2SC1740S-S	1	2213285T	
Q6001	TR	2SC1740S-S	1	2213285T	
Q6002	TR	2SC1740S-S	1	2213285T	
Q6003	TR	2SC1740S-S	1	2213285T	
Q6004	TR	2SC1740S-S	1	2213285T	
Q6005	TR	2SC1740S-S	1	2213285T	
Q6006	TR	2SC1740S-S	1	2213285T	
Q6010	TR	2SC1740S-S	1	2213285T	
Q6011	TR	2SC1740S-S	1	2213285T	
Q6012	TR	2SC1740S-S	1	2213285T	

Q6013	TR	2SC1740S-S	1	2213285T	
Q6014	TR	2SC1740S-S	1	2213285T	
Q6015	TR	2SC1740S-S	1	2213285T	
Q6016	TR	2SC1740S-S	1	2213285T	
Q6030	TR	2SC5171(ONK_Q)	1	2203010	
Q6030 or	TR	2SC5993-Q_P	(1)	2217161	
Q6031	TR	2SC5171(ONK_Q)	1	2203010	
Q6031 or	TR	2SC5993-Q_P	(1)	2217161	
Q6032	TR	2SC5171(ONK_Q)	1	2203010	
Q6032 or	TR	2SC5993-Q_P	(1)	2217161	
Q6033	TR	2SC5171(ONK_Q)	1	2203010	
Q6033 or	TR	2SC5993-Q_P	(1)	2217161	
Q6034	TR	2SC5171(ONK_Q)	1	2203010	
Q6034 or	TR	2SC5993-Q_P	(1)	2217161	
Q6035	TR	2SC5171(ONK_Q)	1	2203010	
Q6035 or	TR	2SC5993-Q_P	(1)	2217161	
Q6036	TR	2SC5171(ONK_Q)	1	2203010	
Q6036 or	TR	2SC5993-Q_P	(1)	2217161	
Q6040	TR	2SA1930(ONK_Q)	1	2203000	
Q6040 or	TR	2SA2140-Q_P	(1)	2217151	
Q6041	TR	2SA1930(ONK_Q)	1	2203000	
Q6041 or	TR	2SA2140-Q_P	(1)	2217151	
Q6042	TR	2SA1930(ONK_Q)	1	2203000	
Q6042 or	TR	2SA2140-Q_P	(1)	2217151	
Q6043	TR	2SA1930(ONK_Q)	1	2203000	
Q6043 or	TR	2SA2140-Q_P	(1)	2217151	
Q6044	TR	2SA1930(ONK_Q)	1	2203000	
Q6044 or	TR	2SA2140-Q_P	(1)	2217151	
Q6045	TR	2SA1930(ONK_Q)	1	2203000	
Q6045 or	TR	2SA2140-Q_P	(1)	2217151	
Q6046	TR	2SA1930(ONK_Q)	1	2203000	
Q6046 or	TR	2SA2140-Q_P	(1)	2217151	
Q6070	TR	2SC2229-Y(TPE6_F)	1	2211634T	
Q6070 or	TR	2SC2229-O(TPE6_F)	(1)	2211633T	
Q6071	TR	2SC2229-Y(TPE6_F)	1	2211634T	
Q6071 or	TR	2SC2229-O(TPE6_F)	(1)	2211633T	
Q6072	TR	2SC2229-Y(TPE6_F)	1	2211634T	
Q6072 or	TR	2SC2229-O(TPE6_F)	(1)	2211633T	
Q6073	TR	2SC2229-Y(TPE6_F)	1	2211634T	
Q6073 or	TR	2SC2229-O(TPE6_F)	(1)	2211633T	
Q6074	TR	2SC2229-Y(TPE6_F)	1	2211634T	
Q6074 or	TR	2SC2229-O(TPE6_F)	(1)	2211633T	
Q6075	TR	2SC2229-Y(TPE6_F)	1	2211634T	
Q6075 or	TR	2SC2229-O(TPE6_F)	(1)	2211633T	
Q6076	TR	2SC2229-Y(TPE6_F)	1	2211634T	
Q6076 or	TR	2SC2229-O(TPE6_F)	(1)	2211633T	
Q6228	TR	RN1402	1	2214470R2	
Q6380	IC	LM61CIZ	1	22242212	
Q6380A	RETAINER	(PTH)	1	27141884-1	
Q6701	TR	2SC2712-GR	1	2213145R2	
Q6701 or	TR	KTC3875-GR	(1)	2216175R2	
Q6702	TR	2SC2712-GR	1	2213145R2	
Q6702 or	TR	KTC3875-GR	(1)	2216175R2	
Q6703	TR	2SA1163-BL(TE85L_F)	1	2216756R2	

Q6707	TR	2SC2712-GR	1	2213145R2
Q6707 or	TR	KTC3875-GR	(1)	2216175R2
D5300	DIODE	1SS133	1	223163T
D5671	ZENER D	DZ-7.5BSC	1	224850753T
D5671 or	ZENER D	MTZJ7.5C	(1)	224470753T
D5672	ZENER D	DZ-7.5BSC	1	224850753T
D5672 or	ZENER D	MTZJ7.5C	(1)	224470753T
D5700	DIODE	1SS133	1	223163T
D5701	DIODE	1SS133	1	223163T
D5707	C-DIODE	1SS352	1	223234R2
D5707 or	C-DIODE	KDS4148U	(1)	223283R2
D5707 or	C-DIODE	1SS355	(1)	223269R2
D5708	C-DIODE	1SS352	1	223234R2
D5708 or	C-DIODE	KDS4148U	(1)	223283R2
D5708 or	C-DIODE	1SS355	(1)	223269R2
D5717	C-DIODE	1SS352	1	223234R2
D5717 or	C-DIODE	KDS4148U	(1)	223283R2
D5717 or	C-DIODE	1SS355	(1)	223269R2
D5718	C-DIODE	1SS352	1	223234R2
D5718 or	C-DIODE	KDS4148U	(1)	223283R2
D5718 or	C-DIODE	1SS355	(1)	223269R2
D6000	C-DIODE	1SS352	1	223234R2
D6000 or	C-DIODE	KDS4148U	(1)	223283R2
D6000 or	C-DIODE	1SS355	(1)	223269R2
D6001	C-DIODE	1SS352	1	223234R2
D6001 or	C-DIODE	KDS4148U	(1)	223283R2
D6001 or	C-DIODE	1SS355	(1)	223269R2
D6002	C-DIODE	1SS352	1	223234R2
D6002 or	C-DIODE	KDS4148U	(1)	223283R2
D6002 or	C-DIODE	1SS355	(1)	223269R2
D6003	C-DIODE	1SS352	1	223234R2
D6003 or	C-DIODE	KDS4148U	(1)	223283R2
D6003 or	C-DIODE	1SS355	(1)	223269R2
D6004	C-DIODE	1SS352	1	223234R2
D6004 or	C-DIODE	KDS4148U	(1)	223283R2
D6004 or	C-DIODE	1SS355	(1)	223269R2
D6005	C-DIODE	1SS352	1	223234R2
D6005 or	C-DIODE	KDS4148U	(1)	223283R2
D6005 or	C-DIODE	1SS355	(1)	223269R2
D6006	C-DIODE	1SS352	1	223234R2
D6006 or	C-DIODE	KDS4148U	(1)	223283R2
D6006 or	C-DIODE	1SS355	(1)	223269R2
D6010	C-DIODE	1SS352	1	223234R2
D6010 or	C-DIODE	KDS4148U	(1)	223283R2
D6010 or	C-DIODE	1SS355	(1)	223269R2
D6011	C-DIODE	1SS352	1	223234R2
D6011 or	C-DIODE	KDS4148U	(1)	223283R2
D6011 or	C-DIODE	1SS355	(1)	223269R2
D6012	C-DIODE	1SS352	1	223234R2
D6012 or	C-DIODE	KDS4148U	(1)	223283R2
D6012 or	C-DIODE	1SS355	(1)	223269R2
D6013	C-DIODE	1SS352	1	223234R2
D6013 or	C-DIODE	KDS4148U	(1)	223283R2
D6013 or	C-DIODE	1SS355	(1)	223269R2

D6014	C-DIODE	1SS352	1	223234R2
D6014 or	C-DIODE	KDS4148U	(1)	223283R2
D6014 or	C-DIODE	1SS355	(1)	223269R2
D6015	C-DIODE	1SS352	1	223234R2
D6015 or	C-DIODE	KDS4148U	(1)	223283R2
D6015 or	C-DIODE	1SS355	(1)	223269R2
D6016	C-DIODE	1SS352	1	223234R2
D6016 or	C-DIODE	KDS4148U	(1)	223283R2
D6016 or	C-DIODE	1SS355	(1)	223269R2
D6701	C-DIODE	1SS352	1	223234R2
D6701 or	C-DIODE	KDS4148U	(1)	223283R2
D6701 or	C-DIODE	1SS355	(1)	223269R2
D6702	C-DIODE	1SS352	1	223234R2
D6702 or	C-DIODE	KDS4148U	(1)	223283R2
D6702 or	C-DIODE	1SS355	(1)	223269R2
D6703	ZENER D	UDZS3.6B	1	224550360R2
D6704	ZENER D	UDZS3.6B	1	224550360R2
D6901	DIODE	D10XB60H	1	22380337
D6901A	HEAT SINK	RAD-196	1	27160545
D6901B	TAPE	TAPE(CLOTH-8U)	1	29110082
D6901C	SCREW	3P+10FN(3BC)	2	82143010GR
D6902	C-DIODE	1SS352	1	223234R2
D6902 or	C-DIODE	KDS4148U	(1)	223283R2
D6902 or	C-DIODE	1SS355	(1)	223269R2
D6903	DIODE	D10XB60H	1	22380337
D9001	DIODE	RL1N4003	1	22380260T
D9001 or	DIODE	GP104003E	(1)	22380035T
D9002	DIODE	RL1N4003	1	22380260T
D9002 or	DIODE	GP104003E	(1)	22380035T
D9003	DIODE	RL1N4003	1	22380260T
D9003 or	DIODE	GP104003E	(1)	22380035T
D9004	DIODE	RL1N4003	1	22380260T
D9004 or	DIODE	GP104003E	(1)	22380035T
C5008	C-CERA C	CK725F1H-103Z1	1	332151030R1
C5503	TF C	ECQ-B50V-221K	1	374722215T
C5504	TF C	ECQ-B50V-221K	1	374722215T
C5507	C-CERA C	CC725CH1H-221J1	1	342102214R1
C5508	C-CERA C	CC725CH1H-221J1	1	342102214R1
C5509	C-CERA C	CC725CH1H-221J1	1	342102214R1
C5510	C-CERA C	CC725CH1H-221J1	1	342102214R1
C5513	C-CERA C	CC725CH1H-221J1	1	342102214R1
C5514	C-CERA C	CC725CH1H-221J1	1	342102214R1
C5517	C-CERA C	CC725CH1H-221J1	1	342102214R1
C5518	C-CERA C	CC725CH1H-221J1	1	342102214R1
C5519	TF C	ECQ-B50V-221K	1	374722215T
C5520	TF C	ECQ-B50V-221K	1	374722215T
C5521	C-CERA C	CC725CH1H-221J1	1	342102214R1
C5522	C-CERA C	CC725CH1H-221J1	1	342102214R1
C5523	C-CERA C	CC725CH1H-221J1	1	342102214R1
C5524	TF C	ECQ-B50V-221K	1	374722215T
C5525	C-CERA C	CC725CH1H-221J1	1	342102214R1
C5526	C-CERA C	CC725CH1H-221J1	1	342102214R1
C5527	C-CERA C	CC725CH1H-221J1	1	342102214R1
C5528	C-CERA C	CC725CH1H-221J1	1	342102214R1

C5529	C-CERA C	CC725CH1H-221J1	1	342102214R1	
C5530	C-CERA C	CC725CH1H-221J1	1	342102214R1	
C5531	C-CERA C	CC725CH1H-221J1	1	342102214R1	
C5532	C-CERA C	CC725CH1H-221J1	1	342102214R1	
C5533	C-CERA C	CC725CH1H-221J1	1	342102214R1	
C5534	C-CERA C	CC725CH1H-221J1	1	342102214R1	
C5551	UTSP C	CE04W25V-47M(UTSP)	1	397554707T	
C5552	UTSP C	CE04W25V-47M(UTSP)	1	397554707T	
C5553	UTSP C	CE04W25V-47M(UTSP)	1	397554707T	
C5554	UTSP C	CE04W25V-47M(UTSP)	1	397554707T	
C5555	UTSP C	CE04W25V-47M(UTSP)	1	397554707T	
C5556	UTSP C	CE04W25V-47M(UTSP)	1	397554707T	
C5557	UTSP C	CE04W25V-47M(UTSP)	1	397554707T	
C5558	UTSP C	CE04W25V-47M(UTSP)	1	397554707T	
C5559	TF C	ECQ-V50V-474J	1	374724744T	
C5560	TF C	ECQ-V50V-823J	1	374728234T	
C5561	TF C	ECQ-B50V-223J	1	374722234T	
C5562	TF C	ECQ-V50V-474J	1	374724744T	
C5563	TF C	ECQ-V50V-823J	1	374728234T	
C5564	TF C	ECQ-B50V-223J	1	374722234T	
C5565	UTSP C	CE04W25V-47M(UTSP)	1	397554707T	
C5566	UTSP C	CE04W25V-47M(UTSP)	1	397554707T	
C5569	UTSP C	CE04W50V 47M(UTSP)	1	397584707T	
C5570	UTSP C	CE04W50V 47M(UTSP)	1	397584707T	
C5571	UTSP C	CE04W50V 47M(UTSP)	1	397584707T	
C5572	UTSP C	CE04W50V 47M(UTSP)	1	397584707T	
C5573	UTSP C	CE04W50V 47M(UTSP)	1	397584707T	
C5574	UTSP C	CE04W50V 47M(UTSP)	1	397584707T	
C5575	UTSP C	CE04W50V 47M(UTSP)	1	397584707T	
C5576	UTSP C	CE04W50V 47M(UTSP)	1	397584707T	
C5600	UTSP C	CE04W50V 47M(UTSP)	1	397584707T	
C5601	UTSP C	CE04W50V 47M(UTSP)	1	397584707T	
C5602	UTSP C	CE04W50V 47M(UTSP)	1	397584707T	
C5603	UTSP C	CE04W50V 47M(UTSP)	1	397584707T	
C5604	UTSP C	CE04W50V 47M(UTSP)	1	397584707T	
C5605	UTSP C	CE04W50V 47M(UTSP)	1	397584707T	
C5606	UTSP C	CE04W50V 47M(UTSP)	1	397584707T	
C5607	UTSP C	CE04W50V 47M(UTSP)	1	397584707T	
C5608	UTSP C	CE04W50V 47M(UTSP)	1	397584707T	
C5609	UTSP C	CE04W50V 47M(UTSP)	1	397584707T	
C5630	UTSP C	CE04W50V 47M(UTSP)	1	397584707T	
C5631	C-CERA C	CC725CH1H-221J1	1	342102214R1	
C5632	TF C	ECQ-B50V-103J	1	374721034T	
C5666	UTSP C	CE04W25V-220M(UTSP)	1	397552217T	
C5667	UTSP C	CE04W25V-220M(UTSP)	1	397552217T	
C5670	UTSP C	CE04W50V-10M(UTSP)	1	397581007T	
C5671	UTSP C	CE04W50V-10M(UTSP)	1	397581007T	
C5672	UTSP C	CE04W25V-220M(UTSP)	1	397552217T	
C5673	UTSP C	CE04W25V-220M(UTSP)	1	397552217T	
C5674	UTSP C	CE04W16V-470M(UTSP)	1	397544717T	
C5675	UTSP C	CE04W16V-470M(UTSP)	1	397544717T	
C5684	UTSP C	CE04W10V-220M(UTSP)	1	397532217T	
C5685	UTSP C	CE04W10V-220M(UTSP)	1	397532217T	
C5686	UTSP C	CE04W25V-220M(UTSP)	1	397552217T	

C5687	UTSP C	CE04W25V-220M(UTSP)	1	397552217T	
C5700	C-CERA C	CK725F1H-103Z1	1	332151030R1	
C5701	C-CERA C	CC725CH1H-102J1	1	342101024R1	
C5702	C-CERA C	CC725CH1H-102J1	1	342101024R1	
C5703	C-CERA C	CC725CH1H-102J1	1	342101024R1	
C5704	C-CERA C	CC725CH1H-102J1	1	342101024R1	
C5705	C-CERA C	CC725CH1H-102J1	1	342101024R1	
C5706	C-CERA C	CC725CH1H-102J1	1	342101024R1	
C5707	C-CERA C	CC725CH1H-221J1	1	342102214R1	
C5708	C-CERA C	CC725CH1H-221J1	1	342102214R1	
C5711	C-CERA C	CK725F1H-103Z1	1	332151030R1	
C6030	TF C	ECQ-V50V-473J	1	374724734T	
C6031	TF C	ECQ-V50V-473J	1	374724734T	
C6032	TF C	ECQ-V50V-473J	1	374724734T	
C6033	TF C	ECQ-V50V-473J	1	374724734T	
C6034	TF C	ECQ-V50V-473J	1	374724734T	
C6035	TF C	ECQ-V50V-473J	1	374724734T	
C6036	TF C	ECQ-V50V-473J	1	374724734T	
C6040	UTSP C	CE04W50V 47M(UTSP)	1	397584707T	
C6041	UTSP C	CE04W50V 47M(UTSP)	1	397584707T	
C6042	UTSP C	CE04W50V 47M(UTSP)	1	397584707T	
C6043	UTSP C	CE04W50V 47M(UTSP)	1	397584707T	
C6044	UTSP C	CE04W50V 47M(UTSP)	1	397584707T	
C6045	UTSP C	CE04W50V 47M(UTSP)	1	397584707T	
C6046	UTSP C	CE04W50V 47M(UTSP)	1	397584707T	
C6050	TF C	ECQ-B50V-103J	1	374721034T	
C6051	TF C	ECQ-B50V-103J	1	374721034T	
C6052	TF C	ECQ-B50V-103J	1	374721034T	
C6053	TF C	ECQ-B50V-103J	1	374721034T	
C6054	TF C	ECQ-B50V-103J	1	374721034T	
C6055	TF C	ECQ-B50V-103J	1	374721034T	
C6056	TF C	ECQ-B50V-103J	1	374721034T	
C6229	C-CERA C	CK725B1H-103K1	1	332101035R1	
C6230	C-CERA C	CC725CH1H-471J1	1	342104714R1	
C6701	UTSP C	CE04W25V-100M(UTSP)	1	397551017T	
C6703	C-CERA C	CK725F1H-104Z1	1	332151040R1	
C6704	UTSP C	CE04W50V-1M(UTSP)	1	397580107T	
C6706	UTSP C	CE04W50V-22M(UTSP)	1	397582207T	
C6901	ELECT C	CE69W71V-12000MIN	1	3504459	
C6902	ELECT C	CE69W71V-12000MIN	1	3504459	
C6911	C-CERA C	CC725CH1H-102J1	1	342101024R1	
C6912	TF C	ECQ-V100-334J	1	374733344T	
C6913	TF C	ECQ-V100-334J	1	374733344T	
C6915	TF C	ECQ-V50V-104J	1	374721044T	
C6916	TF C	ECQ-V50V-104J	1	374721044T	
C9001	MMT C	MMT50V-334J	1	375523344T	
C9003	UTSP C	CE04W35V-1000M(UTSP)	1	397561027S	
C9004	VR C	CE04W35V-470M(VR)	1	394664717T	
R5001	C-CARBON R	RN72K1J-473JE	1	435034734R1	
R5002	C-CARBON R	RN72K1J-473JE	1	435034734R1	
R5500	C-CARBON R	RN72K1J-331JE	1	435033314R1	
R5503	C-CARBON R	RN72K1J-331JE	1	435033314R1	
R5504	C-CARBON R	RN72K1J-331JE	1	435033314R1	
R5505	C-CARBON R	RN72K1J-331JE	1	435033314R1	

R5506	C-CARBON R	RN72K1J-331JE	1	435033314R1	
R5507	C-CARBON R	RN72K1J-331JE	1	435033314R1	
R5508	C-CARBON R	RN72K1J-331JE	1	435033314R1	
R5509	C-CARBON R	RN72K1J-331JE	1	435033314R1	
R5510	C-CARBON R	RN72K1J-331JE	1	435033314R1	
R5513	C-CARBON R	RN72K1J-331JE	1	435033314R1	
R5514	C-CARBON R	RN72K1J-331JE	1	435033314R1	
R5515	C-CARBON R	RN72K1J-331JE	1	435033314R1	
R5516	C-CARBON R	RN72K1J-331JE	1	435033314R1	
R5517	C-CARBON R	RN72K1J-331JE	1	435033314R1	
R5518	C-CARBON R	RN72K1J-331JE	1	435033314R1	
R5519	C-CARBON R	RN72K1J-331JE	1	435033314R1	
R5520	C-CARBON R	RN72K1J-331JE	1	435033314R1	
R5521	C-CARBON R	RN72K1J-331JE	1	435033314R1	
R5522	C-CARBON R	RN72K1J-331JE	1	435033314R1	
R5523	C-CARBON R	RN72K1J-331JE	1	435033314R1	
R5524	C-CARBON R	RN72K1J-331JE	1	435033314R1	
R5525	C-CARBON R	RN72K1J-331JE	1	435033314R1	
R5526	C-CARBON R	RN72K1J-331JE	1	435033314R1	
R5527	C-CARBON R	RN72K1J-101JE	1	435031014R1	
R5528	C-CARBON R	RN72K1J-101JE	1	435031014R1	
R5529	C-CARBON R	RN72K1J-101JE	1	435031014R1	
R5530	C-CARBON R	RN72K1J-101JE	1	435031014R1	
R5531	C-CARBON R	RN72K1J-101JE	1	435031014R1	
R5532	C-CARBON R	RN72K1J-101JE	1	435031014R1	
R5533	C-CARBON R	RN72K1J-101JE	1	435031014R1	
R5534	C-CARBON R	RN72K1J-101JE	1	435031014R1	
R5537	C-CARBON R	RN72K1J-473JE	1	435034734R1	
R5538	C-CARBON R	RN72K1J-473JE	1	435034734R1	
R5543	C-CARBON R	RN72K1J-224JE	1	435032244R1	
R5544	C-CARBON R	RN72K1J-224JE	1	435032244R1	
R5545	C-CARBON R	RN72K1J-224JE	1	435032244R1	
R5546	C-CARBON R	RN72K1J-224JE	1	435032244R1	
R5547	C-CARBON R	RN72K1J-224JE	1	435032244R1	
R5548	C-CARBON R	RN72K1J-224JE	1	435032244R1	
R5549	C-CARBON R	RN72K1J-224JE	1	435032244R1	
R5550	C-CARBON R	RN72K1J-224JE	1	435032244R1	
R5551	C-CARBON R	RN72K1J-224JE	1	435032244R1	
R5552	C-CARBON R	RN72K1J-224JE	1	435032244R1	
R5553	C-CARBON R	RN72K1J-224JE	1	435032244R1	
R5554	C-CARBON R	RN72K1J-224JE	1	435032244R1	
R5555	C-CARBON R	RN72K1J-224JE	1	435032244R1	
R5556	C-CARBON R	RN72K1J-224JE	1	435032244R1	
R5557	C-CARBON R	RN72K1J-224JE	1	435032244R1	
R5558	C-CARBON R	RN72K1J-224JE	1	435032244R1	
R5559	C-CARBON R	RN72K1J-224JE	1	435032244R1	
R5560	C-CARBON R	RN72K1J-224JE	1	435032244R1	
R5561	C-CARBON R	RN72K1J-224JE	1	435032244R1	
R5562	C-CARBON R	RN72K1J-224JE	1	435032244R1	
R5563	C-CARBON R	RN72K1J-224JE	1	435032244R1	
R5564	C-CARBON R	RN72K1J-224JE	1	435032244R1	
R5565	C-CARBON R	RN72K1J-224JE	1	435032244R1	
R5566	C-CARBON R	RN72K1J-224JE	1	435032244R1	
R5567	C-CARBON R	RN72K1J-223JE	1	435032234R1	

R5568	C-CARBON R	RN72K1J-223JE	1	435032234R1	
R5569	C-CARBON R	RN72K1J-223JE	1	435032234R1	
R5570	C-CARBON R	RN72K1J-223JE	1	435032234R1	
R5571	C-CARBON R	RN72K1J-223JE	1	435032234R1	
R5572	C-CARBON R	RN72K1J-223JE	1	435032234R1	
R5573	C-CARBON R	RN72K1J-223JE	1	435032234R1	
R5574	C-CARBON R	RN72K1J-223JE	1	435032234R1	
R5575	C-CARBON R	RN72K1J-224JE	1	435032244R1	
R5576	C-CARBON R	RN72K1J-224JE	1	435032244R1	
R5577	C-CARBON R	RN72K1J-473JE	1	435034734R1	
R5578	C-CARBON R	RN72K1J-473JE	1	435034734R1	
R5579	C-CARBON R	RN72K1J-224JE	1	435032244R1	
R5580	C-CARBON R	RN72K1J-224JE	1	435032244R1	
R5581	C-CARBON R	RN72K1J-224JE	1	435032244R1	
R5582	C-CARBON R	RN72K1J-224JE	1	435032244R1	
R5583	C-CARBON R	RN72K1J-224JE	1	435032244R1	
R5585	C-CARBON R	RN72K1J-182JE	1	435031824R1	
R5586	C-CARBON R	RN72K1J-182JE	1	435031824R1	
R5587	C-CARBON R	RN72K1J-103JE	1	435031034R1	
R5588	C-CARBON R	RN72K1J-103JE	1	435031034R1	
R5589	CARBON R	R16J-1K	1	417341024T	
R5600	C-CARBON R	RN72K1J-224JE	1	435032244R1	
R5601	C-CARBON R	RN72K1J-224JE	1	435032244R1	
R5602	C-CARBON R	RN72K1J-224JE	1	435032244R1	
R5603	C-CARBON R	RN72K1J-224JE	1	435032244R1	
R5604	C-CARBON R	RN72K1J-224JE	1	435032244R1	
R5605	C-CARBON R	RN72K1J-224JE	1	435032244R1	
R5606	C-CARBON R	RN72K1J-224JE	1	435032244R1	
R5607	C-CARBON R	RN72K1J-224JE	1	435032244R1	
R5608	C-CARBON R	RN72K1J-224JE	1	435032244R1	
R5609	C-CARBON R	RN72K1J-224JE	1	435032244R1	
R5610	C-CARBON R	RN72K1J-271JE	1	435032714R1	
R5611	C-CARBON R	RN72K1J-271JE	1	435032714R1	
R5612	C-CARBON R	RN72K1J-271JE	1	435032714R1	
R5613	C-CARBON R	RN72K1J-271JE	1	435032714R1	
R5614	C-CARBON R	RN72K1J-271JE	1	435032714R1	
R5615	C-CARBON R	RN72K1J-271JE	1	435032714R1	
R5616	C-CARBON R	RN72K1J-271JE	1	435032714R1	
R5617	C-CARBON R	RN72K1J-271JE	1	435032714R1	
R5618	C-CARBON R	RN72K1J-000JE	1	435030004R1	
R5619	C-CARBON R	RN72K1J-000JE	1	435030004R1	
R5620	C-CARBON R	RN72K1J-101JE	1	435031014R1	
R5621	C-CARBON R	RN72K1J-101JE	1	435031014R1	
R5622	C-CARBON R	RN72K1J-101JE	1	435031014R1	
R5623	C-CARBON R	RN72K1J-101JE	1	435031014R1	
R5624	C-CARBON R	RN72K1J-101JE	1	435031014R1	
R5625	C-CARBON R	RN72K1J-101JE	1	435031014R1	
R5626	C-CARBON R	RN72K1J-101JE	1	435031014R1	
R5627	C-CARBON R	RN72K1J-101JE	1	435031014R1	
R5628	CARBON R	R16J-22	1	417342204T	<DD>
R5628	METAL O R	RS1WBJ-680	1	443626814T	<MA>
R5630	C-CARBON R	RN72K1J-221JE	1	435032214R1	
R5631	C-CARBON R	RN72K1J-473JE	1	435034734R1	
R5632	C-CARBON R	RN72K1J-153JE	1	435031534R1	

R5633	C-CARBON R	RN72K1J-122JE	1	435031224R1	
R5634	C-CARBON R	RN72K1J-103JE	1	435031034R1	
R5660	METAL R	RNU1WCJ-1.5	1	453630154T	
R5661	METAL R	RNU1WCJ-1.5	1	453630154T	
R5666	CARBON R	R16J-22	1	417342204T	
R5667	CARBON R	R16J-22	1	417342204T	
R5668	CARBON R	R16J-22	1	417342204T	<DD>
R5668	METAL O R	RS1WBJ-680	1	443626814T	<MA>
R5671	METAL O R	RS1WBJ-12	1	443621204T	
R5672	METAL O R	RS1WBJ-10	1	443621004T	<MA>
R5672	METAL R	RNU1WCJ-8.2	1	453630824T	<DD>
R5674	METAL O R	RS1WBJ-68	1	443626804T	
R5675	METAL O R	RS1WBJ-68	1	443626804T	
R5677	METAL R	RNU1WCJ-1.5	1	453630154T	
R5678	METAL R	RNU1WCJ-2.2	1	453630224T	<DD>
R5678	METAL R	RNU1WCJ-0.47	1	453634794T	<MA>
R5680	C-CARBON R	RN72K1J-224JE	1	435032244R1	
R5681	C-CARBON R	RN72K1J-224JE	1	435032244R1	
R5682	C-CARBON R	RN72K1J-224JE	1	435032244R1	
R5684	CARBON R	R16J-680	1	417346814T	
R5685	CARBON R	R16J-680	1	417346814T	
R5800	C-CARBON R	RN72K1J-000JE	1	435030004R1	
R5801	C-CARBON R	RN72K1J-000JE	1	435030004R1	
R5802	C-CARBON R	RN72K1J-000JE	1	435030004R1	
R5805	C-CARBON R	RN72K1J-000JE	1	435030004R1	
R5806	C-CARBON R	RN72K1J-000JE	1	435030004R1	
R5807	C-CARBON R	RN72K1J-000JE	1	435030004R1	
R5808	C-CARBON R	RN72K1J-000JE	1	435030004R1	
R5809	C-CARBON R	RN72K1J-000JE	1	435030004R1	
R5810	C-CARBON R	RN72K1J-000JE	1	435030004R1	
R5811	C-CARBON R	RN72K1J-000JE	1	435030004R1	
R5812	C-CARBON R	RN72K1J-000JE	1	435030004R1	
R5813	C-CARBON R	RN72K1J-000JE	1	435030004R1	
R5820	C-CARBON R	RN72K1J-000JE	1	435030004R1	
R5822	C-CARBON R	RN72K1J-000JE	1	435030004R1	
R5824	C-CARBON R	RN72K1J-000JE	1	435030004R1	
R5828	C-CARBON R	RN72K1J-000JE	1	435030004R1	
R5829	C-CARBON R	RN72K1J-000JE	1	435030004R1	
R5830	C-CARBON R	RN72K1J-000JE	1	435030004R1	
R5831	C-CARBON R	RN72K1J-000JE	1	435030004R1	
R6000	CARBON R	R16J-5.6K	1	417345624T	
R6001	CARBON R	R16J-5.6K	1	417345624T	
R6002	CARBON R	R16J-5.6K	1	417345624T	
R6003	CARBON R	R16J-5.6K	1	417345624T	
R6004	CARBON R	R16J-5.6K	1	417345624T	
R6005	CARBON R	R16J-5.6K	1	417345624T	
R6006	CARBON R	R16J-5.6K	1	417345624T	
R6010	CARBON R	R16J-3.9K	1	417343924T	
R6011	CARBON R	R16J-3.9K	1	417343924T	
R6012	CARBON R	R16J-3.9K	1	417343924T	
R6013	CARBON R	R16J-3.9K	1	417343924T	
R6014	CARBON R	R16J-3.9K	1	417343924T	
R6015	CARBON R	R16J-3.9K	1	417343924T	
R6016	CARBON R	R16J-3.9K	1	417343924T	

R6020	NF CARBON R	R25J-2.2	1	415470224T	
R6021	NF CARBON R	R25J-2.2	1	415470224T	
R6022	NF CARBON R	R25J-2.2	1	415470224T	
R6023	NF CARBON R	R25J-2.2	1	415470224T	
R6024	NF CARBON R	R25J-2.2	1	415470224T	
R6025	NF CARBON R	R25J-2.2	1	415470224T	
R6026	NF CARBON R	R25J-2.2	1	415470224T	
R6030	CARBON R	R16J-470	1	417344714T	
R6031	CARBON R	R16J-470	1	417344714T	
R6032	CARBON R	R16J-470	1	417344714T	
R6033	CARBON R	R16J-470	1	417344714T	
R6034	CARBON R	R16J-470	1	417344714T	
R6035	CARBON R	R16J-470	1	417344714T	
R6036	CARBON R	R16J-470	1	417344714T	
R6040	TRIM R	N06HR2KBC	1	5210390T	
R6041	TRIM R	N06HR2KBC	1	5210390T	
R6042	TRIM R	N06HR2KBC	1	5210390T	
R6043	TRIM R	N06HR2KBC	1	5210390T	
R6044	TRIM R	N06HR2KBC	1	5210390T	
R6045	TRIM R	N06HR2KBC	1	5210390T	
R6046	TRIM R	N06HR2KBC	1	5210390T	
R6050	CARBON R	R16J-3.3K	1	417343324T	
R6051	CARBON R	R16J-3.3K	1	417343324T	
R6052	CARBON R	R16J-3.3K	1	417343324T	
R6053	CARBON R	R16J-3.3K	1	417343324T	
R6054	CARBON R	R16J-3.3K	1	417343324T	
R6055	CARBON R	R16J-3.3K	1	417343324T	
R6056	CARBON R	R16J-3.3K	1	417343324T	
R6070	NF CARBON R	R25J-82	1	415478204T	
R6071	NF CARBON R	R25J-82	1	415478204T	
R6072	NF CARBON R	R25J-82	1	415478204T	
R6073	NF CARBON R	R25J-120	1	415471214T	
R6074	NF CARBON R	R25J-120	1	415471214T	
R6075	NF CARBON R	R25J-120	1	415471214T	
R6076	NF CARBON R	R25J-120	1	415471214T	
R6080	NF CARBON R	R25J-0.22	1	415472294T	
R6081	NF CARBON R	R25J-0.22	1	415472294T	
R6082	NF CARBON R	R25J-0.22	1	415472294T	
R6083	NF CARBON R	R25J-0.22	1	415472294T	
R6084	NF CARBON R	R25J-0.22	1	415472294T	
R6085	NF CARBON R	R25J-0.22	1	415472294T	
R6086	NF CARBON R	R25J-0.22	1	415472294T	
R6090	NF CARBON R	R25J-0.22	1	415472294T	
R6091	NF CARBON R	R25J-0.22	1	415472294T	
R6092	NF CARBON R	R25J-0.22	1	415472294T	
R6093	NF CARBON R	R25J-0.22	1	415472294T	
R6094	NF CARBON R	R25J-0.22	1	415472294T	
R6095	NF CARBON R	R25J-0.22	1	415472294T	
R6096	NF CARBON R	R25J-0.22	1	415472294T	
R6100	METAL PR	MPR5W+5W 0R22	1	4000233	
R6100 or	METAL PR	RGC55 0.22	(1)	4000132	
R6101	METAL PR	MPR5W+5W 0R22	1	4000233	
R6101 or	METAL PR	RGC55 0.22	(1)	4000132	
R6102	METAL PR	MPR5W+5W 0R22	1	4000233	

R6102 or	METAL PR	RGC55 0.22	(1)	4000132
R6103	METAL PR	MPR5W+5W 0R22	1	4000233
R6103 or	METAL PR	RGC55 0.22	(1)	4000132
R6104	METAL PR	MPR5W+5W 0R22	1	4000233
R6104 or	METAL PR	RGC55 0.22	(1)	4000132
R6105	METAL PR	MPR5W+5W 0R22	1	4000233
R6105 or	METAL PR	RGC55 0.22	(1)	4000132
R6106	METAL PR	MPR5W+5W 0R22	1	4000233
R6106 or	METAL PR	RGC55 0.22	(1)	4000132
R6130	METAL R	RNU1WCJ-5.6	1	453630564T
R6131	METAL R	RNU1WCJ-5.6	1	453630564T
R6132	METAL R	RNU1WCJ-5.6	1	453630564T
R6133	METAL R	RNU1WCJ-5.6	1	453630564T
R6134	METAL R	RNU1WCJ-5.6	1	453630564T
R6135	METAL R	RNU1WCJ-5.6	1	453630564T
R6136	METAL R	RNU1WCJ-5.6	1	453630564T
R6140	C-CARBON R	RN72K1J-223JE	1	435032234R1
R6141	C-CARBON R	RN72K1J-223JE	1	435032234R1
R6142	C-CARBON R	RN72K1J-223JE	1	435032234R1
R6143	C-CARBON R	RN72K1J-223JE	1	435032234R1
R6144	C-CARBON R	RN72K1J-223JE	1	435032234R1
R6145	C-CARBON R	RN72K1J-223JE	1	435032234R1
R6146	C-CARBON R	RN72K1J-223JE	1	435032234R1
R6150	C-CARBON R	RN72K1J-123JE	1	435031234R1
R6151	C-CARBON R	RN72K1J-123JE	1	435031234R1
R6152	C-CARBON R	RN72K1J-123JE	1	435031234R1
R6153	C-CARBON R	RN72K1J-123JE	1	435031234R1
R6154	C-CARBON R	RN72K1J-123JE	1	435031234R1
R6155	C-CARBON R	RN72K1J-123JE	1	435031234R1
R6156	C-CARBON R	RN72K1J-123JE	1	435031234R1
R6160	CARBON R	R16J-33K	1	417343334T
R6161	CARBON R	R16J-33K	1	417343334T
R6162	CARBON R	R16J-33K	1	417343334T
R6163	CARBON R	R16J-33K	1	417343334T
R6164	CARBON R	R16J-33K	1	417343334T
R6165	CARBON R	R16J-33K	1	417343334T
R6166	CARBON R	R16J-33K	1	417343334T
R6170	CARBON R	R16J-47K	1	417344734T
R6171	CARBON R	R16J-47K	1	417344734T
R6172	CARBON R	R16J-47K	1	417344734T
R6173	CARBON R	R16J-47K	1	417344734T
R6174	CARBON R	R16J-47K	1	417344734T
R6175	CARBON R	R16J-47K	1	417344734T
R6176	CARBON R	R16J-47K	1	417344734T
R6180	CARBON R	R16J-47K	1	417344734T
R6181	CARBON R	R16J-47K	1	417344734T
R6182	CARBON R	R16J-47K	1	417344734T
R6183	CARBON R	R16J-47K	1	417344734T
R6184	CARBON R	R16J-47K	1	417344734T
R6185	CARBON R	R16J-47K	1	417344734T
R6186	CARBON R	R16J-47K	1	417344734T
R6190	C-CARBON R	RN72K1J-224JE	1	435032244R1
R6191	C-CARBON R	RN72K1J-224JE	1	435032244R1
R6192	C-CARBON R	RN72K1J-224JE	1	435032244R1

R6193	C-CARBON R	RN72K1J-224JE	1	435032244R1	
R6194	C-CARBON R	RN72K1J-224JE	1	435032244R1	
R6195	C-CARBON R	RN72K1J-224JE	1	435032244R1	
R6196	C-CARBON R	RN72K1J-224JE	1	435032244R1	
R6197	METAL O R	RS1/2WBJ-10	1	443521004T	
R6629	CARBON R	R16J-22	1	417342204T	<DD>
R6629	METAL O R	RS1WBJ-680	1	443626814T	<MA>
R6701	C-CARBON R	RN72K1J-223JE	1	435032234R1	
R6702	C-CARBON R	RN72K1J-103JE	1	435031034R1	
R6704	C-CARBON R	RN72K1J-563JE	1	435035634R1	
R6706	C-CARBON R	RN72K1J-224JE	1	435032244R1	
R6708	C-CARBON R	RN72K1J-333JE	1	435033334R1	
R6709	C-CARBON R	RN72K1J-392JE	1	435033924R1	
R6710	C-CARBON R	RN72K1J-123JE	1	435031234R1	
R6902	C-CARBON R	RN72K1J-102JE	1	435031024R1	
R6903	C-CARBON R	RN72K1J-473JE	1	435034734R1	
RL5400	RELAY	NRL-2P2A-DC24-174	1	25065659	<DD>
RL5400	RELAY	NRL-2P2A-DC12-178	1	25065664	<MA>
RL5700	RELAY	NRL-2P2A-DC24-174	1	25065659	<DD>
RL5700	RELAY	NRL-2P2A-DC12-178	1	25065664	<MA>
RL5701	RELAY	NRL-2P2A-DC24-174	1	25065659	<DD>
RL5701	RELAY	NRL-2P2A-DC12-178	1	25065664	<MA>
RL6901	RELAY	NRL-1P10A-DC12-140	1	25065584	
RL6901A	TAPE	TAPE(CLOTH-16U)	1	29110083	
RL6902	RELAY	NRL-1P10A-DC12-140	1	25065584	
RL6902A	TAPE	TAPE(CLOTH-16U)	1	29110083	
F6901A	FUSE HOLDER	SN5051	1	250113	!
F6901B	FUSE HOLDER	SN5051	1	250113	!
F6902A	FUSE HOLDER	SN5051	1	250113	!
F6902B	FUSE HOLDER	SN5051	1	250113	!
JL5502A	WIRE HOL	NSCT-7P878	1	25051091	<DD>
JL6402A	WIRE HOL	NSCT-3P874	1	25051087	
JL6600A	WIRE HOL	NSCT-7P898	1	25051111	
JL6603A	WIRE HOL	NSCT-9P900	1	25051113	
JL6605A	WIRE HOL	NSCT-7P878	1	25051091	
JL6952A	WIRE HOL	NSCT-4P895	1	25051108	
JL6952B	WIRE HOL	NSCT-4P895	1	25051108	
P301	PLUG	NPLG-8P0963	1	25056013	
P302	PLUG	NPLG-14P0969	1	25056019	
P303	PLUG	NPLG-17P0972	1	25056022	
P304	PLUG	NPLG-3P0958	1	25056008	
P5503	CRIMP AS	CRIMP AS	1	2069955120UL	
P5504	SOCKET AS	NSAS-26P1612	1	2009991020UL	
P5505	TRM(SCREW)	NEJITANSI M3	1	25065425	
P5507	TRM	NTM-1P232(M1700)	1	25060301	
P6000B	PLUG	NPLG-5P0960	1	25056010	
P6001B	PLUG	NPLG-5P0960	1	25056010	
P6002B	PLUG	NPLG-5P0960	1	25056010	
P6003B	PLUG	NPLG-5P0960	1	25056010	
P6004B	PLUG	NPLG-5P0960	1	25056010	
P6005B	PLUG	NPLG-5P0960	1	25056010	
P6006B	PLUG	NPLG-5P0960	1	25056010	
P6011A	RETAINER	(BUS-D)	1	27142035	
P6050	HOLDER	HOLDER(CLAMP)	1	27190540-1	

P6080	PLUG	NPLG-2P29	1	25055038	
P6081	PLUG	NPLG-2P29	1	25055038	
P6082	PLUG	NPLG-2P29	1	25055038	
P6083	PLUG	NPLG-2P29	1	25055038	
P6084	PLUG	NPLG-2P29	1	25055038	
P6085	PLUG	NPLG-2P29	1	25055038	
P6086	PLUG	NPLG-2P29	1	25055038	
P6100	HOLDER	HOLDER(CLAMP)	1	27190540-1	
P6101	HOLDER	(CRAMP) UA-0 V0	1	27190608-1	
P6102	HOLDER	(CRAMP) UA-0 V0	1	27190608-1	
P6900	CRIMP AS	CRIMP AS	1	20799165UL	
P6901	CRIMP AS	CRIMP AS	1	2069925189UL	
P6902	CRIMP AS	CRIMP AS	1	2069925266UL	
P6903	CRIMP AS	CRIMP AS	1	20799163UL	
P6904	CRIMP AS	CRIMP AS	1	20799164UL	
P6910	CRIMP AS	PVCAS-TXSR604	1	20799167UL	
P6991	TRM(SCREW)	NEJITANSI M3	1	25065425	
P7900	ST JACK	LGY2502-0200FC	1	25045696	
P7902	PIN JACK	NPJ-6PDRW394	1	25045583	
P7903	PIN JACK	NPJ-2PDBL249	1	25045424	
P7904	PIN JACK	NPJ-6PDRW394	1	25045583	
P7905	PIN JACK	NPJ-4PDWLRE650	1	25045875	
P7906	PIN JACK	NPJ-4PDGNPT651	1	25045876	
P7907	PIN JACK	NPJ-4PDWLRE650	1	25045875	
P7908	PIN JACK	NPJ-4PDGNPT651	1	25045876	

U06 **DISPLAY PC BOARD (NADIS-9163-2F/2G)**
U07 **VOLUME PC BOARD (NADIS-9164-2F/2G)**
U08 **POWER SUPPLY PC BOARD (NAPS-9165-2F/2G)**
U09 **POWER SUPPLY PC BOARD (NAPS-9166-2F/2G)**
U10 **FRONT OPT PC BOARD (NAETC-9167-2F/2G)**
U11 **HEADPHONE JACK PC BOARD (NAETC-9168-2F/2G)**
U12 **HOLDER PC BOARD (NAETC-9169-2F/2G)**
U13 **INLET PC BOARD (NAETC-9170-2F/2G)**
U14 **RS232 PC BOARD (NAETC-9171-2F/2G)**

CIRCUIT	PART NAME	DESCRIPTION	Q'TY	PART NO. (SN)	REMARKS
U7041	REMO SENS	NJL34H380A	1	241365	
U7351	PHT CP	TORX177L	1	24120127	
Q6310	IC	R2S15211FP	1	22242297R3	
Q6311	IC	ICL3221ECVZ	1	22242268R2	
Q6312	TR	2SB1240-R	1	2213794T	
Q6313	TR	2SB1240-R	1	2213794T	
Q6314	TR	KRC102M	1	2215960T	
Q6314 or	TR	DTC114ES	(1)	2213290T	
Q6315	TR	KRC102M	1	2215960T	
Q6315 or	TR	DTC114ES	(1)	2213290T	
Q6316	TR	2SB1240-R	1	2213794T	
Q6317	TR	KRC102M	1	2215960T	
Q6317 or	TR	DTC114ES	(1)	2213290T	
Q6318	TR	KRA102M	1	2215770T	
Q6318 or	TR	DTA114ES	(1)	2213510T	
Q6319	PHT CP	TLP421(BL_J)	1	24120103	
Q6319 or	PHT CP	PC817X	(1)	24120080	

Q6320	PHT CP	TLP421(BL_J)	1	24120103	
Q6320 or	PHT CP	PC817X	(1)	24120080	
Q6321	TR	RN1241-A(TPE4_F)	1	2213631T	
Q6321 or	TR	RN1241-B	(1)	2213632T	
Q6322	TR	RN1241-A(TPE4_F)	1	2213631T	
Q6322 or	TR	RN1241-B	(1)	2213632T	
Q6323	TR	RN1241-A(TPE4_F)	1	2213631T	
Q6323 or	TR	RN1241-B	(1)	2213632T	
Q6324	TR	RN1241-A(TPE4_F)	1	2213631T	
Q6324 or	TR	RN1241-B	(1)	2213632T	
Q7002	FL TUBE	16-BT-138GNK	1	212268	
Q7002A	HOLDER	(FL)	1	27191222C	
Q7003	IC	M66005-0001AHP	1	22242208R3	
Q7004	TR	2SC2458-GR	1	2212115T	
Q7004 or	TR	2SC1740S-R	(1)	2213284T	
Q7004 or	TR	2SC1740S-S	(1)	2213285T	
Q7005	TR	KRA102M	1	2215770T	
Q7005 or	TR	DTA114ES	(1)	2213510T	
Q7007	TR	KRC102M	1	2215960T	
Q7007 or	TR	DTC114ES	(1)	2213290T	
Q7152	TR	KRC102M	1	2215960T	
Q7152 or	TR	DTC114ES	(1)	2213290T	
Q7401	IC	NJM4580D-D	1	22241112	
Q7402	IC	NJM4580D-D	1	22241112	
Q7403	TR	KRC111M	1	2216320T	
Q7403 or	TR	DTC114TS	(1)	221299T	
Q7404	TR	KRC111M	1	2216320T	
Q7404 or	TR	DTC114TS	(1)	221299T	
Q7405	TR	KRA102M	1	2215770T	<MA>
Q7405 or	TR	DTA114ES	(1)	2213510T	<MA>
D6021	ZENER D	DZ-7.5BSC	1	224850753T	
D6021 or	ZENER D	MTZJ7.5C	(1)	224470753T	
D6023	ZENER D	DZ-7.5BSC	1	224850753T	
D6023 or	ZENER D	MTZJ7.5C	(1)	224470753T	
D6024	DIODE	1SS133	1	223163T	
D6025	DIODE	1SS133	1	223163T	
D6026	DIODE	1SS133	1	223163T	
D6027	DIODE	1SS133	1	223163T	
D6028	DIODE	1SS133	1	223163T	
D6029	DIODE	1SS133	1	223163T	
D7002	ZENER D	DZ-8.2BSC	1	224850823T	
D7002 or	ZENER D	MTZJ8.2C	(1)	224470823T	
D7152	LED	SLI-343URC-TE7	1	225449T	<MA>
D7155	LED	SLR-342MGTE7P	1	225455T	
D7401	ZENER D	MTZJ5.1B	1	224470512T	
D7411	ZENER D	DZ-6.8BSC	1	224850683T	
D7411 or	ZENER D	MTZJ6.8C	(1)	224470683T	
D7412	ZENER D	DZ-6.8BSC	1	224850683T	
D7412 or	ZENER D	MTZJ6.8C	(1)	224470683T	
D7413	LED	SLI-343URC-TE7	1	225449T	<DD>
D7413	LED	SEL2910A-TP6	1	225390T	<MA>
D7414	SPCF D	SIR-34ST3F	1	225456	
D7415	SPCF D	SIR-34ST3F	1	225456	
D911	DIODE	1SS133	1	223163T	

D912	DIODE	1SS133	1	223163T	
D921	DIODE	1SS133	1	223163T	
D922	DIODE	1SS133	1	223163T	
D923	DIODE	1SS133	1	223163T	
D924	DIODE	1SS133	1	223163T	
D925	DIODE	1SS133	1	223163T	
D930	DIODE	1SS133	1	223163T	
D931	DIODE	1SS133	1	223163T	
D933	DIODE	1SS133	1	223163T	
D934	ZENER D	MTZJ5.1B	1	224470512T	
D935	DIODE	1SS133	1	223163T	
L6001	CHOKE COIL	NCH-1561 022K	1	233526K022T	
L7031	CHOKE COIL	NCH-1561 022K	1	233526K022T	
L7201	CHOKE COIL	NCH-1561 022K	1	233526K022T	
L7202	CHOKE COIL	NCH-1561 022K	1	233526K022T	
L7203	CHOKE COIL	NCH-1561 022K	1	233526K022T	
L7351	CHOKE COIL	NCH-1561 022K	1	233526K022T	
L7401	CHOKE COIL	NCH-1561 022K	1	233526K022T	
L7402	CHOKE COIL	NCH-1561 022K	1	233526K022T	
T902	P TRANS	NPT-1520JQ	1	2301812A	!, <DD>
T902	P TRANS	NPT-1520GQ	1	2301813	!, <MA>
C6001	CERA C	CK45F50V-223Z	1	335622230T	
C6002	UTSP C	CE04W50V-1M(UTSP)	1	397580107T	
C6003	UTSP C	CE04W50V-1M(UTSP)	1	397580107T	
C6004	UTSP C	CE04W25V-100M(UTSP)	1	397551017T	
C6005	CERA C	CK45F50V-223Z	1	335622230T	
C6006	UTSP C	CE04W50V-1M(UTSP)	1	397580107T	
C6007	UTSP C	CE04W50V-1M(UTSP)	1	397580107T	
C6016	UTSP C	CE04W25V-47M(UTSP)	1	397554707T	
C6017	UTSP C	CE04W25V-47M(UTSP)	1	397554707T	
C6018	UTSP C	CE04W25V-47M(UTSP)	1	397554707T	
C6019	CERA C	CK45F50V-103Z	1	335621030T	
C6020	UTSP C	CE04W25V-47M(UTSP)	1	397554707T	
C6021	TF C	ECQ-V50V-474J	1	374724744T	
C6022	TF C	ECQ-V50V-823J	1	374728234T	
C6023	TF C	ECQ-B50V-223J	1	374722234T	
C6024	UTSP C	CE04W25V-100M(UTSP)	1	397551017T	
C6026	TF C	ECQ-B50V-223J	1	374722234T	
C6027	TF C	ECQ-V50V-823J	1	374728234T	
C6028	TF C	ECQ-V50V-474J	1	374724744T	
C6029	TF C	ECQ-B50V-102J	1	374721024T	
C6030	UTSP C	CE04W16V-470M(UTSP)	1	397544717T	
C6031	TF C	ECQ-B50V-102J	1	374721024T	
C6032	UTSP C	CE04W16V-470M(UTSP)	1	397544717T	
C6033	CERA C	CK45B50V-102K	1	335321025T	
C7001	CERA C	CK45F50V-223Z	1	335622230T	
C7002	MMT C	MMT50V-104J	1	375521044T	
C7003	CERA C	CC45SL50V-101J	1	345021014T	
C7004	CERA C	CC45SL50V-101J	1	345021014T	
C7005	CERA C	CC45SL50V-101J	1	345021014T	
C7007	CERA C	CC45SL50V-101J	1	345021014T	
C7008	ELECT C	CE04W6.3V-100M	1	355721019T	
C7009	MMT C	MMT50V-104J	1	375521044T	
C7010	CERA C	CK45F50V-223Z	1	335622230T	

C7011	CERA C	CK45F50V-223Z	1	335622230T	
C7012	CERA C	CK45F50V-223Z	1	335622230T	
C7013	ELECT C	CE04W50V-33M	1	355783309T	
C7014	CERA C	CK45F50V-223Z	1	335622230T	
C7015	ELECT C	CE04W16V-100M	1	355741019T	
C7016	CERA C	CK45F50V-223Z	1	335622230T	
C7017	CERA C	CK45F50V-223Z	1	335622230T	
C7021	CERA C	CK45F50V-103Z	1	335621030T	
C7022	CERA C	CK45F50V-103Z	1	335621030T	
C7031	CERA C	CK45F50V-223Z	1	335622230T	
C7032	CERA C	CK45F50V-223Z	1	335622230T	
C7041	ELECT C	CE04W6.3V-100M(S)	1	353721019T	
C7043	CERA C	CK45B50V-102K	1	335321025T	
C7201	TF C	ECQ-B50V-472J	1	374724724T	
C7202	TF C	ECQ-B50V-472J	1	374724724T	
C7203	TF C	ECQ-B50V-102J	1	374721024T	
C7204	TF C	ECQ-B50V-102J	1	374721024T	
C7301	TF C	ECQ-B50V-471J	1	374724714T	
C7302	TF C	ECQ-B50V-102J	1	374721024T	
C7303	MMT C	MMT50V-104J	1	375521044T	
C7304	MMT C	MMT50V-104J	1	375521044T	
C7305	MMT C	MMT50V-104J	1	375521044T	
C7351	CERA C	CK45F50V-223Z	1	335622230T	
C7352	UTSP C	CE04W10V-100M(UTSP)	1	397531017T	
C7401	ELECT C	CE04W16V-10M(S)	1	353741009T	
C7402	CERA C	CC45SL50V-101J	1	345021014T	
C7403	ELECT C	CE04W16V-47M(S)	1	353744709T	
C7404	CERA C	CC45SL50V-330J	1	345023304T	
C7405	ELECT C	CE04W16V-10M(S)	1	353741009T	
C7411	ELECT C	CE04W16V-47M(S)	1	353744709T	
C7412	ELECT C	CE04W16V-47M(S)	1	353744709T	
C7421	CERA C	CC45SL50V-102J	1	345021024T	
C901	IS C	ECQU2A103MLC	1	3800039S	!
C901 or	IS C	RE275V-103M	(1)	3500196S	!
C901 or	IS C	LE103-C3.5	(1)	3800042S	!
C902	TF C	ECQ-V50V-104J	1	374721044T	
C9101	MMT C	MMT50V-104J	1	375521044T	
C911	TF C	ECQ-B50V-102J	1	374721024T	
C921	TF C	ECQ-B50V-223J	1	374722234T	
C922	VR C	CE04W25V-2200M(VR)	1	394652227S	
C930	UTSP C	CE04W25V-100M(UTSP)	1	397551017T	
C933	UTSP C	CE04W50V-4.7M(UTSP)	1	397580477T	
R6111	CARBON R	R16J-10K	1	417341034T	
R6112	CARBON R	R16J-10K	1	417341034T	
R6114	CARBON R	R16J-1K	1	417341024T	
R6115	CARBON R	R16J-1.8K	1	417341824T	
R6116	CARBON R	R16J-1.8K	1	417341824T	
R6117	METAL O R	RS1WBJ-82	1	443628204T	
R6118	METAL O R	RS1WBJ-82	1	443628204T	
R6119	CARBON R	R16J-220K	1	417342244T	
R6120	METAL R	RNU1/4WJ-4.7	1	4500175T	
R6121	CARBON R	R16J-1.2K	1	417341224T	
R6122	METAL R	RNU1/4WJ-4.7	1	4500175T	
R6123	CARBON R	R16J-1.2K	1	417341224T	

R6124	METAL R	RNU1/4WJ-4.7	1	4500175T	
R6125	CARBON R	R16J-1.2K	1	417341224T	
R6126	CARBON R	R16J-220K	1	417342244T	
R6129	CARBON R	R16J-220K	1	417342244T	
R6137	CARBON R	R16J-220K	1	417342244T	
R6138	CARBON R	R16J-100	1	417341014T	
R6147	CARBON R	R16J-100	1	417341014T	
R6148	METAL O R	RS1WBJ-100	1	443621014T	
R6149	CARBON R	R16J-100	1	417341014T	
R6157	CARBON R	R16J-10K	1	417341034T	
R6200	CARBON R	R16J-270	1	417342714T	
R6201	CARBON R	R16J-220K	1	417342244T	
R6202	CARBON R	R16J-220K	1	417342244T	
R6203	CARBON R	R16J-270	1	417342714T	
R6204	CARBON R	R16J-100	1	417341014T	
R6205	CARBON R	R16J-100	1	417341014T	
R6206	CARBON R	R16J-330	1	417343314T	
R6207	CARBON R	R16J-330	1	417343314T	
R6208	CARBON R	R16J-10K	1	417341034T	
R6209	CARBON R	R16J-10K	1	417341034T	
R6210	CARBON R	R16J-10K	1	417341034T	
R6211	CARBON R	R16J-330	1	417343314T	
R6212	CARBON R	R16J-330	1	417343314T	
R6213	CARBON R	R16J-100	1	417341014T	
R6214	CARBON R	R16J-100	1	417341014T	
R6215	CARBON R	R16J-220K	1	417342244T	
R6216	CARBON R	R16J-220K	1	417342244T	
R7001	CARBON R	R16J-100K	1	417341044T	
R7002	CARBON R	R16J-3.3K	1	417343324T	
R7003	CARBON R	R16J-3.3K	1	417343324T	
R7004	CARBON R	R16J-220	1	417342214T	
R7005	CARBON R	R16J-220	1	417342214T	
R7006	CARBON R	R16J-27K	1	417342734T	
R7007	CARBON R	R16J-220	1	417342214T	
R7008	CARBON R	R16J-220	1	417342214T	
R7013	CARBON R	R16J-560	1	417345614T	
R7023	CARBON R	R16J-470	1	417344714T	
R7024	CARBON R	R16J-470	1	417344714T	
R7041	CARBON R	R16J-100	1	417341014T	
R7042	CARBON R	R16J-1K	1	417341024T	
R7101	CARBON R	R16J-330	1	417343314T	
R7102	CARBON R	R16J-470	1	417344714T	
R7103	CARBON R	R16J-820	1	417348214T	
R7104	CARBON R	R16J-1.2K	1	417341224T	
R7105	CARBON R	R16J-2.2K	1	417342224T	
R7107	CARBON R	R16J-330	1	417343314T	
R7108	CARBON R	R16J-470	1	417344714T	
R7109	CARBON R	R16J-560	1	417345614T	
R7110	CARBON R	R16J-820	1	417348214T	
R7111	CARBON R	R16J-1.2K	1	417341224T	
R7112	CARBON R	R16J-2.2K	1	417342224T	
R7113	CARBON R	R16J-3.9K	1	417343924T	
R7114	CARBON R	R16J-12K	1	417341234T	
R7115	CARBON R	R16J-330	1	417343314T	

R7116	CARBON R	R16J-470	1	417344714T	
R7117	CARBON R	R16J-560	1	417345614T	
R7118	CARBON R	R16J-820	1	417348214T	
R7119	CARBON R	R16J-1.2K	1	417341224T	
R7120	CARBON R	R16J-2.2K	1	417342224T	
R7121	CARBON R	R16J-3.9K	1	417343924T	
R7122	CARBON R	R16J-12K	1	417341234T	
R7123	CARBON R	R16J-330	1	417343314T	
R7124	CARBON R	R16J-470	1	417344714T	
R7125	CARBON R	R16J-560	1	417345614T	
R7126	CARBON R	R16J-820	1	417348214T	
R7127	CARBON R	R16J-1.2K	1	417341224T	
R7128	CARBON R	R16J-2.2K	1	417342224T	
R7129	CARBON R	R16J-3.9K	1	417343924T	
R7130	CARBON R	R16J-12K	1	417341234T	
R7151	CARBON R	R16J-1K	1	417341024T	
R7154	CARBON R	R16J-180	1	417341814T	
R7301	CARBON R	R16J-330	1	417343314T	
R7302	CARBON R	R16J-330	1	417343314T	
R7351	CARBON R	R16J-220	1	417342214T	
R7401	CARBON R	R16J-100	1	417341014T	
R7402	CARBON R	R16J-47K	1	417344734T	
R7403	CARBON R	R16J-4.7K	1	417344724T	
R7404	CARBON R	R16J-220	1	417342214T	
R7405	CARBON R	R16J-47K	1	417344734T	
R7406	CARBON R	R16J-330	1	417343314T	
R7407	CARBON R	R16J-1K	1	417341024T	
R7408	CARBON R	R16J-33K	1	417343334T	
R7409	CARBON R	R16J-220	1	417342214T	
R7410	CARBON R	R16J-220	1	417342214T	
R7411	CARBON R	R16J-470	1	417344714T	
R7412	CARBON R	R16J-470	1	417344714T	
R7413	CARBON R	R16J-220K	1	417342244T	
R7414	CARBON R	R16J-100K	1	417341044T	
R7415	CARBON R	R16J-180	1	417341814T	<MA>
R7416	CARBON R	R16J-56K	1	417345634T	
R7417	CARBON R	R16J-56K	1	417345634T	
R9102	METAL R	RNU1/2WCJ-3.3	1	453530334T	
R921	METAL O R	RS1/2WBJ-56	1	443525604T	
R934	CARBON R	R16J-100K	1	417341044T	
RL901	RELAY	NRL-1P10A-DC9-186	1	25065683	!
E7201	CRIMP AS	.	1	2061712080UL	
E7301	RETAINER	MET37-0002	1	27142009T	
E7601	TRM(SCREW)	NEJITANSI M3	1	25065425	
E901	TRM(SCREW)	NEJITANSI M3	1	25065425	
E902	TRM(SCREW)	NEJITANSI M3	1	25065425	
F901C	FUSE HOL	NSCT-1P2031	1	25052133T	!
F901D	FUSE HOL	NSCT-1P2031	1	25052133T	!
F901E	FUSELABEL	10A/125V	1	29362241	!, <DD>
F901E	LABEL	T5AL250V	1	29361938	!, <MA>
F903A	FUSE HOL	NSCT-1P2031	1	25052133T	!, <DD>
F903B	FUSE HOL	NSCT-1P2031	1	25052133T	!, <DD>
F903C	LABEL	5A/125V	1	29360462	!, <DD>
F910A	FUSE HOL	NSCT-1P2031	1	25052133T	!

F910B	FUSE HOL	NSCT-1P2031	1	25052133T	!
F910C	LABEL	5A/125V	1	29360462	!
JL6016B	WIRE TRAP	NPLG-8P591	1	25055629	
JL6017B	WIRE TRAP	NPLG-5P588	1	25055626	
JL6065B	WIRE TRAP	NPLG-7P590	1	25055628	
JL6605A	WIRE HOL	NSCT-5P896	1	25051109	
JL7101A	WIRE HOL	NSCT-9P900	1	25051113	
JL7101B	SOCKET	NSCT-9P101	1	25050273	
JL7351A	WIRE HOL	NSCT-3P894	1	25051107	
JL7351B	SOCKET	NSCT-3P95	1	25050267	
JL7352A	WIRE HOL	NSCT-5P876	1	25051089	
JL7352B	WIRE TRAP	NPLG-5P588	1	25055626	
JL7353A	WIRE HOL	NSCT-3P894	1	25051107	
JL7353B	WIRE HOL	NSCT-3P894	1	25051107	
JL901A	WIRE HOL	NSCT-5P876	1	25051089	
JL9101A	WIRE HOL	NSCT-6P897	1	25051110	
P6011	SOCKET	7906-09FHA	1	25053103	
P6012	ST JACK	HSJ1002-01-6020	1	25045647	
P6013	ST JACK	HSJ1002-01-6020	1	25045647	
P6014	ST JACK	HSJ1002-01-6020	1	25045647	
P6015	PIN JACK	NPJ-2PDBL249	1	25045424	
P701B	SOCKET	NSCT-36P2166	1	25052269	
P702	WS CLAMP	CB-71683(L=50)	1	260261	
P7201	JACK	YKB26-5153	1	25045385	
P7301	PIN JACK	NPJ-7PDB632	1	25045854	
P7401	ST JACK	YKB21-5399N	1	25045853	
P902	AC OUTLET	AC-181-UL-11V	1	25053030	!, <DD>
P907	AC INLET	NPLG-2P913	1	25055960	!
P911	PLUG	NPLG-2P631	1	25055675	!
P911 or	PLUG	1-1123724-2	(1)	25056402	!
P921	CRIMP AS	CRIMP AS	1	206CC45109UL	
P922	CRIMP AS	CRIMP AS	1	206CC45101UL	
S7002	R ENCODE	EVEHD1F3024B	1	25065695W	
S7102	PUSH SW	NPS-111-S681	1	25035718T	
S7104	PUSH SW	NPS-111-S681	1	25035718T	
S7106	PUSH SW	NPS-111-S681	1	25035718T	
S7108	PUSH SW	NPS-111-S681	1	25035718T	
S7112	PUSH SW	NPS-111-S681	1	25035718T	
S7113	PUSH SW	NPS-111-S681	1	25035718T	
S7114	PUSH SW	NPS-111-S681	1	25035718T	
S7116	PUSH SW	NPS-111-S681	1	25035718T	
S7118	PUSH SW	NPS-111-S681	1	25035718T	
S7120	PUSH SW	NPS-111-S681	1	25035718T	
S7122	PUSH SW	NPS-111-S681	1	25035718T	
S7124	PUSH SW	NPS-111-S681	1	25035718T	
S7126	PUSH SW	NPS-111-S681	1	25035718T	
S7128	PUSH SW	NPS-111-S681	1	25035718T	
S7130	PUSH SW	NPS-111-S681	1	25035718T	
S7132	PUSH SW	NPS-111-S681	1	25035718T	
S7136	PUSH SW	NPS-111-S681	1	25035718T	
S7138	PUSH SW	NPS-111-S681	1	25035718T	
S7140	PUSH SW	NPS-111-S681	1	25035718T	
S7142	PUSH SW	NPS-111-S681	1	25035718T	
S7144	PUSH SW	NPS-111-S681	1	25035718T	

S7146	PUSH SW	NPS-111-S681	1	25035718T	
S7148	PUSH SW	NPS-111-S681	1	25035718T	
S7150	PUSH SW	NPS-111-S681	1	25035718T	
S7152	PUSH SW	NPS-111-S681	1	25035718T	
S7154	PUSH SW	NPS-111-S681	1	25035718T	
S7156	PUSH SW	NPS-111-S681	1	25035718T	
S7158	PUSH SW	NPS-111-S681	1	25035718T	
S7160	PUSH SW	NPS-111-S681	1	25035718T	
S7162	PUSH SW	NPS-111-S681	1	25035718T	
S7164	PUSH SW	NPS-111-S681	1	25035718T	
S7166	PUSH SW	NPS-111-S681	1	25035718T	

U18 **DSP PC BOARD(NADG-9269-1F/1G)**
U19 **VIDEO AND SP TERMINAL PC BOARD(NAVD-9270-1F/1G)**
U21 **XM PC BOARD(NADG-9267-1F)**
U22 **E-CONTROL PC BOARD(NALAN-9268-1F/1G)**

CIRCUIT	PART NAME	DESCRIPTION	Q'TY	PART NO. (SN)	REMARKS
U1001	PHT CP	GP1FAV51TK0F	1	24120128	
U1002	PHT CP	GP1FAV51RK0F	1	24120129	
U1002 or	PHT CP	JSR1165-001recieving	(1)	24120143	
U1003	PHT CP	GP1FAV51RK0F	1	24120129	
U1003 or	PHT CP	JSR1165-001recieving	(1)	24120143	
Q101	IC	CS4344-CZZR	1	22242406R2	<DD>
Q1011	IC	TC74VHC157FT	1	22274157ER2TO	
Q102	IC	TA48033AF(TE16L_NQ)	1	22278033DR2TO	<DD>
Q103	IC	BU9450KV-E2	1	22242505R2	<DD>
Q103 or	IC	F2628E-01	(1)	22242436R2	<DD>
Q104	IC	TA48033AF(TE16L_NQ)	1	22278033DR2TO	<DD>
Q105	IC	NJM4580M-D	1	22241448R2	<DD>
Q106	IC	NJM4580M-D	1	22241448R2	<DD>
Q107	IC	TC74VHCT08AFT（EKJ)	1	22274008G1R2TO	<DD>
Q107 or	IC	TC74VHCT08AFT	(1)	22274008GR2TO	<DD>
Q1101	IC	CS42528-CQZR-D	1	22242275R2	
Q1201	IC	CS4398-CZZ(R)	1	22242227R2	
Q1301	IC	NJM4580M-D	1	22241448R2	
Q1401	IC	NJM4580M-D	1	22241448R2	
Q1402	IC	NJM4580M-D	1	22241448R2	
Q1403	IC	NJM4580M-D	1	22241448R2	
Q1404	IC	NJM4580M-D	1	22241448R2	
Q1405	IC	NJM4580M-D	1	22241448R2	
Q1601	IC	NJU7312AM	1	22242210R2	
Q1611	IC	NJM4580M-D	1	22241448R2	
Q1612	IC	NJM4580M-D	1	22241448R2	
Q1701	IC	NJM4580M-D	1	22241448R2	
Q1912	IC	TA48033AF(TE16L_NQ)	1	22278033DR2TO	
Q1921	IC	S-812C56AUA-C3K	1	22242207R2	
Q1931	IC	S-812C33AUA-C2N	1	22242222R2	
Q1941	IC	NJM2860F3-05	1	22242105R2	
Q1942	IC	NJM2860F3-33	1	22242087R2	
Q2001	IC(MAIN MICROPROCESSOR)	M3087BFKBGP(0235)	1	222W0059R302350	
Q2019	TR	RN1404	1	2214490R2	
Q2401	TR	RN1404	1	2214490R2	
Q2402	TR	RN2402	1	2214530R2	

Q2403	TR	RN1404	1	2214490R2	
Q2404	TR	RN2402	1	2214530R2	
Q2405	TR	RN1404	1	2214490R2	
Q2406	TR	RN2402	1	2214530R2	
Q2411	TR	DTC114YKA	1	2216470R2	
Q2412	TR	DTA114YKA	1	2216480R2	
Q2413	TR	DTC114YKA	1	2216470R2	
Q2414	TR	DTA114YKA	1	2216480R2	
Q2501	IC	IS25C64A-2GLI	1	22242385R2	
Q2601	IC	TC74VHC541FT	1	22274541ER2TO	<DD>
Q2601 or	IC	TC74VHC541FT(EKJ)	(1)	22274541E1R2TO	<DD>
Q2602	IC	TC74VHCT08AFT	1	22274008GR2TO	<DD>
Q2602 or	IC	TC74VHCT08AFT（EKJ)	(1)	22274008G1R2TO	<DD>
Q2603	IC	TC74VHCT08AFT	1	22274008GR2TO	
Q2603 or	IC	TC74VHCT08AFT（EKJ)	(1)	22274008G1R2TO	
Q2604	IC	TC74VHCT08AFT	1	22274008GR2TO	
Q2604 or	IC	TC74VHCT08AFT（EKJ)	(1)	22274008G1R2TO	
Q2605	IC	TC74VHCT08AFT	1	22274008GR2TO	
Q2605 or	IC	TC74VHCT08AFT（EKJ)	(1)	22274008G1R2TO	
Q2701	TR	RN1402	1	2214470R2	
Q2801	IC(NETWORK MEMORY)	PIC18F66J60(0237)	1	222W0072R302374	
Q2802	IC	IS25C02-2GLI	1	222W0075R2	
Q2802 or	IC	BR25L020FJ-W	(1)	222W0076R2	
Q2830	IC	SI8008TM	1	22242323R2	
Q4002	IC	AN15881A-VT	1	22242318R3	
Q6601	TR	DTC123JKA	1	2216690R2	
Q6602	TR	DTC123JKA	1	2216690R2	
Q6603	TR	DTC123JKA	1	2216690R2	
Q6604	TR	DTC123JKA	1	2216690R2	
Q9001	TR	2SC2235-Y(TPE6_F)	1	2211654T	
Q9002	TR	RN1405	1	2214500R2	
Q9020	TR	RN1405	1	2214500R2	
Q9021	IC	SI8008TM	1	22242323R2	
Q9023	TR	2SB1068-U-AZ	1	2212855T	
Q9031	IC	7805FA(NJM7805FA)	1	222780054JRC	
Q9031 or	IC	UPC7805AHF-AZ	(1)	222780054NEC	
Q9101	TR	2SB1068-U-AZ	1	2212855T	
Q9102	TR	2SA950-O	1	2211503T	
Q9103	TR	2SC1815-GR	1	2211255T	
Q9104	TR	2SA950-O	1	2211503T	
Q9105	TR	2SC1815-GR	1	2211255T	
Q9221	IC	SI8008TM	1	22242323R2	
Q9231	IC	MPC2905BHF	1	22278005DBNE	
Q9231A	HEAT SINK	RAD-153	1	27160484	
D1701	ZENER D	UDZS6.8B	1	224550680R2	
D1702	ZENER D	UDZS6.8B	1	224550680R2	
D1801	DIODE	RL1N4003	1	22380260T	
D1801 or	DIODE	GP104003E	(1)	22380035T	
D1802	DIODE	RL1N4003	1	22380260T	
D1802 or	DIODE	GP104003E	(1)	22380035T	
D1803	DIODE	RL1N4003	1	22380260T	
D1803 or	DIODE	GP104003E	(1)	22380035T	
D1923	C-DIODE	1SS352	1	223234R2	
D1923 or	C-DIODE	1SS355	(1)	223269R2	

D1924	C-DIODE	1SS352	1	223234R2	
D1924 or	C-DIODE	1SS355	(1)	223269R2	
D2019	C-DIODE	1SS352	1	223234R2	
D2019 or	C-DIODE	1SS355	(1)	223269R2	
D2026	C-DIODE	1SS352	1	223234R2	
D2026 or	C-DIODE	1SS355	(1)	223269R2	
D2027	C-DIODE	1SS352	1	223234R2	
D2027 or	C-DIODE	1SS355	(1)	223269R2	
D2830	C-DIODE	1SS352	1	223234R2	
D2830 or	C-DIODE	1SS355	(1)	223269R2	
D2831	C-DIODE	CRS09(TE85L_Q)	1	223274R2	
D6600	C-DIODE	1SS352	1	223234R2	
D6600 or	C-DIODE	1SS355	(1)	223269R2	
D6603	C-DIODE	1SS352	1	223234R2	
D6603 or	C-DIODE	1SS355	(1)	223269R2	
D6605	C-DIODE	1SS352	1	223234R2	
D6605 or	C-DIODE	1SS355	(1)	223269R2	
D6607	C-DIODE	1SS352	1	223234R2	
D6607 or	C-DIODE	1SS355	(1)	223269R2	
D9002	DIODE	RL1N4003	1	22380260T	
D9002 or	DIODE	GP104003E	(1)	22380035T	
D9005	ZENER D	UDZS36B	1	224553600R2	
D9011	DIODE	D5SBA20	1	22380130	
D9011A	HEAT SINK	RAD-083	1	27160271	
D9012	C-DIODE	1SS352	1	223234R2	
D9012 or	C-DIODE	1SS355	(1)	223269R2	
D9013	C-DIODE	1SS352	1	223234R2	
D9013 or	C-DIODE	1SS355	(1)	223269R2	
D9014	C-DIODE	1SS352	1	223234R2	
D9014 or	C-DIODE	1SS355	(1)	223269R2	
D9015	C-DIODE	1SS352	1	223234R2	
D9015 or	C-DIODE	1SS355	(1)	223269R2	
D9017	C-DIODE	1SS352	1	223234R2	
D9017 or	C-DIODE	1SS355	(1)	223269R2	
D9019	C-DIODE	1SS352	1	223234R2	
D9019 or	C-DIODE	1SS355	(1)	223269R2	
D9020	DIODE	RL1N4003	1	22380260T	
D9020 or	DIODE	GP104003E	(1)	22380035T	
D9021	C-DIODE	CRS09(TE85L_Q)	1	223274R2	
D9024	ZENER D	UDZS5.6B	1	224550560R2	
D9101	C-DIODE	1SS352	1	223234R2	
D9102	C-DIODE	1SS352	1	223234R2	
D9219	C-DIODE	1SS352	1	223234R2	
D9219 or	C-DIODE	1SS355	(1)	223269R2	
D9221	C-DIODE	CRS09(TE85L_Q)	1	223274R2	
L1001	CHOKE COIL	LBC2518T470M	1	231364M470R2	
L101	EMIFIL	BK1608LM182-T	1	230958R1	<DD>
L1011	CHOKE COIL	LBC2518T470M	1	231364M470R2	
L102	CHOKE COIL	LBC2518T2R2M	1	231364M022R2	<DD>
L103	CHOKE COIL	BLM21PG221SN1	1	230949R2	<DD>
L104	CHOKE COIL	LBC2518T2R2M	1	231364M022R2	<DD>
L105	CHOKE COIL	BLM21PG221SN1	1	230949R2	<DD>
L106	CHOKE COIL	BLM21PG221SN1	1	230949R2	<DD>
L1101	CHOKE COIL	LBC2518T4R7M	1	231364M047R2	

L1102	CHOKE COIL	LBC2518T4R7M	1	231364M047R2	
L1103	CHOKE COIL	LBC2518T4R7M	1	231364M047R2	
L1104	CHOKE COIL	LBC2518T4R7M	1	231364M047R2	
L1111	EMIFIL	BK1608LM182-T	1	230958R1	
L1112	EMIFIL	BK1608LM182-T	1	230958R1	
L1113	EMIFIL	BK1608LM182-T	1	230958R1	
L1201	CHOKE COIL	LBC2518T470M	1	231364M470R2	
L1202	CHOKE COIL	LBC2518T470M	1	231364M470R2	
L1211	EMIFIL	BK1608LM182-T	1	230958R1	
L2801	CHOKE COIL	BLM21PG221SN1	1	230949R2	
L2802	CHOKE COIL	BLM21PG221SN1	1	230949R2	
L2830	CHOKE COIL	LBC2518T470M	1	231364M470R2	
L2831	CHOKE COIL	NCH-2541	1	231363K470	
L4001	CHOKE COIL	LBC2518T2R2M	1	231364M022R2	
L4015	CHOKE COIL	LBC2518T4R7M	1	231364M047R2	
L6600	S COIL	S-1.3C	1	231176S	<MA>
L6601	S COIL	S-1.3C	1	231176S	<MA>
L6602	S COIL	S-1.3C	1	231176S	<MA>
L6603	S COIL	S-1.3C	1	231176S	<MA>
L6604	S COIL	S-1.3C	1	231176S	<MA>
L6605	S COIL	S-1.3C	1	231176S	<MA>
L6606	S COIL	S-1.3C	1	231176S	<MA>
L9001	CHOKE COIL	NCH-2541	1	231363K470	
L9201	CHOKE COIL	NCH-2541	1	231363K470	
X101	CRYSTAL	DSX840GA 45.1584MHz	1	3010420R2	<DD>
X101 or	CRYSTAL	FCX-02N 45.1584MHz	(1)	3010421R2	<DD>
X2001	CERA LOCK	CSTCE8M00G55-R0	1	3010416R2	
X2801	CRYSTAL	HC-49USSMD25.00MHz	1	3010444R2	
C1001	UTSP C	CE04W10V-100M(UTSP)	1	397531017T	
C1002	C-CERA C	CK725F1H-104Z1	1	332151040R1	
C1003	C-CERA C	CK725F1H-104Z1	1	332151040R1	
C1004	C-CERA C	CK725F1H-104Z1	1	332151040R1	
C101	UTSP C	CE04W10V-470M(UTSP)	1	397534717T	<DD>
C1011	UTSP C	CE04W10V-100M(UTSP)	1	397531017T	
C1012	C-CERA C	CK725F1H-104Z1	1	332151040R1	
C102	C-CERA C	CK725F1E-104Z1	1	332161040R1	<DD>
C104	ELECT C	CE04W16V-10M(S)	1	353741009T	<DD>
C105	ELECT C	CE04W16V-10M(S)	1	353741009T	<DD>
C106	C-CERA C	CK725F1E-104Z1	1	332161040R1	<DD>
C107	C-CERA C	CK725F1E-104Z1	1	332161040R1	<DD>
C108	C-CERA C	CK725F1E-104Z1	1	332161040R1	<DD>
C109	C-CERA C	CK725F1E-104Z1	1	332161040R1	<DD>
C110	C-CERA C	CK725F1E-104Z1	1	332161040R1	<DD>
C1101	UTSP C	CE04W10V-470M(UTSP)	1	397534717T	
C1102	UTSP C	CE04W10V-470M(UTSP)	1	397534717T	
C1103	C-CERA C	CK725F1H-104Z1	1	332151040R1	
C1104	C-CERA C	CK725F1H-104Z1	1	332151040R1	
C1105	C-CERA C	CC725CH1H-221J1	1	342102214R1	
C1106	UTSP C	CE04W10V-470M(UTSP)	1	397534717T	
C1107	UTSP C	CE04W10V-470M(UTSP)	1	397534717T	
C1108	UTSP C	CE04W10V-100M(UTSP)	1	397531017T	
C1109	C-CERA C	CK725F1H-104Z1	1	332151040R1	
C111	C-CERA C	CK725F1E-104Z1	1	332161040R1	<DD>
C1110	UTSJ C	CE04W25V-47M(UTSJ)	1	398054707T	

C1111	C-CERA C	CK725F1H-104Z1	1	332151040R1	
C1112	C-CERA C	CK725F1H-104Z1	1	332151040R1	
C1113	C-CERA C	CK725B1H-222K1	1	332102225R1	
C1114	C-CERA C	CK725B1H-473K1	1	332104735R1	
C1115	C-CERA C	CK725F1H-104Z1	1	332151040R1	
C1116	C-CERA C	CC725CH1H-330J1	1	342103304R1	
C1117	C-CERA C	CC725CH1H-330J1	1	342103304R1	
C1118	C-CERA C	CC725CH1H-330J1	1	342103304R1	
C112	C-CERA C	CC725CH1H-080D1	1	342100802R1	<DD>
C1120	C-CERA C	CC725CH1H-330J1	1	342103304R1	
C1121	C-CERA C	CK725F1H-104Z1	1	332151040R1	
C1122	C-CERA C	CK725F1H-104Z1	1	332151040R1	
C113	C-CERA C	CK725F1E-104Z1	1	332161040R1	<DD>
C114	C-CERA C	CC725CH1H-040C1	1	342100401R1	<DD>
C115	C-CERA C	CK725B1H-102K1	1	332101025R1	<DD>
C116	C-CERA C	CK725F1E-104Z1	1	332161040R1	<DD>
C117	ELECT C	CE04W6.3V-100M(S)	1	353721019T	<DD>
C118	UTSP C	CE04W10V-470M(UTSP)	1	397534717T	<DD>
C119	ELECT C	CE04W6.3V-100M(S)	1	353721019T	<DD>
C120	C-CERA C	CK725F1E-104Z1	1	332161040R1	<DD>
C1201	UTSP C	CE04W10V-220M(UTSP)	1	397532217T	
C1202	C-CERA C	CK725F1H-104Z1	1	332151040R1	
C1203	UTSP C	CE04W10V-220M(UTSP)	1	397532217T	
C1204	C-CERA C	CK725F1H-104Z1	1	332151040R1	
C1205	UTSP C	CE04W10V-220M(UTSP)	1	397532217T	
C1206	C-CERA C	CK725F1H-104Z1	1	332151040R1	
C1207	UTSP C	CE04W50V-4.7M(UTSP)	1	397580477T	
C1208	C-CERA C	CK725F1H-104Z1	1	332151040R1	
C121	C-CERA C	CK725F1E-104Z1	1	332161040R1	<DD>
C122	C-CERA C	CK725F1E-104Z1	1	332161040R1	<DD>
C123	C-CERA C	CK725F1E-104Z1	1	332161040R1	<DD>
C124	ELECT C	CE04W6.3V-100M(S)	1	353721019T	<DD>
C125	C-CERA C	CK725F1E-104Z1	1	332161040R1	<DD>
C126	C-CERA C	CK725F1E-104Z1	1	332161040R1	<DD>
C127	C-CERA C	CK725F1E-104Z1	1	332161040R1	<DD>
C128	ELECT C	CE04W16V-10M(S)	1	353741009T	<DD>
C129	ELECT C	CE04W16V-10M(S)	1	353741009T	<DD>
C130	C-CERA C	CC725CH1H-821J1	1	342108214R1	<DD>
C1301	C-CERA C	CC725CH1H-101J1	1	342101014R1	
C1302	C-CERA C	CC725CH1H-101J1	1	342101014R1	
C1303	UTSP C	CE04W50V-10M(UTSP)	1	397581007T	
C1304	UTSP C	CE04W50V-10M(UTSP)	1	397581007T	
C1305	UTSP C	CE04W50V-10M(UTSP)	1	397581007T	
C1306	UTSP C	CE04W50V-10M(UTSP)	1	397581007T	
C1307	TF C	ECQ-B50V-222J	1	374722224T	
C1308	TF C	ECQ-B50V-222J	1	374722224T	
C131	C-CERA C	CC725CH1H-821J1	1	342108214R1	<DD>
C1316	C-CERA C	CK725F1H-104Z1	1	332151040R1	
C132	C-CERA C	CC725CH1H-821J1	1	342108214R1	<DD>
C133	C-CERA C	CC725CH1H-821J1	1	342108214R1	<DD>
C135	ELECT C	CE04W16V-100M	1	355741019T	<DD>
C136	ELECT C	CE04W16V-100M	1	355741019T	<DD>
C137	ELECT C	CE04W16V-10M(S)	1	353741009T	<DD>
C138	ELECT C	CE04W16V-10M(S)	1	353741009T	<DD>

C139	C-CERA C	CK725F1E-104Z1	1	332161040R1	<DD>
C140	CERA C	CK725F1H-223Z1	1	332152230R1	<DD>
C1401	TF C	ECQ-B50V-331J	1	374723314T	
C1402	TF C	ECQ-B50V-331J	1	374723314T	
C1403	TF C	ECQ-B50V-331J	1	374723314T	
C1404	TF C	ECQ-B50V-331J	1	374723314T	
C1405	TF C	ECQ-B50V-331J	1	374723314T	
C1406	TF C	ECQ-B50V-331J	1	374723314T	
C1407	TF C	ECQ-V50V-273J	1	374722734T	
C1408	TF C	ECQ-V50V-273J	1	374722734T	
C1409	TF C	ECQ-B50V-331J	1	374723314T	
C1410	TF C	ECQ-B50V-331J	1	374723314T	
C1411	TF C	ECQ-V50V-273J	1	374722734T	
C1412	TF C	ECQ-V50V-273J	1	374722734T	
C1413	C-CERA C	CC725CH1H-331J1	1	342103314R1	
C1414	C-CERA C	CC725CH1H-331J1	1	342103314R1	
C1415	C-CERA C	CC725CH1H-331J1	1	342103314R1	
C1416	C-CERA C	CC725CH1H-331J1	1	342103314R1	
C1417	C-CERA C	CC725CH1H-331J1	1	342103314R1	
C1418	C-CERA C	CC725CH1H-331J1	1	342103314R1	
C1419	C-CERA C	CC725CH1H-331J1	1	342103314R1	
C1420	C-CERA C	CC725CH1H-331J1	1	342103314R1	
C1421	TF C	ECQ-B50V-222J	1	374722224T	
C1422	TF C	ECQ-B50V-222J	1	374722224T	
C1423	TF C	ECQ-B50V-222J	1	374722224T	
C1424	TF C	ECQ-V50V-333J	1	374723334T	
C1425	TF C	ECQ-B50V-222J	1	374722224T	
C1426	TF C	ECQ-V50V-333J	1	374723334T	
C1427	C-CERA C	CK725B1H-222K1	1	332102225R1	
C1428	C-CERA C	CK725B1H-222K1	1	332102225R1	
C1429	C-CERA C	CK725B1H-222K1	1	332102225R1	
C1430	C-CERA C	CK725B1H-222K1	1	332102225R1	
C1521	C-CERA C	CK725F1H-104Z1	1	332151040R1	
C1522	C-CERA C	CK725F1H-104Z1	1	332151040R1	
C1523	C-CERA C	CK725F1H-104Z1	1	332151040R1	
C1524	C-CERA C	CK725F1H-104Z1	1	332151040R1	
C1525	C-CERA C	CK725F1H-104Z1	1	332151040R1	
C1591	VR C	CE04W16V-220M(VR)	1	394642217T	
C1592	VR C	CE04W16V-220M(VR)	1	394642217T	
C1601	UTSP C	CE04W50V-100M(UTSP)	1	397581017T	
C1611	C-CERA C	CC725CH1H-101J1	1	342101014R1	
C1612	C-CERA C	CC725CH1H-101J1	1	342101014R1	
C1613	C-CERA C	CC725CH1H-101J1	1	342101014R1	
C1614	C-CERA C	CC725CH1H-101J1	1	342101014R1	
C1615	UTSP C	CE04W25V-47M(UTSP)	1	397554707T	
C1616	UTSP C	CE04W25V-47M(UTSP)	1	397554707T	
C1701	UTSP C	CE04W25V-47M(UTSP)	1	397554707T	
C1702	UTSP C	CE04W25V-47M(UTSP)	1	397554707T	
C1703	C-CERA C	CC725CH1H-102J1	1	342101024R1	
C1704	C-CERA C	CC725CH1H-102J1	1	342101024R1	
C1705	UTSP C	CE04W25V-47M(UTSP)	1	397554707T	
C1706	UTSP C	CE04W25V-47M(UTSP)	1	397554707T	
C1707	UTSP C	CE04W10V-220M(UTSP)	1	397532217T	
C1708	UTSP C	CE04W10V-220M(UTSP)	1	397532217T	

C1709	TF C	ECQ-B50V-123J	1	374721234T	
C1710	TF C	ECQ-B50V-123J	1	374721234T	
C1711	TF C	ECQ-B50V-392J	1	374723924T	
C1712	TF C	ECQ-B50V-392J	1	374723924T	
C1713	C-CERA C	CC725CH1H-101J1	1	342101014R1	
C1714	C-CERA C	CC725CH1H-101J1	1	342101014R1	
C1715	UTSP C	CE04W50V-10M(UTSP)	1	397581007T	
C1716	UTSP C	CE04W50V-10M(UTSP)	1	397581007T	
C1717	C-CERA C	CC725CH1H-102J1	1	342101024R1	
C1801	UTSP C	CE04W25V-100M(UTSP)	1	397551017T	
C1911	UTSP C	CE04W10V-100M(UTSP)	1	397531017T	
C1912	UTSP C	CE04W10V-100M(UTSP)	1	397531017T	
C1921	VR C	CE04W16V-470M(VR)	1	394644717T	
C1922	C-CERA C	CK725F1H-104Z1	1	332151040R1	
C1923	UTSP C	CE04W10V-100M(UTSP)	1	397531017T	
C1924	UTSP C	CE04W10V-470M(UTSP)	1	397534717T	
C1931	VR C	CE04W16V-470M(VR)	1	394644717T	
C1932	C-CERA C	CK725F1H-104Z1	1	332151040R1	
C1933	UTSP C	CE04W10V-100M(UTSP)	1	397531017T	
C1941	C-CERA C	CK725F1H-104Z1	1	332151040R1	
C1942	C-CERA C	CK725F1H-104Z1	1	332151040R1	
C1943	C-CERA C	CK725B1A-105K1	1	332131055R1	
C1944	C-CERA C	CK725B1A-105K1	1	332131055R1	
C1945	C-CERA C	CK725F1H-104Z1	1	332151040R1	
C1946	C-CERA C	CK725B1A-105K1	1	332131055R1	
C1947	C-CERA C	CK725B1A-105K1	1	332131055R1	
C2008	C-CERA C	CK725B1H-102K1	1	332101025R1	
C2012	C-CERA C	CC725CH1H-101J1	1	342101014R1	
C2019	C-CERA C	CK725F1H-104Z1	1	332151040R1	
C2023	C-CERA C	CK725F1H-104Z1	1	332151040R1	
C2027	C-CERA C	CK725B1H-102K1	1	332101025R1	
C2036	C-CERA C	CC725CH1H-101J1	1	342101014R1	
C2037	C-CERA C	CC725CH1H-101J1	1	342101014R1	
C2039	C-CERA C	CK725F1H-104Z1	1	332151040R1	
C2059	C-CERA C	CK725F1H-104Z1	1	332151040R1	
C2074	C-CERA C	CK725F1H-104Z1	1	332151040R1	
C2091	C-CERA C	CK725F1H-104Z1	1	332151040R1	
C2101	C-CERA C	CK725F1H-104Z1	1	332151040R1	
C2107	C-CERA C	CK725F1H-104Z1	1	332151040R1	
C2109	C-CERA C	CK725F1H-104Z1	1	332151040R1	
C2132	C-CERA C	CK725F1H-104Z1	1	332151040R1	
C2133	C-CERA C	CC725CH1H-101J1	1	342101014R1	
C2134	C-CERA C	CC725CH1H-101J1	1	342101014R1	
C2135	C-CERA C	CC725CH1H-101J1	1	342101014R1	
C2136	C-CERA C	CC725CH1H-101J1	1	342101014R1	
C2139	C-CERA C	CC725CH1H-101J1	1	342101014R1	
C2141	C-CERA C	CC725CH1H-101J1	1	342101014R1	
C2142	C-CERA C	CK725F1H-104Z1	1	332151040R1	
C2143	C-CERA C	CK725F1H-104Z1	1	332151040R1	
C2219	UTSP C	CE04W50V-4.7M(UTSP)	1	397580477T	
C2401	C-CERA C	CK725B1A-105K1	1	332131055R1	
C2402	C-CERA C	CK725B1A-105K1	1	332131055R1	
C2403	C-CERA C	CK725B1A-105K1	1	332131055R1	
C2404	C-CERA C	CK725B1A-105K1	1	332131055R1	

C2405	C-CERA C	CK725B1A-105K1	1	332131055R1	
C2406	C-CERA C	CK725B1A-105K1	1	332131055R1	
C2501	UTSP C	CE04W10V-100M(UTSP)	1	397531017T	
C2502	C-CERA C	CK725F1H-104Z1	1	332151040R1	
C2601	C-CERA C	CK725F1H-104Z1	1	332151040R1	
C2602	C-CERA C	CK725F1H-104Z1	1	332151040R1	
C2603	C-CERA C	CK725F1H-104Z1	1	332151040R1	
C2604	C-CERA C	CK725F1H-104Z1	1	332151040R1	
C2605	C-CERA C	CK725F1H-104Z1	1	332151040R1	
C2801	C-CERA C	CK725F1H-104Z1	1	332151040R1	
C2802	C-CERA C	CK725F1H-103Z1	1	332151030R1	
C2803	C-CERA C	CK725F1H-103Z1	1	332151030R1	
C2805	C-CERA C	CK725F1H-104Z1	1	332151040R1	
C2806	C-CERA C	CK725F1H-104Z1	1	332151040R1	
C2807	C-CERA C	CC732CH1H-150J	1	347341504R1	
C2808	UTSP C	CE04W50V-10M(UTSP)	1	397581007T	
C2809	C-CERA C	CC732CH1H-150J	1	347341504R1	
C2810	C-CERA C	CK725F1H-104Z1	1	332151040R1	
C2811	UTSP C	CE04W10V-100M(UTSP)	1	397531017T	
C2812	C-CERA C	CK725F1H-104Z1	1	332151040R1	
C2815	C-CERA C	CK725F1H-104Z1	1	332151040R1	
C2816	UTSP C	CE04W10V-100M(UTSP)	1	397531017T	
C2830	VR C	CE04W16V-470M(VR)	1	394644717T	
C2831	C-CERA C	CK725F1H-104Z1	1	332151040R1	
C2832	VR C	CE04W6.3V-470M(VR)	1	394624717T	
C2833	C-CERA C	CK725F1H-104Z1	1	332151040R1	
C4001	UTSP C	CE04W50V-10M(UTSP)	1	397581007T	
C4002	UTSP C	CE04W50V-10M(UTSP)	1	397581007T	
C4003	UTSP C	CE04W50V-10M(UTSP)	1	397581007T	
C4004	UTSP C	CE04W50V-10M(UTSP)	1	397581007T	
C4005	UTSP C	CE04W50V-10M(UTSP)	1	397581007T	
C4006	UTSP C	CE04W50V-10M(UTSP)	1	397581007T	
C4007	UTSP C	CE04W50V-10M(UTSP)	1	397581007T	
C4008	UTSP C	CE04W50V-10M(UTSP)	1	397581007T	
C4009	UTSP C	CE04W50V-10M(UTSP)	1	397581007T	
C4010	C-CERA C	CK725F1H-104Z1	1	332151040R1	
C4011	UTSP C	CE04W50V-10M(UTSP)	1	397581007T	
C4012	UTSP C	CE04W50V-10M(UTSP)	1	397581007T	
C4013	C-CERA C	CK725B1H-102K1	1	332101025R1	
C4014	C-CERA C	CK725B1H-102K1	1	332101025R1	
C4015	C-CERA C	CK725B1H-102K1	1	332101025R1	
C4016	C-CERA C	CK725F1H-104Z1	1	332151040R1	
C4017	UTSP C	CE04W50V-10M(UTSP)	1	397581007T	
C4018	UTSP C	CE04W50V-10M(UTSP)	1	397581007T	
C4019	C-CERA C	CK725B1H-102K1	1	332101025R1	
C4020	C-CERA C	CK725B1H-102K1	1	332101025R1	
C4021	C-CERA C	CK725B1H-102K1	1	332101025R1	
C4022	C-CERA C	CK725F1H-104Z1	1	332151040R1	
C4023	UTSP C	CE04W50V-10M(UTSP)	1	397581007T	
C4024	UTSP C	CE04W50V-10M(UTSP)	1	397581007T	
C4025	C-CERA C	CK725F1H-104Z1	1	332151040R1	
C4026	UTSP C	CE04W50V-10M(UTSP)	1	397581007T	
C4027	UTSP C	CE04W50V-10M(UTSP)	1	397581007T	
C4103	VR C	CE04W6.3V-220M(VR)	1	394622217T	

C4104	VR C	CE04W6.3V-220M(VR)	1	394622217T	
C4105	UTSP C	CE04W50V-22M(UTSP)	1	397582207T	
C4106	VR C	CE04W6.3V-1000M(VR)	1	394621027T	
C4107	UTSP C	CE04W50V-22M(UTSP)	1	397582207T	
C4108	VR C	CE04W6.3V-1000M(VR)	1	394621027T	
C4110	C-CERA C	CK725F1H-104Z1	1	332151040R1	
C4111	C-CERA C	CK725F1H-104Z1	1	332151040R1	
C4112	C-CERA C	CK725F1H-104Z1	1	332151040R1	
C4114	VR C	CE04W6.3V-470M(VR)	1	394624717T	
C4116	VR C	CE04W6.3V-470M(VR)	1	394624717T	
C4118	VR C	CE04W6.3V-470M(VR)	1	394624717T	
C4119	VR C	CE04W6.3V-470M(VR)	1	394624717T	
C4121	VR C	CE04W6.3V-470M(VR)	1	394624717T	
C4122	C-CERA C	CK725F1H-104Z1	1	332151040R1	
C4123	UTSP C	CE04W25V-47M(UTSP)	1	397554707T	
C4124	UTSP C	CE04W25V-47M(UTSP)	1	397554707T	
C4125	C-CERA C	CK725F1H-104Z1	1	332151040R1	
C4127	VR C	CE04W6.3V-470M(VR)	1	394624717T	
C4129	VR C	CE04W6.3V-470M(VR)	1	394624717T	
C4131	C-CERA C	CK725F1H-104Z1	1	332151040R1	
C4132	C-CERA C	CK725F1H-104Z1	1	332151040R1	
C4133	VR C	CE04W6.3V-470M(VR)	1	394624717T	
C4134	VR C	CE04W6.3V-470M(VR)	1	394624717T	
C4135	C-CERA C	CK725F1H-104Z1	1	332151040R1	
C4136	UTSP C	CE04W50V-22M(UTSP)	1	397582207T	
C4137	C-CERA C	CK725F1H-104Z1	1	332151040R1	
C4138	C-CERA C	CK725F1H-104Z1	1	332151040R1	
C4139	C-CERA C	CK725F1H-104Z1	1	332151040R1	
C4140	C-CERA C	CK725F1H-104Z1	1	332151040R1	
C4141	UTSP C	CE04W25V-47M(UTSP)	1	397554707T	
C4142	C-CERA C	CC725CH1H-181J1	1	342101814R1	
C4143	C-CERA C	CC725CH1H-181J1	1	342101814R1	
C4144	C-CERA C	CC725CH1H-181J1	1	342101814R1	
C4150	C-CERA C	CK725F1H-104Z1	1	332151040R1	
C4151	UTSP C	CE04W50V-10M(UTSP)	1	397581007T	
C4152	UTSP C	CE04W50V-10M(UTSP)	1	397581007T	
C4153	C-CERA C	CK725F1H-104Z1	1	332151040R1	
C4154	C-CERA C	CC725CH1H-221J1	1	342102214R1	
C4155	C-CERA C	CC725CH1H-221J1	1	342102214R1	
C4158	C-CERA C	CC725CH1H-470J1	1	342104704R1	
C4159	C-CERA C	CC725CH1H-470J1	1	342104704R1	
C4160	C-CERA C	CC725CH1H-470J1	1	342104704R1	
C4161	C-CERA C	CC725CH1H-181J1	1	342101814R1	
C4162	C-CERA C	CC725CH1H-181J1	1	342101814R1	
C4163	C-CERA C	CC725CH1H-181J1	1	342101814R1	
C4166	C-CERA C	CC725CH1H-102J1	1	342101024R1	
C4168	C-CERA C	CC725CH1H-220J1	1	342102204R1	
C4242	C-CERA C	CK725F1H-104Z1	1	332151040R1	
C4243	C-CERA C	CK725F1H-104Z1	1	332151040R1	
C4244	C-CERA C	CK725F1H-104Z1	1	332151040R1	
C6600	TF C	ECQ-B50V-223J	1	374722234T	
C6602	TF C	ECQ-B50V-223J	1	374722234T	
C6603	TF C	ECQ-B50V-223J	1	374722234T	
C6605	TF C	ECQ-B50V-223J	1	374722234T	

C6607	TF C	ECQ-B50V-223J	1	374722234T	
C6640	TF C	ECQ-B50V-103J	1	374721034T	
C6641	TF C	ECQ-B50V-103J	1	374721034T	
C6642	TF C	ECQ-B50V-103J	1	374721034T	
C6643	TF C	ECQ-B50V-103J	1	374721034T	
C6644	TF C	ECQ-B50V-103J	1	374721034T	
C6645	TF C	ECQ-B50V-103J	1	374721034T	
C6646	TF C	ECQ-B50V-103J	1	374721034T	
C6650	TF C	ECQ-B50V-102J	1	374721024T	
C6651	TF C	ECQ-B50V-102J	1	374721024T	
C6652	TF C	ECQ-B50V-102J	1	374721024T	
C6653	TF C	ECQ-B50V-102J	1	374721024T	
C6654	TF C	ECQ-B50V-102J	1	374721024T	
C6655	TF C	ECQ-B50V-102J	1	374721024T	
C6656	TF C	ECQ-B50V-102J	1	374721024T	
C9001	VR C	CE04W63V-470M(VR)	1	394674717S	
C9005	UTSP C	CE04W50V 47M(UTSP)	1	397584707T	
C9006	C-CERA C	CK725F1H-223Z1	1	332152230R1	
C9011	VR C	CE04W16V-10000M(VR)	1	394641037S	
C9012	TF C	ECQ-V50V-334J	1	374723344T	
C9013	UTSP C	CE04W50V-3.3M(UTSP)	1	397580337T	
C9021	VR C	CE04W16V-470M(VR)	1	394644717T	
C9023	UTSP C	CE04W10V-470M(UTSP)	1	397534717T	
C9024	C-CERA C	CK725F1H-223Z1	1	332152230R1	
C9025	UTSP C	CE04W10V-470M(UTSP)	1	397534717T	
C9033	UTSP C	CE04W10V-470M(UTSP)	1	397534717T	
C9035	C-CERA C	CK725F1H-104Z1	1	332151040R1	
C9036	C-CERA C	CK725F1H-104Z1	1	332151040R1	
C9101	VR C	CE04W16V-100M(VR)	1	394641017T	
C9102	VR C	CE04W16V-100M(VR)	1	394641017T	
C9221	VR C	CE04W16V-470M(VR)	1	394644717T	
C9223	UTSP C	CE04W10V-470M(UTSP)	1	397534717T	
C9235	C-CERA C	CK725F1H-104Z1	1	332151040R1	
R1001	C-CARBON R	RN72K1J-221JE	1	435032214R1	
R1002	C-CARBON R	RN72K1J-470JE	1	435034704R1	
R1003	C-CARBON R	RN72K1J-470JE	1	435034704R1	
R101	C-CARBON R	RN72K1J-220JE	1	435032204R1	<DD>
R102	C-CARBON R	RN72K1J-331JE	1	435033314R1	<DD>
R103	C-CARBON R	RN72K1J-331JE	1	435033314R1	<DD>
R104	C-CARBON R	RN72K1J-331JE	1	435033314R1	<DD>
R105	C-CARBON R	RN72K1J-101JE	1	435031014R1	<DD>
R106	C-CARBON R	RN72K1J-220JE	1	435032204R1	<DD>
R107	C-CARBON R	RN72K1J-220JE	1	435032204R1	<DD>
R108	C-CARBON R	RN72K1J-220JE	1	435032204R1	<DD>
R109	C-CARBON R	RN72K1J-220JE	1	435032204R1	<DD>
R110	C-CARBON R	RN72K1J-104JE	1	435031044R1	<DD>
R1101	C-CARBON R	RN72K1J-470JE	1	435034704R1	
R1102	C-CARBON R	RN72K1J-470JE	1	435034704R1	
R1103	C-CARBON R	RN72K1J-470JE	1	435034704R1	
R1104	C-CARBON R	RN72K1J-221JE	1	435032214R1	
R1105	C-CARBON R	RN72K1J-470JE	1	435034704R1	
R1106	C-CARBON R	RN72K1J-221JE	1	435032214R1	
R1107	C-CARBON R	RN72K1J-221JE	1	435032214R1	
R1108	C-CARBON R	RN72K1J-470JE	1	435034704R1	

R1109	C-CARBON R	RN72K1J-221JE	1	435032214R1	
R111	C-CARBON R	RN72K1J-105JE	1	435031054R1	<DD>
R1111	C-CARBON R	RN72K1J-272JE	1	435032724R1	
R1116	C-CARBON R	RN72K1J-331JE	1	435033314R1	
R1117	C-CARBON R	RN72K1J-331JE	1	435033314R1	
R1118	C-CARBON R	RN72K1J-331JE	1	435033314R1	
R1119	C-CARBON R	RN72K1J-331JE	1	435033314R1	
R112	C-CARBON R	RN72K1J-681JE	1	435036814R1	<DD>
R1120	C-CARBON R	RN72K1J-331JE	1	435033314R1	
R1121	C-CARBON R	RN72K1J-470JE	1	435034704R1	
R1122	C-CARBON R	RN72K1J-470JE	1	435034704R1	
R1123	C-CARBON R	RN72K1J-151JE	1	435031514R1	
R1124	C-CARBON R	RN72K1J-470JE	1	435034704R1	
R1125	C-CARBON R	RN72K1J-151JE	1	435031514R1	
R1126	C-CARBON R	RN72K1J-151JE	1	435031514R1	
R1127	C-CARBON R	RN72K1J-470JE	1	435034704R1	
R1128	C-CARBON R	RN72K1J-470JE	1	435034704R1	
R1129	C-CARBON R	RN72K1J-470JE	1	435034704R1	
R113	C-CARBON R	RN72K1J-104JE	1	435031044R1	<DD>
R114	C-CARBON R	RN72K1J-104JE	1	435031044R1	<DD>
R115	C-CARBON R	RN72K1J-104JE	1	435031044R1	<DD>
R116	C-CARBON R	RN72K1J-220JE	1	435032204R1	<DD>
R117	C-CARBON R	RN72K1J-104JE	1	435031044R1	<DD>
R118	C-CARBON R	RN72K1J-102JE	1	435031024R1	<DD>
R119	C-CARBON R	RN72K1J-102JE	1	435031024R1	<DD>
R120	C-CARBON R	RN72K1J-101JE	1	435031014R1	<DD>
R1201	C-CARBON R	RN72K1J-103JE	1	435031034R1	
R1202	C-CARBON R	RN72K1J-103JE	1	435031034R1	
R1203	C-CARBON R	RN72K1J-470JE	1	435034704R1	
R1204	C-CARBON R	RN72K1J-470JE	1	435034704R1	
R1205	C-CARBON R	RN72K1J-470JE	1	435034704R1	
R1206	C-CARBON R	RN72K1J-470JE	1	435034704R1	
R1207	C-CARBON R	RN72K1J-221JE	1	435032214R1	
R1208	C-CARBON R	RN72K1J-221JE	1	435032214R1	
R1209	C-CARBON R	RN72K1J-221JE	1	435032214R1	
R121	C-CARBON R	RN72K1J-220JE	1	435032204R1	<DD>
R1210	C-CARBON R	RN72K1J-221JE	1	435032214R1	
R1211	C-CARBON R	RN72K1J-102JE	1	435031024R1	
R1212	C-CARBON R	RN72K1J-103JE	1	435031034R1	
R122	C-CARBON R	RN72K1J-101JE	1	435031014R1	<DD>
R123	C-CARBON R	RN72K1J-220JE	1	435032204R1	<DD>
R124	C-CARBON R	RN72K1J-104JE	1	435031044R1	<DD>
R125	C-CARBON R	RN72K1J-104JE	1	435031044R1	<DD>
R126	C-CARBON R	RN72K1J-222JE	1	435032224R1	<DD>
R127	C-CARBON R	RN72K1J-222JE	1	435032224R1	<DD>
R128	C-CARBON R	RN72K1J-222JE	1	435032224R1	<DD>
R129	C-CARBON R	RN72K1J-222JE	1	435032224R1	<DD>
R130	C-CARBON R	RN72K1J-332JE	1	435033324R1	<DD>
R1301	C-CARBON R	RN72K1J-103JE	1	435031034R1	
R1302	C-CARBON R	RN72K1J-103JE	1	435031034R1	
R1303	C-CARBON R	RN72K1J-103JE	1	435031034R1	
R1304	C-CARBON R	RN72K1J-103JE	1	435031034R1	
R1305	C-CARBON R	RN72K1J-560JE	1	435035604R1	
R1306	C-CARBON R	RN72K1J-560JE	1	435035604R1	

R1307	C-CARBON R	RN72K1J-560JE	1	435035604R1	
R1308	C-CARBON R	RN72K1J-560JE	1	435035604R1	
R1309	C-CARBON R	RN72K1J-392JE	1	435033924R1	
R131	C-CARBON R	RN72K1J-332JE	1	435033324R1	<DD>
R1310	C-CARBON R	RN72K1J-392JE	1	435033924R1	
R132	C-CARBON R	RN72K1J-472JE	1	435034724R1	<DD>
R133	C-CARBON R	RN72K1J-472JE	1	435034724R1	<DD>
R135	C-CARBON R	RN72K1J-104JE	1	435031044R1	<DD>
R136	C-CARBON R	RN72K1J-104JE	1	435031044R1	<DD>
R137	C-CARBON R	RN72K1J-470JE	1	435034704R1	<DD>
R1401	C-CARBON R	RN72K1J-471JE	1	435034714R1	
R1402	C-CARBON R	RN72K1J-471JE	1	435034714R1	
R1403	C-CARBON R	RN72K1J-471JE	1	435034714R1	
R1404	C-CARBON R	RN72K1J-471JE	1	435034714R1	
R1405	C-CARBON R	RN72K1J-471JE	1	435034714R1	
R1406	C-CARBON R	RN72K1J-471JE	1	435034714R1	
R1407	C-CARBON R	RN72K1J-471JE	1	435034714R1	
R1408	C-CARBON R	RN72K1J-471JE	1	435034714R1	
R1409	C-CARBON R	RN72K1J-471JE	1	435034714R1	
R141	C-CARBON R	RN72K1J-104JE	1	435031044R1	<DD>
R1410	C-CARBON R	RN72K1J-471JE	1	435034714R1	
R1411	C-CARBON R	RN72K1J-471JE	1	435034714R1	
R1412	C-CARBON R	RN72K1J-471JE	1	435034714R1	
R1413	C-CARBON R	RN72K1J-471JE	1	435034714R1	
R1414	C-CARBON R	RN72K1J-471JE	1	435034714R1	
R1415	C-CARBON R	RN72K1J-471JE	1	435034714R1	
R1416	C-CARBON R	RN72K1J-471JE	1	435034714R1	
R1417	C-CARBON R	RN72K1J-000JE	1	435030004R1	
R1418	C-CARBON R	RN72K1J-000JE	1	435030004R1	
R1419	C-CARBON R	RN72K1J-000JE	1	435030004R1	
R142	C-CARBON R	RN72K1J-103JE	1	435031034R1	<DD>
R1420	C-CARBON R	RN72K1J-000JE	1	435030004R1	
R1421	C-CARBON R	RN72K1J-332JE	1	435033324R1	
R1422	C-CARBON R	RN72K1J-332JE	1	435033324R1	
R1423	C-CARBON R	RN72K1J-332JE	1	435033324R1	
R1424	C-CARBON R	RN72K1J-332JE	1	435033324R1	
R1425	C-CARBON R	RN72K1J-332JE	1	435033324R1	
R1426	C-CARBON R	RN72K1J-332JE	1	435033324R1	
R1427	C-CARBON R	RN72K1J-332JE	1	435033324R1	
R1428	C-CARBON R	RN72K1J-332JE	1	435033324R1	
R1429	C-CARBON R	RN72K1J-332JE	1	435033324R1	
R1430	C-CARBON R	RN72K1J-332JE	1	435033324R1	
R1431	C-CARBON R	RN72K1J-332JE	1	435033324R1	
R1432	C-CARBON R	RN72K1J-332JE	1	435033324R1	
R1433	C-CARBON R	RN72K1J-332JE	1	435033324R1	
R1434	C-CARBON R	RN72K1J-332JE	1	435033324R1	
R1435	C-CARBON R	RN72K1J-332JE	1	435033324R1	
R1436	C-CARBON R	RN72K1J-332JE	1	435033324R1	
R1437	C-CARBON R	RN72K1J-562JE	1	435035624R1	
R1438	C-CARBON R	RN72K1J-562JE	1	435035624R1	
R1439	C-CARBON R	RN72K1J-562JE	1	435035624R1	
R1440	C-CARBON R	RN72K1J-562JE	1	435035624R1	
R1441	C-CARBON R	RN72K1J-472JE	1	435034724R1	
R1442	C-CARBON R	RN72K1J-472JE	1	435034724R1	

R1443	C-CARBON R	RN72K1J-472JE	1	435034724R1	
R1444	C-CARBON R	RN72K1J-472JE	1	435034724R1	
R1445	C-CARBON R	RN72K1J-472JE	1	435034724R1	
R1446	C-CARBON R	RN72K1J-472JE	1	435034724R1	
R1447	C-CARBON R	RN72K1J-472JE	1	435034724R1	
R1448	C-CARBON R	RN72K1J-472JE	1	435034724R1	
R1449	C-CARBON R	RN72K1J-472JE	1	435034724R1	
R145	C-CARBON R	RN72K1J-104JE	1	435031044R1	<DD>
R1450	C-CARBON R	RN72K1J-472JE	1	435034724R1	
R1451	C-CARBON R	RN72K1J-472JE	1	435034724R1	
R1452	C-CARBON R	RN72K1J-472JE	1	435034724R1	
R1453	C-CARBON R	RN72K1J-472JE	1	435034724R1	
R1454	C-CARBON R	RN72K1J-472JE	1	435034724R1	
R1455	C-CARBON R	RN72K1J-472JE	1	435034724R1	
R1456	C-CARBON R	RN72K1J-472JE	1	435034724R1	
R1457	C-CARBON R	RN72K1J-472JE	1	435034724R1	
R1458	C-CARBON R	RN72K1J-472JE	1	435034724R1	
R1459	C-CARBON R	RN72K1J-472JE	1	435034724R1	
R1460	C-CARBON R	RN72K1J-472JE	1	435034724R1	
R1461	C-CARBON R	RN72K1J-181JE	1	435031814R1	
R1462	C-CARBON R	RN72K1J-181JE	1	435031814R1	
R1463	C-CARBON R	RN72K1J-181JE	1	435031814R1	
R1464	C-CARBON R	RN72K1J-181JE	1	435031814R1	
R1465	C-CARBON R	RN72K1J-181JE	1	435031814R1	
R1466	C-CARBON R	RN72K1J-181JE	1	435031814R1	
R1467	C-CARBON R	RN72K1J-181JE	1	435031814R1	
R1468	C-CARBON R	RN72K1J-181JE	1	435031814R1	
R1469	C-CARBON R	RN72K1J-181JE	1	435031814R1	
R1470	C-CARBON R	RN72K1J-181JE	1	435031814R1	
R1471	C-CARBON R	RN72K1J-181JE	1	435031814R1	
R1472	C-CARBON R	RN72K1J-181JE	1	435031814R1	
R1473	C-CARBON R	RN72K1J-181JE	1	435031814R1	
R1474	C-CARBON R	RN72K1J-181JE	1	435031814R1	
R1475	C-CARBON R	RN72K1J-181JE	1	435031814R1	
R1476	C-CARBON R	RN72K1J-181JE	1	435031814R1	
R1477	C-CARBON R	RN72K1J-181JE	1	435031814R1	
R1478	C-CARBON R	RN72K1J-181JE	1	435031814R1	
R1479	C-CARBON R	RN72K1J-181JE	1	435031814R1	
R1480	C-CARBON R	RN72K1J-181JE	1	435031814R1	
R1491	C-CARBON R	RN72K1J-000JE	1	435030004R1	
R1492	C-CARBON R	RN72K1J-000JE	1	435030004R1	
R1493	C-CARBON R	RN72K1J-000JE	1	435030004R1	
R1494	C-CARBON R	RN72K1J-000JE	1	435030004R1	
R1495	C-CARBON R	RN72K1J-000JE	1	435030004R1	
R1496	C-CARBON R	RN72K1J-000JE	1	435030004R1	
R1497	C-CARBON R	RN72K1J-000JE	1	435030004R1	
R1498	C-CARBON R	RN72K1J-000JE	1	435030004R1	
R1499	C-CARBON R	RN72K1J-000JE	1	435030004R1	
R1500	C-CARBON R	RN72K1J-000JE	1	435030004R1	
R1591	C-CARBON R	RN72K1J-220JE	1	435032204R1	
R1592	C-CARBON R	RN72K1J-220JE	1	435032204R1	
R1601	C-CARBON R	RN72K1J-103JE	1	435031034R1	
R1602	C-CARBON R	RN72K1J-103JE	1	435031034R1	
R1603	C-CARBON R	RN72K1J-103JE	1	435031034R1	

R1611	C-CARBON R	RN72K1J-103JE	1	435031034R1	
R1612	C-CARBON R	RN72K1J-103JE	1	435031034R1	
R1613	C-CARBON R	RN72K1J-103JE	1	435031034R1	
R1614	C-CARBON R	RN72K1J-103JE	1	435031034R1	
R1615	C-CARBON R	RN72K1J-103JE	1	435031034R1	
R1616	C-CARBON R	RN72K1J-103JE	1	435031034R1	
R1617	C-CARBON R	RN72K1J-103JE	1	435031034R1	
R1618	C-CARBON R	RN72K1J-103JE	1	435031034R1	
R1619	C-CARBON R	RN72K1J-103JE	1	435031034R1	
R1620	C-CARBON R	RN72K1J-103JE	1	435031034R1	
R1621	C-CARBON R	RN72K1J-224JE	1	435032244R1	
R1622	C-CARBON R	RN72K1J-224JE	1	435032244R1	
R1623	C-CARBON R	RN72K1J-123JE	1	435031234R1	
R1624	C-CARBON R	RN72K1J-123JE	1	435031234R1	
R1625	C-CARBON R	RN72K1J-222JE	1	435032224R1	
R1626	C-CARBON R	RN72K1J-222JE	1	435032224R1	
R1627	C-CARBON R	RN72K1J-181JE	1	435031814R1	
R1628	C-CARBON R	RN72K1J-181JE	1	435031814R1	
R1629	C-CARBON R	RN72K1J-152JE	1	435031524R1	
R1630	C-CARBON R	RN72K1J-152JE	1	435031524R1	
R1631	C-CARBON R	RN72K1J-123JE	1	435031234R1	
R1632	C-CARBON R	RN72K1J-123JE	1	435031234R1	
R1633	C-CARBON R	RN72K1J-222JE	1	435032224R1	
R1634	C-CARBON R	RN72K1J-222JE	1	435032224R1	
R1701	METAL O R	RS1/2WBJ-68	1	443526804T	
R1702	METAL O R	RS1/2WBJ-68	1	443526804T	
R1703	C-CARBON R	RN72K1J-331JE	1	435033314R1	
R1704	C-CARBON R	RN72K1J-331JE	1	435033314R1	
R1705	C-CARBON R	RN72K1J-563JE	1	435035634R1	
R1706	C-CARBON R	RN72K1J-563JE	1	435035634R1	
R1707	C-CARBON R	RN72K1J-474JE	1	435034744R1	
R1708	C-CARBON R	RN72K1J-474JE	1	435034744R1	
R1709	C-CARBON R	RN72K1J-561JE	1	435035614R1	
R1710	C-CARBON R	RN72K1J-561JE	1	435035614R1	
R1711	C-CARBON R	RN72K1J-274JE	1	435032744R1	
R1712	C-CARBON R	RN72K1J-274JE	1	435032744R1	
R1713	C-CARBON R	RN72K1J-223JE	1	435032234R1	
R1714	C-CARBON R	RN72K1J-223JE	1	435032234R1	
R1715	C-CARBON R	RN72K1J-122JE	1	435031224R1	
R1716	C-CARBON R	RN72K1J-122JE	1	435031224R1	
R1717	C-CARBON R	RN72K1J-101JE	1	435031014R1	
R1718	C-CARBON R	RN72K1J-101JE	1	435031014R1	
R1801	METAL O R	RS1/2WBJ-10	1	443521004T	
R1906	C-CARBON R	RN72K1J-000JE	1	435030004R1	
R1921	C-CARBON R	RN72K1J-271JE	1	435032714R1	
R1941	C-CARBON R	RN72K1J-101JE	1	435031014R1	
R1942	C-CARBON R	RN72K1J-103JE	1	435031034R1	
R1943	C-CARBON R	RN72K1J-103JE	1	435031034R1	
R2001	C-CARBON R	RN72K1J-470JE	1	435034704R1	
R2002	C-CARBON R	RN72K1J-470JE	1	435034704R1	
R2003	C-CARBON R	RN72K1J-470JE	1	435034704R1	
R2004	C-CARBON R	RN72K1J-221JE	1	435032214R1	
R2005	C-CARBON R	RN72K1J-470JE	1	435034704R1	
R2006	C-CARBON R	RN72K1J-221JE	1	435032214R1	

R2007	C-CARBON R	RN72K1J-470JE	1	435034704R1	
R2008	C-CARBON R	RN72K1J-221JE	1	435032214R1	
R2009	C-CARBON R	RN72K1J-102JE	1	435031024R1	
R2010	C-CARBON R	RN72K1J-102JE	1	435031024R1	
R2011	C-CARBON R	RN72K1J-102JE	1	435031024R1	
R2012	C-CARBON R	RN72K1J-102JE	1	435031024R1	
R2013	C-CARBON R	RN72K1J-221JE	1	435032214R1	
R2014	C-CARBON R	RN72K1J-472JE	1	435034724R1	
R2017	C-CARBON R	RN72K1J-221JE	1	435032214R1	
R2018	C-CARBON R	RN72K1J-221JE	1	435032214R1	
R2024	C-CARBON R	RN72K1J-103JE	1	435031034R1	
R2027	C-CARBON R	RN72K1J-472JE	1	435034724R1	
R2028	C-CARBON R	RN72K1J-221JE	1	435032214R1	
R2029	C-CARBON R	RN72K1J-470JE	1	435034704R1	
R2030	C-CARBON R	RN72K1J-470JE	1	435034704R1	
R2031	C-CARBON R	RN72K1J-470JE	1	435034704R1	
R2032	C-CARBON R	RN72K1J-221JE	1	435032214R1	
R2033	C-CARBON R	RN72K1J-221JE	1	435032214R1	
R2034	C-CARBON R	RN72K1J-470JE	1	435034704R1	
R2035	C-CARBON R	RN72K1J-470JE	1	435034704R1	
R2036	C-CARBON R	RN72K1J-470JE	1	435034704R1	
R2037	C-CARBON R	RN72K1J-470JE	1	435034704R1	
R2038	C-CARBON R	RN72K1J-470JE	1	435034704R1	
R2040	C-CARBON R	RN72K1J-470JE	1	435034704R1	
R2042	C-CARBON R	RN72K1J-470JE	1	435034704R1	
R2043	C-CARBON R	RN72K1J-470JE	1	435034704R1	
R2044	C-CARBON R	RN72K1J-470JE	1	435034704R1	
R2045	C-CARBON R	RN72K1J-470JE	1	435034704R1	
R2046	C-CARBON R	RN72K1J-470JE	1	435034704R1	
R2047	C-CARBON R	RN72K1J-221JE	1	435032214R1	
R2048	C-CARBON R	RN72K1J-470JE	1	435034704R1	
R2049	C-CARBON R	RN72K1J-221JE	1	435032214R1	
R2050	C-CARBON R	RN72K1J-470JE	1	435034704R1	
R2051	C-CARBON R	RN72K1J-470JE	1	435034704R1	
R2052	C-CARBON R	RN72K1J-221JE	1	435032214R1	
R2053	C-CARBON R	RN72K1J-221JE	1	435032214R1	
R2054	C-CARBON R	RN72K1J-103JE	1	435031034R1	
R2055	C-CARBON R	RN72K1J-470JE	1	435034704R1	
R2056	C-CARBON R	RN72K1J-221JE	1	435032214R1	
R2062	C-CARBON R	RN72K1J-470JE	1	435034704R1	
R2063	C-CARBON R	RN72K1J-470JE	1	435034704R1	
R2064	C-CARBON R	RN72K1J-470JE	1	435034704R1	
R2065	C-CARBON R	RN72K1J-103JE	1	435031034R1	
R2066	C-CARBON R	RN72K1J-470JE	1	435034704R1	
R2067	C-CARBON R	RN72K1J-470JE	1	435034704R1	
R2068	C-CARBON R	RN72K1J-470JE	1	435034704R1	
R2069	C-CARBON R	RN72K1J-470JE	1	435034704R1	
R2070	C-CARBON R	RN72K1J-470JE	1	435034704R1	
R2071	C-CARBON R	RN72K1J-470JE	1	435034704R1	
R2072	C-CARBON R	RN72K1J-470JE	1	435034704R1	
R2073	C-CARBON R	RN72K1J-470JE	1	435034704R1	
R2075	C-CARBON R	RN72K1J-221JE	1	435032214R1	
R2077	C-CARBON R	RN72K1J-470JE	1	435034704R1	
R2078	C-CARBON R	RN72K1J-470JE	1	435034704R1	

R2079	C-CARBON R	RN72K1J-221JE	1	435032214R1	
R2080	C-CARBON R	RN72K1J-221JE	1	435032214R1	
R2081	C-CARBON R	RN72K1J-221JE	1	435032214R1	
R2082	C-CARBON R	RN72K1J-221JE	1	435032214R1	
R2083	C-CARBON R	RN72K1J-221JE	1	435032214R1	
R2084	C-CARBON R	RN72K1J-221JE	1	435032214R1	
R2085	C-CARBON R	RN72K1J-470JE	1	435034704R1	
R2086	C-CARBON R	RN72K1J-221JE	1	435032214R1	
R2087	C-CARBON R	RN72K1J-470JE	1	435034704R1	
R2088	C-CARBON R	RN72K1J-221JE	1	435032214R1	
R2089	C-CARBON R	RN72K1J-470JE	1	435034704R1	
R2090	C-CARBON R	RN72K1J-470JE	1	435034704R1	
R2092	C-CARBON R	RN72K1J-221JE	1	435032214R1	
R2094	C-CARBON R	RN72K1J-470JE	1	435034704R1	
R2095	C-CARBON R	RN72K1J-470JE	1	435034704R1	
R2096	C-CARBON R	RN72K1J-470JE	1	435034704R1	
R2097	C-CARBON R	RN72K1J-470JE	1	435034704R1	
R2098	C-CARBON R	RN72K1J-221JE	1	435032214R1	
R2099	C-CARBON R	RN72K1J-221JE	1	435032214R1	
R2100	C-CARBON R	RN72K1J-221JE	1	435032214R1	
R2101	C-CARBON R	RN72K1J-221JE	1	435032214R1	
R2102	C-CARBON R	RN72K1J-221JE	1	435032214R1	
R2103	C-CARBON R	RN72K1J-221JE	1	435032214R1	
R2104	C-CARBON R	RN72K1J-221JE	1	435032214R1	
R2105	C-CARBON R	RN72K1J-470JE	1	435034704R1	
R2106	C-CARBON R	RN72K1J-470JE	1	435034704R1	
R2107	C-CARBON R	RN72K1J-221JE	1	435032214R1	
R2108	C-CARBON R	RN72K1J-470JE	1	435034704R1	
R2109	C-CARBON R	RN72K1J-221JE	1	435032214R1	
R2110	C-CARBON R	RN72K1J-103JE	1	435031034R1	
R2112	C-CARBON R	RN72K1J-103JE	1	435031034R1	
R2113	C-CARBON R	RN72K1J-333JE	1	435033334R1	<MA>
R2114	C-CARBON R	RN72K1J-470JE	1	435034704R1	
R2115	C-CARBON R	RN72K1J-470JE	1	435034704R1	
R2116	C-CARBON R	RN72K1J-470JE	1	435034704R1	
R2117	C-CARBON R	RN72K1J-470JE	1	435034704R1	
R2118	C-CARBON R	RN72K1J-470JE	1	435034704R1	
R2119	C-CARBON R	RN72K1J-102JE	1	435031024R1	
R2120	C-CARBON R	RN72K1J-102JE	1	435031024R1	
R2121	C-CARBON R	RN72K1J-221JE	1	435032214R1	
R2122	C-CARBON R	RN72K1J-470JE	1	435034704R1	
R2123	C-CARBON R	RN72K1J-470JE	1	435034704R1	
R2124	C-CARBON R	RN72K1J-221JE	1	435032214R1	
R2125	C-CARBON R	RN72K1J-470JE	1	435034704R1	
R2126	C-CARBON R	RN72K1J-470JE	1	435034704R1	
R2127	C-CARBON R	RN72K1J-221JE	1	435032214R1	
R2128	C-CARBON R	RN72K1J-221JE	1	435032214R1	
R2129	C-CARBON R	RN72K1J-470JE	1	435034704R1	
R2131	C-CARBON R	RN72K1J-470JE	1	435034704R1	
R2133	C-CARBON R	RN72K1J-470JE	1	435034704R1	
R2134	C-CARBON R	RN72K1J-470JE	1	435034704R1	
R2135	C-CARBON R	RN72K1J-470JE	1	435034704R1	
R2136	C-CARBON R	RN72K1J-470JE	1	435034704R1	
R2137	C-CARBON R	RN72K1J-221JE	1	435032214R1	

R2138	C-CARBON R	RN72K1J-470JE	1	435034704R1	
R2139	C-CARBON R	RN72K1J-470JE	1	435034704R1	
R2141	C-CARBON R	RN72K1J-470JE	1	435034704R1	
R2144	C-CARBON R	RN72K1J-221JE	1	435032214R1	
R2200	C-CARBON R	RN72K1J-103JE	1	435031034R1	
R2206	C-CARBON R	RN72K1J-273JE	1	435032734R1	
R2209	C-CARBON R	RN72K1J-103JE	1	435031034R1	
R2210	C-CARBON R	RN72K1J-103JE	1	435031034R1	
R2211	C-CARBON R	RN72K1J-273JE	1	435032734R1	
R2212	C-CARBON R	RN72K1J-273JE	1	435032734R1	
R2214	C-CARBON R	RN72K1J-103JE	1	435031034R1	
R2216	C-CARBON R	RN72K1J-103JE	1	435031034R1	
R2217	C-CARBON R	RN72K1J-103JE	1	435031034R1	
R2218	C-CARBON R	RN72K1J-103JE	1	435031034R1	
R2219	C-CARBON R	RN72K1J-473JE	1	435034734R1	
R2223	C-CARBON R	RN72K1J-103JE	1	435031034R1	
R2224	C-CARBON R	RN72K1J-103JE	1	435031034R1	
R2225	C-CARBON R	RN72K1J-224JE	1	435032244R1	
R2226	C-CARBON R	RN72K1J-224JE	1	435032244R1	
R2233	C-CARBON R	RN72K1J-103JE	1	435031034R1	
R2236	C-CARBON R	RN72K1J-222JE	1	435032224R1	
R2237	C-CARBON R	RN72K1J-222JE	1	435032224R1	
R2240	C-CARBON R	RN72K1J-103JE	1	435031034R1	
R2248	C-CARBON R	RN72K1J-103JE	1	435031034R1	
R2249	C-CARBON R	RN72K1J-103JE	1	435031034R1	
R2250	C-CARBON R	RN72K1J-103JE	1	435031034R1	
R2251	C-CARBON R	RN72K1J-103JE	1	435031034R1	
R2279	C-CARBON R	RN72K1J-103JE	1	435031034R1	
R2281	C-CARBON R	RN72K1J-103JE	1	435031034R1	
R2283	C-CARBON R	RN72K1J-103JE	1	435031034R1	
R2286	C-CARBON R	RN72K1J-103JE	1	435031034R1	
R2287	C-CARBON R	RN72K1J-103JE	1	435031034R1	
R2288	C-CARBON R	RN72K1J-103JE	1	435031034R1	
R2296	C-CARBON R	RN72K1J-103JE	1	435031034R1	
R2307	C-CARBON R	RN72K1J-103JE	1	435031034R1	
R2309	C-CARBON R	RN72K1J-103JE	1	435031034R1	
R2310	C-CARBON R	RN72K1J-103JE	1	435031034R1	
R2311	C-CARBON R	RN72K1J-000JE	1	435030004R1	
R2313	C-CARBON R	RN72K1J-000JE	1	435030004R1	<DD>
R2313	C-CARBON R	RN72K1J-103JE	1	435031034R1	<MA>
R2319	C-CARBON R	RN72K1J-103JE	1	435031034R1	
R2320	C-CARBON R	RN72K1J-103JE	1	435031034R1	
R2323	C-CARBON R	RN72K1J-103JE	1	435031034R1	
R2324	C-CARBON R	RN72K1J-103JE	1	435031034R1	
R2327	C-CARBON R	RN72K1J-103JE	1	435031034R1	
R2328	C-CARBON R	RN72K1J-103JE	1	435031034R1	
R2333	C-CARBON R	RN72K1J-272JE	1	435032724R1	
R2334	C-CARBON R	RN72K1J-272JE	1	435032724R1	
R2335	C-CARBON R	RN72K1J-272JE	1	435032724R1	
R2336	C-CARBON R	RN72K1J-272JE	1	435032724R1	
R2337	C-CARBON R	RN72K1J-103JE	1	435031034R1	
R2339	C-CARBON R	RN72K1J-222JE	1	435032224R1	
R2341	C-CARBON R	RN72K1J-222JE	1	435032224R1	
R2344	C-CARBON R	RN72K1J-103JE	1	435031034R1	

R2401	C-CARBON R	RN72K1J-222JE	1	435032224R1	
R2402	C-CARBON R	RN72K1J-102JE	1	435031024R1	
R2403	C-CARBON R	RN72K1J-222JE	1	435032224R1	
R2404	C-CARBON R	RN72K1J-102JE	1	435031024R1	
R2405	C-CARBON R	RN72K1J-222JE	1	435032224R1	
R2406	C-CARBON R	RN72K1J-681JE	1	435036814R1	
R2407	C-CARBON R	RN72K1J-103JE	1	435031034R1	
R2408	C-CARBON R	RN72K1J-223JE	1	435032234R1	
R2409	C-CARBON R	RN72K1J-223JE	1	435032234R1	
R2411	C-CARBON R	RN72K1J-101JE	1	435031014R1	
R2412	C-CARBON R	RN72K1J-224JE	1	435032244R1	
R2413	C-CARBON R	RN72K1J-103JE	1	435031034R1	
R2414	C-CARBON R	RN72K1J-101JE	1	435031014R1	
R2420	C-CARBON R	RN72K1J-000JE	1	435030004R1	
R2501	C-CARBON R	RN72K1J-103JE	1	435031034R1	
R2502	C-CARBON R	RN72K1J-103JE	1	435031034R1	
R2701	C-CARBON R	RN72K1J-273JE	1	435032734R1	
R2702	C-CARBON R	RN72K1J-000JE	1	435030004R1	
R2703	C-CARBON R	RN72K1J-221JE	1	435032214R1	
R2704	C-CARBON R	RN72K1J-221JE	1	435032214R1	
R2801	CARBON R	MCR03EZPF49R9(49.9_1%)	1	4100037R2	
R2802	CARBON R	MCR03EZPF49R9(49.9_1%)	1	4100037R2	
R2803	CARBON R	MCR03EZPF49R9(49.9_1%)	1	4100037R2	
R2804	CARBON R	MCR03EZPF49R9(49.9_1%)	1	4100037R2	
R2805	C-CARBON R	RN72K1J-222JE	1	435032224R1	
R2806	C-CARBON R	RN72K1J-331JE	1	435033314R1	
R2807	C-CARBON R	RN72K1J-331JE	1	435033314R1	
R2808	C-CARBON R	RN72K1J-103JE	1	435031034R1	
R2809	C-CARBON R	RN72K1J-471JE	1	435034714R1	
R2810	C-CARBON R	RN72K1J-103JE	1	435031034R1	
R2811	C-CARBON R	RN72K1J-100JE	1	435031004R1	
R2812	C-CARBON R	RN72K1J-100JE	1	435031004R1	
R2826	C-CARBON R	RN72K1J-470JE	1	435034704R1	
R2827	C-CARBON R	RN72K1J-470JE	1	435034704R1	
R2828	C-CARBON R	RN72K1J-470JE	1	435034704R1	
R2829	C-CARBON R	RN72K1J-470JE	1	435034704R1	
R2830	C-CARBON R	RN72K1J-103JE	1	435031034R1	
R2831	C-CARBON R	RN72K1J-102JE	1	435031024R1	
R2832	C-CARBON R	RN72K1J-562JE	1	435035624R1	
R2833	C-CARBON R	RN72K1J-472JE	1	435034724R1	
R2834	C-CARBON R	RN72K1J-392JE	1	435033924R1	
R4001	C-CARBON R	RN72K1J-750JE	1	435037504R1	
R4002	C-CARBON R	RN72K1J-750JE	1	435037504R1	
R4003	C-CARBON R	RN72K1J-750JE	1	435037504R1	
R4004	C-CARBON R	RN72K1J-750JE	1	435037504R1	
R4005	C-CARBON R	RN72K1J-750JE	1	435037504R1	
R4006	C-CARBON R	RN72K1J-750JE	1	435037504R1	
R4007	C-CARBON R	RN72K1J-750JE	1	435037504R1	
R4008	C-CARBON R	RN72K1J-750JE	1	435037504R1	
R4009	C-CARBON R	RN72K1J-750JE	1	435037504R1	
R4010	C-CARBON R	RN72K1J-750JE	1	435037504R1	
R4011	C-CARBON R	RN72K1J-750JE	1	435037504R1	
R4012	C-CARBON R	RN72K1J-750JE	1	435037504R1	
R4016	C-CARBON R	RN72K1J-750JE	1	435037504R1	

R4017	C-CARBON R	RN72K1J-750JE	1	435037504R1	
R4018	C-CARBON R	RN72K1J-750JE	1	435037504R1	
R4019	C-CARBON R	RN72K1J-750JE	1	435037504R1	
R4020	C-CARBON R	RN72K1J-750JE	1	435037504R1	
R4021	C-CARBON R	RN72K1J-750JE	1	435037504R1	
R4022	C-CARBON R	RN72K1J-750JE	1	435037504R1	
R4023	C-CARBON R	RN72K1J-750JE	1	435037504R1	
R4024	C-CARBON R	RN72K1J-750JE	1	435037504R1	
R4025	C-CARBON R	RN72K1J-750JE	1	435037504R1	
R4026	C-CARBON R	RN72K1J-750JE	1	435037504R1	
R4027	C-CARBON R	RN72K1J-750JE	1	435037504R1	
R4028	C-CARBON R	RN72K1J-750JE	1	435037504R1	
R4029	C-CARBON R	RN72K1J-750JE	1	435037504R1	
R4030	C-CARBON R	RN72K1J-750JE	1	435037504R1	
R4136	C-CARBON R	RN72K1J-330JE	1	435033304R1	
R4140	C-CARBON R	RN72K1J-000JE	1	435030004R1	
R4141	C-CARBON R	RN72K1J-000JE	1	435030004R1	
R4142	C-CARBON R	RN72K1J-000JE	1	435030004R1	
R4145	C-CARBON R	RN72K1J-000JE	1	435030004R1	
R4150	C-CARBON R	RN72K1J-000JE	1	435030004R1	
R4151	C-CARBON R	RN72K1J-000JE	1	435030004R1	
R4152	C-CARBON R	RN72K1J-000JE	1	435030004R1	
R4153	C-CARBON R	RN72K1J-000JE	1	435030004R1	
R4154	C-CARBON R	RN72K1J-000JE	1	435030004R1	
R4155	C-CARBON R	RN72K1J-000JE	1	435030004R1	
R4156	C-CARBON R	RN72K1J-000JE	1	435030004R1	
R4157	C-CARBON R	RN72K1J-000JE	1	435030004R1	
R4158	C-CARBON R	RN72K1J-000JE	1	435030004R1	
R4201	C-CARBON R	RN72K1J-750JE	1	435037504R1	
R4202	C-CARBON R	RN72K1J-750JE	1	435037504R1	
R4203	C-CARBON R	RN72K1J-750JE	1	435037504R1	
R4204	C-CARBON R	RN72K1J-104JE	1	435031044R1	
R4205	C-CARBON R	RN72K1J-104JE	1	435031044R1	
R4206	C-CARBON R	RN72K1J-104JE	1	435031044R1	
R4210	C-CARBON R	RN72K1J-104JE	1	435031044R1	
R4211	C-CARBON R	RN72K1J-104JE	1	435031044R1	
R4212	C-CARBON R	RN72K1J-104JE	1	435031044R1	
R4213	C-CARBON R	RN72K1J-104JE	1	435031044R1	
R4214	C-CARBON R	RN72K1J-104JE	1	435031044R1	
R4215	C-CARBON R	RN72K1J-104JE	1	435031044R1	
R4221	C-CARBON R	RN72K1J-000JE	1	435030004R1	
R4225	C-CARBON R	RN72K1J-000JE	1	435030004R1	
R4226	C-CARBON R	RN72K2E-022JE	1	435220224R1	
R4227	C-CARBON R	RN72K2E-022JE	1	435220224R1	
R4228	C-CARBON R	RN72K1J-750JE	1	435037504R1	
R4229	C-CARBON R	RN72K1J-750JE	1	435037504R1	
R4230	C-CARBON R	RN72K1J-750JE	1	435037504R1	
R6600	C-CARBON R	RN72K2E-220JE	1	435222204R1	<MA>
R6601	C-CARBON R	RN72K2E-220JE	1	435222204R1	<MA>
R6602	C-CARBON R	RN72K2E-220JE	1	435222204R1	<MA>
R6603	C-CARBON R	RN72K2E-220JE	1	435222204R1	<MA>
R6604	C-CARBON R	RN72K2E-220JE	1	435222204R1	<MA>
R6605	C-CARBON R	RN72K2E-220JE	1	435222204R1	<MA>
R6606	C-CARBON R	RN72K2E-220JE	1	435222204R1	<MA>

R6610	C-CARBON R	RN72K2E-220JE	1	435222204R1	<MA>
R6611	C-CARBON R	RN72K2E-220JE	1	435222204R1	<MA>
R6612	C-CARBON R	RN72K2E-220JE	1	435222204R1	<MA>
R6613	C-CARBON R	RN72K2E-220JE	1	435222204R1	<MA>
R6614	C-CARBON R	RN72K2E-220JE	1	435222204R1	<MA>
R6615	C-CARBON R	RN72K2E-220JE	1	435222204R1	<MA>
R6616	C-CARBON R	RN72K2E-220JE	1	435222204R1	<MA>
R6690	METAL R	RNU1/2WCJ-3.9	1	453530394T	
R6691	METAL O R	RS1/2WBJ-390	1	443523914T	
R6992	METAL O R	RS1/2WBJ-390	1	443523914T	
R9003	C-CARBON R	RN72K1J-392JE	1	435033924R1	
R9004	C-CARBON R	RN72K1J-333JE	1	435033334R1	
R9005	METAL R	RNU1/4WJ-22	1	4500183T	
R9006	C-CARBON R	RN72K1J-392JE	1	435033924R1	
R9008	C-CARBON R	RN72K1J-392JE	1	435033924R1	
R9010	METAL O R	RS1/2WBJ-22	1	443522204T	
R9011	METAL R	RNU1/2WCJ-4.7	1	453530474T	
R9012	C-CARBON R	RN72K1J-010JE	1	435030104R1	
R9013	C-CARBON R	RN72K1J-010JE	1	435030104R1	
R9014	C-CARBON R	RN72K1J-104JE	1	435031044R1	
R9017	C-CARBON R	RN72K1J-000JE	1	435030004R1	
R9020	C-CARBON R	RN72K1J-682JE	1	435036824R1	
R9021	C-CARBON R	RN72K1J-102JE	1	435031024R1	
R9022	C-CARBON R	RN72K1J-473JE	1	435034734R1	
R9024	C-CARBON R	RN72K1J-152JE	1	435031524R1	
R9028	METAL R	RNU1/2WCJ-0.47	1	453534794T	
R9029	METAL R	RNU1/2WCJ-0.22	1	453532294T	
R9030	METAL R	RNU1/2WCJ-0.22	1	453532294T	
R9036	METAL R	RNU1/2WCJ-0.47	1	453534794T	<DD>
R9040	C-CARBON R	RN72K1J-102JE	1	435031024R1	
R9041	C-CARBON R	RN72K1J-392JE	1	435033924R1	
R9042	C-CARBON R	RN72K1J-562JE	1	435035624R1	
R9043	C-CARBON R	RN72K1J-823JE	1	435038234R1	
R9101	C-CARBON R	RN72K1J-223JE	1	435032234R1	
R9102	C-CARBON R	RN72K1J-272JE	1	435032724R1	
R9103	C-CARBON R	RN72K1J-471JE	1	435034714R1	
R9104	METAL R	RNU1/2WCJ-3.3	1	453530334T	
R9105	C-CARBON R	RN72K1J-472JE	1	435034724R1	
R9106	C-CARBON R	RN72K1J-223JE	1	435032234R1	
R9107	C-CARBON R	RN72K1J-182JE	1	435031824R1	
R9108	C-CARBON R	RN72K1J-471JE	1	435034714R1	
R9109	C-CARBON R	RN72K1J-472JE	1	435034724R1	
R9110	C-CARBON R	RN72K1J-272JE	1	435032724R1	
R9111	C-CARBON R	RN72K1J-182JE	1	435031824R1	
R9112	C-CARBON R	RN72K1J-562JE	1	435035624R1	
R9228	METAL R	RNU1/2WCJ-0.47	1	453534794T	
RL6600	RELAY	NRL-2P5A-DC24-158	1	25065618	
RL6602	RELAY	NRL-2P5A-DC24-158	1	25065618	
RL6603	RELAY	NRL-2P5A-DC24-158	1	25065618	
RL6605	RELAY	NRL-2P5A-DC24-158	1	25065618	
RL6607	RELAY	NRL-2P5A-DC24-158	1	25065618	
E101	TRM(SCREW)	NEJITANSI M3	1	25065425	<DD>
E102	TRM(SCREW)	NEJITANSI M3	1	25065425	<DD>
E122A	RETAINER	(XM)	1	27142048	<DD>

E4001	TRM(SCREW)	NEJITANSI M3	1	25065425	
J001	PVC	ULPVC600V1015#18 L=120mm	1	---	NSP
J002	PVC	ULPVC600V1015#18 L=70mm	1	---	NSP
J003	PVC	PVUL600V016/42L=50	1	---	NSP
J004	PVC	#18 1015 BLACKL=100mm	1	---	NSP
J005	PVC	ULPVC600V1015#18 L=70mm	1	---	NSP
JL102A	WIRE HOL	NSCT-10P881	1	25051094	<DD>
JL102B	WIRE TRAP	NPLG-10P593	1	25055631	<DD>
JL5502A	WIRE TRAP	NPLG-7P590	1	25055628	<DD>
JL6016A	WIRE HOL	NSCT-8P879	1	25051092	
JL6017A	WIRE HOL	NSCT-5P876	1	25051089	
JL6402B	WIRE TRAP	NPLG-3P586	1	25055624	
JL6600B	SOCKET	NSCT-7P99	1	25050271	
JL6603B	SOCKET	NSCT-9P101	1	25050273	
JL6604B	SOCKET	NSCT-4P96	1	25050268	
JL6605B	SOCKET	NSCT-5P97	1	25050269	
JL7801A	WIRE HOL	NSCT-5P876	1	25051089	
JL7801B	WIRE TRAP	NPLG-5P588	1	25055626	
JL801A	WIRE HOL	NSCT-8P879	1	25051092	
JL901B	WIRE TRAP	NPLG-5P588	1	25055626	
JL9101B	SOCKET	NSCT-6P98	1	25050270	
P101A	SOCKET	NSCT-13P2106	1	25052209	
P121	SOCKET	YKF51-5397N	1	25053201	<DD>
P122	SOCKET	CAM-C16	1	25053104R2	<DD>
P1701	PIN JACK	NPJ-2PDRW490	1	25045693	
P2004A	PLUG	IMSA-9163B-10G	1	25056587A	
P2004B	SOCKET	IMSA-9163S-10A	1	25053107	
P2005A	PLUG	IMSA-9163B-16G	1	25056588A	
P2005B	SOCKET	IMSA-9163S-16A	1	25053108	
P2006A	PLUG	IMSA-9163B-04G	1	25056586A	
P2006B	SOCKET	IMSA-9163S-04A	1	25053106	
P2007A	PLUG	IMSA-9163B-10G	1	25056587A	
P2007B	SOCKET	IMSA-9163S-10A	1	25053107	
P2801	SOCKET	J0026D21NL	1	25053250	
P2810	PLUG	IMSA-9201B-1-06Z388-PT1	1	25056614	
P2811	TRM(SCREW)	NEJITANSI M3	1	25065425	
P2812	TRM(SCREW)	NEJITANSI M3	1	25065425	
P301	SOCKET	NSCT-8P2188	1	25052291	
P302	SOCKET	NSCT-14P2194	1	25052297	
P303	SOCKET	NSCT-17P2197	1	25052300	
P304	SOCKET	NSCT-3P2183	1	25052286	
P3801A	PLUG	NPLG-20P668	1	25055712	
P3802A	PLUG	NPLG-20P668	1	25055712	
P3803A	PLUG	NPLG-5P657	1	25055701	
P4001	PIN JACK	NPJ-6PDGLR649	1	25045874	
P4002	PIN JACK	NPJ-6PDGLR649	1	25045874	
P4003	PIN JACK	NPJ-5PDSY629	1	25045850	
P4003 or	PIN JACK	NPJ-5PDBY482	(1)	25045685	
P4004	PIN JACK	NPJ-10PDSY628	1	25045849	
P4004 or	PIN JACK	NPJ-10PDBY481	(1)	25045684	
P4005	PIN JACK	NPJ-10PDSY628	1	25045849	
P4005 or	PIN JACK	NPJ-10PDBY481	(1)	25045684	
P4006	PIN JACK	NPJ-5PDSY629	1	25045850	
P4006 or	PIN JACK	NPJ-5PDBY482	(1)	25045685	

P4008B	SOCKET	NSCT-23P2116	1	25052219	
P6019A	SOCKET AS	NSAS-6P1701	1	2002A290655UL	
P6019B	PLUG	NPLG-3P131	1	25055147	
P6601	TRM	NTM-6PDMCWRG410	1	25060482	
P6602	TRM	NTM-8PDMCNTLE411	1	25060483	
P701A	SOCKET	52492-3620	1	25053110	
P751A	SOCKET	NSCT-9P2427	1	25052530	
P802A	SOCKET AS	NSAS-26P1699	1	2002A392620UL	
P9102	PLUG	NPLG-2P83	1	25055099	
P9103	PLUG	NPLG-2P83	1	25055099	

U23 **DRIVER AMPLIFIER PC BOARD (NAAF-8917-3A)**
U24 **SPEAKER TERMINAL PC BOARD (NAETC-8918-3A)**

CIRCUIT	PART NAME	DESCRIPTION	Q'TY	PART NO. (SN)	REMARKS
Q5000	TR	2SC2240-BL(TPE2_F)	1	2211406T	
Q5001	TR	2SC2240-BL(TPE2_F)	1	2211406T	
Q5002	TR	2SC2240-BL(TPE2_F)	1	2211406T	
Q5003	TR	2SC2240-BL(TPE2_F)	1	2211406T	
Q5004	TR	2SC2240-BL(TPE2_F)	1	2211406T	
Q5005	TR	2SC2240-BL(TPE2_F)	1	2211406T	
Q5006	TR	2SC2240-BL(TPE2_F)	1	2211406T	
Q5010	TR	2SC2240-BL(TPE2_F)	1	2211406T	
Q5011	TR	2SC2240-BL(TPE2_F)	1	2211406T	
Q5012	TR	2SC2240-BL(TPE2_F)	1	2211406T	
Q5013	TR	2SC2240-BL(TPE2_F)	1	2211406T	
Q5014	TR	2SC2240-BL(TPE2_F)	1	2211406T	
Q5015	TR	2SC2240-BL(TPE2_F)	1	2211406T	
Q5016	TR	2SC2240-BL(TPE2_F)	1	2211406T	
Q5030	TR	2SA1360-Y	1	2202094	
Q5031	TR	2SA1360-Y	1	2202094	
Q5032	TR	2SA1360-Y	1	2202094	
Q5033	TR	2SA949-Y(TPE6_F)	1	2211354T	
Q5034	TR	2SA949-Y(TPE6_F)	1	2211354T	
Q5035	TR	2SA949-Y(TPE6_F)	1	2211354T	
Q5036	TR	2SA949-Y(TPE6_F)	1	2211354T	
Q5040	TR	2SC3423-Y	1	2202104	
Q5041	TR	2SC3423-Y	1	2202104	
Q5042	TR	2SC3423-Y	1	2202104	
Q5043	TR	2SC2229-Y(TPE6_F)	1	2211634T	
Q5044	TR	2SC2229-Y(TPE6_F)	1	2211634T	
Q5045	TR	2SC2229-Y(TPE6_F)	1	2211634T	
Q5046	TR	2SC2229-Y(TPE6_F)	1	2211634T	
Q5050	TR	2SC2240-BL(TPE2_F)	1	2211406T	
Q5050 or	TR	2SC2240-GR	(1)	2211405T	
Q5051	TR	2SC2240-BL(TPE2_F)	1	2211406T	
Q5051 or	TR	2SC2240-GR	(1)	2211405T	
Q5052	TR	2SC2240-BL(TPE2_F)	1	2211406T	
Q5052 or	TR	2SC2240-GR	(1)	2211405T	
Q5053	TR	2SC2240-BL(TPE2_F)	1	2211406T	
Q5053 or	TR	2SC2240-GR	(1)	2211405T	
Q5054	TR	2SC2240-BL(TPE2_F)	1	2211406T	
Q5054 or	TR	2SC2240-GR	(1)	2211405T	
Q5055	TR	2SC2240-BL(TPE2_F)	1	2211406T	

Q5055 or	TR	2SC2240-GR	(1)	2211405T
Q5056	TR	2SC2240-BL(TPE2_F)	1	2211406T
Q5056 or	TR	2SC2240-GR	(1)	2211405T
D5000	ZENER D	DZ-5.6BSC	1	224850563T
D5000 or	ZENER D	MTZJ5.6B	(1)	224470562T
D5001	ZENER D	DZ-5.6BSC	1	224850563T
D5001 or	ZENER D	MTZJ5.6B	(1)	224470562T
D5002	ZENER D	DZ-5.6BSC	1	224850563T
D5002 or	ZENER D	MTZJ5.6B	(1)	224470562T
D5003	ZENER D	DZ-5.6BSC	1	224850563T
D5003 or	ZENER D	MTZJ5.6B	(1)	224470562T
D5004	ZENER D	DZ-5.6BSC	1	224850563T
D5004 or	ZENER D	MTZJ5.6B	(1)	224470562T
D5005	ZENER D	DZ-5.6BSC	1	224850563T
D5005 or	ZENER D	MTZJ5.6B	(1)	224470562T
D5006	ZENER D	DZ-5.6BSC	1	224850563T
D5006 or	ZENER D	MTZJ5.6B	(1)	224470562T
C5000	TF C	ECQ-B50V-331K	1	374723315T
C5001	TF C	ECQ-B50V-331K	1	374723315T
C5002	TF C	ECQ-B50V-331K	1	374723315T
C5003	TF C	ECQ-B50V-331K	1	374723315T
C5004	TF C	ECQ-B50V-331K	1	374723315T
C5005	TF C	ECQ-B50V-331K	1	374723315T
C5006	TF C	ECQ-B50V-331K	1	374723315T
C5010	UTSP C	CE04W50V 47M(UTSP)	1	397584707T
C5011	UTSP C	CE04W50V 47M(UTSP)	1	397584707T
C5012	UTSP C	CE04W50V 47M(UTSP)	1	397584707T
C5013	UTSP C	CE04W50V 47M(UTSP)	1	397584707T
C5014	UTSP C	CE04W50V 47M(UTSP)	1	397584707T
C5015	UTSP C	CE04W50V 47M(UTSP)	1	397584707T
C5016	UTSP C	CE04W50V 47M(UTSP)	1	397584707T
C5020	UTSP C	CE04W50V-10M(UTSP)	1	397581007T
C5021	UTSP C	CE04W50V-10M(UTSP)	1	397581007T
C5022	UTSP C	CE04W50V-10M(UTSP)	1	397581007T
C5023	UTSP C	CE04W50V-10M(UTSP)	1	397581007T
C5024	UTSP C	CE04W50V-10M(UTSP)	1	397581007T
C5025	UTSP C	CE04W50V-10M(UTSP)	1	397581007T
C5026	UTSP C	CE04W50V-10M(UTSP)	1	397581007T
C5040	UTSP C	CE04W25V-220M(UTSP)	1	397552217T
C5041	UTSP C	CE04W25V-220M(UTSP)	1	397552217T
C5042	UTSP C	CE04W25V-220M(UTSP)	1	397552217T
C5043	UTSP C	CE04W25V-220M(UTSP)	1	397552217T
C5044	UTSP C	CE04W25V-220M(UTSP)	1	397552217T
C5045	UTSP C	CE04W25V-220M(UTSP)	1	397552217T
C5046	UTSP C	CE04W25V-220M(UTSP)	1	397552217T
C5050	UTSP C	CE04W50V 47M(UTSP)	1	397584707T
C5051	UTSP C	CE04W50V 47M(UTSP)	1	397584707T
C5052	UTSP C	CE04W50V 47M(UTSP)	1	397584707T
C5053	UTSP C	CE04W50V 47M(UTSP)	1	397584707T
C5054	UTSP C	CE04W50V 47M(UTSP)	1	397584707T
C5055	UTSP C	CE04W50V 47M(UTSP)	1	397584707T
C5056	UTSP C	CE04W50V 47M(UTSP)	1	397584707T
C5080	CERA C	CC45SL50V-040D	1	345020402T
C5081	CERA C	CC45SL50V-040D	1	345020402T

C5082	CERA C	CC45SL50V-040D	1	345020402T	
C5083	CERA C	CC45SL50V-040D	1	345020402T	
C5084	CERA C	CC45SL50V-040D	1	345020402T	
C5085	CERA C	CC45SL50V-040D	1	345020402T	
C5086	CERA C	CC45SL50V-040D	1	345020402T	
C5090	TF C	ECQ-B50V-101K	1	374721015T	
C5091	TF C	ECQ-B50V-101K	1	374721015T	
C5092	TF C	ECQ-B50V-101K	1	374721015T	
C5093	TF C	ECQ-B50V-101K	1	374721015T	
C5094	TF C	ECQ-B50V-101K	1	374721015T	
C5095	TF C	ECQ-B50V-101K	1	374721015T	
C5096	TF C	ECQ-B50V-101K	1	374721015T	
C5100	VR C	CE04W100V-22M(VR)	1	394692207T	
C5101	VR C	CE04W100V-22M(VR)	1	394692207T	
C5102	VR C	CE04W100V-22M(VR)	1	394692207T	
C5103	VR C	CE04W100V-22M(VR)	1	394692207T	
C5104	VR C	CE04W100V-22M(VR)	1	394692207T	
C5105	VR C	CE04W100V-22M(VR)	1	394692207T	
C5106	VR C	CE04W100V-22M(VR)	1	394692207T	
C5110	VR C	CE04W100V-22M(VR)	1	394692207T	
C5111	VR C	CE04W100V-22M(VR)	1	394692207T	
C5112	VR C	CE04W100V-22M(VR)	1	394692207T	
C5113	VR C	CE04W100V-22M(VR)	1	394692207T	
C5114	VR C	CE04W100V-22M(VR)	1	394692207T	
C5115	VR C	CE04W100V-22M(VR)	1	394692207T	
C5116	VR C	CE04W100V-22M(VR)	1	394692207T	
C6647	TF C	ECQ-B50V-103J	1	374721034T	
C6648	TF C	ECQ-B50V-103J	1	374721034T	
C6657	TF C	ECQ-B50V-102J	1	374721024T	
C6658	TF C	ECQ-B50V-102J	1	374721024T	
R5000	CARBON R	R16J-3.3K	1	417343324T	
R5001	CARBON R	R16J-3.3K	1	417343324T	
R5002	CARBON R	R16J-3.3K	1	417343324T	
R5003	CARBON R	R16J-3.3K	1	417343324T	
R5004	CARBON R	R16J-3.3K	1	417343324T	
R5005	CARBON R	R16J-3.3K	1	417343324T	
R5006	CARBON R	R16J-3.3K	1	417343324T	
R5010	CARBON R	R16J-56K	1	417345634T	
R5011	CARBON R	R16J-56K	1	417345634T	
R5012	CARBON R	R16J-56K	1	417345634T	
R5013	CARBON R	R16J-56K	1	417345634T	
R5014	CARBON R	R16J-56K	1	417345634T	
R5015	CARBON R	R16J-56K	1	417345634T	
R5016	CARBON R	R16J-56K	1	417345634T	
R5020	CARBON R	R16J-330	1	417343314T	
R5021	CARBON R	R16J-330	1	417343314T	
R5022	CARBON R	R16J-330	1	417343314T	
R5023	CARBON R	R16J-330	1	417343314T	
R5024	CARBON R	R16J-330	1	417343314T	
R5025	CARBON R	R16J-330	1	417343314T	
R5026	CARBON R	R16J-330	1	417343314T	
R5030	CARBON R	R16J-120K	1	417341244T	
R5031	CARBON R	R16J-120K	1	417341244T	
R5032	CARBON R	R16J-120K	1	417341244T	

R5033	CARBON R	R16J-120K	1	417341244T	
R5034	CARBON R	R16J-120K	1	417341244T	
R5035	CARBON R	R16J-120K	1	417341244T	
R5036	CARBON R	R16J-120K	1	417341244T	
R5040	CARBON R	R16J-2.2K	1	417342224T	
R5041	CARBON R	R16J-2.2K	1	417342224T	
R5042	CARBON R	R16J-2.2K	1	417342224T	
R5043	CARBON R	R16J-2.2K	1	417342224T	
R5044	CARBON R	R16J-2.2K	1	417342224T	
R5045	CARBON R	R16J-2.2K	1	417342224T	
R5046	CARBON R	R16J-2.2K	1	417342224T	
R5050	CARBON R	R16J-4.7K	1	417344724T	
R5051	CARBON R	R16J-4.7K	1	417344724T	
R5052	CARBON R	R16J-4.7K	1	417344724T	
R5053	CARBON R	R16J-4.7K	1	417344724T	
R5054	CARBON R	R16J-4.7K	1	417344724T	
R5055	CARBON R	R16J-4.7K	1	417344724T	
R5056	CARBON R	R16J-4.7K	1	417344724T	
R5060	CARBON R	R16J-1.2K	1	417341224T	
R5061	CARBON R	R16J-1.2K	1	417341224T	
R5062	CARBON R	R16J-1.2K	1	417341224T	
R5063	CARBON R	R16J-1.2K	1	417341224T	
R5064	CARBON R	R16J-1.2K	1	417341224T	
R5065	CARBON R	R16J-1.2K	1	417341224T	
R5066	CARBON R	R16J-1.2K	1	417341224T	
R5080	CARBON R	R16J-470	1	417344714T	
R5081	CARBON R	R16J-470	1	417344714T	
R5082	CARBON R	R16J-470	1	417344714T	
R5083	CARBON R	R16J-470	1	417344714T	
R5084	CARBON R	R16J-470	1	417344714T	
R5085	CARBON R	R16J-470	1	417344714T	
R5086	CARBON R	R16J-470	1	417344714T	
R5090	CARBON R	R16J-100K	1	417341044T	
R5091	CARBON R	R16J-100K	1	417341044T	
R5092	CARBON R	R16J-100K	1	417341044T	
R5093	CARBON R	R16J-100K	1	417341044T	
R5094	CARBON R	R16J-100K	1	417341044T	
R5095	CARBON R	R16J-100K	1	417341044T	
R5096	CARBON R	R16J-100K	1	417341044T	
R5100	CARBON R	R16J-100K	1	417341044T	
R5101	CARBON R	R16J-100K	1	417341044T	
R5102	CARBON R	R16J-100K	1	417341044T	
R5103	CARBON R	R16J-100K	1	417341044T	
R5104	CARBON R	R16J-100K	1	417341044T	
R5105	CARBON R	R16J-100K	1	417341044T	
R5106	CARBON R	R16J-100K	1	417341044T	
R5110	CARBON R	R16J-1K	1	417341024T	
R5111	CARBON R	R16J-1K	1	417341024T	
R5112	CARBON R	R16J-1K	1	417341024T	
R5113	CARBON R	R16J-1K	1	417341024T	
R5114	CARBON R	R16J-1K	1	417341024T	
R5115	CARBON R	R16J-1K	1	417341024T	
R5116	CARBON R	R16J-1K	1	417341024T	
R5130	CARBON R	R16J-18K	1	417341834T	

R5131	CARBON R	R16J-18K	1	417341834T	
R5132	CARBON R	R16J-18K	1	417341834T	
R5133	CARBON R	R16J-22K	1	417342234T	
R5134	CARBON R	R16J-22K	1	417342234T	
R5135	CARBON R	R16J-22K	1	417342234T	
R5136	CARBON R	R16J-22K	1	417342234T	
R5160	NF CARBON R	R25J-100	1	415471014T	
R5161	NF CARBON R	R25J-100	1	415471014T	
R5162	NF CARBON R	R25J-100	1	415471014T	
R5163	NF CARBON R	R25J-120	1	415471214T	
R5164	NF CARBON R	R25J-120	1	415471214T	
R5165	NF CARBON R	R25J-120	1	415471214T	
R5166	NF CARBON R	R25J-120	1	415471214T	
R5170	NF CARBON R	R25J-100	1	415471014T	
R5171	NF CARBON R	R25J-100	1	415471014T	
R5172	NF CARBON R	R25J-100	1	415471014T	
R5173	NF CARBON R	R25J-120	1	415471214T	
R5174	NF CARBON R	R25J-120	1	415471214T	
R5175	NF CARBON R	R25J-120	1	415471214T	
R5176	NF CARBON R	R25J-120	1	415471214T	
R5180	NF CARBON R	R25J-10	1	415471004T	
R5181	NF CARBON R	R25J-10	1	415471004T	
R5182	NF CARBON R	R25J-10	1	415471004T	
R5183	NF CARBON R	R25J-10	1	415471004T	
R5184	NF CARBON R	R25J-10	1	415471004T	
R5185	NF CARBON R	R25J-10	1	415471004T	
R5186	NF CARBON R	R25J-10	1	415471004T	
R5190	NF CARBON R	R25J-10	1	415471004T	
R5191	NF CARBON R	R25J-10	1	415471004T	
R5192	NF CARBON R	R25J-10	1	415471004T	
R5193	NF CARBON R	R25J-10	1	415471004T	
R5194	NF CARBON R	R25J-10	1	415471004T	
R5195	NF CARBON R	R25J-10	1	415471004T	
R5196	NF CARBON R	R25J-10	1	415471004T	
R5200	CARBON R	R16J-18K	1	417341834T	
R5201	CARBON R	R16J-18K	1	417341834T	
R5202	CARBON R	R16J-18K	1	417341834T	
R5203	CARBON R	R16J-22K	1	417342234T	
R5204	CARBON R	R16J-22K	1	417342234T	
R5205	CARBON R	R16J-22K	1	417342234T	
R5206	CARBON R	R16J-22K	1	417342234T	
R5230	CARBON R	R16J-120K	1	417341244T	
R5231	CARBON R	R16J-120K	1	417341244T	
R5232	CARBON R	R16J-120K	1	417341244T	
R5233	CARBON R	R16J-120K	1	417341244T	
R5234	CARBON R	R16J-120K	1	417341244T	
R5235	CARBON R	R16J-120K	1	417341244T	
R5236	CARBON R	R16J-120K	1	417341244T	
JL6604A	WIRE HOL	NSCT-4P895	1	25051108	
P5019	TRM	NTM-1P233(M1969)	1	25060302	
P5504A	PLUG	NPLG-13P141	1	25055157	
P6000A	SOCKET	NSCT-5P2185	1	25052288	
P6001A	SOCKET	NSCT-5P2185	1	25052288	
P6002A	SOCKET	NSCT-5P2185	1	25052288	

P6003A	SOCKET	NSCT-5P2185	1	25052288	
P6004A	SOCKET	NSCT-5P2185	1	25052288	
P6005A	SOCKET	NSCT-5P2185	1	25052288	
P6006A	SOCKET	NSCT-5P2185	1	25052288	
P6011B	RETAINER	(BUS-U)	1	27141859	
P6607	TRM	NTM-4PDMCWR409	1	25060481	

U25 DSP AND HDMI PC BOARD(NAHDM-9265-1B)

CIRCUIT	PART NAME	DESCRIPTION	Q'TY	PART NO. (SN)	REMARKS
Q1021	IC	TC7WU04FU(TE12L_F)	1	22240935R2	
Q3001	IC	SI8008TM	1	22242323R2	
Q3011	IC	SI8008TM	1	22242323R2	
Q3021	IC	SI8008TM	1	22242323R2	
Q3202	IC	BD7820	1	22242300R2	
Q3301	IC	TC74VHC157FT	1	22274157ER2TO	
Q3311	IC	TC74VHC157FT	1	22274157ER2TO	
Q3391	IC	TC74VHCT08AFT	1	22274008GR2TO	
Q3391 or	IC	TC74VHCT08AFT（EKJ)	(1)	22274008G1R2TO	
Q3401	IC	D790E001BZDH275	1	---	NRP
Q3401 or	IC	D710E001BZDH275	(1)	---	NRP
Q3451	IC(DSP1 ROM)	ES29LV160ET-70TG(0212)	1	222W0069R302126	
Q3451 or	IC(DSP1 ROM)	S29AL016D70TFI010(0212)	(1)	222W0063R302126	
Q3461	IC	IC42S16100	1	22242123R2	
Q3461 or	IC	M12L16161A-7TG	(1)	22242278R3	
Q3461 or	IC	RMS116T(LF)	(1)	22242340R3	
Q3471	IC	IC42S16100	1	22242123R2	
Q3471 or	IC	M12L16161A-7TG	(1)	22242278R3	
Q3481	IC	TC7WU04FU(TE12L_F)	1	22240935R2	
Q3491	IC	TC74VHC541FT	1	22274541ER2TO	
Q3491 or	IC	TC74VHC541FT(EKJ)	(1)	22274541E1R2TO	
Q3501	IC	D788E001BRFP266	1	---	NRP
Q3501 or	IC	D708E001BRFP266	1	---	NRP
Q3551	IC(DSP2 ROM)	ES29LV400ET-70TG(0213)	1	222W0065R302137	
Q3551 or	IC(DSP2 ROM)	ES29LV400(0213)	(1)	222W0045R302137	
Q3551 or	IC(DSP2 ROM)	S29AL004D70TFI010(0213)	(1)	222W0061R302137	
Q3561	IC	IC42S16100	1	22242123R2	
Q3561 or	IC	M12L16161A-7TG	(1)	22242278R3	
Q3561 or	IC	RMS116T(LF)	(1)	22242340R3	
Q3571	IC	TC7WU04FU(TE12L_F)	1	22240935R2	
Q3601	IC	D707E001BRFP250	1	---	NRP
Q3651	IC(DSP3 ROM)	S29AL008D70TFI010(0214)	1	222W0062R302148	
Q3651 or	IC(DSP3 ROM)	ES29LV800ET-70TG(0214)	(1)	222W0068R302148	
Q3661	IC	IS42S16400D-7TL	1	22241910R2	
Q3661 or	IC	M12L64164A-7TG	(1)	22242441R3	
Q3772	IC	BD7820	1	22242300R2	
Q3773	IC	BD7820	1	22242300R2	
Q3931	IC	74HCU04(TC74HCU04F)	1	222740046R2TO	
Q8001	IC	FLI8125-LF-BC	1	22242389R3	
Q8002	IC	TC74VCX162244FT(EL_F)	1	2227C244DR2TO	
Q8003	IC	TC74VCX162244FT(EL_F)	1	2227C244DR2TO	
Q8004	IC	BA18BC0FP	1	22278018DR2RH	
Q8004 or	IC	TA48018AF(TE16L_NQ)	(1)	22278018DR2TO	
Q8004 or	IC	UPC2918T-E1-AZ	(1)	22278018ER2NE	

Q8005	IC	BA33BC0FP	1	22278033DR2RH	
Q8006	IC	SI8008TM	1	22242323R2	
Q8010	IC	S-24CS16A0I-J8V1G	1	22242326R2	
Q8011	IC(VIDEO MEMORY)	SST25VF080B-50-4C-S2AF(0222)	1	222W0064R20222A	
Q8021	TR	RN2402	1	2214530R2	
Q8022	TR	2SA1162-GR	1	2214375R2	
Q8101	IC	AD8196	1	---	NRP
Q8151	IC	BA33BC0FP	1	22278033DR2RH	
Q8204	TR	DTA144EE	1	2216380R2	
Q8206	TR	DTC144EE	1	2216390R2	
Q8207	TR	2SK3019	1	2216520R2	
Q8208	IC	SN74CB3T3306DCT	1	22242454R2	
Q8210	IC	S-24CS02AFT-V-G	1	22242360R2	
Q8210 or	IC	BR24L02FV-W	(1)	22242069R2	
Q8305	IC	S-812C50BUC-C5ET2G	1	22242407R2	
Q8306	IC	TC7SZ08FU(TE85L_F)	1	22242071R2TO	
Q8309	TR ARRAY	UM6K1N	1	226066R2	
Q8309 or	TR ARRAY	UPA672T	(1)	226067R2	
Q8401	IC	SII9134CTU	1	22242394R3	
Q8404	IC	XC6213B182MR	1	22242443R2	
Q8405	IC	SN74CB3Q3305PWR	1	22242258R2	
Q8501	IC	SII9135CTU	1	---	NRP
Q8504	TR	DTA144EE	1	2216380R2	
Q8506	TR	DTC144EE	1	2216390R2	
Q8507	TR	2SK3019	1	2216520R2	
Q8508	IC	SN74CB3T3306DCT	1	22242454R2	
Q8510	IC	S-24CS02AFT-V-G	1	22242360R2	
Q8510 or	IC	BR24L02FV-W	(1)	22242069R2	
Q8592	IC	SI8008TM	1	22242323R2	
Q8593	IC	SI8008TM	1	22242323R2	
Q8595	IC	BA18BC0FP	1	22278018DR2RH	
Q8595 or	IC	TA48018AF(TE16L_NQ)	(1)	22278018DR2TO	
Q8595 or	IC	UPC2918T-E1-AZ	(1)	22278018ER2NE	
Q8604	TR	DTA144EE	1	2216380R2	
Q8606	TR	DTC144EE	1	2216390R2	
Q8607	TR	2SK3019	1	2216520R2	
Q8608	IC	SN74CB3T3306DCT	1	22242454R2	
Q8610	IC	S-24CS02AFT-V-G	1	22242360R2	
Q8610 or	IC	BR24L02FV-W	(1)	22242069R2	
Q8651	IC	BA18BC0FP	1	22278018DR2RH	
Q8651 or	IC	TA48018AF(TE16L_NQ)	(1)	22278018DR2TO	
Q8651 or	IC	UPC2918T-E1-AZ	(1)	22278018ER2NE	
Q8652	IC	XC6213B332MR	1	22242277R2	
Q8653	IC	BA33BC0FP	1	22278033DR2RH	
Q8654	IC	BA18BC0FP	1	22278018DR2RH	
Q8654 or	IC	TA48018AF(TE16L_NQ)	(1)	22278018DR2TO	
Q8654 or	IC	UPC2918T-E1-AZ	(1)	22278018ER2NE	
Q8701	IC(HDMI MEMORY)	MPD70F3716GC-8EA(0210)	1	222W0054R302105	
Q8801	IC	ADV7172	1	22242155R3	
D3002	C-DIODE	CRS09(TE85L_Q)	1	223274R2	
D3012	C-DIODE	CRS09(TE85L_Q)	1	223274R2	
D3022	C-DIODE	CRS09(TE85L_Q)	1	223274R2	
D3205	C-DIODE	1SS352	1	223234R2	
D3205 or	C-DIODE	1SS355	(1)	223269R2	

D3225	C-DIODE	1SS352	1	223234R2
D3225 or	C-DIODE	1SS355	(1)	223269R2
D3226	C-DIODE	1SS352	1	223234R2
D3226 or	C-DIODE	1SS355	(1)	223269R2
D8001	C-DIODE	CRS09(TE85L_Q)	1	223274R2
D8021	C-DIODE	1SS352	1	223234R2
D8021 or	C-DIODE	1SS355	(1)	223269R2
D8022	C-DIODE	1SS352	1	223234R2
D8022 or	C-DIODE	1SS355	(1)	223269R2
D8301	C-DIODE	1SS226(TE85L_F)	1	223266R2
D8301 or	DIODE	DAN217T146	(1)	223285R2
D8302	C-DIODE	1SS352	1	223234R2
D8302 or	C-DIODE	1SS355	(1)	223269R2
D8591	C-DIODE	CRS09(TE85L_Q)	1	223274R2
D8592	C-DIODE	CRS09(TE85L_Q)	1	223274R2
D8701	C-DIODE	1SS352	1	223234R2
D8701 or	C-DIODE	1SS355	(1)	223269R2
L1021	CHOKE COIL	LBC2518T4R7M	1	231364M047R2
L1022	EMIFIL	BK1608LM182-T	1	230958R1
L3001	CHOKE COIL	NCH-2541	1	231363K470
L3003	CHOKE COIL	BLM21PG221SN1	1	230949R2
L3004	CHOKE COIL	BLM21PG221SN1	1	230949R2
L3011	CHOKE COIL	NCH-2541	1	231363K470
L3013	CHOKE COIL	BLM21PG221SN1	1	230949R2
L3014	CHOKE COIL	BLM21PG221SN1	1	230949R2
L3021	CHOKE COIL	NCH-2541	1	231363K470
L3023	CHOKE COIL	BLM21PG221SN1	1	230949R2
L3024	CHOKE COIL	BLM21PG221SN1	1	230949R2
L3301	CHOKE COIL	LBC2518T470M	1	231364M470R2
L3311	EMIFIL	BK1608HS102-T	1	230955R2
L3401	EMIFIL	ACF451832-333-T	1	230978R2
L3402	CHOKE COIL	BLM21PG221SN1	1	230949R2
L3403	CHOKE COIL	LBC2518T4R7M	1	231364M047R2
L3451	CHOKE COIL	BLM21PG221SN1	1	230949R2
L3481	EMIFIL	BK1608HS102-T	1	230955R2
L3482	EMIFIL	BK1608HS102-T	1	230955R2
L3483	CHOKE COIL	LBC2518T470M	1	231364M470R2
L3491	CHOKE COIL	LBC2518T470M	1	231364M470R2
L3501	EMIFIL	ACF451832-333-T	1	230978R2
L3502	C-CARBON R	RN72K1J-330JE	1	435033304R1
L3541	CHOKE COIL	LBC2518T4R7M	1	231364M047R2
L3542	CHOKE COIL	BLM21PG221SN1	1	230949R2
L3551	CHOKE COIL	BLM21PG221SN1	1	230949R2
L3571	CHOKE COIL	LBC2518T470M	1	231364M470R2
L3572	EMIFIL	BK1608HS102-T	1	230955R2
L3601	EMIFIL	ACF451832-333-T	1	230978R2
L3602	C-CARBON R	RN72K1J-330JE	1	435033304R1
L3641	CHOKE COIL	LBC2518T4R7M	1	231364M047R2
L3642	CHOKE COIL	BLM21PG221SN1	1	230949R2
L3651	CHOKE COIL	BLM21PG221SN1	1	230949R2
L3931	CHOKE COIL	LBC2518T2R2M	1	231364M022R2
L3932	CHOKE COIL	LBC2518T2R2M	1	231364M022R2
L3933	CHOKE COIL	LBC2518T2R2M	1	231364M022R2
L3934	CHOKE COIL	LBC2518T470M	1	231364M470R2

L8001	CHOKE COIL	BLM21PG221SN1	1	230949R2	
L8002	CHOKE COIL	BLM21PG221SN1	1	230949R2	
L8003	CHOKE COIL	BLM21PG221SN1	1	230949R2	
L8004	CHOKE COIL	LBC2518T4R7M	1	231364M047R2	
L8005	CHOKE COIL	LBC2518T4R7M	1	231364M047R2	
L8006	CHOKE COIL	LBC2518T4R7M	1	231364M047R2	
L8007	CHOKE COIL	LBC2518T4R7M	1	231364M047R2	
L8008	CHOKE COIL	LBC2518T4R7M	1	231364M047R2	
L8009	CHOKE COIL	BLM21PG221SN1	1	230949R2	
L8010	CHOKE COIL	BLM21PG221SN1	1	230949R2	
L8011	CHOKE COIL	BLM21PG221SN1	1	230949R2	
L8012	CHOKE COIL	BLM21PG221SN1	1	230949R2	
L8014	CHOKE COIL	NCH-2541	1	231363K470	
L8015	CHOKE COIL	BLM21PG221SN1	1	230949R2	
L8016	CHOKE COIL	LBC2518T4R7M	1	231364M047R2	
L8018	CHOKE COIL	LBC2518T4R7M	1	231364M047R2	
L8019	EMIFIL	BK1608LL241-T	1	230959R1	
L8020	CHOKE COIL	LBC2518T4R7M	1	231364M047R2	
L8101	CHOKE COIL	LBC2518T4R7M	1	231364M047R2	
L8102	CHOKE COIL	LBC2518T4R7M	1	231364M047R2	
L8400	C-R NET	MNR12E0APJ000	1	43464900002R2	
L8401	CHOKE COIL	BLM21PG221SN1	1	230949R2	
L8402	CHOKE COIL	BLM21PG221SN1	1	230949R2	
L8403	CHOKE COIL	BLM21PG221SN1	1	230949R2	
L8404	CHOKE COIL	BLM21PG221SN1	1	230949R2	
L8405	CHOKE COIL	BLM21PG221SN1	1	230949R2	
L8406	C-R NET	MNR12E0APJ000	1	43464900002R2	
L8407	C-R NET	MNR12E0APJ000	1	43464900002R2	
L8408	CHOKE COIL	BLM21PG221SN1	1	230949R2	
L8409	C-R NET	MNR12E0APJ000	1	43464900002R2	
L8505	CHOKE COIL	BLM21PG221SN1	1	230949R2	
L8507	CHOKE COIL	NCH-2541	1	231363K470	
L8508	CHOKE COIL	BLM21PG221SN1	1	230949R2	
L8525	CHOKE COIL	BLM21PG221SN1	1	230949R2	
L8527	CHOKE COIL	NCH-2541	1	231363K470	
L8528	CHOKE COIL	BLM21PG221SN1	1	230949R2	
L8601	CHOKE COIL	BLM21PG221SN1	1	230949R2	
L8602	CHOKE COIL	BLM21PG221SN1	1	230949R2	
L8603	CHOKE COIL	BLM21PG221SN1	1	230949R2	
L8604	CHOKE COIL	BLM21PG221SN1	1	230949R2	
L8605	CHOKE COIL	BLM21PG221SN1	1	230949R2	
L8606	CHOKE COIL	BLM21PG221SN1	1	230949R2	
L8607	CHOKE COIL	BLM21PG221SN1	1	230949R2	
L8608	EMIFIL	BK1608LL241-T	1	230959R1	
L8701	CHOKE COIL	LBC2518T4R7M	1	231364M047R2	
L8801	CHOKE COIL	LBC2518T4R7M	1	231364M047R2	
L8901	CHOKE COIL	LBC2518T2R2M	1	231364M022R2	
L8902	CHOKE COIL	LBC2518T2R2M	1	231364M022R2	
L8903	CHOKE COIL	LBC2518T2R2M	1	231364M022R2	
L8904	CHOKE COIL	LBC2518T2R2M	1	231364M022R2	
L8905	CHOKE COIL	LBC2518T2R2M	1	231364M022R2	
L8906	CHOKE COIL	LBC2518T2R2M	1	231364M022R2	
X1021	CRYSTAL	HC-49/U03C24.576MHz	1	3010331R2	
X3481	CRYSTAL	HC-49USSMD25.00MHz	1	3010444R2	

X3571	CRYSTAL	HC-49/U03C17.734M	1	3010430R2	
X8001	CRYSTAL	FCX-03-19.6608M	1	3010439R2	
X8501	CRYSTAL	HC-49-28.332MHz	1	3010417R2	
X8701	CERA LOCK	CSTCR5M00G53-B0	1	3010356R2	
C1021	C-CERA C	CK725F1H-104Z1	1	332151040R1	
C1022	C-CERA C	CC725CH1H-060D1	1	342100602R1	
C1023	C-CERA C	CC725CH1H-060D1	1	342100602R1	
C3001	CD C	UCD1E221MNL1GS	1	396652217R2	
C3002	C-CERA C	CK725F1H-104Z1	1	332151040R1	
C3003	CD C	UCD1A471MNL1GS	1	396634717R2	
C3004	CHIP ELECT C	CEWT6.3V-470M	1	395724717R2	
C3005	C-CERA C	CK725F1H-223Z1	1	332152230R1	
C3011	CD C	UCD1E221MNL1GS	1	396652217R2	
C3012	C-CERA C	CK725F1H-104Z1	1	332151040R1	
C3013	CD C	UCD1A471MNL1GS	1	396634717R2	
C3014	CHIP ELECT C	CEWT6.3V-470M	1	395724717R2	
C3015	C-CERA C	CK725F1H-223Z1	1	332152230R1	
C3021	CD C	UCD1E221MNL1GS	1	396652217R2	
C3022	C-CERA C	CK725F1H-104Z1	1	332151040R1	
C3023	CD C	UCD1A471MNL1GS	1	396634717R2	
C3024	CHIP ELECT C	CEWT6.3V-470M	1	395724717R2	
C3025	C-CERA C	CK725F1H-223Z1	1	332152230R1	
C3204	CHIP ELECT C	CEWX4V-100M	1	3981G1017R2	
C3205	C-CERA C	CK725F1H-104Z1	1	332151040R1	
C3206	CHIP ELECT C	CEWX4V-220M	1	3981G2217R2	
C3224	CHIP ELECT C	CEWX4V-100M	1	3981G1017R2	
C3225	C-CERA C	CK725F1H-104Z1	1	332151040R1	
C3226	CHIP ELECT C	CEWX4V-100M	1	3981G1017R2	
C3227	CHIP ELECT C	CEWX4V-100M	1	3981G1017R2	
C3228	C-CERA C	CK725F1H-104Z1	1	332151040R1	
C3229	CHIP ELECT C	CEWX4V-100M	1	3981G1017R2	
C3301	C-CERA C	CK725F1H-104Z1	1	332151040R1	
C3302	CHIP ELECT C	CEWX4V-100M	1	3981G1017R2	
C3311	C-CERA C	CK725F1H-104Z1	1	332151040R1	
C3325	C-CERA C	CK725F1H-223Z1	1	332152230R1	
C3326	C-CERA C	CK725F1H-223Z1	1	332152230R1	
C3391	C-CERA C	CK725F1H-104Z1	1	332151040R1	
C3392	CHIP ELECT C	CEWX6.3V-47M	1	398124707R2	
C3401	C-CERA C	CC725CH1H-101J1	1	342101014R1	
C3402	CHIP ELECT C	CEWX4V-100M	1	3981G1017R2	
C3403	C-CERA C	CK725F1H-104Z1	1	332151040R1	
C3405	CHIP ELECT C	CEWX4V-220M	1	3981G2217R2	
C3411	C-CERA C	CK725F1H-104Z1	1	332151040R1	
C3412	C-CERA C	CK725F1H-104Z1	1	332151040R1	
C3413	C-CERA C	CK725F1H-104Z1	1	332151040R1	
C3414	C-CERA C	CK725F1H-104Z1	1	332151040R1	
C3415	C-CERA C	CK725F1H-104Z1	1	332151040R1	
C3416	C-CERA C	CK725F1H-104Z1	1	332151040R1	
C3417	C-CERA C	CK725F1H-104Z1	1	332151040R1	
C3418	C-CERA C	CK725F1H-104Z1	1	332151040R1	
C3419	C-CERA C	CK725F1H-104Z1	1	332151040R1	
C3420	C-CERA C	CK725F1H-104Z1	1	332151040R1	
C3421	C-CERA C	CK725F1H-104Z1	1	332151040R1	
C3425	C-CERA C	CK725F1H-104Z1	1	332151040R1	

C3426	C-CERA C	CK725F1H-104Z1	1	332151040R1	
C3427	C-CERA C	CK725F1H-104Z1	1	332151040R1	
C3428	C-CERA C	CK725F1H-104Z1	1	332151040R1	
C3429	C-CERA C	CK725F1H-104Z1	1	332151040R1	
C3430	C-CERA C	CK725F1H-104Z1	1	332151040R1	
C3431	C-CERA C	CK725F1H-104Z1	1	332151040R1	
C3432	C-CERA C	CK725F1H-104Z1	1	332151040R1	
C3433	C-CERA C	CK725F1H-104Z1	1	332151040R1	
C3434	C-CERA C	CK725F1H-104Z1	1	332151040R1	
C3435	C-CERA C	CK725F1H-104Z1	1	332151040R1	
C3451	C-CERA C	CC725CH1H-101J1	1	342101014R1	
C3452	C-CERA C	CK725F1H-104Z1	1	332151040R1	
C3453	CHIP ELECT C	CEWX4V-220M	1	3981G2217R2	
C3461	C-CERA C	CK725F1H-104Z1	1	332151040R1	
C3462	C-CERA C	CK725F1H-104Z1	1	332151040R1	
C3463	C-CERA C	CK725F1H-104Z1	1	332151040R1	
C3464	C-CERA C	CK725F1H-104Z1	1	332151040R1	
C3465	C-CERA C	CK725F1H-104Z1	1	332151040R1	
C3466	C-CERA C	CK725F1H-104Z1	1	332151040R1	
C3467	CHIP ELECT C	CEWX4V-220M	1	3981G2217R2	
C3471	C-CERA C	CK725F1H-104Z1	1	332151040R1	
C3472	C-CERA C	CK725F1H-104Z1	1	332151040R1	
C3473	C-CERA C	CK725F1H-104Z1	1	332151040R1	
C3474	C-CERA C	CK725F1H-104Z1	1	332151040R1	
C3475	C-CERA C	CK725F1H-104Z1	1	332151040R1	
C3476	C-CERA C	CK725F1H-104Z1	1	332151040R1	
C3477	CHIP ELECT C	CEWX4V-220M	1	3981G2217R2	
C3481	C-CERA C	CC725CH1H-060D1	1	342100602R1	
C3482	C-CERA C	CC725CH1H-060D1	1	342100602R1	
C3483	C-CERA C	CK725F1H-104Z1	1	332151040R1	
C3484	CHIP ELECT C	CEWX4V-100M	1	3981G1017R2	
C3491	C-CERA C	CK725F1H-104Z1	1	332151040R1	
C3501	C-CERA C	CK725F1H-104Z1	1	332151040R1	
C3502	C-CERA C	CK725F1H-104Z1	1	332151040R1	
C3503	C-CERA C	CC725CH1H-101J1	1	342101014R1	
C3504	C-CERA C	CK725F1H-104Z1	1	332151040R1	
C3505	C-CERA C	CK725F1H-104Z1	1	332151040R1	
C3506	C-CERA C	CK725F1H-104Z1	1	332151040R1	
C3507	CHIP ELECT C	CEWX4V-220M	1	3981G2217R2	
C3508	C-CERA C	CK725F1H-104Z1	1	332151040R1	
C3509	C-CERA C	CK725F1H-104Z1	1	332151040R1	
C3510	C-CERA C	CK725F1H-104Z1	1	332151040R1	
C3511	C-CERA C	CK725F1H-104Z1	1	332151040R1	
C3512	C-CERA C	CK725F1H-104Z1	1	332151040R1	
C3513	C-CERA C	CK725F1H-104Z1	1	332151040R1	
C3514	C-CERA C	CK725F1H-104Z1	1	332151040R1	
C3515	C-CERA C	CK725F1H-104Z1	1	332151040R1	
C3516	C-CERA C	CK725F1H-104Z1	1	332151040R1	
C3517	C-CERA C	CK725F1H-104Z1	1	332151040R1	
C3518	C-CERA C	CK725F1H-104Z1	1	332151040R1	
C3519	C-CERA C	CK725F1H-104Z1	1	332151040R1	
C3520	C-CERA C	CK725F1H-104Z1	1	332151040R1	
C3521	C-CERA C	CK725F1H-104Z1	1	332151040R1	
C3522	C-CERA C	CK725F1H-104Z1	1	332151040R1	

C3523	C-CERA C	CK725F1H-104Z1	1	332151040R1	
C3524	C-CERA C	CK725F1H-104Z1	1	332151040R1	
C3525	C-CERA C	CK725F1H-104Z1	1	332151040R1	
C3526	C-CERA C	CK725F1H-104Z1	1	332151040R1	
C3527	C-CERA C	CK725F1H-104Z1	1	332151040R1	
C3528	C-CERA C	CK725F1H-104Z1	1	332151040R1	
C3529	C-CERA C	CK725F1H-104Z1	1	332151040R1	
C3541	CHIP ELECT C	CEWX4V-220M	1	3981G2217R2	
C3542	CHIP ELECT C	CEWX4V-220M	1	3981G2217R2	
C3551	C-CERA C	CK725F1H-104Z1	1	332151040R1	
C3552	C-CERA C	CC725CH1H-101J1	1	342101014R1	
C3553	CHIP ELECT C	CEWX4V-220M	1	3981G2217R2	
C3561	C-CERA C	CK725F1H-104Z1	1	332151040R1	
C3562	C-CERA C	CK725F1H-104Z1	1	332151040R1	
C3563	C-CERA C	CK725F1H-104Z1	1	332151040R1	
C3564	C-CERA C	CK725F1H-104Z1	1	332151040R1	
C3565	C-CERA C	CK725F1H-104Z1	1	332151040R1	
C3566	C-CERA C	CK725F1H-104Z1	1	332151040R1	
C3567	CHIP ELECT C	CEWX4V-220M	1	3981G2217R2	
C3571	C-CERA C	CC725CH1H-100D1	1	342101002R1	
C3572	C-CERA C	CC725CH1H-100D1	1	342101002R1	
C3573	C-CERA C	CK725F1H-104Z1	1	332151040R1	
C3574	CHIP ELECT C	CEWX4V-100M	1	3981G1017R2	
C3601	C-CERA C	CK725F1H-104Z1	1	332151040R1	
C3602	C-CERA C	CK725F1H-104Z1	1	332151040R1	
C3603	C-CERA C	CC725CH1H-101J1	1	342101014R1	
C3604	C-CERA C	CK725F1H-104Z1	1	332151040R1	
C3605	C-CERA C	CK725F1H-104Z1	1	332151040R1	
C3606	C-CERA C	CK725F1H-104Z1	1	332151040R1	
C3607	CHIP ELECT C	CEWX4V-220M	1	3981G2217R2	
C3608	C-CERA C	CK725F1H-104Z1	1	332151040R1	
C3609	C-CERA C	CK725F1H-104Z1	1	332151040R1	
C3610	C-CERA C	CK725F1H-104Z1	1	332151040R1	
C3611	C-CERA C	CK725F1H-104Z1	1	332151040R1	
C3612	C-CERA C	CK725F1H-104Z1	1	332151040R1	
C3613	C-CERA C	CK725F1H-104Z1	1	332151040R1	
C3614	C-CERA C	CK725F1H-104Z1	1	332151040R1	
C3615	C-CERA C	CK725F1H-104Z1	1	332151040R1	
C3616	C-CERA C	CK725F1H-104Z1	1	332151040R1	
C3617	C-CERA C	CK725F1H-104Z1	1	332151040R1	
C3618	C-CERA C	CK725F1H-104Z1	1	332151040R1	
C3619	C-CERA C	CK725F1H-104Z1	1	332151040R1	
C3620	C-CERA C	CK725F1H-104Z1	1	332151040R1	
C3621	C-CERA C	CK725F1H-104Z1	1	332151040R1	
C3622	C-CERA C	CK725F1H-104Z1	1	332151040R1	
C3623	C-CERA C	CK725F1H-104Z1	1	332151040R1	
C3624	C-CERA C	CK725F1H-104Z1	1	332151040R1	
C3625	C-CERA C	CK725F1H-104Z1	1	332151040R1	
C3626	C-CERA C	CK725F1H-104Z1	1	332151040R1	
C3627	C-CERA C	CK725F1H-104Z1	1	332151040R1	
C3628	C-CERA C	CK725F1H-104Z1	1	332151040R1	
C3629	C-CERA C	CK725F1H-104Z1	1	332151040R1	
C3641	CHIP ELECT C	CEWX4V-220M	1	3981G2217R2	
C3642	CHIP ELECT C	CEWX4V-220M	1	3981G2217R2	

C3651	C-CERA C	CK725F1H-104Z1	1	332151040R1	
C3652	C-CERA C	CC725CH1H-101J1	1	342101014R1	
C3653	CHIP ELECT C	CEWX4V-220M	1	3981G2217R2	
C3661	C-CERA C	CK725F1H-104Z1	1	332151040R1	
C3662	C-CERA C	CK725F1H-104Z1	1	332151040R1	
C3663	C-CERA C	CK725F1H-104Z1	1	332151040R1	
C3664	C-CERA C	CK725F1H-104Z1	1	332151040R1	
C3665	C-CERA C	CK725F1H-104Z1	1	332151040R1	
C3666	C-CERA C	CK725F1H-104Z1	1	332151040R1	
C3667	C-CERA C	CK725F1H-104Z1	1	332151040R1	
C3668	CHIP ELECT C	CEWX4V-220M	1	3981G2217R2	
C3931	C-CERA C	CC725CH1H-101J1	1	342101014R1	
C3932	C-CERA C	CC725CH1H-101J1	1	342101014R1	
C3933	C-CERA C	CC725CH1H-101J1	1	342101014R1	
C3934	C-CERA C	CK725F1H-104Z1	1	332151040R1	
C3935	C-CERA C	CK725F1H-104Z1	1	332151040R1	
C3936	C-CERA C	CK725F1H-104Z1	1	332151040R1	
C3938	C-CERA C	CC725CH1H-080D1	1	342100802R1	
C3939	CHIP ELECT C	CEWX6.3V-100M	1	398121017R2	
C3940	C-CERA C	CK725F1H-104Z1	1	332151040R1	
C3941	C-CERA C	CC725CH1H-080D1	1	342100802R1	
C3942	C-CERA C	CC725CH1H-080D1	1	342100802R1	
C3946	C-CERA C	CK725F1H-103Z1	1	332151030R1	
C3947	C-CERA C	CK725F1H-103Z1	1	332151030R1	
C8001	C-CERA C	CK725F1H-104Z1	1	332151040R1	
C8002	C-CERA C	CC725CH1H-102J1	1	342101024R1	
C8003	C-CERA C	CK725F1H-104Z1	1	332151040R1	
C8004	CHIP ELECT C	CEWX4V-22M	1	3981G2207R2	
C8005	CHIP ELECT C	CEWX4V-22M	1	3981G2207R2	
C8006	C-CERA C	CK725F1H-104Z1	1	332151040R1	
C8007	C-CERA C	CC725CH1H-120J1	1	342101204R1	
C8008	C-CERA C	CC725CH1H-120J1	1	342101204R1	
C8009	C-CERA C	CK725F1H-104Z1	1	332151040R1	
C8010	C-CERA C	CK725F1H-104Z1	1	332151040R1	
C8011	C-CERA C	CK725F1H-104Z1	1	332151040R1	
C8012	C-CERA C	CK725F1H-104Z1	1	332151040R1	
C8013	C-CERA C	CK725F1H-104Z1	1	332151040R1	
C8014	C-CERA C	CK725F1H-104Z1	1	332151040R1	
C8015	C-CERA C	CK725F1H-104Z1	1	332151040R1	
C8016	C-CERA C	CK725F1H-104Z1	1	332151040R1	
C8017	C-CERA C	CK725F1H-104Z1	1	332151040R1	
C8018	C-CERA C	CK725F1H-104Z1	1	332151040R1	
C8019	C-CERA C	CK725F1H-104Z1	1	332151040R1	
C8020	C-CERA C	CK725F1H-104Z1	1	332151040R1	
C8021	C-CERA C	CK725F1H-104Z1	1	332151040R1	
C8022	C-CERA C	CK725F1H-104Z1	1	332151040R1	
C8023	C-CERA C	CK725F1H-104Z1	1	332151040R1	
C8024	C-CERA C	CK725F1H-104Z1	1	332151040R1	
C8025	C-CERA C	CK725F1H-104Z1	1	332151040R1	
C8026	C-CERA C	CK725F1H-104Z1	1	332151040R1	
C8027	C-CERA C	CK725F1H-104Z1	1	332151040R1	
C8028	C-CERA C	CK725F1H-104Z1	1	332151040R1	
C8029	C-CERA C	CK725F1H-104Z1	1	332151040R1	
C8030	C-CERA C	CK725F1H-104Z1	1	332151040R1	

C8031	C-CERA C	CK725F1H-104Z1	1	332151040R1	
C8032	C-CERA C	CK725F1H-104Z1	1	332151040R1	
C8033	C-CERA C	CK725F1H-104Z1	1	332151040R1	
C8034	C-CERA C	CK725F1H-104Z1	1	332151040R1	
C8035	C-CERA C	CK725F1H-104Z1	1	332151040R1	
C8036	C-CERA C	CK725F1H-104Z1	1	332151040R1	
C8037	C-CERA C	CK725F1H-104Z1	1	332151040R1	
C8038	C-CERA C	CK725F1H-104Z1	1	332151040R1	
C8039	C-CERA C	CK725F1H-104Z1	1	332151040R1	
C8040	C-CERA C	CK725F1H-104Z1	1	332151040R1	
C8041	C-CERA C	CK725F1H-104Z1	1	332151040R1	
C8042	C-CERA C	CK725F1H-104Z1	1	332151040R1	
C8043	C-CERA C	CK725F1H-104Z1	1	332151040R1	
C8044	C-CERA C	CK725F1H-104Z1	1	332151040R1	
C8045	C-CERA C	CK725F1H-104Z1	1	332151040R1	
C8046	C-CERA C	CK725F1H-104Z1	1	332151040R1	
C8047	C-CERA C	CK725F1H-104Z1	1	332151040R1	
C8048	C-CERA C	CK725F1H-104Z1	1	332151040R1	
C8049	CHIP ELECT C	CEWX4V-22M	1	3981G2207R2	
C8051	C-CERA C	CK725F1H-104Z1	1	332151040R1	
C8055	C-CERA C	CK725F1H-104Z1	1	332151040R1	
C8056	CHIP ELECT C	CEWX4V-22M	1	3981G2207R2	
C8057	C-CERA C	CK725F1H-104Z1	1	332151040R1	
C8060	C-CERA C	CK725F1H-104Z1	1	332151040R1	
C8061	CHIP ELECT C	CEWX4V-22M	1	3981G2207R2	
C8062	C-CERA C	CK725F1H-104Z1	1	332151040R1	
C8063	CHIP ELECT C	CEWX4V-22M	1	3981G2207R2	
C8064	C-CERA C	CK725F1H-104Z1	1	332151040R1	
C8065	CHIP ELECT C	CEWX4V-22M	1	3981G2207R2	
C8066	C-CERA C	CK725F1H-104Z1	1	332151040R1	
C8067	CHIP ELECT C	CEWX4V-22M	1	3981G2207R2	
C8068	C-CERA C	CK725F1H-104Z1	1	332151040R1	
C8069	CHIP ELECT C	CEWX4V-22M	1	3981G2207R2	
C8070	CHIP ELECT C	CEWX4V-100M	1	3981G1017R2	
C8071	C-CERA C	CK725F1H-104Z1	1	332151040R1	
C8072	CHIP ELECT C	CEWX6.3V-100M	1	398121017R2	
C8073	C-CERA C	CK725F1H-104Z1	1	332151040R1	
C8074	CD C	UCD1A471MNL1GS	1	396634717R2	
C8075	CHIP ELECT C	CEWT6.3V-470M	1	395724717R2	
C8076	CD C	UCD1E221MNL1GS	1	396652217R2	
C8077	C-CERA C	CK725F1H-223Z1	1	332152230R1	
C8078	C-CERA C	CK725F1H-104Z1	1	332151040R1	
C8081	CHIP ELECT C	CEWX4V-100M	1	3981G1017R2	
C8082	C-CERA C	CK725F1H-104Z1	1	332151040R1	
C8083	C-CERA C	CK725F1H-104Z1	1	332151040R1	
C8084	CHIP ELECT C	CEWX4V-100M	1	3981G1017R2	
C8085	C-CERA C	CK725F1H-104Z1	1	332151040R1	
C8086	C-CERA C	CK725F1H-104Z1	1	332151040R1	
C8087	C-CERA C	CK725F1H-104Z1	1	332151040R1	
C8088	C-CERA C	CK725F1H-104Z1	1	332151040R1	
C8089	C-CERA C	CK725F1H-104Z1	1	332151040R1	
C8101	C-CERA C	CK725B1H-102K1	1	332101025R1	
C8103	CHIP ELECT C	CEWX4V-22M	1	3981G2207R2	
C8104	C-CERA C	CK725F1A-105Z1	1	332181050R1	

C8105	C-CERA C	CK725B1H-102K1	1	332101025R1	
C8106	C-CERA C	CK725F1A-105Z1	1	332181050R1	
C8107	C-CERA C	CK725B1H-102K1	1	332101025R1	
C8108	C-CERA C	CK725F1A-105Z1	1	332181050R1	
C8109	C-CERA C	CK725B1H-102K1	1	332101025R1	
C8110	C-CERA C	CK725F1A-105Z1	1	332181050R1	
C8111	C-CERA C	CK725B1H-102K1	1	332101025R1	
C8112	C-CERA C	CK725F1A-105Z1	1	332181050R1	
C8113	C-CERA C	CK725B1H-102K1	1	332101025R1	
C8114	C-CERA C	CK725F1A-105Z1	1	332181050R1	
C8115	C-CERA C	CK725B1H-102K1	1	332101025R1	
C8116	C-CERA C	CK725F1A-105Z1	1	332181050R1	
C8117	C-CERA C	CK725B1H-102K1	1	332101025R1	
C8118	C-CERA C	CK725F1A-105Z1	1	332181050R1	
C8119	C-CERA C	CK725B1H-102K1	1	332101025R1	
C8120	CHIP ELECT C	CEWX4V-22M	1	3981G2207R2	
C8121	C-CERA C	CK725F1A-105Z1	1	332181050R1	
C8123	C-CERA C	CK725F1A-105Z1	1	332181050R1	
C8124	C-CERA C	CK725B1H-102K1	1	332101025R1	
C8125	C-CERA C	CK725F1A-105Z1	1	332181050R1	
C8126	C-CERA C	CK725B1H-102K1	1	332101025R1	
C8127	C-CERA C	CK725F1A-105Z1	1	332181050R1	
C8128	C-CERA C	CK725B1H-102K1	1	332101025R1	
C8129	C-CERA C	CK725F1A-105Z1	1	332181050R1	
C8151	CHIP ELECT C	CEWX4V-100M	1	3981G1017R2	
C8152	C-CERA C	CK725F1H-104Z1	1	332151040R1	
C8281	C-CERA C	CK725F1H-104Z1	1	332151040R1	
C8292	C-CERA C	CK725F1A-105Z1	1	332181050R1	
C8293	C-CERA C	CK725F1A-105Z1	1	332181050R1	
C8298	C-CERA C	CK725B1H-102K1	1	332101025R1	
C8299	C-CERA C	CK725B1H-102K1	1	332101025R1	
C8326	C-CERA C	CK725F1A-105Z1	1	332181050R1	
C8327	C-CERA C	CK725F1A-105Z1	1	332181050R1	
C8328	CHIP ELECT C	CEWX16V-22M	1	398142207R2	
C8329	C-CERA C	CK725F1A-105Z1	1	332181050R1	
C8330	C-CERA C	CK725F1A-105Z1	1	332181050R1	
C8348	C-CERA C	CK725B1H-102K1	1	332101025R1	
C8399	C-CERA C	CK725B1H-102K1	1	332101025R1	
C8401	CHIP ELECT C	CEWX4V-22M	1	3981G2207R2	
C8402	CHIP ELECT C	CEWX4V-22M	1	3981G2207R2	
C8403	C-CERA C	CK725F1A-105Z1	1	332181050R1	
C8404	C-CERA C	CK725B1H-102K1	1	332101025R1	
C8405	C-CERA C	CK725F1A-105Z1	1	332181050R1	
C8406	C-CERA C	CK725B1H-102K1	1	332101025R1	
C8407	C-CERA C	CC725CH1H-100D1	1	342101002R1	
C8408	CHIP ELECT C	CEWX4V-22M	1	3981G2207R2	
C8409	CHIP ELECT C	CEWX4V-22M	1	3981G2207R2	
C8410	C-CERA C	CK725F1A-105Z1	1	332181050R1	
C8411	C-CERA C	CK725B1H-102K1	1	332101025R1	
C8412	C-CERA C	CK725F1A-105Z1	1	332181050R1	
C8413	C-CERA C	CK725B1H-102K1	1	332101025R1	
C8414	C-CERA C	CK725F1A-105Z1	1	332181050R1	
C8415	C-CERA C	CK725B1H-102K1	1	332101025R1	
C8416	C-CERA C	CK725B1H-102K1	1	332101025R1	

C8417	C-CERA C	CK725F1A-105Z1	1	332181050R1	
C8418	CHIP ELECT C	CEWX4V-22M	1	3981G2207R2	
C8419	C-CERA C	CK725B1H-102K1	1	332101025R1	
C8420	C-CERA C	CK725F1A-105Z1	1	332181050R1	
C8421	C-CERA C	CK725B1H-102K1	1	332101025R1	
C8422	C-CERA C	CK725F1A-105Z1	1	332181050R1	
C8423	C-CERA C	CK725B1H-102K1	1	332101025R1	
C8424	C-CERA C	CK725F1A-105Z1	1	332181050R1	
C8425	C-CERA C	CK725B1H-102K1	1	332101025R1	
C8426	C-CERA C	CK725F1A-105Z1	1	332181050R1	
C8427	C-CERA C	CK725B1H-102K1	1	332101025R1	
C8428	C-CERA C	CK725F1A-105Z1	1	332181050R1	
C8429	C-CERA C	CK725B1H-102K1	1	332101025R1	
C8430	C-CERA C	CK725F1A-105Z1	1	332181050R1	
C8431	C-CERA C	CK725B1H-102K1	1	332101025R1	
C8432	C-CERA C	CK725F1A-105Z1	1	332181050R1	
C8433	C-CERA C	CK725B1H-102K1	1	332101025R1	
C8434	C-CERA C	CK725F1A-105Z1	1	332181050R1	
C8435	C-CERA C	CK725F1A-105Z1	1	332181050R1	
C8441	C-CERA C	CK725F1A-105Z1	1	332181050R1	
C8442	C-CERA C	CK725F1A-105Z1	1	332181050R1	
C8443	CHIP ELECT C	CEWX4V-220M	1	3981G2217R2	
C8444	C-CERA C	CK725F1A-105Z1	1	332181050R1	
C8501	C-CERA C	CK725F1A-105Z1	1	332181050R1	
C8502	CHIP ELECT C	CEWX4V-22M	1	3981G2207R2	
C8503	C-CERA C	CK725B1H-102K1	1	332101025R1	
C8504	C-CERA C	CK725B1H-102K1	1	332101025R1	
C8505	CHIP ELECT C	CEWX4V-22M	1	3981G2207R2	
C8506	C-CERA C	CK725F1A-105Z1	1	332181050R1	
C8507	C-CERA C	CK725B1H-102K1	1	332101025R1	
C8508	C-CERA C	CK725F1A-105Z1	1	332181050R1	
C8509	C-CERA C	CK725B1H-102K1	1	332101025R1	
C8510	C-CERA C	CK725F1A-105Z1	1	332181050R1	
C8511	C-CERA C	CK725B1H-102K1	1	332101025R1	
C8512	C-CERA C	CK725F1A-105Z1	1	332181050R1	
C8513	C-CERA C	CK725B1H-102K1	1	332101025R1	
C8514	C-CERA C	CK725F1A-105Z1	1	332181050R1	
C8515	C-CERA C	CK725B1H-102K1	1	332101025R1	
C8516	C-CERA C	CK725F1A-105Z1	1	332181050R1	
C8517	C-CERA C	CK725B1H-102K1	1	332101025R1	
C8518	C-CERA C	CK725F1A-105Z1	1	332181050R1	
C8519	C-CERA C	CK725B1H-102K1	1	332101025R1	
C8520	C-CERA C	CK725F1A-105Z1	1	332181050R1	
C8521	C-CERA C	CK725B1H-102K1	1	332101025R1	
C8522	C-CERA C	CK725F1A-105Z1	1	332181050R1	
C8523	C-CERA C	CK725B1H-102K1	1	332101025R1	
C8524	C-CERA C	CK725F1A-105Z1	1	332181050R1	
C8529	CHIP ELECT C	CEWX4V-22M	1	3981G2207R2	
C8530	C-CERA C	CK725F1A-105Z1	1	332181050R1	
C8531	C-CERA C	CK725B1H-102K1	1	332101025R1	
C8532	C-CERA C	CK725F1A-105Z1	1	332181050R1	
C8533	C-CERA C	CK725B1H-102K1	1	332101025R1	
C8534	C-CERA C	CK725F1A-105Z1	1	332181050R1	
C8535	C-CERA C	CK725B1H-102K1	1	332101025R1	

C8536	C-CERA C	CK725F1A-105Z1	1	332181050R1	
C8537	C-CERA C	CK725B1H-102K1	1	332101025R1	
C8538	C-CERA C	CK725F1A-105Z1	1	332181050R1	
C8539	C-CERA C	CK725B1H-102K1	1	332101025R1	
C8540	C-CERA C	CK725F1A-105Z1	1	332181050R1	
C8541	C-CERA C	CK725B1H-102K1	1	332101025R1	
C8542	C-CERA C	CK725F1A-105Z1	1	332181050R1	
C8543	C-CERA C	CK725B1H-102K1	1	332101025R1	
C8544	C-CERA C	CK725F1A-105Z1	1	332181050R1	
C8545	C-CERA C	CK725B1H-102K1	1	332101025R1	
C8546	C-CERA C	CK725F1A-105Z1	1	332181050R1	
C8547	C-CERA C	CK725B1H-102K1	1	332101025R1	
C8548	C-CERA C	CK725F1A-105Z1	1	332181050R1	
C8549	C-CERA C	CK725B1H-102K1	1	332101025R1	
C8550	C-CERA C	CK725F1A-105Z1	1	332181050R1	
C8551	C-CERA C	CK725B1H-102K1	1	332101025R1	
C8552	C-CERA C	CK725F1A-105Z1	1	332181050R1	
C8553	C-CERA C	CK725B1H-102K1	1	332101025R1	
C8554	C-CERA C	CK725F1A-105Z1	1	332181050R1	
C8555	C-CERA C	CK725B1H-102K1	1	332101025R1	
C8556	C-CERA C	CK725F1A-105Z1	1	332181050R1	
C8557	C-CERA C	CK725B1H-102K1	1	332101025R1	
C8558	C-CERA C	CK725F1A-105Z1	1	332181050R1	
C8559	C-CERA C	CK725B1H-102K1	1	332101025R1	
C8560	C-CERA C	CK725F1A-105Z1	1	332181050R1	
C8561	C-CERA C	CK725B1H-102K1	1	332101025R1	
C8562	C-CERA C	CK725F1A-105Z1	1	332181050R1	
C8563	C-CERA C	CK725B1H-102K1	1	332101025R1	
C8564	CHIP ELECT C	CEWX4V-22M	1	3981G2207R2	
C8565	CHIP ELECT C	CEWX4V-22M	1	3981G2207R2	
C8566	C-CERA C	CK725B1H-102K1	1	332101025R1	
C8567	C-CERA C	CK725F1A-105Z1	1	332181050R1	
C8568	CHIP ELECT C	CEWX4V-22M	1	3981G2207R2	
C8569	C-CERA C	CK725B1H-102K1	1	332101025R1	
C8570	C-CERA C	CK725F1A-105Z1	1	332181050R1	
C8571	CHIP ELECT C	CEWX4V-22M	1	3981G2207R2	
C8572	C-CERA C	CK725B1H-102K1	1	332101025R1	
C8573	C-CERA C	CK725F1A-105Z1	1	332181050R1	
C8574	C-CERA C	CC725CH1H-070D1	1	342100702R1	
C8575	C-CERA C	CC725CH1H-070D1	1	342100702R1	
C8581	C-CERA C	CK725F1H-104Z1	1	332151040R1	
C8592	C-CERA C	CK725F1A-105Z1	1	332181050R1	
C8593	C-CERA C	CK725F1A-105Z1	1	332181050R1	
C8598	C-CERA C	CK725B1H-102K1	1	332101025R1	
C8599	C-CERA C	CK725B1H-102K1	1	332101025R1	
C8601	C-CERA C	CK725F1A-105Z1	1	332181050R1	
C8602	CHIP ELECT C	CEWX4V-100M	1	3981G1017R2	
C8603	C-CERA C	CK725F1A-105Z1	1	332181050R1	
C8604	C-CERA C	CK725F1A-105Z1	1	332181050R1	
C8605	CHIP ELECT C	CEWX4V-220M	1	3981G2217R2	
C8606	C-CERA C	CK725F1H-104Z1	1	332151040R1	
C8607	CHIP ELECT C	CEWX4V-100M	1	3981G1017R2	
C8608	C-CERA C	CK725F1A-105Z1	1	332181050R1	
C8609	CHIP ELECT C	CEWX4V-100M	1	3981G1017R2	

C8662	C-CERA C	CK725F1H-223Z1	1	332152230R1	
C8663	CD C	UCD1E221MNL1GS	1	396652217R2	
C8664	C-CERA C	CK725F1H-104Z1	1	332151040R1	
C8669	CD C	UCD1A471MNL1GS	1	396634717R2	
C8670	CHIP ELECT C	CEWT6.3V-470M	1	395724717R2	
C8675	CHIP ELECT C	CEWX4V-100M	1	3981G1017R2	
C8676	C-CERA C	CK725F1A-105Z1	1	332181050R1	
C8679	CD C	UCD1A471MNL1GS	1	396634717R2	
C8680	CHIP ELECT C	CEWT6.3V-470M	1	395724717R2	
C8681	C-CERA C	CK725F1H-104Z1	1	332151040R1	
C8682	C-CERA C	CK725F1H-223Z1	1	332152230R1	
C8683	CD C	UCD1E221MNL1GS	1	396652217R2	
C8684	C-CERA C	CK725F1H-104Z1	1	332151040R1	
C8691	C-CERA C	CK725F1A-105Z1	1	332181050R1	
C8692	C-CERA C	CK725F1A-105Z1	1	332181050R1	
C8698	C-CERA C	CK725B1H-102K1	1	332101025R1	
C8699	C-CERA C	CK725B1H-102K1	1	332101025R1	
C8701	C-CERA C	CK725F1A-105Z1	1	332181050R1	
C8702	C-CERA C	CK725F1A-105Z1	1	332181050R1	
C8703	C-CERA C	CK725F1A-105Z1	1	332181050R1	
C8704	CHIP ELECT C	CEWX50V-4.7M	1	398180477R2	
C8705	C-CERA C	CK725F1A-105Z1	1	332181050R1	
C8706	C-CERA C	CK725F1A-105Z1	1	332181050R1	
C8707	C-CERA C	CK725F1A-105Z1	1	332181050R1	
C8708	C-CERA C	CK725F1A-105Z1	1	332181050R1	
C8709	CHIP ELECT C	CEWX4V-220M	1	3981G2217R2	
C8710	C-CERA C	CK725F1A-105Z1	1	332181050R1	
C8801	C-CERA C	CK725F1H-104Z1	1	332151040R1	
C8802	CHIP ELECT C	CEWX4V-22M	1	3981G2207R2	
C8803	C-CERA C	CK725F1A-105Z1	1	332181050R1	
C8804	C-CERA C	CK725F1H-104Z1	1	332151040R1	
C8805	C-CERA C	CK725B1H-102K1	1	332101025R1	
C8806	C-CERA C	CK725F1H-104Z1	1	332151040R1	
C8807	C-CERA C	CK725F1H-104Z1	1	332151040R1	
C8808	C-CERA C	CK725F1H-104Z1	1	332151040R1	
C8809	C-CERA C	CK725F1H-104Z1	1	332151040R1	
C8810	C-CERA C	CK725F1H-104Z1	1	332151040R1	
C8811	C-CERA C	CK725F1H-104Z1	1	332151040R1	
C8812	C-CERA C	CK725F1H-104Z1	1	332151040R1	
C8813	C-CERA C	CK725F1H-104Z1	1	332151040R1	
C8814	C-CERA C	CK725F1H-104Z1	1	332151040R1	
C8901	C-CERA C	CC725CH1H-101J1	1	342101014R1	
C8902	C-CERA C	CC725CH1H-101J1	1	342101014R1	
C8903	C-CERA C	CC725CH1H-101J1	1	342101014R1	
C8904	C-CERA C	CC725CH1H-101J1	1	342101014R1	
C8905	C-CERA C	CC725CH1H-101J1	1	342101014R1	
C8906	C-CERA C	CC725CH1H-101J1	1	342101014R1	
C8919	C-CERA C	CK725F1A-105Z1	1	332181050R1	
C8920	C-CERA C	CK725F1A-105Z1	1	332181050R1	
C8921	C-CERA C	CK725F1A-105Z1	1	332181050R1	
C8922	C-CERA C	CK725F1A-105Z1	1	332181050R1	
C8923	C-CERA C	CK725F1A-105Z1	1	332181050R1	
C8924	C-CERA C	CK725F1A-105Z1	1	332181050R1	
R1021	C-CARBON R	RN72K1J-105JE	1	435031054R1	

R1022	C-CARBON R	RN72K1J-470JE	1	435034704R1	
R3002	C-CARBON R	RN72K1J-102JE	1	435031024R1	
R3003	C-CARBON R	RN72K1J-392JE	1	435033924R1	
R3004	C-CARBON R	RN72K1J-392JE	1	435033924R1	
R3005	C-CARBON R	RN72K1J-222JE	1	435032224R1	
R3012	C-CARBON R	RN72K1J-102JE	1	435031024R1	
R3013	C-CARBON R	RN72K1J-392JE	1	435033924R1	
R3014	C-CARBON R	RN72K1J-392JE	1	435033924R1	
R3015	C-CARBON R	RN72K1J-222JE	1	435032224R1	
R3022	C-CARBON R	RN72K1J-102JE	1	435031024R1	
R3023	C-CARBON R	RN72K1J-392JE	1	435033924R1	
R3024	C-CARBON R	RN72K1J-392JE	1	435033924R1	
R3025	C-CARBON R	RN72K1J-222JE	1	435032224R1	
R3206	C-CARBON R	RN72K1J-273JE	1	435032734R1	
R3207	C-CARBON R	RN72K1J-273JE	1	435032734R1	
R3208	C-CARBON R	RN72K1J-393JE	1	435033934R1	
R3226	C-CARBON R	RN72K1J-273JE	1	435032734R1	
R3227	C-CARBON R	RN72K1J-273JE	1	435032734R1	
R3228	C-CARBON R	RN72K1J-393JE	1	435033934R1	
R3229	C-CARBON R	RN72K1J-273JE	1	435032734R1	
R3230	C-CARBON R	RN72K1J-273JE	1	435032734R1	
R3231	C-CARBON R	RN72K1J-393JE	1	435033934R1	
R3301	C-CARBON R	RN72K1J-331JE	1	435033314R1	
R3304	C-CARBON R	RN72K1J-470JE	1	435034704R1	
R3305	C-CARBON R	RN72K1J-331JE	1	435033314R1	
R3306	C-CARBON R	RN72K1J-470JE	1	435034704R1	
R3307	C-CARBON R	RN72K1J-331JE	1	435033314R1	
R3311	C-CARBON R	RN72K1J-331JE	1	435033314R1	
R3312	C-CARBON R	RN72K1J-331JE	1	435033314R1	
R3313	C-CARBON R	RN72K1J-331JE	1	435033314R1	
R3314	C-CARBON R	RN72K1J-151JE	1	435031514R1	
R3315	C-CARBON R	RN72K1J-331JE	1	435033314R1	
R3316	C-CARBON R	RN72K1J-331JE	1	435033314R1	
R3317	C-CARBON R	RN72K1J-151JE	1	435031514R1	
R3318	C-CARBON R	RN72K1J-331JE	1	435033314R1	
R3319	C-CARBON R	RN72K1J-331JE	1	435033314R1	
R3320	C-CARBON R	RN72K1J-331JE	1	435033314R1	
R3321	C-CARBON R	RN72K1J-151JE	1	435031514R1	
R3322	C-CARBON R	RN72K1J-331JE	1	435033314R1	
R3323	C-CARBON R	RN72K1J-331JE	1	435033314R1	
R3331	C-CARBON R	RN72K1J-331JE	1	435033314R1	
R3334	C-CARBON R	RN72K1J-331JE	1	435033314R1	
R3351	C-CARBON R	RN72K1J-331JE	1	435033314R1	
R3355	C-CARBON R	RN72K1J-331JE	1	435033314R1	
R3371	C-CARBON R	RN72K1J-331JE	1	435033314R1	
R3374	C-CARBON R	RN72K1J-331JE	1	435033314R1	
R3382	C-CARBON R	RN72K1J-331JE	1	435033314R1	
R3391	C-CARBON R	RN72K1J-470JE	1	435034704R1	
R3393	C-CARBON R	RN72K1J-101JE	1	435031014R1	
R3394	C-CARBON R	RN72K1J-101JE	1	435031014R1	
R3401	C-CARBON R	RN72K1J-331JE	1	435033314R1	
R3402	C-CARBON R	RN72K1J-470JE	1	435034704R1	
R3403	C-CARBON R	RN72K1J-331JE	1	435033314R1	
R3404	C-CARBON R	RN72K1J-331JE	1	435033314R1	

R3405	C-CARBON R	RN72K1J-470JE	1	435034704R1	
R3406	C-CARBON R	RN72K1J-331JE	1	435033314R1	
R3407	C-CARBON R	RN72K1J-470JE	1	435034704R1	
R3408	C-CARBON R	RN72K1J-470JE	1	435034704R1	
R3409	C-CARBON R	RN72K1J-470JE	1	435034704R1	
R3410	C-CARBON R	RN72K1J-470JE	1	435034704R1	
R3411	C-CARBON R	RN72K1J-103JE	1	435031034R1	
R3412	C-CARBON R	RN72K1J-331JE	1	435033314R1	
R3413	C-CARBON R	RN72K1J-331JE	1	435033314R1	
R3414	C-CARBON R	RN72K1J-103JE	1	435031034R1	
R3415	C-CARBON R	RN72K1J-103JE	1	435031034R1	
R3416	C-CARBON R	RN72K1J-103JE	1	435031034R1	
R3417	C-CARBON R	RN72K1J-331JE	1	435033314R1	
R3418	C-CARBON R	RN72K1J-331JE	1	435033314R1	
R3419	C-CARBON R	RN72K1J-331JE	1	435033314R1	
R3420	C-CARBON R	RN72K1J-331JE	1	435033314R1	
R3421	C-CARBON R	RN72K1J-331JE	1	435033314R1	
R3422	C-CARBON R	RN72K1J-331JE	1	435033314R1	
R3423	C-CARBON R	RN72K1J-103JE	1	435031034R1	
R3424	C-CARBON R	RN72K1J-331JE	1	435033314R1	
R3425	C-CARBON R	RN72K1J-331JE	1	435033314R1	
R3426	C-CARBON R	RN72K1J-331JE	1	435033314R1	
R3427	C-CARBON R	RN72K1J-470JE	1	435034704R1	
R3428	C-CARBON R	RN72K1J-470JE	1	435034704R1	
R3429	C-CARBON R	RN72K1J-331JE	1	435033314R1	
R3430	C-CARBON R	RN72K1J-103JE	1	435031034R1	
R3431	C-CARBON R	RN72K1J-103JE	1	435031034R1	
R3451	C-CARBON R	RN72K1J-103JE	1	435031034R1	
R3452	C-CARBON R	RN72K1J-103JE	1	435031034R1	
R3453	C-CARBON R	RN72K1J-103JE	1	435031034R1	
R3454	C-CARBON R	RN72K1J-331JE	1	435033314R1	
R3455	C-CARBON R	RN72K1J-103JE	1	435031034R1	
R3456	C-CARBON R	RN72K1J-103JE	1	435031034R1	
R3457	C-CARBON R	RN72K1J-103JE	1	435031034R1	
R3482	C-CARBON R	RN72K1J-221JE	1	435032214R1	
R3483	C-CARBON R	RN72K1J-105JE	1	435031054R1	
R3491	C-CARBON R	RN72K1J-472JE	1	435034724R1	
R3492	C-CARBON R	RN72K1J-472JE	1	435034724R1	
R3493	C-CARBON R	RN72K1J-472JE	1	435034724R1	
R3494	C-CARBON R	RN72K1J-472JE	1	435034724R1	
R3495	C-CARBON R	RN72K1J-472JE	1	435034724R1	
R3496	C-CARBON R	RN72K1J-103JE	1	435031034R1	
R3501	C-CARBON R	RN72K1J-331JE	1	435033314R1	
R3502	C-CARBON R	RN72K1J-331JE	1	435033314R1	
R3503	C-CARBON R	RN72K1J-331JE	1	435033314R1	
R3504	C-CARBON R	RN72K1J-470JE	1	435034704R1	
R3505	C-CARBON R	RN72K1J-470JE	1	435034704R1	
R3506	C-CARBON R	RN72K1J-331JE	1	435033314R1	
R3507	C-CARBON R	RN72K1J-331JE	1	435033314R1	
R3508	C-CARBON R	RN72K1J-331JE	1	435033314R1	
R3509	C-CARBON R	RN72K1J-470JE	1	435034704R1	
R3510	C-CARBON R	RN72K1J-470JE	1	435034704R1	
R3511	C-CARBON R	RN72K1J-470JE	1	435034704R1	
R3512	C-CARBON R	RN72K1J-470JE	1	435034704R1	

R3513	C-CARBON R	RN72K1J-470JE	1	435034704R1	
R3514	C-CARBON R	RN72K1J-103JE	1	435031034R1	
R3515	C-CARBON R	RN72K1J-103JE	1	435031034R1	
R3516	C-CARBON R	RN72K1J-103JE	1	435031034R1	
R3517	C-CARBON R	RN72K1J-103JE	1	435031034R1	
R3518	C-CARBON R	RN72K1J-103JE	1	435031034R1	
R3519	C-CARBON R	RN72K1J-103JE	1	435031034R1	
R3520	C-CARBON R	RN72K1J-103JE	1	435031034R1	
R3521	C-CARBON R	RN72K1J-331JE	1	435033314R1	
R3522	C-CARBON R	RN72K1J-331JE	1	435033314R1	
R3523	C-CARBON R	RN72K1J-331JE	1	435033314R1	
R3524	C-CARBON R	RN72K1J-331JE	1	435033314R1	
R3525	C-CARBON R	RN72K1J-103JE	1	435031034R1	
R3526	C-CARBON R	RN72K1J-331JE	1	435033314R1	
R3527	C-CARBON R	RN72K1J-331JE	1	435033314R1	
R3528	C-CARBON R	RN72K1J-470JE	1	435034704R1	
R3529	C-CARBON R	RN72K1J-103JE	1	435031034R1	
R3530	C-CARBON R	RN72K1J-470JE	1	435034704R1	
R3551	C-CARBON R	RN72K1J-103JE	1	435031034R1	
R3552	C-CARBON R	RN72K1J-103JE	1	435031034R1	
R3553	C-CARBON R	RN72K1J-103JE	1	435031034R1	
R3554	C-CARBON R	RN72K1J-331JE	1	435033314R1	
R3557	C-CARBON R	RN72K1J-103JE	1	435031034R1	
R3558	C-CARBON R	RN72K1J-103JE	1	435031034R1	
R3571	C-CARBON R	RN72K1J-105JE	1	435031054R1	
R3572	C-CARBON R	RN72K1J-221JE	1	435032214R1	
R3601	C-CARBON R	RN72K1J-331JE	1	435033314R1	
R3602	C-CARBON R	RN72K1J-331JE	1	435033314R1	
R3603	C-CARBON R	RN72K1J-331JE	1	435033314R1	
R3604	C-CARBON R	RN72K1J-470JE	1	435034704R1	
R3605	C-CARBON R	RN72K1J-470JE	1	435034704R1	
R3606	C-CARBON R	RN72K1J-331JE	1	435033314R1	
R3607	C-CARBON R	RN72K1J-331JE	1	435033314R1	
R3608	C-CARBON R	RN72K1J-331JE	1	435033314R1	
R3609	C-CARBON R	RN72K1J-470JE	1	435034704R1	
R3610	C-CARBON R	RN72K1J-470JE	1	435034704R1	
R3611	C-CARBON R	RN72K1J-470JE	1	435034704R1	
R3612	C-CARBON R	RN72K1J-470JE	1	435034704R1	
R3613	C-CARBON R	RN72K1J-470JE	1	435034704R1	
R3614	C-CARBON R	RN72K1J-470JE	1	435034704R1	
R3615	C-CARBON R	RN72K1J-103JE	1	435031034R1	
R3616	C-CARBON R	RN72K1J-103JE	1	435031034R1	
R3617	C-CARBON R	RN72K1J-331JE	1	435033314R1	
R3618	C-CARBON R	RN72K1J-103JE	1	435031034R1	
R3619	C-CARBON R	RN72K1J-103JE	1	435031034R1	
R3620	C-CARBON R	RN72K1J-103JE	1	435031034R1	
R3621	C-CARBON R	RN72K1J-331JE	1	435033314R1	
R3622	C-CARBON R	RN72K1J-331JE	1	435033314R1	
R3623	C-CARBON R	RN72K1J-331JE	1	435033314R1	
R3624	C-CARBON R	RN72K1J-331JE	1	435033314R1	
R3625	C-CARBON R	RN72K1J-103JE	1	435031034R1	
R3626	C-CARBON R	RN72K1J-331JE	1	435033314R1	
R3627	C-CARBON R	RN72K1J-331JE	1	435033314R1	
R3628	C-CARBON R	RN72K1J-470JE	1	435034704R1	

R3629	C-CARBON R	RN72K1J-103JE	1	435031034R1	
R3630	C-CARBON R	RN72K1J-470JE	1	435034704R1	
R3651	C-CARBON R	RN72K1J-103JE	1	435031034R1	
R3652	C-CARBON R	RN72K1J-103JE	1	435031034R1	
R3653	C-CARBON R	RN72K1J-103JE	1	435031034R1	
R3656	C-CARBON R	RN72K1J-331JE	1	435033314R1	
R3657	C-CARBON R	RN72K1J-103JE	1	435031034R1	
R3658	C-CARBON R	RN72K1J-103JE	1	435031034R1	
R3659	C-CARBON R	RN72K1J-103JE	1	435031034R1	
R3931	C-CARBON R	RN72K1J-750JE	1	435037504R1	
R3932	C-CARBON R	RN72K1J-750JE	1	435037504R1	
R3933	C-CARBON R	RN72K1J-750JE	1	435037504R1	
R3934	C-CARBON R	RN72K1J-100JE	1	435031004R1	
R3935	C-CARBON R	RN72K1J-100JE	1	435031004R1	
R3936	C-CARBON R	RN72K1J-100JE	1	435031004R1	
R3937	C-CARBON R	RN72K1J-224JE	1	435032244R1	
R3938	C-CARBON R	RN72K1J-224JE	1	435032244R1	
R3939	C-CARBON R	RN72K1J-224JE	1	435032244R1	
R3940	C-CARBON R	RN72K1J-103JE	1	435031034R1	
R3941	C-CARBON R	RN72K1J-103JE	1	435031034R1	
R3942	C-CARBON R	RN72K1J-103JE	1	435031034R1	
R8001	C-R NET	RM7LJ103X04	1	43484710304R2	
R8002	C-CARBON R	RN72K1J-103JE	1	435031034R1	
R8003	C-CARBON R	RN72K1J-103JE	1	435031034R1	
R8004	C-CARBON R	RN72K1J-103JE	1	435031034R1	
R8005	C-CARBON R	RN72K1J-330JE	1	435033304R1	
R8007	C-R NET	RM7LJ330X04	1	43484733004R2	
R8009	C-R NET	RM7LJ220X04	1	43484722004R2	
R8010	C-R NET	RM7LJ220X04	1	43484722004R2	
R8011	C-R NET	RM7LJ220X04	1	43484722004R2	
R8012	C-R NET	RM7LJ220X04	1	43484722004R2	
R8013	C-R NET	RM7LJ220X04	1	43484722004R2	
R8014	C-R NET	RM7LJ220X04	1	43484722004R2	
R8015	C-CARBON R	RN72K1J-103JE	1	435031034R1	
R8016	C-CARBON R	RN72K1J-103JE	1	435031034R1	
R8018	C-CARBON R	RN72K1J-103JE	1	435031034R1	
R8020	C-CARBON R	RN72K1J-103JE	1	435031034R1	
R8021	C-CARBON R	RN72K1J-103JE	1	435031034R1	
R8023	C-CARBON R	RN72K1J-103JE	1	435031034R1	
R8024	C-R NET	RM7LJ103X04	1	43484710304R2	
R8025	C-R NET	RM7LJ103X04	1	43484710304R2	
R8026	C-R NET	RM7LJ103X04	1	43484710304R2	
R8027	C-R NET	RM7LJ103X04	1	43484710304R2	
R8028	C-R NET	RM7LJ103X04	1	43484710304R2	
R8029	C-R NET	RM7LJ103X04	1	43484710304R2	
R8030	C-CARBON R	RN72K1J-103JE	1	435031034R1	
R8033	C-CARBON R	RN72K1J-101JE	1	435031014R1	
R8034	C-CARBON R	RN72K1J-220JE	1	435032204R1	
R8035	C-CARBON R	RN72K1J-220JE	1	435032204R1	
R8036	C-CARBON R	RN72K1J-220JE	1	435032204R1	
R8038	C-CARBON R	RN72K1J-471JE	1	435034714R1	
R8040	C-CARBON R	RN72K1J-101JE	1	435031014R1	
R8041	C-CARBON R	RN72K1J-220JE	1	435032204R1	
R8042	C-CARBON R	RN72K1J-220JE	1	435032204R1	

R8043	C-CARBON R	RN72K1J-220JE	1	435032204R1	
R8044	C-CARBON R	RN72K1J-471JE	1	435034714R1	
R8045	C-R NET	RM7LJ103X04	1	43484710304R2	
R8046	C-CARBON R	RN72K1J-471JE	1	435034714R1	
R8047	C-R NET	RM7LJ103X04	1	43484710304R2	
R8048	C-CARBON R	RN72K1J-471JE	1	435034714R1	
R8049	C-CARBON R	RN72K1J-103JE	1	435031034R1	
R8050	C-CARBON R	RN72K1J-103JE	1	435031034R1	
R8051	C-R NET	RM7LJ330X04	1	43484733004R2	
R8052	C-CARBON R	RN72K1J-103JE	1	435031034R1	
R8053	C-CARBON R	RN72K1J-750JE	1	435037504R1	
R8054	C-CARBON R	RN72K1J-750JE	1	435037504R1	
R8055	C-CARBON R	RN72K1J-750JE	1	435037504R1	
R8056	C-CARBON R	RN72K1J-750JE	1	435037504R1	
R8057	C-CARBON R	RN72K1J-750JE	1	435037504R1	
R8058	C-CARBON R	RN72K1J-750JE	1	435037504R1	
R8062	C-R NET	RM7LJ220X04	1	43484722004R2	
R8063	C-R NET	RM7LJ220X04	1	43484722004R2	
R8066	C-CARBON R	RN72K1J-103JE	1	435031034R1	
R8067	C-CARBON R	RN72K1J-103JE	1	435031034R1	
R8070	C-CARBON R	RN72K1J-272JE	1	435032724R1	
R8071	C-CARBON R	RN72K1J-272JE	1	435032724R1	
R8072	C-CARBON R	RN72K1J-103JE	1	435031034R1	
R8073	C-CARBON R	RN72K1J-000JE	1	435030004R1	
R8074	C-CARBON R	RN72K1J-000JE	1	435030004R1	
R8075	C-CARBON R	RN72K1J-680JE	1	435036804R1	
R8076	C-CARBON R	RN72K1J-680JE	1	435036804R1	
R8077	C-CARBON R	RN72K1J-680JE	1	435036804R1	
R8078	C-CARBON R	RN72K1J-680JE	1	435036804R1	
R8079	C-CARBON R	RN72K1J-330JE	1	435033304R1	
R8081	C-CARBON R	RN72K1J-103JE	1	435031034R1	
R8082	C-CARBON R	RN72K1J-680JE	1	435036804R1	
R8083	C-CARBON R	RN72K1J-222JE	1	435032224R1	
R8084	C-CARBON R	RN72K1J-333JE	1	435033334R1	
R8085	C-CARBON R	RN72K1J-103JE	1	435031034R1	
R8091	C-CARBON R	RN72K1J-750JE	1	435037504R1	
R8092	C-CARBON R	RN72K1J-750JE	1	435037504R1	
R8093	C-CARBON R	RN72K1J-750JE	1	435037504R1	
R8094	C-CARBON R	RN72K1J-750JE	1	435037504R1	
R8095	C-CARBON R	RN72K1J-750JE	1	435037504R1	
R8096	C-CARBON R	RN72K1J-750JE	1	435037504R1	
R8101	C-CARBON R	RN72K1J-103JE	1	435031034R1	
R8102	C-CARBON R	RN72K1J-472JE	1	435034724R1	
R8103	C-CARBON R	RN72K1J-472JE	1	435034724R1	
R8104	C-CARBON R	RN72K1J-472JE	1	435034724R1	
R8234	C-CARBON R	RN72K1J-103JE	1	435031034R1	
R8235	C-CARBON R	RN72K1J-000JE	1	435030004R1	
R8236	C-CARBON R	RN72K1J-000JE	1	435030004R1	
R8237	C-CARBON R	RN72K1J-102JE	1	435031024R1	
R8238	C-CARBON R	RN72K1J-473JE	1	435034734R1	
R8239	C-CARBON R	RN72K1J-000JE	1	435030004R1	
R8240	C-CARBON R	RN72K1J-000JE	1	435030004R1	
R8242	C-CARBON R	RN72K1J-562JE	1	435035624R1	
R8243	C-CARBON R	RN72K1J-562JE	1	435035624R1	

R8244	C-CARBON R	RN72K1J-473JE	1	435034734R1	
R8247	C-CARBON R	RN72K1J-000JE	1	435030004R1	
R8248	C-CARBON R	RN72K1J-473JE	1	435034734R1	
R8323	C-CARBON R	RN72K1J-103JE	1	435031034R1	
R8324	C-CARBON R	RN72K1J-472JE	1	435034724R1	
R8325	C-CARBON R	RN72K1J-473JE	1	435034734R1	
R8326	C-CARBON R	RN72K1J-473JE	1	435034734R1	
R8334	C-CARBON R	RN72K1J-182JE	1	435031824R1	
R8335	C-CARBON R	RN72K1J-182JE	1	435031824R1	
R8337	C-CARBON R	RN72K1J-472JE	1	435034724R1	
R8338	C-CARBON R	RN72K1J-472JE	1	435034724R1	
R8341	C-CARBON R	RN72K2E-100JE	1	435221004R1	
R8401	C-R NET	RM7LJ220X04	1	43484722004R2	
R8402	C-CARBON R	RN72K1J-220JE	1	435032204R1	
R8403	C-R NET	RM7LJ220X04	1	43484722004R2	
R8404	C-CARBON R	RN72K1J-220JE	1	435032204R1	
R8405	C-CARBON R	RN72K1J-220JE	1	435032204R1	
R8408	C-CARBON R	RN72K1J-220JE	1	435032204R1	
R8409	C-CARBON R	RN72K1J-472JE	1	435034724R1	
R8410	C-CARBON R	RN72K1J-681JE	1	435036814R1	
R8411	C-CARBON R	RN72K1J-472JE	1	435034724R1	
R8414	C-CARBON R	RN72K1J-472JE	1	435034724R1	
R8415	C-CARBON R	RN72K1J-472JE	1	435034724R1	
R8416	C-R NET	RM7LJ220X04	1	43484722004R2	
R8417	C-R NET	RM7LJ220X04	1	43484722004R2	
R8418	C-R NET	RM7LJ220X04	1	43484722004R2	
R8419	C-R NET	RM7LJ220X04	1	43484722004R2	
R8420	C-R NET	RM7LJ220X04	1	43484722004R2	
R8421	C-R NET	RM7LJ220X04	1	43484722004R2	
R8422	C-R NET	RM7LJ220X04	1	43484722004R2	
R8423	C-R NET	RM7LJ220X04	1	43484722004R2	
R8424	C-R NET	RM7LJ220X04	1	43484722004R2	
R8425	C-CARBON R	RN72K1J-220JE	1	435032204R1	
R8429	C-CARBON R	RN72K1J-220JE	1	435032204R1	
R8431	C-CARBON R	RN72K1J-472JE	1	435034724R1	
R8432	C-CARBON R	RN72K1J-220JE	1	435032204R1	
R8442	C-CARBON R	RN72K1J-102JE	1	435031024R1	
R8444	C-CARBON R	RN72K1J-000JE	1	435030004R1	
R8501	C-CARBON R	RN72K1J-330JE	1	435033304R1	
R8502	C-CARBON R	RN72K1J-330JE	1	435033304R1	
R8503	C-CARBON R	RN72K1J-330JE	1	435033304R1	
R8504	C-R NET	RM7LJ330X04	1	43484733004R2	
R8505	C-R NET	RM7LJ330X04	1	43484733004R2	
R8506	C-CARBON R	RN72K1J-120JE	1	435031204R1	
R8507	C-R NET	RM7LJ330X04	1	43484733004R2	
R8508	C-R NET	RM7LJ330X04	1	43484733004R2	
R8509	C-R NET	RM7LJ330X04	1	43484733004R2	
R8510	C-R NET	RM7LJ330X04	1	43484733004R2	
R8511	C-R NET	RM7LJ330X04	1	43484733004R2	
R8512	C-R NET	RM7LJ330X04	1	43484733004R2	
R8513	C-R NET	RM7LJ330X04	1	43484733004R2	
R8514	C-CARBON R	RN72K1J-472JE	1	435034724R1	
R8516	C-CARBON R	RN72K1J-101JE	1	435031014R1	
R8517	C-CARBON R	RN72K1J-101JE	1	435031014R1	

R8518	C-CARBON R	RN72K1J-472JE	1	435034724R1	
R8519	C-CARBON R	RN72K1J-470JE	1	435034704R1	
R8520	C-CARBON R	RN72K1J-330JE	1	435033304R1	
R8521	C-CARBON R	RN72K1J-330JE	1	435033304R1	
R8522	C-R NET	RM7LJ330X04	1	43484733004R2	
R8523	C-CARBON R	RN72K1J-330JE	1	435033304R1	
R8524	C-CARBON R	RN72K1J-330JE	1	435033304R1	
R8534	C-CARBON R	RN72K1J-103JE	1	435031034R1	
R8535	C-CARBON R	RN72K1J-000JE	1	435030004R1	
R8536	C-CARBON R	RN72K1J-000JE	1	435030004R1	
R8537	C-CARBON R	RN72K1J-102JE	1	435031024R1	
R8538	C-CARBON R	RN72K1J-473JE	1	435034734R1	
R8539	C-CARBON R	RN72K1J-000JE	1	435030004R1	
R8540	C-CARBON R	RN72K1J-000JE	1	435030004R1	
R8542	C-CARBON R	RN72K1J-562JE	1	435035624R1	
R8543	C-CARBON R	RN72K1J-562JE	1	435035624R1	
R8544	C-CARBON R	RN72K1J-473JE	1	435034734R1	
R8547	C-CARBON R	RN72K1J-000JE	1	435030004R1	
R8548	C-CARBON R	RN72K1J-473JE	1	435034734R1	
R8591	C-CARBON R	RN72K1J-392JE	1	435033924R1	
R8593	C-CARBON R	RN72K1J-152JE	1	435031524R1	
R8594	C-CARBON R	RN72K1J-152JE	1	435031524R1	
R8595	C-CARBON R	RN72K1J-222JE	1	435032224R1	
R8596	C-CARBON R	RN72K1J-473JE	1	435034734R1	
R8597	C-CARBON R	RN72K1J-821JE	1	435038214R1	
R8629	C-CARBON R	RN72K1J-473JE	1	435034734R1	
R8630	C-CARBON R	RN72K1J-473JE	1	435034734R1	
R8631	C-CARBON R	RN72K1J-473JE	1	435034734R1	
R8632	C-CARBON R	RN72K1J-473JE	1	435034734R1	
R8633	C-CARBON R	RN72K1J-102JE	1	435031024R1	
R8634	C-CARBON R	RN72K1J-103JE	1	435031034R1	
R8635	C-CARBON R	RN72K1J-000JE	1	435030004R1	
R8636	C-CARBON R	RN72K1J-000JE	1	435030004R1	
R8637	C-CARBON R	RN72K1J-102JE	1	435031024R1	
R8638	C-CARBON R	RN72K1J-473JE	1	435034734R1	
R8639	C-CARBON R	RN72K1J-000JE	1	435030004R1	
R8640	C-CARBON R	RN72K1J-000JE	1	435030004R1	
R8642	C-CARBON R	RN72K1J-562JE	1	435035624R1	
R8643	C-CARBON R	RN72K1J-562JE	1	435035624R1	
R8644	C-CARBON R	RN72K1J-473JE	1	435034734R1	
R8647	C-CARBON R	RN72K1J-000JE	1	435030004R1	
R8648	C-CARBON R	RN72K1J-473JE	1	435034734R1	
R8662	C-CARBON R	RN72K1J-105JE	1	435031054R1	
R8702	C-CARBON R	RN72K1J-472JE	1	435034724R1	
R8703	C-CARBON R	RN72K1J-472JE	1	435034724R1	
R8706	C-CARBON R	RN72K1J-103JE	1	435031034R1	
R8707	C-CARBON R	RN72K1J-103JE	1	435031034R1	
R8708	C-CARBON R	RN72K1J-000JE	1	435030004R1	
R8710	C-CARBON R	RN72K1J-103JE	1	435031034R1	
R8711	C-CARBON R	RN72K1J-222JE	1	435032224R1	
R8712	C-CARBON R	RN72K1J-222JE	1	435032224R1	
R8713	C-CARBON R	RN72K1J-103JE	1	435031034R1	
R8714	C-CARBON R	RN72K1J-103JE	1	435031034R1	
R8715	C-CARBON R	RN72K1J-220JE	1	435032204R1	

R8716	C-CARBON R	RN72K1J-220JE	1	435032204R1	
R8717	C-CARBON R	RN72K1J-330JE	1	435033304R1	
R8718	C-CARBON R	RN72K1J-220JE	1	435032204R1	
R8720	C-CARBON R	RN72K1J-220JE	1	435032204R1	
R8721	C-CARBON R	RN72K1J-220JE	1	435032204R1	
R8722	C-CARBON R	RN72K1J-103JE	1	435031034R1	
R8723	C-R NET	RM7LJ222X04	1	43484722204R2	
R8726	C-R NET	RM7LJ222X04	1	43484722204R2	
R8727	C-R NET	RM7LJ103X04	1	43484710304R2	
R8728	C-CARBON R	RN72K1J-220JE	1	435032204R1	
R8730	C-CARBON R	RN72K1J-103JE	1	435031034R1	
R8732	C-CARBON R	RN72K1J-220JE	1	435032204R1	
R8733	C-CARBON R	RN72K1J-000JE	1	435030004R1	
R8734	C-CARBON R	RN72K1J-000JE	1	435030004R1	
R8736	C-R NET	RM7LJ220X04	1	43484722004R2	
R8738	C-CARBON R	RN72K1J-473JE	1	435034734R1	
R8741	C-CARBON R	RN72K1J-220JE	1	435032204R1	
R8742	C-CARBON R	RN72K1J-472JE	1	435034724R1	
R8745	C-CARBON R	RN72K1J-220JE	1	435032204R1	
R8747	C-CARBON R	RN72K1J-103JE	1	435031034R1	
R8748	C-CARBON R	RN72K1J-220JE	1	435032204R1	
R8749	C-R NET	RM7LJ220X04	1	43484722004R2	
R8750	C-CARBON R	RN72K1J-103JE	1	435031034R1	
R8751	C-CARBON R	RN72K1J-103JE	1	435031034R1	
R8753	C-R NET	RM7LJ220X04	1	43484722004R2	
R8758	C-CARBON R	RN72K1J-220JE	1	435032204R1	
R8762	C-CARBON R	RN72K1J-103JE	1	435031034R1	
R8763	C-R NET	RM7LJ103X04	1	43484710304R2	
R8765	C-CARBON R	RN72K1J-103JE	1	435031034R1	
R8766	C-R NET	RM7LJ103X04	1	43484710304R2	
R8770	C-R NET	RM7LJ103X04	1	43484710304R2	
R8772	C-CARBON R	RN72K1J-103JE	1	435031034R1	
R8773	C-CARBON R	RN72K1J-103JE	1	435031034R1	
R8774	C-CARBON R	RN72K1J-103JE	1	435031034R1	
R8801	C-CARBON R	RN72K1J-472JE	1	435034724R1	
R8803	C-CARBON R	RN72K1J-272JE	1	435032724R1	
R8804	C-CARBON R	RN72K1J-272JE	1	435032724R1	
R8805	C-CARBON R	RN72K1J-000JE	1	435030004R1	
R8806	C-CARBON R	RN72K1J-330JE	1	435033304R1	
R8807	C-CARBON R	RN72K1J-472JE	1	435034724R1	
R8808	C-CARBON R	RN72K1J-122JE	1	435031224R1	
R8809	C-CARBON R	RN72K1J-122JE	1	435031224R1	
R8810	C-CARBON R	RN72K1J-122JE	1	435031224R1	
R8811	C-CARBON R	RN72K1J-122JE	1	435031224R1	
R8812	C-R NET	RM7LJ220X04	1	43484722004R2	
R8813	C-R NET	RM7LJ220X04	1	43484722004R2	
R8814	C-CARBON R	RN72K1J-000JE	1	435030004R1	
R8815	C-CARBON R	RN72K1J-000JE	1	435030004R1	
R8816	C-CARBON R	RN72K1J-000JE	1	435030004R1	
R8817	C-CARBON R	RN72K1J-103JE	1	435031034R1	
R8901	C-CARBON R	RN72K1J-000JE	1	435030004R1	
R8902	C-CARBON R	RN72K1J-000JE	1	435030004R1	
R8903	C-CARBON R	RN72K1J-000JE	1	435030004R1	
R8904	C-CARBON R	RN72K1J-000JE	1	435030004R1	

R8905	C-CARBON R	RN72K1J-000JE	1	435030004R1	
R8906	C-CARBON R	RN72K1J-000JE	1	435030004R1	
R8907	C-CARBON R	RN72K1J-151JE	1	435031514R1	
R8908	C-CARBON R	RN72K1J-151JE	1	435031514R1	
R8909	C-CARBON R	RN72K1J-151JE	1	435031514R1	
R8910	C-CARBON R	RN72K1J-151JE	1	435031514R1	
R8911	C-CARBON R	RN72K1J-151JE	1	435031514R1	
R8912	C-CARBON R	RN72K1J-151JE	1	435031514R1	
R8931	C-CARBON R	RN72K1J-223JE	1	435032234R1	
R8932	C-CARBON R	RN72K1J-152JE	1	435031524R1	
R8933	C-CARBON R	RN72K1J-152JE	1	435031524R1	
R8934	C-CARBON R	RN72K1J-332JE	1	435033324R1	
E3001	TRM(SCREW)	NEJITANSI M3	1	25065425	
JL801B	WIRE TRAP	NPLG-8P591	1	25055629	
P3491	PLUG	IMSA-9204B-2-13Z122-GF	1	25056542	
P3801B	SOCKET	NSCT-20P1031	1	25051241	
P3802B	SOCKET	NSCT-20P1031	1	25051241	
P3803B	SOCKET	NSCT-5P1020	1	25051230	
P3804	PIN JACK	NPJ-3PDO431	1	25045624	
P4008B	SOCKET	NSCT-23P2116	1	25052219	
P8011	SOCKET	NSCT-4P2238	1	25052341	
P802B	PLUG	NPLG-13P141	1	25055157	
P8201	SOCKET	YKF45-7037V	1	25053253R3	
P8302	SOCKET	YKF45-7037V	1	25053253R3	
P8501	SOCKET	YKF45-7037V	1	25053253R3	
P8601	SOCKET	YKF45-7037V	1	25053253R3	
P8702	SOCKET	NSCT-8P2242	1	25052345	

PACKING PROCEDURE PARTS LIST

REF. NO	NAME	DESCRIPTION	Q`TY	PART NO(SN)	REMARKS
A303	CARTON	DTR6.8(B)MDD	1	29054754	
A305a	EAN LABEL	DTR6.8(B)M	1	29364930	<MA>
A305a	UPC LABEL	DTR6.8(B)M	1	29364933	<DD>
A501	PAD	(AS)	1	29092373	
A503	POLY BAG	w850xd650	1	29100245	
A505	PP TAPE	W48 OPP TAPE	1	29110148	
A507	TAPE	(SEROHAN)NITTO NO.29	1	29110149	
A509	SHEET	(PAD)	1	29096065A	
A801	WRNTY CARD	(INTEGRA)	1	29365103	<DD>
A802	HANDBILL	(DS-A2X)US	1	29380150	<DD>
A803	HANDBILL	(DS-A2X)AUS	1	29380152	<MA>
A805	INST SHEET	En(XM RADIO)	1	29355602	<DD>
A807	INS MANUAL	U9(RC-687M-692M)	1	29344467	
A808	LABEL	(SP CABLE)	1	29390189	
A822	INS MANUAL	En(DTR-6.8)	1	29344487	
A826	INST SHEET	U10(HUDSON VCR)	1	29355657	
A828	INST SHEET	U3EnFrEs(EZ Sync 805series)	1	29355647B	<DD>
A829	INST SHEET	U9(VIERA Link 805Series)	1	29355648b	<MA>
A831	REMO CON	RC-694M	1	24140694	
A841	BATTERY	R6/AA(UM-3)	3	3010194	
A841 or	BATTERY	R6/AA(UM-3)	(3)	3010054	

A843	POLY BAG	w250xd350	1	29100250A	
A844	ANT COIL	NMA-3057	1	232140	
A845	FM ANT AS	Type W	1	292191	
A846	TRM	(WRENCH)	1	25060468	
A847	POLY BAG	t0.1*70*100	1	29100217A	
A848	HANDBILL	(SIRIUS)	1	29380149	<DD>
A849	INST SHEET	U10(07REC HDMI)	1	29355689	
A850	INST SHEET	U2EnJa(IntegraREMO CON)	1	29355670	
P901	AC CORD	AS-UC-2	1	253297KAW	!, <DD>
P901 or	AC CORD	AS-UC-2	(1)	253352ATES	!, <DD>
P901	AC CORD	AS-SAA	1	253391VOL	!, <MA>
U008	MIC AS	MIC-5000	1	1B068MIC	

Integra Division of
ONKYO CORPORATION
Sales & Product Planning Div. : 2-1, Nisshin-cho, Neyagawa-shi, OSAKA 572-8540, JAPAN
Tel: 072-831-8023 Fax: 072-831-8124 http://www.onkyo.com/

Integra Division of
ONKYO U.S.A. CORPORATION
18 Park Way, Upper Saddle River, N.J. 07458, U.S.A.
Tel: 201-785-2600 Fax: 201-785-2650 http://www.integrahometheater.com