Experiment Objective

To investigate the properties of RC circuits.
To measure the time constant and hence to deduce the resistance of an RC circuit.
To measure the time constant τ at higher frequency with an oscilloscope.

Related Theory

Series RC circuits provide an illustration of exponential processes which occur frequently in physics.

Charging the Capacitor

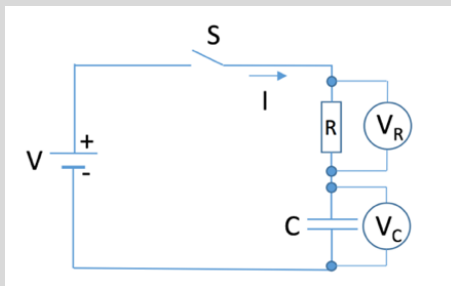

Figure 1

The capacitor C is assumed initially uncharged.

When the switch S is closed, the capacitor charges. The voltage V_c across the capacitor increases towards the maximum of the e.m.f. of the power supply, according to the formula:

$$V_C = V\left(1 - e^{-t/\tau}\right) = V\left(1 - e^{-t/RC}\right) \qquad \text{Eq. 1}$$

where $\tau = \mathrm{RC}$ is the time constant of the circuit.

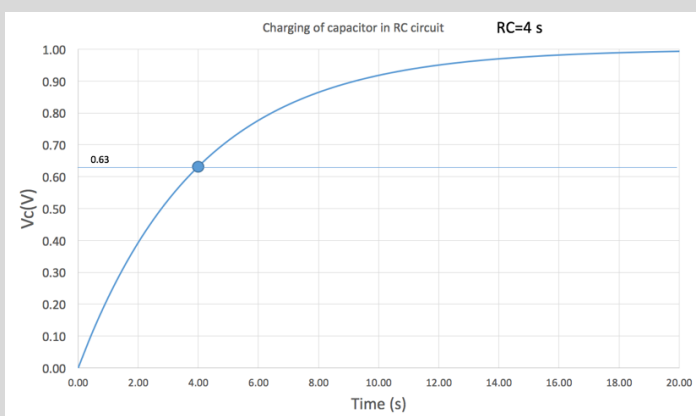

Figure 2

After a time equal to τ, the voltage across the capacitor has reached:

$$V_C = V(1 - e^{-1}) = 0.63\ V$$

Discharging the Capacitor

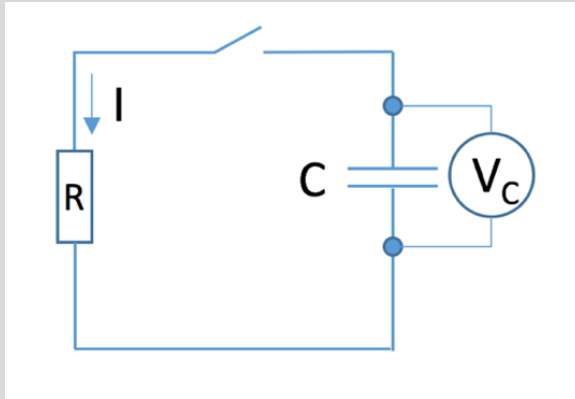

Figure 3

The capacitor C is assumed to be charged to an initial voltage V.

When the switch is shut, the capacitor discharges, such that the voltage V_c varies according to:

$$V_C = Ve^{-t/\tau} = Ve^{-t/RC} \qquad \text{Eq.2}$$

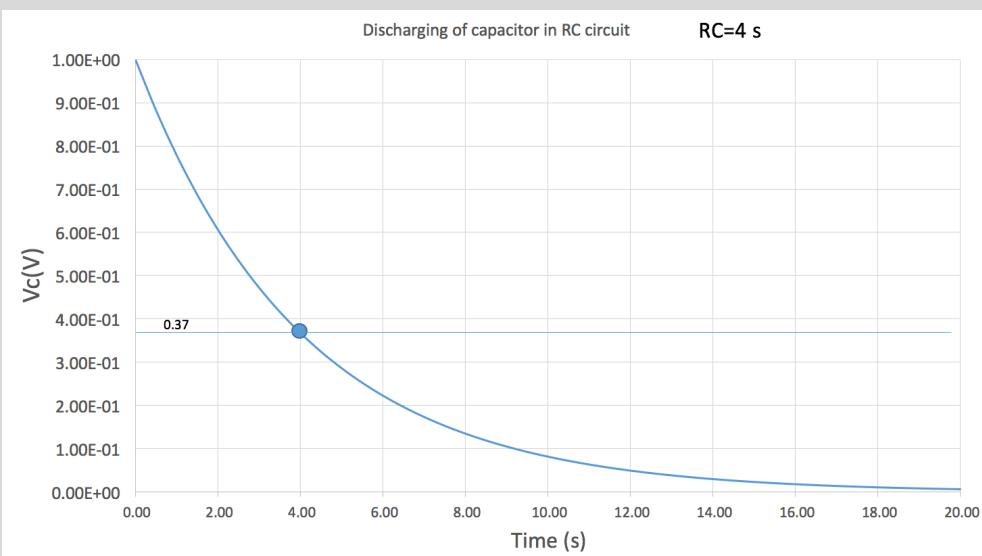

Figure 4

After a time t=τ the voltage V_c has reached:

$$V_C = Ve^{-1} = 0.37\,V$$

Experiment Instructions

Part 1 - Investigation of Capacitor Discharge and determination of a Large Resistance

Connect the circuit shown:

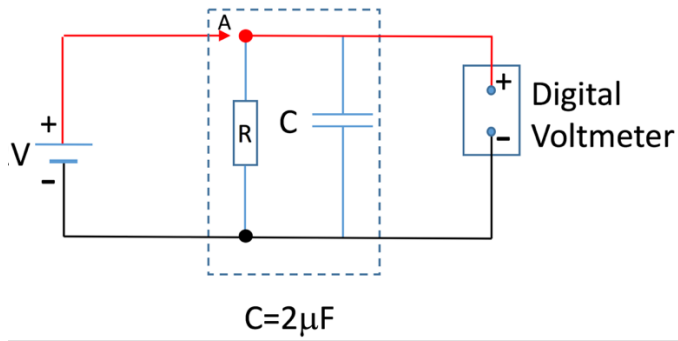

Figure 5

The colour code for D.C. circuits is that:

red represents positive terminal
black represents negative terminal.

Have the circuit checked by a demonstrator before proceeding.
Switch the digital voltmeter to an appropriate setting.
Touch the lead A to the appropriate capacitor terminal to charge the capacitor.
Remove the lead A to discharge the capacitor.

Make a table for t, V_c and their uncertainties:

t (s)	Δt (..)	V_c (..)	ΔV_c(..)

including the appropriate units for each quantity.

Record V_c at intervals of about t = 20 s until the voltage has dropped to about 0.02 volts. Include errors.

Taking natural logarithms of both sides of Eq. 1 gives:

$$\ln V_C = \ln V - \frac{t}{\tau} \qquad \text{Eq.3}$$

Plot V_c against t on log-linear axes (in Excel or Scidavis) including errors. Attach the plot to your lab book.

The plot in log-linear axis should allow a straight line to be fitted to the data. Write expressions for the slope and intercept of such a line in your lab book.

Report the following calculations in your lab book.

Determine τ and V with their uncertainties from the slope and intercept.

From τ and the known value of C (2 μF) determine R and its uncertainty. Remember to show your working.
Determine, using Eq. 2 and the value of V, the voltage V_c which should have been reached after $t = \tau$. Read from your graph the time τ corresponding to this voltage and compare it with the calculated value. Report the result in your lab book.

Part 2 – Setting up an RC Circuit on a Breadboard and Investigation of Capacitor Charge/Discharge at Different Timescales

Select appropriate *R* and *C* values from the available resistors and capacitors to create three circuits on the breadboard with approximate time constant τ ~ 0.5s, τ ~ 50 ms, τ ~ 50 μs, respectively.

In your lab book:

Prepare a table:

R (..)	ΔR (..)	C (..)	ΔC (..)	τ_{calc}(..)	$\Delta\tau_{calc}$(..)	τ_{meas}(..)	$\Delta\tau_{meas}$(..)

including the appropriate units for each quantity.

Record the *R* and *C* values used, along with their corresponding absolute uncertainties.
Determine τ_{calc} for the three R-C combinations, along with their uncertainties.
Use the function generator to obtain the appropriate square wave with amplitude V_o= 1 V. Match the square wave period *T* to the time constant of the circuit, so that $T > 3\tau$. Ask for help from a demonstrator to finalise the set up if you are in doubt.
Observe the wave by connecting the function generator (V_o) to the RC circuit and the oscilloscope to the capacitor (V_c). Take care to use the same reference point (ground) for both the oscilloscope and the function generator.

To measure the value of τ you can use the cursor functions of the oscilloscope.

Take also a picture with the oscilloscope, save on a USB, print it and stick it to your lab book.

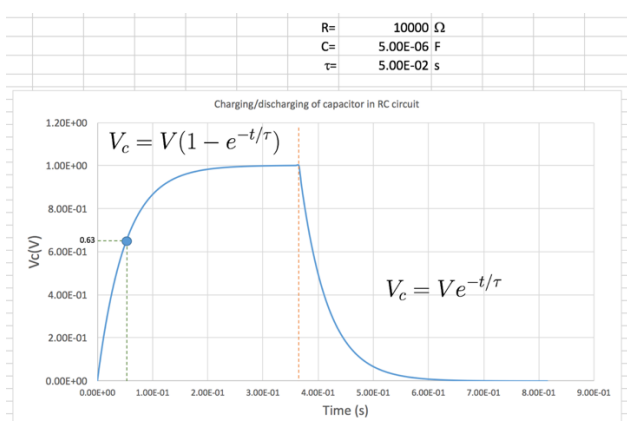

Record the measured values of τ with their errors in the table.

Construct another table with headings of V_C and t (and their appropriate units. For **τ ~ 50 ms** read the V_C and time data (8 values on the rise) by using the cursors on your oscilloscope.

Using Excel or Scidavis, plot V_C vs t, including errors, and stick the plot in your lab book.

Questions for your summary

Write the answer to these questions in your summary report

1. How do your RC values compare with the values of the measured τ?
2. Is the measured τ compatible with RC considering the measurement errors?
3. Do you detect a systematic error? If you detect it, what could be the cause?

Note: The questions are related to both experiments

Typed summary report

In no more than 500 words, typed on a separate file you must report:

1) Summary, Discussion and Conclusions.

   a. You need to briefly summarize the experiments and discuss your results. This will include also the answers to the questions for both experiments.

   b. A summary table of the results is also recommended. You can include also graphs.

The report needs to be based on the physics understanding of your results, including a discussion of experimental errors. Discussion needs to explain the results and the errors in a quantitative way.

The typed report needs to be transformed in PDF and attached to the scanned copy of your lab book.