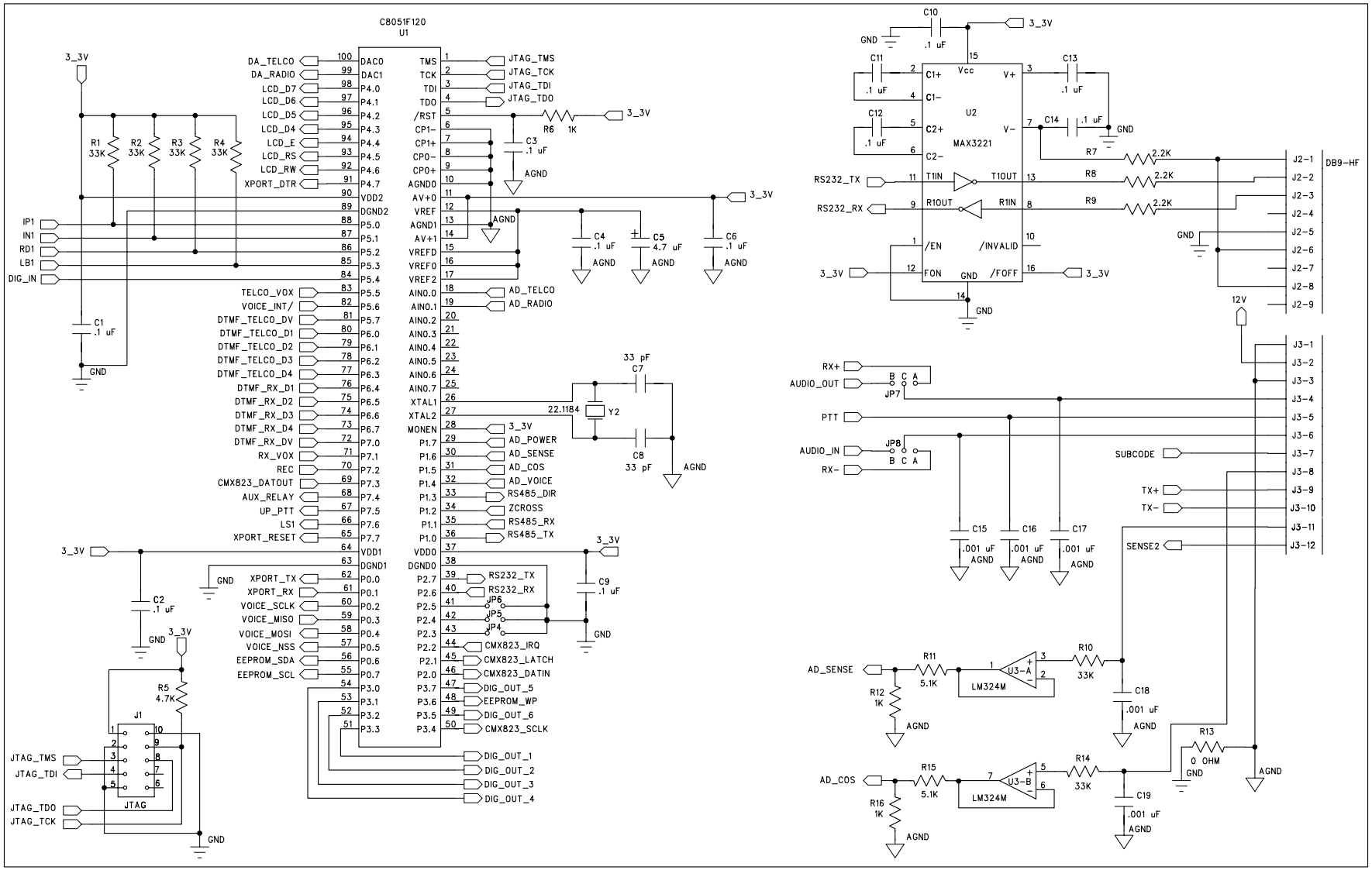
C8051F120
U1
DAC0
DAC1
P4.0
P4.1
P4.2
P4.3
P4.4
P4.5
P4.6
P4.7
VDD2
DGND2
P5.0
P5.1
P5.2
P5.3
P5.4
P5.5
P5.6
P5.7
P6.0
P6.1
P6.2
P6.3
P6.4
P6.5
P6.6
P6.7
P7.0
P7.1
P7.2
P7.3
P7.4
P7.5
P7.6
P7.7
VDD1
DGND1
P0.0
P0.1
P0.2
P0.3
P0.4
P0.5
P0.6
P0.7
P3.0
P3.1
P3.2
P3.3
TMS
TCK
TDI
TDO
/RST
CP1-
CP1+
CP0-
CP0+
AGND0
AV+0
VREF
AGND1
AV+1
VREFD
VREF0
VREF2
AIN0.0
AIN0.1
AIN0.2
AIN0.3
AIN0.4
AIN0.5
AIN0.6
AIN0.7
XTAL1
XTAL2
MONEN
P1.7
P1.6
P1.5
P1.4
P1.3
P1.2
P1.1
P1.0
VDD0
DGND0
P2.7
P2.6
P2.5
P2.4
P2.3
P2.2
P2.1
P2.0
P3.7
P3.6
P3.5
P3.4
DA_TELCO
DA_RADIO
LCD_D7
LCD_D6
LCD_D5
LCD_D4
LCD_E
LCD_RS
LCD_RW
XPORT_DTR
TELCO_VOX
VOICE_INT/
DTMF_TELCO_DV
DTMF_TELCO_D1
DTMF_TELCO_D2
DTMF_TELCO_D3
DTMF_TELCO_D4
DTMF_RX_D1
DTMF_RX_D2
DTMF_RX_D3
DTMF_RX_D4
DTMF_RX_DV
RX_VOX
REC
CMX823_DATOUT
AUX_RELAY
UP_PTT
LS1
XPORT_RESET
XPORT_TX
XPORT_RX
VOICE_SCLK
VOICE_MISO
VOICE_MOSI
VOICE_NSS
EEPROM_SDA
EEPROM_SCL
JTAG_TMS
JTAG_TCK
JTAG_TDI
JTAG_TDO
AD_TELCO
AD_RADIO
AD_POWER
AD_SENSE
AD_COS
AD_VOICE
RS485_DIR
ZCROSS
RS485_RX
RS485_TX
RS232_TX
RS232_RX
CMX823_IRQ
CMX823_LATCH
CMX823_DATIN
DIG_OUT_5
EEPROM_WP
DIG_OUT_6
CMX823_SCLK
DIG_OUT_1
DIG_OUT_2
DIG_OUT_3
DIG_OUT_4
3_3V
GND
AGND
R1 33K
R2 33K
R3 33K
R4 33K
R5 4.7K
R6 1K
C1 .1 uF
C2 .1 uF
C3 .1 uF
C4 .1 uF
C5 4.7 uF
C6 .1 uF
C7 33 pF
C8 33 pF
C9 .1 uF
Y2 22.1184
JP4
JP5
JP6
J1
JTAG
IP1
IN1
RD1
LB1
DIG_IN
U2
MAX3221
Vcc
C1+
C1-
C2+
C2-
V+
V-
T1IN
R1OUT
T1OUT
R1IN
/EN
FON
/INVALID
/FOFF
C10 .1 uF
C11 .1 uF
C12 .1 uF
C13 .1 uF
C14 .1 uF
R7 2.2K
R8 2.2K
R9 2.2K
DB9-HF
J2-1
J2-2
J2-3
J2-4
J2-5
J2-6
J2-7
J2-8
J2-9
12V
J3-1
J3-2
J3-3
J3-4
J3-5
J3-6
J3-7
J3-8
J3-9
J3-10
J3-11
J3-12
RX+
AUDIO_OUT
JP7
PTT
AUDIO_IN
JP8
RX-
SUBCODE
TX+
TX-
SENSE2
C15 .001 uF
C16 .001 uF
C17 .001 uF
AD_SENSE
R11 5.1K
R12 1K
U3-A
LM324M
R10 33K
C18 .001 uF
AD_COS
R15 5.1K
R16 1K
U3-B
R14 33K
C19 .001 uF
R13 0 OHM

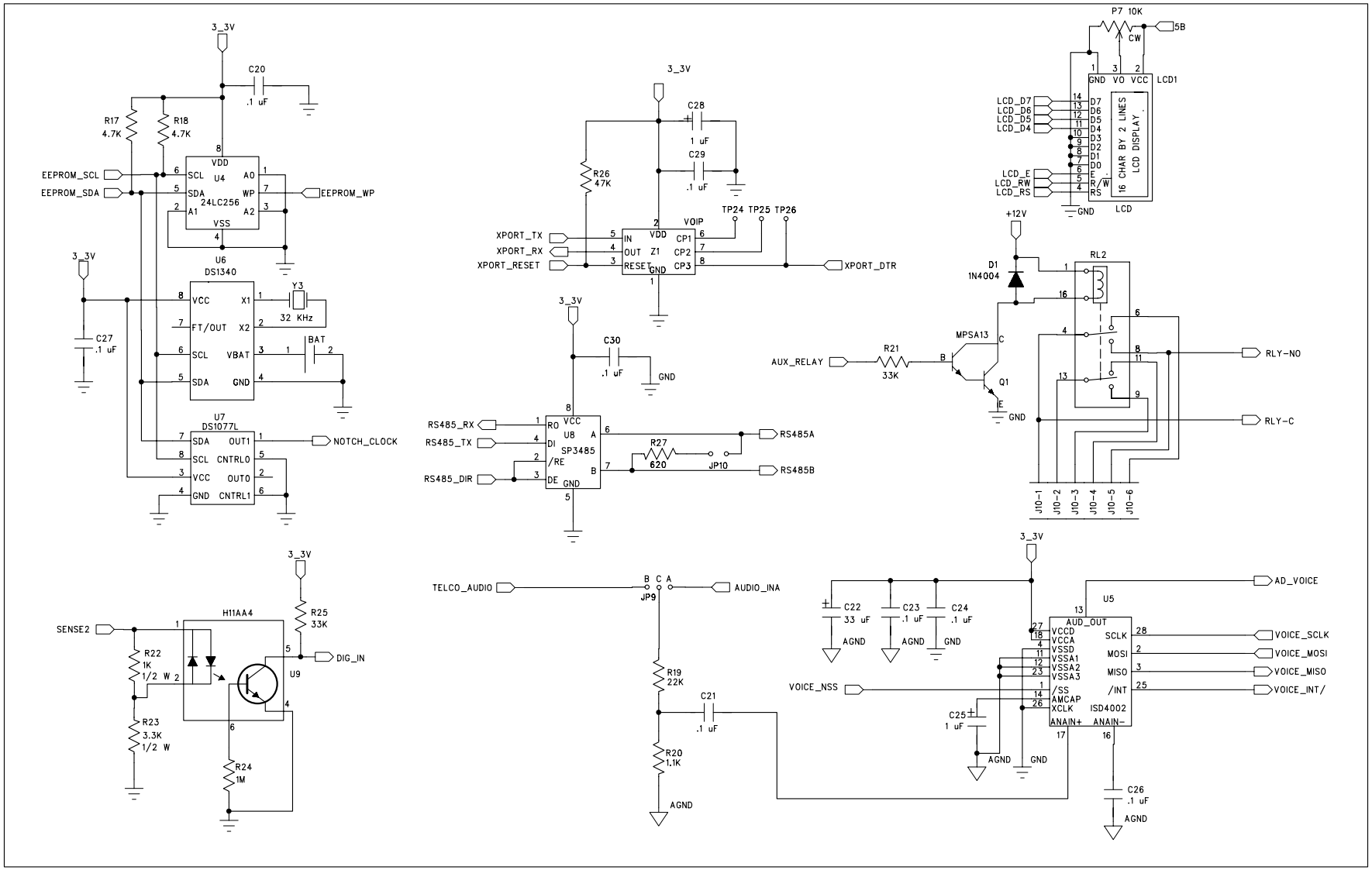
3_3V
C20
.1 uF
R17
4.7K
R18
4.7K
EEPROM_SCL
EEPROM_SDA
EEPROM_WP
VDD
SCL
SDA
A1
VSS
A0
WP
A2
U4
24LC256
U6
DS1340
VCC
FT/OUT
SCL
SDA
X1
X2
VBAT
GND
Y3
32 KHz
BAT
C27
.1 uF
U7
DS1077L
SDA
SCL
VCC
GND
OUT1
CNTRL0
OUT0
CNTRL1
NOTCH_CLOCK
SENSE2
H11AA4
R22
1K
1/2 W
R23
3.3K
1/2 W
R24
1M
R25
33K
U9
DIG_IN
C28
1 uF
C29
.1 uF
R26
47K
XPORT_TX
XPORT_RX
XPORT_RESET
IN
OUT
RESET
VDD
Z1
GND
VOIP
CP1
CP2
CP3
TP24
TP25
TP26
XPORT_DTR
C30
.1 uF
RS485_RX
RS485_TX
RS485_DIR
RO
DI
/RE
DE
VCC
U8
SP3485
GND
A
B
R27
620
JP10
RS485A
RS485B
TELCO_AUDIO
JP9
B C A
AUDIO_INA
R19
22K
C21
.1 uF
R20
1.1K
AGND
C22
33 uF
C23
.1 uF
C24
.1 uF
VOICE_NSS
C25
1 uF
U5
AUD_OUT
VCCD
VCCA
VSSD
VSSA1
VSSA2
VSSA3
/SS
AMCAP
XCLK
ANAIN+
ISD4002
ANAIN-
SCLK
MOSI
MISO
/INT
AD_VOICE
VOICE_SCLK
VOICE_MOSI
VOICE_MISO
VOICE_INT/
C26
.1 uF
P7 10K
CW
5B
GND
VO
VCC
LCD1
LCD_D7
LCD_D6
LCD_D5
LCD_D4
LCD_E
LCD_RW
LCD_RS
D7
D6
D5
D4
D3
D2
D1
D0
E
R/W
RS
16 CHAR BY 2 LINES
LCD DISPLAY
LCD
+12V
D1
1N4004
RL2
MPSA13
Q1
AUX_RELAY
R21
33K
RLY-NO
RLY-C
J10-1
J10-2
J10-3
J10-4
J10-5
J10-6

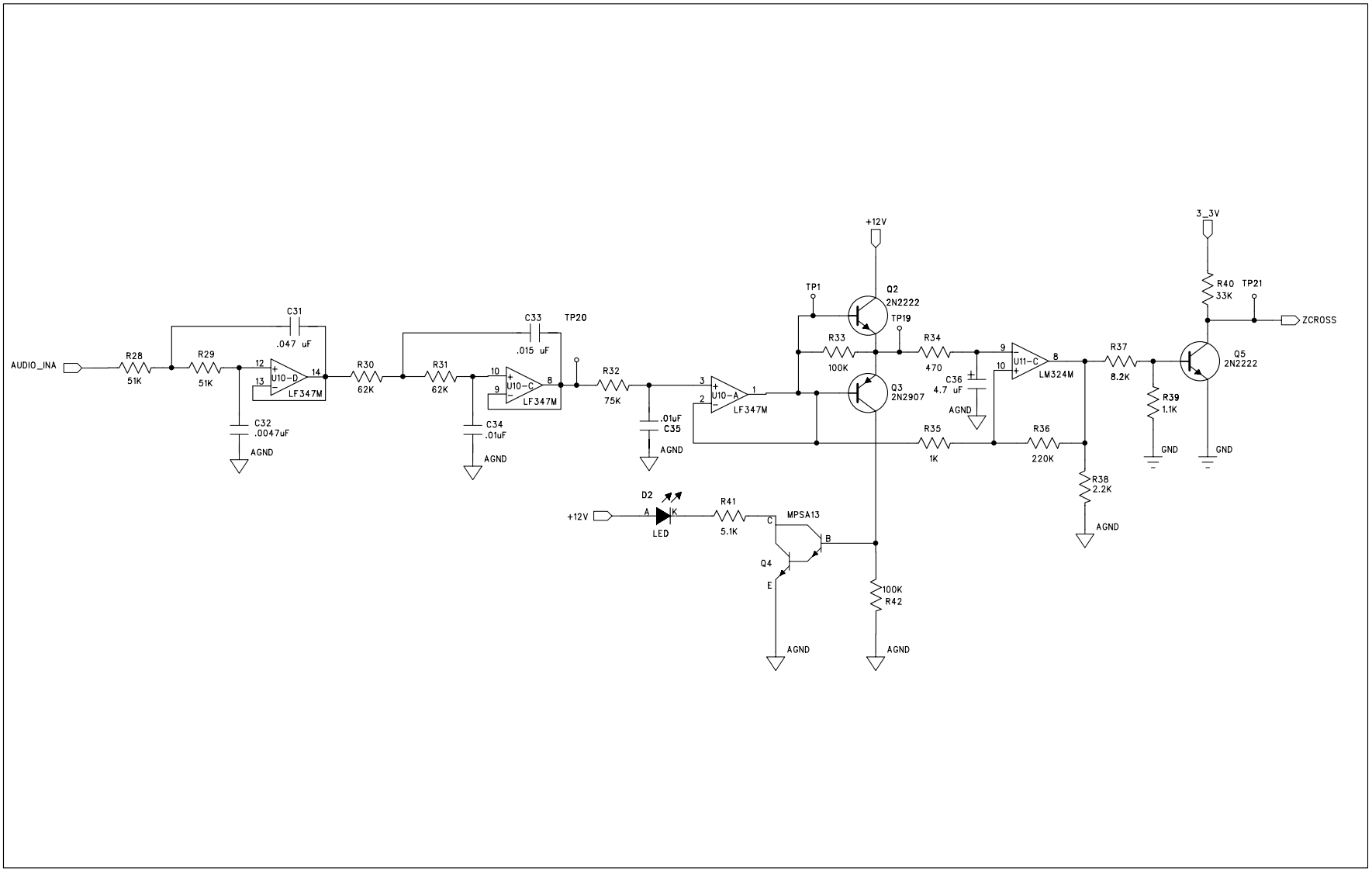
AUDIO_INA
R28
51K
R29
51K
C31
.047 uF
U10-D
LF347M
C32
.0047uF
AGND
R30
62K
R31
62K
C33
.015 uF
TP20
U10-C
LF347M
C34
.01uF
AGND
R32
75K
.01uF
C35
AGND
U10-A
LF347M
+12V
TP1
Q2
2N2222
TP19
R33
100K
Q3
2N2907
R34
470
C36
4.7 uF
AGND
U11-C
LM324M
R35
1K
R36
220K
R37
8.2K
R38
2.2K
AGND
R39
1.1K
GND
3_3V
R40
33K
TP21
ZCROSS
Q5
2N2222
GND
+12V
D2
LED
R41
5.1K
MPSA13
Q4
AGND
100K
R42
AGND

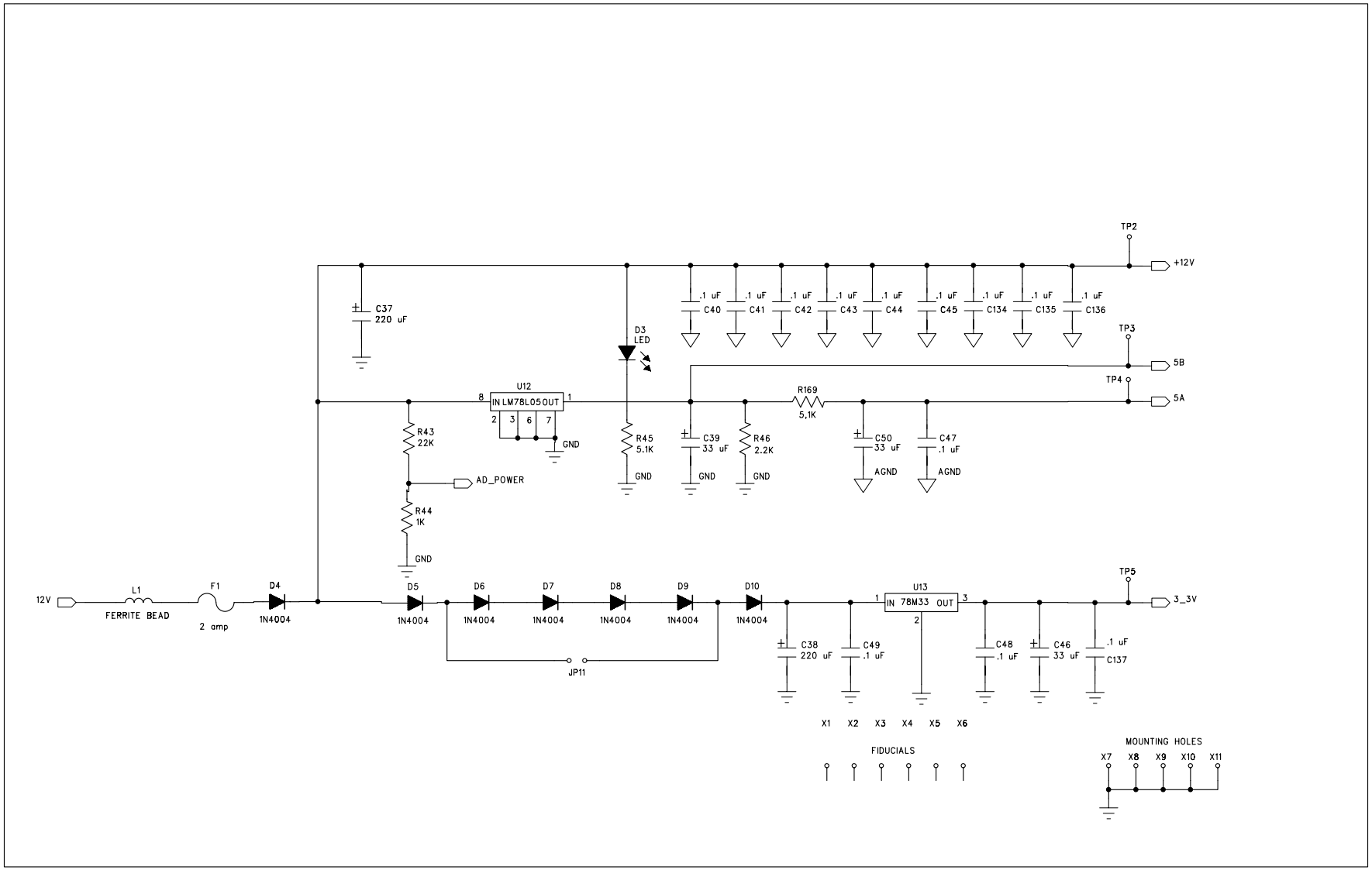
TP2
+12V
C37
220 uF
.1 uF
C40
C41
C42
C43
C44
C45
C134
C135
C136
D3
LED
TP3
5B
TP4
5A
U12
IN LM78L05 OUT
8
1
2
3
6
7
GND
R169
5,1K
R43
22K
AD_POWER
R45
5.1K
C39
33 uF
R46
2.2K
C50
33 uF
C47
.1 uF
AGND
R44
1K
12V
L1
FERRITE BEAD
F1
2 amp
D4
1N4004
D5
D6
D7
D8
D9
D10
JP11
U13
IN 78M33 OUT
3
C38
220 uF
C49
C48
C46
33 uF
C137
TP5
3_3V
X1
X2
X3
X4
X5
X6
FIDUCIALS
MOUNTING HOLES
X7
X8
X9
X10
X11

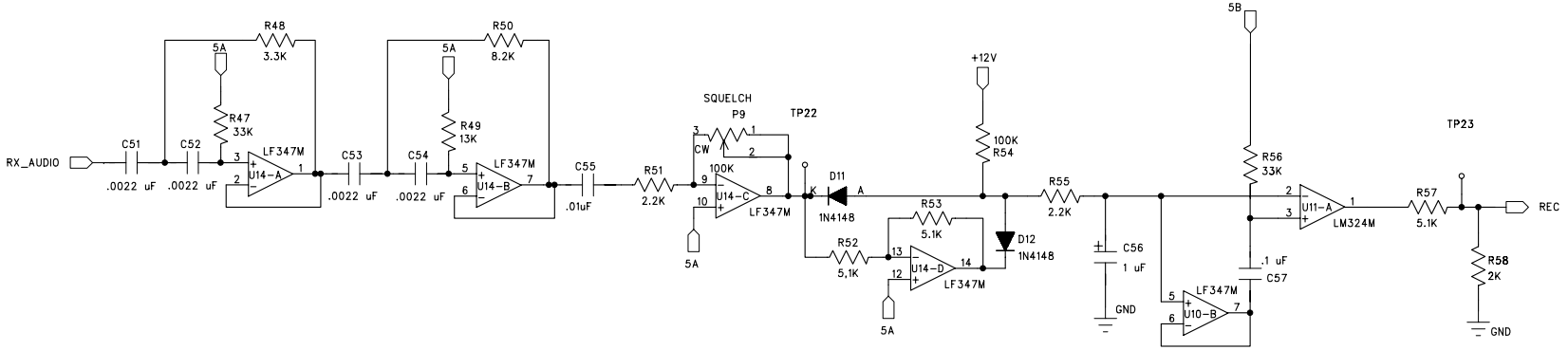
RX_AUDIO
C51
.0022 uF
C52
.0022 uF
R47
33K
5A
R48
3.3K
LF347M
U14-A
C53
.0022 uF
C54
.0022 uF
R49
13K
5A
R50
8.2K
LF347M
U14-B
C55
.01uF
R51
2.2K
SQUELCH
P9
CW
100K
U14-C
LF347M
5A
TP22
D11
1N4148
R52
5.1K
R53
5.1K
U14-D
LF347M
5A
+12V
100K
R54
D12
1N4148
R55
2.2K
C56
1 uF
GND
5B
R56
33K
.1 uF
C57
LF347M
U10-B
U11-A
LM324M
R57
5.1K
TP23
REC
R58
2K
GND

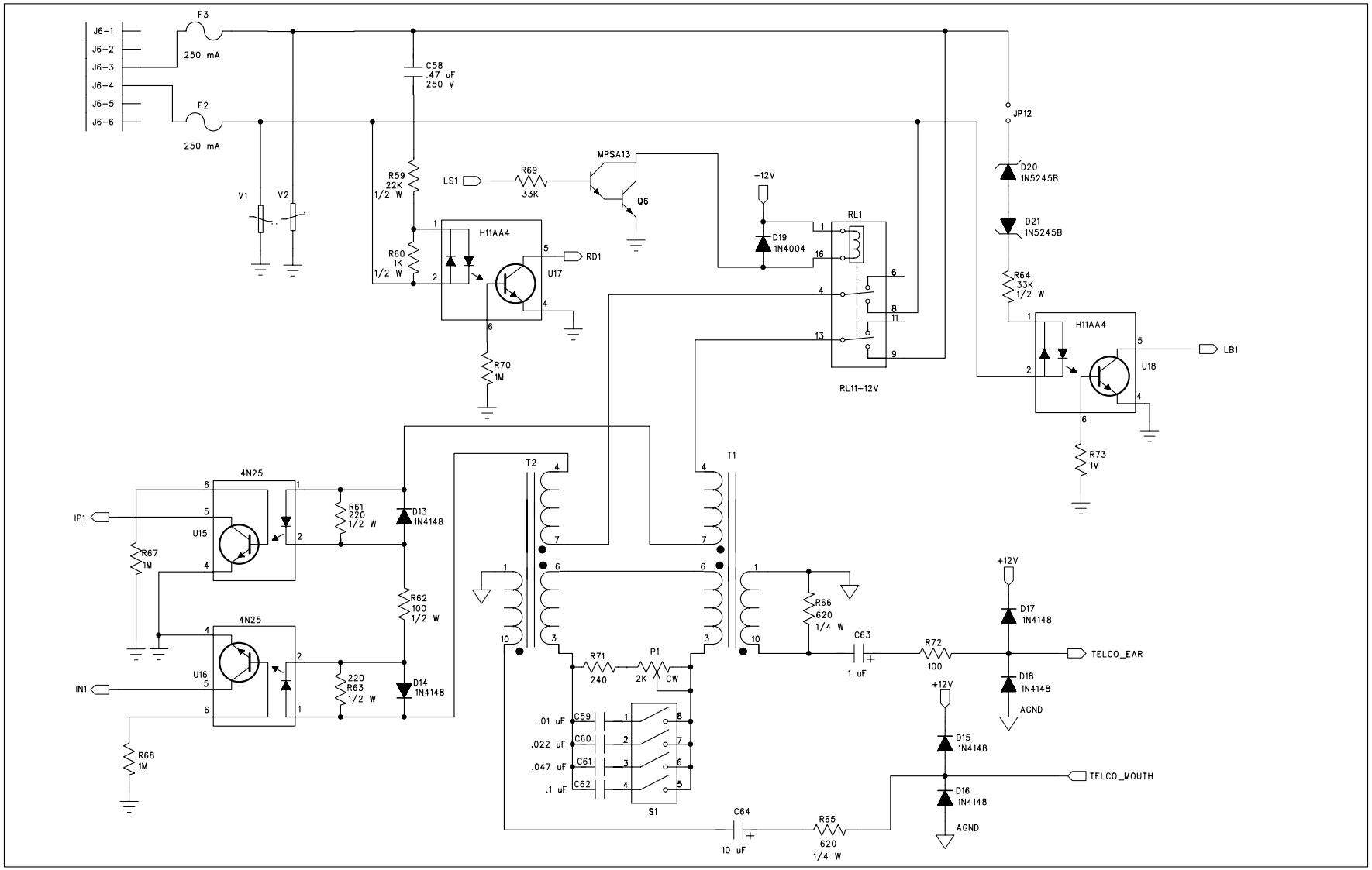
J6-1
J6-2
J6-3
J6-4
J6-5
J6-6
F3
250 mA
F2
250 mA
V1
V2
C58
.47 uF
250 V
R59
22K
1/2 W
R60
1K
1/2 W
H11AA4
U17
RD1
R70
1M
LS1
R69
33K
MPSA13
Q6
+12V
D19
1N4004
RL1
RL11-12V
JP12
D20
1N5245B
D21
1N5245B
R64
33K
1/2 W
H11AA4
U18
LB1
R73
1M
4N25
U15
IP1
R67
1M
R61
220
1/2 W
D13
1N4148
R62
100
1/2 W
4N25
U16
IN1
R68
1M
220
R63
1/2 W
D14
1N4148
T2
T1
R71
240
P1
2K
CW
.01 uF
C59
.022 uF
C60
.047 uF
C61
.1 uF
C62
S1
C64
10 uF
R65
620
1/4 W
R66
620
1/4 W
C63
1 uF
R72
100
+12V
D17
1N4148
D18
1N4148
AGND
TELCO_EAR
+12V
D15
1N4148
D16
1N4148
AGND
TELCO_MOUTH

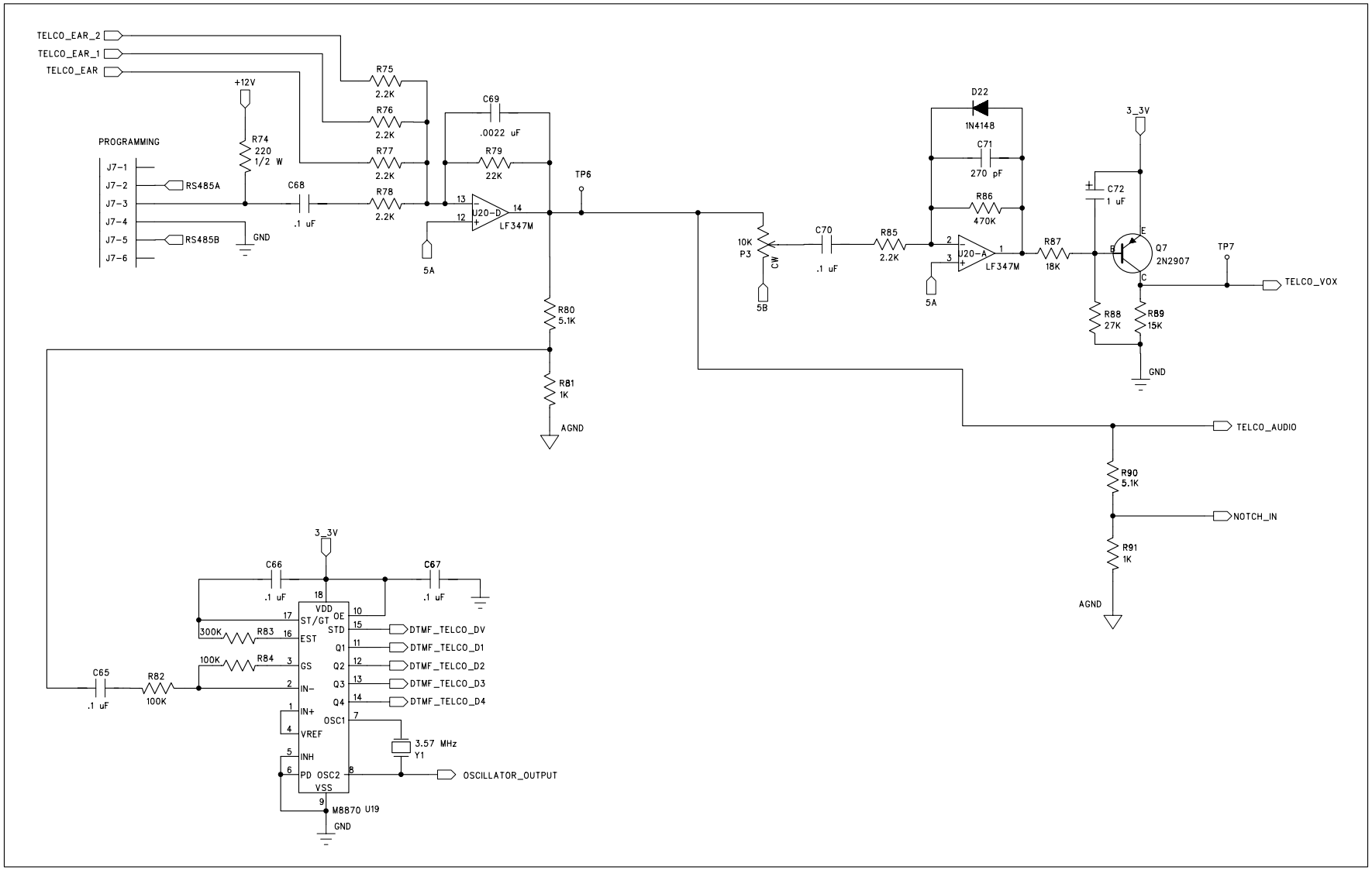
TELCO_EAR_2
TELCO_EAR_1
TELCO_EAR
+12V
R75
2.2K
R76
2.2K
R77
2.2K
R78
2.2K
C69
.0022 uF
R79
22K
PROGRAMMING
J7-1
J7-2
J7-3
J7-4
J7-5
J7-6
RS485A
RS485B
R74
220
1/2 W
C68
.1 uF
GND
U20-D
LF347M
5A
TP6
R80
5.1K
R81
1K
AGND
10K
P3
CW
5B
C70
.1 uF
R85
2.2K
D22
1N4148
C71
270 pF
R86
470K
U20-A
LF347M
5A
R87
18K
3_3V
C72
1 uF
Q7
2N2907
TP7
TELCO_VOX
R88
27K
R89
15K
GND
TELCO_AUDIO
R90
5.1K
NOTCH_IN
R91
1K
AGND
3_3V
C66
.1 uF
C67
.1 uF
VDD
ST/GT
EST
GS
IN-
IN+
VREF
INH
PD
VSS
OE
STD
Q1
Q2
Q3
Q4
OSC1
OSC2
300K
R83
100K
R84
C65
.1 uF
R82
100K
DTMF_TELCO_DV
DTMF_TELCO_D1
DTMF_TELCO_D2
DTMF_TELCO_D3
DTMF_TELCO_D4
3.57 MHz
Y1
OSCILLATOR_OUTPUT
M8870 U19
GND

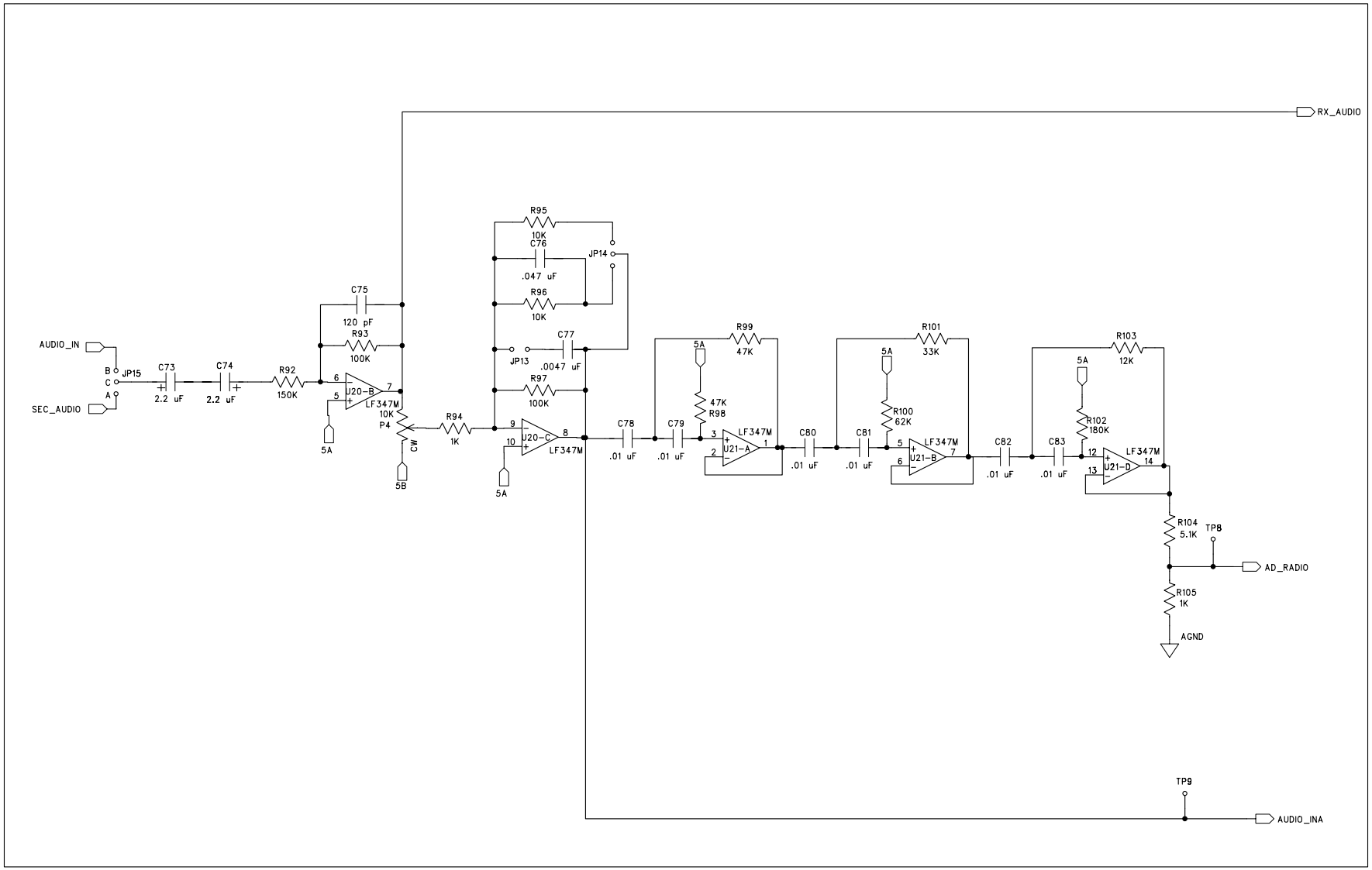
RX_AUDIO
AUDIO_IN
SEC_AUDIO
B
C
A
JP15
C73
2.2 uF
C74
2.2 uF
R92
150K
C75
120 pF
R93
100K
U20-B
LF347M
6
5
7
5A
10K
P4
CW
5B
R94
1K
R95
10K
C76
.047 uF
JP14
R96
10K
JP13
C77
.0047 uF
R97
100K
U20-C
LF347M
9
10
8
5A
C78
.01 uF
C79
.01 uF
R99
47K
5A
47K
R98
U21-A
LF347M
3
2
1
C80
.01 uF
C81
.01 uF
R101
33K
5A
R100
62K
U21-B
LF347M
5
6
7
C82
.01 uF
C83
.01 uF
R103
12K
5A
R102
180K
U21-D
LF347M
12
13
14
R104
5.1K
TP8
AD_RADIO
R105
1K
AGND
TP9
AUDIO_INA

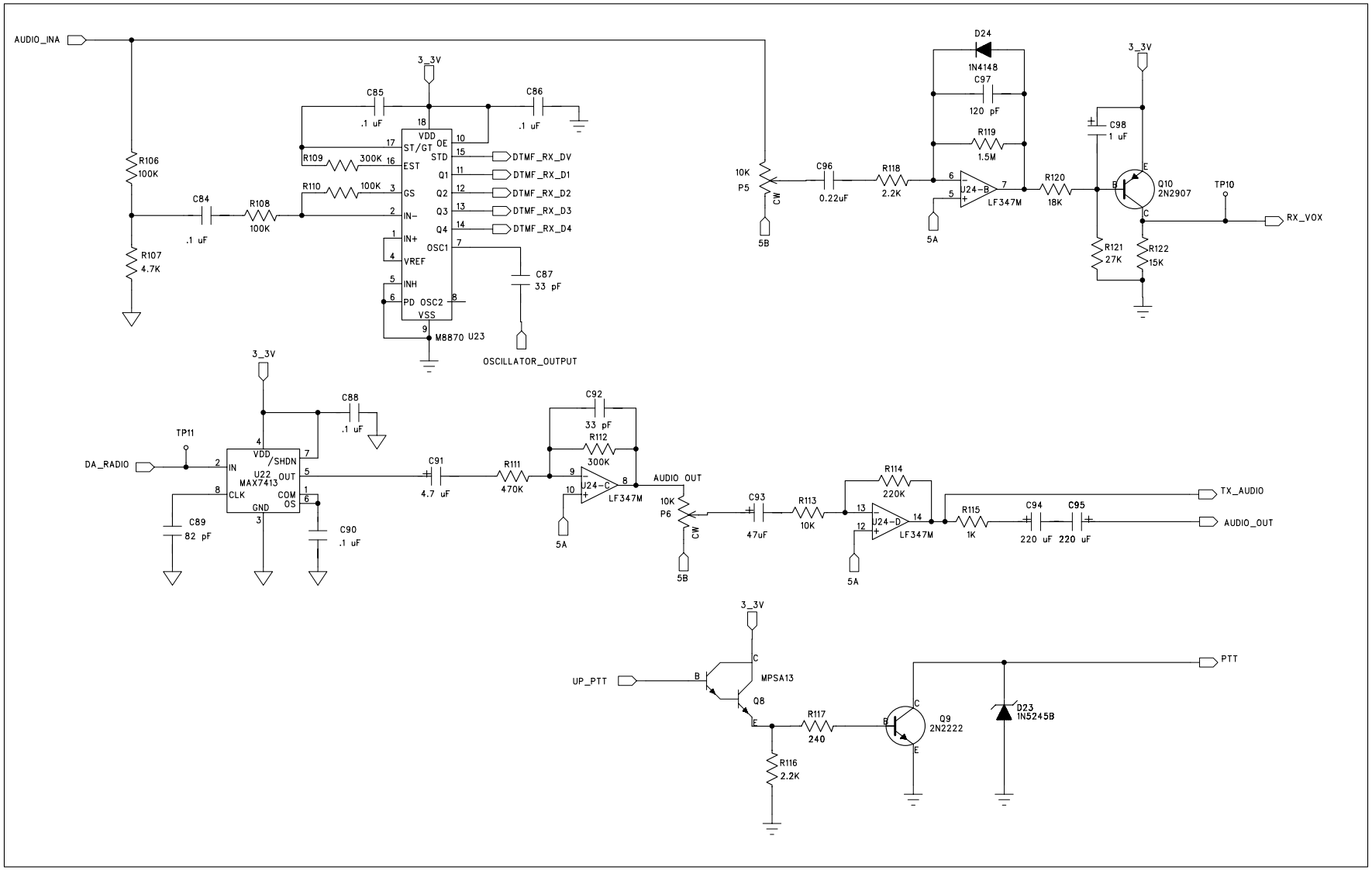
AUDIO_INA
R106
100K
R107
4.7K
C84
.1 uF
R108
100K
R109
300K
R110
100K
C85
.1 uF
C86
.1 uF
3_3V
VDD
ST/GT
EST
GS
IN-
IN+
VREF
INH
PD
OSC2
VSS
OE
STD
Q1
Q2
Q3
Q4
OSC1
M8870 U23
DTMF_RX_DV
DTMF_RX_D1
DTMF_RX_D2
DTMF_RX_D3
DTMF_RX_D4
C87
33 pF
OSCILLATOR_OUTPUT
10K
P5
CW
5B
C96
0.22uF
R118
2.2K
D24
1N4148
C97
120 pF
R119
1.5M
J24-B
LF347M
5A
R120
18K
C98
1 uF
Q10
2N2907
TP10
RX_VOX
R121
27K
R122
15K
TP11
DA_RADIO
VDD
/SHDN
IN
U22
MAX7413
OUT
CLK
COM
GND
OS
C89
82 pF
C90
.1 uF
C88
.1 uF
C91
4.7 uF
R111
470K
C92
33 pF
R112
300K
J24-C
LF347M
AUDIO_OUT
10K
P6
C93
47uF
R113
10K
R114
220K
J24-D
LF347M
R115
1K
C94
220 uF
C95
220 uF
TX_AUDIO
AUDIO_OUT
UP_PTT
MPSA13
Q8
R116
2.2K
R117
240
Q9
2N2222
D23
1N5245B
PTT

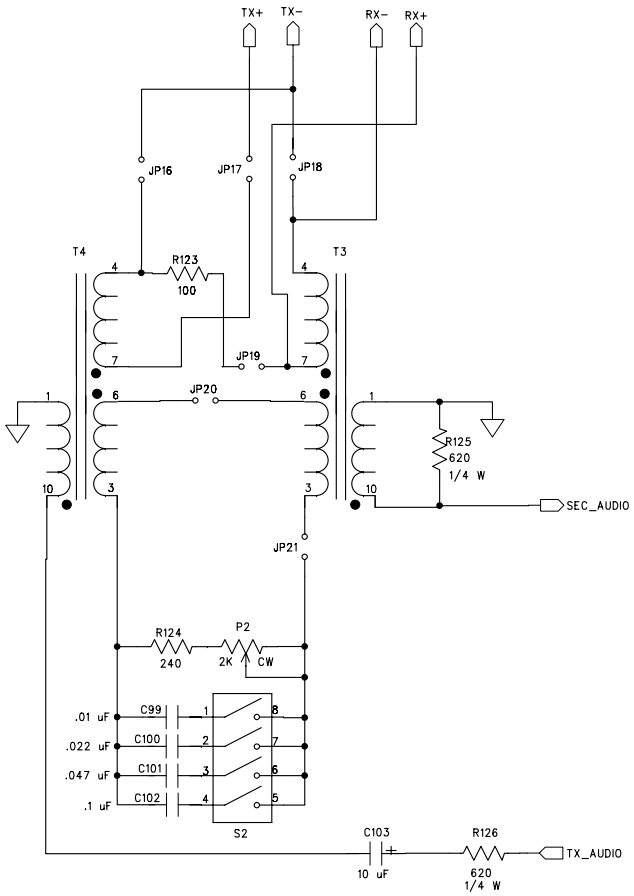
TX+
TX-
RX-
RX+
JP16
JP17
JP18
T4
T3
R123
100
JP19
JP20
R125
620
1/4 W
SEC_AUDIO
JP21
R124
240
P2
2K
CW
.01 uF
.022 uF
.047 uF
.1 uF
C99
C100
C101
C102
S2
C103
10 uF
R126
620
1/4 W
TX_AUDIO

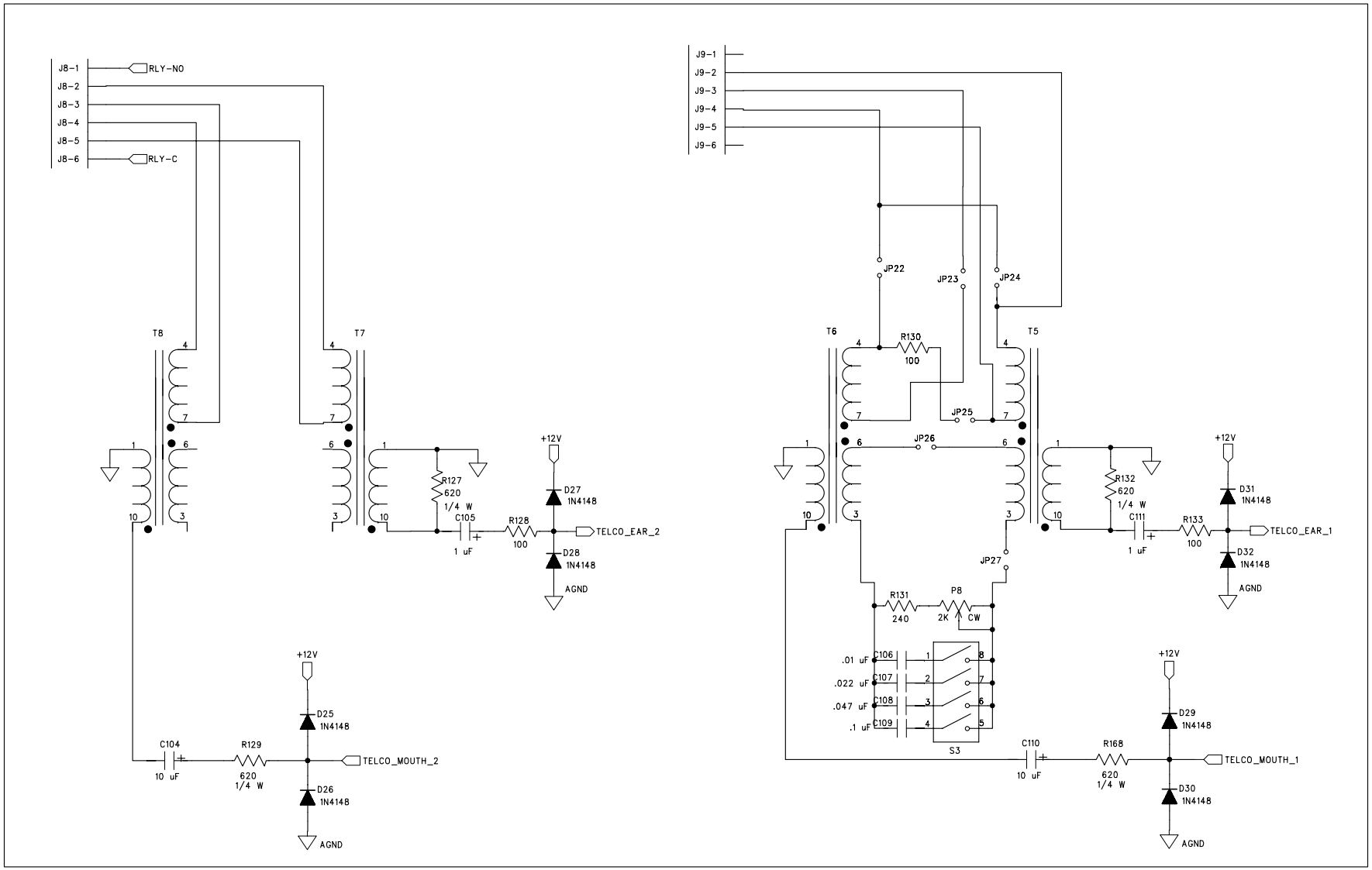
J8-1
J8-2
J8-3
J8-4
J8-5
J8-6
RLY-NO
RLY-C
T8
T7
R127
620
1/4 W
C105
1 uF
R128
100
+12V
D27
1N4148
D28
1N4148
AGND
TELCO_EAR_2
C104
10 uF
R129
620
1/4 W
D25
1N4148
D26
1N4148
TELCO_MOUTH_2
J9-1
J9-2
J9-3
J9-4
J9-5
J9-6
JP22
JP23
JP24
JP25
JP26
JP27
T6
T5
R130
100
R132
620
1/4 W
C111
1 uF
R133
100
D31
1N4148
D32
1N4148
TELCO_EAR_1
R131
240
P8
2K
CW
.01 uF
.022 uF
.047 uF
.1 uF
C106
C107
C108
C109
S3
C110
10 uF
R168
620
1/4 W
D29
1N4148
D30
1N4148
TELCO_MOUTH_1

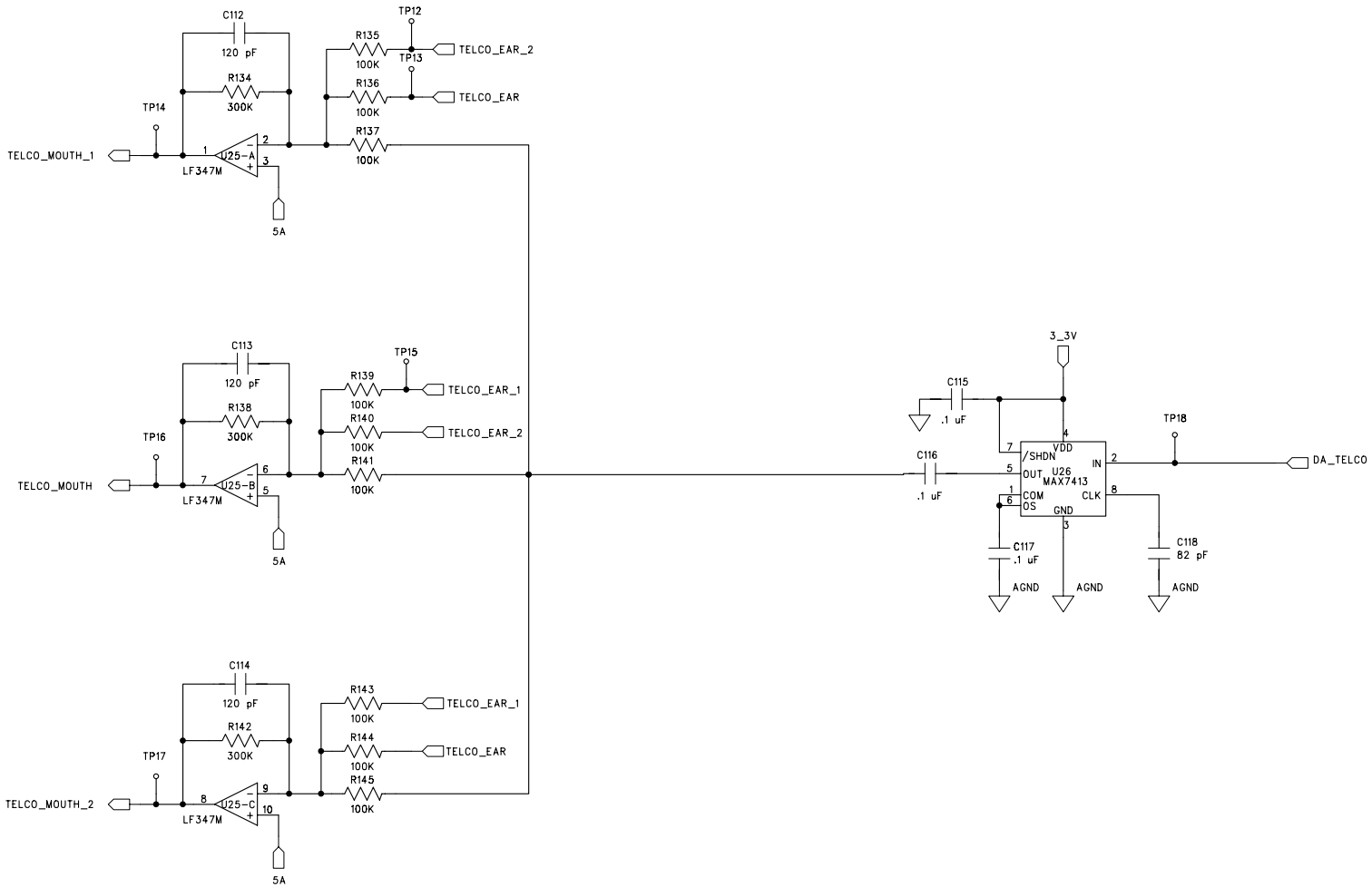
C112
120 pF
R134
300K
TP14
TELCO_MOUTH_1
U25-A
LF347M
5A
TP12
R135
100K
TELCO_EAR_2
TP13
R136
100K
TELCO_EAR
R137
100K
C113
120 pF
R138
300K
TP16
TELCO_MOUTH
U25-B
LF347M
5A
TP15
R139
100K
TELCO_EAR_1
R140
100K
TELCO_EAR_2
R141
100K
C114
120 pF
R142
300K
TP17
TELCO_MOUTH_2
U25-C
LF347M
5A
R143
100K
TELCO_EAR_1
R144
100K
TELCO_EAR
R145
100K
3_3V
C115
.1 uF
C116
.1 uF
VDD
/SHDN
OUT
COM
OS
U26
MAX7413
IN
CLK
GND
C117
.1 uF
AGND
AGND
TP18
C118
82 pF
AGND
DA_TELCO

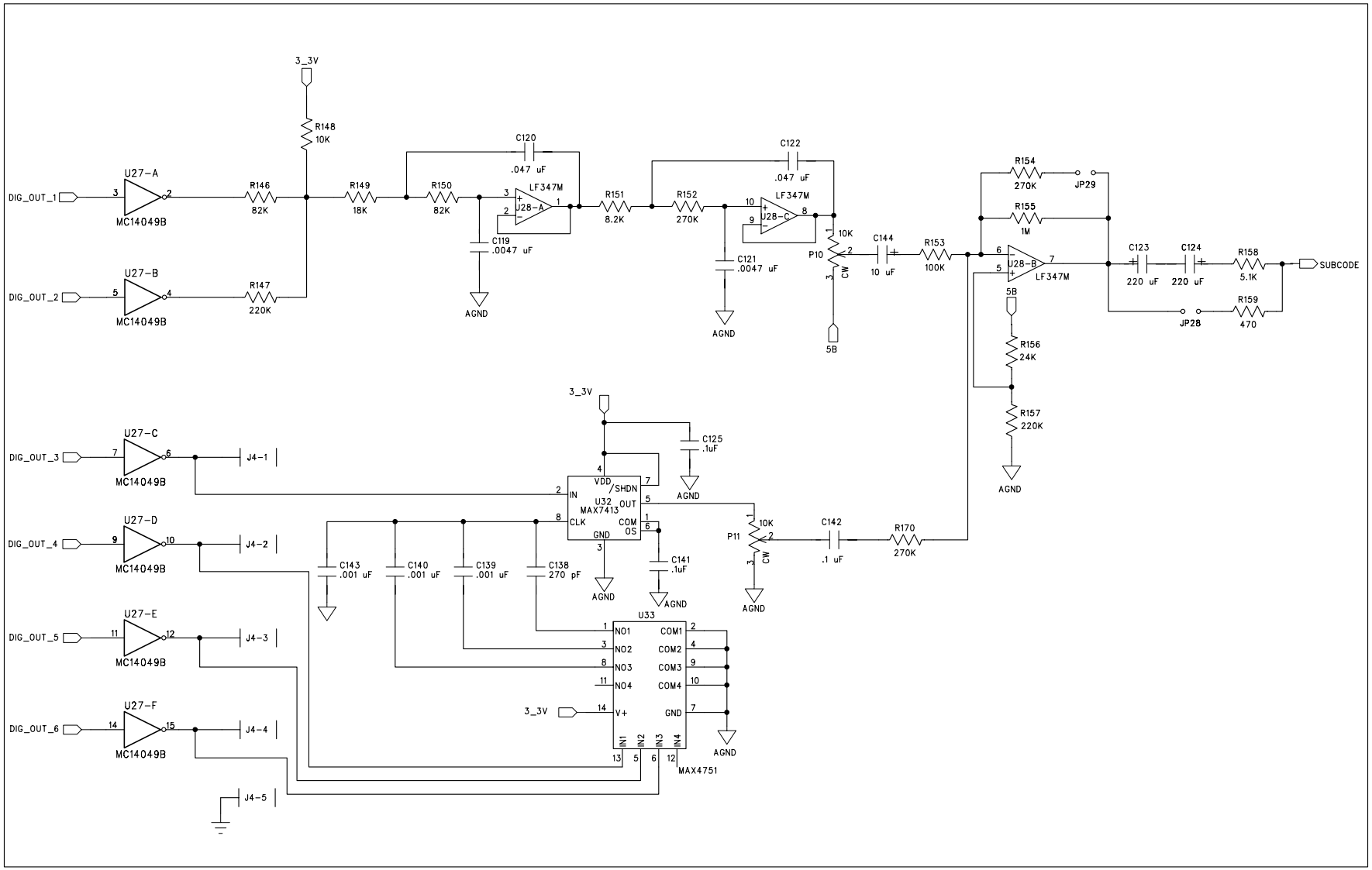
3_3V
R148
10K
DIG_OUT_1
U27-A
MC14049B
R146
82K
R149
18K
R150
82K
C120
.047 uF
LF347M
U28-A
C119
.0047 uF
AGND
R151
8.2K
R152
270K
C122
.047 uF
LF347M
U28-C
C121
.0047 uF
AGND
P10
10K
CW
5B
C144
10 uF
R153
100K
R154
270K
JP29
R155
1M
U28-B
LF347M
C123
220 uF
C124
220 uF
R158
5.1K
SUBCODE
JP28
R159
470
5B
R156
24K
R157
220K
AGND
DIG_OUT_2
U27-B
MC14049B
R147
220K
3_3V
C125
.1uF
AGND
DIG_OUT_3
U27-C
MC14049B
J4-1
VDD
/SHDN
IN
U32
OUT
MAX7413
CLK
COM
OS
GND
DIG_OUT_4
U27-D
MC14049B
J4-2
C143
.001 uF
C140
.001 uF
C139
.001 uF
C138
270 pF
C141
.1uF
AGND
P11
10K
CW
C142
.1 uF
R170
270K
DIG_OUT_5
U27-E
MC14049B
J4-3
U33
NO1
NO2
NO3
NO4
COM1
COM2
COM3
COM4
3_3V
V+
GND
IN1
IN2
IN3
IN4
MAX4751
DIG_OUT_6
U27-F
MC14049B
J4-4
J4-5

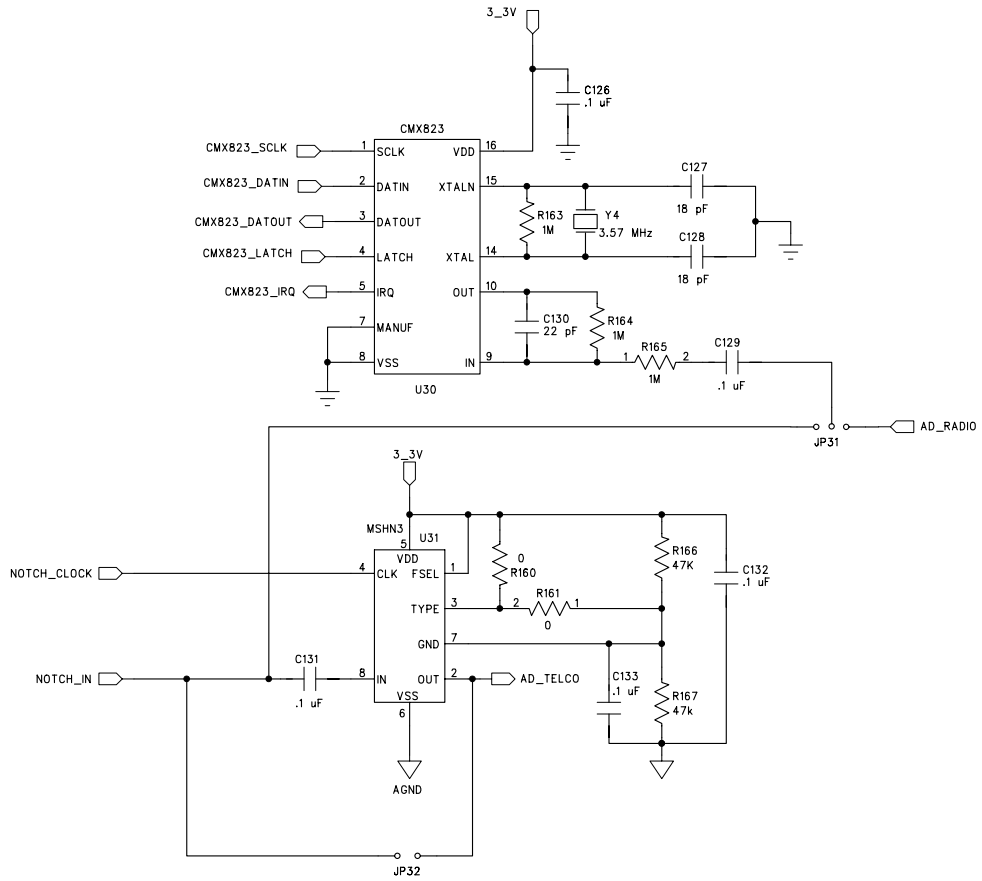
3_3V
C126
.1 uF
CMX823
CMX823_SCLK
CMX823_DATIN
CMX823_DATOUT
CMX823_LATCH
CMX823_IRQ
SCLK
DATIN
DATOUT
LATCH
IRQ
MANUF
VSS
VDD
XTALN
XTAL
OUT
IN
U30
R163
1M
Y4
3.57 MHz
C127
18 pF
C128
18 pF
C130
22 pF
R164
1M
R165
1M
C129
.1 uF
JP31
AD_RADIO
3_3V
MSHN3
U31
VDD
CLK
FSEL
TYPE
GND
IN
OUT
VSS
NOTCH_CLOCK
NOTCH_IN
C131
.1 uF
0
R160
R161
0
R166
47K
C132
.1 uF
C133
.1 uF
R167
47k
AD_TELCO
AGND
JP32