FO-3700A

SHARP SERVICE MANUAL

CODE: 00ZFO3700ASME

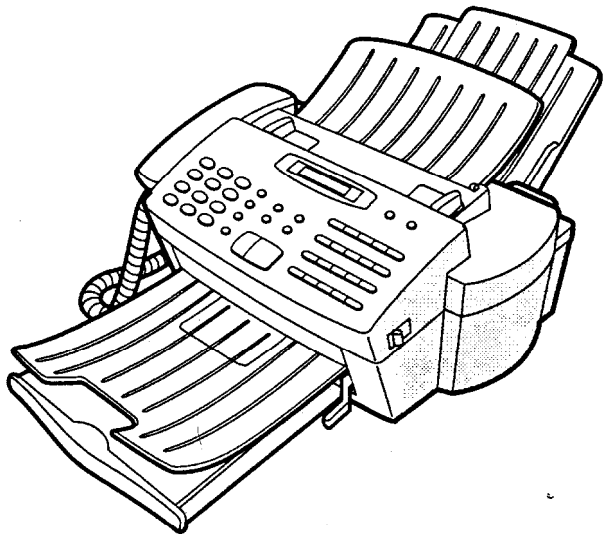

FACSIMILE

MODEL FO-3700

CONTENTS

CHAPTER 1. GENERAL DESCRIPTION

[1] Specifications 1-1
[2] A look at the machine 1-2
[3] Operation Panel 1-3
[4] Transmittable Documents 1-4
[5] Installation 1-5
[6] Quick reference guide 1-9

CHAPTER 2. ADJUSTMENTS

[1] Adjustments 2-1
[2] Diagnostics and service soft switches 2-2
[3] Trouble shooting 2-13
[4] Error code table 2-14

CHAPTER 3. MECHANISM BLOCKS

[1] General description 3-1
[2] Disassembly/assembly procedures 3-4

CHAPTER 4. DIAGRAMS

[1] Blockdiagram 4-1
[2] Wiring diagram 4-2
[3] Point to point diagram 4-3
[4] Connector signal name 4-4

CHAPTER 5. CIRCUIT DESCRIPTION

[1] Circuit description 5-1
[2] Control PWB description 5-2
[3] Description of CCD board 5-11
[4] TEULIU (with Speech PWB unit) board circuit description 5-11
[5] Description of power supply 5-14

CHAPTER 6. CIRCUIT SCHEMATICS AND PARTS LAYOUT

[1] Control circuit/PWB 6-1
[2] TEULIU circuit/PWB and sensor circuit/PWB 6-7
[3] Speech circuit/ PWB 6-13
[4] Power supply circuit/PWB 6-15
[5] CCD circuit/PWB 6-17
[6] Operation panel circuit/PWB 6-18
[7] LCD unit circuit/PWB 6-20
[8] Print unit circuit/PWB 6-22

CHAPTER 7. OPERATION FLOWCHART

[1] Flowchart 7-1
[2] Power on sequence 7-7

CHAPTER 8. OHTERS

[1] Service Tools 8-1
[2] IC signal name 8-3

PARTS GUIDE

Parts marked with "⚠" is important for maintaining the safety of the set. Be sure to replace these parts with specified ones for maintaining the safety and performance of the set.

SHARP CORPORATION

This document has been published to be used foraftersalesserviceonly.
The contents are subject to change without notice.

Caution: Please use the per guage Part No. OJZC214460003 when repairing printes section. The inkjet cartridge consumeable cannot be exposed to the atmosphese for prolong periods.

CHAPTER 1. GENERAL DESCRIPTION

[1] SPECIFICATIONS

Applicable telephone line: Public switched telephone network/ PBX

Compatibility: ITU-TS (CCITT) G3 mode

Configuration: Hatfduplex, desktop transceiver

Compression scheme: Modified Huffman and Sharp special mode.

Scanning method: Flat-bed, solid-state CCD

Resolution:
Horizontal:
8 lines/mm
Vertical:
Standard — 3.85 lines/mm
Fine/Halftone — 7.7 lines/mm

Recording system: Thermal ink jet recording/Plain bond paper

Display: 7 x 5 dots, 1 line by 16-digit display

Reception modes: Auto/Manual/Answering machine

Modem speed: 9600 bps with automatic fallback to 7200, 4800, or 2400 bps

Transmission time*: Approx. 15 seconds
(Sharp special mode)

Effective recording width: 203 mm (average)

Input document size:
Automatic feeding:
Width — 148 to 216 mm
Length — 128 to 279 mm
Manual feeding:
Width — 148 to 216 mm
Length — 128 to 1000 mm

Options: Option memory upgrade PWB
FO-1MD: 4Mbit DRAM (4bit x 1M) -- 2pce.
FO-2MD (Not recommended)

Effective scanning width: 210 mm max.

Automatic document feeder: Standard (20 sheets max.)

Halftone (grey scale): Standard (64 levels)

contrast control: Automatic/Dark selectable

Copy function: Standard

Telephone function: Standard
(cannot be used if power fails)

Power requirements: 230 ~ 240 V AC, 50 Hz

Operating temperature: 5 to 35°C

Recommend temperate: 15 to 35°C

Power consumption:
Stand-by: 13 W
Transmission: 20 W
Reception: 23 W
copy: 34 w

Dimensions: (Without attachment)
Width: 393 mm
Depth: 285 mm
Height 212 mm

Weight: Approx. (without attachments) 6.9 kg

* Based on ITU-TS (CCITT) Test Chart #1 at standard resolution in Sharp special mode, excluding time for protocol signals (i.e., ITU-TS phase C time only).

<IMPORTANT PLEASE READ FIRST>
To avoid problems with supplies, plases don't use supplies from other units. Please use new supplies, when supply changes are required.

[2] A look at the machine

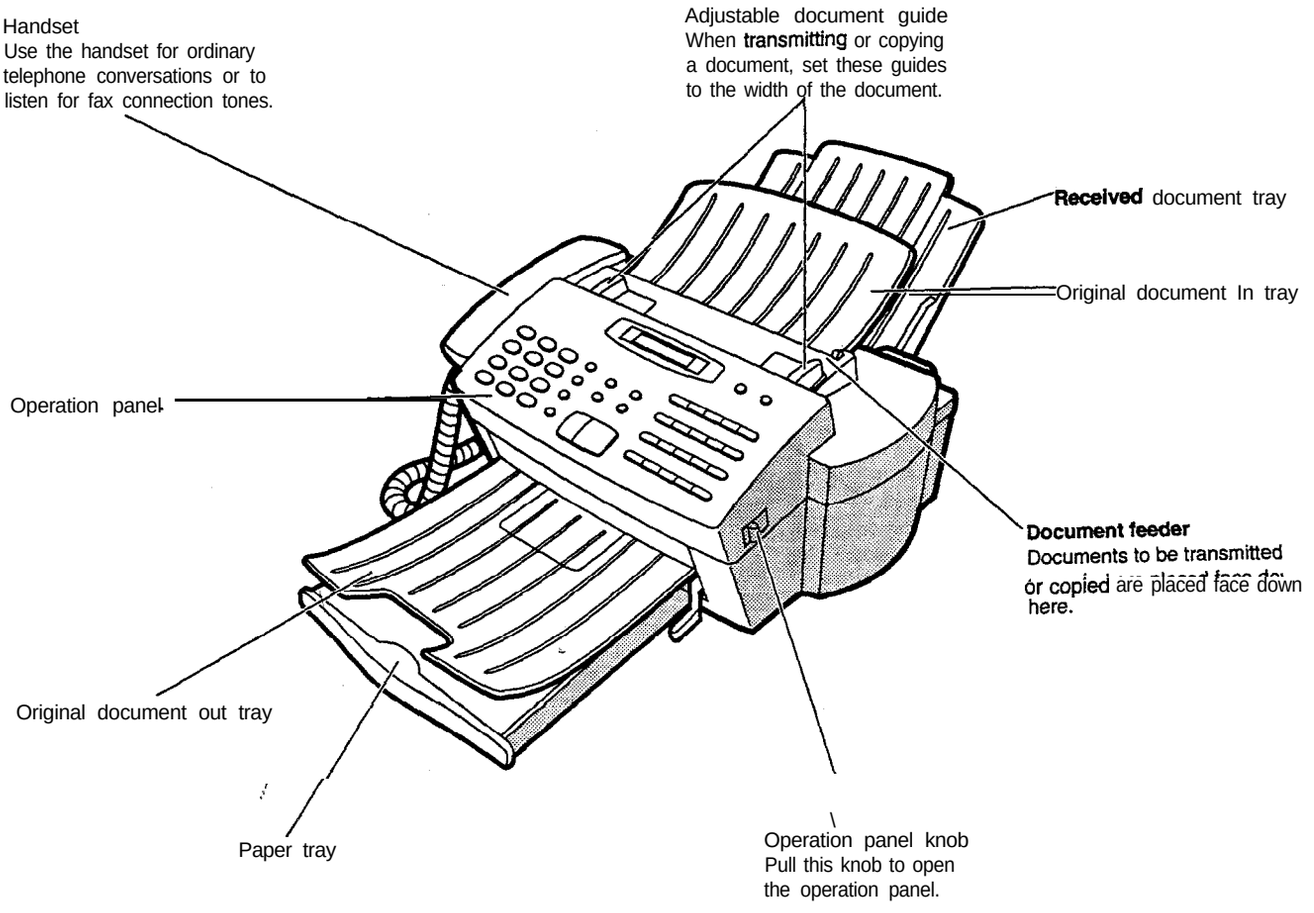

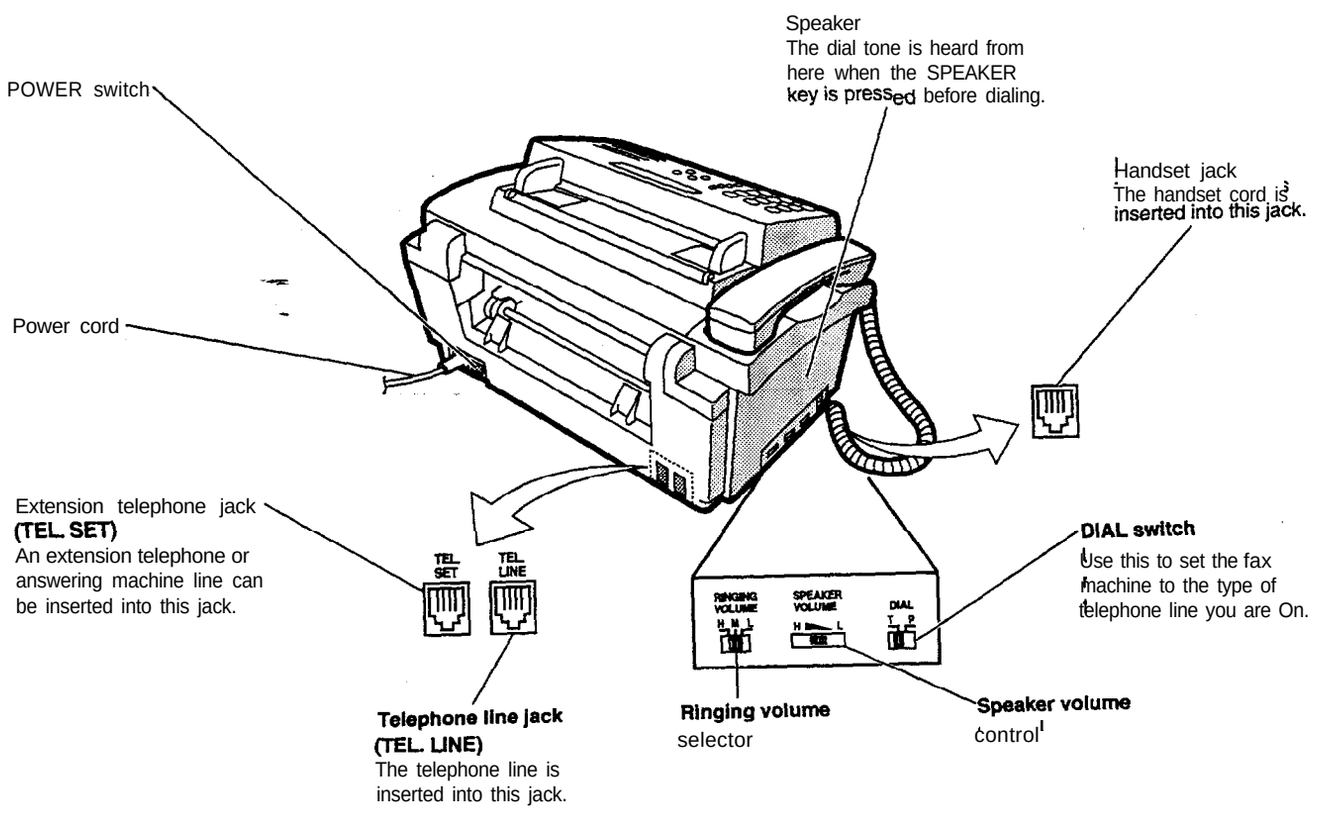

[3] Operation Panel

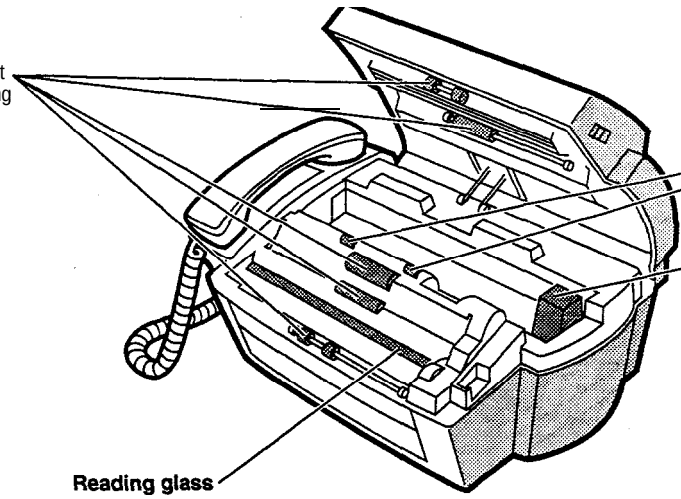

Document rollers
These move the document through the machine during scanning.

Document rollers

Ink cartridge

Reading glass
This scans the document for transmission and copying.

Liquid **crystal** display
Displays various messages during operation and programming.

MEMORY key
Use this key to store a scanned document in memory before transmitting it.

SPEED DIAL **key**
Press this key to dial a Speed Dial number.

RESOLUTION key
Use this key to adjust the resolution and contrast for transmitting or copying a document.

RECEPTION MODE key
Use this key to select the mode of reception.

REDIAL key
Use this key to automaticallv redial the last number dialled. Also used as the PBX Recall "R" key after pressing HOLD key.

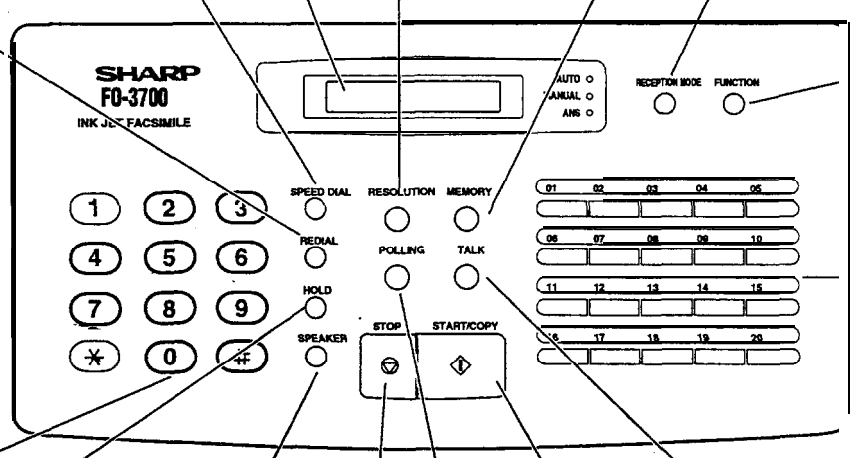

FUNCTION key
Use this key to select various special functions. Prompts indicating selections will appear on the display.

Rapid Keys
Use these keys to dial fax and voice numbers automatically. (Note that you must attach the Rapid Key labels.)

Numeric keys
Use these keys to dial and store numbers.

HOLD key
Press thii key to put the other party on hold during a telephone conversation. Also used in conjunction with the **RE-**DIAL key for **PBX** Recall.

POLLING key
Use this key to poll (activate transmissions from) other machines.

TALK key
Use this key to talk with the other party before or after a fax transmission.

SPEAKER key
Press this key to dial a number without picking up the handset.

STOP key
Press this key to stop operations before they are completed.

START/COPY key
Use this key to start transmission, reception, or copying.

[4] Transmittable Documents

1. Document Sizes

Normal size	width	148 – 216 mm
	length	128-279mm

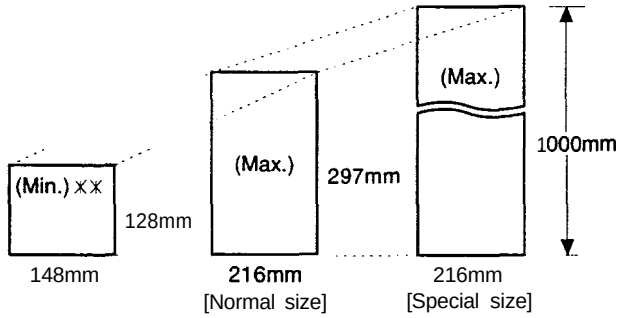

* With special sizes, only one sheet can be fed into the machine at a time. Insert next page into feeder as current page is being scanned.

** Use Document carrier sheet for smaller documents.

2. Paper Thickness & Weight

Normal size	ADF 15 sheets	Thickness	0.12 mm
		Weight	52 –104g/m^2
	ADF 20 sheets	Thickness	0.06-0.09 mm
		Weiaht	52 –74.3a/m^2
Special size		Thickness	0.12 – 0.20 mm
		Weight	52 – 157 g/m^2

3. Document Types

- Normal paper
  Documents handwritten in pencil (No. 2 lead or softer), fountain pen, ball point pen, or felt-tipped pen can be transmitted.
  Documents of normal contrast duplicated by a copying machine can also be transmitted.

. Diazo copy (blueprint)
  Diazo copy documents of a normal contrast may be transmitted.

- Carbon copy
  A carbon copy may be transmitted if its contrast is normal.

4. Cautions on Transmitting Documents

- Documents written in yellow, greenish yellow, or light blue ink cannot be transmitted.
- Ink. glue, and correcting fluid on documents must be dry before the documents can be transmitted.
- All clips, staples and pins must be removed from documents before transmission.
- Patched (taped) documents should be copied first on a copier and then the copies used for transmission.
- All documents should be fanned before insertion into the feeder to prevent possible double feeds.

5. Automatic Document Feeder Capacity

Number of pages that can be placed into the feeder at anytime is as follows:

Normal size: max. 20 sheets (52 – 74.3 g/m^2)
Special size: single sheet only (manual feed)

NOTES:
- When you need to send or copy more pages than the feeder limit, place additional pages in feeder when last page in feeder is being scanned.
- Place additional pages carefully and gently in feeder. If force is used, double-feeding or a document jam may result.

6. Readable Width & Length

The readable width and length of a document are slightly smaller than the actual document size.
Note that characters or graphics outside the effective document scanning range will not be read.

- **Readable width**

210 mm max.

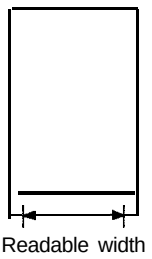

- **Readable length**

This is the length of the document sent minus 4 mm from the top and bottom edges.

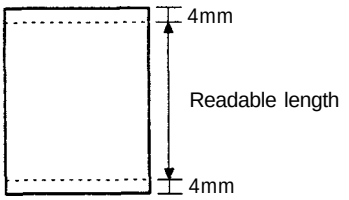

7. Use of Document Carrier Sheet

A document carder sheet must be used for the following documents.

- Those with tears.
- Those smaller than size 148 mm (W) x 128 mm (L).
- Carbon-backed documents

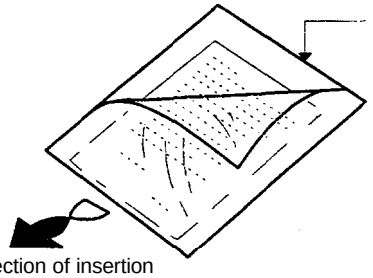

Ensure document is straight in the carrier. Place the document carrier in the document feeder with the clear film side down

Direction of insertion

NOTE: To transmit a carbon-backed document, insert a white sheet of paper between the carbon back of the document and the document carrier.

- Those containing an easily separable writing substance (e.g., tracing paper written on with a soft, heavy lead pencil).

NOTES:
- When using the document carrier, carefully read the instructions written on the back.
- If the document carrier is dirty, clean it with a soft, moist cloth, and then dry it before using for transmission.
- Do not place more than one document in the carrier at a time.

[5] Installation

1. Site selection

Take the following points into consideration when selecting a site for this model.

ENVIRONMENT

- The machine must be installed on a level surface.
- Keep the machine away from air conditioners, heaters, direct sunlight, and dust.
- Provide easy access to the front, back, and sides of the machine. In particular, keep the area in front of the machine clear, or the original document may jam as it comes out after scanning.
- The ambient temperature should be between 5' and 35'C (Recommend temperate 15 to 35'C).
- The humidity should be between 30% and 85% (without condensation).

ELECTRICITY

A230 ~ 240 V, 50 Hz, grounded (3-prong) AC outlet is required.

Caution!

- Connection to a power source other than that specified will cause damage to the equipment and is not covered under the warranty.
- If your area experiences a high incidence of lightning or power surges, we recommend that you install a surge protector for the power and telephone lines. Surge protectors can be purchased at most telephone specialty stores.

2. Unpacking

Take the machine out of the box carefully, remove all packing material. Make sure you have all the items listed below.

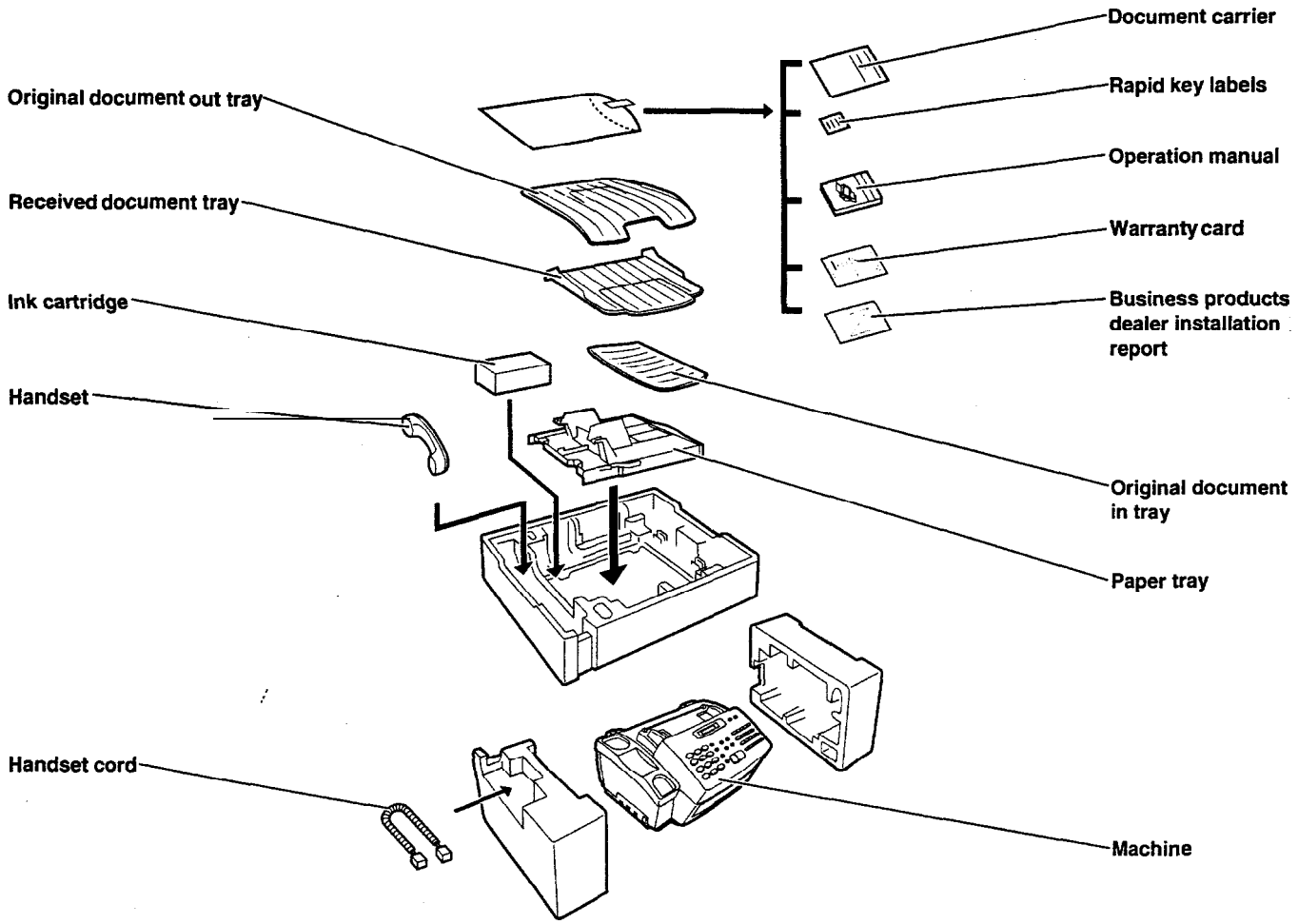

3. Installing the print cartridge

① Pull the operation panel knob on the right side of the machine forward, and open the operation panel.

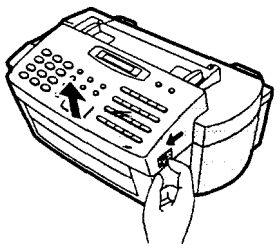

② Open the **print** cartridge container. Grasp the print cartridge by the green **arrow** and remove it from the container.

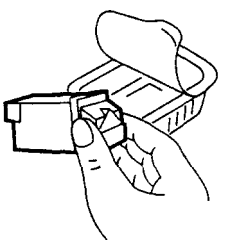

③ Gently remove the tape covering the nozzles on the print cartridge.

- Be careful not to touch the copper ribbon or the ink nozzles, and do not allow them to touch any surface or object. (Skin oil and dust can cause poor print quality.)

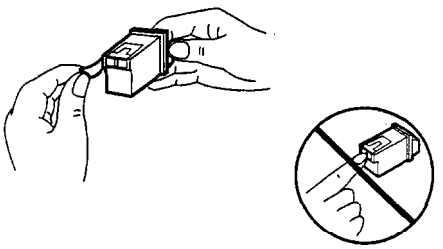

④ Insert the print cartridge into the cradle with the green arrow on the cartridge top pointing to the green dot on the top of the cradle.

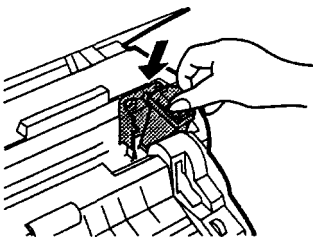

⑤ Push the green arrow forward toward the green dot, 'snapping' the cartridge into place.

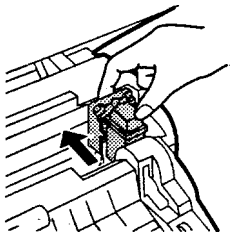

⑥ Close the operation panel.

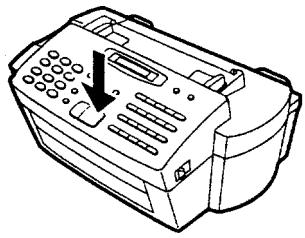

4. Assembly and connections

① Connect the handset cord to the handset and the machine as shown.

- The ends of the handset cord are identical, so they will go into either jack.

Place the handset on the handset rest.

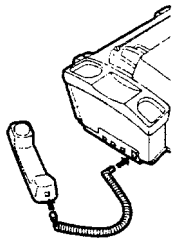

② Mount the original document tray.

- Hold the tray vertically, bend it slightly at the center, and insert the tabs into the holes on the top of the machine as shown.

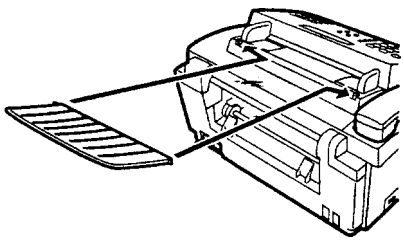

③ Mount the received document tray.

- Insert the tabs on the tray into the holes on the back of the machine.
- If desired, flip the tray extender out.

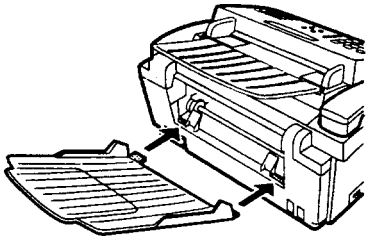

④ Mount the paper tray.

- Slide the tray in as shown until it clicks into place.

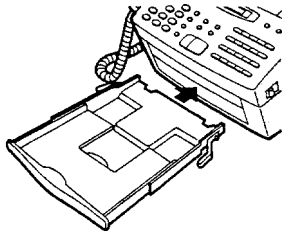

⑤ Mount the original document out tray.

- Place the original document out tray on the paper tray. Slide it in or out to fit the length of the original.

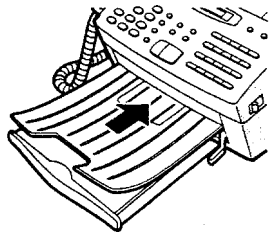

⑥ Insert the small modular plug which terminates the FO80TP adaptor line cord into the jack on the back of the machine marked TEL. **LINE**. Plug the FO80TP adaptor into the telephone jack on the wall.

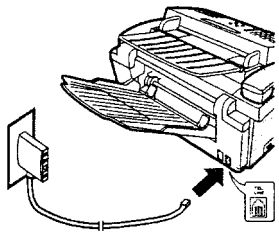

⑦ Plug the power cord into a 230 ~ 240 V, grounded (3-prong) AC outlet.

Press the power switch to turn on the power.

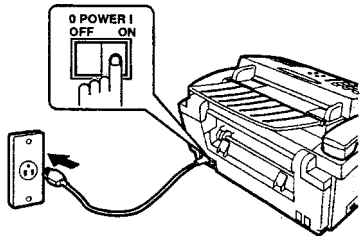

⑧ Adjust the volume switches on the left side of the machine:

- **RINGING VOLUME**: Set the switch at high (**H**), medium (**M**), or low (**L**) as desired.
- **SPEAKER VOLUME**: Adjust the setting from high (**H**) to low (**L**) as desired.

Set the mode of dialing with the DIAL switch. Select "T" if you are on a touch-tone line, or "P" if you are on a pulse dial (rotary) line.

- Be sure to make the correct setting, or you will not be able to make a call.
- **WARNING NOTICE**: For all units installed in New Zealand, only the **T** setting for tone dialing is permitted. The P setting for pulse dialing does not operate properly and must not be used.

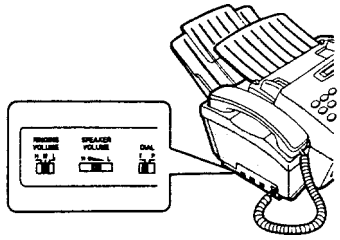

5. Loading printing paper

Selecting paper

The inkjet printer in your FO-3700 is designed to work well with most types of plain paper. Bond paper generally produces the best results, and plain paper manufactured for high-quality photocopying is also good. However, variation in paper composition may significantly affect print quality, and you should therefore test paper (printing on both sides) before purchasing large quantities to be assured of the quality you desire.

Size and weight

A4 size paper from 60 to 90 g/m^2 can be used.

Printing side

Plain paper has a 'print' side which should be used to obtain the best print quality. The print side is not visible to the naked eye, so check the label on the end of the package before removing the paper. The print side will be indicated by an arrow, symbol, or wording. Remove the number of sheets you wish to use from the package, and load them in the paper tray print side up as described below.

Note:

Do not use paper which is folded, curled, or tom, as it may jam in the printer.

Loading paper

A maximum of 100 sheets of paper can be loaded in the paper tray.

Note: Do not remove the paper tray from the machine to load paper (if the tray is not correctly in the machine when paper is loaded, the paper sensor will not be able to detect the paper).

① Remove the original document out tray.

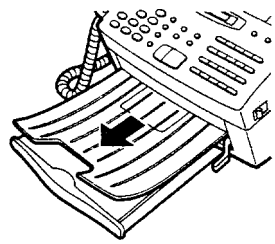

② Pull the tray extender out slightly.

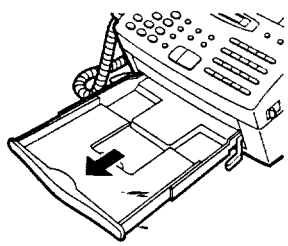

③ Fan the paper, and then tap the edge against a flat surface to even the stack.

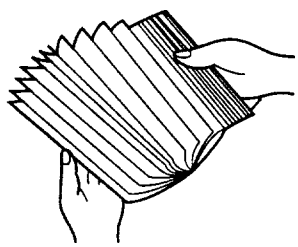

④ Insert the paper into the tray, print side up.

- Make sure it fits squarely against the inside of the machine.

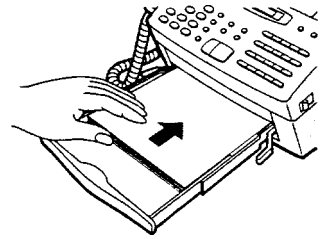

⑤ Push the tray extender back in.

- Make sure it fits snugly against the paper.

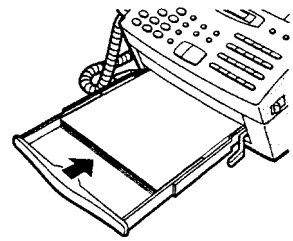

⑥ Replace the original document out tray.

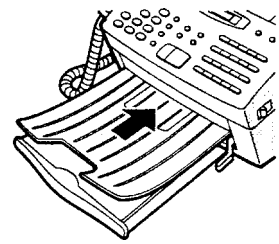

About the printable area

The area of the page on which the FO-3700 can print is slightly smaller than the page itself. The following dimensions are averages, and there may be slight deviation from these dimensions depending on how the paper is loaded in the tray.

Printing width: 203 mm

Printing length: The length of the page minus 1.5 mm from the top, and 12 mm from the bottom.

The FO-3700 has been set at the factory to automatically reduce the size of received documents to 92%. This can be configured for 100% reception by user switch. This ensures that data at the extreme edges of A4 size documents is not lost.

Note: If you receive a document which is too long to be printed on one sheet of paper, the remainder will be printed on a second page.

[6] Quick reference guide

Use this guide as a convenient reminder for operating the machine after you have read the detailed instructions for each procedure in the manual.

Note: Steps which are optional are enclosed in a dotted frame: ┌----------Y ¦ └----------┘

Transmitting documents

Normal Dialling	Load document → RESOLUTION → Lift handset or press SPEAKER → Dial (press numeric keys) → Wait for reception tone → START/COPY → Hang up
Direct Keypad Dialling	Load document → RESOLUTION → Dial (press numeric keys) → START/COPY
Rapid Key Dialling	Load document → RESOLUTION → Press Rapid Key
Speed Dialling	Load document → RESOLUTION → SPEED DIAL → Enter Speed Dial number (press 2 numeric keys) → START/COPY
Redialling	Load document → RESOLUTION → REDIAL → Wait for reception tone → START/COPY

Making voice calls

Normal Dialling	Lift handset or press SPEAKER → Dial (press numeric keys) → Lift handset if you pressed SPEAKER
Rapid Key Dialling	Lift handset or press SPEAKER → Press Rapid Key → Lift handset if you pressed SPEAKER
Speed Dialling	Lift handset or press SPEAKER → SPEED DIAL → Enter Speed Dial number (press 2 numeric keys) → Lift handset if you pressed SPEAKER
Redialling	REDIAL → Lift handset

Operations using the FUNCTION key

The following chart shows how to access **FUNCTION** key operations. Once you have accessed the desired operation, follow the instructions which appear in the display.

Answering machine settings	FUNCTION → 0 → # or * (Press until desired item appears)
Timer operations	FUNCTION → 1
Printing out lists	FUNCTION → 2 → # or * (Press until desired item appears)
Entry mode settings	FUNCTION → 3 → # or * (Press until desired item appears)
Setting User Switches	FUNCTION → 4 → # or * (Press until desired item appears)
Relay Request	FUNCTION → 5 → # or * (Press until desired item appears)
Broadcasting	FUNCTION → 6
Multi-copying	FUNCTION → #

FO-37 coA

CHAPTER 2. ADJUSTMENTS

[1] Adjustments

General

The following adjustments and settings are provided for this model, make adjustments and/or settings as necessary.

1. Adjustments

Adjustments of output voltage (FACTORY ONLY)

1. Install the power supply unit in the machine.
2. Set the recording paper and document.
3. When the document is loaded, power is supplied to the output lines. Confirm that outputs are within the limits below.

Output voltage settings

Output	Voltage limits	Factoryad
+12V	11.4V ~ 12.6V	None
-12v	–12.6V ~ –11.4V	None
+5V	4.75V ~ 5.25V	None
VM (+24V)	23.3V ~ 24.7V	VR1

(Top view)

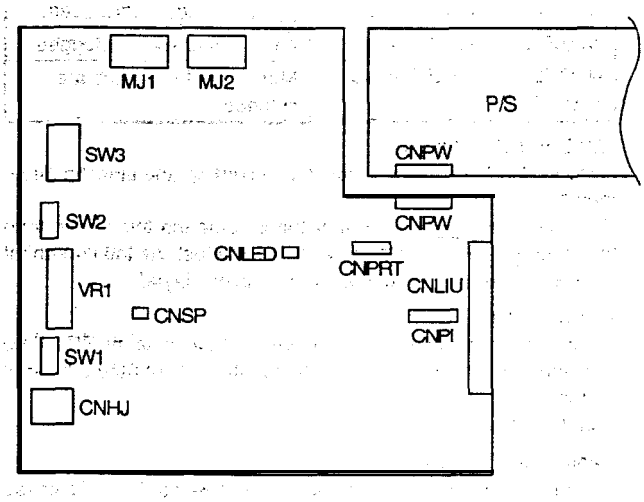

Connector No. / Pin No.	CNPW
1	MG
2	MG
3	+24V
4	+24V
5	DG
6	+5V
7	AG
8	+12V
9	-12v

Fig. 1

2. Settings

(1) Telephone/Fax setting

Perform the following adjustments and settings for the telephone and facsimile functions.

a) Ringing volume
The desired telephone ring volume can be selected from among three levels: high, middle, and low.

b) Speaker volume
When the SPEAKER key is pressed, the speaker volume is adjusted with this control.

c) Dial mode selector
(tine selector)
Select P(Pulse) or T(Tone) according to the type of the telephone line.
P: Pulse dial telephone mode (10 PPS)
T: Tonedial tone telephone mode (Tone)

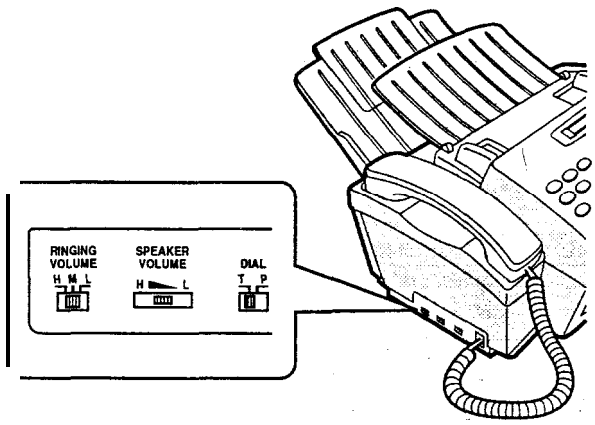

3. IC protectors replacement

ICPs (IC Protectors) are installed to protect the motor driver circuit. ICPs protect various ICs and electronic circuits from an overcurrent.

The location of ICPs is shown below:

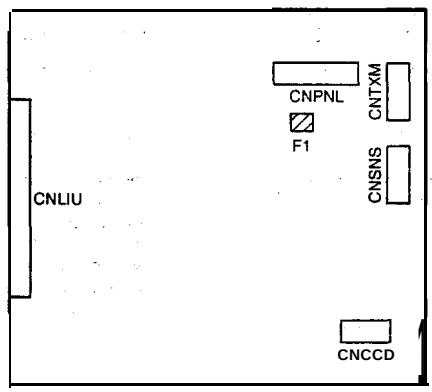

(1) F1 (ICP-20) is installed in order to protect IC's from an overcurrent generated in the motor drive circuit. If F1 is open, replace it with a new one.

In addition to the replacement of F1, the factor causing F1 to open must also be repaired. If not, F1 will open again.

Replacement parts
ICP-N20 (Sharp code: VHVICPN20//-1)

[2] Diagnostics and service soft switches

1. Diagnostics description

(1) Entering the diagnostic mode

Press the keys in the following sequence FUNC → 9 → * → 8 → # → 7, and the following display will appear.

ROM1:********* (This code is ROM version name.)

Then press the 'START/COPY' key. Select the desired item by pressing * or ❑ key or rapid key. Press the START/COPY key to go into the selected diagnostic mode.

(2) Diagnostic items

rapid key	contents
01	SOFT SWITCH MODE
02	ALL BLACK PRINT
03	ROM & RAM CHECK
04	AUTO FEEDER MODE
05	AGING MODE
06	PANEL CHECK MODE
07	CHECK PATTERN
0 8	PRODUCT CHECK
09	SIGNALSEND MODE
10	MEMORY CLEAR
11	MEMORY SET MODE
12	FSK SEND MODE
13	ENTRY DATA SEND
14	ENTRY DATA RCV.
15	TEL. NUMBER SET
16	CCD ADJUST MODE
17	PAPER EXIT MODE
18	PRINTER SELF TEST
19	INK TEST MODE

(3) Description of diagnostic items

01 SOFT SWITCH MODE

Used to change the soft switch settings.

After setting soft switch 22, the following display will appear.

PRINT SFTSW LIST and 1: YES OTHER: NO

Then 'SOFT SWITCH TABLE' list is printed by pressing 1 key.

```
*****************************************************************
*                                                               *
*                    SOFT SWITCH TABLE                          *
*        SW01=00000010                SW11=00000110             *
*        SW02=00001000                SW12=00000000             *
*        SW03=00000000                SW13=00010000             *
*        SW04=00000000                SW14=00000001             *
*        SW05=00000100                [illegible]               *
*        SW06=00000101                SW16=10001000             *
*        SW07=00001100                SW17=00000000             *
*        SW08=01010010                SW18=10010010             *
*        [illegible]                  SW19=00010000             *
*        SW10=00000000                SW20=10000000             *
*                                                               *
*****************************************************************
```

02 AU BLACK PRINT

Used to check the printer head. All black pattern printable area of page is printed.

03 ROM & RAM CHECK

Used to check the program ROM and the work RAM area of the machine and the printer, and check the status of the printer. The ROM check is used for ROM, and a read/write matching test is used for the RAM.

The result of the machine check is given by a number of beeps, and the total result is given by printing the 'ROM & RAM CHECK TABLE' list.

number of beeps

0 beep	NO ERROR
1 beep	ROM ERROR
4 beeps	SRAM ERROR
5 beeps	DRAM ERROR (Standard)
6 beeps	DRAM ERROR (Option)

```
*****************************************************************
*                                                               *
*                    ROM & RAM CHECK TABLE                      *
*          - MAIN -                                             *
*                  ROM  = OK          [illegible] FCB0B         *
*                  SRAM = OK                                    *
*                  DRAM = OK                                    *
*                  OPTION DRAM = NO SET UP                      *
*                                                               *
*          - PRINTER -                                          *
*                  ROM  = OK          VER. A00.58               *
*                  RAM  = OK                                    *
*                  ASIC = OK                                    *
*                  STATUS OK                                    *
*                                                               *
*****************************************************************
```

Description of printer status

OK	normal
OUT OF INK	The ink is missing.
SENSOR ERROR	The sensor for printer head is abnormal.
NOZZLE CLOGGED 1 to 3	1 to 3 nozzles are clogged.
NOZZLE CLOGGED 4 to 11	4 to 11 nozzles are clogged.
NOZZLE CLOGGED more than 11	More than 11 nozzles are clogged.

04 AUTO FEEDER MODE

Used to check auto feed function by inserting and ejecting documents.

Place documents in the hopper before entering this mode, then press the START/COPY key to start the test. As the document sensor is actuated, the document size is displayed.

05 AGING MODE

If a document is placed in the hopper, a copy is taken first. If no document is present, a sheet of test patterns is printed out every 60 minutes.

(Total 10 sheets)

06 PANEL CHECK MODE

Used to check proper key operation, Each key entry is displayed on the LCD.

The test results will be also printed.

```
*****************************************************************
*                                                               *
*                  PANEL CHECK LIST                             *
* 1          2          3          4          5                 *
* [illegible] 7          8          9          *                 *
* [illegible] #          SPEED DIAL REDIAL     HOLD              *
* [illegible] RESOLUTION  POLLING   MEMORY     TALK              *
* START/COPY RECEPTION   FUNCTION   [illegible] 02               *
* 03         04         05         06         07                *
* 08         09         [illegible] [illegible] 12               *
* 13         14         15         16         17                *
* 18         19         [illegible] STOP                         *
*                                                          AUTO *
*                PANEL CHECK OK                                 *
*                                                               *
*****************************************************************
```

07 CHECK PATTERN

Used to check the nozzles of the print head. The following pattern is printed out on the sheet, A total of two sheets will be produced.

① Frame line:
The frame line shows the print area of a page.
The horizontal ruled line at the lower end is specified with soft SW 18 bit 3. 4, and 5.

② Nozzle test:
The pattern is used to check for a clog in the 46 nozzles of the print head.

③ Vertical stripes 1

④ Vertical stripes 2

⑤ Light grey

⑥ All-black block:
Three all-black blocks for checking print density

⑦ All white

⑧ Paper feed accuracy check pattern:
Used to check eccentricity of the paper feed motor.

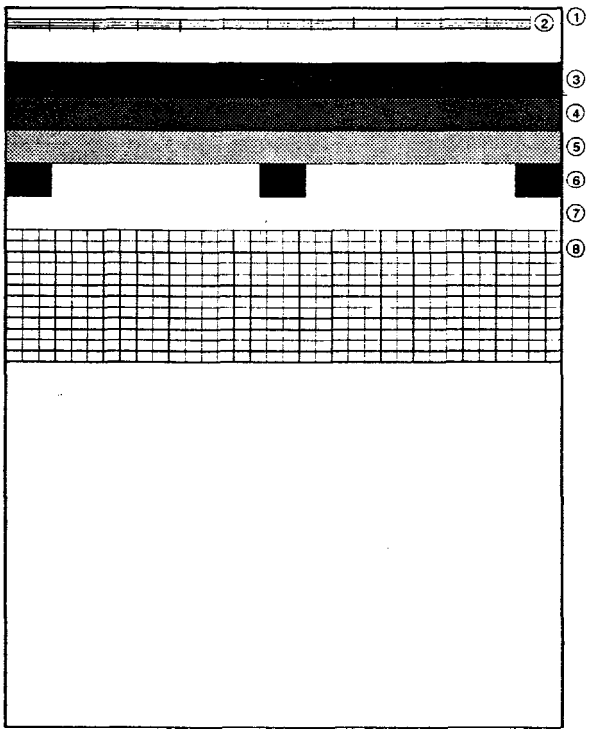

08 PRODUCT CHECK

(Diags, 07, 06, and 03 take place in succession)
Used to carry out the CHECK PATTERN, PANEL CHECK MODE, and ROM & RAM CHECK CAPITAL CETIERS successively.

09 SIGNAL SEND MODE

Pressing the START/COPY key after entering this mode will transmit modem signals out of the TEL Line, in the following order. Used to check the modem. (Monitor from (This is also audible from the speaker of the machine) the TEL line socket to check signals.)

[1] No signal (CML signal turn on)
[2] 9600bps(V.29)
[3] 7200bps(V.29)
[4] 4800bps(V.27ter)
[5] 2400bps(V.27ter)
[6] 300bps(FLAG)
[7] 21 00Hz(CED)
[8] 11 00Hz(CNG)
[9] PSEVDC RINGER

10 MEMORY CLEAR

Used to clear the memory. The soft switches and the user switches will be set to initial states. The following will be printed.

```
**********************************************************************
*                                                                    *
*                          MEMORY CLEARED                            *
*                                                                    *
**********************************************************************
```

11 FACTORY USE ONLY

12 FSK SEND MODE

Delivers various signals of 300bps in the following data pattern at the level set by the soft switch.
00000 → 11111 → 010101 → 11110 → 00001

13.14. Diag #13, #14 are used together.

1. Press the Start key on the receive data unit first then the send unit.

13 ENTRY DATA SEND

Used to send the data registered in memory by signals of 2400bps, and copy the registering contents.
Registering contents

[1] rapid number
[2] speed number
[3] the contents registered in the entry mode
(But date & time is excluded.)
[4] relay tx data
[5] soft switch settings

14 ENTRY DATA RCV.

This mode is the reception mode of ENTRY DATA SEND. The received data is registered in the memory, and 'TELEPHONE LIST', 'PASSCODE LIST'. 'USER SWITCH LIST'. 'SOFT SWITCH LIST' are printed.

15 TEL. NUMBER SET

The TEL number and name registered in rapid number 01 can be copied to all rapid numbers. The first 3 characters of the copied name is changed such as "R02".
Additionally, the TEL number and name registered in speed number 01 can be copied to all speed numbers. The first 3 characters of the copied name is changed such as "S02".

16 CCD ADJUST MODE

Used to execute copy operation. When the STOP key is pressed, the unit goes into the waft state to adjust the CCD line alignment. When the START/COPY key is pressed again, the copy operation is resumed.

17 PAPER EXIT MODE

Used to check the recording paper feed function by inserting and ejecting recording paper. This mode will continue until recording paper is out, or the STOP key is pressed.

18 PRINTER SELF TEST

Used to check the state of the printer. This the check prints the check pattern provided by the printer driver.

19 INK TEST MODE

Used to check the state of the printer. A check pattern as with diagnostic 07 is produced when this mode is entered.

2. Soft switch description

Soft switch list

SW No.	Bit No.	Item	Switch setting and function 1	Switch setting and function 0	Default	Note
SW1	1	Line density choice	FINE	STANDARD	0	USER SWITCH
	2	Reserved	—	—	0	
	3	Reserved	—	—	0	
	4	Activity report print	Automatic printout after memory full	No printout when memory is full	0	USER SWITCH
	5	Reserved	—	—	0	
	6	Reserved	—	—	0	
	7	Reserved	—	—	1	
	8	Automatic switching mode	Phone/fax automatic switching	switching to fax only	0	USER SWITCH
SW2	1	Reserved	—	—	0	
	2	Reception 4800 BPS fixed	Yes	No	0	
	3	Reserved	—	—	0	
	4	CED tone-signal interval	500 msec	75 msec	0	
	5	Line equalizer	Yes	No	1	
	6	Reserved	—	—	0	
	7	Reserved	—	—	0	
	8	"NOZZLE CLOGGED" display	Yes	No	0	
SW3	1	Max.page length for transmit, receive and copy	No limit	1m max.for copy and transmit, 1.5m max. for receive (std)	0	
	2	Footer print	ON	OFF	0	USER SWITCH
	3	Sender's phone number registration	Cannot be changed	Can be changed	0	
	4	Total communication hours and pages print	No	Yes	0	
	5	Reserved	—	—	0	
	6	Reserved	—	—	0	
	7	CSI transmission	Not transmitted	transmitted	0	
	8	Communication error treatment (reception) in RTN sending	Not transmission error	Transmission error	0	
SW4	1	Protocol Monitor 1	Printed at com.err	Not Printed	0	
	2	Dialing pause	4 seconds	2 seconds	0	
	3	Reserved	—	—	0	
	4	NSF receive acknowledge in G3 transmit mode	Twice	Once for NSF reception, Twice for DIS reception	0	
	5	Non-modulation carrier in V29 transmission mode	Yes	No	0	
	6	EOL detect timer	25 seconds	5 seconds	0	
	7	Protocol Monitor	Yes	No	0	
	8	Line Monitor	Yes	No	0	
SW5	1	Fine and standard contrast control	Standard: No.1 = 0	Light: 0 / Dark: 1 / Darker: 1	0	
	2		Standard: No.2 = 0	Light: 1 / Dark: 0 / Darker: 1	0	
	3	Halftone contrast control	Standard: No.3 = 0	Light: 0 / Dark: 1 / Darker: 1	0	
	4		Standard: No.4 = 0	Light: 1 / Dark: 0 / Darker: 1	0	
	5	Halftone MTF correction	—: No.5 = 0	Weak: 0 / Strong: 1 / —: 1	0	
	6		—: No.6 = 0	Weak: 1 / Strong: 0 / —: 1	1	
	7	Reserved	—	—	0	
	8	Reserved	—	—	0	

SW No.	Bit No.	Item	Switch setting and function							Default	Note
			1					0			
SW6	1 2 3	Communication results printout (Transaction report)		transmi-ssion or com.err	cancel or com. error	printed at E/T/M/P	Printed at only trans.	Prints every time	Not printed		USER SWITCH
			No.1	1	1	0	0	0	0	0	
			No.2	0	0	0	0	1	1	0	
			No.3	1	0	0	1	0	1	0	
	4	Sender's information delivery	No				Yes			0	
	5 6 7 8	Remote operation code figures by external TEL(0-9)	Binary input 8 4 2 1 (Binary) No. = 5 6 7 8 (Bit No.)							0 1 0 1	USER SWITCH
SW7	1	H2 mode	OFF				ON			0	
	2	ECM (MMH)	No				Yes			0	
	3	ECM mode	No				Yes			0	USER SWITCH
	4	ECM oct/frame	64 oct				256 oct			0	
	5 6 7 8	Modem signal transmission level (dBm)	Binary input 8 4 2 1 (Binary) No. = 5 6 7 8 (Bit No.)							1 1 0 0	
SW8	1	Mode signal transmission level (dBm)	ON (OVER −16dBm)				OFF			0	
	2	Reserved	—				—			1	
	3	Reserved	—				—			0	
	4	Reserved	—				—			1	
	5	Reserved	—				—			0	
	6	Reserved	—				—			0	
	7	Reserved	—				—			1	
	8	Reserved	—				—			0	
SW9	1 2	Dummy ringer rumbling time at TEL/FAX automatic switching mode		15sec.		30sec.		60sec.	120sec.		USER SWITCH
			No.1	0		0		1	1	0	
			No.2	0		1		0	1	0	
	3	Busy tone detection continuation sound detect time	10sec				5sec			0	
	4 5	Numbe r of Busy tone detection pulses		2pulse		4pulse		6pulse	10pulse		
			No.4	0		0		1	1	0	
			No.5	0		1		0	1	1	
	6	Busy tone detection ON/OFF time (Lower limit)	350ms				200ms			0	
	7	Busy tone detection ON/OFF time (Upper limit)	650ms				750ms			0	
	8	Busy tone detection intermittent sound detection	No				Yes			0	
SW10	1 2	Beep length select		3 sec.		1 sec.		no beep	Not used		USER SWITCH
			No.1	0		0		1	1	0	
			No.2	0		1		0	1	0	
	3	Remote receive control function	No				Yes			0	
	4	Switching to reception when A.M.memory full	After 6 rings				Does not switch			0	A.M. MODE
	5 6	Reduce of copy and manual receive		94 %			100%				USER SWITCH
			No.5	0			0			0	
			No.6	0			1			0	
	7 8	Reduce of auto receive	footer off	92 %			100%				USER SWITCH
			footer on	91 %			100%				
			No.7	0			0			0	
			No.8	0			1			0	

SW No.	Bit No.	Item	Switch setting and function					Default	Note
			1			0			
SW 11	1	Busy tone detection frequency	480 Hz			440 Hz		0	
	2	Reserved	—			—		0	
				50ms	80ms	100 ms	120 ms		
	3	DTMF detection time	No.3	0	1	0	1	0	
	4		No.4	0	0	1	1	0	
	5	Quiet detect time (When in A.M mode)	Binary input(0 ~ 10)					0	A.M. MODE
	6		8 4 2 1 (Binary)					1	
	7		No. = 5 6 7 8 (Bit No.)					1	
	8		(0:Not detect)					0	
SW 12	1	MH fixed	Yes			No		0	
	2	MMR	No			Yes		0	
	3	F27 mode	No			Yes		0	
	4	F70 mode	No			Yes		0	
	5	Quiet detect start time	Binary input(0 ~ 15)					0	A.M. MODE
	6		8 4 2 1 (Binary)					0	
	7		No. = 5 6 7 8 (Bit No.)					0	
	8							0	
SW 13				250 ms	500 ms	750 ms	1000ms		
	1	Detection time of hook state by external telephone(on → off)	No.1	0	0	1	1	0	
	2		No.2	0	1	0	1	0	
				250 ms	500 ms	750 ms	1000ms		
	3	Detection time of hook state by external telephone(off → on)	No.3	0	0	1	1	0	
	4		No.4	0	1	0	1	1	
	5	Reserved	—			—		0	
	6	Reserved	—			—		0	
	7	Reserved	—			—		0	
	8	Reserved	—			—		0	
SW 14	1	Reserved	—			—		0	
	2	Reserved	—			—		0	
	3	Reserved	—			—		0	
	4	Reserved	—			—		0	
			V.29			V.27ter			
			9600	7200		4800	2400		
	5	Modem speed	0	0		0	0	0	
	6		0	0		0	0	0	
	7		0	1		1	0	0	
	8		1	1		0	0	1	
SW 15	1	DTMF 3 digits at remote reception	Yes			No		0	
	2	DTMFdetection cycletime off time	58 ms 8 ms			93 ms 28 ms		0	
	3	A.M.mode CNG detecting	No			Yes		0	
	4	Protection from echo	Yes			No		0	
	5	CNG detection time (Lower limit)	ON 225ms OFF 2150ms			ON 325ms OFF 2450ms		0	
	6	CNG detection time (Upper limit)	ON 775ms OFF 3850ms			ON 675ms OFF 3550ms		0	
				1 time	2times	3times	4times		
	7	CNG detection number of times (A.M. mode)	No.7	0	0	1	1	1	
	8		No.8	0	1	0	1	0	
SW 16	1	CNG detection number of times(TEL/FAX mode)	Twice			Once		1	
	2	Reserved	—			—		0	
	3	Reserved	—			—		0	
	4	Reserved	—			—		0	
	5	Time format	24 hours			12 hours		1	
				D.M.Y	M.D.Y	Y.M.D	JPN		D:Day
	6	Date format	No.6	0	0	1	1	0	M:Month
	7		No.7	0	1	0	1	0	Y:Year
	8	Vertical resolution	7.7 line/mm			300 dpi		0	CHECK PATTERN

SW No.	Bit No.	Item	Switch setting and function					Default	Note
			1			0			
SW17	1	Off Hook Hold (Answer delay in A.M. mode)	Binary Input(0 ~ 255)					0	A.M. MODE
	2		128 64 32 16 8 4 2 1 (Binary)					0	
	3		No. = 1 2 3 4 5 6 7 8 (Bit No.)					0	
	4							0	
	5							0	
	6							0	
	7							0	
	8							0	
SW18	1	Cut off mode(Copy mode)	Yes			No		1	USER SWITCH
	2	Cut off mode(Com. mode)	Yes			No		0	USER SWITCH
		Paper select		Letter	A4	legal	—		CHECK PATTERN ONLY
	3		No.3	0	0	1	1	0	
	4		No.4	0	1	0	1	1	
	5	Extended print area	Yes			No		0	
		Vertical scale method		Blank rows	Duplicate last row	Smoothing	Constant line density: Duplication	Constant line density: Smoothing	
	6		No.6	0	0	0	0	1	0
	7		No.7	0	0	1	1	0	1
	8		No.8	0	1	0	1	0	0
SW19	1	Number of rings for auto receive	Binary input(1 ~ 9)					0	USER SWITCH
	2		8 4 2 1 (Binary)					0	
	3		No. = 1 2 3 4 (Bit No.)					0	
	4							1	
	5	Automatic switching from manual to auto receive mode	Binary input(0 ~ 9)					0	USER SWITCH
	6		8 4 2 1 (Binary)					0	
	7		No. = 5 6 7 8 (Bit No.)					0	
	8		0:does not change					0	
SW20	1	Dummy ringer transmission level (dBm)	Binary input					1	
	2		8 4 2 1 (Binary)					0	
	3		No.=5 8 7 8 (Bit No.)					0	
	4							0	
	5	Reserved	—			—		0	
	6	Reserved	—			—		0	
	7	Remote operation auto disable	Limit (7 sec)			No limit		0	
	8	Reserved	—			—		0	

Soft switch setup

Soft **switch** settings stored in memory can be changed by entering data from **the** keyboard. SW1 through SW20 constitutes soft switches. See the soft switch listing on page 2-4 and 2-7 for the function of **SW1** through SW20 settings.

How to make soft switch **settings**

To enter the softswitch mode, make the following key entries in sequence.

'FUNCTION', **"9", "*", "8", "#", "7",** 'START/COPY', 'START/COPY'

SW1 bii No.1 through No.8 will be displayed.

	Bit No.	1	2	3	4	5	6	7	8
Display	SW01 =	0	0	0	0	0	0	1	0

Press the **"#"** or **"*"** key and bring the cursor (blinking pointer) to the bii No. which is to be changed. (The **"#"** key moves the cursor to the **right,** and the **"*"** key to the left.)

Press the FUNCTION key to change the setting between 1 and 0.

When the cursor is on data No.8 position, press the **"#"** key to display SW2 data No.1 through **No.8.** pressing the START/COPY button **shifts** cursor to the next soft switch

	Bit No.	1	2	3	4	5	6	7	8
Display	SW02 =	0	0	0	0	1	0	0	0

Make settings in the same way as for SW2. Proceed to the settings of SW3 to SW20 in the same manner

When the cursor is on SW20 data No.8 position as shown below, press the **"#"** key to finalize all settings.

	Bit No.	1	2	3	4	5	6	7	8
Display	SW20 =	0	0	0	0	0	0	0	0

To finish the settings halfway between SW1 and **SW20,** press the STOP key. in this case, the setting being performed to the SW No. on display will be nullified while settings **performed** to the preceding SW Nos. remain in effect.

Soft switch functional description

SW1 No.1 Line density choice

Used to set the transmission mode which is automatically selected when the MODE key is not pressed. In copy mode, however, the fine mode is automatically selected unless the MODE key is manually set to another mode.

0: Standard
1: Fine

default: 0

SW1 **No.2, 3** Resewed

Set to '0'.

SW1 No.4 Activity **report** print

This soft switch is used to select; whether or not to print out the activity report when the memory is full. An activity report can be printed when the foilowing key entry command is made.

'FUNCTION', **"2", "#",** 'START/COPY

After producing the activity report, **all** the data in the memory will be cleared.

When the switch function is set to **"0"** (NO), the data in the memory will be deleted from the oldest as it reaches the maximum memory **capacity.**

0: NO (first data lost when memory is full)
1: YES (when memory is full)

default: 0

SW1 No.5 ~ 6 Reserved
Set to "0".

SW1 No.7 Reserved
Set to 'I'.

SW1 No.8 Automatic switching mode

This soft switch is used to set the auto **tel/fax** select mode or to set the normal fax mode.

0: Switching to fax only
1: **TEL/FAX** automatic switching

Default: 0

SW2 **No.1 Reserved**
Set to **"0".**

SW2 No.2 **Reception 4800 BPS fixed**

When line conditions warrant that the reception take place at 4900 BPS repeatedly. It may improve the success of reception to start at 4900 BPS. This improves the receiving document quality and reduces handshake time due to **fallback** during training.

0: NO
1: YES

Default: 0

SW2 No.3 **Reserved**
Set to **"0".**

SW2 No.4 **CED tone-signal interval**

For international communication, the **2100Hz** CED tone may act as an echo suppresser switch, causing ***a*** communication problem. Though this soft switch is normally set to **"0",** it should be set to '1' so as to change the timer between CED tone and DIS signal from 75ms to 500ms to eliminate the communication problem caused by echo.

0: 75 ms
1: 5ooms

Default: 0

SW2 No.5 Line equalizer

Used to set the Line equalizer function.

On → **7.2km**
Off → 0km

0: **Off → 0km**
1: **On → 7.2km**

Default: 1

SW2 No.8 ~ 7 **Reserved**
Set to '0'.

SW2 No.8 "NOZZLE CLOGGED" display select

You can select whether the prompt 'NOZZLE CLOGGED' is displayed or not when nozzie on the printer cartridge dogged.

0: Not display
1: **Display**

Default: 0

SW3 **No.1 MAX.page** length **for transmit, receive and copy**

Used to set the maximum page length.

To avoid possible paper jam, the page length is **nomally** limited to 1 meter for copy or transmit, and 1.5 **metres** for receive.

It is possible to set it to 'No limir to transmit **a-iong** document, such as a computer print from, etc. (In this case, the receiver must **also** be set to no limit.)

0: 1 m max. for copy and **transmit, 1,5m** max. for receive (std)
1: No limit

Default: 0

SW3 No.2 Footer print

When set to **"1",** the date of reception, the sender's machine No., and the page **No.are** automatically recorded at the end of reception.

0: off
1: On

Default: 1

SW3 No.3 Sender's phone number registration

Used to make a choice of whether the registered sender's phone number can be changed or not. If the switch is set to 'I', new registration of the senders phone number is disabled to prevent accidental wrong input.

0: **Can be changed**
1: cannot be changed

Default: 0

SW3 No.4 Total communication hours and pages print

Used to make a choice of whether the total communication time and pages are recorded in the activity report.

0: Yes
1: No

Default: 0

SW3 **No.5, 6** ***Resewed***
Set to **"0".**

SW3 No.7 CSI transmission

CSI signal contains the sender's phone number registered in the machine.

0: Transmitted
1: Not transmitted

Default: 0

SW3 No.8 **Communication error treatment (reception) in RTN sending**

Used to determine communication error treatment when RTN is sent by occurrence of a received image error in **G3** reception. When it is set to 'I', communication error is judged as no error.

0: Transmission error
1: Not transmission error

Default: 0

SW4 No.1 Protocol Monitor 1

If set to **"1",** protocol is printed at communication error.

0: off
1: On

Default: 0

SW4 No.2 Dialing pause

The length of the pause inserted between telephone numbers of direct dial contraction. can be adjusted. Selection of 4 **sec** or 2 **sec pause** is available.

0: **2 seconds**
1: **4 seconds**

Default: 0

SW4 No.3 **Reserved**
Set to **"0".**

SW4 No.4 NSF receive acknowledge in G3 transmit mode

Used to make a choice of whether reception of NSF (DIS) is acknowledged after receiving two **NSFs (DISs)** or receiving one NSF **(two DISs).**

It may be useful for overseas communication to avoid an echo **suppresser** problem, if set to 1

0: 1 for NSF reception, 2 for DIS reception
1: **2 times**

Default: 0

SW4 No.5 Non-modulation carrier in V29 transmission mode

Though transmission of non-modulated carrier is not required for transmission by the V29 modem according to the **CCITT** Recommendation, it may be **permitted** to send non-modulation carder before the image signal to avoid an echo suppresser problem.

It may be useful for overseas communication to avoid an **echo suppresser** problem, if set to 1.

0: No
1: Yes

Default: 0

/served

Reserved

8 Modem speed

o de mine the initial modem speed. The default is 9600bps.
cessary to program it to a slower speed when frequent
is encountered, in order to save the time required for
cedure.
V29 9600BPS
7200BPS
V27ter 4800BPS
2400BPS
owl

No.1 DTMF 3 digits at remote reception

to make a choice of whether to use the 3 digits code or 2 digits
for remote receive.
0: No 0* → 00*
1: Yes 1* → 10*
efault: 0 5* → 50*
9* → 90*

SW15 No.2 DTMF detection cycle/off time

Used to choose the cycle time and off time.
Normally set to "0". When the DTMF signal not detected, You can set to '1'. The DTMF detection is shortened.
0: Cycle time 93ms
Off time 28ms
1: Cycle time 58ms
Off time 8rns
Default: 0

SW15 No.3 A.M mode CNG detecting

Choke is made whether the CNG signal is not detected in A.M (Answering machine) mode.
0: Yes
1: No
Default: 0

SW15 No.4 Protection from echo

Used to protect from echo in reception.
0: No
1: Yes
Default: 0

SW15 No.5 CNG detection time (Lower limit)

Used to determine the lower limit of CNG detect time.
0: ON 325ms
OFF 2450ms
1: ON 225ms
OFF 2150ms --
Default: 0

SW15 No.6 CNG detection time (Upper limit)

Used to determine the upper limit of CNG detect time.
0: ON 675ms
OFF 3550ms
1: ON 775ms
OFF 3850ms
Default: 0

SW15 No.7, 8 Number of CNG signal detection in A.M mode

Used for detection of CNG in 1 ~ 4 pulses in answering machine mode.
00: 1 time
01: 2 times
10: 3times
11: 4 times
Default: 10

SW16 No.1 Number of CNG signal detection at the TEL/FAX automatic switching mode

Used for detection of CNG in one or two pulses in the TEL/FAX automatic switching mode
0: Once
1: Twice
Default: 1

SW16 No.2 ~ 4 Reserved

Set to "0".

SW16 No.5 Time format

Choice is made for the format of time display
0: 12 hours mode (AM/PM)
1: 24hoursmode
Default: 1

SW16 No.6, 7 Date format

Used to set entry of date into activity report and LED format according to specifications of country.
00: day/month/year
01: month/day/year
10: year/month/day
11: year/month/day (Japan mode: month is not English)
Default: 00

SW16 No.8 Vertical resolution

Used to set the Vertical resolution.
0: 300 dpi
1: 7.7 line/mm
Default: 0

SW1 7 No.1 ~ 8 Off hook hold

Used to set 'Off hook hold' time by binary input.
00000000: 0 second
↓
11111111: 255seconds
Default: 00000000

SW18 No.1 Cut off mode (Copy mode)

When in copy, if the scanned data is out of the range of recording, the operator has one of the choices below using the switch.
0: Continue: Data is printed onto the next page.
1: Cut off: Data scanned out of the limit is cut off.
Default: 1

SW18 No.2 Cut off mode (Com. mode)

When receiving, if the data is out of the range of recording, the operator has one of the choices below using the switch.
0: Continue
1: cutoff
Default: 0

SW18 No.3, 4 Paper select

Used to set the media size. (Letter /A4 / Legal) check pattern only
00: Letter size
01: A4
10: Legal
Default: 01

SW18 No.5 Extended print area

Used to choose of extended print area enable or disable.
0: Disable
1: Enable
Default: 0

SW18 No.6 ~ 8 Vertical scale method

Used to choose of Vertical scale method.
Method used to create the additional rows needed to provide the proper vertical size.
000: Blank rows
001: Duplicate last row
010: Smoothing
011: Constant line density (Duplication)
100: Constant line density (Smoothing)
Default: 010

<Scale Method>	Value	Standard Mode	Fine Mode
Blank rows	0 x 00	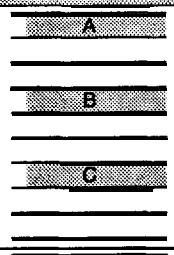	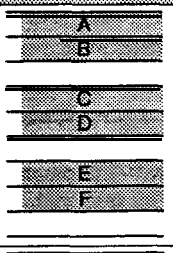
Duplicate last row	0 x 01	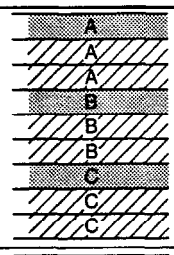	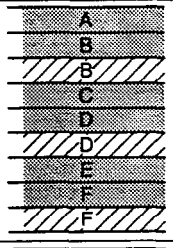
Smoothing	0 x 02	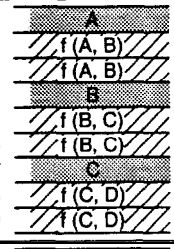	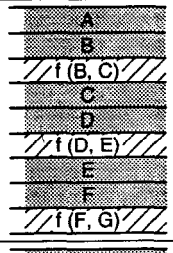
Constant line density using duplication	0 x 0 3	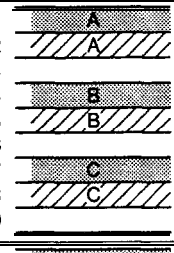	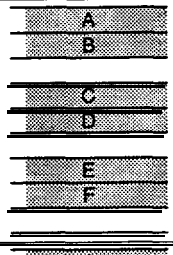
Constant line density using smoothing	0 x 04	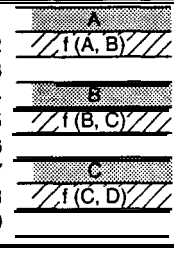	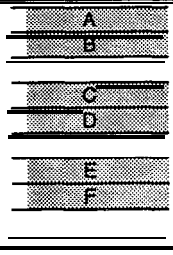

SW19 No.1 ~ 4 Number of rings for auto receive

When the machine is set in the auto receive mode, the number of rings before answer is made can be selected. It may be set from one to nine *rings using a* binary number. Since the facsimile telephone could be used as an ordinary telephone if the handset is taken off the hook before connection is made to the facsimile while ringing, it should be programmed to the user's choice. If a facsimile calling beep is heard when the handset is taken off the hook, press the START/COPY key and put the handset on the hook to have the facsimile start receiving. If it is set to above 9, receive rings are automatically set to 1.

0001: 1 time
↓
1001: 9 times
Default: 0001

SW19 No.5 ~ 8 Automatic Switching from manual to auto receive mode

Choice is made to after how many rings in the manual receive mode it should be automatically changed to the facsimile answer mode or remain in the manual receive mode. Entering a binary number 0 will force the machine to remain in the manual answer mode. If a number between 1 and 9 is entered, the machine will go into the answer mode after the given number of rings. However, it can be used as an ordinary telephone if the handset is taken off the hook before this programmed number has elapsed. Entry of a number above 9 will set the machine to 0.

0000: Does not change
0001: 1 times
↓
1001: 9 times
Default: 0000

SW20 No.1 ~ 4 Dummy ringer transmission level (dB)

Pseude-ringer sending level setting 0dBm ~ –15dBm.

0000: 0dBm
↓
1111: -15dB
Default: 1000 (–8dBm)

SW20 No.5 – 6 Reserved

Set to '0'.

SW20 No.7 Remote operation auto disable

Selection of remote operation (5, ✳) inhibition after passing a certain time from reception of Remote operation auto disable.

0: Not inhibited.
1: Inhibited automatically after 7 sec.
Default: 0

SW20 No.8 Reserved

Set to '0'.

[3] TROUBLE SHOOTING

Refer to the following actions to troubleshoot any of problems mentioned in I-6.

[1] A communication error evoked.
[2] Image distortion produced.
[3] Unable to do overseas communication
[4] Communication speed slow liable to failback.

- Increase the transmission level SOFT SWITCH 7-5 6 7 8
  Can be used in case [1] [2] [3]
- Decrease the transmission level SOFT SWITCH 7-5 6 7 8
  Can be used in case [3]
- Apply line equalization SOFT SWITCH 2-5
  Can be used in all cases.
- Slow down the transmission speed SOFT SWITCH 14-5 6 7 8
  Can be used in case [2] [3]
- Replace the LIU PWB.
  Can be used in all cases.
- Replace the control PWB.
  Can be used in all cases.

* If transmission problems still exist on the machine, use the following format and check the related matters.

TO: ATT: Ref.No. :
CC: ATT: Date :
FM: Dept :
Sign :

***** Facsimile communication problem *****			Ref.No.:
From: Mr.	Fax Tel No.:		Date:
Our customer	Name		Tel No.
	Address		Fax No.
	Contact person		Model name
Other party	Name		Tel No.
	Address		Fax No.
	Contact person		Model name
Problem mode	Line: Domestic / international	Mode: G3	Phase: A. B. C. D.
	Reception /Transmission	Automatic reception / Manual reception	
		Automatic dialling /Manual dialling / Others	
Frequency:	%	ROM version:	
Confirmation item	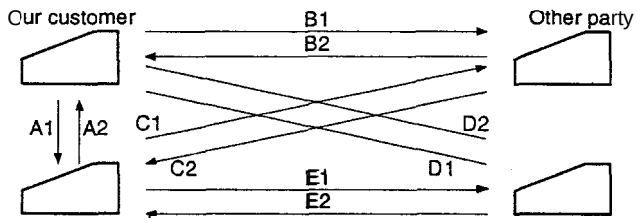		Please mark problem with an X No problem is: 0

Al	A2	Bl	B2	Cl	C2	Dl	D2	El	E

Transmission level setting is ( ) dB at our customer

Transmission level ( ) dBm
Reception level ( ) dBm
By level meter at Bl and B2

Comment	
Counter-measure	

**** Please attach the G3 data and activity report on problem. ****

[4] Error code table

Transmission errors

E-0	Able to recognize handshake signal, but it has errors.
E-i	Cannot recognize the handshake signal from the receiver side.
E-2	Line disconnected during transmission.
E-3	Line disconnected after modem speed fall-back.
E-4	tine disconnected during multi-page transmission.
E-6	Cannot recognize the handshake signal for next page at receiver side.
E-7	No response from receiver side or 'disconnect signal" is received at transmitter side.

Reception errors

E-0	Able to recoonize handshake signal. but it has errors.
E-I	Line disconnected during reception.
E-2	Cannot recoanize the handshake signal from the transmitter side.
E-3	Cannot recognize the last handshake signal from the transmitter side.
E-4	Cannot recognize the handshake signal for next page from the transmitter side in the case of mode change.
E-5	Cannot recoonize the handshake signal for next page from the transmitter side.
E-7	No response from transmitter or 'disconnect signal' is received at receiver side.

CHAPTER 3. MECHANISM BLOCKS

[1] General description

1. Document feed block and diagram

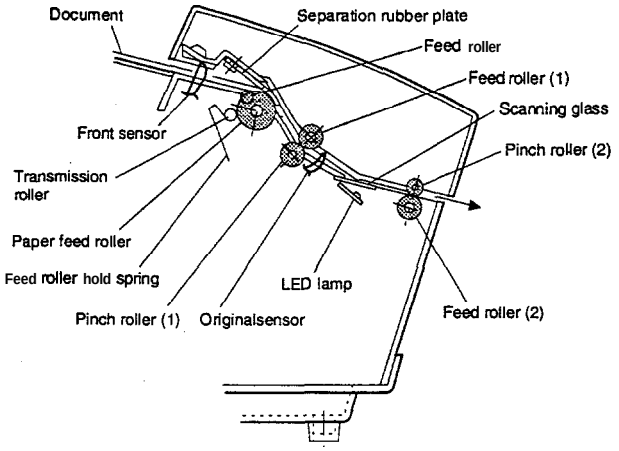

Fig. 1

2. Document feed operation

1) The document placed in the hopper actuates the front sensor. After one second, the pulse motor starts to drive the paper feed roller. The document is automatically taken up into the machine, and stopped at the original sensor.
2) After a specified number of pulses are received from the document lead edge being sensed, scanning is started.
3) When a specified number of pulses are received from the document rear edge being sensed, scanning is terminated and the document is fed through.
4) If the front sensor is active (i.e., another document is in the hopper), when the preceding document scanning is completed and and it is fed out, the next document is taken up into the machine. If the front sensor is not active (i.e., there is no document in the hopper), when the document is fed out, the operation is terminated.

3. Hopper mechanism

3-1. General view

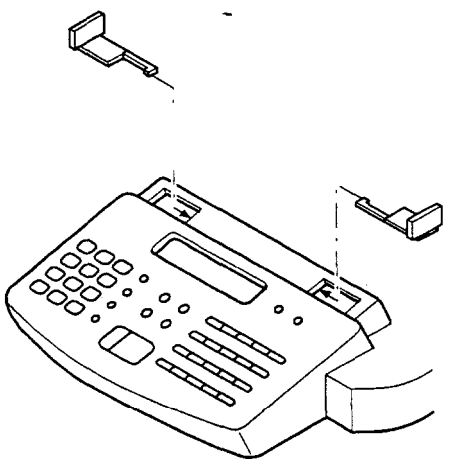

Fig. 2

The hopper is used to align documents with the document guides adjusted to the paper width.

NOTE: Adjust the document guides before and after inserting the document.

3-2. Automatic document feed

1) Use of the paper feed roller and separation rubber plate ensures error-free transport and separation of documents. The plate spring presses the document to the paper feed roller to assure smooth feeding of the document.
2) Document separation method: Separation rubber plate

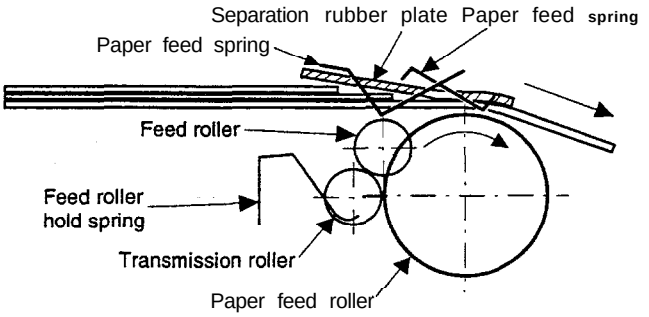

Fig. 3

3-3. Documents applicable for automatic feed

	4x6 series (788mm x 1091mm x 1000mm sheets)		Square meter series	
	Minimum	Maximu	Minimum	Maximu
Feeder capacity	20 sheets, max.			
Paper weight	45kg	64.3kg	52g/m²	74.3g/m²
Paper thickness (ref.)	0.06mm	0.09mm	0.06mm	0.09mm
Paper size	B6 (128mm x 182mm) ~ A4 (210mm x 297mm), Letter (216mm x 279mm)			
Feeder capacity	15 sheets, max.			
Paper weight	45kg	90kg	52g/m²	104g/m²
Paper thickness (ref.)	0.06mm	0.12mm	0.06mm	0.12mm
Paper size	B6 (128mm x 182mm) ~ A4 (210mm x 297mm), Letter (216mm x 279mm)			
Paper quality	High quality paper or equivalent			

NOTE: Double-side coated documents and documents on facsimile recording paper should be inserted manually. The document feed quantity may be changed according to the document thickness.

Documents corresponding to a paper weight heavier than 64.3kg (74.3g/m²) and lighter than 135kg (157g/m²) are acceptable for manual feed.

Documents heavier than 135kg in terms of the paper weight must be duplicated on a copier to make it operative in the facsimile.

3-4. Loading the documents

1) Make sure that the documents are of suitable size and thickness, and free from creases, folds, curls, wet glue, wet ink, clips, staples and pins.
2) Place documents face down in the hopper.
   i) Adjust the document guides to the document size.
   ii) Align the top edge of documents and gently place them into the hopper. The first page under the stack will be taken up by the feed roller to get ready for transmission.

NOTES: 1) Curled edge of documents, if any, must be straightened out.
2) Do not load the documents of different sizes and/or thicknesses together.

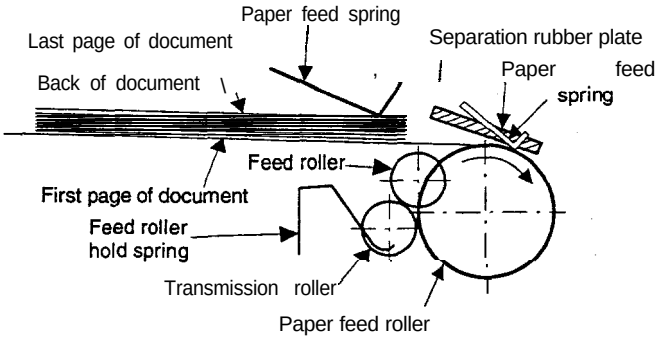

Fig. 4

3-5. Documents requiring use of document carrier

1) Documents smaller than B6 (128mm x 182mm).
2) Documents thinner than the thickness of 0.06mm.
3) Documents containing creases, folds, or curls, especially those whose surface is curled (maximum allowable curl is 5mm).
4) Documents containing tears.
5) Carbon-backed documents. (Insert a white sheet of paper between the carbon back and the document carrier to avoid transfer of carbon to the carder.)
6) Documents containing an easily separable writing material (e.g., those written with a lead pencil).
7) Transparent documents.
8) Folded or glued documents.
   Document in document carrier should be inserted manually into the feeder.

4. Document release

4-1 . Cross section view

(RIGHT SIDE)

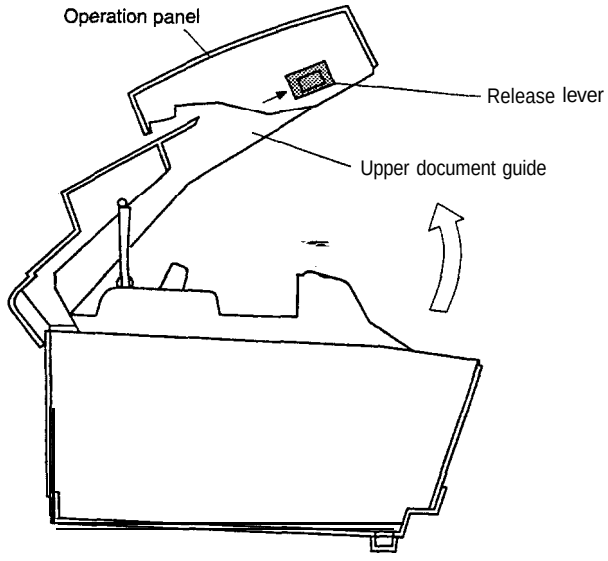

Fig. 5

4-2. General

When the Release Lever is pulled by hand in the direction of arrow A, the latch is released and the upper document guide moves on its axis in the direction of the arrow. The feed rollers, the separation rubber plate, and the pinch rollers become free to make it possible to remove the document.

5. Optical system

(1) General view

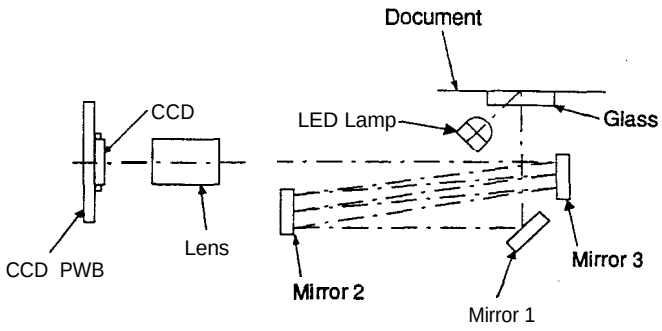

Fig. 6

(2) Composition

The optical system is composed of the document feed mechanism, the lamp, the reflecting mirrors, the focusing lens, the CCD sensor, and the read process circuit.

5-1. Lamp

The lamp is used to expose the document.

5-2. Lens

The lens is used to focus the light reflected from the document on the CCD elements.

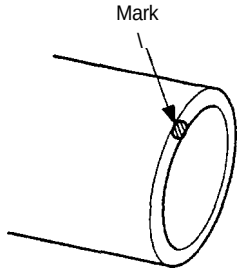

Fig. 7

5-3. CCD

The CCD (charge coupled device) image sensor consists of a photodiode array which converts the intensity of light reflected from the document surface into a series of analog voltages which are then stored in an analog shift register. The series of analog voltages are then converted into a digital equivalent by a black/white binary logic circuit.

(Example) Scan signal output waveform

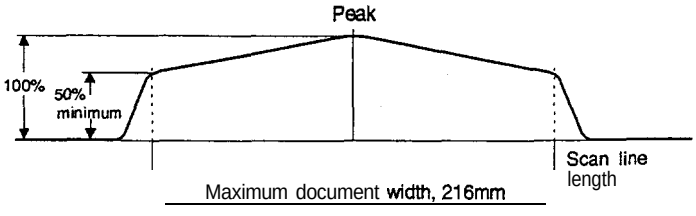

Fig. 8

1) The minimum output from the CCD at the maximum scan width of document (216mm) must be more than 50% of the peak value.
2) The peak output must be about 150mV under room temperature to avoid CCD saturation.

[2] Disassembly and assembly procedures

- This chapter mainly describes the disassembly procedures. For the assembly procedures, reverse the disassembly procedures.
- Easy and simple disassembly/assembly procedures of some parts and units are omitted. For disassembly and assembly of such parts and units, refer to the Parts List.
- The numbers in the illustration, the parts list and the flowchart in a same section are common to each other.
- To assure reliability of the product, the disassembly and the assembly procedures should be performed carefully and deliberately.

1 Control PWB, Power unit

a. Remove the AC cord, the power unit, the control PWB, and the LIU according to the flow chart.

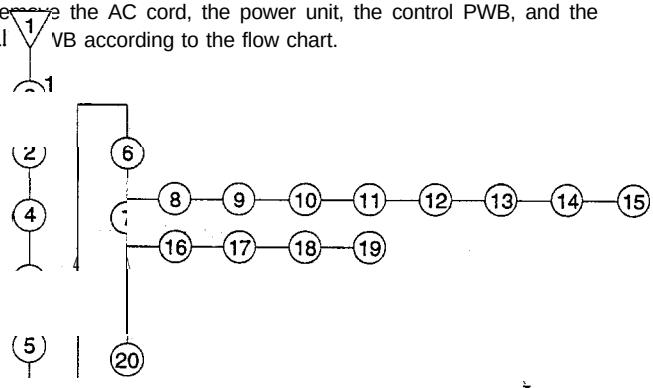

Parts list (Fig. 1)

No.	Part name	Q'ty	No.	Part name	Q'ty
1	Lower cabinet	1	11	AC cord	1
2	Screw (3×10)	9	12	Screw (3×6)	1
5	Discharge ground cable	1	15	Connector (8)	1
6	Connector	—	16	Screw (3×5)	4
9	Bottom plate ass'y (with PWB)	1	17	Connector	1
10	Screw (4×6)	1	18	Control PWB	1
—	AC grounding cable	1	19	LIU Bottplate	1

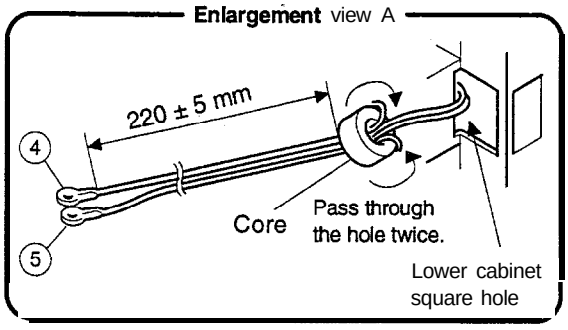

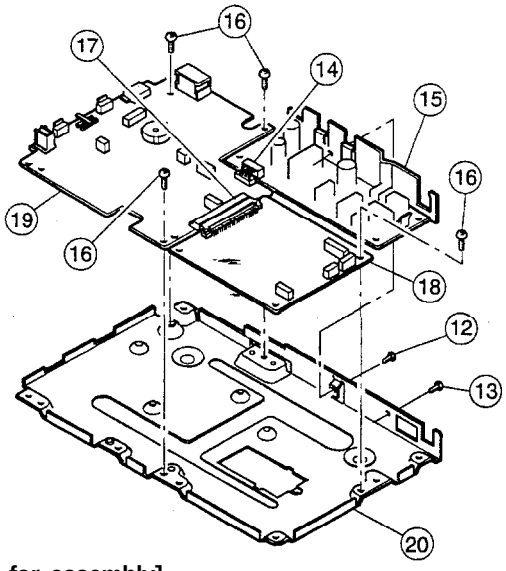

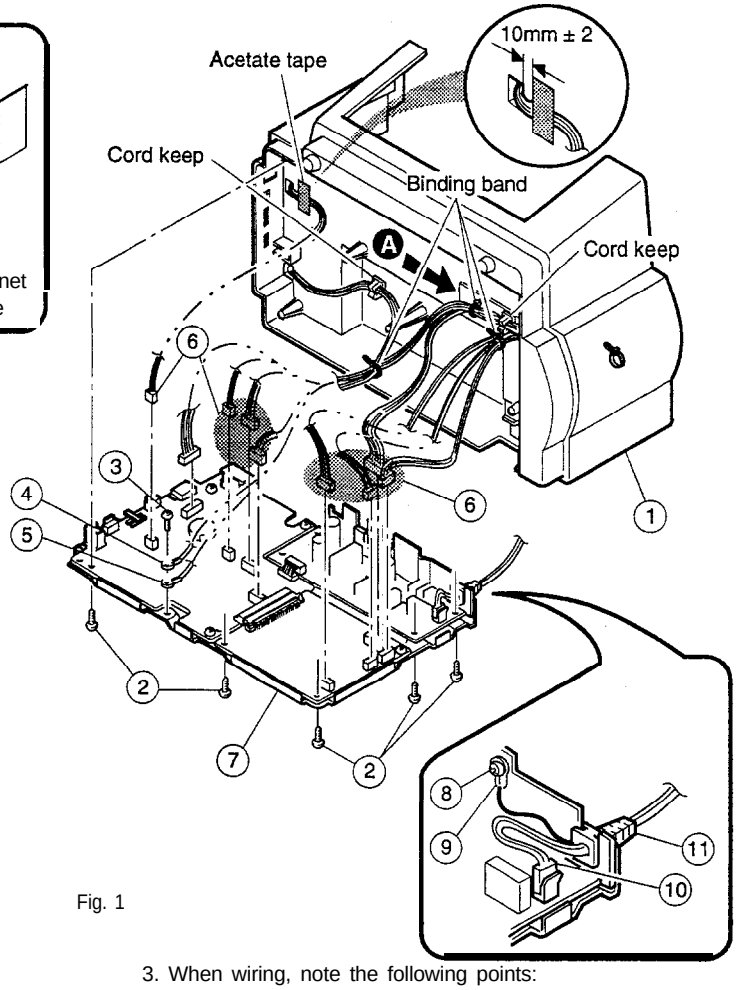

Fig. 1

[Note for assembly]

1. Insert connectors ⑰ and ⑭ securely.
2. When setting AC cord ⑪, note the following points:
   - For inserting angle of the AC cord bushing into the mounting angle, refer to the enlargement view of Fig. 1.
   - Fix the AC cable above the AC cord with a screw. (Refer to the enlargement view.)
3. When wiring, note the following points:
   - Before binding each cable, wind grounding cables ④ and ⑤ around the core and insert the core into the square hole in the lower cabinet until the core is not seen from the outside as shown in the enlargement view.
   - Use two bands and two cord keeps for wiring, and fix with acetate tape to eliminate slack in the speaker cable. (Refer to the enlargement view.)

2 Original guide lower, paper feed roller, sensor lever ass'y, etc.

a. Remove the original guide lower, the paper feed roller, the original sensor lever ass'y, and the front sensor lever ass'y.

<Note 1> When removing original guide lower ass'y ③, be careful not to damage the front sensor lever.

<Note 2> When removing the front sensor lever ass'y, refer to the enlarged view. Press lever section Ⓐ in the arrow direction to put the lever in the dotted line place. Then turn the lever shaft and remove it upwards.

Parts list (Fig. 2)

No.	Part name	Q'ty
1	Medium cabinet	1
2	Screw (3 x 8)	5
3	Original guide lower ass'y	1
4	Paper feed roller ass'y	1
5	Original sensor lever ass'y	1
8	Front sensor lever ass'y	1
7	Screw (3 x 8)	2
8	Pinch pressure spring	2

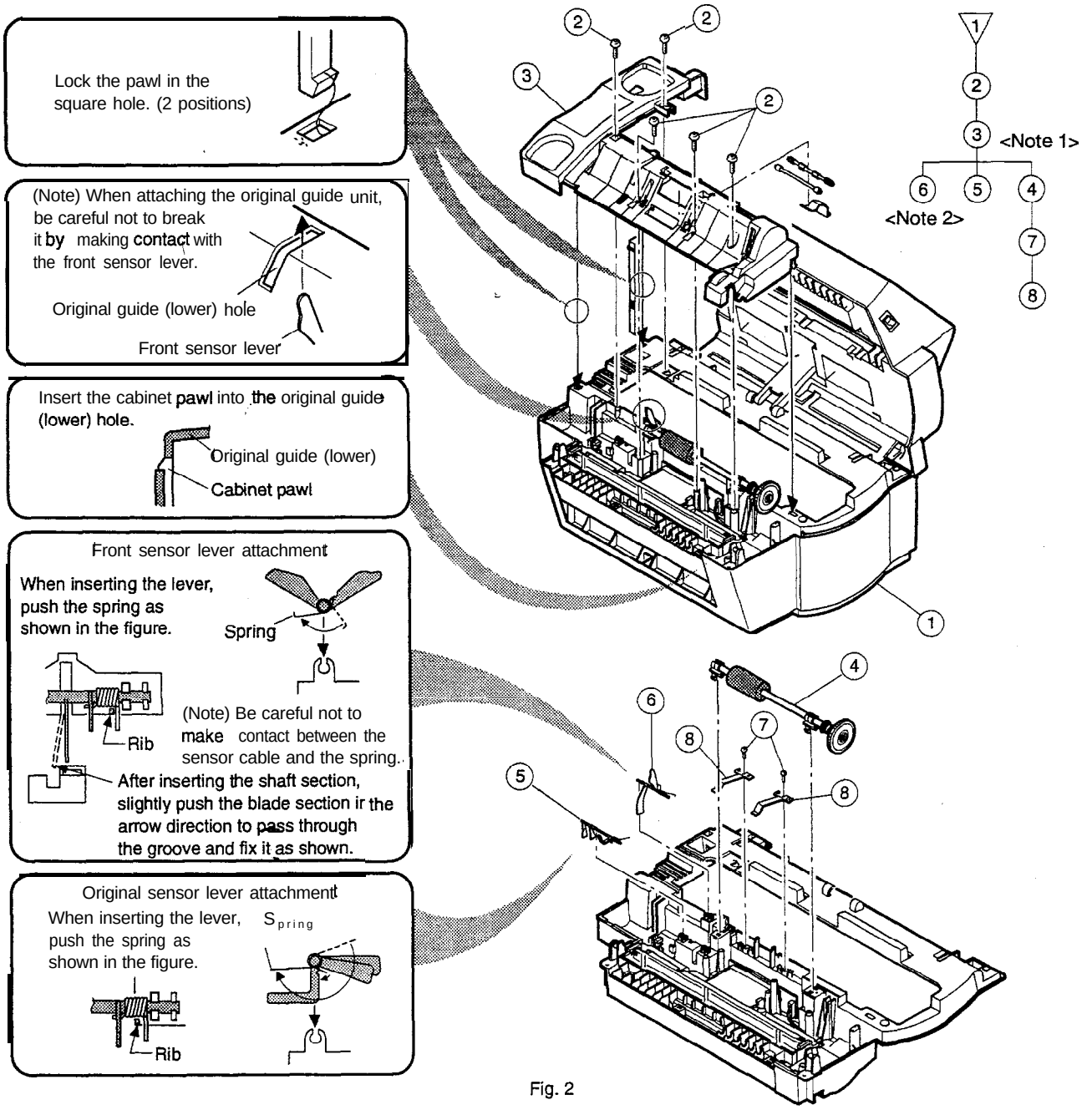

Fig. 2

[Note for assembly]

1. Be careful to the installing direction of pinch pressure spring ⑧.
2. When attaching original sensor lever ass'y ⑤ and front sensor lever ass'y ⑥ to the sensor holder, refer to the enlarged view for the spring position and the attachment procedure.
3. When attaching original guide lower ass'y ③, note the following points:
   - Check that the scanning glass is free from dust, finger prints, etc.
   - Be careful not to damage the front sensor lever.
   - Lock the four pawls and fit them with screws.

3 Optical unit

1. Remove the original guide lower ass'y, and the paper feed roller ass'y according to procedure 2-a.
2. Remove the optical unit.
3. Remove the scanning glass, the LED, and the mirror from the optical unit.

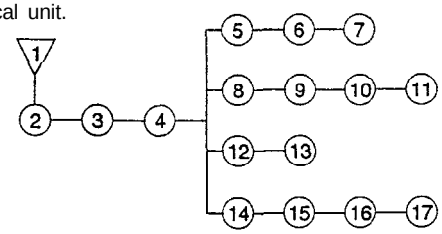

Parts list (Fig. 3)

No.	Part name	Q'ty	No.	Part name	Q'ty
1	Medium cabinet	1	10	Mirror (1)	1
2	Connector (LED)	1	11	Mirror (2)	2
3	Connector (CCD)	1	12	Screw (M3 W, red)	2
4	Optical unit	1	13	CCD PWB	1
5	Scanning glass	1	14	Shielding sheet	1
6	Screw (2×6)	3	15	Screw (3×6)	2
7	LED	1	16	Lens holding spring	1
8	Screw (3×4)	2	17	Lens	1
9	Mirrorholdingspring	2			

<Note> Never disassemble the CCD PWB and the lens except when replacing. If they are disassembled, the optical unit adjustment must be performed.

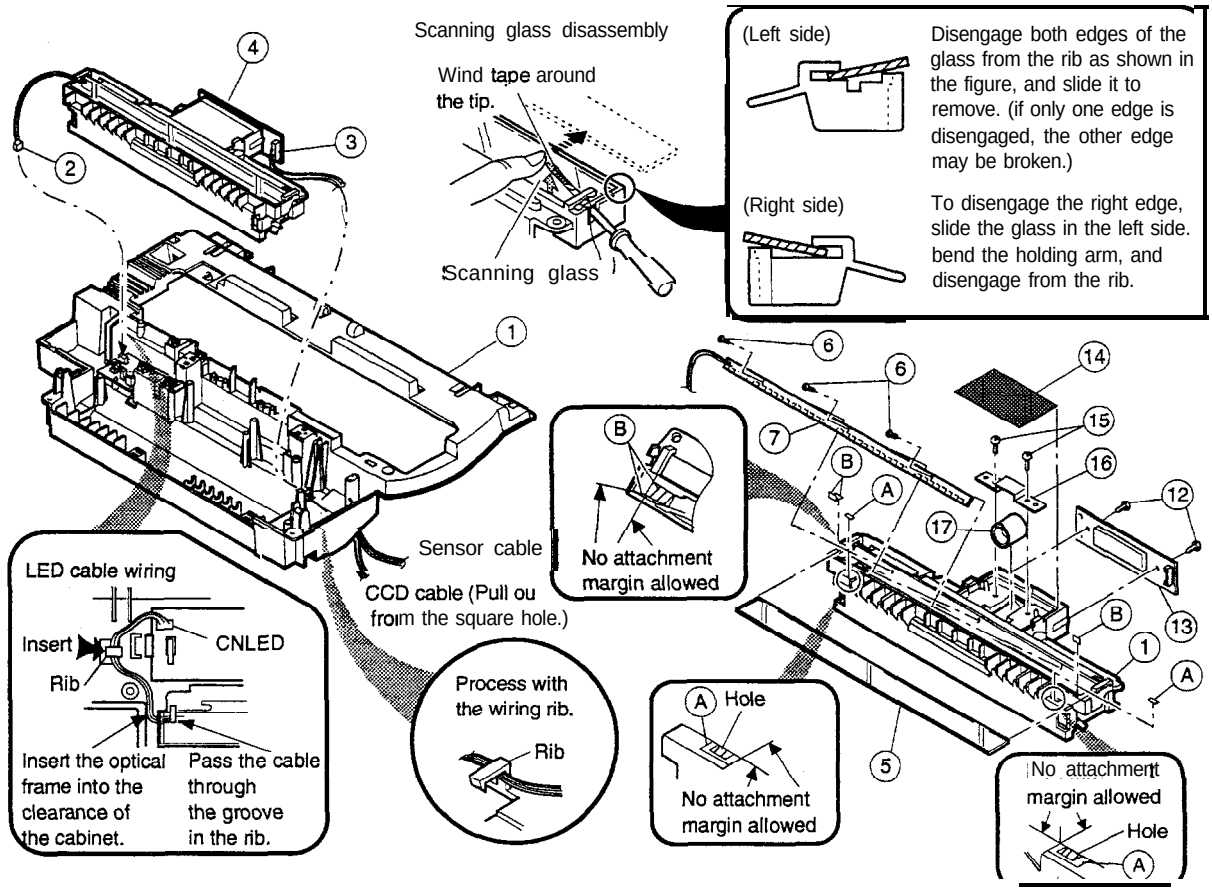

Fig. 3

[Note for assembly]

1. When attaching mirrors ⑩ and ⑪, note the following points:
   - Be careful of the mirror surface direction as shown in the figure.
   - Be careful that the mirror surface is free from finger prints and dust.
   - After fixing mirror holding spring ⑨ with a screw, apply screw lock to mirror ① ⑨ (2 positions). (Refer to the enlarged view.)
2. Arrange the LED and the CCD cable under the rib. (Refer to the enlarged view.)
3. For attachment reference of dust-proof sheet Ⓐ and reflection sheet Ⓑ, refer to the enlarged view.

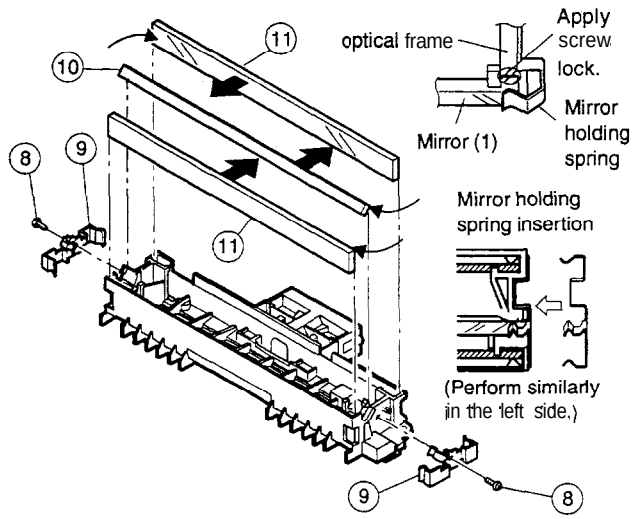

4 Drive system unit

1. Remove the PWB section (the control PWB, the LIU PWB, the power unit) according to procedure I-a, and remove the cable from the cord keep.
2. Remove scanner section ③ in Fig. 4 from lower cabinet ①.

   <Note 1> Be careful not to hang PWBs by the cable.

   <Note 2> Remove two pawls and one rib. (Refer to the enlarged view.)
3. Remove the drive system unit and the transport roller.

Parts list (Fig. 4)

No.	Part name	Q'ty
1	Lower cabinet	1
2	Screw	5
3	Scanner section	1
4	Screw	2
5	Drive system unit	1
6	Transport roller ass'y	1
7	Reduction gear	2
8	Reduction gear	3
9	Screw	2
10	Drive motor	1
11	Motor mounting plate	1
12	Drive frame	1

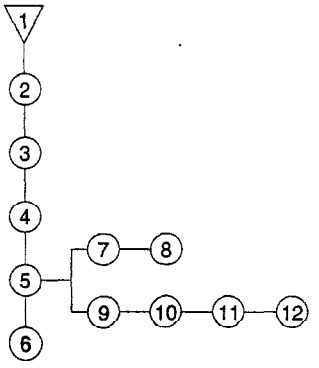

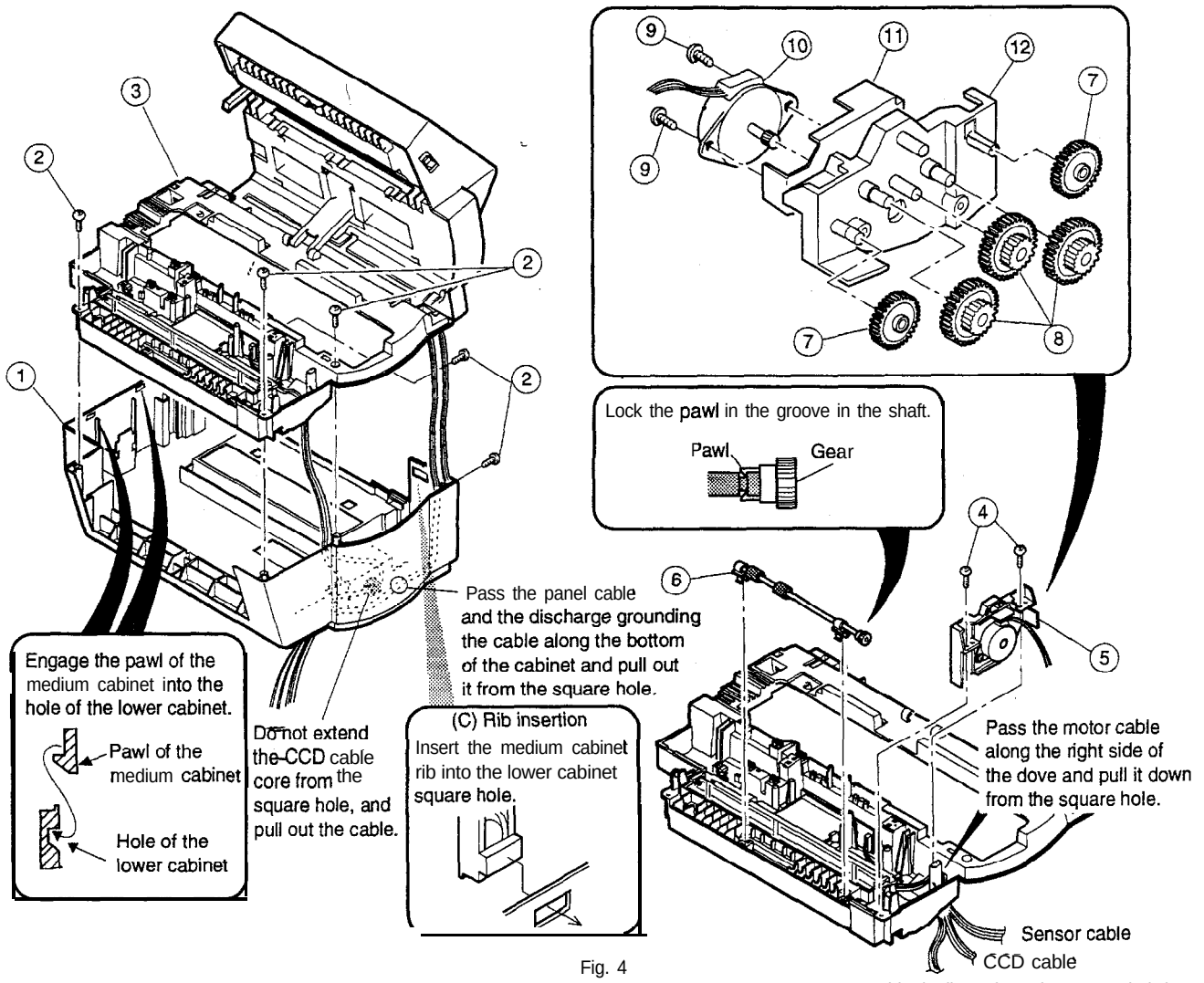

Fig. 4

[Note for assembly]

1. When attaching drive motor ⑩ to drive frame ⑱, be careful of the attaching direction. The connector PWB must be in the upper side. (Refer to Fig. 4.)
2. When attaching reduction gears ⑦ and ⑧, note the following points:
   - Apply Molykote to the mounting shaft of drive frame ⑫ reduction gear, and the teeth surfaces of reduction gears ⑦ and ⑧.
   - Lock reduction gear ⑦ to the pawl of the mounting shaft.
3. For wiring, observe the notes in Fig. 4.
4. When fixing scanner section ③ to the lower cabinet, attach the two pawls and one rib to the lower cabinet securely.

5 Upper cabinet section (Panel, hopper, etc.)

a. Remove the scanner section from the lower cabinet according to procedures 4-a, b.

b. Remove the upper cabinet section from the upper frame section, and remove the panel PWB, keys, and hoppers.

Parts list (Fig. 5)

No.	Part name	Q'ty	No.	Part name	Q'ty
1	Upper frame ass'y	1	10	Screw (2 × 6)	21
2	Screw (3 × 8)	4	11	Panel PWB	1
3	Upper cabinet section	1	12	Panel cable	1
4	Release knob	1	13	Start/stop key	1
5	Screw (3 × 6)	1	14	Auto/manual select key	1
6	Pinion gear	1	15	Dial key	1
7	Hopper spring	1	16	One-touch key	1
8	Hopper guide (R)	1	17	Function key	1
9	Hopper guide (L)	1	18	Upper cabinet	1

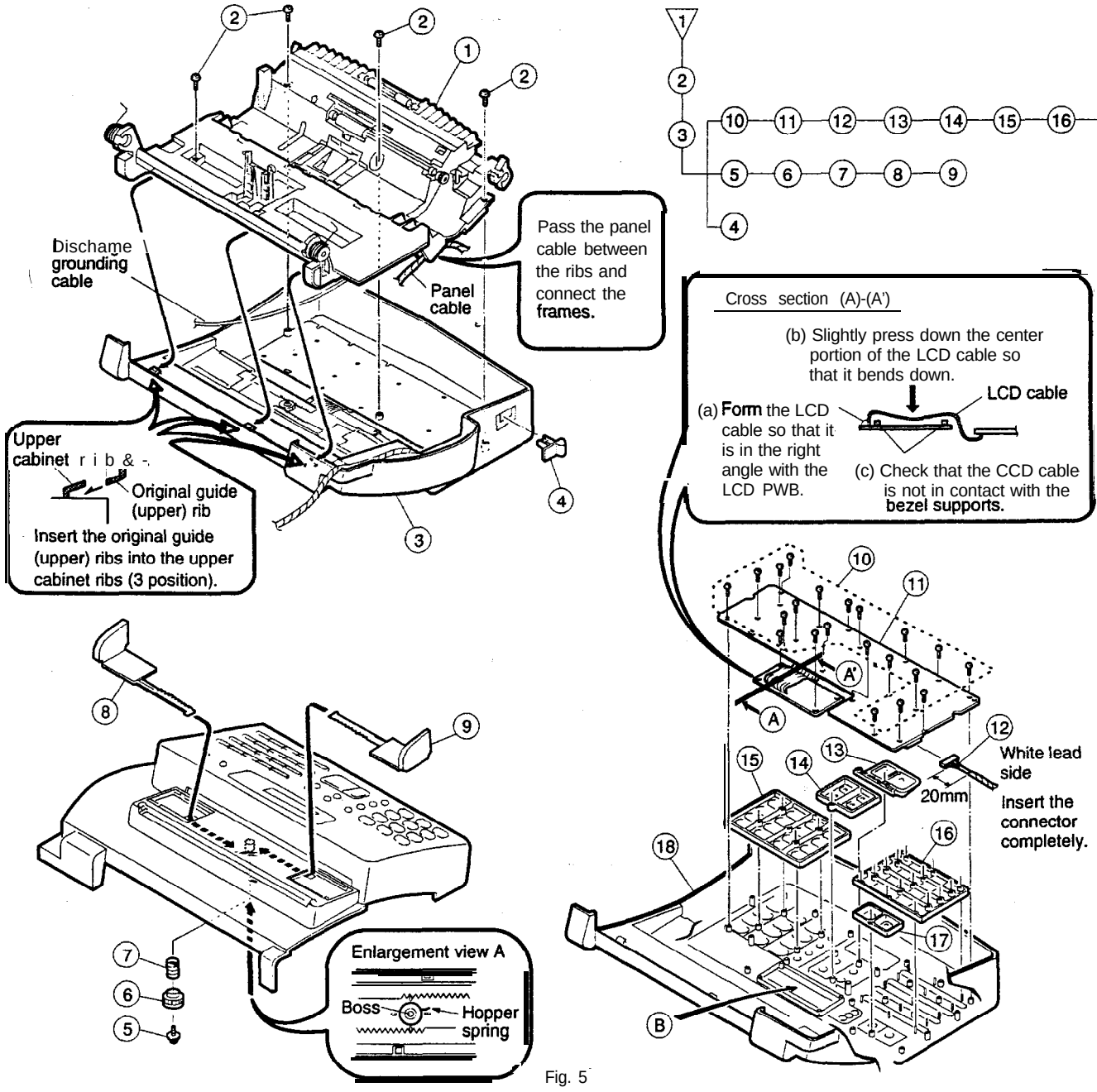

Fig. 5

[Note for assembly]

1. When connecting panel cable ⑫, insert the white cable as shown in Fig. 5.
2. When attaching panel PWB ⑪, note the following points:
   - Check that the LCD installing section Ⓑ in Fig. 5) of upper cabinet ⑱ and the glass surface of the LCD are free from dirt.
   - When tightening screws ⑩, be sure to tighten ❑ and ❑ first.
   - For wiring of the LCD cable, refer to the enlarged view.
3. For attaching direction of hopper spring ⑦, refer to the enlarged view.
4. When attaching upper cabinet section ③ to the upper frame **ass'y**, put the upper frame **ass'y** rib under the upper cabinet rib. (Refer lo the enlarged view.)
5. For wiring of the panel cable, refer to the note in Fig. 5.

6 Upper frame section (original guide upper section)

a. Remove the scanner section from the lower cabinet according to procedures 4-a, b.

b. Remove the upper cabinet section from the upper frame section according to procedure 5-b.

c. Remove the release lever, the original insertion guide, the pinch roller, and the transport roller from me upper frame section.

<Note 1> Use a small screwdriver to remove screw ⑭ and be careful not to scratch pinch roller ⑮.

Parts list (Fig. 6)

No.	Part name	Q'ty	No.	Part name	Q'ty
1	Upper frame section	1	12	Open/close spring 2	1
2	Screw (3 × 6)	1	13	Transport roller ass'y	1
3	Discharge brush grounding cable	1	14	Screw (3 × 6)	1
4	Discharge brush	1	15	Pinch roller ass'y	1
5	Release lever return spring	1	16	Open/close spring	1
6	Release lever	1	17	Stopper plate	1
7	Separation pressure spring	1	18	Paper feed spring	1
8	Separation pressure plate	1	19	Step screw	1
9	Back sheet	1	20	Separation rubber plate	1
10	Original insertion guide	1	21	Open close spring	1
11	Screw (3 × 6)	1	22	Screw (3 × 6)	1

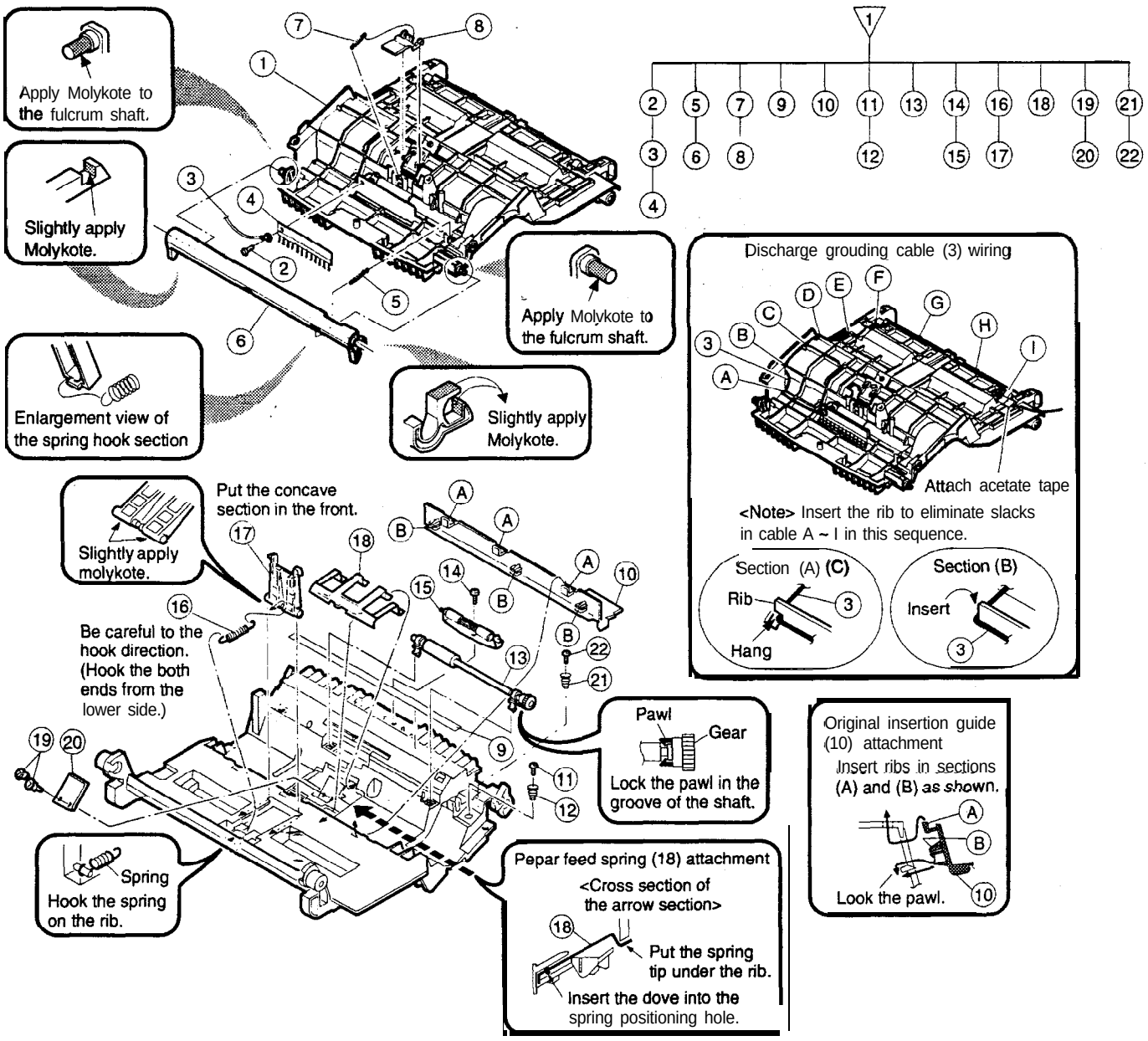

Fig. 6

[Note for assembly]

1. When attaching paper feed spring ⑱, be careful not to scratch separation rubber plate ⑳, and insert securely. (Refer to the enlarged view.)
2. When attaching stopper plate ⑰, apply Molykote to the stopper section (referring to the enlarged view), and place the concave section in the front surface, and attach open/close spring ⑯ as shown in Fig. 6. Be careful not to reverse me spring hook.
3. For attaching direction of original insertion guide ⑩, refer to the enlarged view.
4. When attaching release lever ⑥, apply Molykote to the enlarged view section of Fig. 6, and attach release lever return spring ⑤ as shown in the enlarged view. Be careful to the spring hook direction.
5. For wiring of discharge brush grounding cable ③, refer to the enlarged view.

7 Ink jetter unit

:Note> This section describes the procedures to remove the ink jetter section from the body.

ι. Remove the scanner section from the lower cabinet according to procedures 4-1, b.

). Remove the ink jetter unit,

<Note> When removing the ink jetter unit from the lower cabinet, be careful not to hang the cables and connectors.

Parts list (Pig. 7)

No.	Part name	Q'ty
1	Lower cabinet	1
2	Screw (3 × 10)	4
3	Ink jetter unit	1
4	Screw (3 × 5)	1
5	Printer grounding cable	1
6	Printer power cable	1
7	Printer signal cable	1

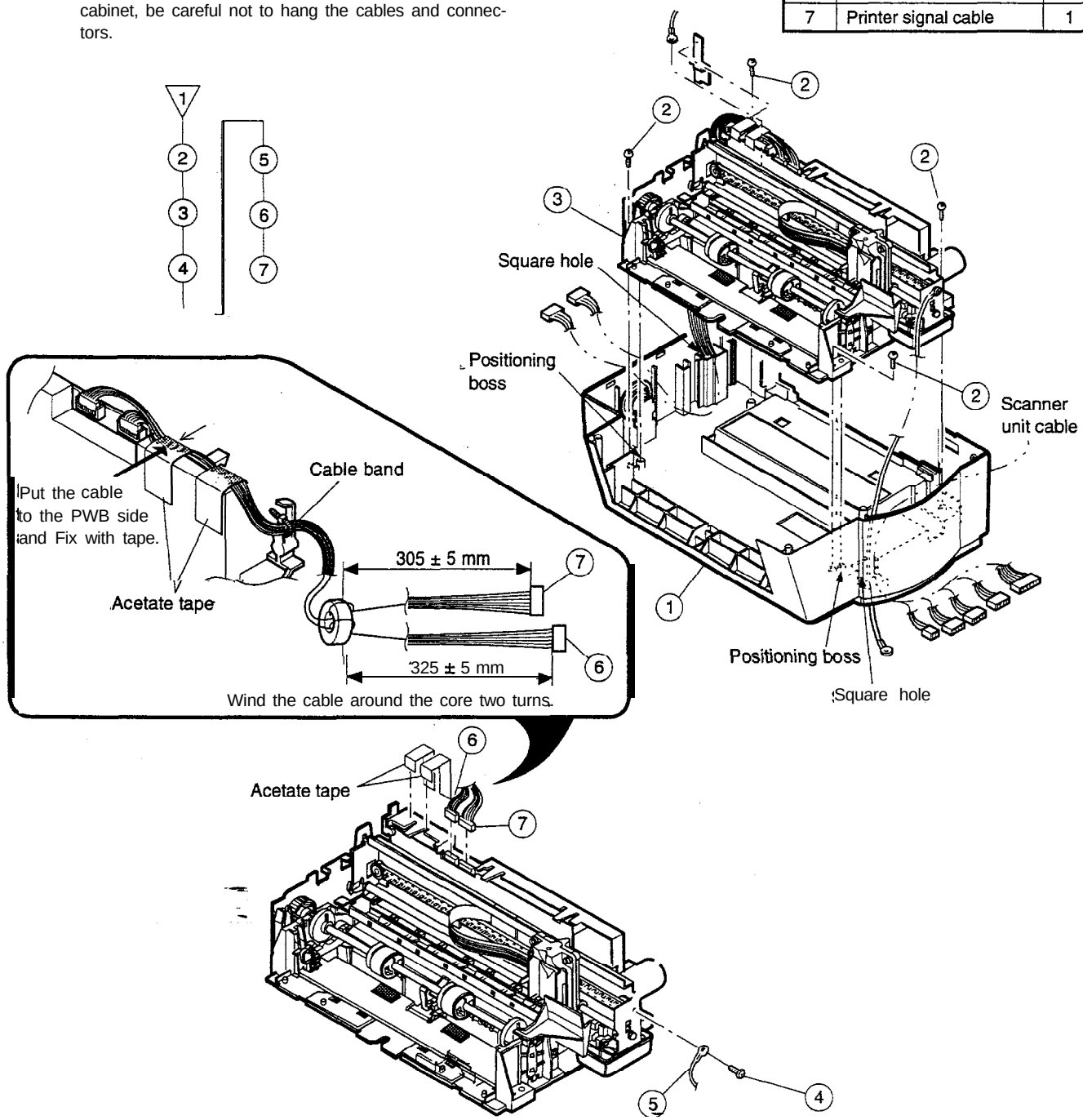

Fig. 7

[Note for assembly]

1. For wiring of printer power cable ⑥ and printer signal cable ⑦ and the core attaching position, refer to the enlarged view of Fig. 7.
2. Attach printer grounding cable ⑤ at the angle of 45 degrees. (Refer to Fig. 7.)
3. Note for attaching ink jetter unit ③

- Before attaching the ink jetter unit, pass the cables connected to the PWB section through the square hole and put them out.
- Be careful not to pinch the cables, and install the ink jetter unit to the positioning boss of the lower cabinet and fix it with a screw.

CHAPTER 4. DIAGRAMS

[1] Block diagram

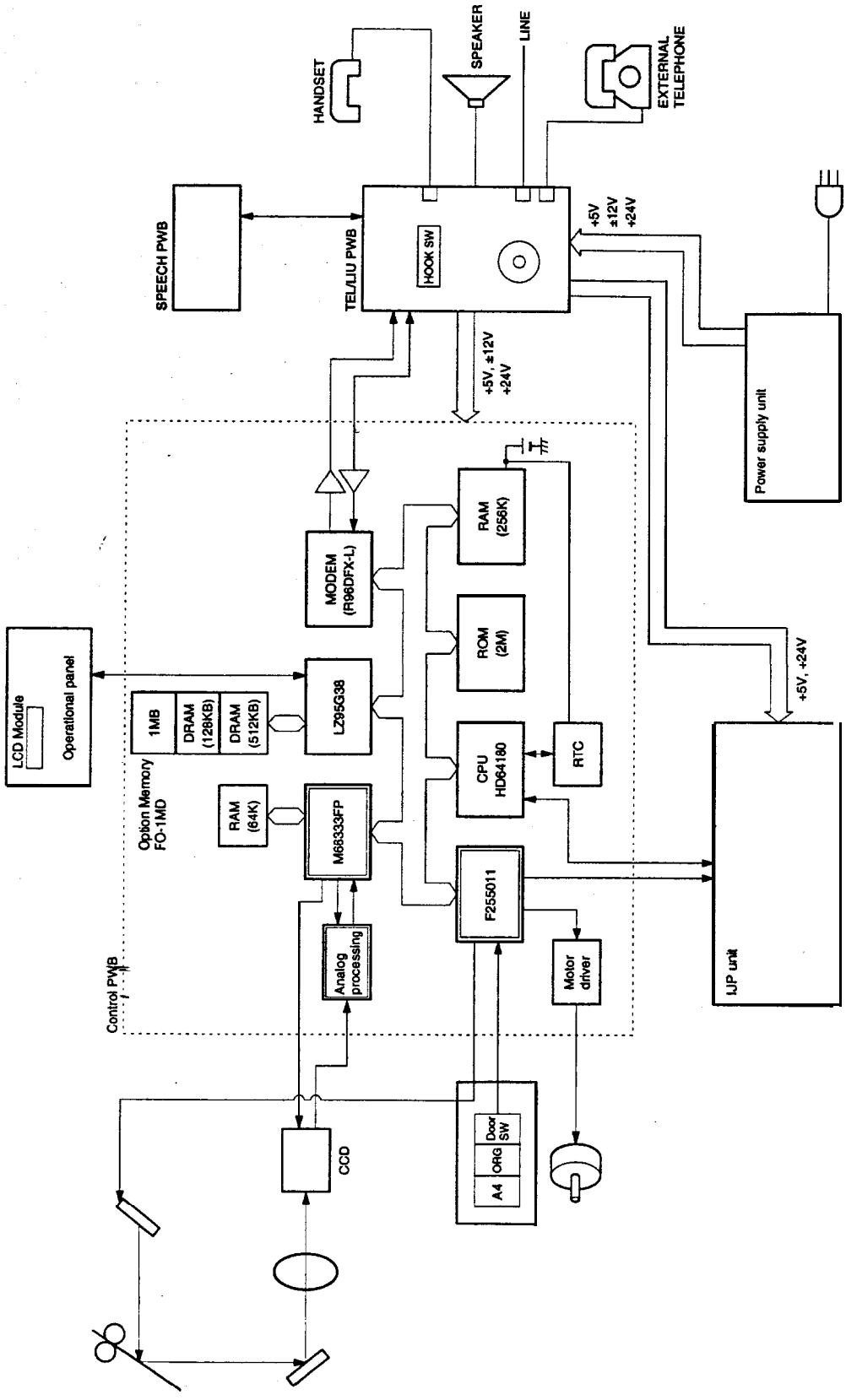

[2] Wiring diagram

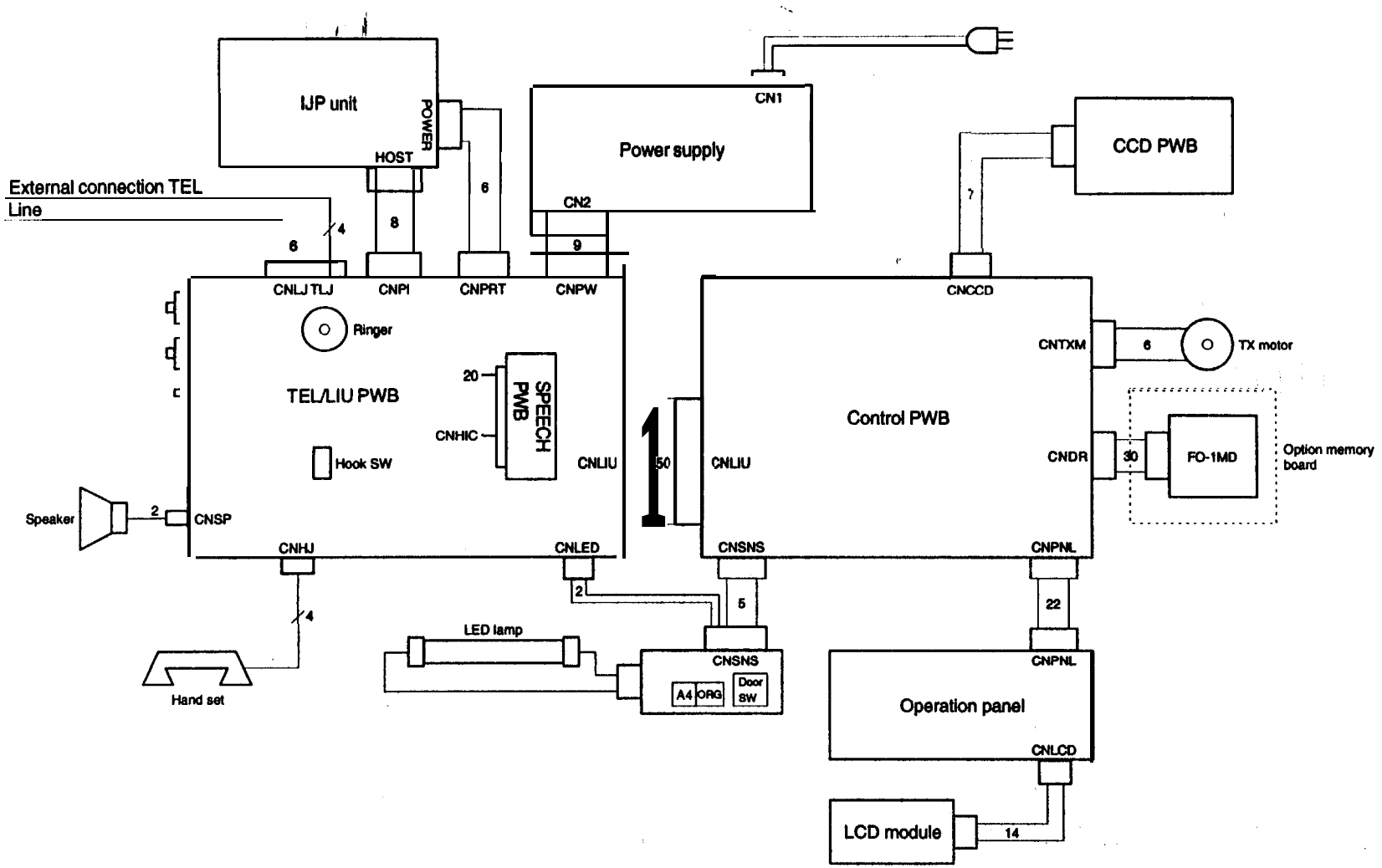

[4] Connector signal name [1/2]

Control PWB/Operation panel

(DDK) 128A-050P2B-L

CNLIU	TEL/LIU PWB ◄► Control PWB		
-12V	1	2	+12V
AG	3	4	AG
+5V	5	6	+5V
+5V	7	8	DG
DG	9	10	DG
+24V	11	12	+24V
MG	13	14	MG
$\overline{PRST}$	15	16	PTX
PRX	17	18	BUSY
SCK	19	20	SI
LEDON	21	22	CI
RNGDET	23	24	CML
OHRL	25	26	MPX/QRLY
MPY/MONITOR	27	28	MPZ/ERLY
DP	29	30	SIGTX
SIGRX	31	32	SPMUTE
$\overline{RHS}$	33	34	$\overline{HS1}$
$\overline{HS2}$	35	36	TELMUTE/BZCONT
P/T•SDT	37	38	BZ
——	39	40	——
SPARE INPUT	41	42	MT OUT
EXHS1	43	44	EXHS2
DT4	45	46	DT3
DT2	47	48	DT1
S-RLY	49	50	——

DF11-22DP-2DSA

CNPNL	Control PWB ◄► Panel PWB		
KEN3	1	2	KEN4
KEN2	3	4	$\overline{SEN4}$
KEN1	5	6	$\overline{SEN1}$
+5V	7	8	$\overline{SEN2}$
GND	9	10	$\overline{SEN3}$
GND	11	12	AUTO
$\overline{SEN0}$	13	14	MAN
RS	15	16	AM
R/W	17	18	LD7
E	19	20	LD6
LD4	21	22	LD5

(MOLEX) 5532-30A

CNDR	Control PWB ◄► Option memory PWB		
EDRA9	1	2	EDRA8
EDRA7	3	4	EDRA6
EDRA5	5	6	EDRA4
EDRA3	7	8	EDRA2
EDRA1	9	10	EDRA0
DRD7	11	12	DRD6
DRD5	13	14	DRD4
DRD3	15	16	DRD2
DRD1	17	18	DRD0
$\overline{DRAS1}$	19	20	$\overline{DRAS2}$
$\overline{DCAS}$	21	22	$\overline{DWE}$
+5V	23	24	DG
+5V	25	26	DG
DG	27	28	DG
$\overline{DTYP}$	29	30	DOPT

CNDR is mounted only in the FO-3700

CNLCD	Operation panel ◄► LCD module
1	GND
2	+5V
3	VO
4	RS
5	R/W
6	E
7	N.C
8	N.C
9	N.C
10	N.C
11	LD4
12	LD5
13	LD6
14	LD7

(JST) B7B-PH-K-S

CNCCD	Control PWB ◄► CCD PWB
1	VO
2	VCCD
3	VG
4	ΦTD
5	Φ2D
6	Φ1D
7	ΦRD

(JST) B6B-PH-K-S

CNTXM	Control PWB ◄► TX motor
1	TPAD
2	TPBD
3	$\overline{TPAD}$
4	$\overline{TPBD}$
5	VMT
6	VMT

(JST) B5B-PH-K-S

CNSNS	Control PWB ◄► Sensor PWB
1	+5V
2	ORGSW
3	FRTSW
4	DRSW
5	DG

Connector signal name [2/2]

TEL/LIU PWB

(DDK) 128A-050P2B-L

CNLIU	TEL/LIU PWB ◄► Control PWB		
-12V	1	2	+12V
AG	3	4	AG
+5V	5	6	+5V
+5V	7	8	DG
DG	9	10	DG
+24V	11	12	+24V
MG	13	14	MG
$\overline{PRST}$	15	16	PTX
PRX	17	18	BUSY
SCK	19	20	SI
LEDON	21	22	CI
RNGDET	23	24	CML
OHRL	25	26	MPX/QRLY
MPY/MONITOR	27	28	MPZ/ERLY
DP	29	30	SIGTX
SIGRX	31	32	SPMUTE
$\overline{RHS}$	33	34	$\overline{HS1}$
$\overline{HS2}$	35	36	TELMUTE/BZCONT
P/T•SDT	37	38	BZ
——	39	40	——
SPARE INPUT	41	42	MT OUT
EXHS1	43	44	EXHS2
DT4	45	46	DT3
DT2	47	48	DT1
S-RLY	49	50	——

(JST) B2B-PH-K-R

CNSP	TEL/LIU PWB ◄► Speaker
1	SP-
2	SP+

(JST) B2B-PH-KS

CNLED	TEL/LIU PWB ◄► LED lump
1	$\overline{LEDON}$
2	+24V

(JST) B8B-PH-K-S

CNPI	TEL/LIU PWB ◄► IJP
1	$\overline{PRST}$
2	PTX
3	PRX
4	BUSY
5	DG
6	SCK
7	DG
8	SI

(JST) SP-FJ

CNPW	TEL/LIU PWB ◄► Power supply unit
1	MG
2	MG
3	+24V
4	+24V
5	DG
6	+5V
7	AG
8	+12V
9	-12V

(JST) B6B-PH-K-R

CNPRT	TEL/LIU PWB ◄► IJP
1	+24V
2	+24V
3	MG
4	MG
5	DG
6	+5V

CNHIC	SPEECH PWB ◄► TEL/LIU PWB
1	MO+
2	MO-
3	L1
4	L2
5	M3
6	TX+
7	RX+
8	RX-
9	MUTE
10	TX-
11	N.C.
12	N.C.
13	VDD
14	VSS
15	MO
16	TO
17	$\overline{XMUTE}$
18	DP
19	QB
20	HS

CNLJ	TEL/LIU PWB ◄► IJP
1	——
2	B-WIRE
3	L1
4	L2
5	A-WIRE
6	——

TLJ	TEL/LIU PWB ◄► Ext TEL
1	——
2	A-WIRE
3	B-WIRE
4	——

CHAPTER 5. CIRCUIT DESCRIPTION

[1] Circuit description

1. General description

The compact design of the control PWB is obtained by using two gate arrays and high density printing of surface mounting parts. Each PWB is independent according to its function as shown in Fig. 1.

2. PWB configuration

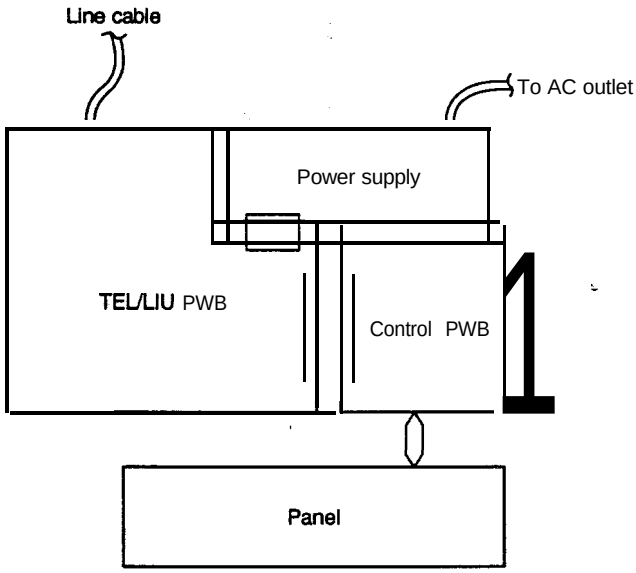

Fig. 1 PWB configuration

1) Control PWB

The control PWB controls peripheral PWB's, mechanical parts, transmission, and performs overall control of the unit.
This machine employs a l-chip modem (R96DFXL) which is installed on the control PWB.

2) TEL/LIU

This PWB controls connection of the telephone line to the unit.

3) Power supply

This provides voltages of +5V, ±12V, and +24V to the control PWB and the Inkjet Printer.

4) Panel

me panel allows input of the operation panel and LCD display.

5) Option memory board (FO-1 MD)

This unit is the use of an extend memory.
If this unit is setted, the memory function is increased.

3. Operational description

Operational descriptions are given below:

- Transmission
  When a document in loaded in the standby mode, the state of the document sensor is sensed via the gate array A. If the sensor signal was on, the motor is started to bring the document into the standby position. With depression of the START/copy key in the off-hook state, transmission takes place.
  Upon depression of the START/copy key, the CML relay is set active which switches the line from the telephone to the modem. Then, the procedure is sent out from the modem and the motor is rotated to move the document down to the scan line. In the Image processor (M66333), the signal scanned by CCD is sent to the internal AD converter to convert the analog signal into binary data. This binary data is transferred from the Image processor to the image buffer and encoded and stored in the transmit buffer of the DRAM. The data is then written to the modem according to interruption by the data transmission request signal from the modem. The modem madulates the code data and sends signals through the TEL/LIU PWB.
- Receive operation
  There are two ways of starting reception, manual and automatic. Depression of the START/copy key in the off-hook mode in the case of the manual receive mode, or Cl signal detection by the LIU in the automatic receive mode, causes the CML relay to activate to initiate the receive operation.
  First, the CPU controls the procedure signals from the modem to be ready to receive data. When the program goes into phase C, the serial data from the modem is stored in the receive buffer of the RAM. The data in the receive buffer is decoded software-wise to reproduce it as binary image data in the image buffer. The data is DMA transferred to the recording processor within the gate array A (F255011) which is then converted from parallel to serial form to be sent to the printer unit. The data is printed by the printer unit.
- Copy operation
  To make a copy on this facsimile, the START/copy key is pressed when the machine is ready with a document on the document table and the telephone set is in the on-hook state.
  First, depression of the START/copy key advances the document to the first scan line. Similar to the transmitting operation, the image signal from the CCD is converted to a binary signal in the DMA mode via the Image Processor which is then sent to the image buffer of the RAM. Next, the data is transferred to the recording processor in the DMA mode to send the image data to the printer unit which is printed. The copying takes place as the operation is repeated.

[2] Control PWB description

1. General description

Fig. 2 shows the functional blocks of the control PWB, which is composed of 6 blocks.

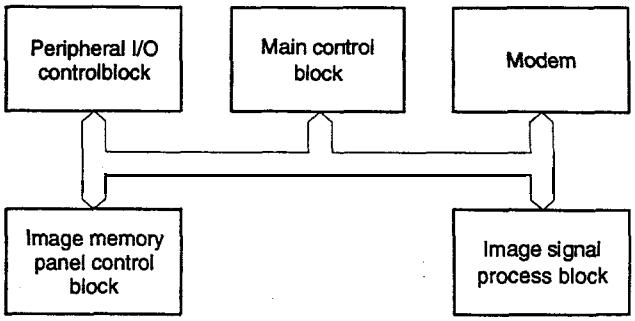

Fig. 2 Control PWB functional block diagram

2. Description of each block

(1) Main control block

The main control block is composed of an 8-bit microprocessor HD64180, ROM (256KByte), SRAM (32KByte), and DRAM (640KByte). Devices are connected to the bus to control the whole unit.

1) HD64180 (IC4, main CPU) . . . pin-80 QFP

This is a CMOS 8-bit microprocessor. A high-speed CPU (compatible with Z80 upper class models) and peripheral functions are incorporated in one chip.
This system allows the following functions.

- Memory Management Unit (MMU)
- DMA controller (2 channel); channel 0: For read data transfer
  channel 1: For print data transfer
- Timer
- Interruption; As external interrupt.
  $\overline{INT0}$: Modem interrupt.
  $\overline{INT1}$: Peripheral I/O control section interrupt.
  $\overline{INT2}$: RTC detection interrupt.

Operating speed is 8MHz.
In addition, 16MHz clock is internally generated with the ceramic oscilator.
For reset when power is turned on, a LOW signal of about 200msec is supplied to $\overline{RESET}$ terminal.

2) 27C020 (IC114, main ROM): pin-28 DIP

EPROM of 2MKbit equipped with software for the main CPU.

3) μPD43257 (IC5): pin-28, SOP

Line memory for the main CPU system RAM area.
Memory of recorded data such as daily report and auto dials. When power is turned off, backup is made with a lithium battery.

4) HM514800 (IC11 DRAM): pin-28, SOJ and GM71 CA256A (IC10 DRAM): Pin-26, SOJ

Image memory for cording/recording process.

- Memory for recording pixel data at no paper.
- Memory for ECM

5) F255011 (IC7, gate array A)

The following functions are incorporated to support the main CPU.

- Printer interface
- Read system control
- Mechanism control
- I/O port

HD64180 (IC4) terminal descriptions

Classification	Code	Terminal No. (FP-80)		Name and pin function
Power GND	VCC	32	Input	Power supply: Connected to the power source. (+5V)
	VSS	12, 34, 72, 73	Input	Ground: Connected to the power source. (Ground)
XTAL clock	XTAL	74	Input	Connected to a crystal oscillator. Frequency must be two times as great as ϕ clock frequency. When inputting an external clock to EXTAL pin, open XTAL pin.
	EXTAL	76	Input	Connected to a crystal oscillator. Also used as an external clock input pin. The external clock input frequency must be two time as great as ϕ clock frequency.
	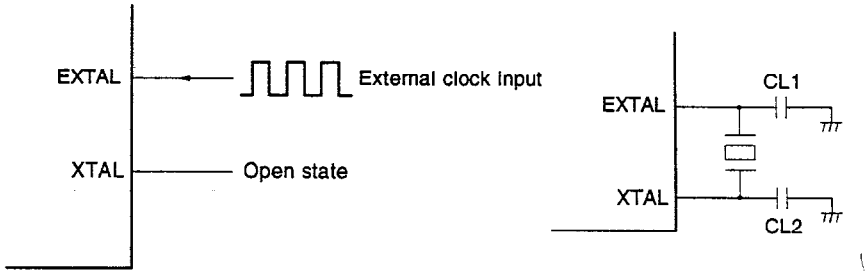			
	ϕ	71	Output	System clock: Provides system clock to the peripheral devices.
Reset	$\overline{RESET}$	80	Input	Reset: LOW when the LSI is reset state.
Address bus	A_0~A_{18} A_0~A_{19} (HD64180R1; FP-80, CP-68) (A18 is commonly used with TOUT.)	8~11 13 15~21 24~29 31, 33	Output (Three-state)	Address bus: The address to make access to the memory space. HIGH only in the following cases: (a) Reset (b) Bus control is transmitted to another device. (When $\overline{BUSACK}$ = "0" by $\overline{BUSREQ}$ = "0") A18 is multiplexed with TOUT. The timer control register TOC0 and TOC1 bits determine which output to take.
Data bus	D0~D7	35~41, 44	Input/Output	Data Bus: 8-bit bidirectional data bus
Memory I/O interface signal	$\overline{RD}$	70	Output (Three-state)	Read: Shows that the LSI is in read cycle. At that time, the data bus is in output mode.
	$\overline{WR}$	69	Output (Three-state)	Write: Shows that the LSI is in write cycle. At that time, the data bus is in output mode.
	$\overline{ME}$	66	Output (Three-state)	Memory Enable: Shows that read/write operation of the memory is being executed. LOW in the following cases: (a) Command fetch, operant read (b) Memory access in DMA cycle (c) Refresh cycle
	$\overline{IOE}$	65	Output (Three-state)	I/O Enable: Shows that I/O read/write operation is being executed. LOW in the following cases: (a) Read/write of data in executing an I/O command (b) I/O access in DMA cycle (c) $\overline{INT_0}$ acknowledge cycle
	WAIT	77	Input	Wait: Used to extend read/write cycle of I/O or the memory. When this input is LOW at the falling edge of T2, TW state is inserted next to T2. When it is LOW at the falling edge of TW, another TW is inserted again next to the preceding one.
	E	67	output	Enable: Synchronizing clock for peripheral LSI's of the 6800 system.
System control signal	$\overline{BUSREQ}$	79	Input	Bus Request: Used for other devices to request bus free to this LSI. When driven LOW, the CPU stops execution of commands and drives some parts ($\overline{RD}$, WR, ME, $\overline{IOE}$) of the address bus, data bus, and memory interface signals HIGH.
	$\overline{BUSACK}$	78	output	Bus acknowledge: Shows that the CPU received $\overline{BUSREQ}$ signal and freed the bus. When a device which outputted $\overline{BUSREQ}$ signal receives BUSACK signal, it acknowledges that it has gained bus control

Recommended circuit configuration with a crystal oscillator

HD64180 (IC4)

<table>
<tr><th>Clasaificatlon</th><th>Code</th><th>Terminal No.</th><th></th><th>Name and pin function</th></tr>
<tr><td>System control signal</td><td>HALT</td><td>61</td><td>output</td><td>HALT: LOW when the CPU executes HALT or SLP command, and shows to the outside that the CPU is in HALT mode, SLEEP mode, or SYSTEM STOP mode. Used with ST signal and $\overline{LIR}$ signal to show the operation status such as the internal DMA operation and the CPU operation mode.</td></tr>
<tr><td></td><td>$\overline{LIR}$</td><td>68</td><td>output</td><td>Load Instruction Register: Shows that the cycle which is under operation is the operation code fetch cycle.</td></tr>
<tr><td></td><td>ST</td><td>7</td><td>output</td><td>Status: Shows the operation status.
Do not connect with a pull-down resistor.
<table>
<tr><th>ST</th><th>$\overline{HALT}$</th><th>$\overline{LIR}$</th><th>Operation status</th></tr>
<tr><td>0</td><td>1</td><td>0</td><td>CPU operation (First operation code fetch cycle)</td></tr>
<tr><td>1</td><td>1</td><td>0</td><td>CPU operation (Second, third operation code fetch cycles)</td></tr>
<tr><td>1</td><td>1</td><td>1</td><td>CPU operation (Machine cycle other than operation code fetch cycle)</td></tr>
<tr><td>1</td><td>Not fixed.</td><td>0</td><td>DMA operation</td></tr>
<tr><td>0</td><td>0</td><td>0</td><td>HALT mode</td></tr>
<tr><td>1</td><td>0</td><td>1</td><td>SLEEP mode SYSTEM STOP mode</td></tr>
</table></td></tr>
<tr><td>System control signal</td><td>$\overline{REF}$</td><td>64</td><td>output</td><td>Refresh: When LOW, shows that the CPU is in DRAM refresh cycle. When LOW, refresh addresses are outputted to the lower 8 bits of the address bus (A_0–A_7). Refresh interval is programmable in 10, 20, 40 or 80 state.</td></tr>
<tr><td>Interrupt signal</td><td>$\overline{NMI}$</td><td>1</td><td>Input</td><td>Non-Ma&able interrupt: This is the non-maskable intterrupt request terminal.</td></tr>
<tr><td></td><td>$\overline{INT_0}$</td><td>4</td><td>Input</td><td>Interrupt 0: Maskable interrupt level 0 request terminal. In leve 0, there are three operation mode:
<table>
<tr><th>Operation mode</th><th>Content</th></tr>
<tr><td>0</td><td>Command on the data bus is executed.</td></tr>
<tr><td>1</td><td>Command is executed from address 0038H.</td></tr>
<tr><td>2</td><td>Vector system</td></tr>
</table></td></tr>
<tr><td></td><td>$\overline{INT_1}$</td><td>5</td><td>Input</td><td rowspan="2">Interrupt 1, 2: Maskable interrupt level 1 and 2 request terminals. Vector system</td></tr>
<tr><td></td><td>$\overline{INT_2}$</td><td>6</td><td>Input</td></tr>
<tr><td>DMA signal</td><td>$DREQ_0$ - - (Commonly used with CKAO.)</td><td>50</td><td>Input</td><td>DMA Request for Channel 0: Internal DMAC transfer (to channel 0) request terminal. With this signal, the internal DMAC can operate in synchronization with the external I/O devices. The internal DMAC channel 0 supports the following transfer types:
(a) Between memories
(b) Between memory and I/O
(c) Between memory and memory map I/O
This terminal is multiplexed with CKAO terminal. When DMA channel 0 transfer mode is set to ‘Between memory and I/O (including memory map I/O)“, $\overline{DREQ_0}$ terminal serves as an input terminal.</td></tr>
<tr><td></td><td>$\overline{TEND_0}$</td><td>55</td><td>output</td><td>Transfer End for Channel 0: Internal DMAC channel 0 transfe sent signal. Driven LOW in synchronization with the last data transfer write cycle. This terminal is multiplexed with CKA1 terminal. When ASCI control register A channel 1 is set to ‘1 ", it serves as $\overline{TEND_0}$ terminal.</td></tr>
<tr><td></td><td>$\overline{DREQ_1}$</td><td>59</td><td>Input</td><td>DMA Request for Channel 1: Internal DMAC transfer (to channel 1) request terminal. Channel 1 supports only transfer between memory and I/O.</td></tr>
</table>

HD64180 (IC4)

Classification	Code	Terminal No.		Name and pin function
DMA signal	$TEND_1$	60	output	Transfer End for channel 1: Internal DMAC trasnfer (to channel 1) end signal.Driven LOW in synchronization with the last data transfer write cycle.
Serial I/O signal (ASCI channel 0)	TXA_0	48	output	Transfer Data for Asynchronous SCI Channel 0: ASCI channel 0 transfer data terminal.
	RXA_0	49	Input	Receive Data for Asynchronous SCI Channel 0: ASCI channel 0 receive data terminal.
	CKA0 (Commonly used with DREQO)	50	Input/Output	Clock for Asynchronous SCI Channel 0: ASCI channel 0 clock input/output terminal. This terminal is multiplexed with transfer request signal DREQO for internal DMAC channel 0. When DMA channel 0 is oeprated in the transfer mode of 'Between memory and I/O", it cannot be used as a clock output terminal.
	$\overline{RTS_0}$	45	Output	Request to Send for Asynchronous SCI Channel 0: One of the ASCI channel 0 modem control signals. The output can be controlled to LOW and HIGH by the program.
	$\overline{CTS_0}$	46	Input	Clear To Send for Asynchronous SCI Channel 0: One of the ASCI channel 0 modem control signals. With this input, transmission can be controlled.
Serial I/O signal (ASCI channel 0)	DCD_0	47	Input ,	Data Carder Detect for Asynchronous SCI Channel 0: One of the ASCI channel 0 modem control signals. With this input, the operation of the receiver section can be reset.
Serial I/O signal (ASCI channel 1)	TXA1	52	Output	Transfer Data for Asynchronous SCI Channel 1: ASCI channel 1 transfer data terminal.
	RXA1	54	Input	Receive Data for Asynchronous SCI Channel 1: ASCI channel 1 receive data terminal.
	CKA1 (Commonly used with $\overline{TEND_0}$.)	55	Input/Output	Clock for Asynchronous SCI channel 1: ASCI channel 1 clock input/output terminal. This terminal is multiplexed with internal DMAC channel 0 transfer end signal $\overline{TEND_0}$. When CKA1 D bit of the ASCI control register A channel 1 is set to "0", it can be used as a clock input/output terminal.
	$\overline{CTS_1}$ (Commonly used with RXS.)	57	Input	Clear to SEnd for Asynchronous SCI Channel 1: ASCI channel 1 modem control signal. With this input, transmission can be controlled. This terminal is multiplexed with RXS signal described below. ASCI status register channel 1 CTS1 E bit is used to select this terminal.
Serial I/O signal (CSI/O)	TXS	56	output	Transfer Data for Serial I/O Port: CSI/O serial output terminal.
	RXS (Commonly used with CTS1.)	57	Input	Receive Data for Serial I/O Port: CSI/O serial input terminal. This terminal is multiplexed with CTS1 , and selection is made by the program.
	CKS	58	Input/Output	Clock for Serial I/O Port: Used as CSI/O clock input/output terminal.
Timer	TOUT (Commonly used with $\overline{AT8}$.)	31	output	Timer Out: Timer output terminal of timer 1. Multiplexed with A18. Selection is made with TOCO and TOC1 bits of the timer control register.

Common terminal descriptions HD64180 (IC4)

Code	Terminal No.	Selection method
AI 8/TOUT	31	Al8 is selected immediately after resetting. When either one or both of TOC1 bit and TOCO bit is/are set to '1 ", TOUT is selected. When the both bits are set to "0", Al 8 is selected again.
CKA0/$\overline{DREQ_0}$	50	CKAO is selected immediately after resetting. Either one of DM1 bit or SM1 bit of DMAC DMA mode register is 'I', CKA0 is compulsorily changed to an input terminal though it is set as an output terminal, and CKAO can be used as $\overline{DREQ_0}$ terminal.
CKA1/$\overline{TEND_0}$	55	CKA1 terminal is selected immediately after resetting. When CKA1 D bit of the ASCI control register A channel 1 is Set to "1", it can be used as TEND0 terminal. When the bit is reset to "0", the terminal returns to CKA1.
RXS/CTS_1	57	RXS terminal is selected immediately after resettina. When CTS1 E bit of ASCI status register channel 1 is set to "1", it can be used as $\overline{CTS_1}$ terminal. In this case, however, the function of RXS input terminal is not prohibited.

F255011 PJ pin descriptions

Pin	Name	I/O	Description
1	PI697	I	Input port (I/O address 69H)
2	IOSCF	I/O	Input mode: Input port (I/O address 6BH) Output mode: I/O address C0H ~ FFH selection
3	IOSAB	0	I/O address A0H ~ BFH selection
4	IOS89	0	I/O address 80H ~ 9FH selection
5	$\overline{IOS7}$	I/O	Input mode: Input port (I/O address 6BH) Output mode: I/O address 70H ~ 7FH selection
6 7 8 9 10 11 12 13	PO660 PO661 PO662 PO663 PO664 PO665 PO666 PO667	0	Output port (I/O address 66H)
14	PO670	0	Output port (I/O address 67H)
15	GND	—	GND
16	VCC	—	Power (+5V)
17 18 19 20 21 22 23	PO671 PO672 PO673 PO674 PO675 PO676 PO677	0	Output port (I/O address 67H)
24 25 26 27	GAIN0 GAIN1 GAIN2 GAIN3	0	Read image signal gain control signal
28	AGC	I	GAIN 3 ~ 0 control signal
29	PTIM	I	Transmission motor start timing signal
30	RRDY	0	Data send start ready signal to the read process LSI
31	$\overline{STIM}$	I	Data send area signal from the read process LSI
32	SCLK	I	Data send clock from the read process LSI
33	SVID	I	Serial image data from the read process LSI
34	PHIT	I	CCD shift pulse signal
35	$\overline{INT}$	0	Interruption request signal
36	RESET	I	Reset signal
37	PHAI	I	Clock input (8MHz)
38	IORD	I	I/O read
39	$\overline{IOWR}$	I	I/O write
40	VCC		Power (+5V)
41	GND	—	GND
42 43 44 45 46 47 48 49	D0 D1 D2 D3 D4 D5 D6 D7	I/O	CPU data bus
50	DREQ1	0	DMA ch.1 reauest signal to CPU
51	DREQO	0	DMA ch.0 request signal to CPU
52	CK614K	I	614.4KHz clock input
53	CKA	0	CPU ASIC clock output

Pin	Name	I/O	Description
54 55 56 57 58 59 60 61	A0 A1 A2 A3 A4 A5 A6 A7	I	CPU address bus
62 63	TPA TPB	O	Transmission motor phase excitement control signal
64	TEST	I	Test pin
65	GND	—	GND
66	VCC	—	Power (+5V)
67 68	$\overline{TPA}$ $\overline{TPB}$	O	Transmission motor phase excitement control signal
69 70 71 72 73 74 75 76	PI6A0 PI6A1 PI6A2 PI6A3 PI6A4 PI6A5 PI6A6 PI6A7	I	Input port (I/O address 6AH)
77	$\overline{RSTP}$	O	Printer reset signal
78	BUSY	I	Busy signal from the printer
79	PCLK	O	Record data send clock to the printer
80	PDATA	O	Serial record data to the printer
81	CI1	I	CI signal
82	CI2	I	RINGDET signal
83	DP	O	Dial pulse generating signal
84 85 86 87 88 89	PO657 PO656 PO655 PO654 PO653 PO652	O	Output port (I/O address 65H)
90	VCC	—	Power (+5V)
91	GND	—	GND
92 93	PO651 PO650	O	Output port (I/O address 65H)
94 95 96 97 98 99 100	PO690 PO691 PO692 PO693 PO694 PO695 PO696	O	Output port (I/O address 69H)

8) LZ95G38 (IC12 gate array B) . . . 100 pin QFP

The following functions are provided as the main CPU peripheral functions.

- Memory mapper
- WAIT control
- Main CPU timers (3 units)
- DRAM controller
- Panel I/F (LCD controller I/F, key scan)
- Modem I/F (RTC detection)
- Alarm buzzer/busy tone clock frequency division

LZ95G38 pin description

Pin No.	Signal name	I/O	Description
1	DCLK	I	MODEM DCLK
2	RXD	I	MODEM serial reception data
3	ALARM	O	Alarm buzzer clock
4	BSTONE	O	Busy tone signal
5	GND	—	
6	$\overline{DRWE}$	O	DRAM write enable signal
7	$\overline{CAS}$	O	DRAM CAS signal
8	$\overline{RAS3}$	O	DRAM RAS signal (3)
9	$\overline{RAS2}$	O	DRAM RAS signal (2)
10	$\overline{RAS1}$	O	DRAM RAS signal (1)
11	(NU)		Not used.
12	MA9	O	DRAM address
13	MA8		
14	MA7		
15	MA6		
16	MA5		
17	MA4		
18	MA3		
19	MA2		
20	MA1		
21	MA0		
22	MD7	I/O	DRAM data
23	MD6		
24	MD5		
25	MD4		
26	MD3		
27	MD2		
28	MD1		
29	MD0		
30	GND	—	
31	D7	I/O	Main CPU data bus
32	D6		
33	D5		
34	D4		
35	D3		
36	D2		
37	D1		
38	D0		
39	Vcc	—	
40	GND	—	
41	TEST	I	Test pin
42	A19	I	Main CPU address
43	A18		
44	A17		
45	A16		
46	A15		
47	A14		
48	A13		
49	A12		
50	A11		
51	A10		
52	A9		
53	A8		
54	A7		
55	A6		
56	A5		
57	A4		
58	A3		
59	A2		
60	A1		
61	A0		
62	$\overline{RD}$	I	Main CPU read signal
63	$\overline{WR}$	I	Main CPU write signal
64	$\overline{IOE}$	I	Main CPU I/O enable signal
65	$\overline{ME}$	I	Main CPU memory enable signal
66	$\overline{WAITO}$	O	Main CPU wait signal
67	$\overline{REF}$	I	Main CPU refresh cycle signal
68	$\overline{LIR}$	I	Main CPU LIR signal
69	PHI	I	Main CPU system clock
70	$\overline{RESET}$	I	Reset signal
71	$\overline{INT20}$	O	Interruption request signal
72	$\overline{MWR}$	O	Memory write signal
73	$\overline{MS3}$	O	Memory select (3)
74	$\overline{MS2}$	O	Memory select (2)
75	$\overline{MS1}$	O	Memory select (1)
76	$\overline{MS0}$	O	Memory select (0)
77	GND	—	——
78	RS	O	LCD controller I/F (Register select signal)
79	RKS	O	LCD controller I/F (Read/write signal)
80	E	O	LCD controller I/F (enable signal)
81	LD7	I/O	LCD controller I/F (data bus)
82	LD6		
83	LD5		
84	LD4		
85	LD3		
86	LD2		
87	LD1		
88	LD0		
89	Vcc	—	——
90	GND	—	——
91	KN3	O	KEY scan signal (decode data)
92	KN2		
93	KN1		
94	KN0		
95	KN11	O	KEY scan signal
96	KN10	I	KEY sense signal
97	$\overline{SEN3}$	I	KEY sense signal
98	$\overline{SEN2}$		
99	$\overline{SEN1}$		
100	$\overline{SEN0}$		

(2) Panel control block

The following controls are performed through LZ95G38 according to commands from the main CPU.

- Operation panel key scanning
- Operation panel LCD display

(3) Peripheral I/O control block

- Recording control block diagram

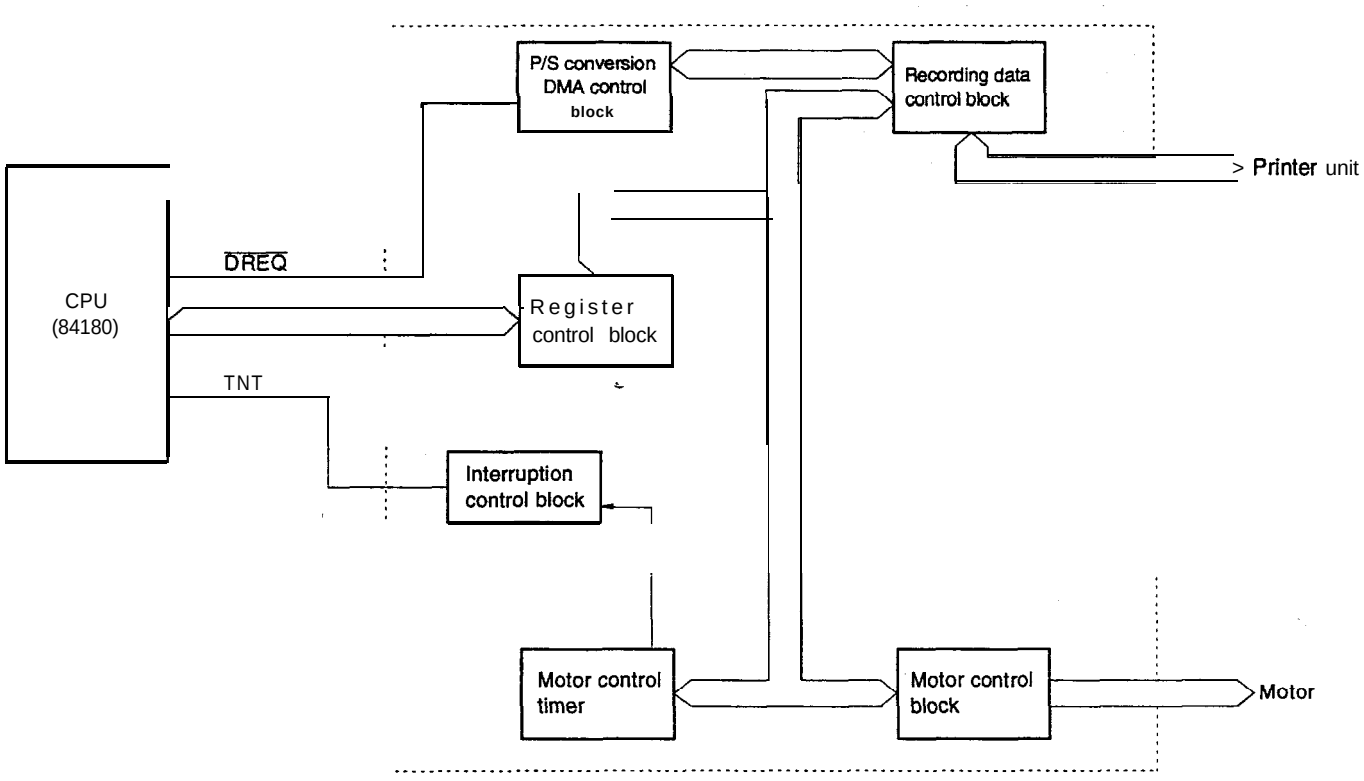

Fig. 3

The recording control block is composed as shown above. The descriptions are given below:

- P/S conversion block, DMA control block, recording data control block
  The recording data is transferred to the printer unit by these blocks. First, the gate array A sends DREQ to the CPU. The CPU transfers the recording data to the P/S conversion block by means of DMA. The transferred data is converted into serial data and sent through the recording data control block to the printer unit together with a clock.
- Motor control block
  This block supplies phase output for control of the TX motors. With register setting, it controls phase switching timing of the motor.

(4) Image signal processing block

The image signal processing block is composed of the following:

① CCD sensor drive block (M66333FP (IC2)).

② Analog processing block

- OP amp. (TL084 (IC102)),
- Analog switch (4053BP (IC107), 4066 (IC103 and IC104))
- M66333FP (IC2), transistor, etc.

③ A/D converter block (M66333FP (IC2) inside).

④ Binary coding processing block

- M66333FP (IC2)
- LH5266 (IC3)

Descriptions on each block are given below:

1) CCD drive block

The Clock necessary for CCD drive is generated in M66333.

- $\phi 1$ (Synchronization clock)
- $\phi 2$ (= $\overline{\phi 1}$) (Synchronization clock)
- ϕR (Output buffer reset clock)
- ϕT (Transmission clock)

2) Analog processing block

Video signals supplied from the CCD PWB are sample-hold, gain control and clamped to supply M66333FP.
The gain control is performed by F255011 (IC7), 7406 (IC105), 4066 (IC104), and TL084 (IC102) to control the max. voltage of video signal to about 3V.

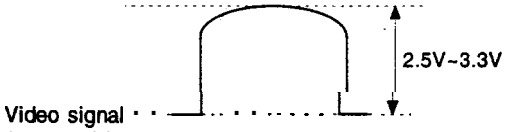

3) A/D Converter

A 7-bit, high-speed A/D converter M66333 in (IC2 80 pin QFP) is used to supply A/D converted digital video signals to the binary coding processing block.

4) Binary coding processing block

Digital video signals incorporates various algorithms required for binary coding, and RAM (IC3) which stores data necessary for processing are converted into binary data, and P/S converted, and DMA-transmitted to the line memory of the main CPU.
The algorithms for binary coding in the processing block are as follows:

- Shading correction
- Focus correction
- Auto contrast process
- Intermediate Half-tone expression process
  (error dispersion process/image area separation)

(5) Modem (R96DFXL) block

INTRODUCTION

The Rockwell R96DFXL MONOFAX modem is a synchronous 9600 bits per second (bps) half-duplex modem with error detection and DTMF reception. It has low power consumption and requires only a single +5VDC power supply. The modem is housed in a single VLSI device package.
The modem can operate over the public switched telephone network (PSTN) through line terminations provided by a data access arrangement (DAA).
The R96DFXL is designed for use in Group 3 facsimile machines. The modem satisfies the requirements specified in CCITT recommendations V.29. V.27 ter. V.21 Channel 2 and T.4, and meets the binary signaling requirements of T.30.
The modem can operate at 9600, 7200, 4800, 2400, or 300 bps, and also includes the V.27 ter short training sequence option.
The modem can also perform HDLC framing according to T.30 at 9600, 7200, 4800, 2400, or300 bps.
The modem features a programmable DTMF receiver and three programmable tone detectors which operate concurrently with the V.21 channel 2 receiver.
The voice mode allows the host computer to efficiently transmit and receive audio signals and messages.
The modem is available in either a 100-pin plastic quad flat pack (PQFP) or a 64-pin quad in-line package (QUIP).
General purpose input/output (GPIO) pins are available for host assignment in the 1 00-pin PQFP.
The modem's small size, single voltage supply, and low power consumption allow the design of compact system enclosures for use in both office and home environments.
MONOFAX is a registered trademark of Rockwell International.

FEATURES

- Group 3 facsimile transmission/reception
  - CCITT V.29, V.27 ter, T.30, V.21 Channel 2, T.4
  - HDLC Framing at all speeds
- V.27 ter short train
- Concurrent DTMF, FSK, and tone reception
- Voice mode transmission/reception
- Halfduplex (2-Wire)
- Programmable maximum transmit level:
  0 dBm to -15 dBm
- Programmable transmit analog attentuation:
- 0 dB to 14 dB in 2 dB steps
- Receive dynamic range: 0 dBm to –43 dBm
- Programmable dual tone generation
- Programmable tone detection
- Programmable turn-on and turn-off thresholds
- Programmable interface memory interrupt
- Diagnostic capability
  - Allows telephone line quality monitoring
- Equalization
  - Automatic adaptive equalizer
  - Fixed digital compromise equalizer
- DTE interface: two alternate ports
  - Selectable microprocessor bus (6500 or 8085)
  - CCITT V.24 (EIA-232-D compatible) interface
- TTL and CMOS compatible
- Low power consumption: 275 mW (typical)
- Single Package
  - 100-pin PQFP
  - 64-pin QUIP
- Single +5VDC power supply
- Software compatible with R96MFX, R96EFX, R96DFX, and R96VFX modems

R96DFXL Hardware Interface Signals

Pin Signals – 100-Pin PQFP

Pin No.	Signal Name	I/O Type
1	GPO3	IA/OB
2	GPO4	IA/OB
3	GPO5	IA/OB
4	GPO6	IA/OB
5	GPO7	IA/OB
6	OVD2	GND
7	0VD2	GND
8	D7	IA/OB
9	D6	IA/OB
10	D5	IA/OB
11	D4	IA/OB
12	D3	IA/OB
13	D2	IA/OB
14	D1	IA/OB
15	D0	IA/OB
16	OVD2	GND
17	OVA	GND
18	RAMPIN	R
19	NC	
20	NC	
21	OVA	GND
22	+5VD2	PWR
23	0VD1	GND
24	SWGAINI	R
25	ECLKIN1	R
26	SYNCIN1	R
27	NC	
28	NC	
29	NC	
30	OVA	GND
31	NC	
32	NC	
33	NC	
34	DAIN	R
35	ADOUT	R
36	BYPASS	IC
37	RCVI	R
38	TXLOSS3	IC
39	TXLOSS2	IC
40	TXLOSS1	IC
41	NC	
42	NC	
43	OVA	GND
44	TXOUT	AA
45	RXIN	AB
46	+5VA	PWR
47	OVA	GND
48	AGD	R
49	AOUT	R
50	0VD1	GND
51	NC	
52	$\overline{IRQ}$	o c
53	$\overline{WRITE}$-R/$\overline{W}$	IA
54	$\overline{CS}$	IA
55	READ-ϕ2	IA
56	RS4	IA
57	RS3	IA
58	RS2	IA
59	RS1	IA
60	RSO	IA
61	GP13	IA/OB
62	NC	
63	GP11	IA/OB
64	RTS	IA
65	EN85	R
66	OVD2	GND
67	PORI	ID
68	XTLI	R
69	XTLO	R
70	XCLK	OD
71	YCLK	OD
72	+5VD1	PWR
73	DCLKI	R
74	SYNCIN2	R
75	GP16	IA/OB
76	GP17	IA/OB
77	OVD2	GND
78	$\overline{CTS}$	OA
79	TXD	IA
80	0VD2	GND
81	OVD2	GND
82	DCLK	OA
83	EYESYNC	OA
84	EYECLKX	OA
85	EYECLK	OA
86	EYEX	OA
87	ADIN	R
88	DAOUT	R
89	OVD2	GND
90	EYEY	OA
91	GP21	IA/OB
92	OVD2	GND
93	GP20	IA/OB
94	GP19	IA/OB
95	RXD	OA
96	$\overline{RLSD}$	OA
97	OVD2	GND
98	RCVO	R
99	SWGAINO	R
100	GPO2	IA/OB

Notes:

1. NC = No connection; leave pin disconnected (open).
2. I/O Type: Digital signals: see Table 9;
   Analog signals: see Table 10.
3. R = Required modem inter-connection; no connection to host equipment.

[3] Description of CCD board

The CCD board picks up optical information from the document, converts it into an electrical (analog) signal and transfers it to the control board.

(1) Block diagram

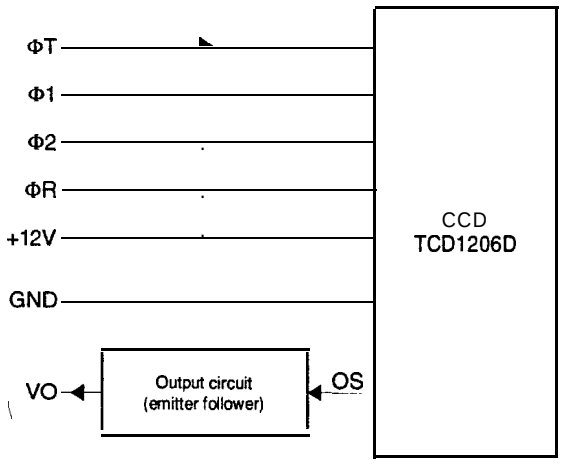

Fig. 4

(2) Description of blocks

1. CCD

The TCD1206D is a highly sensitive charged coupled image sensor that consists of 2160 picture elements.
Receiving four drive signals (φT, φ2, φ1, φR) from the control board, the transferred photoelectric analog signal OS is impedance converted, and the signal VO, is supplied to the control board.

2. Waveforms

1. φ1, φ2 (= $\overline{\phi 1}$) . . . signals within the control board.

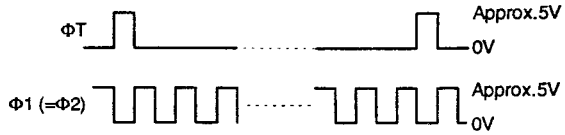

2. OS φ

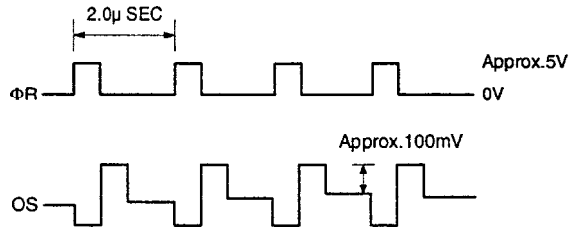

Fig. 5

[4] TEL/LIU (with Speech PWB unit) board circuit description

1.General

Telephone interface circuitry for this facsimile is all mounted on one circuit board unit and is interfaced with the telephone line and facsimile circuits via connectors.
Connection to the switched telecommunication network is canted out by means as of the magnetic relay. Power required for the control of the unit is supplied from the power supply unit of the facsimile +24V, +12V, −12V, +5V.

2. Circuit general description

This board is composed of the following blocks.

(1) Surge protection block
(2) Hook detection block(Polarity inversion detection block)
(3) Reception control block --
(4) Transmission control block
(5) CI signal detection block
(6) Speaker output voice select block
(7) Speaker amplifier block
(8) Polarity guard block
(9) Tone ringer block
(10) Hook control block
(11) Dialer control block
(12) Dial control block
(13) 4-bit control block
(14) External TEL hook detection block
Speech PWB unit (IC3)
(15) Dial pulse transmission block
(16) Communication circuit block

3. Each block description

(1) Surge protection block

This is composed of arrester (AR1). Used to prevent the LIU block from damage caused by a surge voltage occurring across lines, the 3-pole type is used.

(2)Hook detection block(Polarity inversion detection block)

This is composed of IC11 and its peripheral circuits and detects inversion of porarity. When the DC circuit is formed, either $\overline{HS1}$ or HS2 turns LOW.

(3) Reception control block

This is composed of IC5, IC6, IC8 and its peripheral circuits and controls reception signals.

(4) Transmission control block

This is composed of IC5 its peripheral circuits and controls transmission signals.

(5) CI signal detection block

The CI signal detection block consists of R2, D6, ZD14. PC5 and its peripheral circuits. The CI(Calling Indicate) signal is detected by the half wave rectifier circuit consisting of D6 and ZD14. The photocoupler PC5 is driven during the half cycle rectified by D6. The photocoupler delives current to IC1 when it is turned on during these half cycles. IC1 inverts the signal present at its input to create CI signal.

(6) Speaker output voice select block

This is composed of IC7 and its peripheral circuits. The speaker amplifier input signal is selected as shown in the table below.

$\overline{MONITOR}$	BZCONT	Speaker output voice
0	1	Buzzer, key sound
0	0	Line signal
1	0	Modem send signal

(7) Speaker amplifier block

This is composed of IC9 and its peripheral circuits.
The signal is inputted to amplifier IC through volume and amplified and sent to the speaker. The speaker volume is adjustable by the volume.

(8) Polarity guard block

This is bridge rectifier REC1 and has a function to protect the telephone set against inversion in the line.

(9) Tone ringer block

This is composed of IC10 and its peripheral circuits. When a call signal is inputted, the toner ringer block makes the piezo-electric buzzer ring.
The speake sound volume is varied in by the slide switch.

(10) Hook control block

This is composed of the hook SW, the on-hook relay (OHRLY relay), and its driver.
When OHRLY is high, H relay is on to close the line regardless of the hook SW state.

(11) Dialer control block

This is composed of IC101 and its peripheral circuits, and supplies current to the dialer circuit.

(12) Dial control block

This is composed of IC3 and its peripheral circuits. Signal from the selection signal according to 4-bit signal from the CPU is outputted to the pulse transmission block DP and the telephone line block (PB) according to slide SW1 setting (Tone or Pulse)

(13) Cbit control block

This block is composed of phto couplers (PC1) is used to supply 4 bit data from the CPU through the photo coupler to the dial IC.

(14) External TEL hook detection block

This is composed of IC7 and its peripheral circuits.
When the telephone connected to the external TEL terminal is picked up to form the DC circuit, either $\overline{EXHS1}$ or $\overline{EXHS2}$ turns LOW.

(In Speech PWB unit)

(15) Dial pulse transmission block

This is composed of IC3 and its peripheral circuits, and has the switching function for pulse dial transmission and the switching function of on-hook/off-hook.

(16) Communication circuit block

This is composed of IC3 and its peripheral circuits. It has functions of reception amplifier, transmission amplifier, AGC circuit, and other function necessary for communication.

Block diagram

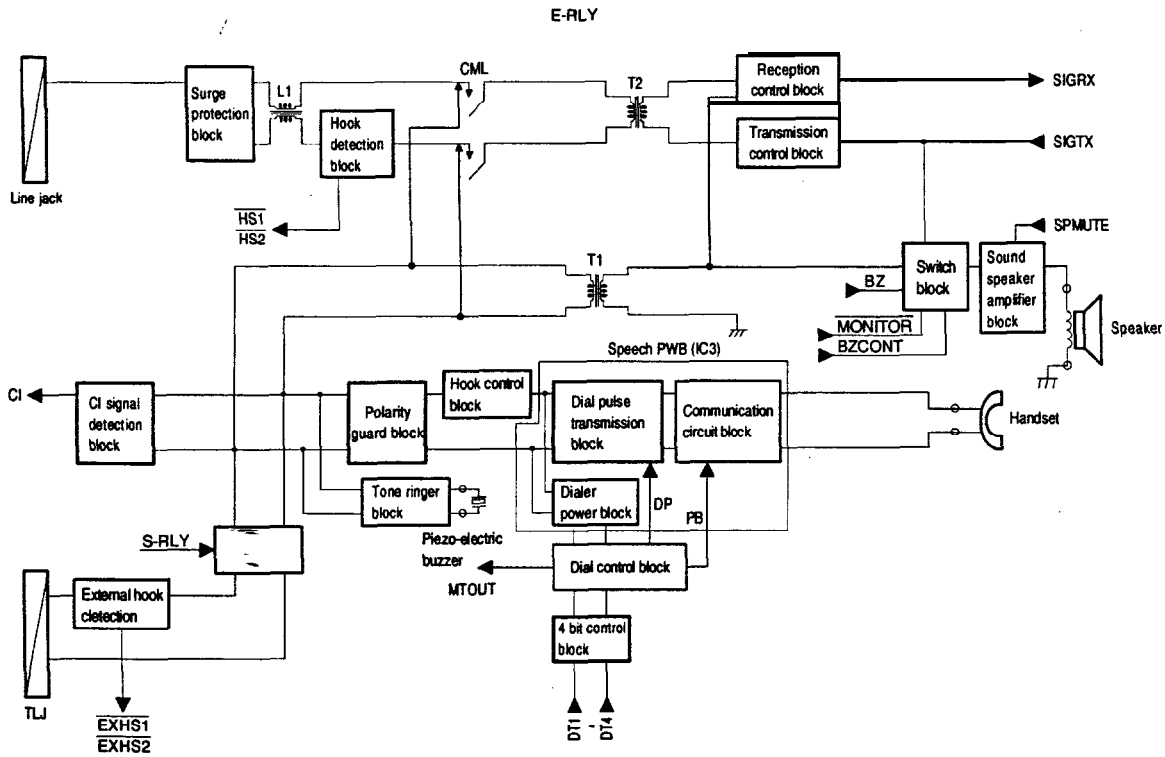

Fig. 6

Speech Network IC

TA31065

Pin No.	Pin Name	Pin function
1	V_L	[Line current input pin] This pin is connected to the positive output of the diode bridge circuit.
2	TOI	[Send output current flowing pin] This oin is connected through the 56 Ohm resistor to the VI oin ①.
3	TOO	[Send output current output pin] This pin is connected through the 15 Ohm resistor to the GND pin ⑫. Since most of line currents are outputted from this pin, the allowable power of the 15 Ohm resistor which is connected between this pin and the GND pin must be determined by taking the expected max. line current into consideration.
4	NC	—
5	AC BIAS	[AC signal reference voltage pin] When an AC signal is inputted to this pin through the capacitor (for preventing against DC), the signal is transmitted to the line.
6	MFI	[DTMF or external input signal input pin] A signal inputted this pin is outputted to the V_L pin ① only when the MUTE pin ⑪ is LOW,
7	TPO	[Send input amp output pin] This pin is negatively fed back to the TPI1 oin ⑧.
8	TPI1	[Send input amp reverse input pin] This pin receives negative feedback from the TPO pin ⑦.
9	TP12	[Send input amp reverse input pin] This pin is DC-biased from the REF pin ⑮ through the resistor.
10	NC	—
11	MUTE	[NUTE pin] Pin for selection between send signals and MFI input signals in the transmitter system. Pin for selection between send signals and BTI input signals in the receiver system.
12	GND	[Ground pin] This pin is connected to the negative output of the diode bridge.
13	UP	[AC impedance control pin] When this pin is connected directly to the GND pin ⑫ or through a resistor, the DC potential of the V_L pin ① can be increased to max. 1.5V (TYP) with the same line current.
14	PADC	[Pad control pin] When this pin is connected to the GND pin ⑫ or the Vcc pin ㉔ through a resistor, the operating current of gain control (auto pad) by the line current can be controlled.
15	REF	[Internal reference output pin] This pin voltage serves as the reference voltage of the internal pre-amp.
16	NC	—
17	RPI2	[Reception input amp non-reverse input pin] This pin is directly biased from the REF pin ⑮ through the resistor.
18	RPI1	[Reception input amp reverse input pin] This oin receives neoative feedback from the PRO oin ⑲.
19	RPO	[Reception input amp output pin] This pin is negatively fed back to the RPI 1 pin ⑱.
20	BTI	[Dial confirmation sound (Beep tone, DTMF), monitor sound pinput pin] A signal inputted to this pin is outputted to the RO1 and R02 pin ㉒ and ㉓ only when the MUTE pin ⑪ is LOW.
21	NC	—
22	R02	[Reception output pin, reverse side] This is the output oin to the receiver.
23	RO1	[Reception output pin, non-reverse side] This is the output pin to the receiver.
24	vcc	[Internal power voltage pin] Power for the internal pre-amp.

[5] Description of Power Supply

1. Block diagram

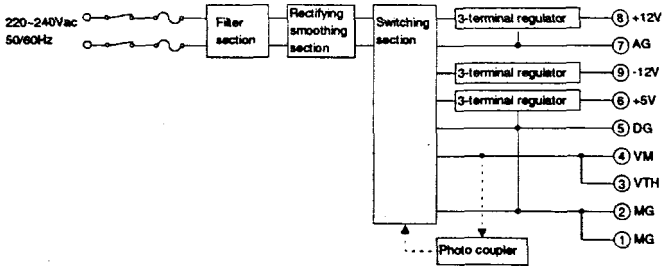

Fig. 1. Block diagram

2. General description

The input voltage is 187V AC - 276V AC conforming to UL standards. The outputs are +24V(VM), +5V, +12V, -12V. The overvoltage protection function for protection of the load in case of power abnormality and the overcurrent protection function for protection of the power supply itself from overload are added,

3. Operational description

When 230 ~ 246 V/AC power is supplied, it is passed through a noise filter to the rectifier section where it is smoothed to about 300V then supplied to the invertor section. The invertor section employs one-transistor ON/OFF self-excited invertor (R.C.C. system) and a stable DC voltage is supplied to the secondary side.
The operation of each section is described below:

3.1. Invertor section

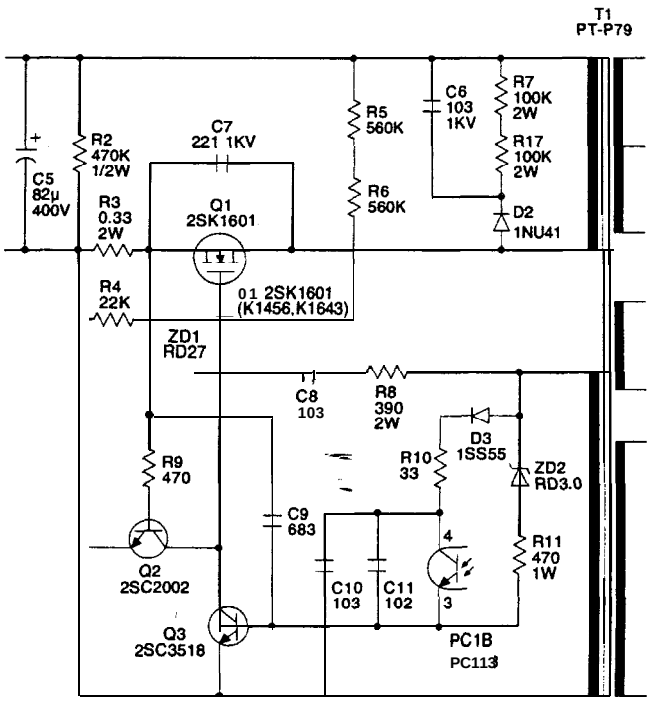

When the voltage across R4 reaches the gate ON voltage through R5, R6, and R4, Q1 begins to turn ON, flowing a current from pin1 of T1 primary winding to pin3. Then a voltage is generated from pin5 of auxiliary winding to pin4, turning Q1 gate ON completely. The drain current increases linearly to store energy in the primary winding. However, voltage across R3 turns ON Q2 thorough R9 when the drain current reaches a certain level. As a result, Q1 gate voltage falls below the threshold voltage (about 4V) of the gate and Q1 turns off. Simultaneously when Q1 turns off, the energy stored in the primary winding is induced in the secondary winding to bias the rectifier diodes D4, D5, D6, and D7 forwardly, smoothing each output capacitor. Thus a DC voltage is obtained.

3.2. Control section

(1) +24V (VM) control

A voltage is generated in the secondary side by repeated operations of 3.1, and the output in the secondary side is divided by R14, VR1, and R15 to be inputted to Q4. The divided voltage is adjusted to about 6.2V by VR1. Q4 always monitors the divided output voltage. When the output voltage exceeds +24V, the divided voltage also exceeds 6.2V and Q4 judges it as an increase in the output voltage. Then photocoupler PC1 is lit through R13 to turn on the transistor in the light receiving side, supplying a current to the base of Q3, turning off Q1. (The current which is to be passed through the additional line, R8, and C8 to R4 is bypassed by Q3). Resultantly, ON time of Q1 is shortened and the energy stored in the primary winding is decreased, limiting the increase in the output voltage. When the output voltage begins to decrease, the light quantity of PC1 is decreased to lengthen the ON time to Q1. As a result the energy in the primary winding is increased to compensate for the decrease in the output voltage.
The negative feedback control is repeated to stabilize the output voltage.

(2) +5V, +12V, -12V control

The outputs of +5V, +12V, and -12V are stabilized by the three-terminal regulator ICs (IC3, IC1, and IC2). The overcurrent protection function protects the regulator ICs themselves.

3.3. Overcurrent protection function

When the output current in the secondary side increases to become an overcurrent or short R3/R4 detects the drain current to turn on Q2, The gate voltage of Q1 is controlled to shorten ON time of Q1 to protect the circuit from the overcurrent.

3.4. Overvoltage protection function

When the output voltage is abnormally increased and ZD5 zener voltage exceeds about 30V, ZD5 is shorted to operate the same procedure as the overcurrent protection function. To reset, turn off the AC switch, remove the cause, and replace ZD5 with a new one.

3.5. High temperature protection circuit

Thermal fuse F3 included in the power circuit is blown when the surface temperature of rectifier D1 exceeds about 115 degrees Centigrade. (about 239-F)

3.6 Rush current limiting circuit

When AC power is supplied, a rush current flowing through capacitor C5 may blow fuse **F1/F2** and damage the circuit. To prevent this, the power thermistor **TH1** is provided to limit the rush current.

3.7. Line filter

To protect against external noises and noises generated in the power circuit, the line filter is composed of **L1,** L2, Cl, C2, C3, and **C4** to reduce noises.

(Waveform)

- At standby

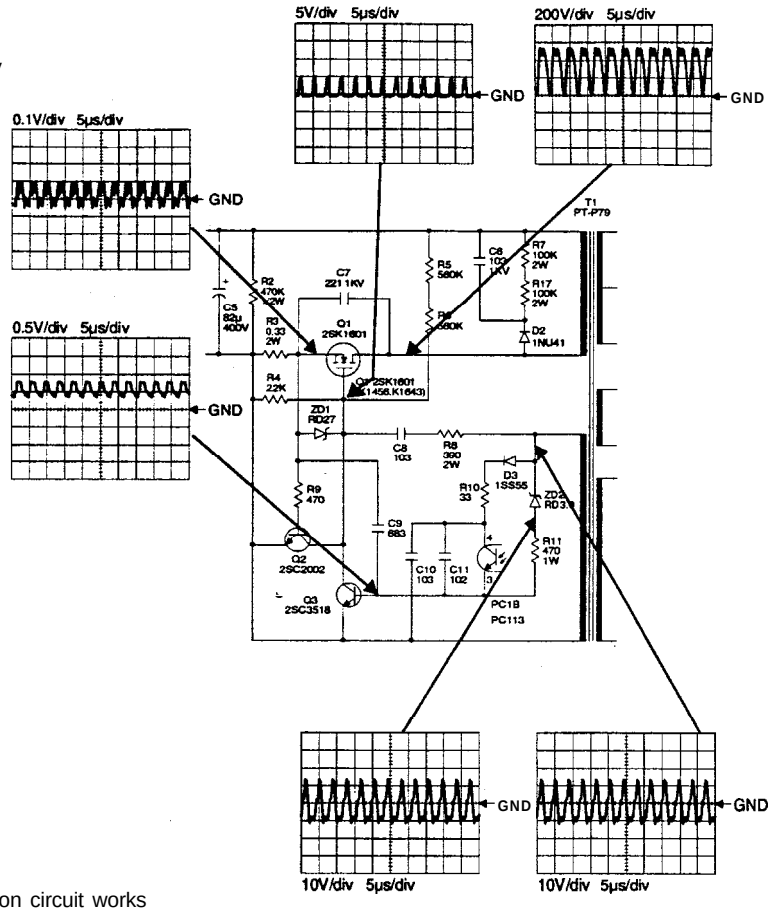

- When the overcurrent protection circuit works

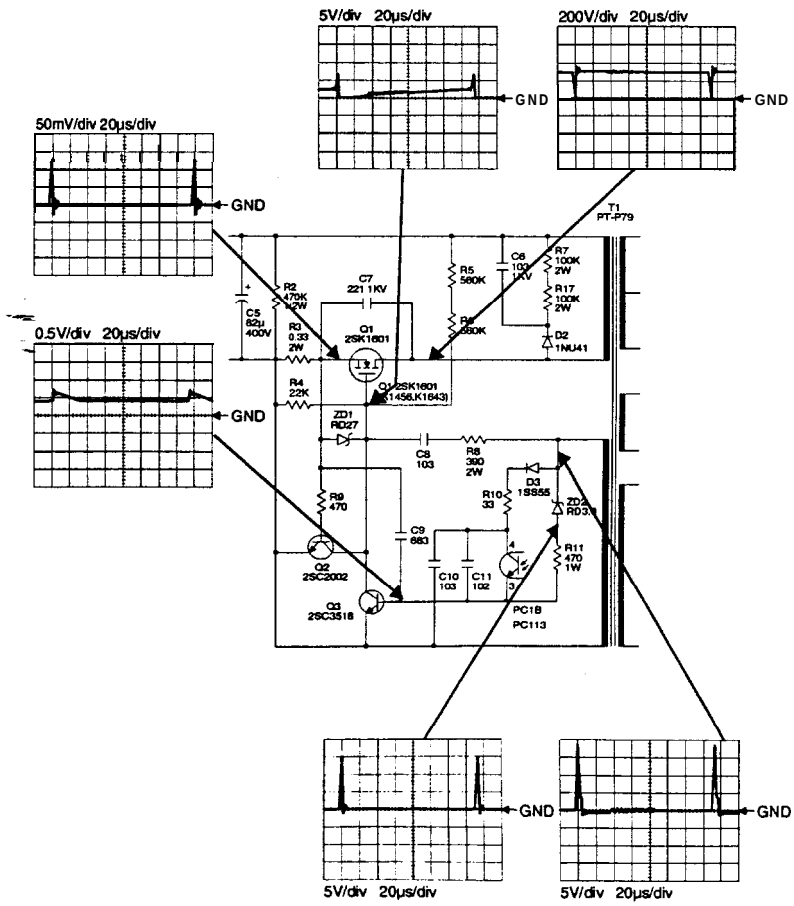

[1] Control PWB circuit

Main control block

1/5

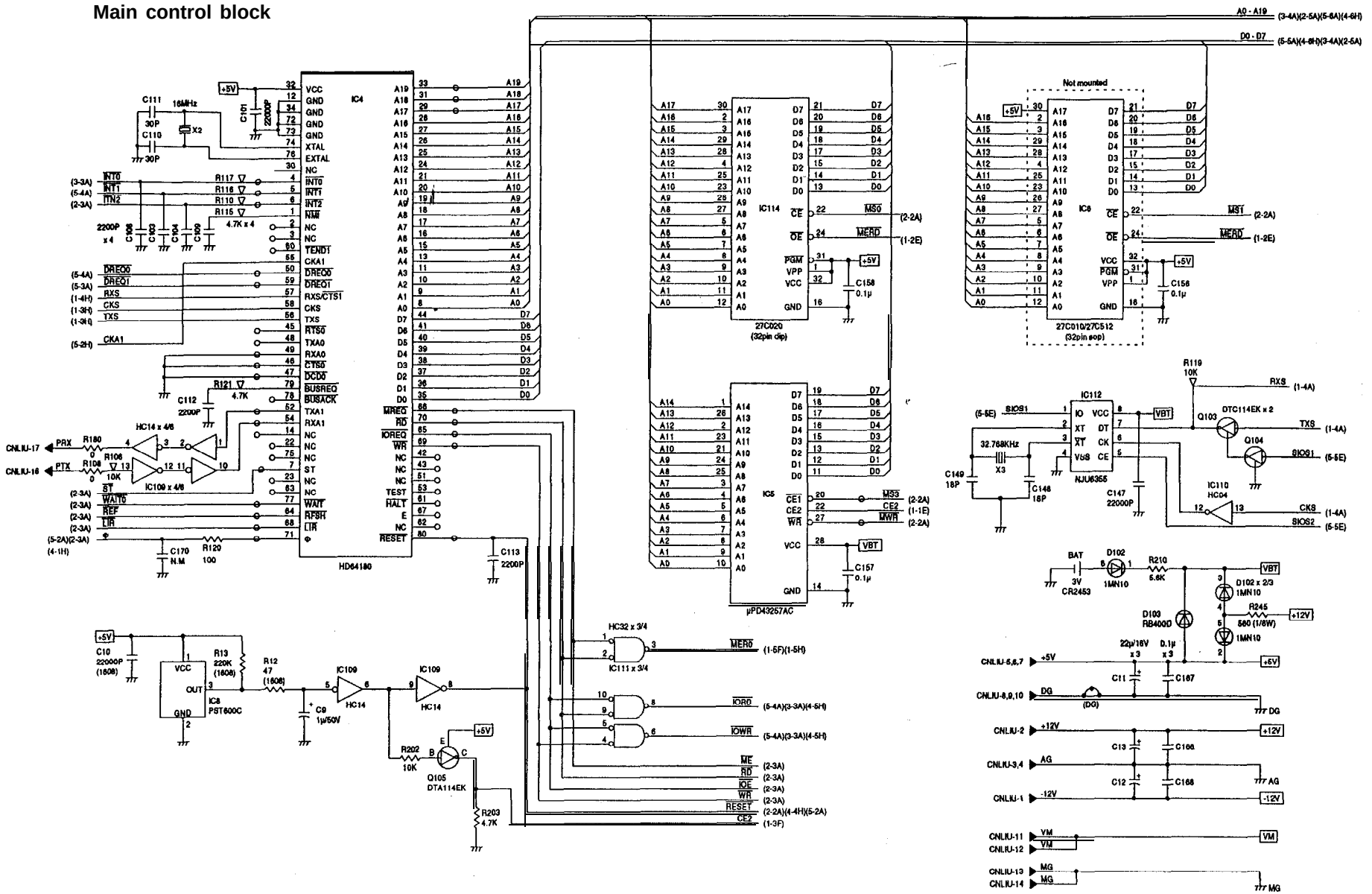

Control PWB circuit

Image memory control

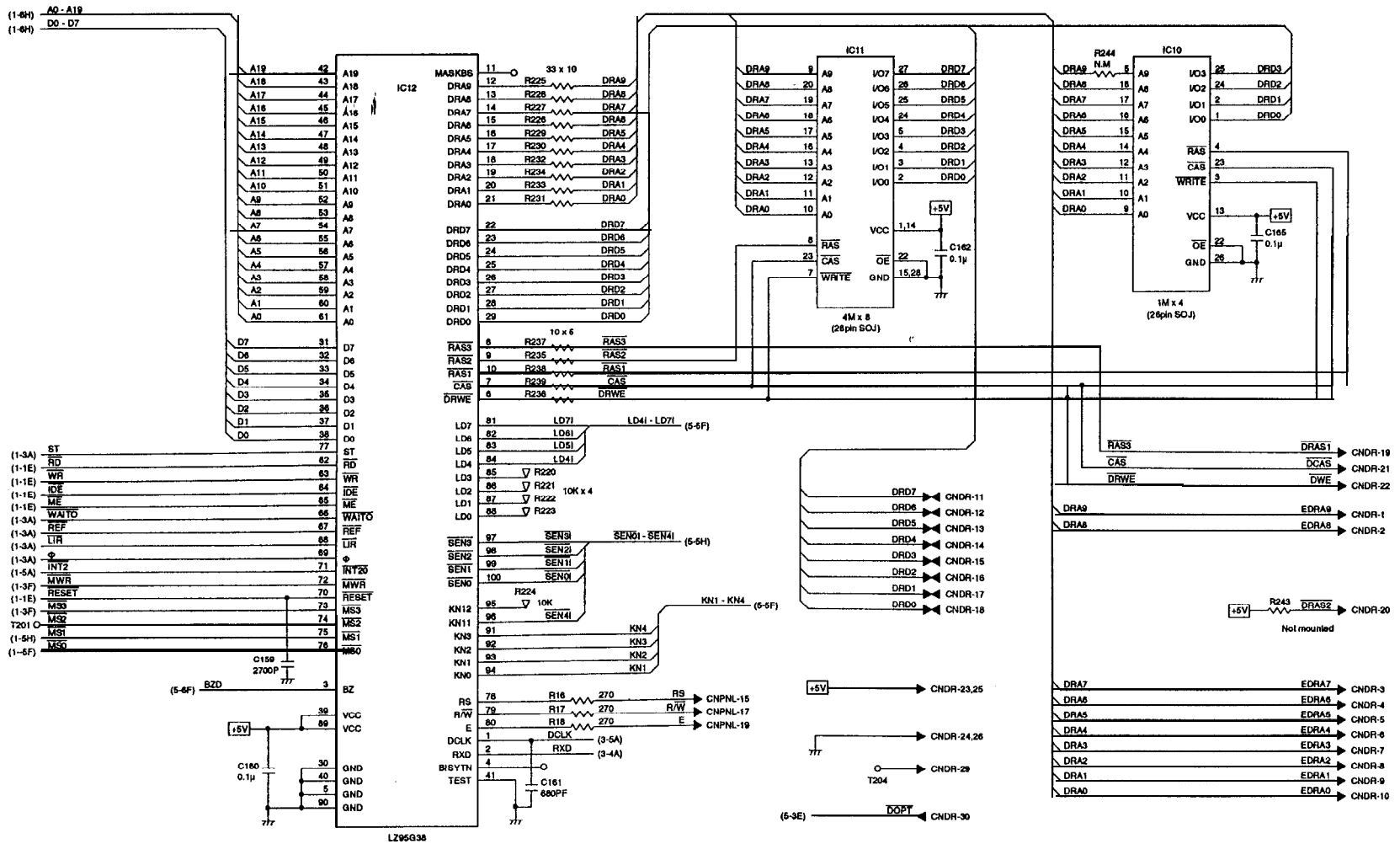

Control PWB circuit
MODEM

3/5

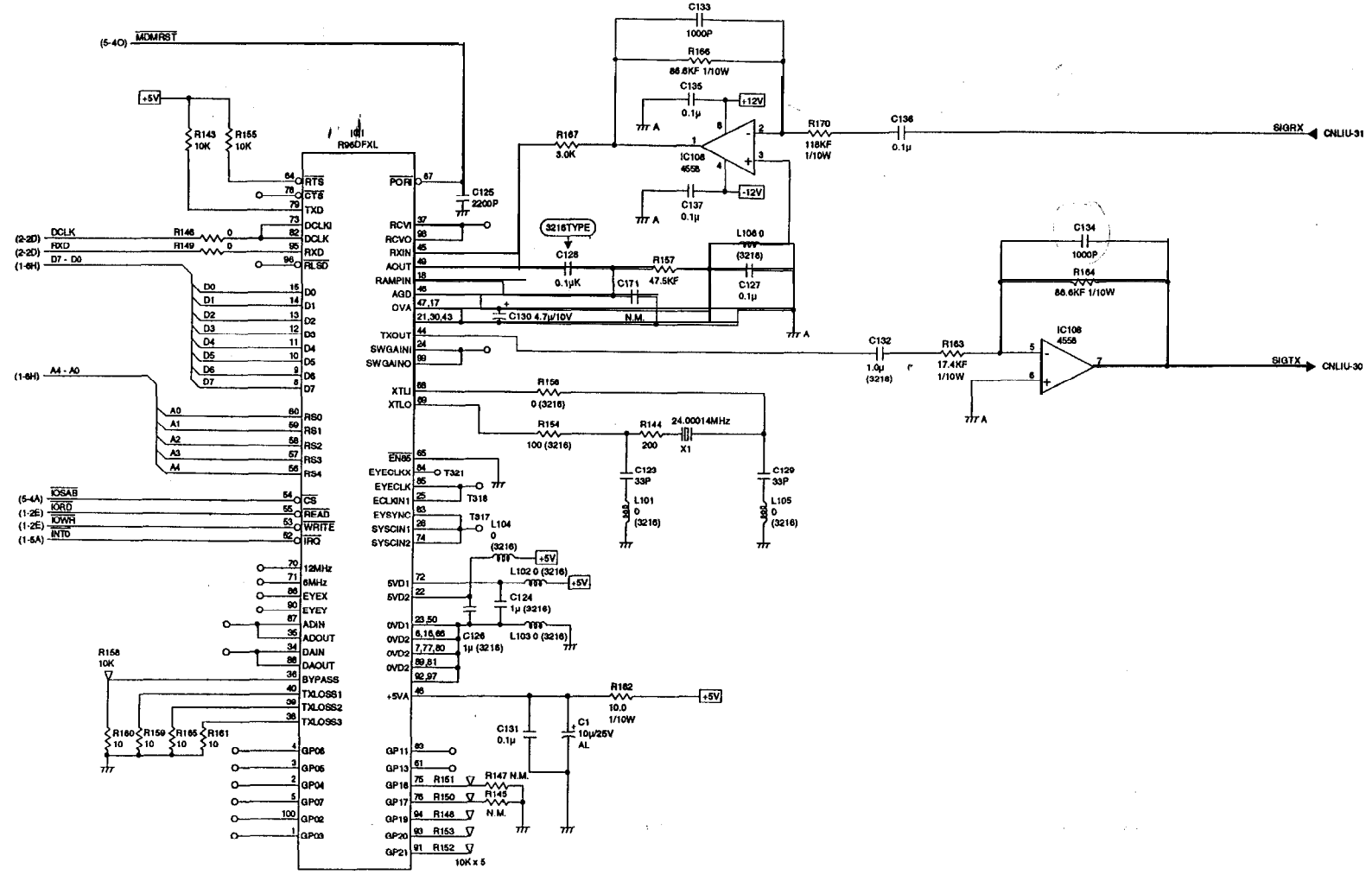

Control PWB circuit

Scanning section

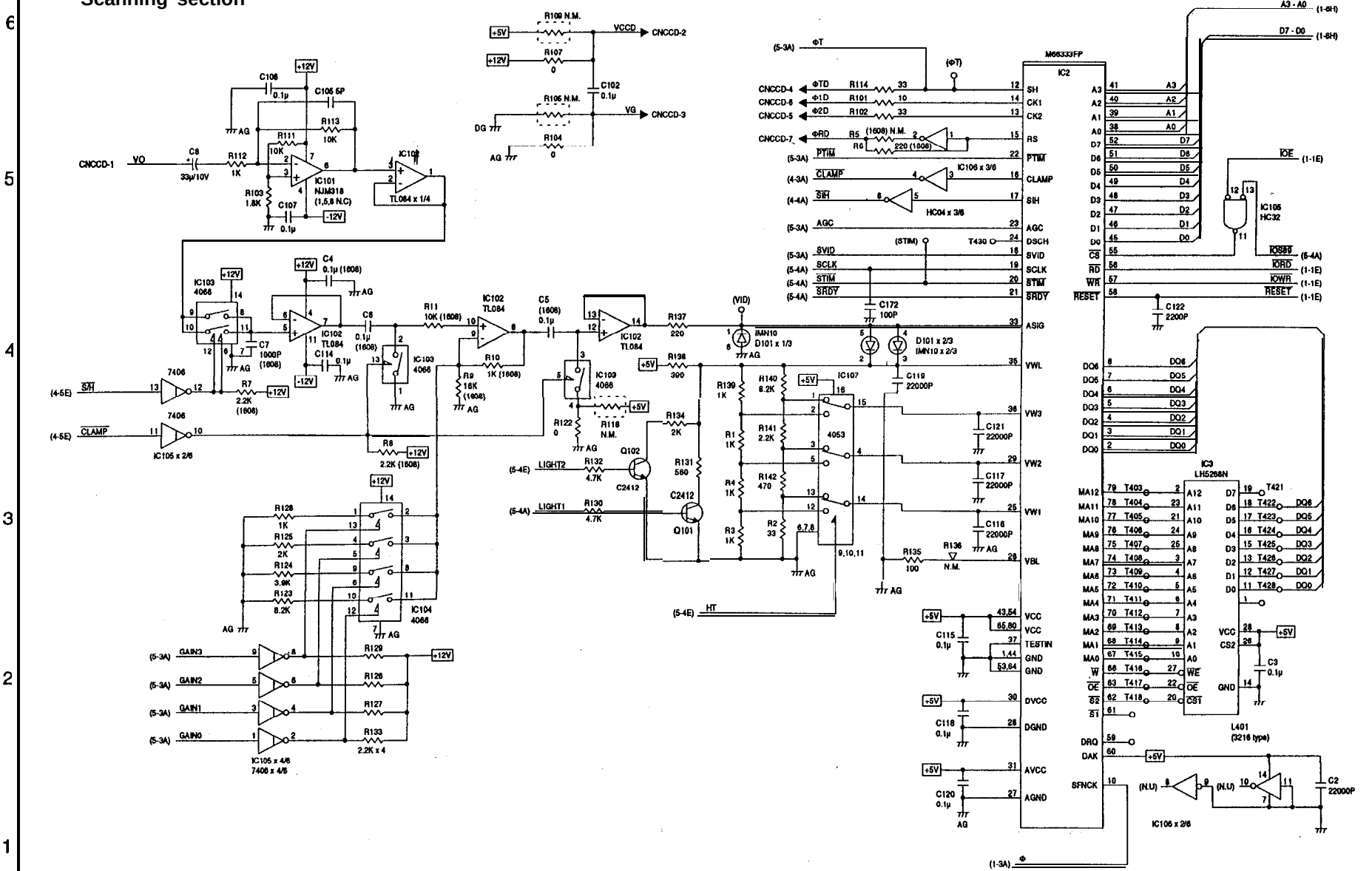

Control PWB circuit

Peripheral I/O control section

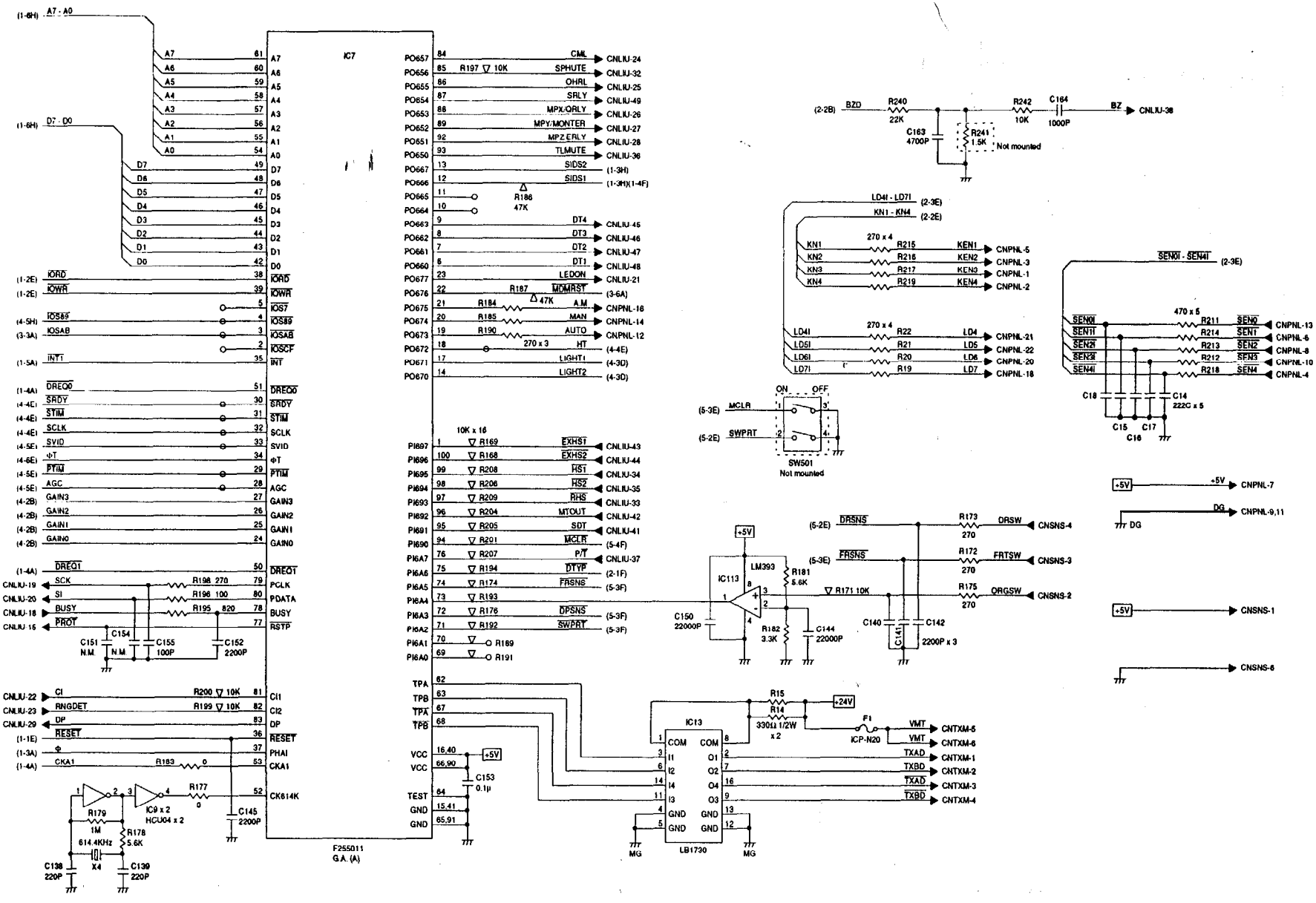

Control PWB parts layout (Top side)

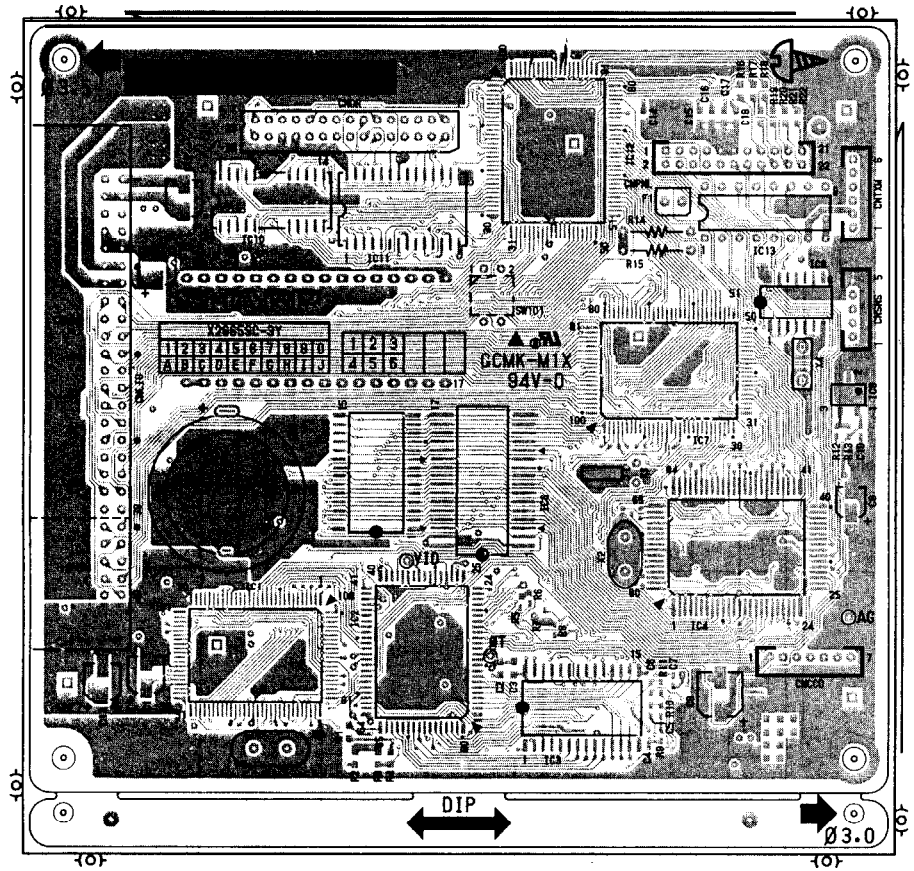

Control PWB parts layout (Bottom side)

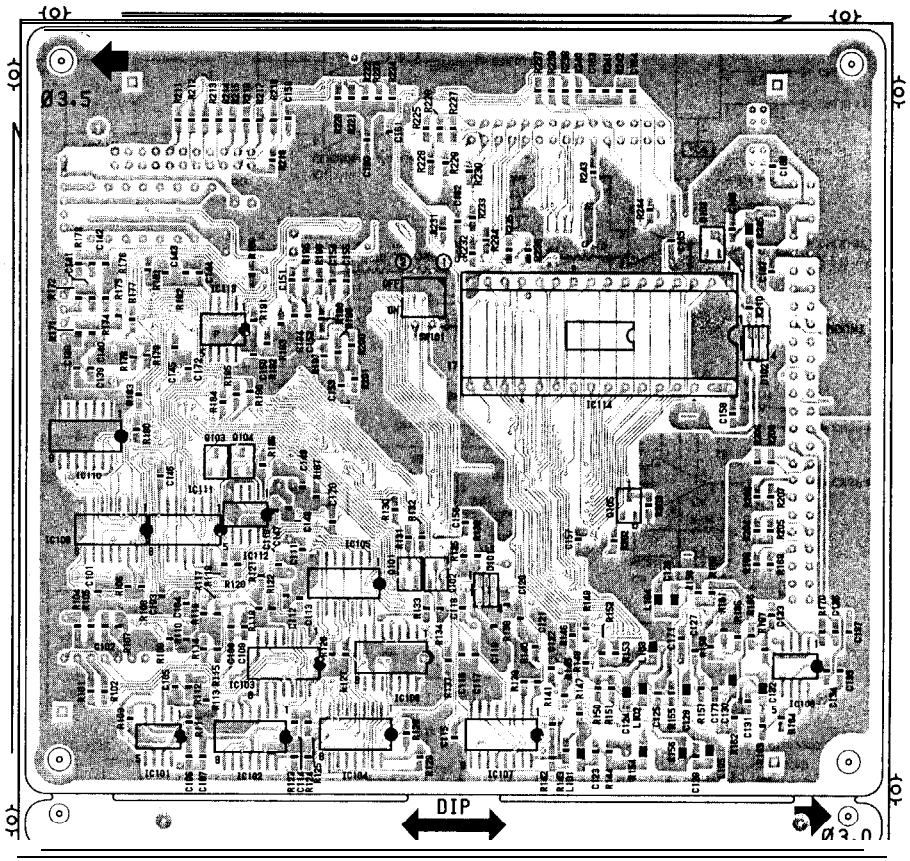

[2] TEL/LIU circuit

1/3

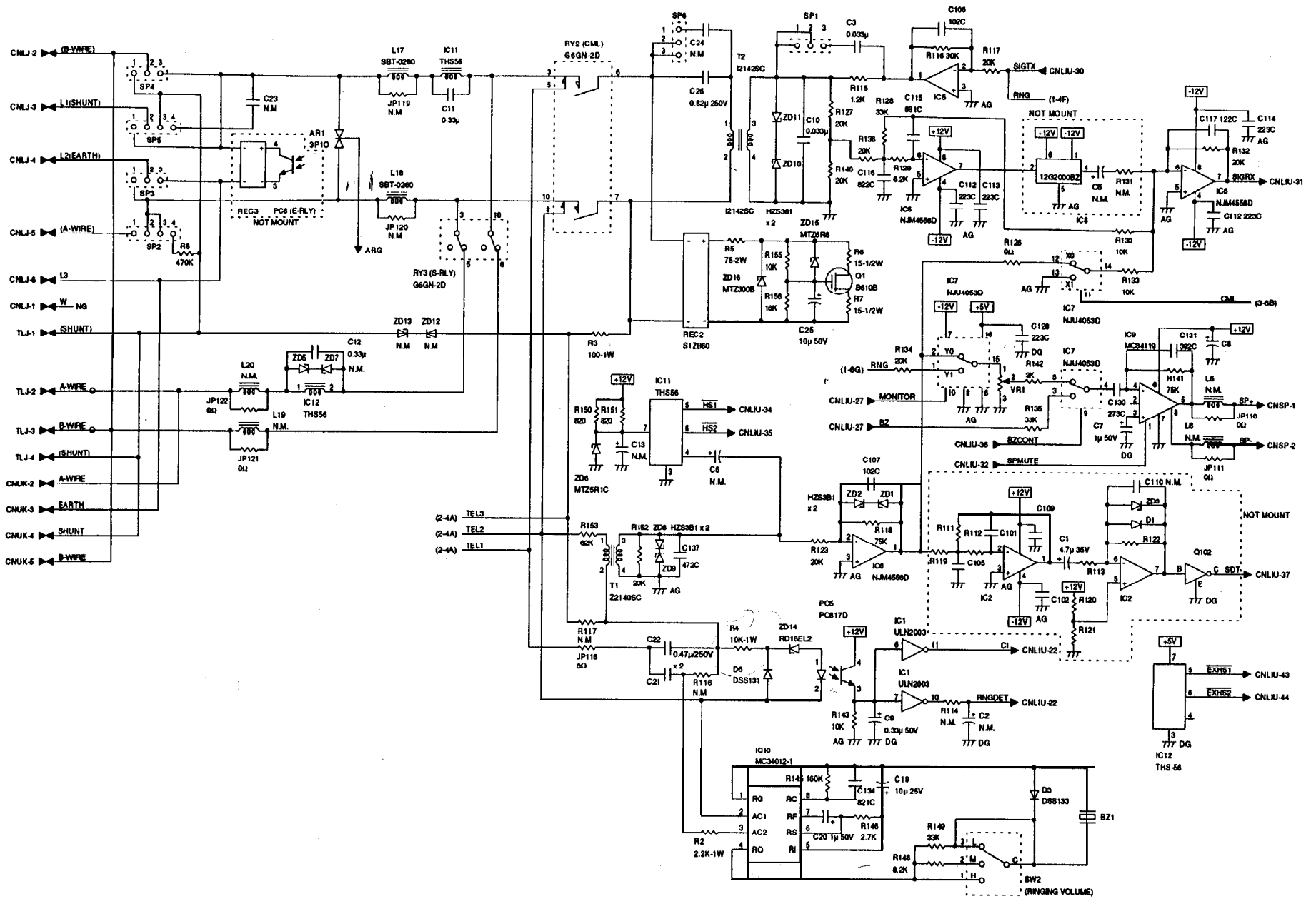

TEL/LIU circuit

<ON HOOK STATE>

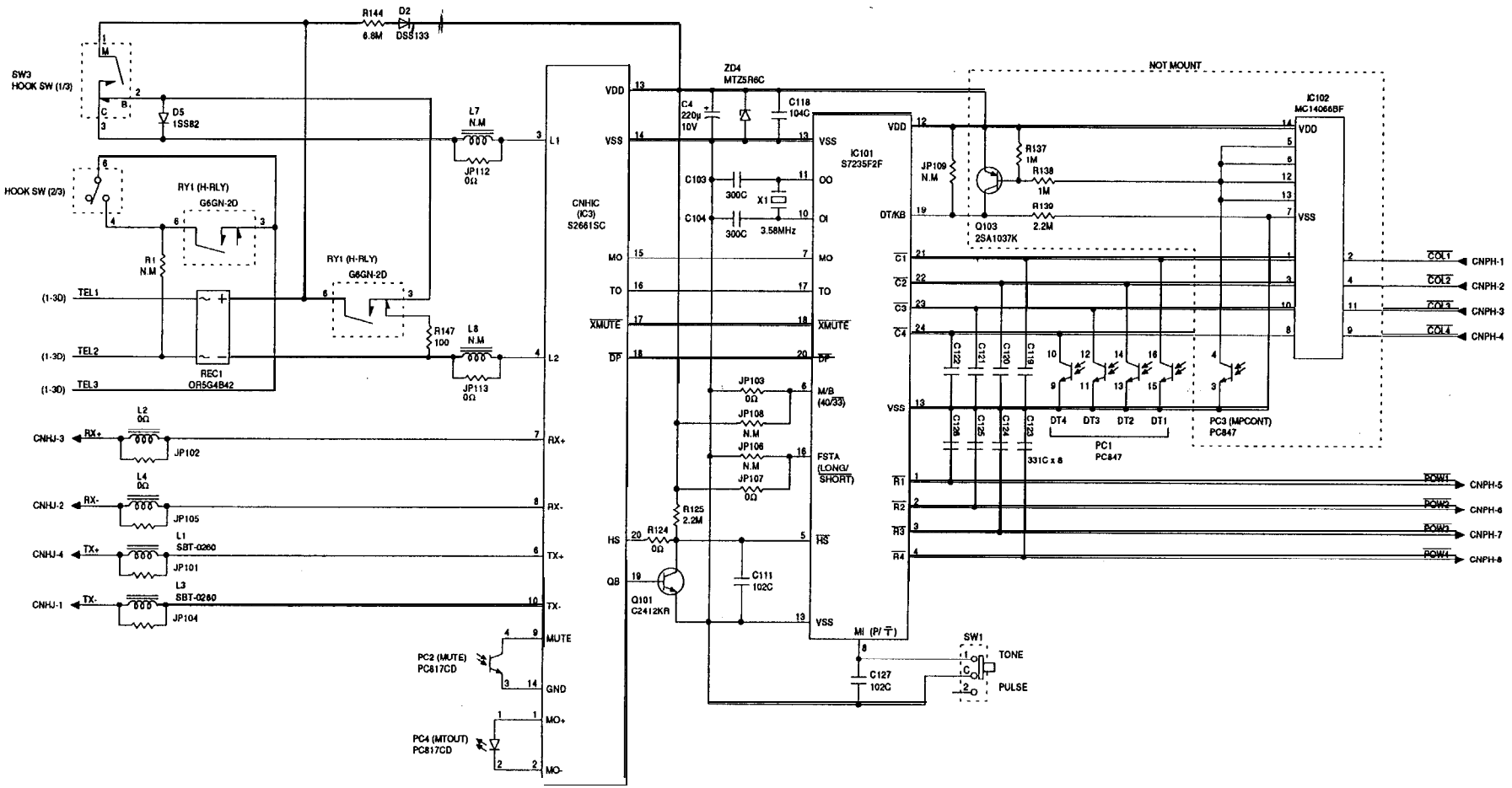

TEL/LIU circuit

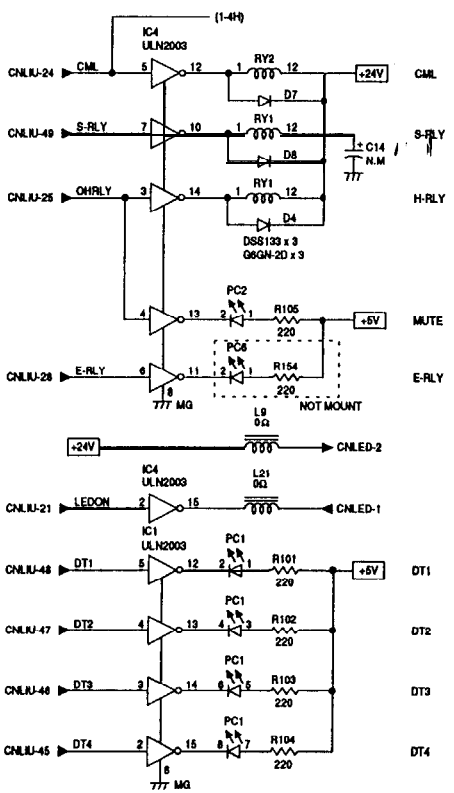

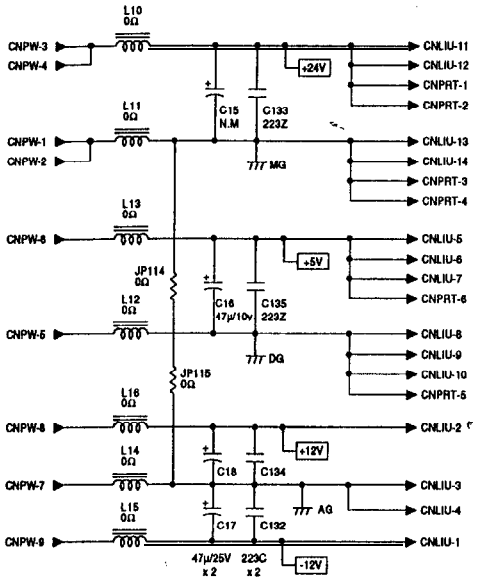

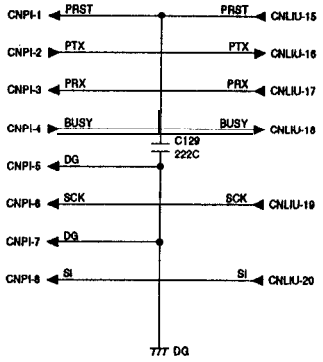

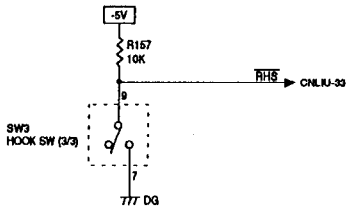

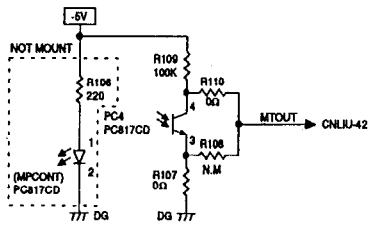

<ON HOOK STATE>

Sensor circuit

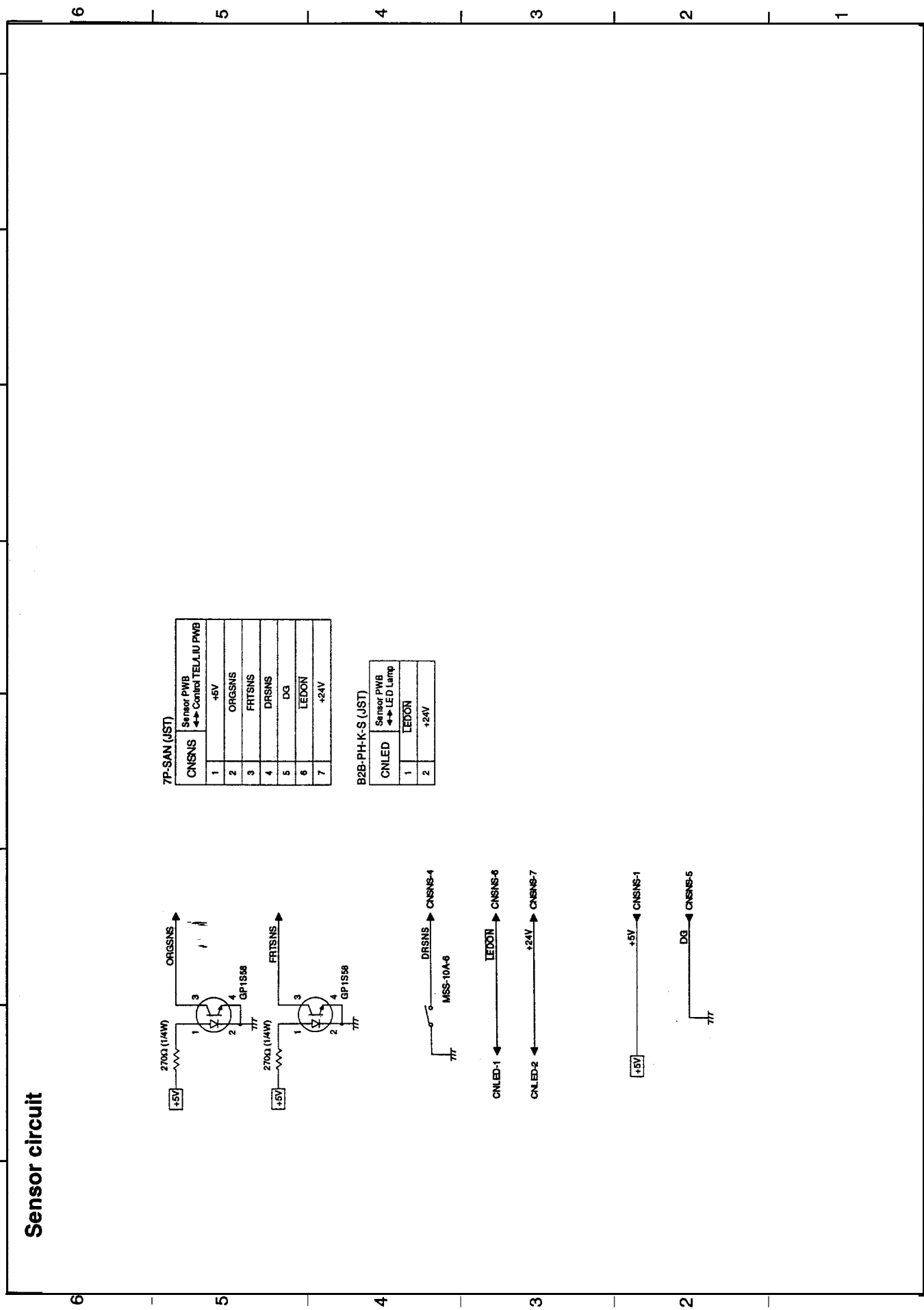

TEL/LIU PWB parts layout [Top side]

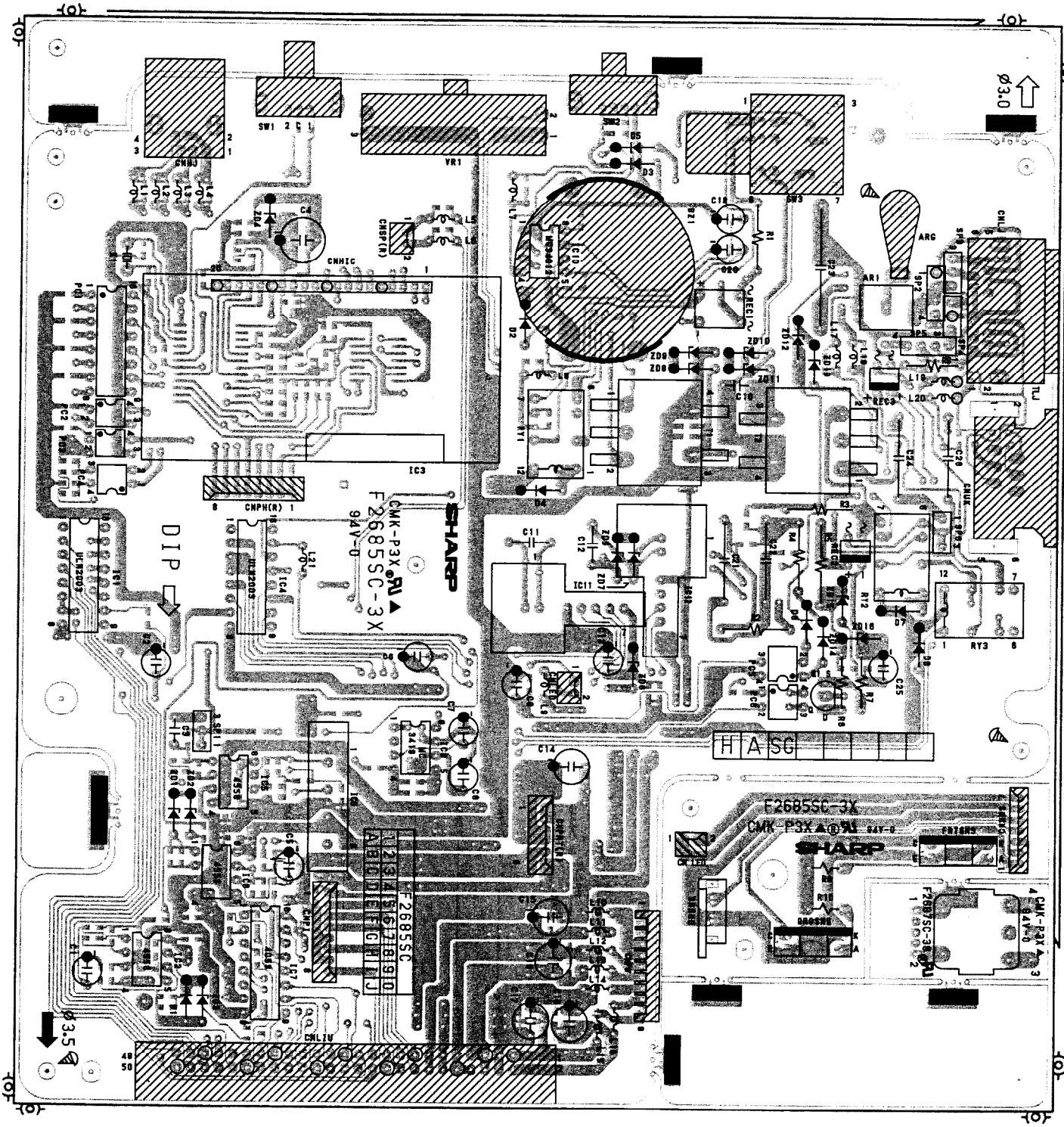

TEL/LIU PWB parts layout [Bottom side]

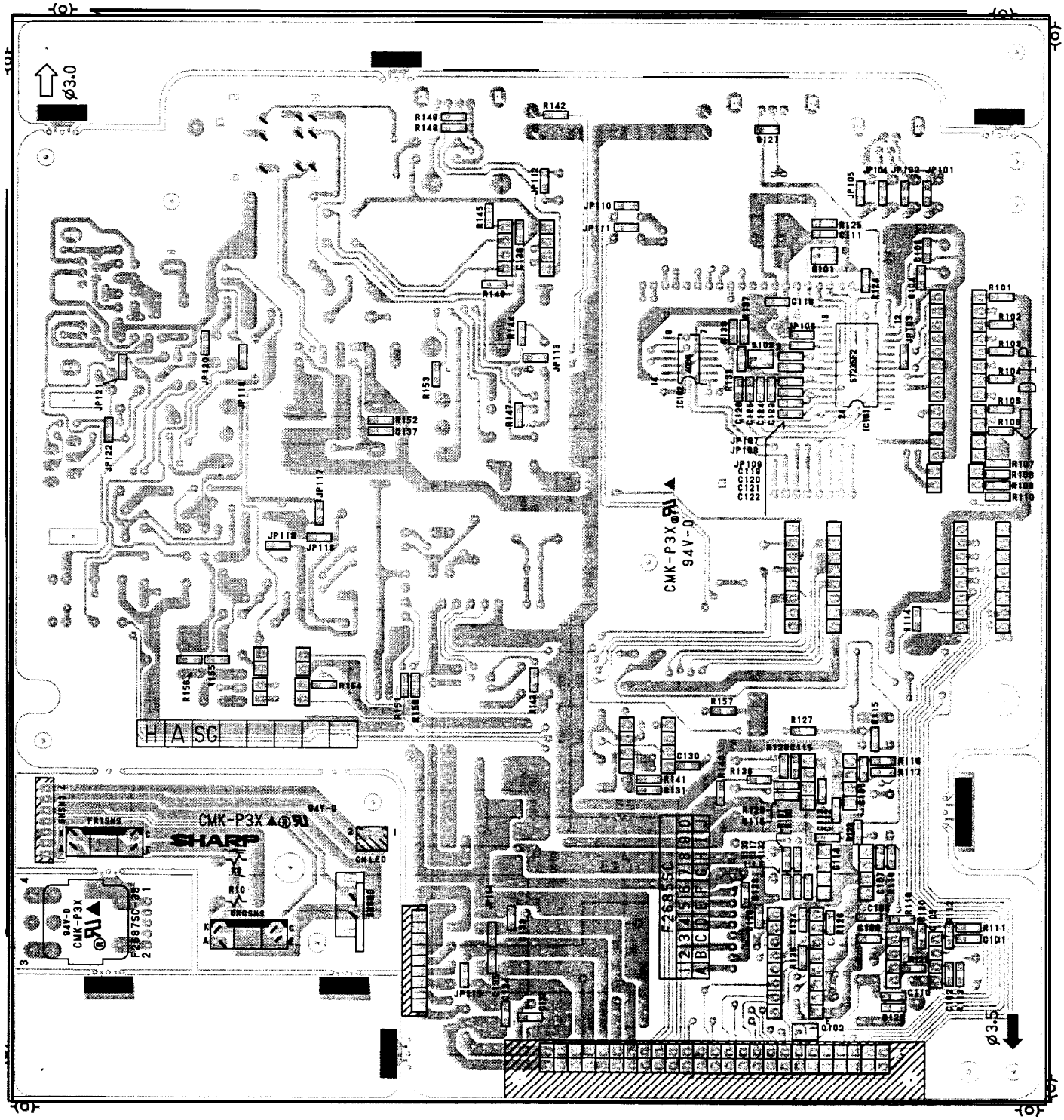

[3] Speech circuit

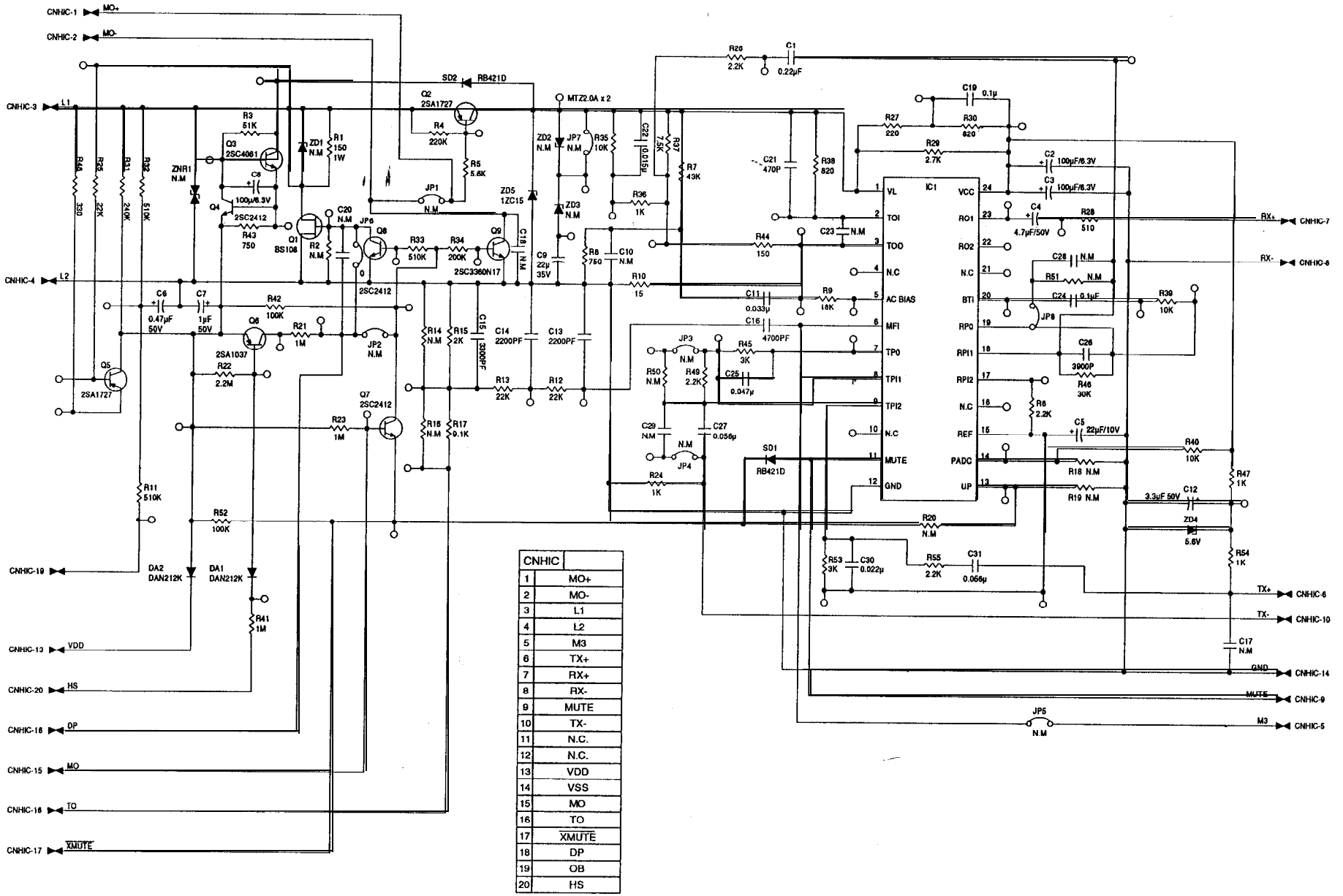

CNHIC	
1	MO+
2	MO-
3	L1
4	L2
5	M3
6	TX+
7	RX+
8	RX-
9	MUTE
10	TX-
11	N.C.
12	N.C.
13	VDD
14	VSS
15	MO
16	TO
17	XMUTE
18	DP
19	OB
20	HS

Speech PWB parts layout

[Top side]

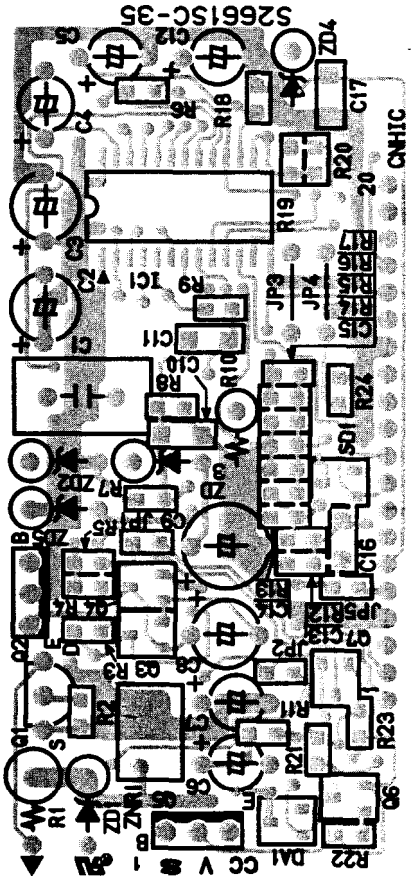

[Bottom side]

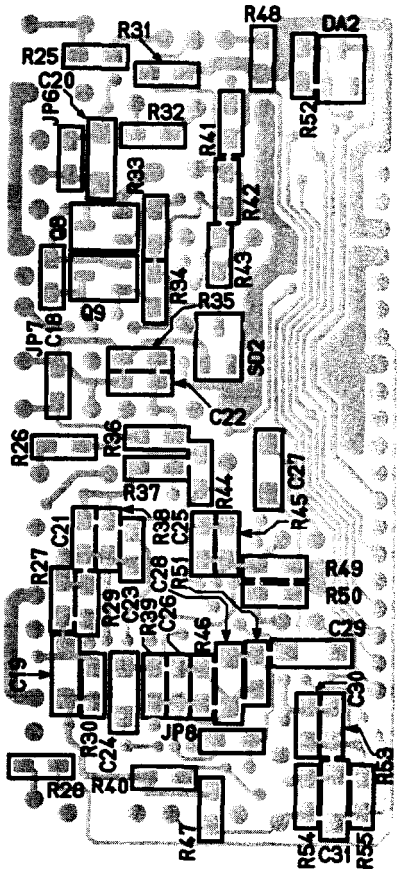

[4] Power supply circuit

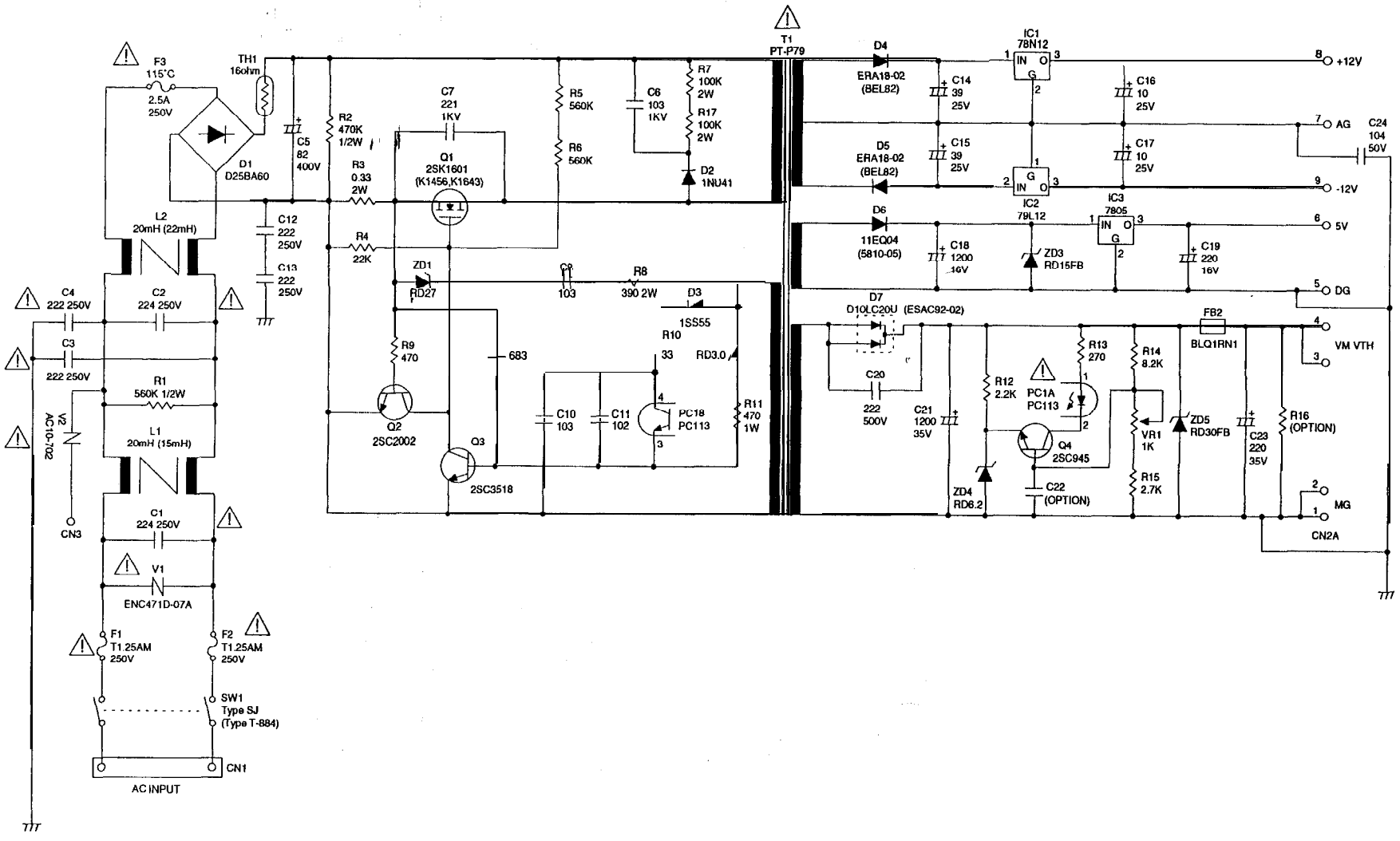

NOTE:
⚠ These marks are all safety-ciritial parts.

Power supply PWB parts layout

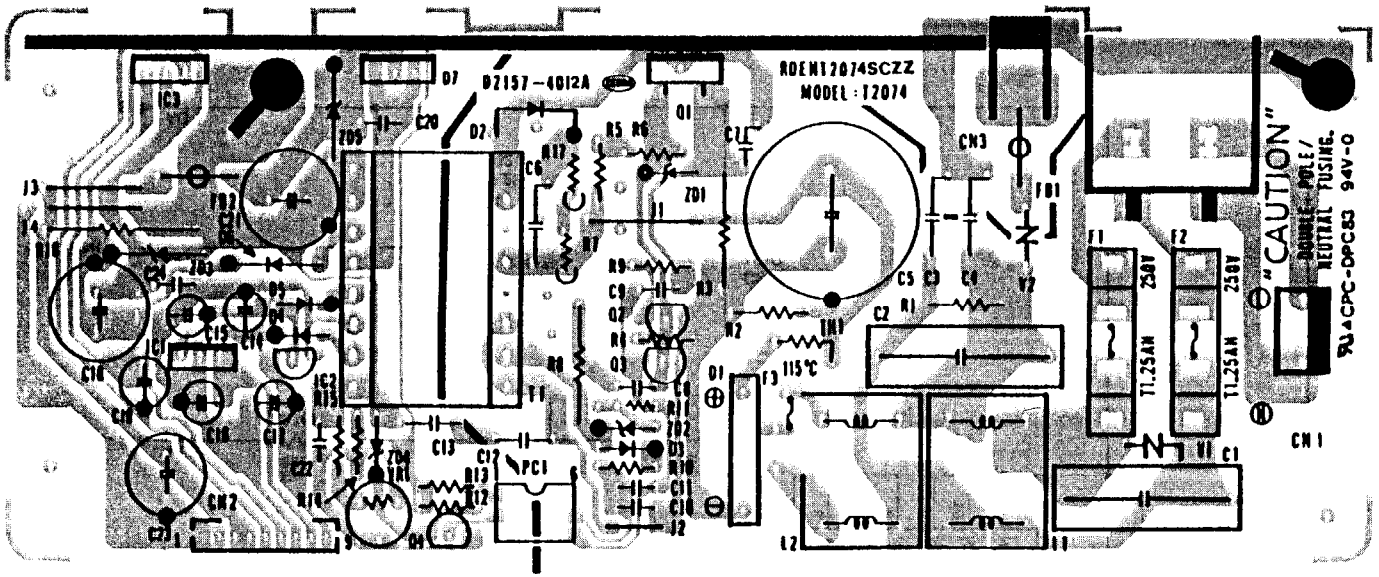

[5] CCD circuit

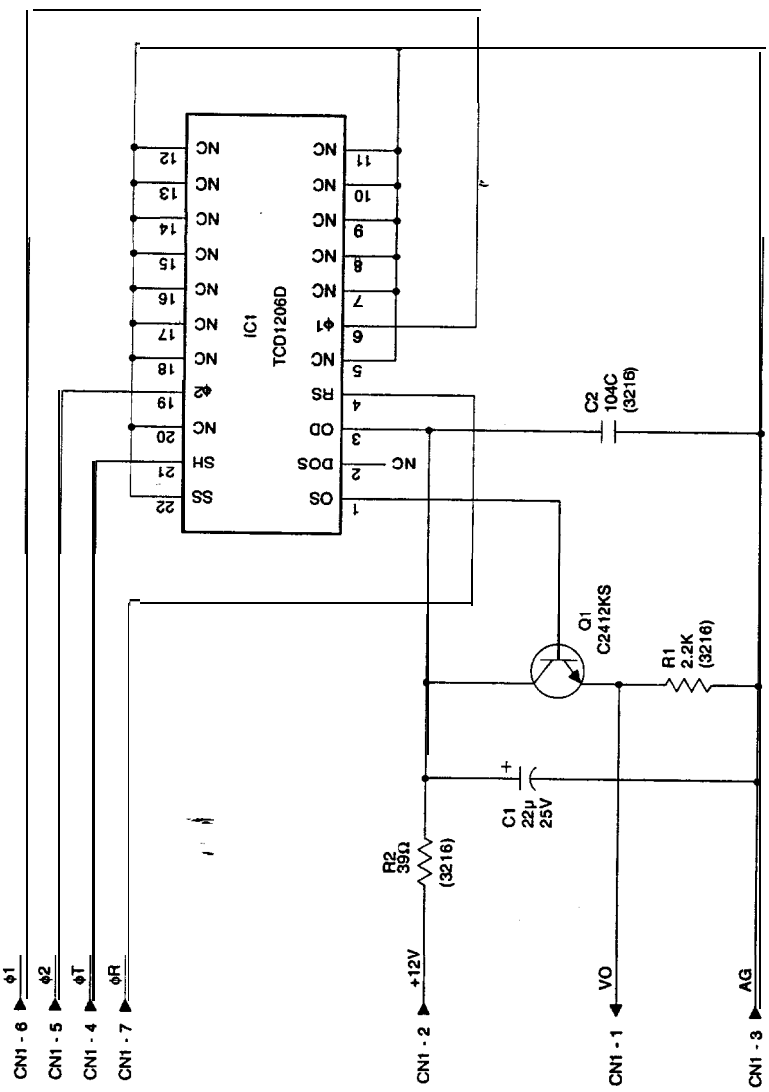

CN1	
1	VO
2	+12V
3	AG
4	φT
5	φ2
6	φ1
7	φR

CCD PWB parts layout

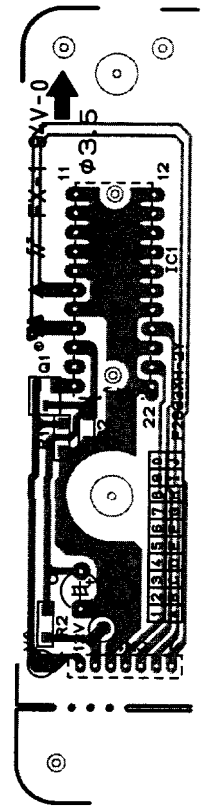

[6] Operation panel circuit

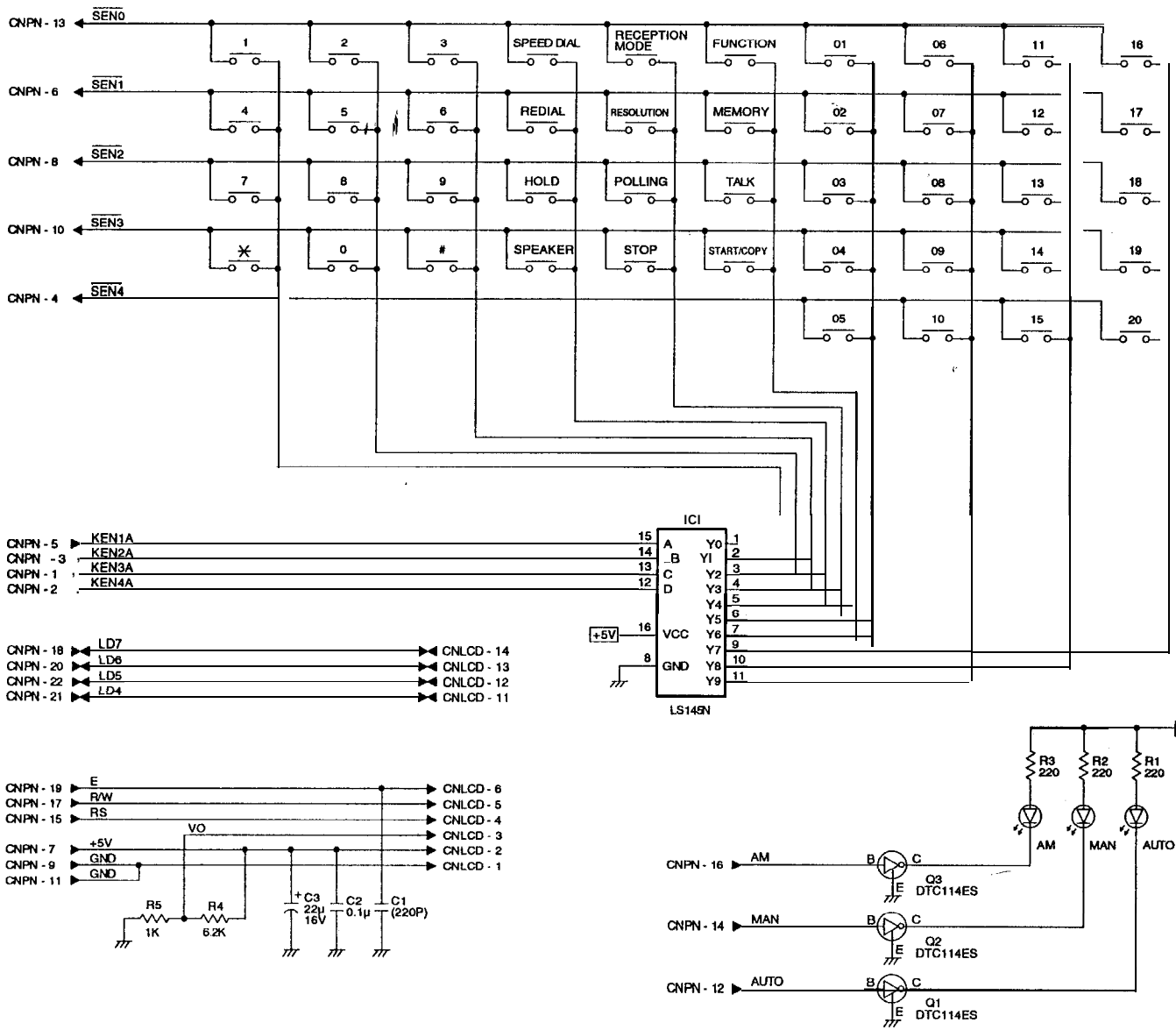

CNLCD	LCD cable
1	GND
2	+5V
3	VO
4	RS
5	R/W
6	E
7	N.C
8	N.C
9	N.C
10	N.C
11	LD4
12	LD5
13	LD6
14	LD7

CNPN	DF11-22DP-2DS		
KEN3A	1	2	KEN4A
KEN2A	3	4	$\overline{SEN4}$
KEN1A	5	6	$\overline{SEN1}$
+5V	7	8	$\overline{SEN2}$
GND	9	10	$\overline{SEN3}$
GND	11	12	AUTO
$\overline{SEN0}$	13	14	MAN
RS	15	16	AM
R/W	17	18	LD7
E	19	20	LD6
LD4	21	22	LD5

Operation panel PWB parts layout

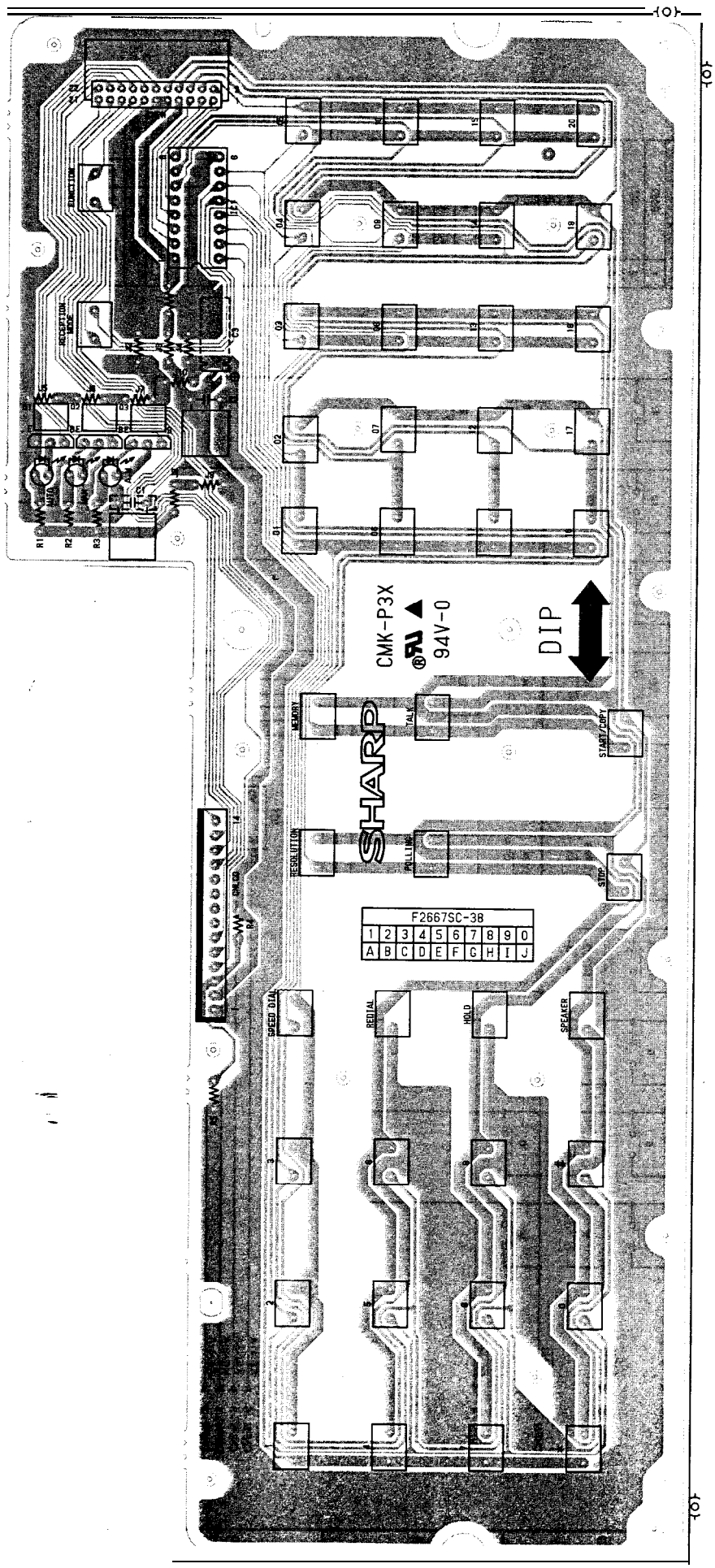

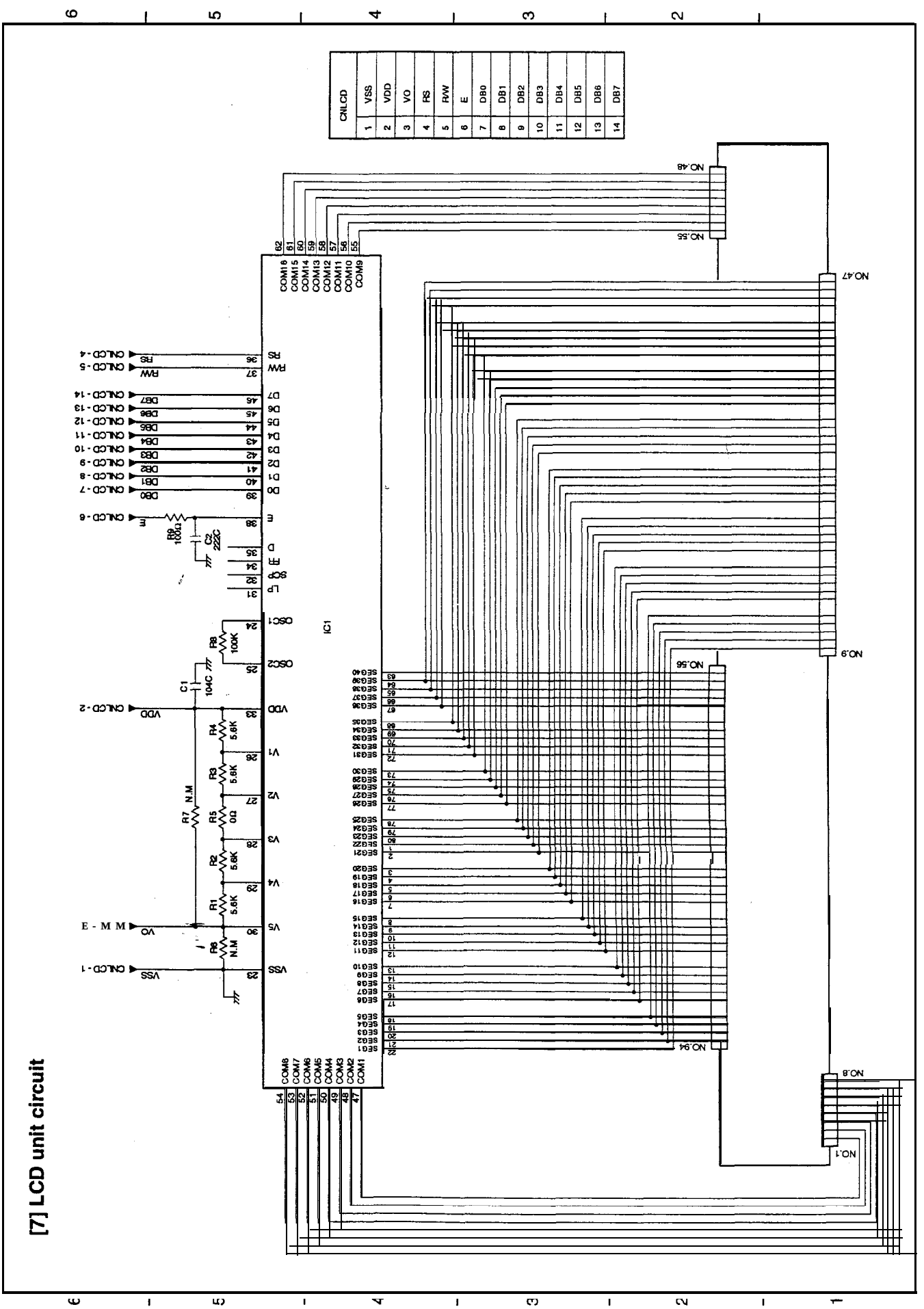

[7] LCD unit circuit

LCD PWB parts layout

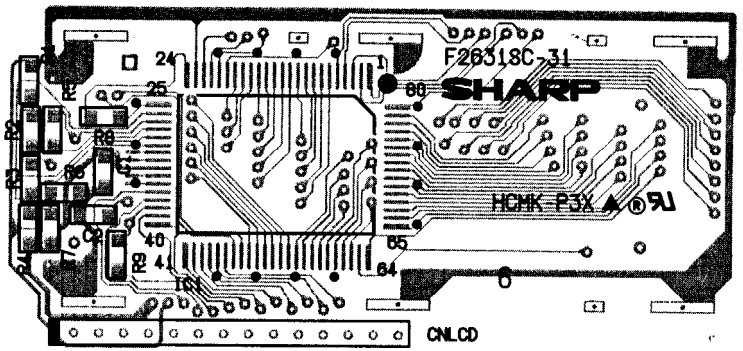

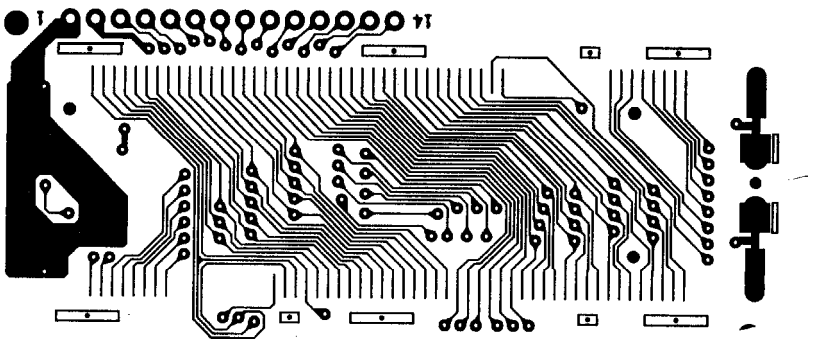

[8] Print unit circuit (1/3)

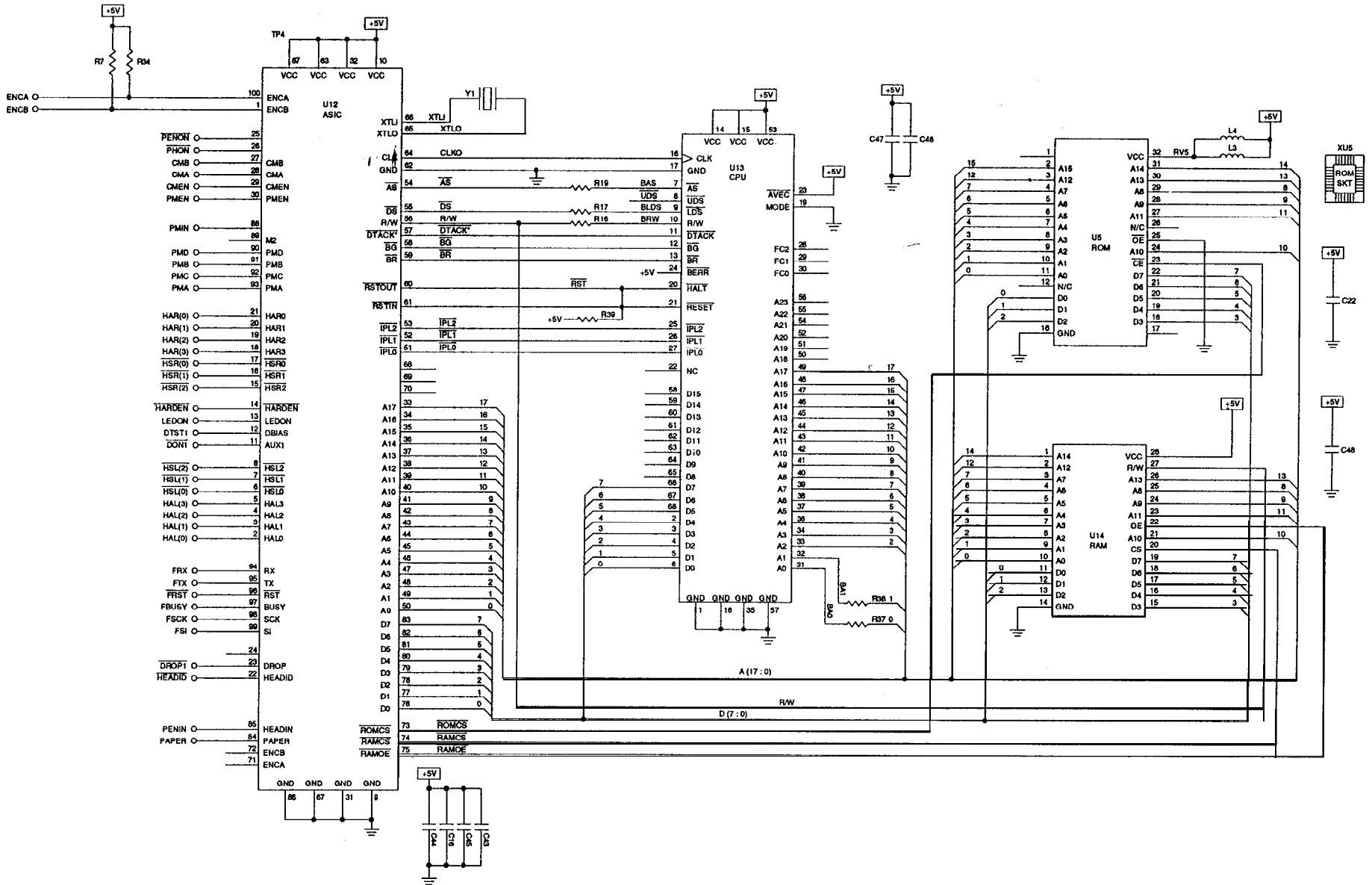

Print unit circuit (2/3)

2/3

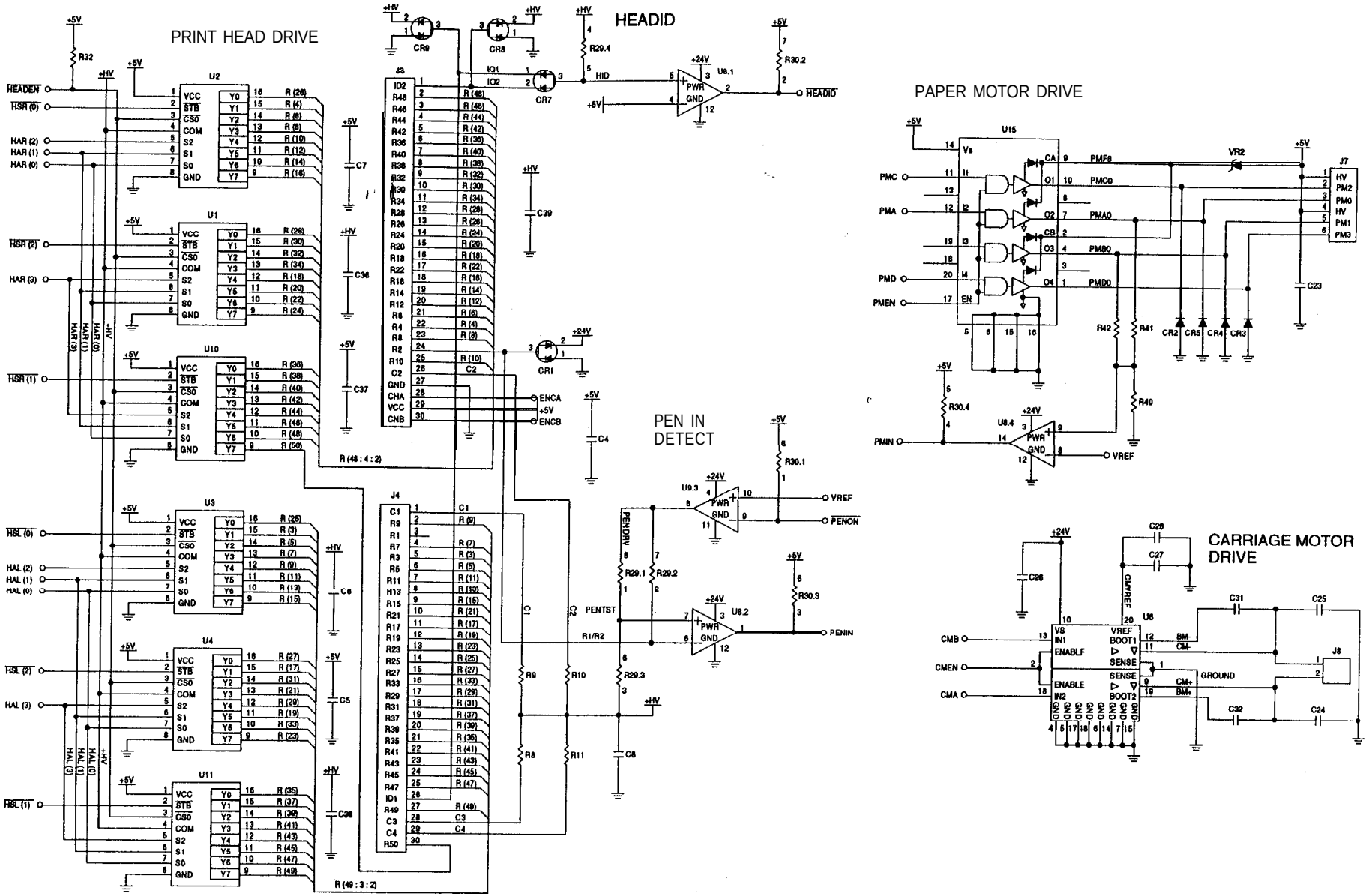

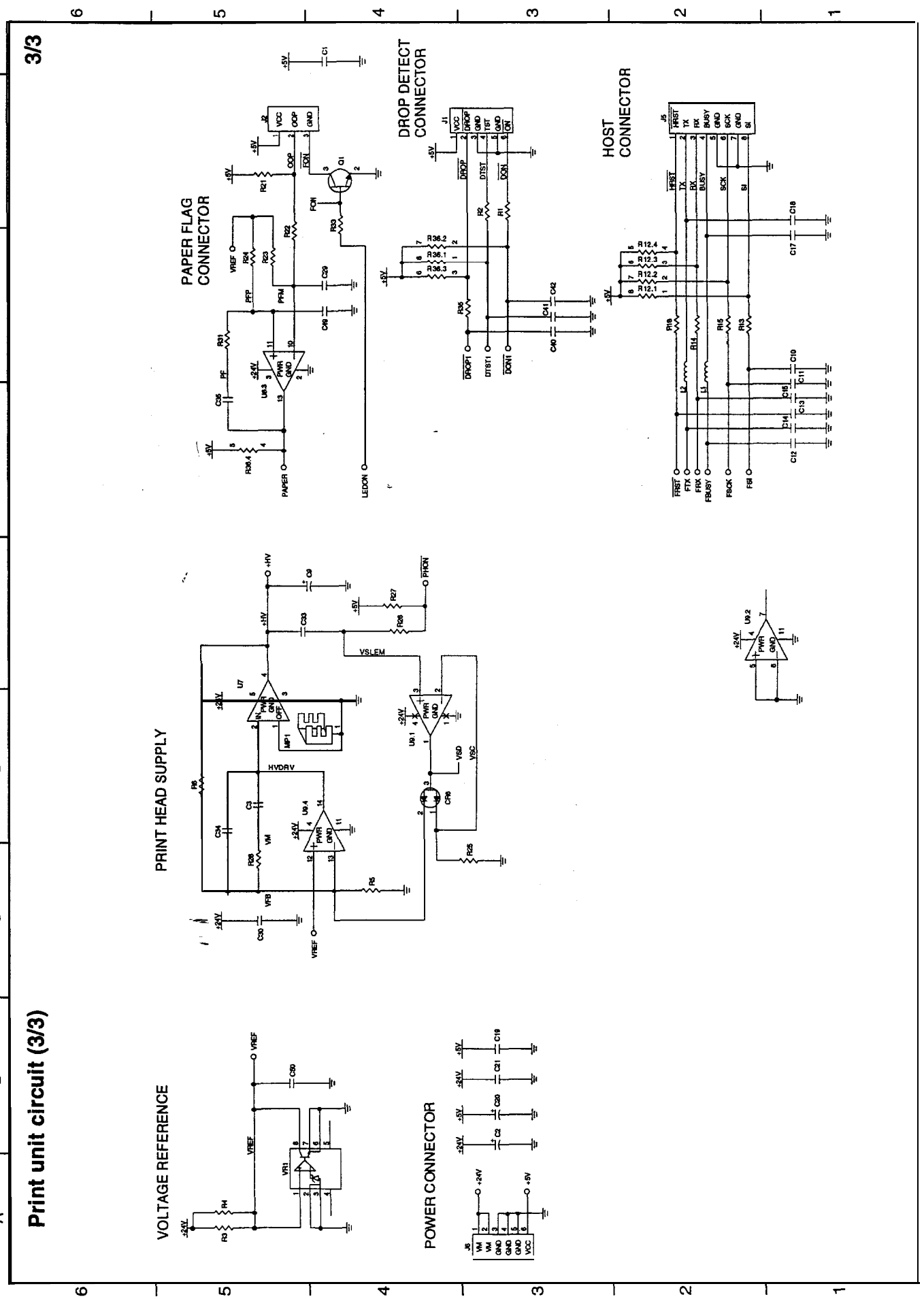
Print unit circuit (3/3)
3/3
PAPER FLAG CONNECTOR
DROP DETECT CONNECTOR
HOST CONNECTOR
PRINT HEAD SUPPLY
VOLTAGE REFERENCE
POWER CONNECTOR

Print PWB parts layout

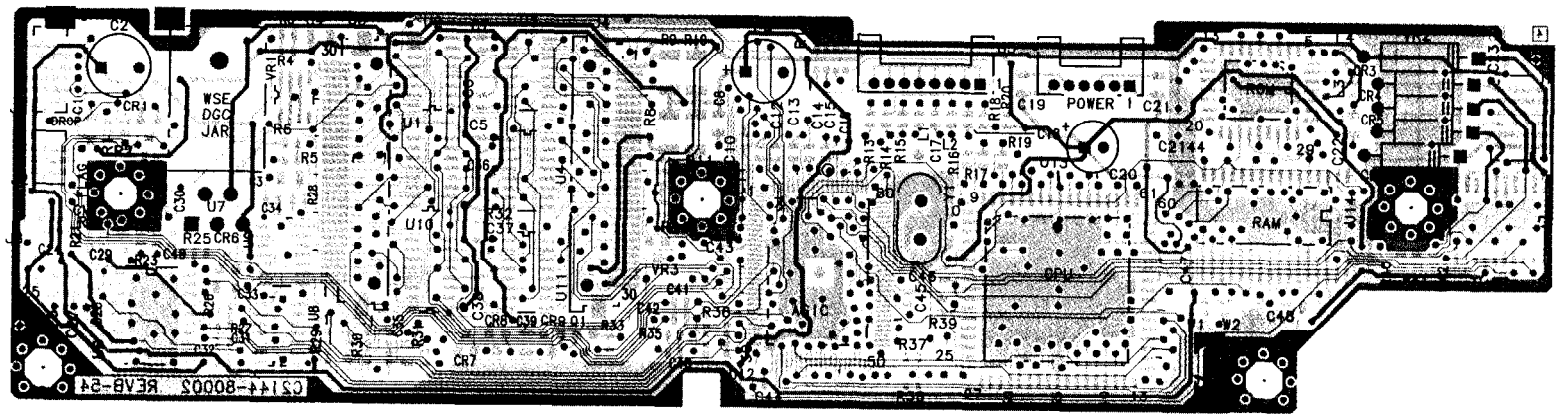

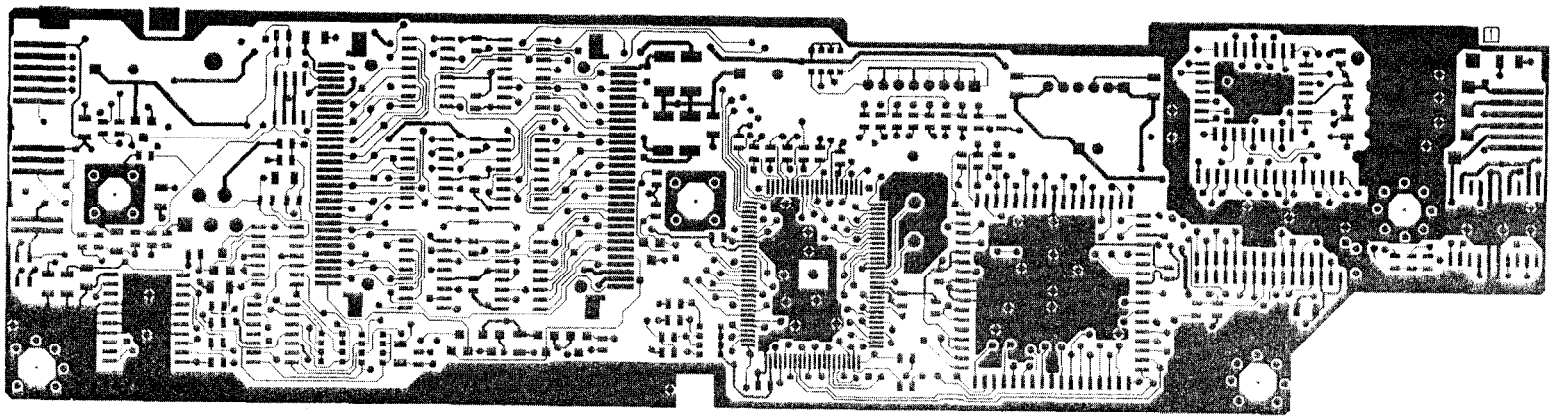

CHAPTER 7. OPERATION FLOWCHART

[1] Flow chart

FLOW-VE-1

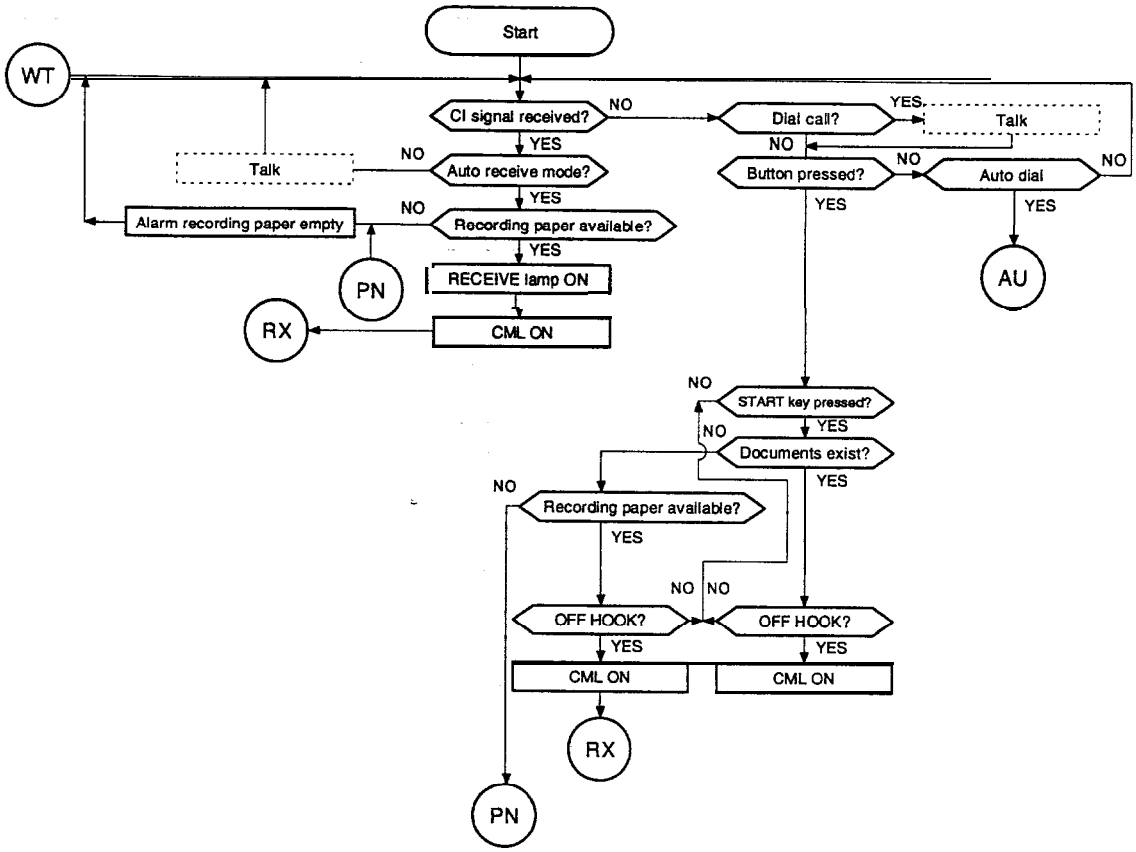

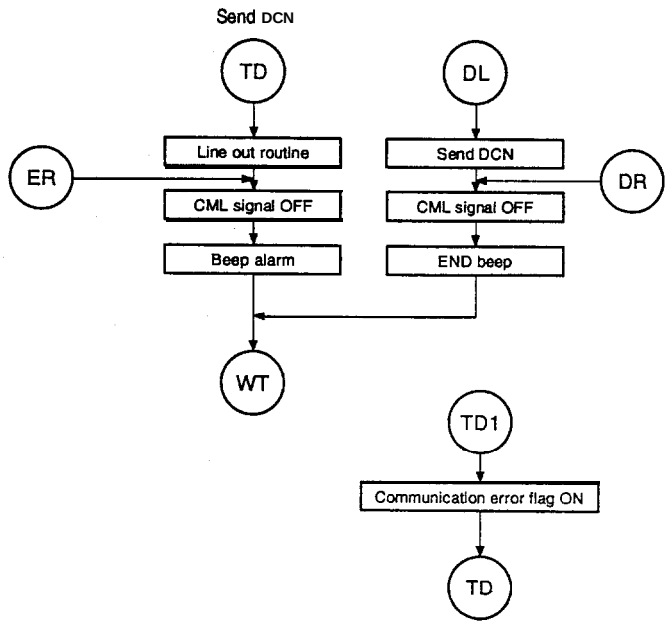

FLOW-VE-2

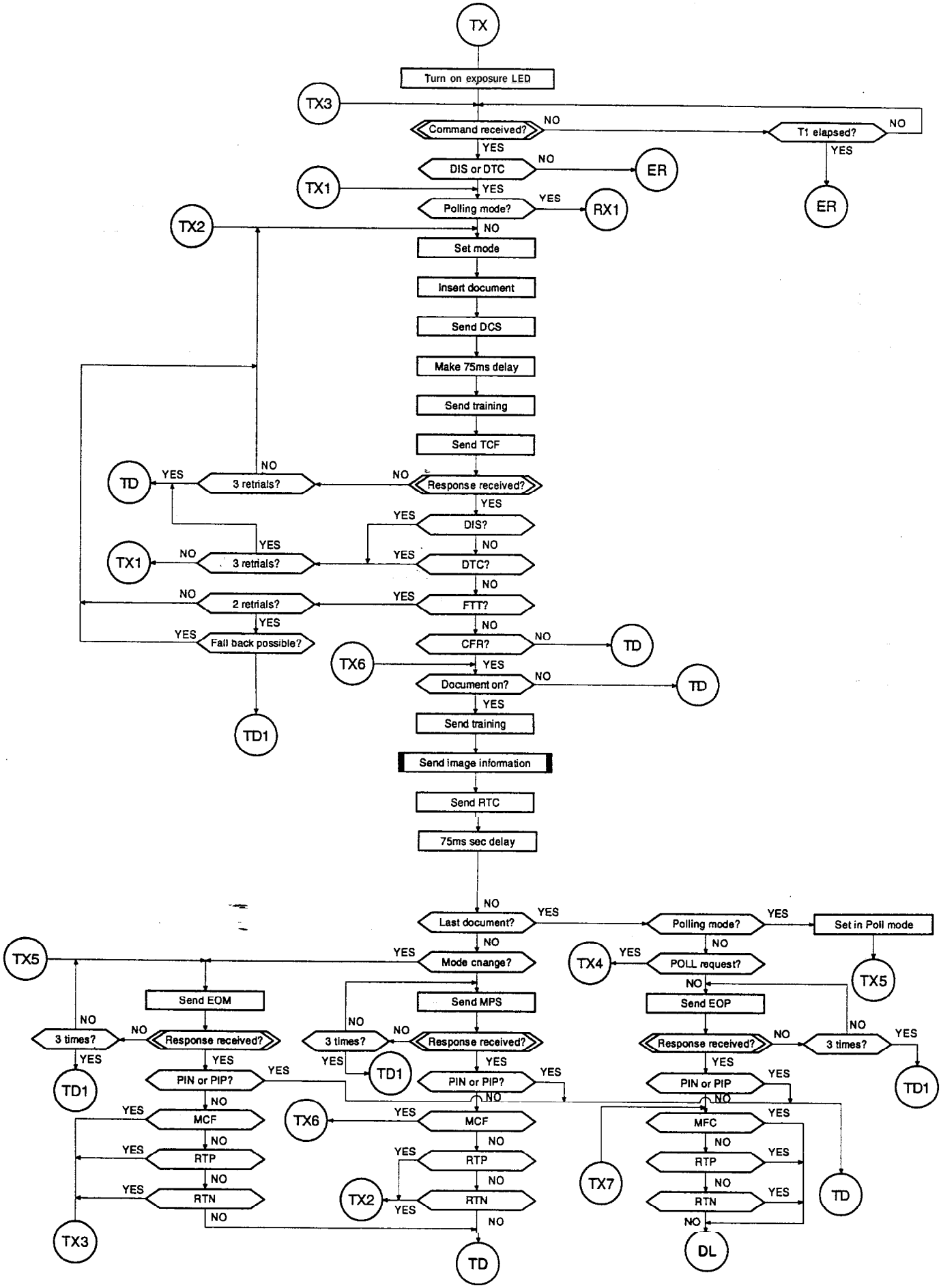
TX
Turn on exposure LED
TX3
Command received?
NO
T1 elapsed?
NO
YES
YES
DIS or DTC
NO
ER
TX1
YES
Polling mode?
YES
RX1
ER
TX2
NO
Set mode
Insert document
Send DCS
Make 75ms delay
Send training
Send TCF
TD
YES
3 retrials?
NO
NO
Response received?
YES
YES
DIS?
NO
TX1
NO
3 retrials?
YES
YES
DTC?
NO
NO
2 retrials?
YES
YES
FTT?
NO
YES
Fall back possible?
NO
CFR?
NO
TD
TX6
YES
Document on?
NO
TD
YES
TD1
Send training
Send image information
Send RTC
75ms sec delay
NO
Last document?
YES
Polling mode?
YES
Set in Poll mode
TX5
NO
YES
Mode change?
TX4
YES
POLL request?
TX5
NO
Send EOM
Send MPS
Send EOP
NO
NO
NO
3 times?
NO
Response received?
3 times?
NO
Response received?
NO
3 times?
YES
YES
YES
YES
YES
TD1
TD1
TD1
PIN or PIP?
YES
PIN or PIP?
YES
PIN or PIP
YES
NO
NO
NO
YES
MCF
TX6
YES
MCF
YES
MFC
NO
NO
NO
YES
RTP
YES
RTP
YES
RTP
NO
NO
NO
YES
RTN
TX2
YES
RTN
YES
RTN
TX7
TD
NO
NO
NO
TX3
TD
DL

FLOW-VE3

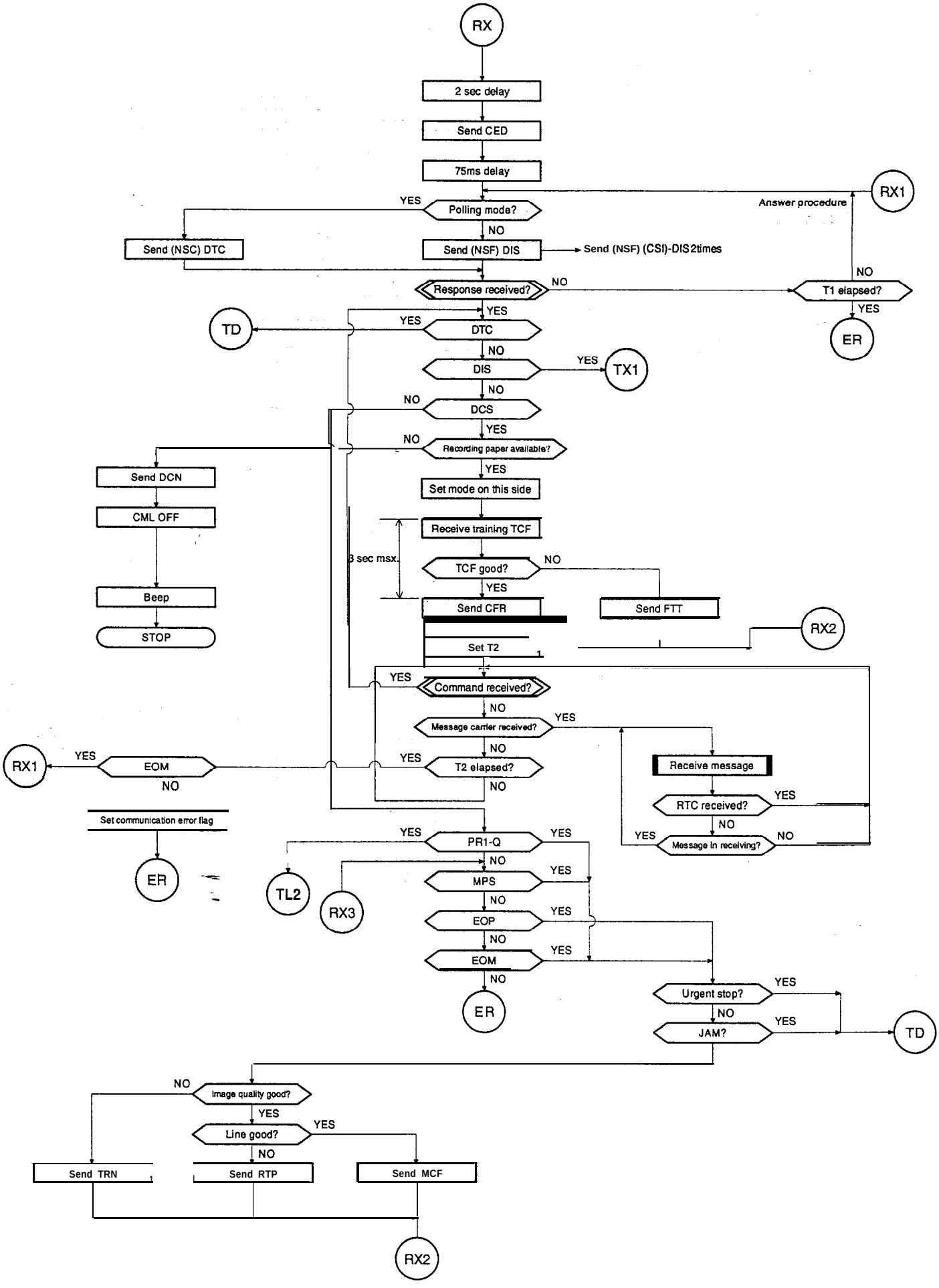
RX
2 sec delay
Send CED
75ms delay
RX1
Answer procedure
YES
Polling mode?
NO
Send (NSC) DTC
Send (NSF) DIS
Send (NSF) (CSI)-DIS2times
NO
Response received?
NO
T1 elapsed?
YES
ER
TD
YES
DTC
NO
DIS
YES
TX1
NO
DCS
NO
YES
Recording paper available?
YES
Send DCN
Set mode on this side
CML OFF
Receive training TCF
3 sec msx.
Beep
TCF good?
NO
STOP
YES
Send CFR
Send FTT
RX2
Set T2
YES
Command received?
NO
Message carrier received?
YES
RX1
YES
EOM
NO
YES
T2 elapsed?
NO
Receive message
YES
RTC received?
NO
YES
Message in receiving?
NO
Set communication error flag
ER
YES
PR1-Q
YES
NO
TL2
RX3
MPS
YES
NO
EOP
YES
NO
EOM
YES
NO
ER
YES
Urgent stop?
NO
YES
JAM?
TD
NO
Image quality good?
YES
YES
Line good?
NO
Send TRN
Send RTP
Send MCF
RX2

FLOW-VE-4

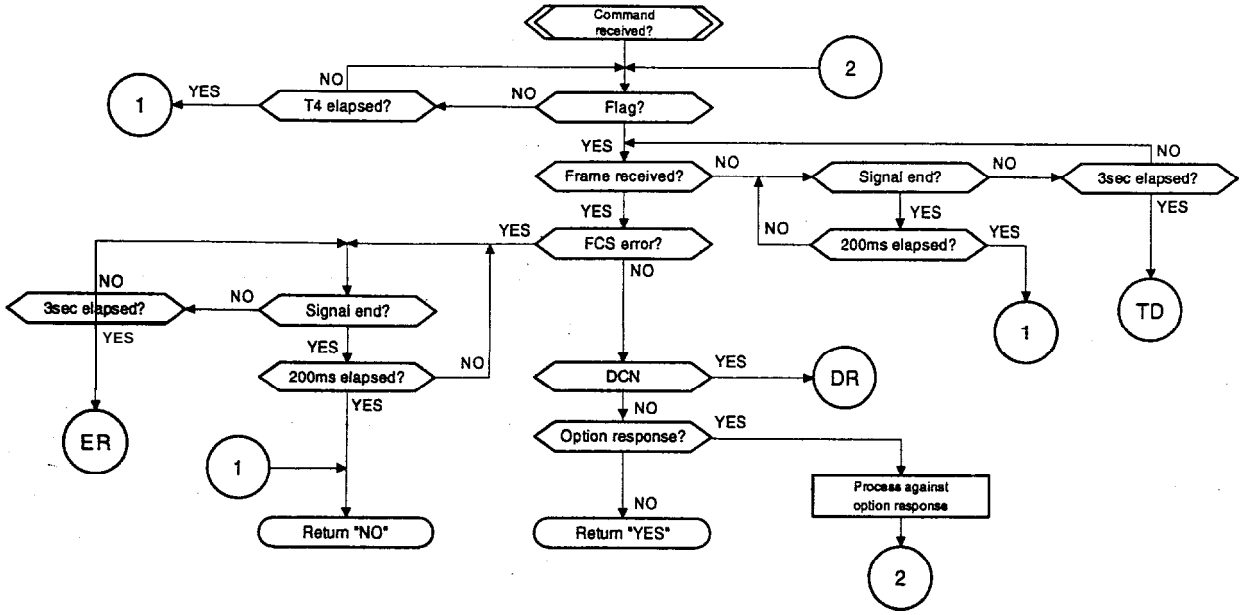
Command received?
2
NO
1
YES
T4 elapsed?
NO
Flag?
YES
Frame received?
NO
Signal end?
NO
3sec elapsed?
NO
YES
YES
YES
FCS error?
NO
200ms elapsed?
YES
1
TD
NO
3sec elapsed?
NO
Signal end?
YES
YES
200ms elapsed?
NO
YES
ER
1
Return "NO"
DCN
YES
DR
NO
Option response?
YES
Process against option response
NO
Return "YES"
2

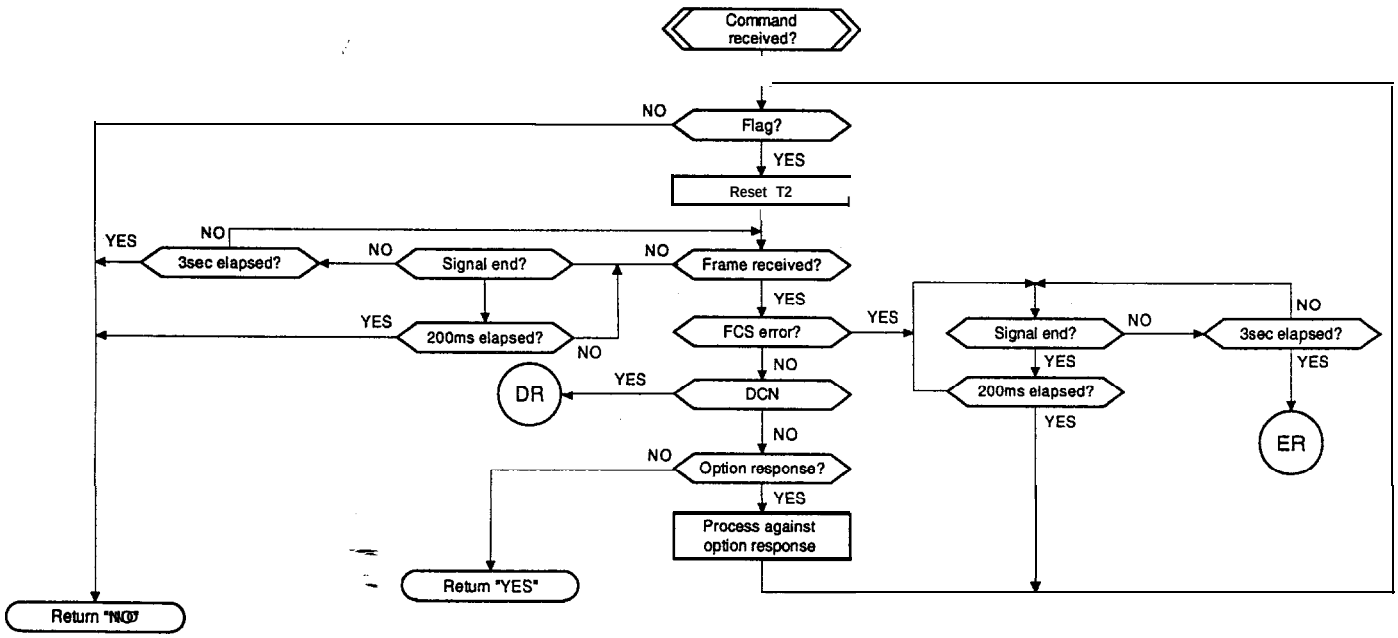
Command received?
NO
Flag?
YES
Reset T2
YES
NO
3sec elapsed?
NO
Signal end?
NO
Frame received?
YES
YES
200ms elapsed?
NO
FCS error?
YES
Signal end?
NO
3sec elapsed?
NO
YES
YES
200ms elapsed?
YES
ER
NO
DR
YES
DCN
NO
NO
Option response?
YES
Process against option response
Return "YES"
Return "NO"

FLOW-VE-11

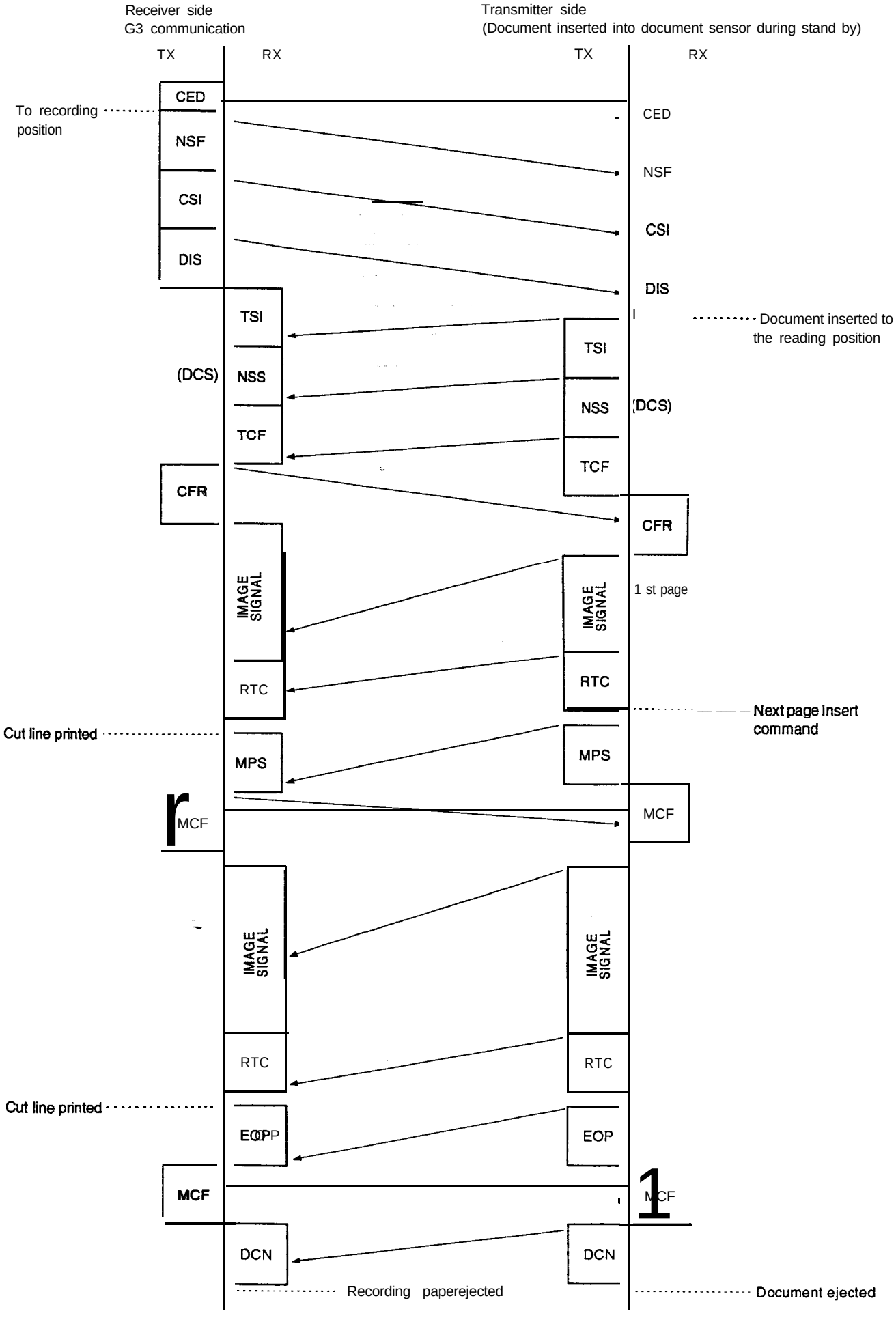
Receiver side
G3 communication
Transmitter side
(Document inserted into document sensor during stand by)
TX
RX
TX
RX
To recording position
CED
NSF
CSI
DIS
CED
NSF
CSI
DIS
Document inserted to the reading position
TSI
NSS
TCF
(DCS)
TSI
NSS
TCF
(DCS)
CFR
CFR
IMAGE SIGNAL
RTC
IMAGE SIGNAL
RTC
1 st page
Next page insert command
Cut line printed
MPS
MPS
MCF
MCF
IMAGE SIGNAL
RTC
IMAGE SIGNAL
RTC
Cut line printed
EOP
EOP
MCF
MCF
DCN
DCN
Recording paperejected
Document ejected

Auto dial sending

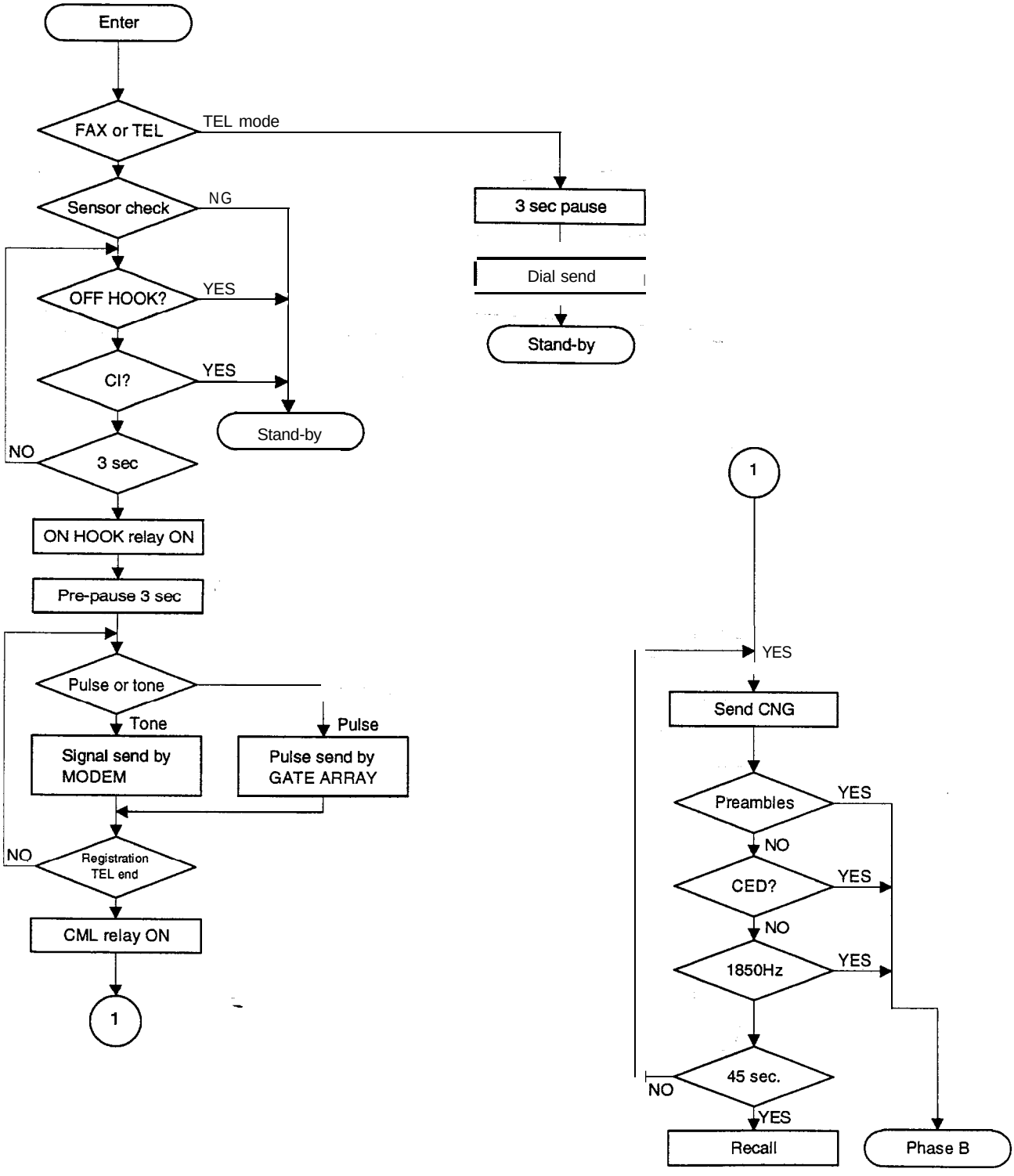

[2] Power on sequence

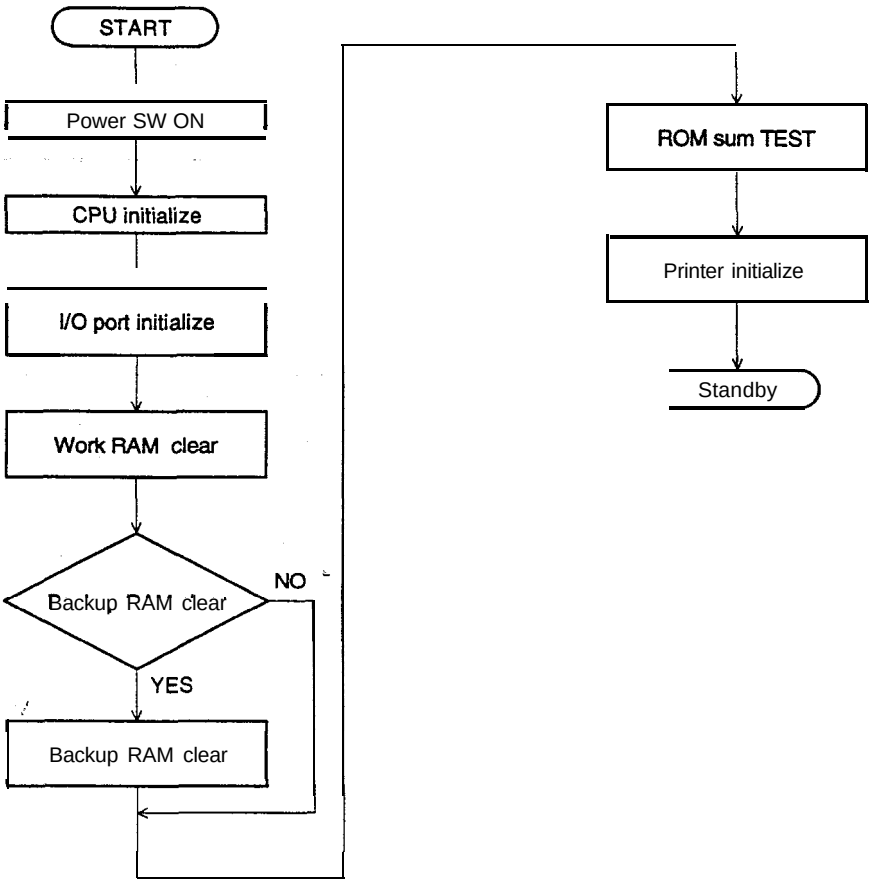

CHAPTER 8. OTHERS

[1] Service tools

1. List

NO.	PARTS CODE	DESCRIPTION	Q'TY	PRICE RANK
1	C P W B S 2 6 8 3 S C 0 3	Extension board unit	1	BX

2. Description

2-1. Extension board unit

FO-3700 series extension PWB unit connection

1) Remove the bottom ass'y from the body.

2) Connect the cables from the body with the extension PWB unit connectors (CNCCD1, CNSNS1, CNTXM1, CNPNL1, CNPI 1, CNPRT1, CNLED1, CNSP1, CNPH1) similarly with the control PWB and the TEL/LIU PWB unit. Fix the grounding cable to the bottom PWB with a screw.

(Note) When connecting the cables, check the color of the cables and the color of the connectors.

3) Pass the five cables which are provided for the extension PWB through "TEL LINE' and 'TEL SET' holes in the lower cabinet. Pass the four cables which are in the opposite side to the hook switch through the AC cord hole and the power switch hole, and fix the extension PWB.

4) Connect the extension cables which are in the rear of the body where the extension PWB has been installed with the bottom ass'y (the control PWB, the TEULIU PWB) as follows:

Extention PWB connection diagram

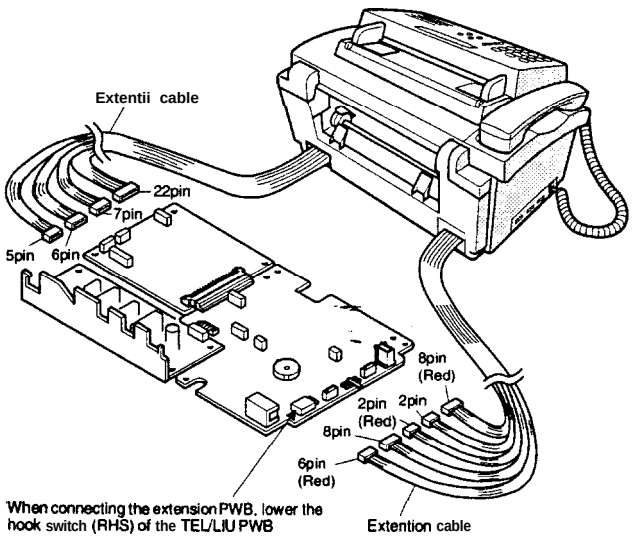

Cable parts code	Pin	Color	Connector	Remark
QCNW-4196SCZZ	22 Pin		CNPNL	Control PWB
QCNW-4197SCZZ	7 Pin		CNCCD	
QCNW-4198SCZZ	6 Pin		CNTXM	
QCNW-4199SCZZ	5 Pin		CNSNS	
QCNW-4200SCZZ	6 Pin	Red	CNPRT	TEL/LIU PWB
QCNW-4201SCZZ	8 Pin		CNPI	
QCNW-4202SCZZ	2 Pin	Red	CNLED	
QCNW-4203SCZZ	2 Pin		CNSP	
QCNW-4217SCZZ	8 Pin	Red	CNPH	

Extension board unit

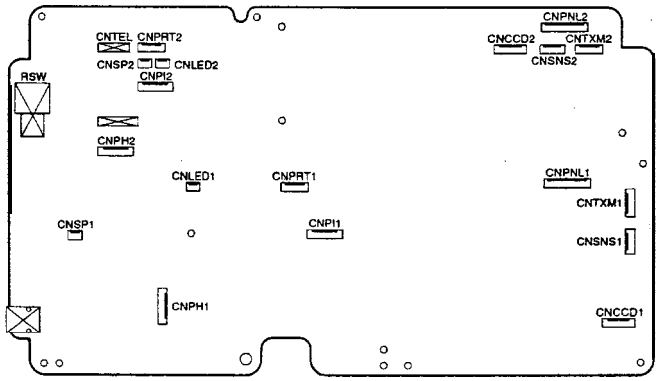

NO.	PARTS CODE	DESCRIPTION	Q'TY	PRICE RANK
1	QCNW-4196SCZZ	CABLE (CNPNL)	1	AU
2	QCNW-4197SCZZ	CABLE (CNCCD)	1	AK
3	QCNW-4198SCZZ	CABLE (CNTXM)	1	AH
4	QCNW-4199SCZZ	CABLE (CNSNS)	1	AH
5	QCNW-4200SCZZ	CABLE (CNPRT)	1	AK
6	QCNW-4201SCZZ	CABLE (CNPI)	1	AL
7	QCNW-4202SCZZ	CABLE (CNLED)	1	AE
8	QCNW-4203SCZZ	CABLE (CNSP)	1	AE
9	QCNW-4217SCZZ	CABLE (CNPH)	1	AK
10	QCNCM7014SC0G	CONNECTOR 7pin (CNCCD1, CNCCD2)	2	AB
11	QCNCM7014SC0E	CONNECTOR 5pin (CNSNS1, CNSNS2)	2	AB
12	QCNCM7014SC0F	CONNECTOR 6pin (CNTXM1, CNTXM2)	2	AB
13	QCNCM2389SC2B	CONNECTOR 22pin (CNPNL1, CNPNL2)	2	AE
14	QCNCM7014SC0H	CONNECTOR 8pin (CNPI1, CNPI2)	2	AB
15	QCNCM705FAF02	CONNECTOR 6pin (CNPRT1, CNPRT2)	2	AB
16	QCNCM7014SC0B	CONNECTOR 2pin (CNLED1, CNLED2)	2	AD
17	QCNCM2401SC0H	CONNECTOR 8pin (CNPH1, CNPH2)	2	AC
18	QCNCM2401SC0B	CONNECTOR 2pin (CNSP1, CNSP2)	2	AA
19	LPLTM2684SCZZ	Bottom plate	1	AR
20	XHBSD30P05000	Screw, 3 × 5mm	3	AA
21	QPWBS2683SCZZ	EXTENSION BOARD (WITHOUT PARTS)	1	BV

List of jigs used for disassembly and assembly of the ink jet printer

NO.	PARTS CODE	DESCRIPTION	a n	PRICE RANK
1	0JZC2144600003	Pen garage	1	BK
2	UKOGD2031SCZZ	Torx screwdriver (M2.5 x 5)	1	BQ
3	UKOGD2032SCZZ	Torx screwdriver (M3 x 8)	1	BQ
4	UKOGM2026SCZZ	Optical adjustment plate	1	BP

2-2. Scan optical system adjustment

(1) Outline

The adjustment procedures of the scan optical system are described below:

(2) Adjustment procedures

① Fully open the upper cabinet, remove fixing screws of the recording paper tray, and remove the recording paper tray.
In order to perform focus adjustment, remove the optical system unit from the frame.

② Install the scan adjustment jig to the optical system unit so that the pattern surface is in the lower side.

③ Fit the pin of the optical system adjustment jig with the hole in the optical system frame.

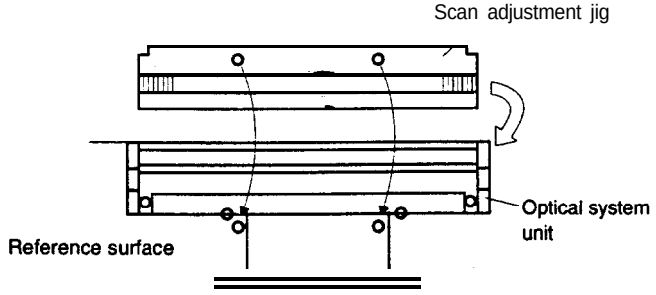

④ Use an oscilloscope to connect the control PWB VID (1 channel side), ϕT (2 channel side), and AG (GND).

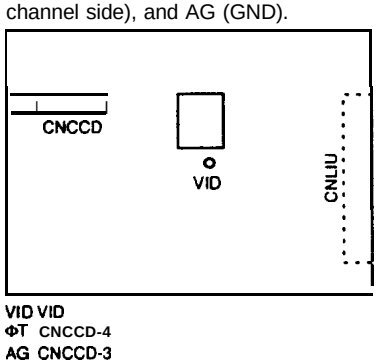

⑤ Supply power to the main body to light the LED in the LED array lighting mode Loosen the two red screws of the CCD to obtain VID signal waveform in synchronization with ϕT signal and adjust the CCD position so that the following waveform is obtained.

CCD waveform

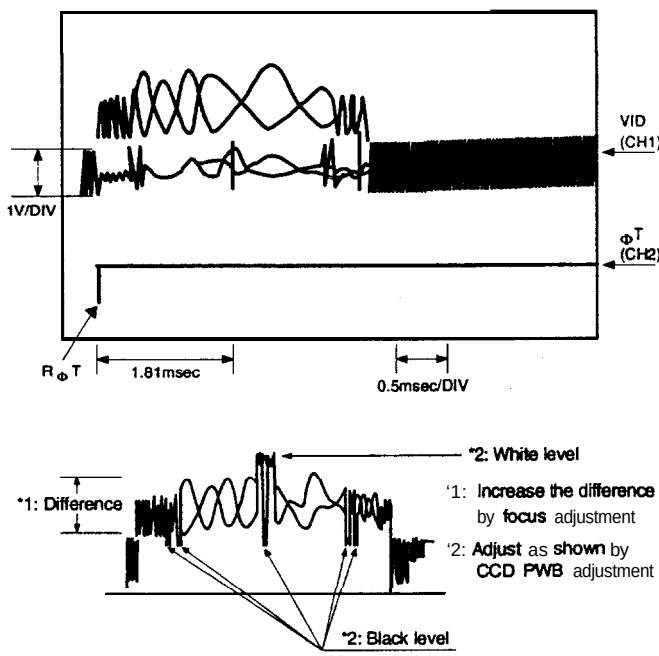

[CCD waveform model]

⑥ By adjusting the CCD PWB as shown above, focus is adjusted and scan line is aligned.
After completion of the CCD adjustment, tighten the two red screws and apply screw lock.

[2] IC signal name

VHIMC14066BF

Pin Arrangement

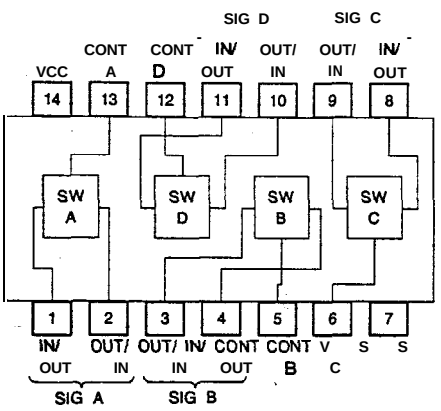

Equivalent circuit (One of the four blocks)

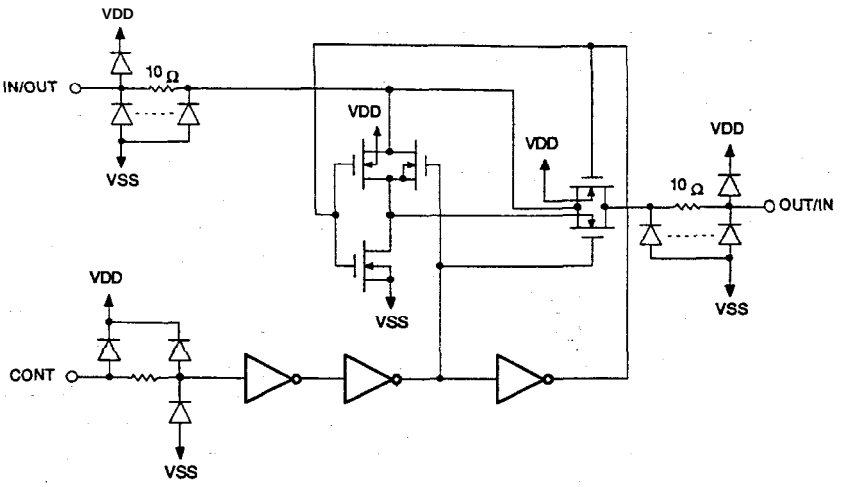

VHIPST600CMT1

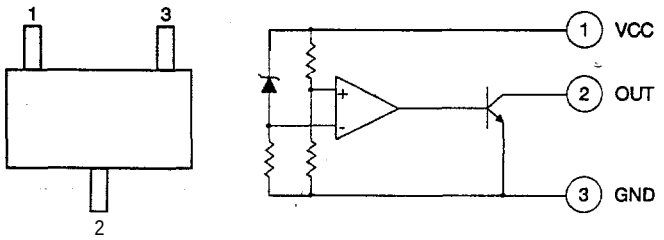

VHIMC34012-1P

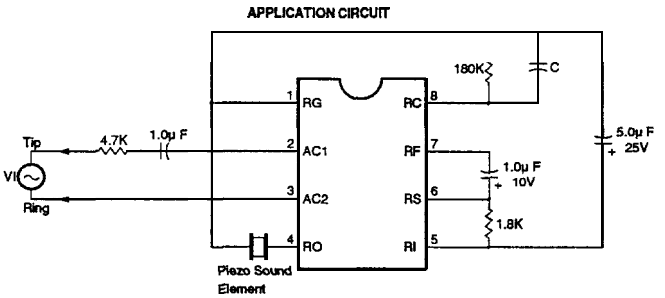

APPLICATION CIRCUIT PERFORMANCE

Characteristic	Typical Value	Units
Output Tone Frequencies MC3401 2-I Warble Frequency	 832/1040 13	 HZ
Output Voltage (VI>60Vrms,20Hz)	20	VP-P
Output Duty Cycle	50	%
Ringing Start Input Voltage (20Hz)	36	V n s
Ringing Stop Input Voltage (20Hz)	28	Vrms
Maximum AC Input Voltage (<68Hz)	150	Vrms
Impedance When Ringing VI=40Vrms,15Hz VI=130Vrms,23Hz	 20 10	K
Impedance When Not Ringing VI=10Vrms,24Hz VI=2.5Vrms,24Hz VI=10Vrms,5.0Hz VI=3.0Vrms,200~3200Hz	 28 >1.0 55 >1.0	 KΩ MΩ KΩ MΩ
Maximum Transient Input Voltage (T<2.0 ms)	1500	V

VHIULN2003AN/

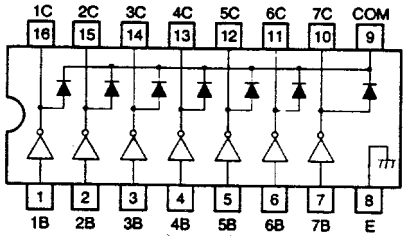

VHINJM4558D-1

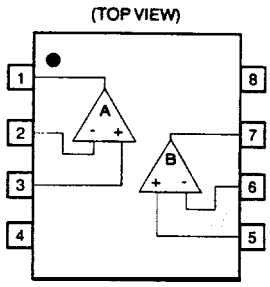

1. A OUTPUT
2. A-INPUT
3. A+INPUT
4. V-
5. B+INPUT
6. B-INPUT
7. B OUTPUT
8. V+

VHINJU4053D-1

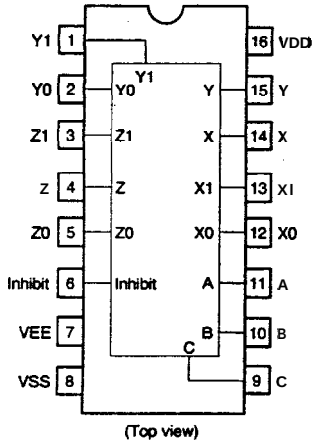

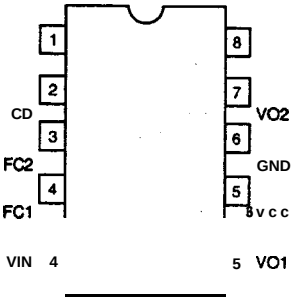

2M EP-ROM (VHI27C02012TI)

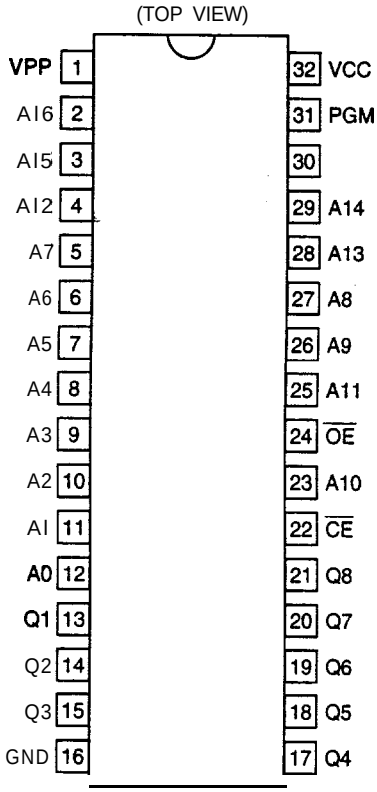

Pin name	Signal
A0~A17	Address input
$\overline{CE}$	Chip enable
$\overline{OE}$	Output enabel
$\overline{PGM}$	Program
VPP	+12V ~ -13V programming power
GND	Ground
Q1~Q8	Data output
vcc	+5V power

VHIMC34012-1P

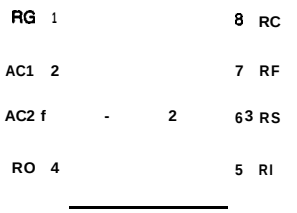

VHITA31065A-1

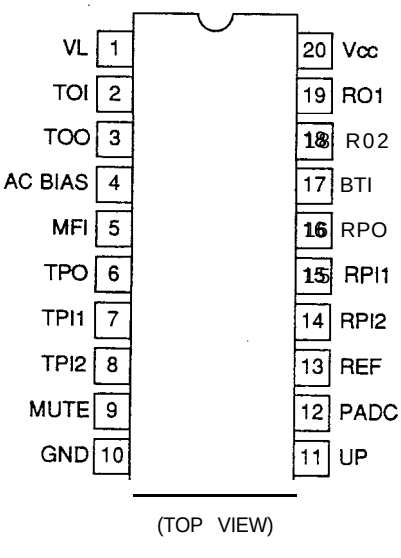

(TOP VIEW)

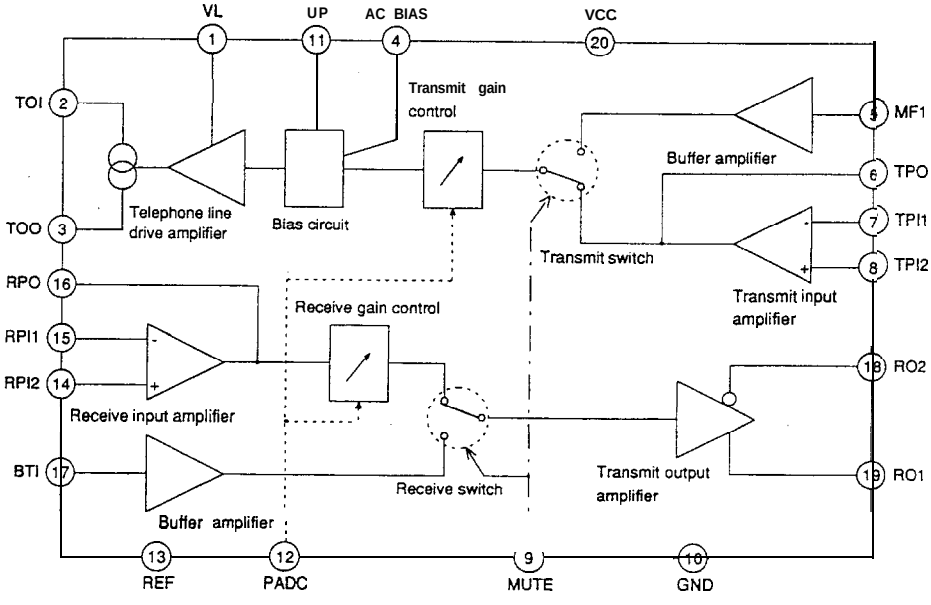

VHI64180ZSR08

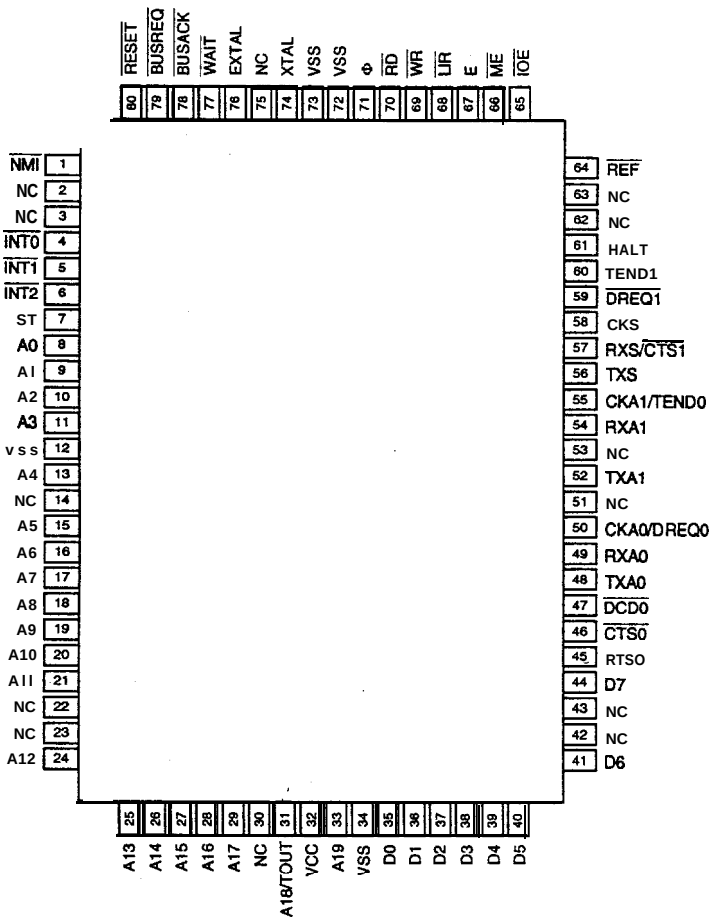

VHILB1730//-1

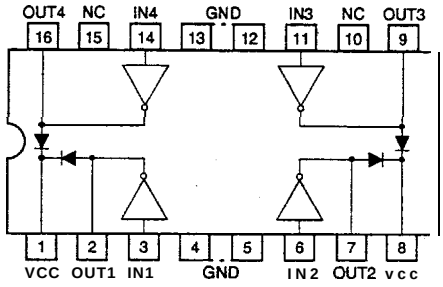

VHIMC74HC32F-

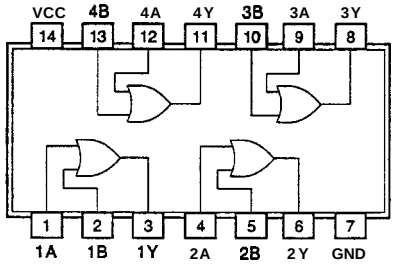

VHILM393PS/-S

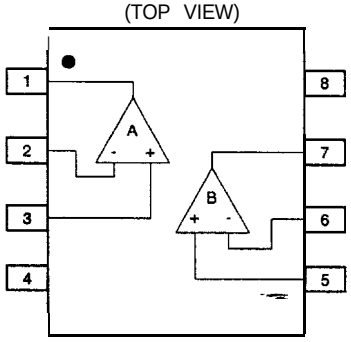

1. A OUTPUT
2. A-INPUT
3. A+INPUT
4. V-
5. B+INPUT
6. B-INPUT
7. B OUTPUT
8. v+

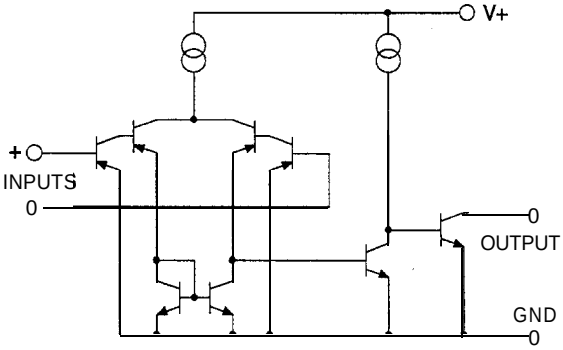

VHINJM4558MF-

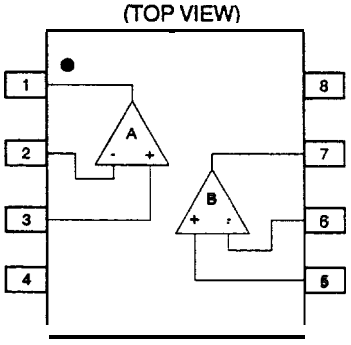

1. A OUTPUT
2. A-INPUT
3. A+INPUT
4. V-
5. B+INPUT
6. B-INPUT
7. B OUTPUT
8. V+

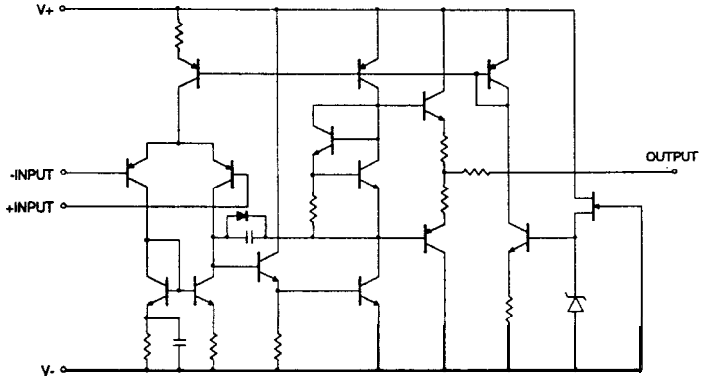

VHILH5268T410

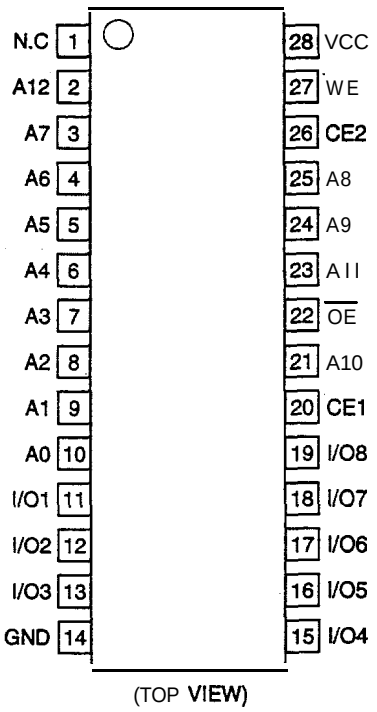

(TOP VIEW)

Pin name	Signal
A0~A12	Address input
$\overline{CE1}$/CE2	Chip enable
$\overline{WE}$	Write enable
$\overline{OE}$	Output enable
I/O1~I/O8	Data I/O
VCC	Power source
GND	Ground
N.C.	Non connection

VHINJU6355E-1

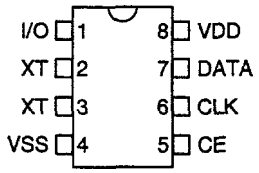

(TOP VIEW)

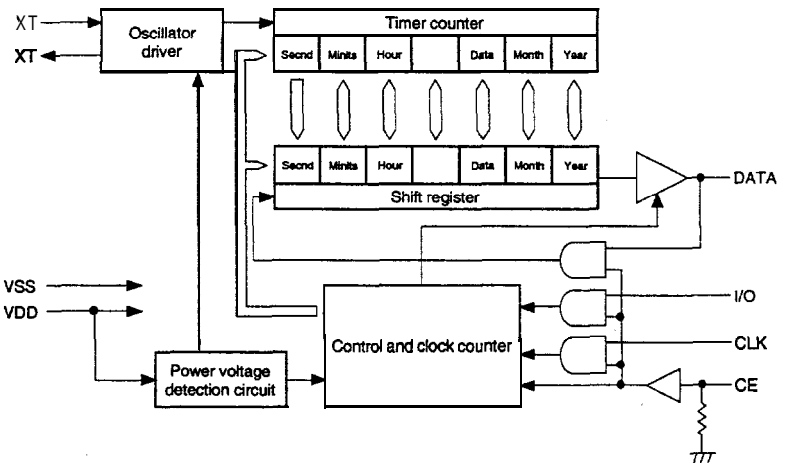

Io	Function	Description
1	I/$\overline{O}$	DATA pin I/O select pin "H" : Data input "L" : Tata output When,however, CE pin is in "L", DATA pin is in high impedance
2 3	XT XT	Crystal oscillator connection pin (f= 32.768KHz) For the capacity of Cg and Cd, refer to the series composition table
5	CE	Chip enable input pin (built-in pull-down resistor) "H" : DATA pin allows data input/output "L" : DATA pin is in high impedance
6	CLK	Clock input pin: Data are inputted or output in synchronization with this clock When, however, CE pin in "L", DATA pin is in high impedance
7	DATA	Serial timer data I/O pin I/O / CE / DATA pin H / H / Input L / H / Output H / L / High impedance L / L / High impedance
8 4	VDD VSS	Power pin +5V Power pin GND

VHIHM514800J8

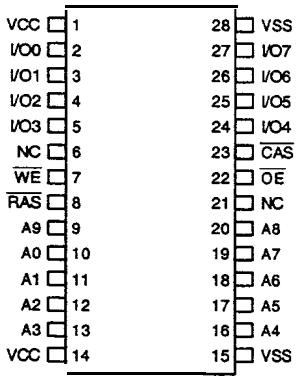

Pin descrption

Pin	Pin name
A0-A9	Address input (Low/Refresh A0-A3 Column A0-A3)
I/O0-I/O7	Data I/O
RAS	Low address strobe

Pin	Pin name
CAS	Column address strobe
WE	Read/Write input
OE	Output enable
VCC	Power (+5V)
VSS	Connection

Block diagram

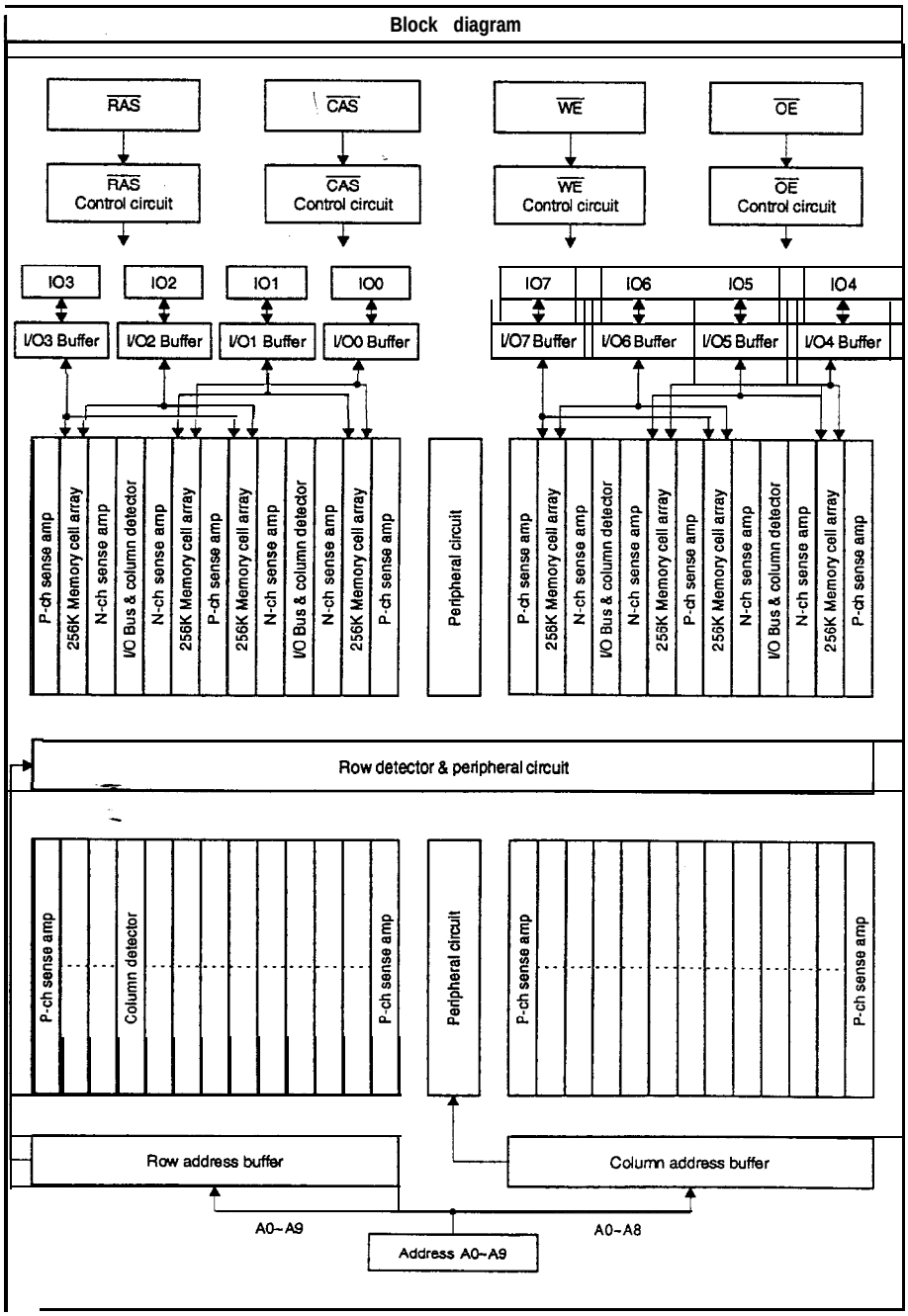

VHIM66333FP-1

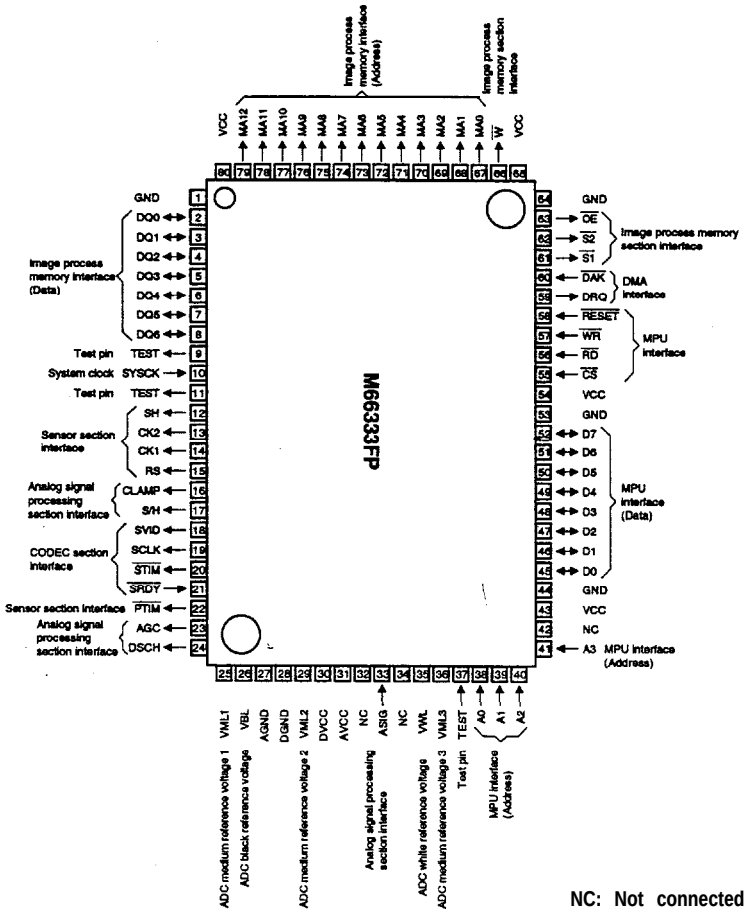

NC: Not connected

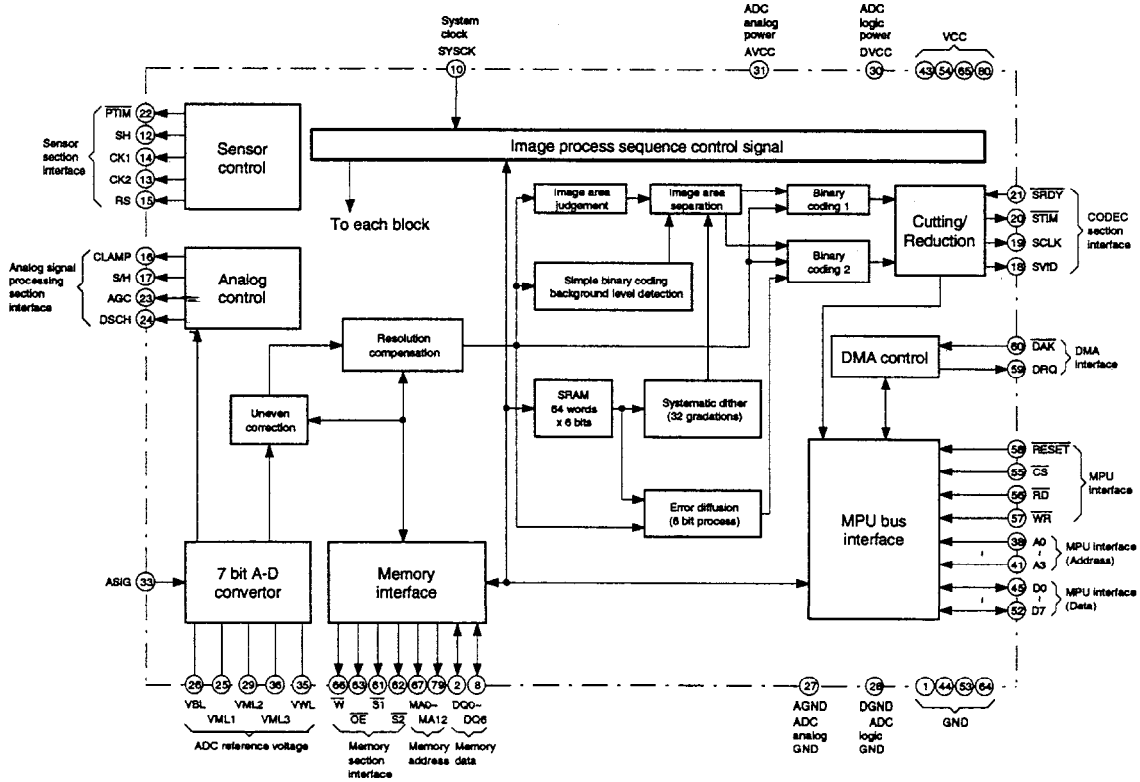

SHARP PARTS GUIDE

MODEL FO-3700

CONTENTS

1 Scanner mechanism

2 Upper cabinet, document guide upper

3 Print mechanism

4 Optical unit

5 Packing material & Accessories

6 Control PWB unit

7 Power supply PWB unit

8 TEL-Liu PWB unit

9 Panel PWB unit

10 Sensor PWB unit

11 CCD PWB unit

50 Hardware parts

■ Index

Because parts marked with "⚠" is indispensable for the machine safety maintenance and operation, it must be replaced with the parts specific to the product specification.

1 Scanner mechanism

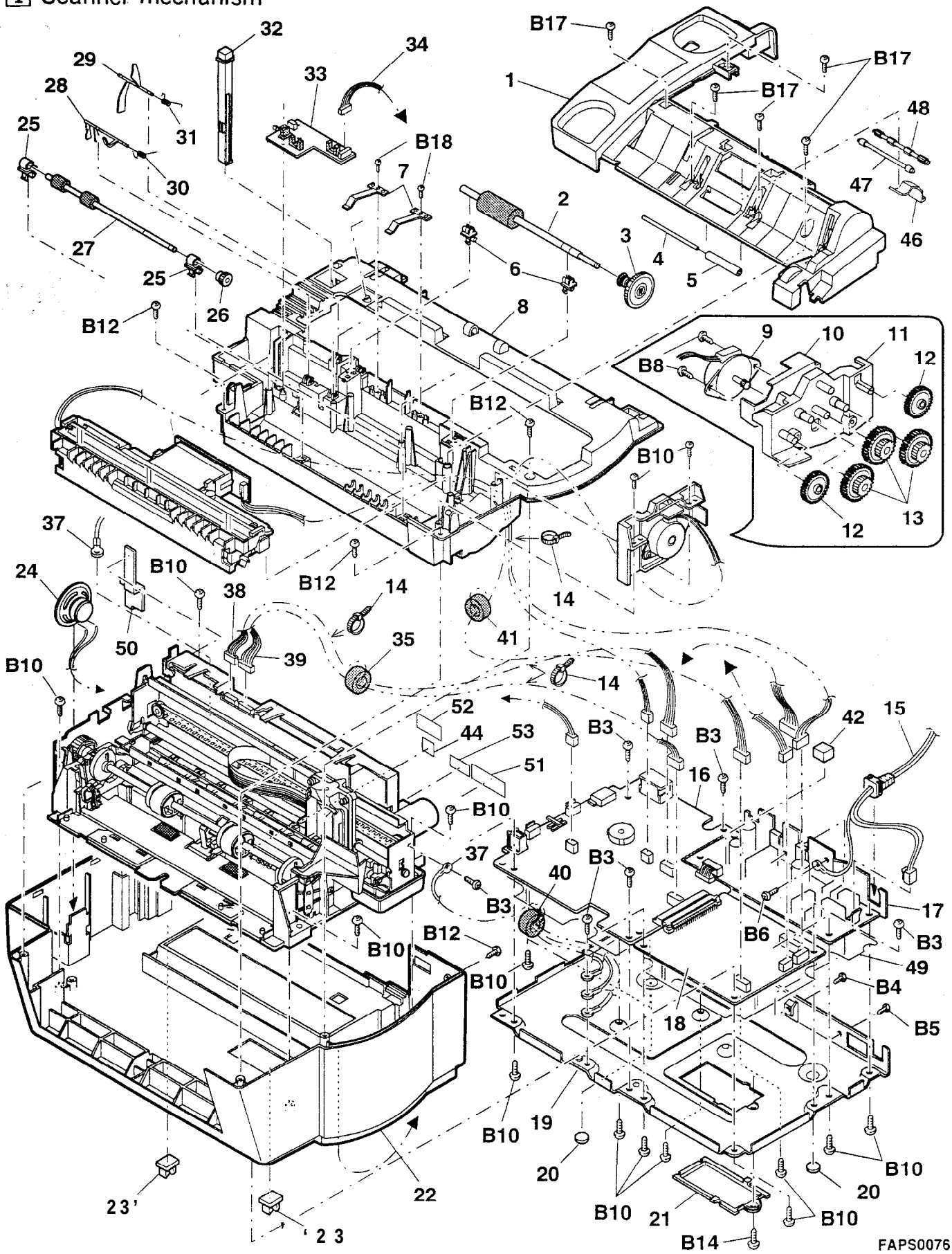

1 Scanner mechanism

NO.	PARTS CODE	PRICE RANK	NEW MARK	PART RANK	DESCRIPTION
⚠ 1	PGIDM2398SCZD	AU	N	C	Document guide lower
2	NRŌLR2285SCZZ	AM		C	Paper feed roller
3	NGERH2257SCZZ	AE		C	Paper feed gear 542
4	NSFTZ2249SCZZ	AS		C	Pinch roller shaft
5	NRŌLP2292SCZZ	AD		C	Pinch roller
6	NBRGP2138XHZZ	AD		C	Bearing
7	MSPRP2653SCZZ	AC		C	Pinch spring 1
⚠ 8	GCABC2233SCZB	BA		D	Middle cabinet
⚠ 9	RMŌTZ2109SCZZ	AX		B	Transfer motor
10	LPLTM2687SCZZ	AE		C	Heat sink
⚠ 11	LPLTP2677SCZZ	AH		C	Driving plate
12	NGERH2210XHZZ	AC		C	Idle gear 1
13	NGERH2240XHZZ	AC		C	Reduction gear
14	LBNDJ2006SCZZ	AA		C	Cable clamp (GT−100M)
⚠ 15	QACCL762ASCZZ	AW		B	AC cord
16	DCEKL346ASC32	BT	N	E	TEL−Liu PWB unit
⚠ 17	RDENT2074SCZZ	BN		E	Power supply PWB unit
18	DCEKC780FSCZZ	CA	N	E	Control PWB unit
19	LPLTM2684SCZZ	AR		C	Bottom plate
20	GLEGG2026SCZZ	AA		C	Rubber foot
⚠ 21	PCŌVH2098SCZZ	AD		C	ROM cover
⚠ 22	GCABB2231SCZB	BB	N	D	Lower cabinet
23	LHLDW2133SCZZ	AC		C	Wire holder (LWS−1M)
24	CCNW−4171SC01	AR		C	Speaker ass'y
25	NBRGP2141XHZZ	AH		C	Transfer bearing 2
26	NGERH2258SCZZ	AB		C	Transfer gear 182
27	NRŌLR2286SCZZ	AK		C	Transfer roller 2
28	MLEVP2169SCZZ	AC		C	Document SNS. lever
29	MLEVP2170SCZZ	AC		C	Front SNS. lever
30	MSPRD2671SCZZ	AB		C	Docu. SNS. lev. return spring
31	MSPRD2659SCZZ	AB		C	Fro. SNS. lev. return spring
32	MLEVP2165SCZB	AE		C	Hook sw. lever
33	DCEKS348ASC31	AW		E	Sensor PWB unit
⚠ 34	QCNW−4172SCZZ	AH		C	Sensor cable
⚠ 35	RCŌRF2068SCZZ	AG		C	Core (TR−25−15−8)
⚠ 37	QCNW−4173SCZZ	AC		C	PS earth cable
⚠ 38	QCNW−4167SCZZ	AH		C	PS cable
⚠ 39	QCNW−4168SCZZ	AG		C	PR signal cable
⚠ 40	RCŌRF2084SCZZ	AG		C	Core
⚠ 41	RCŌRF2063SCZZ	AE		C	Core (TRA20)
42	PSPAZ2181SCZZ	AB		C	PWB spacer
44	PSHEZ2880XHZZ	AK		C	Jack sheet
46	MSPRP2667SCZZ	AC		C	Feed roller fixed spring
47	NRŌLR2288SCZZ	AH		C	Feed roller
48	NRŌLP2289SCZZ	AE		C	Transmission roller
49	PSHEZ2980SCZZ	AM		C	Insulator
50	PSHEZ3002SCZZ	AD		C	Conceal sheet
⚠ 51	TLABS3420SCZZ	AB	N	D	AUSTEL label
⚠ 52	TLABS3421SCZZ	AB	N	D	NZ label
⚠ 53	TLABZ3418SCZZ	AB	N	D	TEL explanation label

2 Upper cabinet, document guide upper

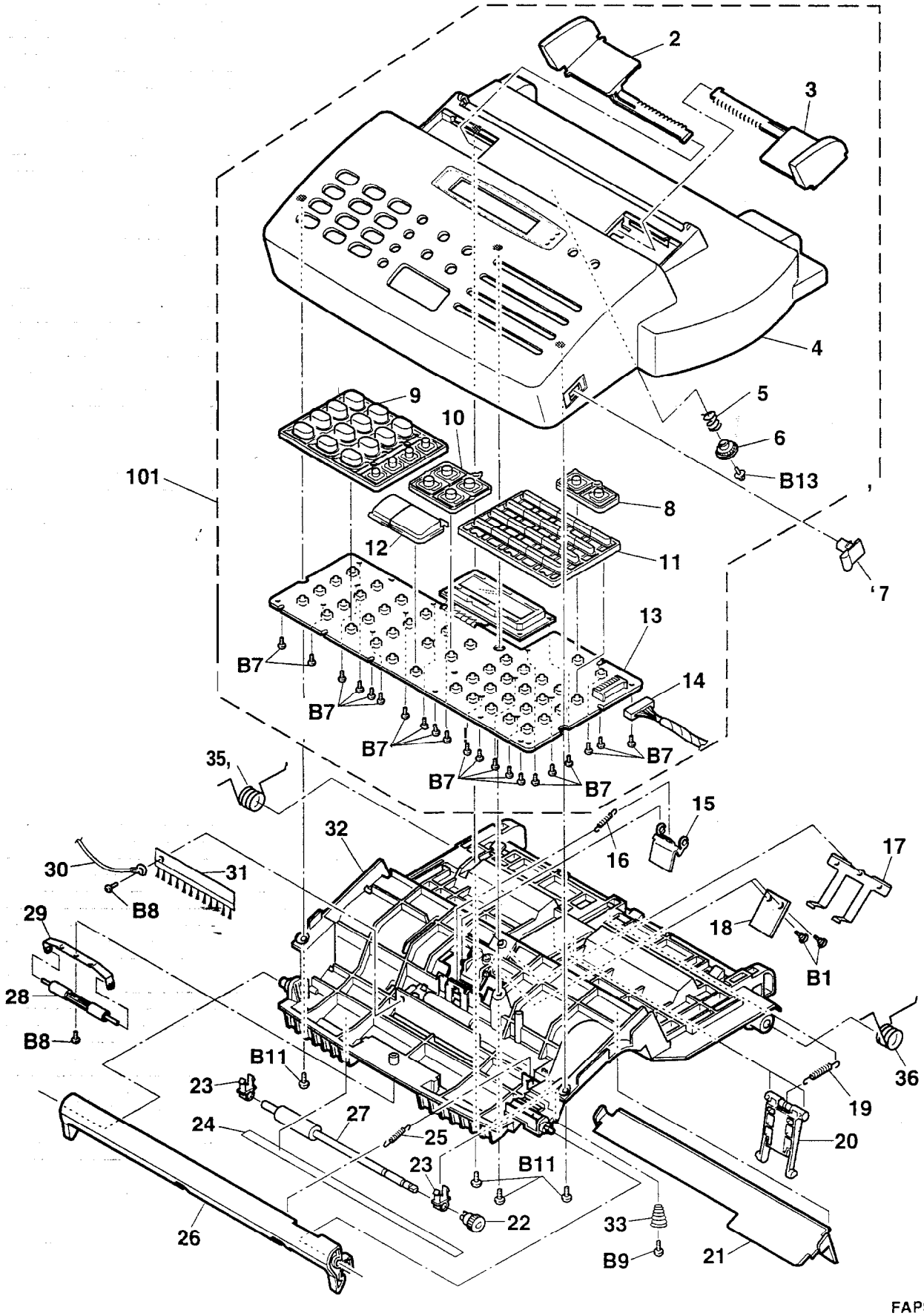

FAPS0077

❑ Uppercabinet,documentguide upper

NO.	PARTS CODE	PRICE RANK	NEW MARK	PART RANK	DESCRIPTION
⚠ 2	PGiDM2397SCLB	AE		C	Hopper guide L
⚠ 3	PGiDM2397SCRB	AE		C	Hopper guide R
⚠ 4	GCABA2232SCZD	AX	N	D	Upper cabinet
5	MSPRC2660SCZZ	AB		C	Hopper spring
6	NGERP2206XHZZ	AE		C	Pinion gear
7	JKNBP2063SCZB	AD		C	Release knob
8	JBTN-2116SCZB	AC		C	Function key
9	JBTN-2085XHZC	AR		C	12 key
10	JBTN-2117SCZB	AC		C	A/M changing key
11	JBTN-2086XHZC	AQ		C	Direct key
12	JBTN-2115SCZB	AG		C	Start/stop key
13	DCEKP335ASC01	BD		E	Panel PWB unit
⚠ 14	QCNW-4170SCZZ	AT		C	Panel cable
15	LPLTM2685SCZZ	AD		C	Separater
16	MSPRT2661SCZZ	AB		C	Separate spring
17	MSPRP2652SCZZ	AD		C	Paper feed spring
18	LPLTG2678SCZZ	AD		C	Separate rubber
19	MSPRT2676SCZA	AB		C	Spring (Open and shut)
20	LPLTP2676SCZZ	AE		C	Stopper plate
⚠ 21	PCOVP2097SCZB	AH		C	Document inserting cover
22	NGERH2258SCZZ	AB		C	Transfer gear 18Z
23	NBRGP2141XHZZ	AH		C	Transfer bearing 2
24	PSHEZ2935SCZZ	AB		C	Rear sheet
25	MSPRT2657SCZZ	AB		C	Release lever return spring
26	MLEVP2166SCZZ	AM		C	Release lever
27	NROLR2284SCZZ	AK		C	Transfer roller 1
28	NROLP2249XHZZ	AE		C	Pinch roller 2
29	MSPRP2535XHZZ	AD		C	Pinch spring 2
⚠ 30	QCNW-4175SCZZ	AE		C	Earth cable
31	PBRS-2041SCZZ	AG		C	Brush,electro-static discharger
⚠ 32	PGiDM2396SCZB	BA		C	Document guide upper
33	MSPRC2681SCZZ	AC		C	Spring 2 (Open and shut)
35	MSPRD2655SCZZ	AC		C	Spring (Open and shut) (L)
36	MSPRD2656SCZZ	AC		C	Spring (Open and shut) (R)
101	CCABA2232SC12	BM	N	E	Upper cabinet ass'y

FO-3700 (3)
Print mechanism

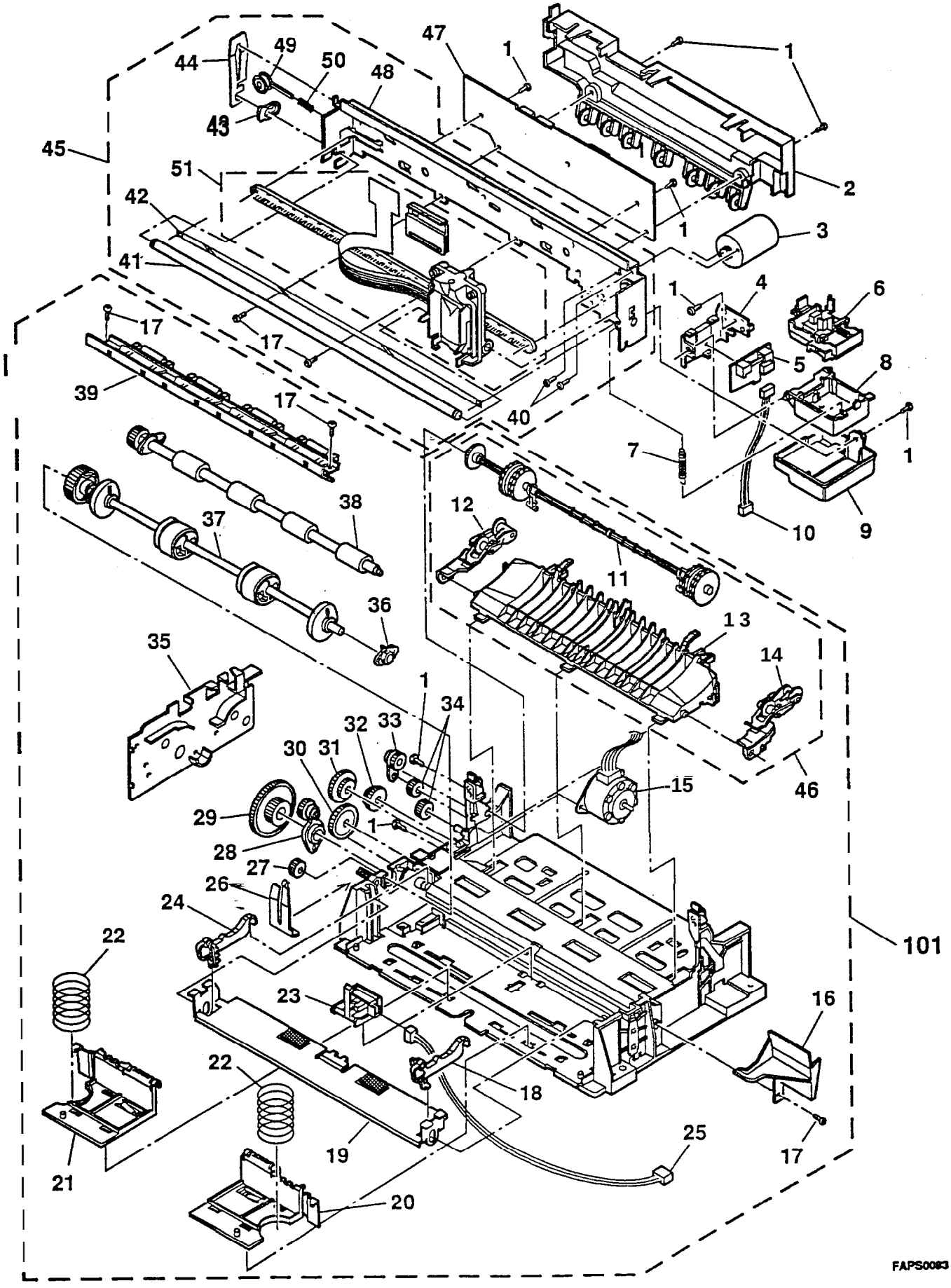

5 Packing material & Accessories

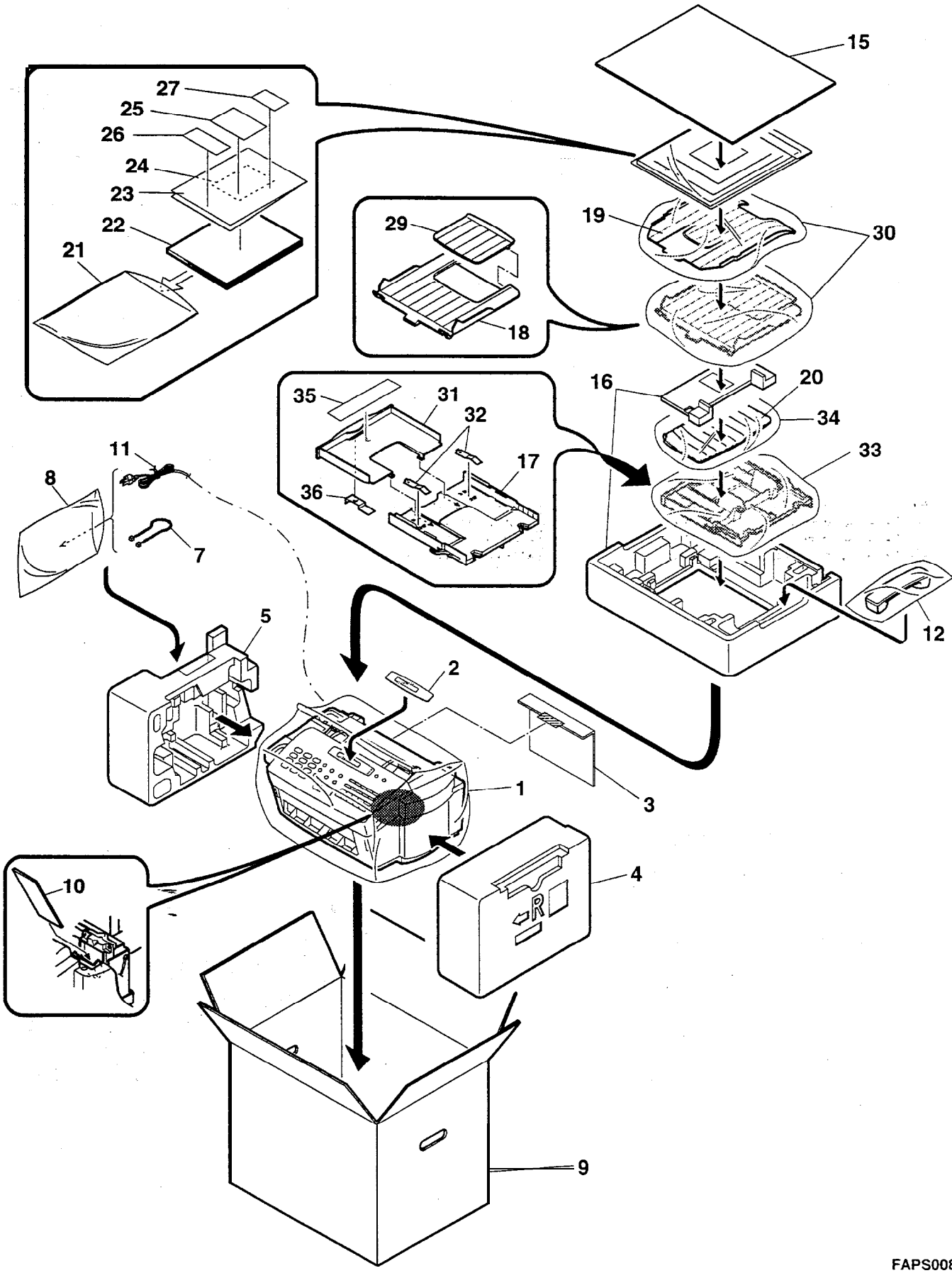

5 Packing material & Accessories

NO.	PARTS CODE	PRICE RANK	NEW MARK	PART RANK	DESCRIPTION
1	SPAKP4080SCZZA	M		D	Vinyl cover
A 2	PSHEZ2930SCZB	A E		C	Face sheet
3	SPAKA4345SCZZ	A C		D	Protector
4	SPAKA4106SCZZ	A M		D	Side pat R
5	SPAKA4105SCZZ	A M		D	Side pat L
7	QCNW-3376XH0G	AT		C	Hand set cord
8	SSAKA3001CCZZ	A A		D	Vinyl bag for AC cord (140×360mm)
9	SPAKC4202SCZZA	P		D	Packing case
10	SPAKA4274SCZZ	AB		D	Protector
11	UBNDA1008CCZZA	A		C	AC code band (120mm)
12	DUNTK4925SCD3A	X		E	Hand set
15	SPAKA4109SCZZA	E		D	Pat
16	SPAKA4108SCZZ	AN		D	Add
⚠ 17	LPLTP2679SCZC	AS	N	C	Inserting tray
⚠ 18	LPLTP2681SCZB	A			QExit tra ICI Y
⚠ 19	LPLTP2683SCZZ	AU		C	Original document out tray
⚠ 20	PHOP-2076SCZZ	AQ		C	Original document in tray
21	SSAKA2344QCZZ	AB		D	Vinyl bag (240×360mm)
22	TINSE3397SCZZ	AZ	N	D	Operation manual
23	PSHEZ2897SCA4	AK		C	Document carrier (A4)
24	TCADZ2139SCZZ	AE		D	Card
25	TCADZ2264SCZZ	AE		D	Installation card
26	TGANE2036SCZZA	C		D	Warranty card
27	TCADZ2274SCZBA	D		D	Rapid key label
A 29	LPLTP2682SCZBA	H		C	Extend paper plate
30	SSAKA3341QCZZA	0		D	Vinyl bag
A 31	LPLTP2680SCZBA	N		C	Extend paper tray
32	MSPRP2658SCZZ	A C		C	Extend plate spring
33	SSAKA3340QCZZ	A B		D	Vinyl bag (320×380mm)
34	SSAKA1340QCZZ	A B		D	Vinyl bag (180×320mm)
35	TLABH3435SCZB	A D		D	Paper setting label
36	PSHEZ2982SC2Z	AD		C	Protector

6 Control PWB unit

NO.	PARTS CODE	PRICE RANK	NEW MARK	PART RANK	DESCRIPTION	
1	UBATN2010SCZZ	AN		B	Battery (CR2354−1HF)	[BAT]
2	EAPS106AF1EA	C		C	Capacitor (25WV 10μ	[C1]
3	VCKYTV1HF223ZA	A		C	Capacitor (50WV 0.022μF)	[C2]
4	VCKYTV1EF104ZA	A		C	Capacitor (25WV 0.10μF)	[C3]
5	VCKYCY1EF104Z	AA		C	Capacitor (25WV 0.10μF)	[C4]
6	VCKYCY1EF104Z	AA		C	Capacitor (25WV 0.10μF)	[C5]
7	VCKYCY1EF104Z	AA		C	(Capacitor (25WV 0.10μF)	[C6]
8	VCKYCY1HB102K	AA		C	Capacitor (50WV 1000PF)	[C7]
9	VCEAPS336AF1C	AC		C	Capacitor (16WV 33μF)	[C8]
10	VCEAPS105AF1H	AB		C	Capacitor (50WV 1μF)	[C9]
11	VCKYCY1EF223Z	AA		C	Capacitor (25WV 0.022μF)	[C10]
12	VCEAPS226AF1C	AC		C	Capacitor (16WV 22μF)	[C11]
13	VCEAPS226AF1C	AC		C	Capacitor (16WV 22μF)	[C12]
14	VCEAPS226AF1C	AC		C	Capacitor (16WV 22μF)	[C13]
15	VCKYTV1HB222K	A A		C	/Capacitor (50WV 2200pF)	[C14]
16	VCKYTV1HB222K	A A		C	(Capacitor (50WV 2200pF)	[C15]
17	VCKYTV1HB222K	A A		C	Capacitor (50WV 2200pF)	[C16]
18	VCKYTV1HB222K	A A		C	Capacitor (50WV 2200pF)	[C17]
19	VCKYTV1HB222K	AA		C	Capacitor (50WV 2200pF)	[C18]
20	VCKYTV1HF223Z	AA		C	Capacitor (50WV 0.022μF)	[C101]
21	VCKYTV1EF104Z	AA		C	Capacitor (25WV 0.10μF)	[C102]
22	VCKYTV1HB222K	AA		C	Capacitor (50WV 2200pF)	[C103]
23	VCKYTV1HB222K	AA		C	Capacitor (50WV 2200pF)	[C104]
24	VCCCTV1HH5R0J	AA		C	Capacitor (50WV 5pF)	[C105]
25	VCKYTV1EF104Z	AA		C	Capacitor (25WV 0.10μF)	[C106]
26	VCKYTV1EF104Z	AA		C	Capacitor (25WV 0.10μF)	[C107]
27	VCKYTV1HB222K	AA		C	Capacitor (50WV 2200pF)	[C108]
28	VCKYTV1HB222K	AA		C	Capacitor (50WV 2200pF)	[C109]
29	VCCCTV1HH300J	AA		C	Capacitor (50WV 30PF)	[C110]
30	VCCCTV1HH300J	AA		C	Capacitor (50WV 30PF)	[C111]
31	VCKYTV1HB222K	AA		C	Capacitor (50WV 2200pF)	[C112]
32	VCKYTV1HB222K	AA		C	Capacitor (50WV 2200pF)	[C113]
33	VCKYTV1EF104Z	AA		C	Capacitor (25WV 0.10μF)	[C114]
34	VCKYTV1EF104Z	AA		C	Capacitor (25WV 0.10μF)	[C115]
35	VCKYTV1HF223Z	AA		C	Capacitor (50WV 0.022μF)	[C116]
36	VCKYTV1HF223Z	AA		C	Capacitor (50WV 0.022μF)	[C117]
37	VCKYTV1EF104Z	AA		C	Capacitor (25WV 0.10μF)	[C118]
38	VCKYTV1HF223Z	AA		C	Capacitor (50WV 0.022μF)	[C119]
39	VCKYTV1EF104Z	AA		C	Capacitor (25WV 0.10μF)	[C120]
40	VCKYTV1HF223Z	AA		C	Capacitor (50WV 0.022μF)	[C121]

6 Control PWB unit

NO.	PARTS CODE	PRICE RANK	NEW MARK	PART RANK	DESCRIPTION	
41	VCKYTV1HB222K	AA		C	Capacitor (50WV 2200pF)	[C122]
42	VCCCTV1HH330J	AA		C	Capacitor (50WV 33pF)	[C123]
43	VCKYTQ1CF105Z	AE		C	Capacitor (16WV 1.0μF)	[C124]
44	VCKYTV1HB222K	AA		C	Capacitor (50WV 2200pF)	[C125]
45	VCKYTQ1CF105Z	AE		C	Capacitor (16WV 1.0μF)	[C126]
46	VCKYTV1EF104Z	AA		C	Capacitor (25WV 0.10μF)	[C127]
47	VCKYTQ1EF104Z	AA		C	Capacitor (25WV 0.1μF)	[C128]
48	VCCCTV1HH330J	AA		C	Capacitor (50WV 33pF)	[C129]
49	VCSAPJ1AA475M	AB		C	Capacitor (10WV 4.7μF)	[C130]
50	VCKYTV1EF104Z	AA		C	Capacitor (25WV 0.10μF)	[C131]
51	VCKYTQ1CF105Z	AE		C	Capacitor (16WV 1.0μF)	[C132]
52	VCCSTV1HL102J	AA		C	Capacitor (50WV 1000PF)	[C133]
53	VCCSTV1HL102J	AA		C	Capacitor (50WV 1000PF)	[C134]
54	VCKYTV1EF104Z	AA		C	Capacitor (25WV 0.10μF)	[C135]
55	VCKYTV1EF104Z	AA		C	Capacitor (25WV 0.10μF)	[C136]
56	VCKYTV1EF104Z	AA		C	Capacitor (25WV 0.10μF)	[C137]
57	VCCCTV1HH221JA	A		C	Capacitor (50WV 220PF)	[C138]
58	VCCCTV1HH221JA	A		C	Capacitor (50WV 220PF)	[C139]
59	VCKYTV1HB222KA	A		C	Capacitor (50WV 2200pF)	[C140]
60	VCKYTV1HB222KA	A		C	Capacitor 50WV 2200pF	[C141]
61	VCKYTV1HB222KA	A		C	Capacitor (50WV 2200pF)	[C142]
62	VCKYTV1HF223ZA	A		C	Capacitor (50WV 0.022μF	[C143]
63	VCKYTV1HF223Z	AA		C	Capacitor (50WV 0.022μF)	[C144]
64	VCKYTV1HB222K	AA		C	Capacitor (50WV 2200pF)	[C145]
65	VCKYTV1HF223Z	AA		C	Capacitor (50WV 0.022μF)	[C146]
66	VCKYTV1HF223Z	AA		C	Capacitor (50WV 0.02Fμ	[C147]
67	VCCCTV1HH180	AA		C	Capacitor (50WV 18PF)	[C148]
68	VCCCTV1HH180	AA		C	Capacitor (50WV 18PF)	[C149]
69	VCKYTV1HF223	AA		C	Capacitor (50WV 0.022μF)	[C150]
70	VCKYTV1HB222K			C	Capacitor 50WV 2200PF)	[C152]
71	VCKYTV1EF104Z	AA		C	Capacitor (25WV 0.10μF)	[C153]
72	VCCCTV1HH101J	AA		C	Capacitor (50WV 100PF)	[C155]
73	VCKYTV1EF104Z	AA		C	Capacitor (25WV 0.10μF)	[C156]
74	VCKYTV1EF104Z	AA		C	Capacitor (25WV 0.10μF)	[C157]
75	VCKYTV1EF104Z	AA		C	Capacitor (25WV 0.10μF)	[C158]
76	VCKYTV1HB272K	AA		C	Capacitor (50WV 2700PF)	[C159]
77	VCKYTV1EF104Z	AA		C	Capacitor (25WV 0.10μF)	[C160]
78	VCKYTV1HB681K	AA		C	Capacitor (50WV 680PF)	[C161]
79	VCKYTV1EF104Z	AA		C	Capacitor (25WV 0.10μF)	[C162]
80	VCKYTV1HB472K	AA		C	Capacitor (50WV 4700pF)	[C163]
81	VCCSTV1HL102J	AA		C	Capacitor (50WV 1000PF)	[C164]
82	VCKYTV1EF104Z	AA		C	Capacitor (25WV 0.10μF)	[C165]
83	VCKYTV1EF104Z	AA		C	Capacitor (25WV 0.10μF)	[C166]
84	VCKYTV1EF104Z	AA		C	Capacitor (25WV 0.10μF)	[C167]
85	VCKYTV1EF104Z	AA		C	Capacitor (25WV 0.10μF)	[C168]
86	VCCCTV1HH101J	AA		C	Capacitor (50WV 100PF)	[C172]
87	QCNCM7014SC0G	AB		C	Connector (7pin)	[CNCCD]
88	QCNCM2465SC3J	AF		C	Connector (30pin)	[CNDR]
89	QCNCM2436SC5J	AB		C	Connector (50pin)	[CNLIU]
90	QCNCM2389SC2B	AE		C	Connector (22pin)	[CNPNL]
91	QCNCM7014SC0E	AB		C	Connector (5pin)	[CNSNS]
92	QCNCM7014SC0F	AB		C	Connector (6pin)	[CNTXM]
93	VHDiMN10///-1	AC		B	Diode (IMN10)	[D101]
94	VHDiMN10///-1	AC		B	Diode (IMN10)	[D102]
95	VHDRB400D///-1	AC		B	Diode (RB400D)	[D103]
96	VHViCPN20///-1	AD		B	IC protector (ICP-N20)	[F1]
97	VHiR96SHF///-1	BD		B	IC (R96SHF)	[IC1]
98	VHiM66333FP-1	BC		B	IC (M66333FP)	[IC2]
99	VHiLH5268T410	AS		B	IC (LH5268T410)	[IC3]
100	VHiC64180ZRS08	AX		B	IC (64180ZRS08)	[IC4]
101	VHi43257AG10L	AY		B	IC (43257AG10L)	[IC5]
102	VHiF255011/-1	AU		B	IC (F255011)	[IC7]
103	VHiPST600CMT1	AE		B	IC (PST600CMT1)	[IC8]
104	VHi74HCU04F-1	AC		B	IC (74HCU04F)	[IC9]
105	VHiGM4256BSJ7	AX		B	IC (GM4256BSJ7)	[IC10]
106	VHiHM514800J8	BG		B	IC (HM514800J8)	[IC11]
107	VHiLZ95G38/-1	AX		B	IC (LZ95G38)	[IC12]
108	VHiLB1730///-1	AH		B	IC (LB1730)	[IC13]
109	VHiNJM318M/-F	AF		B	IC (NJM318M)	[IC101]
110	VHiTL084CN/-F	AN		B	IC (TL084CN)	[IC102]
111	VHiMC14066BMF	AD		B	IC (MC14066BMF)	[IC103]
112	VHiMC14066BMFA	D		B	IC (MC14066BMF)	[IC104]
113	VHiSN7406NS-1A	F		B	IC (SN7406NS)	[IC105]
114	VHiSN74HC04NSA	C		B	IC (SN74HC04NS)	[IC106]
115	VHiMC14053BMF	AE		B	IC (MC14053BM	[IC107]
116	VHiNJM4558F-1	AD		B	IC (NJM4558MF)	[IC108]
117	VHiMC74HC14MF	AE		B	IC (MC74HC14MF)	[IC109]
118	VHiSN74HC04NSA	C		B	IC (SN74HC04NS)	[IC110]
119	VHiMC74HC32MF	AC		B	IC (MC74HC32MF)	[IC111]
120	VHiNJU6355E-1	AM		B	IC (NJU6355E)	[IC112]

6 Control PWB unit

NO.	PARTS CODE	PRICE RANK	NEW MARK	PART RANK	DESCRIPTION	
12	1 VHiLM393PS/-S	AC		B	IC (LM393PS)	[IC113]
12	2 QSOCZ2051SC32	AC		C	IC socket (32pin)	[IC114]
12	3 VHi27020FCB0B	BM	N	B	IC (27020FCB0B)	[IC114]
124	VRS-TP2BD000J	AA		C	Resistor (1/8W 0Ω ±5%)	[L101]
125	VRS-TP2BD000J	AA		C	Resistor (1/8W 0Ω ±5%)	[L102]
126	VRS-TP2BD000J	AA		C	Resistor (1/8W 0Ω ±5%)	[L103]
127	VRS-TP2BD000J	AA		C	Resistor (1/8W 0Ω ±5%)	[L104]
128	VRS-TP2BD000J	AA		C	Resistor (1/8W 0Ω ±5%)	[L105]
129	VS2SC2412KS-1	AB		B	Transistor (2SC2412KS)	[Q101]
130	VS2SC2412KS-1	AB		B	Transistor (2SC2412KS)	[Q102]
131	VSDTC114EK/-1	AB		B	Transistor (DTC114EK)	[Q103]
132	VSDTC114EK/-1	AB		B	Transistor (DTC114EK)	[Q104]
133	VSDTA114EK/-1	AB		B	Transistor (DTA114EK)	[Q105]
134	VRS-TS2AD102J	AA		C	Resistor (1/10W 1.0KΩ ±5%)	[R1]
135	VRS-TS2AD330J	AA		C	Resistor (1/10W 33Ω ±5%)	[R2]
136	VRS-TS2AD102J	AA		C	Resistor (1/10W 1.0KΩ ±5%)	[R3]
137	VRS-TS2AD102J	AA		C	Resistor (1/10W 1.0KΩ ±5%)	[R4]
138	VRS-CY1JD221J	AA		C	Resistor (1/16W 220Ω ±5%)	[R6]
139	VRS-CY1JD222J	AA		C	Resistor (1/16W 2.2KΩ ±5%)	[R7]
140	VRS-CY1JD222J	AA		C	Resistor (1/16W 2.2KΩ ±5%)	[R8]
141	VRS-CY1JD163J	AA		C	Resistor (1/16W 16KΩ ±5%)	[R9]
142	VRS-CY1JD222J	AA		C	Resistor (1/16W 2.2KΩ ±5%)	[R10]
143	VRS-CY1JD103J	AA		C	Resistor (1/16W 10KΩ ±5%)	[R11]
144	VRS-CY1JD470J	AA		C	Resistor (1/16W 47Ω ±5%)	[R12]
145	VRS-CY1JD224J	AA		C	Resistor (1/16W 220KΩ ±5%)	[R13]
146	VRD-HT2HY331J	AA		C	Resistor (1/4W 330Ω ±5%)	[R14]
147	VRD-HT2HY331J	AA		C	Resistor (1/4W 330Ω ±5%)	[R15]
148	VRS-TS2AD271J	AA		C	Resistor (1/10W 270Ω ±5%)	[R16]
149	VRS-TS2AD271J	AA		C	Resistor (1/10W 270Ω ±5%)	[R17]
150	VRS-TS2AD271J	AA		C	Resistor (1/10W 270Ω ±5%)	[R18]
151	VRS-TS2AD271J	AA		C	Resistor (1/10W 270Ω ±5%)	[R19]
152	VRS-TS2AD271J	AA		C	Resistor (1/10W 270Ω ±5%)	[R20]
153	VRS-TS2AD271J	AA		C	Resistor (1/10W 270Ω ±5%)	[R21]
154	VRS-TS2AD271J	AA		C	Resistor (1/10W 270Ω ±5%)	[R22]
155	VRS-TS2AD100J	AA		C	Resistor (1/10W 10Ω ±5%)	[R101]
156	VRS-TS2AD330J	AA		C	Resistor (1/10W 33Ω ±5%)	[R102]
157	VRS-TS2AD182J	AA		C	Resistor (1/10W 1.8KΩ ±5%)	[R103]
158	VRS-TS2AD000J	AA		C	Resistor (1/10W 0Ω ±5%)	[R104]
159	VRS-TS2AD103J	AA		C	Resistor (1/10W 10KΩ ±5%)	[R106]
160	VRS-TS2AD000J	AA		C	Resistor (1/10W 0Ω ±5%)	[R107]
161	VRS-TS2AD000J	AA		C	Resistor (1/10W 0Ω ±5%)	[R108]
162	VRS-TS2AD472J	AA		C	Resistor (1/10W 4.7KΩ ±5%)	[R110]
163	VRS-TS2AD103J	AA		C	Resistor (1/10W 10KΩ ±5%)	[R111]
164	VRS-TS2AD102J	AA		C	Resistor (1/10W 1.0KΩ ±5%)	[R112]
165	VRS-TS2AD562J	AA		C	Resistor (1/10W 5.6KΩ ±5%)	[R113]
166	VRS-TS2AD330J	AA		C	Resistor (1/10W 33Ω ±5%)	[R114]
167	VRS-TS2AD472J	AA		C	Resistor (1/10W 4.7KΩ ±5%)	[R115]
168	VRS-TS2AD472J	AA		C	Resistor (1/10W 4.7KΩ ±5%)	[R116]
169	VRS-TS2AD472J	AA		C	Resistor (1/10W 4.7KΩ ±5%)	[R117]
170	VRS-TS2AD103J	AA		C	Resistor (1/10W 10KΩ ±5%)	[R119]
171	VRS-TS2AD101J	AA		C	Resistor (1/10W 100Ω ±5%)	[R120]
172	VRS-TS2AD472J	AA		C	Resistor (1/10W 4.7KΩ ±5%)	[R121]
173	VRS-TS2AD000J	AA		C	Resistor (1/10W 0Ω ±5%)	[R122]
174	VRS-TS2AD822J	AA		C	Resistor (1/10W 8.2KΩ ±5%)	[R123]
175	VRS-TS2AD392J	AA		C	Resistor (1/10W 3.9KΩ ±5%)	[R124]
176	VRS-TS2AD202J	AA		C	Resistor (1/10W 2KΩ ±5%)	[R125]
177	VRS-TS2AD222J	AA		C	Resistor (1/10W 2.2KΩ ±5%)	[R126]
178	VRS-TS2AD222J	AA		C	Resistor (1/10W 2.2KΩ ±5%)	[R127]
179	VRS-TS2AD102J	AA		C	Resistor (1/10W 1.0KΩ ±5%)	[R128]
180	VRS-TS2AD222J	AA		C	Resistor (1/10W 2.2KΩ ±5%)	[R129]
181	VRS-TS2AD472J	AA		C	Resistor (1/10W 4.7KΩ ±5%)	[R130]
182	VRS-TS2AD561J	AA		C	Resistor (1/10W 560Ω ±5%)	[R131]
183	VRS-TS2AD472J	AA		C	Resistor (1/10W 4.7KΩ ±5%)	[R132]
184	VRS-TS2AD222J	AA		C	Resistor (1/10W 2.2KΩ ±5%)	[R133]
185	VRS-TS2AD202J	AA		C	Resistor (1/10W 2KΩ ±5%)	[R134]
186	VRS-TS2AD101J	AA		C	Resistor (1/10W 100Ω ±5%)	[R135]
187	VRS-TS2AD221J	AA		C	Resistor (1/10W 220Ω ±5%)	[R137]
188	VRS-TS2AD391J	AA		C	Resistor (1/10W 390Ω ±5%)	[R138]
189	VRS-TS2AD102J	AA		C	Resistor (1/10W 1.0KΩ ±5%)	[R139]
190	VRS-TS2AD822J	AA		C	Resistor (1/10W 8.2KΩ ±5%)	[R140]
191	VRS-TS2AD222J	AA		C	Resistor (1/10W 2.2KΩ ±5%)	[R141]
192	VRS-TS2AD471J	AA		C	Resistor (1/10W 470Ω ±5%)	[R142]
193	VRS-TS2AD103J	AA		C	Resistor (1/10W 10KΩ ±5%)	[R143]
194	VRS-TS2AD201J	AG	N	C	Resistor (1/10W 200Ω ±5%)	[R144]
195	VRS-TS2AD000J	AA		C	Resistor (1/10W 0Ω ±5%)	[R146]
196	VRS-TS2AD103J	AA		C	Resistor (1/10W 10KΩ ±5%)	[R148]
197	VRS-TS2AD000J	AA		C	Resistor (1/10W 0Ω ±5%)	[R149]
198	VRS-TS2AD103JA	A		C	Resistor (1/10W 10KΩ ±5%)	[R150]
199	VRS-TS2AD103JA	A		C	Resistor (1/10W 10KΩ ±5%)	[R151]
200	VRS-TS2AD103J	A		C	Resistor (1/10W 10KΩ ±5%)	[R152]

6 Control PWB unit

NO.	PARTS CODE	PRICE RANK	NEW MARK	PART RANK	DESCRIPTION	
201	VRS-TS2AD103J	AA		C	Resistor (1/10W 10KΩ ±5%)	[R153]
202	VRS-TP2BD101J	AA		C	Resistor (1/8W 100Ω ±5%)	[R154]
203	VRS-TS2AD103J	AA		C	Resistor (1/10W 10KΩ ±5%)	[R155]
204	VRS-TP2BD000J	AA		C	Resistor (1/8W 0Ω ±5%)	[R156]
205	VRSTS2AD4752F	AA		C	Reslstor (1/10W 47.5KΩ ±1%)	[R157]
206	VRS-TS2AD103JA	A		C	Resistor (1/10W 10KΩ ±5%)	[R158]
207	VRS-TS2AD100JA	A		C	Resistor (1/10W 10Ω ±5%)	[R159]
208	VRS-TS2AD100JA	A		C	Resistor (1/10W 10Ω ±5%)	[R160]
209	VRS-TS2AD100JA	A		C	Resistor (1/10W 10Ω ±5%)	[R161]
210	VRS-TS2AD100JA	A		C	Resistor (1/10W 10Ω ±5%)	[R162]
211	VRSTS2AD1742FA	A		C	Resistor (1/10W 17.4KΩ ±1%)	[R163]
212	VRSTS2AD8662FA	A		C	Resistor (1/10W 86.6KΩ ±1%)	[R164]
213	VRS-TS2AD100J	AA		C	Resistor (1/10W 10Ω ±5%)	[R165]
214	VRSTS2AD8662F	AA		C	Resistor (1/10W 86.6KΩ ±1%)	[R166]
215	VRS-TS2AD302J	AA		C	Resistor (1/10W 3.0KΩ ±5%)	[R167]
216	VRS-TS2AD103J	AA		C	Resistor (1/10W 10KΩ ±5%)	[R168]
217	VRS-TS2AD103J	AA		C	Resistor (1/10W 10KΩ ±5%)	[R169]
218	VRSTS2AD1183F	AA		C	Resistor (1/10W 118KΩ ±1%)	[R170]
219	VRS-TS2AD103J	AA		C	Resistor (1/10W 10KΩ ±5%)	[R171]
220	VRS-TS2AD271J	AA		C	Resistor (1/10W 270Ω ±5%)	[R172]
221	VRS-TS2AD271J	AA		C	Resistor (1/10W 270Ω ±5%)	[R173]
222	VRS-TS2AD103J	AA		C	Resistor (1/10W 10KΩ ±5%)	[R174]
223	VRS-TS2AD271J	AA		C	Resistor (1/10W 270Ω ±5%)	[R175]
224	VRS-TS2AD103J	AA		C	Resistor (1/10W 10KΩ ±5%)	[R176]
225	VRS-TS2AD000J	AA		C	Resistor (1/10W 0Ω ±5%)	[R177]
226	VRS-TS2AD562J	AA		C	Resistor (1/10W 5.6KΩ ±5%)	[R178]
227	VRS-TS2AD105J	AA		C	Resistor (1/10W 1MΩ ±5%)	[R179]
228	VRS-TS2AD000J	AA		C	Resistor (1/10W 0Ω ±5%)	[R180]
229	VRS-TS2AD562J	AA		C	Resistor (1/10W 5.6KΩ ±5%)	[R181]
230	VRS-TS2AD332J	AA		C	Resistor (1/10W 3.3KΩ ±5%)	[R182]
231	VRS-TS2AD000J	AA		C	Resistor (1/10W 0Ω ±5%)	[R183]
232	VRS-TS2AD271J	AA		C	Resistor (1/10W 270Ω ±5%)	[R184]
233	VRS-TS2AD271J	AA		C	Resistor (1/10W 270Ω ±5%)	[R185]
234	VRS-TS2AD473J	AA		C	Resistor (1/10W 47KΩ ±5%)	[R186]
235	VRS-TS2AD473J	AA		C	Resistor (1/10W 47KΩ ±5%)	[R187]
236	VRS-TS2AD103J	AA		C	Resistor (1/10W 10KΩ ±5%)	[R189]
237	VRS-TS2AD271J	AA		C	Resistor (1/10W 270Ω ±5%)	[R190]
238	VRS-TS2AD103J	AA		C	Resistor (1/10W 10KΩ ±5%)	[R191]
239	VRS-TS2AD103J	AA		C	Resistor (1/10W 10KΩ ±5%)	[R192]
240	VRS-TS2AD103J	AA		C	Resistor (1/10W 10KΩ ±5%)	[R193]
241	VRS-TS2AD103J	AA		C	Resistor (1/10W 10KΩ ±5%)	[R194]
242	VRS-TS2AD821J	AA		C	Resistor (1/10W 820Ω ±5%)	[R195]
243	VRS-TS2AD101J	AA		C	Resistor (1/10W 100Ω ±5%)	[R196]
244	VRS-TS2AD103J	AA		C	Resistor (1/10W 10KΩ ±5%)	[R197]
245	VRS-TS2AD271J	AA		C	Resistor (1/10W 270Ω ±5%)	[R198]
246	VRS-TS2AD103J	AA		C	Resistor (1/10W 10KΩ ±5%)	[R199]
247	VRS-TS2AD103J	AA		C	Resistor (1/10W 10KΩ ±5%)	[R200]
248	VRS-TS2AD103J	AA		C	Resistor (1/10W 10KΩ ±5%)	[R201]
249	VRS-TS2AD103J	AA		C	Resistor (1/10W 10KΩ ±5%)	[R202]
250	VRS-TS2AD472J	AA		C	Resistor (1/10W 4.7KΩ ±5%)	[R203]
251	VRS-TS2AD103JA	A		C	Reslstor (1/10W 10KΩ ±5%)	[R205]
252	VRS-TS2AD103JA	A		C	Resistor (1/10W 10KΩ ±5%)	[R206]
253	VRS-TS2AD103JA	A		C	Resistor (1/10W 10KΩ ±5%)	[R207]
254	VRS-TS2AD103JA	A		C	Reslstor (1/10W 10KΩ ±5%	[R208]
255	VRS-TS2AD103JA	A		C	Reslstor (1/10W 10KΩ ±5%)	[R209]
256	VRS-TS2AD562JA	A		C	Resistor (1/10W 5.6KΩ ±5%)	[R210]
257	VRS-TS2AD471JA	A		C	Resistor (1/10W 470Ω ±5%)	[R211]
258	VRS-TS2AD471JA	A		C	Resistor (1/10W 470Ω ±5%)	[R212]
259	VRS-TS2AD471JA	A		C	Resistor (1/10W 470Ω ±5%)	[R213]
260	VRS-TS2AD471J	AA		C	Resistor (1/10W 470Ω ±5%)	[R214]
261	VRS-TS2AD271J	AA		C	Resistor (1/10W 270Ω ±5%)	[R215]
262	VRS-TS2AD271J	AA		C	Resistor (1/10W 270Ω ±5%)	[R216]
263	VRS-TS2AD271J	AA		C	Resistor (1/10W 270Ω ±5%)	[R217]
264	VRS-TS2AD471J	AA		C	Resistor (1/10W 470Ω ±5%)	[R218]
265	VRS-TS2AD271J	AA		C	Resistor (1/10W 270Ω ±5%)	[R219]
266	VRS-TS2AD103J	AA		C	Resistor (1/10W 10KΩ ±5%)	[R220]
267	VRS-TS2AD103J	AA		C	Resistor (1/10W 10KΩ ±5%)	[R221]
268	VRS-TS2AD103J	AA		C	Resistor (1/10W 10KΩ ±5%)	[R222]
269	VRS-TS2AD103J	AA		C	Resistor (1/10W 10KΩ ±5%)	[R223]
270	VRS-TS2AD103J	AA		C	Resistor (1/10W 10KΩ ±5%)	[R224]
271	VRS-TS2AD330J	AA		C	Resistor (1/10W 33Ω ±5%)	[R225]
272	VRS-TS2AD330J	AA		C	Resistor (1/10W 33Ω ±5%)	[R226]
273	VRS-TS2AD330J	AA		C	Resistor (1/10W 33Ω ±5%)	[R227]
274	VRS-TS2AD330J	AA		C	Resistor (1/10W 33Ω ±5%)	[R228]
275	VRS-TS2AD330J	AA		C	Resistor (1/10W 33Ω ±5%)	[R229]
276	VRS-TS2AD330J	AA		C	Resistor (1/10W 33Ω ±5%)	[R230]
277	VRS-TS2AD330J	AA		C	Resistor (1/10W 33Ω ±5%)	[R231]
278	VRS-TS2AD330J	AA		C	Resistor (1/10W 33Ω ±5%)	[R232]
279	VRS-TS2AD330J	AA		C	Resistor (1/10W 33Ω ±5%)	[R233]
280	VRS-TS2AD330J	AA		C	Resistor (1/10W 33Ω ±5%)	[R234]

❑ ControlPWBunit

NO.	PARTS CODE	PRICE RANK	NEW MARK	PART RANK	DESCRIPTION	
281	VRS-TS2AD100J	A	A	C	Resistor (1/10W 10Ω ±5%)	[R235]
282	VRS-TS2AD100J	A	A	C	Resistor (1/10W 10Ω ±5%)	[R236]
283	VRS-TS2AD100J	A	A	C	Resistor (1/10W 10Ω ±5%)	[R237]
284	VRS-TS2AD100J	A	A	C	Resistor (1/10W 10Ω ±5%)	[R238]
285	VRS-TS2AD100J	A	A	C	Resistor (1/10W 10Ω ±5%)	[R239]
286	VRS-TS2AD223J	A	A	C	Resistor (1/10W 22KΩ ±5%)	[R240]
287	VRS-TS2AD103J	A	A	C	Resistor (1/10W 10Ω ±5%)	[R242]
288	VRS-TS2AD000J	A	A	C	Resistor (1/10W 0Ω ±5%)	[R243]
289	VRS-TP2BD561J	A	A	C	Resistor (1/8W 560Ω ±5%)	CR2451
290	RCRSP2080SCZZ	A	F	B	Crystal (24.000.14KHz)	[X1]
291	RCRSZ7008SCZZ	A	D	B	Crystal (16MHz)	[X2]
292	RCRSP2083SCZZ	A	E	B	Crystal (32.768KHz)	[X3]
293	RCRSQ2090SCZZ	A	D	C	Crystal (614.4MHz)	[X4]
294	TLABP3078SCZZA	A		D	Shading label (for EP-ROM)	
	(Unit)					
901	DCEKC780FSCZZ	CA	N	E	Control PWB unit	

7 Power supply PWB unit

	NO.	PARTS CODE	PRICE RANK	NEW MARK	PART RANK	DESCRIPTION	
⚠	1	0CB829820363/B	C		B	Transformer (PT-P79-KTT)	[T1]
⚠	2	OCBUKZ0582ZZ/	A H		C	Filter (FU105V0R4A203)	[L1,2]
	3	0CBPZZ0604ZZ/	A C		C	Jumping wire (IPS-3002-4)	[FB1]
	4	0CBBFZ89154Z/	A C		C	Ferrite core (BL01RN1-A62B1)	[FB2]
	5	0CBUCC0013DZ/	A M		B	IC (UPC78N12H)	[IC1]
	6	0CBUCC0010FZ/	A C		B	IC (NJM79L12A)	[IC2]
	7	OCBUCB0112AZ/	AK		B	IC (NJM7805FA)	[IC3]
⚠	8	0CBUAG0091AZ/	AQ		B	FET (2SK1601)	[Q1]
	9	0CBUAC0056BZ/A	D		B	Transistor (2SC2002-L)	[Q2]
	10	0CBUAC0098AZ/A	G		B	Transistor (2SC3518)	[Q3]
	11	0CBUAC0104DZ/	AC		B	Transistor (2SC945-PA)	[Q4]
⚠	12	0CBUBB0178DZ/	AG		B	Diode (D2SBA60)	[D1]
	13	0CBUBC0220BZ/	A n		B	Diode (1NU41)	[D2]
	14	VHD1N4148ZZ/	AA		B	Diode (1SS55)	[D3]
	15	0CBUBC0221AZ/	AC		B	Diode (ERA18-02)	[D4,5]
	16	0CBUBC0280RZ/	AC		B	Diode (11EQ04)	[D6]
	17	0CBUBB0187AZ/	AG		B	Diode (D10LC20U)	[D7]
	18	0CBUBDAC270D/	A C		B	Zener diode (RD27ESAB3)	[ZD1]
	19	0CBUBDAA3R0C/	AC		B	Zener diode (RD3.0EB2)	[ZD2]
	20	0CBUBDAE150B/	AD		B	Zener diode (RD15FB1)	[ZD3]
	21	0CBUBDAA6R2C/	AC		B	Zener diode (RD6.2EB2)	[ZD4]
	22	0CBUBDAE300D/	AD		B	Zener diode (RD30FB3)	[ZD5]
⚠	23	0CBUDC0139AZ/	AN		B	Photo coupler (PC113Y11)	[PC1]
	24	0CBUEFC564BA/	AC		C	Metal film resistor (SFR25H560K(52))	[R1]
	25	0CBUEEC474BG/	AB		C	Carbon resistor (RDF1/2PS474J)	[R2]
	26	0CBUEFER33CH/	AC		C	Metal film resistor (SPRX2R33J)	[R3]
	27	0CBUEEB223BA/	AC		C	Resistor (R1/4PS223J)	[R4]
	28	0CBUEEB564BA/	AA		C	Carbon resistor (R1/4PS564J)	[R5,6]
	29	0CBUEFE104CS/	AB		C	Metal film resistor (RSS2U104J)	[R7,17]
	30	0CBUEFE391CL/	AC		C	Metal film resistor (RSS2-L15-391J)	[R8]
	31	0CBUEEB471BA/	AC		C	Carbon resistor (R1/4PS471J)	[R9]
	32	0CBUEEB330BM/	AA		C	Carbon resistor (F20R-02J330)	[R10]
	33	0CBUEFD561AU/	AC		C	Metal film resistor (RS1F561J)	[R11]
	34	0CBUEEB222BA/	AC		C	Carbon resistor (1/4W 2.2KΩ ±5%)(R1/4PS222J)	[R12]
	35	0CBUEEB271BA/	AA		C	Resistor (R1/4PS271J)	[R13]
	36	0CBUEEB822BA/	AA		C	Resistor (R1/4PS822J)	[R14]
	37	0CBUEEB272BA/	AA		C	Carbon resistor (R1/4PS272J)	[R15]
	38	0CBUFBA102DC/	AD		B	Variable resistor (KVSF637AB102)	[VR1]
⚠	39	0CBUGFZ224FY/	AG		C	Film capacitor (ECQ-U2A224MVA)	[C1,2]
⚠	40	0CBUGCZ222CK/	A F		C	Ceramic capacitor (DE1410-1E222M(CT4K-KD)	[C3,4]
⚠	41	0CBUGBQ820BR/	AP		C	Block capacitor (LGQ2G820MHSZ)	[C5]
	42	0CBUGCU103BC/	AD		C	Ceramic capacitor (DE1307-1E103Z1K)	[C6]
	43	0CBUGCU221BR/	AC		C	Ceramic capacitor (DE0705R221K1K-MHR)	[C7]
	44	0CBUGFF103ER/	AC		C	Capacitor (AMZF-103K50)	[C8,10]
	45	0CBUGFF683ER/	AD		C	Capacitor (AMZF-683K50)	[C9]
	46	0CBUGFF102ER/	AC		C	Capacitor (AMZF-102K50)	[C11]
⚠	47	0CBUGCQ222AQ/	A E		C	Ceramic capacitor (DE7100-1F222MVA1-KC)	[C12,13]
	48	0CBUGAD390PR/	A E		C	Capacitor (LXF25VB39(M)FM-5)	[C14,15]
	49	0CBUGAD100HD/	AC		C	Capacitor (UVZ1E100MDH1AA)	[C16,17]
	50	0CBUGAC122GK/	AG		C	Capacitor (UPL1C122MRH1AA)	[C18]
	51	0CBUGAC221HD/	AC		C	Capacitor (UVZ1C221MEH1AA)	[C19]
	52	0CBUGCS222AP/	AC		C	Ceramic capacitor (DD08-63E222P500)	[C20]
	53	0CBUGAE122NS/	AH		C	Capacitor (LXF35VB1200(M)MC-12.5)	[C21]
	54	0CBUGAE221HD/	AD		C	Capacitor (UVZ1V221MPH1AA)	[C23]
	55	0CBUGCF104DS/	AC		C	Ceramic capacitor (DD308-63F104Z50)	[C24]
⚠	56	0CBUERALE471/	AF		B	Varistor (ENC471D-07A)	[V1]

❑ Power supply PWB unit

NO.	PARTS CODE	PRICE RANK	NEW MARK	PART RANK	DESCRIPTION	
⚠ 57	0CBUZZ0100ZZ/	AH		B	Varistor (AG-10PC702R-L3N)	[V2]
⚠ 58	0CBPJCZZ0037/	AG		A	Current fuse (19181 1.25A)	[F1,2]
⚠ 59	0CBPJT0115ZZ/	AF		A	Thermal cutoff (U22 (115°C))	[F3]
⚠ 60	0CBUDZ0052ZZ/	AG		B	Thermistor (M16007C)	[TH1]
⚠ 61	0CBPKZ0194ZZ/	AC		c	Connector (B2P3-VH)	[CN1]
62	0CBPCZ0161ZZ/	AF		C	Connector (09R-FJ)	[CN2]
63	0CBPCZ0160ZZ/	AE		C	Connector (M1698(MEP1698))	[CN3 1]
64	0CBPZZ0739ZZ/	AE		C	Bush (M1773(MOL1773))	[CN3 2]
⚠ 65	0CBPFZ0242ZZ/A	L		B	Switch (SJ-W2R4A-30BB)	[SW1]
66	0CBLRH0308ZQ/A	M		C	Heat sink (D2157-5001B EZS)	[MT1]
67	OCBLRSO103ZZ/A	C		C	Supporter (SUP- 103 SUS)	[MT2]
68	OCBLRSO101ZZ/A	C		C	Supporter (SUP- 101 SUS)	[MT3]
69	0CBMRZ0787-7-/	AF		C	Radiation cap (45T-T0-220-01220)	[RA1]
70	0CBMRS0029ZZ/A	G		C	Radiation sheet (30T-55-24-A)	[RA2]
71	0CBFBZ0098ZZ/A	C		c	Terminal (TM-12)	[01]
	(Unit)					
⚠ 901	RDENT2074SCZZ	BN		E	Power supply PWB unit	

8 TEL-Liu PWB unit

NO.	PARTS CODE	PRICE RANK	NEW MARK	PART RANK	DESCRIPTION	
1	VCQYNA1HM224K	AC		C	Capacitor (50WV 0.22μF)	[C1]
2	VCEAEA0JW107M	AA		C	Capacitor (6.3WV 100μF)	[C2]
3	VCEAEA0JW107MA	A		C	Capacitor (6.3WV 100μF)	[C3]
4	VCEAL_1HW475M	AA		c	Capacitor 50WV 4.7μF)	[C4]
5	VCEAEA1AW226M	AA		C	Capacitor (10WV 22μF)	[C5]
6	VCEAEA1HW474M	AA		C	Capacitor (50WV 0.47μF)	[C6]
7	VCEAEU1HW105M	AA		C	Capacitor (50WV 1.0μF)	[C7]
8	VCEAEA0JW107M	AA		C	Capacitor (6.3WV 100μF)	[C8]
9	VCEAEA1VW226M	AA		C	Capacitor (35WV 22μF)	[C9]
11	VCEAER1HB333K	AA		C	Capacitor (50WV 0.033μF)	[C11]
				c	Capacitor 50WV 3.3μF)	[C12]
12	VCKYTV1HB222K	AA		C	Capacitor (50WV 2200PF)	[C13]
13	VCKYTV1HB222K	AA		C	Capacitor (50WV 2200PF)	[C14]
14	VCKYTV1HB332K	AA		C	Capacitor (50WV 3300PF)	[C15]
15	VCKYTQ1HB472KA	A		C	Capacitor (50WV 4700PF)	[C16]
16	VCKYTQ1HB104KA	B		C	Capacitor (5OWV 0.10μF)	[C19]
17	VCKYTV1HB471KA	A		C	Capacitor (50WV 47OPF)	[C21]
18	VCKYTV1HB153KA	A		C	Capacitor (50WV 0.015μF)	[C22]
19	VCKYTQ1HB104KA	B		C	Capacitor (50WV 0.10μF)	[C24]
20	VCKYTV1HB473KA	A		C	Capacitor (50WV 0.047μF)	[C25]
21	VCKYTV1HB392KA	A		C	Capacitor (50WV 3900PF)	[C26]
22	VCKYTQ1HB563K	AA		C	Capacitor (50WV 0.056μF)	[C27]
23	VCKYTV1HB223K	AA		C	Capacitor (50WV 0.022μF)	[C30]
24	VCKYTQ1HB563KA	A		C	Capacitor (50WV 0.056μF)	[C31]
25	QCNCM2476SC2JA	K		C	Connector (20pin)	[CNHIC]
26	VHDDAN212K/-1A	C		B	Diode (DAN212K)	[DA1]
27	VHDDAN212K/-1A	C		B	Diode (DAN212K)	[DA2]
28	VHiTA31065A-1A	K		B	IC (TA31065A)	[IC1]
29	VRS-TS2AD000J	AA		C	Resistor (1/10W 0Ω ±5%)	[JP6]
30	VSBS108///-1	AE		B	Transistor (BS108)	[Q1]
31	VS2SA1727//-1	AE		B	Transistor (2SA1727)	[Q2]
32	VS2SC4061K/-1	AC		B	Transistor (2SC4061K)	[Q3]
33	VS2SC2412KR-1	AD		B	Transistor (2SC2412KR)	[Q4]
34	VS2SA1727//-1	AE		B	Transistor (2SA1727)	[Q5]
35	VS2SA1037KR-1	AB		B	Transistor (2SA1037KR)	[Q6]
36	VS2SC2412KR-1	AD		B	Transistor (2SC2412KR)	[Q7]
37	VS2SC2412KR-1	AD		B	Transistor (2SC2412KR)	[Q8]
38	VS2SC4061K/-1	AC		B	Transistor (2SC4061K)	[Q9]
39	VRS-HT3AA151J	AA		C	Resistor (1W 150Ω ±5%)	[R1]
40	VRS-TS2AD103J	AA		C	Resistor (1/10W 10KΩ ±5%)	[R3]
41	VRS-TS2AD204J	AA		C	Resistor (1/10W 200KΩ ±5%)	[R4]
42	VRS-TS2AD562J	AA		C	Resistor (1/10W 5.6KΩ ±5%)	[R5]
43	VRS-TS2AD222J	AA		C	Resistor (1/10W 2.2KΩ ±5%)	[R6]
44	VRS-TS2AD433J	AA		C	Resistor (1/10W 43KΩ ±5%)	[R7]
45	VRS-TS2AD751J	AA		C	Resistor (1/10W 750Ω ±5%)	[R8]
46	VRS-TS2AD183J	AA		C	Resistor (1/10W 18KΩ ±5%)	[R9]
47	VRD-HT2HY150J	AA		C	Resistor (1/2W 15Ω ±5%)	[R10]
48	VRS-TS2AD514J	AG		C	Resistor (1/10W 510KΩ ±5%)	[R11]
49	VRS-TS2AD223J	AA		C	Resistor (1/10W 22KΩ ±5%)	[R12]
50	VRS-TS2AD223J	AA		C	Resistor (1/10W 22KΩ ±5%)	[R13]
51	VRS-TS2AD202J	AA		C	Resistor (1/10W 2KΩ ±5%)	[R15]
52	VRS-TS2AD912J	AA		C	Resistor (1/10W 9.1KΩ ±5%)	[R17]
53	VRS-TS2AD105J	AA		C	Resistor (1/10W 1.0MΩ ±5%)	[R21]
54	VRS-TS2AD225J	AA		C	Resistor (1/10W 2.2MΩ ±5%)	[R22]
55	VRS-TS2AD105J	AA		C	Resistor (1/10W 1.0MΩ ±5%)	[R23]

8 TEL-Liu PWB unit

NO.	PARTS CODE	PRICE RANK	NEW MARK	PART RANK	DESCRIPTION	
56	VRS-TS2AD102J	AA		C	Resistor (1/10W 1.0KΩ ±5%)	[R24]
57	VRS-TS2AD223J	AA		C	Resistor (1/10W 22KΩ ±5%)	[R25]
58	VRS-TS2AD222J	AA		C	Resistor (1/10W 2.2KΩ ±5%)	[R26]
59	VRS-TS2AD221J	AA		C	Resistor (1/10W 220Ω ±5%)	[R27]
60	VRS-TS2AD511J	AA		C	Resistor (1/10W 510Ω ±5%)	[R28]
61	VRS-TS2AD272J	AA		C	Resistor (1/10W 2.7KΩ ±5%)	[R29]
62	VRS-TS2AD821J	AA		C	Resistor (1/10W 820Ω ±5%)	[R30]
63	VRS-TS2AD244J	AA		C	Resistor (1/10W 240KΩ ±5%)	[R31]
64	VRS-TS2AD514J	AG		C	Resistor (1/10W 510KΩ ±5%)	[R32]
65	VRS-TS2AD514J	AG		C	Resistor (1/10W 510KΩ ±5%)	[R33]
66	VRS-TS2AD204J	A A		C	Resistor (1/10W 200KΩ ±5%)	[R34]
67	VRS-TS2AD103J	A A		C	Resistor (1/10W 10KΩ ±5%)	[R35]
68	VRS-TS2AD102J	AA		C	Resistor (1/10W 1.0KΩ ±5%)	[R36]
69	VRS-TS2AD752J	AA		C	Resistor (1/10W 7.5KΩ ±5%)	[R37]
70	VRS-TS2AD820J	AA		C	Resistor (1/10W 82Ω ±5%)	[R38]
71	VRS-TS2AD103J	AA		C	Resistor (1/10W 10KΩ ±5%)	[R39]
72	VRS-TS2AD103J	AA		C	Resistor (1/10W 10KΩ ±5%)	[R40]
73	VRS-TS2AD105J	AA		C	Resistor (1/10W 1.0MΩ ±5%)	[R41]
74	VRS-TS2AD104J	AA		C	Resistor 1/10W 100KΩ ±5%)	[R42]
75	VRS-TS2AD751J		AA	C	Resistor (1/10W 750Ω ±5%	[R43]
76	VRS-TS2AD151J	AA		C	Resistor (1/10W 150Ω ±5%)	[R44]
77	VRS-TS2AD302J	AA		C	Resistor (1/10W 3KΩ ±5%)	[R45]
78	VRS-TS2AD303J	AA		C	Resistor (1/10W 30KΩ ±5%)	[R46]
79	VRS-TS2AD102J	AA		C	Resistor (1/10W 1.0KΩ ±5%)	[R47]
80	VRS-TS2AD331J	AA		C	Resistor (1/10W 330Ω ±5%)	[R48]
81	VRS-TS2AD222J	AA		C	Resistor (1/10W 2.2KΩ ±5%)	[R49]
82	VRS-TS2AD104J	AA		C	Resistor (1/10W 100KΩ ±5%)	[R52]
83	VRS-TS2AD302J	AA		C	Resistor (1/10W 3KΩ ±5%)	[R53]
84	VRS-TS2AD102J	AA		C	Resistor (1/10W 1.0KΩ ±5%)	[R54]
85	VRS-TS2AD222J	AA		C	Resistor (1/10W 2.2 ±5%)	[R55]
86	VHDRB421D//-1	AC		B	Diode (RB421D)	[SD1]
87	VHDRB421D//-1	AC		B	Diode (RB421D)	[SD2]
88	VHEMTZ2R0A//-1	AA		B	Zener diode (MTZ2R0A)	[ZD2]
89	VHEMTZ2R0A//-1	AA		B	Zener diode (MTZ2R0A)	[ZD3]
90	VHEMTZ5R6B//-1	AB		B	Zener diode (MTZ5R6B)	[ZD4]
91	VHE1ZC15///-1	AC		B	Zener diode (1ZC15)	[ZD5]
⚠201	VHV3P10P1//-1	AM		B	Varistor (3P-10)	[AR1]
202	QTANZ2042SCZZ	AB		C	Terminal (M1902-A)	[ARG]
203	RALMB2007SCZZ	AG		B	Buzzer (KBT-33SB-2T-2)	[BZ1]
204	VCQYNA1HM333K	AA		C	Capacitor (50WV OS)33μF)	[C3]
205	VCEAEA1AW227M	AA		C	Capacitor (10WV 220μF)	[C4]
206	VCEAEU1HW105M	AA		C	Capacitor (50WV 1.0μF)	[C7]
207	VCEAEA1AW107M	AB		C	Capacitor (10WV 100μF)	[C8]
208	VCEAEA1HW334M	AA		C	Capacitor (50WV 0.33μF)	[C9]
209	VCQYNA1HM333K	AA		C	Capacitor (50WV 0.033μF)	[C10]
210	VCQYNU1HM334K	AD		C	Capacitor (50WV 0.33μF)	[C11]
211	VCQYNU1HM334K	AD		C	Capacitor (50WV 0.33μF)	[C12]
212	VCEAEA1AW476M	AB		C	Capacitor (10WV 47μF)	[C16]
213	VCEAEA1EW476M	AB		C	Capacitor (25WV 47μF)	[C17]
214	VCEAEA1EW476M	AB		C	Capacitor (25WV 47μF)	[C18]
215	VCEAEU1EW106M	AA		C	Capacitor (25WV 10μF)	[C19]
216	VCEAEU1HW105M	AA		C	Capacitor (50WV 1.0μF)	[C20]
217	VCFYJU2EA474K	AD		C	Capacitor (250WV 0.47μF)	[C21]
218	VCFYJU2EA474K	AD		C	Capacitor (250WV 0.47μF)	[C22]
219	VCEAEA1HW106M	AA		C	Capacitor (50WV 10μF)	[C25]
220	RC-FZ113AFZZ	AC		C	Capacitor (250WV 0.82μF)	[C26]
221	VCCCTV1HH300J	AA		C	Capacitor (50WV 30PF)	[C103]
222	VCCCTV1HH300J	AA		C	Capacitor (50WV 30PF)	[C104]
223	VCKYTV1HB102K	AA		C	Capacitor (50WV 1000PF)	[C106]
224	VCKYTV1HB102K	AA		C	Capacitor (50WV 1000PF)	[C107]
225	VCKYTV1HF223Z	AA		C	Capacitor (50WV 0.022μF)	[C108]
226	VCKYTV1HB102K	AA		C	Capacitor (50WV 1000PF)	[C111]
227	VCKYTV1HF223Z	AA		C	Capacitor (50WV 0.022μF)	[C112]
228	VCKYTV1HF223Z	AA		C	Capacitor (50WV 0.022μF)	[C113]
229	VCKYTV1HF223Z	AA		C	Capacitor (50WV 0.022μF)	[C114]
230	VCKYTV1HB681K	AA		C	Capacitor (50WV 680PF)	[C115]
231	VCKYTV1HB822K	AA		C	Capacitor (50WV 8200PF)	[C116]
232	VCKYTV1HB122K	AB		C	Capacitor (50WV 1200PF)	[C117]
233	VCKYTV1EF104Z	AA		C	Capacitor (25WV 0.1μF)	[C118]
234	VCKYTV1HB331K	AA		C	Capacitor (50WV 330PF)	[C119]
235	VCKYTV1HB331K	AA		C	Capacitor (50WV 330PF)	[C120]
236	VCKYTV1HB331K	AA		C	Capacitor (50WV 330PF)	[C121]
237	VCKYTV1HB331K	AA		C	Capacitor (50WV 330PF)	[C122]
238	VCKYTV1HB331K	AA		C	Capacitor (50WV 330PF)	[C123]
239	VCKYTV1HB331K	AA		C	Capacitor (50WV 330PF)	[C124]
240	VCKYTV1HB331K	AA		C	Capacitor (50WV 330PF)	[C125]
241	VCKYTV1HB331K	A A		C	Capacitor (50WV 330PF)	[C126]
242	VCKYTV1HB102K	AA		C	Capacitor (50WV 1000PF)	[C127]
243	CKYTV1HF223Z	A A		C	Capacitor (50WV 0.022μF)	[C128]
244	VCKYTV1HB222K	A A		C	Capacitor (50WV 2200PF)	[C129]

8 TEL-Liu PWB unit

NO.	PARTS CODE	PRICE RANK	NEW MARK	PART RANK	DESCRIPTION	
245	VCKYTV1HB273K	AA		C	Capacitor (50WV 0.027μF)	[C130]
246	VCKYTV1HB392K	AA		C	Capacitor (50WV 3900PF)	cc1311
247	VCKYTV1HF223Z	A		C	Capacitor (50WV 0.022μF)	CC1321
248	VCKYTV1HF223Z	A		C	Capacitor (50WV 0.022μF)	cc1331
249	VCKYTV1HF223ZA	A		C	Capacitor (50WV 0.022μF)	[C134]
250	VCKYTV1HF223ZA	A		C	Capacitor (50WV 0.022μF)	[C135]
251	VCKYTV1HB821KA	A		C	Capacitor (50WV 820PF)	[C136]
252	VCKYTV1HB472K	AA		C	Capacitor (50WV 4700PF)	[C137]
253	QJAKZ2029SCO0	AD		C	Connector (4pin)	[CNHJ]
254	QCNCM7014SC0BA	D		B	Connector (2pin)	[CNLED]
255	QCNCW2436SC5J	AB		C	Connector (50pin)	[CNLIU]
256	QCNCM7014SCOH	AB		C	Connector (8pin)	[CNPI]
257	QCNCM705FAF02A	B		C	Connector (B6B-PH-K-R)	[CNPRT]
258	QCNCM886JAFZZ	AD		C	Connector (9pin)	[CNPW]
259	QCNCM2401SC0BA	A		B	Connector (2pin)	[CNSP]
260	QJAKZ2043SCFD	AC		C	Jack	[CNLJ/TLJ]
261	VHDDSS133//-1	AA		B	Diode (DSS133)	[D2]
262	VHDDSS133//-1	AA		B	Diode (DSS133)	[D3]
263	VHDDSS133//-1	AA		B	Diode (DSS133)	[D4]
264	VHD1SS82///-1	AB		B	Diode (1SS82)	[D5]
265	VHDDSS131//-1	AA		B	Diode (DSS131)	[D6]
266	VHDDSS133//-1	AA		B	Diode (DSS133)	[D7]
267	VHDDSS133//-1	AA		B	Diode (DSS133)	[D8]
268	VHiULN2003AN/	AE		B	IC (ULN2003AN)	[IC1]
269	VHiULN2003AN/	AE		B	IC (ULN2003AN)	[IC4]
270	VHiNJM4558D-1	AN		B	IC (NJM4558D)	[IC5]
271	VHiNJM4558D-1	AN		B	IC (NJM4558D)	[IC6]
272	VHiNJU40530-1	AF		B	IC (NJU40530)	[IC7]
273	VHiMC34119/-1A	F		B	IC (MC34119)	[IC9]
274	VHiMC34012-1P	AF		B	IC (MC34012)	[IC10]
⚠ 275	VHiTHS56///-1A	N		B	IC (THS56)	[IC11]
⚠ 276	VHiTHS56///-1	AN		B	IC (THS56)	[IC12]
277	VHiS7235F2F-1	AM		B	IC (S7235F2F)	[IC101]
278	VRS-TS2AD000J	AA		C	Resistor (1/10W 0Ω ±5%)	[JP103]
279	VRS-TS2AD000J	AA		C	Resistor (1/10W 0Ω ±5%)	[JP107]
280	VRS-TS2AOOOOOJ	AA		c	Resistor (1/10W 0Ω ±5%)	[JP109]
281	VRS-TS2AD000JA	A		C	Resistor (1/10W 0Ω ±5%)	[JP110]
282	VRS-TS2AOOOOJ	AA		C	Resistor (1/10W On ±5%)	[JP111]
283	VRS-TS2AD000JA	A		C	Resistor (1/10W 0Ω ±5%)	[JP112]
284	VRS-TS2AD000J	AA		C	Resistor (1/10W 0Ω ±5%)	[JP113]
285	VRS-TS2AD000J	AA		C	Resistor (1/10W 0Ω ±5%)	[JP114]
286	VRS-TS2AD000J	AA		C	Resistor (1/10W 0Ω ±5%)	[JP115]
287	VRS-TS2AD000J	AA		C	Resistor (1/10W 0Ω ±5%)	[JP118]
288	VRS-TS2AD000J	AA		C	Resistor (1/10W 0Ω ±5%)	[JP121]
289	VRS-TS2AD000J	AA		C	Resistor (1/10W 0Ω ±5%)	[JP122]
⚠ 290	RFiLN2011SCZZ	AC		C	Coil (SBT-0260)	[L1]
291	VRO-RC2EYOOOJ	AA		c	Resistor (1/4W 0Ω ±5%)	[L2]
⚠ 292	RFiLN2011SCZZ	AC		c	Coil (SBT-0260)	[L3]
293	VRO-RC2EYOOOJ	AA		c	Resistor (1/4W On ±5%)	[L4]
294	VRD-RC2EY000J	A	A	C	Resistor (1/4W 0Ω ±5%)	[L9]
295	VRD-RC2EY000J	A	A	C	Resistor (1/4W 0Ω ±5%)	[L10]
296	VRO-RC2EYOOOJ	AA		C	Resistor (1/4W 0Ω ±5%)	[L11]
297	VRD-RC2EY000JA	A		C	Resistor (1/4W 0Ω ±5%)	[L12]
298	VRD-RC2EY000JA	A		C	Resistor (1/4W 0Ω ±5%)	[L13]
299	VRD-R2EY000JA	A		C	Resistor (1/4W 0Ω ±5%)	[L14]
300	VRO-RC2EY000JA	A		C	Resistor (1/4W 0Ω ±5%)	[L15]
301	VRD-R2EY000JA	A		C	Resistor (1/4W 0Ω ±5%)	[L16]
⚠ 302	RFiLN2011SCZZA	C		C	Coil (SBT-0260)	[L17]
⚠ 303	RFiLN2011SCZZA	C		C	Coil (SET-0260)	[L18]
304	VRO-RC2EYOOOJ	AA		C	Resistor (1/4W 0Ω ±5%)	[L21]
⚠ 305	VHPPC847J///-1	AM		B	Photo coupler (PC847)	[PC1]
⚠ 306	VHPPC817CD/-1	AC		B	Photo coupler (PC817CD)	[PC2]
⚠ 307	VHPPC817CD/-1	AC		B	Photo coupler (PC817CD)	[PC4]
⚠ 308	VHPPC817D//-1A	D		B	Photo coupler (PC817D)	[PC5]
309	VSBS108////-1A	E		B	Transistor (BS108)	[Q1]
310	VS2SC2412KR-1A	D		B	Transistor (2SC2412KR)	[Q101]
311	VRS-RE3AA222JA	A		C	Resistor (1W 2.2KΩ ±5%)	[R2]
312	VRS-RE3AA103JA	A		C	Resistor (1W 10KΩ ±5%)	[R4]
313	VRS-RE3DA750JA	L		C	Resistor (2W 750 ±5%)	[R5]
314	VRD-HT2HY150JA	A		C	Resistor (1/2W 15Ω ±5%)	[R6]
315	VRD-HT2HY150J	AA		C	Resistor (1/2W 15Ω ±5%)	
316	VRD-HT2HY474J	AA		C	Resistor (1/2W 470KΩ ±5%)	[R8]
317	VRS-TS2AD221J	AA		C	Resistor (1/10W 220Ω ±5%)	[R101]
318	VRS-TS2AD221J	AA		C	Resistor (1/10W 220Ω ±5%)	[R102]
319	VRS-TS2AD221J	AA		C	Resistor (1/10W 220Ω ±5%)	[R103]
320	VRS-TS2AD221JA	A		C	Resistor (1/10W 220Ω ±5%)	[R104]
321	VRS-TS2AD221JA	A		C	Resistor (1/10W 220Ω ±5%)	[R105]
322	VRS-TS2AOOOOJ	AA		C	Resistor (1/10W 0Ω ±5%)	[R107]
323	VRS-TS2AD104JA	A		C	Resistor (1/10W 100KΩ ±5%)	[R109]
324	VRS-TS2AD000JA	A		C	Resistor (1/10W On ±5%)	[R110]

8 TEL-Liu PWB unit

NO.	PARTS CODE	PRICE RANK	NEW MARK	PART RANK	DESCRIPTION	
325	VRS-TS2AD122J	AA		C	Resistor (1/10W 1.2KΩ ±5%)	[R115]
326	VRS-TS2AD303J	AA		C	Resistor (1/10W 30KΩ ±5%)	[R116]
327	VRS-TS2AD203J	AA		C	Resistor (1/10W 20KΩ ±5%)	[R117]
328	VRS-TS2AD753J	AA		C	Resistor (1/10W 75KΩ ±5%)	[R118]
329	VRS-TS2AD203J	AA		C	Resistor (1/10W 20KΩ ±5%)	[R123]
330	VRS-TS2AD000J	AA		C	Resistor (1/10W 0Ω ±5%)	[R124]
331	VRS-TS2AD225J	AA		C	Resistor (1/10W 2.2MΩ ±5%)	[R125]
332	VRS-TS2AD000J	AA		C	Resistor (1/10W 0Ω ±5%)	[R126]
333	VRS-TS2AD203J	AA		C	Resistor (1/10W 20KΩ ±5%)	[R127]
334	VRS-TS2AD333J	AA		C	Resistor (1/10W 33KΩ ±5%)	[R128]
335	VRS-TS2AD622J	AA		C	Resistor (1/10W 6.2KΩ ±5%)	[R129]
336	VRS-TS2AD103J	AA		C	Resistor (1/10W 10KΩ ±5%)	[R130]
337	VRS-TS2AD203J	AA		C	Resistor (1/10W 20KΩ ±5%)	[R132]
338	VRS-TS2AD103J	AA		C	Resistor (1/10W 10KΩ ±5%)	[R133]
339	VRS-TS2AD203J	AA		C	Resistor (1/10W 20KΩ ±5%)	[R134]
340	VRS-TS2AD333J	AA		C	Resistor (1/10W 33KΩ ±5%)	[R135]
341	VRS-TS2AD203J	AA		C	Resistor (1/10W 20KΩ ±5%)	[R136]
342	VRS-TS2AD203J	AA		C	Resistor (1/10W 20KΩ ±5%)	[R140]
343	VRS-TS2AD753J	AA		C	Resistor (1/10W 75KΩ ±5%)	[R141]
344	VRS-TS2AD302J	AA		C	Resistor (1/10W 3.0KΩ ±5%)	[R142]
345	VRS-TS2AD103J	AA		C	Resistor (1/10W 10KΩ ±5%)	[R143]
346	VRS-TS2AD685J	AA		C	Resistor (1/10W 6.8MΩ ±5%)	[R144]
347	VRS-TS2AD164J	AA		C	Resistor (1/10W 160KΩ ±5%)	[R145]
348	VRS-TS2AD272J	AA		C	Resistor (1/10W 2.7KΩ ±5%)	[R146]
349	VRS-TS2AD101J	AA		C	Resistor (1/10W 100Ω ±5%)	[R147]
350	VRS-TS2AD822J	AA		C	Resistor (1/10W 8.2KΩ ±5%)	[R148]
351	VRS-TS2AD333J	AA		C	Resistor (1/10W 33KΩ ±5%)	[R149]
352	VRS-TS2AD821J	AA		C	Resistor (1/10W 820Ω ±5%)	[R150]
353	VRS-TS2AD821J	AA		C	Resistor (1/10W 820Ω ±5%)	[R151]
354	VRS-TS2AD203J	AA		C	Resistor (1/10W 20KΩ ±5%)	[R152]
355	VRS-TS2AD623J	AA		C	Resistor (1/10W 62KΩ ±5%)	[R153]
356	VRS-TS2AD103J	AA		C	Resistor (1/10W 10KΩ ±5%)	[R155]
357	VRS-TS2AD183J	AA		C	Resistor (1/10W 18KΩ ±5%)	[R156]
358	VRS-TS2AD103J	AA		C	Resistor (1/10W 10KΩ ±5%)	[R157]
359	VHD0R5G4B42-1	AF		B	Diode (0R5G4B42)	[REC1]
360	VHDS1ZB60//-1	AC		B	Diode (S1ZB60)	[REC2]
361	RRLYZ3420SCZZ	AR		B	Relay (G6GN-2D)	[RY1]
⚠ 362	RRLYZ3420SCZZ	AR		B	Relay (G6GN-2D)	[RY2]
⚠ 363	RRLYZ3420SCZZ	AR		B	Relay (G6GN-2D)	[RY3]
364	VRD-RC2EY000J	AA		C	Resistor (1/4W 0Ω ±5%)	[SP1]
365	VRD-HT2EY000J	AA		C	Resistor (1/4W 0Ω ±5%)	[SP3]
366	VRD-HT2EY000J	AA		C	Resistor (1/4W 0Ω ±5%)	[SP5]
367	PSPAZ2190SCZZ	AB		C	PWB spacer	[SPACER]
368	QSW-S2166SC02	AC		B	Slide switch (HSW-1070-01-200)	[SW1]
369	QSW-S2166SC03	AC		B	Slide switch (HSW-1071-01-200)	[SW2]
⚠ 370	QSW-Z2186SCZZ	AH		B	Switch (SPPY43)	[SW3]
371	RTRNZ2140SCZZ	AN		B	Transformer	[T1]
⚠ 372	RTRNi2142SCZA	AP		B	Transformer	[T2]
373	RVR-Q1402QCZZ	AD		B	Variable resistor (RS10M11AJ)	[VR1]
374	RCRM-0091AFZZ	AE		B	Crystal (CSA3.58MG)	[X1]
375	VHEHZS3B1//-1	AC		B	Zener diode (HZS3B1)	[ZD1]
376	VHEHZS3B1//-1	AC		B	Zener diode (HZS3B1)	[ZD2]
377	VHEMTZ5R6C//-1	AA		B	Zener diode (MTZ5R6C)	[ZD4]
378	VHEMTZ5R1C//-1	AA		B	Zener diode (MTZ5R1C)	[ZD6]
379	VHEHZS3B1//-1	AC		B	Zener diode (HZS3B1)	[ZD8]
380	VHEHZS3B1//-1	AC		B	Zener diode (HZS3B1)	[ZD9]
381	VHEHZS3B1//-1	AC		B	Zener diode (HZS3B1)	[ZD10]
382	VHEHZS3B1//-1	AC		B	Zener diode (HZS3B1)	[ZD11]
383	VHERD18EL2//-1	AA		B	Zener diode (RD18EL2)	[ZD14]
384	VHEMTZ6R8B//-1	AB		B	Zener diode (MTZ6R8B)	[ZD15]
385	VHEMTZJ300B-1	AA		B	Zener diode (MTZJ300B)	[ZD16]
386	QCNW-4260SCZZ	AA	N	C	Jumper wire	
	(Unit)					
901	———				Speech PWB unit (No.1~91)	
902	DCEKL346ASC32	BT	N	E	TEL—Liu PWB unit (Include No. 901)	

9 Panel PWB unit

NO.	PARTS CODE	PRICE RANK	NEW MARK	PART RANK	DESCRIPTION	
1	VCKYTQ1EF104ZA	A		C	Capacitor (25WV 0.1μF)	[C1]
2	VCKYTQ1HB222K/A	A		C	Capacitor (50WV 2200PF)	[C2]
3	VHiKS0066F00/A	AA		C	IC (KS0066F00)	[IC1]
4	VRS-TP2BD562J			c	Resistor (1/8W 5.6KΩ ±5%)	[R1]
5	VRS-TP2BD562J	A		C	Resistor (1/8W 5.6KΩ ±5%)	[R2]
6	VRS-TP2BD562J	A		C	Resistor (1/8W 5.6KΩ ±5%)	[R3]
7	VRS-TP2BD562J	A		c	Resistor (1/8W 5.6KΩ ±5%)	[R4]

9 Panel PWB unit

NO.	PARTS CODE	PRICE RANK	NEW MARK	PART RANK	DESCRIPTION	
8	VRS-TP2BD000J	A A		C	Resistor (1/8W On ±5%)	[R5]
9	VRS-TP2BD104J	A A		C	Resistor (1/8W 100KΩ ±5%)	[R8]
10	VRS-TP2BD101J	A A		C	Resister (1/8W 100Ω ±5%)	[R9]
11	LANGH2 70XHZZ	A D		C	Bezel	
12	PGUMM2107SCZZ	A B		C	Rubber	
13	VVLLF7174G6-1	A P		E	LCD (LLF7174G6)	
51	VHPGL3EG43/-1	A B		B	LED (Green) (GL3EG43)	[AM]
52	VHPGL3EG43/-1	A B		B	LED (Green) (GL3EG43)	[AUTO]
53	RC-K1H104HCZZ	A C		C	Capacitor (50WV 0.1μF)	[C2]
54	RC-EZ2017SCZZ	A C		C	Capacitor (16WV 22μF)	[C3]
55	QCNW-4174SCZZ	A C		C	LCD cable	[CNLCD]
56	QCNCM2419SC2B	A E		C	Connector (22pin)	[CNPN]
57	VHiSN74LS145N	A H		B	IC (SN74LS145N)	[IC1]
58	VRD-RC2EY000J	A A		C	Resistor (1/4W 0Ω ±5%)	[J1]
59	VRD-RC2EY000J	A A		C	Resistor (1/4W 0Ω ±5%)	[J2]
60	VRD-RC2EY000J	A A		C	Resistor (1/4W 0Ω ±5%)	[J3]
61	VRD-RC2EY000J	A A		C	Resistor (1/4W 0Ω ±5%)	[J4]
62	VRD-RC2EY000J	A A		C	Resistor (1/4W 0Ω ±5%)	[J5]
63	VRD-RC2EY000J	A A		C	Resistor (1/4W 0Ω ±5%)	[J6]
64	VRD-RC2EY000J	A A		C	Resistor (1/4W 0Ω ±5%)	[J7]
65	VRD-RC2EY000J	A A		C	Resistor (1/4W 0Ω ±5%)	[J8]
66	VRD-RC2EY000J	A A		C	Resistor (1/4W 0Ω ±5%)	[J9]
67	VHPGL3EG43/-1	A B		B	LED (Green) (GL3EG43)	[MAN]
68	VSDTC114ES/-1	A B		B	Transistor (DTC114ES)	[Q1]
69	VSDTC114ES/-1	A B		B	Transistor (DTC114ES)	[Q2]
70	VS [illegible] /-1	A B		B	Transistor (DTC114ES)	[Q3]
71	VRD-RC2EY221JA	A		C	Resistor (1/4W 220Ω ±5%)	[R1]
72	VRD-RC2EY221JA	A		C	Resistor (1/4W 220Ω ±5%)	[R2]
73	VRD-RC2EY221JA	A		C	Resistor (1/4W 220Ω ±5%)	[R3]
74	VD-RC2EY622JA	A		C	Resistor (1/4W 6.2KΩ ±5%)	[R4]
75	VRD-RC2EY102JA	A		C	Resister (1/4W 1.0KΩ ±5%)	[R5]
76	QSW-K2194SCZZA	B		B	Tact switch (SOR - 123HS)	[SW]
					LCD PWB unit (No.1~13)	
					Panel PWB unit (No.51~76)	
	(Unit)					
901	DCEKP335ASC01	B D		E	Panel PWB unit	

❑ SensorPWBunit

NO.	PARTS CODE	PRICE RANK	NEW MARK	PART RANK	DESCRIPTION	
1	QCNCM7014SC0B	A D		B	Connector (2pin)	[CNLED(SNS)]
2	QCNCM7014SC0G	A B		C	Connector (7pin)	[CNSNS]
3	QSW-M2184SCZZ	A D		B	Door-switch (MSS-10A-6)	[DRSNS]
4	VHGP1S58V//-1	A E		B	Photo interrupter (GP1S58V)	[PC1]
5	VHGP1S58V//-1	A E		B	Photo interrupter (GP1S58V)	[PC2]
6	VRD-HT2EY271J	A A		C	Resistor (1/4W 220Ω ±5%)	[R9]
7	VRD-HT2EY271J	A A		C	Resistor (1/4W 220Ω ±5%)	[R10]
	(Unit)					
901	DCEKS348ASC31	A W		E	Sensor PWB unit	

11 CCD PWB unit

NO.	PARTS CODE	PRICE RANK	NEW MARK	PART RANK	DESCRIPTION	
1	VCEAJA1EW226M	A B		C	Capacitor (25WV 22μF)	[C1]
2	VCKYTQ1EF104Z	A A		C	Capacitor (25WV 0.1μF)	[C2]
3	QCNCM7014SC0G	A B		C	Connector (7pin)	[CN1]
4	VHiTCD1200D-1	A Z		B	IC (TCD1200D)	[IC1]
5	VS2SC2412KS-1	A B		B	Transistor (2SC2412KS)	[Q1]
6	VRS-TP2BD222J	A A		C	Resistor (1/8W 2.2KΩ ±5%)	[R1]
7	VRS-TP2BD390J	A A		C	Resistor (1/8W 39Ω ±5%)	[R2]
8	PSHEZ2997SCZZ	A B		C	CCD sheet	
	(Unit)					
901	DCEKD333ASC01B	E		E	CCD PWB unit	

50 Hardware parts

NO.	PARTS CODE	PRICE RANK	NEW MARK	PART RANK	DESCRIPTION
B1	LX-BZ2178SCZZA	B		C	Screw

50 Hardware parts

NO.	PARTS CODE	PRICE RANK	NEW MARK	PART RANK	DESCRIPTION
B2	LX-BZ2182SCZZ	AB		C	Screw
B3	XHBSD30P05000	AA		C	Screw (3×5)
B4	XBPSD30P06K00	AA		C	Screw (3×6K)
B5	XBPSE30P08K00	AA		C	Screw (3×8K)
B6	XBPSN40P06K00	AA		C	Screw (4×6K)
B7	XEBSD20P06000	AA		C	Screw (2×6)
B8	XEBSD30P06000	AA		C	Screw (3×6)
B9	XEBSF30P06000	AA		C	Screw (3×6)
B10	XEBSD30P10000	AA		C	Screw (3×10)
B11	XEBSF30P08000	AA		C	Screw (3×8)
B12	XEBSE30P10000	AA		C	Screw (3×10)
B13	XEPSD30P06X00	AA		C	Screw (3×6X)
B14	XHBSD30P06000	AA		C	Screw (3×6)
B15	XJPSD30P04000	AA		C	Screw (3×4)
B16	XUBSD20P06000	AA		C	Screw (2×6)
B17	XEBSE30P08000	AA		C	Screw (3×8)
B18	XEBSD30P08000	AA		C	Screw (3×8)

■ Index

PARTS CODE	NO.	PRICE RANK	NEW MARK	PART RANK
〔C〕				
CCABA2232SC12	2- 101	BM	N	E
CCNW-4171SC01	1- 24	AR		C
〔D〕				
DCEKC780FSCZZ	1- 18	CA	N	E
〃	6- 901	CA	N	E
DCEKD333ASC01	4- 9	BE		E
〃	11- 901	BE		E
DCEKL346ASC32	1- 16	BT	N	E
〃	8-902	BT	N	E
DCEKP335ASC01	2- 13	BD		E
〃	9- 901	BD		E
DCEKS348ASC31	1- 33	AW		E
〃	10- 901	AW		E
DUNTK4925SCD3	5- 12	AX		E
〔G〕				
GCABA2232SCZD	2- 4	AX	N	D
GCABB2231SCZB	1- 22	BB	N	D
GCABC2233SCZB	1- 8	BA		D
GLEGG2026SCZZ	1- 20	AA		C
〔J〕				
JBTN-2085XHZC	2- 9	AR		C
JBTN-2086XHZC	2- 11	AQ		C
JBTN-2115SCZB	2- 12	AG		C
JBTN-2116SCZB	2- 8	AC		C
JBTN-2117SCZB	2- 10	AC		C
JKNBP2063SCZB	2- 7	AD		C
〔L〕				
LANGH2390AH2Z	5- 11	AD		C
LBNDJ2006SCZZ	1- 14	AA		C
LFRM-2147XHZZ	4- 4	AY		C
LHLDW2133SCZZ	i-23	AC		C
LPLTG2678SCZZ	2- 18	AD		C
LPLTM2684SCZZ	1- 19	AR		C
LPLTM2685SCZZ	2- 15	AD		C
LPLTM2687SCZZ	1- 10	AE		C
LPLTP2676SCZZ	2- 20	AE		C
LPLTP2677SCZZ	1- 11	AH		C
LPLTP2679SCZC	5- 17	AS	N	C
LPLTP2680SCZB	5- 31	AN		C
LPLTP2681SCZB	5- 18	AC		C
LPLTP2682SCZB	5- 29	AH		C
LPLTP2683SCZZ	5- 19	AU		C
LX-BZ2178SCZZ	50-B1	AB		C
LX-BZ2182SCZZ	50-B2	AB		C
〔M〕				
MLEVP2165SCZB	1- 32	AE		C
MLEVP2166SCZZ	2- 6	AM		C
MLEVP2169SCZZ	1- 28 A	C		C
MLEVP2170SCZZ	1- 29	AC		C
MSPRC2660SCZZ	2- 5	AB		C
MSPRC2681SCZZ	2- 33	AC		C
MSPRD2655SCZZ	2- 35	AC		
MSPRD2656SCZZ	2- 36	AC		C
MSPRD2659SCZZ	1- 31	AB		C
MSPRD2671SCZZ	1- 30	AB		C
MSPRP2512SCZZ	4- 8	AB		C
MSPRP2535XHZZ	2- 29	AD		C
MSPRP2618SCZZ	4- 5	AD		C
MSPRP2619SCZZ	4- 3	AD		C
MSPRP2652SCZZ	2- 17	AD		C
MSPRP2653SCZZ	1- 7	AC		C
MSPRP2658SCZZ	5- 32	AC		C
MSPRP2667SCZZ	1- 46	AC		C
MSPRT2657SCZZ	2- 25	AB		C
MSPRT2661SCZZ	2- 16	AB		C
MSPRT2676SCZA	2- 19	AB		C
〔N〕				
NBRGP2138XHZZ	1- 6	AD		C
NBRGP2141XHZZ	1- 25	AA		C
〃	2- 23	AH		C
NGERH2210XHZZ	1- 12	AC		C
NGERH2240XHZZ	1- 13	AC		C
NGERH2257SCZZ	1- 3	AE		C
NGERH2258SCZZ	1- 26	AB		C
〃	2- 22	AB		C
NGERP2206XHZZ	2- 6	AE		C
NRÖLP2249XHZZ	2- 28	AE		C
NRÖLP2289SCZZ	1- 48	AE		C
NRÖLP2292SCZZ	1- 5	AD		C

PARTS CODE	NO.	PRICE RANK	NEW MARK	PART RANK
NRÖLR2284SCZZ	2- 27	AK		C
NRÖLR2285SCZZ	1- 2	AM		C
NROLR2286SCZZ	1- 27	AK		C
NRÖLR2288SCZZ	1- 47	AH		C
NSFTZ2249SCZZ	1-4	AS		C
〔P〕				
PBRS-2041SCZZ	2- 31	AG		C
PCÖVH2098SCZZ	1- 21	AD		C
PCÖVP2097SCZB	2- 21	AH		C
PGiDM2396SCZB	2- 32	BA		C
PGiDM2397SCLB	2- 2	AE		C
PGiDM2397SCRB	2- 3	AE		C
PGiDM2398SCZD	1- 1	AU	N	C
PGLSP2043SCZZ	4- 6	AF		C
PGUMM2107SCZZ	9- 12	AB		C
PHÖP-2076SCZZ	5- 20	AQ		C
PLNS-2043SCZZ	4- 10	AV		B
PMiR-2061SCZZ	4- 2	AG		C
PMiR-2062SCZZ	4- 1	AH		C
PSHEZ2879XHZZ	4- 7	AK		C
PSHEZ2880XHZZ	1- 44	AK		C
PSHEZ2897SCA4	5- 23	AK		C
PSHEZ2930SCZB	5- 2	AE		C
PSHEZ2935SCZZ	2- 24	AB		C
PSHEZ2940SCZZ	4- 12	AB		C
PSHEZ2974SCZZ	4- 14	AA		C
PSHEZ2980SCZZ	1- 49	AM		C
PSHEZ2982SCZZ	5- 36	AD		C
PSHEZ2997SCZZ	11- 8	AB		C
PSHEZ3002SCZZ	1- 50	AD		C
PSPAZ2181SCZZ	1- 42	AB		C
PSPAZ2190SCZZ	8- 367	AB		C
〔Q〕				
QACCL762ASCZZ	1- 15	AW		B
QCNCM2389SC2B	6- 90	AE		C
QCNCM2401SC0B	8- 259	AA		B
QCNCM2419SC2B	9- 56	AE		C
QCNCM2436SC5J	6- 89	AB		C
QCNCM2465SC3J	6- 88	AF		C
QCNCM2476SC2J	8- 25	AU		C
QCNCM7014SC0B	8- 254	AD		B
〃	10- 1	AD		B
QCNCM7014SC0E	6- 91	AB		C
QCNCM7014SC0F	6- 92	AB		C
QCNCM7014SC0G	6- 87	AB		C
〃	10- 2	AB		C
〃	10- 3	AB		C
QCNCM7014SC0H	8- 256	AB		C
QCNCM705FAF02	8- 257	AB		C
QCNCM886JAFZZ	8- 258	AD		C
QCNCW2436SC5J	8- 255	AB		C
QCNW-3976XHÖG	5- 7	AT		C
QCNW-4167SCZZ	1- 38	AH		C
QCNW-4168SCZZ	1- 39	AG		C
QCNW-4169SCZZ	4- 13	AC		C
QCNW-4170SCZZ	2- 14	AT		C
QCNW-4172SCZZ	1- 34	AH		C
QCNW-4173SCZZ	1- 37	AC		C
QCNW-4174SCZZ	9- 55	AC		C
QCNW-4175SCZZ	2- 30	AE		C
QCNW-4260SCZZ	8- 386	AA	N	C
QJAKZ2029SC0D	8- 253	AD		C
QJAKZ2043SCFD	8- 260	AG		C
QSÖCZ2051SC32	6- 122	AC		C
QSW-K2194SCZZ	9- 76	AB		B
QSW-M2184SCZZ	10- 3	AD		B
QSW-S2166SC02	8- 368	AC		B
QSW-S2166SC03	8- 369	AC		B
QSW-Z2186SCZZ	8- 370	AH		B
QTANZ2042SCZZ	8- 202	AB		C
〔R〕				
RALMB2007SCZZ	8- 203	AG		B
RC-EZ2017SCZZ	9- 54	AE		C
RC-EZ2030SCZZ	3- 235	AE		C
RC-EZ2031SCZZ	3- 238	AE		C
RC-FZ1131AFZZ	R- 220	AC		C
RC-K1H104HCZZ	9- 5 3 A	C		C
RCORF2063SCZZ	1- 41	AE		C
RCORF2066SCZZ	1- 35	AG		C
RCÖRF2084SCZZ	1- 40	AG		C

PARTS CODE	NO.	PRICE RANK	NEW MARK	PART RANK	
RCORF2085SCZZ	3- 228	AE		C	
//	3- 239	AE		C	
RCRM-0091AFZZ	8- 374	AE		B	
RCRSP2080SCZZ	6-290	AF		B	
RCRSP2083SCZZ	6- 292	AE		B	
RCRSQ2090SCZZ	6- 293	AD		C	
RCRSZ7008SCZZ	6- 291	AD		B	
RDENT2074SCZZ	1- 17	BN		E	
//	7- 901	BN		E	
RFiLN2011SCZZ	8- 290	AC		C	
//	8- 292	AC		C	
//	8- 302	AC		C	
//	a- 303	AC		C	
RMOTZ2109SCZZ	1- 9	AX		B	
RR-DZ4103ACZZ	3- 227	AB		C	
RR-SZ2002SCZZ	3- 234	AE		C	
RRLYZ3420SCZZ	8- 361	AR		B	
//	8- 362	AR		B	
//	8- 363	AR		B	
RTRNi2142SCZA	8- 372	AP		B	
RTRNZ2140SCZZ	8- 371	AN		B	
RVR-Q1402QCZZ	8- 373	AD		B	
[S]					
SPAKA4105SCZZ	5- 5	A,,,		D	
SPAKA4106SCZZ	5- 4	AM		D	
SPAKA4108SCZZ	5- 16	AN		D	
SPAKA4109SCZZ	5- 15	AE		D	
SPAKA4274SCZZ	5- 10	AB		D	
SPAKA4345SCZZ	5- 3	AC		D	
SPAKC4202SCZZ	5- 9	AP		D	
SPAKP4080SCZZ	5- 1	AM		D	
SSAKA1340QCZZ	5- 34	AB		D	
SSAKA2344QCZZ	5- 21	AB		D	
SSAKA3001CCZZ	5- 8	AA		D	
SSAKA3340QCZZ	5- 33	AB		D	
SSAKA3341QCZZ	5- 30	AB		D	
[T]					
TCADZ2139SCZZ	5- 24	AE		D	
TCADZ2264SCZZ	5- 25	AE		D	
TCADZ2274SCZB	5- 27	AD		D	
TGANE2036SCZZ	5- 26	AC		D	
TiNSE3397SCZZ	5- 22	AZ	N	D	
TLABH3435SCZB	5- 35	AD		D	
TLABP3078SCZZ	6- 294	AA		D	
TLABS3420SCZZ	1- 51	AB	N	D	
TLABS3421SCZZ	1- 52	AB	N	D	
TLABZ3418SCZZ	1- 53	AB	N	D	
[U]					
UBATN2010SCZZ	6- 1	AN		B	
UBNDA1008CCZZ	5- 11	AA		C	
[V]					
VCCCTV1HH101J	3- 222	AA		C	
//	6- 72	AA		C	
//	6- 86	AA		C	
VCCCTV1HH180J	6- 67	AA		C	
//	6- 68	AA		C	
VCCCTV1HH221J	6- 57	AA		C	
//	6- 58	AA		C	
VCCCTV1HH300J	6- 29	AA		C	
//	6- 30	AA		C	
//	8- 221	AA		C	
//	8- 222	AA		C	
VCCCTV1HH330J	6- 42	AA		C	
//	6- 48	AA		C	
VCCCTV1HH470J	3- 221	AA		C	
VCCCTV1HH5R0J	6- 24	AA		C	
VCCSTV1HL102J	6- 52	AA		C	
//	6- 53	AA		C	
//	6- 81	AA		C	
VCEAEA1AW107M	8- 2	AA		C	
//	8- 3	AA		C	
//	8- 8	AA		C	
VCEAEA1AW107M	8- 207	AB		C	
VCEAEA1AW226M	8- 5	AA		C	
VCEAEA1AW227M	8- 205	AB		C	
VCEAEA1AW476M	8- 212	AB		C	
VCEAEA1EW476M	8- 213	AB		C	
//	8- 214	AB		C	
VCEAEA1HW106M	8- 219	AA		C	
VCEAEA1HW334M	8- 208	AA		C	

PARTS CODE	NO.	PRICE RANK	NEW MARK	PART RANK	
VCEAEA1HW335M	8- 11	AA		C	
VCEAEA1HW474M	8- 6	AA		C	
VCEAEA1VW226M	8- 9	AA		C	
VCEAEU1EW106M	8- 215	AA		C	
VCEAEU1HW105M	8- 7	AA		C	
//	8- 206	AA		C	
//	8- 216	AA		C	
VCEAEU1HW475M	8- 4	AA		C	
VCEAJA1EW226M	11- 1	AB		C	
VCEAPS105AF1H	6- 10	AB		C	
VCEAPS106AF1E	6- 2	AC		C	
VCEAPS226AF1C	6- 12	AC		C	
//	6- 13	AC		C	
//	6- 14	AC		C	
VCEAPS336AF1C	6- 9	AC		C	
VCFYJU2EA474K	8- 217	AD		C	
//	8- 218	AD		C	
VCKRTQ1HR104K	3- 223	AB		C	
VCKRTV1HR102K	3- 220	AB		C	
VCKRTV1HR103K	3- 219	AB		C	
VCKYCY1EF104Z	6- 5	AA		C	
//	6- 6	AA		C	
//	6- 7	AA		C	
VCKYCY1EF223Z	6- 11	AA		C	
VCKYCY1HB102K	6- 8	AA		C	
VCKYTQ1CF105Z	6- 43	AE		C	
//	6- 45	AE		C	
//	6- 51	AE		C	
VCKYTQ1EF104Z	6- 47	AA		C	
//	9- 1	AA		C	
//	11- 2	AA		C	
VCKYTQ1HB104K	8- 16	AB		C	
//	8- 19	AB		C	
VCKYTQ1HB222K	9- 2	AA		C	
VCKYTQ1HB333K	8- 10	AA		C	
VCKYTQ1HB472K	8- 15	AA		C	
VCKYTQ1HB563K	8- 22	AA		C	
//	8- 24	AA		C	
VCKYTV1EF104Z	6- 4	AA		C	
//	6- 21	AA		C	
//	6- 25	AA		C	
//	6- 26	AA		C	
//	6- 33	AA		C	
//	6- 34	AA		C	
//	6- 37	AA		C	
//	6- 39	AA		C	
//	6- 46	AA		C	
//	6- 50	AA		C	
//	6- 54	AA		C	
//	6- 55	AA		C	
//	6- 56	AA		C	
//	6- 71	AA		C	
//	6- 73	AA		C	
//	6- 74	AA		C	
//	6- 75	AA		C	
//	6- 77	AA		C	
//	6- 79	AA		C	
//	6- 82	AA		C	
//	6- 83	AA		C	
//	6- 84	AA		C	
//	6- 85	AA		C	
//	8- 233	AA		C	
VCKYTV1HB102K	8- 223	AA		C	
//	8- 224	AA		C	
//	8- 226	AA		C	
//	8- 242	AA		C	
VCKYTV1HB122K	8- 232	AB		C	
VCKYTV1HB153K	8- 18	AA		C	
VCKYTV1HB222K	6- 15	AA		C	
//	6- 16	AA		C	
//	6- 17	AA		C	
//	6- 18	AA		C	
//	6- 19	AA		C	
//	6- 22	AA		C	
//	6- 23	AA		C	
//	6- 27	AA		C	
//	6- 28	AA		C	
//	6- 31	AA		C	
//	6- 32	AA		C	
//	6- 41	AA		C	

PARTS CODE	NO.	PRICE RANK	NEW MARK	PART RANK	
VCKYTV1HB222K	6- 44	AA		C	
//	6- 59	AA		C	
//	6- 60	AA		C	
//	6- 61	AA		C	
//	6- 64	AA		C	
//	6- 70	AA		C	
//	8- 12	AA		C	
//	8- 13	AA		C	
//	8- 244	AA		C	
VCKYTV1HB223K	8- 23	AA		C	
VCKYTV1HB272K	6- 76	AA		C	
VCKYTV1HB273K	8- 245	AA		C	
VCKYTV1HB331K	8- 234	AA		C	
//	8- 235	AA		C	
//	a- 236	AA		C	
//	a- 237	AA		C	
//	a- 238	AA		C	
//	a- 239	AA		C	
//	a- 240	AA		C	
//	a- 241	AA		C	
VCKYTV1HB332K	8- 14	AA		C	
VCKYTV1HB392K	8- 21	AA		C	
//	8- 246	AA		C	
VCKYTV1HB471K	6- 17	AA		C	
VCKYTV1HB472K	6- 80	AA		C	
//	8- 252	AA		C	
VCKYTV1HB473K	8- 20	AA		C	
VCKYTV1HB681K	6- 78	AA		C	
//	8- 230	AA		C	
VCKYTV1HB821K	8- 251	A	A	C	
VCKYTV1HB822K	8- 231	AA		C	
VCKYTV1HF223Z	6- 3	AA		C	
//	6- 20	AA		C	
//	6- 35	AA		C	
//	6- 36	AA		C	
//	6- 38	AA		C	
//	6- 40	AA		C	
//	a- 62	AA		C	
//	6- 63	AA		C	
//	6- 65	AA		C	
//	6- 66	AA		C	
//	6- 69	AA		C	
//	a- 225	AA		C	
//	a- 227	AA		C	
//	a- 228	AA		C	
//	8- 229	AA		C	
//	8- 243	AA		C	
//	8- 247	AA		C	
//	8- 248	AA		C	
//	8- 250	AA		C	
VCQYNA1HM224K	8-1	AC		C	
VCQYNA1HM333K	8- 204	AA		C	
//	a- 209	AA		C	
VCQYNU1HM334K	8- 210	A	D	C	
//	8-211	AD		C	
VCSAPJ1AA475M	6- 49	AB		C	
VHDDAN212K/-1	8- 26	AC		B	
//	8- 27	AC		B	
VHDDSS131//-1	8- 265	AA		B	
VHDDSS133//-1	8- 261	AA		B	
//	8- 262	AA		B	
//	8- 263	AA		B	
//	8- 266	AA		B	
//	8- 267	AA		B	
VHDiMN10///-1	6- 93	AC		B	
//	6- 94	AC		B	
VHDRRA[illegible]	6- 95	AC		B	
VHDRB421D//-1	8- 86	AC		B	
//	8- 87	AC		B	
VHDS1ZB60//-1	8- 360	AC		B	
VHD0R5G4B42-1	8- 359	AF		B	
VHD1N4148//-1	7- 14	AA		B	
VHD1SS82///-1	8- 264	AB		B	
VHEHZS3B1//-1	8- 375	AC		B	
//	8- 376	AC		B	
//	8- 379	AC		B	
//	8- 380	AC		B	
//	8- 381	AC		B	
//	8- 382	AC		B	

PARTS CODE	NO.	PRICE RANK	NEW MARK	PART RANK	
VHEMTZJ300B-1	a- 385	AA		B	
VHEMTZ2R0A/-1	a- 88	AA		B	
//	a- 89	AA		B	
VHEMTZ5R1C/-1	8- 378	AA		B	
VHEMTZ5R6B/-1	8- 90	AB		B	
VHEMTZ5R6C/-1	8- 377	AA		B	
VHEMTZ6R8B/-1	a- 384	AB		B	
VHERD18EL2/-1	a-333	AA		B	
VHE1ZC15///-1	8- 91	AC		B	
VHGP1S58V//-1	10- 4	AE		B	
//	10- 5	AE		B	
VHiF255011/-1	6- 102	AU		B	
VHiGM4256BSJ7	6- 105	AX		B	
VHiHM514800J8	6- 106	BG		B	
VHiKS0066F00/	9- 3	AR		B	
VHiLB1730//-1	6- 108	AH		B	
VHiLH5268T410	6- 99	AS		B	
VHiLM393PS/-S	6- 121	AC		B	
VHiLZ95G38/-1	6- 107	AX		B	
VHiMC14053BMF	6- 115	AE		B	
VHiMC14066BMF	6- 111	AD		B	
//	6-112	AD		B	
VHiMC34012-1P	8- 274	AF		B	
VHiMC3411[illegible]	8-273	AF		B	
VHiMC74HC14MF	6- 117	AE		B	
VHiMC74HC32MF	6- 119	AC		B	
VHiM66333FP-1	6- 9a	BC		B	
VHiNJM318M/-F	6- 109	AF		B	
VHiNJM4558D-1	8- 270	AN		B	
//	8- 271	AN		B	
VHiNJM4558F-1	6- 116	AD		B	
VHiNJU4053D-1	8- 272	AF		B	
VHiNJU6355E-1	6- 120	AM		B	
VHiPST600CMT1	6- 103	AE		B	
VHiR96SHF//-1	6- 97	BD		B	
VHiSN74HC04NS	6- 114	AC		B	
//	6- 118	AC		B	
VHiSN74LS145N	9- 57	AH		B	
VHiSN7406NS-1	6- 113	AF		B	
VHiS7235F2F-1	8- 277	AM		B	
VHiTA31065A-1	8- 2a	AK		B	
VHiTCD1200D-1	11- 4	AZ		B	
VHiTHS56///-1	8- 275	AN		B	
//	8- 276	AN		B	
VHiTL084CN/-F	6- 110	AN		B	
VHiULN2003AN/	8- 268	AC		B	
//	8- 269	AE		B	
VHi27020FCB0B	6- 123	BM	N	B	
VHi43257AG10L	6- 101	AY		B	
VHi64180ZRS08	6- 100	ix		B	
VHi74HCU04F-1	6- 104	AC		B	
VHPGL3EG43/-1	9-51	AB		B	
//	9- 52	AB		B	
//	9- 67	AB		B	
VHPLT4657E7-1	4- 11	AY		B	
VHPPC817CD/-1	8- 306	AC		B	
//	8- 307	AC		B	
VHPP[illegible]	8- 308	AD		B	
VHPPC847///-1	a-305	AM		B	
VHViCPN20//-1	6- 96	AD		B	
VHV3P10P1//-1	8- 201	AM		B	
VRD-HT2EY000J	8- 365	AA		C	
//	8- 366	AA		C	
VRD-HT2EY271J	10- 6	AA		C	
//	10- 7	AA		C	
VRD-HT2HY150J	8- 47	AA		C	
//	8- 314	AA		C	
//	8- 315	AA		C	
VRD-HT2HY331J	6- 146	AA		C	
//	8- 147	AA		C	
VRD-HT2HY474J	E-316	AA		C	
VRD-[illegible]	8- 291	AA		C	
//	8- 293	AA		C	
//	8- 294	AA		C	
//	8- 295	AA		C	
//	8- 296	AA		C	
//	8- 297	AA		C	
//	8- 298	AA		C	
//	8- 299	AA		C	
//	8- 300	AA		C	

PARTS CODE	NO.	PRICE RANK	NEW MARK	PART RANK	
VRD-RC2EY000J	8- 301	AA		C	
〃	8- 304	AA		C	
〃	8- 364	AA		C	
〃	9- 58	AA		C	
〃	9- 59	AA		C	
〃	9- 60	AA		C	
〃	9- 61	AA		C	
〃	9- 62	AA		C	
〃	9- 63	AA		C	
〃	9- 64	AA		C	
〃	9- 65	AA		C	
〃	9- 66	AA		C	
VRD-RC2EY102J	9- 75	AA		C	
VRD-RC2EY221J	9- 71	AA		C	
〃	9- 72	AA		C	
〃	9- 73	AA		C	
VRD-RC2EY622J	9- 74	AA		C	
VRS-CY1JD103J	6- 143	AA		C	
VRS-CY1JD163J	6- 141	AA		C	
VRS-CY1JD221J	6- 138	AA		C	
VRS-CY1JD222J	6- 139	AA		C	
〃	6- 140	AA		C	
〃	6- 142	AA		C	
VRS-CY1JD224J	6- 145	AA		C	
VRS-CY1JD470J	6- 144	AA		C	
VRS-HT3AA151J	8- 39	AA		C	
VRS-RE3AA103J	8- 312	AA		C	
VRS-RE3AA222J	8- 311	AA		C	
VRS-RE3DA750J	8- 313	AL		C	
VRS-TP2BD000J	6- 124	AA		C	
〃	6- 125	AA		C	
〃	6- 126	AA		C	
〃	6- 127	AA		C	
〃	6- 128	AA		C	
〃	6- 204	AA		C	
〃	9- 8	AA		C	
VRS-TP2BD101J	6- 202	AA		C	
〃	9- 10	AA		C	
VRS-TP2BD104J	9- 9	AA		C	
VRS-TP2BD222J	11- 6	AA		C	
VRS-TP2BD390J	11- 7	AA		C	
VRS-TP2BD561J	6- 289	AA		C	
VRS-TP2BD562J	9- 4	AA		C	
〃	9- 5	AA		C	
〃	9- 6	AA		C	
〃	9- 7	AA		C	
VRS-TS2AD000J	6- 158	AA		C	
〃	6- 160	AA		C	
〃	6- 161	AA		C	
〃	6- 173	AA		C	
〃	6- 195	AA		C	
〃	6- 197	AA		C	
〃	6- 225	AA		C	
〃	6- 228	AA		C	
〃	6- 231	AA		C	
〃	6- 288	AA		C	
〃	8- 29	AA		C	
〃	8- 278	AA		C	
〃	8- 279	AA		C	
〃	8- 280	AA		C	
〃	8- 281	AA		C	
〃	8- 282	AA		C	
〃	8- 283	AA		C	
〃	8- 284	AA		C	
〃	8- 285	AA		C	
〃	8- 286	AA		C	
〃	8- 287	AA		C	
〃	8- 288	AA		C	
〃	8- 289	AA		C	
〃	8- 322	AA		C	
〃	8- 324	AA		C	
〃	8- 330	AA		C	
〃	8- 332	AA		C	
VRS-TS2AD100J	6- 155	AA		C	
〃	6- 207	AA		C	
〃	6- 208	AA		C	
〃	6- 209	AA		C	
〃	6- 210	AA		C	
〃	6- 213	AA		C	
〃	6- 281	AA		C	

PARTS CODE	NO.	PRICE RANK	NEW MARK	PART RANK	
VRS-TS2AD100J	6- 282	AA		C	
〃	6- 283	AA		C	
〃	6- 284	AA		C	
〃	6- 285	AA		C	
VRS-TS2AD101J	6- 171	AA		C	
〃	6- 186	AA		C	
〃	6- 243	AA		C	
〃	8- 349	AA		C	
VRS-TS2AD102J	3- 224	AA		C	
〃	6- 134	AA		C	
〃	6- 136	AA		C	
〃	6- 137	AA		C	
〃	6- 164	AA		C	
〃	6- 179	AA		C	
〃	6- 189	AA		C	
〃	8- 56	AA		C	
〃	8- 68	AA		C	
〃	8- 79	AA		C	
〃	8- 84	AA		C	
VRS-TS2AD103J	6- 159	AA		C	
〃	6- 163	AA		C	
〃	6- 170	AA		C	
〃	6- 193	AA		C	
〃	6- 196	AA		C	
〃	6- 198	AA		C	
〃	6- 199	AA		C	
〃	6- 200	AA		C	
〃	6- 201	AA		C	
〃	6- 203	AA		C	
〃	6- 206	AA		C	
〃	6- 216	AA		C	
〃	6- 217	AA		C	
〃	6- 219	AA		C	
〃	6- 222	AA		C	
〃	6- 224	AA		C	
〃	6- 236	AA		C	
〃	6- 238	AA		C	
〃	6- 239	AA		C	
〃	6- 240	AA		C	
〃	6- 241	AA		C	
〃	6- 244	AA		C	
〃	6- 246	AA		C	
〃	6- 247	AA		C	
〃	6- 248	AA		C	
〃	6- 249	AA		C	
〃	6- 251	AA		C	
〃	6- 252	AA		C	
〃	6- 253	AA		C	
〃	6- 254	AA		C	
〃	6- 255	AA		C	
〃	6- 266	AA		C	
〃	6- 267	AA		C	
〃	6- 268	AA		C	
〃	6- 269	AA		C	
〃	6- 270	AA		C	
〃	6- 287	AA		C	
〃	8- 40	AA		C	
〃	8- 67	AA		C	
〃	8- 71	AA		C	
〃	8- 72	AA		C	
〃	8- 336	AA		C	
〃	8- 338	AA		C	
〃	8- 345	AA		C	
〃	8- 356	AA		C	
〃	8- 358	AA		C	
VRS-TS2AD104J	8- 74	AA		C	
〃	8- 82	AA		C	
〃	8- 323	AA		C	
VRS-TS2AD105J	6- 227	AA		C	
〃	a- 53	AA		C	
〃	8- 55	AA		C	
〃	8- 73	AA		C	
VRS-TS2AD122J	8- 325	AA		C	
VRS-TS2AD124J	3- 226	AA		C	
VRS-TS2AD151J	8- 76	AA		C	
VRS-TS2AD164J	8- 347	AA		C	
VRS-TS2AD182J	6- 157	AA		C	
VRS-TS2AD183J	8- 46	AA		C	
〃	8- 357	AA		C	
VRS-TS2AD201J	6- 194	AG	N	C	

PARTS CODE	NO.	PRICE RANK	NEW MARK	PART RANK
VRS-TS2AD202J	6- 176	AA		C
//	8- 185	AA		C
//	8- 51	AA		C
VRS-TS2AD203J	8- 327	AA		C
//	a- 329	AA		C
//	a- 333	AA		C
//	a-337	AA		C
//	8- 339	AA		C
//	8- 341	AA		C
//	8- 342	AA		C
//	8- 354	AA		C
VRS-TS2AD204J	8- 41	AA		C
//	8- 66	AA		C
VRS-TS2AD221J	3- 237	AA		C
//	6- 187	AA		C
//	8- 59	AA		C
//	8- 317	AA		C
//	8- 318	AA		C
//	8- 319	AA		C
//	8- 320	AA		C
//	8- 321	AA		C
VRS-TS2AD222J	3- 225	AA		C
//	6- 177	AA		C
//	6- 178	AA		C
//	6- 180	AA		C
//	6- la4	AA		C
//	6- 191	AA		C
//	8- 43	AA		C
	a- 58	AA		C
//	a- 81	AA		C
//	a- a5	AA		C
VRS-TS2AD223J	6- 286	AA		C
//	8- 49	AA		C
//	8- 50	AA		C
//	8- 57	AA		C
VRS-TS2AD225J	8- 54	AA		C
//	8- 331	AA		C
VRS-TS2AD244J	8- 63	AA		C
VRS-TS2AD271J	6- 148	AA		C
//	6- 149	AA		C
//	6- 150	AA		C
//	6- 151	AA		C
//	6- 152	AA		C
//	6- 153	AA		C
//	6- 154	AA		C
//	6- 220	AA		C
//	6- 221	AA		C
//	6- 223	AA		C
//	6- 232	AA		C
//	6- 233	AA		C
//	6- 237	AA		C
//	6- 245	AA		C
//	6- 261	AA		C
//	6- 262	AA		C
//	6- 263	AA		C
//	6- 265	AA		C
VRS-TS2AD272J	8- 61	AA		C
//	8- 348	AA		C
VRS-TS2AD273J	3- 232	AA		C
VRS-TS2AD302J	6- 215	AA		C
//	8- 77	AA		C
//	8- 83	AA		C
//	8- 344	AA		C
VRS-TS2AD303J	8- 78	AA		C
//	8- 326	AA		C
VRS-TS2AD330J	6- 135	AA		C
//	6- 156	AA		C
//	6- 166	AA		C
//	6- 271	AA		C
//	6- 272	AA		C
//	6- 273	AA		C
//	6- 274	AA		C
//	6- 275	AA		C
//	6- 276	AA		C
//	6- 277	AA		C
//	6- 278	AA		C
//	6- 279			
//	6- 280	AA		C
VRS-TS2AD331J	a- 80	AA		c
VRS-TS2AD332J	6- 230	AA		c

PARTS CODE	NO.	PRICE RANK	NEW MARK	PART RANK
VRS-TS2AD333J	8- 334	AA		C
//	8- 340	AA		C
//	8- 351	AA		C
VRS-TS2AD391J	6- 188	AA		C
VRS-TS2AD392J	6- 175	AA		C
VRS-TS2AD433J	8- 44	AA		C
VRS-TS2AD471J	6- 192	AA		C
//	6- 257	AA		C
//	6- 258	AA		C
//	6- 259	AA		C
//	6- 260	AA		C
//	6- 264	AA		C
VRS-TS2AD472J	6- 162	AA		C
//	6- 167	AA		C
//	6- 168	AA		C
//	6- 169	AA		C
//	6- 172	AA		C
//	6- 181	AA		C
//	6- 183	AA		C
//	6- 250	AA		C
VRS-TS2AD473J	3- 231	AA		C
//	6- 234	AA		C
//	6- 235	AA		C
VRS-TS2AD511J	a- 60	AA		C
VRS-TS2AD514J	a- 48	AG		C
//	a- 64	AG		C
//	a- 65	AG		C
VRS-TS2AD561J	6- 182	AA		C
VRS-TS2AD562J	6- 165	AA		C
//	6- 226	AA		C
//	6- 229	AA		C
//	6- 256	AA		C
//	8- 42	AA		C
VRS-TS2AD622J	8- 335	AA		C
VRS-TS2AD623J	8- 355	AA		C
VRS-TS2AD682J	3- 229	AA		C
VRS-TS2AD685J	8- 346	AA		C
VRS-TS2AD751J	8- 45	AA		C
//	8- 75	AA		C
VRS-TS2AD752J	8- 69	AA		C
VRS-TS2AD753J	8- 328	AA		C
//	8- 343	AA		c
VRS-TS2AD820J	8- 70	AA		c
VRS-TS2AD821J	6- 242	AA		C
//	8- 62	AA		C
//	8- 352	AA		C
//	a- 353	AA		C
VRS-TS2AD822J	6- 174	AA		C
//	6- 190	AA		C
//	8- 350	AA		C
VRS-TS2AD912J	8- 52	AA		C
VRS-TV2AB112J	3- 236	AA		c
VRS-TV2AB752J	3- 230	AA		C
VRSTS2AD1183F	6- 218			
VRSTS2AD1742F	6- 211	AA		C
VRSTS2AD4752F	6- 205	AA		C
VRSTS2AD8662F	6- 212	AA		C
//	6- 214	AA		C
VSBS108////-1	8- 30	AE		E
//	8- 309	AE		B
VSDTA114EK/-1	6- 133	AB		B
VSDTC114EK/-1	6- 131	AB		B
//	6- 132	AB		B
VSDTC114ES/-1	9- 68	AB		B
//	9- 69	AB		B
//	9- 70	AB		B
VS2SA1037KR-1	8- 35	AB		B
VS2SA1727//-1	8- 31	AE		B
//	8- 34	AE		B
VS2SC2412KR-1	8- 33	AD		B
//	8- 36	AD		B
//	8- 37	AD		B
//	8- 310	AD		B
VS2SC2412KS-1	6- 129	AB		B
//	6- 130	AB		B
//	11- 5	AB		B
VS2SC4061K/-1	8- 32	AC		B
//	8- 38	AC		B
VVLLF7174G6-1	9- 13	AP		E

PARTS CODE	NO.	PRICE RANK	NEW MARK	PART RANK	
[X]					
XBPSD30P06K00	50-B4	AA		C	
XBPSE30P08K00	50-B5	AA		C	
XBPSN40P06K00	50-B6	AA		C	
XEBSD20P06000	50-B7	AA		C	
XEBSD30P06000	50-B8	AA		C	
XEBSD30P08000	50-B18	AA		C	
XEBSD30P10000	50-B10	AA		C	
XEBSE30P08000	50-B17	AA		C	
XEBSE30P10000	50-B12	AA		C	
XEBSF30P06000	50-B9	AA		C	
XEBSF30P08000	50-B11	AA		C	
XEPSD30P06X00	50-B13	AA		C	
XHBSD30P05000	50-B3	AA		C	
XHBSD30P06000	50-B14	AA		C	
XJPSD30P04000	50-B15	AA		C	
XUBSD20P06000	50-B16	AA		C	
[0]					
0CBBFZ89154Z/	7- 4	AC		C	
0CBFBZ0098ZZ/	7- 71	AC		C	
0CBLRH0308ZQ/	7- 66	AM		C	
0CBLRS0101ZZ/	7- 68	AC		C	
0CBLRS0103ZZ/	7- 67	AC		C	
0CBMRS0029ZZ/	7- 70	AG		C	
0CBMRZ0378ZZ/	7- 69	AF		C	
0CBPCZ0160ZZ/	7- 63	AE		C	
0CBPCZ0161ZZ/	7- 62	AF		C	
0CBPFZ0242ZZ/	7- 65	AL		B	
0CBPJCZZ0037/	7- 58	AG		A	
0CBPJT0115ZZ/	7- 59	AF		A	
0CBPKZ0194ZZ/	7- 61	AC		C	
0CBPZZ0604ZZ/	7- 3	AC		C	
0CBPZZ0739ZZ/	7- 64	AE		C	
0CBUAC0004DZ/	7- 11	AC		B	
0CBUAC0056BZ/	7- 9	AD		B	
0CBUAC0098AZ/	7- 10	AG		B	
0CBUAG0091AZ/	7- 8	AQ		B	
0CBUBB0178DZ/	7- 12	AG		B	
0CBUBB0187AZ/	7- 17	AG		B	
0CBUBC0220BZ/	7- 13	AD		B	
0CBUBC0221AZ/	7- 15	AC		B	
0CBUBC0280BZ/	7- 16	AC		B	
0CBUBDAA3R0C/	7- 19	AC		C	
0CBUBDAA6R2C/	7- 21	AC		B	
0CBUBDAC270D/	7- 18	AC		B	
0CBUBDAE150B/	7- 20	AD		B	
0CBUBDAE300D/	7- 22	AD		B	
0CBUCB0112AZ/	7- 7	AK		B	
0CBUCC0010FZ/	7- 6	AC		B	
0CBUCC0013DZ/	7-5	AM		B	
0CBUDC0139AZ/	7- 23	AN		B	
0CBUDZ0052ZZ/	7- 60	AG		B	
0CBUEEB222BA/	7- 34	AC		C	
0CBUEEB223BA/	7- 27	AC		C	
0CBUEEB271BA/	7- 35	AA		C	
0CBUEEB272BA/	7- 37	AA		C	
0CBUEEB330BM/	7- 32	AA		C	
0CBUEEB471BA/	7- 31	AC		C	
0CBUEEB564BA/	7- 28	AA		C	
0CBUEEB822BA/	7- 36	AA		C	
0CBUEEC474BG/	7- 25	AB		C	
0CBUEFC564BA/	7- 24	AC		C	
0CBUEFD561AU/	7- 33	AC		C	
0CBUEFER33CH/	7- 26	AC		C	
0CBUEFE104CS/	7- 29	AB		C	
0CBUEFE391CL/	7- 30	AC		C	
0CBUERALE471/	7- 56	AF		B	
0CBUFBA102DC/	7- 38	AD		B	
0CBUGAC122GK/	7- 50	AG		C	
0CBUGAC221HD/	7- 51	AC		C	
0CBUGAD100HD/	7- 49	AC		C	
0CBUGAD390PR/	7- 48	AE		C	
0CBUGAE122NS/	7- 53	AH		C	
0CBUGAE221HD/	7- 54	AD		C	
0CBUGBQ820BR/	7- 41	AP		C	
0CBUGCF1[illegible]/	7- 55	AC		C	
0CBUGCQ222AQ/	7- 47	AE		C	
0CBUGCS222AP/	7- 52	AC		C	
0CBUGCU103BC/	7- 42	AD		C	
0CBUGCU221BR/	7- 43	AC		C	

PARTS CODE	NO.	PRICE RANK	NEW MARK	PART RANK	
0CBUGCZ222CK/	7- 40	AF		C	
0CBUGFF102ER/	7- 46	AC		C	
0CBUGFF103ER/	7- 44	AC		C	
0CBUGFF683ER/	7- 45	AD		C	
0CBUGFZ224FY/	7- 39	AG		C	
0CBUKZ0582ZZ/	7- 2	AH		C	
0CBUZZ0100ZZ/	7- 57	AH		B	
0CB829820363/	7- 1	BC		B	
0JZC214467810	3- 217	BH		C	
0JZC214467903	3- 22	AN		C	
0JZC214467904	3- 3	BL		C	
0JZC214467910	3- 45	BX		C	
0JZC214467911	3- 32	AF		C	
0JZC214467912	3- 30	AG		C	
0JZC214467914	3- 38	BK		C	
0JZC214467915	3- 31	AG		C	
0JZC214467916	3- 11	AY		C	
0JZC214467917	3- 15	BM		B	
0JZC214467918	3- 29	AL		C	
0JZC214467920	3- 5	BK		C	
0JZC214467922	3- 37	BF		C	
0JZC214467923	3- 17	AB		C	
0JZC214467926	3- 47	CG		E	
0JZC214467928	3- 35	AQ		C	
0JZC214467929	3- 19	AV		C	
0JZC214467932	3- 33	AN		C	
0JZC214467933	3- 28	AT		C	
0JZC214467934	3- 21	AY		C	
0JZC214467935	3- 20	AY		C	
0JZC214467936	3- 39	BE		C	
0JZC214467938	3- 46	BF		C	
0JZC214467940	3- 23	BC		C	
0JZC214467942	3- 2	BC		C	
0JZC214467943	3- 6	AY		C	
0JZC214467944	3- 24	AP		C	
0JZC214467945	3- 18	AP		C	
0JZC214467946	3- 101	CH		C	
0JZC214467947	3- 12	AW		C	
0JZC214467948	3- 14	AW		C	
0JZC214467949	3- 43	AG		C	
0JZC214467950	3- 42	AW		C	
0JZC214467952	3- 41	AX		C	
0JZC214467953	3- 44	AH		C	
0JZC214467954	3- 13	AU		C	
0JZC214467955	3- 201	[illegible]		C	
0JZC214467956	3- 202	AG		B	
0JZC214467957	3- 203	AH		C	
0JZC214467958	3- 204	AL		C	
0JZC214467959	3- 205	AQ		C	
0JZC214467960	3- 206	AK		C	
0JZC214467961	3- 207	AK		C	
0JZC214467962	3- 4	AR		C	
0JZC214467963	3- 36	AE		C	
0JZC214467964	3- 10	AM		C	
0JZC214467965	3- 7	AH		C	
0JZC214467966	3- 8	AS		C	
0JZC214467967	3- 9	AQ		C	
0JZC214467968	3- 16	AQ		C	
0JZC214467969	3- 40	AD		C	
//	3- 218	AD		C	
0JZC214467970	3- 1	AE		C	
0JZC214467971	3- 27	AD		C	
0JZC214467972	3- 34	AD		C	
0JZC214467973	3- 26	AL		C	
0JZC214467975	3- 25	AM		C	
0JZC214467980	3- 208	BF		B	
0JZC214467982	3- 209	[illegible]		B	
0JZC214467983	3- 210	AV		B	
0JZC214467984	3- 211	AX		B	
0JZC214467985	3- 212	BE		B	
0JZC214467986	3- 213	BE		B	
0JZC214467987	3- 214	AF		B	
0JZC214467988	3- 215	AJ[illegible]		C	
0JZC214467989	3- 216	AT		C	

CAUTION FOR BATTERY REPLACEMENT

(Danish) ADVARSEL !

Lithiumbatteri – Eksplosionsfare ved fejlagtig handtering.
Udskiftning må kun ske med batten
af samme fabrikat og type.
Lever det brugte batten tilbage til ieverandoren.

(English) Caution !

Danger of explosion if battery is incorrectly replaced.
Replace only with the same or equivalent type
recommended by the equipment manufacturer.
Discard used batteries according to manufacturer's instructions.

(Finnish) VAROITUS

Paristo voi räjähtää, jos se on virheellisesti asennettu.
Vaihda paristo ainoastaan laitevalmistajan suosittelemaan
tyyppiin. Hävitä käytetty paristo valmistajan ohjeiden
mukaisesti.

(French) ATTENTION

Il y a danger d'explosion s' il y a remplacement incorrect
de la batterie. Remplacer uniquement avec une batterie du
même type ou d'un type recommande par le constructeur.
Mettre au rebut les batteries usagées conformement aux
instructions du fabricant.

(Swedish) VARNING

Explosionsfare vid felaktigt battenbyte.
Använd samma batterityp eller en ekvivalent
typ som rekommenderas av apparattfllverkaren.
Kassera använt batten enligt fabrikantens
instruktion.

[redacted]
FO-3700A

00ZUX114ASM/E

00ZFO235A/SME

SHARP

COPYRIGHT © 1994 BY SHARP CORPORATION

All rights reserved.
Printed in Japan.
No part of this publication may be reproduced,
stored in a retrieval system, or transmitted,
in any form or by any means,
electronic, mechanical, photocopying, recording, or otherwise,
without prior written permission of the publisher.

SHARP CORPORATION
Communication & Audio Systems Group
Quality & Reliability Control Center
Higashihiroshima, Hiroshima 739-01, Japan
1994 Printed in Japan
A9403-378SW•TI•T