PLASMA DISPLAY TV

Chassis: F34B(N_HD_R1)_Lily
Model : HPT5044X/XAA

SERVICE Manual

PLASMA DISPLAY TV

HP-T5044

CONTENTS

Refer to the service manual in the GSPN (see the rear cover) for the more information.

GSPN (Global Service Partner Network)

Area	Web Site
North America	service.samsungportal.com
Latin America	latin.samsungportal.com
CIS	cis.samsungportal.com
Europe	europe.samsungportal.com
China	china.samsungportal.com
Asia	asia.samsungportal.com
Mideast & Africa	mea.samsungportal.com

Printed in Korea
AA82-04864A

Table of Contents

1. Precaution

To avoid possible damage or electric shocks or exposure to radiation, follow the instructions below with regard to safety, installation, service and ESD.

1-1 Safety Precautions

1. Make sure all protective devices are properly installed including non-metallic handles and compartment covers when installing or re-installing the chassis or chassis assemblies.

2. Make sure that no gaps exist between the cabinets for children to insert their fingers in to prevent children from receiving electric shocks. Gaps mentioned above include ventilation holes between the PDP module and the cabinet mask, and the improper installation of the rear cabinet.

   Errors may occur when the resistance is below 1.0 MΩ or over 5.2 MΩ.
   In these cases, make sure that the device is repaired before sending it back to the customer.

3. Check for Electricity Leakage (Figure 1-1)
   Warning: Do not use an insulated transformer for checking the leakage. Use only those current leakage testers or mirroring systems that comply with ANSIC 101.1 and the Underwriter Laboratory's specifications (UL1410, 59.7).

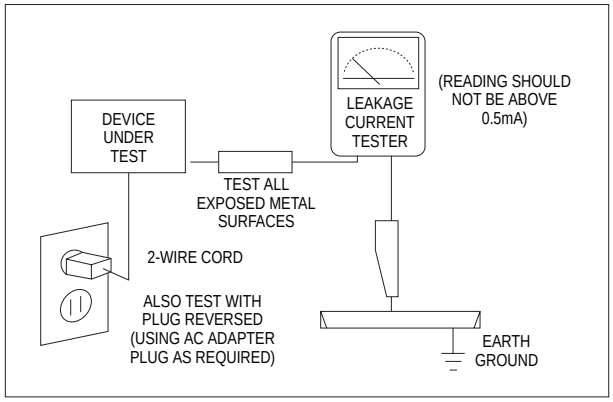

Fig. 1-1 AC Leakage Test

4. A high voltage is maintained within the specified limits using safety parts, calibration and tolerances. When voltage exceeds the specified limits, check each special part.

5. Warning for Engineering Changes:
   Never make any changes or additions to the circuit design or the internal part for this product.
   Ex: Do not add any audio or video accessory connectors. This might cause physical damage. Furthermore, any changes or additions to the original design/engineering will invalidate the warranty.

6. Warning - Hot Chassis:
   Some TV chassis are directly connected to one end of the AC power cord for electrical reasons.
   Without insulated transformers, the product can only be repaired safely when the chassis is connected to the earth end of the AC power source.

   To make sure the AC power cord is properly connected, follow the instructions below. Use the voltmeter to measure the voltage between the chassis and the earth ground. If the measurement is over 1.0V, unplug the AC power cord and change the polarity before re-inserting it. Measure the voltage between the chassis and the ground again.

7. Some TV chassis are shipped with an additional secondary grounding system. The secondary system is adjacent to the AC power line. These two grounding systems are separated in the circuit using an unbreakable/unchangeable insulation material.

8. When any parts, material or wiring appear overheated or damaged, replace them with new immediately. When any damage or overheating is detected, correct this immediately and make a regular check of possible errors.

9. Check for the original shape of the lead, especially that of the antenna wiring, any sharp edges, the AC power and the high voltage power. Carefully check if the wiring is too tight, incorrectly placed or loose. Never change the space between the part and the printed circuit board. Check the AC power cord for possible damages. Keep the part or the lead away from any heat-emitting materials.

10. Safety Indication:
    Some electrical circuits or device related materials require special attention to their safety features, which cannot be viewed by the naked eye. If an original part is replaced with another irregular one, the safety or protective features will be lost even if the new one has a higher voltage or more watts.

    Critical safety parts should be bracketed with (⚠ ⚠). Use only regular parts for replacements (in particular, flame resistance and dielectric strength specifications). Irregular parts or materials may cause electric shock or fire.

1-2 Servicing Precautions

Warning 1: First carefully read the "Safety Instruction" in this service manual.
When there is a conflict between the service and the safety instructions, follow the safety instruction at all times.

Warning 2: Any electrolytic capacitor with the wrong polarity will explode.

1. The service instructions are printed on the cabinet, and should be followed by any service personnel.

2. Make sure to unplug the AC power cord from the power source before starting any repairs.
   (a) Remove or re-install parts or assemblies.
   (b) Disconnect the electric plug or connector, if any.
   (c) Connect the test part in parallel with the electrolytic capacitor.

3. Some parts are placed at a higher position than the printed board. Insulated tubes or tapes are used for this purpose. The internal wiring is clamped using buckles to avoid contact with heat emitting parts. These parts are installed back to their original position.

4. After the repair, make sure to check if the screws, parts or cables are properly installed. Make sure no damage is caused to the repaired part and its surroundings.

5. Check for insulation between the blade of the AC plug and that of any conductive materials (i.e. the metal panel, input terminal, earphone jack, etc).

6. Insulation Check Process: Unplug the power cord from the AC source and turn the switch on. Connect the insulating resistance meter (500v) to the AC plug blade.

   The insulating resistance between the blade of the AC plug and that of the conductive material should be more than 1 MΩ.

7. Any B+ interlock should not be damaged.
   If the metal heat sink is not properly installed, no connection to the AC power should be made.

8. Make sure the grounding lead of the tester is connected to the chassis ground before connecting to the positive lead. The ground lead of the tester should be removed last.

9. Beware of risks of any current leakage coming into contact with the high-capacity capacitor.

10. The sharp edges of the metal material may cause physical damage, so protect yourself by wearing gloves during the repair.

11. Due to the nature of plasma display panels, partial after-images may appear if a still picture is displayed on the screen for a long period of time.
    This is caused by brightness deterioration due to the storage effect of the panel, and to prevent this from happening, we recommend that the brightness and contrast are reduced.
    (e.g.) Contrast: 25, Brightness: 50

1-3 Static Electricity Precautions

1. Some semi-conductive ("solid state") devices are vulnerable to static electricity. These devices are known as ESD. ESD includes the integrated circuit and the field effect transistor. To avoid any materials damage from electrostatic shock, follow the instructions described below.

2. Remove any static electricity from your body by connecting the earth ground before handling any semi-conductive parts or assemblies. Alternatively, wear a dischargeable wrist-belt.
   (Make sure to remove any static electricity before connecting the power source - this is a safety instruction for avoiding electric shock)

3. Remove the ESD assembly and place it on a conductive surface such as aluminum foil to prevent accumulating static electricity.

4. Do not use any Freon-based chemicals.
   Such chemicals will generate static electricity that causes damage to the ESD.

5. Use only grounded-tip irons for soldering purposes.

6. Use only anti-static solder removal devices.
   Most solder removal devices do not support an anti-static feature. A solder removal device without an anti-static feature can store enough static electricity to cause damage to the ESD.

7. Do not remove the ESD from the protective box until the replacement is ready. Most ESD replacements are covered with lead, which will cause a short to the entire unit due to the conductive foam, aluminum foil or other conductive materials.

8. Remove the protective material from the ESD replacement lead immediately after connecting it to the chassis or circuit assembly.

9. Take extreme caution in handling any uncovered ESD replacements. Actions such as brushing clothes or lifting your leg from the carpet floor can generate enough static electricity to damage the ESD.

CAUTION

These servicing instructions are for use by qualified service personnel only.
To reduce the risk of electric shock do not perform any servicing other than that contained in the operating instructions unless you are qualified to do so.

1-4 Installation Precautions

1. For safety reasons, more than two people are required for carrying the product.

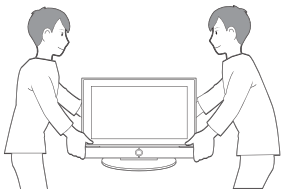

2. Keep the power cord away from any heat emitting devices, as a melted covering may cause fire or electric shock.

3. Do not place the product in areas with poor ventilation such as a bookshelf or closet. The increased internal temperature may cause fire.

4. Bend the external antenna cable when connecting it to the product. This is a measure to protect it from being exposed to moisture. Otherwise, it may cause a fire or electric shock.

5. Make sure to turn the power off and unplug the power cord from the outlet before repositioning the product. Also check the antenna cable or the external connectors if they are fully unplugged. Damage to the cord may cause fire or electric shock.

6. Keep the antenna far away from any high-voltage cables and install it firmly. Contact with the high-voltage cable or the antenna falling over may cause fire or electric shock.

7. When connecting the RF antenna, check for a DTV receiving system and install a separate DTV reception antenna for areas with no DTV signal.

8. When installing the product, leave enough space (4") between the product and the wall for ventilation purposes.
   A rise in temperature within the product may cause fire.

9. When moving a PDP with removable speakers, detach the speakers first before moving the main body.
   Moving the PDP main body without separating the speakers may cause the speakers to detach, possibly causing damage or injury.

MEMO

2. Product Specification

2-1 Product Specification

Features			
Block	Specification	Major IC	Remark
RF	Digital/Analog (DTV Built In)	NTSC/VSB/QAM Tuner S5H2111X01(Lake1)	
PDP Module	Samsung SDI W2A Module	42"HD/50"HD	New Module
Power	Samsung/Dong-yang electro mechanics SMPS		
Video	NTSC 3.58, ATSC HDMI DNIe(FBE2) Component, PC	Lake1 SDP64	
Sound	SRS TruSuround XT, Dolby Digital	MSP 4450K, NTP-3000	Optical Output
Cabinet	C9 Design		

Specification	
Model	HP-T5044
Screen Size	50 Inches (16:9)
Dimensions (WxHxD)	1227.1 x 844.8 x 340 mm
Weight	49.0 kg
PC Resolution	1365 x 768 @ 60Hz
Voltage	AC 100~240V, 60Hz
ANTENNA input	ANT 1 - AIR IN ANT 2 - CABLE IN ※ 75Ω unbalanced
VIDEO input	AV1 S-VIDEO1 COMPONENT1 - 480i/480p/720p/1080i COMPONENT2 - 480i/480p/720p/1080i PC HDMI1 (DVI Compatible) - 480p/720p/1080i HDMI2 - 480p/720p/1080i
AUDIO input	AV1 S-VIDEO COMPONENT1 - 480i/480p/720p/1080i COMPONENT2 - 480i/480p/720p/1080i PC DVI
Audio Output	AUDIO (L/R)
Speaker Output	10W + 10W
New Features	Anynet+

■ New Features explanation

- Anynet+ : Anynet+ is an AV network system that enables you to control all connected Samsung AV devices with your Samsung TV's remote.

To directly connect to TV

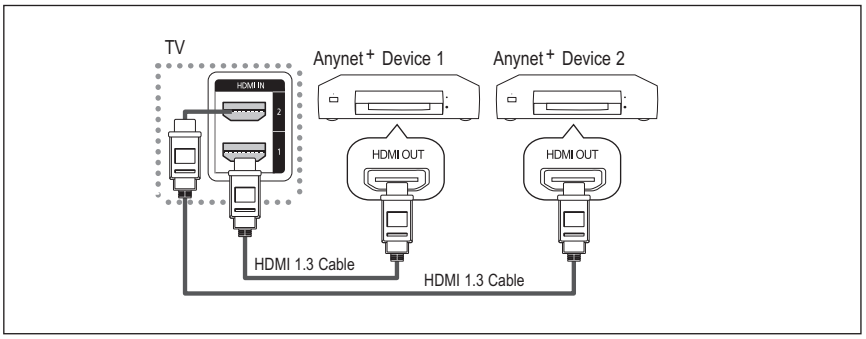

Connect the [HDMI 1], [HDMI 2] jack on the TV and the HDMI OUT jack of the corresponding Anynet + device using the HDMI cable.

To connect to Home Theater

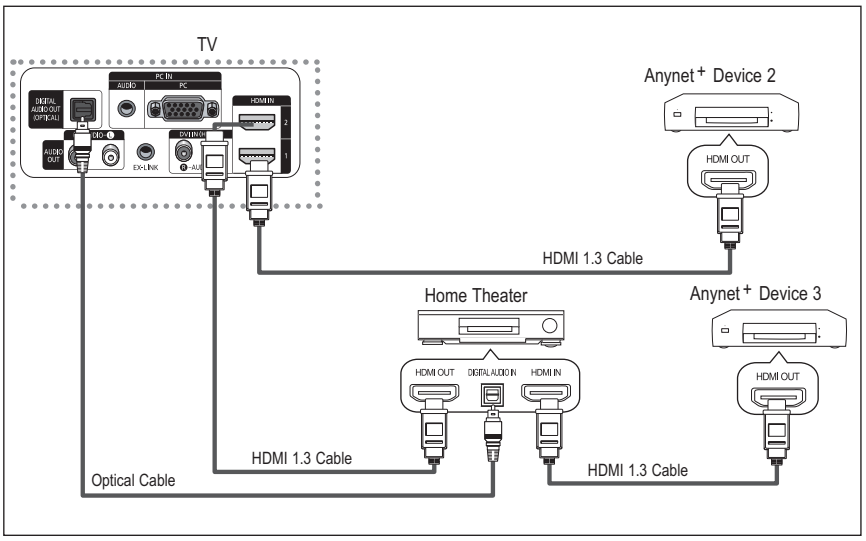

1. Connect the [HDMI 1], [HDMI 2] jack on the TV and the HDMI OUT jack of the corresponding Anynet + device using the HDMI cable.
2. Connect the HDMI IN jack of the home theater and the HDMI OUT jack of the corresponding Anynet + device using the HDMI cable.

→ Connect the Optical cable between [Digital Audio Out (Optical)] on your TV and Digital Audio Input on the Home Theater.
→ Connect only one Home Theater.
→ You can listen to 5.1 channel sound through the home theater's speakers. Otherwise, you can only listen to 2 channel stereo sound in other cases. Make sure to connect the Digital Audio IN (Optical) of the home theater and the TV correctly to listen to TV sound through the home theater. However, you cannot listen to sound from the BD recorder that is sent to the home theater via the TV in 5.1 channel sound because the TV outputs only 2 channel stereo sound. Please see the manual for the home theater.
→ You can connect an Anynet + device using the HDMI 1.3 cable. Some HDMI cables may not support Anynet + functions.
→ Anynet + works when the AV device supporting Anynet + is in the Standby or On status.
→ Anynet + supports up to 12 AV devices in total.

2-2 Specifications Analysis

※ ○: application, X: non-application

Model		HP-T5044 (Lily-50HD)	HP-S4253 (Cadillac-42HD)
Design			
Basic	Display Type	PDP TV	PDP TV
	Built-In Tuner	○	○
	Resolution	**1365 x 768**	1024 x 768
	PDP Module	**W2A**	Samsung SDI V5.1
	Screen Size	**50"**	42"
	Picture ratio	16 : 9	16 : 9
	Dimensions (WxHxD)	**1227.1 x 844.8 x 340 mm**	41.5 x 28 x 3.8 inches
	Weight	**49.0 kg**	75.4 lbs / 34.2 kg
Picture	Brightness	**1,300 Cd/m2**	1,200 Cd/m2
	Contrast Ratio	**10000:1**	7,000 : 1
	Picture Enhacer	**FBE2**	LBE
	Comb Filter	○	○
Audio	Equalizer	5 Band	5 Band
	Auto Volume Control	○	○
	Surround Sound	**SRS TruSurround XT**	SRS TruSurround XT Dolby Digital (AC3)
	Speaker Output	10W + 10W	10W + 10W
Features	PIP	○	○
	Double Window	○	○
	Caption	○	○
	Still Image	○	○
	EPG	○	○
	My Color Control	○	○
	Color Weakness	**X**	○
	Energy Saving	○	○
	Anynet	○	X
Connections	Antenna	2 (Cable/Air)	2 (Cable/Air)
	AV Input	**1**	2
	S-Video	**1**	2
	Component	2	2
	PC(D-SUB)	1	1
	DVI	X	X
	HDMI	2	2
	Sub Woofer	X	X
	Optical	1	1
	Coaxial	**X**	1
ETC	Speaker/Stand	**Built-in Speaker**	Built-in Speaker/Stand

※ For the power supply and power consumption, refer to the label attached to the product.

2-3 Accessories

Accessories		Item	Item code	Remark
Supplied Accessories		Remote Control Batteries	BN59-00599A 4301-000103	Samsung Service center
		Power Cord	3903-000144	
		Owner's Instructions	BN68-01192T	
		Warranty Card Registration Card Safety Guide Manual	BN68-00872A AA68-03870C AA68-03242L	
		Cloth-Clean	BN63-01798A	
		Ferrite Core for Power Cord	3301-001110	
Accessories that can be purchased additionally		S-VIDEO Cable 47.244 inches	BN39-00149A	Electronics Store/ Internal shopping mall
		HDMI Cable 118.11 inches	BN39-00641A	
		HDMI/DVI cable 118.11 inches	BN39-00643A	
		Component Cables (RCA) 59.055 inches	BN39-00279A	

Accessories		Item	Item code	Remark
Accessories that can be purchased additionally		Optical Cable	None	Electronics Store/ Internal shopping mall
		PC Cable 72.047 inches	BN39-00115A	
		PC Audio Cable 78.740 inches	BN39-00061B	
		Antenna Cable 118.11 inches	BN39-00333A	

MEMO

3. Disassembly & Reassembly

3-1 Overall Disassembly & Reassembly

⚠ Notice

- Be sure to separate the power cord before disassembling the unit.
- Discharge the capacitors first when separating PCB's with high capacity capacitors such as SMPS, X Main Board, Y Main Board, etc. (A spark may be generated by the electric charge, and there is danger of electronic shock.)
- Check that the cables are properly connected referring to the circuit diagram when disassembling or assembling the unit taking care not to damage the cables.
- Take care not to scratch the Glass Filter in the front.
- Assemble the boards in the reverse order of the disassembly.
- The plasma must be layed down on a flat padded surface for disassembly and reassembly.

3-1-1 Separation of ASSY COVER P-REAR

Part Name	Description	Description Photo
Cover Rear	① Remove 4 screws. (□) : M8,L16,ZPC(BLK),SWRCH18A,WP ② Remove 16 screws. (○) : BH,+,B,M4,L3,ZPC(BLK) ③ Remove 4 screws. (○) : BH,+,S,M4,L10,ZPC(BLK) ④ Remove the 2 Hex nuts for the PC input. (□) : #4-40,L6,NI PLT,C3601,- ⑤ Remove the rear cover. ⚠: Please lay the PDP unit face down on a soft surface when removing the stand.	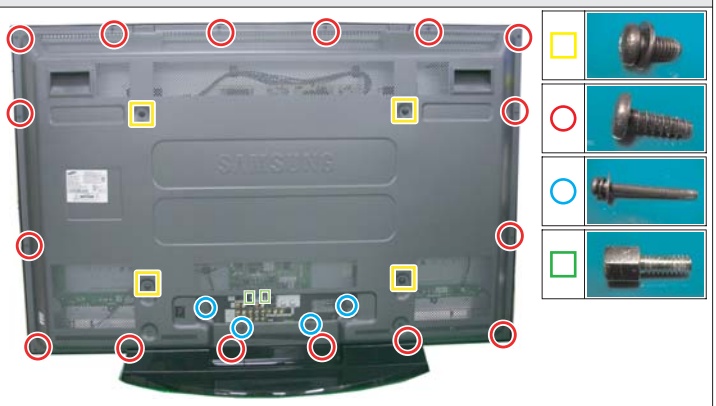

3-1-2 Separation of ASSY PCB MISC-MAIN

Part Name	Description	Description Photo
Main Board	① Detach all connectors from the Main Board. ② Remove 4 screws. : PH,+,WWP,M3,L8,NI PLT ③ Remove the Main Board.	

3-1-3 Separation of FILTER-EMI AC LINE

Part Name	Description	Description Photo
FILTER-EMI AC LINE	① Detach connector from SMPS. ② Remove 2 screws. (○) : PH,+,WWP,M3,L8,NI PLT ③ Remove a screw. (○) : BH,+,S,M4,L10,ZPC(BLK) ④ Remove FILTER-EMI AC LINE.	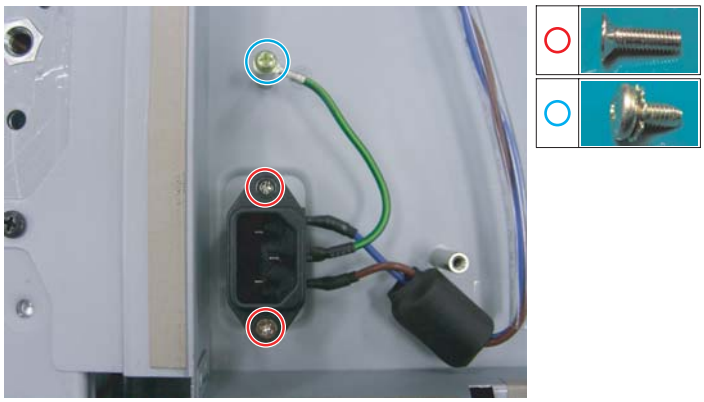

3-1-4 Separation of BRACKET-PCB

Part Name	Description	Description Photo
Bracket PCB	① Remove a screw. : BH,+,S,M4,L10,ZPC(BLK) ② Remove the BRACKET-PCB.	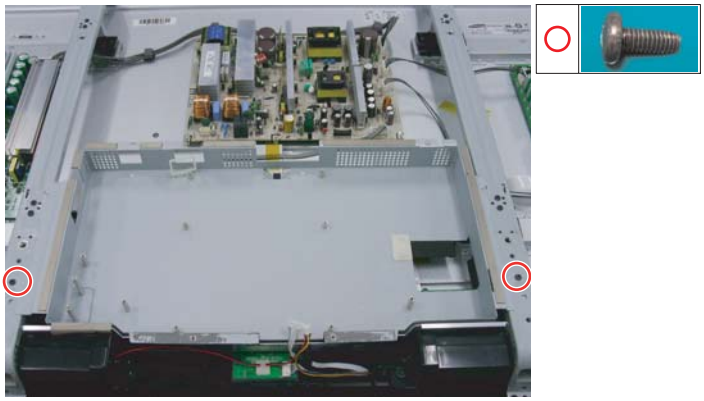

3-1-5 Separation of ASSY BRACKET P-WALL

Part Name	Description	Description Photo
Wall Bracket	① Remove 8 screws. (○) : BH,+,S,M4,L10,ZPC(BLK) ② Remove 8 screws. (○) : BH,+,B,M4,L12,ZPC(BLK) ③ Remove Wall Bracket. ⚠: Please lay the PDP panel face down on a soft surface when separating front cover.	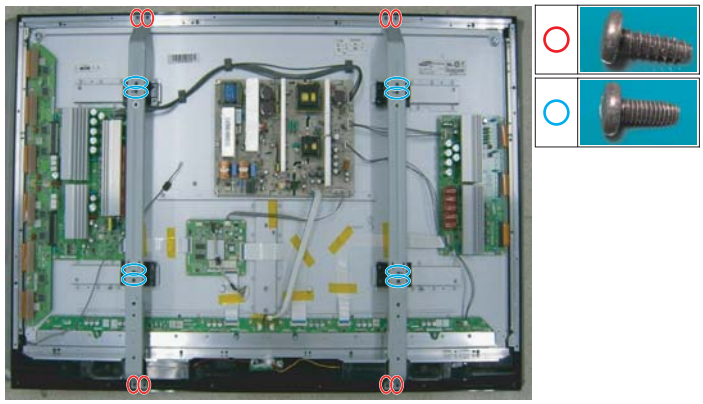

3-1-6 Separation of ASSY SPEAKER P

Part Name	Description	Description Photo
Speaker	① Remove 4 screws. : BH,+,WP,B,M4.0,L3,ZPC(BLK), SWRCH18A ② Remove the Speaker.	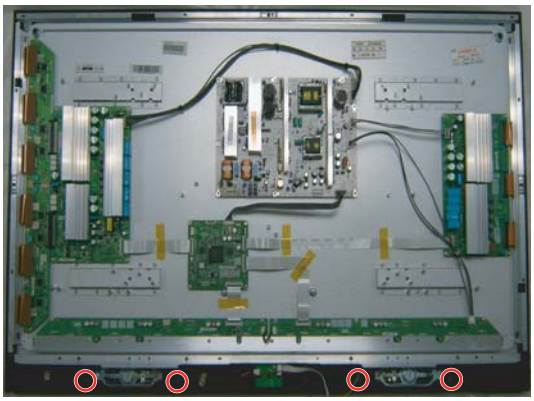 

3-1-7 Separation of ASSY BOARD P-POWER&IR

Part Name	Description	Description Photo
Power & IR Board	① Detach all connectors from the Power&IR Board. ② Remove the Power&IR PCB unlocking the 2 holders.	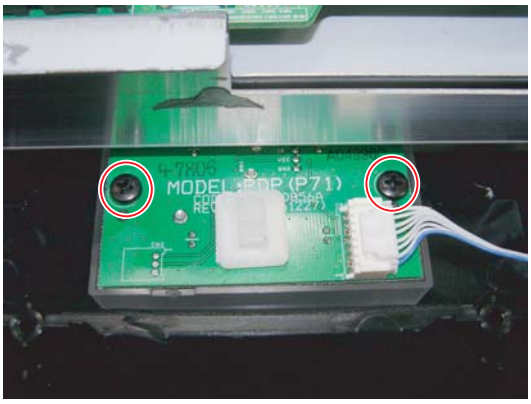

3-1-8 Separation of SMPS-PDP TV

Part Name	Description	Description Photo
SMPS	① Detach all connectors from the SMPS. ② Remove 8 screws. : PH,+,WWP,M3,L8,NI PLT ③ Remove the SMPS. ⚠: Wear gloves when handling the power board as there may be some remaining electrical charge in the capacitor. Specifically, avoid touching any part of the capacitor.	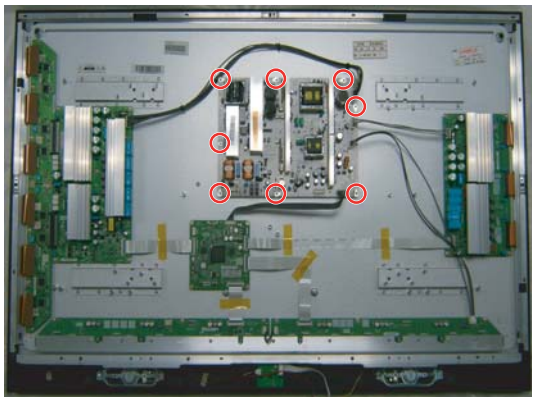 

3-1-9 Separation of ASSY PDP MODULE P-LOGIC MAIN BOARD

Part Name	Description	Description Photo
50" Logic Board	① Detach all connectors from the Logic Main Board. ② Remove 4 screws. : WSP,PH,+,M3,L8,NI PLT ③ Remove the Logic Main Board.	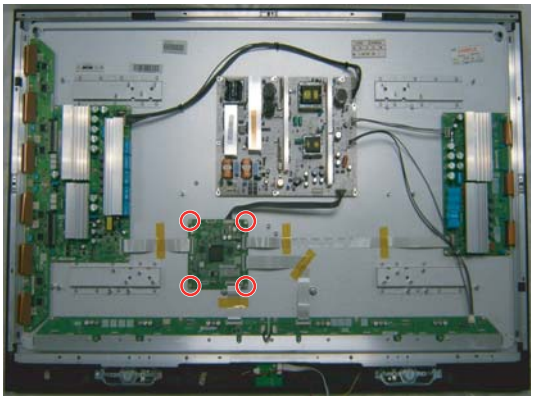 

3-1-10 Separation of ASSY PDP MODULE P-X MAIN BOARD

Part Name	Description	Description Photo
Flat Cable	① Detach all Connectors from the X Main Board. ※ To separate the Flat Cable of the X-Board, press the upper and the lower sides of the connector.	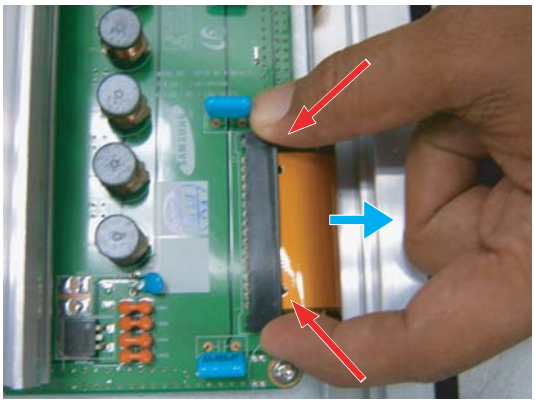 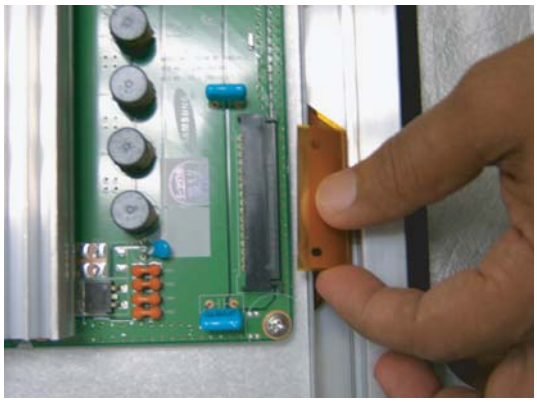
42" X-Main Board	① Remove 4 screws. : PH,+,WWP,M3,L8,NI PLT ② Remove the X-Main Board.	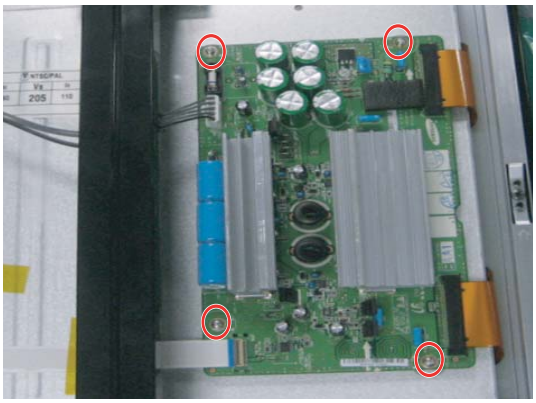 
50" X-Main Board	① Remove 4 screws. : PH,+,WWP,M3,L8,NI PLT ② Remove the X-Main Board.	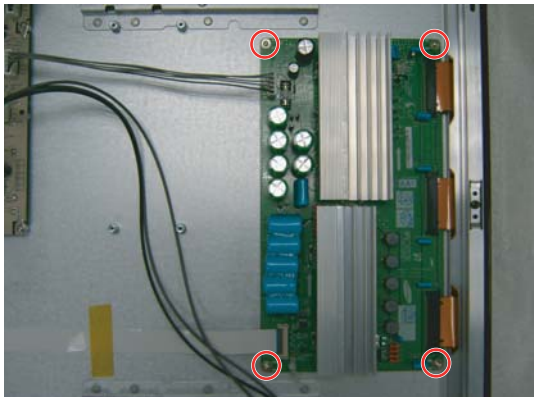 

3-1-11 Separation of ASSY PDP MODULE P-Y MAIN BOARD

Part Name	Description	Description Photo
Flat Cable	① Detach the 6 scan board connectors from the panel by pulling the holder from both the top and bottom ends.	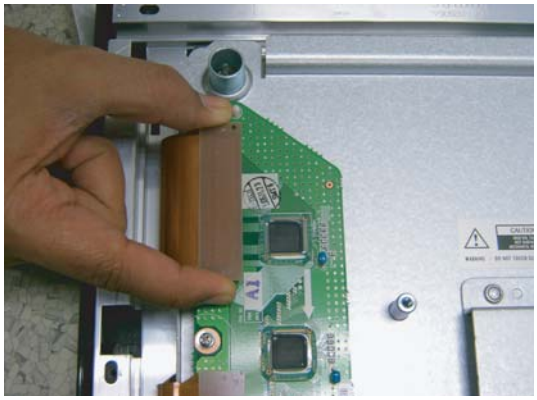 
42" Y-Scan Board	① Remove 3 screws. : PH,+,WWP,M3,L8,NI PLT	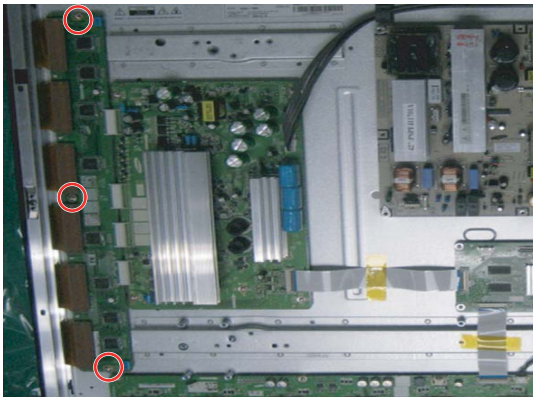 
50" Y-Scan Board	① Remove 5 screws. : PH,+,WWP,M3,L8,NI PLT	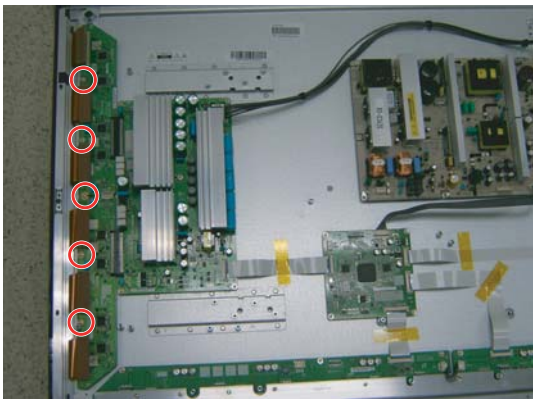 

Part Name	Description	Description Photo
42" Y-Main Board	① Remove 4 screws. : PH,+,WWP,M3,L8,NI PLT ② Detach all connectors from the Y-Main Board.	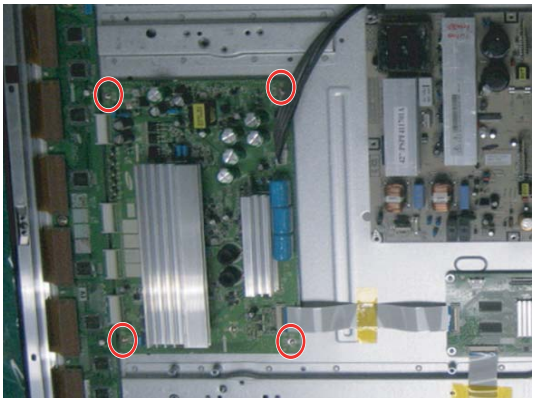 
50" Y-Main Board	① Remove 4 screws. : PH,+,WWP,M3,L8,NI PLT ② Detach all connectors from the Y-Main Board.	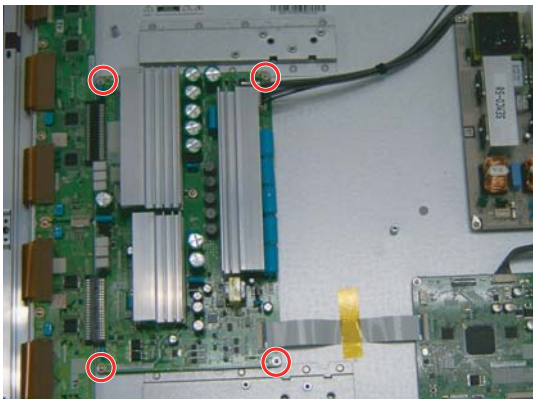 

3-1-12 Separation of ASSY PDP MODULE P-ADDRESS BUFFER BOARD

Part Name	Description	Description Photo
42" Still Bar	① Remove 4 screws. : PH,+,WWP,M3,L8,NI PLT ② Remove the still bar.	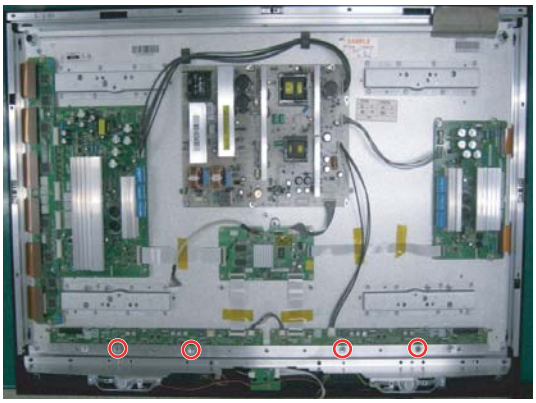 
50" Still Bar	① Remove 4 screws. : PH,+,WWP,M3,L8,NI PLT ② Remove the still bar.	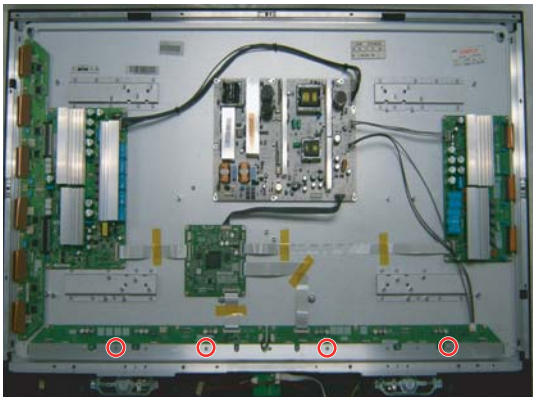 
42" Buffer Board	① Detach the all connectors from the buffer board. ② Remove 12 screws. : PH,+,WWP,M3,L8,NI PLT ③ Remove the E-Board and F-Board.	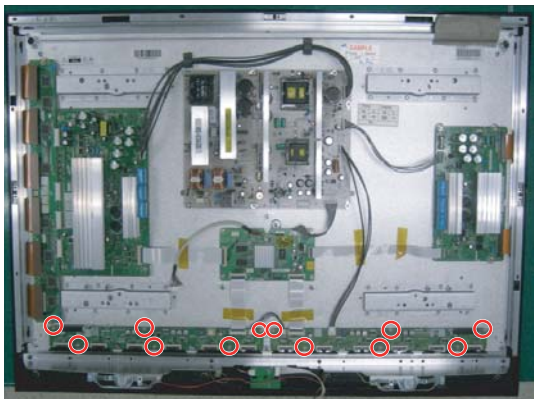 
50" Buffer Board	① Detach the all connectors from the buffer board. ② Remove 14 screws. : PH,+,WWP,M3,L8,NI PLT ③ Remove the E-Board and F-Board.	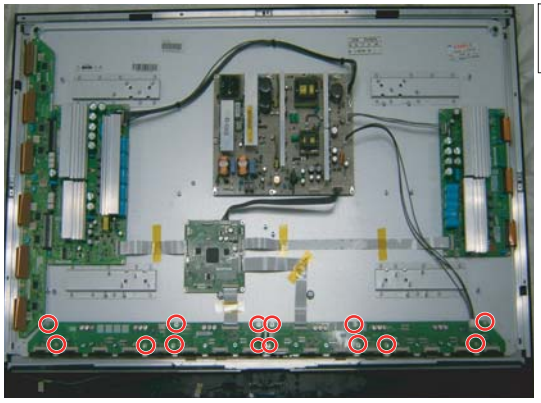 

3-1-13 Separation of ASSY PANEL BRACKETS

Part Name	Description	Description Photo
Panel Brackets	① Remove 6 screws. (○) : BH,+,B,M4,L3,ZPC(BLK) ② Remove 4 screws. (○) : BH,+,S,M4,L10,ZPC(BLK) ③ Remove the Side Panel Brackets.	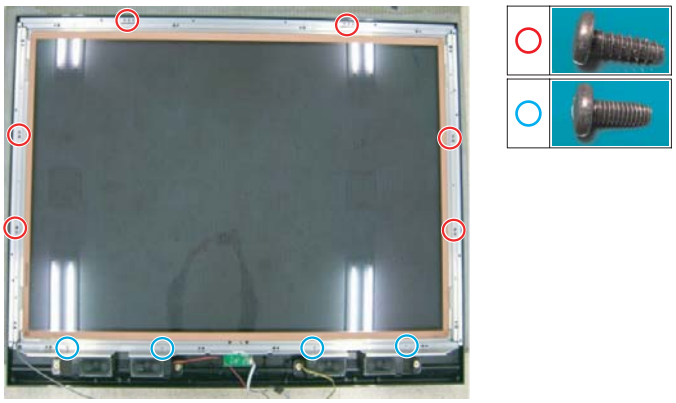

3-1-14 Separation of ASSY PCB FUNCTION

Part Name	Description	Description Photo
Function Board	① Remove 2 screws. : BH,+,B,M4,L3,ZPC(BLK) ② Remove the Function Board.	

MEMO

4. Troubleshooting

4-1 Troubleshooting

4-1-1 First Checklist for Troubleshooting

1. Check the various cable connections first.
   - Check to see if there is a burnt or damaged cable.
   - Check to see if there is a disconnected or loose cable connection.
   - Check to see if the cables are connected according to the connection diagram.

2. Check the power input to the Main Board.

3. Check the voltage in and out between the SMPS ↔ Main Board, between the SMPS ↔ X, Y Main Board, and between the Logic Boards.

4-1-2 Checkpoints by Error Mode

■ No Power

Symptom	- The LEDs on the front panel do not work when connecting the power cord. - The SMPS relay does not work when connecting the power cord. - The unit appears to be dead.
Major Checklist	The SMPS relay or the LEDs on the front panel does not work when connecting the power cord if the cables are improperly connected or the Main Board or SMPS is not functioning. In this case, check the following: - Check the internal cable connection. - Check the fuses. - Check the output voltage of the SMPS. - Replace the Main Board.
Troubleshooting Procedures	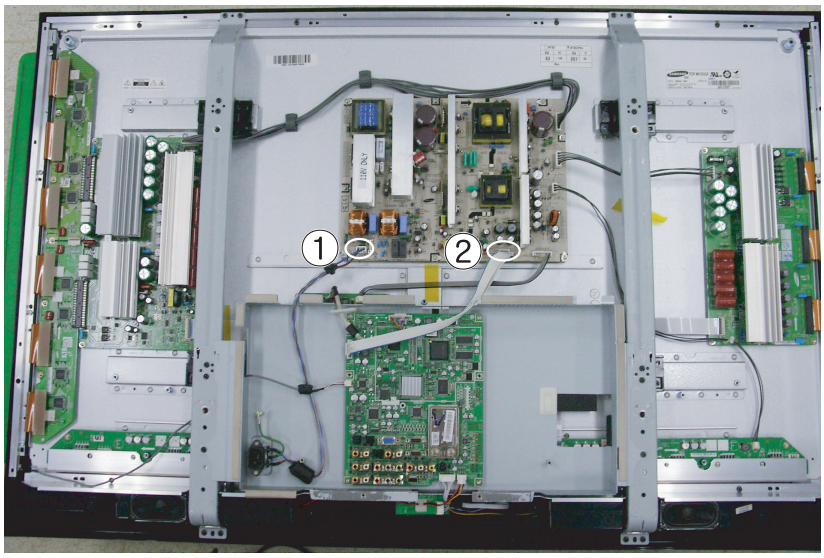 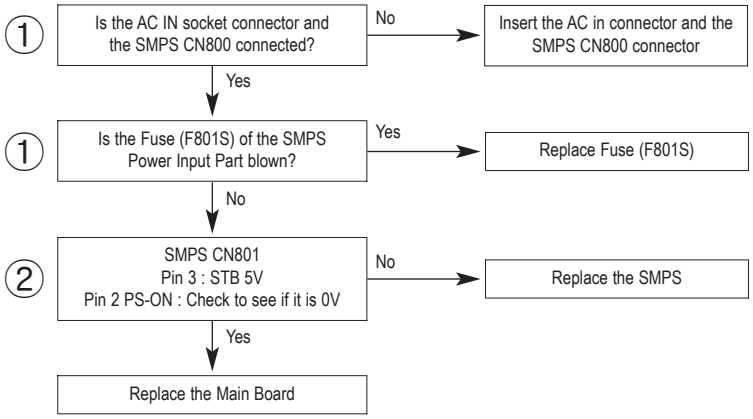

■ When the unit is repeatedly turning on and off

Symptom	- The SMPS relay is repeatedly turning on and off.
Major Checklist	In general, the SMPS relay repeatedly turns on and off by the protection function due to a defect on a board connected to the SMPS. - Disconnect all cables from the SMPS, operate the SMPS alone and check if the SMPS works properly and if each voltage output is correct. - If the symptom continues even when SMPS is operated alone, replace the SMPS. - If the symptom is not observed when operating the SMPS alone, find any defective assemblies by connecting the cables one by one.
Troubleshooting Procedures	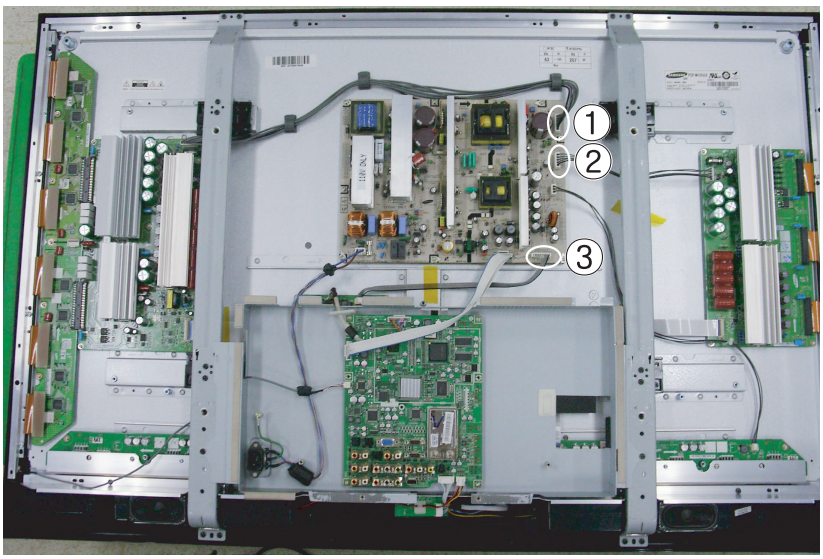 ① Does the symptom continue when connecting the power after removing CN810 from the SMPS? — No → Replace the Y Main Board; Yes ↓ ② Does the symptom continue when connecting the power after removing CN809 from the SMPS? — No → Replace the X Main Board; Yes ↓ ③ Does the symptom continue when connecting the power after removing CN807 from the SMPS? — No → Replace the Logic Board; Yes ↓ Replace the SMPS
Caution	WHEN SEPARATING AND CONNECTING THE CABLES SUCH AS CN810, CN809, CN808, CN807 OF THE MAIN SMPS, CN4701 OF THE X MAIN BOARD, AND CN5707 OF THE Y MAIN BOARD, A SPARK MAY BE GENERATED BY THE ELECTRIC CHARGE OF THE HIGH CAPACITY CAPACITOR. THEREFORE, WAIT SOME TIME AFTER DISCONNECTING THE POWER CORD FROM THE UNIT.

■ No Picture (When audio is normal)

Symptom	- Audio is normal but no picture is displayed on the screen.
Major Checklist	- This may happen when the Main Board is functioning but the X, Y Main Board, Logic Board, or Y Buffer Boards are not. - The output voltage of the Main SMPS. - This may happen when the LVDS cable connecting the Main Board and the Logic Board is disconnected.
Troubleshooting Procedures	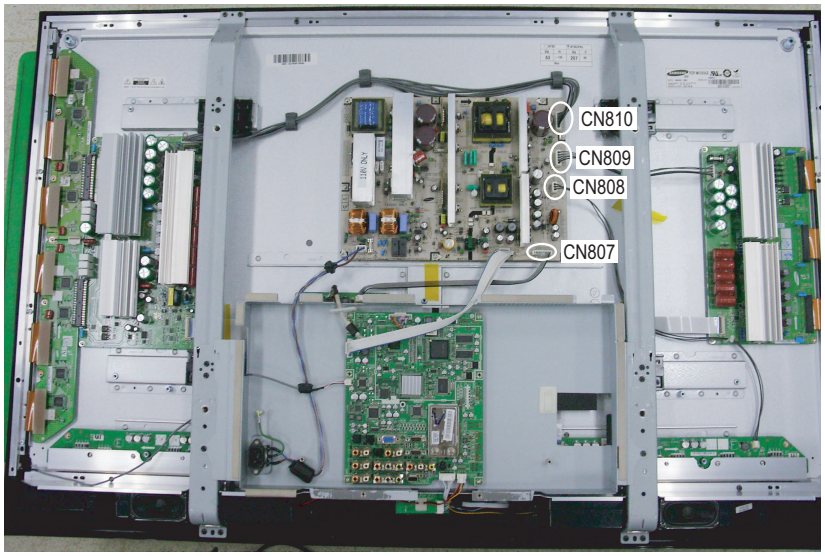 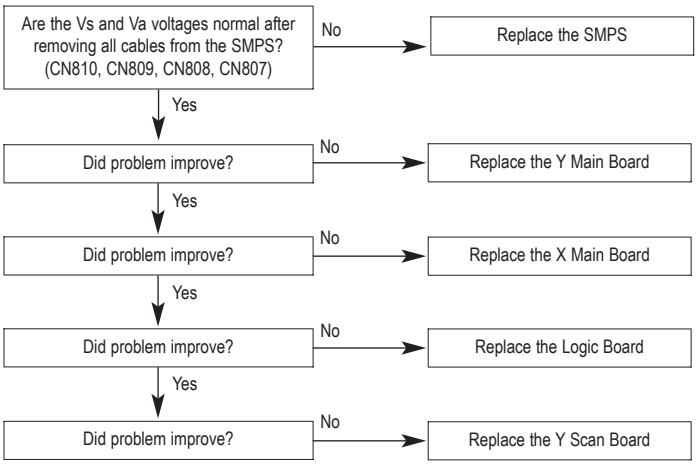
Caution	WHEN SEPARATING AND CONNECTING THE CABLES SUCH AS CN810, CN809, CN808, CN807 OF THE MAIN SMPS, CN4701 OF THE X MAIN BOARD, AND CN5707 OF THE Y MAIN BOARD, A SPARK MAY BE GENERATED BY THE ELECTRIC CHARGE OF THE HIGH CAPACITY CAPACITOR. THEREFORE, WAIT SOME TIME AFTER DISCONNECTING THE POWER CORD FROM THE UNIT.

■ No Sound

Symptom	- Video is normal but there is no sound.
Major Checklist	- When the speaker connectors are disconnected or damaged. - When the sound processing part of the Main Board is not functioning. - Speaker defect.
Troubleshooting Procedures	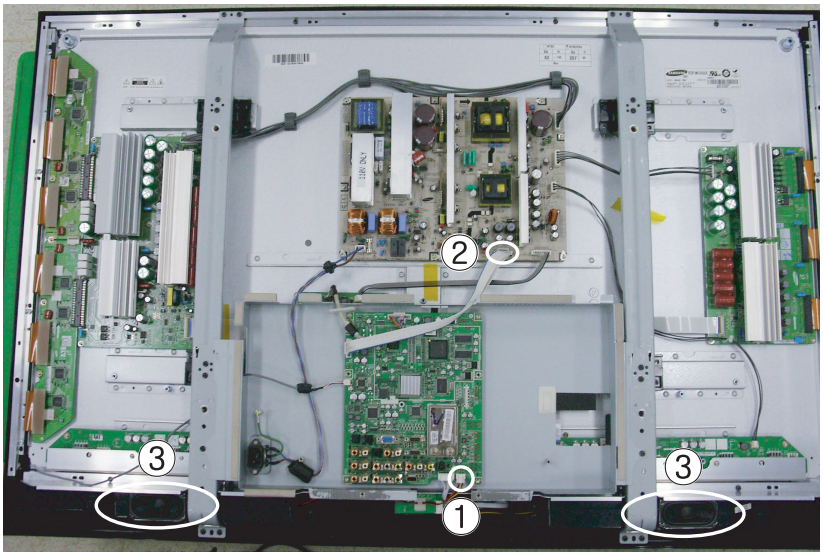 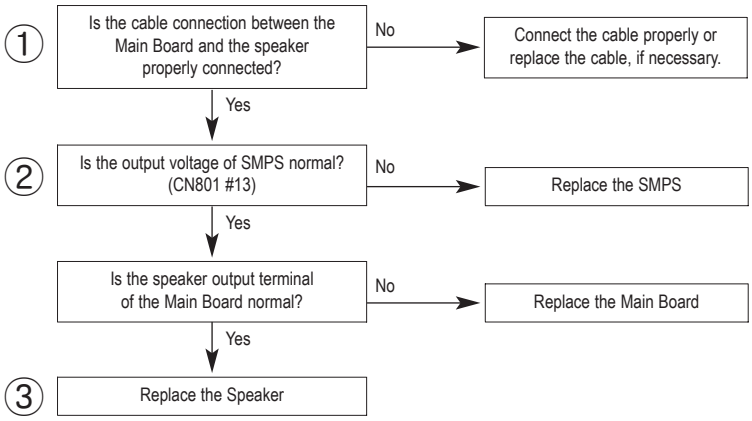

■ No Video

Symptom	- A normal/cable network analog broadcast screen is blank or abnormal but OSD is OK.
Major Checklist	- Check the antenna connection settings (Air: NTSC / ATSC, Cable: NTSC) - Check the CVBS cable connection. - Check the power input of the Main board.
Troubleshooting Procedures	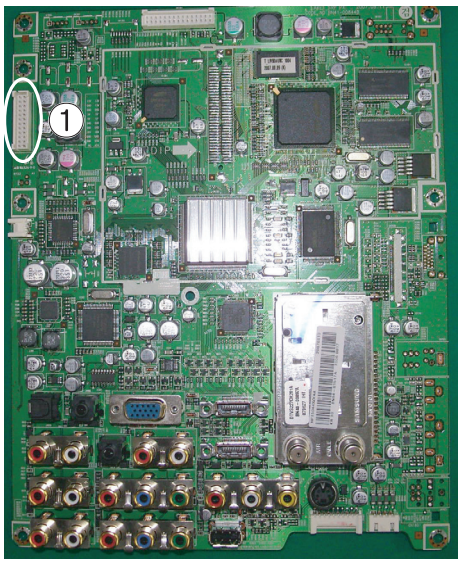 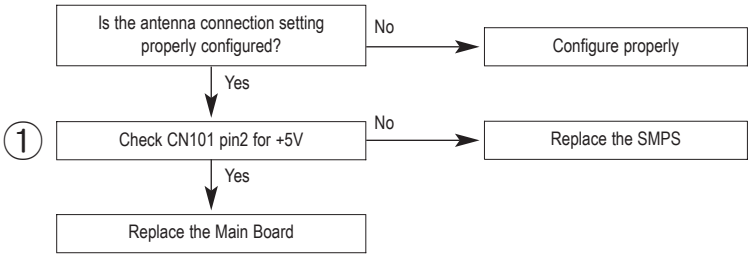

■ SMPS Troubleshooting

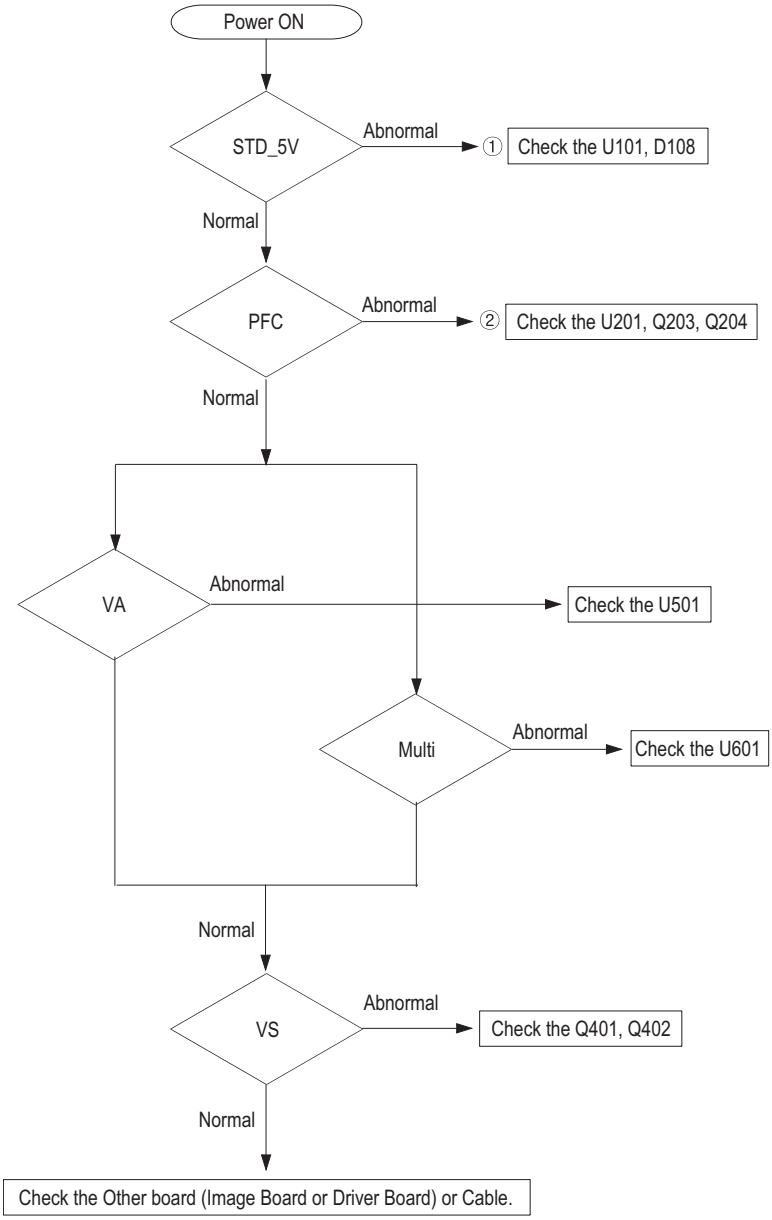

■ Drive Board Troubleshooting

1) Troubleshooting Summary

Condition Name	Description	Related Board
No Voltage Output	Operating Voltage don't exist	PSU
No Display	Operating Voltage exist, but an Image doesn't exist on screen	Y-MAIN, X-MAIN, Logic Main, Cable
Abnormal Display	Abnormal Image (not open or short) is no screen	Y-MAIN, X-MAIN, Logic Main
Sustain Open	Some horizontal lines don't exist on screen	Scan Buffer, FPC of X/Y
Sustain Short	Some horizontal lines appear to be linked on screen	Scan Buffer, FPC of X/Y
Address Open	Some vertical lines don't exist on screen	Logic Main, Logic Buffer, TCP
Address Short	Some vertical lines appear to be linked on screen	Logic Main, Logic Buffer, TCP

2) Troubleshooting Procedure in Abnormal Conditions

① No Display

▶ No Display is related with Y-MAIN, X-MAIN, Logic Main and so on.
This page shows you how to check the boards, and the following pages show you how to find the defective board.

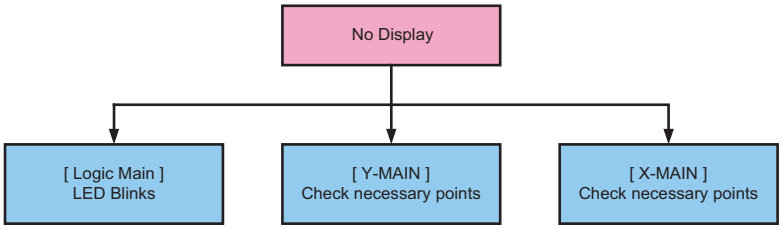

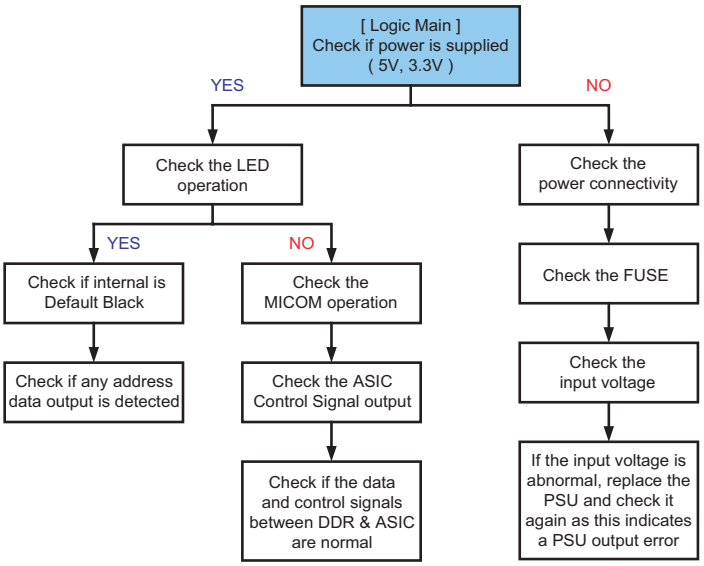

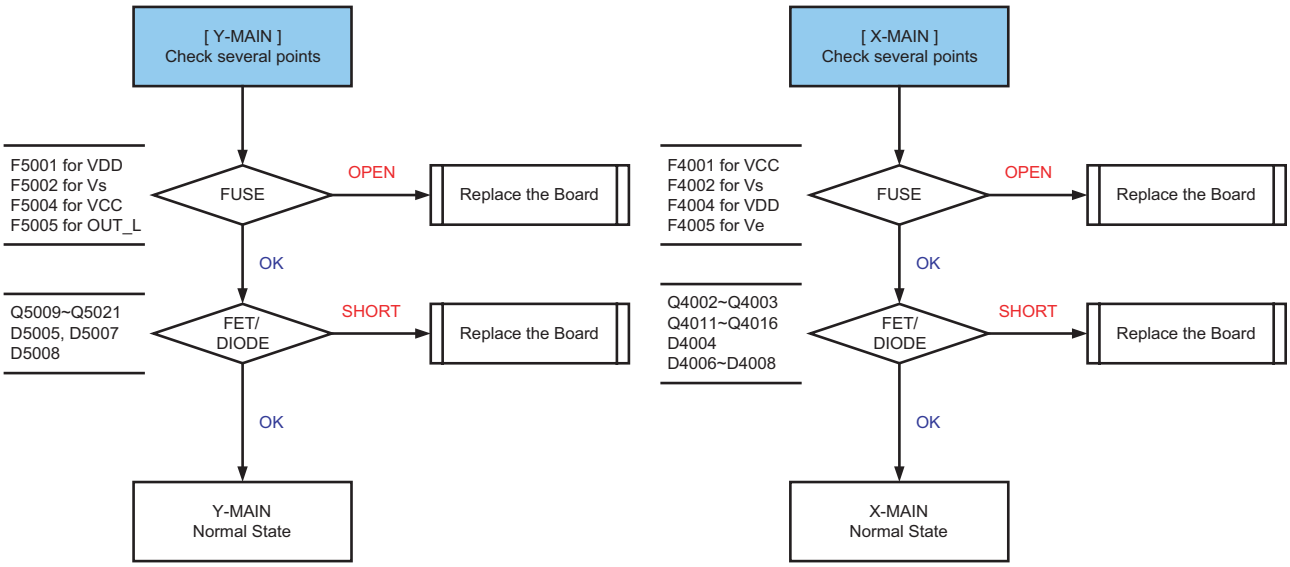

② Abnormal Display(Abnormal Image is on Screen.(except abnormality in Sustain or Address))

▶ Abnormal Display is related with Y-MAIN, X-MAIN, Logic Main and so on.
This page shows you how to check the boards, and the following pages show you how to find the defective board.

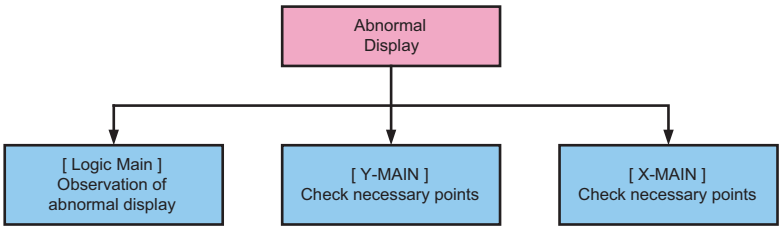

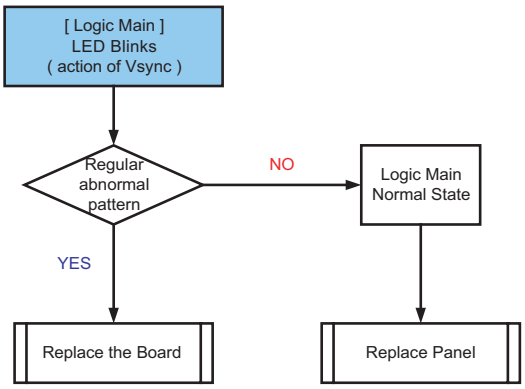

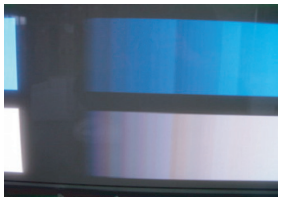

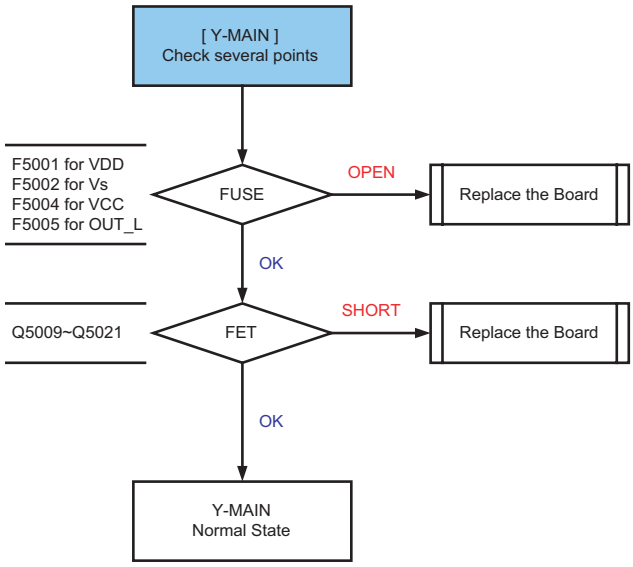

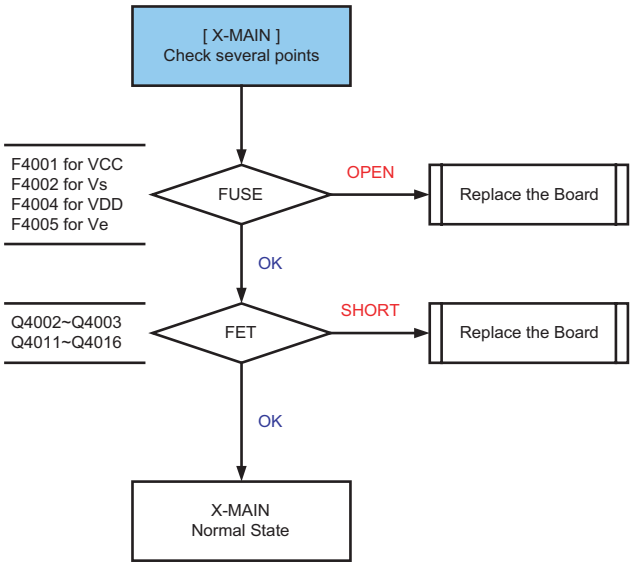

③ Sustain Open (some horizontal lines don't exist on screen)

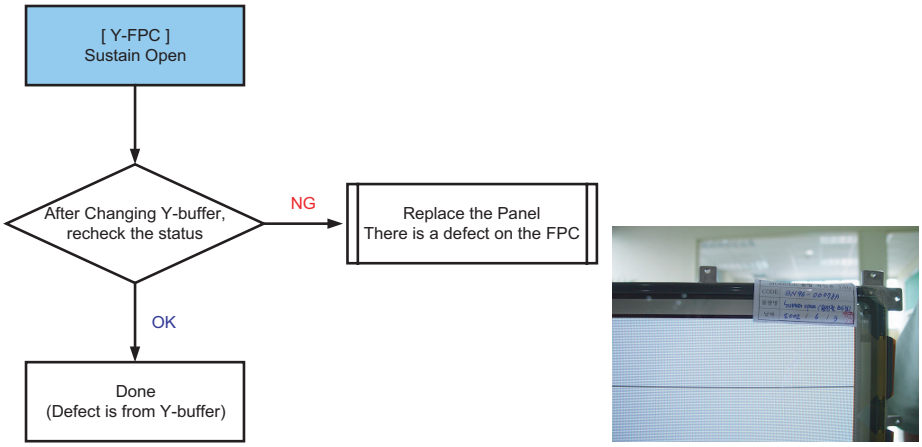

④ Sustain Short (some horizontal lines appear to be linked on Video)

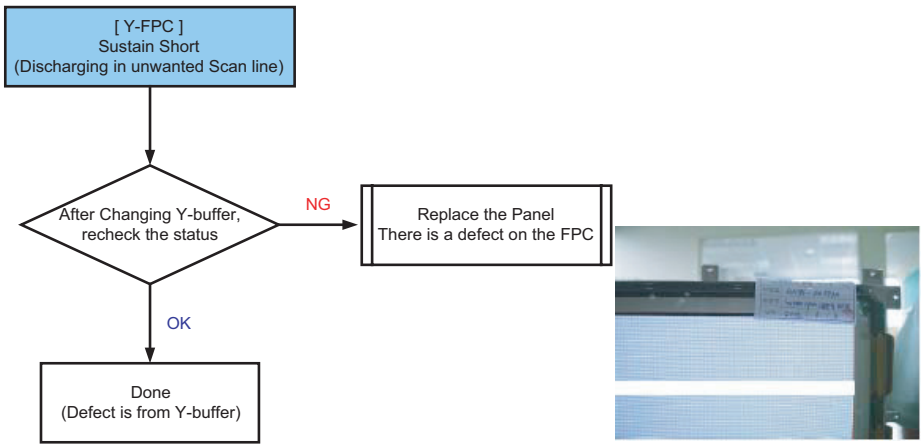

⑤ Address Open, Short

▶ Address Open and Short is related with Logic Main, Logic Buffer, FFC, TCP film and so on.
This page shows you how to check the boards, and the following pages show you how to find the defective board.

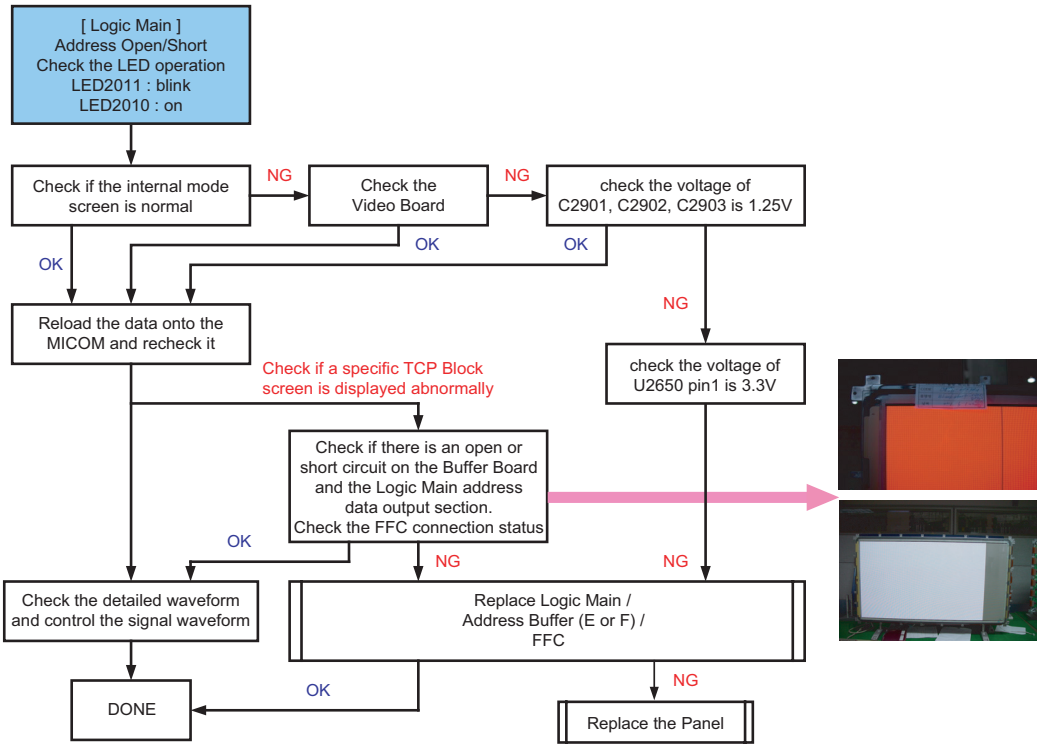

4-1-3 Faults and Corrective Actions

Symptom	Related Image	Causes and Countermeasures
A blank vertical cell (block) appears on the screen.		Address buffer defect - Replace the corresponding upper/lower buffers (E, F) COF defect (burnt) - Replace the module
A green screen appears when the TV is turned on.		The Scale is not reseting - Replace the Main board
The OSD box appears but there is no text.		Incorrect program version - Check the version of each program - Replace the Main board
A blank upper (or lower) block appears on the screen.	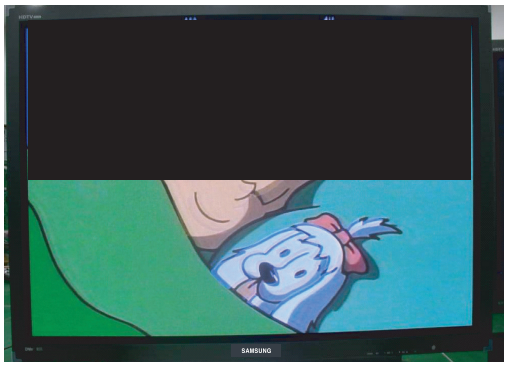	Upper/Lower Y Buffer defect - Replace the corresponding upper/lower buffers (E, F)

Symptom	Related Image	Causes and Countermeasures
Either the main or sub picture does not appear.		Replace the Main board
A vertical green line appears on the screen.	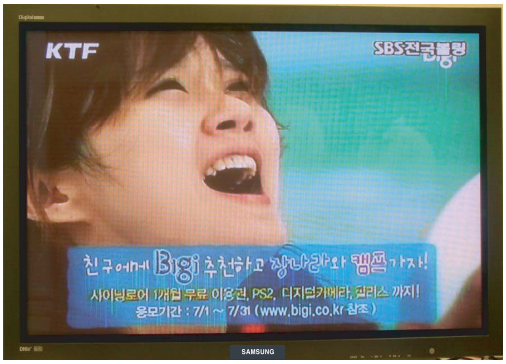	The SMPS voltage is incorrect - Adjust the SMPS voltage according to the voltage printed on the module label
Dim screen (blurred in red)		X-Main board defect - Replace the X-Main board
A blank screen appears	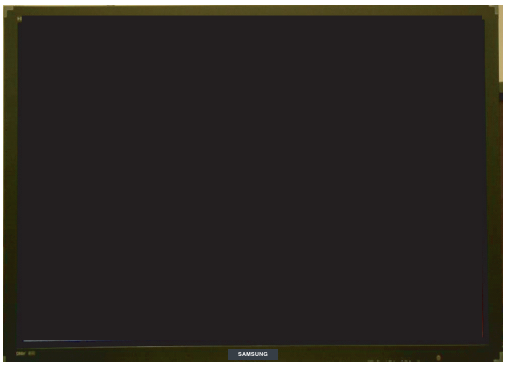	- Replace the Y-Main board

4-1-4 Troubleshooting Procedures by assembly

No	Assembly	Major Symptoms
1	SMPS-PDP TV	No power, Blank screen, the Relay repeats On and Off.
2	ASSY PDP MODULE P-X-MAIN	Blank screen
3	ASSY PDP MODULE P-Y-MAIN	Blank screen
4	ASSY PDP MODULE P-LOGIC MAIN	Blank screen, Screen noise
5	ASSY PDP MODULE P-Y-MAIN SCAN BUFFER	Row Bar screen is blank
6	ASSY PDP MODULE P-ADDRESS E BUFFER	Corresponding Buffer Board block screen is blank.
7	ASSY PDP MODULE P-ADDRESS F BUFFER	Corresponding Buffer Board block screen is blank.
8	ASSY PCB MISC-MAIN	No Power, Abnormal screen for each input source, PIP screen trouble, Sound trouble
9	ASSY BOARD P-FUNCTION	The side function key does not work properly
10	ASSY BOARD P-POWER&IR	The remote control does not work properly, the LED does not work properly.

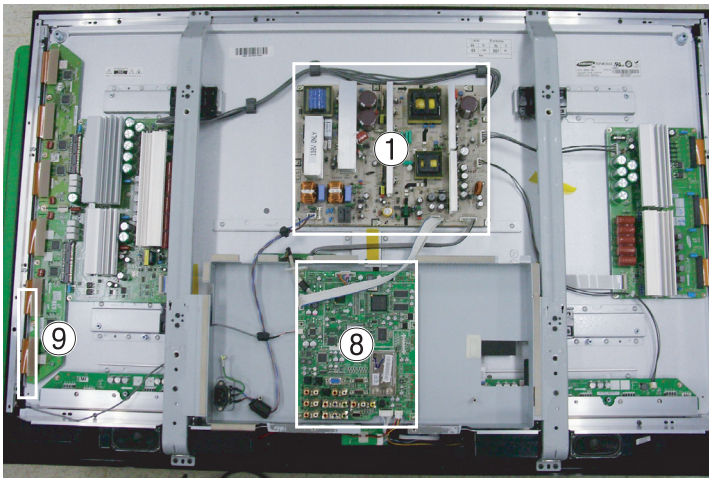

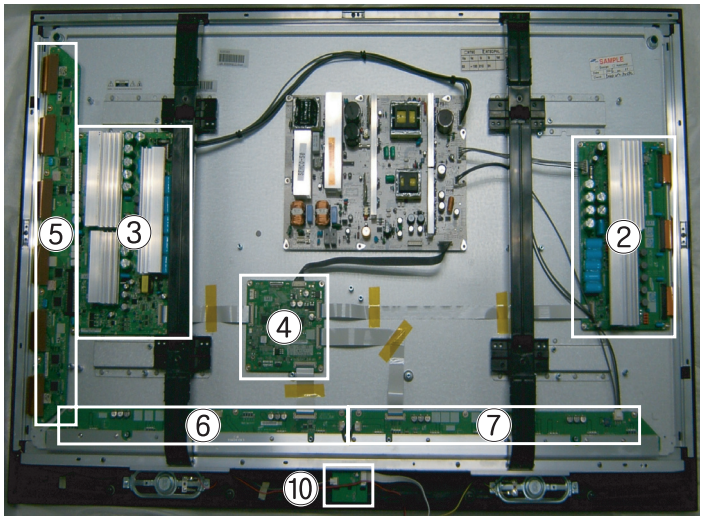

4-2 Adjustment

4-2-1 Service Instruction

■ Before Performing After Sales Services

1. Check if the measurement and test equipment is working properly.
2. Secure sufficient work space for disassembling the product.
3. Prepare a soft pad for disassembling the product.

■ Service adjustment item after replacement of Board

<If adjustment equipment is available>

① PDP Option of Factory Mode → set the Factory Data Type item as the suitable value of relevant model.
② Adjust Calibration of Factory Mode for each mode.
③ Adjust White Balance of Factory Mode.

<If adjustment equipment is not available>

① Write down the value of HDMI White Balance of Factory Mode before replacing Board.
② PDP Option of Factory Mode → set the Factory Data Type item as the suitable value of relevant model.
③ Set the value of HDMI White Balance with the value written down before.

4-2-2 How to Access Service Mode

1. General Remote

To Enter: **POWER OFF** → **MUTE** → **1** → **8** → **2** → **POWER ON**
(Interval between key strokes: less than 3 sec)

To Exit: **POWER OFF** → **POWER ON**

2. Factory Remote

To Enter: **POWER ON** → **INFO** → **FACTORY Key** (Interval between key strokes: less than 3 sec)

To Exit: **POWER OFF** → **POWER ON**

Press the Factory key twice with a key stroke interval of more than 1 second (Pressing once enters Aging Mode)

3. Settings when entering Factory mode
- Sharp Screen (Dynamic), Color Tone (Cool1), Factory (Dynamic CE Off), DNIe(Off)

4. Adjustment Procedures
- Channel ▲ ▼ Key : Select an item.
- Volume ◀ ▶ Key : Adjust the value up or down.
- MENU Key : Save the changes to the EEPROM and return to the higher-level mode.
- Using the Numeric (0~9) keys, you can select a channel.
- Using the SOURCE key, you can switch AV modes.

5. Initial SERVICE MODE DISPLAY State

NTSC-RF

Calibration	Sub Micom Download
Option Byte	Checksum
White Balance	KS1410
W/B Movie	Dynamic Contrast
SVP-PX	EEPROM Access Count
FBE2	PDP Option
MSP44XX	RESET
NTP3000	10W,50SPUU/LILYQ71WS

T-LIV50AUSC-1000 May 10 2007
T-LIV50AUSS-1008 [Sec : 20]

※ The version of the firmware displayed at the bottom of the screen may differ and the firmware is subject to change for the improvement of product functions.
※ If you have adjusted the settings in Service Mode, you have to reset the product.
※ If you exit Service Mode without reset, DNIe vlaue keeps Off regardless of setting up the user.

4-2-3 Factory Data ★ The underlined are items applied during the service adjustment. None of the others should be adjusted.

1. Calibration

Item	Data
AV Calibration	Failure
Comp Calibration	Failure
PC Calibration	Failure
HDMI Calibration	Failure

2. Option Byte

Item	Range	RF	AV/S-video	Component HD	PC	HDMI
HDMI Polarity		10	10	10	10	10
Watchdog Enable		1	1	1	1	1
Spread Spectrum		>>	>>	>>	>>	>>
NIM Version		KS1410	KS1410	KS1410	KS1410	KS1410
AUTO WALL		On	On	On	On	On
RS-232 JACK		AutoWM	AutoWM	AutoWM	AutoWM	AutoWM
Gamma		0.9	0.9	0.9	0.9	0.9
HSCB		STD	STD	STD	STD	STD
LVDS_TX_Fmt		[0]	[0]	[0]	[0]	[0]
LVDS_TX_Bit		12Bit	12Bit	12Bit	12Bit	12Bit
Panel Display Time		0Hr	0Hr	0Hr	0Hr	0Hr
Mute Time[RF]		2	2	2	2	2
CH Memory		SAMEX	SAMEX	SAMEX	SAMEX	SAMEX
shop mode		Off	Off	Off	Off	Off
Downloadable RRT		On	On	On	On	On
PC Mode ident		Auto	Auto	Auto	Auto	Auto
IRE		Off	Off	Off	Off	Off
IRE Offset		60	60	60	60	60
HDMI Hot plug		Enable	Enable	Enable	Enable	Enable
HDMI Delay Time		1200	1200	1200	1200	1200
HDMI Mode Ident		Auto	Auto	Auto	Auto	Auto
Select FBE		FBE2X	FBE2X	FBE2X	FBE2X	FBE2X
WM_Calibration		0	0	0	0	0
SVP Caption level		16	16	16	16	16
No MGT Case		Off	Off	Off	Off	Off
Hotel Mode		Off	Off	Off	Off	Off

* Spread Spectrum

Item	Data
SSC Range	1
SSC RESET SEL	1

3. White Balance

Item	Range	RF	AV/S-video	Component HD	PC	HDMI
Sub-Briteness	0~255	128	128	128	128	128
R-offset	0~1023	512	512	512	512	512
G-offset	0~1023	512	512	512	512	512
B-offset	0~1023	512	512	512	512	512
Sub-Contrast	0~255	128	128	128	128	128
R-Gain	0~1023	512	512	512	512	512
G-Gain	0~1023	512	512	512	512	512
B-Gain	0~1023	512	512	512	512	512

4. W/B Movie

Item	Range	RF	AV/S-video	Component HD	PC	HDMI
W/B MOVIE ON/OFF	ON/OFF	Off	Off	Off	Off	Off
MODE	Dynamic/Movie	Dynamic	Dynamic	Dynamic	Dynamic	Dynamic
Color Tone	Coo2/Cool1/Normal /Warm1/Warm2	Cool1	Cool1	Cool1	Cool1	Cool1
Msub Contrast		128	128	128	128	128
Msub Bright		128	128	128	128	128
W2_Rgain	127~-128	0	0	0	0	0
W2_Bgain	127~-128	0	0	0	0	0
W2_Roffset	511~-512	0	0	0	0	0
W2_Boffset	511~-512	0	0	0	0	0
W1_Rgain	127~-128	0	0	0	0	0
W1_Bgain	127~-128	0	0	0	0	0
W1_Roffset	511~-512	0	0	0	0	0
W1_Boffset	511~-512	0	0	0	0	0
Nor_Rgain	127~-128	0	0	0	0	0
Nor_Bgain	127~-128	0	0	0	0	0
Nor_Roffset	511~-512	0	0	0	0	0
Nor_Boffset	511~-512	0	0	0	0	0
C2_Rgain	127~-128	0	0	0	0	0
C2_Bgain	127~-128	0	0	0	0	0
C2_Roffset	511~-512	0	0	0	0	0
C2_Boffset	511~-512	0	0	0	0	0
Movie Contrast	0~100	80	0	80	80	80
Movie Bright	0~100	45	0	45	45	45
Movie Color	0~100	45	0	45	45	45

5. SVP-PX

Item	Range	RF	AV/S-video	Component HD	PC	HDMI
Sharpness		>>	>>	>>	>>	>>
LNA PLUS		>>	>>	>>	>>	>>
UV Dealy		>>	>>	>>	>>	>>
PGA		>>	>>	>>	>>	>>
Calibration Target		>>	>>	>>	>>	>>
CLK_A	00 ~ 255	16	16	16	16	16
CLK_B	00 ~ 255	96	96	96	96	48
CLK_C	00 ~ 255	8	8	8	8	8
Roffset		68	68	67	110	67
Goffset		68	68	67	110	67
Boffset		68	68	67	110	67
RGain		294	294	274	265	274
GGain		294	294	274	265	274
BGain		294	294	274	265	274

① Sharpness

Item	Range	RF	AV/S-video	Component HD	PC	HDMI
H2gain		10	10	10	10	10
H4gain		10	16	16	10	16
V2gain		10	10	10	10	10
V4gain		10	16	16	10	16
Sr2gain		0	0	0	0	0
Sr4gain		0	0	0	0	0
Sl2gain		0	0	0	0	0
Sl4gain		0	0	0	0	0
Peakth1		4	4	4	4	4
Peakth2		47	47	47	47	47
Sub_Color		60	62	62	62	62

② LNA PLUS

Item	Range	RF	AV/S-video	Component HD	PC	HDMI
dB0_Peaking_th1		2	2	0	0	0
dB0_Vpeaking_th1		4	4	0	0	0
dB1_NoiseAmount		4	4	0	0	0
dB1_Peaking_th1		12	12	0	0	0
dB1_Vpeaking_th1		12	12	0	0	0
dB2_NoiseAmount		10	10	0	0	0
dB2_Peaking_th1		32	32	0	0	0
dB2_Vpeaking_th2		32	32	0	0	0
dB3_NoiseAmount		14	14	0	0	0
dB3_Peaking_th1		128	128	0	0	0
dB3_Vpeaking_th1		80	80	0	0	0

③ UV Delay

Item	Range	RF	AV/S-video	Component HD	PC	HDMI
U Delay		0	0	0	0	0
V Delay		0	0	0	0	0

④ PGA

Item	Range	RF	AV/S-video	Component HD	PC	HDMI
TCD3_Contrast		114	114	126	126	126
TCD3_Bright		45	45	40	40	40
TCD3_YC_Delay		0	0	0	0	0
ANALOG_Y_Offset		66	66	67	20	66
ANALOG_PB_Offset		128	128	128	23	128
ANALOG_PR_Offset		128	128	128	20	128
ANALOG_Y_Gain		194	194	193	206	194
ANALOG_PB_Gain		128	128	128	128	128
ANALOG_PR_Gain		128	128	128	128	128

⑤ Calibration Target

Item	Range	RF	AV/S-video	Component HD	PC	HDMI
1st_AV_Low		0x10	0x10	0x10	0x10	0x10
1st_AV_High		0xDC	1xDC	1xDC	0xDC	0xDC
1st_AV_Delta		0x4	0x4	0x4	0x4	0x4
1st_COMP_Low		0x10	0x10	0x10	0x10	0x10
1st_COMP_High		0xEB	1xEB	1xEB	0xEB	0xEB
1st_COMP_Delta		0x4	0x4	0x4	0x4	0x4
1st_PC_Low		0x4	0x4	0x4	0x4	0x4
1st_PC_High		0xEB	1xEB	1xEB	0xEB	0xEB
1st_PC_Delta		0x4	0x4	0x4	0x4	0x4
None						
None						
None						
2nd_AV_Low		0x1	0x1	0x1	0x1	0x1
2nd_AV_High		0xEB	1xEB	1xEB	0xEB	0xEB
2nd_AV_Delta		0x8	0x8	0x8	0x8	0x8
2nd_COMP_Low		0x1	0x1	0x1	0x1	0x1
2nd_COMP_High		0xEB	1xEB	1xEB	0xEB	0xEB
2nd_COMP_Delta		0x8	0x8	0x8	0x8	0x8
2nd_PC_Low		0x1	0x1	0x1	0x1	0x1
2nd_PC_High		0xEB	1xEB	1xEB	0xEB	0xEB
2nd_PC_Delta		0x8	0x8	0x8	0x8	0x8
2nd_HDMI_Low		0x1	0x1	0x1	0x1	0x1
2nd_HDMI_High		0xEB	1xEB	1xEB	0xEB	0xEB
2nd_HDMI_Delta		0x8	0x8	0x8	0x8	0x8

6. FBE2

Item	Range	RF	AV/S-video	Component HD	PC	HDMI
Patt-Sel		0	0	0	0	0
B-Slope Gain		74	80	84	84	84
B-Tilt Min		20	20	20	20	20
B-Tilt Max		120	120	120	120	120
Lfunc Basis		75	75	75	75	75
Hfunc Basis		88	88	88	88	88
Mean offset1		64	64	64	64	64
Mean offset2		235	235	235	235	235
Mean slope		93	93	93	93	93
Input Offset		128	128	128	128	128
Acr Offset		25	25	25	25	25
Arc Th1		30	30	30	30	30
Acr th2		120	120	120	120	120
Skin-Enable		1	1	1	1	1
Skin-Tu		130	130	130	128	134
Skin-Tv		130	130	130	128	134
Sub Color		128	128	140	130	140
M-Skin-Tu		100	100	100	100	100
M-Skin-Tv		100	100	100	100	100
M-Au Sub color		128	128	128	128	128
MW_Skin Tu		100	100	100	100	100
MW_Skin Tv		100	100	100	100	100
M-Wi Sub color		128	128	128	128	128

7. MSP44XX

Item	Range	RF	AV/S-video	Component HD	PC	HDMI
FM_Precale		31	31	31	31	31
Melody Volume		7	7	7	7	7
SpdifDelay		0	0	0	0	0
InternalDelayDtv		0	0	0	0	0
InternalDelayAnalog		45	45	45	45	45
Carrier Mute		1	1	1	1	1
Pilot High		10	10	10	10	10
Pilot Low		5	5	5	5	5
Scart1 Out Volume		109	109	109	109	109
Scart2 Out Volume		115	115	115	115	115

8. NTP3000

Item	Range	RF	AV/S-video	Component HD	PC	HDMI
Amp Volume		21	21	21	21	21
PWM MOD		234	234	234	234	234
Drc Thresh		25	25	25	25	25
Speaker EQ		1	1	1	1	1

9. Submicom Download 0

10. Checksum [0000]

11. KS1410

Item	Range	RF	AV/S-video	Component HD	PC	HDMI
RF_AGC		0x8A	0x8A	0x8A	0x8A	0x8A
VSB-CR_GAIN		0x2E	0x2E	0x2E	0x2E	0x2E
VSB-		0xE	0xE	0xE	0xE	0xE
VSB-		0xC	0xC	0xC	0xC	0xC
VSB-		0xD	0xD	0xD	0xD	0xD
VSB-		0xC	0xC	0xC	0xC	0xC
VSB-		0x12	0x12	0x12	0x12	0x12
VSB-		0x10	0x10	0x10	0x10	0x10
VSB-		0x11	0x11	0x11	0x11	0x11
VSB-		0x10	0x10	0x10	0x10	0x10
VSB_EQ_CTRL1		0x30E	0x30E	0x30E	0x30E	0x30E
VSB_EQ_CTRL2		0x104	0x104	0x104	0x104	0x104
VSB_EQ_INIT_STEP		0x3161	0x3161	0x3161	0x3161	0x3161
VSB_EQ_STEP		0x6111	0x6111	0x6111	0x6111	0x6111
VSB_PTL_STEP		0x522	0x522	0x522	0x522	0x522
VSB_PTL_ALPHA		0x55	0x55	0x55	0x55	0x55
QAM_AGC		0x2A38	0x2A38	0x2A38	0x2A38	0x2A38
QAM_EQ_STEP1		0x312F	0x312F	0x312F	0x312F	0x312F
QAM+EQ_STEP2		0xA8B0	0xA8B0	0xA8B0	0xA8B0	0xA8B0
QAM_PTL_K1		0X37	0X37	0X37	0X37	0X37
QAM_PTL_K2		0x2D	0x2D	0x2D	0x2D	0x2D

12. Dynamic Contrast

Item	Range
Dynamic CE	Off
Dynamic ASL Gain	On
FBE2 Y_MEAN READ	

13. EEPROM Access Count

14. PDP Option

Item	Range	RF	AV/S-video	Component HD	PC	HDMI
Pixel Shift Test		0	0	0	0	0
Logic D/L		Off	Off	Off	Off	Off
Sound Output		10W	10W	10W	10W	10W
Pattern Select		0	0	0	0	0
Model Select		LILYQ71WS	LILYQ71WS	LILYQ71WS	LILYQ71WS	LILYQ71WS
Panel Select		W2A	W2A	W2A	W2A	W2A
Panel Type		No Info	No Info	No Info	No Info	No Info
Panel Version		W2	W2	W2	W2	W2
Logic SW Version		61128	61128	61128	61128	61128
Factory Update		Off	Off	Off	Off	Off
Factory Data Type		50SPuu	50SPuu	50SPuu	50SPuu	50SPuu
CDC_SW		OFF	OFF	OFF	OFF	OFF
CDC_STRENG_TH		0	0	0	0	0
BRE_SE		OFF	OFF	OFF	OFF	OFF
PANEL TEMP		0	0	0	0	0

15. RESET

16. 10W, NONE

4-2-4 Service Adjustment - You must perform Calibration in the Lattice Pattern before adjusting the White Balance.

■ Color Calibration

Adjust spec.

1. Source : HDMI
2. Setting Mode : 1280*720@60Hz
3. Pattern : Pattern #24 (Chess Pattern)

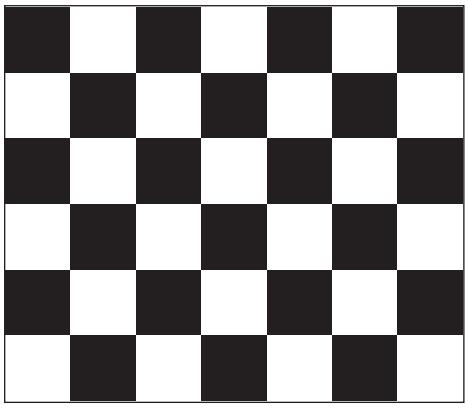

(Chess Pattern)

4. Use Equipment : CA210 & Master MSPG925 Generator

※ Use other equipment only after comparing the result with that of the Master equipment.

Input mode	Calibration	Pattern
CVBS IN (Model_#1)	Perform in NTSC B&W Pattern #24	Lattice
Component IN (Model_#6)	Perform in 720p B&W Pattern #24	Lattice
PC Analog IN (Model_#21)	Perform in VESA XGA (1024x768) B&W Pattern #24	Lattice
HDMI IN	Perform in 720p B&W Pattern #24	Lattice

<Table 1>

■ Method of Color Calibration (AV)

1) Apply the NTSC Lattice (N0. 3) pattern signal to the AV IN 1 port
2) Press the Source key to switch to "AV1" mode
3) Enter Service mode
4) Select the "Calibration" menu
5) Select the "AV Calibration" menu.
6) In "AV Calibration Off" status, press the "▶" key to perform Calibration.
7) When Calibration is complete, it returns to the high-level menu.
8) You can see the change of the "AV Calibration" status from Failure to Success.

■ Method of Color Calibration (Component)

1) Apply the 720p Lattice (N0. 6) pattern signal to the Component IN 1 port
2) Press the Source key to switch to "Component1" mode
3) Enter Service mode
4) Select the "Calibration" menu
5) Select the "Comp Calibration" menu.
6) In "Comp Calibration Off" status, press the "▶" key to perform Calibration.
7) When Calibration is complete, it returns to the high-level menu.
8) You can see the change of the "Comp Calibration" status from Failure to Success.

■ Method of Color Calibration (PC)

1) Apply the VESA XGA Lattice (N0. 21) pattern signal to the PC IN port
2) Press the Source key to switch to "PC" mode
3) Enter Service mode
4) Select the "Calibration" menu
5) Select the "PC Calibration" menu.
6) In "PC Calibration Off" status, press the "▶" key to perform Calibration.
7) When Calibration is complete, it returns to the high-level menu.
8) You can see the change of the "PC Calibration" status from Failure to Success.

■ Method of Color Calibration (HDMI)

1) Apply the 720p Lattice (N0. 6) pattern signal to the HDMI1/DVI IN port
2) Press the Source key to switch to "HDMI1" mode
3) Enter Service mode
4) Select the "Calibration" menu
5) Select the "HDMI Calibration" menu.
6) In "HDMI Calibration Off" status, press the "▶" key to perform Calibration.
7) When Calibration is complete, it returns to the high-level menu.
8) You can see the change of the "HDMI Calibration" status from Failure to Success.

■ White Balance

Adjust spec.

1. Source : HDMI
2. Setting Mode : 1280*720@60Hz
3. Pattern : Pattern #92
4. Use Equipment : MIK-7256 (MSPG925L)

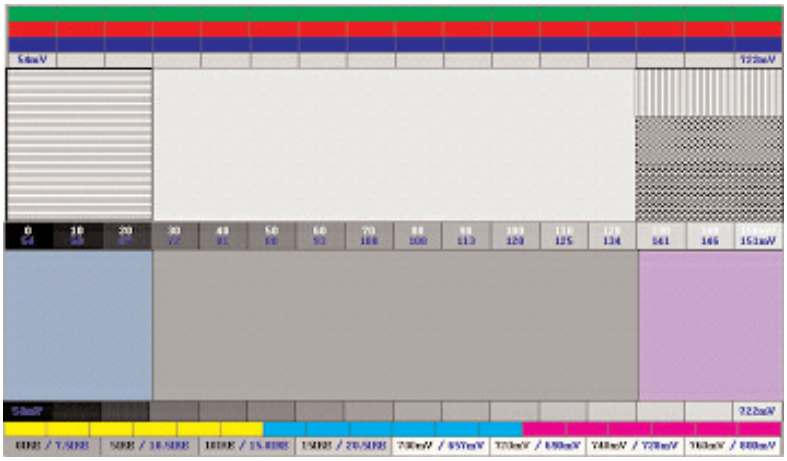

(SAMSUNG WHITE BALANCE Adjustment PATTERN with FPD)

5. Work order

① Connect HDMI (DVI) output terminal of MIK-7256 (MSPG925L) to the HDMI input in main set
② Set the input to HDMI mode
③ Enter the White Balance menu of service mode
④ Contact CA-210 sensor to glass filter

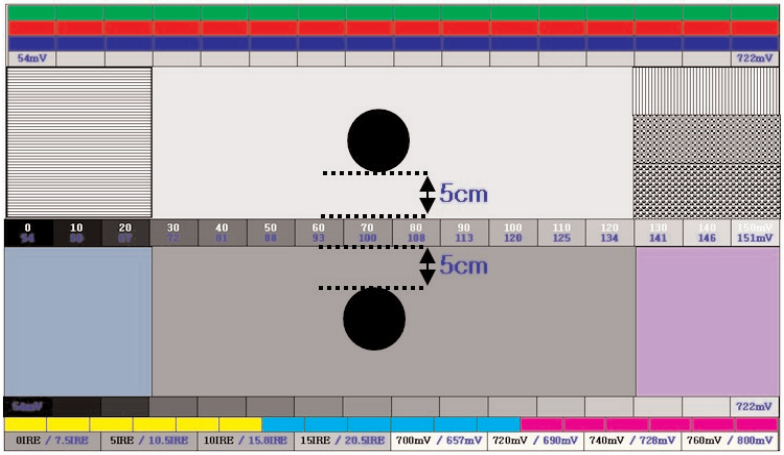

(Fixed Position of CA210 Probe)

⑤ Adjust the low light
- Adjust Sub-Bright (LBE) to set the 'Y' value
- Adjust R-Offset ('x') and B-Offset ('y') to the color coordinates.
* Do not adjust G-Offset data

⑥ Adjust the high light.
- Adjust Sub-Contrast (LBE) to set the 'Y' value
- Adjust R-Gain ('x') and B-Gain ('y') to the color coordinates.
* Do not adjust the G-gain data

Input mode		(CA-210)			
		x	y	Y(L)	T(K), MPCD
CVBS (NTSC-J)	H/L	278± 3	285± 3	22fL(20fL↑)	10,500 (± 0)
	L/L	278± 5	285± 5	1.0fL± 0.3fL	10,500 (± 0)
COMP (720P)	H/L	278± 3	285± 3	23fL(20fL↑)	10,500 (± 0)
	L/L	278± 5	285± 5	1.3fL± 0.2fL	10,500 (± 0)
HDMI (720P)	H/L	278± 3	285± 3	23fL(20fL↑)	10,500 (± 0)
	L/L	278± 5	285± 5	1.2fL± 0.1fL	10,500 (± 0)
PC (XGA) (1024*768)	H/L	279± 5	294± 5	21fL(20fL↑)	-
	L/L	287± 5	297± 5	0.8fL± 0.2fL	-

4-2-5 Replacements & Calibration

* PDP Check items listed after changing each

Replaced assembly items	Check Items
ASSY PCB MISC-MAIN	1) Auto Program 2) White Balance Adjust
SMPS-PDP TV	Vs, Va voltage check and adjust
ASSY PDP MODULE P-LOGIC MAIN	Not to be adjusted
ASSY PDP MODULE P-X-MAIN	
ASSY PDP MODULE P-Y-MAIN	
ASSY PDP MODULE P-Y-MAIN SCAN BUFFER	
ASSY PDP MODULE P-Y-MAIN SCAN BUFFER	
ASSY PDP MODULE P-ADDRESS E BUFFER	
ASSY PDP MODULE P-ADDRESS F BUFFER	

※ When replacing the SMPS or PDP panel, you have to check the voltage printed on the panel sticker and adjust it.

■ Voltage Adjustment

1. After replacing the SMPS or PDP panel, you must adjust the voltage referring to the voltage label printed on the panel.
   (If you do not adjust the voltage, an abnormal discharge symptom may appear.)

	Value	Board Adjustment
Vs	210	SMPS
Va	63	
Vset	-	
Ve	94	
Vscan	-190	

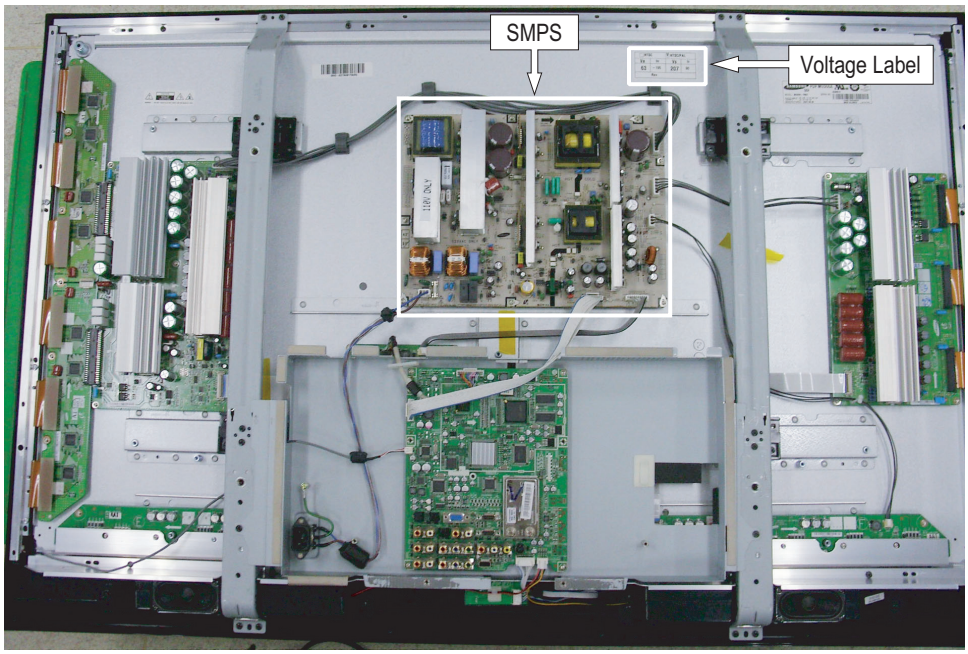

2. A point of adjusting SMPS-MAIN voltage.

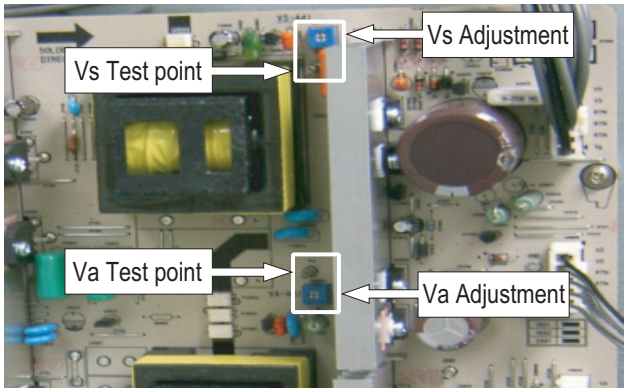

■ Y-RR and Y-FR controls

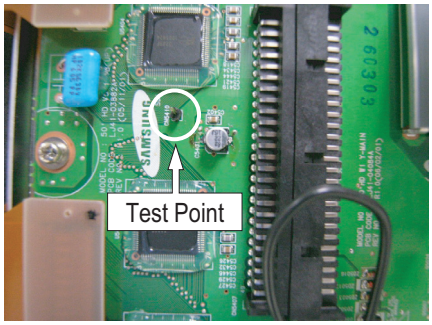

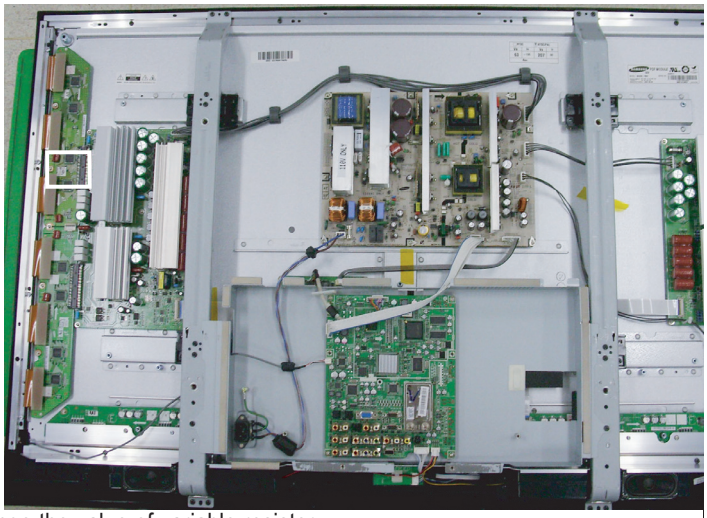

Set the main reset (rising : 60usec, falling : 80usec) by change the value of variable resistor.

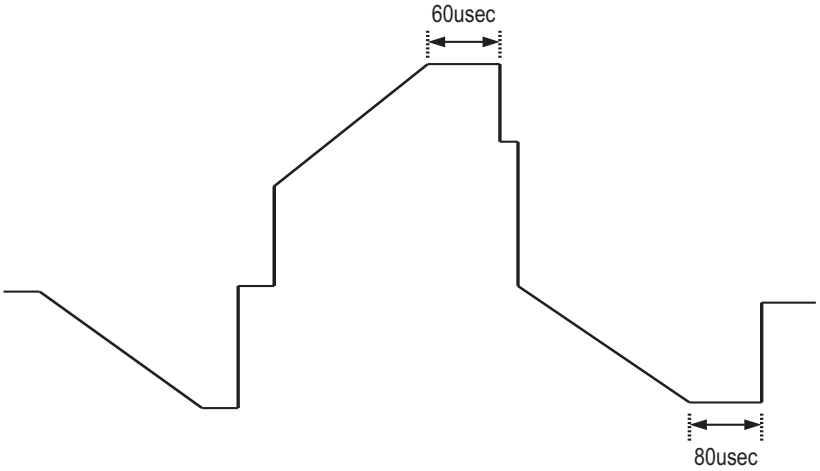

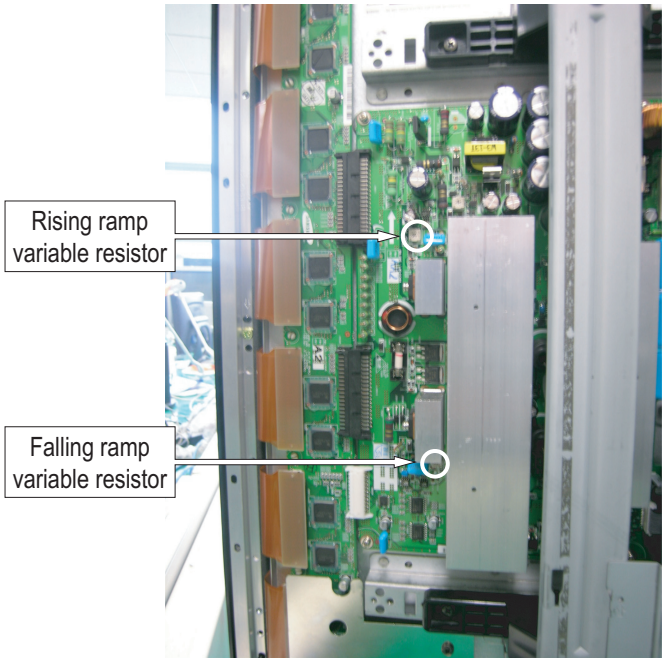

4-3 Upgrade

4-3-1 USB Download Method

1. Copy the Upgrade Files into the path "₩Lily₩us_50" in USB flash driver.

2. USB Download
   ① Insert the USB Memory Stick to the service port in Stand-by mode.
   ② Turn the power on.
   ③ Press "MENU" and find "SW Upgrade" in Menu "SETUP".
   ④ Select the "SW Upgrade" from the menu.
   ⑤ Select "USB" from the menu.
   ⑥ The banner OSD "Scaning for USB..." is displayed.
   ⑦ The banner OSD "Upgrade version **** to version ****" is displayed. Select "Yes".
   ⑧ The banner OSD "Upgrade version **** to version ****" is displayed. It takes about 30 sec. (Warning: Don't remove USB flash driver during upgrade.)
   ⑨ The banner OSD "Upgrade is completed" is displayed when the upgrade is completed.
   ⑩ Remove the USB flash driver from PDP TV and check the program version.

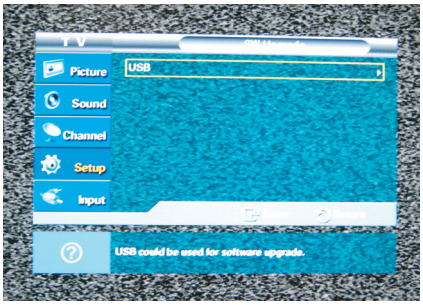

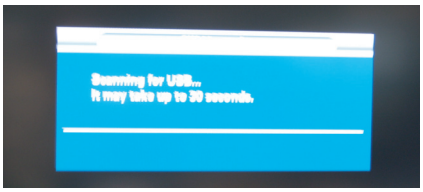

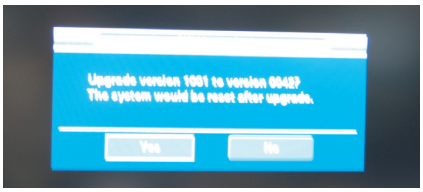

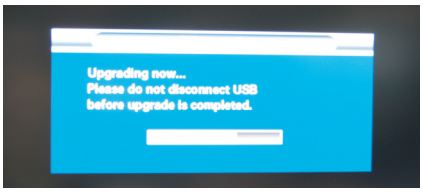

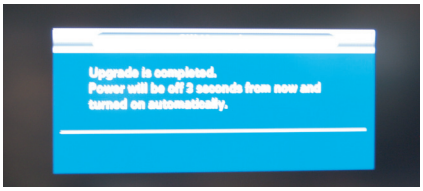

4-3-2 How to Check the Version of the Program

1. Procedures for checking in the User Menu
   ① Select the "Setup" menu in the Menu screen
   ② Place the cursor over the "On" of "Function Help", and press the "Info" key on the remote control
   ③ The version of the program is displayed at the bottom of the Menu screen

MAIN PROGRAM VERSION
MICOM VERSION

2. How to check Program Version on factory mode.

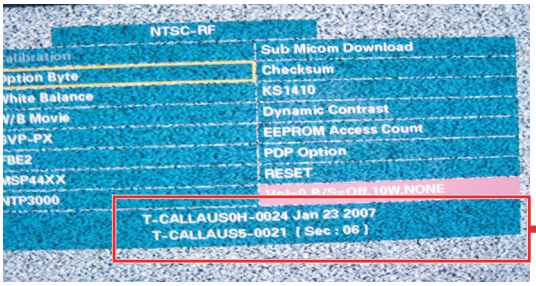

MAIN PROGRAM VERSION
MICOM VERSION

MEMO

5. Exploded View & Part List

5-1 HPT5044X/XAA Exploded View

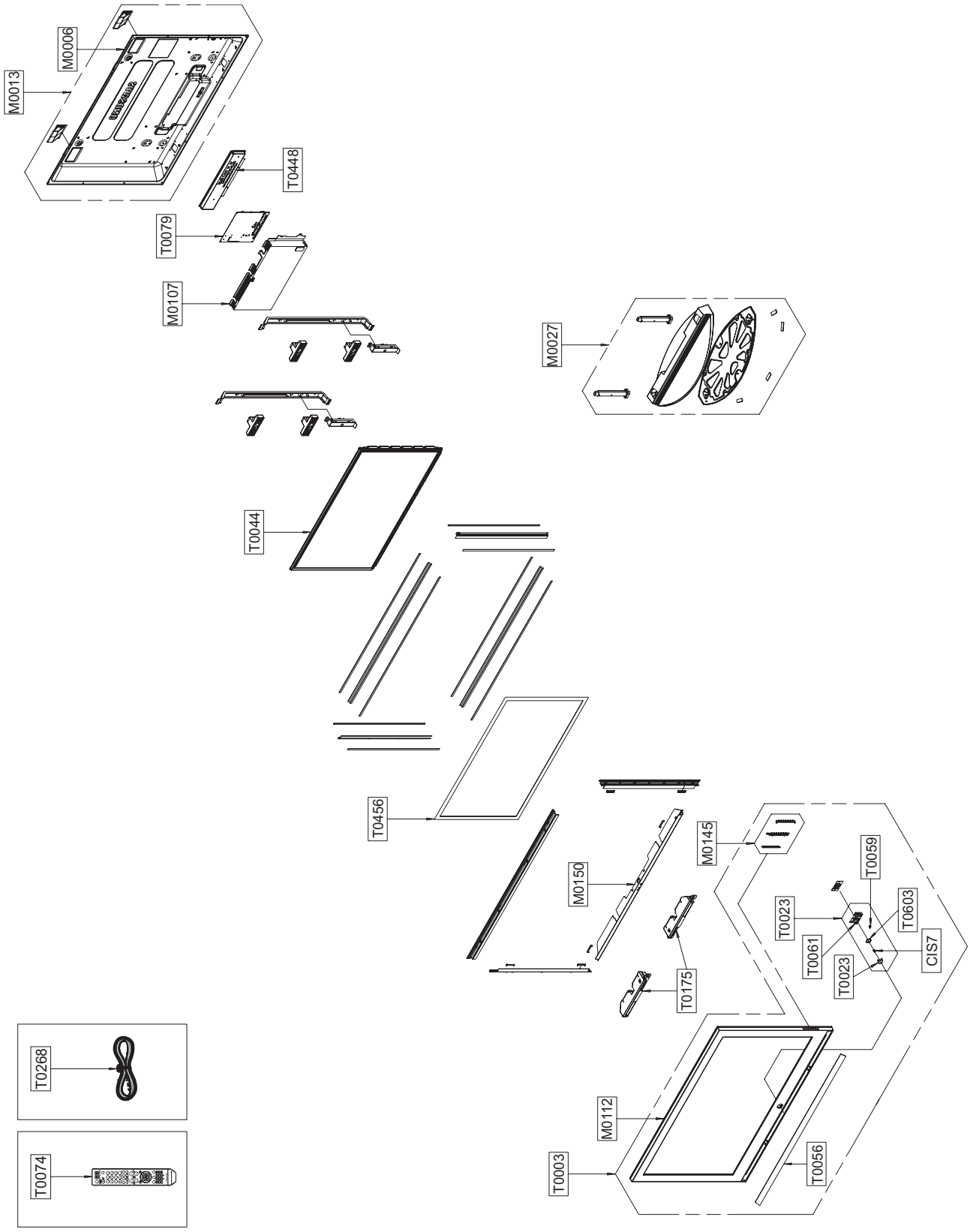

Loc. No.	Code No.	Description	Specification	Q'ty	SA/SNA	Remark
CIS7	AA61-60003B	SPRING ETC-CS	-,SUS304,-,-,OD11.2,N7,OD1	1	S.N.A	
M0006	BN63-02389C	COVER-REAR	50C7,PCM,T0.5,BKM-P703,No Sid	1	S.N.A	
M0013	BN96-03161J	ASSY COVER P-REAR	-,50Q71,SEA,PCM T0.5,-	1	S.A	
M0027	BN96-03154A	ASSY STAND P-BASE	-,Q7,-,HGI T3.0,-,BK23	1	S.A	
M0107	BN61-02315K	BRACKET-PCB	42/50Q71,SECC,0.8,±¹ÆÇ/¹ÌÁÖ	1	S.N.A	
M0112	BN63-02390P	COVER-FRONT	50Q71,ABS+PMMA,-,-,-,HB,SEA,	1	S.N.A	
M0145	BN96-04853B	ASSY BOARD P-FUNCTION	Lily/Calla,CT5000-	1	S.A	
M0150	BN96-04549A	ASSY BRACKET P-FILTER BOTTOM	-,50Q7/P7,-	1	S.N.A	
T0003	BN96-04485D	ASSY COVER P-FRONT	-,50Q71(HQ),SEA,ABS H	1	S.A	
T0023	BN96-03173A	ASSY COVER P-KNOB POWER	-,42P7,-,ABS,-,-	1	S.N.A	
T0023	BN64-00459A	KNOB POWER	42P7,PC,Violet	1	S.N.A	
T0044	BN96-05772A	ASSY PDP MODULE P	PL50HW025A,50HD W2A,PL	1	S.A	⚠
T0056	BN63-02391A	COVER-DECORATION	50Q7,PC SHEET,T0.5,Silv	1	S.N.A	
T0059	BN64-00461A	INDICATOR LED	42P7,PMMA	1	S.N.A	
T0061	BN64-00462A	WINDOW-REMOCON	42P7,ACRYL,5%	1	S.N.A	
T0074	BN59-00599A	REMOCON	Bordeaux plus,TM87C,SAMSUNG28P+E	1	S.A	
T0079	BN94-01517A	ASSY PCB MISC-MAIN	HPT5044X(Q71),F34B,LI	1	S.A	⚠
T0175	BN96-03392D	ASSY SPEAKER P	8ohm,Q7,10W,2Way 2speaker	1	S.A	
T0268	3903-000144	CBF-POWER CORD	DT,US,BP3/Y,U(IEC C13-RA)	1	S.A	
T0448	BN96-03144X	ASSY BRACKET P-TERMINAL	-,Q71,SEA,SECC T	1	S.N.A	
T0456	BN67-00196A	GLASS-FILTER EMI	50" W2A, without AR,Spu	1	S.A	⚠
T0603	BN64-00460A	KNOB-DECORATION POWER	42P7,ABS,HB,AL	1	S.N.A	

5-2 HPT5044X/XAA Service Item

※ This is the list which is available to repair the real material at the time of service.

Loc. No.	Code No.	Description	Specification	Q'ty	Remark
M0013	BN96-03161J	ASSY COVER P-REAR	-,50Q71,SEA,PCM T0.5,-	1	
M0027	BN96-03154A	ASSY STAND P-BASE	-,Q7,-,HGI T3.0,-,BK23	1	
M2893	BN39-00802C	LEAD CONNECTOR	HPT4264H,UL1617#22,24P/24	1	
M2893	BN39-00921A	LEAD CONNECTOR-LVDS	HPT4234X/XAA,UL20276	1	
T0003	BN96-04485D	ASSY COVER P-FRONT	-,50Q71(HQ),SEA,ABS H	1	
T0044	BN96-05772A	ASSY PDP MODULE P	PL50HW025A,50HD W2A,PL	1	⚠
T0074	BN59-00599A	REMOCON	Bordeaux plus,TM87C,SAMSUNG28P+E	1	
T0079	BN94-01517A	ASSY PCB MISC-MAIN	HPT5044X(Q71),F34B,LI	1	⚠
T0175	BN96-03392D	ASSY SPEAKER P	8ohm,Q7,10W,2Way 2speaker	1	
T0764	BN44-00162A	SMPS-PDP TV	HPS5053,SEM,AC/DC,460W,AC100	1	⚠
T1910	BN96-06091A	ASSY PDP MODULE P-X-MAIN BOARD	PL50HW025	1	⚠
T1911	BN96-06092A	ASSY PDP MODULE P-Y-MAIN BOARD	PL50HW025	1	⚠
T1914	BN96-06096A	ASSY PDP MODULE P-ADDRESS E BU	PL50HW025	1	
T1915	BN96-06097A	ASSY PDP MODULE P-ADDRESS F BU	PL50HW025	1	
T1917	BN96-06095A	ASSY PDP MODULE P-LOGIC MAIN	PL50HW025A,	1	
T1960	BN96-06093A	ASSY PDP MODULE P-Y-MAIN UPPER	PL50HW025	1	
T1961	BN96-06094A	ASSY PDP MODULE P-Y-MAIN LOWWE	PL50HW025	1	

6. Wiring Diagram

6-1 Overall Wiring

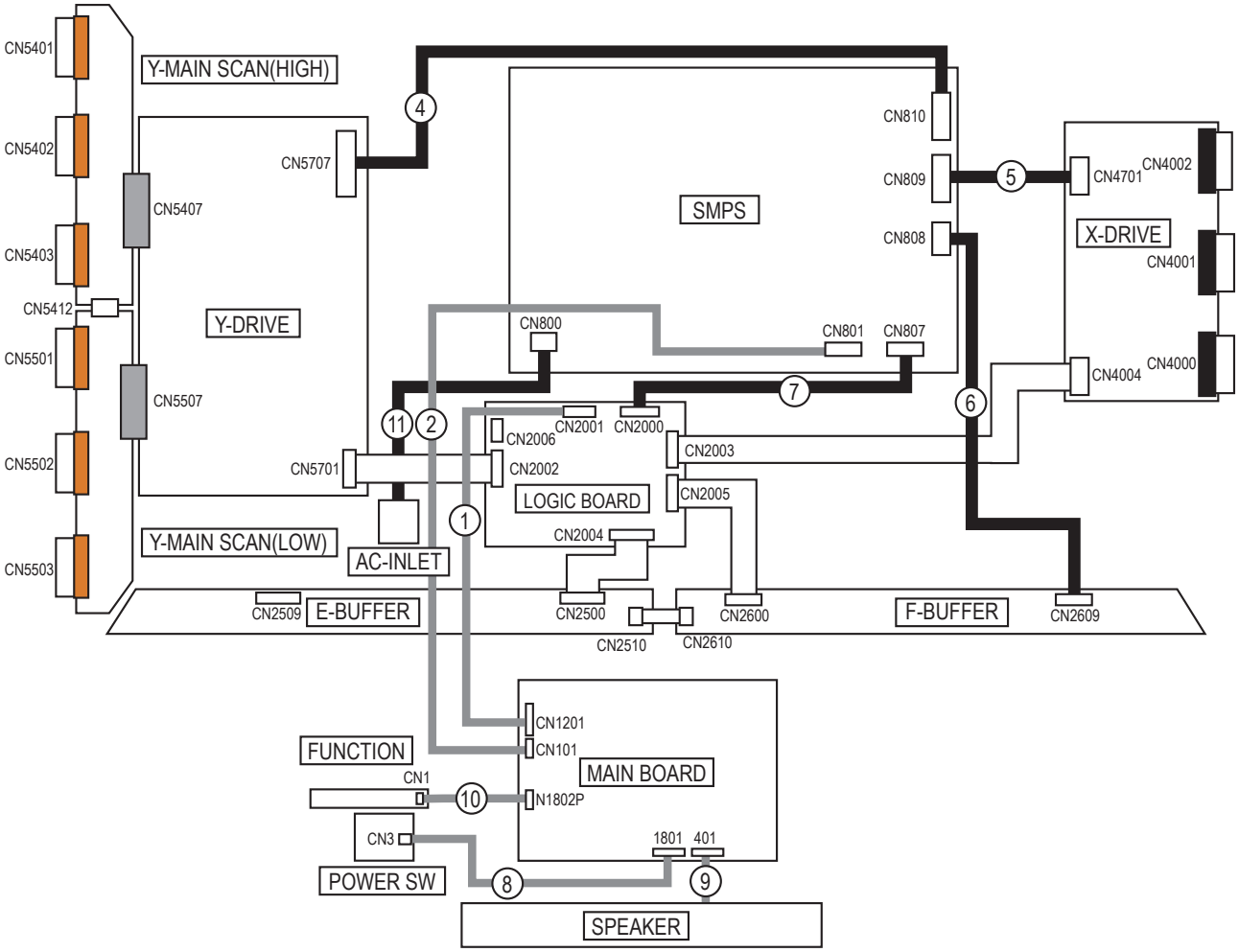

※ The code number of cable(Lead-connector) can be changed, see "5. Exploded View & Part List."

Use	① LVDS 31P-30P	② POWER 24P	③ Flat Cable
Code	42" - BN39-00826A 50" - BN39-00859A	42" - BN39-00802K 50" - BN39-00802C	42" - BN96-05164A 50" - BN96-05176A
Photo	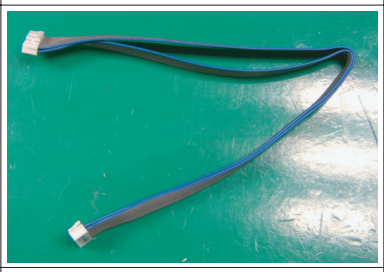		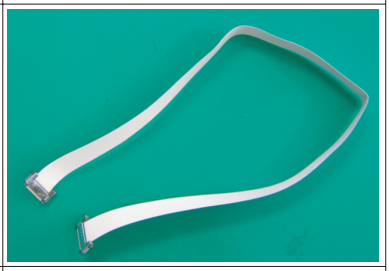
Use	⑪ AC_INPUT		
Code	42" - 2901-001378 50" - 2901-001340		
Photo	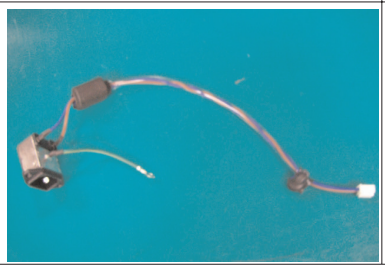		

6-1-1 Pin Connection

① CN1201(MAIN B'D) ↔ CN2001(LOGIC B'D)			
Pin No.	Signal	Pin No.	Signal
1	RxIN0-	16	NC
2	RxIN0+	17	GND
3	RxIN1-	18	WP
4	RxIN1+	19	SCL
5	RxIN2-	20	SDA
6	RxIN2+	21	LVDS Opt
7	RxINCLK-	22	DCC Opt
8	RxINCLK+	23	GND
9	RxIN3-	24	GND
10	RxIN3+	25	GND
11	NC	26	Vdd
12	NC	27	Vdd
13	NC	28	Vdd
14	NC	29	Vdd
15	NC	30	Vdd

② CN101(MAIN B'D) ↔ CN801(MAIN SMPS)							
CN101(MAIN B'D)				CN801(MAIN SMPS)			
Pin No.	Signal	Pin No.	Signal	Pin No.	Signal	Pin No.	Signal
1	NC	13	5V	1	PS_ON	13	5V
2	SW_POWER	14	5V	2	NC(Auto_V)	14	5V
3	GND	15	5V	3	STBY	15	5V
4	STD_VCC	16	5V	4	GND_STBY	16	5V
5	GND	17	GND	5	GND_18V AMP	17	GND_12V
6	GND	18	GND	6	GND_18V AMP	18	GND_12V
7	18V	19	GND	7	18V AMP	19	12V
8	18V	20	13V	8	18V AMP	20	GND_12V
9	GND	21	13V	9	GND_5V	21	12V
10	GND	22	13V	10	GND_5V	22	12V
11	GND	23	NC	11	GND_5V	23	NC(FAN_ON)
12	GND	24	NC	12	GND_5V	24	NC(FAN_DET)

④ CN810(SMPS) ↔ CN5707(Y B'D)	
Pin No.	Signal
1	Vg
2	GND
3	GND
4	GND
5	Vs
6	Vs

⑤ CN809(SMPS) ↔ CN4701(X B'D)	
Pin No.	Signal
1	Vg
2	GND
3	GND
4	Vs
5	Vs

⑥ CN808(SMPS) ↔ CN2609(E-BUFFER)	
Pin No.	Signal
1	Va
2	GND
3	5.3V

⑦ CN807(SMPS) ↔ CN2000(LOGIC B'D)	
Pin No.	Signal
1	STBY
2	VS_ON
3	N/C
4	PS_ON
5	RTN
6	5.3V
7	RTN
8	RTN
9	5.3V
10	5.3V

⑧ 1801(MAIN B'D) ↔ POWER&IR	
Pin No.	Signal
1	IR
2	GND
3	A5V_1
4	LED_STB
5	BUZZER
6	KEY_INPUT1
7	KEY_INPUT2
8	GND
9	B5V
10	LED_CTRL

⑨ 401(MAIN B'D) ↔ SPEAKER	
Pin No.	Signal
1	R+_OUT
2	R-_OUT
3	L+_OUT
4	L-_OUT

⑩ N1802P(MAIN B'D) ↔ FUNCTION	
Pin No.	Signal
1	KEY_INPUT1
2	KEY_INPUT2
3	GND

⑪ CN800(SMPS) ↔ AC INLET	
Pin No.	Signal
1	AC Neutral
2	N/C
3	AC Live

6-1-2 Connector role

Loc. No.	Description
CN5401	Horizontal Y-scan line(1~128) of Module and Y-Main Scan Connect
CN5402	Horizontal Y-scan line(129~256) of Module and Y-Main Scan Connect
CN5403	Horizontal Y-scan line(256~384) of Module and Y-Main Scan Connect
CN5512	Y-Main Scan(High) and Y-Main Scan(Low) Connect
CN5501	Horizontal Y-scan line(384~512) of Module and Y-Main Scan Connect
CN5502	Horizontal Y-scan line(512~640) of Module and Y-Main Scan Connect
CN5503	Horizontal Y-scan line(640~768) of Module and Y-Main Scan Connect
CN5407	Upper Y-Drive and Y-Main Scan Connect
CN5507	Lower Y-Drive and Y-Main Scan Connect
CN5707	Vs(205V),Vg(15v) Power input connect(6Pin) of Y-Drive
CN5701	Y-Drive control signal from Logic Board
CN810	Vs(205V),Vg(15v) Power input connect(6Pin) of SMPS for Y-Drive
CN809	Vs(205V),Vg(15v) Power input connect(6Pin) of SMPS for X-Drive
CN808	Va(63V) ,5.3V Power input connect(3Pin) of SMPS for F-Buffer
CN807	Power input connect(10pin) for Logic Board
CN801	Image signal(LVDS) connect(41pin) from Main Board
CN800	AC Power input connect from AC-inlet
CN4002	Horizontal X-scan line of Module and X-scan Connect(first Block)
CN4001	Horizontal X-scan line of Module and X-scan Connect(second Block)
CN4000	Horizontal X-scan line of Module and X-scan Connect(third Block)
CN2000	Power input connect(10pin) of Logic Board from SMPS
CN2001	Image signal(LVDS) connect(41pin) of Logic board from Main Board
CN2002	Y-Drive control signal of Logic Board
CN2005	Address Data(684th~1366th) connect for F-Buffer board
CN2004	Address Data(1st~683th) connect for E-Buffer board
CN2500	Address Data(1st~683th) connect from Logic Board
CN2510	Power input connect from F-Buffer Board
CN2610	Power input connect to E-Buffer Board
CN2600	Address Data(684th~1366th) connect from Logic board
CN2609	Va(63V) ,5.3V Power input connect(3Pin) from SMPS
CN1101	Power input connect(24Pin) from SMPS
CN2202	Image signal(LVDS) connect(41pin) for Logic board
CN1605	Function input(source,ch up/down...) connect on Main board
CN1404	Video signal input connect form Side AV ass'y
CN1606	Power SW input connect on Main Board
CN1203	Speak out connect on Main Board
CN1	Function input(source,ch up/down...) connect to Main board
CN3	Power SW input connect to Main Board

MEMO

7. Schematic Diagram

7-1 Circuit Description

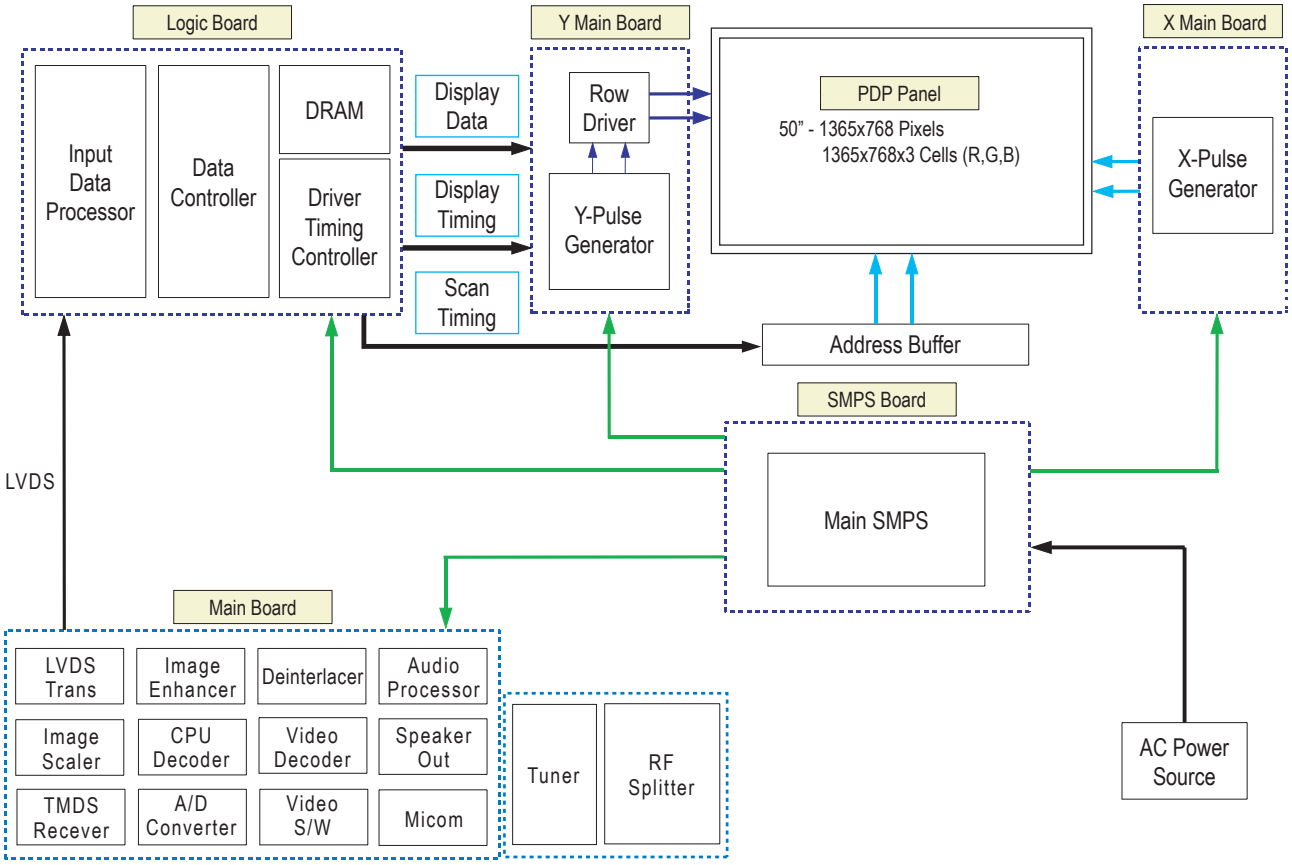

■ SMPS Board

The SMPS used for the PDP has been designed to be efficient, compact and lightweight. For VS and VA outputs, a LLC converter has been used. For the other outputs, a Flyback converter has been used.

■ LOGIC Board

The logic circuit consists of a Logic Main Board and an Address Buffer Board. The Logic Main Board decodes the video signal encoded by the Video Board, outputs the ADDRESS data signal for each pattern and generates X and Y drive signals. The Address Buffer Board buffers and transfers the ADDRESS data output signal using TCP IC.

- LVDS with built-in video signal processing (W/L, error diffusion, APC, FCR, etc.) applied and 1 ASIC chip.
- Outputs the address Drive IC control and data signals to the Buffer Board.
- Outputs the control signal for the X and Y Drive Boards.
- Monitors major drive voltages (Micom Circuit Block); detects if a surge voltage has been applied and protects the Drive Circuit.
- Temperature Adaptive Operating Mode (Low Temperature/Room Temperature/High Temperature); Discharge optimization for each temperature level.

■ X-MAIN Board

Connects to the X terminal block, 1) provides maintaining voltage waveform (including ERC), and 2) maintains the Ve bias in the Scan section.

■ Y-MAIN Board

Connects to the Y terminal block, 1) provides maintaining voltage waveform (including ERC), 2) provides Y Rising, Falling Ramp waveforms, and 3) maintains the Vscan bias.

■ Address Buffer Board

It delivers the data signal and control signal to the TCP.

MEMO

7-2 Schematic Diagram

7-2-1 MAIN POWER BLOCK

This Document can not be used without Samsung's authorization.

Power

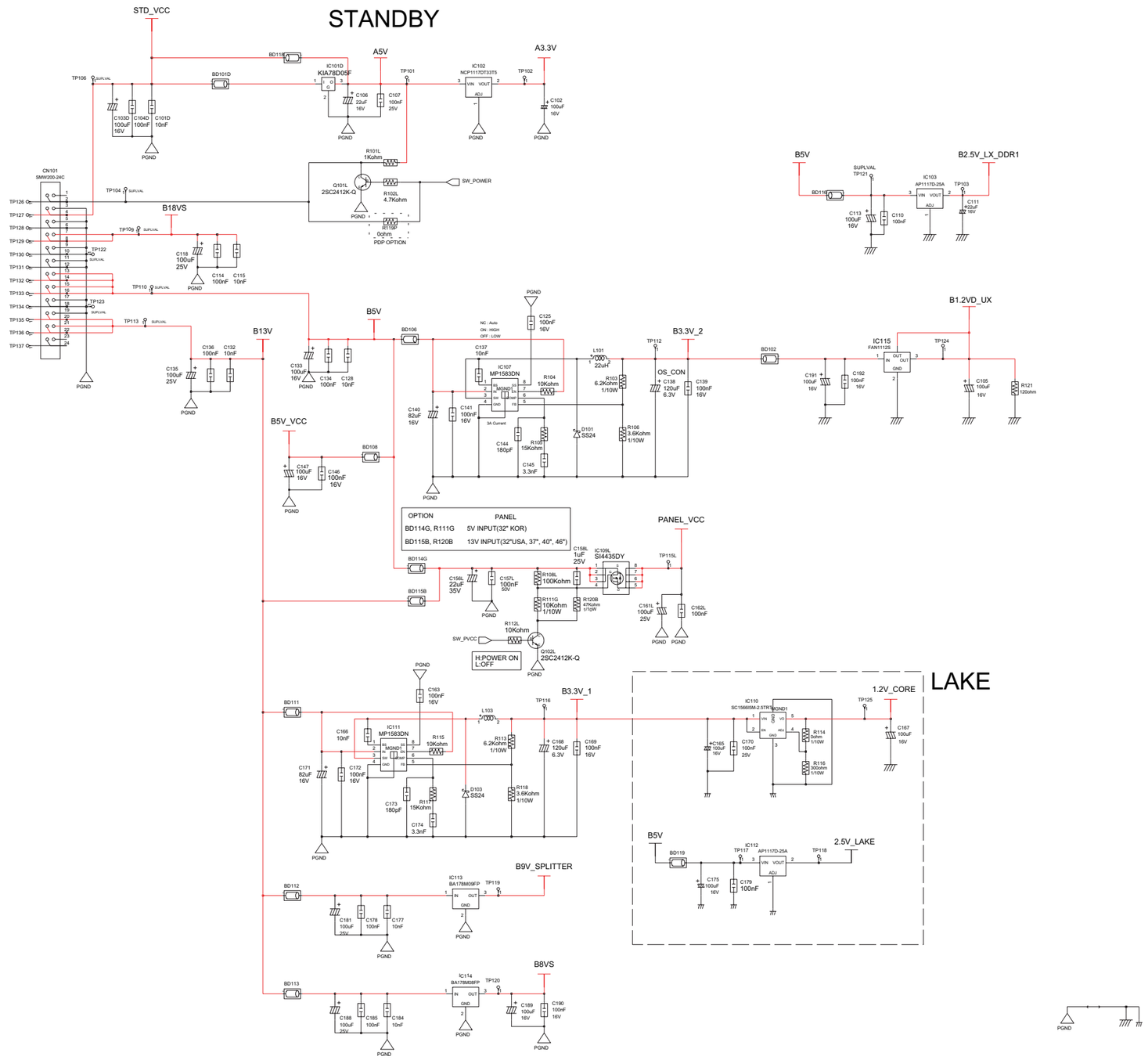

7-2-2 STANDBY MICOM (WT61P6)

This Document can not be used without Samsung's authorization.

Power

Reset & Power Detection

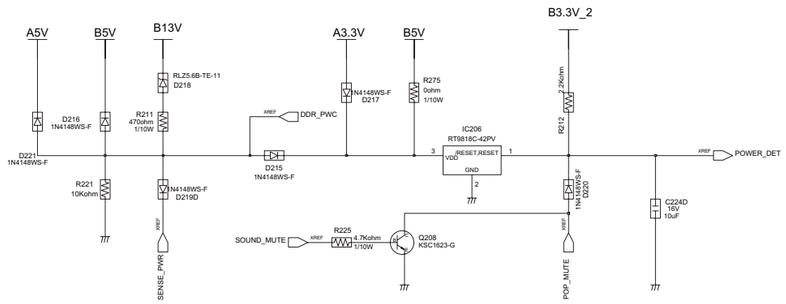

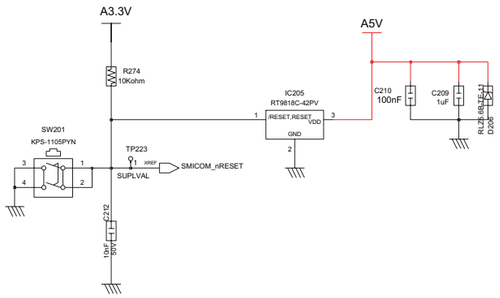

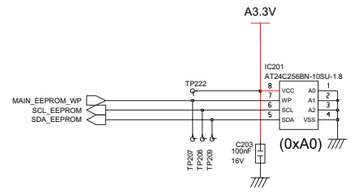

Near To LAKE2(IC1301)

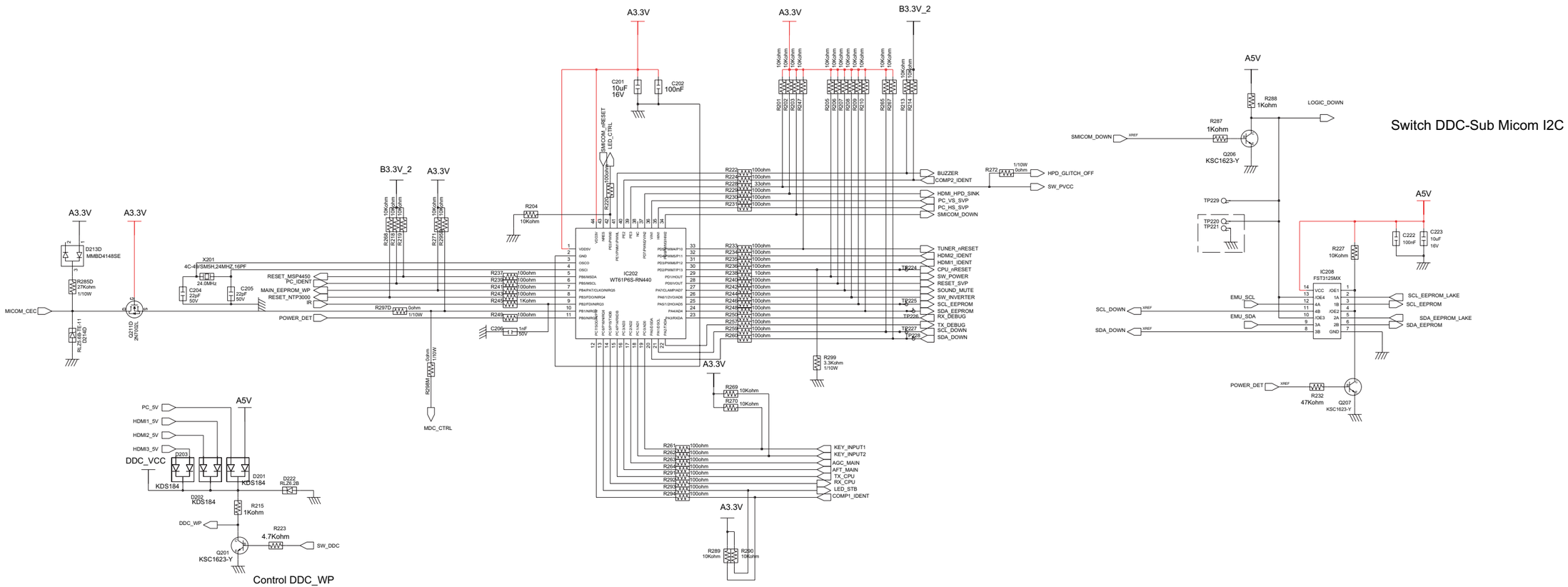

Switch DDC-Sub Micom I2C

Control DDC_WP

7-2-3 SOUND PROCESSOR (MSP4450)

This Document can not be used without Samsung's authorization.

———	Power

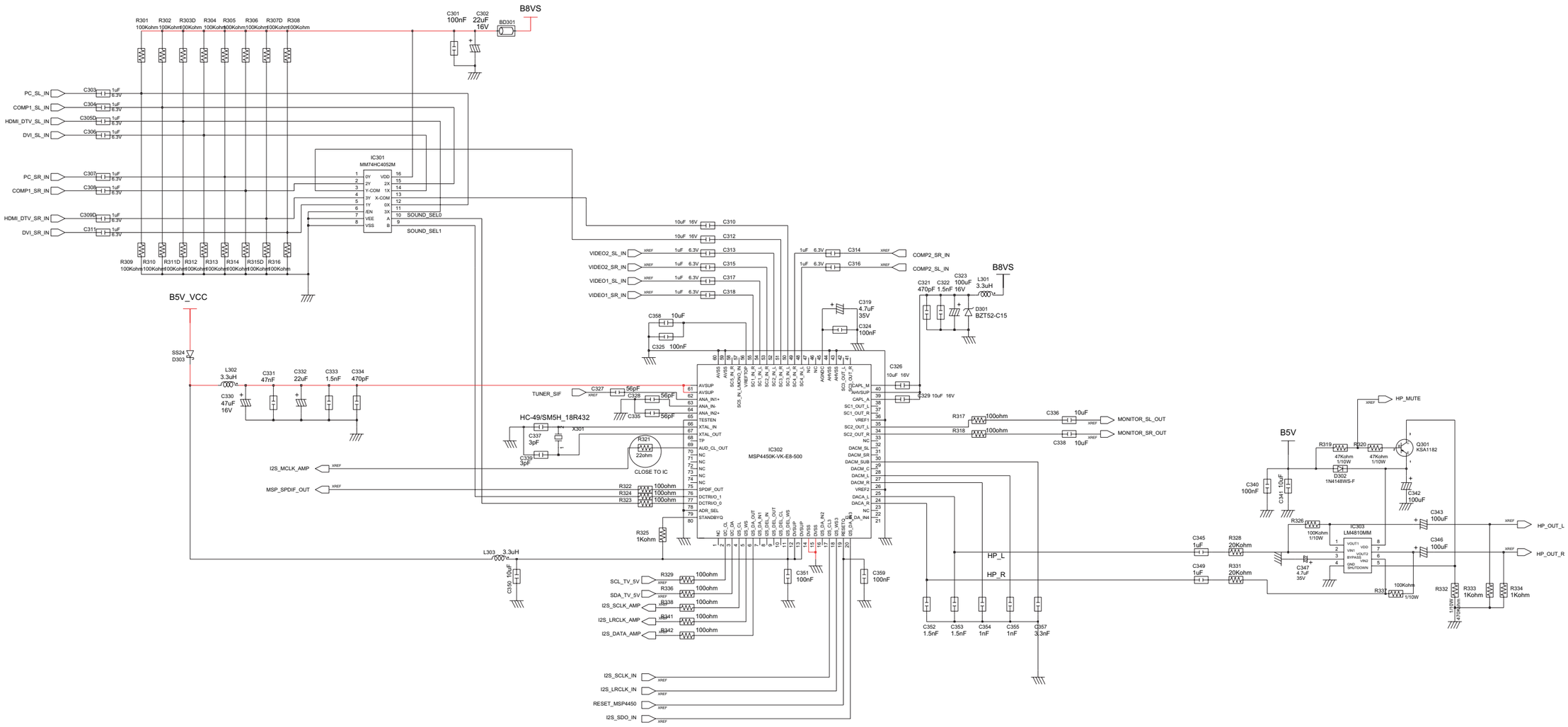

7-2-4 SOUND AMP (NTP3000) & POP SOLUTION

This Document can not be used without Samsung's authorization.

———	Power

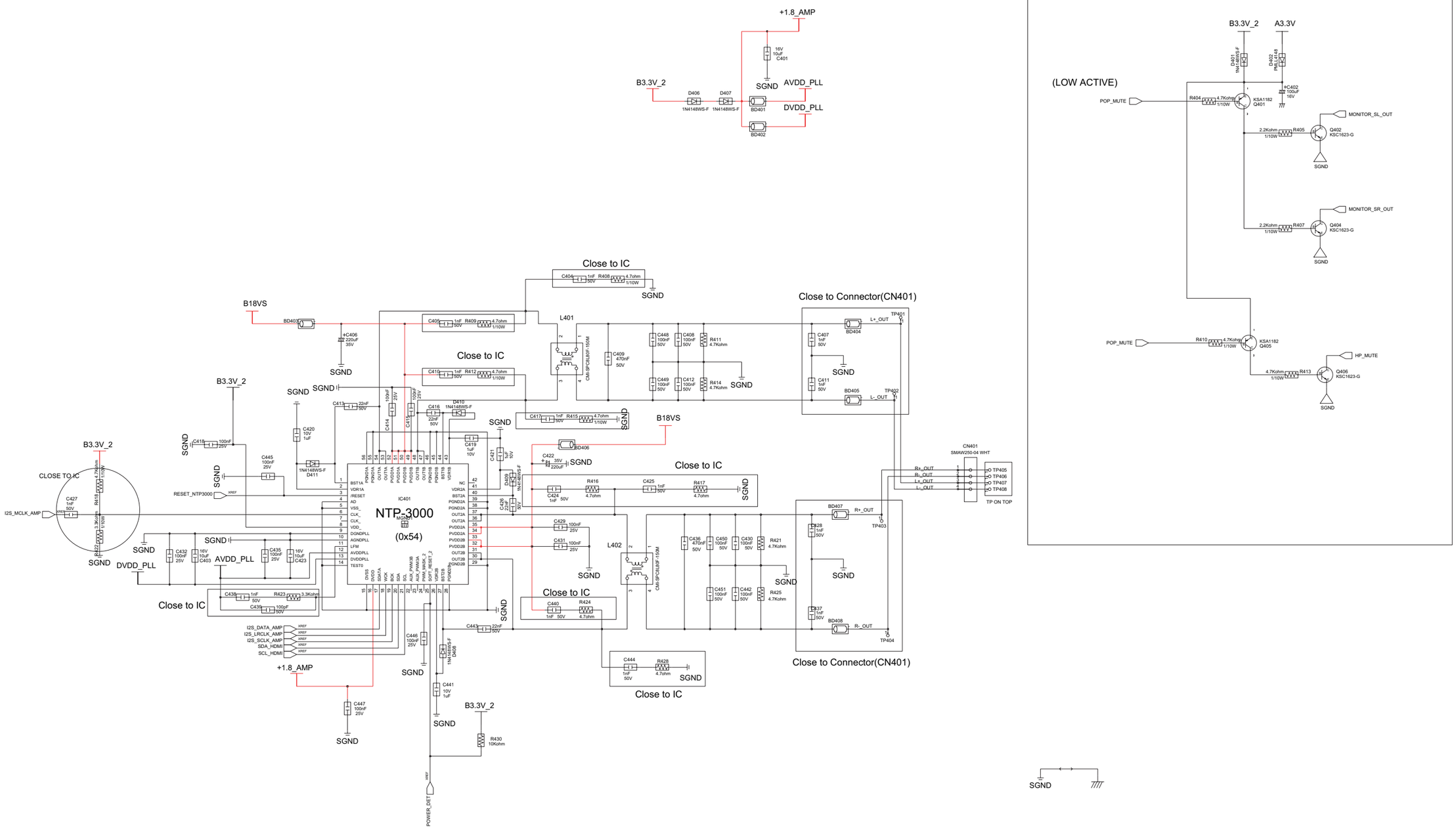

7-2-5 NIM TUNER 1410

This Document can not be used without Samsung's authorization.

Power

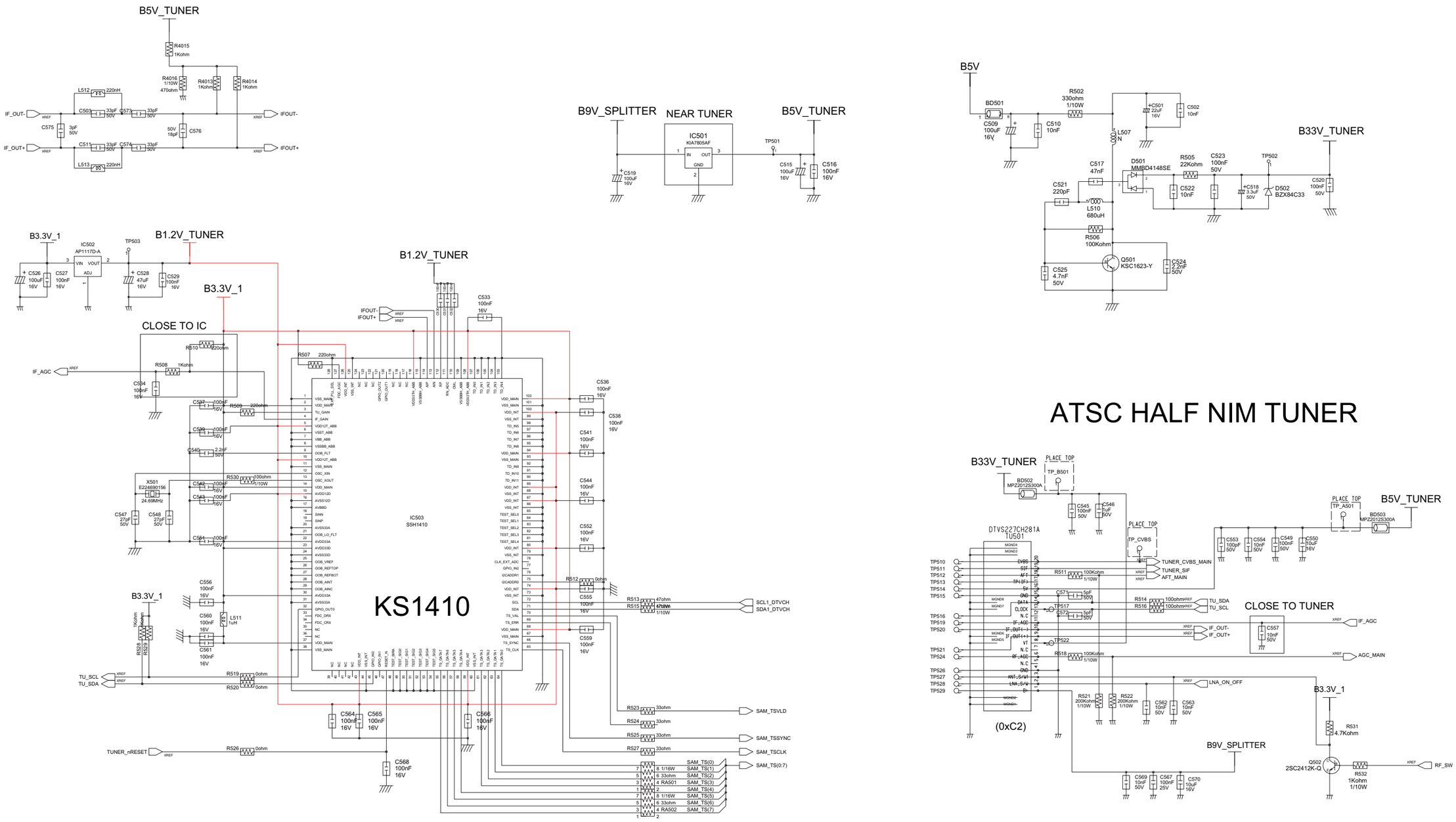

7-2-6 BACK AV IN/OUT

Power

AV INPUT 1

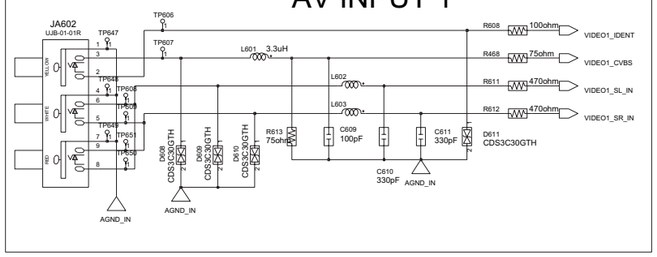

SVHS INPUT 1

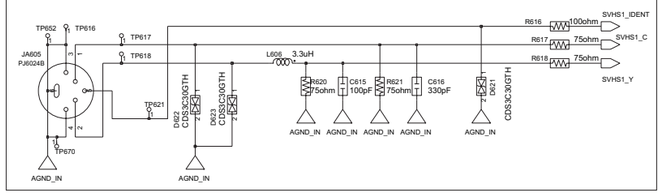

AUDIO_OUT

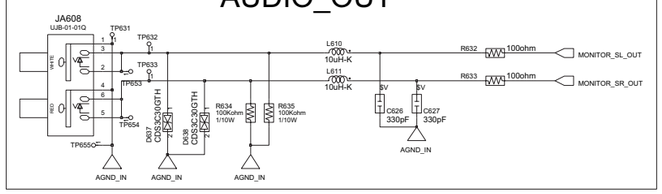

DEBUG / AUTO WALL

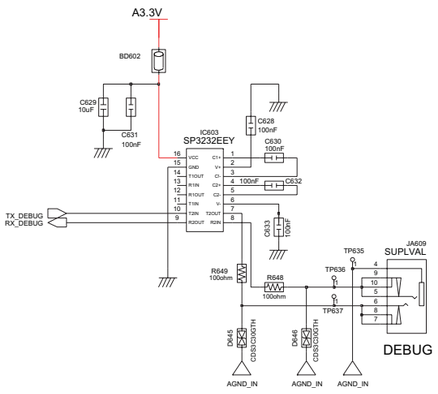

COMPONENT 1

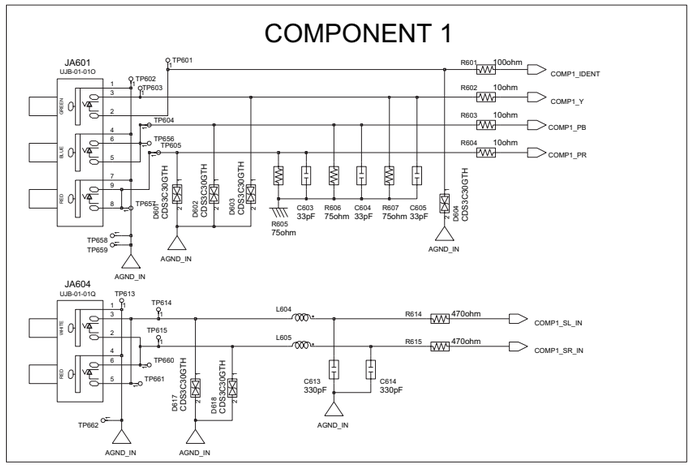

COMPONENT 2

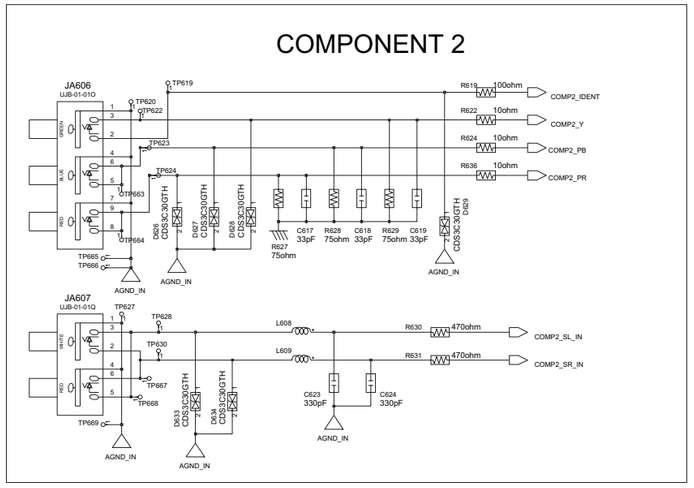

OPTICAL SPDIF OUT

SEL_SPDIF	OUT
L	MSP_SPDIF_OUT
H	LAKE_SPDIF_OUT

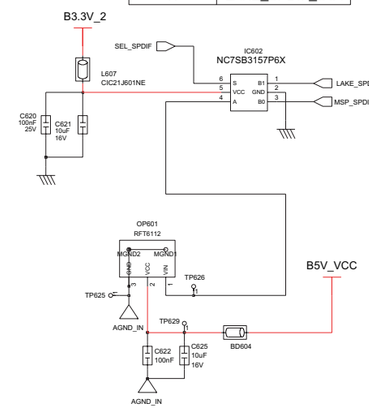

REAR USB1.1

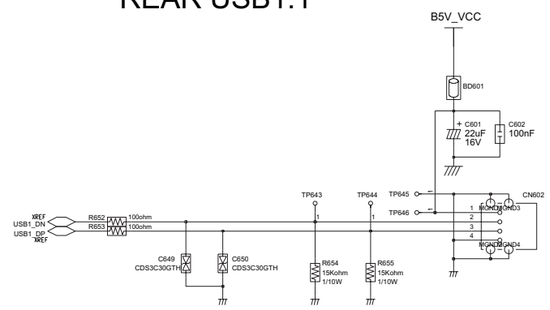

7-2-7 HDMI SWITCH & PC & HDMI INPUT

This Document can not be used without Samsung's authorization.

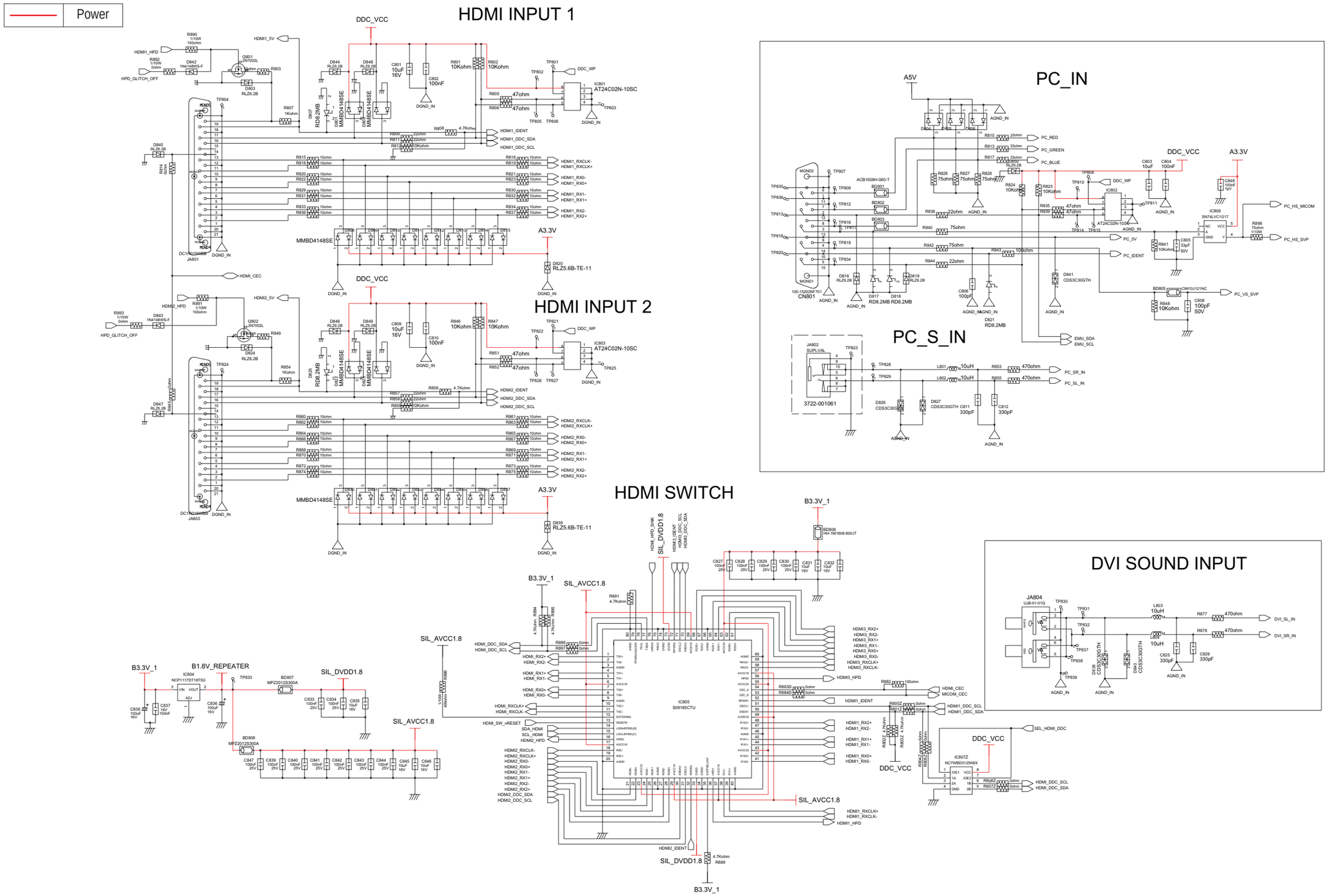

7-2-8 SVP-PX POWER BLOCK

This Document can not be used without Samsung's authorization.

Power

SVP_PX_POWER

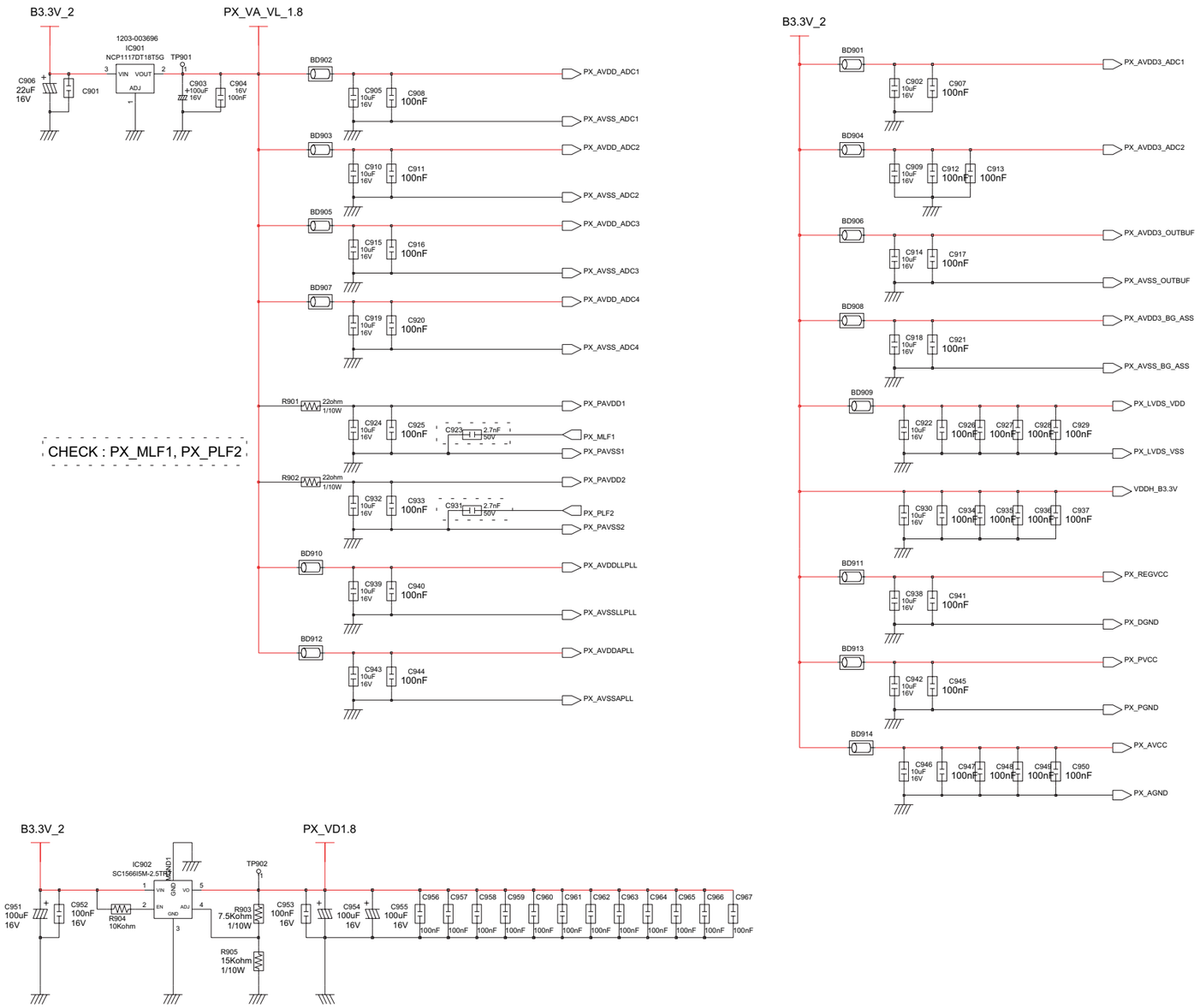

7-2-9 VIDEO DECODER & SCALER (SVP-PX)

This Document can not be used without Samsung's authorization.

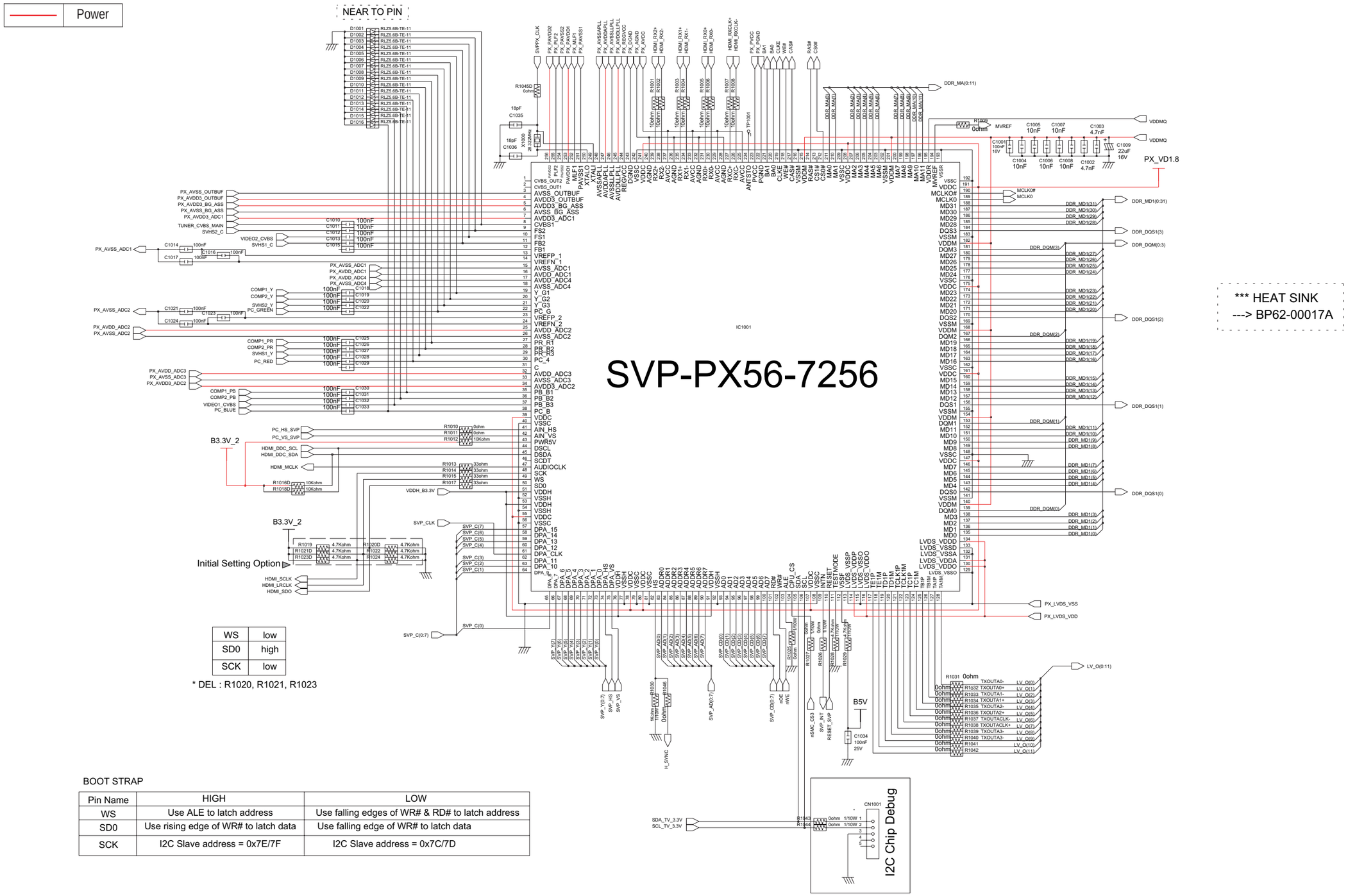

WS	low
SD0	high
SCK	low

* DEL : R1020, R1021, R1023

BOOT STRAP

Pin Name	HIGH	LOW
WS	Use ALE to latch address	Use falling edges of WR# & RD# to latch address
SD0	Use rising edge of WR# to latch data	Use falling edge of WR# to latch data
SCK	I2C Slave address = 0x7E/7F	I2C Slave address = 0x7C/7D

7-2-10 SVP-PX DDR MEMORY

This Document can not be used without Samsung's authorization.

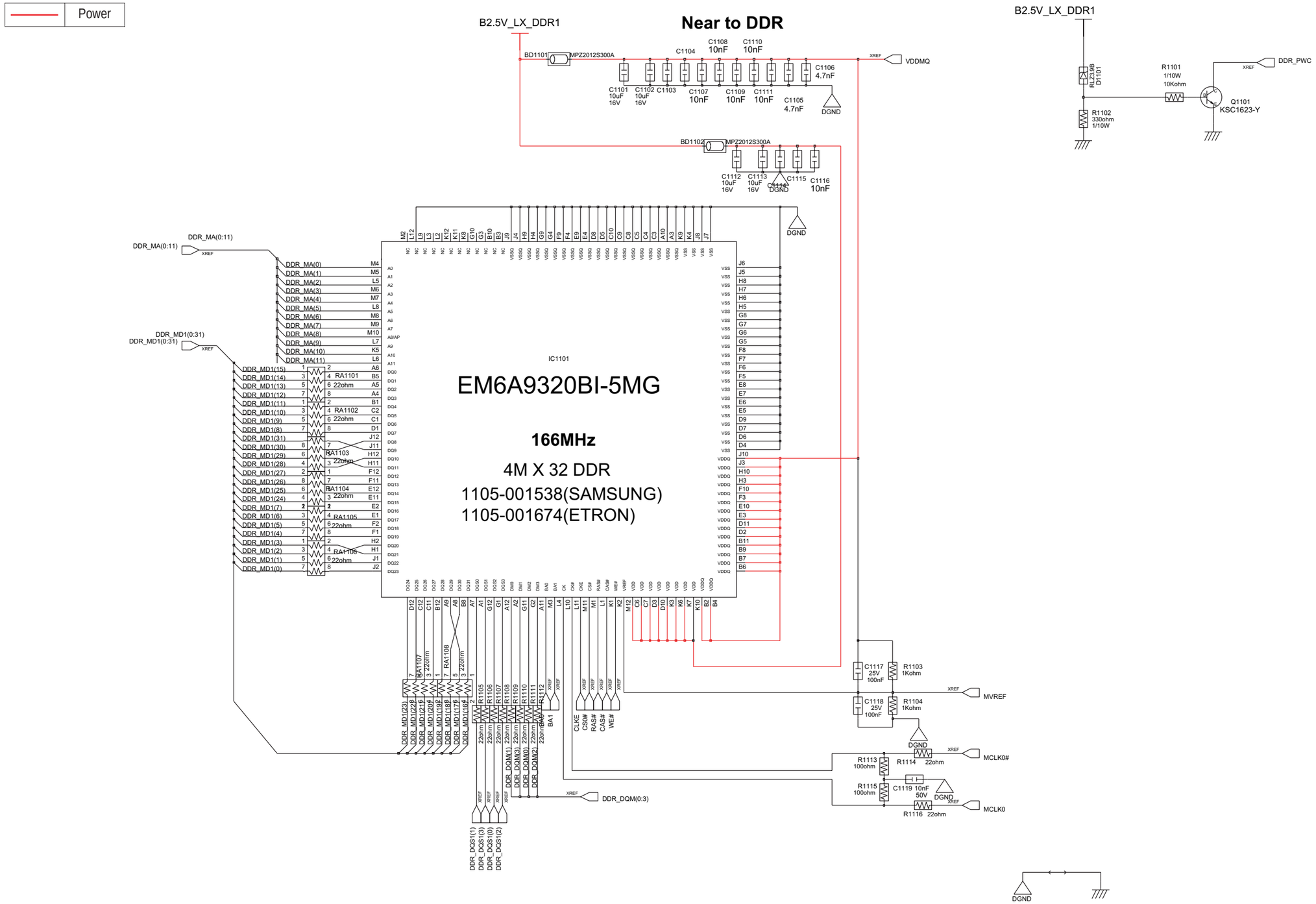

7-2-11 LVDS & PWM CONTROL & PANEL I/F

This Document can not be used without Samsung's authorization.

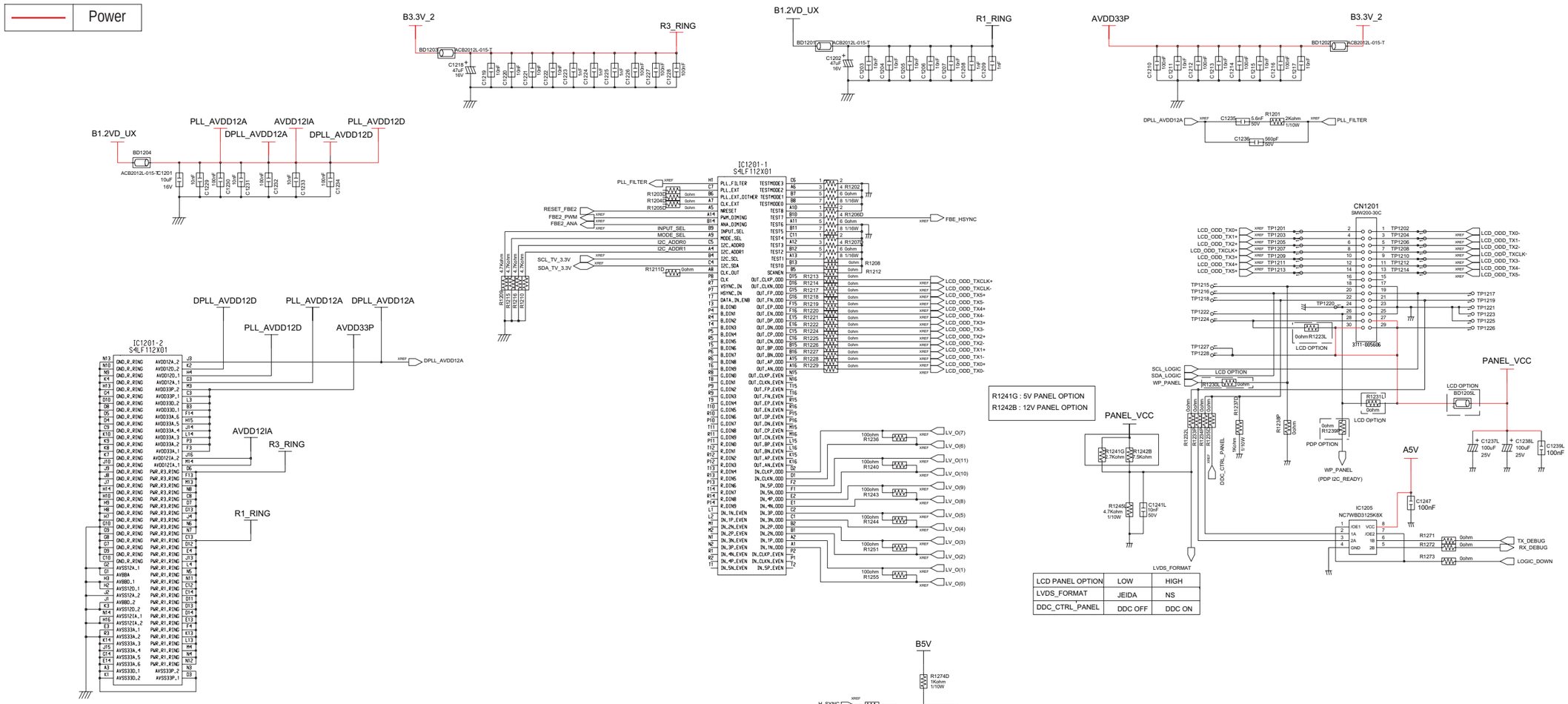

LCD PANEL OPTION	LOW	HIGH
LVDS_FORMAT	JEIDA	NS
DDC_CTRL_PANEL	DDC OFF	DDC ON

7-2-12 LAKE (I2C & GPIO & USB & UART & INTERRUPT)

Power

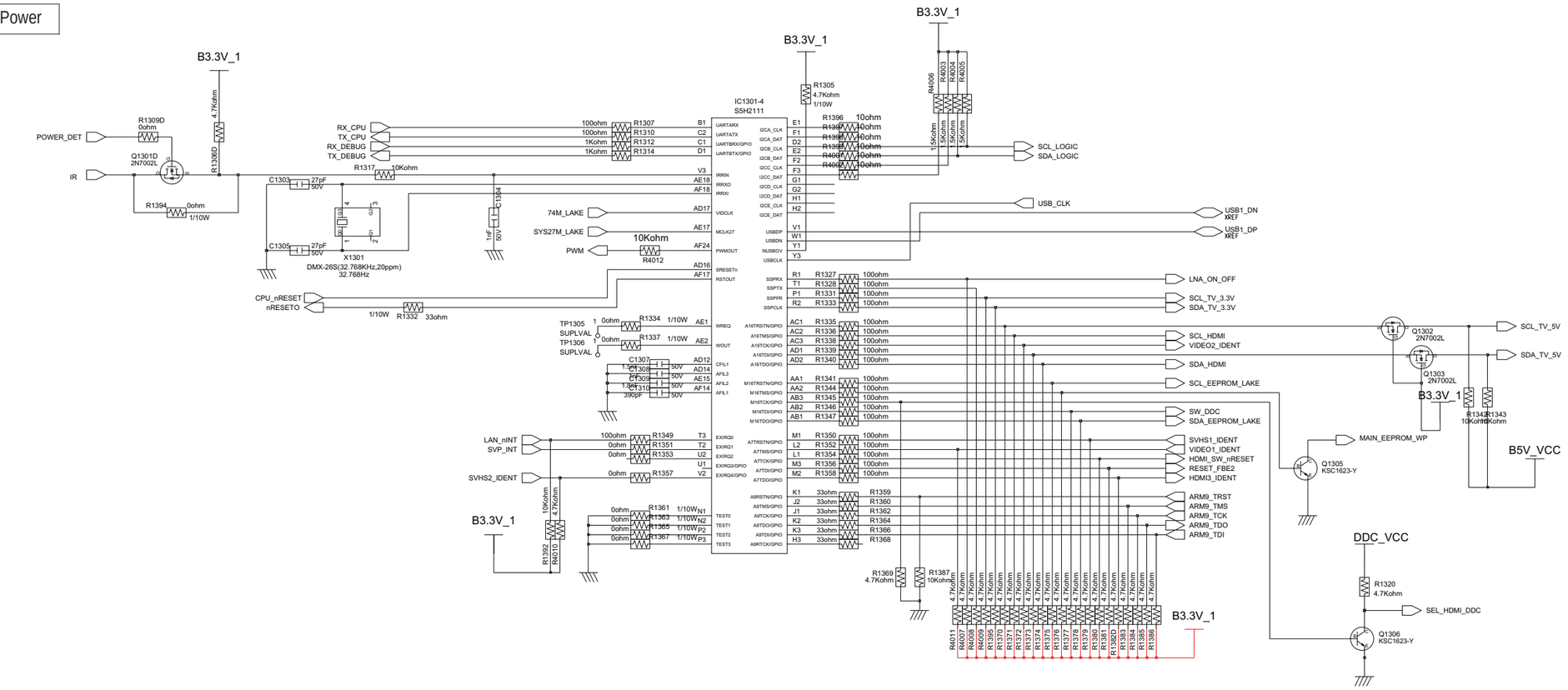

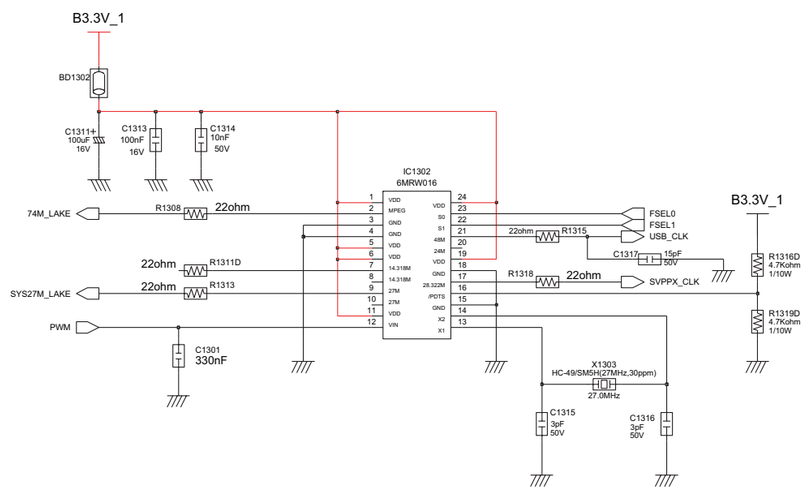

FSEL0	FSEL1	CLK1/CLK2
L	L	27Mhz
H	L	27.027Mhz
L	H	74.250Mhz
H	H	74.175Mhz

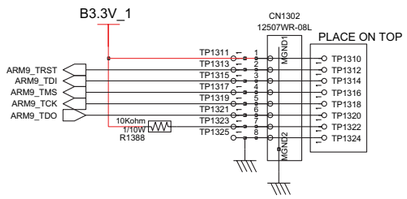

7-2-13 LAKE (I2S IN/OUT & TS-INPUT & YCbCr OUTPUT)

This Document can not be used without Samsung's authorization.

———	Power

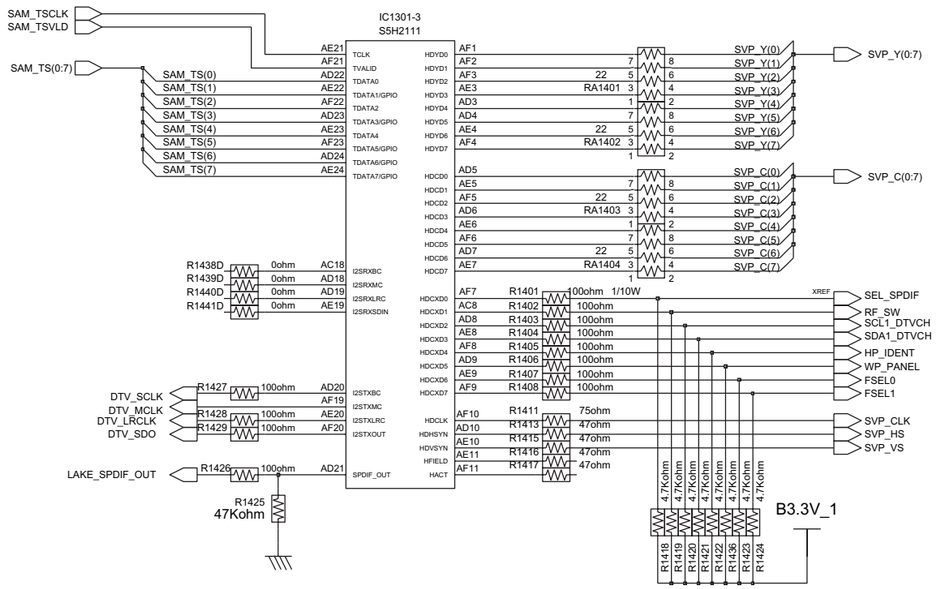

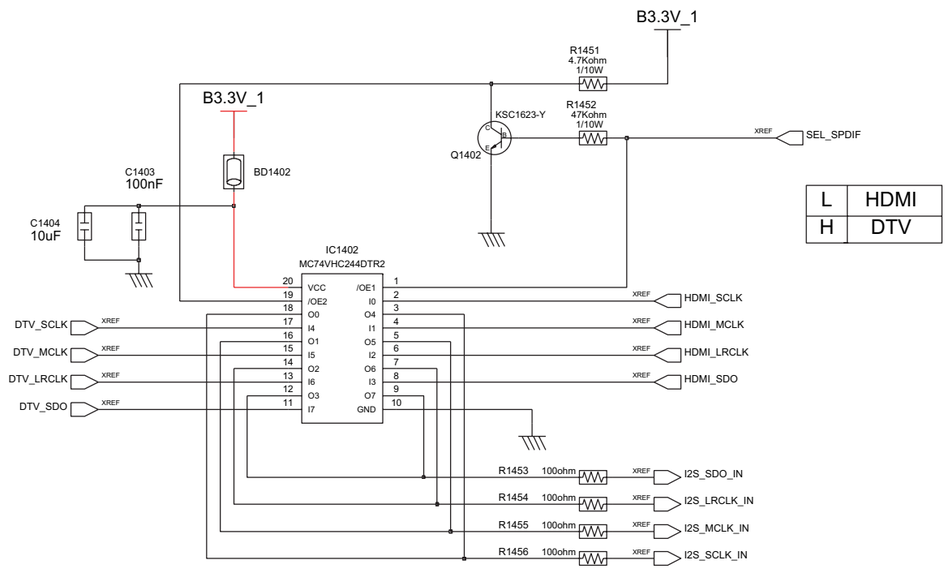

L	HDMI
H	DTV

7-2-14 LAKE (DDR MEMORY)

This Document can not be used without Samsung's authorization.

Power

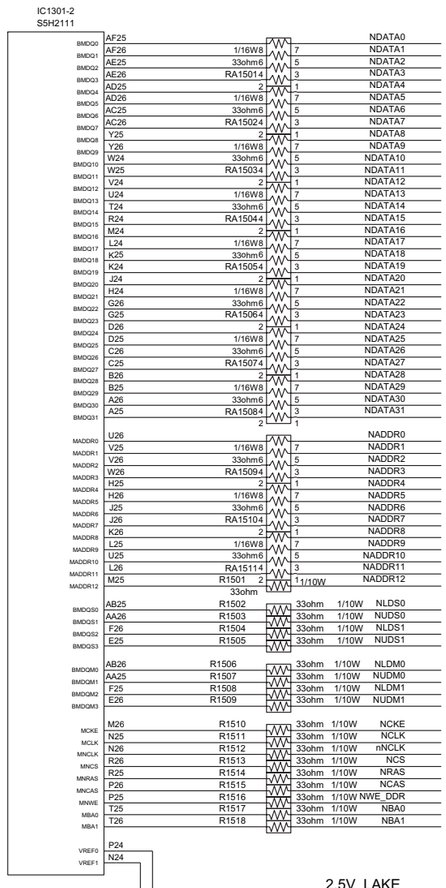

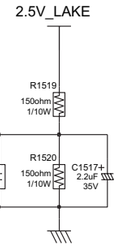

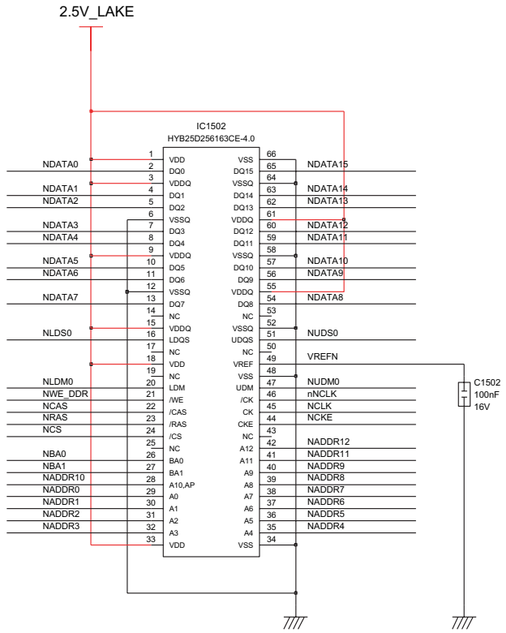

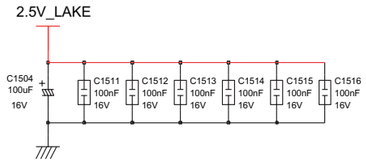

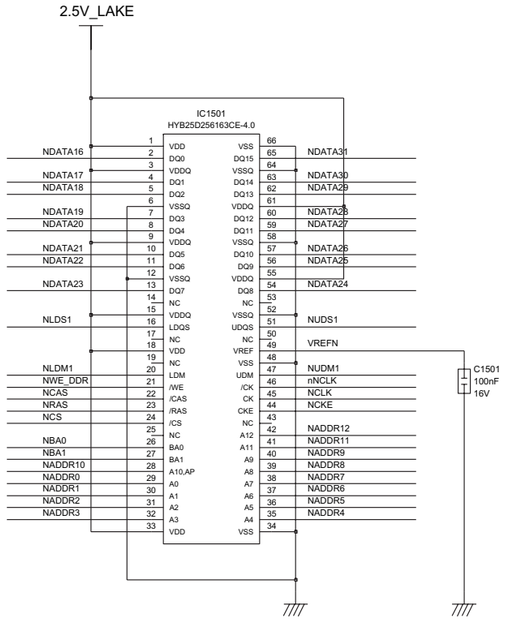

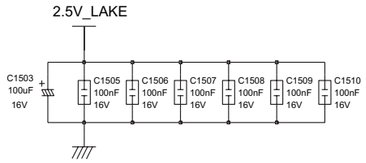

7-2-15 LAKE (STATIC MEMORY & DEBUG)

This Document can not be used without Samsung's authorization.

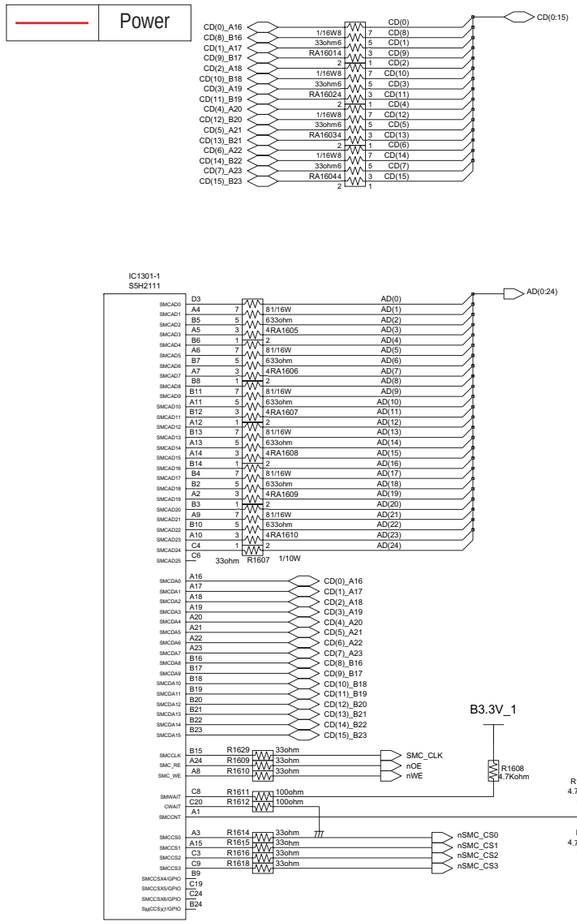

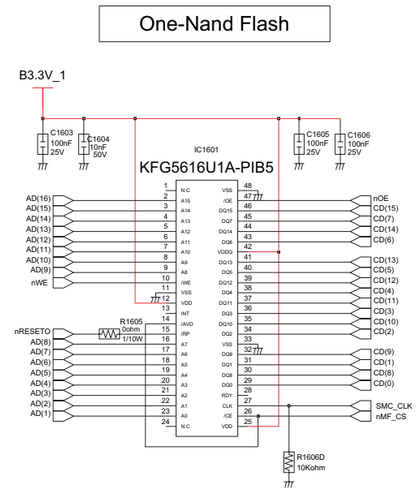

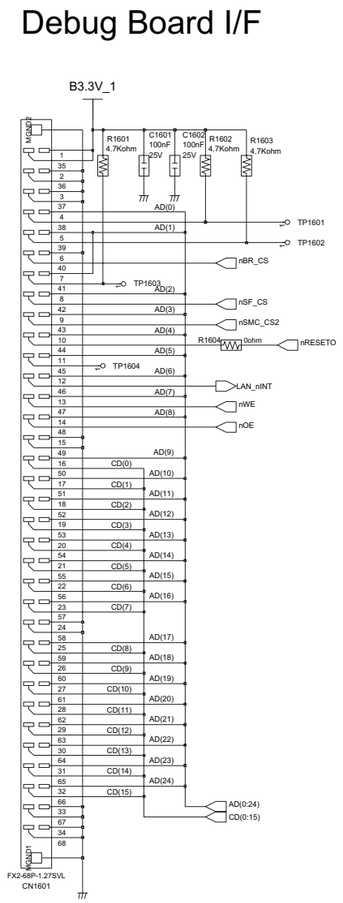

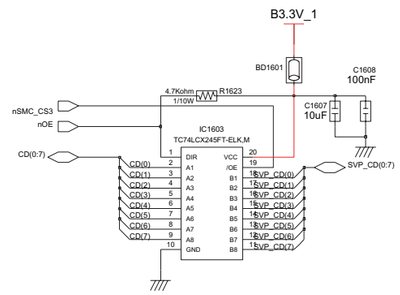

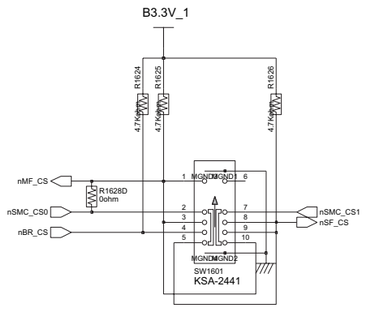

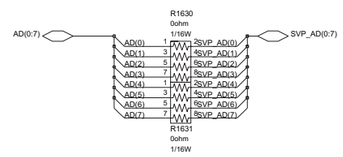

7-2-16 LAKE (POWER BLOCK)

This Document can not be used without Samsung's authorization.

———	Power

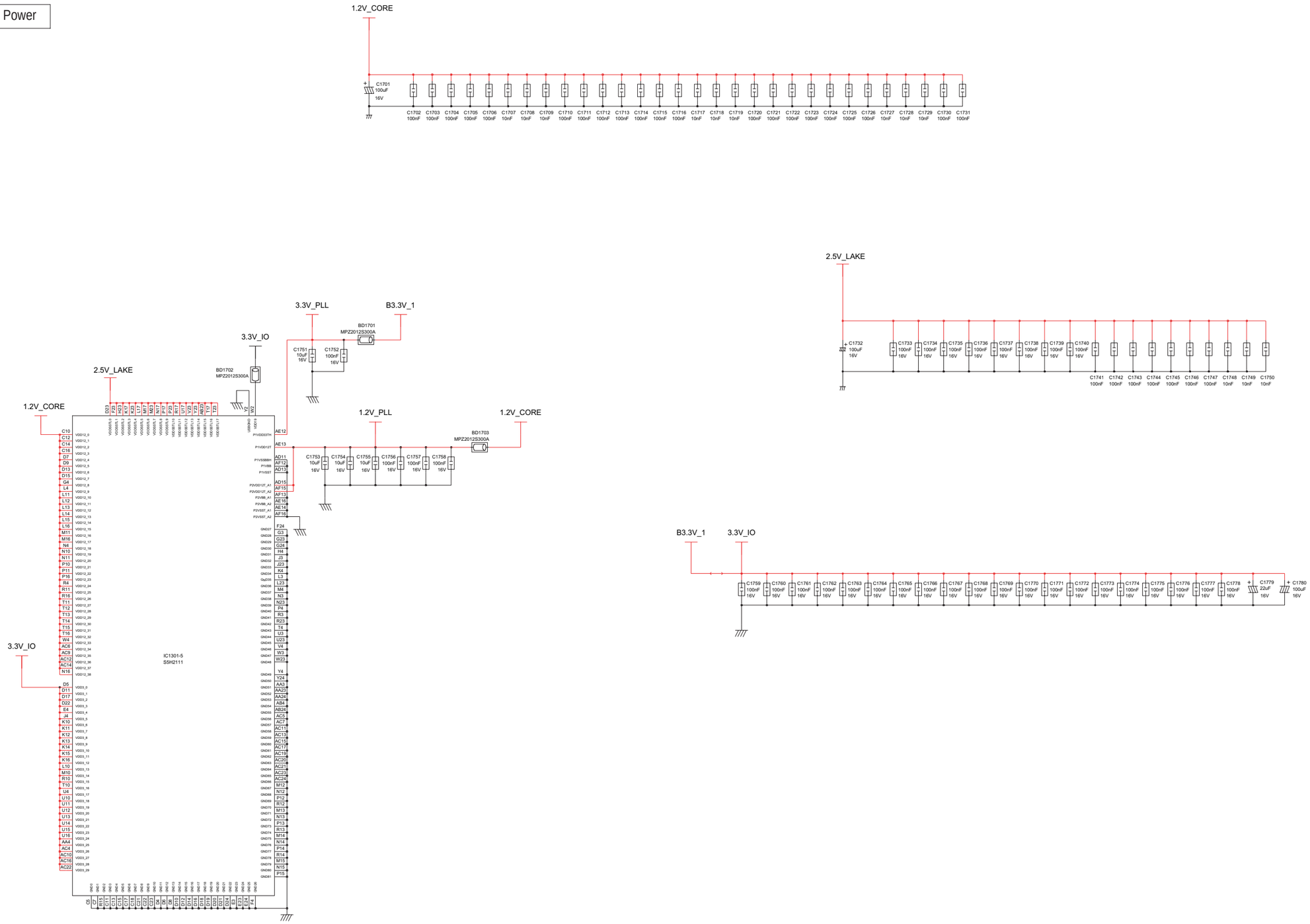

7-2-17 SUB FUCNTION

This Document can not be used without Samsung's authorization.

———	Power