http://waterheatertimer.org/How-to-program-Hagar-timer.html

hager

hager group

Circuit protection devices
2005 - 2006

MCBs, RCCBs, RCBOs, ELRs, fuse carriers,
isolating switches, surge protective devices

Welcome to the new edition of our general catalogue

For easy reference purposes, Hager general catalogue has been divided into three separate catalogues each representing the following product groups :

1. Enclosures and Connection Systems

2. Circuit Protection Devices

3. Modular Automation and Control Devices

A technical section, at the end of each catalogue provides detailed information of the products and its applications.

hager

The success is in the system

the Hager Group

With more than 7500 employees worldwide and a line of innovative products, the Hager Group is one of the leading manufacturers of electrical equipment for homes, business premises and office buildings.

Our mission

Our primary mission is to contribute to a safe and efficient distribution of electrical energy and actively participate in the improvement of building comfort.

In line with this mission statement, our ambition is to offer the market a complete range of products and services needed for the design and the implementation of a fully integrated electrical installation in homes, business premises and office buildings.

Despite its growth in recent years, the Hager Group today remains essentially a family and independent Group of companies, with its founders still managing the business with the help of the Executive Team.

A global company

The expansion of the Hager Group worldwide was not solely limited to creating commercial agencies, but included the set up of a global industrial organisation with full design and production capabilities to offer the various markets suitable products.

Today the Hager Group is present in 60 countries with more than 2300 points of sale and offers various products and systems meeting very different needs.

Quality and Human Resources

Although Hager's success was based on the relevance of its offer and the performance of its industrial organization, Human Resources are its basic and fundamental assets. Hager's renowned quality for products, services and sales organisation was made possible by the use of advanced equipment and a Quality Assurance System registered to ISO 9001. But it was made possible first and foremost by the involvement of the highly qualified men and women of the Company using such equipment and implementing such Quality Organisation.

Obernai - France

Tehalit headquarters in Heltersberg - Germany

Telford - UK

Ensheim - Germany

Hager product brands

hager

Hager products form a fully integrated system for safe, efficient and effective protection and control of electrical distribution systems.

- Consumer units system.
- Distribution board system.
- Enclosures.
- Busbars and connections.
- Protection devices.
- Modular control devices.
- Intelligent installation system for control of lighting, heating and shutters.
- Wiring accessories.

TEHALIT

Tehalit products cover the complete spectrum of cable management and include systems for domestic, commercial and industrial applications.

- Skirting systems.
- Multi - compartment dado systems.
- Architectural systems.
- Island systems.
- Industrial trunking systems.
- Panel trunkings.
- Fire resistant trunkings.

klik

KLIK secure connection systems provide an innovative solution to a variety of connection requirements. Systems are available for power and lighting distribution applications.

- KLIK lighting
- KLIK AX
- KLIK Power
- KLIK LV.
- Lighting distribution systems.
- Occupancy sensors.

Numerical index

Cat.ref.	Page No.
A	
AD106Z	26
AD110Z	26
AD116Z	26
AD120Z	26
AD125Z	26
AD127	26
AD128	26
AD132Z	26
AD140Z	26
AD184	26
AD185	26
AD187	26
AD188	26
AD189	26
AD190	26
AD191	26
AD806J	25
AD810J	25
AD816J	25
AD820J	25
AD825J	25
AD832J	25
AD840J	25
AD856J	25
AD860J	25
AD866J	25
AD870J	25
AD875J	25
AD882J	25
AD890J	25
AD906B	25
AD906J	25
AD910B	25
AD910J	25
AD910J	25
AD916B	25
AD916J	25
AD920B	25
AD920J	25
AD920J	25
AD925B	25
AD925J	25
AD932B	25
AD932J	25
AD940B	25
AD940J	25
AD956B	25
AD956J	25
AD960B	25
AD960J	25
AD966B	25
AD966J	25
AD970B	25
AD970J	25
AD975B	25
AD975J	25
AD982B	25
AD982J	25
AD990B	25
AD990J	25
AE106Z	26
AE110Z	26
AE116Z	26
AE120Z	26
AE125Z	26
AE132Z	26
AE140Z	26
AF120Z	26
AF125Z	26
AF132Z	26
AF140Z	26
AF956B	25
AF956J	25
AF960B	25
AF960J	25
AF966B	25
AF966J	25
AF970B	25
AF970J	25
AF975B	25
AF975J	25
AF982B	25
AF982J	25
AF990B	25
AF990J	25
AN150Z	26
AP150Z	26
B	
BC226	15
BD225	16
BD226	15
BD240	16
BD241	15
BD263	16
BD264	15
BD284	18
BD285	18
BD325	16
BD326	15
BD340	16
BD341	15
BD363	16
BD364	15
BD384	18
BD385	18
BD425	16
BD426	15
BD441	15
BD463	16
BD464	15
BD484	18
BD485	18
BE264	15
BE464	15
BF225	16
BF226	15
BF240	16
BF241	15
BF263	16
BF264	15
BF284	18
BF285	18
BF325	16
BF326	15
BF340	16
BF341	15
BF363	16
BF364	15
BF384	18
BF385	18
BF425	16
BF426	15
BF440	16
BF441	15
BF463	16
BF464	15
BF484	18
BF485	18
BN264	15
BN464	15
BP264	15
BP285	18
BP364	15
BP385	18
BP464	15
BP485	18
BS264	15
BS364	15
BS464	15
C	
CC217J	23
CC217Z	23
CD225J	23
CD226J	23
CD226Z	23
CD227T	23
CD240J	23
CD241J	23
CD241Z	23
CD242T	23
CD263J	23
CD264J	23
CD264Z	23
CD265T	23
CD281Z	23
CD285Z	23
CD425J	23
CD426J	23
CD426Z	23
CD427T	23
CD440J	23
CD441J	23
CD441Z	23
CD442T	23
CD463J	23
CD464J	23
CD464Z	23
CD465T	23
CD480Z	23
CD485Z	23
CE226J	23
CE226Z	23
CE241J	23
CE241Z	23
CE264J	23
CE264Z	23
CE281Z	23
CE285Z	23
CE426J	23
CE426Z	23
CE441J	23
CE441Z	23
CE464J	23
CE464Z	23
CE481Z	23
CE485Z	23
CF225J	23
CF225U	23
CF226J	23
CF240J	23
CF241J	23
CF241Z	23
CF263J	23
CF264J	23
CF264Z	23
CF281Z	23
CF285Z	23
CF425J	23
CF426Z	23
CF440J	23
CF441J	23
CF441Z	23
CF426J	23
CF463J	23
CF464J	23
CF464Z	23
CF481Z	23
CF485Z	23
CG481Z	23
CG485Z	23
CP265F	23
CP441J	23
CP445F	23
CP464J	23
CP465F	23
CZ001	24
CZ005	24
CZ006	24
CZ007	24
CZ008	24
CZN005	24
CZN006	24
H	
HR400	27
HR402	27
HR410	27
HR420	27
HR425	27
HR800	28
HR801	28
HR802	28
HR803	28
HR804	28
HR805	28
HR820	28
HR821	28
HR822	28
HR823	28
HR824	28
HR830	28
HR831	28
HR832	28
L	
L022	20
L023	20
L024	20
L025	20
L053	20
L055	20
L065	22
L104	19
L105	19
L106	19
L107	19
L108	19
L109	19
L124	19
L125	19
L126	19
L127	19
L128	19
L147	19
L304	19
L305	19
L306	19
L307	19
L308	19
L324	19
L325	19
L326	19
L327	19
L328	19
L401	20
L402	20
L403	20
L404	20
L406	20
L412	20
L431	20
L432	20
L501	20
L502	20
L503	20
L504	20
L506	20
L512	20
L531	20
L532	20
LF138	19
LF139	19
LF140	19
LF141	19
LF142	19
LR601	21
LR602	21
LR603	21
LR604	21
LR612	21
LR701	22
LR702	22
LR703	22
LR704	22
LR712	22
LS601	21
LS602	21
LS603	21
LS604	21
LS612	21
LS670	21
LS671	21
LS672	21
LS672	22
LS701	22
LS702	22
LS703	22
LS704	22
LS712	22
LS770	22
LS771	22
M	
MB106A	10
MB110A	10
MB116A	10
MB120A	10
MB125A	10
MB132A	10
MB140A	10
MB150A	10
MB163A	10
MB206A	10
MB210A	10
MB216A	10
MB220A	10
MB225A	10
MB232A	10
MB240A	10
MB250A	10
MB263A	10
MB306A	10
MB310A	10
MB316A	10
MB320A	10
MB325A	10
MB332A	10
MB340A	10
MB350A	10
MB363A	10
MB406A	10
MB410A	10
MB416A	10
MB420A	10
MB425A	10
MB432A	10
MB440A	10
MB450A	10
MB463A	10
MC100A	10
MC101A	10
MC102A	10
MC103A	10
MC104A	10
MC106A	10
MC110A	10
MC116A	10
MC120A	10
MC125A	10
MC132A	10
MC140A	10
MC150A	10
MC163A	10
MC200A	10
MC201A	10
MC202A	10
MC203A	10
MC204A	10
MC206A	10
MC210A	10
MC216A	10
MC220A	10
MC225A	10
MC232A	10
MC240A	10
MC250A	10
MC263A	10
MC300A	10
MC301A	10
MC302A	10
MC303A	10
MC304A	10
MC306A	10
MC310A	10
MC316A	10
MC320A	10
MC325A	10
MC332A	10
MC340A	10
MC350A	10
MC363A	10

Numerical index

Cat.ref.	Page No.
MC406A	10
MC410A	10
MC416A	10
MC420A	10
MC425A	10
MC432A	10
MC440A	10
MC450A	10
MC463A	10
MJ702	13
MJ706	13
MJ710	13
MJ716	13
MJ720	13
MJ725	13
MJ732	13
MJ740	13
ML706	13
ML710	13
ML716	13
ML720	13
ML725	13
ML732	13
ML740	13
MM501N	34
MM502N	34
MM503N	34
MM504N	34
MM505N	34
MM506N	34
MM507N	34
MM508N	34
MM509N	34
MM510N	34
MM511N	34
MM512N	34
MM513N	34
MT106A	9
MT110A	9
MT116A	9
MT120A	9
MT125A	9
MT132A	9
MT140A	9
MT150A	9
MT163A	9
MT206A	9
MT210A	9
MT216A	9
MT220A	9
MT225A	9
MT232A	9
MT240A	9
MT250A	9
MT263A	9
MT306A	9
MT310A	9
MT316A	9
MT320A	9
MT325A	9
MT332A	9
MT340A	9
MT350A	9
MT363A	9
MU106A	9
MU110A	9
MU116A	9
MU120A	9
MU125A	9

Cat.ref.	Page No.
MU132A	9
MU140A	9
MU150A	9
MU163A	9
MU206A	9
MU210A	9
MU216A	9
MU220A	9
MU225A	9
MU232A	9
MU240A	9
MU250A	9
MU263A	9
MU306A	9
MU310A	9
MU316A	9
MU320A	9
MU325A	9
MU332A	9
MU340A	9
MU350A	9
MU363A	9
MU406A	9
MU410A	9
MU416A	9
MU420A	9
MU425A	9
MU432A	9
MU440A	9
MU450A	9
MU463A	9
MV106	8
MV110	8
MV116	8
MV120	8
MV125	8
MV132	8
MV140	8
MV206	8
MV210	8
MV216	8
MV220	8
MV225	8
MV232	8
MV240	8
MV306	8
MV310	8
MV316	8
MV320	8
MV325	8
MV332	8
MV340	8
MV406	8
MV410	8
MV416	8
MV420	8
MV425	8
MV432	8
MV440	8
MW106	8
MW110	8
MW116	8
MW120	8
MW125	8
MW132	8
MW140	8
MW206	8
MW210	8
MW216	8

Cat.ref.	Page No.
MW220	8
MW225	8
MW232	8
MW240	8
MW306	8
MW310	8
MW316	8
MW320	8
MW325	8
MW332	8
MW340	8
MW406	8
MW410	8
MW416	8
MW420	8
MW425	8
MW432	8
MW440	8
MZ176	14
MZ201	14
MZ202	14
MZ203	14
MZ204	14
MZ205	14
MZ206	14
MZ520N	35
MZ521N	35
MZ522N	35
MZ523N	35
MZ527N	35
MZ528N	35
MZ529N	35
MZ530N	35
MZ531N	35
MZN175	14
MZN176	14
N	
NC100A	11
NC101A	11
NC102A	11
NC103A	11
NC104A	11
NC106A	11
NC110A	11
NC116A	11
NC120A	11
NC125A	11
NC132A	11
NC140A	11
NC150A	11
NC163A	11
NC200A	11
NC201A	11
NC202A	11
NC203A	11
NC204A	11
NC206A	11
NC210A	11
NC216A	11
NC220A	11
NC225A	11
NC232A	11
NC240A	11
NC250A	11
NC263A	11
NC300A	11
NC301A	11
NC302A	11

Cat.ref.	Page No.
NC303A	11
NC304A	11
NC306A	11
NC310A	11
NC316A	11
NC320A	11
NC325A	11
NC332A	11
NC340A	11
NC350A	11
NC363A	11
NC400A	11
NC401A	11
NC402A	11
NC403A	11
NC404A	11
NC406A	11
NC410A	11
NC416A	11
NC420A	11
NC425A	11
NC432A	11
NC440A	11
NC450A	11
NC463A	11
ND100A	11
ND101A	11
ND102A	11
ND103A	11
ND104A	11
ND106A	11
ND110A	11
ND116A	11
ND120A	11
ND125A	11
ND132A	11
ND140A	11
ND150A	11
ND163A	11
ND180	17
ND184	17
ND200A	11
ND201A	11
ND202A	11
ND203A	11
ND204A	11
ND206A	11
ND210A	11
ND216A	11
ND220A	11
ND225A	11
ND232A	11
ND240A	11
ND250A	11
ND263A	11
ND280	17
ND284	17
ND300A	11
ND301A	11
ND302A	11
ND303A	11
ND304A	11
ND306A	11
ND310A	11
ND316A	11
ND320A	11
ND325A	11
ND332A	11
ND340A	11

Cat.ref.	Page No.
ND350A	11
ND363A	11
ND380	17
ND384	17
ND400A	11
ND401A	11
ND402A	11
ND403A	11
ND404A	11
ND406A	11
ND410A	11
ND416A	11
ND420A	11
ND425A	11
ND432A	11
ND440A	11
ND450A	11
ND463A	11
ND480	17
ND484	17
NM180	17
NM184	17
NM190	17
NM280	17
NM284	17
NM290	17
NM380	17
NM384	17
NM390	17
NM480	17
NM484	17
NM490	17
NR100A	12
NR101A	12
NR102A	12
NR103A	12
NR104A	12
NR106A	12
NR110A	12
NR116A	12
NR120A	12
NR125A	12
NR132A	12
NR140A	12
NR150A	12
NR163A	12
NR200A	12
NR201A	12
NR202A	12
NR203A	12
NR204A	12
NR206A	12
NR210A	12
NR216A	12
NR220A	12
NR225A	12
NR232A	12
NR240A	12
NR250A	12
NR263A	12
NR300A	12
NR301A	12
NR302A	12
NR303A	12
NR304A	12
NR306A	12
NR310A	12
NR316A	12
NR320A	12

Cat.ref.	Page No.
NR325A	12
NR332A	12
NR340A	12
NR350A	12
NR363A	12
NR400A	12
NR401A	12
NR402A	12
NR403A	12
NR404A	12
NR406A	12
NR410A	12
NR416A	12
NR420A	12
NR425A	12
NR432A	12
NR440A	12
NR450A	12
NR463A	12
S	
SB116	29
SB125	29
SB125V	29
SB132	29
SB132V	29
SB140	29
SB163	29
SB180	29
SB199	29
SB216	29
SB216V	29
SB225	29
SB225V	29
SB232	29
SB232V	29
SB240	29
SB263	29
SB280	29
SB299	29
SB316	29
SB325	29
SB332	29
SB332Q	29
SB340	29
SB363	29
SB380	29
SB399	29
SB416	29
SB416F	29
SB425	29
SB425F	29
SB432	29
SB432F	29
SB440	29
SB440F	29
SB463	29
SB463F	29
SB480	29
SB480F	29
SB499	29
SB499F	29
SF115	30
SF118F	30
SF119F	30
SF119G	30
SF218F	30
SF219F	30
SF219G	30

Cat.ref.	Page No.	Cat.ref.	Page No.	Cat.ref.	Page No.	Cat.ref.	Page No.	Cat.ref.	Page No.	Cat.ref.	Page No.
SF319G	30										
SF419G	30										
SPA212A	31										
SPA412A	31										
SPN015D	32										
SPN015R	32										
SPN040C	32										
SPN040D	32										
SPN040N	32										
SPN040R	32										
SPN065N	32										
SPN065R	32										
SPN140C	32										
SPN208S	33										
SPN215D	32										
SPN215R	32										
SPN240D	32										
SPN240R	32										
SPN265R	31										
SPN408S	33										
SPN415D	32										
SPN415R	32										
SPN440D	32										
SPN440R	32										
SPN465R	31										
SPN504	33										
SPN505	33										
SZ011	30										

Protection devices

8 Miniature circuit breakers - MV, MW, MT, MU
10 Miniature circuit breakers - MB, MC
11 Miniature circuit breakers - NC, ND
12 Miniature circuit breakers - NR
13 Miniature circuit breakers - MJ, ML
14 Auxiliaries and accessories for devices
15 RCCB add on blocks
17 Miniature circuit breakers- NM, ND
80, 100 and 125A
18 RCCB add on blocks - type AC/A
19 HRC fuse carrier range - LB, LBX, L and LX
20 HRC fuse carrier range - L31, L38, L51, L58
23 RCCBs 2 and 4 poles
25 RCBOs (residual circuit breaker with overload)
27 Earth leakage relays
29 Isolating switches
30 2 way/centre-off changeover modular switches
31 Surge protective devices
34 Motors starters

Miniature circuit breakers
3kA Type B and C - MV, MW

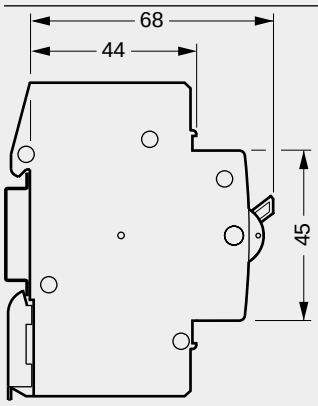

Description
Protection and control of circuits against overloads and short circuits.

Technical data
Type B and C tripping characteristics
Tropicalisation T2
Breaking capacity :
3000A to IEC898
Voltage rating : 230-400 V
Current rating : 6-40A
IP2X

Connection capacity
25□ rigid cables
16□ flexible cables

- will not accept accessories

Voltage marking as per IEC38 can be used on 240/415V 50Hz without derating

□ *For technical details see pages 40-43*

MW 110

MW 220

MW 316

Designation	*In/A*	*Width in I 17.5mm*	*Pack qty.*	***B curve cat. ref.***	***C curve cat. ref.***
Single pole MCB	6	1	12	**MV 106**	**MW 106**
	10	1	12	**MV 110**	**MW 110**
	16	1	12	**MV 116**	**MW 116**
	20	1	12	**MV 120**	**MW 120**
	25	1	12	**MV 125**	**MW 125**
	32	1	12	**MV 132**	**MW 132**
	40	1	12	**MV 140**	**MW 140**
Double pole MCB	6	2	6	**MV 206**	**MW 206**
	10	2	6	**MV 210**	**MW 210**
	16	2	6	**MV 216**	**MW 216**
	20	2	6	**MV 220**	**MW 220**
	25	2	6	**MV 225**	**MW 225**
	32	2	6	**MV 232**	**MW 232**
	40	2	6	**MV 240**	**MW 240**
Triple pole MCB	6	3	4	**MV 306**	**MW 306**
	10	3	4	**MV 310**	**MW 310**
	16	3	4	**MV 316**	**MW 316**
	20	3	4	**MV 320**	**MW 320**
	25	3	4	**MV 325**	**MW 325**
	32	3	4	**MV 332**	**MW 332**
	40	3	4	**MV 340**	**MW 340**
Four pole MCB	6	4	3	**MV 406**	**MW 406**
	10	4	3	**MV 410**	**MW 410**
	16	4	3	**MV 416**	**MW 416**
	20	4	3	**MV 420**	**MW 420**
	25	4	3	**MV 425**	**MW 425**
	32	4	3	**MV 432**	**MW 432**
	40	4	3	**MV 440**	**MW 440**

Miniature circuit breakers
6kA Type B and C - MT, MU

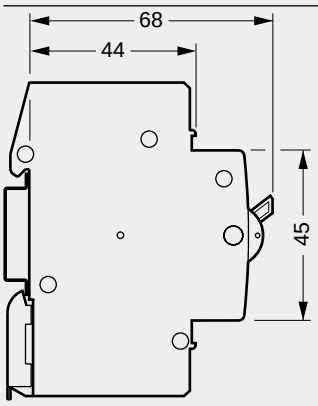

Description
Protection and control of circuits against overloads and short circuits.

Technical data
Type B and C tripping characteristics
Tropicalisation T2
Breaking capacity :
6000A to IEC898
10000A to IEC947-2
Voltage rating : 230-400 V
Current rating : 6-63A
IP2X

Connection capacity
25□ rigid cables
16□ flexible cables

- will not accept accessories

Voltage marking as per IEC38 can be used on 240/415V 50Hz without derating

☐ *For technical details see pages 40-43*

MT 116A

MT 216A

MT 320A

Designation	*In/A*	*Width in I 17.5mm*	*Pack qty.*	***B curve cat. ref.***	***C curve cat. ref.***
Single pole MCB	6	1	12	**MT 106A**	**MU 106A**
	10	1	12	**MT 110A**	**MU 110A**
	16	1	12	**MT 116A**	**MU 116A**
	20	1	12	**MT 120A**	**MU 120A**
	25	1	12	**MT 125A**	**MU 125A**
	32	1	12	**MT 132A**	**MU 132A**
	40	1	12	**MT 140A**	**MU 140A**
	50	1	12	**MT 150A**	**MU 150A**
	63	1	12	**MT 163A**	**MU 163A**
Double pole MCB	6	2	6	**MT 206A**	**MU 206A**
	10	2	6	**MT 210A**	**MU 210A**
	16	2	6	**MT 216A**	**MU 216A**
	20	2	6	**MT 220A**	**MU 220A**
	25	2	6	**MT 225A**	**MU 225A**
	32	2	6	**MT 232A**	**MU 232A**
	40	2	6	**MT 240A**	**MU 240A**
	50	2	6	**MT 250A**	**MU 250A**
	63	2	6	**MT 263A**	**MU 263A**
Triple pole MCB	6	3	4	**MT 306A**	**MU 306A**
	10	3	4	**MT 310A**	**MU 310A**
	16	3	4	**MT 316A**	**MU 316A**
	20	3	4	**MT 320A**	**MU 320A**
	25	3	4	**MT 325A**	**MU 325A**
	32	3	4	**MT 332A**	**MU 332A**
	40	3	4	**MT 340A**	**MU 340A**
	50	3	4	**MT 350A**	**MU 350A**
	63	3	4	**MT 363A**	**MU 363A**
Four pole MCB	6	4	3		**MU 406A**
	10	4	3		**MU 410A**
	16	4	3		**MU 416A**
	20	4	3		**MU 420A**
	25	4	3		**MU 425A**
	32	4	3		**MU 432A**
	40	4	3		**MU 440A**
	50	4	3		**MU 450A**
	63	4	3		**MU 463A**

Miniature circuit breakers
6kA Type B and C - MB, MC

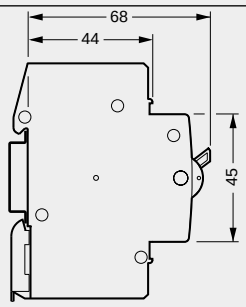

Description
Protection and control of circuits against overloads and short circuits.

Technical data
Type B and C tripping characteristics
Tropicalisation T2
Breaking capacity :
6000A to IEC898
10000A to IEC947-2
Voltage rating : 230-400 V
Current rating : 0.5 - 63A
IP2X
Connection capacity
25□ rigid cables
16□ flexible cables

- **will accept accessories** **see page 14**

Voltage marking as per IEC38 can be used on 240/415V 50Hz without derating

☐ *For technical details* *see pages 40-43*

MC 132A

MC 216A

MC 332A

MC 432A

Designation	*In/A*	*Width in I 17.5mm*	*Pack qty.*	***B curve cat. ref.***	***C curve cat. ref.***
Single pole MCB	0.5	1	12		**MC 100A**
	1	1	12		**MC 101A**
	2	1	12		**MC 102A**
	3	1	12		**MC 103A**
	4	1	12		**MC 104A**
	6	1	12	**MB 106A**	**MC 106A**
	10	1	12	**MB 110A**	**MC 110A**
	16	1	12	**MB 116A**	**MC 116A**
	20	1	12	**MB 120A**	**MC 120A**
	25	1	12	**MB 125A**	**MC 125A**
	32	1	12	**MB 132A**	**MC 132A**
	40	1	12	**MB 140A**	**MC 140A**
	50	1	12	**MB 150A**	**MC 150A**
	63	1	12	**MB 163A**	**MC 163A**
Double pole MCB	0.5	2	6		**MC 200A**
	1	2	6		**MC 201A**
	2	2	6		**MC 202A**
	3	2	6		**MC 203A**
	4	2	6		**MC 204A**
	6	2	6	**MB 206A**	**MC 206A**
	10	2	6	**MB 210A**	**MC 210A**
	16	2	6	**MB 216A**	**MC 216A**
	20	2	6	**MB 220A**	**MC 220A**
	25	2	6	**MB 225A**	**MC 225A**
	32	2	6	**MB 232A**	**MC 232A**
	40	2	6	**MB 240A**	**MC 240A**
	50	2	6	**MB 250A**	**MC 250A**
	63	2	6	**MB 263A**	**MC 263A**
Triple pole MCB	0.5	3	4		**MC 300A**
	1	3	4		**MC 301A**
	2	3	4		**MC 302A**
	3	3	4		**MC 303A**
	4	3	4		**MC 304A**
	6	3	4	**MB 306A**	**MC 306A**
	10	3	4	**MB 310A**	**MC 310A**
	16	3	4	**MB 316A**	**MC 316A**
	20	3	4	**MB 320A**	**MC 320A**
	25	3	4	**MB 325A**	**MC 325A**
	32	3	4	**MB 332A**	**MC 332A**
	40	3	4	**MB 340A**	**MC 340A**
	50	3	4	**MB 350A**	**MC 350A**
	63	3	4	**MB 363A**	**MC 363A**
Four pole MCB	6	4	3	**MB 406A**	**MC 406A**
	10	4	3	**MB 410A**	**MC 410A**
	16	4	3	**MB 416A**	**MC 416A**
	20	4	3	**MB 420A**	**MC 420A**
	25	4	3	**MB 425A**	**MC 425A**
	32	4	3	**MB 432A**	**MC 432A**
	40	4	3	**MB 440A**	**MC 440A**
	50	4	3	**MB 450A**	**MC 450A**
	63	4	3	**MB 463A**	**MC 463A**

Miniature circuit breakers
10kA Type C and D - NC, ND

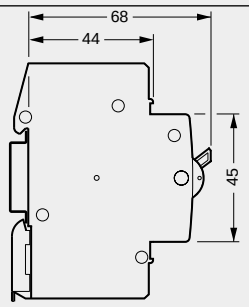

Description
Protection and control of circuits against overloads and short circuits.

Technical data
Type C and D tripping characteristics
Tropicalisation T2

Breaking capacity :
10000A to IEC898
15000A to IEC947-2
Voltage rating : 230-400 V
Current rating : 0.5 - 63A

Positive contact indication :
red - contacts closed
green - contacts open
- **will accept accessories see page 14**

Connection capacity
25□ rigid cables
16□ flexible cables

Voltage marking as per IEC38 can be used on 240/415V 50Hz without derating

☐ *For technical details see pages 40-43*

NC 116A

NC 232A

NC 363A

NC 463A

	Designation	*In/A*	*Width in I 17.5mm*	*Pack qty.*	***C curve cat. ref.***	***D curve cat. ref.***
	Single pole MCB	0.5	1	12	**NC 100A**	**ND 100A**
		1	1	12	**NC 101A**	**ND 101A**
		2	1	12	**NC 102A**	**ND 102A**
		3	1	12	**NC 103A**	**ND 103A**
		4	1	12	**NC 104A**	**ND 104A**
		6	1	12	**NC 106A**	**ND 106A**
		10	1	12	**NC 110A**	**ND 110A**
		16	1	12	**NC 116A**	**ND 116A**
		20	1	12	**NC 120A**	**ND 120A**
		25	1	12	**NC 125A**	**ND 125A**
		32	1	12	**NC 132A**	**ND 132A**
		40	1	12	**NC 140A**	**ND 140A**
		50	1	12	**NC 150A**	**ND 150A**
		63	1	12	**NC 163A**	**ND 163A**
	Double pole MCB	0.5	2	6	**NC 200A**	**ND 200A**
		1	2	6	**NC 201A**	**ND 201A**
		2	2	6	**NC 202A**	**ND 202A**
		3	2	6	**NC 203A**	**ND 203A**
		4	2	6	**NC 204A**	**ND 204A**
		6	2	6	**NC 206A**	**ND 206A**
		10	2	6	**NC 210A**	**ND 210A**
		16	2	6	**NC 216A**	**ND 216A**
		20	2	6	**NC 220A**	**ND 220A**
		25	2	6	**NC 225A**	**ND 225A**
		32	2	6	**NC 232A**	**ND 232A**
		40	2	6	**NC 240A**	**ND 240A**
		50	2	6	**NC 250A**	**ND 250A**
		63	2	6	**NC 263A**	**ND 263A**
	Triple pole MCB	0.5	3	4	**NC 300A**	**ND 300A**
		1	3	4	**NC 301A**	**ND 301A**
		2	3	4	**NC 302A**	**ND 302A**
		3	3	4	**NC 303A**	**ND 303A**
		4	3	4	**NC 304A**	**ND 304A**
		6	3	4	**NC 306A**	**ND 306A**
		10	3	4	**NC 310A**	**ND 310A**
		16	3	4	**NC 316A**	**ND 316A**
		20	3	4	**NC 320A**	**ND 320A**
		25	3	4	**NC 325A**	**ND 325A**
		32	3	4	**NC 332A**	**ND 332A**
		40	3	4	**NC 340A**	**ND 340A**
		50	3	4	**NC 350A**	**ND 350A**
		63	3	4	**NC 363A**	**ND 363A**
	Four pole MCB	0,5	4	3	**NC 400A**	**ND 400A**
		1	4	3	**NC 401A**	**ND 401A**
		2	4	3	**NC 402A**	**ND 402A**
		3	4	3	**NC 403A**	**ND 403A**
		4	4	3	**NC 404A**	**ND 404A**
		6	4	3	**NC 406A**	**ND 406A**
		10	4	3	**NC 410A**	**ND 410A**
		16	4	3	**NC 416A**	**ND 416A**
		20	4	3	**NC 420A**	**ND 420A**
		25	4	3	**NC 425A**	**ND 425A**
		32	4	3	**NC 432A**	**ND 432A**
		40	4	3	**NC 440A**	**ND 440A**
		50	4	3	**NC 450A**	**ND 450A**
		63	4	3	**NC 463A**	**ND 463A**

Miniature circuit breakers
15 to 25 kA Type C - NR

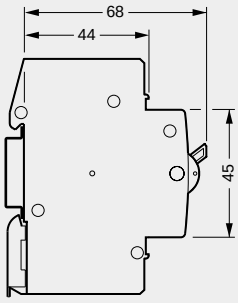

Description
Protection and control of circuits against overloads and short circuits.

Technical data
Type C tripping characteristics
Tropicalisation T2
Breaking capacity :
25000A (≤ 20A)
20000A (25 to 40A)
15000A (50 - 63A)
to IEC947-2
Voltage rating : 230-400 V
Current rating : 0.5 - 63A
Positive contact indication :
red - contacts closed
green - contacts open

Connection capacity
25□ rigid cables
16□ flexible cables

- **will accept accessories see page 14**

Voltage marking as per IEC38 can be used on 240/415V 50Hz without derating

☐ *For technical details see pages 40-43*

NR 116A

NR 232A

NR 340A

NR 440A

Designation	*Breaking capacity kA*	*In/A*	*Width in 17.5mm*	*Pack qty.*	***Cat. ref.***
Single pole MCB	25	0,5	1	12	**NR 100A**
	25	1	1	12	**NR 101A**
	25	2	1	12	**NR 102A**
	25	3	1	12	**NR 103A**
	25	4	1	12	**NR 104A**
	25	6	1	12	**NR 106A**
	25	10	1	12	**NR 110A**
	25	16	1	12	**NR 116A**
	25	20	1	12	**NR 120A**
	20	25	1	12	**NR 125A**
	20	32	1	12	**NR 132A**
	20	40	1	12	**NR 140A**
	15	50	1	12	**NR 150A**
	15	63	1	12	**NR 163A**
Double pole MCB	25	0,5	2	6	**NR 200A**
	25	1	2	6	**NR 201A**
	25	2	2	6	**NR 202A**
	25	3	2	6	**NR 203A**
	25	4	2	6	**NR 204A**
	25	6	2	6	**NR 206A**
	25	10	2	6	**NR 210A**
	25	16	2	6	**NR 216A**
	25	20	2	6	**NR 220A**
	20	25	2	6	**NR 225A**
	20	32	2	6	**NR 232A**
	20	40	2	6	**NR 240A**
	15	50	2	6	**NR 250A**
	15	63	2	6	**NR 263A**
Triple pole MCB	25	0,5	3	4	**NR 300A**
	25	1	3	4	**NR 301A**
	25	2	3	4	**NR 302A**
	25	3	3	4	**NR 303A**
	25	4	3	4	**NR 304A**
	25	6	3	4	**NR 306A**
	25	10	3	4	**NR 310A**
	25	16	3	4	**NR 316A**
	25	20	3	4	**NR 320A**
	20	25	3	4	**NR 325A**
	20	32	3	4	**NR 332A**
	20	40	3	4	**NR 340A**
	15	50	3	4	**NR 350A**
	15	63	3	4	**NR 363A**
Four pole MCB	25	0,5	4	3	**NR 400A**
	25	1	4	3	**NR 401A**
	25	2	4	3	**NR 402A**
	25	3	4	3	**NR 403A**
	25	4	4	3	**NR 404A**
	25	6	4	3	**NR 406A**
	25	10	4	3	**NR 410A**
	25	16	4	3	**NR 416A**
	25	20	4	3	**NR 420A**
	20	25	4	3	**NR 425A**
	20	32	4	3	**NR 432A**
	20	40	4	3	**NR 440A**
	15	50	4	3	**NR 450A**
	15	63	4	3	**NR 463A**

Miniature circuit breakers
4,5 - 6kA Type C SP&N - MJ and ML

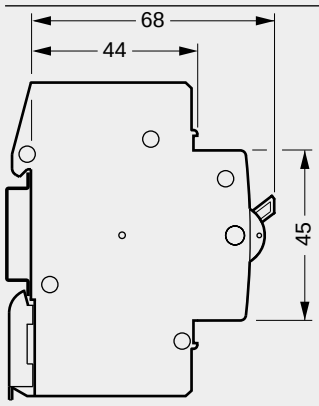

Description
Protection and control of circuits against overloads and short circuits.

Technical data
Type C tripping characteristics
Tropicalisation T2
Breaking capacity :
4 500A, 6 000A to IEC898
Voltage rating : 230V
Current rating : 2-40A
IP2X

Connection capacity
16□ rigid cables
10□ flexible cables
+ busbars

Voltage marking as per IEC38 can be used on 240/415V 50Hz without derating

□ *For technical details see pages 40-43*

MJ 716

Designation	*In/A*	*Width in 17.5mm*	*Pack qty.*	***Cat. ref.***
Single pole and switched neutral - 4,5kA	2	1	12	**MJ 702**
	6	1	12	**MJ 706**
SP&N	10	1	12	**MJ 710**
	16	1	12	**MJ 716**
	20	1	12	**MJ 720**
	25	1	12	**MJ 725**
	32	1	12	**MJ 732**
	40	1	12	**MJ 740**

ML 716

Single pole and switched neutral - 6kA	6	1	12	**ML 706**
	10	1	12	**ML 710**
SP&N	16	1	12	**ML 716**
	20	1	12	**ML 720**
	25	1	12	**ML 725**
	32	1	12	**ML 732**
	40	1	12	**ML 740**

Auxiliaries and accessories for devices MB, MC, NC, ND, NR MCBs and RCCBs

All auxiliaries are common to both single and multi-pole circuit breakers.
These auxiliaries are fitted to the left hand side of devices.

Shunt trips, and under-voltage releases are fitted with a reset button that indicates the automatic/remote tripping of the device.

Connection capacity
6□ rigid cables
4□ flexible cables

For fitting to RCCB
- see page 45

Use of MZ 203 - MZ 206 on RCCBs requires the use of interface auxiliary CZ 001

□ *For technical details see page 44*

MZ 201

MZ 203

MZ 204

MZ 205

MZN 175

Designation	*Description*	*Width in I 17.5mm*	*Pack qty.*	***Cat. ref.***
Auxiliary contacts 5A - 230V~ 13 21 / 14 22	1NO + 1NC auxiliary contact indication of main contact status.	1/2	1	**MZ 201**
Alarm contacts condition (e.g. MCB tripped 91 / 92 93 / 94	SD contact indicates a fault overcurrent (e.g. MCB tripped) on overload or short circuit).	1/2	1	**MZ 202**
Shunt trip C1 / C2	allows remote tripping of the device.			
	24Vac - 415Vac 12V - 130Vdc	1	1	**MZ 203**
	24 - 48Vac 12 - 48Vdc	1	1	**MZ 204**
Under voltage release D1 / U< / D2	allows MCB to be closed only when voltage is above 70% of Un. MCB will automatically trip when voltage falls by 35% of Un			
	48Vdc	1	1	**MZ 205**
	230Vac	1	1	**MZ 206**
Locking kit for the dolly of the device supplied without padlock.	allows locking of the device dolly in the on/off position. will accept two padlocks with hasps of 4.75mm diameter max.		1	**MZN 175**
Sealing Kit				**MZN 176**
Label kit	set of 12 labels for circuit indication. for multi-pole MCB's only.		10 sets	**MZ 176**

RCCB add-on blocks for MCB devices - Type AC - MB, MC, NC, ND, NR

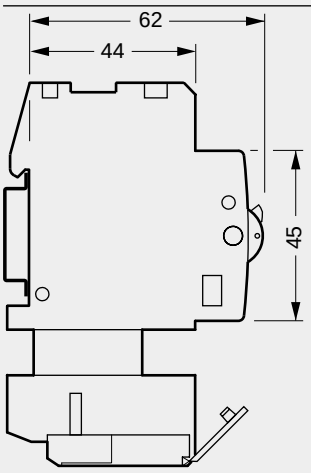

Description
RCD add-on blocks for use with MCB ranges MB, MC, NC, ND, NR.
(manufactured since 01.01.00)

Technical data :
High sensitivity :
10-30 mA instant tripping
Medium sensitivity :
100-300 mA instant tripping
300 - 1A selective (time delay)

These devices are designed to be fitted on the right hand side of the 2, 3 and 4 poles MCB's.

The combination device than provides protection against overload, short circuits and earth leakage faults.

All devices have a test facility

All devices are type AC, protected against nuisance tripping and transient voltages

Nominal voltage : - 20, + 10%
2 poles 230V
3 and 4 poles : 230/400V
Test button : 230/400V

Comply with IEC1009

Connection capacities :
25 A : 6□ flexible cable
10□ rigid cable
40, 63 A : 16□ flexible cable
25□ rigid cable

□ *For technical details see page 46*

BD 226

BD 364

BD 426

Designation	*Sensitivity I△n*	*In/A*	*Width in I 17.5mm*	*Pack qty.*	***Cat. ref.***
2 poles RCCB add-on blocks	10 mA	25A	2	1	**BC 226**
	30 mA	25A	2	1	**BD 226**
		40A	2	1	**BD 241**
		63A	2	1	**BD 264**
	100 mA	63A	2	1	**BE 264**
	300 mA	25A	2	1	**BF 226**
		40A	2	1	**BF 241**
		63A	2	1	**BF 264**
time delayed S	100 mA	63A	2	1	**BN 264**
time delayed S	300 mA	63A	2	1	**BP 264**
time delayed S	1A	63A	2	1	**BS 264**
3 poles RCCB add-on blocks	30 mA	25A	2	1	**BD 326**
		40A	3	1	**BD 341**
		63A	3	1	**BD 364**
	300 mA	25A	2	1	**BF 326**
		40A	3	1	**BF 341**
		63A	3	1	**BF 364**
time delayed S	300 mA	63A	3	1	**BP 364**
time delayed S	1A	63A	3	1	**BS 364**
4 poles RCCB add-on blocks	30 mA	25A	2	1	**BD 426**
		40A	3	1	**BD 441**
		63A	3	1	**BD 464**
	100 mA	63A	3	1	**BE 464**
	300 mA	25A	2	1	**BF 426**
		40A	3	1	**BF 441**
		63A	3	1	**BF 464**
time delayed S	100 mA	63	3	1	**BN 464**
time delayed S	300 mA	63A	3	1	**BP 464**
time delayed S	1A	63A	3	1	**BS 464**

RCCB add-on blocks for MCB devices - Type A
MB, MC, NC, ND, NR

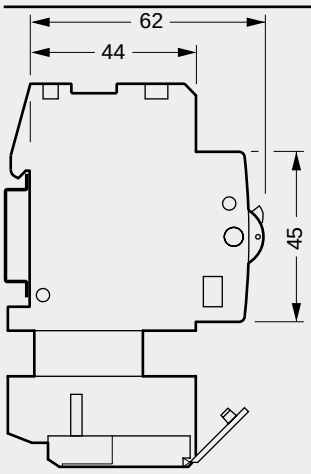

Description
RCD add-on blocks for use with MCB ranges MB, MC, NC, ND, NR.
(manufactured since 01.01.00)

Technical data :
High sensitivity :
30 mA instant tripping
Medium sensitivity :
300 mA instant tripping

These devices are designed to be fitted on the right hand side of the 2, 3 and 4 poles MCB's
The combination device than provides protection against overload, short circuits and earth leakage faults.

All devices have a test facility
All devices are type A
Highly immunized against nuisance tripping for circuits which need continuity in supply (hospitals, computers, electronic ballasts...)
All devices integrate as well detection of nuisance tripping and transient voltages for AC and pulsating DC fault currents.

Nominal voltage : - 20, +10%
2 poles 230V
3 and 4 poles : 230/400V
Test button : 230/400V

Comply with IEC1009

Connection capacities :
25 A : 6□ flexible cable
10□ rigid cable
40, 63 A : 16□ flexible cable
25□ rigid cable

□ *For technical details see page 46*

BD 225

BD 325

BD 463

Designation	*Sensitivity* $I\Delta n$	*In/A*	*Width in* I *17.5mm*	*Pack qty.*	***Cat. ref.***
2 poles RCCB add-on blocks	30 mA	25A	2	1	**BD 225**
		40A	2	1	**BD 240**
		63A	2	1	**BD 263**
	300 mA	25A	2	1	**BF 225**
		40A	2	1	**BF 240**
		63A	2	1	**BF 263**
3 poles RCCB add-on blocks	30 mA	25A	2	1	**BD 325**
		40A	3	1	**BD 340**
		63A	3	1	**BD 363**
	300 mA	25A	2	1	**BF 325**
		40A	3	1	**BF 340**
		63A	3	1	**BF 363**
4 poles RCCB add-on blocks	30 mA	25A	2	1	**BD 425**
		63A	3	1	**BD 463**
	300 mA	25A	2	1	**BF 425**
		40A	3	1	**BF 440**
		63A	3	1	**BF 463**

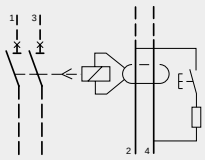

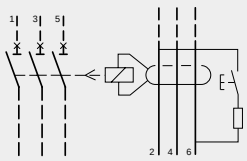

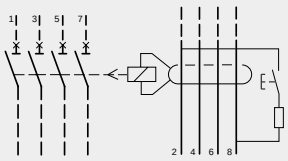

RCBO = **association of 2 poles MCB ⩽ 63 A + 2 poles add-on block**

MCB - NM, ND
Type C, 80 to 125A - Type D, 80 & 100A

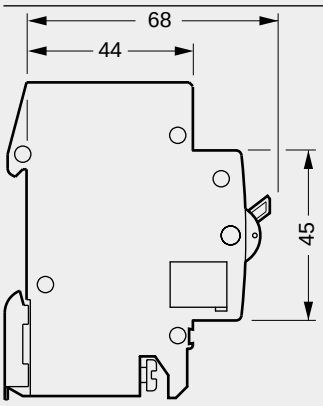

Description
Protection and control of circuits against overloads and short circuits.
- in commercial and industrial electrical distribution systems.

Technical data
Type C and D tripping characteristics
Tropicalisation T2
Breaking capacity :
10 000A to IEC 947-2
Voltage rating - 230V-400V
Current rating :
type C : 80, 100A & 125A
type D : 80, 100A

Positive contact indication :
red - contacts closed
green - contacts open

Connection capacity
50□ rigid cables
35□ flexible cables

Voltage marking as per IEC38 can be used on 240/415V 50Hz without derating

☐ *For technical details see pages 40-43*

NM 280

NM 380

NM 480

Designation	*In/A*	*Width in I 17.5mm*	*Pack qty.*	***Curve C Cat. ref.***	***Curve D Cat. ref.***
Single pole MCB	80	1.5	1	**NM 180**	**ND 180**
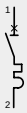	100	1.5	1	**NM 184**	**ND 184**
	125A	1.5	1	**NM 190***	
Double pole MCB	80	3	1	**NM 280**	**ND 280**
	100	3	1	**NM 284**	**ND 284**
	125	3	1	**NM 290***	
Triple pole MCB	80	4.5	1	**NM 380**	**ND 380**
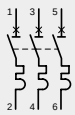	100	4.5	1	**NM 384**	**ND 384**
	125	4.5	1	**NM 390***	
Four pole MCB	80	6	1	**NM 480**	**ND 480**
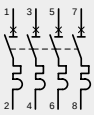	100	6	1	**NM 484**	**ND 484**
	125	6	1	**NM 490***	

*** will not accept accessories (125A)**

RCCB add-on blocks - Type AC / A for use with 80/100A MCBs (NM)

RCCB add-on blocks
These devices are designed to be fitted to the right hand side of 2, 3, or 4 pole 80 and 100A circuit breakers.
The combination device then provides protection against overloads, short circuits and earth leakage faults.

Nuisance tripping
As with all Hager devices the add on blocks are protected against nuisance tripping caused by transient voltages

Connection capacity
35□ flexible cables
50□ rigid cables

All devices have a test facility.

□ *For technical details see page 46*

BD 285

Designation	*Sensitivity I△n*	*Width in 17.5mm*	*Pack qty.*	***Cat.ref. stand. type AC***	***Cat.ref. stand. type A***
2 pole RCCB add-on blocks suitable only for NM 280-NM 284	30mA	2.5	1	**BD 285**	**BD 284**
	300mA	2.5	1	**BF 285**	**BF 284**
time delayed S	300mA	2.5	1	**BP 285**	

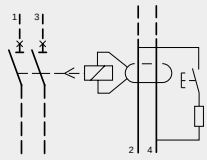

BD 385

3 pole RCCB add-on blocks suitable only for NM 380-NM 384	30mA	2.5	1	**BD 385**	**BD 384**
	300mA	2.5	1	**BF 385**	**BF 384**
time delayed S	300mA	2.5	1	**BP 385**	**time**

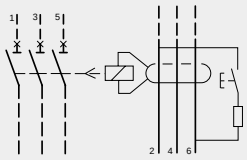

4 pole RCCB add-on blocks suitable only for NM 480-NM 484	30mA	4.5	1	**BD 485**	**BD 484**
	300mA	4.5	1	**BF 485**	**BF 484**
time delayed S	300mA	4.5	1	**BP 485**	

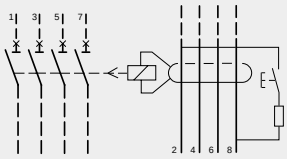

example below: 2 pole MCB + 2 pole RCD add-on block.

HRC fuse carrier range - LB, LBX, L and LX

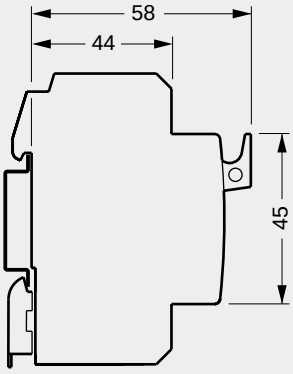

Description
Protection and control of circuits against overloads and short-circuits in domestic electrical distribution systems. Fuse carriers for domestic cylindrical cartridge fuses, type B.

Technical data
Delivered without cartridge fuse. The LBX and LX series are delivered with a lighting push button to check the status of the cartridge fuse.

Comply with IEC 269

Connection capacity :
10□ flexible cables
16□ rigid cables

L 125 L 325

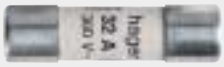

LF 142

L 147

L 105 L 305

Designation	*Characteristics*	*Width in 17.5mm*	*Pack qty.*	***LB* cat.ref.**	***LBX*. cat.ref.**
Fuse carrier LB, 1 Ph + N	10 A - 250 V ~	1	12	**L 124**	**L 324**
	16 A - 250 V ~	1	12	**L 125**	**L 325**
Fuse carrier LBX, 1 Ph + N with lighting push button	20 A - 400 V ~	1	12	**L 126**	**L 326**
	25 A - 400 V ~	1	12	**L 127**	**L 327**
	32 A - 400 V ~	1	12	**L 128**	**L 328**
Cartridge fuses	10A - 8,5 x 23mm		10		**LF 138**
domestic, type gF	16A - 10,3 x 25,8mm		10		**LF 139**
breaking capacity : - 4000 A : from 10 to 20 A - 8000 A : from 25 to 32 A	20A - 8,5 x 31,5mm		10		**LF 140**
	25A - 10,3 x 31,5mm		10		**LF 141**
	32A - 10,3 x 38mm		10		**LF 142**
Box for spare cartridge fuses fixing on the DIN rail next to the fuse carrier without removing enclosure cover insulating material, unbreakable, with drawer for cartridge fuses	delivered empty	1	10		**L 147**
Fuse carrier L 1 PH				**"L"**	**"LX"**
	10 A - 250 V ~	1	12	**L 104**	**L 304**
	16 A - 250 V ~	1	12	**L 105**	**L 305**
Fuse carrier LX 1 PH with lighting push button	20 A - 400 V ~	1	12	**L 106**	**L 306**
	25 A - 400 V ~	1	12	**L 107**	**L 307**
Fuse carrier neutral	32 A - 400 V ~	1	12	**L 108**	**L 308**
	with unreamovable neutral cartridge	1	12	**L 109**	

HRC fuse carrier range - L31, L38

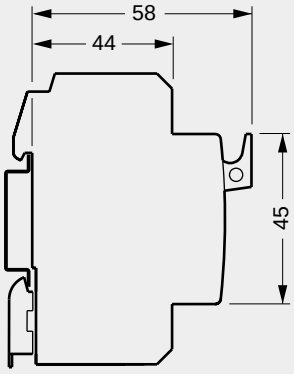

Description
Protection and control of circuits against overloads and short-circuits in commercial and light industrial electrical distribution systems.

Fuse carrier L31
for cylindrical cartridge fuses
8.5 x 31.5mm
Max 16A- 400V~
Fuse carrier L38
for cylindrical cartridge fuses
10.3 x 38mm
Max 20A- 500V~

Max 32A- 400V~

- Comply with IEC269-2

Connection capacity :
16□ rigid cables
10□ flexible cables

☐ *For technical details see page 47*

L 401 L 431

L 406 L 402

L 404

L 055

L 053

L 022

Designation	*Description*	*Width in* I *17.5mm*	*Pack qty.*	***L31 cat.ref.***	***L38. cat.ref.***
Single pole fuse carrier	1 phase	1	12	**L 401**	**L 501**
	1 phase + indic.light	1	12	**L 431**	**L 531**
Double pole fuse carrier	1 phase + neutral	1	12	**L 402**	**L 502**
	1 phase + neutral + indic. light	1	12	**L 432**	**L 532**
	1 phase + neutral	1	12	**L 406**	**L 506**
	2 phases	1	12	**L 412**	**L 512**
Triple pole fuse carrier	3 phases	3	4	**L 403**	**L 503**
Four pole fuse carrier	3 phases + neutral	4	3	**L 404**	**L 504**
Indication labelling for fuse carrier L31, L38, L51		labels : **ratings**		10 stripes	**L 055**
stripes of 50 stickers : - with ratings 0.16 to 32A - with letters and figures : 2 stripes N, PE, L1, L3 1 stripe 1 to 100 1 stripe 101 to 200			**letters and figures kit**	1 L 055 = 1 stripe 3 kits 1 L 053 = 1 kit	**L 053**
Handle link pin for single units (to enable you to switch several circuits simultaneously)		for : 2 I	20		**L 022**
		3 I	20		**L 023**
		4 I	20		**L 024**
		5 I	20		**L 025**

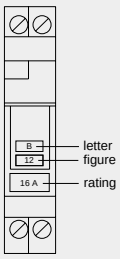

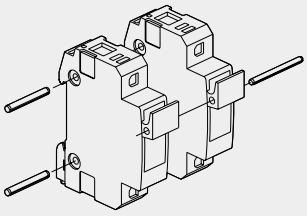

HRC fuse carrier range - L51

Description
Protection and control of circuits against overloads and short-circuits in commercial and industrial distribution systems.

Technical data
For cylindrical fuses
14 x 51mm
50A- 690V AC
50-60 Hz

Comply with IEC947-3

Fuse carriers type LS 6xx can be equipped with following accessories :
- indicating light : for indication of the fuse status.
- auxiliary switch : for indication of fuse blown condition

LR type will not accept accessories

Connection capacity :
35□ rigid cables
25□ flexible cables

☐ *For technical details see page 47*

LS 601

LS 604

LS 672

Designation	*Description*	*Width in I 17.5mm*	*Pack qty.*	***LR 6xx cat.ref.***	***LS 6xx cat.ref.***
Single pole carrier	1 phase	1 1/2	1	**LR 601**	**LS 601**
Two pole carrier	2 phases	3	1	**LR 602**	**LS 602**
	1 phase + neutral link	3	1	**LR 612**	**LS 612**
Three pole carrier	3 phases	4.5	1	**LR 603**	**LS 603**
Four pole carrier	3 phases +neutral link	6	1	**LR 604**	**LS 604**
Auxiliary switch	5A - 250V~ 1 c/o contact				
for fuses 14 x 51 with striker pins	single pole		1		**LS 670**
for fuses 14 x 51 with striker pins	three pole		1		**LS 671**
Indicating light	230V~ indication of blown or missing fuse link		1		**LS 672**

HRC fuse carrier range - L58

Description
Protection and control of circuits against overloads and short-circuits in commercial and industrial distribution systems.

Technical data
For cylindrical fuses
22 x 58mm
125A- 690V AC
50-60 Hz

Comply with IEC947-3

Fuse carriers type LS 7xx can be equipped with following accessories :
- indicating light : for indication of the fuse status.
- auxiliary switch : for indication of fuse blown condition

LR type will not accept accessories

Connection capacity :
50□ rigid cables
35□ flexible cables

☐ *For technical details see page 47*

LS 701

LS 703

LS 770

LS 672

L 065

Designation	*Description*	*Width in I 17.5mm*	*Pack qty.*	***LR 7xx cat.ref.***	***LS 7xx cat.ref.***
Single pole carrier	1 phase	2	1	**LR 701**	**LS 701**
Two pole carrier	2 phases	4	1	**LR 702**	**LS 702**
	1 phase + neutral link	4	1	**LR 712**	**LS 712**
Three pole carrier	3 phases	6	1	**LR 703**	**LS 703**
Four pole carrier	3 phases +neutral link	8	1	**LR 704**	**LS 704**
Auxiliary switch	5A - 250V ~ 1 c/o contact				
for fuses 22 x 58 with striker pins	single pole		1		**LS 770**
for fuses 22 x 58 with striker pins	three pole		1		**LS 771**
Indicating light	230V ~ indication of blown or missing fuse link		1		**LS 672**
Adaptor for assymetric rails for series L51 and L58			20		**L 065**

2 pole and 4 pole RCCBs

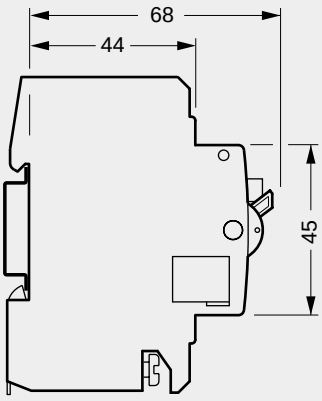

Description
To open a circuit automatically in the event of an earth fault between phase and earth, and/or neutral and earth.
A wide range of current ratings and sensitivities are available.
Suitable for domestic, commercial, industrial applications.

Technical data
Specification IEC1008
Tropicalisation T2

Sensitivities (fixed) :
10, 30, 100, 300mA and 500mA

Terminal capacities :
16-63A rigid 25□
flexible 16□
80&100A rigid 50□
flexible 35□

Features
Positive contact indication is provided by the rectangular flag indicator
Red = closed
Green = open.
Indication of trip is provided by the oval flag indicator
Yellow = tripped.
All RCCB's have trip free mechanisms and can be padlocked either 'on' or 'off'.

Operating voltage
2P - 127-230V AC 50Hz (+6%,-10%)
4P - 230 - 400V AC 50Hz (+6%,-10%)

Voltage marking as per IEC38 can be used on 240/415V 50Hz without derating

Width in 17.5mm modules I
2P - 2 I
4P - 4 I

□ *For technical details see pages 48-51*

CD 241J

CD 441J

Sensitivity	*Current rating*	*Pack qty*	*Ref 2 pole avai. from 1.09.05*	***Ref 2 pole current range***	*Ref 4 pole avai. from 1.09.05*	***Ref 4 pole current range***
10mA	16A	1	CC 217J	**CC 217Z**		
30mA	25A	1	CD 226J	**CD 226Z**	CD 426J	**CD 426Z**
	40A	1	CD 241J	**CD 241Z**	CD 441J	**CD 441Z**
	63A	1	CD 264J	**CD 264Z**	CD 464J	**CD 464Z**
	80A	1		**CD 281Z**		**CD 480Z**
	100A	1		**CD 285Z**		**CD 485Z**
30mA - Type A AC and pulsating DC residual current	25A	1	CD 225J	**CD 227T**	CD 425J	**CD 427T**
	40A	1	CD 240J	**CD 242T**	CD 440J	**CD 442T**
	63A	1	CD 263J	**CD 265T**	CD 463J	**CD 465T**
100mA	25A	1	CE 226J	**CE 226Z**	CE 426J	**CE 426Z**
	40A	1	CE 241J	**CE 241Z**	CE 441J	**CE 441Z**
	63A	1	CE 264J	**CE 264Z**	CE 464J	**CE 464Z**
	80A	1		**CE 281Z**		**CE 481Z**
	100A	1		**CE 285Z**		**CE 485Z**
300mA	25A	1	CF 226J	**CF 225U**	CF 426J	**CF 426Z**
	40A	1	CF 241J	**CF 241Z**	CF 441J	**CF 441Z**
	S 40A	1			CP 441J	**CP 445F**
	63A	1	CF 264J	**CF 264Z**	CF 464J	**CF 464Z**
	63A	1		**CP 265F**		
	S 63A	1			CP 464J	**CP 465F**
	80A	1		**CF 281Z**		**CF 481Z**
	100A	1		**CF 285Z**		**CF 485Z**
300mA - Type A AC and pulsating DC residual current	25A	1	CF 225J		CF 425J	
	40A	1	CF 240J		CF 440J	
	63A	1	CF 263J		CF 463J	
500mA	80A	1				**CG 481Z**
	100A	1				**CG 485Z**

Accessories for 2 pole and 4 pole RCCBs

MZN 175

Sensitivity	*Current rating*	*Pack qty*	***Ref 2 pole avai. from 1.09.05***	***Ref 2 pole***	***Ref 4 pole avai. from 1.09.05***	***Ref 4 pole***
Accessories terminal covers	16A-63A	10 sets	**CZN 005**	**CZ 005**	**CZN 006**	**CZ 006**
	80A-100A	10 sets		**CZ 007**		**CZ 008**
Auxiliary + alarm switch	1 I wide for ON/OFF & trip indication					**CZ 001**
locking kit for the dolly of the device supplied without padlock.	this allows locking of the device dolly in the on/off position. will accept two padlocks with hasps of 4.75mm diameter max.					**MZN 175**

RCBO (residual circuit breaker with overload)
Type B and C SP&N with neutral lead

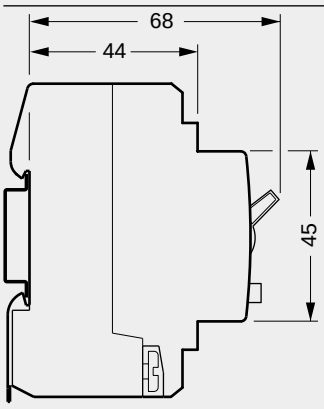

Description
Compact protection devices which provide MCB overcurrent protection and RCD earth leakage protection in a single unit.

Complies to IEC1009

Technical data
The units are available with current ratings of 6A, 10A, 16A, 25A, 32A and 40A. The device switches both the phase and neutral conductors. All ratings have 30mA and 300mA earth leakage protection. The units feature indicators which show whether tripping is due to an overcurrent or earth leakage fault.
Voltage rating - 110-230V 50/60Hz
Current rating – 6-40A.
Mechanical life :
20 000 operations.
Breaking capacity : 4 500A and 6 000A

Connection capacity
25□ rigid cables
16□ flexible cables

Designation	*Breaking capacity*	*In/A*	*Width in 17.5mm*	*Pack qty.*	***Ref. type B available as from 01.09.05***	***Ref. type C available as from 01.09.05***
RCBO Type AC - 30mA	4,5kA	6A	2	1	**AD806J**	**AD856J**
		10A	2	1	**AD810J**	**AD860J**
		16A	2	1	**AD816J**	**AD866J**
		20A	2	1	**AD820J**	**AD870J**
		25A	2	1	**AD825J**	**AD875J**
		32A	2	1	**AD832J**	**AD882J**
		40A	2	1	**AD840J**	**AD890J**
	6kA	6A	2	1	**AD906B**	**AD956B**
		10A	2	1	**AD910B**	**AD960B**
		16A	2	1	**AD916B**	**AD966B**
		20A	2	1	**AD920B**	**AD970B**
		25A	2	1	**AD925B**	**AD975B**
		32A	2	1	**AD932B**	**AD982B**
		40A	2	1	**AD940B**	**AD990B**
RCBO Type AC - 300mA	6kA	6A	2	1		**AF956B**
		10A	2	1		**AF960B**
		16A	2	1		**AF966B**
		20A	2	1		**AF970B**
		25A	2	1		**AF975B**
		32A	2	1		**AF982B**
		40A	2	1		**AF990B**
RCBO Type A - 30mA	6kA	6A	2	1	**AD906J**	**AD956J**
		10A	2	1	**AD910J**	**AD960J**
		16A	2	1	**AD916J**	**AD966J**
		20A	2	1	**AD920J**	**AD970J**
		25A	2	1	**AD925J**	**AD975J**
		32A	2	1	**AD932J**	**AD982J**
		40A	2	1	**AD940J**	**AD990J**
RCBO Type A - 300mA	6kA	6A	2	1		**AF956J**
		10A	2	1		**AF960J**
		16A	2	1		**AF966J**
		20A	2	1		**AF970J**
		25A	2	1		**AF975J**
		32A	2	1		**AF982J**
		40A	2	1		**AF990J**

AD 916J

RCBO - single pole

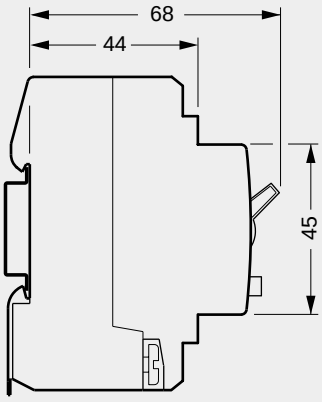

Description
Compact protection devices which combine the overcurrent functions of an MCB with the earth fault functions of an RCD in a single unit. A range of sensitivity and current ratings are available for use in domestic commercial and industrial applications

Technical data
Specification complies to IEC1009

Sensitivities :
Fixed : 30mA, 100mA and 300mA
Selectivite : 100mA, 300mA

Terminal capacities
16□ rigid, 10□ flexible

Features
1 module devices provide a compact solution for installation in consumer units & distribution boards, for individual installations. These devices are 1P & solid neutral.

Operating voltage
110-230V AC 50/60Hz

Flying neutral lead length
700mm

AD 110Z

Designation	*In/A*	*Width in I 17.5mm*	*Pack qty.*	***C curve cat. ref.***
RCBO, 6000A to IEC 898, C curve, 30mA sensitivity	6	1	1	**AD 106Z**
	10	1	1	**AD 110Z**
	16	1	1	**AD 116Z**
	20	1	1	**AD 120Z**
	25	1	1	**AD 125Z**
	32	1	1	**AD 132Z**
	40	1	1	**AD 140Z**
	45	1	1	**AD 127**
	50	1	1	**AD 128**
RCBO, 6000A to IEC 898, C curve, 100mA sensitivity	6	1	1	**AE 106Z**
	10	1	1	**AE 110Z**
	16	1	1	**AE 116Z**
	20	1	1	**AE 120Z**
	25	1	1	**AE 125Z**
	32	1	1	**AE 132Z**
	40	1	1	**AE 140Z**
RCBO, 6000A to IEC 898, C curve, 300mA sensitivity	20	1	1	**AF 120Z**
	25	1	1	**AF 125Z**
	32	1	1	**AF 132Z**
	40	1	1	**AF 140Z**
RCBO, 10000A to IEC 898, C curve, 30mA sensitivity	6	1	1	**AD 184**
	10	1	1	**AD 185**
	16	1	1	**AD 187**
	20	1	1	**AD 188**
	25	1	1	**AD 189**
	32	1	1	**AD 190**
	40	1	1	**AD 191**
RCBO, 6000A to IEC 898, C curve, 100mA sensitivity selective version	50	1	1	**AN 150Z**
RCBO, 6000A to IEC 898, C curve, 300mA sensitivity selective version	50	1	1	**AP 150Z**
Locking kit	this allows the locking of the device dolly in ON/OFF positions. It is possible to padlock the device with 2 padlocks.			**MZN 175**

MZN 175

Earth leakage relays

Earth leakage relays with separate detection torroids.
These devices ensure protection of electrical installations and the protection of persons against direct and indirect contacts.

Transform circuit breakers and free-tripping switches with voltmeter triggers into earth leakage devices.

Barograph version:
Signalisation of default current by a barograph, display in % the level of current before setting of relay (5 to 75%). An output contact prealarm to remote every overflow of 50% of IΔn .

Common characteristics
☐ positive security : relay tripping when break in relay/core link, and blinking of default LED
☐ Default storage with control of tripping sequence (reset),
☐ test-button for default simulation with control of tripping sequence.
☐ Nuisance tripping protection and immunity type A and HI
☐ Tripping on DC default current
☐ Display of default current by LED,
☐ LED for power supply

Supply voltage : 230 V
frequency : 50/60 Hz

Connection capacity :
- rigid 1,5 to 10
- flexible 1 to 6
max. length of wires :
remote test and reset : 20 m

According to electromagnetic compatibility (CEM)
According to standards :
CEI 60947-2 annex B
CEI 60755 CEI 61008 - 1
CEI 61543

☐ *For technical details see pages 52*

HR 400

Designation	*Characteristics*	*Width in 17,5 mm*	***Ref.***
Earth leakage relays standard version 1 C/O	instant strip, adjustable sensitivity, IΔn : 30 mA	2	**HR 400**
	300 mA	2	**HR 402**

HR 410

HR 420

Earth leakage relays standard version 1 C/O adjustable sensitivity IΔn : 0,03 - 0,1 - 0,3 - 0,5 - 1 - 3 5 - 10A adjustable time delay : 0 - 0,1 - 0,3 - 0,4 - 0,5 - 1s - 3s	standard version 1 OF	3	**HR 410**
	- display of earth leakage current - positive safety output - 50% default output with optical scale display	3	**HR 420**
	- display of earth leakage current - positive safety output - 50% default output with optical scale display - external test and reset	5	**HR 425**

Torroids

Detection torroid
Torroids can be associated with all differential relays of HR range. They meet all requirements of electrical distribution.
☐ 6 circular section torroids of Ø 30 to Ø 210 mm
☐ 3 closed rectangular torroids
☐ 5 rectangular section torroids opening for renovation (can be installed without disconnecting cables).

Mounting :
- either directly on cable or metal strip
- or on perforated kits in Univers and Quadro.
- HR 800 can be cliped on DIN rail

Installation instruction :
- fix torroid on rectilineal part of cables
- put cables or bars inside the torroid
- PE conductor must not run through the torroid

Connection of cables
- rigid1,5 to 4□
- flexible 1 to 6□

max. length core/relay
- 50 m max with twisted cable of 1,5 mm²

☐ *For technical details see pages 53-54*

HR 802

HR 830

HR 820

HR 822

Designation	*Characteristics*	***Ref.***
Circular section torroids	Ø 30 mm	**HR 800**
	Ø 35 mm	**HR 801**
	Ø 70 mm	**HR 802**
	Ø 105 mm	**HR 803**
	Ø 140 mm	**HR 804**
	Ø 210 mm	**HR 805**
Rectangular section torroids - closed	70 x 175 mm	**HR 830**
	115 x 305 mm	**HR 831**
	150 x 350 mm	**HR 832**
- opening	20 x 30 mm	**HR 820**
	50 x 80 mm	**HR 821**
	80 x 80 mm	**HR 822**
	80 x 120 mm	**HR 823**
	80 x 160 mm	**HR 824**

Isolating switches

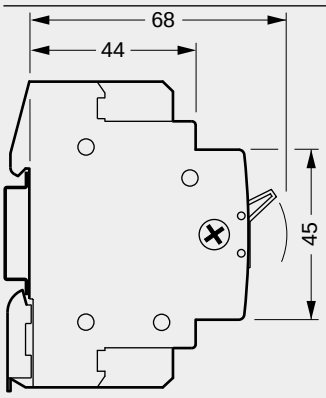

Description
for use as a switch disconnector in all types of circuit.

Complies with :
- IEC 60947-3 (In 16 to 100A)
- EN 669.1 (In 16 to 63A)

Technical data
In : 16, 25, 32A
AC 21A duty specification
connection capacity:
10□ rigid cables
6□ flexible cables
In : 40, 63, 80A (1 pole)
AC 22B duty specification
connection capacity:
25□ rigid cables
16□ flexible cables

In : 80A (2 to 4 poles), 100A
AC 22B duty specification
connection capacity:
50□ rigid cables
35□ flexible cables

SB 140

SB 232

SB 240

SB 399

Designation	*Characteristics*		*Width in I 17.5mm*	*Pack qty.*	***Cat. ref.***
Single pole	1 x 16A	250V~	1	12	**SB 116**
	1 x 16A	250V~	1	1	**SB 116V**
	with pilot light				
	1 x 25A	250V~	1	12	**SB 125**
	1 x 25A	250V~	1	1	**SB 125V**
	with pilot light				
	1 x 32A	250V~	1	1	**SB 132**
	1 x 32A	250V~	1	1	**SB 132V**
	with pilot light				
	1 x 40A	250V~	1	1	**SB 140**
	1 x 63A	250V~	1	1	**SB 163**
	1 x 80A	250V~	1	12	**SB 180**
	1 x 100A	250V~	1	1	**SB 199**
Double pole	2 x 16A	250V~	1	1	**SB 216**
	2 x 16A	250V~	1	1	**SB 216V**
	with pilot light				
	2 x 25A	250V~	1	12	**SB 225**
	2 x 25A	250V~	1	1	**SB 225V**
	with pilot light				
	2 x 32A	250V~	1	1	**SB 232**
	2 x 32A	250V~	1	1	**SB 232V**
	with pilot light				
	2 x 40A	250V~	1	1	**SB 240**
	2 x 63A	250V~	1	6	**SB 263**
	2 x 80A	250V~	1	1	**SB 280**
	2 x 100A	250V~	1	1	**SB 299**
Triple pole	3 x 16A	400V~	2	1	**SB 316**
	3 x 25A	400V~	2	1	**SB 325**
	3 x 32A	400V~	2	1	**SB 332**
	3 x 32A	400V~	3	1	**SB 332Q**
	large terminals				
	3 x 40A	400V~	3	1	**SB 340**
	3 x 63A	400V~	3	1	**SB 363**
	3 x 80A	400V~	3	1	**SB 380**
	3 x 100A	400V~	3	1	**SB 399**

Designation	*Characteristics*		*Width in I 17.5mm*	*Pack qty.*	***Cat. ref. neutral right***	***Cat. ref. neutral left***
Four pole	4 x 16A	400V~	2	1	**SB 416**	**SB 416F**
	4 x 25A	400V~	2	1	**SB 425**	**SB 425F**
	4 x 32A	400V~	2	1	**SB 432**	**SB 432F**
	4 x 40A	400V~	4	1	**SB 440**	**SB 440F**
	4 x 63A	400V~	4	1	**SB 463**	**SB 463F**
	4 x 80A	400V~	4	1	**SB 480**	**SB 480F**
	4 x 100A	400V~	4	1	**SB 499**	**SB 499F**

2 way / centre - off changeover modular switches

SF 118F

SF 219F

SZ 011

Designation	*Characteristics*		*Width in 17.5mm*	*Pack qty.*	***Cat. ref.***
Switch, 2 ways single pole	1 x 25A	250V~	1	12	**SF 118F**
Double pole	2 x 25A	250V~	1	12	**SF 115**
Double pole 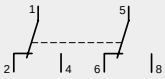	2 x 25A	250V~	2	6	**SF 218F**
Switches centre - off changeover single pole	1 x 25A	250V~	1	12	**SF 119F**
	1 x 40A	250V~	1	12	**SF 119G**
double pole 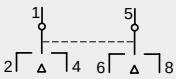	2 x 25A	250V~	2	6	**SF 219F**
	2 x 40A	250V~	2	6	**SF 219G**
	3 x 40A	250V~	3	4	**SF 319G**
	4 x 40A	250V~	4	3	**SF 419G**
Handle link pin for switch handles	1 set includes 5 pins 2 mod width 5 pins 3 mod width 5 pins 4 mod width			1 set	**SZ 011**

Surge protective devices type 1

This type of surge protective devices are recommended on electric installations where the buildings are fitted with lightning conductor. The minimavalue of shock current is I imp =12,5 kA.

With a discharge current wave 10/350 µs (I imp) which is similar to lightning current on direct impact, those SPD's must have the capacity to flow out this energizing wave.

Monobloc SPD's type 1 have a LED for well functioning for each phase on the front.

☐ connection capacity:
- 35□ flexible conductor,
- 50□ rigid conductor
☐ complies with EN 61-643.11
☐ *For technical details see pages 55-59*

SPA 412A

Designation	*Characteristics*	*Width in ▮ 17,5 mm*	***Ref.***
SPD's type 1 I imp. 12,5 kA Un : 230/400 V ∼ 50/60 Hz	2 pole 1 Ph + N Up : 2,5 kV at In	4	**SPA 212A**
	4 poles 3 Ph + N Up : 2,5 kV at In	8	**SPA 412A**

Surge protective devices for general protection

SPDs with plug in cartridge with very high, high and medium discharge current capacity (65 kA, 40 kA and 15 kA).

SPDs with plug in cartridge ensure :
- general protection of electric equipment,
- protection in common and differential mode for domestic, industrial and commercial buildings.

Common characteristics :
SPDs with base and cartridges.

Available in 2 versions :
☐ SPDs with base and plug in cartridges with an end of life indication LED
☐ SPDs with base and auxiliary contact for remote signallings and plug in cartridges with reserve protection indicator .

This version, with reserve indicator, shows the intermediary state, with indication of the need to change the cartridge before disconnection, but keeps the maximal protection capacity till the end.

For remote signalling, an auxiliary contact (R version) is used to report the information of condition indication until the end of life of the product.

The cartridge allows simple replacement without the need to cut-off the power supply
☐ SPDs are equipped with integrated thermic and dynamic disconnection

☐ connection capacity of terminal blocks, (L, N/E) :
- 16□ flexible conductor,
- 25□ rigid conductor
for auxiliary contact :
- 0,5□ mini
- 1,5□ maxi
☐ degree of protection : IP 203 (in enclosure).

☐ *For technical details see pages 55-59*

SPN 265R

SPN 465R

Designation	*Characteristics*	*Width in ▮ 17,5 mm*	***Ref.***
SPDs with plug in cartridge I max. 65 kA Un : 230/400 V ∼ 50/60 Hz 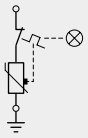	2 poles 1 Ph + N with reserve indicator and remote signalling Up : 1,3 kV at In	2	**SPN 265R**
	4 poles 3 Ph + N with reserve indicator and remote signalling Up : 1,5 kV at In	4	**SPN 465R**

Surge protective devices for general protection

SPN 240R

SPN 415R

Designation	Characteristics	Width in 17,5 mm	Ref.
SPDs with plug in cartridge I max. 40 kA Un : 230/400 V ~ 50/60 Hz	- single pole 1 Ph Up : 2 kV at In	1	**SPN 140C**
	- 2 poles 1 Ph + N with reserve indicator and remote signalling Up : 1,2 kV at In	2	**SPN 240R**
	- 2 poles 1 Ph + N Up : 1,2 kV at In	2	**SPN 240D**
	- 4 poles 3 Ph + N with reserve indicator and remote signalling Up : 1,2 kV at In	4	**SPN 440R**
	- 4 poles 3 Ph + N Up : 1,2 kV at In	4	**SPN 440D**
SPDs with plug in cartridge I max. 15 kA Un : 230/400 V ~ 50/60 Hz	- 2 poles 1 Ph + N with reserve indicator and remote signalling Up : 1,0 kV at In	2	**SPN 215R**
	- 2 poles 1 Ph + N Up : 1,0 kV at In	2	**SPN 215D**
	- 4 poles 3 Ph + N with reserve indicator and remote signalling Up : 1,0 kV at In	4	**SPN 415R**
	- 4 poles 3 Ph + N Up : 1,0 kV at In	4	**SPN 415D**

Replacement cartridges for SPDs with plug in cartridge

Replacement cartridges

The cartridge allows simple replacement without the need to cut-off the power supply.

Cartridges are available for all discharge currents (65 kA, 40 reserve protection indication.

A keying system exists to prevent a line cartridge being interchanged by mistake with a neutral and visa versa

☐ *For technical details see pages 55-59*

SPN 065R

SPN 065N

Designation	Characteristics		Width in 17,5 mm	Ref.
Replacement cartridges	**Phase** for :	SPN 265R, SPN 465R		**SPN 065R**
		SPN 140C		**SPN 040C**
		SPN 240R, SPN 440R		**SPN 040R**
		SPN 240D, SPN 440D		**SPN 040D**
		SPN 215R, SPN 415R		**SPN 015R**
		SPN 215D, SPN 415D		**SPN 015D**
Remark : for a replacement of cartridges, choose only the same reference as the previous cartridge.	**Neutral** for:	SPN 265R, SPN 465R,		**SPN 065N**
		SPN 240R, SPN 440R, SPN 215R, SPN 415R SPN 240D, SPN 440D, SPN 215D, SPN 415D		**SPN 040N**

Surge protective devices for fine protection

SPDs with low valotage protection level

To protect very sensitive electronic equipment.
The fine protection completes the main protection and can protect 1 or several electronic devices.
Optimal coordination is obtained when cascaded with a main protection device (lower Up see table below)

Protection is assured in both common and differential modes.

Discharge current :
I max. 8 kA (8/20 wave).

A green LED on the front face indicates the status of the SPD connected in series with the equipment that needs to be protected.
Connected in series with the equipment that needs to be protected.

Suitable for every earthing system.

Connection capacity :
- 6□ flexible conductor
- 10□ rigid conductor .

Degree of protection : IP 20 (in enclosure).

complies with NF EN 61-643-11 september 2002

☐ *For technical details see pages 55-59*

SPN 408S

Designation	*Characteristics*	*Width in ▮ 17,5 mm*	***Ref.***
SPD with low voltage protection level	2 poles 1 Ph + N	2	**SPN 208S**
Un : 230/400 V ∼ 50/60 Hz	4 poles 3 Ph + N	3	**SPN 408S**
Up (Ph/ N/⏚) : 1,2 kV at In Up (Ph/N) : 1 kV at In	Voltage protection level with a main + fine protection : Up ≤ 800 V		

SPDs for telephone lines

SPDs for telephone lines.

For the protection of receiver against transient current surge vehicled by telephone lines (fax, modem, etc...)
Protection is assured in both common and differential modes

In-line connection on telephone line with receiver to be protected.

Discharge current :
I max 10 kA (8/20 wave).

Connection capacity
- 0,5 à 2,5□ flexible conductor
- 0,5 à 2,5□ rigid conductor

Degree of protection : IP 10 (in enclosure).

Complies with IEC 61643-21

☐ *For technical details see pages 55-59*

SPN 505

Designation	*Characteristics*	*Width in ▮ 17,5 mm*	***Ref.***
Voltage surge protection for analog telephone lines	Un : 130 V Up : 600 V	1	**SPN 505**
Voltage surge protection for digital telephone lines	Un : 40 V Up : 600 V	1	**SPN 504**

Motor starters

Description
to ensure localised control and protection of single and three phase motors.

Technical data
– adjustable thermal relay
– AC3 utilisation category

Connection capacity
2 conductors
max size 1 to 4□ flexible
1.5 to 6□ rigid

Options
under voltage release: MZ 528N, MZ 529N
auxiliary contacts: MZ 520N, MZ 527N
alarm contact: MZ 527N,

Complies with IEC 947-1, IEC 947-2

Breaking capacity :

	Ic (kA) 230 V ~	400 V ~
0,16 à 10 A	100	100
16 à 25 A	16	16

☐ *For technical details, see page 60*

MM 501N

Designation	*current setting*	*Stand.power motors 50/60Hz*	*Ratings of 3 phase (AC3 category)*	*Width in I 17.5mm*	*Pack qty.*	***Cat. ref.***
Motors starters		230V (kW)	400V (kW)			
	0.1 - 0.16A	-	-	2 1/2	1	**MM 501N**
	0.16 - 0.24A	-	0.06	2 1/2	1	**MM 502N**
	0.24 - 0.4A	0.06	0.09	2 1/2	1	**MM 503N**
	0.4 - 0.63A	0.09	0.12	2 1/2	1	**MM 504N**
	0.63 - 1A	0.12	0.25	2 1/2	1	**MM 505N**
	1 - 1.6A	0.25	0.55	2 1/2	1	**MM 506N**
	1.6 - 2.5A	0.37	0.75	2 1/2	1	**MM 507N**
	2.5 - 4A	0.75	1.5	2 1/2	1	**MM 508N**
	4 - 6.3A	1.1	2.2	2 1/2	1	**MM 509N**
	6.3-10A	2.7	4	2 1/2	1	**MM 510N**
	10-16A	4	7.5	2 1/2	1	**MM 511N**
	16-20A	5.5	9	2 1/2	1	**MM 512N**
	20-25A	7.5	12.5	2 1/2	1	**MM 513N**

Accessories for motor starters

	Designation	*Characteristics*		*Width in ▮ 17,5 mm*	***Ref.***
MZ 520N	**Auxiliary contacts** connection of MZ520N on he right side of motor starter, MZ522N connected directly on front of motor starter and cannot be mounted behind modular plates.	**1 C + 1 O**	3,5 A - 230 V ∼ 2 A - 400 V ∼	1/2	**MZ 520N**
		1 C	1 A - 230 V ∼ 400 V ∼	1/2	**MZ 522N**
MZ 527N	**Default signal contact** mounting on the right side of motor starter	**1 C :** short-circuit	3,5 A - 230 V ∼ 2 A - 400 V ∼	1/2	**MZ 527N**
		1 C : overload 1 short-circuit			
	Shunt trip mounting on the left side of motor starter	**230 V** ∼ - 50 Hz		1	**MZ 523N**
MZ 528N	**Under voltage release** mounting on the left side of motor starter	**230 V** ∼ - 50 Hz		1	**MZ 528N**
		400 V ∼ - 50 Hz		1	**MZ 529N**
	Surface mounting enclosure for waterproof motor starter l. 80 x h. 158 x p. 125,5 mm	with external rotary handle actives motor starter without opening the enclosure 4 x M25			**MZ 521N**
MZ 521N	**Emergency stop button** emergency stop : IP 65	allow remote “emergency stop” of motor starter via tripping auxiliary			**MZ 530N**
	Remote emergency stop button with key synchronizing unlocking with key IP67	3 x M20 + 2 x M25			
		1 C + 1 O	230 / 400 V ∼		**MZ 531N**
MZ 530N MZ 531N					

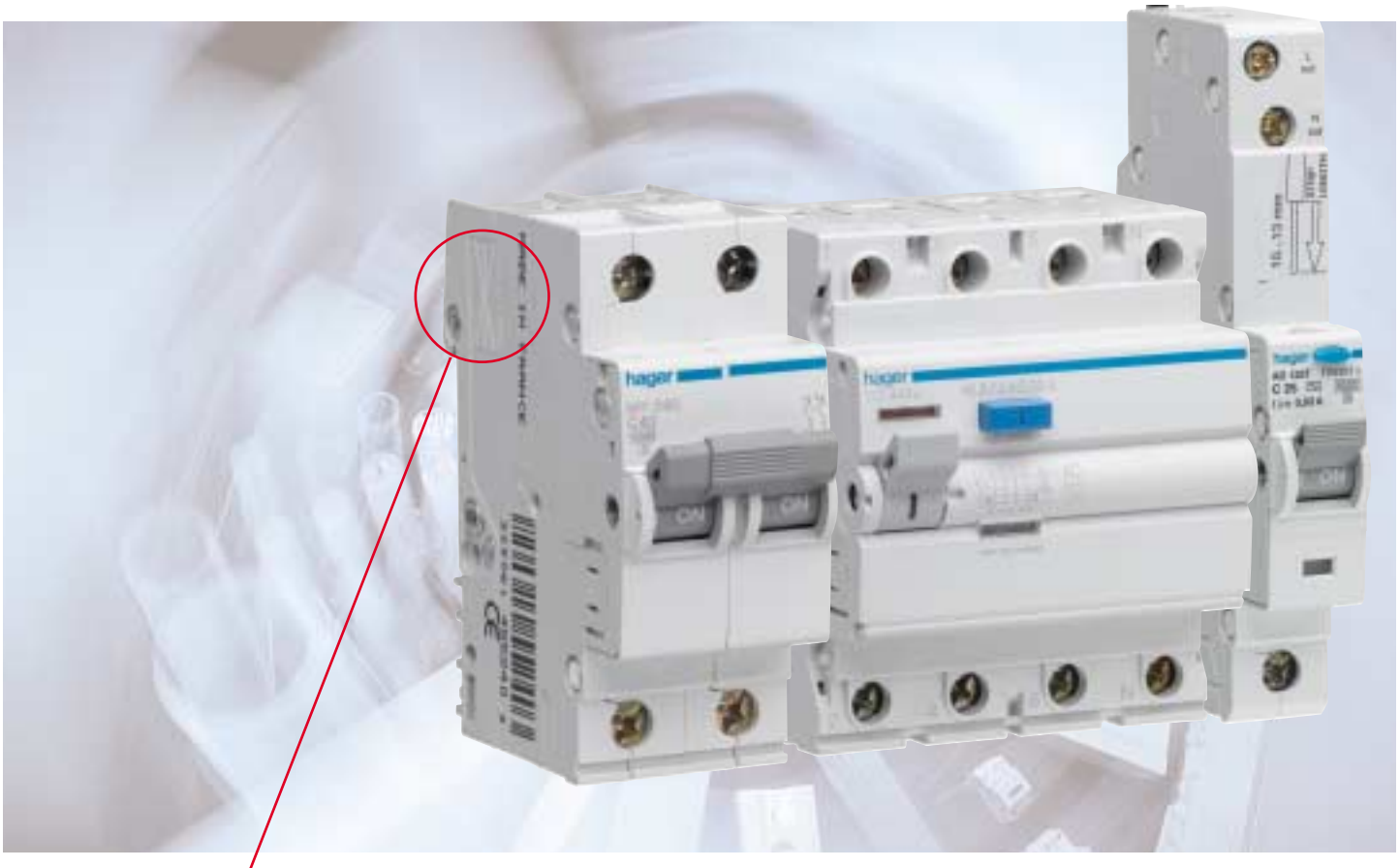

=

+

This “made by hager” symbol is your guarantee to receive the very best that hager has to offer.

Over time, it will replace the hologram which will be progressively withdrawn.

Every MCB, RCCB and RCBO that bears this new symbol has been carefully crafted in one of our hager owned factories.

hager

the success is in the system

Technical information

38 Circuit protection
40 Miniature circuit breakers
44 Auxiliaries for MCBs and RCDs
45 Transformer protection and lighting circuits
46 RCD add on blocks
47 HRC fuse carriers
48 RCCBs
52 Earth fault protection relays
53 Torroids for earth fault protection relays
55 Surge protective device
60 Motor starters

Basic Principles
The proper selection of the correct circuit protective device requires an understanding of the potential hazards against which protection for safety is required. The Wiring Regulations identify several hazards:
- electric shock
- thermal effects
- overcurrent
- undervoltage
- isolation

Electric shock - is divided into two parts:
- direct contact: contact with parts which result in an electric shock in normal service
- indirect contact: contact with exposed conductive parts which result in an electric shock in case of a fault.

To protect against direct contact the Wiring Regulations suggest the following basic measures should be taken:
(1) by insulation of live parts
(2) by enclosures or barriers
(3) by obstacles
(4) by placing out of reach

To protect against indirect contact the Wiring Regulations suggest the following basic measures should be taken:
(1) earthed equipotential bonding and automatic disconnection of supply
(2) use of class II equipment or equivalent insulation
(3) non-conducting location
(4) earth-free local equipotential bonding
(5) electrical separation

Of these five measures, the first is by far the most commonly used -
(1) earthed equipotential bonding and automatic disconnection of supply:

In each installation main equipotential bonding conductors shall connect the main earthing terminal of the installation; this metalwork comprises exposed conductive parts which are part of the electrical installation itself and extraneous conductive parts including the following:
- main water pipes
- gas installation pipes
- other service pipes and ducting
- risers of central heating and air conditioning systems
- exposed metal parts of the building structure

This bonding creates a zone within which any voltages appearing between exposed conductive parts and extraneous conductive parts, are minimised; the earth fault loop impedance must have an value low enough to allow sufficient current to flow for the circuit protective device to operate rapidly to disconnect the supply; disconnection must be sufficiently fast so that voltages appearing on the bonded metalwork cannot persist long enough to cause danger; depending on the operating characteristics of the protective device and the earth impedance, such disconnection may be achieved either by overcurrent devices, Fuses, Miniature Circuit Breakers, (i.e. MCBs) or by Residual Current Devices, (i.e. RCDs).

Thermal Effect - refers to heat generated by the electrical equipment in normal use and under fault conditions. The proper selection of equipment complying with the latest product standards is essential in providing protection against thermal effects.

Overcurrent - is defined as a current exceeding the rated value of the circuit components. It may be caused by the overloading of a healthy circuit or it may take the form of a short-circuit current, defined as an "overcurrent resulting from a fault of negligible impedance between live conductors having a difference in potential under normal operating conditions". Overcurrent protection may be provided by using fuses or circuit breakers singly or in combination.

Undervoltage - refers to the dangers that could be caused by the reduction or loss in voltage and the subsequent restoration, such as the unexpected re-starting of motors or the automatic closing of protective devices. The proper selection of control and protective devices must take the protection against undervoltage into consideration.

Isolation - every circuit shall be provided with means of isolation (except in certain cases) to prevent or remove hazards associated with the installation, equipment and machines. The new standards for circuit breakers and switch-fuses now take this into account.

Protection against shock by indirect contact
Indirect contact - is the contact of persons or livestock with exposed conductive parts made live by a fault and which may result in electric shock. An example would be where the insulation of an electric heater has broken down resulting in a live conductor internally touching the casing. This could result in the heater casing being raised to a hazardous voltage level, causing electric shock to a person touching it.

Two important measures must be taken to prevent this hazard:
- the impedance of circuit conductors is kept to a minimum. The earth fault loop impedance (Z_S) is used as a measure of the circuit impedance under fault conditions.
- the overcurrent device protecting the circuit is selected to rapidly disconnect an earth fault.

The effect of these two measures is inter-related.
1. By ensuring that the circuit protective conductor is of a low impedance, the voltage to which the live casing is raised, under fault conditions, is kept to a minimum.
2. The low impedance path provided by the circuit conductors and the circuit protective conductor will result in a high level of current in the event of an earth fault. This high fault current ensures that the overcurrent protective device will disconnect the fault in a short time, reducing the interval during which the casing of the faulty equipment is live.

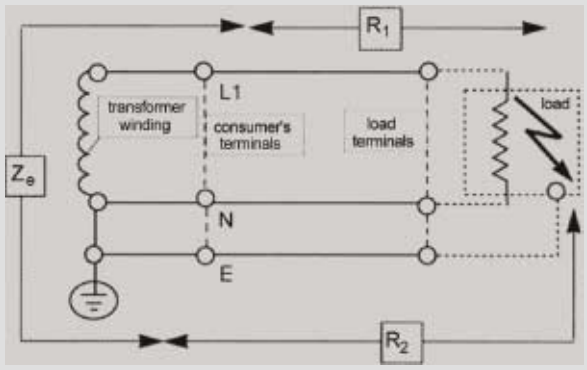

Components of earth fault loop impedance (Z_S) in a system.
(Earth fault at load between conductor and casing).
$Z_S = Z_e + (R_1 + R_2)$

Earth fault loop impedance (Z_S)
To ensure the impedance of conductors in a circuit is sufficiently low the system designer has to establish the value of the earth fault loop impedance.
Z_S - is a measure of the earth fault current loop, comprising the phase conductor and the earth conductor. It comprises the complete loop including the winding of the transformer from which the circuit is supplied as defined by the following:
Z_e - is the part of the earth fault loop impedance external to the installation, its value can be measured or a nominal value can be obtained from the supply authority.

(R_1 +R_2) - where R_1 is the resistance of the phase conductor within the installation and R_2 is the resistance of the circuit protective conductor. These two components constitute the loop impedance within the installation.

Therefore: $Z_S = Z_e + (R_1 + R_2)$

Once the value of Z_S has been established a suitable overcurrent protective device has to be selected to ensure disconnection of an earth fault within the specified time.The times are:

- 5 seconds for fixed equipment.
- For portable equipment and for fixed equipment installed outside the equipotential bonding zone, the disconnection times are dependent on the nominal voltage to earth, i.e. 220 to 277 volts = 0.4 seconds.

Z_S by calculation

To establish whether the relevant disconnection time can be achieved a simple calculation must be made, based on Ohm's law:

$$I_f \text{ (fault current)} = \frac{U_o \text{ (open circuit voltage)*}}{Z_S \text{ (earth fault loop)}}$$

* voltage between phase and earth (240V)

The fault current (I_f) must be high enough to cause the circuit protective device to trip in the specified time. This can be established by consulting the time/current characteristic for the protective device. If the maximum trip time for the fault current calculated is less than or equal to the relevant value (5s for fixed equipment; 0.4s for portable equipment) then compliance is achieved. It is important that when consulting the characteristic curve the worst case is used, i.e. the maximum tripping time including any tolerance. An example is shown in Figs 1 and 2.

Z_S by tables

The above procedure can be used for any type of protective device providing a time/current characteristic curve is available. Frequently, however, a much simpler method is available using tables listing maximum Z_S values which have been interpreted from the characteristic curves for the relevant devices. Providing the system Z_S is equal to or less than the value given in the table, compliance is achieved. Tables for a number of 'standard' devices (certain fuses and MCBs) are given in the Wiring Regulations.

Zs too high

If the system Z_S value is too high to achieve rapid enough disconnection with the overcurrent protective devices available then it is necessary to use one of the two following methods:

- fit a cable with a larger cross-section and consequently a lower impedance. This may be a very expensive solution especially when the installation is complete before the problem is discovered.
- use a Hager residual current device (RCD). Subject to certain conditions being met this provides a simple and economical solution.

Example

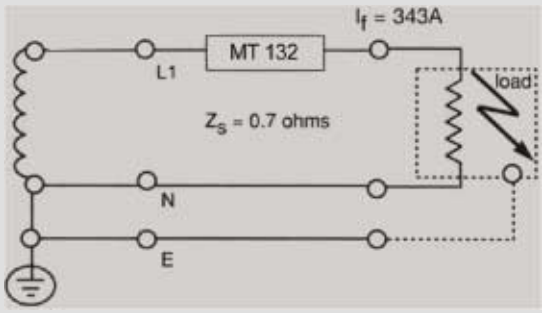

Fig 2

Fig 2 shows a fixed circuit with an earth loop impedance Z_S of 0.7 ohms protected with an MT 132. The fault current (I_f) will therefore be U_O/Z_S = 240/0.7 = 343A
By referring to the characteristic for MT132 (see Fig 3) it can be seen that the breaker will disconnect in 0.02 seconds for this current. The breaker therefore easily satisfies the requirement for disconnection in 5 seconds.
If the circuit Z_S was 2.0 ohms then the fault current would be:
240/2 = 120A
and the disconnection time would be 10 seconds, in which case compliance would not be achieved.
Fig 3

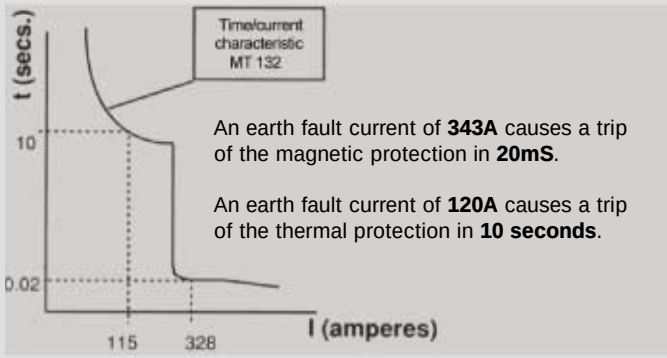

Protection against overcurrent

Overcurrent - "A current exceeding the rated value. For conductors the rated value is the current-carrying capacity"

Overload Current - "An overcurrent occurring in a circuit which is electrically sound"

Short-Circuit Current - "An overcurrent resulting from a fault of negligible impedance between live conductors having a difference in potential under normal operating conditions."

Protection against Overload Current

For the protection against overload current, protective devices must be provided in the circuit to break any overload current flowing in the circuit conductors before it can cause a temperature rise which would be detrimental to insulation, joints, terminations or the surroundings of the conductors.

In order to achieve this protection the nominal current of the protective device I_n should be not less than the design current of the circuit I_b and that I_n should not exceed the current-carrying capacity of the conductors I_z, and that the current causing effective operation of the protective device I2 does not exceed 1.45 times the current-carrying capacity of the conductor I_z, expressed as

$I_b \leq I_n \leq I_z$

$I_2 \leq 1.45 I_z$

Protection against Short-Circuit Current

Protective devices must be provided to break any short-circuit current before it can cause danger due to thermal and mechanical (electro-dynamic) effects produced in the conductors and connections. The breaking capacity of the protective device shall not be less than the prospective short-circuit current at the point at which the device is installed. However a lower breaking capacity is permitted provided that a properly co-ordinated back-up device having the necessary breaking capacity is installed on the supply side.

Positioning of Overcurrent Devices

Devices for the protection against overload and short-circuit must be placed at the point where a reduction occurs in the current-carrying capacity of the conductors. This reduction could be caused by a change in the environmental conditions as well as the more obvious change in the cross-sectional area of the cable.

There are of course exceptions to this general rule which relate to a very few special applications. These are set out in detail in the the Wiring Regulations.

Both of the new International Standards covering Low Voltage Circuit Breakers provide the user with a better assurance of quality and performance by taking into account the actual operating conditions of the breaker. New definitions and symbols have been introduced which should be committed to memory. Some of those most frequently used are:

U_e : rated service voltage
U_i : rated insulation voltage (> U_{emax})
U_{imp} : rated impulse withstand
I_{cm} : rated short circuit making capacity
I_{cn} : rated short circuit capacity
I_{cs} : rated service short circuit breaking capacity
I_{cu} : rated ultimate short circuit breaking capacity
$I_{\Delta n}$: rated residual operating current (often called residual sensitivity)
I_n: rated current = maximum value of current used for the temperature rise test
Δt: trip delay of residual current devices

In addition IEC 898 sets out to provide a greater degree of safety to the uninstructed users of circuit breakers. It is interesting to note that the description "miniature circuit breaker" or MCB is not used at all in this standard, but no doubt both manufacturers and users will continue to call circuit breakers complying with IEC 898 miniature circuit breakers or MCBs for some time to come.

The scope of this standard is limited to ac air break circuit breakers for operation at 50Hz or 60Hz, having a rated current not exceeding 125A and a rated short-circuit capacity not exceeding 25kA.

A rated service short-circuit breaking capacity I_{cs} is also included which is equal to the rated short-circuit capacity I_{cn} for short-circuit capacity values up to and including 6kA, and 50% of Icn above 6kA with a minimum value of 7.5kA. As the circuit- breakers covered by this standard are intended for household and similar uses, Ics is of academic interest only. The rated short-circuit capacity of a MCB (I_{cn}) is the alternating component of the prospective current expressed by its r.m.s. value, which the MCB is designed to make, carry for its opening time and to break under specified conditions. I_{cn} is shown on the MCB label in a rectangular box without the suffix 'A' and is the value which is used for application purposes. I_{cn} (of the MCB) should be equal to or greater than the prospective short-circuit current at the point of application.

You will see from the curves that the inverse time delay characteristic which provides overload protection is the same on all three. This is because the Standards requires the breaker to carry 1.13 times the rated current without tripping for at least one hour and when the test current is increased to 1.45 times the rated current, it must trip within one hour, and again from cold if the last current is increased to 2.55 times the rated current the breaker must trip between 1 and 120 seconds. The inverse time delay characteristic of all MCBs claiming compliance with IEC 898 must operate within these limits.

The difference between the three types of characteristic curves designated 'B', 'C' and 'D' concerns only the magnetic instantaneous trip which provides short-circuit protection.

- For type 'B' the breaker must trip between the limits of 3 to 5 times rated current
- For type 'C" the breaker must trip between the limits of 5 to 10 times rated current, and
- For type 'D' the breaker must trip between the limits of 10 to 20 times rated current.

Often manufacturers publish their MCB tripping characteristics showing the limits set by the standard and guarantee that any breaker that you purchase will operate within these limits. So great care should be taken when working with characteristic curves showing lower and higher limits - on no account should you take a mean point for application design purposes.

For cable protection applications you should take the maximum tripping time and some manufacturers publish single line characteristic curves which show the maximum tripping time. If the design problem is nuisance tripping then the minimum tripping time should be used and for desk top co-ordination studies, both lower and upper limits have to be taken into account.

Energy limiting

Energy is measured in Joules. *James Prescott Joule proved that thermal energy was produced when an electric current flowed through a resistance for a certain time, giving us the formula :-

Joules = I^2 x R x t or because we know that watts = I^2R
Joules = watts x seconds
Therefore we can say that :-
One Joule = one watt second
or energy = watts x seconds = I^2 R t

If the resistance (R) remains constant or is very small compared with the current (I) as in the case of short-circuit current, then energy becomes proportional to I^2t. Which is why the energy let-through of a protective device is expressed in ampere squared seconds and referred to as I^2t

I≈t (Joule Integral) is the integral of the square of the current over a given time interval (t_0, t_1)

The I^2t characteristic of a circuit breaker is shown as a curve giving the maximum values of I^2t as a function of the prospective current.

Manufacturers are required by the Standard to produce the I≈t characteristic of their circuit breakers.
See page 39.

The energy limiting characteristics of modern MCBs greatly reduce the damage that might otherwise be caused by short-circuits. They protect the cable insulation and reduce the risk of fire and other damage. Knowledge of the energy limiting characteristic of a circuit breaker also helps the circuit designer calculate discrimination with other protective devices in the same circuit.

Because of the importance of the energy limiting characteristic the Standards for circuit breakers for household and similar installations suggests three energy limiting classes based on the permissible I^2t (let-through) values for circuit breakers up to 32A; class 3 having the highest energy limiting performance.

All Hager MCBs are well within the limits of energy let-through set by IEC 898 for energy limiting class 3.

Electrical characteristics	References MJ	ML	MV	MW	MT	MU	MB	MC	NC	ND	NR	NM*
Poles	SP+N	SP+N	1,2,3,4	1,2,3,4	1,2,3,4	1,2,3,4	1,2,3,4	1,2,3,4	1,2,3,4	1,2,3,4	1,2,3,4	1,2,3,4
Rated operational voltage U_e (V) **	230	230	230/400	230/400	230/400	230/400	230/400	230/400	230/400	230/400	230/400	230/400
Nominal current	2-40A	6-40A	6-40A	6-40A	6-63A	6-63A	0.5-63A	0.5-63A	0.5-63A	0.5-63A	0.5-63A	80-100A
Breaking capacity to IEC 898	4.5kA	6kA	3kA	3kA	6kA	6kA	6kA	6kA	10kA	10kA	-	-
Breaking capacity to IEC 947-2	-	-	-	-	10kA	10kA	10kA	10kA	15kA	15kA	25/20/15kA	10kA
Rated insulation voltage U_i (V)	500V	500V	500V	500V	500V	500V	500V	500V	500V	500V	500V	500V
Rated impulse voltage U_{imp} (kV)	2500V	2500V	2500V	2500V	2500V	2500V	2500V	2500V	2500V	2500V	2500V	2500V
Electrical endurance	10000	10000	20000	20000	20000	20000	20000	20000	20000	20000	20000	20000

* din rail mount only, not for use in fixed busbar distribution boards.
** As per IEC38. Can be installed in 240/415V system without derating. Voltage tolerances -20% to +10%

Power loss
The power loss of MCB's is closely controlled by the standards and is calculated on the basis of the voltage drop across the main terminals measured at rated current. The power loss of Hager circuit breakers is very much lower than that required by the Standard, so in consequences run cooler and are less affected when mounted together.

The table below gives the watts loss per pole at rated current.

MCB rated current (A)	0.5	1	2	3	4	6	10	16	20	25	32	40	50	63	80	100
Watts loss per pole (W)	1.3	1.5	1.7	2.1	2.4	2.7	1.8	2.6	2.8	3.3	3.9	4.3	4.8	5.2	8	10

For use with DC
Because of their quick make and break design and excellent arc quenching capabilities Hager circuit breakers are suitable for DC applications.

The following parameters must be considered.
1 system voltage:
Determined by the number of poles connected in series

2 short circuit current:

3 tripping characteristics:
- the thermal trip remains unchanged
- the magnetic trip will become less sensitive requiring derating by $\sqrt{2}$ the ac value.

No. of poles	**1 pole**		**2 poles in series**	
Range	Max voltage	Breaking capacity L/R=15ms	Max voltage	Breaking capacity L/R=15ms
MT, MU, MB, MC	60V	6kA	125V	6kA
NC, ND	60V	10kA	125V	10kA

Characteristic curve	**B**		**C**	
Magnetic trip	50Hz	dc	50Hz	dc
Irm1	3In	4.5 In	5In	7.5 In
Irm2	5In	7.5 In	10In	15In

Note : the circuit breaker can have the line\load connected to either the top or bottom terminals

Temperature Derating
MCBs are designed and calibrated to carry their rated current and to operate within their designated thermal time/current zone at 40°C. Testing is carried out with the breaker mounted singly in a vertical plane in a controlled environment. Therefore if the circuit breaker is required to operate in conditions which differ from the reference conditions, certain factors have to be applied to the standard data. For instance if the circuit breaker is required to operate in a higher ambient temperature than 40°C it will require progressively less current to trip within the designated time/current zone.

correction factor
The breaker is calibrated at a temperature of 40°C.

Temperature correction

In (A)	45°C	50°C	55°C	60°C
0.5	0.48	0.46	-	-
1	0.96	0.92	0.88	0.84
2	1.92	1.84	1.76	1.68
3	2.88	2.76	2.64	2.9
4	3.3	3	2.8	2.52
6	5.76	5.52	5.28	5.04
10	9.6	9.2	8.8	8.4
16	15.4	14.7	14.1	13.4
20	19.2	18.4	17.6	16.8
25	24	23	22	21
32	30.7	29.4	28.2	26.9
40	38.4	36.8	35.2	33.6
50	48	46	44	42
63	60.5	58.0	55.4	52.9
80	76.8	73.6	70.4	67.2
100	96	92	88	84

Grouping factors
Consideration should also be given to the proximity heating effect of the breakers themselves when fully loaded and mounted together in groups. There is a certain amount of watts loss from each breaker depending on the trip rating which may well elevate the ambient air temperature of the breaker above the ambient air temperature of the enclosure.

grouping factor (rated current reduce by factor K)

No. of units n	K
n = 1	1
2 ≤ n < 4	0.95
4 ≤ n < 6	0.9
6 ≤ n	0.85

Frequency
thermal – unchanged
magnetic – value multiplied by coefficient K

F (Hz)	17Hz – 60Hz	100Hz	200Hz	400Hz
K	1	1.1	1.2	1.5

'B' curve (IEC 898)
MCBs: MT rated 6 - 63A
MV rated 6 - 40A
MB rated 0.5 - 63A

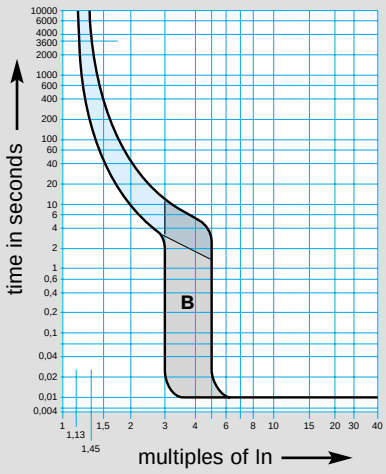

'C' curve (IEC 898)
MCBs : NC rated 0.5 - 63A MW rated 6-40A
MJ rated 2 - 40A MU rated 6-63A
NM rated 80 - 125A MC rated 0.5-63A
ML rated 6 - 40A

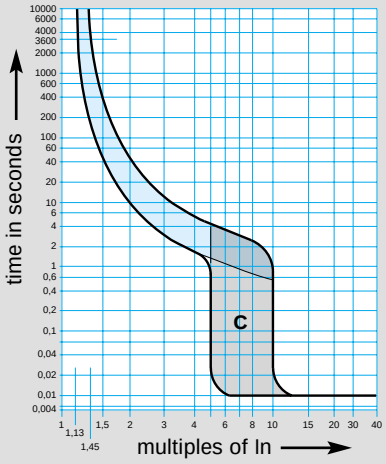

'D' curve (IEC 898)
MCBs: ND rated 1 – 100A

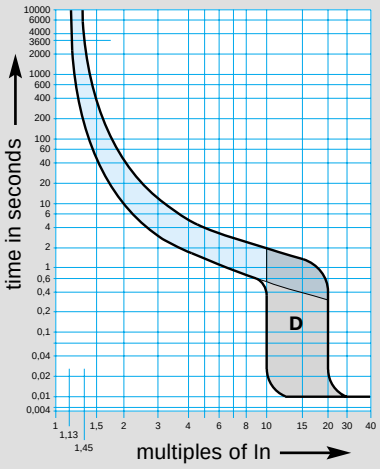

current limiting at 400V

MT, MB, MC, MU, MV, MW, NC, ND, NR

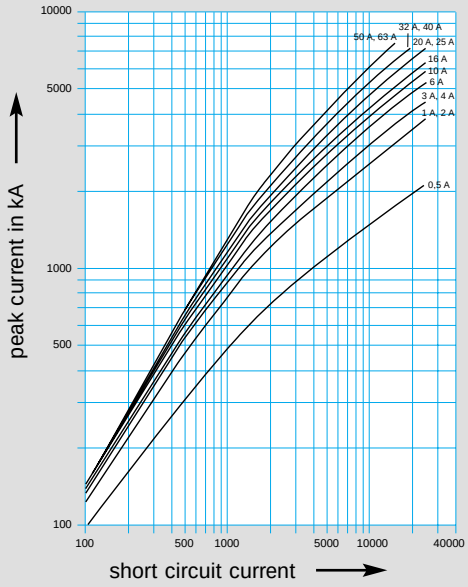

NM 80 - 100A

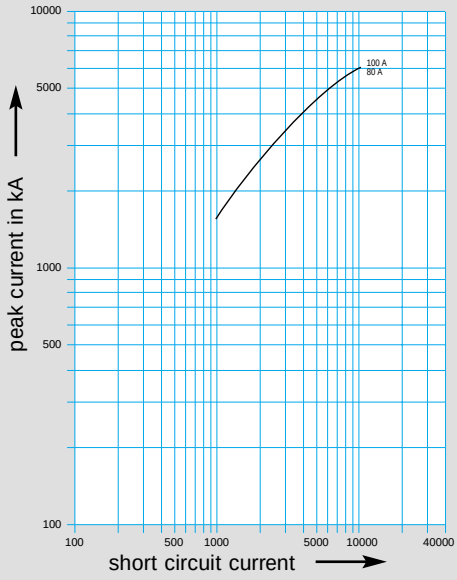

I²t characteristics

MW, MU, MC, NC, NR

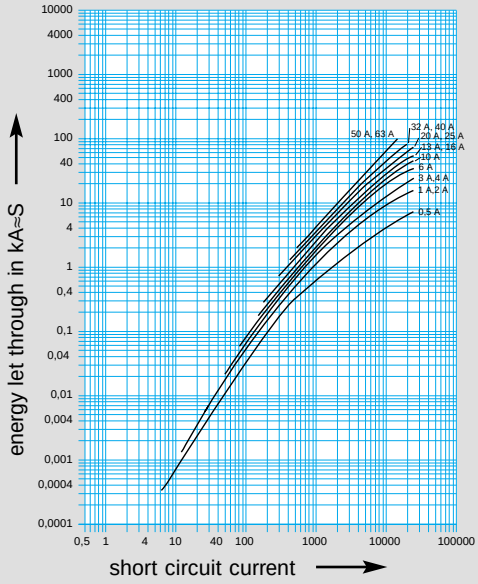

MV, MT, MB

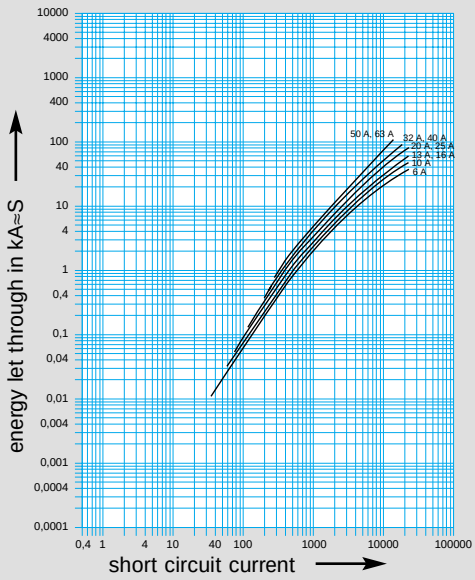

NM 80 - 100A

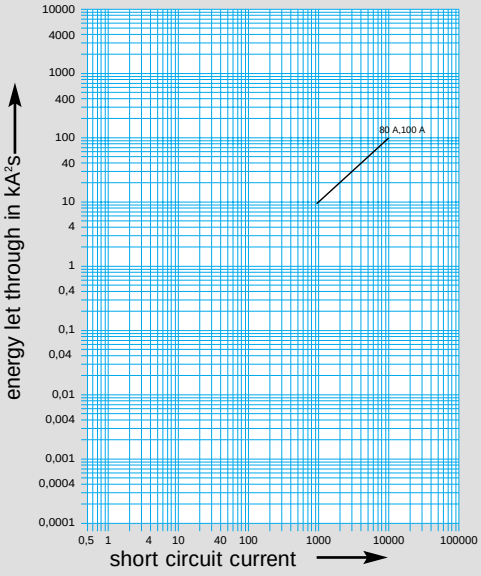

Functions
Tripping and indication auxiliary contacts are common to the range of multi-pole MCBs.
They should be mounted on the left hand side of the device.

Auxiliary contact MZ 201
Allows remote indication of the status of the device contacts to which it is associated.

Alarm contact MZ 202
The alarm contact will provide indication if the breaker trips under fault conditions.

Shunt trip MZ 203 - MZ 204
Allows tripping of the device by feeding the coil. It is fitted with internal contacts which allow it to be fed by an impulse or latched feed.
MZ 203 - 230V to 415V ac / 110V to 130V dc
MZ 204 - 24V to 48V ac / 12 to 48V dc

Under voltage release MZ 205 - MZ 206
Allows the MCB to trip when the voltage drops or by pressing a remote off switch (ie emergency stop).
MZ 205 - 48V dc
MZ 206 - 230V ac

Wiring diagram
MZ 201 auxiliary contact

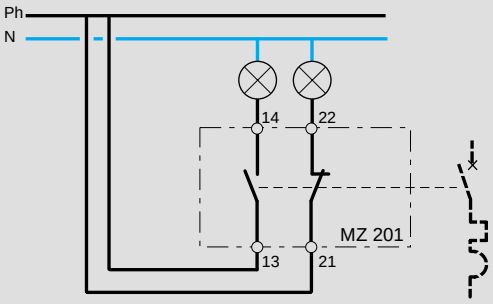

MZ 206 under voltage release

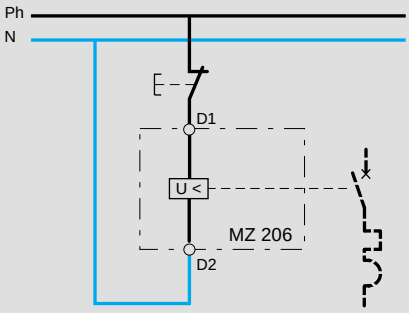

Electrical characteristics	MZ 201	MZ 202	MZ 203	MZ 204	MZ 205	MZ 206
Contact	1NO+1NC	1NO+1NC	-	-	-	-
Rating of contact	6A 230V AC	6A 230V AC				
Coil voltage Un	-	-	230 to 415V AC 110 to 130V DC	24 to 48V AC 12 to 48V DC	48V DC	230V AC
Energising power	-	-	8VA	8VA	-	-
Voltage tolerances	-	-	-15% of Un	-15% of Un	-	-
Undervoltage	-	-	-	-	0.35 to 0.7Un	0.35 to 0.7Un

Mounting of auxiliaries
No tools is necessary for the mounting of the auxiliaries. The auxiliaries click onto the left side of the breakers and are held in place with special designed fixing points. The whole operation is performed within seconds. It is possible to fit the auxiliary without removing the associated device from the din rail.

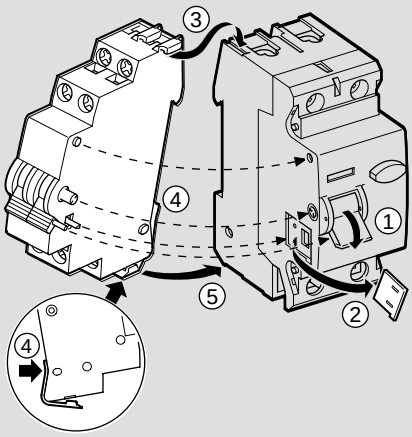

Combination of auxiliaries with circuit breakers and RCDs
It is possible to combine 4 auxiliaries with miniature circuit breakers, however the following must be observed :
- only one protection auxiliary is allowed.
- the trip contact MZ 202 must be mounted first.
- all auxiliaries are left mounted.

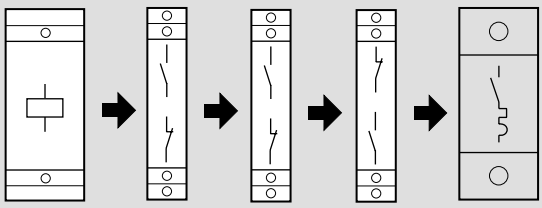

MZ 203 + MZ 201+ MZ 201+ MZ 202+ circuit breaker
MZ 206 + MZ 201+ MZ 201+ MZ 201

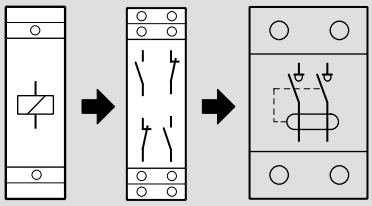

MZ 203.. + CZ 001 + RCCBs
MZ 206

Transformer Protection
When a transformer is switched on, a high inrush current occurs in the primary circuit of the transformer irrespective of the load on the secondary side. Correct selection of the primary circuit protective device will avoid the risk of nuisance tripping due to this inrush current. Tables below show the recommended MCB's for the protection of single phase (230V) and three phase (400V) transformers.

Single Phase 230V

Transformer Rating (VA)	Primary Current (A)	Recommended MCB NC	ND
50	0.22	1	6
100	0.43	2	6
200	0.87	3	6
250	1.09	4	6
300	1.30	4	6
400	1.74	6	6
500	2.17	10	6
750	3.26	10	6
1 000	4.35	16	10
2 500	10.87	40	20
5 000	21.74	63	32
7 500	32.60		50
10 000	43.48		63

Three Phase 400V

Transformer Rating (VA)	Primary Current (A)	Recommended MCB NC	ND
500	0.72	3	6
750	1.08	4	6
1000	1.44	6	6
2000	2.88	10	6
3000	4.33	16	10
4000	5.77	20	10
5000	7.21	25	16
7500	10.82	32	20
10000	14.43	50	25
15000	21.64	63	32
20000	28.86		50
25000	36.07		63

Lighting circuits
Although the MCBs prime function is the protection of lighting circuits, they are often used as local control switches as well, conveniently switching on and off large groups of luminaries in shops and factories. The MCB is well able to perform this additional task safely and effectively. Hager MCBs have an electrical endurance of 20,000 on/off operations for rated trips up to and including 32A and 10,000 on/off operations for 40, 50 and 63A rated trips.

For the protection of lighting circuits the designer must select the circuit breaker with the lowest instantaneous trip current compatible with the inrush currents likely to develop in the circuit.

High Frequency (HF) ballasts are often singled out for their high inrush currents but they do not differ widely from the conventional 50Hz. The highest value is reached when the ballast is switched on at the moment the mains sine wave passes through zero. However, because the HF system is a "rapid start" system whereby all lamps start at the same time, the total inrush current of an HF system exceeds the usual values of a conventional 50Hz system. Therefore where multiple ballasts are used in lighting schemes, the peak current increases proportionally.

Mains circuit impedance will reduce the peak current but will not affect the pulse time.

The problem facing the installation designer in selecting the correct circuit breaker is that the surge characteristic of HF ballasts vary from manufacturer to manufacturer. Some may be as low as 12A with a pulse time of 3mS and some as high as 35A with a pulse time of 1mS. Therefore it is important to obtain the expected inrush current of the equipment from the manufacturer in order to find out how many HF ballasts can safely be supplied from one circuit breaker without the risk of nuisance tripping.

This information can then be divided into the minimum peak tripping current of the circuit breaker, shown in Table below

Minimum peak tripping current

Circuit breaker type	Circuit breaker rated current 6A	10A	16A	20A	25A	32A	40A	50A	63A
B	26	43	68	85	106	136	170	212	268
C	43	71	113	142	177	223	283	354	446
D	85	142	226	283	354	453	566	707	891

Example:
How many HF ballasts, each having an expected inrush of 20A can be supplied by a 16A type C circuit breaker? From table above, 16A type C we have a minimum peak tripping current of 113A.

Therefore $\frac{113}{20} = 5$

i.e. 5 ballasts can be supplied by a 16A type C circuit breaker.

Assembly of the RCCB add-on blocks ⩽ 63 A

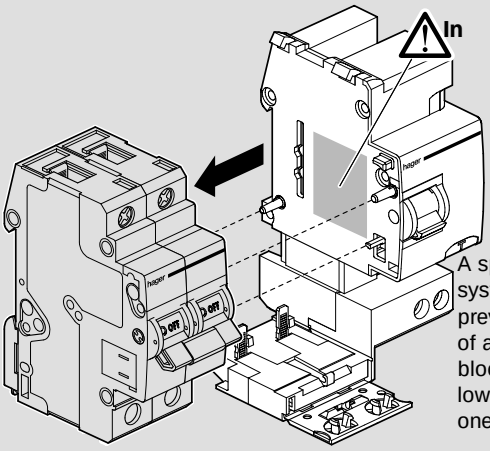

A specific keying system will prevent assembly of an add-on block of a rating lower than the one of the MCB.

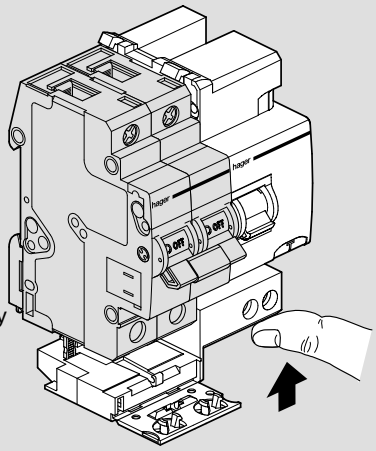

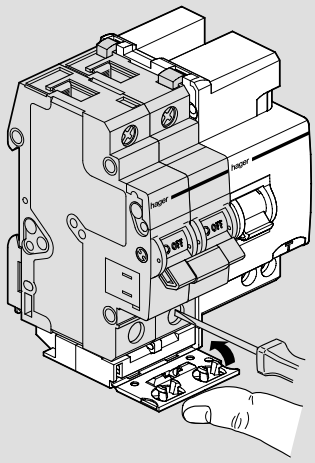

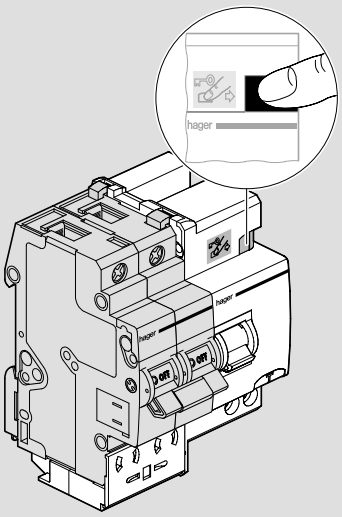

By pushing the "lock" button it will bolt both devices together mechanically, thus forbidding a dismantling of the products without deteriorating the RCCB add-on block (compliance to annex G of standard EN 61-009) .

Assembly of the add-on blocks 80 - 100 A

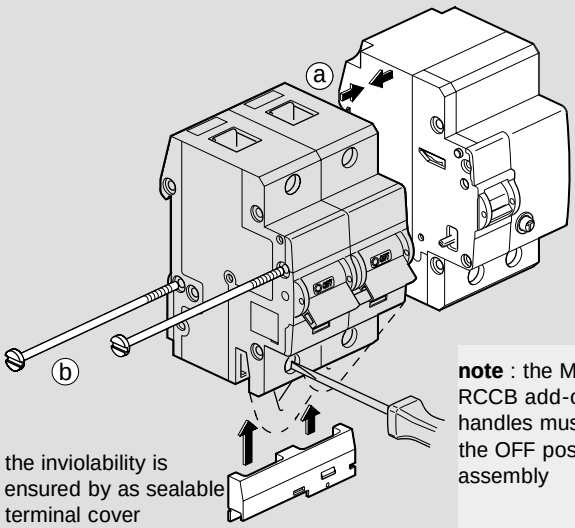

the inviolability is ensured by as sealable terminal cover

note : the MCB and RCCB add-on block handles must be in the OFF position for assembly

Dimensions of associated MCB / RCCB add-on block

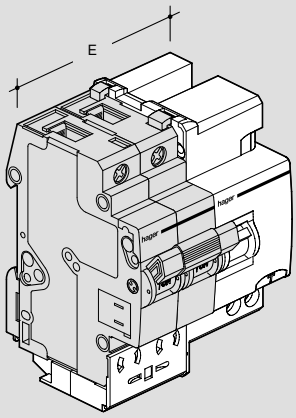

RCCB add-on blocks 25, 40 et 63 A

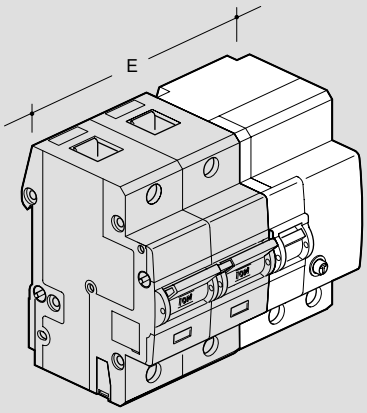

RCCB add-on blocks 80-100 A

		E
2 P.P.	6 to 63 A	4
2 P.P.	80 to 100 A	5,5
3 P.P.	6 to 25 A	5
3 P.P.	32 to 63 A	6
3 P.P.	80 to 100 A	9
4 P.P.	6 to 25 A	6
4 P.P.	32 to 63 A	7
4 P.P.	80 to 100 A	10,5

Wiring diagram for MCB+Add-on block from 25 to 100A

incoming

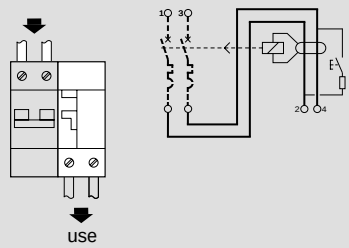

Test

Connection capacities :
for assembled products from 6 to 25A : 6□ / 10□
for assembled products from 32 to 63 A : 10□ / 25□
for assembled products from 80 to 100A : 35□ / 50□

If the supply of the RCCB add-on block is done from the bottom it should be clearly indicated.

Correction chart for admissable current
A - ambient temperature effect.
B - mutual temperature effect.

In conditions where both conditions are combined (ambient temperature > 20°C and 3 juxtaposed phases simultaneously on load) both coefficients A and B are applicable.

Type fuse size		**L 31** 8.5x31.5	**L 38** 10,3 x 38	**L 51** 14 x 51	**L 58** 22 x 58
In for Un 400 V∼		20A	32 A	50 A	125 A
In for Un 500 V∼		16A	20 A	40 A	80 A
	20°	1	1	1	1
A	30°	0.95	0,95	0,95	0,95
	40°	0.9	0,90	0,90	0,90
	50°	0.8	0,80	0,80	0,80
	1 to 3 Ph	1	1	1	1
B	4 to 6 Ph	0.8	0,8	0,8	0,8
	7 to 9 Ph	0.7	0,7	0,7	0,7
	> 10 Ph	0.6	0,6	0,6	0,6

Function of auxiliary contact

- possible to disconnect the supply to the motor by wiring the auxiliary to the coil of the contactor.
- remote indication of the fuse blown status by wiring the auxiliary to an indicating lamp

Note :
to use the auxiliary for remote indication it is necessary to use fuse links with striker pins.

Indicating light
mounting on L 51 and L 58

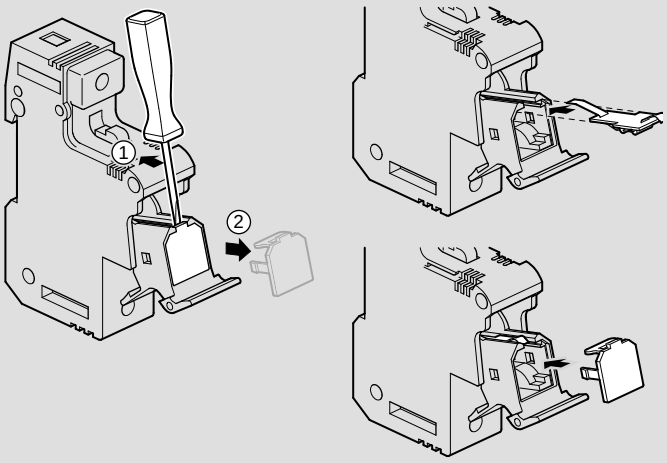

Auxiliary changeover contact
Identical mounting on L 51 and L 58 - SP and multipole type LS

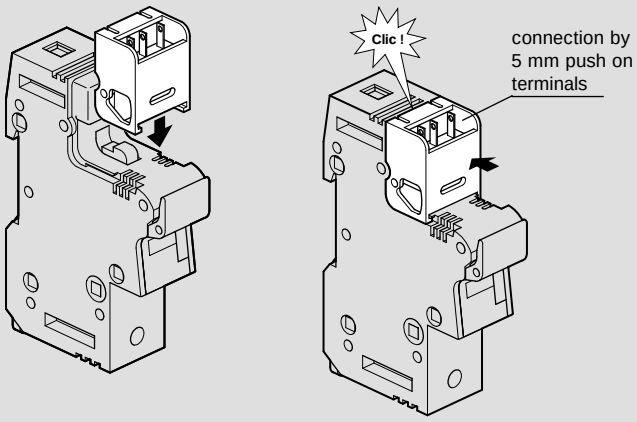

Application drawing

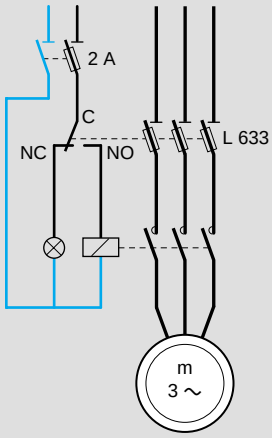

Isolation and padlocking in open position

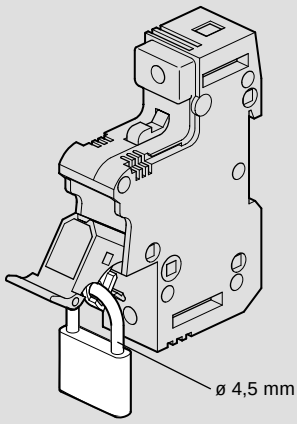

Residual current devices
A residual current device (RCCBS) is the generic term for a device which simultaneously performs the functions of detection of the residual current, comparison oF this value with the rated residual operating value and opening the protected circuit when the residual current exceeds this value.
For fixed domestic installations and similar applications we have two types :-

- Residual current operated circuit-breaker without integral over-current protection (RCCB's) which should comply with the requirements of IEC 1008
- Residual current operated circuit-breaker with integral overcurrent protection (RCBO's) which should comply with the requirements of IEC 1009

Both RCCB's and RCBO's are further divided into types depending on their operating function :

Type AC For which tripping is ensured for residual sinusoidal alternating currents, whether suddenly applied or slowly rising. Marked with the symbol.

Type A For which tripping is ensured for residual sinusoidal alternating currents and residual pulsating direct currents, whether suddenly applied or slowly rising . Marked with the symbol.

Type S For selectivity, with time-delay. Marked with the symbol.

S

RCCB's must be protected against short-circuits by means of circuit-breakers or fuses

RCBO's have their own in built short-circuit protection, up to it's rated value

The drawing opposite shows how a torroid is located around the line and neutral conductors to measure the magnetic fields created by the current flowing in these conductors. The sum of the magnetic fields set up by these currents (which takes into consideration both the magnitude and phase relationship of the currents) is detected by the torroid.

In a normal healthy circuit the vector sum of the current values added together will be zero. Current flowing to earth, due to a line earth fault, will return via the earth conductor, and regardless of load conditions will register as a fault. This current flow will give rise to a residual current (Ires) which will be detected by the device.

It is most important that the line and neutral conductors are passed through the torroid. A common cause of nuisance operation is the failure to connect the neutral through the device.

RCCBSs work just as well on three phase or three phase and neutral circuits, but when the neutral is distributed it must pass through the torroid.

RCCBs are not suitable for use on DC systems and unearthed networks.

RCCBSs – domestic installation
RCCBs can be installed in two ways:

1. whole house protection.
2. selective protection.

Whole house protection is provided typically by a consumer unit where the RCCBs device serves as the main switch. Although very popular this suffers from a disadvantage: all circuits are disconnected in the event of fault. Selective protection can be provided by associating the RCCBs with identified high risk circuits by adopting one or more of the following :

Principle

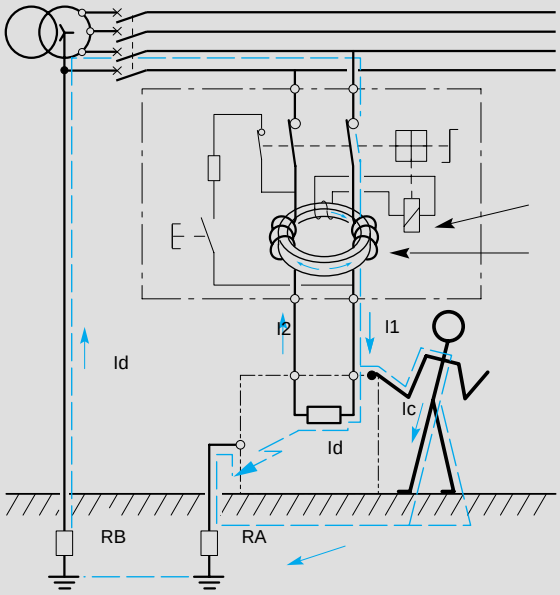

Current flowing through torroid in healthy circuit

$$I_{res} = I_1 + I_2 = 0$$

Current flowing through torroid in circuit with earth fault I_3

$$I_{res} = I_1 + I_2 + I_3 = I_3$$

- Split busbar consumer unit:

All circuits are fed via an overall isolator and selected circuits fed additionally via the RCCBs. Typical circuits fed direct are lighting, freezer, storage heating: and circuits fed via the RCCBs are socket outlets, garage circuits. This concept minimises inconvenience in the event of fault.

- Whole ring circuit
  A 30mA device adjacent to the consumer unit, which provides protection for the downstairs ring circuit, provides an easy installation with protection for all associated socket outlets. This represents the best solution for upgrading existing installations.

Nuisance tripping
All Hager RCCBs incorporate a filtering device preventing the risk of nuisance tripping due to transient voltages (lightning, line disturbances on other equipment...) and transient currents (from high capacitive circuit).

Pulsating DC fault current sensitive
Increasingly, semi-conductors are also extensively used in computers, VDUs, printers, plotters... all of which may be fed from the mains electrical supply. The presence of semi-conductors may result in the normal sinusoidal AC waveform being modified. For example, the waveform may be rectified or, as in asymmetric phase control devices, the waveform may be chopped. The resulting waveforms are said to have a pulsating DC component.

In the event of an earth fault occurring in equipment containing semi-conductor devices, there is a probability that the earth fault current will contain a pulsating DC component.

Standard type AC may not respond to this type of earth fault current and the intended degree of protection will not be provided.

Use of RCCBs

RCCBs offer excellent protection against earth fault currents; the main areas of application being as follows:

- **Zs value too high to allow disconnection in the required time**

Where the overcurrent protection or a circuit breaker cannot provide disconnection within the specified time because the earth fault loop impedance is too high the addition of RCCBs protection may well solve the problem without any other change in the system. Because of its high sensitivity to earth fault current and its rapid operating time, in most cases the RCCBs will ensure disconnection within the specified time. This is achieved without any detriment to overcurrent discrimination because, unlike the situation in a fuse based system, the increased sensitivity is obtained without increasing sensitivity to overcurrent faults. Use of RCCBs in this way can be particularly useful for construction sites and bathrooms where disconnection times are more stringent than for standard installations.
(Construction sites - 0.2s at 220-277V, bathrooms - 0.4s).

The limitation to this technique is the requirement that the rated residual operating current multiplied by Zs should not exceed 50V. This is to avoid the danger of exposed conductive parts reaching an unacceptably high voltage level.

Residual current protection can even be added to a completed distribution system where the value of Zs is excessive, either because of a design oversight or subsequent wiring modification.

- **Protection against shock by direct contact**

So far we have considered shock by indirect contact only.
Direct contact is defined thus:

Direct contact - contact of persons or livestock with live parts which may result in electric shock. The consideration here is not the hazard of parts becoming live as a result of a fault but the possibility of touching circuit conductors which are intentionally live.

RCCBs, although affording good protection against the potentially lethal effects of electric shock, must not be used as a the sole means of protection against shock by direct contact. The Electricity at Work Act recommends the use of RCCBs, "....danger may be reduced by the use of a residual current device but states that this should be "....considered as a second line of defence". The Wiring Regulations defines the other measures that should be taken i.e.

- insulation of live parts.
- barriers or enclosures.
- obstacles.
- placing live parts out of reach.

Additionally an RCCB used for this purpose should have:

- a sensitivity of 30mA
- an operating time not exceeding 40mS at a residual current of 150mA.

The specified sensitivity is based on research that has been carried out to estimate the effect various levels and duration of current can have on the human body. This experience is summarised in a graph shown in 'IEC 479-1: Effects of current passing through the human body'. A simplified version of this graph is shown. It shows that very small currents can be tolerated for reasonably long periods and moderate currents for very short periods. It can be seen, for instance, that 100mA for 100mS or 20mA for 500mS will not normally cause any harmful effect. 200mA for 200mS or 50mA for 500mS which are in Zone 3, would be more dangerous; and shock levels in Zone 4 carry a risk of lethal consequences.

The tripping characteristic for a 30mA RCCBs is also shown in the graph. It shows the level of current required to cause the RCCBs to trip, for example; 50mA will cause a trip but not 10mA. Comparing its characteristic with the various zones on the graph it can be seen that the 30mA RCCBs gives a very good measure of protection against the hazards associated with electric shock. Where a higher level of protection is required, for example in laboratories, 10mA devices are available.

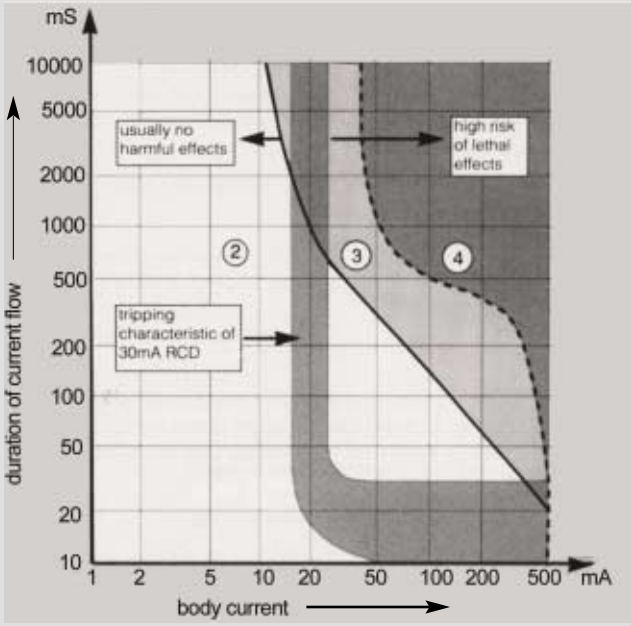

IEC 479-1

Note :
Although RCCBs are extremely effective devices they must never be used as the only method of protection against electric shock. With or without RCCBs protection all electrical equipment should be kept in good condition and should never be worked on live.

- **Protection against shock outside the equipotential bonding zone**
  Bonding conductors are used in an installation to maintain metallic parts, as near as possible, to the same potential as earth. Working with portable equipment outside this equipotential bonding zone, e.g. in the car park of a factory, introduces additional shock hazards. Socket outlets rated 32A or less 'which may be reasonably expected to supply portable equipment for use outdoors' should have at least one socket nominated for outdoor use. This socket should be equipped with RCCBs protection unless fed from an isolating transformer or similar device, or fed from a reduced voltage.

- **Protection in special situations**
  The use of RCCBs is obligatory or recommended in the following situations:

  - caravans: 30mA RCCBs should be used.

  - TT systems.

  - swimming pools: 30mA RCCBs for socket outlets in Zone B obligatory; recommended in Zone C.

  - agricultural and horticultural: 30mA RCCBs for socket outlets and for the purpose of protection against fire, RCCBS ≤ 0.5A sensitivity.

  - construction sites: 30mA RCCBs recommended.

- **Portable equipment**
  With the exception mentioned above, where a socket is specifically designated for work outside the equipotential bonding zone, the Wiring Regulations demand the use of RCCBs to protect the users of portable equipment. It is widely recognised that their use has made a significant contribution to safety in the workplace and the home.

- **Protection against fire hazards**
  The provisions in the Wiring Regulations for protection against shock by indirect contact ensure rapid disconnection under earth fault assuming the fault has negligible impedance. Under such conditions the fault current, as we have seen, is sufficiently great to cause the overcurrent protection device to quickly disconnect the fault. However high impedance faults can arise where the fault current is sufficient to cause considerable local heat without being high enough to cause tripping of the overcurrent protective device. The heat generated at the point of the fault may initiate a fire long before the fault has deteriorated into a low impedance connection to earth.

The provision of residual current protection throughout a system or in vulnerable parts of a system will greatly reduce the hazard of fire caused by such faults.

- **PEN conductors**
  The use of RCCBSs with PEN conductors is prohibited. A PEN conductor is a single conductor combining the functions of neutral conductor and protective conductor. This being so, when the PEN conductor is taken through the torroid of an RCCBS, earth faults will go undetected because the return path for the earth fault current is included in the residual sum.

- **Auxiliary contacts**
  A range of auxiliaries, alarm and shunt contacts are available for Hager RCCBs.

- **Supply entry**
  Top or bottom feed.

CB/RCCBs co-ordination

RCCBs	Short circuit current capacity of the RCCBS only	With MCB's				
		MT 6-63A B	MU 6-63A C	MC 0.5-63A C	NC 0.5-63A C	ND 1-63A D
2 poles						
16A	1500A	6kA	6kA	6kA	10kA	6kA
25A	1500A	6kA	6kA	6kA	10kA	6kA
40A	1500A	6kA	6kA	6kA	10kA	6kA
63A	1500A	6kA	6kA	6kA	10kA	6kA
80A	1500A	6kA	6kA	6kA	10kA	6kA
4 poles						
16A	1500A	6kA	6kA	6kA	6kA	4.5kA
25A	1500A	6kA	6kA	6kA	6kA	4.5kA
40A	1500A	6kA	6kA	6kA	6kA	4.5kA
63A	1500A	6kA	6kA	6kA	6kA	4.5kA
80A	1500A	6kA	6kA	6kA	6kA	4.5kA
100A	1500A	6kA	6kA	6kA	6kA	4.5kA

Product presentation

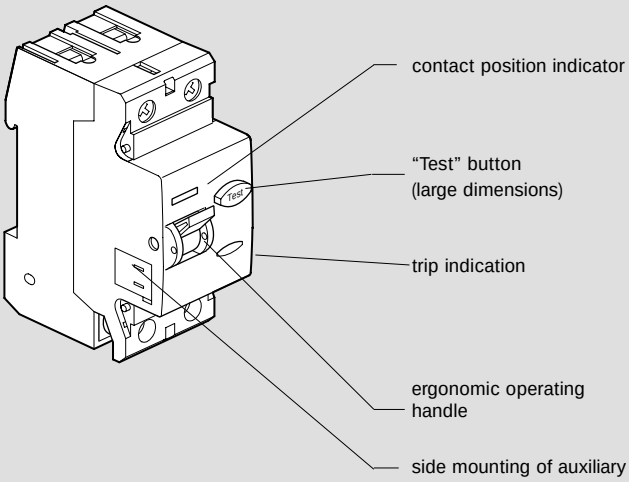

Contact positioning indicator

The mechanical indicator on the front of RCCB shows the physical position of the contacts.
- Red indication for closed contacts
- Green indication for open contacts

The green indication is the guarantee that the contacts are open and that the terminals are not live.

Trip indicator

The status of the RCCB can be visualised by the colour of the trip indicator in addition to the position of the operating lever.
- Grey indication for normal conditions (even when operating lever is in ON/OFF position)
- Yellow indication for tripped condition, operating lever in OFF position.

Similar condition exists when TEST button is pushed or RCCB is remotely tripped via protection auxiliaries.

Positive contact indication

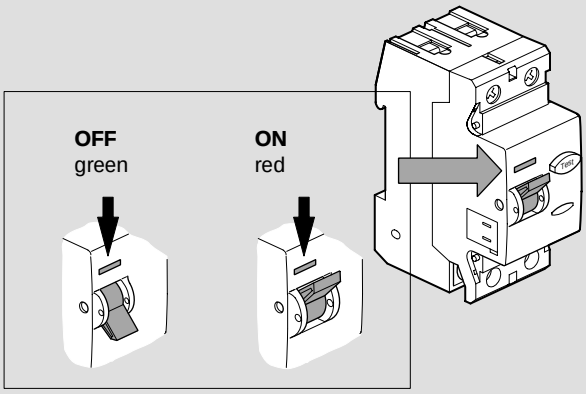

Earth leakage fault indication

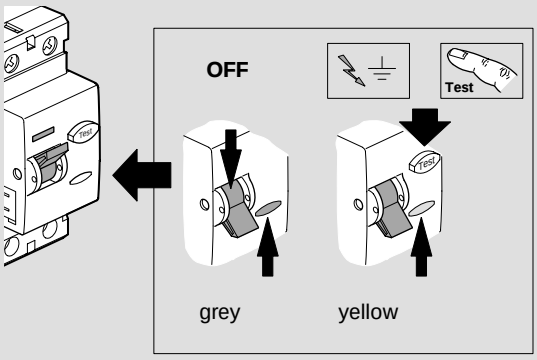

Mounting of auxiliaries

lit is possible to mount two auxiliaries on RCCB.
- Auxiliary CZ 001 for ON/OFF status and TRIP indication is mounted first on the left hand side of the RCCB.
- Additional protection auxiliary MZ 203 to MZ 206 can be mounted besides CZ 001.

Auxiliaries association possibilities

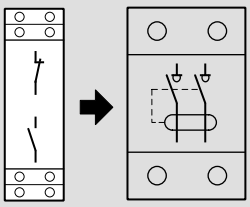

CZ 001
(CA+SD)

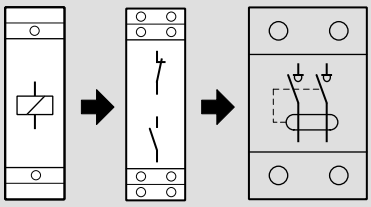

MZ 203... + CZ 001
MZ 206 (CA+SD)

Technical specifications

	non adjustable earth leakage relays		adjustable earth leakage relays		
	HR 400	**HR 402**	**HR 410**	**HR 420**	**HR 425**
power supply voltage ∼ 50/60 Hz	230 V ± 20%				
controlled main voltage ∼ 50/60 Hz	50 to 700 V				
imput power	3 VA		5 VA		5 VA
control output	inverter free of potential				
breaking capacity (standard output, positive security, pre-alarm 50%)	6 A / 250 V AC1				
sensitivity IΔn	0,03 A	0,3 A	0 / 0,03 A / 0,1 A / 0,3 A / 0,5 A / 1 A / 3 A / 10 A		
tripping (± 20%)	instantaneous		instantaneous; delayed 0,1 s / 0,3 s / 0,4 s / 0,5 s / 1 s / 3 s		
memory	storage of default by “reset” button				
acceptable overload at torroid level	30 kA / 100 ms				
voltage of test and reset buttons	100 to 250 V				
max. length of test/reset connection	200 m				
max. length of torroid/relay connection	50 m maxi with twisted cables of 1,5 mm□ - 25m non twisted cable				
relay connect. : cage terminals rigid	1,5□ to 4□				
flexible	1□ to 2,5□				
connect. torroid rigid	1,5□ to 4□				
flexible	1□ to 6□				
operating temperature	-10 to +55 °C				
storage temperature	-25 to +70 °C				

main characteristics

① **“reset” button :** in case of tripping, output remains switched and return to normal position is obtained either :
- by pressing the “reset” clear pushbutton
- or cutting off the power supply

② **“test” button :** pressing the “test” button allows a fault simulation which operates the relay and the output contacts.

③ **fault signal LED :** switched on when a fault is detected, intermittent light when break in connection relay/core.

④ **power indicator :**
indicates well working of product.

⑤ **IΔn selector :** 0,03 / 0,1 / 0,3 / 0,5 / 1 / 3 / 10 A

⑥ **time delay selector Δt :** 0 / 0,1 / 0,3 / 0,4 / 0,5 / 1 / 3 s (± 20 %)

⑦ **standard output (1 OF) :** tripping at 85 % of IΔn ± 15 %
goes from 0 to 1 when :
- failure of the torroid/core connection,
- fault current in the monitored installation.

⑧ **positive safety outlet (1 OF) :**
switching to state 1 : by switching on of the power :
- switching to state 0 : failure of the torroid/relay connection,
- fault current in installation,
- fault supply or fault on internal relay.

⑨ **safety output (1 F) :** contact closes at 50 % of IΔn (± 15 %)

⑩ **remote test and reset**

⑪ **optical scale display :** indicates permanently the value of leakage current, 5 to 15 %, 15 to 30 %, 30 to 45 %, 45 to 60 % and 60 to 75 % de IΔn.

Product presentation

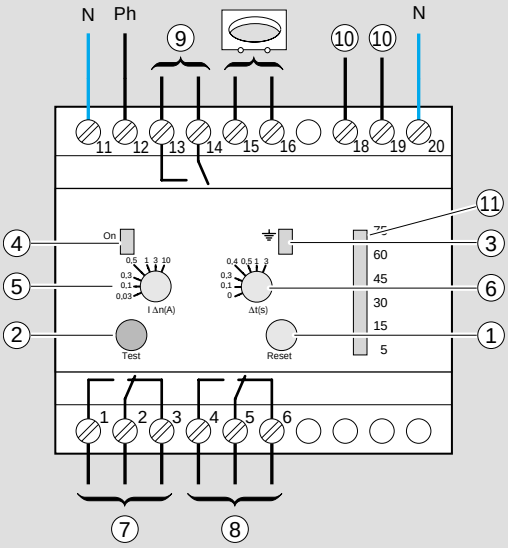

sealable settings : a sealable cover prevents interference once the settings have been made.

Electrical connections

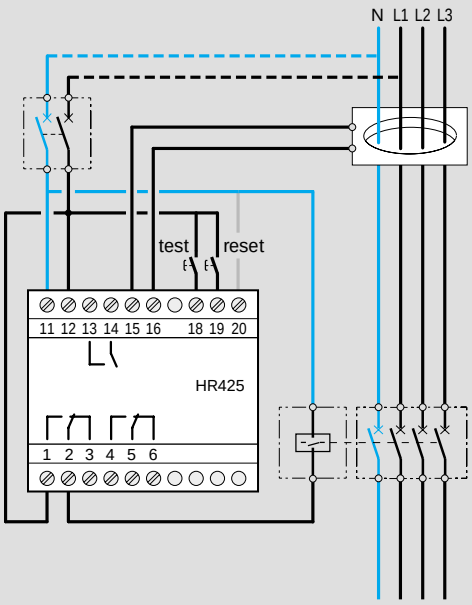

Circular torroids:
HR 800

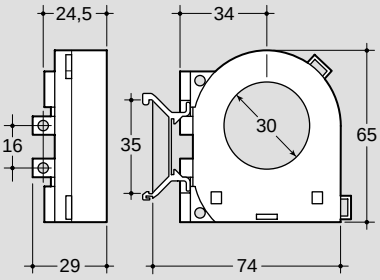

HR 801 to HR 805

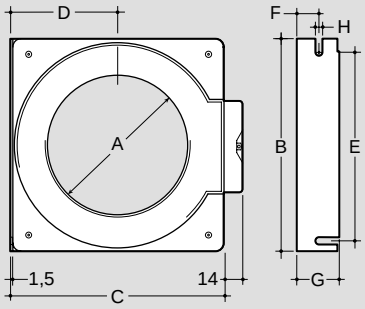

Rectangular torroids :
HR 830, HR 831, HR 832

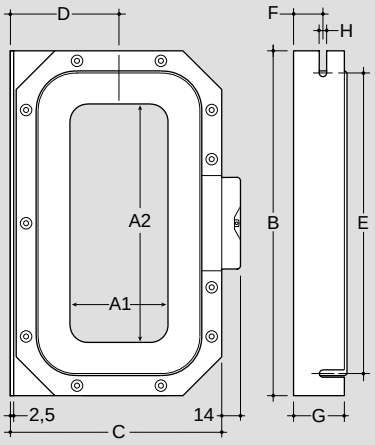

Dimensions for circular and rectangular torroids

refe-rences	size (en mm)									
	A	A1	A2	B	C	D	E	F	G	H
HR 801	ø 35	-	-	92	86	43,5	74	17	32,5	5,5
HR 802	ø 70	-	-	115	118	60,5	97	17	32,5	5,5
HR 803	ø 105	-	-	158	162,5	84,5	140	15	32,5	5,5
HR 804	ø 140	-	-	202	203	103,5	178	21	32,5	7,5
HR 805	ø 210	-	-	290	295	150	265	23	32,5	7,5
HR 830	-	70	175	260	162	85	225	22	40	7,5
HR 831	-	115	305	400	225	116	360	25	48	8,5
HR 832	-	150	350	460	270	140	415	28	48	8,5

Opening rectangular torroids :

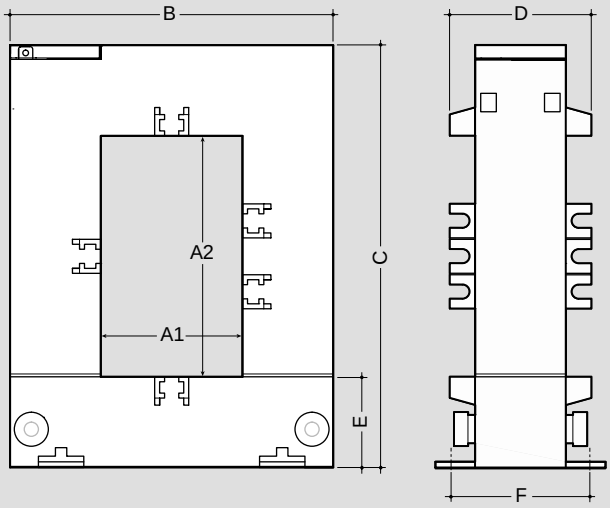

Dimensions for opening rectangular torroids

	A1	A2	B	C	D	E	F
HR 820	20	30	89	110	41	32	46
HR 821	50	80	114	145	50	32	46
HR 822	80	80	145	145	50	32	46
HR 823	80	121	145	185	50	32	46
HR 824	80	161	184	244	70	37	46

Torroids capacity

on copper cables ▶ / Ø torroid inside ▼		U 1000 R2V cable single pole	U 1000 R2V cable single pole	U 1000 R2V cable 2 poles	U 1000 R2V cable 4 poles	U 1000 R2V cable 4 pole partially stripped multipole	U 1000 R2V cable 2 pole partially stripped multipole
		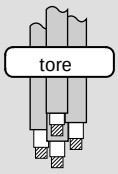	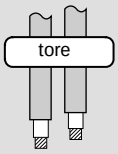	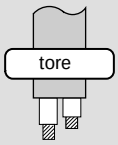	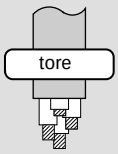	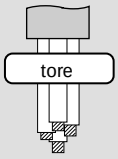	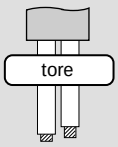
30	HR 800	4 x 16□	2 x 50□	35□	35□	35□	50□
35	HR 801	4 x 25□	2 x 70□	35□	50□	35□	70□
70	HR 802	4 x 185□	2 x 400□ ou 4 x 150□	35□	240□	35□	300□
105	HR 803	4 x 500□	2 x 630□ ou 4 x 185□	35□	300□	35□	300□
140	HR 804	4 x 630□	2 x 630□ ou 4 x 240□	35□	300□	35□	300□
210	HR 805	4 x 630□	2 x 630□ ou 4 x 240□	35□	300□	35□	300□
70 x 175	HR 830	4 x 630□	2 x 630□ ou 4 x 240□	35□	300□	35□	300□
115 x 305	HR 831	4 x 630□	2 x 630□ ou 4 x 240□	35□	300□	35□	300□
150 x 350	HR 832	4 x 630□	2 x 630□ ou 4 x 240□	35□	300□	35□	300□
20 x 30	HR 820	4 x 16□	2 x 70□	35□	10□	35□	16□
50 x 80	HR 821	4 x 240□	2 x 630□ ou 4 x 185□	35□	120□	35□	150□
80 x 80	HR 822	4 x 500□	2 x 630□ ou 4 x 185□	35□	300□	35□	300□
80 x 120	HR 823	4 x 630□	2 x 630□ ou 4 x 240□	35□	300□	35□	300□
80 x 160	HR 824	4 x 630□	2 x 630□ ou 4 x 240□	35□	300□	35□	300□

on copper cables ▶ / Ø torroid inside ▼		H07 V - U 1 pole	H07 V - U 1 pole
		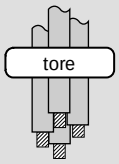	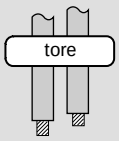
30	HR 800	4 x 35□	2 x 70□
35	HR 801	4 x 50□	2 x 95□
70	HR 802	4 x 240□	2 x 400□ ou 4 x 185□
105	HR 803	4 x 400□	2 x 400□ ou 4 x 240□
140	HR 804	4 x 400□	2 x 400□ ou 4 x 240□
210	HR 805	4 x 400□	2 x 400□ ou 4 x 240□
70 x 175	HR 830	4 x 400□	2 x 400□ ou 4 x 240□
115 x 305	HR 831	4 x 400□	2 x 400□ ou 4 x 240□
150 x 350	HR 832	4 x 400□	2 x 400□ ou 4 x 240□
20 x 30	HR 820	4 x 10□	2 x 35□
50 x 80	HR 821	4 x 185□	2 x 240□
80 x 80	HR 822	4 x 400□	2 x 400□ ou 4 x 240□
80 x 120	HR 823	4 x 400□	2 x 400□ ou 4 x 240□
80 x 160	HR 824	4 x 400□	2 x 400□ ou 4 x 240□

Installation example

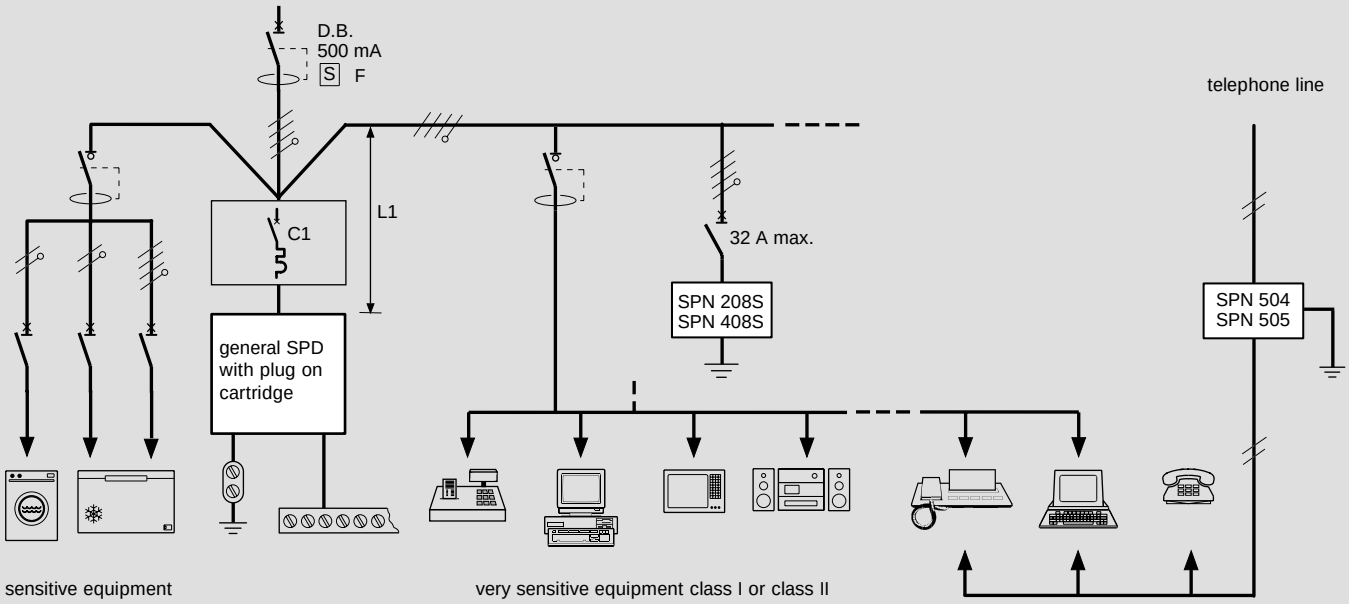

Some installation rules for SPDs

- General SPD protects the whole installation by flowing the lightning current out to the earth. Fitted in directly dowstream the type S differential function or delayed for system TT and TN-S.
- The cable length L1 must be reduced to less than 0,5m
- The resistance of the earth connection must be weakest possible (approx. 10 Ω) and only one is requested by installation,
- SPDs SPN 208S and SPN 408S protect very sensitive devices of class I and class II.
- A cable length of at least 1m is requested between general and secondary SPD to ensure a minimum impedance in order to avoid the simultaneous bringing into conduction of both SPDs,
- SPDs SPN 504 and SPN 505 protect analog or digital telephone lines from very sensitive receivers.

N.b. : when SPD is fitted downstream of differential system, the system should preferably be selectif to avoid inopportune setting of.

Choice of disconnection device

The choosen device is an MCB

Selection chart for disconnection device according to the SPD type

general SPD	C1 (1)
SPN 265R **SPN 465R**	32 A curve C
SPN 140C **SPN 240R - SPN 240D** **SPN 440R - SPN 440D**	32 A curve C
SPN 215R - SPN 215D **SPN 415R - SPN 415D**	32 A curve C

(1) The breaking capacity of MCB must be choosen according to the short circuit intensity at the head of the installation and according to the number of poles (1,2 or 4)

Distressing of SPD

Successive discharging of current due to lightning reduces progressively the performance of SPD's, with the consequence of a possible short circuit for the installation.
For this reason, all our SPDs are fitted with an automatic thermic and dynamic disconnection device
LED on front indicates the good working of the device :
- for normal version :
  green = OK red = replacement
- for version with reserve indicator :
  green = OK yellow = caution red = replacement
- for version with electric LED for SPDs for fine protection
  green = OK LED off = replacement

Warranty
Warranty can not be applied for SPDs as their life expectancy depends on the perturbation level absorbed to protect the electric installation.

SPDs with plug in cartridge

Presentation of 1 pole and multi pole SPDs :
available in two versions :
- base with an auxiliay contact and cartridges with reserve indicator
- base without auxiliary contact and cartridges with end of life LED

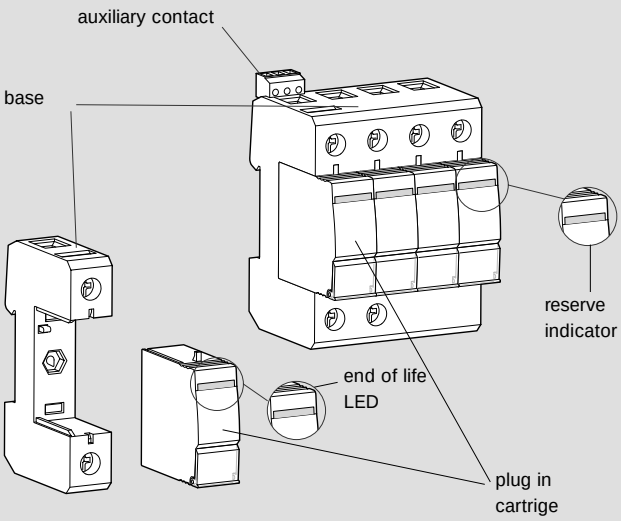

Keying system for fitting of neutral and phase cartridge

Neutral plug in cartridges can not be fitted in slots for phase cartridges and visa versa

On the front of the cartridge, a mechanical LED indicates the state of SPD

with reserve indicator

end of life LED

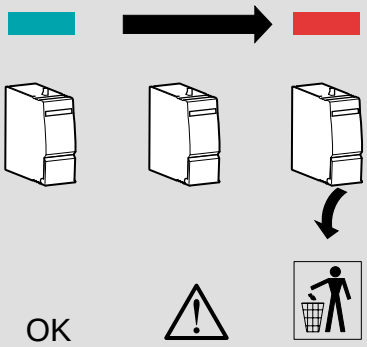

Auxiliary contact for signalling transfert

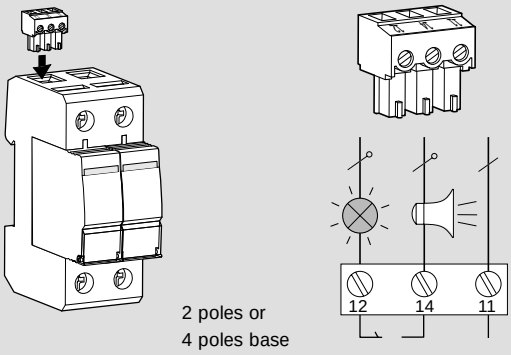

auxiliary contact connection capacity	mini maxi	0,5 mm□ 1,5 mm□	
remote signalling	voltage ominal current	230 V∼ 1 A	250 V ⎓ 0,1 A

Connection diagrams

Single pole SPDs : SPN 140C
protection only in common mode

IT / TN-C

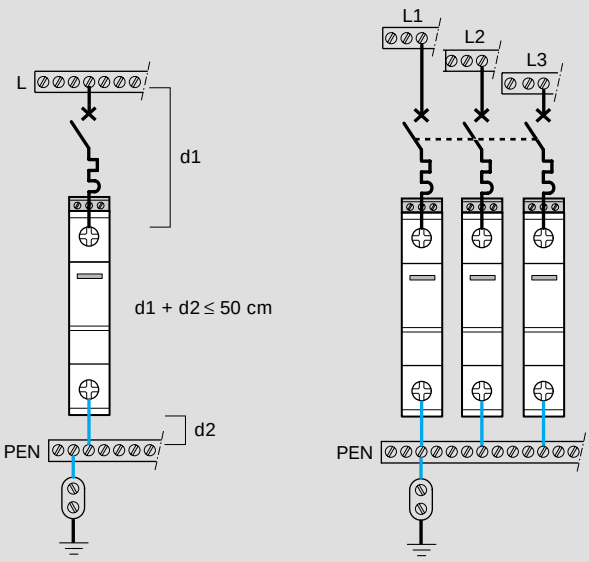

Multi pole SPDs : SPN 215D ... SPN 465R
protection is assured in both common and differential modes without adding devices

TT / TN-S

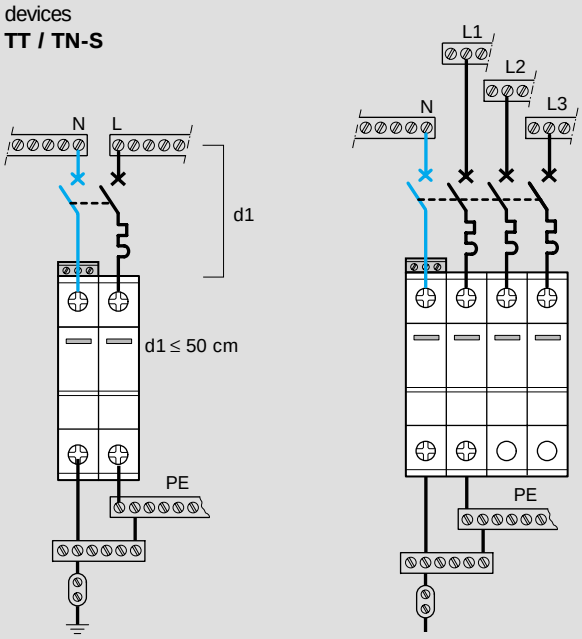

Technical characteristics of single pole SPDs

references		SPA 212A SPA 412A
installation exposure level (risk)		very high
installation of SPDs		in parallel
nominal voltage Un frequency		230 V∼ 50/60 Hz
Max. continuous operating voltage Uc		255 V
voltage protection level Up		2,5 kV
protection mode		common differential
shock current	limp	12,5 kA
disconnection value	Ifi	12,5 kA
resistance to short-circuit	Icc alone with associated protect° of max. 125 A in series or 315 A in parrallel	12,5 kA 25 kA
working temperature		-40 à + 60 °C
end of life LED		yes
earthing systems		TT - TNS
max.connection capacity	flexible rigid	25 mm□ 35 mm□
screw head		PZ3

références		SPN 140C
installation exposure level (risk		medium
installation of SPDs		in parallel
nominal voltage Un frenquency		230 V∼ 50/60 Hz
Max. continuous operating voltage Uc		440 V
voltage protection level Up		2 kV
discharge current capacity 8/20 µs wave	nominal current In max. current Imax	15 kA 40 kA
degree of protection		IP 20
short circuit resistance Icc	(MCB - curve C)	20 kA - 32 A
temperature	working storage	-20 à + 60°C -40 à +70°C
end of live LED		SPN 140C
reserve indicator + auxiliary contact		-
domestic building	collective/individual industrial/commercial	yes yes
earthing systems		IT, TN-C
max. connection capacity (Ph, N, E)	flexible rigid	25 mm□ 35 mm□
screw head		PZ2

technical characteristics of multipole SPDs

references		SPN 265R-SPN 465R	SPN 240R, SPN 440R SPN 240D, SPN 440D	SPN 215R, SPN 415R SPN 215D, SPN 415D
installation exposure level (risk)		very high	medium	low
installation of SPDs		in parallel	in parallel	in parallel
nominal voltage Un frenquency		230/400 V∼ 50/60 Hz	230/400 V∼ 50/60 Hz	230/400 V∼ 50/60 Hz
Max. continuous operating voltage Uc	between Phase / Neutral between Neutre / PE	255 V 275 V	255 V 275 V	255 V 275 V
protection mode	common differential	yes yes	yes yes	yes yes
voltage protection level Up		1,5 kV	1,2 kV	1,0 kV
discharge current capacity 8/20 µs wave	nominal current In maxial current Imax	20 kA 65 kA	15 kA 40 kA	5 kA 15 kA
degree of protection		IP 20		
short circuit resistance Icc	(MCB - curve C)	20 kA - 32 A	20 kA - 32 A	10 kA - 32 A
working temperature		-40°C à +60°C		
end of life LED		-	SPN 240D - SPN 440D	SPN 215D - SPN 415D
reserve indicator + auxiliary contact		SPN 265R - SPN 465R	SPN 240R - SPN 440R	SPN 215R - SPN 415R
domestic buildings	collective / individual industrial / commercial	yes yes		
earthing systems		TT TN - S	TT TN - S	TT TN - S
connection capacity (Ph, N, E)	flexible rigid	25 mm□ 35 mm□		
screw head		PZ2		

Technical characteristics of secondary SPDs (fine protection)

references		**SPN 208S**	**SPN 408S**
installation exposure level (risk)		low	low
installation of SPDs		in parallel	in parallel
nominal voltage Un frequency		230 V∼ 50/60 Hz	230/400 V∼ 50/60 Hz
Max. continuous operating voltage Uc	between N / PE between Phase and Neutral	255 V 255 V	255 V 255 V
protection mode	common differential	yes yes	yes yes
voltage protection level Up		1,0 kV	1,0 kV
discharge current capacity 8/20 µs wave	nominal current In maximal current Imax	2 kA 8 kA	2 kA 8 kA
degree of protection		IP 20	IP 20
short ciruit resistance Icc (with fuse or associated MCB)		6 kA - 32 A	6 kA - 32 A
temperature	working storage	-25°C à +40°C -25°C à +40°C	-25°C à +40°C -25°C à +40°C
well functioning indicator		green LED	green LED
domestic buildings	collective / individual industrial / commercial	yes yes	yes yes
earthing systems		TT, IT, TN - S	TT, IT, TN - S
connection capacity (Ph, N, E)	flexible min./max. rigid min./max.	2,5/6 mm□ 6/10 mm□	2,5/6 mm□ 6/10 mm□
screw head		PZ1	

SPDs SPN 208S and SPN 408S

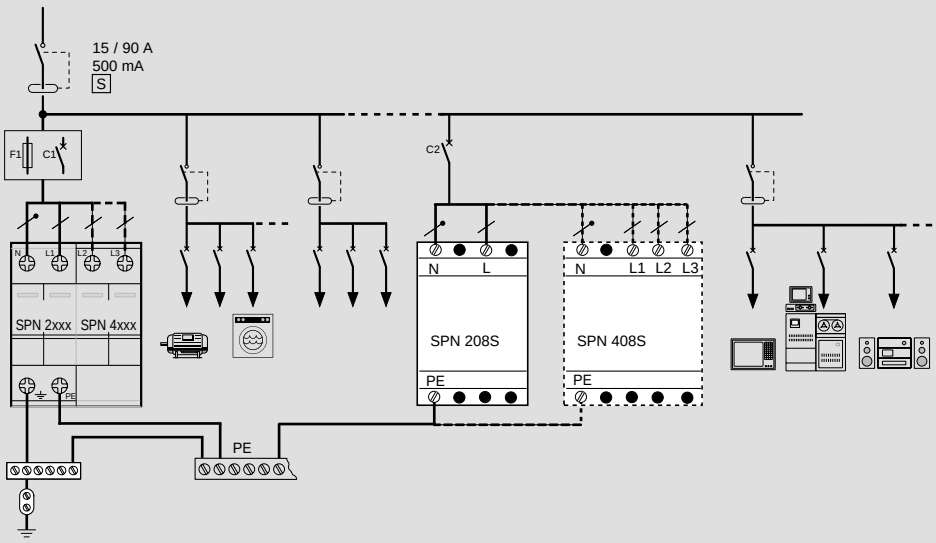

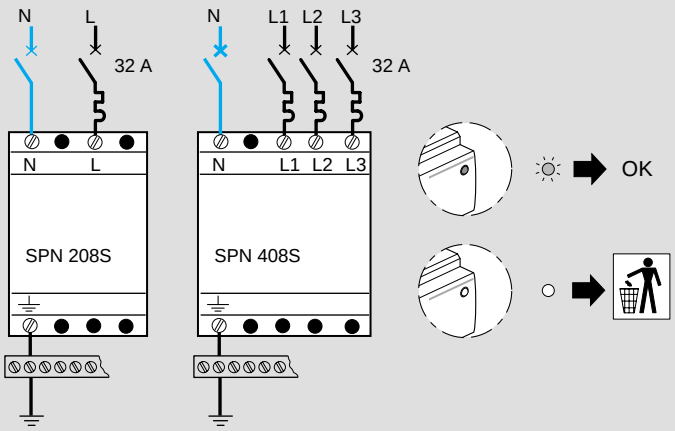

Coordination : between main SPD and secondary level SPDs, this coordination allows to reduce the protection level Up to ≤ 800 V

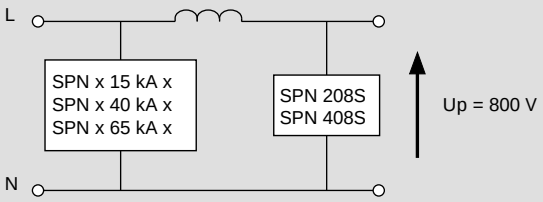

Technical characteristics of the SPDs for telephone line

references		SPN 504	SPN 505
surge protective device		digital line (Numéris, RNIS, ISDN...)	analog line
installation of SPDs		in series	in series
ingress protection		IP 10	IP 10
nominal voltage Un		5 V / 40 V	130 V
maximum continious operating voltage Uc		7,5 V / 60 V	170 V
voltage protection level Up		600 V	600 v
voltage protection level	common mode differential mode	yes yes	yes yes
series impedence		1,0 Ω	4,7 Ω
discharge current wave	In (total) In (line)	10 kA 5 kA	5 kA / 10 kA (RJ 45 / vis) 2,5 / 5 kA (RJ 45 / vis)
working temperature		-40°C + 60°C	-40°C + 60°C
connection	in out	screw screw / RJ 45	screw / RJ 45 screw / RJ 45
connection capacity (Ph, N, T)	flexible min./max. rigid min./max.	0,08 mm□ 2,5 mm□	0,08 mm□ 2,5 mm□
applications		digital line ISDN, RNIS	analog line

Electrical connection

SPN 504

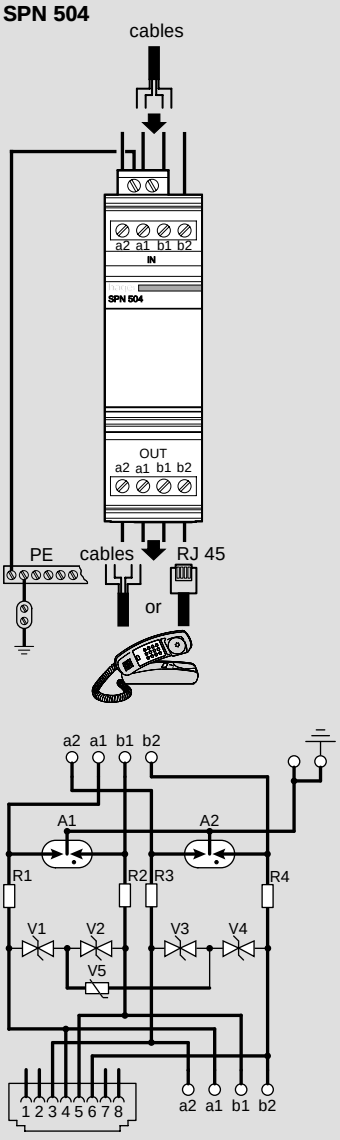

SPN 505

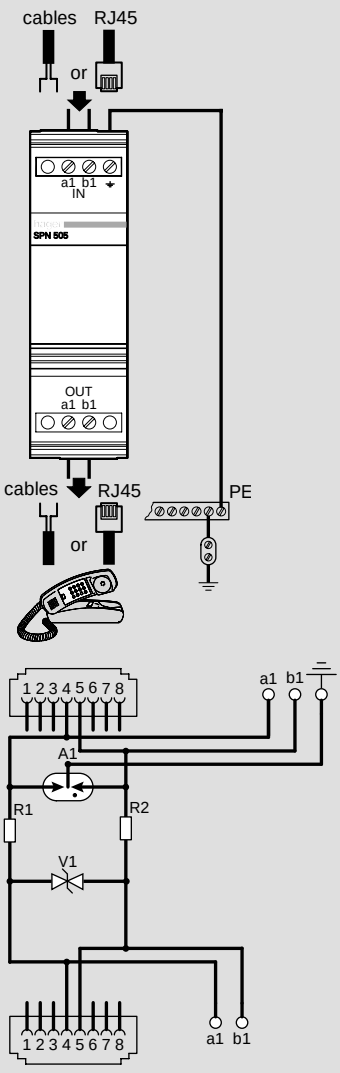

Electrical characteristics

- electrical supply : 230 V / 400 V∼
- ambiant temperature range : from -25 to +55 °C
- working life : 100 000 operations - categorie : AC3
- maximum : 40 operations / hour
- tropicalized : normale all climates (TC)
- connection capacity :
  flexible wire : from 1 to 4□ rigid wire : from 1,5 to 6□
- insulation voltage : 6000 V
- frequency : 40 - 60 Hz

Single phase connection diagram

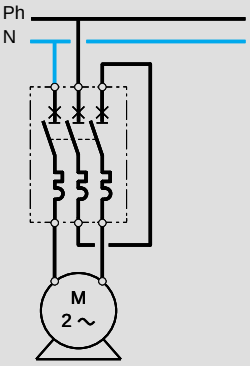

Breaking capacity

	230 V	400 V	230/400 V + fuse gl
MM 501N MM 502N MM 503N MM 504N MM 505N MM 506N MM 507N MM 508N MM 509N MM 510N	100 kA	100 kA	100 kA
MM 511N MM 512N MM 513N	16 kA	16 kA	50 kA

tripping curve

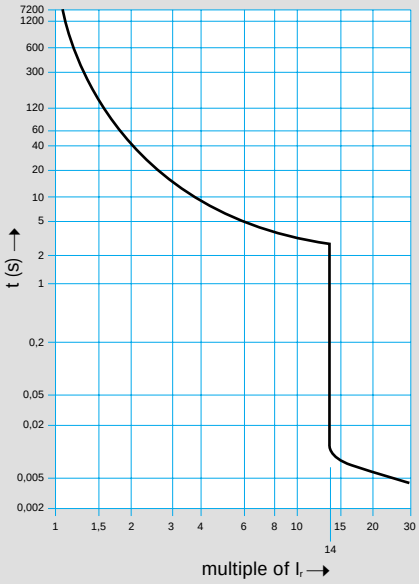

Auxiliaries

● **auxiliary contacts 1O + 1F : MZ 520N**
230 V∼ 3,5 A
400 V∼ 2 A

● **cauxiliary contacts 1 F : MZ 522N**
230 - 400 V∼ 1 A

● **default signal contact 2 F : MZ 527N**
change state on short-circuit (magnectic tripping)

change state on overload and short-circuit (magnetic and thermic tripping)

● **release : MZ 523N**
230 V∼
de 0,7 à 1,1 Un

● **under voltage release : MZ 528N** 230 V∼, **MZ 529N** 400 V∼
maintain voltage 0,85 x Un
fall voltage 0,7 à 0,35 x Un

● **waterproof enclosure IP 55 : MZ 521N**
allows to control the motor starter via external rotary handle

● **emergency stop button : MZ 530N**
- synchronized
- synchronized unlocking by key : **MZ 531N**

allows the emergency stop of motors by tripping auxiliary connected to MCB . (MZ 523N - MZ 528N - MZ 529N)

Connection of auxiliaries (without tool)

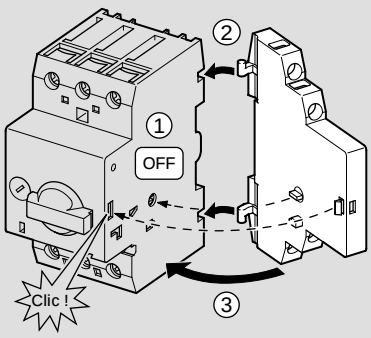

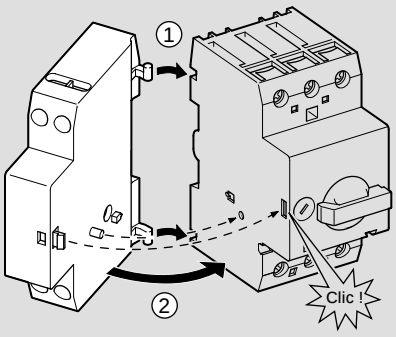

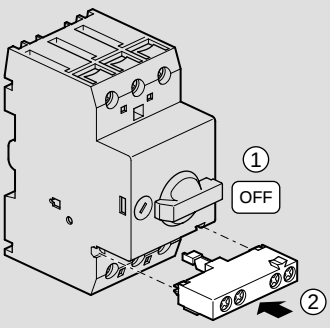

Hager worldwide - Europe

AUSTRIA :
Hager Electro Ges. m. b. H.
Dieselgasse, 3
2333 Leopoldsdorf / AUSTRIA
Tel. (43) 02235 / 44600
Fax (43) 02235 / 44545

BELGIUM :
S.A. Hager Modulec N.V.
Boulevard Industriel 61
BRUXELLES 1070 / BELGIUM
Tel. (32) 2 529 47 11
Fax (32) 2 527 12 61

CZECH REPUBLIC :
Hager Electro s.r.o.
Podebradská 186/56
18066 Praha 9 - Hloubetin
CZECH REPUBLIC
Tel. (42) 02 66 10 73 08
Fax (42) 02 66 10 73 10

CYPRUS :
N.P. LANITIS LTD
106 Gladstonos Street
3032 LIMASSOL
CYPRUS
Tel. (357)-25 819030
Fax (357)-25 819075
e.mail : info@nplanitis.com

DENMARK :
ELPEFA A/S
Postbox 180
2670 GREVE / DENMARK
Tel. (45) 43 95 95 95
Fax (45) 43 95 95 90

ESTONIA :
Hager Süsteemid OÜ
Türi 10d
11313 TALLINN
Tél. +372 655 61 46
Fax +372 655 61 68

FINLAND :
URHO TUOMINEN Oy
Palopellonkatu 7 - PL 33
04250 KERAVA / FINLAND
Tel. (358) 9 274 6411
Fax (358) 9 274 641 41

FRANCE :
Hager Electro S.A.
132, Bld d'Europe
B.P. n° 3
67215 OBERNAI Cedex
FRANCE
Tel. (33) 03 88 49 50 50
Fax (33) 03 88 49 50 03

GERMANY :
Hager Electro GmbH
Im Hofgarten
66131 SAARBRÜCKEN
GERMANY
Tel. (49) 68 93 94 50
Fax (49) 68 93 94 53 76

Hager Electro GmbH
Zum Gunterstal
66440 BLIESKASTEL
GERMANY
Tel. (49) 68 42 94 50
Fax (49) 68 42 94 56 76

GREAT BRITAIN :
Hager Ltd
Hortonwood 50
TELFORD, Shropshire
TF1 4FT / U.K.
Tel. (44) 1952 - 677 899
Fax (44) 1952 - 670 271
http://www.hagergroup.com.uk

GREECE :
Hager Hellas
Iapetou Street 33
11364 ATHENS / GREECE
Tel. (30) 1 864 50 90
Fax (30) 1 865 09 56

HUNGARY :
Hager Kft
Aradi utca 16
1043 BUDAPEST
Tél. +361 36 95 689
Fax +361 36 93 601

ICELAND :
Johan RÖNNING Hf
Sundaborg 15
104 REYKJAVIK / ICELAND
Tel. (354) 5 20 08 00
Fax (354) 5 20 08 88

IRELAND :
Hager Nolan Ltd
Techna House
Terenure Road East
DUBLIN 6 / IRELAND
Tel. (353) 1 - 490 6611
Fax (353) 1 - 490 1274

ITALY :
Hager Lume S.p.A.
Via Battistotti Sassi n. 11
20133 MILANO / ITALY
Tel. (39) 02 70 10 74 40
Fax (39) 02 70 10 74 30

LATVIA :
SIA Hager Sistémas
Bauskas 58
1004 RIGA
Tél. +371 780 86 80
Fax +371 780 86 81

LITHUANIA :
Hager Polo UAB
Laisves pr 77
2600 VILNIUS
Tél. +370 5 274 28 27
Fax +370 5 274 28 38

MALTA :
International Trading Co.
White House Buildings
Mountbatten Street
BLATA L-BAJDA / MALTA
Tel. (356) 21 2402 91
Fax (356) 21 2431 86
http://www.itc-malta.com

NETHERLANDS :
Hager Electro b.v.
Larenweg 36
5234 KA's Hertogenbosch
NETHERLANDS
Tel. (31) 73 6428 584
Fax (31) 73 6442 674

NORWAY :
Hager Systemer A/S.
Industriveien 8b
Postboks 391
1473 SKÅRER / NORWAY
Tel. (47) 67 97 50 11
Fax (47) 67 97 20 55

POLAND :
Hager Polo Sp.zo.o.
ul. Domaniewska 39A
02-672 WARSZAWA
Tél. +48 22 640 28 80
Fax +48 22 640 28 81

PORTUGAL :
Hager SEM SA
(Sistemas Electricos Modulares)
Estrada para Polima
Complexo Meramar
Armazem C
Abóboda
2775 PAREDE / PORTUGAL
Tel. (351) 21 445 84 50
Fax (351) 21 445 84 54

RUMANIA :
Hager Romania SRL
B-dul Precizei 32, Sect. 6
cod 062204
BUCURESTI Romania
Tél. +40 21 434 09 37
Fax +40 21 434 16 60

SPAIN :
Hager Sistemas S.A.
Paratge Coll-Blanc s/n
Apartado 39
08430 LA ROCA DEL VALLES
SPAIN
Tel. (34) 902 42 2232
(34) 93 842 4730
Fax (34) 93 842 2132

SWEDEN :
Hager Elektro AB
Box 9040
400 91 GÖTEBORG / SWEDEN
Tel. (46) 31 706 39 00
Fax (46) 31 706 39 50

SWITZERLAND :
Hager Tehalit AG
Moosweg 8,
Postfach 431
8501 FRAUENFELD
SWITZERLAND
Tel. (41) 052 723 24 00
Fax (41) 052 723 24 05

Hager worldwide - Overseas

AUSTRALIA
Hager B&R Ltd
Unit 14 Riverside Centre
148 James Ruse Drive
(cnr River Road West)
North Parramatta NSW 2150
AUSTRALIA
Tel. (61) 2 - 9687 0077
Fax (61) 2 - 9687 0011 or 22
http://www.hagergroup.com.au

BAHRAIN, KUWAIT, OMAN, QATAR, SAUDI ARABIA, U.A.E., IRAN, EGYPT, PAKISTAN, AFGHANISTAN, IRAK and INDIA
Hager Tehalit Systems
M.E. FZE
POB 61056
JEBEL ALI
DUBAI / U.A.E.
Tel. (971) 4 - 883 63 64
Fax (971) 4 - 883 79 93
e-mail : htsme@emirates.net.ae
http://www.hagergroup.com.ae

CHINA
Hager Beijing Office
N° 308, He Qiao Building
8A Guang Hua Road
Chaoyang District
100026 BEIJING / CHINA
Tel. (86) 10-6503 5170
Fax (86) 10-6503 5173

EGYPT
M.B. for Engineeering & Contracting
10, Omar Ebnel Khattab Street
Dokky, Giza
EGYPT
Tel. (20) 2-3375283/7490592
Fax (20) 2-7490592
e-mail : tbshalaby@link.net

ERITREA
Electrolight Pvt. Ltd.
PO Box 4642
ASMARA / ERITREA
Tel. (291) 1 121265
Fax (291) 1 126759
e-mail : elelight@gemel.com.er

GHANA
Grand Pacific Ltd.
PO Box 140
KORLE-BU
ACCRA / GHANA
Tel. (233) 21 667037, 665778
Fax (233) 21 670316
e-mail : gpacific@ucomgh.com

HONG KONG
Hager Electro Ltd
Suite 310 Chinachem Golden Plaza
77 Mody Road
Tsimshatsui East, Kowloon
HONG KONG
Tel. (852) 2688.0228
and 0234
Fax (852) 2688.0336

JORDAN
Dasouki Trading Corp.
PO Box 815422
11180 AMMAN / JORDAN
Tel. (962) 6 465 27 11
Fax (962) 6 464 74 72
e-mail : dasouki@index.com.jo

LEBANON
Cesar Debbas & Fils
Imm. Debbas
Corniche El-Nahr
BEIRUT 2069 6810
LEBANON
Tel. (961) 1 44 27 40
Fax (961) 1 44 75 62
e-mail : cdf@debbas.com.lb

LYBIA
ALWAQAEA Co.
Saadum Street
MISURATA
LYBIA
Tel. (218) 51 613471
Fax (961) 51 612390

KENYA
Nabico Enterprises Ltd.
PO Box 39639, 00623
Kirinyaga Road
NAIROBI / KENYA
Tel. (254) 20 336445, 224088
Fax (254) 20 225952
e-mail : nabico@africaonline.co.ke

MALAYSIA
Hager Engineering (M) SDN BHD
N° 12, Jalan 4/91A
Taman Shamelin Perkasa
Cheras
56100 KUALA LUMPUR / MALAYSIA
Tel. (60) 3 - 983 33 53
Fax (60) 3 - 983 23 35
http://www.hagergroup.com.my

MAURITIUS
Simelec
116 Royal Road, G.R.N.W.
PO Box 739
Bell Village, PORT LOUIS
MAURITIUS
Tel. (230) 212 10 73
Fax (230) 212 87 62
e-mail : simelec@intnet.mu

SINGAPORE :
Hager Electro Systems PTE Ltd
23, New Industrial Road
04/04 Century Industrial Building
SINGAPORE 536209
Tel. (65) 383 1030
Fax (65) 383 0230
http://www.hagergroup.com.sg

SOUTH AFRICA
Electromechanica (Gauteng)
9/11 Data Crescent, Ormonde Ext. 8
PO Box 38980
BOOYSENS 2016
SOUTH AFRICA
Tel. (27) 11 249 5000
Fax (27) 11 496 2779
http://www.em.co.za

Electromechanica (Cape Province)
44 Freeway Park
cnr Upper Camp & Berkley Rd.
PO Box 267
MAITLAND
SOUTH AFRICA
Tel. (27) 21 510 5030
Fax (27) 21 510 5050

Electromechanica (Kwazulu Natal)
17 Mc Donald Road
PO Box 17317
CONGELLA 4013
SOUTH AFRICA
Tel. (27) 31 205 1571
Fax (27) 31 205 1625

SYRIA
Constructions Electriques Hanino
PO Box 5236
Abbara Al - Hamra
ALEPPO / SYRIA
Tel. (963) 21 211 33 73
Fax (963) 21 211 33 76

OTHER COUNTRIES
Hager Electro S.A.S.
PO Box 3
67215 OBERNAI Cedex
FRANCE
Tel. (33) 3 88 49 50 50
Fax (33) 3 88 49 51 44
e-mail : hageroverseas@hager.fr

Notes

Notes

The success is in the system

hager group

Hager Electro S.A.S
132, boulevard d'Europe
B.P. 3
67215 Obernai cedex
France
Tel +33 (0)3 88 49 50 50
Fax +33 (0)3 88 49 51 44
e-mail : hageroverseas@hager.fr
http://www.hager.com