DVD+RW Receiver

LX7500R/01/04/05

Service
Service
Service

Service Manual

For servicing the DVD+RW Basic Engine we refer to
Service Manual 3122 785 14850
DVD+RW Basic Engine VAD8041
Only designated workshops can perform these repairs!

DVD+ReWritable

TABLE OF CONTENTS

Technical specification....2
Location of printed circuit boards....4
Warnings & Safety....5
Brief Operating Instructions....6
Dismantling Instructions....15
Service hints....22
Diagnostic Software....23
Block Diagrams....61
Wiring Diagram....65
Exploded Views....66

Circuit Diagrams and PWB Layouts
Switched Mode Power Supply....69
Auxiliary Supply board....73
Display/Control board....75
Standby board....76
Tray light boards left/right....76
Combi board....78
Amplifier board....87
Loudspeaker Socket board....92
Analog Video (AV) board....93
µP Sub board (CECO)....101
Digital board....105

Alignments....117
Circuit- and IC descriptions....120
Abbreviations A/V-, Digital board....148

Spare parts list....150

Revision list....181

**CLASS 1
LASER PRODUCT**

© Copyright 2004 Philips Consumer Electronics B.V. Eindhoven, The Netherlands
All rights reserved. No part of this publication may be reproduced, stored in a retrieval system or transmitted, in any form or by any means, electronic, mechanical, photocopying, or otherwise without the prior permission of Philips.

Published by MS 0448 Service Audio Printed in The Netherlands Subject to modification

GB 3103 785 25301

Version 1.1

PHILIPS

TECHNICAL SPECIFICATION

General:

Mains voltage :230V ±10% for EU versions
:120V ±10% for USA version
Mains frequency :50 Hz - 60Hz
Power consumption mains :100 W
Power consumption standby :≤ 20 W
Power consumption low power stand-by :≤ 5.5 W

TV Tuner

Test equipment:Fluke 54200 TV Signal generator
Test streams:PAL BG Philips Standard test pattern

System: PAL B/G, PAL D/K, SECAM L/L', PAL I

RF - Loop Through:
Frequency range :45 MHz - 860 MHz
Gain: (ANT IN - ANT OUT) :-6 dB to 0dB

Radio Interference:
input voltage /3 tone method (+40 dB min) :no limit

Receiver:
PLL tuning with AFC for optimum reception
Frequency range :45.25 MHz - 857 MHz
Sensitivity at 40 dB S/N :≤ 60dBmV at 75W (video unweighted)

Video Performance:
Channel : 25 / 503,25 MHz,
Test pattern : PAL BG PHILIPS standard test pattern
RF Level :74 dBV
Measured on SCART 1
Frequency response :0 - 4.00 MHz +0-4dB
Group delay (0.1 MHz - 4.4 MHz) :0 nsec ± 150nsec

Audio Performance:
Audio Performance Analogue - HiFi:

Frequency response at SCART 1
(L+R) output :100 Hz - 12 kHz / 0± 3dB
S/N according to DIN 45405, 7, 1967 and PHILIPS standard test pattern video signal :FM: ≥ 50dB
AM ≥ 45dB, unweighted
Harmonic distortion (1 kHz, ± 25 kHz deviation) :FM ≤ 1.5%
AM ≤ 2%

Audio Performance NICAM:

Frequency response at SCART 1
(L+R) output :40 Hz - 15 kHz 0 ± 3dB
S/N according to DIN 45405, 7, 1967 and PHILIPS standard test pattern video signal :≥ 60 dB unweighted
Harmonic distortion (1 kHz) :≤ 0.5 %

Tuning
Automatic Search Tuning
scanning time without antenna :typ. 3 min. PAL
stop level (vision carrier) :≥ 37dBmV
Maximum tuning error of a recalled program :± 62.5 kHz
Maximum tuning error during operation :± 100 kHz

Tuning Principle
automatic B,G, I, DK and L/L'detection
manual selection in "STORE" mode

Audio Tuner

Frequency range FM :87.5 MHz - 108 MHz
AM :531 kHz – 1602 kHz (EU)
530 kHz – 1700 kHz (USA)
Sensitivity at 26 dB S/N FM :≤ 5µV
AM :≤ 3250µV/m

IF FM :10.7MHz
AM :450kHz

Harmonic distortion
FM (RF=1mV, ∆f=75kHz) : ≤ 3% (1% typ.)
AM (RF=50mV/m, m=80%) : ≤ 5% (4% typ.)

Analogue Inputs

SCART 1 (Connected to TV)

Pin Signals:
1 Audio R 1.8V RMS
2 Audio R
3 Audio L 1.8V RMS
4 Audio GND
5 Blue/Chroma GND
6 Audio L
7 Blue out/ Chroma in: 0.7Vpp ± 0.1V into 75 Ohm (*)
8 Function switch <2V = TV
>4.5V / <7V = asp. ratio 16:9 DVD
>9.5V / <12V = asp. ratio 4:3 DVD
9 Green GND
10 P50 control
11 Green 0.7Vpp ± 0.1V into 75 Ohm (*)
12 Nc
13 Red/Chroma GND
14 fast switch GND
15 Red out/ Chroma out 0.7Vpp ± 0.1V into 75 Ohm (*)
± 3dB 0.3Vpp Chroma (burst)
16 fast switch RGB/ CVBS or Y <0.4V into 75 Ohm = CVBS
>1V / <3V into 75 Ohm = RGB
17 Y/CVBS GND OUT
18 Y/CVBS GND IN
19 CVBS/Y 1Vpp ± 0.1V into 75 Ohm (*)
20 CVBS/Y
21 Shield

SCART 2 (Connected to AUX)

Pin Signals:
1 Audio R 1.8V RMS
2 Audio R
3 Audio L 1.8V RMS
4 Audio GND
5 Blue/Chroma GND
6 Audio L
7 Blue in/ Chroma out ± 3dB 0.3Vpp Chroma (burst)
8 Function switch
9 Green GND
10 P50 control
11 Green
12 Nc
13 Red/Chroma GND
14 fast switch GND
15 Red in/ Chroma in
16 fast switch RGB/ CVBS or Y
17 CVBS GND OUT
18 CVBS GND IN
19 CVBS/Y/RGB sync 1Vpp ± 0.1V into 75 Ohm (*)
20 CVBS/Y
21 Shield

(*) for 100% white

Audio/Video Front Input Connectors
Audio
Input voltage : 2 Vrms
Input impedance : >10kW

Video - Cinch
Input voltage : 1 Vpp ± 3dB
Input impedance : 75 W

Video - YC (Hosiden)
Input voltage Y :1Vpp ± 3dB
Input impedance Y :75 W
Input voltage C :burst 300 mVpp ± 3 dB
Input impedance C :75 Ohm

Video Performance

All outputs loaded with 75 Ohm
SNR measurements over full bandwidth without weighting.

SCART (RGB)
SNR : > -65 dB on all outputs
Bandwidth : 4.8 MHz ± 2dB

Audio Performance CD

Cinch Output Rear

Output voltage 2 channel mode	:1.8Vrms ± 2dB
Channel unbalance (1kHz)	:<1dB
Crosstalk 1kHz	:<-85dB
Crosstalk 20Hz-20kHz	:<-70dB
Frequency response 20Hz- 20kHz	:±0.5dB max
Signal to noise ratio	:>80 dB
Dynamic range 1kHz	:>75dB
Dynamic range 20Hz-20kHz	:>70dB
Distortion and noise 1kHz	:<-70dB
Distortion and noise 20Hz-20kHz	:<-55dB
Intermodulation distortion	:<-77dB
Mute	:>95dB
Outband attenuation	:>40dB above 30kHz

Scart Audio

Output voltage 2 channel mode	:1.4Vrms ± 2dB
Channel unbalance (1kHz)	:<1dB
Crosstalk 1kHz	:<-85dB
Crosstalk 20Hz-20kHz	:<-70dB
Frequency response 20Hz- 20kHz	:± 0.5dB max
Signal to noise ratio	:>80 dB
Dynamic range 1kHz	:>75dB
Dynamic range 20Hz-20kHz	:>70dB
Distortion and noise 1kHz	:<-70dB
Distortion and noise 20Hz-20kHz	:<-55dB
Intermodulation distortion	:<-70dB
Mute (spin-up, pause, access)	:>85dB
Outband attenuation	:>40dB above 25kHz

Digital Output

Coaxial

CDDA/ LPCM (incl MPEG1)	:according IEC958
MPEG2, AC3 audio	:according IEC1937
DTS	:according IEC1937, amendment 1

Digital Video Input (IEEE 1394)

Applicable Standards
Implementation according:
IEEE Std 1394-1995
IEC 61883 - Part 1
IEC 61883 - Part 2 SD-DVCR (02-01-1997)
Specification of consumer use digital VCR's using 6.3 mm magnetic tape - dec.1994
Mechanical connection according: Annex A of 61883-1

P50 System Control

Via SCART pin no. 10

Power Amplifier

Power stage protection : temperature and short circuit

Output power (1kHz, 10% distortion)
European versions : 100W rms at 3Ω (one channel driven)
USA version : 75W rms at 3Ω (FTC rated)
Frequency response
Subwoofer : 35Hz - 150Hz -5dB
Center, L, R, SL, SR : 150Hz - 20.000Hz ±3dB

Distortion : ≤ 0,7% at 1 kHz and 1W output power
Channel difference : ≤ 2dB at 1 kHz and 1W output power
Channel crosstalk : ≤ -45dB at 250Hz - 10kHz
Signal/Noise ratio : ≥ 80dB (A-weighted)

Headphone

3.5mm stereo jack, 8 - 600 Ohm

Output level : typ.15mW at 32Ω
Frequency response : 30Hz - 20.000 Hz -5dB
Distortion : ≤ 0.1% at 1 kHz and 1mW output
Channel difference : ≤ 1,5dB at 1 kHz
Channel crosstalk : ≤ -30dB at 1kHz
Signal/Noise ratio : ≥ 75dB (A-weighted)

Dimensions and Weight

Height of feet :10mm
Apparatus tray closed :WxDxH :435 x 335 x 81mm
Weight without packaging :appr. 5.4 kg (main set)
appr. 24.5 kg (speaker boxes)
Weight in packaging :appr. 36.7 kg

Laser Output Power & Wavelength

DVD
Output power during reading :0.8mW
Output power during writing :20mW
Wavelength :660nm

CD
Output power :0.3mW
Wavelength :780nm

LOCATION OF PRINTED BOARDS

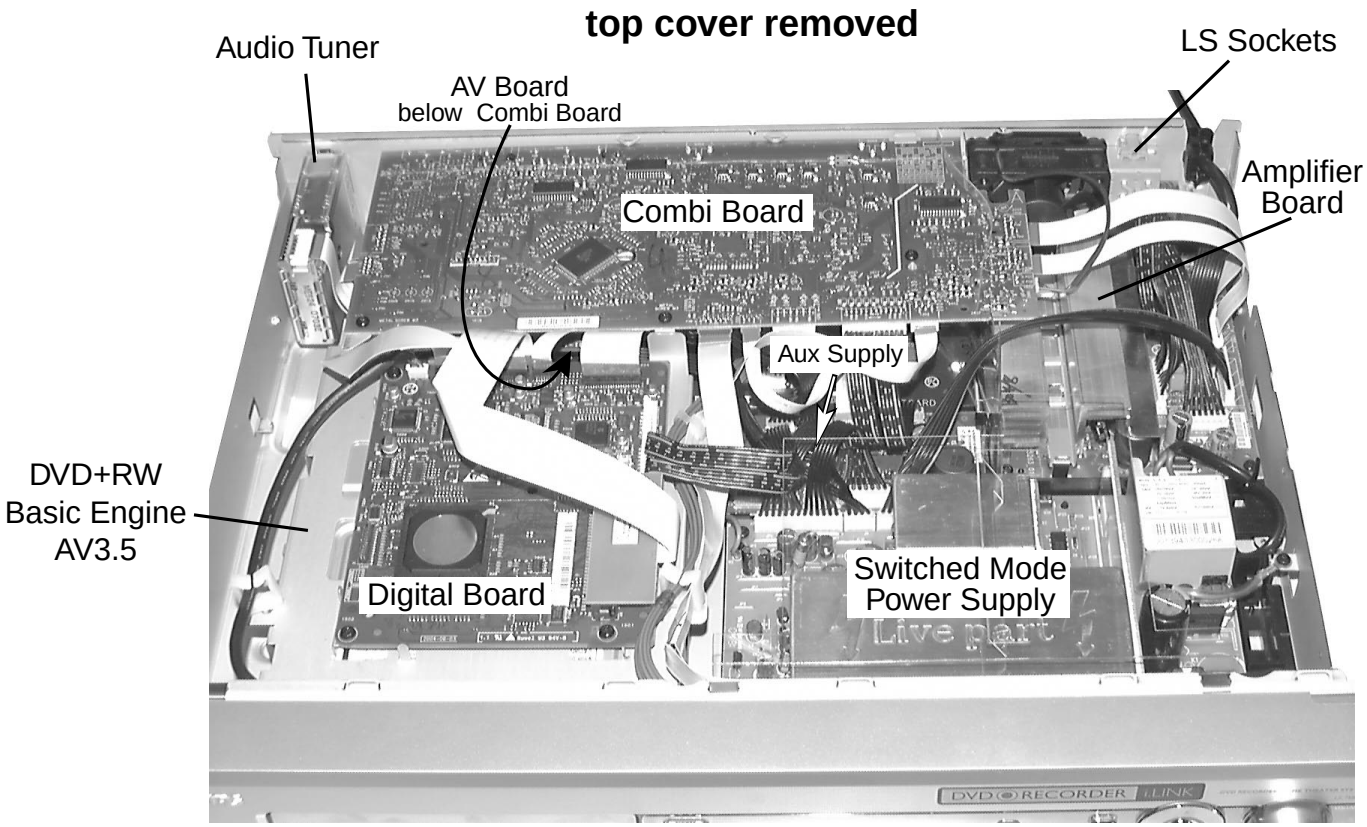

figure 1

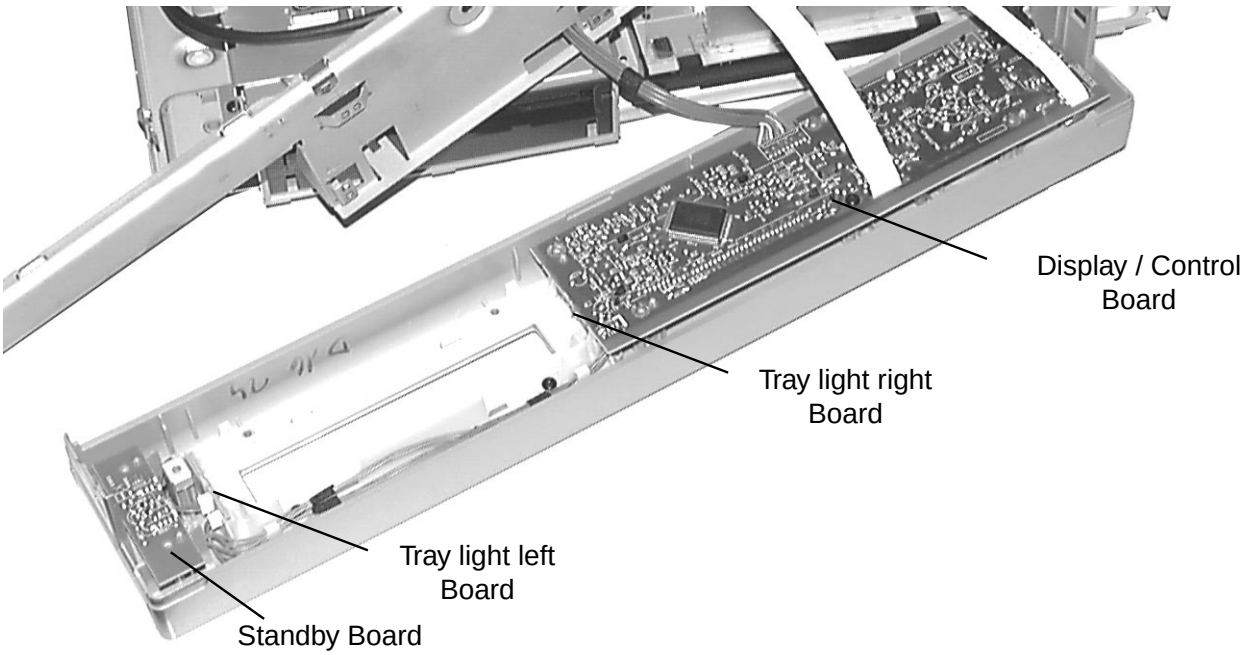

figure 2

ESD

(GB) WARNING
All ICs and many other semiconductors are susceptible to electrostatic discharges (ESD). Careless handling during repair can reduce life drastically.
When repairing, make sure that you are connected with the same potential as the mass of the set via a wristband with resistance. Keep components and tools at this potential.

(F) ATTENTION
Tous les IC et beaucoup d´autres semi-conducteurs sont sensibles aux décharges statiques (ESD). Leur longévite pourrait être considérablement écourtée par le fait qu´aucune précaution nést prise à leur manipulation.
Lors de réparations, s´assurer de bien être relié au même potentiel que la masse de l´appareil et enfileer le bracelet serti d´une résistance de sécurité.
Veiller à ce que les composants ainsi que les outils que l´on utilise soient également à ce potentiel.

(D) WARNUNG
Alle ICs und viele andere Halbleiter sind empfindlich gegenüber elektrostatischen Entladungen (ESD).
Unsorgfältige Behandlung im Reparaturfall kann die Lebensdauer drastisch reduzieren.
Sorgen Sie dafür, daß Sie im Reparaturfall über ein Pulsarmband mit Widerstand mit dem Massepotential des Gerätes verbunden sind.
Halten Sie Bauteile und Hilfsmittel ebenfalls auf diesem Potential.

(NL) WAARSCHUWING
Alle IC´s en vele andere halfgeleiders zijn gevoelig voor electrostatische ontladingen (ESD).
Onzorgvuldig behandelen tijdens reparatie kan de levensduur drastisch doen vermindern. Zorg ervoor dat u tijdens reparatie via een polsband met weerstand verbonden bent met hetzelfde potentiaal als de massa van het apparaat.
Houd componenten en hulpmiddelen ook op ditzelfde potentiaal.

(I) AVVERTIMENTO
Tutti IC e parecchi semi-conduttori sono sensibili alle scariche statiche (ESD).
La loro longevità potrebbe essere fortemente ridatta in caso di non osservazione della più grande cauzione alla loro manipolazione. Durante le riparationi occorre quindi essere collegato allo stesso potenziale che quello della massa delápparecchio tramite un braccialetto a resistenza.
Assicurarsi che i componenti e anche gli utensili con quali si lavora siano anche a questo potenziale.

(GB) AVAILABLE ESD PROTECTION EQUIPMENT :

KIT ESD3 (small tablemat, wristband, connection box, extension cable and earth cable)	4822 310 10671
wristband tester	4822 344 13999

SAFETY

(GB)
Safety regulations require that the set has to be restored to its original condition and parts which are identical with those specified be used. Replace safety components only by components identical to the original ones.
Safety components are marked by the symbol ⚠

(F)
Les normes de sécurité exigent que l`appareil soit remis à l`état d`origine et que soient utilisées les pièces de rechange identiques à celles spécifiées.
Les composants de sécurité sont marqués ⚠

(D)
Bei jeder Reparatur sind die geltenden Sicherheitsvorschriften zu beachten. Der Originalzustand des Gerätes darf nicht verändert werden. Für Reparaturen sind Bauteile gleicher Spezifikation zu verwenden. Für Sicherheitsbauteile sind Originalersatzteile zu verwenden.
Sicherheitsbauteile sind durch das Symbol ⚠ markiert.

(NL)
Veiligheidsbepalingen vereisen, dat het apparaat in zijn oorspronkeliijke toestand wordt teruggebracht en dat onderdelen, identiek aan de gespecificeerde, worden toegepast.
De Veiligheidsonderdelen zijn aangeduid met het symbool ⚠

(I)
Le norme di sicurezza estigono che l´apparecchio venga rimesso nelle condizioni originali e che siano utilizzati i pezzi di ricambiago identici a quelli specificati.
Componenty di sicurezza sono marcati con ⚠

(GB) **DANGER**: Invisible laser radiation when open. AVOID DIRECT EXPOSURE TO BEAM.

CLASS 1
LASER PRODUCT

(S) Varning !
Osynlig laserstrålning när apparaten är öppnad och spärren är urkopplad. Betrakta ej strålen.

(DK) Advarsel !
Usynlig laserstråling ved åbning når sikkerhedsafbrydere er ude af funktion. Undgå udsaettelse for stråling.

(FIN) Varoitus !
Avatussa laitteessa ja suojalukituksen ohitettaessa olet alttiina näkymättömälle laserisäteilylle. Älä katso säteeseen !

(GB)
After servicing and before returning the set to customer perform a leakage current measurement test from all exposed metal parts to earth ground, to assure no shock hazard exists.
The leakage current must not exceed 0.5mA.

(F)
"Pour votre sécurite, ces documents doivent être utilisés par des spécialistes agréés, seuls habilités à réparer votre appareil en panne".

BRIEF OPERATING INSTRUCTIONS

The following excerpt of the Owner´s Manual serves as a very short introduction to the set.
The complete Owners Manual can be downloaded in several languages from the Internet site of Philips Customer Care Center: **www.p4c.philips.com**

English

Controls and connections

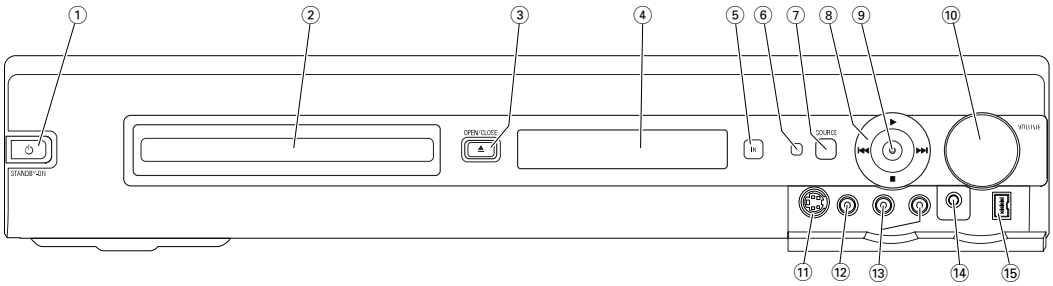

Controls on the front

① ⏻ **STANDBY·ON**
switches the set on or to standby.

② DVD recorder drawer

③ **OPEN/CLOSE ▲**
opens/closes the DVD recorder drawer.

④ display

⑤ **SOURCE**
selects a source.

⑥ IR sensor

⑦ Standby LED

⑧ ▶
starts playback

▶▶|
DVD: skips to the beginning of the next chapter/title/track of the inserted disc, searches forwards.
TUNER: skips to the next preset radio station.

■
stops playback or recording.

|◀◀
DVD: skips to the beginning of the current or previous chapter/title/track of the inserted disc, searches backwards.
TUNER: skips to the previous preset radio station.

⑨ **RECORD**
starts recording a TV channel or from an external video source (while recording the button will be illuminated).

⑩ **VOLUME**
adjusts the volume.

Connections on the front

⑪ **CAM 1 / S-VIDEO**
connect to the S-video output of your Hi-8 or S-VHS camcorder.

⑫ **CAM 1 /VIDEO**
connect to the video (CVBS) output of your camcorder.

⑬ **CAM 1 /AUDIOL/R**
connect to the audio output of your camcorder.

⑭ **PHONES**
3.5 mm headphone socket

⑮ **CAM 2 / DV IN**
connect to the i.LINK output of your Digital Video (DV) or Digital 8 camcorder.

Controls and connections

English

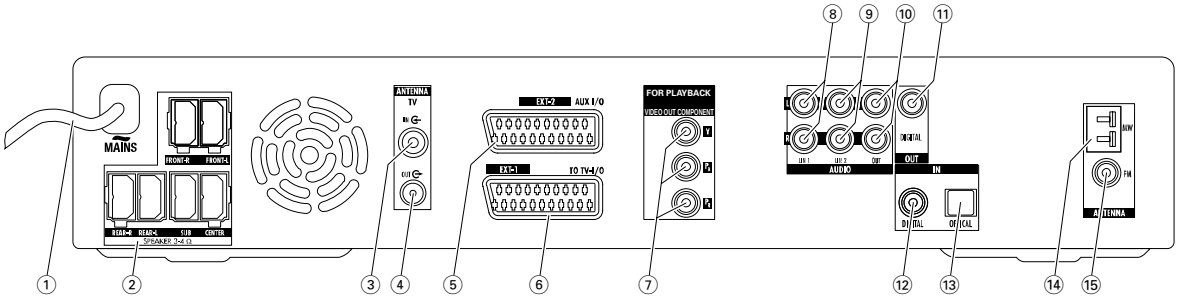

Connections on the rear

① **MAINS ~**
After all other connections have been made, connect the mains lead to the wall socket.

② **FRONT-R, FRONT-L, REAR-R, REAR-L, SUB, CENTER**
connect the supplied speakers.

③ **TV ANTENNA / IN**
connect the TV antenna.

④ **TV ANTENNA / OUT**
connect to the TV antenna input of your TV .

⑤ **EXT-2 AUX I/O**
connect to the Scart sock et of external video equipment.

⑥ **EXT-1 TO TV-I/O**
connect to the Scart socket of the TV.

⑦ **FOR PLAYBACK / VIDEO OUT COMPONENT Y P_B P_R**
connect to the Component Video or Progressive Scan input of your TV.

⑧ **AUDIO/ LIN1 L/R**
connect to the analogue audio output of external equipment (e. g. tape deck, CD changer , …).

⑨ **AUDIO/ LIN2 L/R**
connect to the analogue audio output of external equipment (e . g. tape deck, CD changer , …).

⑩ **AUDIO /OUT L/R**
connect to the analogue audio input of external equipment (e. g. tape deck, …).

⑪ **OUT / DIGITAL**
connect to the digital coaxial input of digital equipment.

⑫ **IN / DIGITAL**
connect to the digital coaxial output of digital equipment.

⑬ **IN / OPTICAL**
connect to the digital optical output of digital equipment.

⑭ **ANTENNA / MW**
connect the MW antenna.

⑮ **ANTENNA / FM**
connect the FM antenna.

Before starting with the connections, make sure all equipment you want to connect as well as the DVD recorder system are disconnected from the mains supply.

English

Remote control

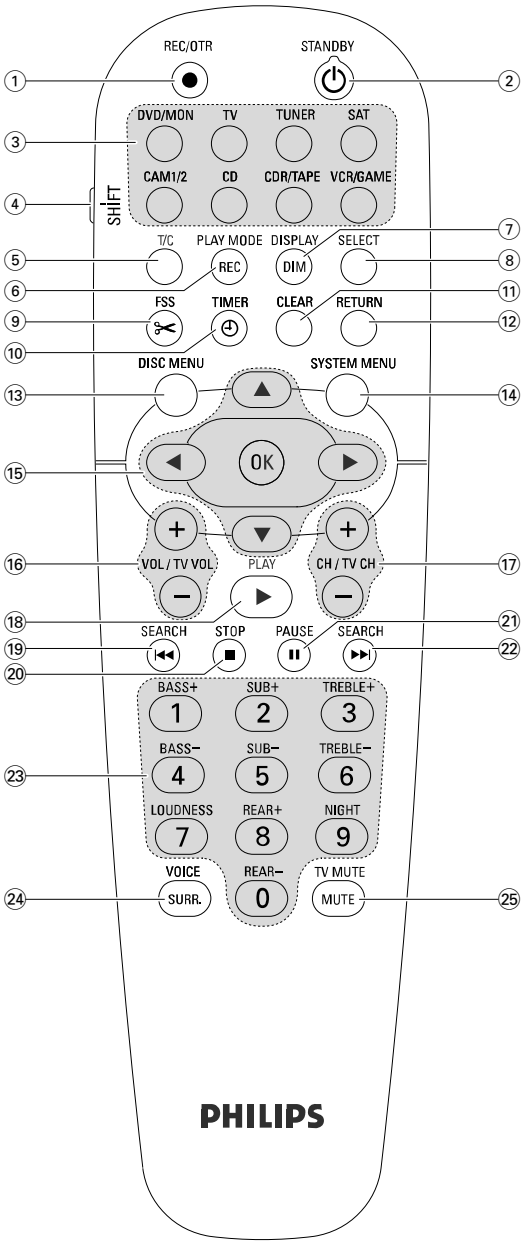

Remote control buttons

① **REC/OTR**
starts recording the TV channel or the video source selected on the DVD recorder system.

② **STANDBY** ⏻
switches the DVD recorder system to standby.

③ **DVD/MON**
switches between the disc in the tray and the TV channel selected on the DVD recorder system.

TV
plays the sound of the TV on the DVD recorder system.

TUNER
selects the radio tuner, selects the waveband and switches between FM stereo and FM mono.

SAT
selects a connected satellite receiver.

CAM 1/2
switches between the camcorder inputs on the front.

CD
selects a connected CD player.

CDR/TAPE
switches between a connected CD recorder and tape deck or similar.

VCR/GAME
switches between a connected VCR and game console.

④ **SHIFT**
press and hold to select secondary functions of the remote controls b uttons with blue labelling.

⑤ **T/C**
switches on the title/chapter selection for discs.

⑥ **REC / PLAY MODE**
selects different playback modes like REPEAT or SHUFFLE.
While you press and hold SHIFT : selects a recording mode.

⑦ **DIM / DISPLAY**
selects various display information.
While you press and hold SHIFT : dims the display.

⑧ **SELECT**
selects menu options,
switches between upper and lower case characters.

Remote control

⑨ **FSS** (Favorite Scene Selection)
enters the “Favorite Scene Selection” menu for editing titles.

⑩ **TIMER**
enters the timer menu to program recordings.

⑪ **CLEAR**
clears an entry, e. g. in the timer menu.

⑫ **RETURN**
returns to the previous menu on a (Super) Video CD.

⑬ **DISC MENU**
enters the disc menu.

⑭ **SYSTEM MENU**
DVD: enters the system menu of the DVD recorder system.
TV: enters the system menu of your Philips TV.

⑮ **▲, ▼, ◄, ►**
move up, down , left or right in a menu.

OK
confirms menu options.

⑯ **VOL / TV VOL +, −**
adjusts the volume of the DVD recorder system.
While you press and hold SHIFT: adjusts the volume on a Philips TV.

⑰ **CH / TV CH +, −**
DVD/MON: selects a TV channel on the DVD recorder system.
TUNER: selects a preset radio station.
While you press and hold SHIFT: selects a TV channel on a Philips TV.

⑱ **PLAY ►**
starts playback, closes the disc tray.

⑲ **SEARCH I◄◄**
skips to the beginning of the current or previous chapter/title/track, searches backwards,
tunes to a radio station with a lower frequency.

⑳ **STOP ■**
stops playback or recording,
press and hold to open/close the disc tray.

㉑ **PAUSE II**
pauses playback or recording,
advances to next still picture.

㉒ **SEARCH ►►I**
skips to the beginning of the next chapter/title/track, searches forwards,
tunes to a radio station with a higher frequency.

㉓ **0–9** to key in numbers 0–9 and characters (see page 7).
While you press and hold SHIFT: adjust bass, treble and the volume of the rear speakers and of the subwoofer. Switch loudness and Night mode on/off.

SURR. / VOICE
selects the different surround modes.
While you press and hold SHIFT: switches ClearVoice on or off.

MUTE / TV MUTE
mutes the sound of the DVD recorder system.
While you press and hold SHIFT: mutes the sound on a Philips TV.

Quick use guide

English

Supplied accessories

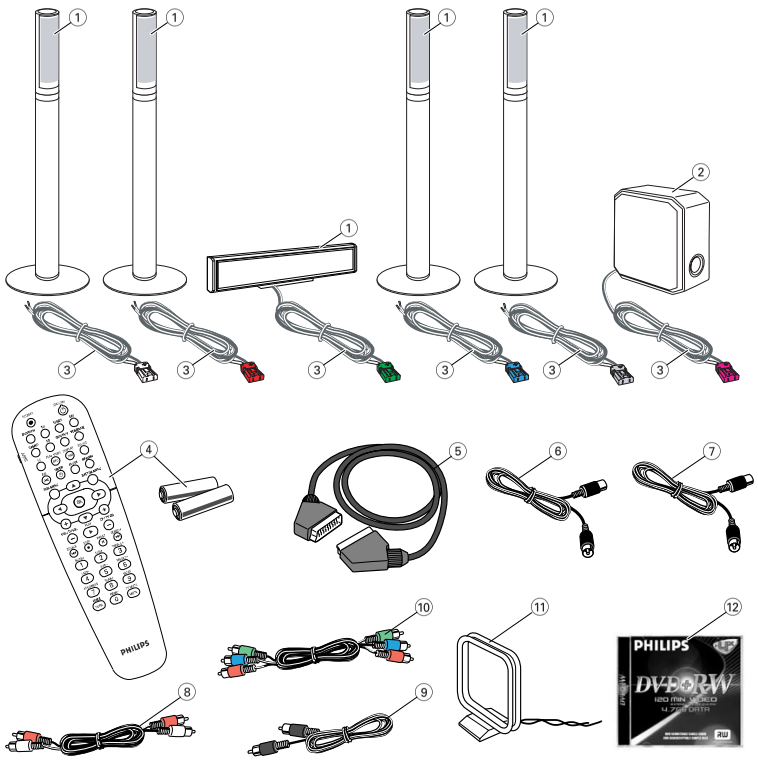

Your DVD recorder system is delivered with

1. 2 front, 1 centre and 2 rear speakers (see page 2)
2. 1 subwoofer
3. 6 speaker cables
4. 1 remote control with 2 AA batteries
5. 1 Scart cable
6. 1 TV antenna cable
7. 1 FM antenna cable
8. 1 cinch audio cable (red and white plugs)
9. 1 digital audio cable (black plugs)
10. 1 Component Video cable (red, green and blue plugs)
11. 1 MW loop antenna
12. 1 blank Philips DVD+RW disc

Discs for recording

DVD+ReWritable · DVD+R

Quick use guide LX7500R

Speakers

page 2 valid for loudspeaker boxes with different connector colours

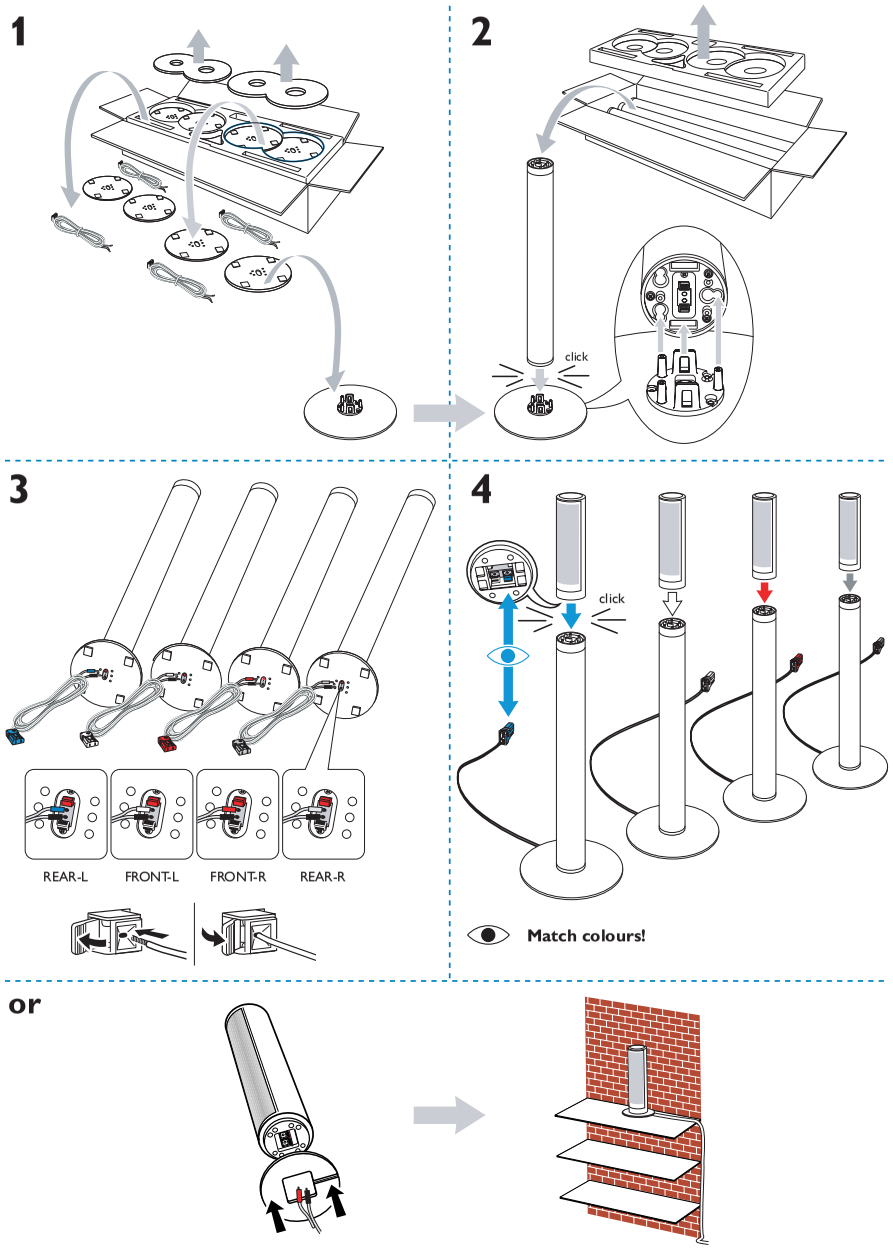

Quick use guide

LX7500R

Speakers

page 2 valid for 4 identical loudspeaker boxes with red/black coloured connectors

1

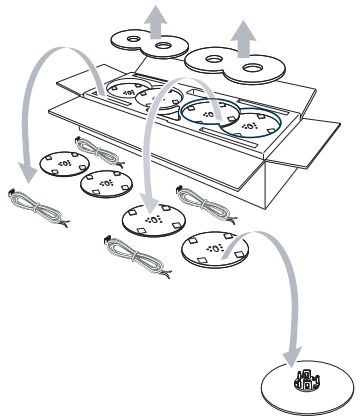

2

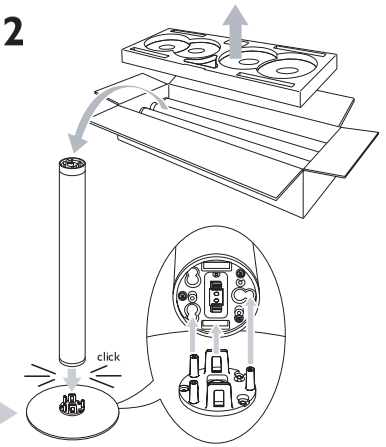

3

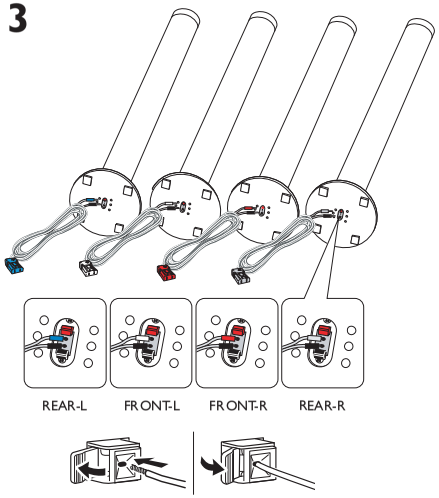

4

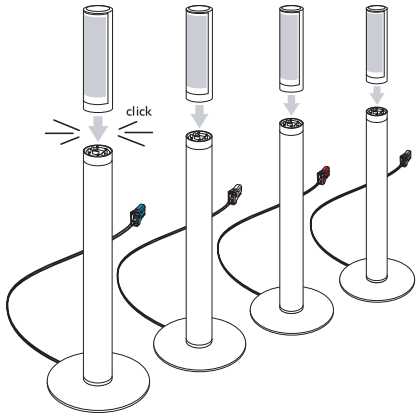

or

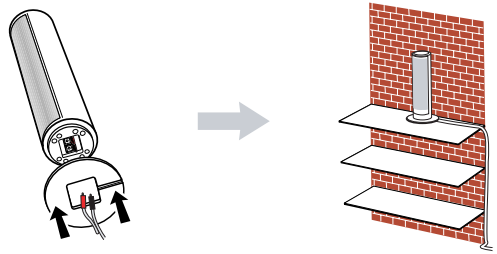

Speakers

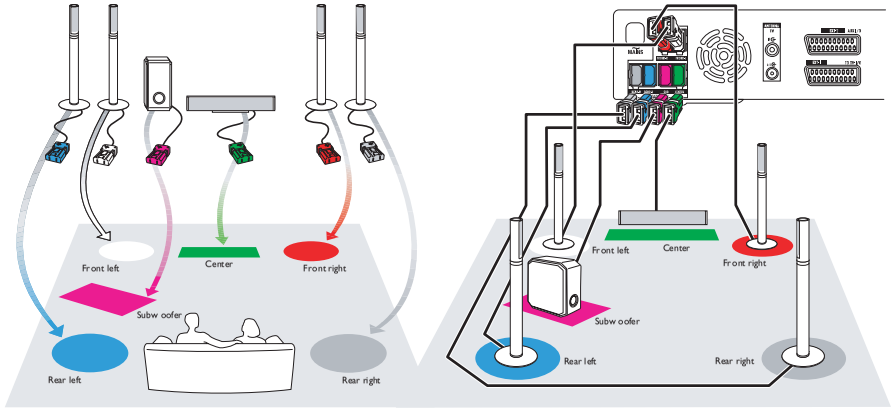

Connections

User manual: see pages 12–16

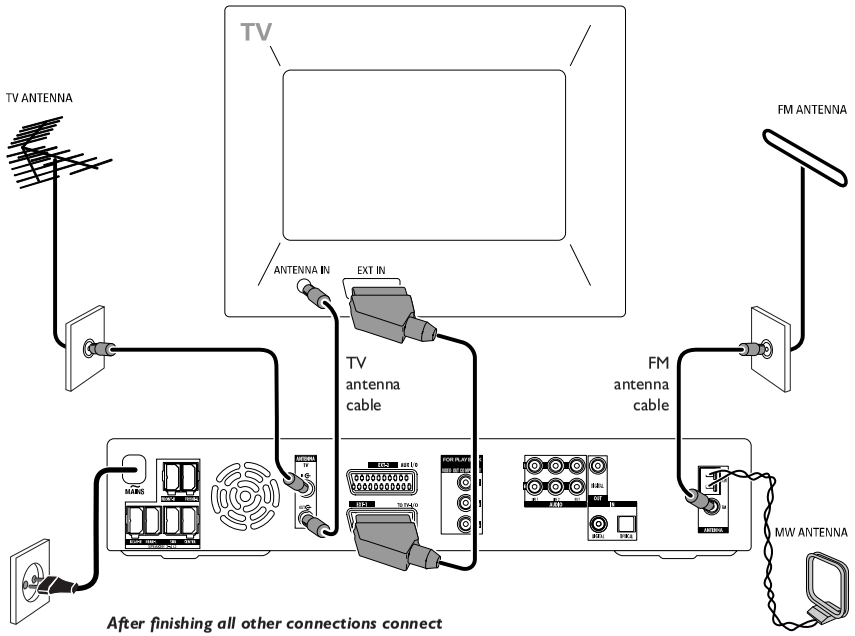

After finishing all other connections connect the mains cable to the wall socket.

Addendum

LX7500R

Attention – Atención – Achtung – Let op – Attenzione
Viktigt – Vigtig – Huomio – Atenção

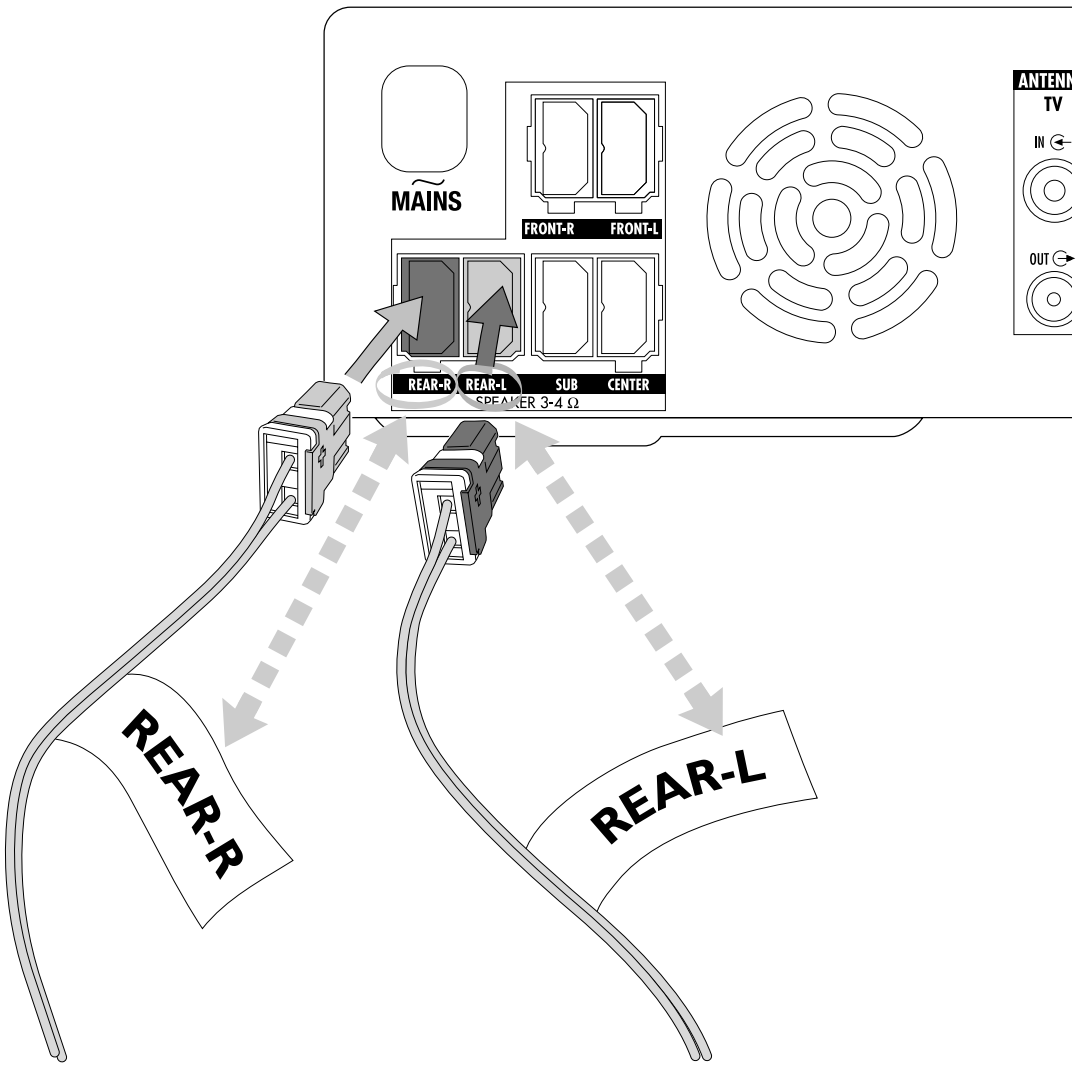

Initial installation

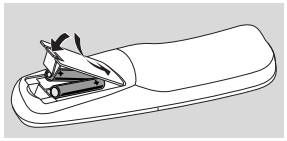

1 Insert the batteries into the remote control.

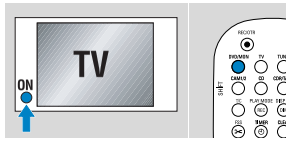

2 Switch on your TV.

3 Press DVD/MON to switch on the DVD recorder system.
IS TV ON will be displayed on the DVD recorder system.

4 Press ▼, ▲ to select the language in which the display messages should appear on the TV screen. Next, press **OK**.

If the previous menu does not appear, set the TV to the correct audio/video channel for the DVD recorder system. Such channels may be called AUX or AUXILIARY IN, AUDIO/VIDEO or A/V IN, EXT1, EXT2 or EXTERNAL IN, etc. These channels are often near channel 00.

5 Press ▼, ▲ to select the language in which a DVD should preferably be played. Next, press **OK**.

6 Press ▼, ▲ to select the language in which subtitles should preferably be displayed. Next, press **OK**.

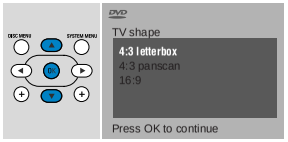

7 Press ▼, ▲ to select the screen format. This setting will have an effect only with DVDs supporting different screen formats. Next, press **OK**.

8 Press ▼, ▲ to select the country where you use the DVD recorder system. Next, press **OK**.

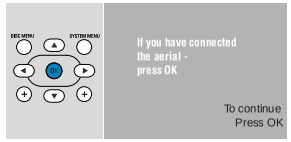

9 Make sure the TV antenna or cable TV system is connected to the DVD recorder system. Next, press **OK**.

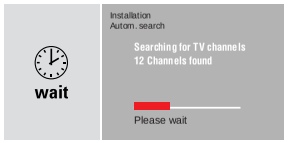

→ The DVD recorder system will search for available TV channels. This may take several minutes.

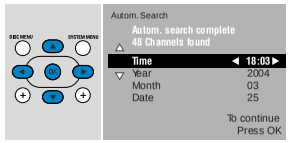

10 Check the time and date. If necessary, use ▼, ▲, ◀, ▶ to set the time/date correctly. Next, press **OK**.

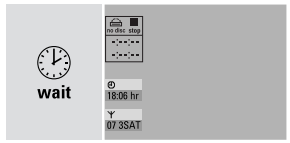

→ The TV screen will turn blank for about 1/2 minute. Next, the DVD screen will appear.

The DVD recorder system is ready for use!

Playing a disc

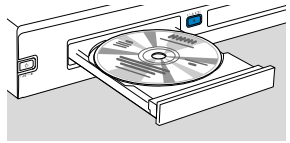

1 Press and hold DVD/MON for 1 second.

2 Press OPEN/CLOSE ▲ on the set to open the drawer.

3 Insert a disc (printed side up) in the tray.

4 Press OPEN/CLOSE ▲ on the set to close the drawer.

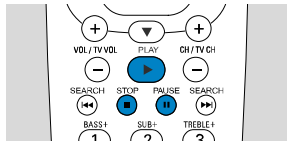

5 If playback does not start automatically, press PLAY ▶ to start playback.

○ To interrupt playback press PAUSE ⏸.

○ To resume playback press PLAY ▶.

6 To stop playback, press STOP ■.

○ To select one of the available surround modes, press SURR. repeatedly. The selected surround mode will be displayed on the DVD recorder system.

Playing a radio station

Make sure the FM radio antenna is connected to the DVD recorder system.

When you press TUNER for the first time, the DVD recorder system will search for radio stations automatically. The search will take a couple of minutes.

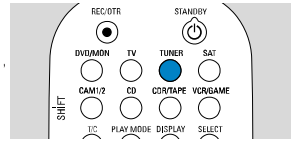

1 Press and hold TUNER for 1 second to select the radio tuner.

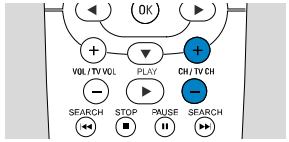

2 Press CH + or CH – repeatedly to skip to a preset radio station.
Or use 0–9 to enter the number of a preset radio station. To enter a preset number with two digits, press 0–9 twice within 2 seconds.

Selecting a source

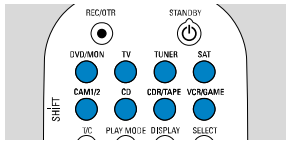

With the "source buttons" you select what you want to play and what to record.

Press and hold a source button for 1 second to select a source.

DVD selects the disc inserted into the DVD recorder system (DVD, DVD+RW, DVD+R, Video CD, Super Video CD, Audio CD, MP3-CD). Playback will start automatically or a menu/information screen will appear on the TV screen.

MON ("Monitor") shows the TV channels stored in the DVD recorder system. Press CH + or CH – to select the TV channel which you wish to record.

TV plays the sound of your televison set on the speakers of the DVD recorder system.

SAT, CAM1/2, CD, CDR/TAPE, VCR/GAME select connected equipment (satellite receiver, CD player or similar).

With **SAT, CAM1/2, VCR/GAME** select the video equipment from which you wish to record. E. g. To record a satellite programme, first select SAT, then press REC/OTR.

Quick use guide

LX7500R

Recording a TV programme

1 Switch your TV set on. If necessary set the TV to the correct audio/video channel for the DVD recorder system. Such channels may be called AUX or AUXILIARY IN, AUDIO/VIDEO or A/V IN, EXT1, EXT2 or EXTERNAL IN, etc. These channels are often near channel 00.

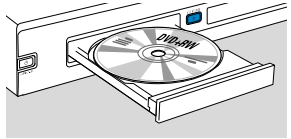

2 Insert a DVD+RW or DVD+R disc on which you want to record into the tray.

DVD+ReWritable DVD+R

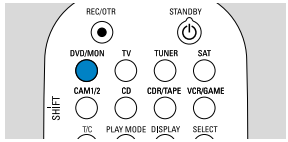

3 Press DVD/MON to see the TV channel currently selected on the DVD recorder system.

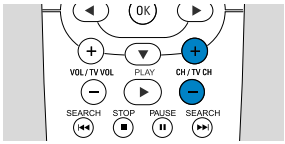

4 Press CH+ or CH– to select the TV channel (programme number) which you wish to record.

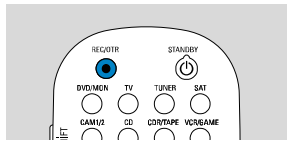

5 Keep REC/OTR pressed until SAFE REC 0 is displayed on the DVD recorder system.

Recording starts at the end of all existing recordings.

Note for DVD+RWs: If you press REC/OTR briefly, the recording will start at the position where you stopped playback. Previous recordings may be overwritten.

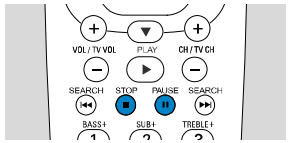

- To interrupt recording press PAUSE ❚❚
- To resume recording press PAUSE ❚❚ again.

6 Press STOP ■ to stop recording.

Selecting a recording mode

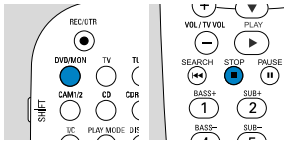

The recording mode determines the picture quality of a recording and the maximum time available for recording on a disc.

1 Press and hold DVD/MON for 1 second.

2 Press STOP ■ to stop playback or recording.

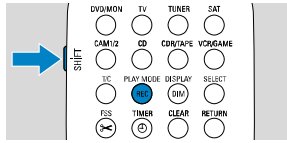

3 While you press and hold SHIFT, press REC / PLAY MODE repeatedly to select the recording mode.

mode	quality	recording time
M1	better than DVD	1 hour
M2	DVD	2 hours
M2x	better than S-VHS	2 ½ hours
M3	S-VHS	3 hours
M4	better than VHS	4 hours
M6	VHS	6 hours
M8	VHS (longplay)	8 hours

DISMANTLING INSTRUCTIONS

Dismantling the *Top Cover*

- Remove 9 screws as shown in picture 1.
- Release side walls on bottom and raise top cover upwards.

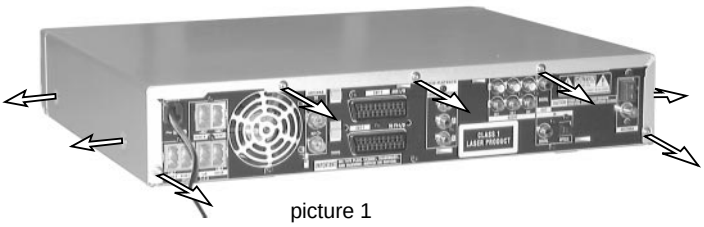

picture 1

Details of correct *Wire Routing*

To fulfil safety requirements cables must not touch the large cooling plate (high potential) of the Switched Mode Power Supply.
After repair it has therefore to be made sure that all cables are fixed according the instructions shown in pictures 2 and 3.

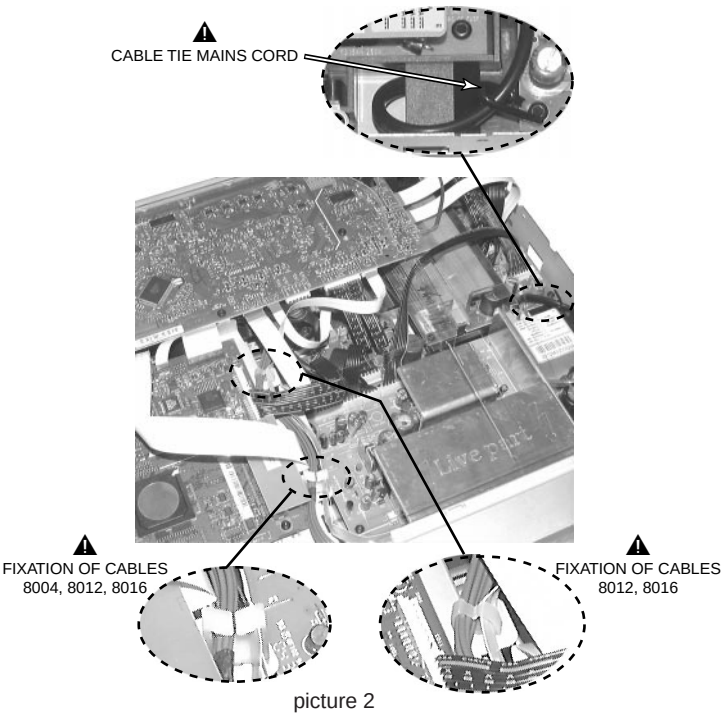

picture 2

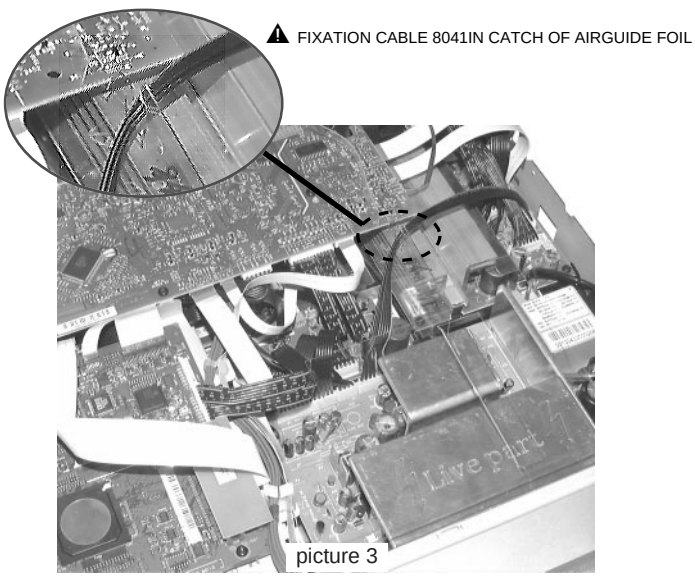

picture 3

Manual *Opening the Tray*

In case the loader is defect or cannot be opened electrically, proceed as follows:

- The tray can be released by means of screwdriver.
  The locking slider of the tray can be accessed through a slot on the bottom side of the set. To prevent dust coming into the drive this slot is covered by an adhesive tape on the cabinet of the drive (see picture 4).
  Push through this adhesive tape and move the white pin of the slider to the left side (see picture 5). The tray will move out a bit and is now released.
- Pull the tray out.
  Make sure that a new adhesive tape has been applied to the drive when the repair is finished!

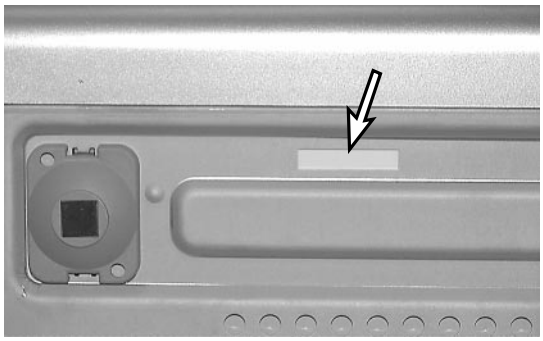

picture 4

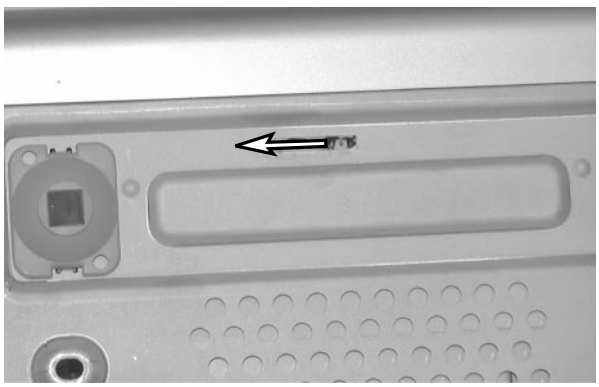

picture 5

Dismantling the Tray Cover

To dismantle the ornamental cover the tray has to be moved out first. This can either be done by actuating the Open/Close key or manually. To release the tray manually proceed as described above.

Take the ornamental cover on the bottom side and press it upwards while supporting the tray. The cover will automatically be tilted a bit. In turn the catches become released.

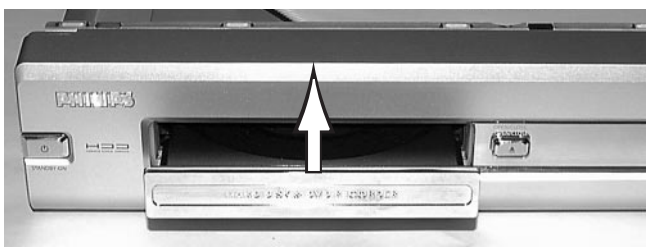

picture 6

Dismantling the *Digital Board*

- Dismantle Top Cover as described before.
- Loosen 4 screws to dismantle Digital Board (see picture 7).
- To get access to the bottom side, the board can be put to a service position as shown in picture 8.

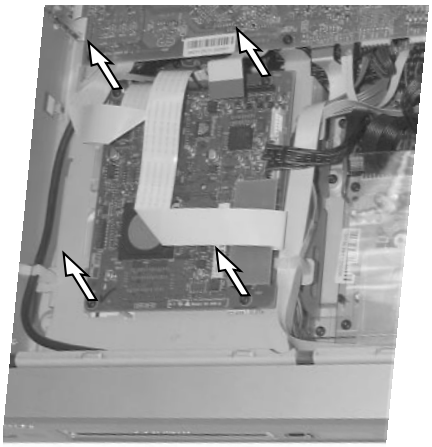

picture 7

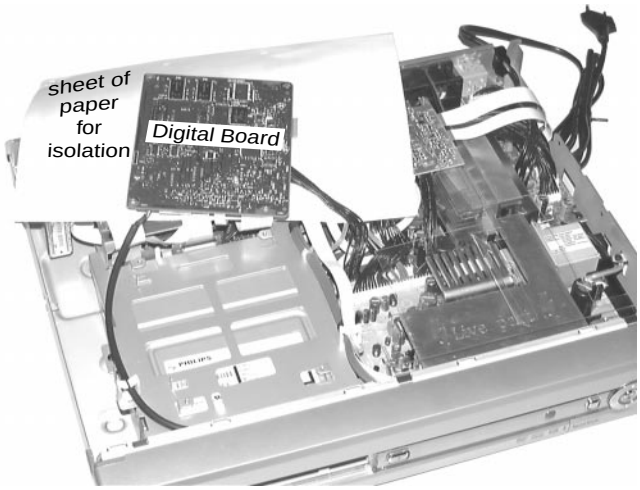

picture 8

Dismantling the *DVD Basic Engine*

- Dismantle the ornamental cover of the tray first (see picture 6).
- Dismantle Top Cover as described before.
- Loosen 6 screws as shown in picture 9.
- Release cables from cable catches.
- Lift metal frame-Digital Board assembly on the rear side to get the catch hook free from the IDE socket board. (see picture 10).
  If necessary bend Combi Board up to get support lugs free.
- Pull the complete assembly out and put it to a rest position as shown in picture 11.

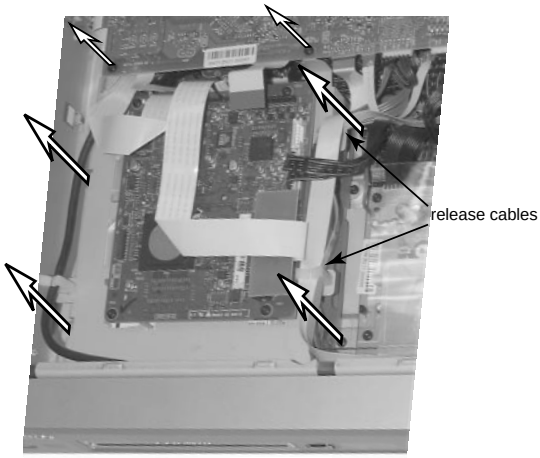

picture 9

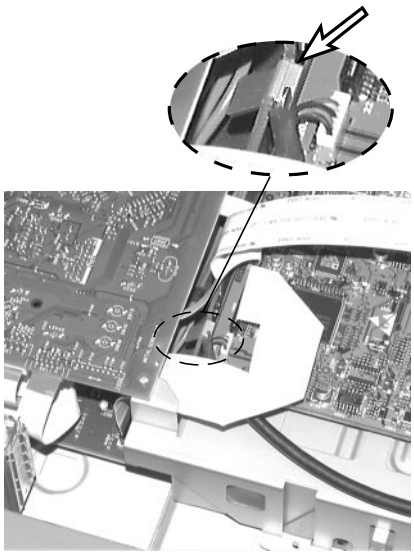

picture 10

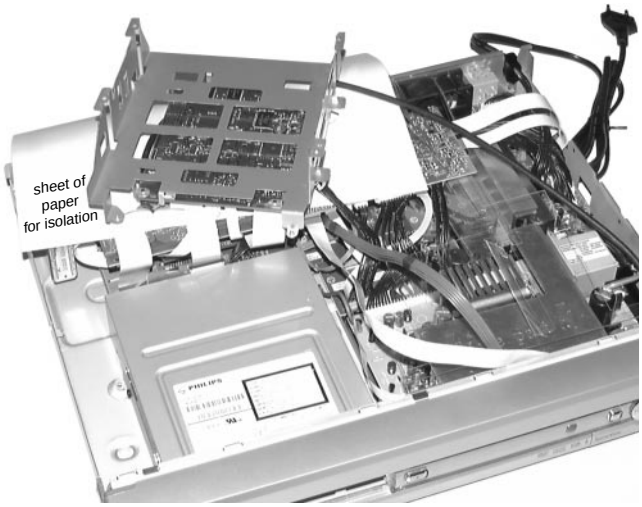

picture 11

Dismantling the *DVD Basic Engine* (continued)

- Now the head of the last screw on the right side has become free and the screw can be removed.
- Pull off power supply cable from the Basic Engine (rear left).
- Lift Basic Engine at the rear and move it backwards until it becomes free at the front.
  Note: the available space is very tight as the Basic Engine has to be moved against cables and sockets located on the AV Board. Slightly lifting Combi Board together with the Basic Engine will make it easier.
- Turn Basic Engine out at front side and put it to a proper service position as shown in pictures 12 and 13.

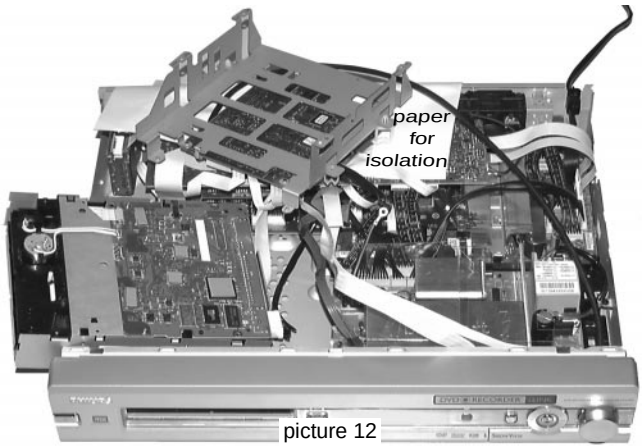

picture 12

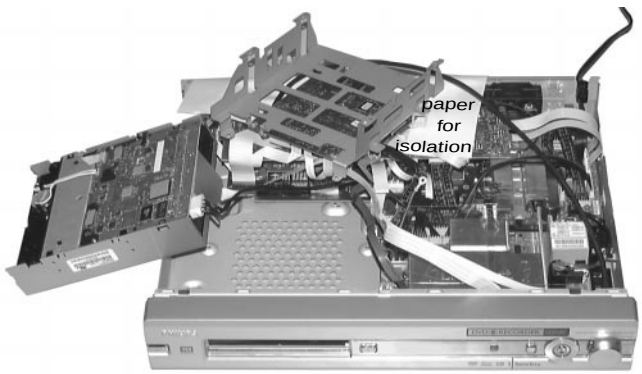

picture 13

Dismantling the *Amplifier Board*

- Remove 4 screws.
- Turn the Amplifier Board out of the set and put it in service position as shown in picture 14.

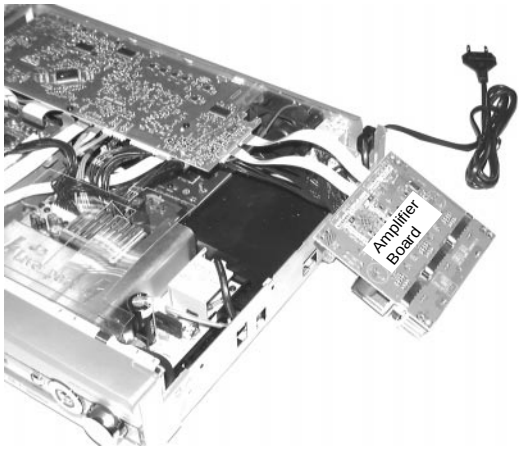

picture 14

Dismantling the *Auxiliary supply Board*

- Remove 1 screw.
- Lift the board on the left side to get it free from the catch on the right side.
- Turn the Auxiliary supply Board out of the set and put it in service position as shown in picture 15.
  If necessary, the one or the other cable has to be plugged off.

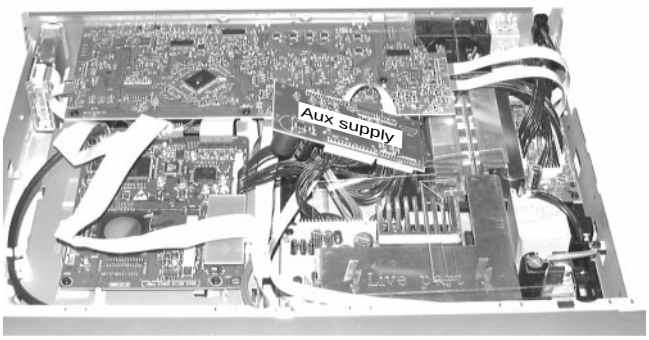

picture 15

Dismantling the *Switched Mode Power Supply Board*

- Remove 4 screws as shown in picture 16 and loosen the ground wire from the cabinet.
- Disengage catch of the airguide foils (see picture 17).
- Lift the unit on the rear side and move it backwards to release the board from the catches on the front side (see picture 18).
- Pull the whole unit on the front side up - take care of cables routed between front and the plastic foil! - and turn it to service position as shown in picture 19.

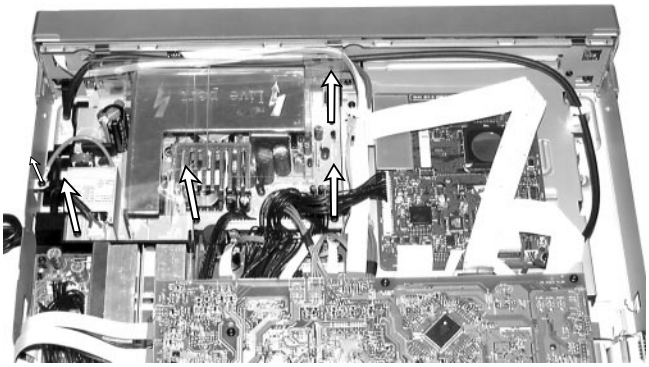

picture 16

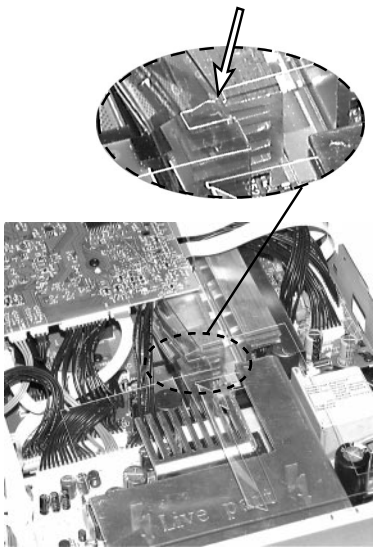

picture 17

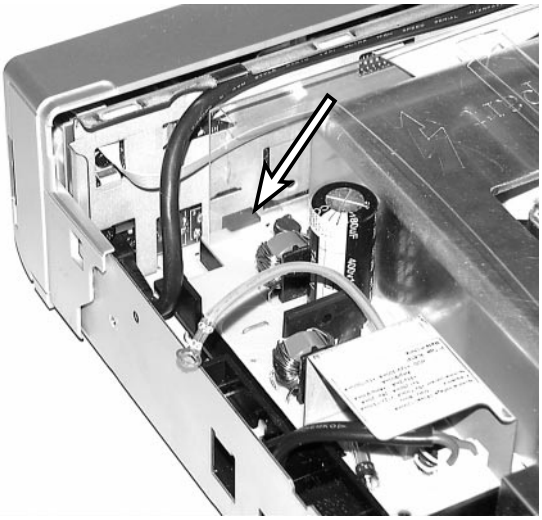

picture 18

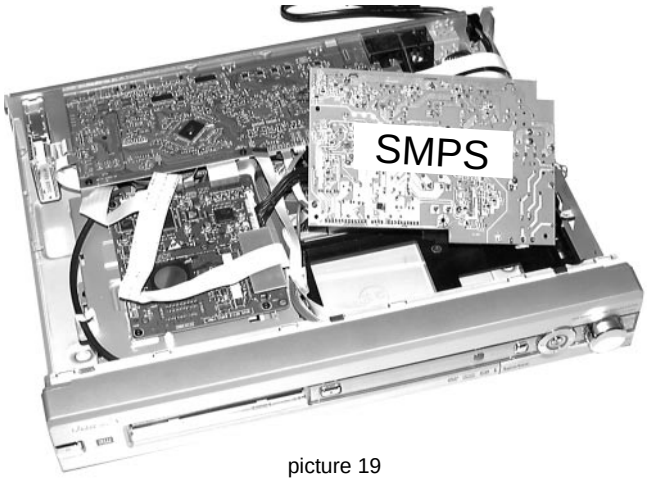

picture 19

Dismantling the *Front panel assembly*

- Dismantle the ornamental cover of the tray first (see picture 6).
- Loosen 3 screws to bottom cabinet as shown in picture 20.
- Release catches on both sides (see picture 21) and move the front panel out.
- Put the panel in rest position as shown in picture 22.

To get access to the printed boards the metal plate has to be removed →

- Loosen 9 screws as shown in picture 22.
- Pull up the metal frame and move it backwards along cables fed through.
- Put the metal frame to rest position as shown in picture 23.
  → Display Board and Standby Board are now accessible on the copperside.
  Picture 24 shows service position for the component side of the Display Board.

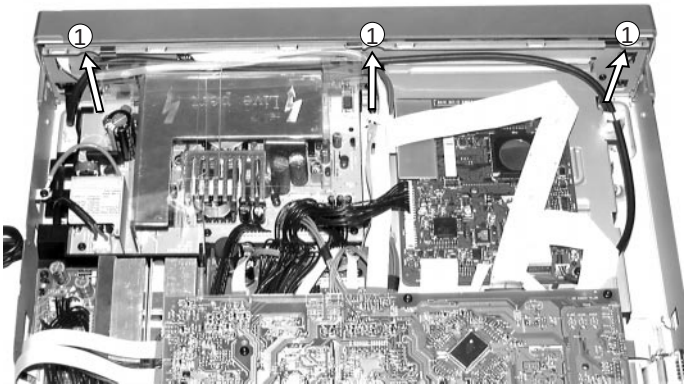

picture 20

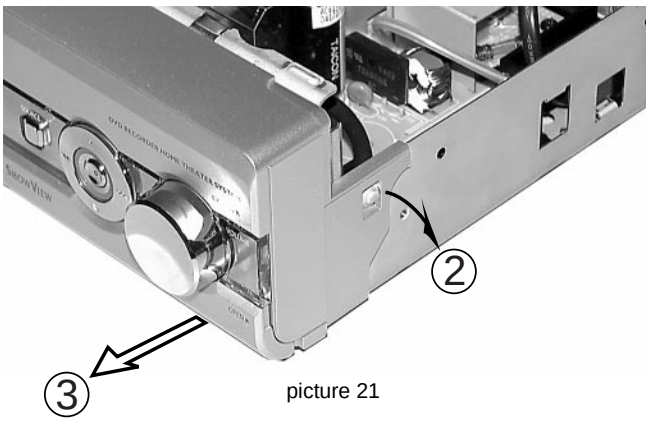

picture 21

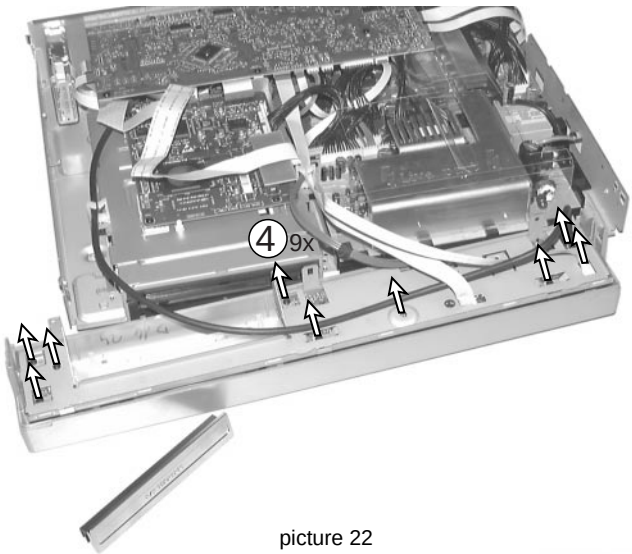

picture 22

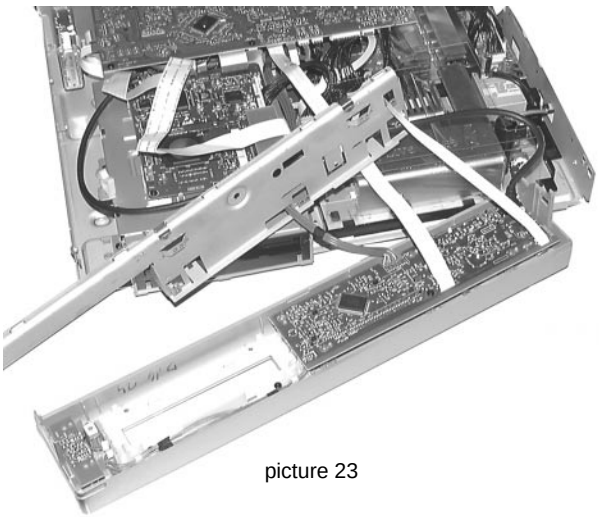

picture 23

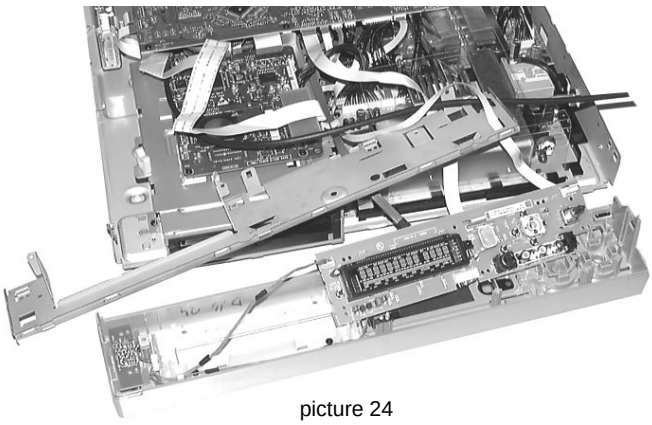

picture 24

Dismantling the *Combi Board*

- Loosen 8 screws as shown in pictures 25 and 26.
  Note: The Combi Board is fixed with metal screws M3x4 and plastite screws 3x8. The metal screws are indicated with a text on the printed board and with a white ring on the rear plate → see picture 27.
- Move the board frontwards to release the sockets from the rear plate.
- Turn Combi Board up to service position as shown in picture 28.

  The length of some cables might be marginal. We recommend to disconnect cables to the Audio Tuner and the Amplifier Board before turning the Combi Board and re-connect them when the board is in the service position.
  Also release cables to front from the cable catch and move them to max. free length at the Combi Board.

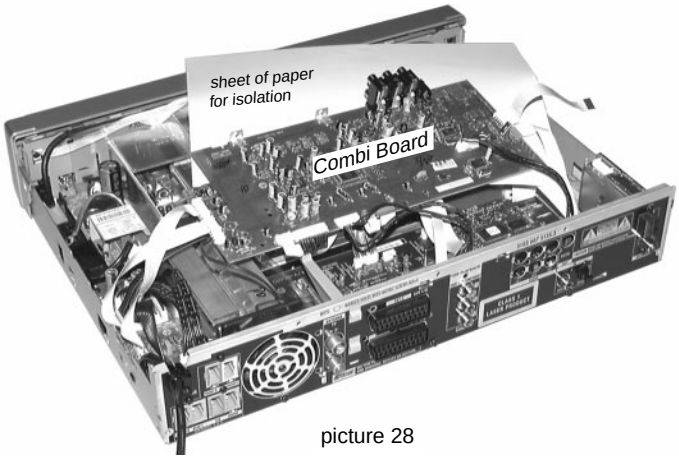

picture 28

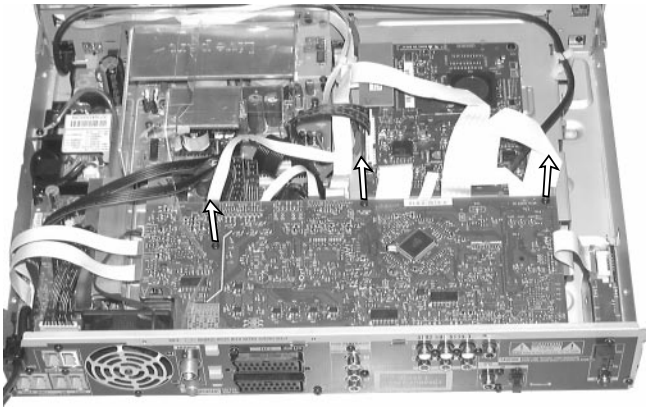

picture 25

picture 26

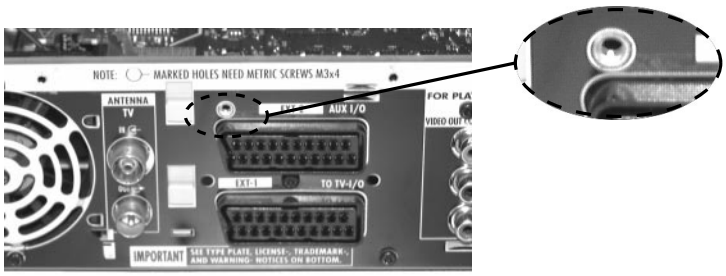

picture 27

Dismantling the *Analog Video Board*

- Dismantle Combi Board and put it to rest (service) position as described before.
  The AV Board can now be accessed on the component side.

To get access to the copper side:

- Loosen 3 screws ① - see picture 29.
- Re-mount Combi Board and fix it provisionally with 1 screw.
- Loosen 3 screws ② - see picture 29.
- Loosen 1 screws ③ a few turns to loosen the fan - see picture 29.
- Release catches ④ on both sides of the rear cabinet and move it backwards until rear cabinet becomes free from bottom cabinet.
- Turn the whole unit AV Board - Combi Board up to service position as shown in picture 30.

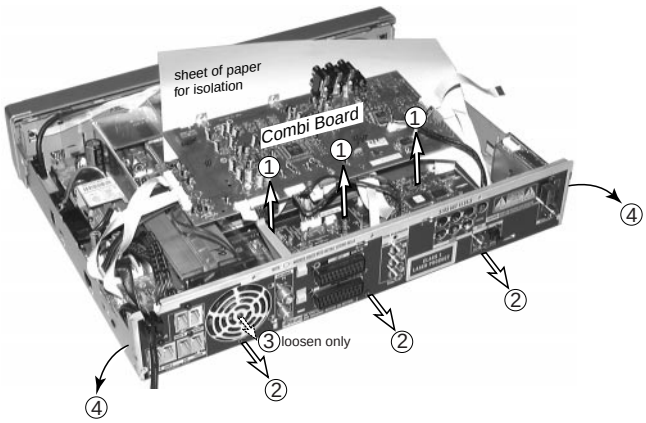

picture 29

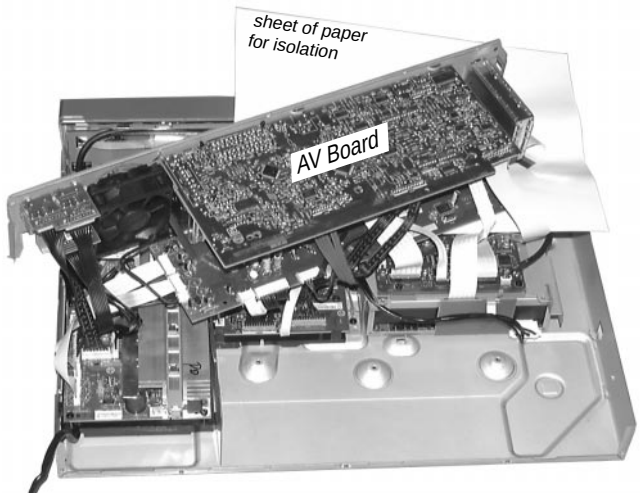

picture 30

SERVICE TOOLS

TORX T10 screwdriver with shaftlength 150mm.....4822 395 50423
TORX screwdriver set SBC 163.....4822 295 50145

Audio signal disc SBC 429 .....4822 397 30184
Playability test disc SBC444.....4822 397 30245
Test disc 5 (disc without errors) +
Test disc 5A (disc with dropout errors, black spots and fingerprints)
SBC 426/426A.....4822 397 30096
Burn in test disc (65 min. 1kHz signal at -30dB level
without "pause").....4822 397 30155

Sub chassis 8 test disc CD.....7104 099 28362
MPTD printed test disc CVP02.18A.....7104 099 91691
MPTD printed test disc CVP02.18C 7104 099 97941
Burn in test disc DL LVP04.15.....7104 099 91041
MPTD thin test disc CVP02.60.....7104 099 97931

NLT 01.00 link test disc DVDROM settings.....7104 099 98502
Blank DVD+RW disc RICOH 7104 099 98582
Blank DVD+R disc RICOH.....7104 099 94001

DEMO MODE

The DEMO MODE displays various features of the set and will start automatically when no key has been pressed for several minutes or during Standby mode.
The Demo mode will automatically be switched off after the first installation of the set.
The Demo mode can be switched on/off again via the System Menu of the set:
Press *System Menu* on the remote control.
Select ⚒ → ⌂ → Standby → Low power
Normal
Demo mode

LEAD FREE PRODUCED SET

This set is manufactured with lead-free production technology. This is also indicated by the PHILIPS-lead-free logo you find on the printed boards.

The set is produced with lead-free solder-alloy as well as with lead-free sub-parts. It can be considered as lead-free. Due to this fact some rules have to be respected by the workshop during a repair:

- Use only lead-free soldering-tin Philips SAC305 with order code 0622 149 00106. If lead-free solder-paste is required, please contact the manufacturer of your solder-equipment.
- Use only adequate solder tools applicable for lead-free soldering-tin.
- Adjust your solder tool so that a temperature around 217° – 220° is reached at the solder joint.
- Do not mix lead-free soldering-tin with leaded soldering-tin. This would lead to unreliable solder joints.
- On our website http://www.atyourservice.ce.philips.com you find more information to
  – aspects of lead-free technology
  – BGA-de-/soldering, heating-profiles of BGAs used in Philips-sets, and others.

SERVICE TESTPROGRAM
OVERVIEW ALL TESTS

SERVICE TESTS APPARATUS

To enter Service Testprogram hold ***Open/Close & Source*** button depressed while plugging mainscord in.

* To leave Service Testprogram plug mains cord off.

The display shows the version of the set.

S--LX7500R EU

S stands for Service mode
EU stands for European version of Combi board.
NAFT stands for USA version of Combi board.

V'XX stands for Version number of the software used in Combi board µP 7107 respectively Front board µP 7103

To check versions of the DVD+RW software use OSD.

SELECT TEST

|◄◄ **or** ►►| button pressed? N / Y

Test menu

TEST	Display shows
Set version	LX7500R EU
SW version Combi board µP	COMBI SW V'XX
SW version Front board µP	FRONT SW V'XX
Quartz test	QUARTZ
Temperature test	NTC
EEPROM test	EEPROM
EEPROM format	EP FORMAT
Display test	DISPLAY
Key test	KEY TEST
Audio TUNER test	TUNER
Audio test	AUD TEST
I^2C test Combi board	IIC TEST

Select test: |◄◄ ... ►►|

The display shows next or previous test of the test menu.

|◄◄ **or** ►►| button pressed? Y / N

START TEST

PLAY button pressed? N / Y

Start actual selected test.

For detailed description of the various tests see next pages.

END-USER DIAGNOSTICS (DVD+RW module)

To enter END-USER DIAGNOSTICS hold ***PLAY & NEXT*** button depressed while plugging mainscord in.

For detailed description of the End-User Diagnostic see page 29 ff.

FORCED DOWNLOAD OF OLDER SOFTWARE VERSION

To enable loading of an older software version hold ***Open/Close & RECORD*** buttons depressed while plugging mainscord in.

TOGGLE VIDEO MODE

for USA version only

To toggle Video Mode (interlace/progressive scan) hold |◄◄ button depressed while plugging mainscord in.

DEMO MODE

To switch **Demo Mode on/off** use **System Menu**

VIRGIN MODE (DVD+RW module)

To reset the set to Virgin Mode hold ***STANDBY*** button depressed while plugging mainscord in.

TOGGLE MODULATOR CHANNEL

for USA version only

To toggle Modulator Channel (channel 3/4) hold ►►| button depressed while plugging mainscord in.

DEMO MODE
The DEMO MODE displays various features of the set and will start automatically when no key has been pressed for several minutes or during Standby mode.
The Demo mode will automatically be switched off after the first installation of the set.
The Demo mode can be switched on/off again via the System Menu of the set:
Press *System Menu* on the remote control.
Select → → Standby → Low power
Normal
Demo mode

QUARTZ TEST

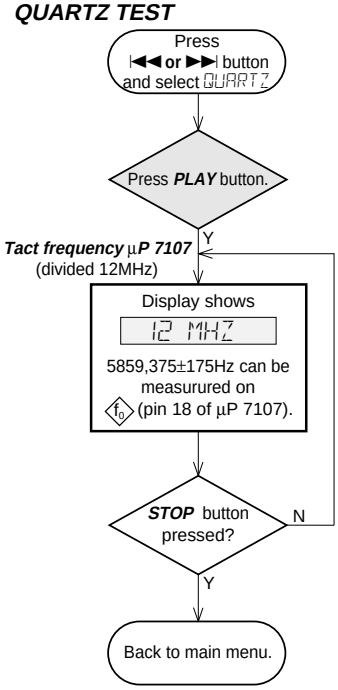

The Quartz test allows a quick check of the oscillator of the Combi board µP without any influence to the oscillator circuitry by the test equipment.
The factory can check if the correct quartz has been assembled.
A 50% duty pulse of the divided oscillator frequency is put on pin 18 of the µP.
The test signal can best be measured on the junction 3072/3111 → f0

TEMPERATURE TEST

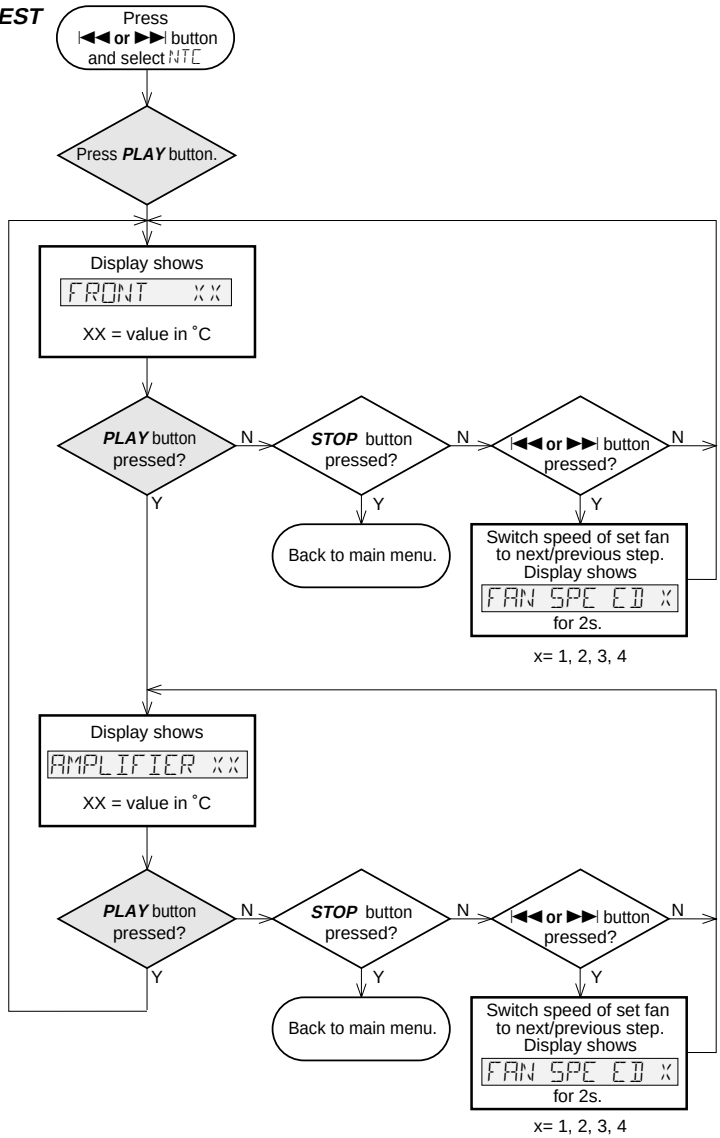

TEMPERATURE TEST

The temperature test is used to check the NTC resistors which measure various temperatures to control the speed of the the set fan.

NTC Front: sensor for ambient temperature, located on Display board.

NTC Amp(lifier): sensor for the temperature of the heatsink on the Power Amplifier board.

The signals NTC_Front and NTC_Amp are compared with a special algorithm and result in the control signal Set_Fan_Ctrl which controls the speed of the set fan.

In each test step of the temperature test the speed of the set fan can be set in four steps.

EEPROM TEST

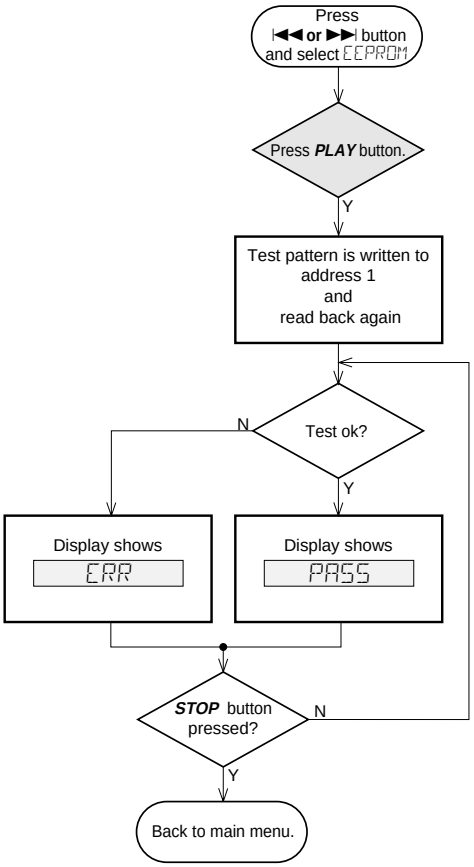

The test checks writing and reading of data to EEPROM 7108 on Combi board.
A test pattern is written to the first location in the EEPROM.
PASS is displayed when the test pattern is read back correctly, else ERR.

FORMAT EEPROM

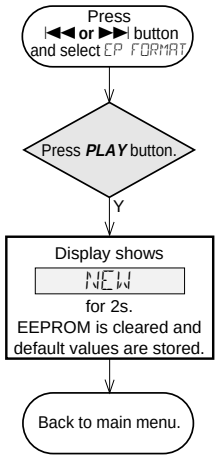

Each software module using the EEPROM is forced to write the default values in its part of the EEPROM.

This test should only be used to clear the EEPROM in case of a µP-"hangup".

DISPLAY TEST

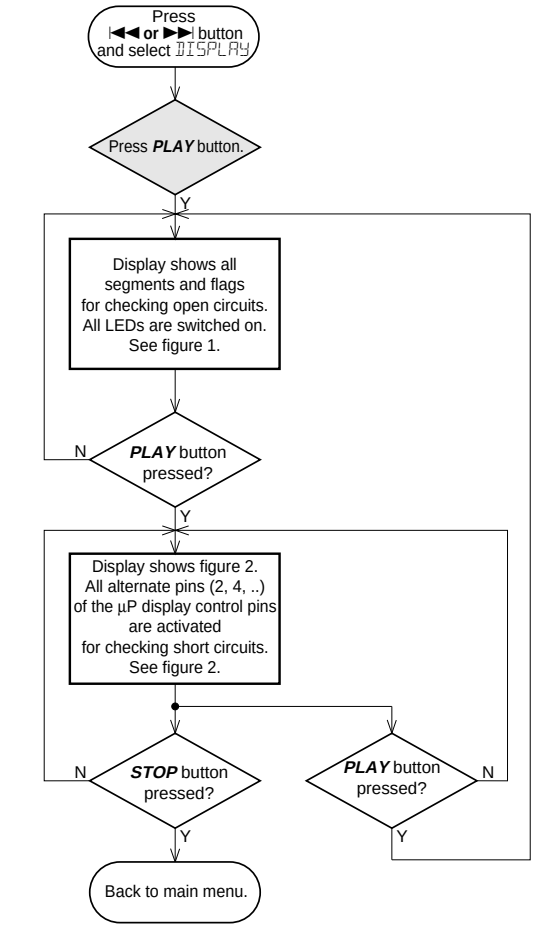

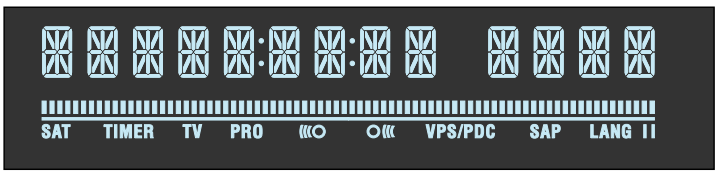

fig. 1

fig. 2

The DISPLAY test is intended to check the driver circuits and the LEDs for open- or short-circuits.

KEY TEST

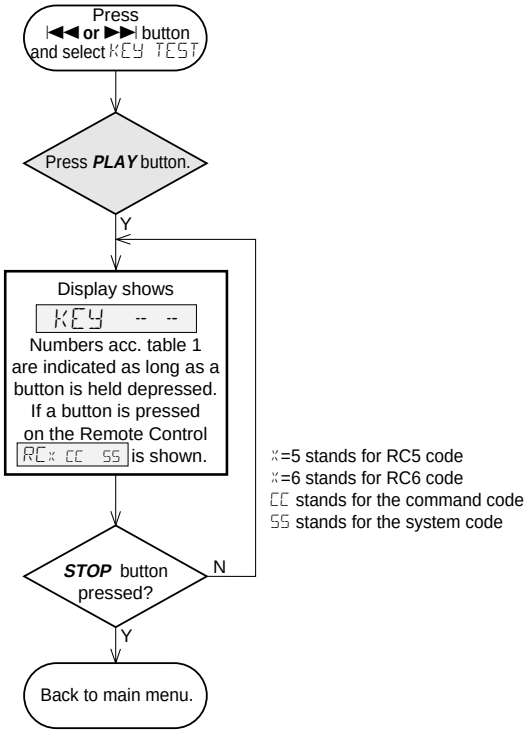

KEY CODES

KEY	KEY CODE
STANDBY/ON	1
OPEN/CLOSE	2
PREVIOUS |◄◄	3
PLAY/PAUSE	4
NEXT ►►|	5
STOP	6 (exit)
SOURCE	7
RECORD	8

table 1

AUDIO TUNER TEST

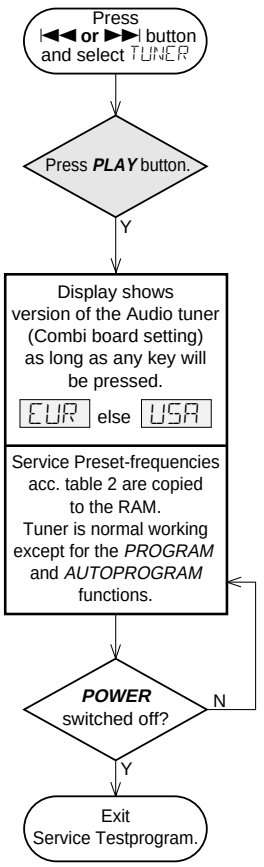

SERVICE PRESET FREQUENCIES

REGION / PRESET	EUR EUROPE FM/MW /22/25/29	USA USA FM/AM /37
1	98,6 MHz	98,6 MHz
2	87,5 MHz	87,5 MHz
3	108 MHz	108 MHz
4	531 kHz	530 kHz
5	1602 kHz	1700 kHz
6	558 kHz	560 kHz
7	1494 kHz	1500 kHz
8	98 MHz	98 MHz

table 2

Key	*Function*
NEXT ►►|	manual tuning + auto search
PREV |◄◄	manual tuning + auto search
STOP ■	preset down
PLAY ►	preset up
OPEN/CLOSE	band switch (FM stereo, FM mono, AM)

table 3

The Audio tuner test is intended to read out the tuner version selected by the Combi board µP.
The correct tuner version is defined by the version detection resistor 3052 mounted on
the Combi board. 3052 mounted = USA version without RDS.
The stored preset frequencies serve as provision for other tuner modules only.

COMBI BOARD
AUDIO TEST

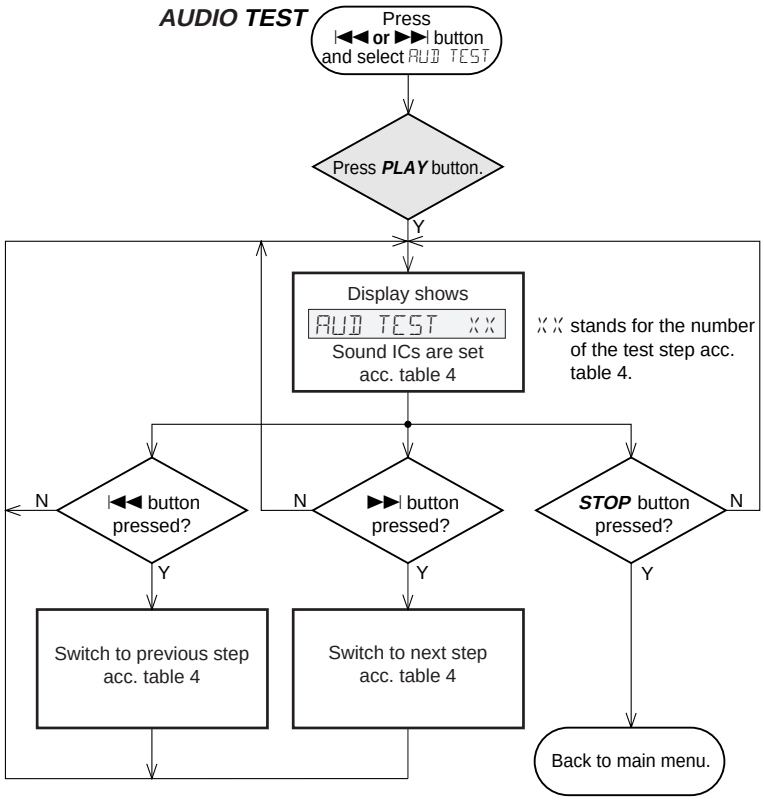

The AUDIO TEST is derived from a factory test defined to test the Combi board as stand alone test object.
During the relevant test steps the Audio tuner and the DVD module are not switched on.
Input signals have therefore to be fed in directly at the dedicated sockets on the Combi board.
The defined input signals stated in table 4 are intended for quantitative measurements of the different software settings.

For a quick test in repair workshops it is recommended to use test step 1.
Test step 1 produces output on 6 channels.
This allows either a simple check of the signal path from Line in 1-socket to Line out-socket and the headphone amplifier or a complete check of all 6 channels inclusive the power amplifiers.

At the beginning of the Audio test the user settings are set to following default values:

Volume:	10 (-33dB)
Bass/Treble:	flat
Loudness:	off
Clear Voice:	off
Bass ALC:	on
All speaker outputs:	Δ Volume 0dB

During test step1 manual setting of the sound parameters is possible. When test step 1 is left the default values will be restored.

TEST STEPS *COMBI BOARD AUDIO TEST*

STEP	INPUT	Input Signal	OUTPUT	Level	Tested function	Speaker setting	VOLUME
AUD TEST 1	Line in 1	any	Line out, Amplifiers		Audio settings	DPL2 Music	10 (-33dB)
AUD TEST 2	Opt. in[1)]	AC3/5.1/63Hz/ FS/Subw only	Dig out, Amplifiers		Dig. out, Amplifiers	DPL2 Music	20 (-20dB)
AUD TEST 3	Coax in[1)]	AC3/5.1/ 10kHz/FS	Line out, Amplifiers	0dB FS	Muting	DPL2 Music	40 (0dB) transistor mute
AUD TEST 4	Coax in[1)]	AC3/5.1/ 10kHz/FS	Line out, Amplifiers	0dB FS	Coax in, Line out	DPL2 Music	40 (0dB)
AUD TEST 5	Line in 1	1kHz $1V_{rms}$	Dig out	-6dB FS	Line in 1, Dig. out	Stereo	40 (0dB)
AUD TEST 6	Line in 2	1kHz/50Hz $1V_{rms}$	Amplifiers	-12dB FS	Line in 2, Amplifiers	Stereo	34 (-6dB)
AUD TEST 7	Ext. 1[1)]	1kHz $1V_{rms}$	Line out	-6dB FS	Ext. 1, Line out	Stereo	40 (0dB)
AUD TEST 8	Ext. 2[1)]	1kHz $1V_{rms}$	Headph. out	-6dB FS	Ext. 1, Headph. out	Stereo	40 (0dB)
AUD TEST 9	TUNER[1)]	1kHz 150mV_{rms}	Line out		Tuner input	Stereo	40 (0dB)
AUD TEST 10	DVD in[1)]	AC3/5.1/ 10kHz/FS	Amplifiers	-10dB	DVD in	DPL2 Music	30 (-10dB)
AUD TEST 11	DVD in[1)]	AC3/5.1/ 10kHz/FS	Amplifiers	-10dB	Treble	DPL2 Music	30 (-10dB) treble 5 (+10dB)
AUD TEST 12	Front in (/17 only)					Stereo	0 (-87dB) transistor mute
AUD TEST 13	Ext. 3 (/17 only)					Stereo	0 (-87dB)

[1)] Tuner and DVD module are not switched on in these steps.
To check the inputs a signal has to be fed directly to Combi board, connectors 1202 respectively 1205 or 1701.
In all test steps with digital input signal (2, 3, 4, 10 and 11) NO SIGNAL will be shown on the display when the SPDIF in/out IC 7603 does not recognize any signal.

COMBI BOARD

I²C TEST

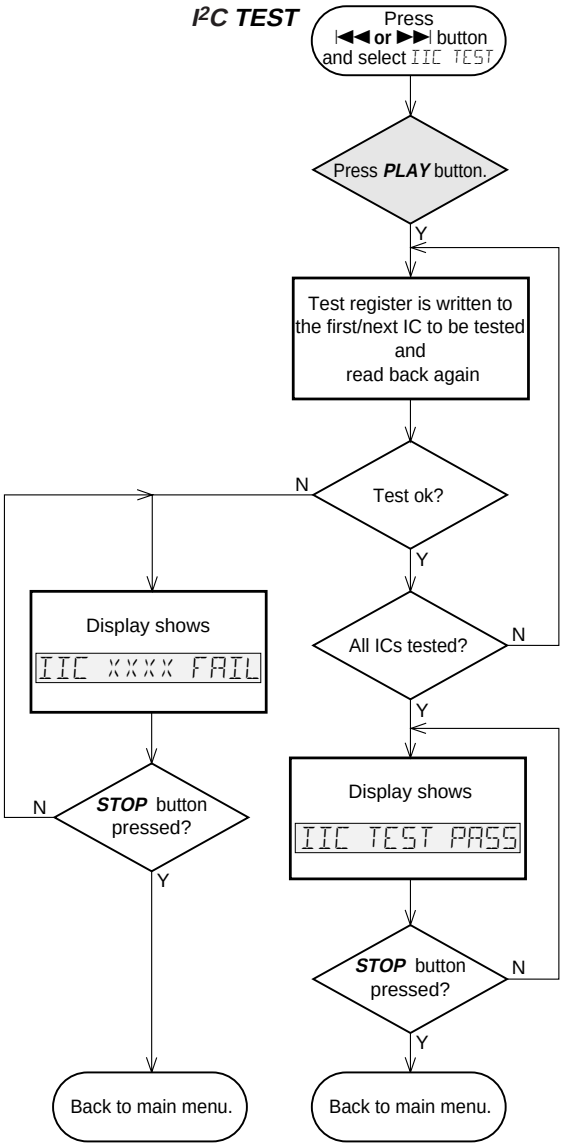

XXXX stands for item number of the failed IC.

7405 CODEC
7505 DSP
7603 SPDIF IC

The selector / sound processor ICs 7207, 7214 and 7303 are passive ICs which do not feed back via the IIC bus. The functionality of these ICs can therefore not be tested with the IIC Test. For testing these ICs use the AUDIO TEST.

5. Diagnostic Software

Due to the complexity of the DVD recorder, the time to find a defect in the recorder can become long. To reduce this time, the recorder has been equipped with Diagnostic and Service software (DS). The DS offers functionality to diagnose the DVDR hardware and tests the following:

- Interconnections between components
- Accessibility of components
- Functionality of the audio and video paths

This functionality can be accessed via several interfaces:

1. End user/Dealer script interface
2. Command Interface

5.1 End User/Dealer Script Interface

5.1.1 Description

The End user/Dealer script interface gives a diagnosis on a stand alone DVD recorder. During this mode, a number of hardware tests (nuclei) are automatically executed to check if the recorder is faulty. The diagnosis is simply a "fail" or "pass" message. If the message "FAIL" appears on the display, there is apparently a failure in the recorder. If the message "PASS" appears, the nuclei in this mode have been executed successfully. There can be still a failure in the recorder because the nuclei in this mode don't cover the complete functionality of the recorder.

5.1.2 Structure

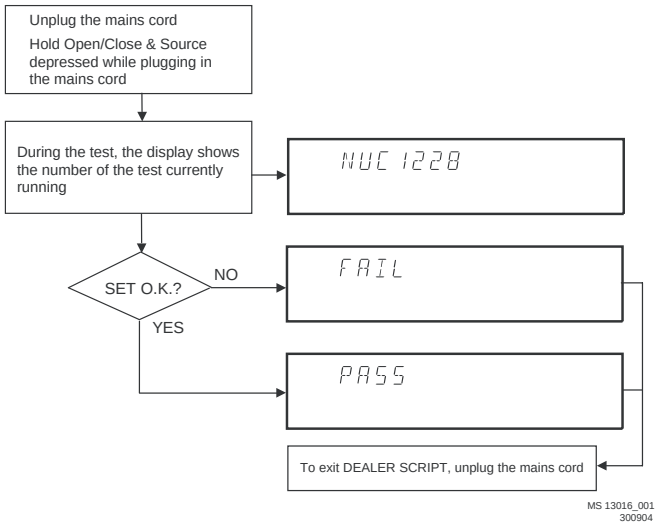

Figure 5-1

The End use/Dealer script executes all diagnostic nuclei that do not need any user interaction and are meaningful on a standalone DVD recorder.

5.1.3 Contents

Included tests:	1.DS_ANAB_COMMUNICATIONECHO_NUC 2.DS_DCB_COMMUNICATIONECHO_NUC 3. DS_BROM_COMMUNICATION_NUC 4. DS_SYS_SETTINGSDISPLAY_NUC 5. DS_CHR_DEVTYPEGET_NUC6. DS_CHR_INT_PIC_NUC7. DS_CHR_DMA_NUC8. DS_BROM_WRITEREAD_NUC9. DS_NVRAM_COMMUNICATION_NUC10. DS_NVRAM_WRITEREAD_NUC11. DS_SDRAM_WRITEREADFAST_NUC12. DS_FLASH_WRITEREAD_NUC13.DS_FLASH_CHECKSUMPROGRAM_ NUC14.DS_SYS_HARDWAREVERSIONGET_NUC15. DS_VIP_DEVTYPEGET_NUC16. DS_VIP_COMMUNICATION_NUC17. DS_DVIO_LINKDEVTYPEGET_NUC18. DS_DVIO_PHYDEVTYPEGET_NUC19. DS_DVIO_LINKCOMMUNICATION_NUC20. DS_DVIO_PHYCOMMUNICATION_NUC21.DS_PSCAN_COMMUNICATI ONDENC_NUC22.DS_PSCAN_COMMUNICATIONDEINTERLACER_NU C23. DS_BE_COMMUNICATIONECHO_NUC24.DS_ANAB_COMMUNICATIO NIICNVRAM_NUC25.DS_ANAB_COMMUNICATIONIICTUNER_NUC26.D S_ANAB_COMMUNICATIONIICSOUNDPROCESSOR_NUC27.DS_ANA B_COMMUNICATIONIICAVSELECTOR_NUC28. DS_ANAB_CHECKSUMPROGRAM_NUC

5.2 Virgin mode

If you want that the recorder starts up in Virgin mode, follow this procedure:

- Unplug the recorder
- plug the recorder again while you keep the STAND BY/ON key pressed
- the set starts up in Virgin mode.

5.3 Command Mode Interface

5.3.1 Nuclei Numeration

Each nucleus has a unique number of four digits. This number is the input of the command mode.

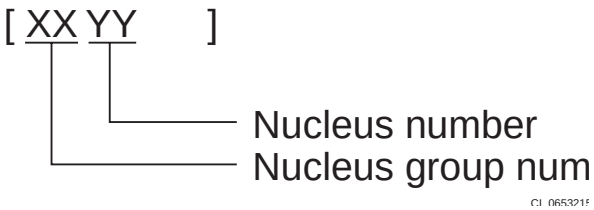

Figure 5-2

The following groups are defined for Digital Board Chrysalis:

Group number	Group name
0	Basic / Scripts
1	Chrysalis
2	Boot EEPROM
3	NVRAM
4	SDRAM
5	Flash
6	Video Input Processor
7	DVIO
8	Progressive Scan
9	Basic Engine
10	Display and Control Board
11	Analogue Board
12	System

5.3.2 Error Handling

Each nucleus returns an error code. This code contains six numerals, which means:

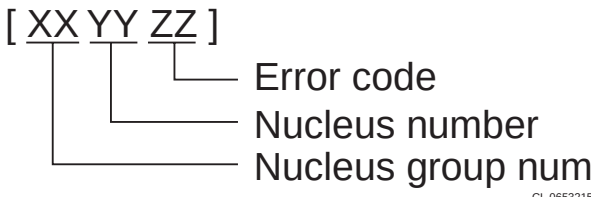

Figure 5-3

The nucleus group numbers and nucleus numbers are the same as above.

5.3.3 Command Mode Interface

Set-Up Physical Interface Components

Hardware required:

- Service PC
- one free COM port on the Service PC
- special cable to connect DVD recorder to Service PC

The service PC must have a terminal emulation program (e.g. Hyperterminal) installed and must have a free COM port (e.g. COM1). Activate the terminal emulation program and check that the port settings for the free COM port are: 19200 bps, 8 data bits, no parity, 1 stop bit and no flow control. The free COM port must be connected via a special cable to the RS232 port of the DVD recorder. This special cable will also connect the test pin, which is available on the connector, to ground (i.e. activate test pin).

Code number of PC interface cable: 3122 785 90017

Activation Digital Board Chrysalis

1. Pull the mains cord from the recorder and reconnect it again (reboot).
2. The next welcome message will appear on the PC:

Startup screen

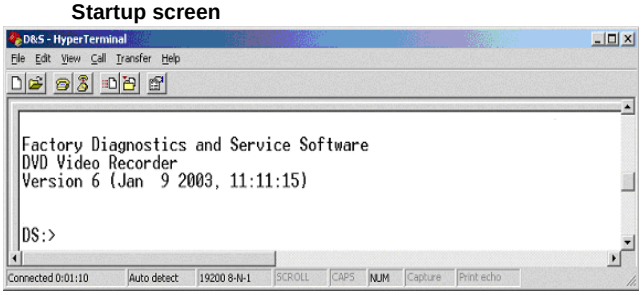

Figure 5-4

Now, the prompt 'DS:>' will appear. The diagnostic software is now ready to receive commands. The commands that can be given are the numbers of the nuclei. If you see above shown screen, continue with paragraph 'Nuclei Codes'.

1. It is possible that the next messages will appear when starting the DVD+RW for the first time

Error messages startup

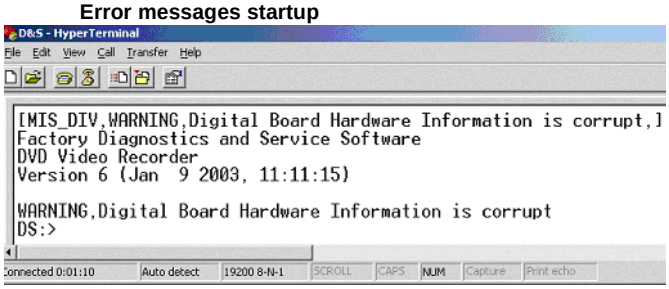

Figure 5-5

Error messages D&S program

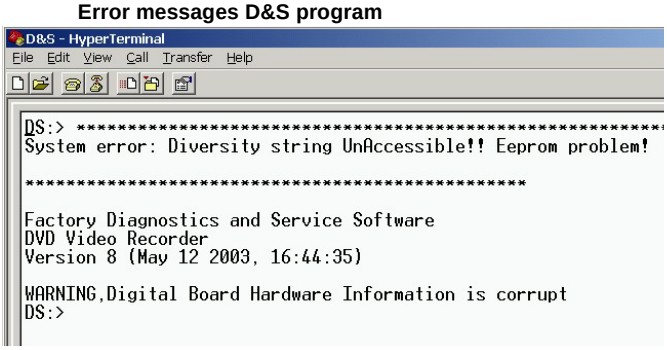

Figure 5-6

In these cases, the boot EEPROM of the Chrysalis Digital Board does not contain the required string with the hardware information. To update the Digital Board with the correct string, nucleus 1226 must be executed. See next section 'Diversity String Input'.

There can also be the next error message.

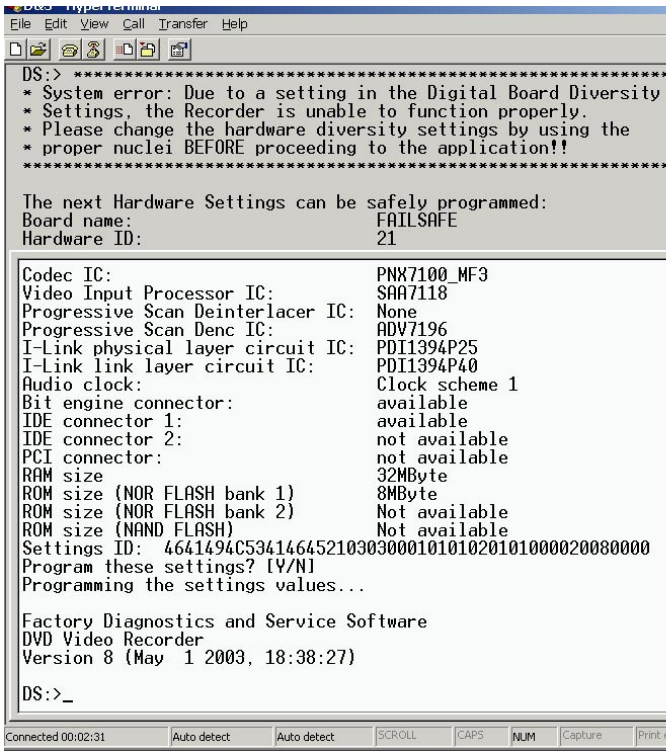

Figure 5-7

Enter "Y" to program a safe string. With this automatically generated string the board will work in principle but it has to be checked if all board settings were detected correctly.

Diversity String Input

1. Execute nucleus 1226 to enter the string. Please see adjustment instructions in chapter 8 for details

Nucleus 1226 execution with string

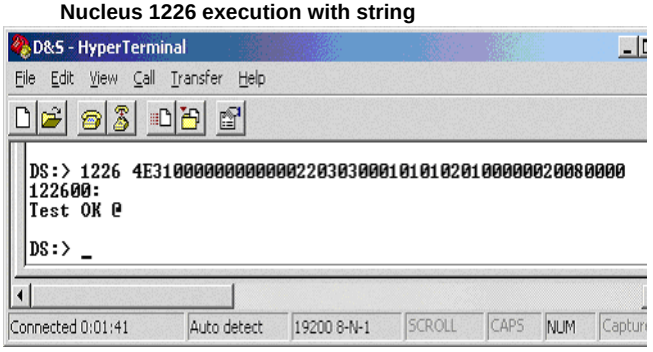

Figure 5-8

1. To check if the hardware info is filled correctly, you can execute nucleus 1228.

Nucleus 1228 info example

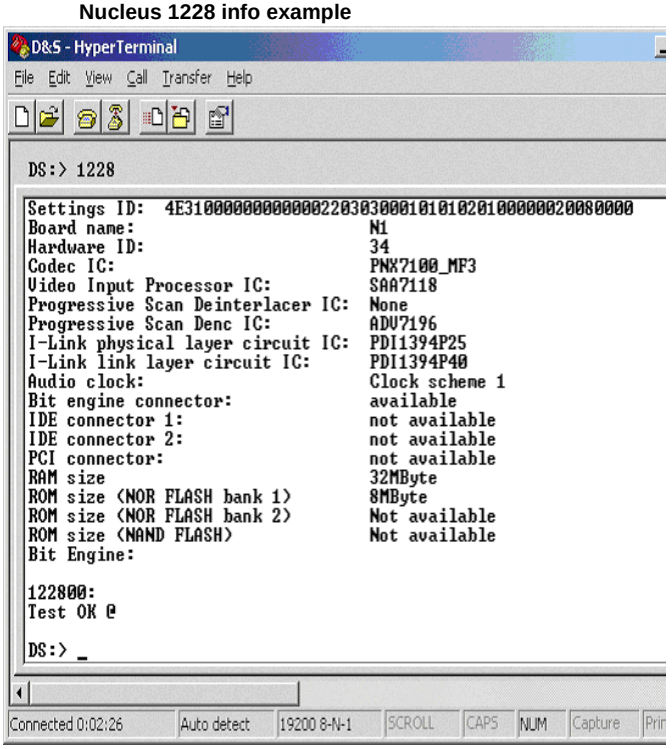

Figure 5-9

1. Exit the 'Terminal' program.
1. Reboot the DVD recorder to allow the software to start.

Command overview Digital Board Chrysalis

Below you will find an overview of the nuclei, their numbers, and their error codes. This overview is preliminary and subject to modifications.

Chrysalis (CHR)

Nucleus Name	**DS_CHR_DevTypeGet**
Nucleus Number	100
Description	Sends the device ID and the module ids and revisions of the PNX7100 (Chrysalis) to the stdout port.
User Input	None
Example	DS:> 100 Device ID 7100 Codec ID PNX7100_MF2 F-BCU (0x0102) 1.0 INTC (0x011d) 1.0 PCI-XIO(0x0113) 1.0 SIF(0x013b) 1.0 EJTAG (0x0104) 0.0 S-BCU (0x0102) 1.0 BOOT (0x010a) 1.0 CONFIG (0x013f) 1.0 RESET (0x0123) 1.0 DEBUG (0x0116) 0.0 UART0 (0x0107) 0.1 UART1 (0x0107) 0.1 UART2 (0x0107) 0.1 UART3 (0x0107) 0.1 I2C0 (0x0105) 0.1 I2C1 (0x0105) 0.1 GPIO (0x013c) 1.0 SYNC (0x013a) 1.0 DISP0 (0xa015) 0.1 DISP1 (0xa00f) 0.0 OSD (0x0136) 0.1 SPU (0xa00e) 0.0 MIXER (0x0137) 1.0 DENC (0x0138) 0.1 CCIR (0x0139) 1.0 VDEC (0x0133) 0.1 PARSER (0xa00d) 0.0 DV (0xa00c) 0.0 BEI (0xa00a) 0.0 IDE (0xa009) 0.0 SGDX (0xa008)0.0 BYTE (0xa00b) 0.0 OUTPUT (0xa003) 0.0 ACOMP (0xa000) 0.0 VFE (0xa001) 0.0 VCOMP (0xa002) 0.0 SCR (0x0000) 0.0 SIFF (0xa011) 0.0 WMD (0xa010) 0.0 AUDIO0 (0xa015) 0.1 AUDIO1 (0xa00f) 0.0 PSCAN (0xa018) 0.0 010000: Test OK @

Nucleus Name	**DS_CHR_TestImageOn**
Nucleus Number	101
Description	Generates a test-image of a selected video standard on selected video output on the digital board. When no input is given, the default values will be used. Use nucleus **DS_ANAB_VideoRouting** to route the video signal on the analogue board output
User Input	The user has to decide which test image, video standard and video output must be used: **Test image id:** 0 VERTICAL_COLOURBAR (default) 1 HORIZONTAL_COLOURBAR 2 WHITE 3 YELLOW 4 CYAN 5 GREEN 6 MAGENTA 7 RED 8 BLUE 9 BLACK 10 GRAY **Video standard:** PAL (default) NTSC **Video output:** ALL CVBS and YC and RGB (default) CVBS YC RGB YUV PSCAN progressive scan
Example	DS:> 101 010100: Test OK @ DS:> 101 0 pal cvbs 010100: Test OK @ DS:> 101 4 ntsc yc 010100: Test OK @

Nucleus Name	**DS_CHR_TestImageOff**
Nucleus Number	102
Description	Switches the test-image off.
User Input	None

Example	DS:> 102 010200: Test OK @

Nucleus Name	**DS_CHR_SineOn**
Nucleus Number	103
Description	Generate an audio sine signal on the audio output of the digital board. Note: Left channel 6kHz, right channel 12 kHz sine. Make sure to route the signal first.
User Input	None
Example	DS:> 103 010300: Test OK @

Nucleus Name	**DS_CHR_SineOff**
Nucleus Number	104
Description	Stop generating the audio sine signal
User Input	None
Example	DS:> 104 010400: Test OK @

Nucleus Name	**DS_CHR_SineBurst**
Nucleus Number	105
Description	Generate an audio sine signal on the audio output of the digital board for 4 seconds.
	Note: Left channel 6kHz, right channel 12 kHz sine with some known hick-ups
User Input	None
Example	DS:> 105 010500: Test OK @

Nucleus Name	**DS_CHR_MuteOn**
Nucleus Number	106
Description	Mute the audio outputs of the digital board
User Input	None
Example	DS:> 106 010600: Test OK @

Nucleus Name	**DS_CHR_MuteOff**
Nucleus Number	107
Description	De-mute the audio outputs of the digital board
User Input	None
Example	DS:> 107 010700: Test OK @

Nucleus Name	**DS_CHR_DvLedOn**
Nucleus Number	108
Description	Check the connection to the DV-LED on the digital board by switching it on
User Input	None
Example	DS:> 108 010800: Test OK @

Nucleus Name	**DS_CHR_DvLedOff**
Nucleus Number	109
Description	Switch off the DV-LED on the digital board
User Input	None
Example	DS:> 109 010900: Test OK @

Nucleus Name	**DS_CHR_MacroVisionOn**
Nucleus Number	110
Description	Turn on MacroVision.
User Input	None
Example	DS:> 110 011000: Test OK @

Nucleus Name	**DS_CHR_MacroVisionOff**
Nucleus Number	111
Description	Turn off MacroVision.
User Input	None
Example	DS:> 111 011100: Test OK @

Nucleus Name	**DS_CHR_Peek**
Nucleus Number	112
Description	Peek a value on a specified address
User Input	The address to peek on
Example	DS:> 112 0xa0700000 011200: Value read = 0x000001BD Test OK @

Nucleus Name	**DS_CHR_Poke**
Nucleus Number	113
Description	Poke a value on a specified address
User Input	The address to poke and the value: <address><value>
Example	DS:> 113 0xa0700000 0xaabbccdd 011300: Test OK @

Nucleus Name	**DS_CHR_INT_PICInterrupts**
Nucleus Number	114
Description	Test all interrupts of the priority interrupt controller
User Input	-
Example	DS:> 114 011400: Test OK @

Nucleus Name	**DS_CHR_DMA_TestDMA**
Nucleus Number	115
Description	Test the memory to memory DMA transfer
User Input	-
Example	DS:> 115 011500: Test OK @

Boot EEPROM (BROM)

Nucleus Name	**DS_BROM_Communication**
Nucleus Number	200
Description	Check the communication between the IIC controller of the Chrysalis and the boot EEPROM
User Input	None
Example	DS:> 200 020000: Test OK @

Nucleus Name	**DS_BROM_WriteRead**
Nucleus Number	201
Description	Check whether the Boot EEPROM can be written to and read from
User Input	None

Example	DS:> 201 020100: Test OK @

NVRAM

Nucleus Name	**DS_NVRAM_Communication**
Nucleus Number	300
Description	Check the communication between the IIC controller of the Chrysalis and the EEPROM
User Input	None
Example	DS:> 300 030000: Test OK @

Nucleus Name	**DS_NVRAM_WriteRead**
Nucleus Number	301
Description	Check whether the EEPROM can be written to and read from
User Input	None
Example	DS:> 301 030100: Test OK @

Nucleus Name	**DS_NVRAM_Clear**
Nucleus Number	302
Description	Make the EEPROM empty, containing all zeroes.
User Input	None
Example	DS:> 302 030200: Test OK @

Nucleus Name	**DS_NVRAM_Modify**
Nucleus Number	303
Description	Modifies one or more locations in NVRAM and updates the checksum of the section modified
User Input	1. The location that must be modified i.e. "ALL" "BOOT" "DIAGNOSTICS" "DOWNLOAD" "CONFIG" "RECORDER" or no string if an offset from the base address of the NVRAM is required 2. The offset and data which to put on the selected location <offset> <length> <data>
Example	DS:> 303 DIAGNOSTICS 5 1 0x5a 030300:Section is modified successfully Test OK @

Nucleus Name	**DS_NVRAM_Read**
Nucleus Number	304
Description	Read out one or more locations in the NVRAM
User Input	1. The location which must be read i.e. "ALL" "BOOT" "DIAGNOSTICS" "DOWN LOAD" "CONFIG" "RECORDER" or no string if an offset from the base address of the NVRAM is required 2. The offset and number of bytes to read <offset> <length>
Example	304 DIAGNOSTICS 0 6 030400: Value read = 0x00 0x00 0x00 0x00 0x00 0x5A Test OK @

SDRAM

Nucleus Name	**DS_SDRAM_WriteRead**
Nucleus Number	400
Description	Check all data lines, address lines and memory locations of the SDRAM
User Input	None
Example	DS:> 400 040000: Test OK @

Nucleus Name	**DS_SDRAM_WriteReadFast**
Nucleus Number	401

Description	Check all data lines and address lines of the SDRAM
User Input	None
Example	DS:> 401 040100: Test OK @

Nucleus Name	**DS_SDRAM_Write**
Nucleus Number	402
Description	Write to a specific memory address
User Input	1. The location that must be modified (SDRAM starts at address 0xA0000000) 2. The value to put on the selected location
Example	DS:> 402 0xa1000010 0xad112222 040200: Test OK @

Nucleus Name	**DS_SDRAM_Read**
Nucleus Number	403
Description	Read from a specific memory address
User Input	The location from which the data must be read (SDRAM starts at address 0xA0000000)
Example	DS:> 403 0xa1000010 040300: Value read = 0xAD112222 Test OK @

FLASH

Nucleus Name	**DS_FLASH_DevTypeGet**
Nucleus Number	500
Description	Get the device (revision) type information of the FLASH IC. (manufacturer and device ID)
User Input	None
Example	DS:> 500 050000: Found FLASH memory: Manufacturer ID: 0x01 Device ID : 0x01 Test OK @

Nucleus Name	**DS_FLASH_WriteRead**
Nucleus Number	501
Description	Check whether the FLASH can be written to and read from
User Input	None
Example	DS:> 501 050100: Test OK @

Nucleus Name	**DS_FLASH_Read**
Nucleus Number	502
Description	Read from a specific memory address in FLASH
User Input	The location from which data must be read (FLASH starts at address 0xB8000000)
Example	DS:> 502 0xb8000000 050200: Value read = 0x3C08A000 Test OK @

Nucleus Name	**DS_FLASH_ChecksumProgram**
Nucleus Number	503
Description	Check the checksum of the application partitions by recalculating and comparing partition checksums
User Input	None
Example	DS:> 503 050300: BootCode checksum is: 0xBABE5B6F, which is correct Diagnostics checksum is : 0xBABEBAFF, which is correct Download checksum is: 0xBABEEDBF, which is correct Application checksum is : 0xBABE8EEC, which is correct Test OK @

Nucleus Name	**DS_FLASH_CalculateChecksum**
Nucleus Number	504
Description	Calculate the checksum over all memory addresses. Used to check entire FLASH contents
User Input	None
Example	DS:> 504 050400: The Checksum = 0xBABE30A4 Test OK @

Nucleus Name	**DS_FLASH_CalculateChecksumFast**
Nucleus Number	505
Description	Calculate a checksum over a selected number of address locations
User Input	None
Example	DS:> 505 050500: The Checksum = 0xBABEB064 Test OK @

Video Input Processor (VIP)

Nucleus Name	**DS_VIP_DevTypeGet**
Nucleus Number	600
Description	Get the device (revision) type information of the VIP IC
User Input	None
Example	DS:> 600 060000: Found SAA7118 Test OK @

Nucleus Name	**DS_VIP_Communication**
Nucleus Number	601
Description	Check the communication between the IIC controller of the chrysalis and the VIP IC
User Input	None
Example	DS:> 601 060100: Test OK @

Nucleus Name	**DS_VIP_ClockOutputOn**
Nucleus Number	602
Description	Switch the clock output on
User Input	None
Example	DS:> 602 060200: Test OK @

Nucleus Name	**DS_VIP_ClockOutputOff**
Nucleus Number	603
Description	Switch the clock output off
User Input	None
Example	DS:> 603 060300: Test OK @

Nucleus Name	**DS_VIP_SelectInput**
Nucleus Number	604
Description	Select an input video path to be switched to the analogue output pin (AOUT) of the VIP
User Input	The input to select, see table below. 1 CVBS_Y_IN_A 2 CVBS_OUT_B 3 CVBS_Y_IN_B 4 CVBS_Y_IN_C 6 C_IN 8 G_IN 9 Y_IN 13 B_IN 14 U_IN 18 R_IN 19 V_IN

Example	DS:> 604 1 060400: Test OK @

Digital Video Input Output (DVIO)

Nucleus Name	**DS_DVIO_LinkDevTypeGet**
Nucleus Number	700
Description	Get the device (revision) type information of the 1394 Link layer IC
User Input	None
Example	DS:> 700 070000: Device type of the link layer IC: ffc00301 Test OK @

Nucleus Name	**DS_DVIO_PhyDevTypeGet**
Nucleus Number	701
Description	Get the device (revision) type information of the 1394 Physical layer IC
User Input	None
Example	DS:> 701 070100: Device type of the phy layer IC: 0 Test OK @

Nucleus Name	**DS_DVIO_LinkCommunication**
Nucleus Number	702
Description	Check the accessibility of the 1394 Link layer IC by writing to and reading from a specific address
User Input	None
Example	DS:> 702 070200: Test OK @

Nucleus Name	**DS_DVIO_PhyCommunication**
Nucleus Number	703
Description	Check the accessibility of the 1394 Physical layer IC by writing to and reading from a specific address
User Input	None
Example	DS:> 703 070300: Test OK @

Nucleus Name	**DS_DVIO_Routing**
Nucleus Number	704
Description	Route a DV stream containing an audio and video signal through the physical and link layer ICs to the Chrysalis
User Input	None, test works for both NTSC and PAL
Example	DS:> 704 070400: Test OK @

Nucleus Name	**DS_DVIO_DetectNode**
Nucleus Number	705
Description	Check whether a DV node can be detected by the hardware
User Input	None, test works for both NTSC and PAL
Example	DS:> 705 070500: Test OK @

Nucleus Name	**DS_DVIO_DetectStream**
Nucleus Number	706
Description	Check whether a DV stream can be detected by the hardware
User Input	None, test works for both NTSC and PAL
Example	DS:> 706 070600: Test OK @

Progressive Scan (PSCAN)

Nucleus Name	**DS_PSCAN_CommunicationDenc**
Nucleus Number	801
Description	Check the communication between the IIC controller of the chrysalis and the progressive scan DENC-IC
User Input	None
Example	DS:> 801 080100: Test OK @

Nucleus Name	**DS_PSCAN_TestImageOn**
Nucleus Number	802
Description	Generate the test images that are present on the progressive scan IC.
User Input	In case of ADV7196: When no input is given “HATCH” is the default -“HATCH” -“FRAME” Remark: “HATCH” is a crosshatch test pattern (horizontal and vertical white lines are displayed against a black background) “FRAME” is a uniform coloured frame/field test pattern (default white). In case of FLI2300: Nothing.
Example	DS:> 802 HATCH 080200: Test OK @

Nucleus Name	**DS_PSCAN_TestImageOff**
Nucleus Number	803
Description	Switch off the generated test image
User Input	None
Example	DS:> 803 080300: Test OK @

Nucleus Name	**DS_PSCAN_TestImageColourSettingsSet**
Nucleus Number	804
Description	Set the colour of the hatch- or the frame- field to a different value than the default white
User Input	A colour string of one of the next non-case sensitive strings (WHITE, BLACK, RED, GREEN, BLUE, YELLOW, CYAN, MAGENTA) or Y Cr Cb (hexa-) decimal values.
Example	DS:> 804 yellow 080400: Test OK @ DS:> 804 0x6a 0xde 0xca 080400: Test OK @

Nucleus Name	**DS_PSCAN_TestImageColourSettingsGet**
Nucleus Number	805
Description	Get the colour settings of the hatch- or the frame- field.
User Input	None
Example	DS:> 805 080500: Colour Y Cr Cb values: 0xD2 0x92 0x10 Test OK @

Nucleus Name	**DS_PSCAN_Routing**
Nucleus Number	806
Description	Route a video signal from the host processor through the progressive scan ICs to the progressive scan output of the set. Note: to route the progressive scan to the output of the set, first call nucleus 1112 with parameter 0 (video routing on analogue board).
User Input	None
Example	DS:> 806 080600: Test OK @

Nucleus Name	**DS_PSCAN_DevTypeGetDeinterlacer**
Nucleus Number	807
Description	Get the device (revision) type information of the progressive scan deinterlacer.
User Input	None
Example	DS:> 807 080700: Chip name : 2300 Chip version : 1 Test OK @

Nucleus Name	**DS_PSCAN_CommunicationDeinterlacer**
Nucleus Number	808
Description	Check the communication between the IIC controller of the chrysalis and the progressive scan Deinterlacer-IC
User Input	None
Example	DS:> 808 080800: Test OK @

Basic Engine (BE)

Nucleus Name	**DS_BE_CommunicationEcho**
Nucleus Number	900
Description	Check the communication between the digital board and the basic engine by issuing an echo command over the S2B interface
User Input	None
Example	DS:> 900 090000: Test OK @

Nucleus Name	**DS_BE_Reset**
Nucleus Number	901
Description	Reset the basic engine
User Input	None
Example	DS:> 901 090100: Test OK @

Nucleus Name	**DS_BE_VersionGet**
Nucleus Number	903
Description	Get the version of the basic engine and that of the optical unit
User Input	None
Example	DS:> 903 090300: BE version = 20.09.18 Optical unit version = 3C.00.09.41.08 Test OK @

Nucleus Name	**DS_BE_GetSelftestResult**
Nucleus Number	902
Description	Return the self-test results through the service port
User Input	None
Example	DS:> 902 090200: Test OK @

Nucleus Name	**DS_BE_TrayOut**
Nucleus Number	904
Description	Open the tray of the basic engine
User Input	None
Example	DS:> 904 090400: Test OK @

Nucleus Name	**DS_BE_TrayIn**
Nucleus Number	905
Description	Close the tray of the basic engine

User Input	None
Example	DS:> 905 090500: Test OK @

Nucleus Name	**DS_BE_WriteReadDvdRw**
Nucleus Number	906
Description	Write data to and read data from a DVD+RW disc through the basic engine for verification of the writing
User Input	None
Example	DS:> 906 090600: Testing on sector 0x5dbe0: OK Test OK @

Nucleus Name	**DS_BE_WriteReadDvdR**
Nucleus Number	907
Description	Write data to and read data from a DVD+R disc through the basic engine for verification of the writing
User Input	None
Example	DS:> 907 090700: Testing on sector 0x36210: OK Test OK @

Nucleus Name	**DS_BE_StatisticalInformationGet**
Nucleus Number	908
Description	Retrieve the statistical information from the basic engine
User Input	None
Example	DS:> 908 Total time the power power on (HR:MIN) 0: 0h Total time of reading CDROM discs (HR:MIN) 0: 0h Total time of reading high DVD SL discs (HR:MIN) 0: 0h Total time of reading other DVD SL discs (HR:MIN) 0: 0h Total time of reading high DVD DL siscs (HR:MIN) 0: 0h Total time of reading other DVD DL discs (HR:MIN) 0: 0h Total time of reading high DVD+R discs (HR:MIN) 0: 0h Total time of reading other DVD+R discs (HR:MIN) 0: 0h Total time of reading high DVD+RW discs (HR:MIN) 0: 0h Total time of reading other DVD+RW discs (HR:MIN) 1: 0h Total time of writing DVD+R discs in 2HRS mode (HR:MIN) 0: 0h Total time of writing DVD+R discs in 4HRS mode (HR:MIN) 0: 0h Total time of writing DVD+R discs in 6HRS mode (HR:MIN) 0: 2h Total time of writing DVD+RW discs in 2HRS mode (HR:MIN) 0: 0h Total time of writing DVD+RW discs in 4HRS mode (HR:MIN) 0: 3h Total time of writing DVD+RW discs in 6HRS mode (HR:MIN) 0: 0h 090800: Test OK @

Nucleus Name	**DS_BE_StatisticalInformationReSet**
Nucleus Number	909
Description	Reset the statistical information in the basic engine
User Input	None
Example	DS:> 909 090900: Test OK @

Nucleus Name	**DS_BE_ErrorLogGet**
Nucleus Number	910
Description	Get the error log from the basic engine
User Input	None
Example	DS:> 910 Momentary errors (0-9): 0x21 0x00 0x00 0x20 0x00 0x00 0x00 0x00 0x00 0x00 Cumulative errors (1-9): 0x00 0x80 0x20 0x00 0x00 0x00 0x00 0x00 0x00 Software fatal assert : 256 cpowermanager.cpp 091000: Test OK @

Nucleus Name	**DS_BE_ErrorLogReset**
Nucleus Number	911
Description	Reset the error log in the basic engine
User Input	None
Example	DS:> 911 091100: Test OK @

Nucleus Name	DS_BE_JitterOptimise
Nucleus Number	912
Description	Perform jitter optimisation:A formatted DVD must be loaded into the engine before executing this nucleus
User Input	none
Example	DS:> 912 Test OK @

Nucleus Name	**DS_BE_FocusOn**
Nucleus Number	913
Description	Put the laser of the BE into focus
User Input	None
Example	DS:> 913 091300: Test OK @

Nucleus Name	**DS_BE_FocusOff**
Nucleus Number	914
Description	Turn off putting the laser of the BE into focus
User Input	None
Example	DS:> 914 091400: Test OK @

Nucleus Name	**DS_BE_MotorOn**
Nucleus Number	915
Description	Turn on the turntable motor
User Input	None
Example	DS:> 915 091500: Test OK @

Nucleus Name	**DS_BE_MotorOff**
Nucleus Number	916
Description	Turn off the turntable motor
User Input	None
Example	DS:> 916 091600: Test OK @

Nucleus Name	**DS_BE_RadialOn**
Nucleus Number	917
Description	Close the radial loop
User Input	A formatted DVD must be loaded into the engine before executing this nucleus
Example	DS:> 917 091700: Test OK @

Nucleus Name	**DS_BE_RadialOff**
Nucleus Number	918
Description	Open the radial loop
User Input	None
Example	DS:> 918 091800: Test OK @

Nucleus Name	**DS_BE_RadialCalibration**
Nucleus Number	919
Description	Calibrate the radial loop
User Input	A formatted DVD must be loaded into the engine before executing this nucleus
Example	DS:> 919 091900: Test OK @

Nucleus Name	**DS_BE_Tilt**
Nucleus Number	920
Description	Test the tilt mechanism control loop, or allow its proper functioning to be measured.Before executing this nucleus a disc must be loaded into the recorder
User Input	None
Example	DS:> 920 092000: Tilt sensor bathtub: (71,-12,145)(68,-12,135)(62,-10,120)(56,-92,97)(50,-75,86) (44,-59,80)(41,-52,80)(35,-37,86)(29,-22,86) (23,-7,92)(17,8,111)(11,23,135)(8,31,138)(5,39,158) Test OK @

Nucleus Name	**DS_BE_CheckDisc**
Nucleus Number	921
Description	Check whether there is a disc inside the BE
User Input	None
Example	DS:> 921 092100: A DVD+Rewritable is loaded (disc is empty or partially recorded) Test OK @ DS:> 921 092100: No Disc is loaded Test OK @

Nucleus Name	**DS_BE_SledgeMotor**
Nucleus Number	922
Description	Send the sledge to its home position, then to the middle of the disc, and then to the end.
User Input	None
Example	DS:> 922 092200: Test OK @

Nucleus Name	**DS_BE_ReadTocInfo**
Nucleus Number	924
Description	Read the TOC from the disc. This gives a good indication if the BE works properly..
User Input	None
Example	DS:> 924 092400: TOC info [hex] = 91 3A 0C Test OK@ DS:> 924 092403: The BE returned: 0x10 #{no_disc_error} No disc is detected Error@ DS:> 924 092403: The BE returned: 0x1e #{illegal_medium_error} Engine unable to handle current disc. Probably illegal medium. Error @

Nucleus Name	**DS_BE_DiscErase**
Nucleus Number	925
Description	Perform a DC-erase on a DVD+RW disc.
User Input	None

Example	DS:> 925 The entirely disc will be erased. Are you sure you want this?[y/n] 092500: Test OK @

Nucleus Name	**DS_BE_RegionCodeSet**
Nucleus Number	928
Description	Set the region code in the AV3.
User Input	Region code
Example	DS:> 928 1 092800: Test OK @ DS:> 928 This nucleus is not supported by the engine 092800: Test OK @

Nucleus Name	**DS_BE_RegionCodeGet**
Nucleus Number	929
Description	Read the region code from the AV3.
User Input	None
Example	DS:> 929 092900: DVD region 1 Test OK @ DS:> 929This nucleus is not supported by the engine 092900: Test OK @

Nucleus Name	**DS_BE_RegionCounterReset**
Nucleus Number	930
Description	Reset the region counter in the AV3.
User Input	None
Example	DS:> 930 093000: Test OK @ DS:> 930 This nucleus is not supported by the engine 093000: Test OK @

Nucleus Name	**DS_BE_AdjustLaserControl**
Nucleus Number	931
Description	Adjust the DVD-M (with the OPU) with PCBA. (So adjusts the two PCBS to each other)
User Input	None
Execution Time	30 seconds
Example	DS:> 931 093100: Test OK @

Display and Control Board (DCB)

Nucleus Name	**DS_DCB_CommunicationEcho**
Nucleus Number	1000
Description	Check the communication between the digital board and the DCB by issuing an echo command
User Input	None
Example	DS:> 1000 100000: Test OK @

Nucleus Name	**DS_DCB_VersionGet**
Nucleus Number	1001
Description	Get the version of the DCB

User Input	None
Example	DS:> 1001100100: DCB version: 13Test OK @

Nucleus Name	**DS_DCB_LightDisplay**
Nucleus Number	1002
Description	Light the entire display of the DCB, and clear the display after confirmation.User confirmation is necessary.
User Input	None
Example	DS:> 1002 100200: Test OK @

Nucleus Name	**DS_DCB_Keyboard**
Nucleus Number	1004
Description	Check all keys of the keyboard by confirming the key-code displayed of each key.
User Input	None
Example	DS:> 1004 100400: Test OK @

Nucleus Name	**DS_DCB_RemoteControl**
Nucleus Number	1005
Description	Check the interface between the remote control and the DCB by checking the key-code displayed
User Input	None
Example	DS:> 1005 100500: Test OK @

Nucleus Name	**DS_DCB_Led**
Nucleus Number	1006
Description	Switch the record LED on, and after confirmation off. The user confirms by pressing the REC key, STOP key, or the PLAY key on the local keyboard. The PLAY key confirms that the LED is on and the REC key
User Input	None
Example	DS:> 1006 100600: Test OK @

Analogue Board (ANAB)

Nucleus Name	**DS_ANAB_CommunicationEcho**
Nucleus Number	1100
Description	Check the communication between the digital board and the analogue board by issuing some echo string.
User Input	None
Example	DS:> 1100 110000: Hello Analogue Board Test OK @

Nucleus Name	**DS_ANAB_CommunicationlicNvram**
Nucleus Number	1101
Description	Check the communication between the digital board and the NVRAM on the analogue board.
User Input	None
Example	DS:> 1101 110100: Test OK @

Nucleus Name	**DS_ANAB_CommunicationlicTuner**
Nucleus Number	1102
Description	Check the communication between the digital board and the tuner on the analogue board
User Input	None

Example	DS:> 1102 110200: Test OK @

Nucleus Name	**DS_ANAB_CommunicationlicDataSlicer**
Nucleus Number	1103
Description	Check the communication between the digital board and the data slicer on the analogue board
User Input	None
Example	DS:> 1103 110300: Test OK @

Nucleus Name	**DS_ANAB_CommunicationlicSoundProcessor**
Nucleus Number	1104
Description	Check the communication between the digital board and the sound processor on the analogue board
User Input	None
Example	DS:> 1104 110400: Test OK @

Nucleus Name	**DS_ANAB_CommunicationlicAVSelector**
Nucleus Number	1105
Description	Check the communication between the digital board and the A/V-selector on the analogue board
User Input	None
Example	DS:> 1105 110500: Test OK @

Nucleus Name	**DS_ANAB_HardwareVersionGet**
Nucleus Number	1106
Description	Get the hardware version of the analogue board
User Input	None
Example	DS:> 1106 110600: Analogue hardware version : 11 Test OK @

Nucleus Name	**DS_ANAB_SoftwareVersionBootGet**
Nucleus Number	1107
Description	Get the software version of the boot software of the analogue board
User Input	None
Example	DS:> 1107 110700: Bootcode application version : 11.00.11 Test OK @

Nucleus Name	**DS_ANAB_SoftwareVersionDownloadGet**
Nucleus Number	1108
Description	Get the software version of the download software of the analogue board
User Input	None
Example	DS:> 1108 110800: Download application version : 11.00.06 Test OK @

Nucleus Name	**DS_ANAB_SoftwareVersionApplGet**
Nucleus Number	1109
Description	Get the software version of the application software of the analogue board
User Input	None
Example	DS:> 1109 110900: Recorder application version : 11.00.23 Test OK @

Nucleus Name	**DS_ANAB_SoftwareVersionDiagnosticsGet**
Nucleus Number	1110
Description	Get the software version of the diagnostic software of the analogue board
User Input	None
Example	DS:> 1110 111000: Diagnostics application version : 11.00.13 Test OK @

Nucleus Name	**DS_ANAB_ChecksumProgram**
Nucleus Number	1111
Description	Check the checksum of the several partitions by recalculating and comparing partition checksums
User Input	None
Example	DS:> 1111 BootCode checksum is: 0xBABE6240, which is correct Diagnostics checksum is : 0xBABEBEAD, which is correct Download checksum is: 0xBABEA6B7, which is correct Application checksum is : 0xBABEB277, which is correct 111100: Test OK @

Nucleus Name	**DS_ANAB_VideoRouting**
Nucleus Number	1112
Description	Perform the routing of the video paths on the analogue board
User Input	The user has to input the correct parameter for the routing (see table 'video routing' below).
Example	DS:> 1112 00111200: Test OK @

Video routing paths (Europe)

Path ID	Description
0	Input signal is VIDEO(CVBS) from digital board and will be re-routed back to the digital board.
1	Input signal is from FRONT VIDEO(CVBS) IN and will be routed to the digital board.
2	No Routing.
3	Input signal is from FRONT S-VIDEO(Y/C) and will be routed to the digital board.
4	No Routing.
5	Input signal is CVBS from SCART1 and will be routed to the digital board.
6	Input signal is CVBS from SCART2 and will be routed to the digital board.
7	Input Signal is CVBS from Digital Board and it will be routed to Scart1 and Scart2.
8	Input signal is VIDEO(CVBS) from ANTENNA IN and will be routed to SCART2.
9	Input signal is VIDEO(CVBS) from SCART1 and will be routed to SCART2.
10	Input signal is VIDEO(CVBS) from SCART2 and will be routed to SCART1.
11	Signal path is routed Fast Blank from Scart2 pin16 and will be routed SCART1 pin16
12	Input Signal is YC from Digital Board and it will be routed to SCART1.
13	
14	No Routing.
15	Input Signal is CVBS from TUNER and it will be routed to Digital .
16	No Routing.
17	Input Signal is routed from digital board YC to REAR S-VIDEO(YC) OUT
18	Signal path is routed from digital board RGB to RGB SCART1 and from digital board CVBS to digital board CVBS.
19	No Routing.
20	Input RGB Signal is routed from Digital Board to SCART1(RGB),Input CVBS Signal from Digital Board to Digital Board and Fast Blanking Signal from SCART2 to SCART1.
21	Input Y/C Signal from Digital Board is routed to Rear Y/C Connector and Input Y/C Signal from Front Y/C connector is routed to Digital Board.

Video routing paths (NAFTA)

Path ID	Description
0	No Routing.
1	Input signal is from FRONT VIDEO(CVBS) IN and will be routed to the digital board.This routing is same as the above path id.

2	Input signal is from REAR VIDEO(CVBS) IN and will be routed to the digital board.
3	Input signal is from FRONT S-VIDEO(Y/C) IN and the signal received will be routed to the digital board.
4	Input signal is from REAR S-VIDEO(Y/C) IN and will be routed to the digital board.
5	No Routing.
6	No routing.
7	No routing.
8	Input signal is VIDEO(CVBS) from TUNER and will be routed to Y Pin of Rear Y/C Connector.This will give only black/White Picture .
9	Input signal is from YUV IN and will be routed to YUV OUT.This is possible only if Digital Board routes back YUV signal received back to the Analogue board(DENC)
10	No routing.
11	No routing.
12	No Routing.
13	No Routing.
14	No Routing.
15	Input CVBS Signal from Tuner is routed to Digital Board..
16	No Routing.
17	No Routing.
18	Input Signal from CVBS Rear In is routed to Digital Board. This is the same as path ID 02.
19	Input Y/C signal from Digital Board is routed to Y/C Rear Out Connector and Input signal from Y/C Front In Connector is routed to Y/C Digital Board.
20	Y/C signal from Digital Board is routed to Y/C Rear Out Connector and Input signal from Y/C Rear In Connector is routed to Y/C Digital Board.
23	The Video signal received from the Digital board will be output on Modulator channel 3.
24	The Video signal received from the Digital board will be output on Modulator channel 4.

Nucleus Name	**DS_ANAB_AudioRouting**
Nucleus Number	1113
Description	Perform the routing of the audio paths on the analogue board
User Input	The user has to input the correct parameter for the routing (see table 'audio routing' below)
Example	DS:> 1113 00111300: Test OK @

Audio routing paths (Europe)

Path ID	Description
0	Input signal is from FRONT AUDIO IN and will be routed to the digital board.
1	Input signal is from FRONT AUDIO IN and will be routed to the digital board.
2	No Routing.
3	Input signal is AUDIO from SCART1 and will be routed to the digital board.
4	Input signal is AUDIO from SCART2 and will be routed to the digital board.
5	No routing.
6	No routing.
7	Input Audio signal is from the digital Board and it will be routed to the SCART1 and SCART2
8	Input AUDIO signal from TUNER and will be routed to SCART2.
9	Input signal is AUDIO from SCART1 and will be routed to SCART2.
10	Input audio signal from SCART2 is routed to SCART1.
11	Input Audio signal is routed from DVIO to SCART2.
12	
13	No Routing.
14	Input is Audio Signal from DVIO and it will be routed to Digital Board.
15	Input is Audio Signal from TUNER and it will be routed to Digital Board..
16	No routing.
17	No Routing.
18	Input signal is from FRONT AUDIO IN and will be routed to SCART2.
21	Input signal is from FRONT AUDIO IN and will be routed to the digital board.

Audio routing paths (NAFTA)

Path ID	Description
0	No Routing.
1	Input signal is from FRONT AUDIO IN and will be routed to the digital board.
2	Input signal is from REAR AUDIO IN 2 and will be routed to the digital board.

3	Input Audio Signal is routed from FRONT Cinch In to Digital Board.(This is same as path ID 01)
4	Input Signal is from Rear Cinch In1 and it will be routed to Digital Board..
5	No routing.
6	No routing.
7	No routing.
8	No Routing.
9	No routing.
10	No Routing.
11	No Routing.
12	No Routing.
13	Input Signal is from Digital Board and it will be routed to the digital board.
14	No routing.
15	Input is Audio Signal from TUNER and it will be routed to Digital Board.
16	Input signal is AUDIO from dvio board and will be routed to Digital Board.
17	No routing.
18	No routing.
19	No routing.
20	Input signal is from REAR AUDIO IN 2 and will be routed to the digital board.
21	Input signal is from REAR AUDIO IN 1 and will be routed to the digital board.
22	Input signal is from REAR AUDIO IN 1 and will be routed to the digital board.
23	The Audio signal received from the Digital board will be outputted on Modulator channel 3.
24	The Audio signal received from the Digital board will be outputted on Modulator channel 4.

Nucleus Name	**DS_ANAB_SelectTunerChannel**		
Nucleus Number	1114		
Description	Set the tuner to receive a valid audio and video signal		
User Input	<Frequency*16> <video standard id>Tuner frequency: to tune the tuner to e.g. 216 MHz, this parameter must be 3456. (Since 216*16 = 3456. This is to avoid the decimal points to the parameter list.)Video standard id: The table below shows which video standards are possible		
	Video standard id	Europe	NAFTA
	163248648096112	PAL_BG	NTSC
		PAL_I	Invalid
		PAL_DK	Invalid
		SEC_L	Invalid
		SEC_LS	Invalid
		SEC_BG	Invalid
		SEC_DK	Invalid
Example	DS:> 1114 3456 16 111400: Test OK @		

Nucleus Name	**DS_ANAB_IICWriteRead**
Nucleus Number	1115
Description	Perform an IIC write and read action on the analogue board
User Input	Writing: [<W>|<w>] [I2C address] [number of data bytes to write] with <data[0]...data[n]> Max 16 data bytes (n < 16). Reading: [<R>|<r>] [I2C address] [number of data bytes to read] Max 16 data bytes (n < 16).
Example	DS:> 1115 w 0x94 2 0x06 0x02 111500: Test OK @

Nucleus Name	**DS_ANAB_ClockAdjust**
Nucleus Number	1116
Description	Set the clock to the value passed through in the YYYY MM DD HH MM SS format
User Input	<YYYY> <MM> <DD> <HH> <MM> <SS>
Example	DS:> 1116 2002 11 11 11 11 11 111600: Test OK @

Nucleus Name	**DS_ANAB_ClockReference**
Nucleus Number	1117
Description	Generate a 1 kHz signal on pin 7 (INT) of the clock IC
User Input	None
Example	DS:> 1117 111700: Test OK @

Nucleus Name	**DS_ANAB_ClockCorrection**
Nucleus Number	1118
Description	Store the clock IC correction value in NVRAM
User Input	The correction value for the clock
Example	DS:> 1118 1000023 111800: Test OK @

Nucleus Name	**DS_ANAB_TunerAFCReferenceVoltage**
Nucleus Number	1119
Description	Store the reference voltage for the tuner in NVRAM
User Input	The reference voltage, between 0 and 255
Example	DS:> 1119 5111900: Test OK @

Nucleus Name	**DS_ANAB_TunerFrequencyDownload**
Nucleus Number	1120
Description	Store the frequency table in NVRAM. The frequency table is passed through the error-string provided to the nucleus.
User Input	See frequency table
Example	DS:> 1120 2233 00 02 4E45442031 112000: Test OK @

Nucleus Name	**DS_ANAB_StoreExternalPresets**
Nucleus Number	1121
Description	Store the external presets in NVRAM
User Input	None
Example	DS:> 1121 112100: Test OK @

Nucleus Name	**DS_ANAB_BargraphLevelAdjust**
Nucleus Number	1122
Description	Measure the audio signal corresponding to 0dB per channel and store it as correction value in NVRAM
User Input	none
Example	DS:> 1122 112200: Test OK @

Frequency download string format

Format	description	remarks
X(XXX)	Preset number	
VVWW	VV: Channel numberWW : Channel offset	

ZZ	Byte containing 8 bit fields for TRUE/FALSE : BIT 0: Decoder BIT 1: Modulation BIT 2: NICAM SAP BIT 3: Satpreset BIT 4: Presetdefined Channelpreferred BIT 5: ExtPreset BIT 6: NameManuallyChanged BIT 7: ChannelPreset	 NICAM/stereo bit for Europe SAP/stereo bit for NAFTA Preset defined bit is only used for Europe. For NAFTA, renamed as channelpreferred to indicate if a channel is preferred or not. TRUE if preset is defined from P50 as extern [TGA]
HH	HfSystemFineTuning	HfS: 4 bit, FT: -4,...,4
IIJJKKLLMM	Netname	Range: A,..,Z,0,..,9,_,.. Netname length exists for Europe only. 'II' is the HEX-value for the first character, 'JJ' for the second, Ö
The message string of (DS_MessageDef *msgString) should be in the format: "X(XXX)_VVWW_ZZ_HH_IIJJKKLLMM". Here will be 'X(XXX)' a decimal value in the range of 0 to 255. V, W, Z, H, I, J, K, L, M are hex values with out the prefix '0x' (in the range 0... 9,A ... F) " _" Denotes a space character. Remarks: CHANNEL_SYSTEM is for NAFTA. PRESET_SYSTEM is for Europe.		

System (SYS)

Nucleus Name	**DS_SYS_HardwareVersionGet**	
Nucleus Number	1200	
Description	Get the hardware version and type of the digital board	
User Input	None	
Example	DS:> 1200 120000: Hardware ID = 00 The (PIO-pins) Digital Board ID = 2 Test OK @ DS:>	

Nucleus Name	**DS_SYS_SoftwareVersionBootGet**
Nucleus Number	1201
Description	Get the version of the boot software on the digital board
User Input	None
Example	DS:> 1201 120100: Software Boot Version = 0001T est OK @

Nucleus Name	**DS_SYS_SoftwareVersionDownloadGet**
Nucleus Number	1202
Description	Get the version of the download software on the digital board
User Input	None
Example	DS:> 1202 120200: Software Download Version = 0001 Test OK @

Nucleus Name	**DS_SYS_SoftwareVersionApplGet**
Nucleus Number	1203
Description	Get the version of the application software on the digital board
User Input	None
Example	DS:> 1203 120300: Software Application Version = 0001 Test OK @

Nucleus Name	**DS_SYS_SoftwareVersionDiagnosticsGet**
Nucleus Number	1204
Description	Get the version of the diagnostics software on the digital board
User Input	None

Example	DS:> 1204 120400: Software Diagnostics Version = 0001 Test OK @

Nucleus Name	**DS_SYS_EepromUpload**	
Nucleus Number	1205	
Description	Upload the contents of the NVRAM on the analogue board or the digital board to the service PC, by using the X-modem protocol	
User Input	Choose one of the following parameters for the nucleus:1. Upload the contents of the NVRAM of the digital board2. Upload the contents of the NVRAM of the analogue boardChoose in the terminal on the control PC -> transfer -> receive file. Select X-modem protocol. Then click receive in the dialogue and fill in the file name in which you want to store the data.	
	120503	Something went wrong while transferring the data.
	120504	User cancelled the upload.
Example	DS:> 1205 1120500: Test OK @	

Nucleus Name	**DS_SYS_EepromDownload**
Nucleus Number	1206
Description	Download a file with the contents of the NVRAM for the analogue board or the digital board from the service PC to the recorder, by using the X-modem protocol
User Input	Choose one of the following parameters for the nucleus:1. Download the contents of the NVRAM of the digital board2. Download the contents of the NVRAM of the analogue boardChoose in the terminal of the control PC -> transfer -> send file. Select X-modem protocol. Then choose a file with the Browse button in the dialogue and click on send.
Example	DS:> 1206 1120600: Test OK @

Nucleus Name	**DS_SYS_DvIdNumberSet**
Nucleus Number	1207
Description	Set the IEEE 1394 unique IDThe unique ID to be set.
User Input	None
Example	DS:> 1207 1234567890 120700: Test OK @

Nucleus Name	**DS_SYS_DvIdNumberGet**
Nucleus Number	1208
Description	Get the IEEE1394 ID
User Input	None
Example	DS:> 1208 120800: The DvIdNumber is: 0x0C22384E5A Test OK @

Nucleus Name	**DS_SYS_IicWrite**
Nucleus Number	1209
Description	Perform an IIC write action on the digital board
User Input	The user input the number of bytes to write followed by these bytes: <BusID><Slave address to write to><number of bytes to write><d1><d2><..><dx> Where the bus ID is either 0 (normally used) or 1
Example	DS:> 1209 0 0xa0 1 0x6 120900: 1 Bytes written Test OK @

Nucleus Name	**DS_SYS_IicRead**
Nucleus Number	1210
Description	Perform an IIC read action on the digital board
User Input	The user inputs the number of bytes to read and the address to read them from: <BusID><Slave address to read from><Number of bytes to read>Where the bus ID is either 0 (normally used) or 1

Example	DS:> 1210 0 0xa0 1 121000: Value read =0x06T est OK @

Nucleus Name	**DS_SYS_UartWrite**
Nucleus Number	1211
Description	Perform an UART write action on the digital board on a specified UART
User Input	The user inputs the UART to write to, the number of bytes and the bytes to be written to the UART. 1=UART port 1 : not used 2=UART port 2 : Bit Engine 3=UART port 3 : Analogue board <UartNr><Number of bytes to write><d1><d2><..><dx>
Example	DS:> 1211 2 2 0xd1 0x01 121100: Test OK @

Nucleus Name	**DS_SYS_UartRead**
Nucleus Number	1212
Description	Perform an UART read action on the digital board on a specified UART
User Input	The user inputs the UART to read from. 1=UART port 1 : not used 2=UART port 2 : Bit Engine 3=UART port 3 : Analogue board <UartNr >
Example	DS:> 1212 2 121200: The value that was read is: 0x50 0xD1 0x00 Test OK @

Nucleus Name	**DS_SYS_VideoLoopThroughStart**
Nucleus Number	1213
Description	The video signal, which is confirm the user input, is routed from the input to the output. Input is set with the routing nucleus 1112. All outputs are enabled.
User Input	<vipInput> <VideoOutput> <VideoStandard> 1. vipInput (CVBS, YC, YUV, RGB). 2. VideoOutput (YUV, RGB). 3. VideoStandard (PAL, NTSC).
Example	DS:> 1213 CVBS RGB PAL 121300: Test OK @

Nucleus Name	**DS_SYS_VideoLoopThroughStop**
Nucleus Number	1214
Description	Stop routing the video input to all the outputs.
User Input	-
Example	DS:> 1214 121400: Test OK @

Nucleus Name	**DS_SYS_VideoLoop**
Nucleus Number	1215
Description	Note: Before executing this nucleus the user must route the video signal on the analog board with nucleus DS_ANAB_VideoRouting(1112).
User Input	Video input of the digital board: - CVBS - YC - YUV - RGB - TEST (The video output will be routed to the video input on the digital board.) Video standard: - PAL - NTSC When no input is given, the nucleus will take TEST for video input and PAL for video standard.

Example	DS:> 1215 cvbs ntsc 121500: Test OK @ DS:> 1215 cvbs pal 121508: The VideoInputProcessor cannot detect a sync-signal. Error @ DS:> 1215 yuv ntsc 121511: Error in luminance signal(Y) Error in chrominance signal(U) Error in chrominance signal(V) Error @

Nucleus Name	**DS_SYS_AudioLoop**
Nucleus Number	1216
Description	The user first needs to select how the audio path must be routed on the analogue board (FRS_DS_ANAB_AUDIO_VIDEO_ROUTING) and/or digital board before calling this nucleus. The user also has to route the audio outputs back to the inputs by means of cables. In this nucleus the Chrysalis generates an audio sine signal with a specific signature and sends it to the output of the digital board (FRS_DS_CHR_SINE). The Chrysalis encodes the audio signal to MPEG I layer II and after this the signature of the signal will be checked.
User Input	None
Example	DS:> 1216 121600: Test OK @

Nucleus Name	**DS_SYS_SlashVersionSet**
Nucleus Number	1217
Description	Set the slash version of the system
User Input	The slash version
Example	DS:> 1217 82121700: Test OK @

Nucleus Name	**DS_SYS_SlashVersionGet**
Nucleus Number	1218
Description	Get the slash version of the system
User Input	None
Example	DS:> 1218 121800: The slash version is: 82 Test OK @

Nucleus Name	**DS_SYS_Virginize**
Nucleus Number	1219
Description	(Re-) Virginize the recorder. User data in the NVRAM of the analogue board is cleared
Example	DS:> 1219 121900: Test OK @

Nucleus Name	**DS_SYS_VirginModeOn**
Nucleus Number	1220
Description	Turn on the virgin mode functionality (e.g. the auto channel search upon start-up)
User Input	None
Example	DS:> 1220 122000: Test OK @

Nucleus Name	**DS_SYS_VirginModeOff**
Nucleus Number	1221
Description	Turn off the virgin mode functionality (e.g. the auto channel search upon start-up)
User Input	None
Example	DS:> 1221 122100: Test OK @

Nucleus Name	**DS_SYS_DisplayFatalOn**
Nucleus Number	1223
Description	Turn on the display-fatal functionality which displays debug-information on the display when encountering a fatal error condition from which could not be recovered automatically
User Input	None
Example	DS:> 1223 122300: Test OK @

Nucleus Name	**DS_SYS_DisplayFatalOff**
Nucleus Number	1224
Description	Turn off the display-fatal functionality which displays debug-information on the display when encountering a fatal error condition from which could not be recovered automatically
User Input	None
Example	DS:> 1224122400:Test OK @

Nucleus Name	**DS_SYS_DisplayFatalGet**
Nucleus Number	1225
Description	Get the display-fatal flag of the recorder
User Input	None
Example	DS:> 1225 122500: Test OK @

Nucleus Name	**DS_SYS_SettingsSet**
Nucleus Number	1226
Description	Programs the digital board settings into the boot EEPROM on the digital board.
User Input	A large hexadecimal value that represents the digital board settings obtained from the DbString.exe program or from a reference set.
Example	DS:> 1226 6469616774737462010102000101010101010000020080000 122600: Test OK @

Nucleus Name	**DS_SYS_SettingsDisplay**
Nucleus Number	1228
Description	Show the settings that are programmed in the BROM on the digital board.
User Input	None.
Example	DS:> 1228 Settings ID: 6D7920626F617264000203000101010201010000020080000 Board name: my board Hardware ID: 0 Codec IC: PNX7100_MF2 Video Input Processor IC: SAA7118 Progressive Scan Deinterlacer IC: None Progressive Scan Denc IC: ADV7196 I-Link physical layer circuit IC: PDI1394P25 I-Link link layer circuit IC: PDI1394P40 Audio clock: Clock scheme 1 Bit engine connector: available IDE connector 1: available IDE connector 2: not available PCI connector: not available RAM size 32MByte ROM size (NOR FLASH bank 1) 8MByte ROM size (NOR FLASH bank 2) Not available ROM size (NAND FLASH) Not available Bit Engine: AV 2.0 122800: Test OK @

Nucleus Name	**DS_SYS_SettingsGet**
Nucleus Number	1229
Description	Get the digital board diversity settings string that is programmed in the BROM on the digital board.
User Input	None.

Example	DS:> 1229 122900: 6D7920626F6172640002030001010102010100002008000 Test OK @

Nucleus Name	**DS_SYS_AudioLoopThroughStart**
Nucleus Number	1230
Description	Description: The audio input is routed from the an input to all outputs. Input is set with the routing nucleus 1113. All outputs are enabled.
User Input	None.
Example	DS:> 1230 123000: Test OK @

Nucleus Name	**DS_SYS_AudioLoopThroughStop**
Nucleus Number	1231
Description	Stop routing the audio input to all the outputs
User Input	-
Example	DS:> 1231 123100: Test OK @

Nucleus Name	**DS_SYS_SettingsHwIdSet**
Nucleus Number	1232
Description	Double check whether stored HW-string equals actual HW as far as we can automatically detect this. An automatic and a manual mode is supported.
User Input	- 'manual' or 'MANUAL' to enter manual mode - default is automatic mode where the nucleus stops upon and reports the first encountered error
Example	DS:> 1233 123300: Test OK @ DS:> 1233 manual 123300: Test OK @ DS:> 1233 123301:Hardware ID mismatch: in HW-Diversity string:99, actual in FLASH:0 Error @ DS:> 1233 manual Hardware ID mismatch! in HW-Diversity string:99, actual in FLASH:0 Enter the correct HW ID of the digital board. > 0 The HW-diversity string has been modified by you. Settings: Board name: DIAG Hardware ID: 0 Codec IC: PNX7100_MF3 Video Input Processor IC: SAA7118 Progressive Scan Deinterlacer IC: None Progressive Scan Denc IC: ADV7196 I-Link physical layer circuit IC: PDI1394P25 I-Link link layer circuit IC: PDI1394P40 Audio clock: Clock scheme 1 Bit engine connector: available IDE connector 1: available IDE connector 2: not available PCI connector: not available RAM size 32MByte ROM size (NOR FLASH bank 1) 8MByte ROM size (NOR FLASH bank 2) Not available ROM size (NAND FLASH) Not available Is it OK to program this inthe new HW-diversity string? ([y]es/[n]o):y Diversity HW-string programmed successfully. 123300: Test OK @ DS:>

Nucleus Name	**DS_SYS_SettingsDoubleCheck**
Nucleus Number	1233
Description	This nucleus sets the HW-Id in the HW-diversity string
User Input	- <HW-ID> - The hardware ID to set -No input - The user will be asked for the ID
Example	DS:> 1232 Enter the new HW ID of the digital board (Currently equals 21) Enter a value between 0 and 99: > 22 The HW ID will be set to: 22. Is that correct? ([Y/N]):y 123200: Test OK @ DS:> 1232 Enter the new HW ID of the digital board (Currently equals 22) Enter a value between 0 and 99: > The HW ID will be set to: 0. Is that correct? ([Y/N]):N 123202: Setting the HW ID was aborted by the user. Error @ DS:> 1232 99 123200: Test OK @

Script

Nucleus Name	**DS_IH_ScriptHandler**
Nucleus Number	Script
Description	
Included tests:	1. DS_ANAB_COMMUNICATIONECHO_NUC 2. DS_DCB_COMMUNICATIONECHO_NUC 3. DS_BROM_COMMUNICATION_NUC 4. DS_SYS_SETTINGSDISPLAY_NUC 5. DS_CHR_DEVTYPEGET_NUC 6. DS_CHR_INT_PIC_NUC 7. DS_CHR_DMA_NUC 8. DS_BROM_WRITEREAD_NUC 9. DS_NVRAM_COMMUNICATION_NUC 10. DS_NVRAM_WRITEREAD_NUC 11. DS_SDRAM_WRITEREADFAST_NUC 12. DS_FLASH_WRITEREAD_NUC 13. DS_FLASH_CHECKSUMPROGRAM_NUC 14. DS_SYS_HARDWAREVERSIONGET_NUC 15. DS_VIP_DEVTYPEGET_NUC 16. DS_VIP_COMMUNICATION_NUC 17. DS_DVIO_LINKDEVTYPEGET_NUC 18. DS_DVIO_PHYDEVTYPEGET_NUC 19. DS_DVIO_LINKCOMMUNICATION_NUC 20. DS_DVIO_PHYCOMMUNICATION_NUC 21. DS_PSCAN_COMMUNICATIONDENC_NUC 22. DS_PSCAN_COMMUNICATIONDEINTERLACER_NUC 23. DS_BE_COMMUNICATIONECHO_NUC 24. DS_ANAB_COMMUNICATIONIICNVRAM_NUC 25. DS_ANAB_COMMUNICATIONIICTUNER_NUC 26. DS_ANAB_COMMUNICATIONIICSOUNDPROCESSOR_NUC 27. DS_ANAB_COMMUNICATIONIICAVSELECTOR_NUC 28. DS_ANAB_CHECKSUMPROGRAM_NUC
User Input	None

Example	DS:> script Executing User/Dealer script. Busy executing NUC1100 1-28 Hello Analogue Board Busy executing NUC1000 2-28 Busy executing NUC200 3-28 Busy executing NUC1228 4-28 Settings ID: 4C4541440D0000000003030001010102010100002008000 0 Board name: LEAD Hardware ID: 0 Codec IC: PNX7100_MF3 Video Input Processor IC: SAA7118 Progressive Scan Deinterlacer IC: None Progressive Scan Denc IC: ADV7196 I-Link physical layer circuit IC: PDI1394P25 I-Link link layer circuit IC: PDI1394P40 Audio clock: Clock scheme 1 Bit engine connector: available IDE connector 1: available IDE connector 2: not available PCI connector: not available RAM size 32MByte ROM size (NOR FLASH bank 1) 8MByte ROM size (NOR FLASH bank 2) Not available ROM size (NAND FLASH) Not available Bit Engine: AV 2.0 Busy executing NUC100 5-28 Device ID 7100 Codec ID PNX7100_MF3 F-BCU (0x0102) 1.0 INTC (0x011d) 1.0 PCI-XIO(0x0113) 1.0 SIF (0x013b) 1.0 EJTAG (0x0104) 0.0 S-BCU (0x0102) 1.0 BOOT (0x010a) 1.0 CONFIG (0x013f) 1.0 RESET (0x0123) 1.0 DEBUG (0x0116) 0.0 UART0 (0x0107) 0.1 UART1 (0x0107) 0.1 UART2 (0x0107) 0.1 UART3 (0x0107) 0.1 I2C0 (0x0105) 0.1 I2C1 (0x0105) 0.1 GPIO (0x013c) 1.0 SYNC (0x013a) 1.0 DISP0 (0xa015) 0.2 DISP1 (0xa00f) 0.0 OSD (0x0136) 0.1 SPU (0xa00e) 0.0 MIXER (0x0137) 1.0 DENC (0x0138) 0.1 CCIR (0x0139) 1.0 VDEC (0x0133) 0.1 PARSER (0xa00d) 0.0 DV (0xa00c) 0.0 BEI (0xa00a) 0.0 IDE (0xa009) 0.0 SGDX (0xa008) 0.0 BYTE (0xa00b) 0.0 OUTPUT (0xa003) 0.0 ACOMP (0xa000) 0.0 VFE (0xa001) 0.0 VCOMP (0xa002) 0.0 SCR (0x0000) 0.0 SIFF (0xa011) 0.0 WMD (0xa010) 0.0 AUDIO0 (0xa015) 0.2 AUDIO1 (0xa00f) 0.0 PSCAN (0xa018) 0.0 Busy executing NUC114 6-28 Busy executing NUC115 7-28 Busy executing NUC201 8-28 Busy executing NUC300 9-28 Busy executing NUC301 10-28 Busy executing NUC401 11-28 Busy executing NUC501 12-28 Busy executing NUC503 13-28 BootCode checksum is: 0xBABEB432, which is correct Diagnostics checksum is: 0xBABED22B, which is correct Download checksum is: 0xBABE025F, which is correct Application checksum is: 0xBABE2825, which is correct Busy executing NUC1200 14-28 Hardware ID = 00 Busy executing NUC600 15-28 Found SAA7118

Example	Busy executing NUC601 16-28 Busy executing NUC700 17-28 Device type of the link layer IC: ffc00301 Busy executing NUC701 18-28 Device type of the phy layer IC: 0 Busy executing NUC702 19-28 Busy executing NUC703 20-28 Busy executing NUC801 21-28 Busy executing NUC808 22-28 The IIC acknowledge was not received, which is correct Busy executing NUC900 23-28 Busy executing NUC1101 24-28 Busy executing NUC1102 25-28 Busy executing NUC1104 26-28 Busy executing NUC1105 27-28 Busy executing NUC1111 28-28 BootCode checksum is: 0xBABE6240, which is correct Diagnostics checksum is: 0xBABEDC9A, which is correct Download checksum is: 0xBABEA6B7, which is correct Application checksum is: 0xBABE5968, which is correct PASS DS:>

BLOCK DIAGRAM 1

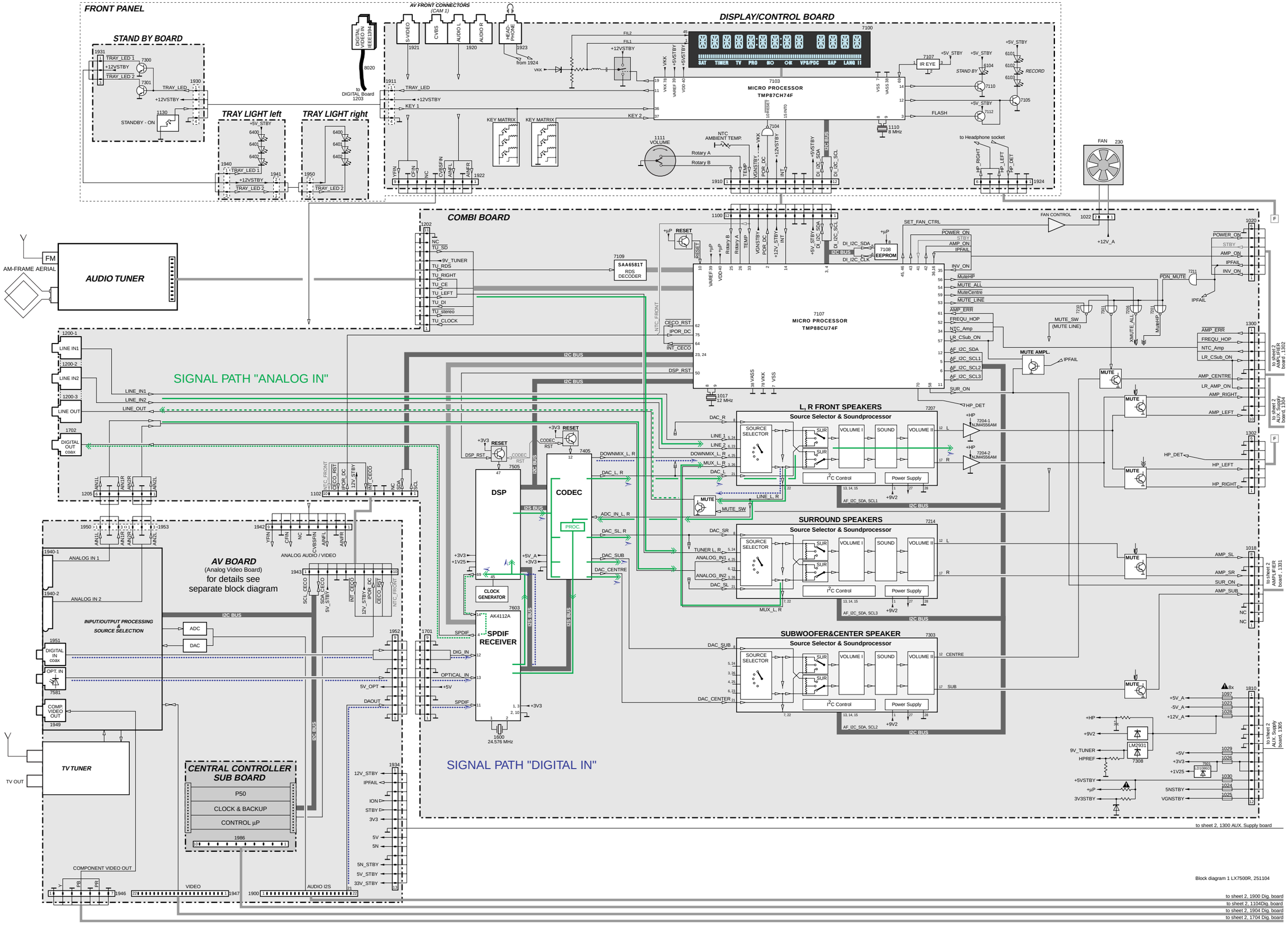

BLOCK DIAGRAM 2

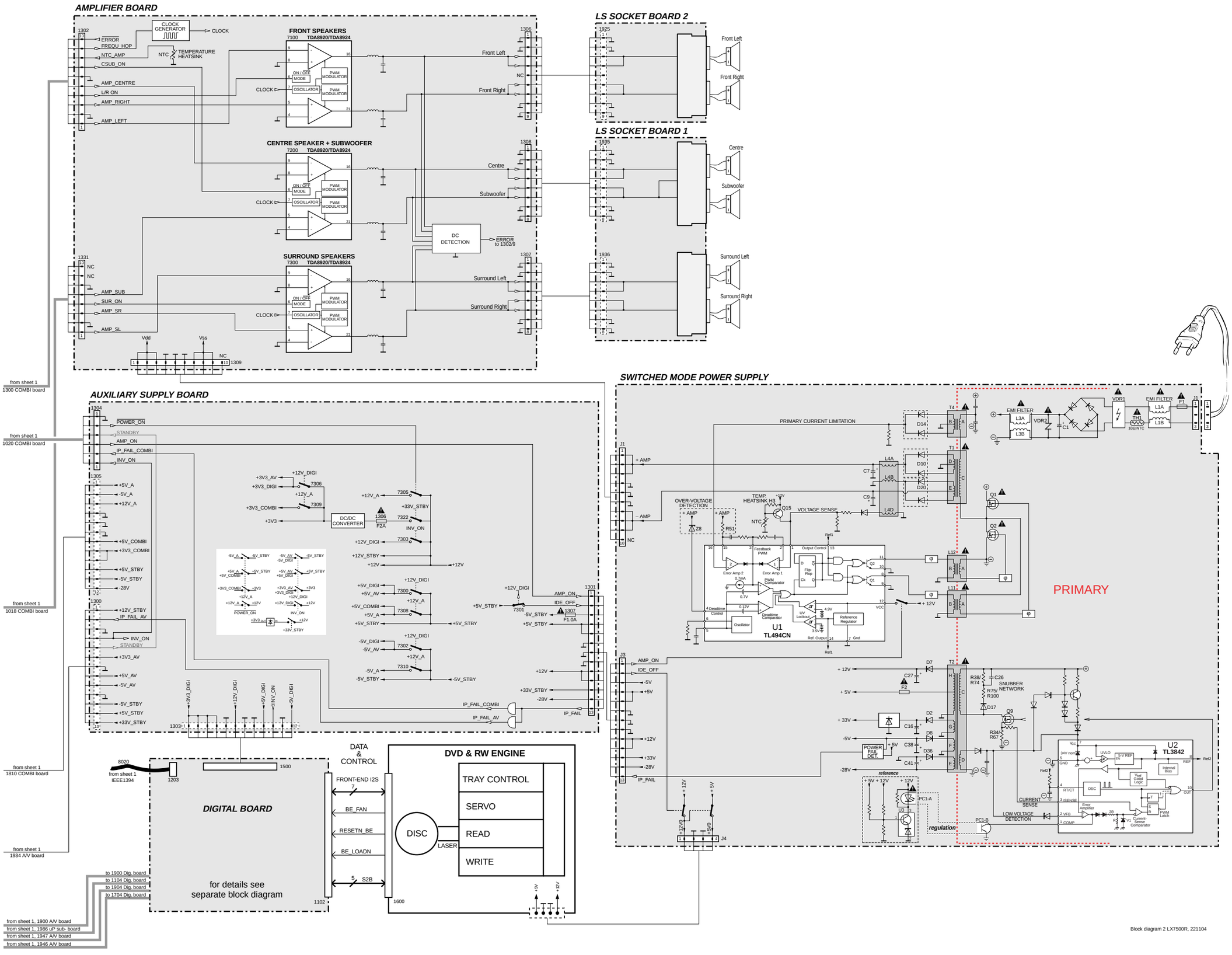

Block diagram 2 LX7500R, 221104

Overall Block Diagram Digital Board Chrysalis

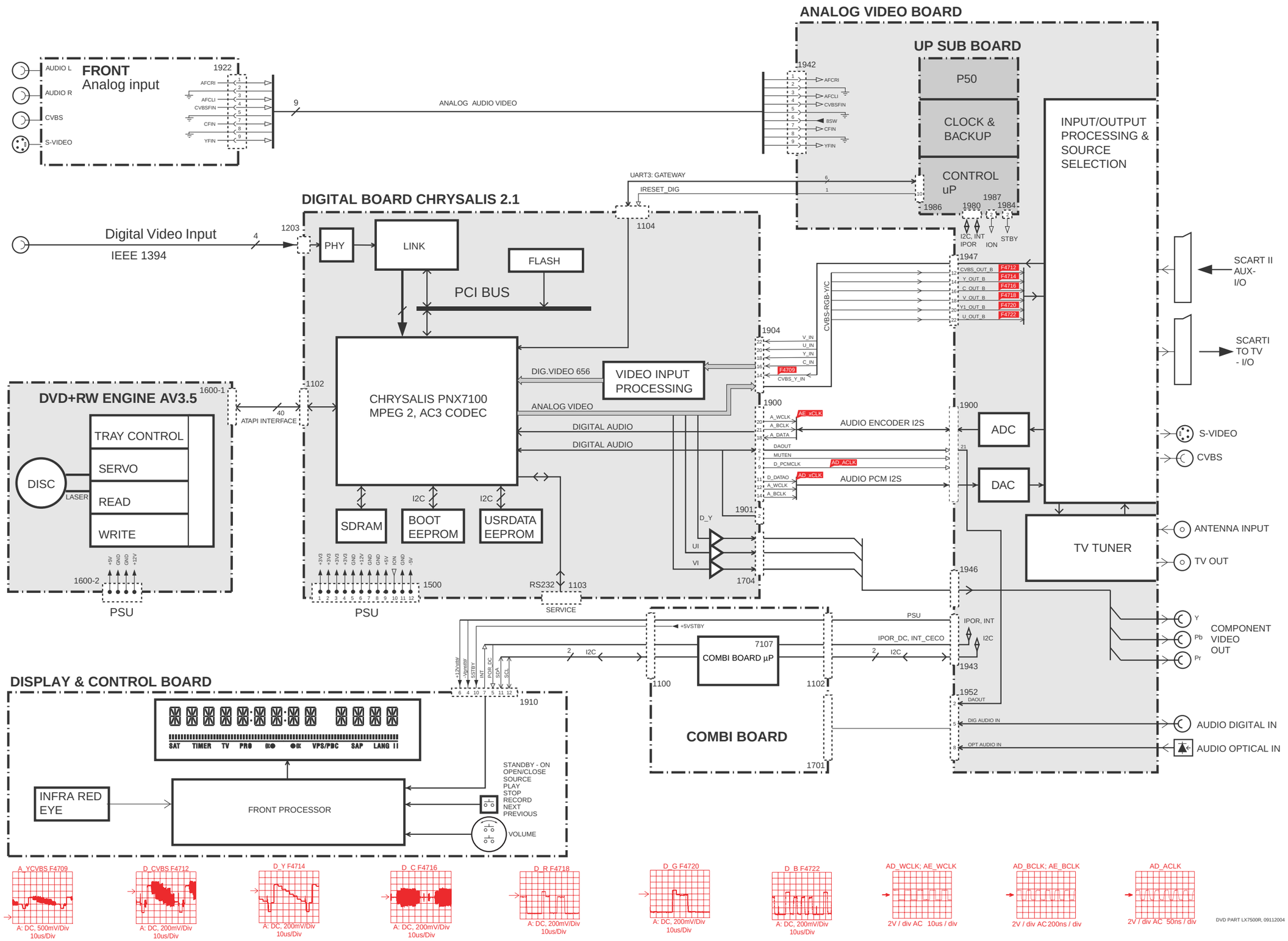

Blockdiagram

Control Lines and Bus Systems DVD+RW part

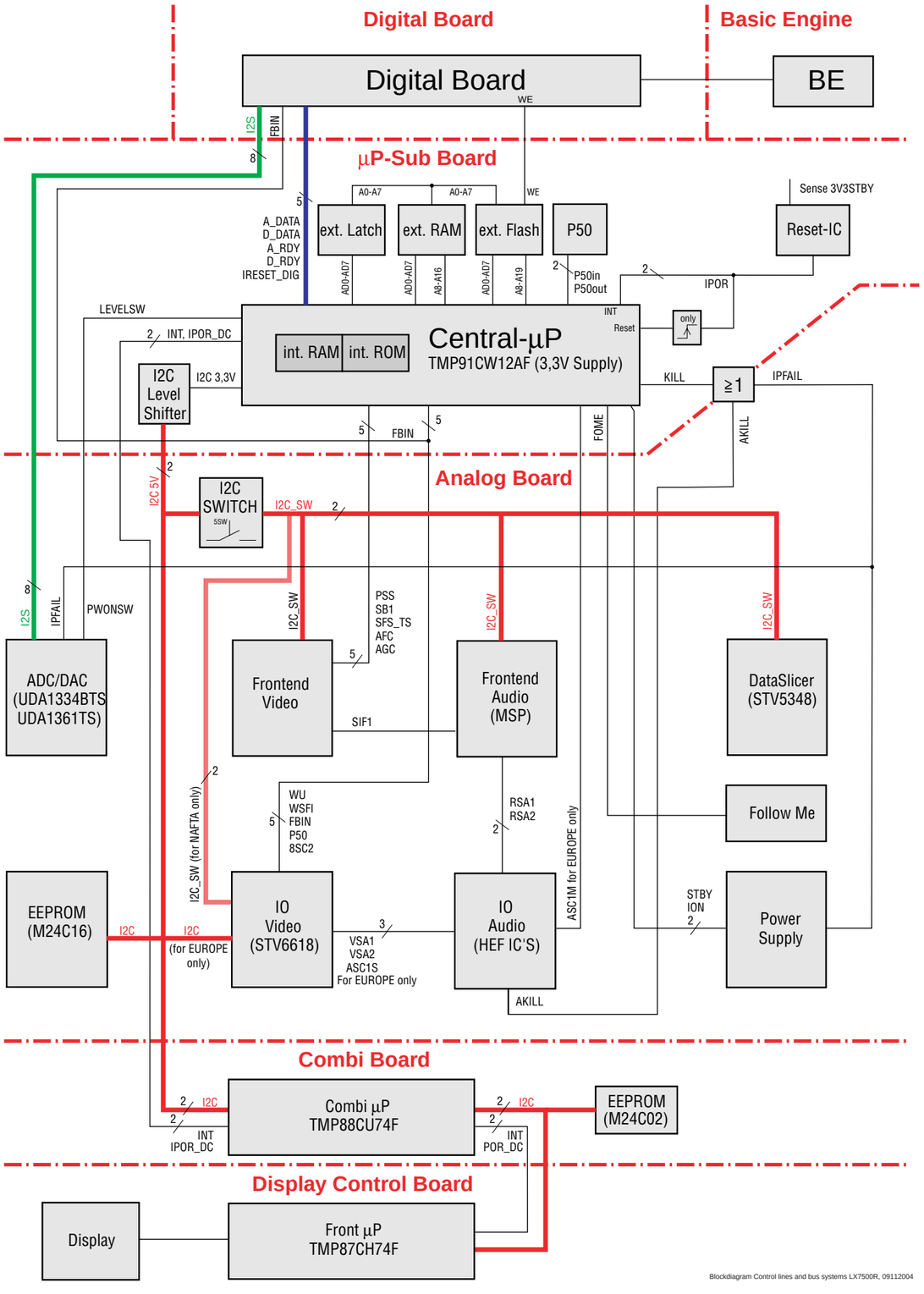

Blockdiagram Control lines and bus systems LX7500R, 09112004

WIRING DIAGRAM LX7500R

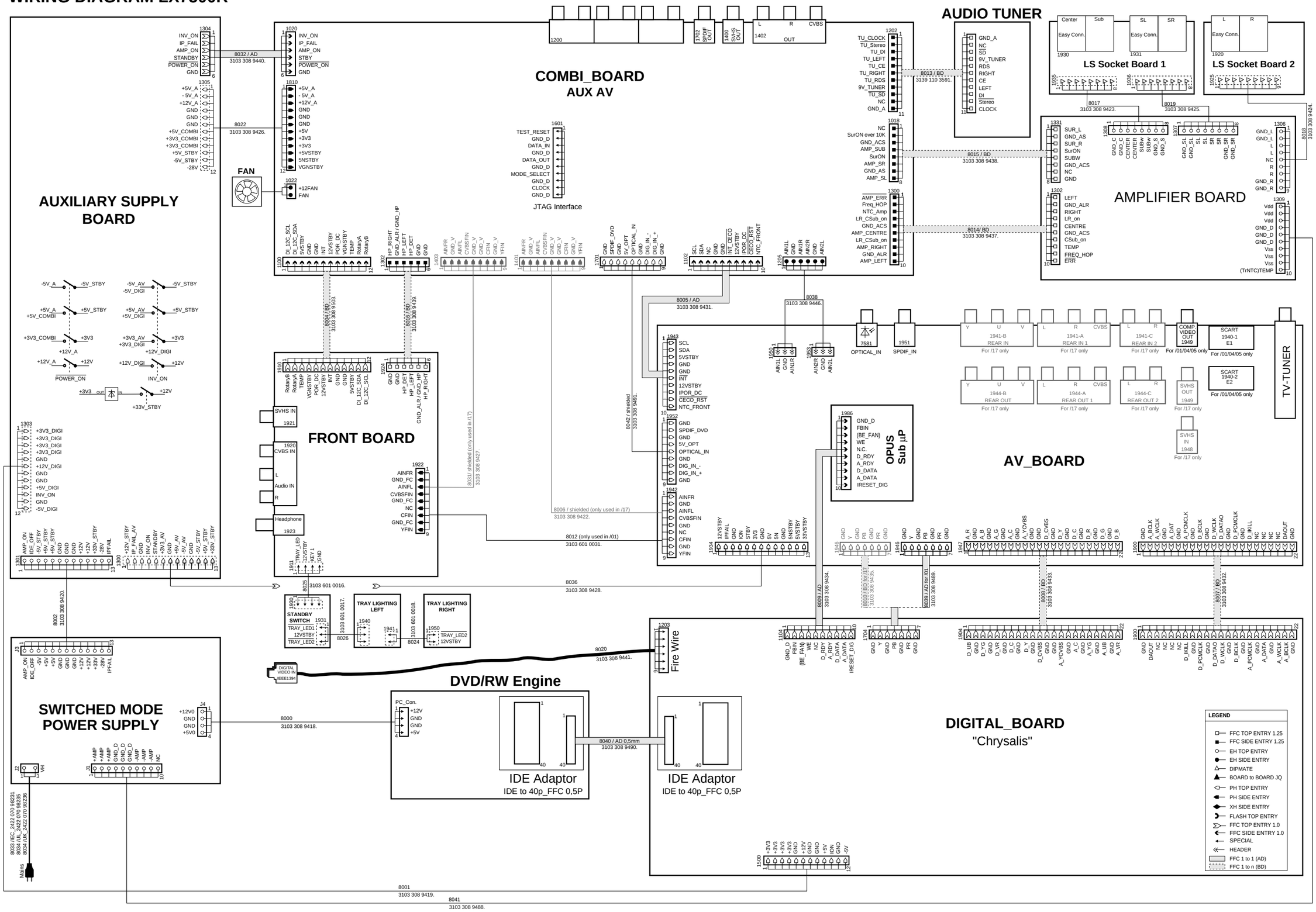

EXPLODED VIEW / apparatus

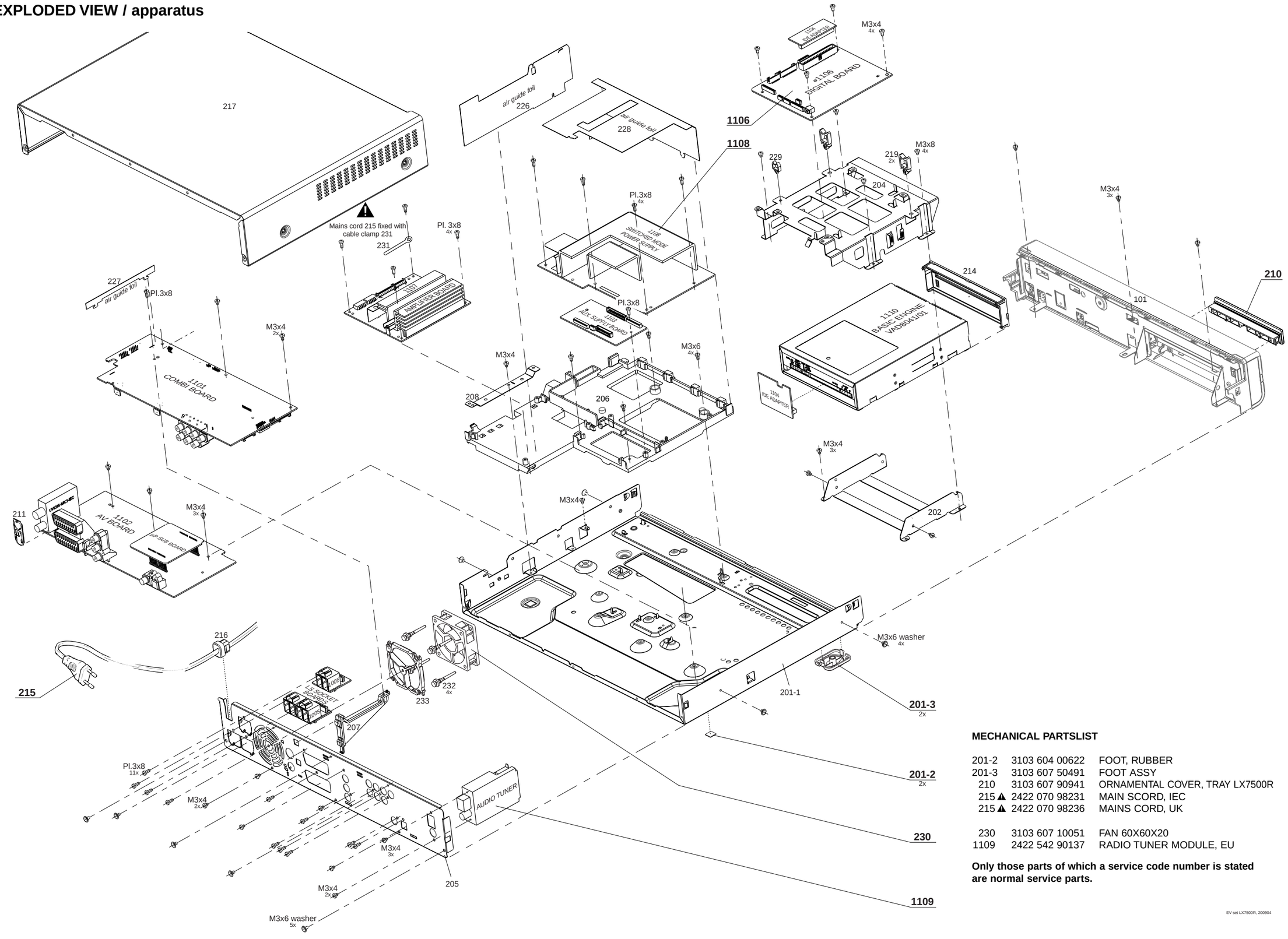

MECHANICAL PARTSLIST

201-2	3103 604 00622	FOOT, RUBBER
201-3	3103 607 50491	FOOT ASSY
210	3103 607 90941	ORNAMENTAL COVER, TRAY LX7500R
215 ⚠	2422 070 98231	MAIN SCORD, IEC
215 ⚠	2422 070 98236	MAINS CORD, UK
230	3103 607 10051	FAN 60X60X20
1109	2422 542 90137	RADIO TUNER MODULE, EU

Only those parts of which a service code number is stated are normal service parts.

EXPLODED VIEW / Front assembly

101
FRONT COMPLETE

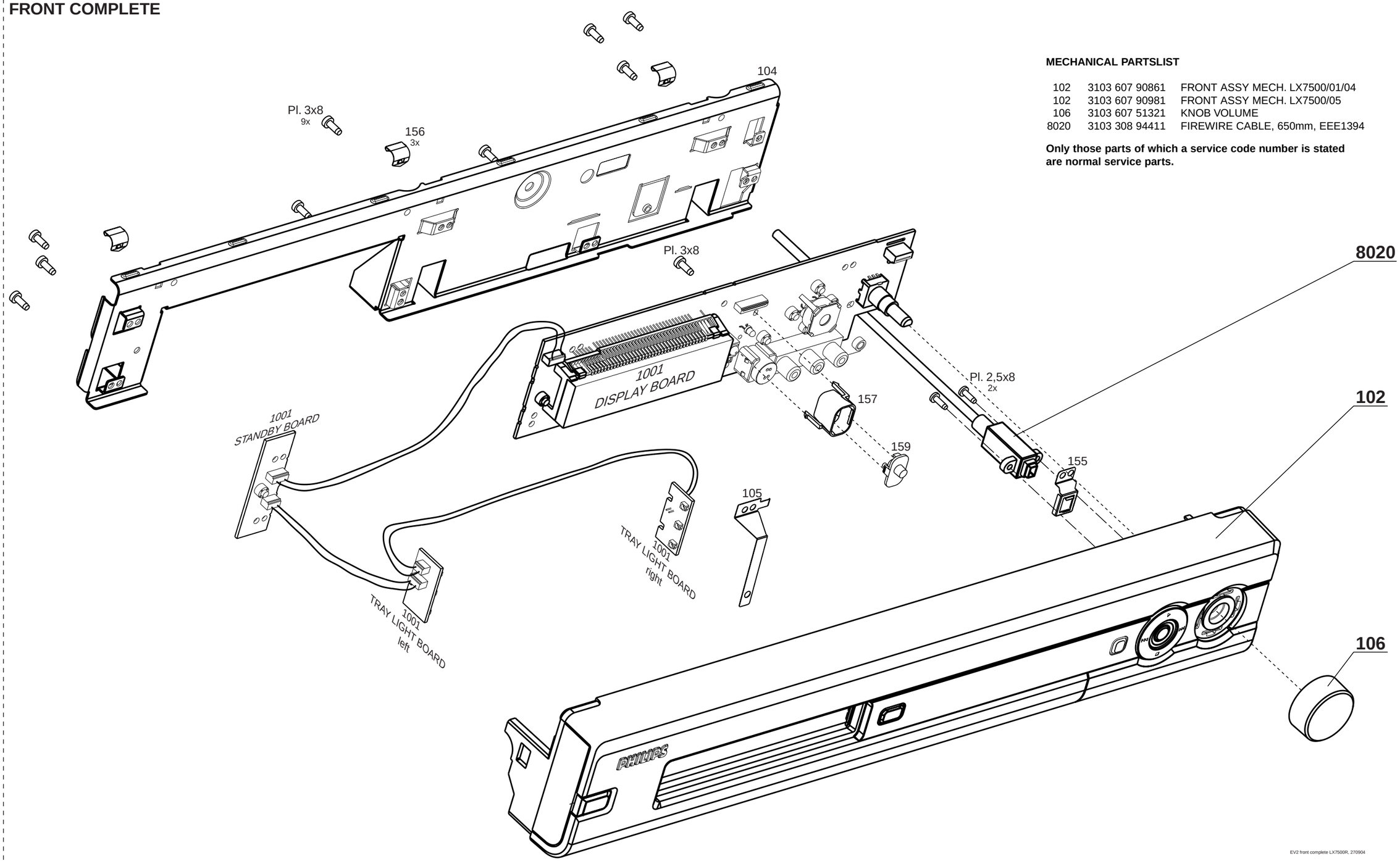

MECHANICAL PARTSLIST

102	3103 607 90861	FRONT ASSY MECH. LX7500/01/04
102	3103 607 90981	FRONT ASSY MECH. LX7500/05
106	3103 607 51321	KNOB VOLUME
8020	3103 308 94411	FIREWIRE CABLE, 650mm, EEE1394

Only those parts of which a service code number is stated are normal service parts.

EV2 front complete LX7500R, 270904

EXPLODED VIEW / Front assembly

102
MECH. FRONT ASSEMBLY

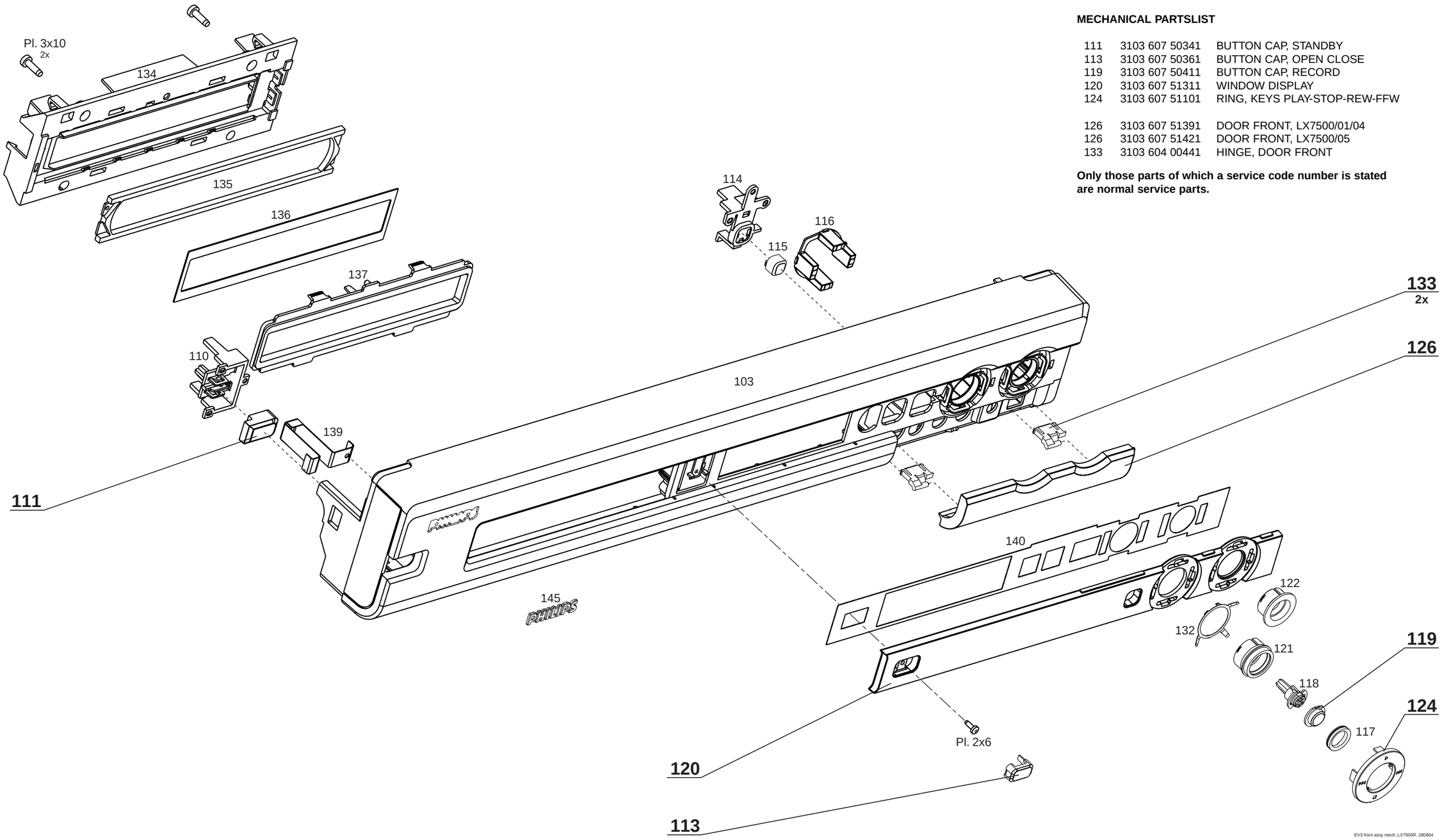

MECHANICAL PARTSLIST

111	3103 607 50341	BUTTON CAP, STANDBY
113	3103 607 50361	BUTTON CAP, OPEN CLOSE
119	3103 607 50411	BUTTON CAP, RECORD
120	3103 607 51311	WINDOW DISPLAY
124	3103 607 51101	RING, KEYS PLAY-STOP-REW-FFW
126	3103 607 51391	DOOR FRONT, LX7500/01/04
126	3103 607 51421	DOOR FRONT, LX7500/05
133	3103 604 00441	HINGE, DOOR FRONT

Only those parts of which a service code number is stated are normal service parts.

Switched Mode Power Supply FOR ORIENTATION ONLY

1 SMPS "AC6191" Drawing 1

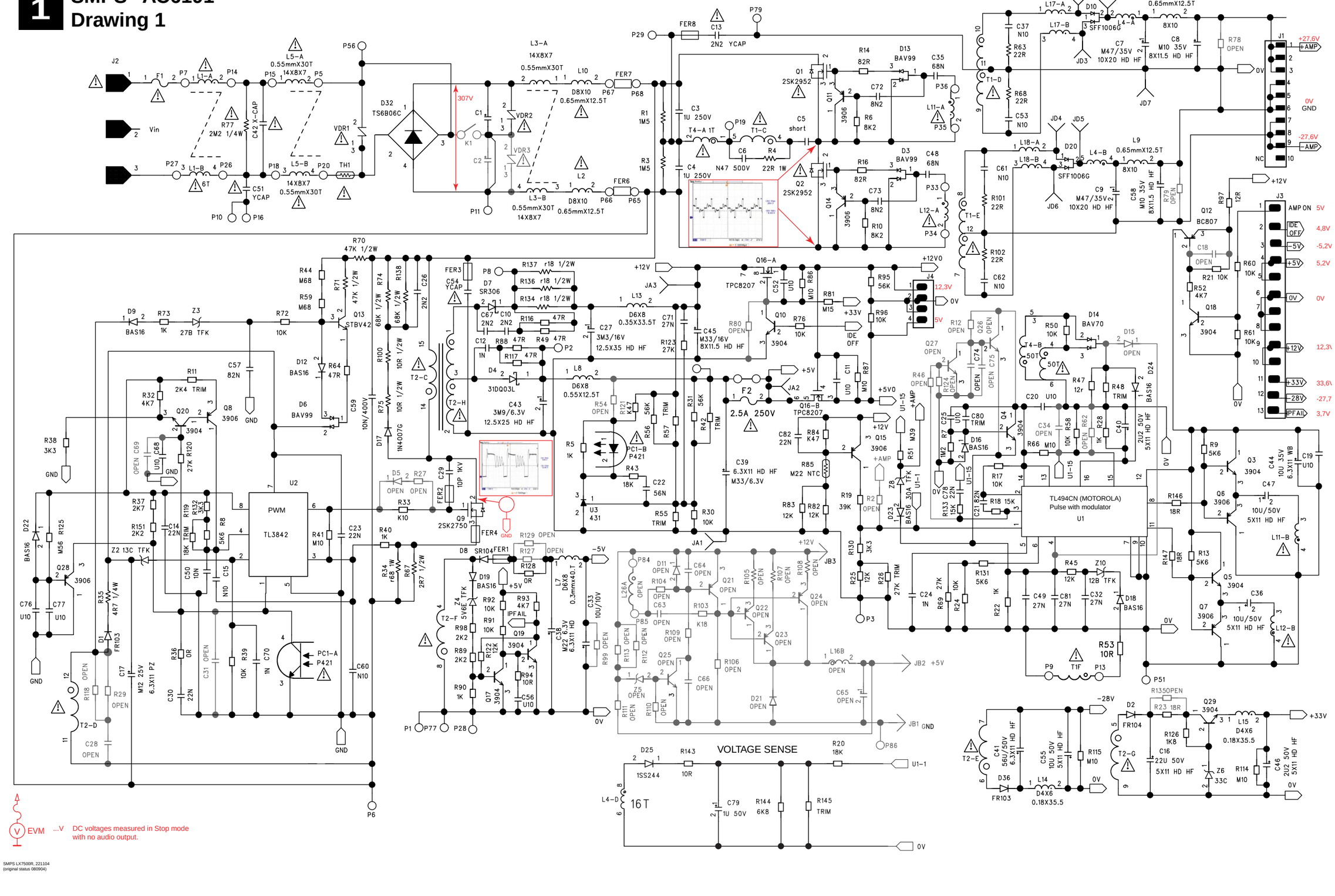

EVM ...V DC voltages measured in Stop mode with no audio output.

Switched Mode Power Supply FOR ORIENTATION ONLY

2 SMPS "AC6191" Drawing 2

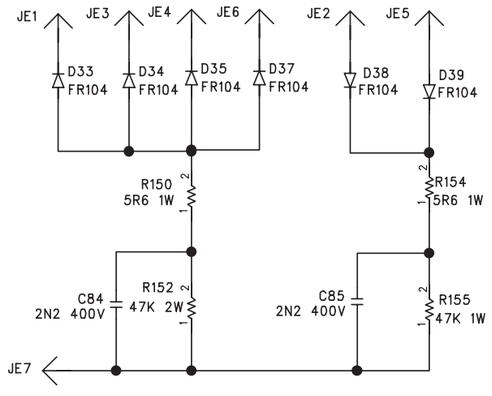

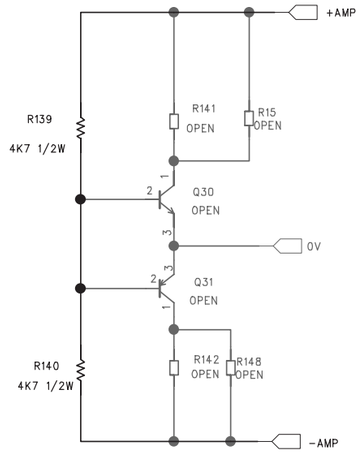

	MODEL	F1	TH1	C42	C1	C2	VDR1	VDR2	VDR3	C51	K1		
230V	AC6191	T3.15AH 250V	4R	U22 275V	M18 400V AQ	SHORT	471	471	OPEN	1N 250V	OPEN		
120V	AC6192	T5AH 250V	2R5	U33 275V	M39 200V AQ	M39 200V AQ	241	241	241	OPEN	SHORT		
120/230V	AC6193	T5AH 250V	2R5	U33 275V	M39 200V AQ	M39 200V AQ	471	241	241	1N 250V			

SMPS AC6191 (LX7500R), 221104
original status 080904

Switched Mode Power Supply FOR ORIENTATION ONLY

SWITCHED MODE POWER SUPPLY / component side view

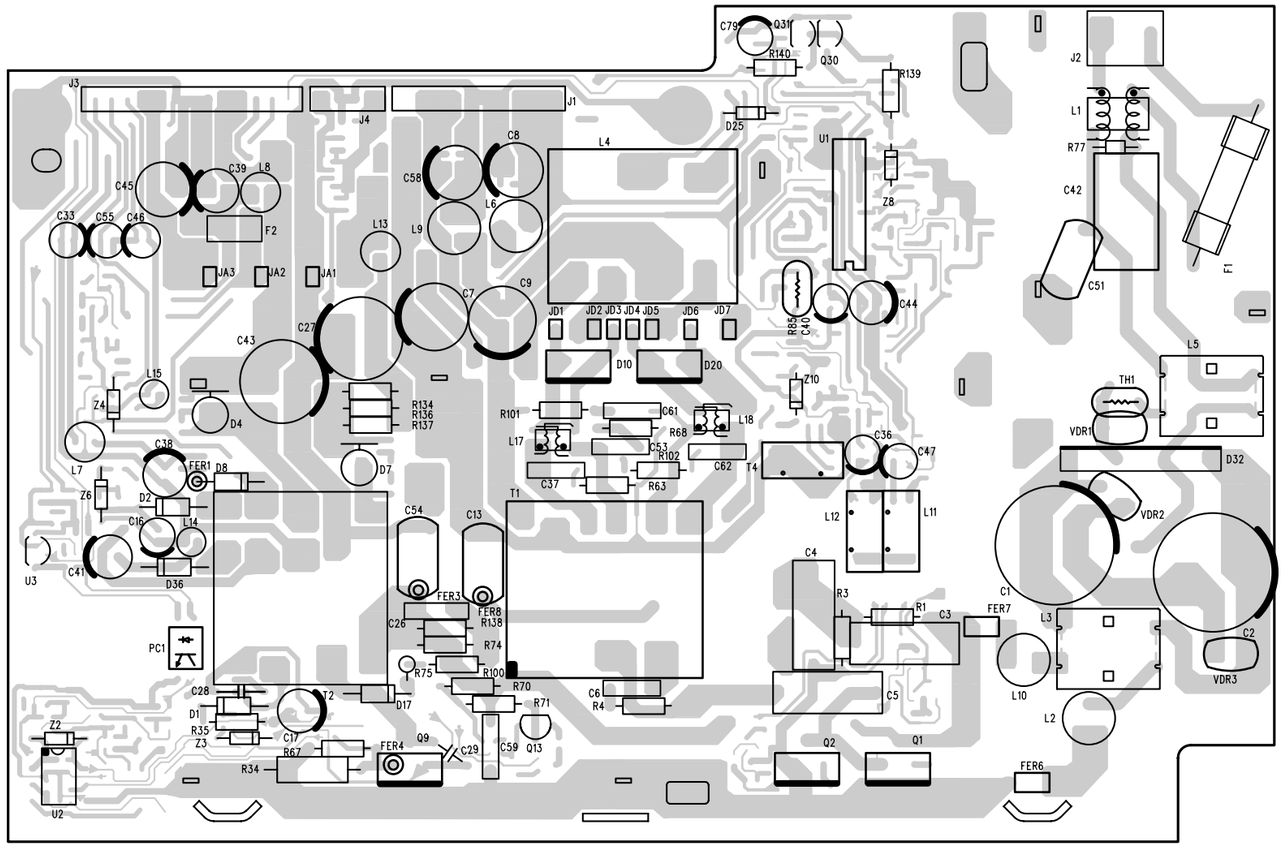

SMPS AC6191 (LX7500R), 150904
original status 080904

C1	B2	C58	C4	J3	D6	JP14	A5	L5	C1	R75	B4
C2	B1	C61	C4	J4	D5	JP17	B4	L6	C4	R77	D2
C3	B3	C62	B3	JC1	D5	JP18	B4	L7	B6	R100	B4
C5	B3	C79	D3	JC2	C5	JP20	D4	L8	C5	R101	C4
C7	C4	D1	B5	JC3	D4	JP21	D3	L9	C4	R102	B4
C6	B4	D2	B5	JC5	C4	JP22	D3	L10	B2	R134	C15
C8	C4	D4	C5	JC6	B3	JP23	D3	L11	B3	R136	C5
C9	C4	D7	B5	JC7	A3	JP24	C3	L12	B3	R137	C5
C13	B4	D8	B5	JC8	C3	JP24	C3	L13	C5	R138	B4
C16	B5	D10	C4	JC9	C5	JP27	D3	L14	B5	R139	D3
C17	A5	D17	B5	JC10	D5	JP28	C3	L15	C5	R140	D3
C26	B4	D20	C3	JD1	C4	JP29	C3	L17	B4	SH1	D2
C27	C5	D25	D3	JD2	C4	JP30	C3	L18	C3	T2	B5
C28	B5	D32	B2	JD3	C4	JP31	B3	PC1	B5	T3	B3
C33	C6	D36	B5	JD4	C4	JP32	B3	Q1	A3	TH1	C2
C36	B3	F1	C1	JD5	C4	JP33	B3	Q2	A3	U1	C3
C37	B4	F2	C5	JD6	C3	JP34	A3	Q30	D3	U2	A6
C38	B5	FER1	B5	JD7	C3	JP35	A2	Q31	D3	U3	B6
C39	C5	FER3	B4	JP1	D5	JP36	A3	R1	B3	VDR1	C2
C40	C3	FER4	A5	JP2	D5	JP38	C3	R3	B3	VDR2	B2
C41	B6	FER6	A2	JP3	C5	JP39	C3	R4	B4	VDR3	B1
C42	C2	FER7	B2	JP5	C6	JP40	B2	R34	A5	W1	C6
C43	C5	FER8	B4	JP7	C6	JP41	A2	R35	A5	W2	C6
C44	B3	H1	D2	JP8	C6	JP42	C3	R58	C3	Z2	A6
C45	C5	H2	B2	JP9	C5	JP43	C5	R63	B4	Z3	A5
C47	B3	H3	C4	JP10	B5	K1	B2	R67	A5	Z6	B6
C51	C2	H4	B5	JP11	B6	L1	D2	R68	C4	Z8	C3
C53	B4	H5	C5	JP12	A5	L2	A2	R70	B4	Z10	C3
C54	B4	J1	D4	JP13	A5	L3	B2	R71	B4		
C55	C6	J2	D2	JP26	D3	L4	C4	R74	B4		

Switched Mode Power Supply FOR ORIENTATION ONLY

SWITCHED MODE POWER SUPPLY / copper side view

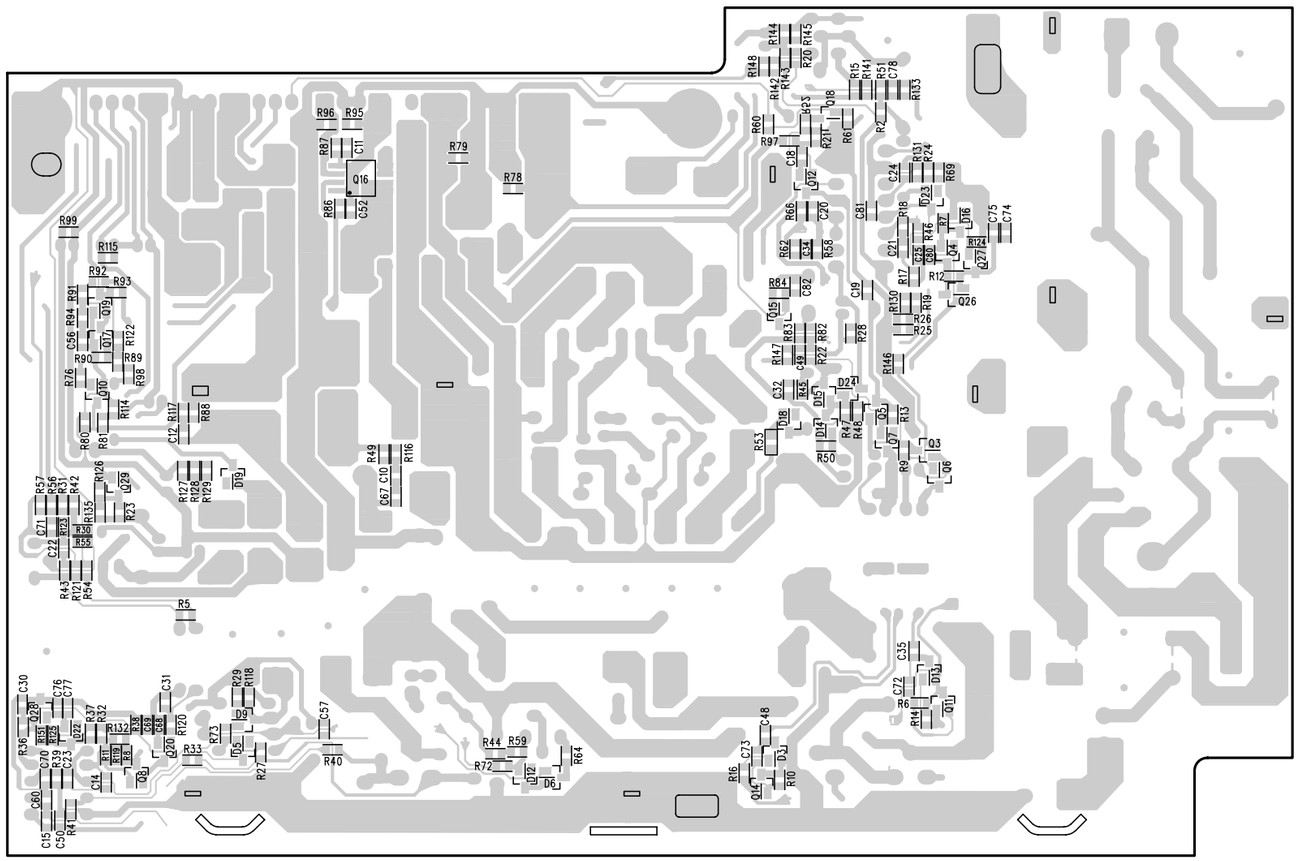

SMPS AC6191 (LX7500R), 150904
original status 080904

C10	B5	C75	C2	Q14	A3	R25	C3	R57	B6	R99	C6
C11	D5	C76	B6	Q15	C3	R26	C3	R58	C3	R114	C6
C12	C5	C77	B6	Q16	C5	R27	A5	R59	A4	R115	C6
C14	A6	C78	D3	Q18	D3	R28	C3	R60	D3	R116	B5
C15	A6	C80	C3	Q19	C6	R29	B5	R61	D3	R117	C5
C18	C3	C81	C3	Q20	A5	R30	B6	R62	C3	R118	B5
C21	C3	C82	C3	Q26	C2	R31	B6	R64	A4	R119	A6
C22	B6	D3	A3	Q27	C2	R33	A5	R66	C3	R120	A5
C23	A6	D5	A5	Q28	B6	R35	A6	R67	D3	R121	B6
C24	C3	D6	A4	Q29	B6	R36	A6	R69	C3	R122	C6
C25	C3	D9	A5	R2	D3	R37	A6	R72	A4	R123	B6
C30	B6	D12	A4	R5	B5	R38	A5	R73	A5	R124	C2
C31	B5	D13	B3	R6	B3	R39	A6	R76	C6	R126	B6
C32	C3	D14	C3	R7	C2	R40	A5	R78	C4	R127	B5
C34	B3	D15	C3	R8	A6	R41	A6	R79	C4	R128	B5
C35	B3	D16	C2	R9	B3	R42	B6	R80	C6	R129	B5
C48	A3	D18	C3	R10	A3	R43	A4	R81	C6	R130	C3
C49	C3	D19	B5	R11	A6	R44	A4	R82	C3	R131	C3
C50	A6	D22	A6	R12	C2	R45	C3	R83	C3	R132	A6
C52	C5	D23	C3	R13	C3	R46	C3	R84	C3	R133	D3
C56	C6	D24	C3	R14	B3	R47	C3	R86	C5	R135	B6
C60	A6	Q3	B3	R15	D3	R48	C3	R88	C5	R141	D3
C67	B5	Q4	C2	R16	A3	R49	B5	R89	C6	R142	D3
C68	A5	Q5	C3	R17	A3	R50	B3	R90	C6	R143	D3
C69	A5	Q6	B3	R18	C3	R51	B3	R91	C6	R144	D3
C70	A6	Q7	B3	R19	C3	R52	D3	R94	C6	R145	D3
C71	B6	Q8	A5	R20	D3	R53	B3	R95	D5	R146	C3
C72	B3	Q10	C6	R21	D3	R54	B6	R96	D5	R147	C3
C73	A3	Q11	B3	R22	C3	R55	B6	R97	D5	R148	D3
C74	C2	C12	C3	R23	B6	R56	B6	R98	C6	R151	A6
										R152	A6

AUX SUPPLY BOARD

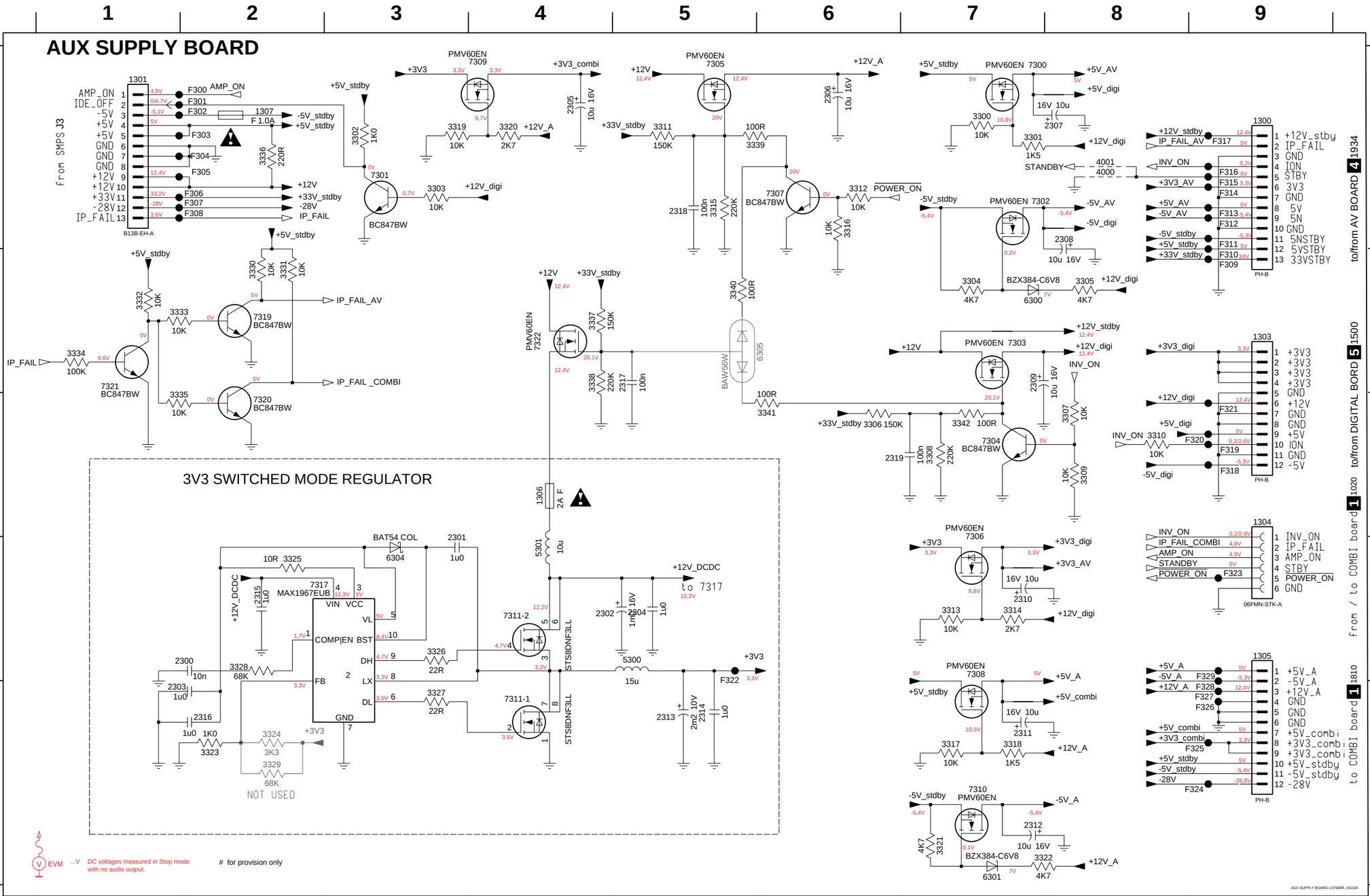

1300 A9
1301 A1
1303 B9
1304 C9
1305 D9
1306 C4
1307 A2
2300 D2
2301 D3
2302 D4
2303 E1
2304 D5
2305 A4
2306 A6
2307 A8
2308 A8
2309 B7
2310 D7
2311 E7
2312 E7
2313 E5
2314 E5
2315 D2
2316 E2
2317 C5
2318 A5
2319 C7
3300 A7
3301 A7
3302 A3
3303 A3
3304 B7
3305 B8
3306 C6
3307 C8
3308 C7
3309 C8
3310 C8
3311 A5
3312 A6
3313 D7
3314 D7
3315 A5
3316 A6
3317 E7
3318 E7
3319 A3
3320 A4
3321 E7
3322 E7
3323 E2
3324 E2
3325 D2
3326 D3
3327 E3
3328 D2
3329 E2
3330 B2
3331 B2
3332 B1
3333 B1
3334 B1
3335 C1
3336 A2
3337 B4
3338 C4
3339 A5
3340 B5
3341 C5
3342 C7
4000 A8
4001 A8
5300 D5
5301 D4
6300 B7
6301 E7
6304 D3
6305 B5
7300 A8
7301 A3
7302 A8
7303 B7
7304 C7
7305 A5
7306 C7
7307 A6
7308 D7
7309 A4
7310 E7
7311-1 E4
7311-2 D4
7317 D3
7319 B2
7320 C2
7321 B1
7322 B4
F300 A2
F301 A2
F302 A2
F303 A2
F304 A1
F305 A1
F306 A1
F307 A1
F308 A1
F309 B6
F310 B9
F311 A9
F312 A9
F313 A9
F314 A9
F315 A9
F316 A9
F317 A9
F318 C9
F319 C9
F320 C9
F321 C9
F322 E5
F323 D9
F324 E9
F325 E9
F326 E9
F327 E9
F328 E9
F329 D9

AUX. SUPPLY BOARD / component side view

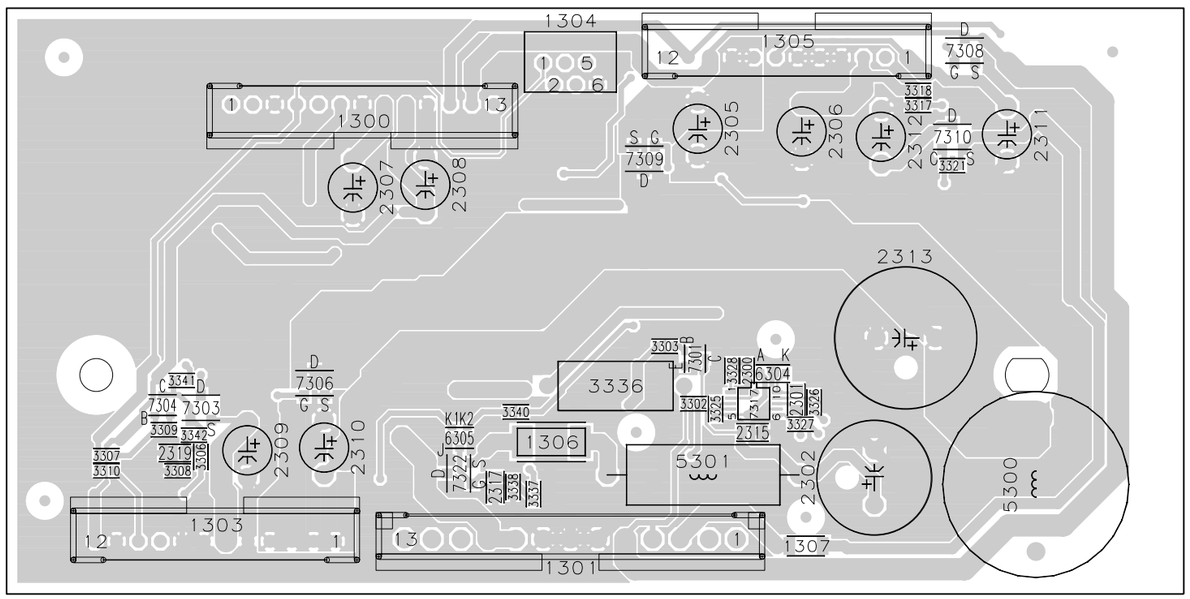

1300 A1
1301 A2
1303 A1
1304 A2
1305 A3
1306 A2
1307 A3
2300 A2
2301 A3
2302 A3
2305 A2
2306 A3
2307 A1
2308 A2
2309 A1
2310 A1
2311 A3
2312 A3
2313 A3
2315 A2
2317 A2
2319 A1
3302 A2
3303 A2
3306 A1
3307 A1
3308 A1
3309 A1
3310 A1
3317 A3
3318 A3
3321 A3
3325 A2
3326 A3
3327 A3
3328 A2
3336 A2
3337 A2
3338 A2
3340 A2
3341 A1
3342 A1
5300 A3
5301 A2
6304 A2
6305 A2
7301 A2
7303 A1
7304 A1
7306 A1
7308 A3
7309 A2
7310 A3
7317 A2
7322 A2

AUX. SUPPLY BOARD / copper side view

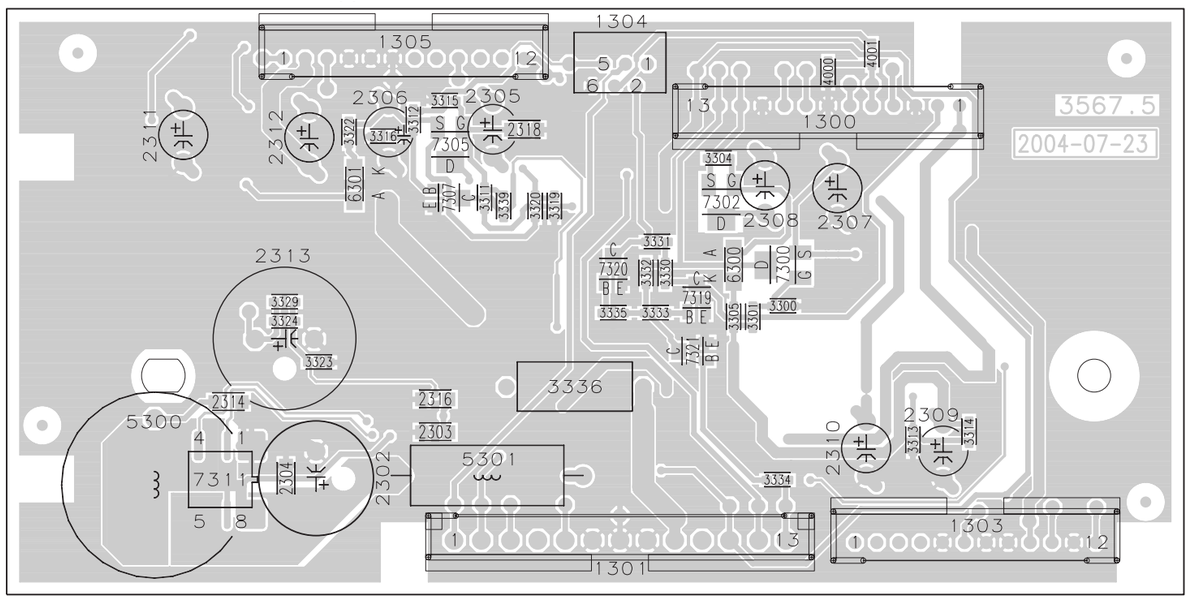

2303 A2
2304 A1
2314 A1
2316 A2
2318 A2
3300 A2
3301 A2
3304 A2
3305 A2
3311 A2
3312 A1
3313 A3
3314 A3
3315 A2
3316 A1
3319 A2
3320 A2
3322 A1
3323 A1
3324 A1
3329 A1
3330 A2
3331 A2
3332 A2
3333 A2
3334 A2
3335 A2
3339 A2
4000 A3
4001 A3
6300 A2
6301 A1
7300 A2
7302 A2
7305 A2
7307 A2
7311 A1
7319 A2
7320 A2
7321 A2

1 FRONT PANEL
DISPLAY / CONTROL BOARD

0005 PROTECTION FOIL

0206 HOLDER FTD ASSY

0210 LIGHT CHAMBER RECORD

7100 BJ900GNK

SAT TIMER TV PRO VPS/PDC SAP LANG II

Standby *Record*

7106/7108-Emitter
A: DC, 2 V/Div, 10us/Div

IC7103-8
A: DC, 1 V/Div, 100ns/Div

IC7103-19
A: DC, 1 V/Div, 10us/Div

SENSOR AMBIENT TEMPERATURE

IR EYE

Rotary Encoder VOLUME

PREV NEXT OPEN/CLOSE REC PLAY STOP SOURCE

7103 TMP87CH74F

4199 Dummy

0303 BARCODE

from/to Combi board 1100

to STBY board 1930

Display board .6 LX7500R, 221104

0005	A13	7107	F9
0206	A13	7108	F7
0210	A3	7109	E8
0211	A1	7110	D2
0803	I14	7112	D4
1110	C10	9101	F5
1111	I8	F102	G3
1160	I5	F103	F2
1165	I4	F104	G4
1166	I2	F1401	F1
1167	I4	F1402	F2
1168	I3	F1403	G4
1169	I5	F1404	G4
1170	I3	F1405	G4
1910	G1	F1407	G2
1911	H1	F1408	G3
2100	I6	F1409	G3
2101	C11	F1410	H1
2102	D11	F1411	G2
2103	I6	F1412	G2
2104	D12	F1501	H1
2107	G3	F1502	H1
2110	E6	F1503	H1
2111	E7	F1504	I1
2112	E9	I100	E12
2113	F7	I101	E12
2114	F9	I102	E12
2115	F5	I103	E12
2116	G9	I104	E12
2117	F6	I105	I12
2118	E13	I106	I12
2119	F13	I107	H12
2120	F13	I108	H12
2121	F13	I109	H12
2122	G13	I110	H12
2123	C13	I111	H12
2124	D13	I112	H12
2125	G13	I113	H12
2126	G13	I114	H12
3100	C13	I115	H12
3101	D13	I116	H12
3102	I6	I117	H12
3103	I4	I118	G12
3104	I5	I119	G12
3105	I5	I120	G12
3106	I4	I121	G12
3107	I6	I122	G12
3108	I3	I123	G12
3110	I3	I124	G12
3111	F3	I125	G12
3112	F10	I126	G12
3113	E6	I127	G12
3114	G4	I128	G12
3115	H3	I129	F12
3116	E7	I130	F12
3117	E9	I131	F12
3118	E8	I132	F12
3119	F6	I133	F12
3120	F9	I134	F12
3121	F9	I135	F12
3122	F6	I136	F12
3123	F6	I137	H10
3124	F8	I142	F10
3125	E8	I143	F9
3126	E9	I144	F10
3127	C14	I145	H8
3128	D14	I146	I8
3130	I2	I147	F10
3132	I7	I150	E10
3133	I7	I151	E10
3134	F1	I152	I6
3136	C2	I155	E10
3137	C3	I156	E10
3139	D3	I157	F5
3140	G8	I158	F6
3141	E3	I159	F7
3142	D8	I160	E8
3143	H2	I161	E8
3144	E4	I162	F8
3145	E3	I163	F8
3146	E2	I165	F10
3147	F14	I166	I3
3148	F14	I167	I3
3149	F14	I168	I2
3150	F14	I170	I5
3151	G14	I171	I5
3152	G14	I172	I4
3153	G14	I173	H10
3160	H8	I174	G10
3161	H9	I175	D13
3162	I8	I176	B13
3163	H8	I177	A5
4100	C13	I178	A12
4101	D13	I179	I4
4199	I14	I182	B3
5100	C11	I183	B3
5101	F2	I184	G10
5103	G3	I189	B2
5104	F7	I190	C3
6100	F6	I191	C2
6101	B3	I192	C3
6102	B3	I194	D3
6103	C3	I199	H10
6104	B2		
6105	B14		
6106	C14		
6109	G8		
6110	D7		
6111	E4		
6112	E3		
7100	A5		
7101	B13		
7102	D13		
7103	E11		
7104	F4		
7105	E3		
7106	E7		

2 FRONT PANEL
DISPLAY / CONTROL BOARD

AV FRONT CONNECTORS

CINCH 1920
CVBS
AL/MONO
AR
JPJ1127
F1006 F1003 F1002 F1001
4198 2105 1n0 not used 2106 1n0 not used
GND_FC GND_FC GND

S-CONN 1921
C
Y
YKF51
GND_FC GND_FC GND_FC GND_FC

HEADPHONE 1923
TC38-103-01
F2210 5201 F2213
F2211 5202 F2214
F2212 5203 F2215
4129 GND
1924 GND GND HP_DET HP_LEFT HP_GND HP_RIGHT
06FE-BT-VK-N
2206 22n 2207 22n
2208 1n0 GND

3200 1K0 3202 1K0
not used 3208 SIOV-CN1805M4CCG3
not used 3209 SIOV-CN0805M4CCG3
6200 6.8V DFSA6.8FUT1
6201 DF3A6.8FUT1 6.8V
6202 DF3A6.8FUT1 6.8V
6203 DF3A6.8FUT1 6.8V
6204 DF3A6.8FUT1 6.8V
2200 330p 3201 1M0
2201 330p 3203 1M0
3204 68R
3205 75R 3206 75R 3207 75R
2203 47p not used
2202 100n
I201
F1103 F1104 F1105 F1107 F1109

1922 S9B-PH
F1101
AINF R
GND_FC
AINF L
CVBSFIN
GND_FC
NC
CFIN
GND_FC
YFIN

to Analog board 2 1942

from/to Combi board Audio Processing 2 1302

1920 B1
1921 D1
1922 C9
1923 E1
1924 E4
2105 B2
2106 B2
2200 A5
2201 B5
2202 E6
2203 C6
2206 F2
2207 F3
2208 F2
3200 A5
3201 A6
3202 B5
3203 B6
3204 C5
3205 C3
3206 D3
3207 D6
3208 A3
3209 B3
4129 E4
4198 B2
5201 E3
5202 E3
5203 E3
6200 A4
6201 B4
6202 C4
6203 D4
6204 D7
F1001 B2
F1002 B2
F1003 A2
F1006 A2
F1101 C8
F1103 B7
F1104 C7
F1105 D8
F1107 C8
F1109 C8
F2210 E3
F2211 E3
F2212 E3
F2213 E4
F2214 E4
F2215 E4
F2216 E4
I201 E6

Display board .6 LX7500R, 230904

STANDBY BOARD / copper side view

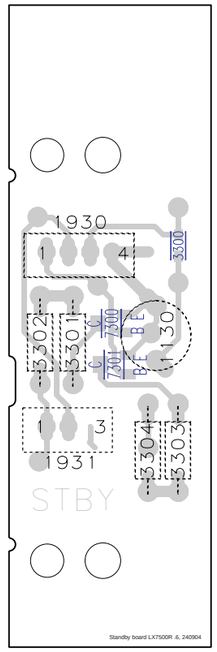

TRAY LIGHT left BOARD
copper side view

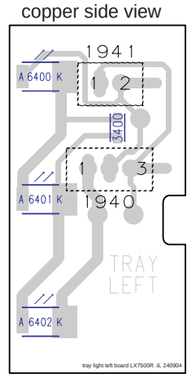

TRAY LIGHT right BOARD
copper side view

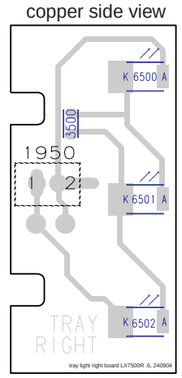

3 FRONT PANEL
STANDBY BOARD

1130 C1
1930 A1
1931 A4
3300 B1
3301 A3
3302 A3
3303 B3
3304 B3
7300 A3
7301 B3
F3001 A1
F3002 B1
F3003 B1
F3004 B1
F3101 A4
F3103 B4
I300 B1

from/to Display board 1911

1930 (not used)
Tray_Led
+12VSTBY
KEY1
GND
F3001 F3002 F3003 F3004
3300 4K7 I300
1130 4A/63V
STANDBY · ON

7300 PDTC124EU
7301 PDTC124EU
3301 270R 3302 270R
3303 270R 3304 270R
+12VSTBY
1931 (not used)
F3101 F3103
TRAY_LED1
TRAY_LED2
+12VSTBY

to TRAY LIGHT LEFT 1940

Display board .6 LX7500R, 240904

4 FRONT PANEL
TRAY LIGHT left BOARD

1940 A1
1941 B4
3400 A3
6400 A3
6401 A3
6402 A2
F4001 A1
F4002 A1
F4003 B1

from STANDBY board 1911

1940
TRAY_LED1
+12VSTBY
TRAY_LED2
F4001 F4002 F4003
6402 6401 6400 LST670
3400 680R
+12VSTBY
1941
TRAY_LED2
+12VSTBY

to TRAY LIGHT BOARD right 1950

FRONT board .6 LX7500R, 240904

5 FRONT PANEL
TRAY LIGHT right BOARD

1950 A1
3500 A2
6500 A3
6501 A2
6502 A2
F5001 B1
F5002 B1

from TRAY LIGHT left BOARD 1941

1950 (not used)
TRAY_LED2
+12VSTBY
F5001 F5002
6502 6501 6500 LST670
3500 680R

FRONT board .6 LX7500R, 230904

2100 A2 2101 A5 2103 A6 2104 A4 2105 A4 2106 A1 2107 A4 2111 A6 2112 A4 2114 A6 2115 A6 2118 A6 2119 A6 2120 A6 2121 A5 2122 A5 2123 A6 2124 A6 2125 A5 2126 A5 2200 A1 2201 A2 2202 A2 2203 A2 2206 A1 2207 A1 2208 A1 3100 A6 3101 A6 3102 A2 3103 A1 3104 A2 3105 A2 3106 A1 3107 A3 3108 A6 3110 A1 3111 A4 3113 A4 3114 A4 3115 A4 3116 A6 3117 A4 3118 A6 3119 A6 3120 A6 3122 A6 3123 A6 3124 A6 3125 A6 3126 A4 3127 A6 3128 A6 3130 A2 3132 A5 3133 A5 3140 A4 3141 A4 3142 A4 3143 A6 3144 A4 3145 A4 3146 A4 3150 A5 3151 A6 3152 A5 3153 A5 3160 A1 3161 A1 3162 A1 3163 A1 3200 A1 3201 A1 3202 A2 3203 A2 3204 A2 3205 A2 3206 A2 3207 A3 3208 A2 3209 A2 4100 A6 4101 A6 4111 A6 4121 A4 4122 A5 4123 A5 4124 A2 4129 A1 4198 A1 4199 A1 5101 A3 5103 A3 5201 A1 5202 A1 5203 A1 6100 A6 6105 A5 6106 A5 6109 A4 6110 A4 6111 A4 6112 A4 6200 A1 6201 A2 6202 A2 6203 A2 6204 A2 6112 A4 7101 A5 7102 A5 7103 A5 7104 A4 7105 A4 7109 A6 7110 A4 7112 A4

DISPLAY/CONTROL BOARD / copper side view

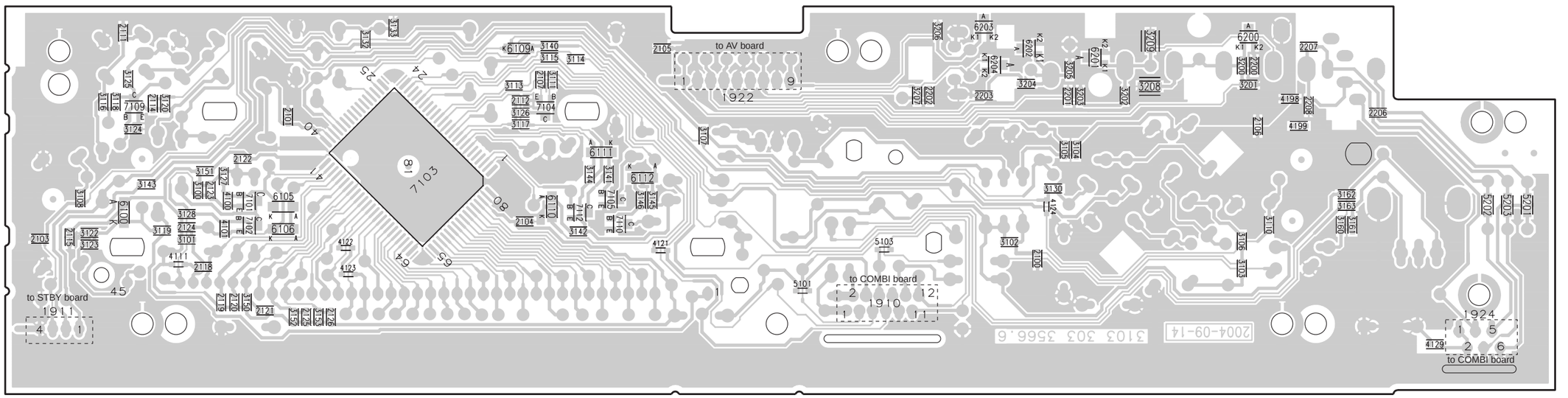

Front Display board LX7500R .6, 240904

0005 A2 0206 A2 0210 A6 0303 A4 1110 A3 1111 A6 1160 A5 1165 A6 1166 A5 1167 A6 1168 A6 1169 A6 1170 A1 1910 A4 1911 A1 1920 A6 1921 A5 1922 A4 1923 A6 1924 A6 2102 A2 2110 A1 2113 A1 2116 A4 2117 A1 3112 A5 3121 A5 3134 A6 3136 A4 3137 A5 3139 A3 3147 A1 3148 A2 5100 A1 5104 A1 6101 A5 6102 A6 6103 A6 6104 A4 7100 A2 7106 A1 7107 A4 7108 A1 9101 A4 9105 A3 9106 A4 9107 A4 9108 A6 9115 A5 9121 A1 9122 A1 9123 A3 9124 A2 9125 A2 9126 A2 9128 A5 9129 A5 9130 A5 9131 A5 9132 A3 9134 A5 9135 A6 9137 A6 9138 A3 9139 A3 9140 A2 9141 A5

DISPLAY/CONTROL BOARD / component side view

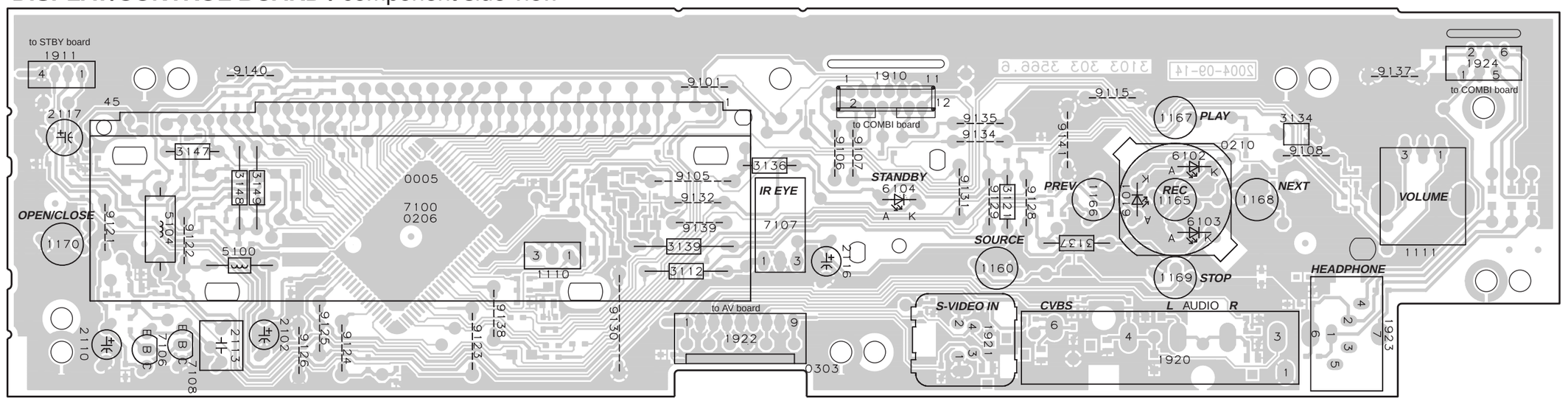

Front Display board LX7500R .6, 240904

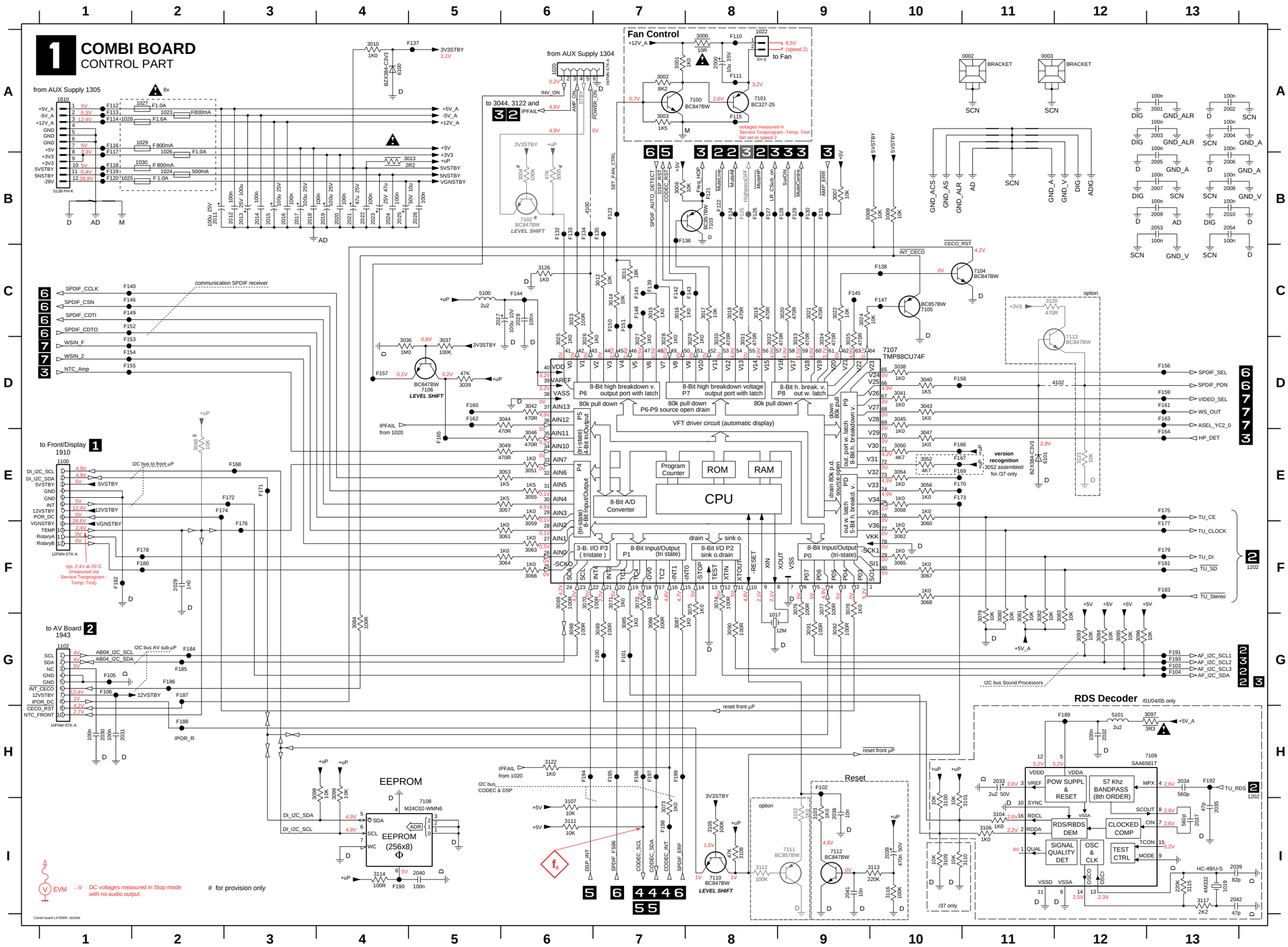
1 COMBI BOARD
CONTROL PART
from AUX Supply 1305
from AUX Supply 1304
to 3044, 3122 and
Fan Control
to Fan
voltages measured in Service Testprogram -Temp. Test fan set to speed 2
LEVEL SHIFT
communication SPDIF receiver
7107
TMP88CU74F
8-Bit high breakdown v. output port with latch
8-Bit high breakdown voltage output port with latch
8-Bit h. break. v. out w. latch
80k pull down
P6-P9 source open drain
VFT driver circuit (automatic display)
Program Counter
ROM
RAM
CPU
8-Bit A/D Converter
3-B. I/O P3 (tristate)
8-Bit Input/Output (tri state)
8-Bit I/O P2 sink o.drain
version recognition
3052 assembled for /37 only
to Front/Display 1
1910
to AV Board 2
1943
I2C bus to front µP
I2C bus AV sub µP
I2C bus Sound Processors
reset front µP
RDS Decoder
/01/04/05 only
7109
SAA6581T
POW SUPPL & RESET
57 Khz BANDPASS (8th ORDER)
RDS/RBDS DEM
CLOCKED COMP
SIGNAL QUALITY DET
OSC & CLK
TEST CTRL
EEPROM
7108
M24C02-WMN6
EEPROM (256x8)
Reset
option
/37 only
EVM
...V DC voltages measured in Stop mode with no audio output.
for provision only
Combi board LX7500R, 181004

2 COMBI BOARD
AUDIO PROCESSING 1

L/R FRONT SPEAKERS

SURROUND SPEAKERS

MUTE

MUTE HEADPHONE

POWER SUPPLY

SOURCE SELECTOR

LOGIC

IIC BUS REC

SUR.

VOLUME I LEFT

VOLUME I RIGHT

TREBLE LEFT

TREBLE RIGHT

BASS LEFT

BASS RIGHT

VOLUME II LEFT

VOLUME II RIGHT

BASS ALC

7207 TDA7468

7214 TDA7468

7204-1 NJM4556AM

7204-2 NJM4556AM

to Audio Tuner

to AV board

Line 1

Line 2

Line Out

/37 only

for provision only

EVM ...V DC voltages measured in Stop mode with no audio output.

Combi board LX7500R, 181004

1200-1 D1	3231 C11	6200 A13
1200-2 D1	3232 C9	6201 C14
1200-3 G14	3233 C10	6202 E12
1200-4 H14	3234 C14	7200 A8
1202 F1	3235 D12	7201 A13
1205 H1	3236 D13	7202 B11
2200 A7	3237 D13	7203 A12
2201 A7	3238 D1	7204-1 B11
2202 A9	3239 D10	7204-2 D11
2203 A13	3240 D12	7205 C12
2204 B5	3241 D2	7206 C13
2205 B3	3242 D9	7207 B8
2206 B7	3243 D10	7208 D12
2207 B8	3244 D12	7210 E12
2208 B7	3245 D1	7211 E13
2209 B3	3246 E2	7212 F8
2210 B9	3247 E5	7213 G10
2211 B10	3248 E7	7214 F8
2212 B3	3249 E5	7215 H10
2213 B5	3251 E12	F210 A6
2214 C4	3252 E2	F211 A12
2215 C4	3253 E2	F212 C13
2216 B9	3254 E3	F213 D1
2217 C11	3255 E3	F214 D1
2228 C10	3256 E7	F215 D1
2229 C9	3257 E9	F216 E1
2233 C11	3258 E13	F217 E6
2234 C3	3259 E7	F218 E13
2235 C14	3260 E14	F219 F2
2236 C11	3261 F12	F220 F2
2237 D9	3262 F7	F221 G13
2238 D9	3263 F9	F222 G13
2258 D2	3267 F9	F223 G13
2259 D10	3268 F12	F224 G1
2286 D11	3269 F5	F225 G1
2287 D3	3270 F5	F226 G2
2289 D9	3271 F2	F227 G2
2290 D9	3272 F8	F228 H1
2291 D10	3273 F2	F229 H1
2292 E3	3274 G3	
2293 E7	3275 G3	
2298 E3	3276 G10	
2299 E5	3277 G9	
2300 E7	3278 G11	
2301 E8	3279 H2	
2302 E12	3280 H9	
2303 E2	3281 H2	
2318 E2	3282 H9	
2319 E3	3283 H2	
2320 E3	3284 H2	
2321 E7	3285 H11	
2322 E7	3286 H9	
2323 F9	3287 I1	
2324 F5	3288 I1	
2325 F3	3289 I10	
2326 F3	3290 I2	
2327 F7	3291 I2	
2328 G3	3292 I3	
2329 G3	3293 I3	
2330 G9	3294 I4	
2331 G5	3295 I8	
2332 G9	3296 I4	
2333 G4	3297 I5	
2334 G4	3299 I4	
2335 G13	3306 I4	
2336 G13	3307 I5	
2337 G9	6200 A13	
2338 H3	6201 C14	
2339 H3	6202 E12	
2340 H3	7200 A8	
2341 H3	7201 A13	
2342 H9	7202 B11	
2343 H9	7203 A12	
2344 H9	7204-1 B11	
2345 I9	7204-2 D11	
2346 I2	7205 C12	
2347 I2	7206 C13	
2348 I3	7207 B8	
2349 I3	7208 D12	
2350 I5	7210 E12	
2351 I7	7211 E13	
2352 I5	7212 F8	
2353 I6	7213 G10	
2354 I4	7214 F8	
2355 I5	7215 H10	
3200 A7	F210 A6	
3201 A7	F211 A12	
3202 A9	F212 C13	
3203 A8	F213 D1	
3204 A8	F214 D1	
3205 A9	F215 D1	
3206 A11	F216 E1	
3207 A12	F217 E6	
3208 A13	F218 E13	
3209 A13	F219 F2	
3210 A5	F220 F2	
3211 B13	F221 G13	
3212 B5	F222 G13	
3213 B7	F223 G13	
3214 B12	F224 G1	
3215 B2	F225 G1	
3216 B12	F226 G2	
3217 B12	F227 G2	
3218 C9	F228 H1	
3219 B10	F229 H1	
3220 C2		
3221 C12		
3222 C10		
3223 C13		
3224 C12		
3225 C2		
3226 C14		
3227 C10		
3228 C11		
3229 C9		
3230 C2		

3 COMBI BOARD
AUDIO PROCESSING 2

SUBWOOFER & CENTER SPEAKERS

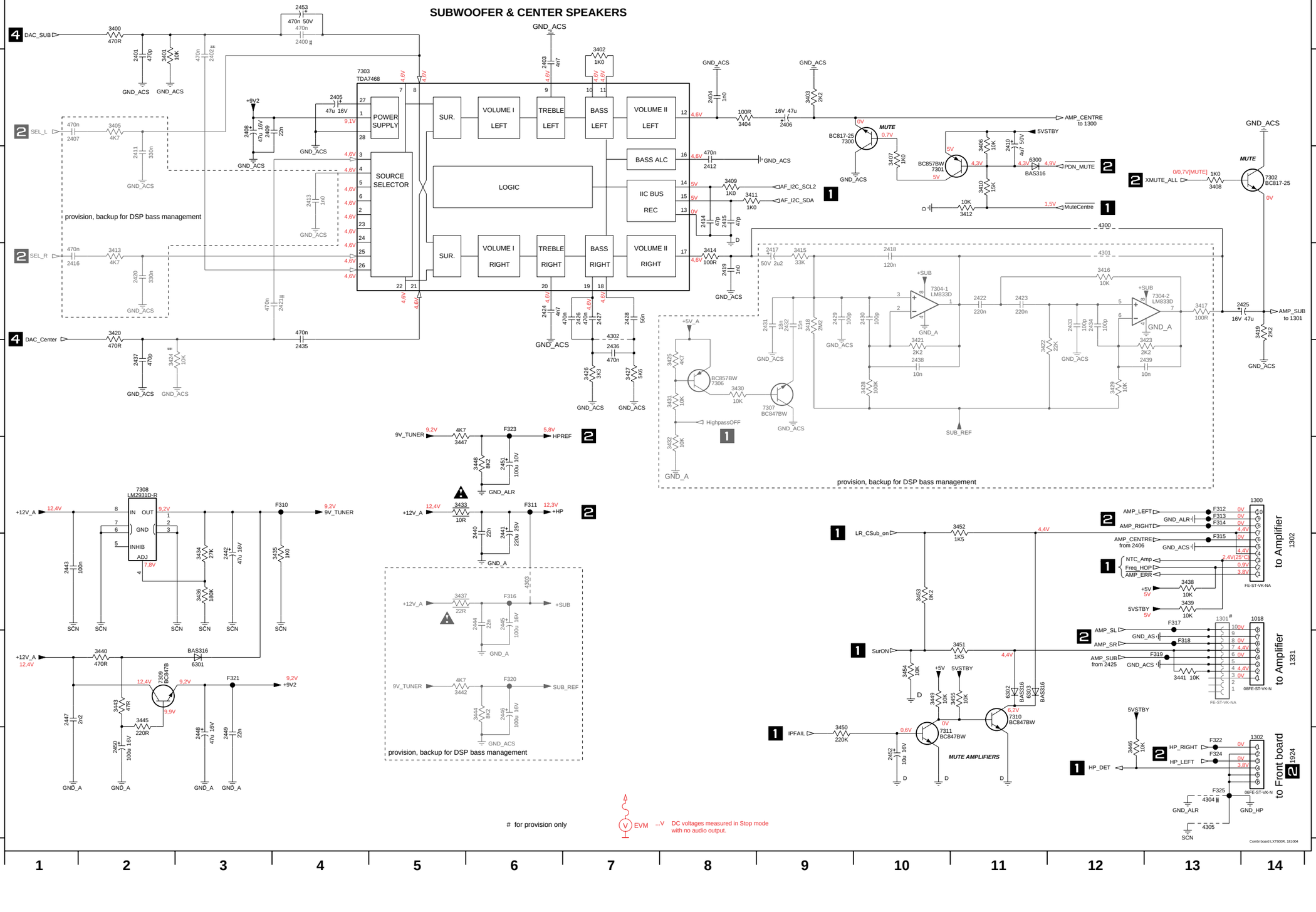

1018 H14	4300 C12
1300 F14	4301 D12
1301 G13	4302 D7
1302 I14	4303 G6
2400 A4	4304 I13
2401 B2	4305 I13
2402 B3	6300 C11
2403 B6	6301 H3
2404 B8	6302 H11
2405 B4	6303 H11
2406 B9	7300 B10
2407 B1	7301 C10
2408 B3	7302 C14
2409 B3	7303 B4
2410 B11	7304-1 D10
2411 C2	7304-2 D13
2412 C8	7306 E8
2413 C4	7307 E9
2414 C8	7308 F2
2415 C8	7309 H2
2416 D1	7310 H11
2417 D9	7311 I10
2418 D10	F310 F4
2419 D8	F311 F6
2420 D2	F312 F13
2421 D4	F313 F13
2422 D11	F314 F13
2423 D11	F315 G13
2424 D6	F316 G6
2425 D14	F317 G13
2426 D7	F318 H13
2427 D7	F319 H13
2428 D7	F320 H6
2429 D9	F321 H3
2430 D10	F322 I13
2431 D9	F323 E6
2432 D9	F324 I13
2433 D12	F325 I13
2434 D12	
2435 E4	
2436 E7	
2437 E2	
2438 E10	
2439 E13	
2440 F6	
2441 F6	
2442 G3	
2443 G1	
2444 G6	
2445 G6	
2446 H6	
2447 H1	
2448 I3	
2449 I3	
2450 I2	
2451 F6	
2452 I10	
2453 A4	
3400 A2	
3401 B2	
3402 B7	
3403 B9	
3404 B8	
3405 B2	
3406 B11	
3407 C10	
3408 C13	
3409 C8	
3410 C11	
3411 C8	
3412 C11	
3413 D2	
3414 D8	
3415 D9	
3416 D12	
3417 D13	
3418 D9	
3419 D14	
3420 D2	
3421 E10	
3422 E11	
3423 E13	
3424 E2	
3425 E8	
3426 E7	
3427 E7	
3428 E10	
3429 E12	
3430 E8	
3431 E8	
3432 F8	
3433 F5	
3434 G3	
3435 G4	
3436 G3	
3437 G5	
3438 G13	
3439 G13	
3440 H2	
3441 H13	
3442 H5	
3443 H2	
3444 H6	
3445 H2	
3446 I12	
3447 F5	
3448 F6	
3449 H10	
3450 I9	
3451 H11	
3452 F11	
3453 G10	
3454 H10	
3455 H11	

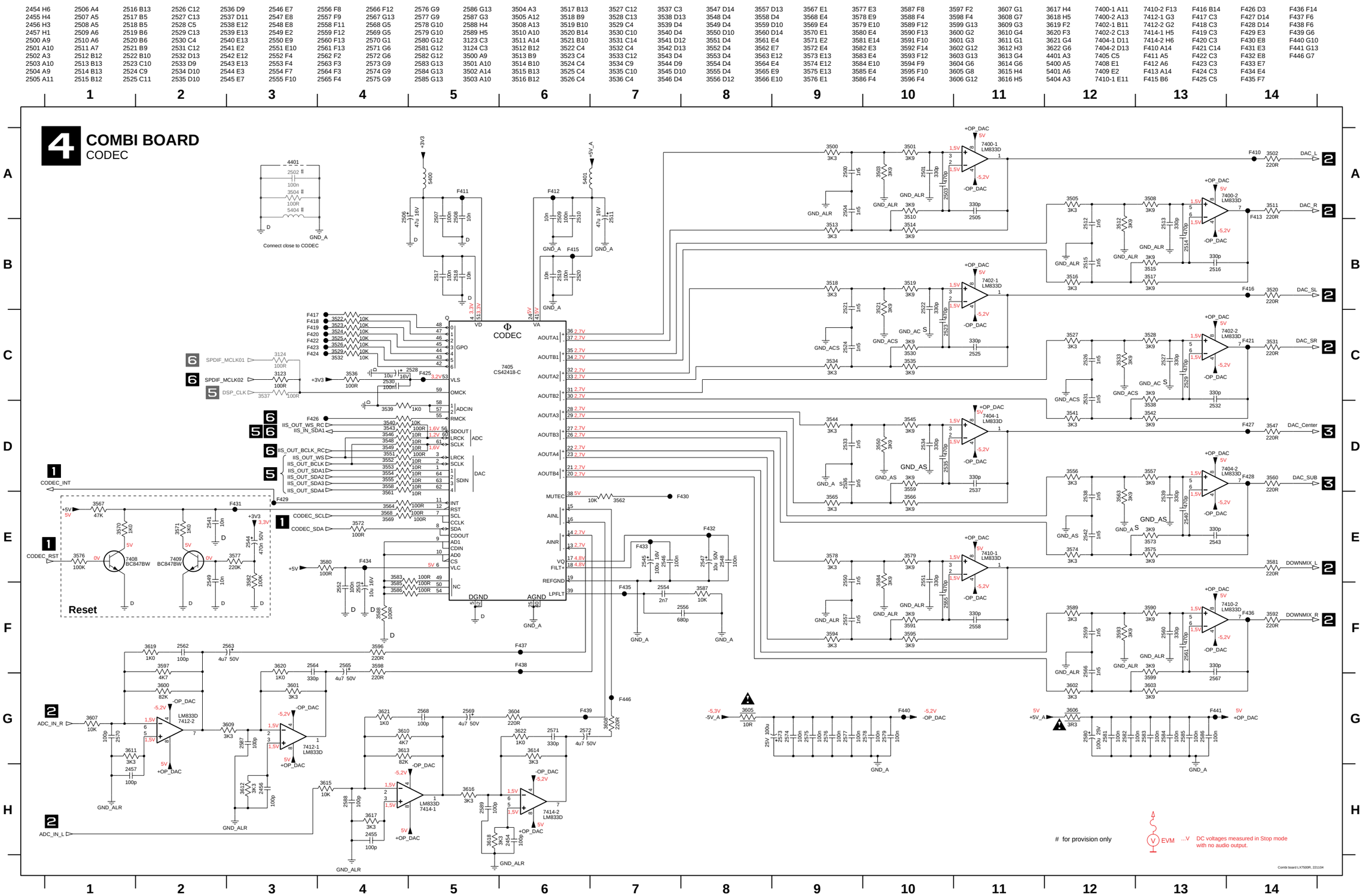
4 COMBI BOARD
CODEC
Connect close to CODEC
Reset
CODEC
7405
CS42418-C
7400-1 LM833D
7400-2 LM833D
7402-1 LM833D
7402-2 LM833D
7404-1 LM833D
7404-2 LM833D
7410-1 LM833D
7410-2 LM833D
7412-1 LM833D
7412-2 LM833D
7414-1 LM833D
7414-2 LM833D
7408 BC847BW
7409 BC847BW
SPDIF_MCLK01
SPDIF_MCLK02
DSP_CLK
IIS_OUT_WS_RC
IIS_IN_SDA1
IIS_OUT_BCLK_RC
IIS_OUT_WS
IIS_OUT_BCLK
IIS_OUT_SDA1
IIS_OUT_SDA2
IIS_OUT_SDA3
IIS_OUT_SDA4
CODEC_INT
CODEC_SCL
CODEC_SDA
CODEC_RST
ADC_IN_R
ADC_IN_L
DAC_L
DAC_R
DAC_SL
DAC_SR
DAC_Center
DAC_SUB
DOWNMIX_L
DOWNMIX_R
for provision only
EVM
...V DC voltages measured in Stop mode with no audio output.
Combi board LX7500R, 221104

1500 C12 2703 C12 2709 E1 2715 F1 2721 D3 2727 F13 2734 F14 2741 F12 3704 D7 3710 D8 3716 F11 3722 G11 3728 B6 3734 D11 3740 D11 3746 E7 3752 E9 3758 E11 3764 E11 3770 G9 3776 F9 3782 F9 4101 E12 5102 B12 6500 B6 7504 B7 F514 D7 F520 G12 F526 F12 F532 E2 F538 E8 F544 G8 F550 E13 F556 F7 F562 F8
1601 E6 2704 D1 2710 E2 2716 F2 2722 D4 2728 F13 2735 F13 3119 B12 3705 D7 3711 D7 3717 G11 3723 D13 3729 F11 3735 C7 3741 D12 3747 E7 3753 E9 3759 F9 3765 E11 3771 E11 3777 F9 3783 F9 4500 B11 5500 E1 6501 C6 7505 D11 F515 D7 F521 G12 F527 D11 F533 E8 F539 E3 F545 E13 F551 E12 F557 F8 F563 F8
2045 B12 2705 D2 2711 E2 2717 F2 2723 D4 2729 F13 2737 F13 3700 B13 3706 C12 3712 D7 3718 B7 3724 B8 3730 C8 3736 D12 3742 F11 3748 E7 3754 E9 3760 F9 3766 G9 3772 E11 3778 F9 3784 F9 4501 D13 5501 E1 7500 B12 F510 C12 F516 F12 F522 G12 F528 C7 F534 D9 F540 F9 F546 E12 F552 E12 F558 F8 F564 E13
2700 B13 2706 B8 2712 E2 2718 F1 2724 D4 2731 D8 2738 F13 3701 D8 3707 C13 3713 D7 3719 F11 3725 B7 3731 C6 3737 D12 3743 D12 3749 D9 3755 E12 3761 F9 3767 E11 3773 E11 3779 E11 3852 D2 4502 E12 5502 F1 7501 C2 F511 D8 F517 F12 F523 B8 F529 F12 F535 F7 F541 F9 F547 G8 F553 E12 F559 F8 F565 E13
2701 C12 2707 B8 2713 E2 2719 F2 2725 D3 2732 F13 2739 F12 3702 D7 3708 C12 3714 D7 3720 F11 3726 D13 3732 F11 3738 D11 3744 E9 3750 E9 3756 E11 3762 F9 3768 G9 3774 F9 3780 E11 3853 D2 4503 E13 5503 C3 7502 D13 F512 D7 F518 F12 F524 F12 F530 D11 F536 E8 F542 E13 F548 C4 F554 E12 F560 F8
2702 C11 2708 C8 2714 E2 2720 D3 2726 D3 2733 F14 2740 F12 3703 D7 3709 D3 3715 F11 3721 G11 3727 B8 3733 F11 3739 F11 3745 E7 3751 D9 3757 E12 3763 E12 3769 E11 3775 F9 3781 F8 3854 G8 4504 F12 5504 D3 7503 B8 F513 D7 F519 F12 F525 F12 F531 F12 F537 E9 F543 F3 F549 D4 F555 G8 F561 F8

COMBI BOARD
DSP

RESET

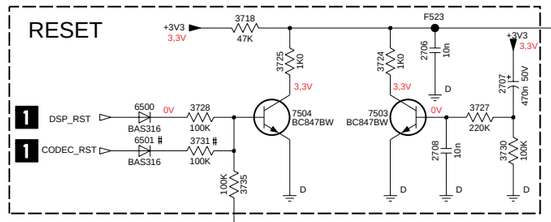

Clock Generator

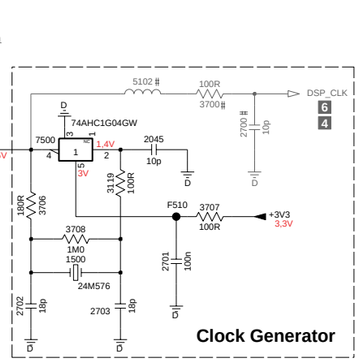

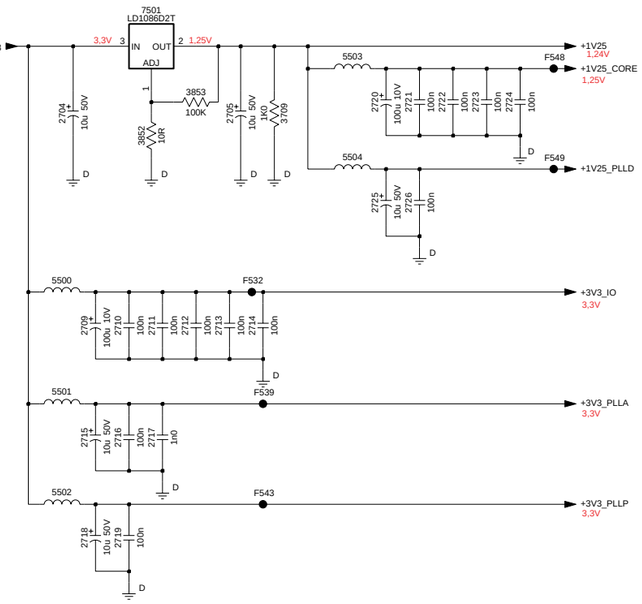

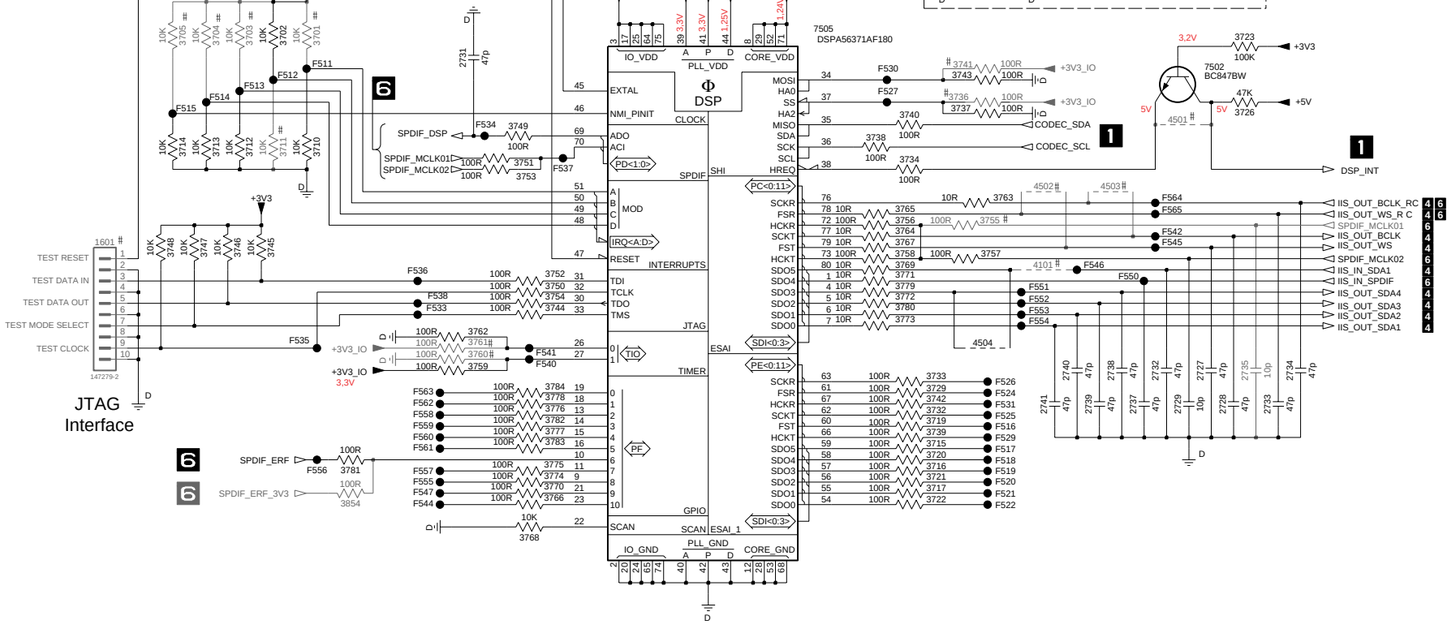

for provision only

EVM ...V DC voltages measured in Stop mode with no audio output.

Combi board LX7500R, 221104

COMBI BOARD
SPDIF IN/OUT

SPDIF Receiver

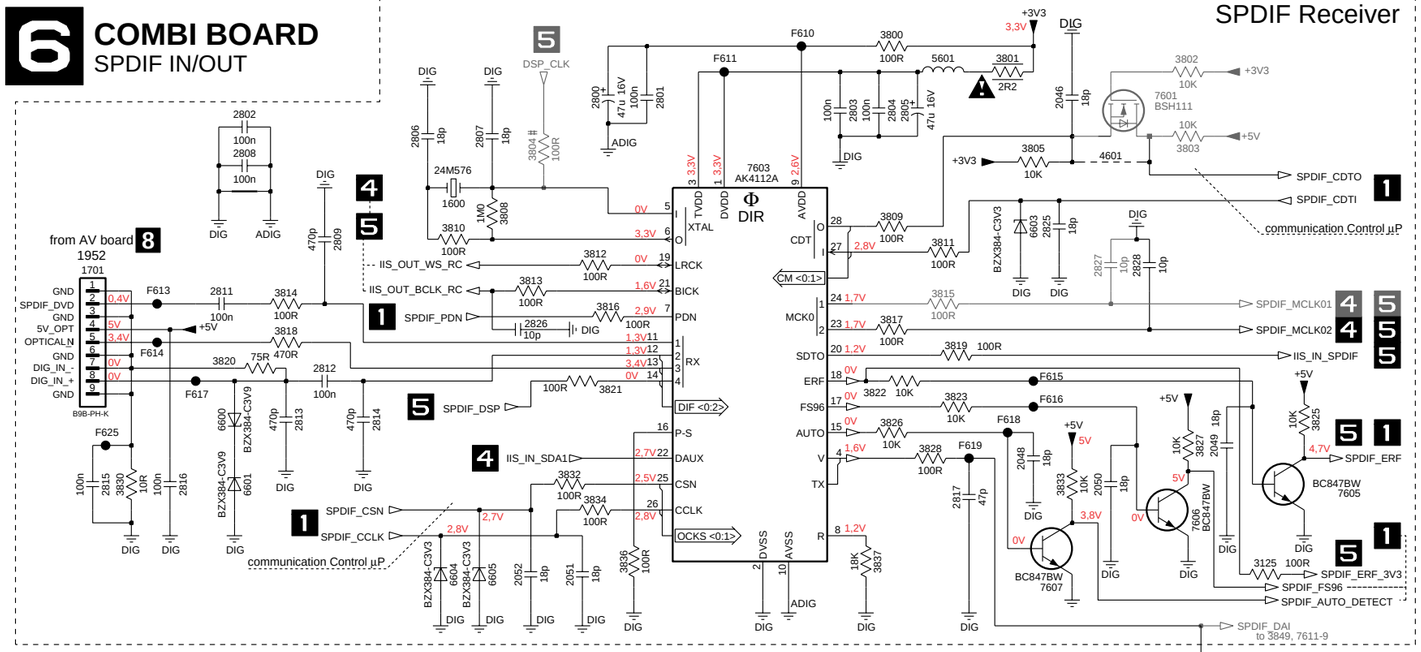

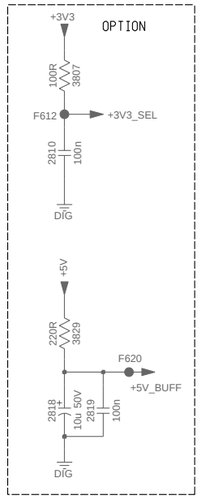

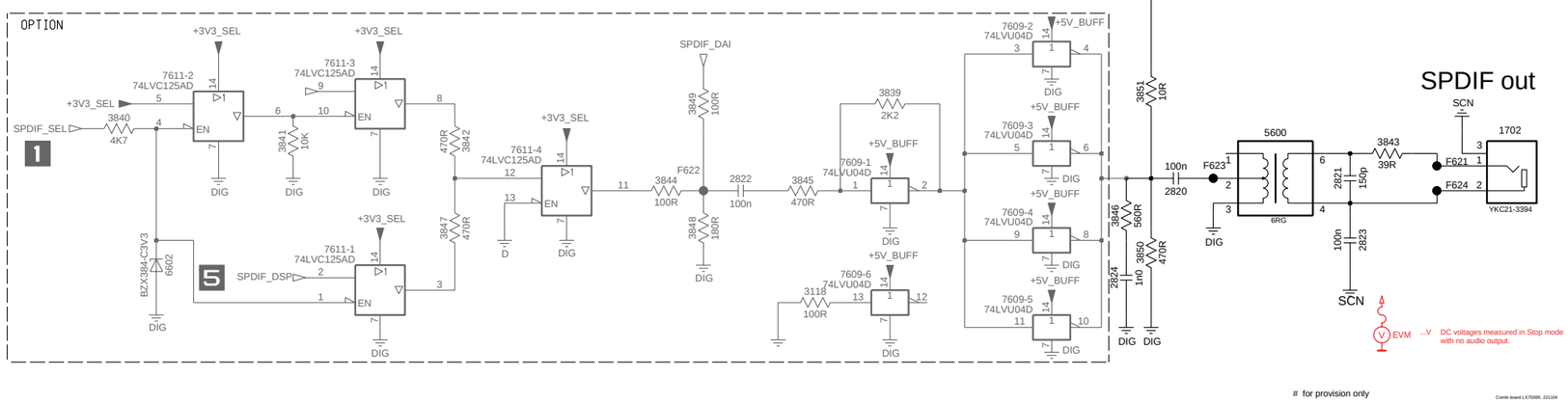

1600 B3 3836 D4
1701 B1 3837 D5
1702 E9 3839 E6
2046 A6 3840 E1
2048 C6 3841 E2
2049 C7 3842 E3
2050 C7 3843 E9
2051 D4 3844 E4
2052 D3 3845 E5
2800 A4 3846 E7
2801 A4 3847 E3
2802 A2 3848 E5
2803 A5 3849 E5
2804 A5 3850 F7
2805 A6 3851 E7
2806 A3 4601 A7
2807 A3 5600 E8
2808 A2 5601 A6
2809 B2 6600 C2
2810 B9 6601 C2
2811 B2 6602 F2
2812 C2 6603 B6
2813 C2 6604 D3
2814 C3 6605 D3
2815 C1 7601 A7
2816 C2 7603 B4
2817 C6 7605 C8
2818 D9 7606 D7
2819 D9 7607 D6
2820 E7 7609-1 E6
2821 E8 7609-2 D7
2822 E5 7609-3 E7
2823 F8 7609-4 E7
2824 F7 7609-5 F7
2825 B6 7609-6 F6
2826 B4 7611-1 F3
2827 B7 7611-2 E2
2828 B7 7611-3 E3
3118 F5 7611-4 E4
3125 D8 F610 A5
3800 A5 F611 A5
3801 A6 F612 B9
3802 A7 F613 B1
3803 A7 F614 C1
3804 A4 F615 C6
3805 A4 F616 C6
3807 B9 F617 C2
3808 B3 F618 C6
3809 B5 F619 C6
3810 B3 F620 C9
3811 B6 F621 E9
3812 B4 F622 E5
3813 B3 F623 E8
3814 B2 F624 E9
3815 B6 F625 C1
3816 B4
3817 B5
3818 B2
3819 C6
3820 C2
3821 C4
3822 C5
3823 C6
3825 C8
3826 C5
3827 C7
3828 C6
3829 C9
3830 C1
3832 C4
3833 C6
3834 C4

7 COMBI BOARD
VIDEO SWITCH

VIDEO SWITCHING
For non scart version only

S-Video

EXT. VIDEO IN SELECTOR

EXT. AUDIO IN SELECTOR

from Front 2

to AV board 2

Audio R
Audio L
CVBS

... provisional

for provision only

EVM ...V DC voltages measured in Stop mode with no audio output.

Combi board LX7500R, 081004

U8 H4
U9 G5
U10 C6
U11 E2
1400 B2
1401 C10
1402 G2
1403 D2
2043 B9
2044 E9
2900 B7
2901 B3
2902 B3
2903 C9
2904 C2
2905 C6
2906 C9
2907 D3
2908 D7
2909 E3
2910 E4
2911 E9
2912 E7
2913 E3
2914 E5
2915 F4
2916 F11
2917 F11
2918 F12
2919 F12
2920 F12
2921 G5
2922 G12
2923 G12
2924 H5
2925 H3
2926 H3
2927 H12
2928 H12
2929 I4
2930 I5
3900 B8
3901 B2
3902 B9
3903 B7
3904 B3
3905 B8
3906 B3
3907 C2
3908 C8
3909 C3
3910 C9
3911 D10
3912 D8
3913 D7
3914 D9
3915 D4
3916 E5
3917 E4
3918 E8
3919 E5
3920 E9
3921 E7
3922 E2
3923 E8
3924 F4
3925 F11
3926 F2
3927 G5
3928 G11
3929 G2
3930 G5
3931 G6
3932 H2
3933 G11
3934 H4
3935 H5
3936 H6
4900 B7
4901 C7
4902 E7
5900 C6
6900 B3
6901 C3
6902 F2
7705-1 G6
7705-2 H6
7900 B8
7901 B4
7902 D8
7903 E8
7904 G4
F710 B2
F711 B2
F712 C10
F713 C10
F714 C10
F715 C10
F716 C10
F717 E2
F718 E2
F719 E2
F720 E2
F721 E2
F722 F2
F723 F12
F724 G12
F725 G2
F726 H2
F727 G12
F728 D10

1023 C7 2024 C6 2202 A2 2341 C6 2416 B8 2437 A7 2711 B5 2740 B5 2903 A1 3005 B3 3028 B3 3047 C3 3066 B4 3090 C4 3110 C2 3214 C7 3245 A3 3279 C6 3405 A7 3425 B7 3449 C7 3747 B4 3901 A2 3929 A1 5501 B5 7106 B4 7214 A4 7609 A2
1024 C6 2028 B3 2229 A3 2342 A4 2418 B8 2438 B8 2712 B5 2802 B2 2904 A1 3006 C7 3029 B3 3048 C4 3067 C3 3091 C3 3111 C4 3216 C7 3246 A3 3280 A4 3406 C5 3426 B8 3450 C7 3748 B4 3902 A1 3931 A1 5502 B5 7107 B3 7215 C8 7900 A1
1025 C6 2029 C5 2236 A3 2343 A4 2419 B7 2439 C8 2713 B5 2803 B2 2906 A1 3007 C7 3030 B3 3049 B4 3068 C3 3092 C3 3112 C4 3217 C7 3251 C5 3281 C6 3407 B8 3427 B7 3451 C8 3800 B2 3903 A1 3932 A1 5503 A4 7110 C3 7300 B8 7901 A1
1026 C7 2030 B1 2237 A3 2346 C6 2420 B8 2440 A4 2714 B5 2804 B2 2907 A1 3011 B3 3031 B3 3050 C3 3069 B4 3093 C3 3113 C4 3221 C7 3252 A3 3282 A4 3408 B8 3428 B8 3452 B8 3805 B2 3905 A1 3933 A1 5504 A4 7111 C4 7301 C5 7902 A1
1027 C7 2031 B1 2238 A3 2347 C5 2421 A8 2444 C8 2716 B4 2806 B2 2908 A1 3012 B3 3032 B3 3051 B4 3070 B4 3094 C3 3114 C3 3223 C8 3253 A3 3283 C5 3409 B7 3429 B8 3453 B8 3807 A2 3907 A1 3936 A1 6101 C3 7112 C4 7302 B8 7903 A1
1028 C7 2032 C2 2258 A3 2348 C6 2422 C8 2447 A4 2717 B5 2807 B2 2911 A1 3014 B3 3033 B3 3052 C3 3071 B4 3095 C4 3115 C2 3224 C7 3254 A3 3284 C6 3410 C4 3430 B7 3454 C8 3814 B2 3908 A1 4100 C5 6200 C6 7113 B2 7303 B7
1029 C7 2036 C4 2259 A3 2349 C6 2423 C7 2449 A4 2719 B5 2808 B2 2912 A1 3015 B3 3034 B3 3053 B4 3072 C4 3096 C4 3116 C4 3226 C5 3255 A3 3285 C8 3411 B7 3431 B7 3576 B6 3818 B2 3909 A1 4102 B2 6201 C5 7200 A2 7304 B8
1030 C6 2039 C2 2287 A3 2400 A8 2424 B8 2507 B6 2721 B5 2810 A2 2917 A1 3016 B3 3035 B3 3054 C3 3073 C4 3098 C3 3117 C2 3229 A3 3256 A3 3287 C6 3412 B3 3432 B7 3577 B6 3820 B2 3910 A1 4300 C8 6202 C5 7201 C6 7306 B7
2001 A2 2040 C3 2292 A3 2401 B8 2426 B7 2508 B6 2722 B5 2811 B2 2918 A1 3017 B3 3036 B4 3055 B4 3074 C4 3099 C3 3119 B5 3231 A3 3257 A2 3288 C6 3413 B8 3435 B1 3580 B6 3821 B2 3911 A1 4301 C8 6300 C5 7202 C7 7307 B8
2002 C2 2041 C4 2298 A3 2402 B8 2427 B7 2509 B6 2723 B5 2813 B2 2919 A1 3018 B3 3037 B4 3056 C3 3075 C4 3100 C2 3120 B3 3232 B3 3258 C5 3289 C8 3414 B7 3438 C7 3582 B6 3829 A2 3912 A1 4302 B7 6301 A4 7203 C7 7309 A4
2003 A2 2042 C2 2303 A3 2403 A7 2428 B7 2510 B6 2724 B5 2814 B2 2920 A2 3019 B3 3038 C3 3057 B4 3076 C3 3101 C2 3121 B2 3233 A3 3259 A3 3290 C5 3415 B8 3439 C5 3708 B5 3830 B2 3913 A1 4304 A4 6302 C8 7204 A3 7310 C8
2005 A5 2045 B5 2318 A3 2404 A7 2429 C8 2517 B6 2726 B5 2815 B2 2923 B1 3020 B3 3039 B4 3058 C3 3077 C3 3102 C4 3202 A2 3234 C5 3260 C5 3291 C6 3416 C8 3440 A4 3709 A5 3836 B2 3914 A1 4305 A3 6303 C8 7205 C7 7311 C8
2006 B6 2046 B2 2319 A3 2407 A7 2430 B8 2518 B6 2727 B6 2816 B2 2925 A1 3021 B3 3040 C3 3059 B4 3078 C3 3103 C4 3203 A2 3235 C7 3261 C5 3292 C6 3417 C8 3441 B8 3718 B4 3837 B2 3918 A1 4502 B6 6602 A2 7206 C5 7400 A6
2007 B2 2048 B2 2320 A3 2409 A8 2431 B8 2519 B6 2728 B6 2820 A2 2926 A1 3022 B3 3041 C3 3060 C3 3084 B1 3104 C2 3204 A2 3236 C8 3262 A2 3293 C6 3418 B8 3442 B8 3725 B4 3839 A2 3920 A1 4503 B6 6900 A2 7207 A3 7402 A6
2008 B1 2049 B2 2323 A2 2411 A8 2432 B8 2520 B6 2729 B5 2821 A2 2928 A1 3023 B3 3042 B3 3061 B4 3085 C4 3105 C3 3205 C7 3237 B3 3263 A2 3400 B8 3420 A8 3443 A4 3728 B4 3842 A2 3921 A1 4900 A1 6901 A1 7208 C8 7404 A5
2012 B7 2050 B2 2334 A4 2412 B7 2433 B8 2549 B6 2733 B6 2823 A2 3001 C8 3024 B3 3043 C3 3062 C3 3086 C4 3106 C2 3207 C7 3238 A3 3268 B3 3401 B8 3421 B8 3444 B7 3731 B4 3843 A2 3923 A1 4901 A1 6902 A1 7210 C5 7410 A5
2014 C7 2051 B2 2338 C6 2413 A7 2434 C8 2702 B5 2734 B6 2824 A2 3002 C8 3025 B3 3044 B4 3063 B4 3087 C4 3107 C4 3208 C6 3240 C7 3272 A4 3402 A7 3422 B8 3445 A4 3735 B4 3846 A2 3925 A1 4902 A1 7100 C8 7211 C5 7412 A7
2020 C7 2052 B2 2339 C6 2414 A7 2435 A8 2703 B5 2735 B5 3003 C8 3026 B3 3045 C3 3064 B4 3088 C4 3108 C3 3209 C5 3241 A3 3276 C8 3403 B8 3423 C8 3447 A3 3745 B4 3850 A2 3926 A1 5400 B6 7102 B3 7212 A2 7414 A7
2022 C6 2053 A2 2340 C5 2415 B7 2436 B7 2710 B5 2737 B5 2900 A1 3004 B3 3027 B3 3046 B4 3065 C3 3089 C4 3109 C2 3211 B3 3244 C8 3278 C8 3404 A7 3424 A7 3448 A3 3746 B4 3900 A1 3928 B1 5500 B5 7103 C5 7213 C8 7504 B4

COMBI BOARD / copper side view

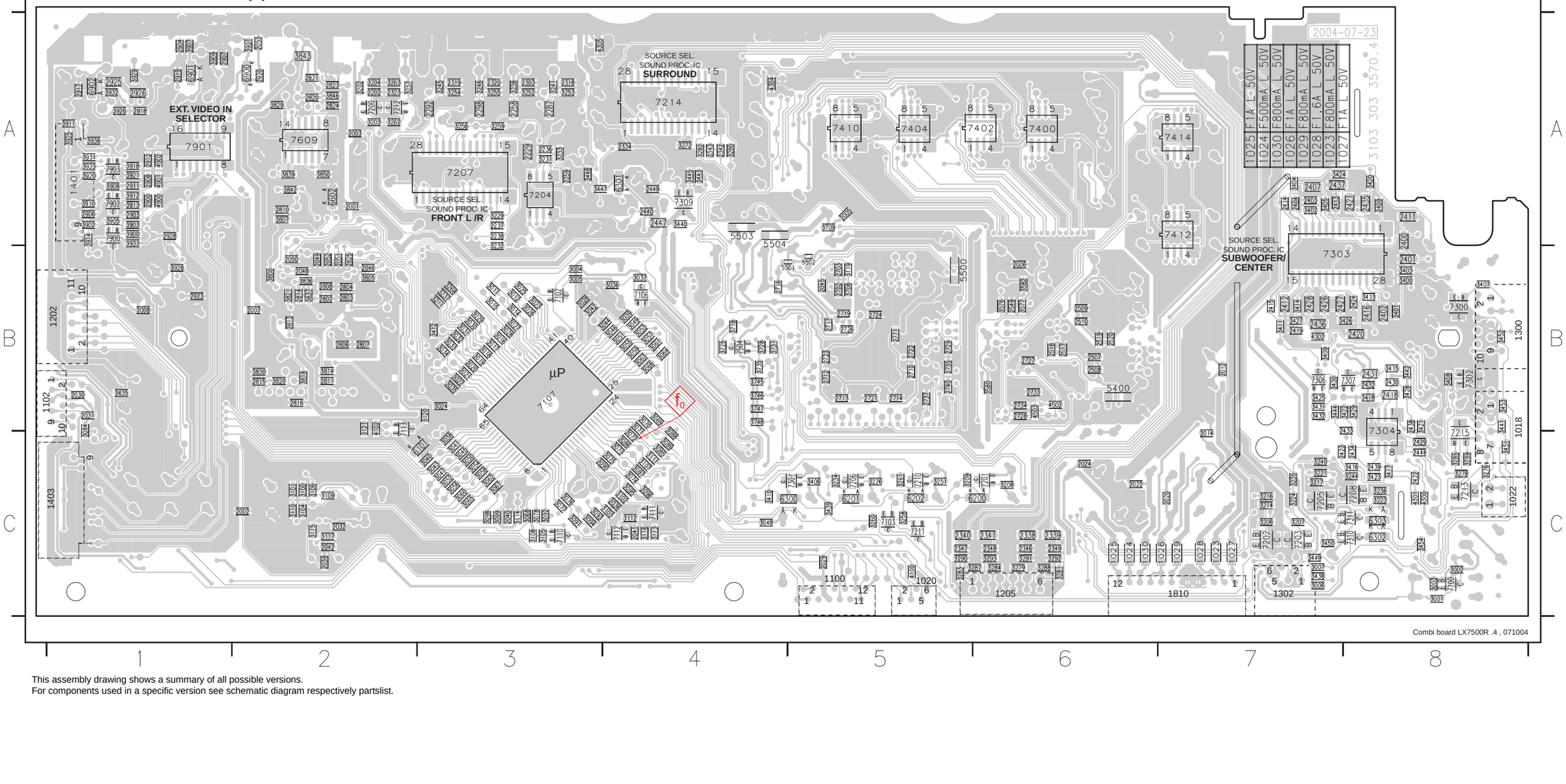

This assembly drawing shows a summary of all possible versions.
For components used in a specific version see schematic diagram respectively partslist.

0002	A5	1701	B7	2037	C7	2228	A6	2331	A6	2443	B8	2514	A3	2540	A4	2563	A2	2585	A2	2800	B7	2922	B8	3200	A6	3269	A5	3500	A3	3525	B3
0003	A2	1702	A7	2038	C5	2233	A6	2332	A5	2445	C1	2515	A3	2541	B3	2564	B2	2586	A2	2801	B7	2924	A8	3201	A6	3270	A5	3501	A3	3526	B3
1017	C6	1810	C2	2043	B8	2234	A6	2333	A6	2446	C1	2516	A3	2542	A4	2565	A3	2587	B2	2805	B7	2927	A8	3205	A2	3271	B8	3502	A3	3527	A3
1018	B1	2000	C1	2044	B8	2235	C4	2335	A7	2448	A5	2521	A4	2543	A4	2566	A4	2588	A2	2809	B7	2929	B8	3210	A6	3273	B8	3503	A3	3528	A3
1019	C7	2004	A3	2054	A5	2286	A6	2336	A7	2450	A5	2522	A3	2544	B3	2567	A4	2589	A2	2812	B7	2930	B8	3212	A6	3274	B8	3504	B3	3529	B3
1020	C4	2009	B2	2200	A5	2289	A6	2337	A5	2451	A6	2523	A3	2545	B3	2568	A2	2700	B4	2817	B7	3000	C1	3213	A6	3275	B8	3505	A3	3530	A3
1022	C1	2010	B7	2201	A6	2290	A6	2344	A5	2452	C2	2524	A3	2546	B3	2569	A2	2701	B4	2818	A7	3008	B8	3215	A7	3277	A5	3508	A3	3531	A4
1100	C4	2011	B2	2203	C3	2291	A6	2345	A5	2453	B1	2525	A4	2547	B3	2570	A3	2704	A4	2819	A7	3009	B8	3218	A6	3286	A5	3510	A3	3532	B3
1102	B8	2013	C2	2204	A6	2293	A6	2350	A5	2454	A2	2526	A3	2548	B3	2571	A2	2705	A4	2822	A7	3010	C5	3219	A6	3294	A5	3511	A3	3533	A3
1200	A6	2015	C2	2205	A6	2299	A6	2351	A5	2455	A2	2527	A3	2550	A4	2572	A3	2706	B5	2826	B7	3013	C5	3220	A7	3295	A5	3512	A3	3534	A3
1202	B8	2016	C2	2206	A6	2300	A6	2352	A5	2456	B2	2528	B3	2551	A4	2573	A3	2707	B5	2827	B7	3079	B8	3222	A6	3296	A5	3513	A3	3535	A3
1205	C3	2017	C2	2207	A6	2301	A6	2353	A5	2457	B2	2529	A3	2552	B3	2574	A3	2708	B5	2828	B7	3080	B8	3225	A6	3297	A5	3514	A3	3536	B3
1300	B1	2018	C2	2208	A6	2302	C4	2354	A5	2500	A3	2530	B3	2553	B4	2575	A4	2709	B4	2901	A7	3081	B8	3227	A6	3299	A5	3515	A3	3537	B3
1301	B1	2019	C3	2209	A6	2321	A6	2355	A5	2501	A3	2531	A3	2554	B3	2576	A3	2715	B5	2902	A8	3082	B8	3228	A6	3306	A5	3516	A3	3538	A3
1302	C2	2021	C3	2210	A6	2322	A5	2405	B1	2502	B3	2532	A3	2555	A4	2577	A4	2718	A5	2903	B8	3083	B8	3230	A7	3307	A5	3517	A3	3539	B3
1400	A8	2023	C3	2211	A6	2324	A5	2406	B1	2503	A3	2533	A4	2556	B3	2578	A2	2720	A5	2909	C8	3097	C7	3239	A6	3419	B1	3518	A4	3540	B3
1401	A8	2025	C3	2212	A6	2325	B8	2408	B1	2504	A3	2534	A4	2557	A4	2579	A2	2725	B5	2910	C8	3118	A7	3242	A6	3433	A5	3519	A3	3541	A3
1402	A8	2026	C3	2213	A7	2326	B8	2410	C4	2505	A3	2535	A4	2558	A4	2580	A3	2731	A7	2913	C8	3122	B5	3243	A6	3434	B8	3520	A3	3542	A3
1403	C8	2027	B6	2214	A7	2327	A5	2417	B1	2506	B3	2536	A4	2559	A4	2581	A3	2732	B4	2914	C8	3123	B4	3247	A6	3436	B8	3521	A4	3543	B3
1500	B4	2033	C7	2215	A7	2328	B8	2425	C1	2511	B3	2537	A4	2560	A4	2582	A4	2738	B4	2915	A8	3124	B4	3248	A6	3437	C1	3522	B3	3544	A4
1600	B7	2034	C7	2216	A6	2329	B8	2441	A5	2512	A3	2538	A4	2561	A4	2583	A4	2739	B4	2916	A8	3125	A7	3249	A6	3446	C2	3523	B3	3545	A4
1601	B5	2035	C7	2217	A6	2330	A5	2442	B8	2513	A3	2539	A4	2562	A2	2584	A4	2741	B3	2921	A7	3126	B6	3267	A2	3455	C2	3524	B3	3546	B3

3526	B3	3548	B3	3570	B3	3595	A4	3617	A2	3719	B4	3749	B4	3771	B4	3812	B7	3851	A7	4601	A7	7308	B8							
3527	A3	3549	B3	3571	B3	3596	B3	3618	A2	3720	B4	3750	B4	3772	B4	3813	B7	3852	A4	5100	B5	7405	B3							
3528	A3	3550	A4	3572	B3	3597	A2	3619	A2	3721	B4	3751	B4	3773	B4	3815	B7	3853	A4	5101	C7	7408	B3							
3529	B3	3551	B3	3573	A4	3598	B3	3620	B2	3722	B4	3752	B4	3774	B4	3816	B7	3854	B4	5102	B4	7409	B3							
3530	A3	3552	B3	3574	A4	3599	A4	3621	A2	3723	B5	3753	B4	3775	B4	3817	B7	3904	A8	5401	B2	7500	B4							
3531	A4	3553	B3	3575	A4	3600	A2	3622	A2	3724	B5	3754	B4	3776	B4	3819	B7	3906	A8	5404	B3	7501	A4							
3532	B3	3554	B3	3578	A4	3601	B2	3700	B4	3726	B5	3755	B4	3777	B4	3822	B7	3915	A8	5600	A7	7502	B4							
3533	A3	3555	B3	3579	A4	3602	A4	3701	B4	3727	B5	3756	B4	3778	B4	3823	B7	3916	A8	5601	B7	7503	B5							
3534	A3	3556	A4	3581	A4	3603	A4	3702	B4	3729	B4	3757	B4	3779	B4	3825	A7	3917	A8	5900	A8	7505	B4							
3535	A3	3557	A4	3583	B3	3605	A3	3703	B4	3730	B5	3758	B4	3780	B4	3826	B7	3919	C8	6100	C5	7601	B7							
3536	B3	3558	B3	3584	A4	3606	A3	3704	B4	3732	B4	3759	B4	3781	B4	3827	A7	3922	C8	6500	B5	7603	B7							
3537	B3	3559	A4	3585	B3	3607	A2	3706	B4	3733	B4	3760	B4	3782	B4	3828	B7	3924	A8	6501	B5	7605	B7							
3538	A3	3560	A4	3586	B3	3608	B3	3707	B4	3734	B4	3761	B4	3783	B4	3832	B7	3927	A8	6600	B7	7606	A7							
3539	B3	3561	B3	3587	B3	3609	A2	3710	B4	3736	B4	3762	B4	3784	B4	3833	B7	3930	A8	6601	B7	7607	B7							
3540	B3	3562	B3	3588	B3	3610	A2	3711	B4	3737	B4	3763	B4	3801	B7	3834	B7	3934	B8	6603	B7	7611	A7							
3541	A3	3563	A4	3589	A4	3611	A2	3712	B4	3738	B4	3764	B4	3802	B7	3840	A7	3935	B7	6604	A7	7705	A8							
3542	A3	3564	B3	3590	A4	3612	B2	3713	B4	3739	B4	3765	B4	3803	A7	3841	A7	4101	B4	6605	B7	7904	A8							
3543	B3	3565	A4	3591	A4	3613	A2	3714	B4	3740	B4	3766	B4	3804	B7	3844	A7	4303	A5	7101	C1									
3544	A4	3566	A4	3592	A4	3614	A2	3715	B4	3741	B4	3767	B4	3808	B7	3845	A7	4401	B3	7104	B8									
3545	A4	3567	B3	3593	A4	3615	A2	3716	B4	3742	B4	3768	B4	3809	B7	3847	A7	4500	B4	7105	C8									
3546	B3	3568	B3	3594	A4	3616	A2	3717	B4	3743	B4	3769	B4	3810	B7	3848	A7	4501	B4	7108	C6									
										3744	B4	3770	B4	3811	B7	3849	A7	4504	B4	7109	C7									

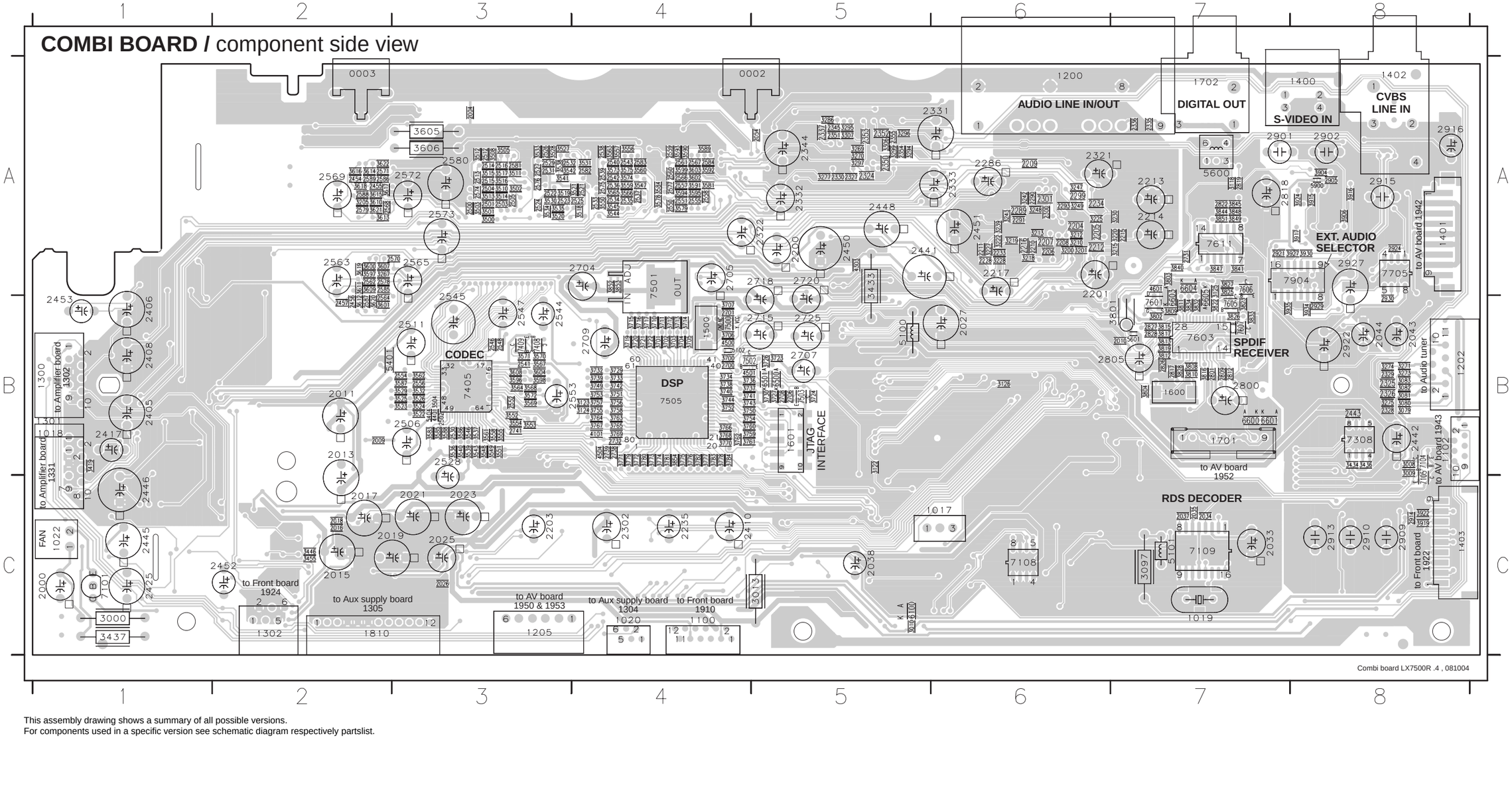

This assembly drawing shows a summary of all possible versions.
For components used in a specific version see schematic diagram respectively partslist.

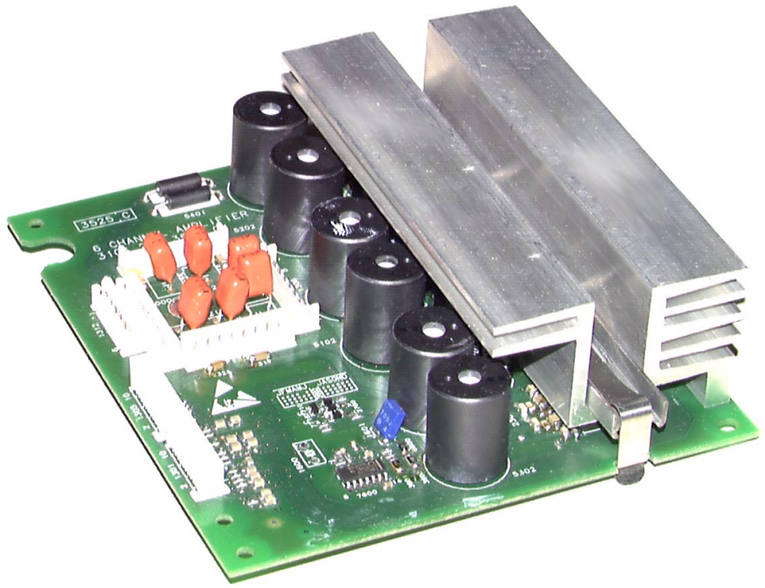

6 - channel AMPLIFIER BOARD

PWR307 (6x 100W SE)

TABLE OF CONTENT

Class D amplifier circuit description 87
Exploded view & mechanical parts 88

Schematic diagram 89
Assembly drawing, componentside view 90
Assembly drawing, copperside view 91

Loudspeaker sockets 92

6-channel class-D amplifier

Basic operation of a class-D amplifier

Basically, the output stage of a class-D amplifier outputs a continuous square wave swinging between positive and negative power supplies with a fixed frequency (“clock” frequency) far beyond the audible range. The duty cycle of this square wave is modulated with the audio signal. The output is followed by a low-pass filter which eliminates the clock frequency and allows only the audio signal going to the speaker. See simplified drawing below.

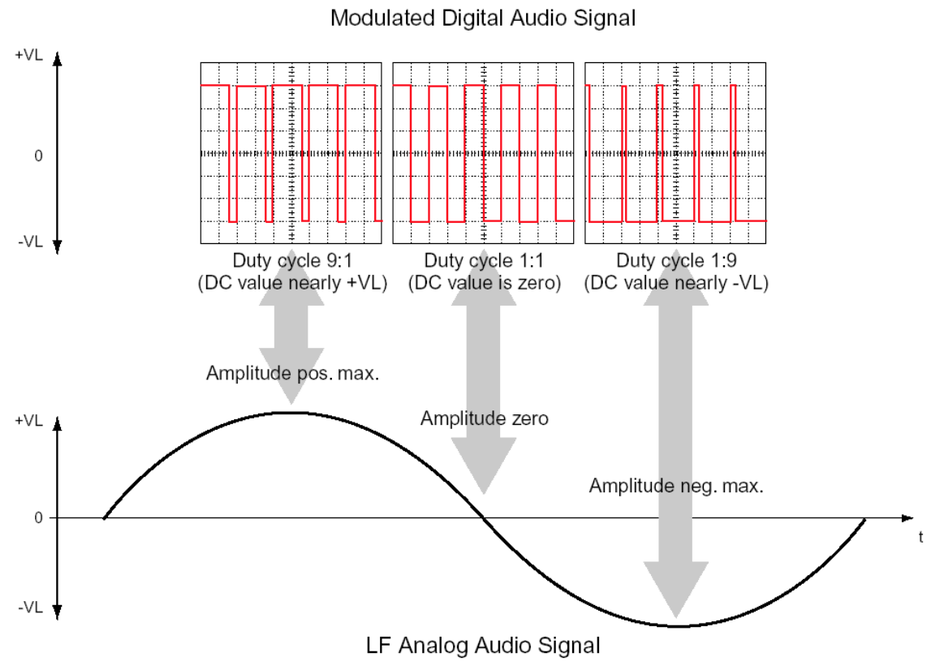

Compared to a conventional power amplifier the benefits of the Class-D amplifier are:

- higher effiency
- lower power dissipation
- smaller heatsink required
- smaller mains transformer required

The main disadvantage of this concept is:

- The amplifier is operating with a high-frequency square wave at high amplitude and currents. This requires special precautions to prevent excessive electromagnetic ratiation (EMC).

Block diagram and operation

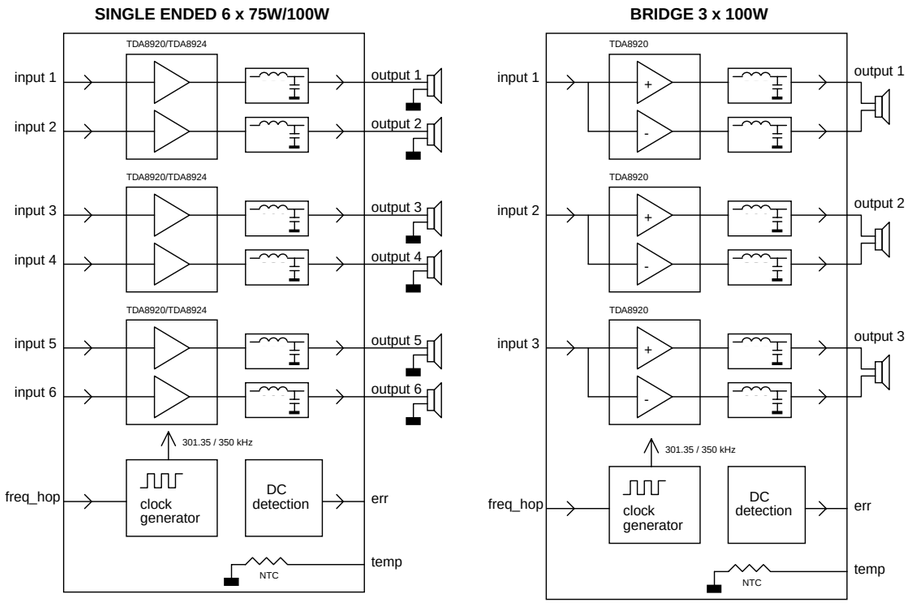

• clock oscillator

The clock frequency is generated around IC7600. Using 2 extra transistors (7602 and 7608) and 2 ceramic resonators it can be operated at 2 frequencies: 602.7kHz and 700kHz. The frequency is selected by the signal “FREQ_HOP” coming from connector 1302 pin 9.
When FREQ_HOP is low, the output of 7600-1 will be high. This switches transistor 7602 on, and connects resonator 1600 (602.7kHz) to inverter 7600-3. Similarly, when FREQ_HOP is high, resonator 1601 is connected to 7600-3.
The output frequency is divided by two by IC7607, resulting in 301.35kHz or 350kHz.
The purpose of a selectable clock frequency is related to the disturbance of the tuner which is built-in together with this amplifier. In MW, the software of the set microprocessor will select the other clock frequency in case the amplifier clock interferes with the tuned station.

• Class-D amplifier TDA8920/TDA8924 and low-pass filter

The TDA892x is a two channel audio power amplifier using class-D technology. The audio input signal is converted into a digital Pulse Width Modulated (PWM) signal via an analog input stage and PWM modulator. It is then fed to the power stage which outputs a high power PWM signal which switches between the main supply lines.
The TDA892x is followed by a 2nd-order low-pass filter. It has a cut-off frequency around 50kHz and converts the PWM signal into analog audio signal across the loudspeaker.
The TDA892x has a temperature protection and a current limiter built-in.
Furthermore, via the mode input, the IC can be put in active-, mute- and standby mode.
- Active mode (amplifier fully operational) with output signal.
- Mute mode; the amplifiers are operational, but the audio signal is muted.
- Standby mode; with a very low supply current, the output stage is switched off.

• DC-detection

The DC-detection circuit monitors all 6 outputs for DC. Whenever one or more outputs contain DC for more than 1 second, the circuit will be activated. A positive voltage will activate transistor 7710 and pin 10 of connector 1302 will be pulled down. In case of a negative voltage, transistor 7716 will be activated, which in turn activates 7710. The set microprocessor will take further action.

MECHANICAL EXPLODED VIEW

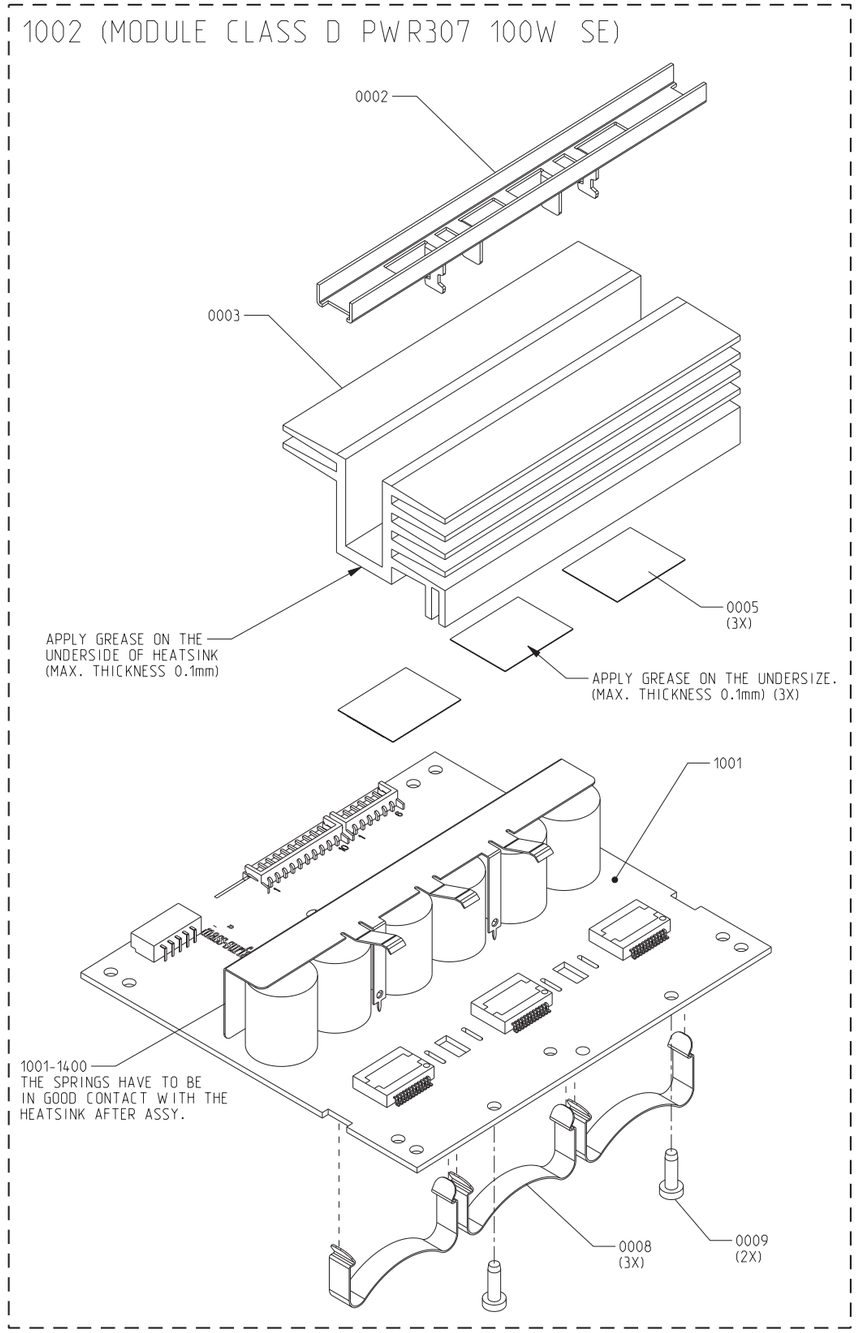

MECHANICAL PARTS LIST & SCREWS

8	4822 492 11735	SPRING, TRANSISTOR
9	-	D2.3 x 8

Note: Only the parts mentioned in this list are normal service spare parts.

AMPLIFIER BOARD

from COMBI board 1300 3

1302 ✱ AMP_LEFT F100 · GND F102 · AMP_RIGHT F103 · L/R_ON 4,4V F105 · AMP_CENTRE F106 · GND F140 · CSUB_ON F108 4,4V · 2,4V NTC_AMP · 5,3V F111 · 2,4V F114

1301 △ FE-ST-VK-NA · FE-BT-VK-N

typ. 2,4V at 25°C (measured via Service Testprogram - Temp. Test)

TEMP from 3422 · FREQ_HOP · ERROR from 7710

0V — 100mV/div 500us/div

INPUT_1 3414 5K6 · INPUT_2N 3415 5K6 · INPUT_3 3416 5K6 · INPUT_4N 3417 5K6 · INPUT_5 3418 5K6 · INPUT_6N 3419 5K6 · INPUT_3 3423 5K6 · INPUT_1N 3421 5K6 · INPUT_2 3400 5K6 · INPUT_2 3401 5K6 · INPUT_3N 3402 5K6 · INPUT_4 3403 5K6 · MODE_12 · 3404 220R 250p 100n · MODE_34 4400 · INPUT_3N 3405 5K6 · INPUT_5N 3406 5K6 · INPUT_6 3407 5K6 · MODE_34 · MODE_56 3408 220R 220R 2502 250p 100n

2408 1n0 · 2409 1n0 · 2425 1n0 · 2410 1n0 · 2414 1n0 · 2413 1n0 · 2412 1n0 · 2420 1n0 · 2411 1n0

FRONT L/R SPEAKERS

AMPLIFIER 1

LEFT: INPUT_1N · INPUT_1 · Vss 2135 470n · 68p

RIGHT: MODE_12 · INPUT_2 · Vss 2134 220n · 2133 470n 4132 · INPUT_2N · 2132 470n 4132

CLOCK from 7607 2,6V · 4,2V

7100 TDA8920/TDA8924

INP STAGE · MUTE · PWM MOD · REL1 · SW1 · EN1 · CTRL & HAND-SHAKE · SW2 · REL2 · DRIVER HIGH · DRIVER LOW · OSC · MODE · MANAGER · TEMP SENSOR CURRENT PROT

IN1- 0V · IN1+ 0V · PROT -17,7V · SGND1 · OSC 2,6V · MODE 4,2V · SGND2 · STABI -15V · IN2+ 0V · IN2- 0V

VDDA2 · VDDA1 · VSSA1 · VSSA2 · VSSD · SUBVSSD · VDDP2 · VDDP1 · VSSP1 · VSSP2 · BOOT1 · OUT1 · BOOT2 · OUT2 · VSSP1 · VDDP2

Vdd 3107 18R · 2101 100n · 2102 100n · +28V

Vss 2104 100n · 2105 100n · 2106 + 22u · 2107 100n · 2108 100n · +28V

2111 15n · 2120 15n · 2122 560p · 2126 560p · 2130 15n

3100 10R · 2129 100n · 2130 100n · 2127 100n · 2128 100n · -28V

3100 47K · 2131 330p

AMPLIFIER 2

INPUT_3N · CENTER · INPUT_3 · Vss 2235 470n · 68p

CLOCK from 7607 2,6V · 4,2V

7200 TDA8920/TDA8924

MODE_34 · 2234 220n · 2233 470n 4232 · INPUT_4 · SUB WOOFER · INPUT_4N · 2232 470n 4232

3207 18R · 2201 100n · 2202 100n · +28V

2204 100n · 2205 100n · 2206 + 22u · 2207 100n · 2208 100n · +28V

2211 15n · 2220 15n · 2222 560p · 2226 560p · 2230 15n

3200 10R · 2229 100n · 2230 100n · 2227 100n · 2228 100n · -28V

3200 47K · 2231 330p

AMPLIFIER 3

INPUT_5N L · INPUT_5 · Vss 2335 470n · 68p

CLOCK from 7607 2,6V · 4,2V

7300 TDA8920/TDA8924

MODE_56 · 2334 220n · 2333 470n 4332 · INPUT_6 R · INPUT_6N · 2332 470n 4332

3307 18R · 2301 100n · 2302 100n · +28V

2304 100n · 2305 100n · 2306 + 22u · 2307 100n · 2308 100n · +28V

2311 15n · 2320 15n · 2322 560p · 2326 560p · 2330 15n

3300 10R · 2329 100n · 2330 100n · 2327 100n · 2328 100n · -28V

3300 47K · 2331 330p

to LS socket

1306 · F139 · F104 · OUT_1 · F109 · F112 · F134 · EH-B · 1316 △ EH-B

1308 ✱ · F120 · OUT_3 · F121 · F122 · F133 · EH-B · 1318 △ EH-B

1307 · F128 · OUT_5 · F129 · F130 · F135 · EH-B · 1317 △ EH-B

3100 5R6 · 3101 5R6 · 3102 5R6 · 3103 22R · 3104 22R · 3105 5R6 · 3151 3k9 · 3152 3k9 · 3153 3k9 · 2115 560p · 2117 220n · 2118 680n · 2119 470n · 2123 680n · 2124 220n · 2125 470n · 2126 560p · 2127 100n · 2128 100n · 2129 100n · 2130 100n · 2131 330p · 2132 470n · 2133 470n · 2134 220n · 2135 470n · 2136 B7 · 2137 470n · 2138 470n · 2139 330p · 2140 330p · 2141 B7 · 2142 B7 · 2143 B7 · 2144 B7 · 2145 B7 · 2146 B7 · 2147 B7 · 2148 B7 · 2149 B7 · 2150 B7 · 2151 B7 · 2152 B7 · 2153 B7 · 2154 D11 · 3154 D11 · 3200 F10 · 3201 G10 · 3202 G10 · 3203 G11 · 3204 H11 · 3205 H10 · 3206 H6 · 3207 F8 · 3208 F6 · 3209 I8 · 3251 G11 · 3252 H11 · 3253 G11 · 3254 H11 · 3300 J10 · 3301 K10 · 3302 K10 · 3303 K11 · 3304 L11 · 3305 L10 · 3306 L6 · 3307 J8 · 3308 J6 · 3309 M8 · 3351 K11 · 3352 L11 · 3353 K11 · 3354 L11 · 3400 B4 · 3401 B4 · 3402 C4 · 3403 C4 · 3404 C4 · 3405 C4 · 3406 C4 · 3407 C4 · 3408 D4 · 3409 D4 · 3410 K4 · 3411 J4 · 3412 K4 · 3413 K4 · 3414 A4 · 3415 A4 · 3416 A4 · 3417 B4 · 3418 B4 · 3419 B4 · 3420 H2 · 3421 B4 · 3422 H2 · 3423 B4 · 3424 J4 · 3425 K4 · 3426 K4 · 3600 I12 · 3601 I12 · 3602 I13 · 3603 H17 · 3604 I12 · 3605 I14 · 3606 I16 · 3607 I16 · 3608 I17 · 3609 I16 · 3610 I16 · 3700 K14 · 3701 K14 · 3703 K15 · 3709 L14 · 3712 L14 · 3713 K15 · 3716 L14 · 3718 L14 · 3722 L15 · 4101 C1 · 4102 B2 · 4103 K2 · 4104 G2 · 4105 K1 · 4106 B12 · 4107 K12 · 4108 F12 · 4109 G1 · 4112 G2 · 4116 C12 · 4117 K12 · 4118 G12 · 4120 I 4 · 4121 K8 · 4122 K8 · 4123 G7 · 4124 H3 · 4125 I18 · 4126 I3 · 4127 I3 · 4128 K12 · 4129 K12 · 4130 K12 · 4131 L15 · 4132 I2 · 4133 H12 · 4134 D12 · 4135 L12 · 4139 B12 · 4140 C2 · 4141 F3 · 4142 F2 · 4143 K3

POWER SUPPLY

from Power Supply J1 1309 · 1304 · 1312(△) · +A · +A · GND · GND · -A · -A · B10B-EH-A · EH-S · SXXB-EH-A

F124 · 5400 · +28,5V Vdd · F126 · F127 · 5401 · -28,5V Vss

2400 100n · 2402 470u 35V · 2401 470u 35V · 2403 100n · 2407 470u 35V · 2404 470u 35V · 2405 470u 35V

F132 · TEMP to 1302 · 3422 100R · 2419 100n · 3420 10K NTC -T · Temperature sensor heatsink

1400 SCREENCOVER · F143 · 2423 100n

1320 RT-01T

SURROUND SPEAKERS

from COMBI board 1018 3 · 1303 (p) · 1331 · 1305 ✱ · AMP_SL · GND · AMP_SR · SUR_ON 4,4V · AMP_SUB · GND

F117 · F141 · F119 · F118 · F116 · F142

FE-BT-VK-N · 10FE-ST-VK-N · 4101

3411 ✱ 5K6 INPUT_5N · 3424 ✱ 5K6 INPUT_5 · 3425 ✱ 5K6 INPUT_6N · 3413 ✱ 5K6 INPUT_6 · 3412 ✱ 5K6 MODE_56 · 3410 220R ✱ 5K6 INPUT_4 · 3426 ✱ 5K6 INPUT_4N

2421 1n0 · 2418 1n0 · 2416 1n0 · 2415 1n0 · 2422 1n0 · 2417 1n0

CENTER SPEAKER + SUBWOOFER

CLOCK GENERATOR

2601 (p) 33p · 1600 602K7 · 2602 100p · 2603 100p · 7602 BC847B · 7603 10K · 7600-1 74HCU04D · 7600-2 74HCU04D · 7600-3 74HCU04D · 7600-4 74HCU04D · 7600-5 74HCU04D · 7600-6 74HCU04D · 3602 100K · 3603 10K · 3604 10K · 3605 6K8 · 3606 100K · 3607 1K0 · 3608 1M · 3609 100K · 2605 470p · 2606 1n0 · 2607 100p · 2608 100p · 3610 22K · 2611 10u BZX384-C5V6 · 6600 · 1601 700K · FREQ_HOP from 1302 · 7607 HEF4013BT · SD1 D1 O1 CP1 O1 CD1 · SD2 D2 O2 CP2 O2 CD2 · 2604 100n · F123 CLOCK · F125 · 2,4V · 0V · 2,5V · 2,8V · 2,9V

DC DETECTION

OUT_1 3700 47K · OUT_2 3701 47K · OUT_3 3709 47K · OUT_4 3712 47K · OUT_5 3716 47K · OUT_6 3718 47K

F131 3721 10K · 2700 10u · 3703 47K · 3713 10K · 3722 10K · 6713 BAS316 · 6714 BAS316 · 6715 BAS316 · 7710 BC847B · 7716 BC857B · 2,3V · 0V · -19,8V · ERROR to 1302

Diversity identification jumpers

4501	*Single Ended*
4502	*Bridge Tied Load*
4511	*TDA8920*
4512	*TDA8924*
4521	*6ch output*
4522	*4ch output*

(p) for provision only

✱ not for bridge version

△ not for single-ended version

EVM ...V DC voltages measured in Stop mode with no audio output.

6x100W amplifier LX7500R, 210904

AMPLIFIER BOARD / component side view

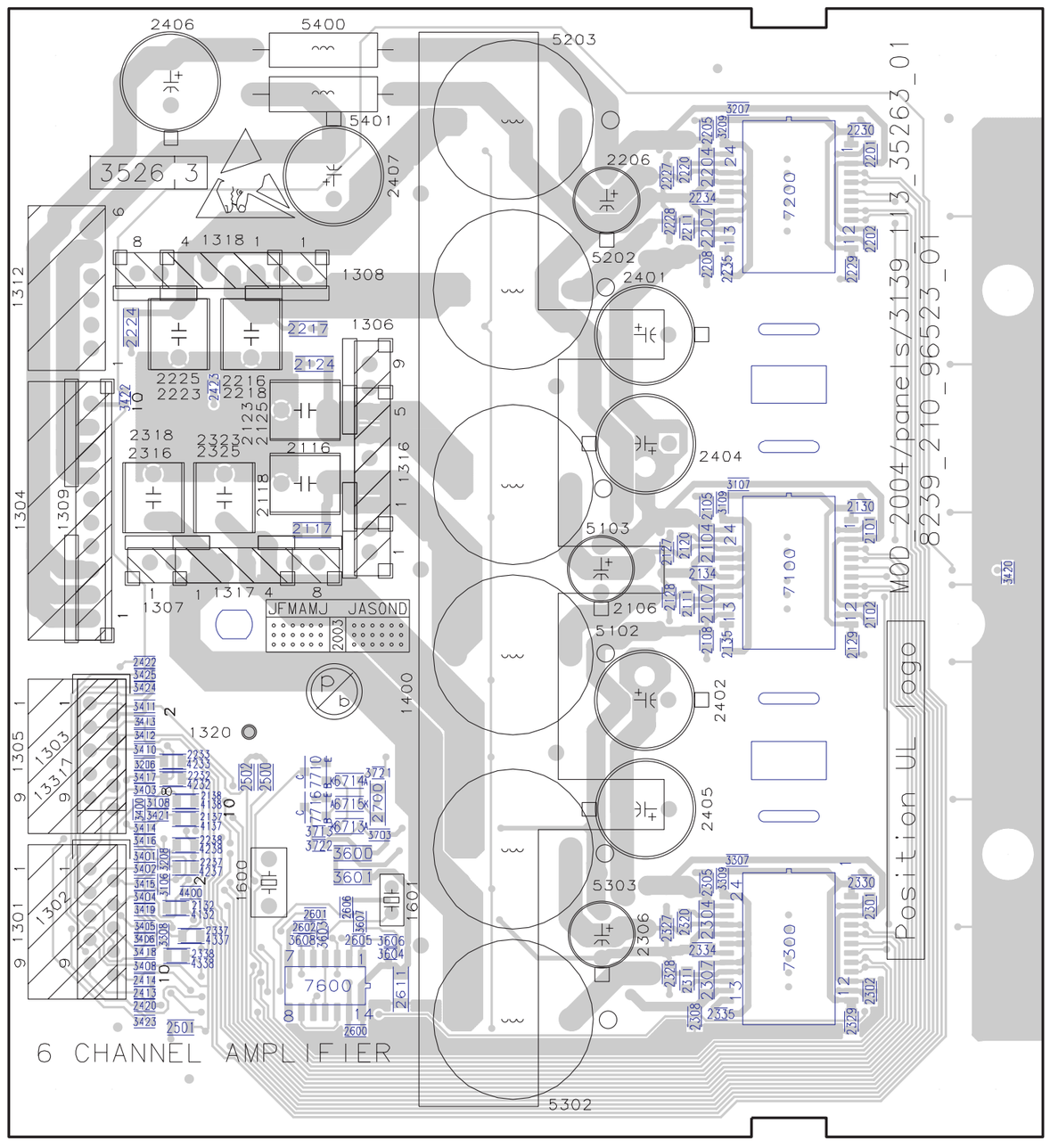

This assembly drawing shows a summary of all possible versions.
For components used in a specific version see schematic diagram and respective parts list.

3139 113 3526 pt3 dd wk0345

wired components		SMDs		SMDs	
1301	E1	2101	C4	3420	C4
1302	E1	2102	C4	3421	D1
1303	D1	2104	C3	3422	B1
1304	C1	2105	C3	3423	E1
1305	D1	2107	C3	3424	D1
1306	B2	2108	C3	3425	D1
1307	C1	2111	C3	3600	D2
1308	B2	2117	C2	3601	D2
1309	C1	2120	C3	3603	E2
1312	B1	2124	B2	3604	E2
1316	C2	2127	C3	3606	E2
1317	C1	2128	C3	3607	E2
1318	B1	2129	C4	3608	E2
1320	D1	2130	C4	3703	D2
1331	D1	2132	E1	3713	D2
1400	D2	2134	C3	3721	D2
1600	D1	2135	C4	3722	D2
1601	D2	2137	D1	4132	E1
2104	C3	2138	D1	4137	D1
2106	C3	2201	A4	4138	D1
2107	C3	2202	B4	4232	D1
2116	C2	2204	A3	4233	D1
2117	C2	2205	A3	4237	D1
2118	C2	2207	B3	4238	D1
2123	B2	2208	B3	4337	E1
2124	B2	2211	B3	4338	E1
2125	B2	2217	B2	4400	D1
2204	A3	2220	A3	6713	D2
2206	A3	2224	B1	6714	D2
2207	B3	2227	A3	6715	D2
2216	B1	2228	B3	7100	C4
2217	B2	2229	B4	7200	A4
2218	B2	2230	A4	7300	E4
2223	B1	2232	D1	7600	E2
2224	B1	2233	D1	7710	D2
2225	B1	2234	B3	7716	D2
2304	D3	2235	B4		
2306	E3	2237	D1		
2307	E3	2238	D1		
2316	C1	2301	E4		
2318	C1	2302	E4		
2323	C1	2304	E3		
2325	C1	2305	D3		
2401	B3	2307	E3		
2402	D4	2308	E3		
2404	C4	2311	E3		
2405	D3	2320	E3		
2406	A1	2327	E3		
2407	A2	2328	E3		
2611	E2	2329	E4		
2700	D2	2330	D4		
3600	D2	2334	E3		
3601	D2	2335	E4		
5102	C3	2337	E1		
5103	C3	2338	E1		
5202	B3	2413	E1		
5203	A3	2414	E1		
5302	E3	2420	E1		
5303	D3	2422	C1		
5400	A2	2423	B1		
5401	A2	2500	D2		
6713	D2	2501	E1		
6714	D2	2502	D2		
6715	D2	2600	E2		
7100	C4	2601	E2		
7200	A4	2602	E2		
7300	E4	2605	E2		
7600	E2	2606	E2		
7710	D2	2611	E2		
7716	D2	2700	D2		
		3106	D1		
		3107	C4		
		3108	D1		
		3109	C4		
		3206	D1		
		3207	A4		
		3208	D1		
		3209	A4		
		3307	D4		
		3308	E1		
		3309	D4		
		3400	D1		
		3401	D1		
		3402	D1		
		3403	D1		
		3404	D1		
		3405	E1		
		3406	E1		
		3408	E1		
		3410	D1		
		3411	D1		
		3412	D1		
		3413	D1		
		3414	D1		
		3415	D1		
		3416	D1		
		3417	D1		
		3418	E1		
		3419	E1		

AMPLIFIER BOARD / copper side view

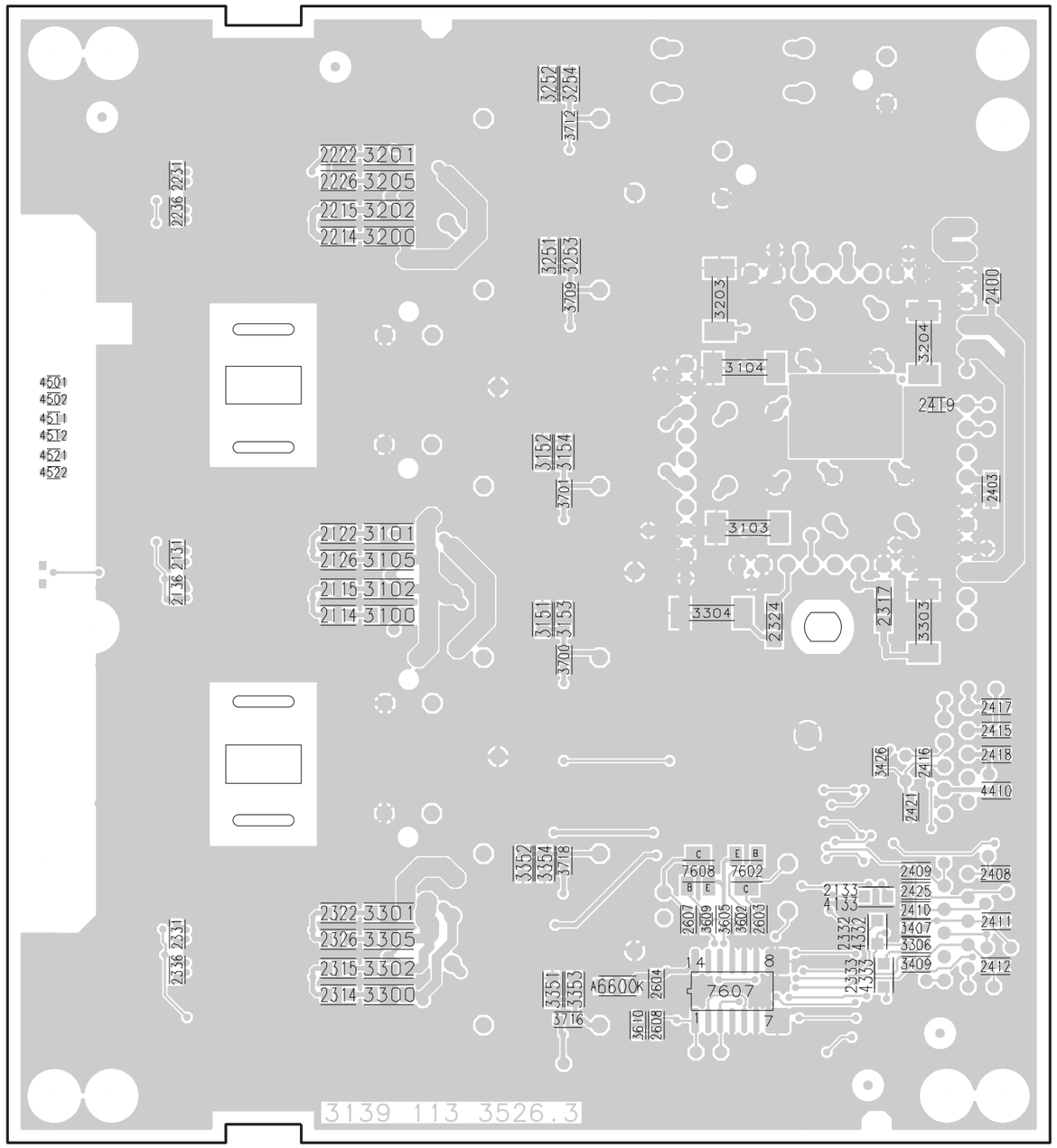

This assembly drawing shows a summary of all possible versions.
For components used in a specific version see schematic diagram and respective parts list.

3139 113 3526 pt3 dd wk0345

2114 C1
2115 C1
2122 C1
2126 C1
2131 C1
2133 D4
2136 C1
2214 B1
2215 B1
2222 A1
2226 A1
2231 A1
2236 B1
2314 E1
2315 E1
2317 C4
2322 E1
2324 C3
2326 E1
2331 E1
2332 E4
2333 E4
2336 E1
2400 B4
2403 C4
2408 D4
2409 D4
2410 E4
2411 E4
2412 E4
2415 D4
2416 D4
2417 D4
2418 D4
2419 B4
2421 D4
2425 D4
2603 E3
2604 E3
2607 E3
2608 E3
3100 C2
3101 C2
3102 C2
3103 C3
3104 B3
3105 C2
3151 C2
3152 C2
3153 C2
3154 C2
3200 B2
3201 A2
3202 B2
3203 B3
3204 B4
3205 A2
3251 B2
3252 A2
3253 B2
3254 A2
3300 E2
3301 E2
3302 E2
3303 C4
3304 C3
3305 E2
3306 E4
3351 E2
3352 D2
3353 E2
3354 D2
3407 E4
3409 E4
3426 D4
3602 E3
3605 E3
3609 E3
3610 E3
3700 C2
3701 C2
3709 B2
3712 A2
3716 E2
3718 D2
4133 D4
4332 E4
4333 E4
4410 D4
4501 B1
4502 B1
4511 B1
4512 C1
4521 C1
4522 C1
6600 E3
7602 D3
7607 E3
7608 D3

1920 A3 1925 A1 2920 A3 2921 A2 2922 B2 2923 B2

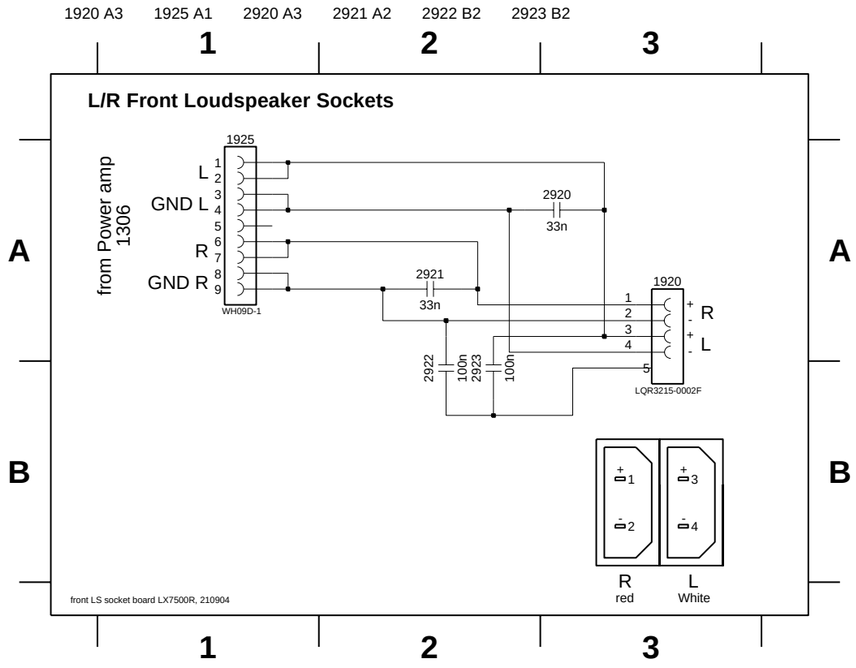

1930 A3 1935 A1 2930 A3 2932 B3 2934 A2 2936 C2
1931 B3 1936 B1 2931 A2 2933 B2 2935 A2 2937 C2

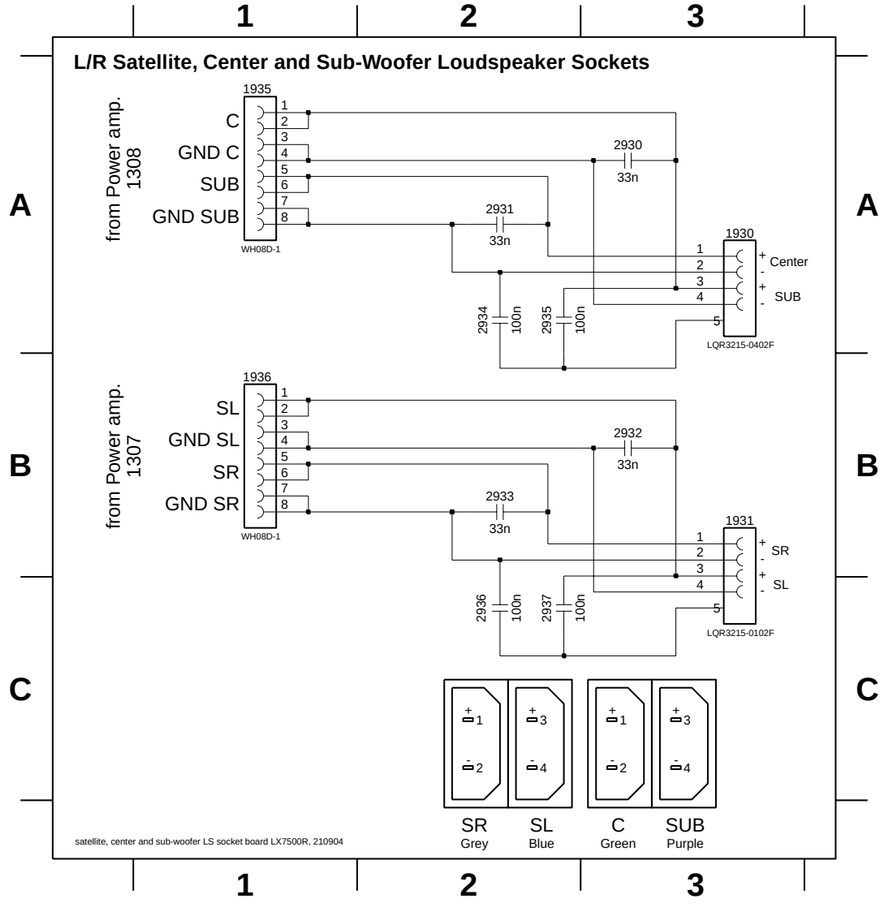

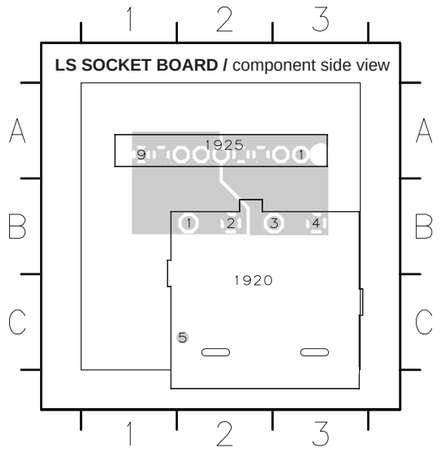

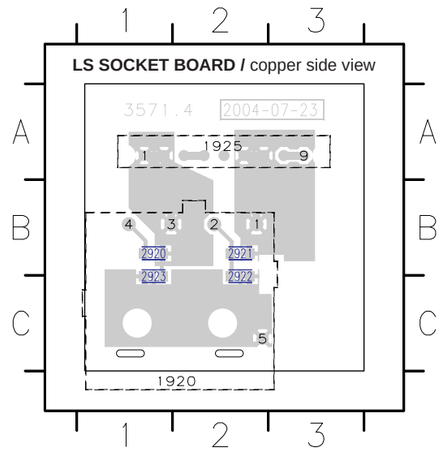

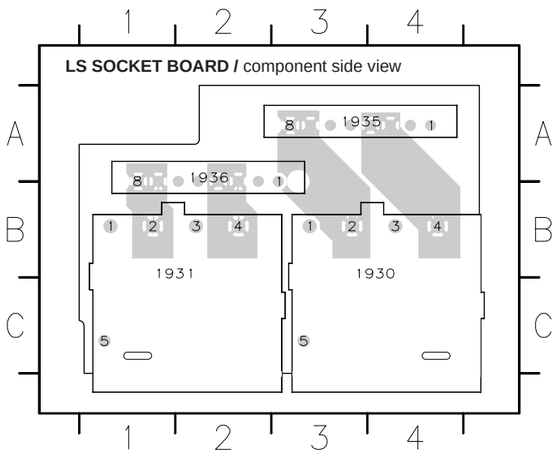

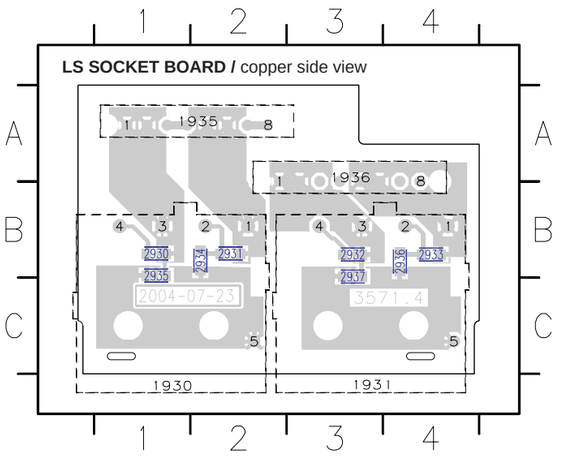

1701 C7 1702 E7 1703 D7 1704 F14 1705 C1 1706 F14 2713 A2 2719 B5 2720 B3 2721 B5 2722 F8 2723 F8 2724 B12 2725 D3 2727 F10 2728 C9 2729 C9 2730 E8 2731 D11 2732 E3 2733 E2 2734 D4 2735 E1 2736 E2 2737 E15 2740 F7 2741 F4 2742 F11 3701 A7 3702 A2 3703 A2 3704 E3 3705 C14 3710 F10 3711 A3 3714 B12 3715 B13 3716 B5 3717 D12 3720 F8 3724 F9 3725 B13 3726 C5 3728 D13 3730 D5 3731 F13 3732 E15 3733 G4 3734 F15 3735 F15 3736 E6 3738 E6 3739 F8 3740 F11 3741 D14 3742 F6 3743 G8 3744 G8 3745 H5 3746 H6 3758 G6 4700 D4 4701 G5 5701 E1 5702 E1 5704 A1 5705 B3 5709 C10 5710 B6 5711 D12 5713 D13 5714 G14 6703 C5 6704 D5 6705 F5 6706 C5 7701 G11 7702 D14 7704 C6 7705 D6 7706 H6 7709 B10 7710 D11 7711 E14 7712 H4 7713 D12 7714 H6 7716 H6 7717 G8 F701 D1 F702 C10 F703 C6 F704 A4 F707 D1 F708 B12 F709 C6 F710 D3 F713 H5 I701 B2 I702 B6 I704 C5 I706 E6 I707 D8 I708 D7 I709 E6 I711 E8 I712 E8 I715 E1 I716 E1 I717 F10 I721 F11 I723 F15 I724 E14 I725 F13 I726 E8 I727 E7 I728 E11 I729 E5 I730 F5 I731 H4 I732 B3 I733 E2 I734 E1 I735 E1 I739 H6 I742 D5 I743 E7 I744 E7 I745 A8 I746 E11 I748 D11 I749 D12 I751 D13 I754 D13

1 ANALOG BOARD
Frontend Video (FV)

from PS 4 5SW

UV1316-MK3 1705

placed on some pos. as 7710 for MSTD only

*7709 TDA9818T

for MSTD only

40,4-ADJUST 7KMY 5710

1701 OFWK3953M

*1703 OFWG3956M

7704 PDTC124EU

7705 PDTC124EU

7710 TDA9817T

AFC-ADJUST 7KMY 5711

BC857BW 7713

7716 BC857BW

7702 PDTC124EU

SB1 from IOV

AFC to IOV

*1704 TPSRA

*1706 TPSRD

7711 BC857BW

VFV to IOV, FOME

VFV I723

A:DC, 500mV/Div
10us/Div

1702 OFWK9656M

7717 BC847CW

7701 PDTC124EU

7712 PDTC124EU

7706 PDTC124EU

7714 BC847BW

4701 delete for MSTD

4700 delete for MSTD

for MSTD only

OSCILLOGRAMS
..V MEASURED IN PLAYBACK MODE
.V MEASURED IN RECORD MODE

	B/G	I	L	L'	D/K
PSS	1	1	0	0	1
SB1	0	0	0	1	0
SFS_TS	0	1	1	1	1

* VERSION TABLE

Pos.	PAL BG (/01)	PAL I (/07)	MULTISTD (/39)
1703	G3956M	K3953M	G3956M
1704	TPS 5,5 MHz	--	TPS 5,5 MHz
1706	--	TPS 6,0 MHz	--
3731	270R	330R	270R
4700	0R	0R	--
4701	0R	0R	--
7709	--	--	TDA9818
7710	TDA9817	TDA9817	--

A/V board LX7500R, 231104

2 ANALOG BOARD
In/Out Video (IOV)

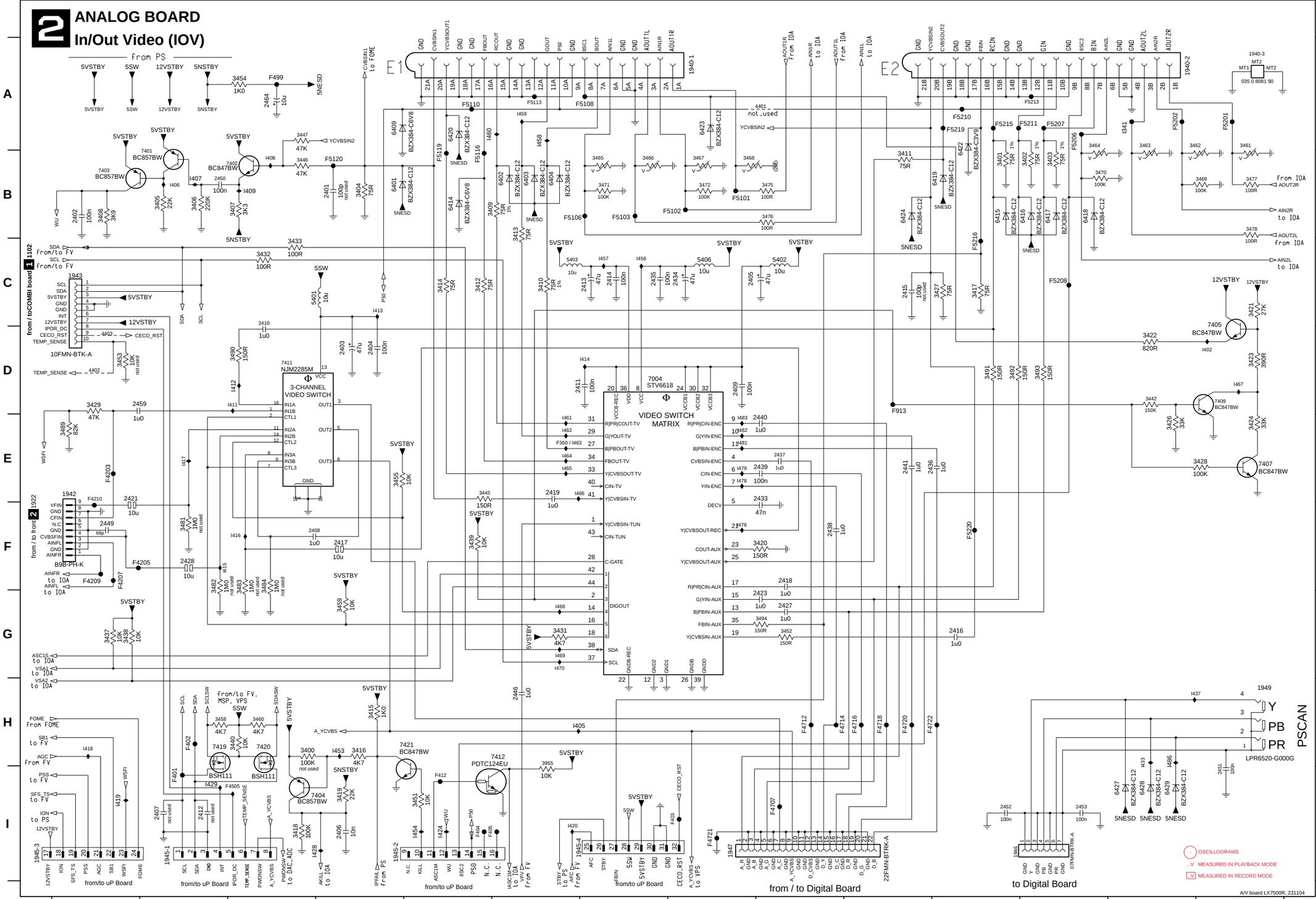

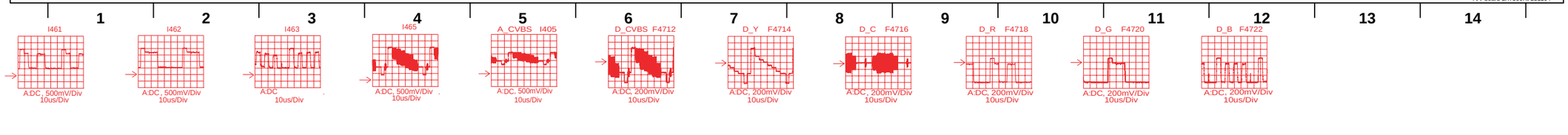

3 ANALOG BOARD
In/Out Audio (IOA)

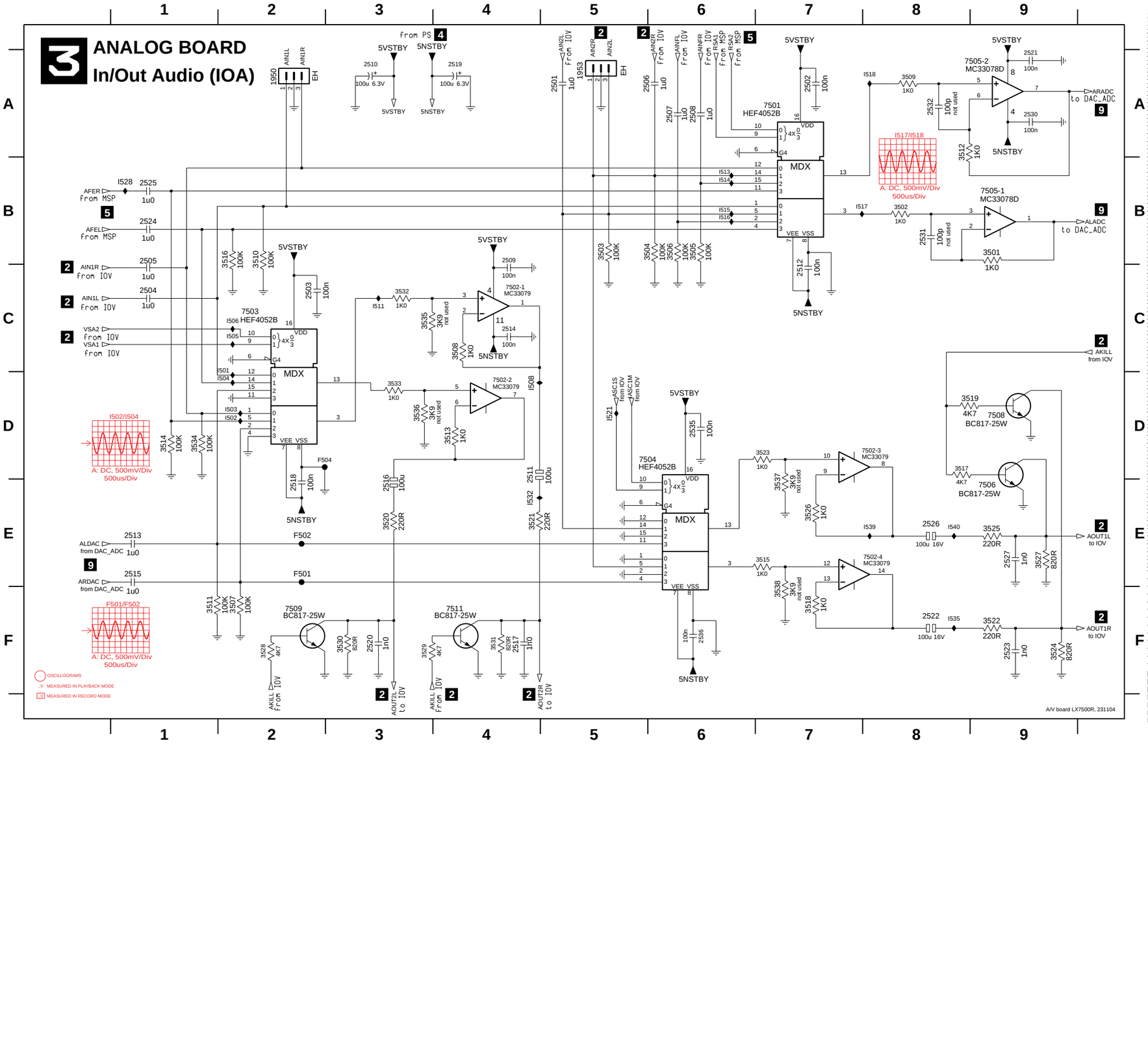

1950 A2
1953 A5
2501 A5
2502 A7
2503 C2
2504 C1
2505 B1
2506 A6
2507 A6
2508 A6
2509 B4
2510 A3
2511 D4
2512 C7
2513 E1
2514 C4
2515 E1
2516 E3
2517 F4
2518 E2
2519 A4
2520 F3
2521 A9
2522 F8
2523 F9
2524 B1
2525 B1
2526 E8
2527 E9
2530 A9
2531 B8
2532 A8
2535 D6
2536 F6
3501 B9
3502 B8
3503 B5
3504 B6
3505 B6
3506 B6
3507 F2
3508 C4
3509 A8
3510 B2
3511 F1
3512 A8
3513 D4
3514 D1
3515 E7
3516 B2
3517 D8
3518 F7
3519 D8
3520 E3
3521 E4
3522 F9
3523 D7
3524 F9
3525 E9
3526 E7
3527 E9
3528 F2
3529 F3
3530 F3
3531 F4
3532 C3
3533 D3
3534 D1
3535 C3
3536 D3
3537 E7
3538 F7
7501 A7
7502-1 C4
7502-2 D4
7502-3 D7
7502-4 E8
7503 C2
7504 D6
7505-1 B9
7505-2 A8
7506 E9
7508 D9
7509 F2
7511 F4
F501 E2
F502 E2
F504 D2
I501 C2
I502 D2
I503 D2
I504 D2
I505 C2
I506 C2
I508 D4
I511 C3
I513 B6
I514 B6
I515 B6
I516 B6
I517 B7
I518 A8
I521 D5
I528 B1
I532 E4
I535 F8
I539 E8
I540 E8

1934 B1 3329 B3 3362 D3 4300 C3 7308 A2 F301 C1 F331 C2 F348 C2 F353 C1 F383 C1 I349 D3
2332 A3 3348 D3 3371 C4 4301 C3 7319 D4 F302 C2 F333 C1 F350 C1 F354 C1 F384 C2 I352 C1
2334 E3 3349 C4 3372 C4 6314 E3 7320 A3 F322 B1 F346 C2 F351 C2 F358 C1 I346 A3 I353 A4
3327 A3 3355 D3 3373 D4 6320 E3 7321 D1 F325 B2 F347 C1 F352 E4 F381 C1 I347 D4 I354 B2

4 ANALOG BOARD
Power Supply (PS)

33VSTBY
3327 1M0
I346
5VSTBY
7320 SI2306DS
7308 PDTC124EU
2 STBY from IOV
I354
2332 2u2
I353
5SW
to IOV, FACO, FOME, FV VPS, DIGIO, IOA, MSP
1 2 3 5 6 7 8
3329 2M2

1934
from AUX SUPPLY board 1300
B13P-PH-K
12,4V F322 5V F383 0,2V F353 0V F358 3,3V F350 F348 3V3 to DAC_ADC 9
F351
5V F381 -5,4V F354 F384 5V to DAC_ADC, AIO, DIGIO 3 8 9
5N to DAC_ADC 5
-5,3V F347 F346 5NSTBY to IOV 2
5V F301 F302 5VSTBY to IOV, IOA, FV 1 2 3
34V F333 F331 33VSTBY to FV 1
F325 I352 12VSTBY 2 to IOV, FACO
IPFAIL to IOV, DAC_ADC 5
ION from IOV 2
4301 not used
4300 STBY

12VSTBY
3349 47R
3371 47R
3372 33R
3373 33R
3348 680R
3362 680R
I347
7319 BC847BW
F352
5 8SW to MSP
7321 PDTC124EU
2 STBY from IOV
3355 47R
I349
2334 100n
6314
BZX384-C8V2
6320
BAS316

V EVM ...V DC voltages measured in Stop mode with no audio output.

A/V board LX7500R, 241104

5 ANALOG BOARD
Multi Sound Processing (MSP)

from PS 4
8SW 5SW
8SW 5SW

7408 MSP3415G
QFP44
2 from/to I01V
SCLSW 3601 100R I615
SDASW 3603 100R I616
I602 I624 I625 4601
RSA1 to 10A
RSA2 to 10A
ADR_CL ADR_SEL D_CTR_I01 D_CTR_I00 TESTEN
2600 10u 2601 10n I603
I601 8SW
2602 10u 2603 100n 2611 47u I604
VREFTOP AHVSUP CAPL_M
5SW
3600 10K
5SW1 5600 10u
2604 10n
2606 10n
6600 BAS316
3602 4K7
2608 10u
STBYQ I614
DVSUP I605
RESETQ I617

I2C_CL I2C_DA I2S_CL I2S_WS I2S_DA_OUT I2S_DA_IN1 I2S_DA_IN2 ANA_IN- ANA_IN+ MONO_IN SC1_IN_R SC1_IN_L SC2_IN_R SC2_IN_L

2607 56p I607
2609 56p I608
SIF1 From FV 1

DEMODULATOR
FM1 FM2 NICAM A NICAM B
IDENT
A/D A/D
SCART-L SCART-R
S1...4 I2SL/R I2SL/R
LOUDSPEAKER R LOUDSPEAKER L
D/A D/A
DACM_R DACM_L
LOUDSPEAKER
DFP
HEADPHONE R HEADPHONE L
SCART-R SCART-L
D/A D/A
SCART Switching Facilities

SC1_OUT_R SC1_OUT_L
3611 100R AFER to IOA
3612 100R AFEL to IOA
3 I623
2616 1n0 2617 1n0
2618 4n7 2619 4n7 not used

1960 from DV - Board
DVAR GND GND DVAL B4B-PH-K
F6001 2626 2u2 50V I630 3606 1K0 I620
F6002
F6004 2627 2u2 50V I631 3607 1K0 I621
for DVIN only

VREF2 VREF1 AHVSS ASG AVSS DVSS NC AVSUP TP XTAL_IN XTAL_OUT
25 29 35 39 44 20 23 24 28 32 1 7 5 6
5SW1
5SW 5601 10u I612 5602 10u I613
2605 10u 2623 100n
1600 18M432 I610 I611
2620 3p3 2621 3p3

.. OSCILLOGRAMS
..V MEASURED IN PLAYBACK MODE
..V MEASURED IN RECORD MODE

A/V board LX7500R, 241104

1600 F7 1960 E1 2600 A6 2601 A6 2602 A7 2603 A7 2604 A9 2605 F5 2606 B8 2607 C2 2608 C9 2609 C2 2610 C8 2611 A7 2612 D8 2616 E8 2617 E8 2618 E9 2619 E9 2620 F7 2621 F7 2623 F6 2626 E2 2627 E2 3600 A8 3601 B1 3602 B9 3603 B2 3606 E2 3607 E2 3611 D8 3612 E8 4601 A5 5600 A8 5601 F5 5602 F6 6600 B9 7600 A3 F6001 E1 F6002 E1 F6004 E1 I601 A7 I602 A4 I603 A6 I604 A7 I605 B7 I607 C1 I608 C2 I609 D7 I610 F7 I611 F7 I612 F5 I613 F6 I614 B7 I615 B2 I616 B2 I617 B7 I620 E2 I621 E2 I623 E7 I624 A5 I625 A5 I630 E2 I631 E2

1990 D1 2934 C2 2937 D1 3932 C4 3935 C1 5932 B3 I988 C4 I991 D2 I994 D1 I997 C1
2932 B3 2935 D2 2938 B2 3933 D4 3936 B4 7931 B2 I989 C2 I992 D3 I995 D1 I998 D1
2933 B3 2936 D1 3931 C4 3934 C1 5931 A2 I987 B3 I990 C3 I993 B2 I996 D3

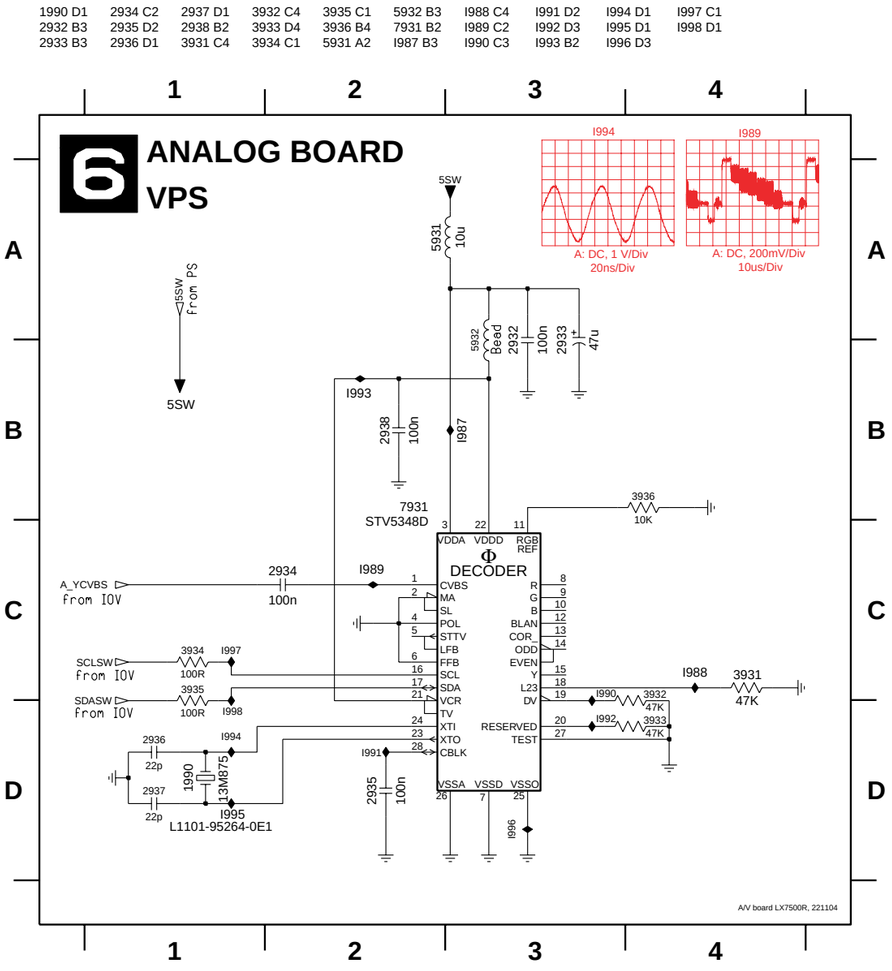

2940 A2 2944 D4 3937 C1 3941 D3 3945 E3 3950 A3 3954 C2 7934-B B4 I952 B3 I958 D3
2941 B3 2945 D2 3938 C1 3942 E1 3946 E2 3951 B2 7932 B2 7934-C C2 I955 C1 I959 D3
2942 D2 2946 E1 3939 C3 3943 E2 3947 E4 3952 B3 7933 B3 7934-D D3 I956 D2
2943 D4 2947 E3 3940 D1 3944 E3 3948 A1 3953 B2 7934-A A2 F950 A2 I957 D2

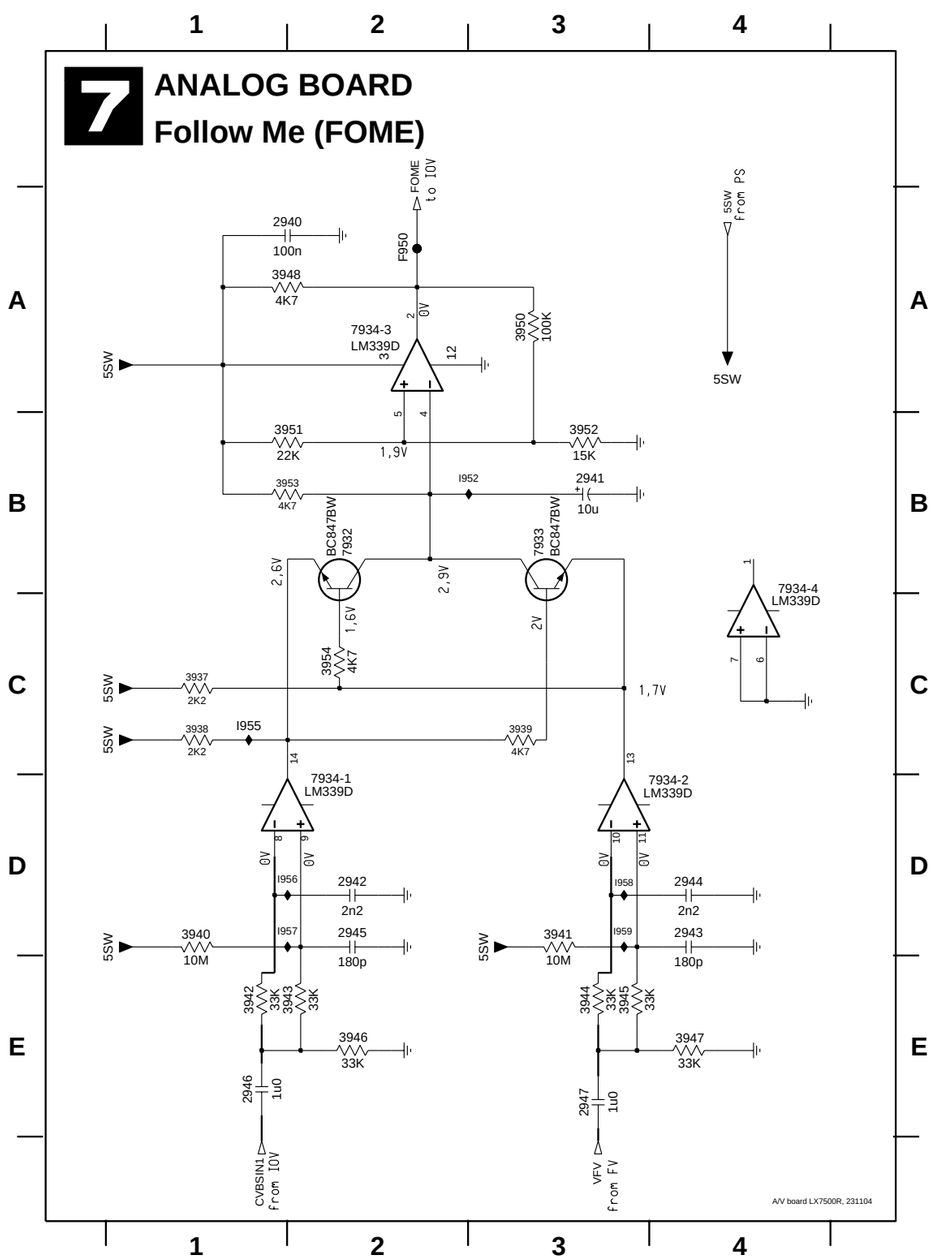

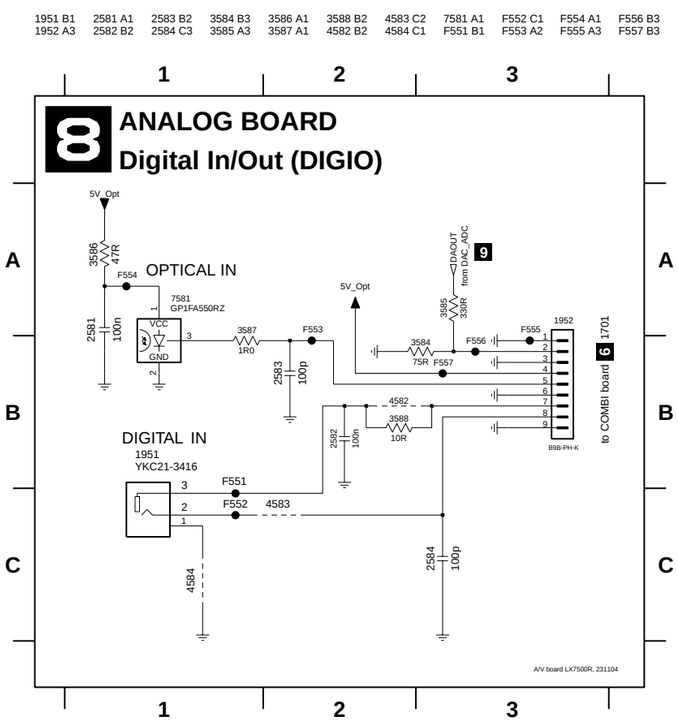

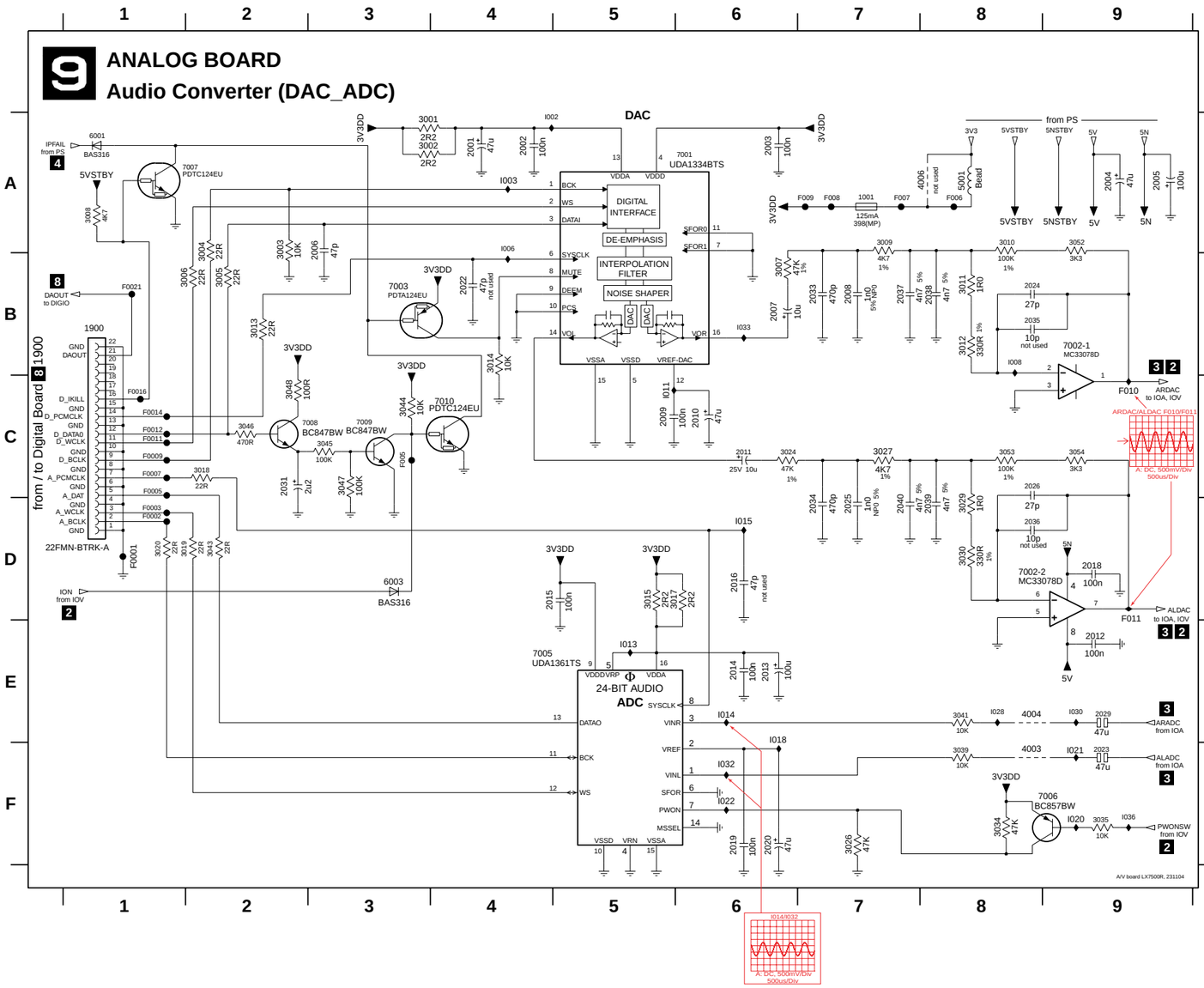

1001 A7 6001 A1
1900 B1 6003 D3
2001 A4 7001 A6
2002 A4 7002-1 B9
2003 A6 7002-2 D8
2004 A9 7003 B3
2005 A9 7004 A1
2006 A3 7005 E4
2007 B6 7006 F9
2008 B7 7008 C2
2009 C5 7009 C3
2010 C6 7010 C4
2011 C6 F0001 D1
2012 E9 F0002 D1
2013 E6 F0003 D1
2014 E6 F0005 C1
2015 D4 F0007 C1
2016 D6 F0009 C1
2018 D9 F0011 C1
2019 F6 F0012 C1
2020 F6 F0014 C1
2022 B4 F0016 C1
2023 F9 F0021 B1
2024 B8 F005 C3
2025 D7 F006 A8
2026 C8 F007 A7
2029 E9 F008 A7
2031 C2 F009 A7
2033 B7 F010 C9
2034 D7 F011 D9
2035 B8 I002 A4
2036 D8 I003 A4
2037 B7 I006 A4
2038 B8 I008 B8
2039 D8 I011 C5
2040 D7 I013 E5
3001 A3 I014 E6
3002 A3 I015 D6
3003 A2 I018 E6
3004 A2 I020 F9
3005 B2 I021 F9
3006 B2 I022 F6
3007 B6 I028 E8
3008 A1 I030 E9
3009 A7 I032 F6
3010 A8 I033 B6
3011 B8 I036 F9
3012 B8
3013 B2
3014 B4
3015 D5
3017 D6
3018 C2
3019 D2
3020 D1
3024 C6
3026 F7
3027 C7
3029 D8
3030 D8
3034 F8
3035 F9
3039 F8
3041 E8
3043 D2
3044 C3
3045 C3
3046 C2
3047 C3
3048 C2
3052 A9
3053 C8
3054 C9
4003 F8
4004 E8
4006 A8
5001 A8

ANALOG BOARD / component side view

1001	B2	1934	C3	1951	A2	2010	B1	2405	B6	2516	A3	2612	B5	2740	B7	3433	B6	3523	A3	5402	A6	5711	B7	9016	C6	9025	A4	9036	C7	9427	A6	9436	B5	9445	C3	9455	A3	9466	B3	9475	B4	9484	A1	9494	A3
1600	B4	1940	A6	1952	A2	2011	B1	2413	B6	2519	B3	2626	C5	2933	A1	3447	A7	3532	A2	5403	B6	5713	C7	9017	A7	9026	A2	9037	B4	9428	A7	9437	B5	9446	C6	9457	A3	9467	A4	9476	A3	9485	C6	9495	A3
1701	B7	1942	C5	1953	B4	2013	B2	2417	B6	2522	A4	2627	B5	2941	C2	3451	A2	3533	A3	5406	B6	5714	C6	9018	A6	9027	B3	9038	B2	9429	A5	9438	B5	9447	A2	9459	B3	9468	A3	9477	B3	9486	A4	9496	A3
1702	B7	1943	A1	1960	C5	2020	B1	2421	C6	2526	A3	2713	B7	3035	A2	3454	A7	3601	C4	5600	B4	5931	A1	9019	A6	9028	C3	9039	A3	9430	A7	9439	B4	9448	A1	9460	B5	9469	A2	9478	B3	9487	C3	9497	C1
1703	C7	1945	C2	1990	A1	2023	B2	2428	C5	2600	B5	2720	A7	3039	B2	3502	B3	3603	C4	5601	B4	7581	A1	9020	A6	9029	C3	9422	C2	9431	B6	9440	B3	9449	C4	9461	B3	9470	A3	9479	B3	9488	A2	9498	C1
1704	C6	1946	A5	2001	B1	2029	B2	2434	B6	2602	B5	2722	C7	3041	B2	3509	B3	3701	B7	5602	C4	9003	C2	9021	A6	9030	A2	9423	C6	9432	C4	9441	A6	9450	A2	9462	B3	9471	B3	9480	A3	9489	C3	9499	B3
1705	A7	1947	B5	2004	B2	2031	C1	2464	A7	2605	B4	2729	B7	3412	A7	3515	A3	3703	B7	5705	B7	9007	B3	9022	B6	9031	A1	9424	A7	9433	A5	9442	A4	9451	C6	9463	B4	9472	B2	9481	A2	9490	B1	9551	A6
1706	C6	1949	A4	2005	B2	2332	A7	2510	A2	2608	B4	2732	C7	3422	A5	3517	A4	3724	B7	5709	B7	9011	A7	9023	C5	9032	A1	9425	C3	9434	C1	9443	B3	9452	A3	9464	C1	9473	B3	9482	A3	9491	A2	9552	B5
1900	C1	1950	B2	2007	B1	2403	C6	2511	A4	2611	B5	2737	C6	3432	B6	3519	A4	5401	B6	5710	B7	9014	B7	9024	B5	9035	C1	9426	A7	9435	C4	9444	C3	9453	A4	9465	B2	9474	A3	9483	A4	9492	A2		

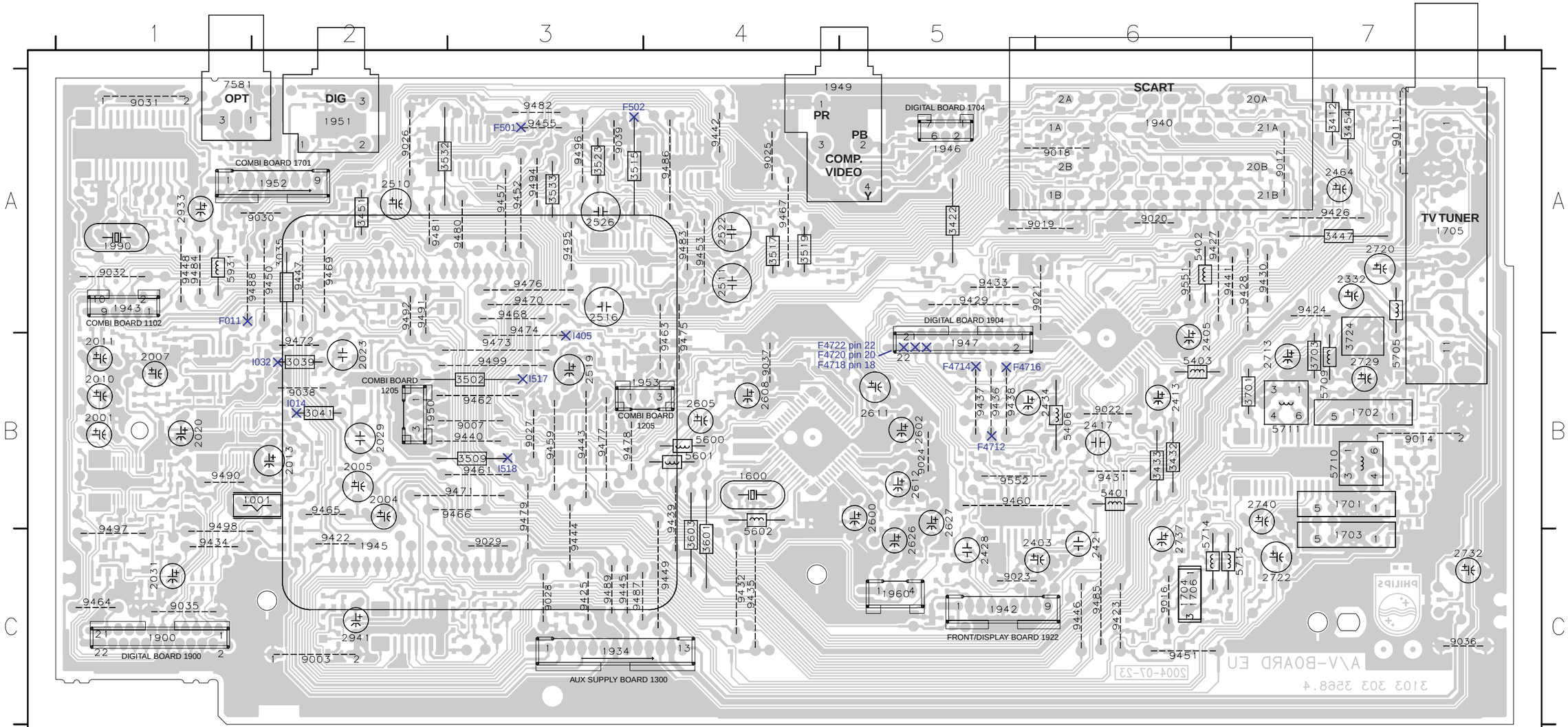

This assembly drawing shows a summary of all possible versions.
For components used in a specific version see schematic diagram respectively partslist.

A/V board LX7500R .4, 231104

TEST POINTS

F 011	A1	F 502	A3	F4714	B5	F4718	B5	F4722	B5	I 032	B2	I 517	B3
F 501	A3	F4712	B5	F4716	B5	F4720	B5	I 014	B2	I 405	B 3	I 518	B3

ANALOG BOARD / copper side view

2002	B7	2037	B7	2419	B2	2502	B5	2527	A3	2618	B4	2742	C1	3006	B7	3034	B6	3400	A6	3420	A2	3458	A6	3481	C2	3512	B6	3537	A5	3715	B2	3742	B1	3944	C5	4411	B2	4443	A5	6314	B5	6429	A3	7401	A1	7508	A4	7934	C6
2003	B7	2038	B7	2423	A2	2503	A6	2530	B6	2619	B4	2932	A7	3007	B7	3043	C7	3401	A2	3421	A3	3459	B2	3482	C3	3513	A5	3538	A4	3716	B1	3743	C1	3945	C5	4413	A3	4444	A6	6320	B5	6600	B4	7402	A1	7509	A3		
2006	B7	2039	B7	2427	A3	2504	A3	2531	B6	2620	B4	2934	A7	3008	C7	3044	B7	3402	A2	3423	A3	3460	A6	3483	B2	3514	A6	3584	A7	3717	C2	3744	C1	3946	C5	4415	A3	4447	A1	6401	A1	6703	B1	7403	A1	7511	A4		
2008	B7	2040	B7	2433	B2	2505	A3	2532	B6	2621	B4	2935	A7	3009	B7	3045	C7	3403	A2	3424	B3	3461	A2	3484	B2	3516	A6	3585	A7	3720	B2	3745	B1	3947	C5	4416	B6	4448	A3	6402	A2	6704	B1	7404	A6	7701	C2		
2009	B7	2334	B5	2435	B2	2506	A3	2535	A5	2623	B4	2936	A7	3010	B7	3046	C7	3404	A1	3426	B3	3462	A2	3489	C3	3518	A4	3586	A7	3725	C2	3746	B1	3948	C6	4418	B2	4449	A3	6403	A2	6705	B1	7405	A3	7702	C2		
2012	B7	2401	A1	2436	B3	2507	C3	2536	A4	2719	B1	2937	A7	3011	B7	3047	C7	3405	A1	3427	A1	3463	A2	3490	A3	3520	A4	3587	A7	3726	B1	3758	C2	3950	C6	4419	A3	4582	A6	6404	A2	7001	B7	7407	B3	7704	B1		
2014	B6	2402	A1	2437	B2	2508	C3	2581	A6	2721	B1	2938	A7	3012	B7	3048	C7	3406	A1	3428	B2	3464	A2	3491	A3	3521	A4	3588	A6	3728	C2	3931	A7	3951	C6	4420	B1	4583	A6	6409	A2	7002	B7	7408	B4	7705	B1		
2015	B6	2404	C2	2438	B3	2509	A5	2582	A6	2723	B1	2940	C5	3013	B7	3052	B7	3407	A1	3429	C3	3465	A2	3492	A3	3522	A4	3600	B4	3730	B1	3932	A7	3952	C6	4421	B2	4584	A6	6414	A1	7003	B7	7409	B3	7706	C2		
2016	B6	2406	A6	2439	B2	2512	B5	2583	A7	2724	B2	2942	C5	3014	B7	3053	B7	3408	A1	3431	A2	3466	A2	3493	A3	3524	A4	3602	B4	3731	C2	3933	A7	3953	C6	4423	A3	4601	B4	6415	A2	7004	B2	7411	B3	7709	B1		
2018	B7	2407	A6	2440	B3	2513	A4	2584	A6	2725	B1	2943	C5	3015	B6	3054	B7	3409	A1	3437	B2	3467	A2	3494	B2	3525	A4	3606	B3	3732	C2	3934	A7	3954	C6	4424	A2	4700	B1	6416	A2	7005	B7	7412	A5	7710	B1		
2019	B7	2408	B2	2441	B3	2514	A5	2601	B3	2727	B2	2944	C5	3017	B6	3327	C1	3410	A1	3438	B2	3468	A2	3501	B6	3526	A5	3607	B3	3733	B1	3935	A7	3955	A5	4427	A7	4701	B1	6417	A2	7006	B6	7419	A6	7711	C2		
2022	B7	2409	A2	2446	C2	2515	A5	2603	B3	2728	B1	2945	C5	3018	B6	3329	A1	3411	A1	3439	B2	3469	A2	3503	A4	3527	A4	3611	B4	3734	C2	3936	A7	4003	B6	4428	A6	4999	C1	6418	A2	7007	C7	7420	A6	7712	C1		
2024	B6	2410	A3	2449	C3	2517	A3	2604	B4	2730	B2	2946	C5	3019	C7	3348	A5	3413	A1	3440	A5	3470	A2	3504	A4	3528	A4	3612	B3	3735	C2	3937	C6	4004	B6	4430	A6	5001	B6	6419	A1	7008	C7	7421	A6	7713	C1		
2025	B7	2411	B2	2450	A1	2518	A5	2606	B4	2731	B1	2947	C5	3020	C7	3349	A5	3414	A1	3442	B2	3471	A2	3505	C3	3529	A4	3702	A1	3736	C2	3938	C6	4006	B6	4431	A5	5701	A1	6420	A1	7009	C7	7501	B5	7714	B1		
2026	B7	2412	A6	2451	A3	2520	A2	2607	B4	2733	C1	3001	B7	3024	B7	3355	B5	3415	A6	3445	B2	3472	A2	3506	C3	3530	A4	3704	C1	3737	B1	3939	C6	4300	C5	4433	B3	5702	A1	6422	A2	7010	C7	7502	A5	7716	C2		
2033	B7	2414	B2	2452	A4	2521	B6	2609	C4	2734	B1	3002	B7	3026	B6	3362	B5	3416	A6	3446	A1	3475	A3	3507	A5	3531	A4	3705	C1	3738	B1	3940	C5	4301	C5	4434	B3	5704	A1	6423	A3	7308	A1	7503	A5	7717	C1		
2034	A7	2415	A1	2453	A3	2523	A3	2610	B3	2735	A1	3003	B7	3027	B7	3371	A5	3417	A2	3452	A2	3476	A2	3508	A4	3534	A6	3710	B2	3739	B1	3941	C5	4401	A2	4435	A5	5932	A7	6424	A1	7319	B4	7504	A4	7931	A7		
2035	B7	2416	A2	2459	B3	2524	B4	2616	B4	2736	A1	3004	B7	3029	B7	3372	B5	3418	A6	3453	B7	3477	A2	3510	B5	3535	A5	3711	A1	3740	C1	3942	C5	4402	A6	4437	B5	6001	C6	6427	A3	7320	A1	7505	B6	7932	C6		
2036	B7	2418	A2	2501	A2	2525	B4	2617	B4	2741	B1	3005	B7	3030	B7	3373	B4	3419	A5	3455	B2	3478	A3	3511	A4	3536	A5	3714	B2	3741	C2	3943	C5	4403	B6	4442	A6	6003	C6	6428	A3	7321	B5	7506	A4	7933	C6		

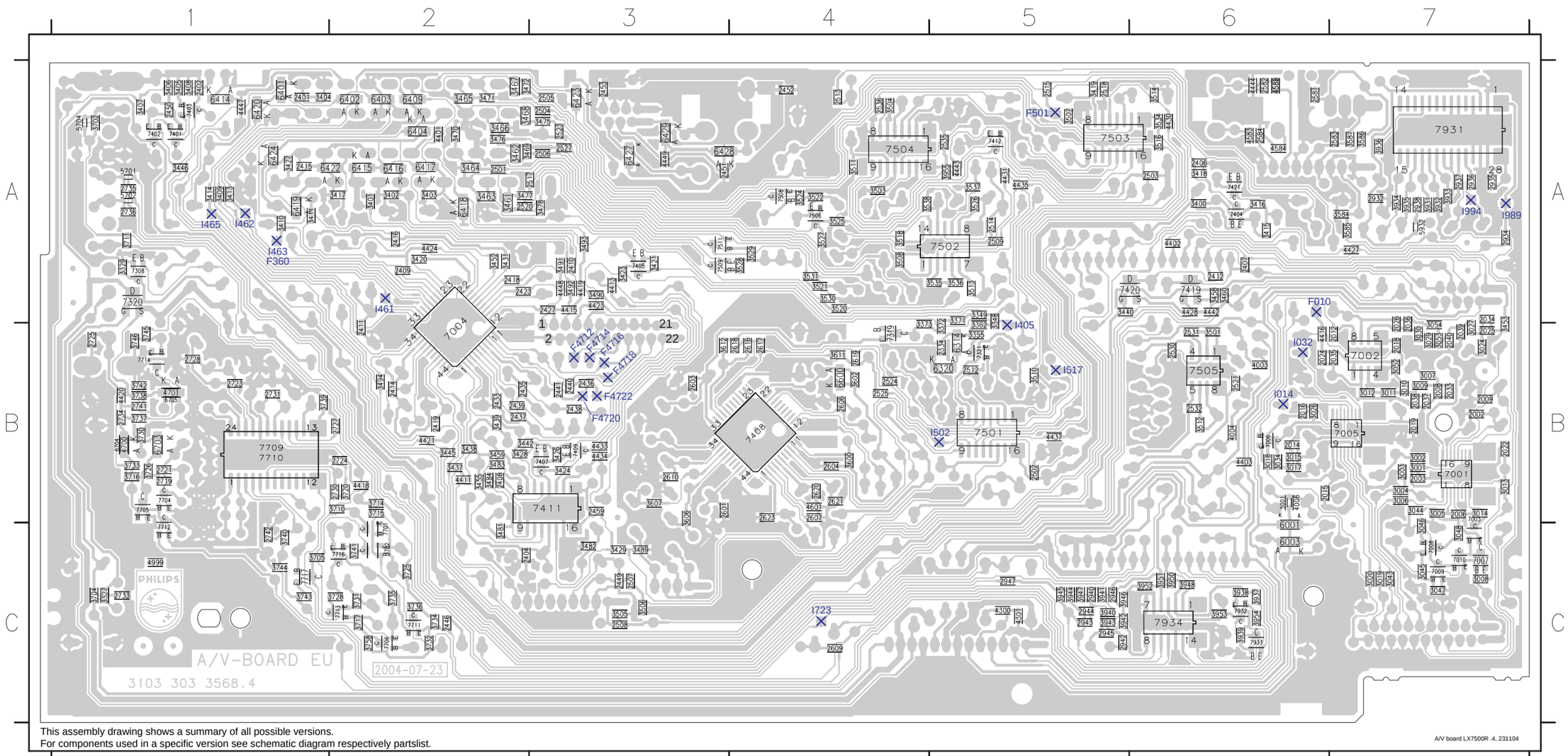

This assembly drawing shows a summary of all possible versions.
For components used in a specific version see schematic diagram respectively partslist.

A/V board LX7500R .4, 231104

TEST POINTS

F 010	A7	F 501	A5	F4714	B3	F4718	B3	F4722	B3	I 032	B6	I 461	A2	I 463	A1	I 502	B5	I 723	C4	I 994	A7
F 360	A1	F4712	B3	F4716	B3	F4720	B3	I 014	B6	I 405	A5	I 462	A1	I 465	A1	I 517	B5	I 989	A7		

uP Sub Board: Central Controller (CECO)

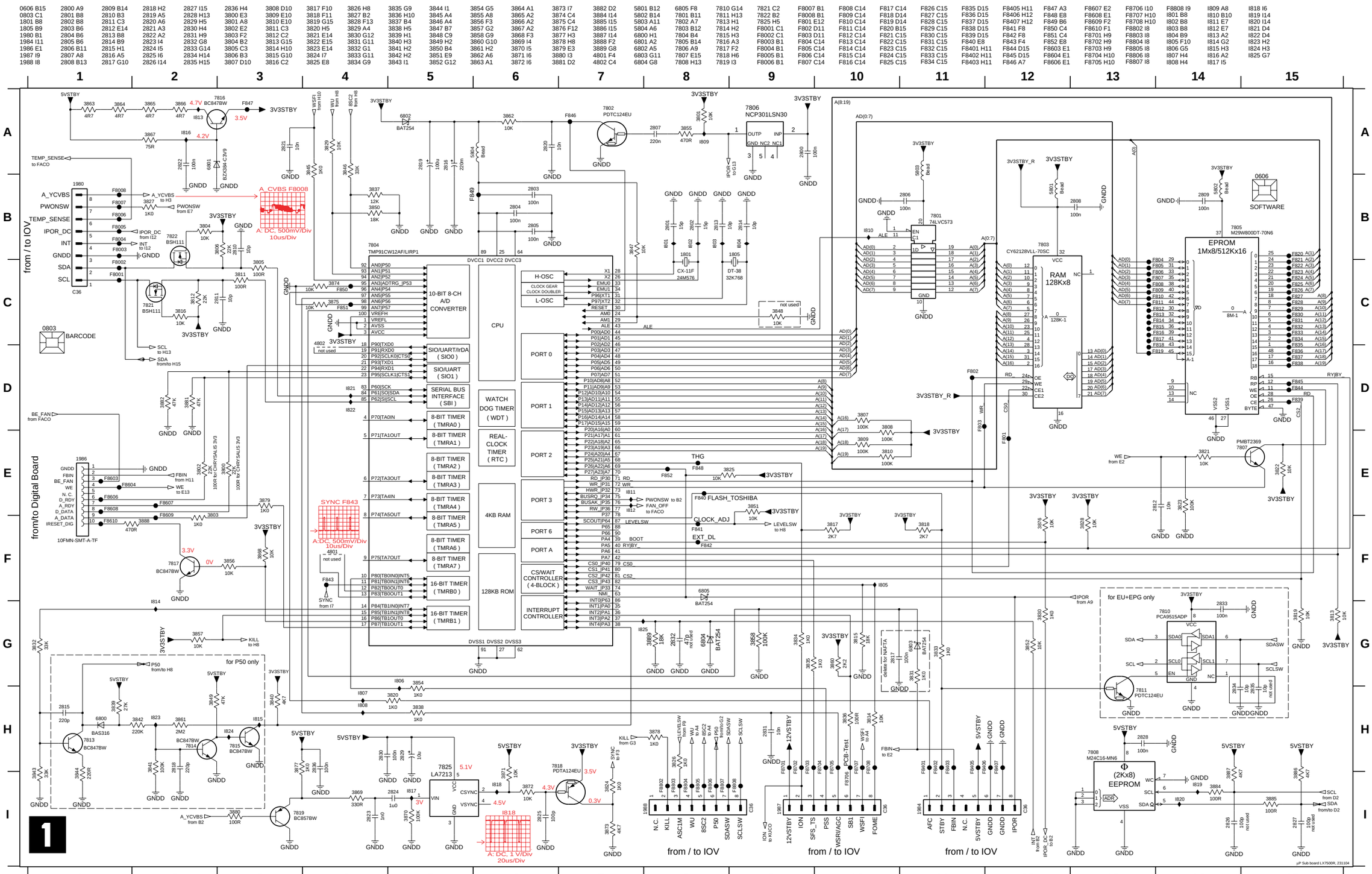

uP Sub Board: Fan Control (FACO)

1901 A4	3915 C3	3922 C1	3929 A4	4902 D3	7902-2 D2	7907 A2	F904 B4	I903 C2
1902 A4	3916 D1	3923 E1	3930 A4	4903 D3	7902-3 C4	7908 B1	F905 A1	I904 C2
2911 D1	3917 C1	3924 A2	3931 A4	4904 B4	7902-4 D4	7909 B4	F906 A2	I905 C2
2912 B3	3918 B2	3925 D1	3932 B4	6901 E3	7903 A1	7910 B3	F907 A2	I906 E2
2913 B3	3919 C1	3926 A2	3933 B4	6902 A1	7904 A3	F901 A3	F908 B4	I907 E4
3913 B2	3920 E1	3927 D2	3934 A4	6903 C3	7905 A3	F902 B3	F909 C3	I908 D1
3914 C4	3921 E4	3928 C3	4901 A1	7902-1 C2	7906 A1	F903 B4	F910 E3	

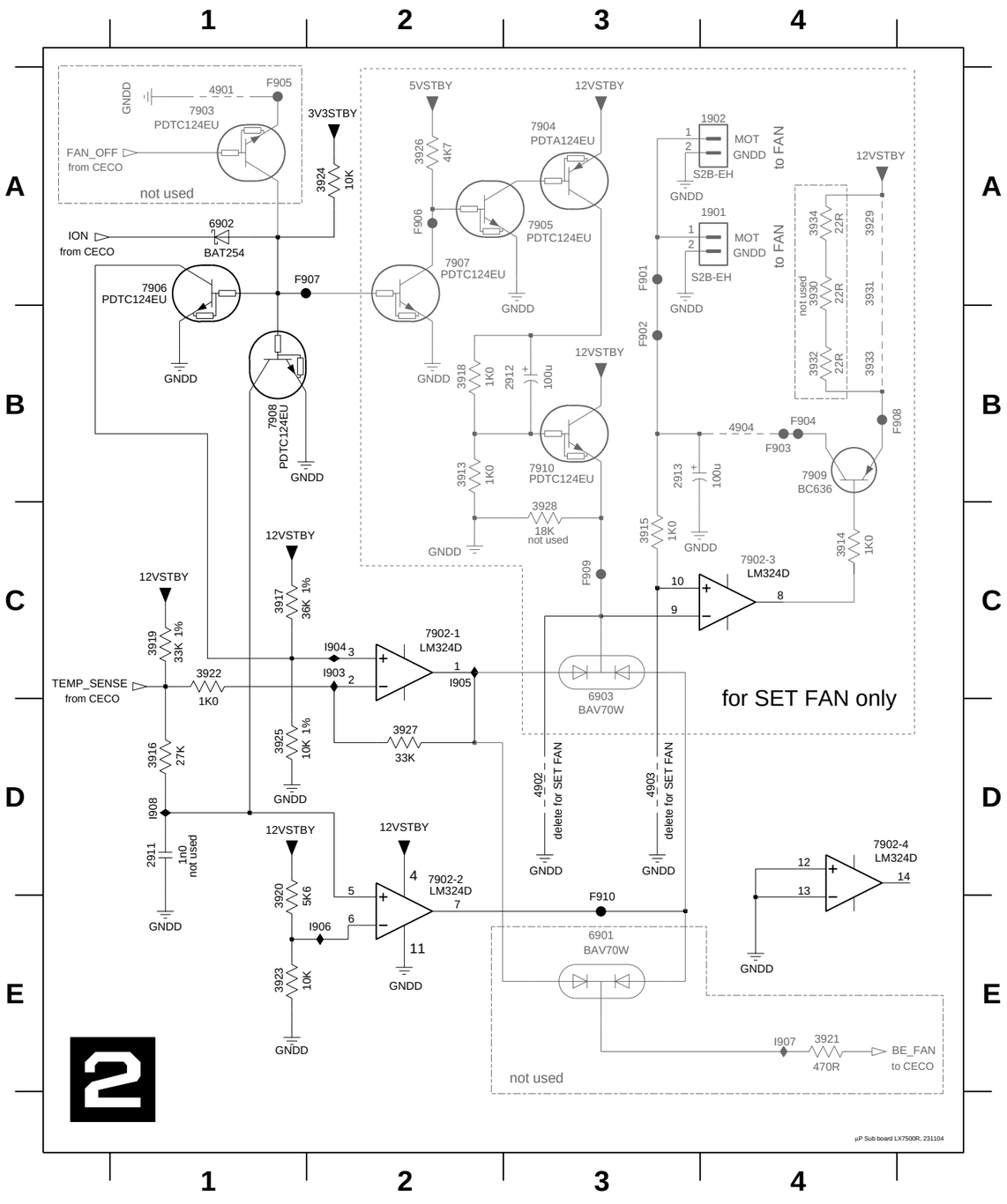

0606 B3	2821 A2	3816 C1	3855 C3	3924 A3	7804 B2
0803 C2	2826 C3	3817 A1	3857 B1	3927 B3	7805 B3
1801 C2	2828 C3	3819 C3	3858 A1	3929 A3	7806 C3
1805 C2	2829 A3	3824 B3	3860 A1	3930 A3	7808 C3
1901 A1	2830 B3	3825 C2	3861 A2	3931 A3	7810 C3
1902 A3	2832 C2	3828 A2	3874 B1	3932 A3	7811 C3
1980 C2	2833 C3	3830 C2	3875 B1	3933 A3	7813 A2
1984 A2	2834 C3	3831 A1	3876 C3	3934 A3	7814 A2
1986 C1	2835 C3	3832 B1	3878 B1	4801 B1	7815 A2
1987 A1	2912 B3	3834 A1	3879 B2	4802 B2	7821 C1
1988 C2	2913 A3	3835 A1	3881 C2	4903 A3	7822 C1
2800 C3	3800 B2	3837 C2	3882 B2	5802 B3	7825 B3
2804 B1	3801 C3	3838 A1	3884 C3	5804 A1	7902 B3
2805 A2	3802 C2	3839 A2	3887 C3	6800 A2	7903 A3
2807 C3	3803 B2	3840 A2	3889 C2	6802 A3	7904 B3
2815 A2	3804 C1	3841 A2	3914 A3	6803 A1	7908 A3
2816 A3	3805 B1	3842 A2	3915 A3	6804 C2	7909 A3
2817 A1	3806 C1	3843 A2	3916 B3	6805 C3	7910 B3
2818 A2	3808 B3	3844 A2	3919 B3	6901 B3	
2819 A3	3811 B1	3849 A2	3921 C3	6903 B3	
2820 C2	3812 B1	3852 C2	3922 B3	7802 C3	

2801 C2	2827 C1	3826 C2	3864 A1	3913 A1	7801 B3
2802 C2	2831 A3	3827 A3	3865 A1	3917 B1	7803 B2
2803 B3	2836 C1	3829 C2	3866 A1	3918 B1	7807 A2
2806 A3	2911 A1	3833 A2	3867 A1	3920 B1	7816 A1
2808 A1	3807 A1	3836 A3	3868 B1	3923 A1	7817 C1
2809 B2	3809 A2	3845 A3	3869 C1	3925 B1	7818 B1
2810 C3	3810 A2	3846 C2	3870 B1	3926 A1	7819 C1
2811 C3	3813 A2	3847 C3	3871 B1	3928 B1	7905 A1
2812 A2	3814 A2	3848 C3	3872 B1	4901 A2	7906 B1
2813 C2	3815 A2	3850 C2	3873 B1	4902 B1	7907 A1
2814 B2	3818 A2	3851 C2	3877 C1	4904 A1	
2822 A1	3820 A2	3854 A3	3880 C1	5801 A1	
2823 C1	3821 A2	3856 C1	3885 C1	5803 A2	
2824 C1	3822 A2	3862 A1	3886 C1	6801 A1	
2825 B1	3823 A2	3863 A1	3888 C1	6902 A2	

uP Sub Board: (top view)

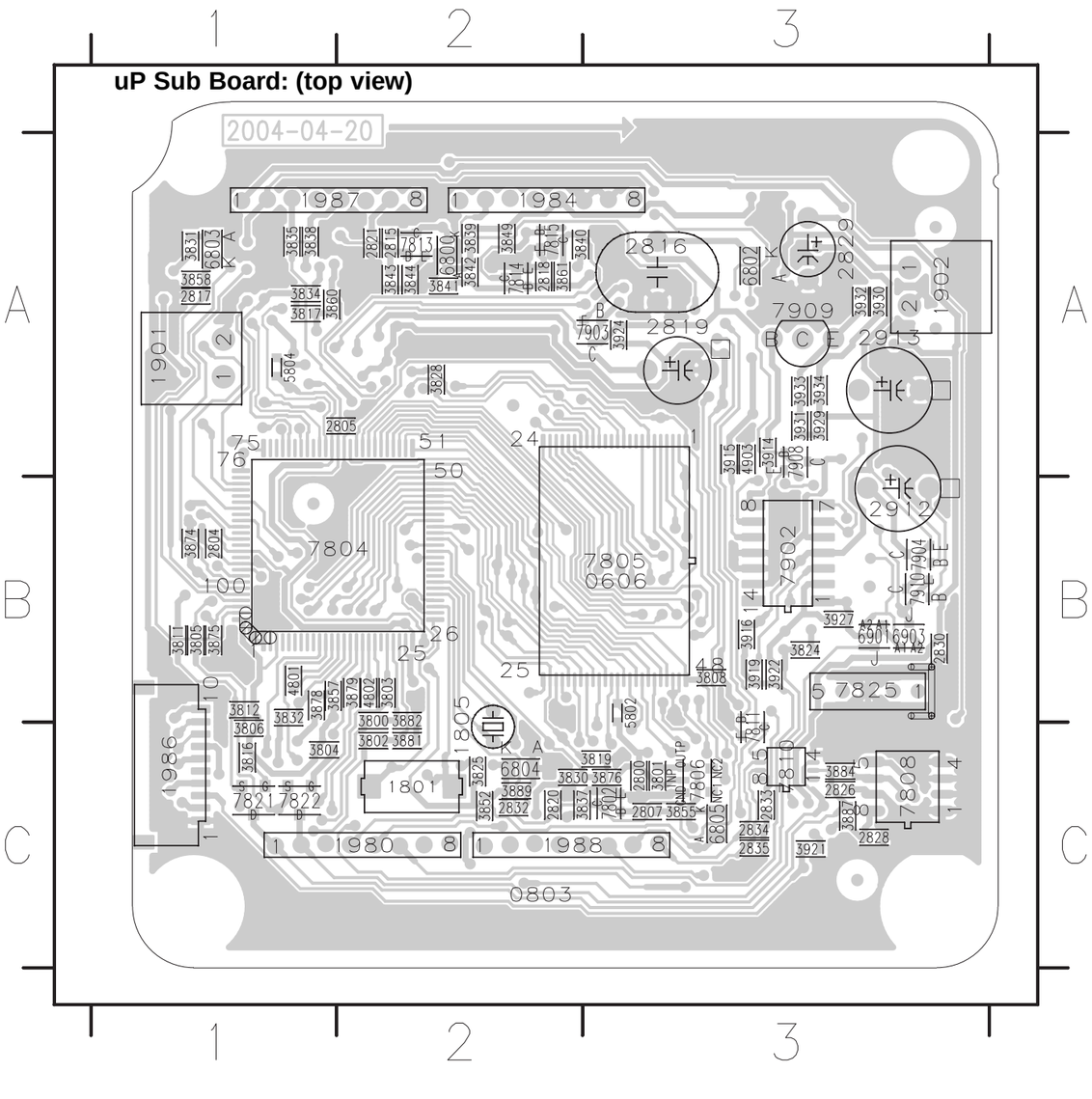

uP Sub Board: (bottom view)

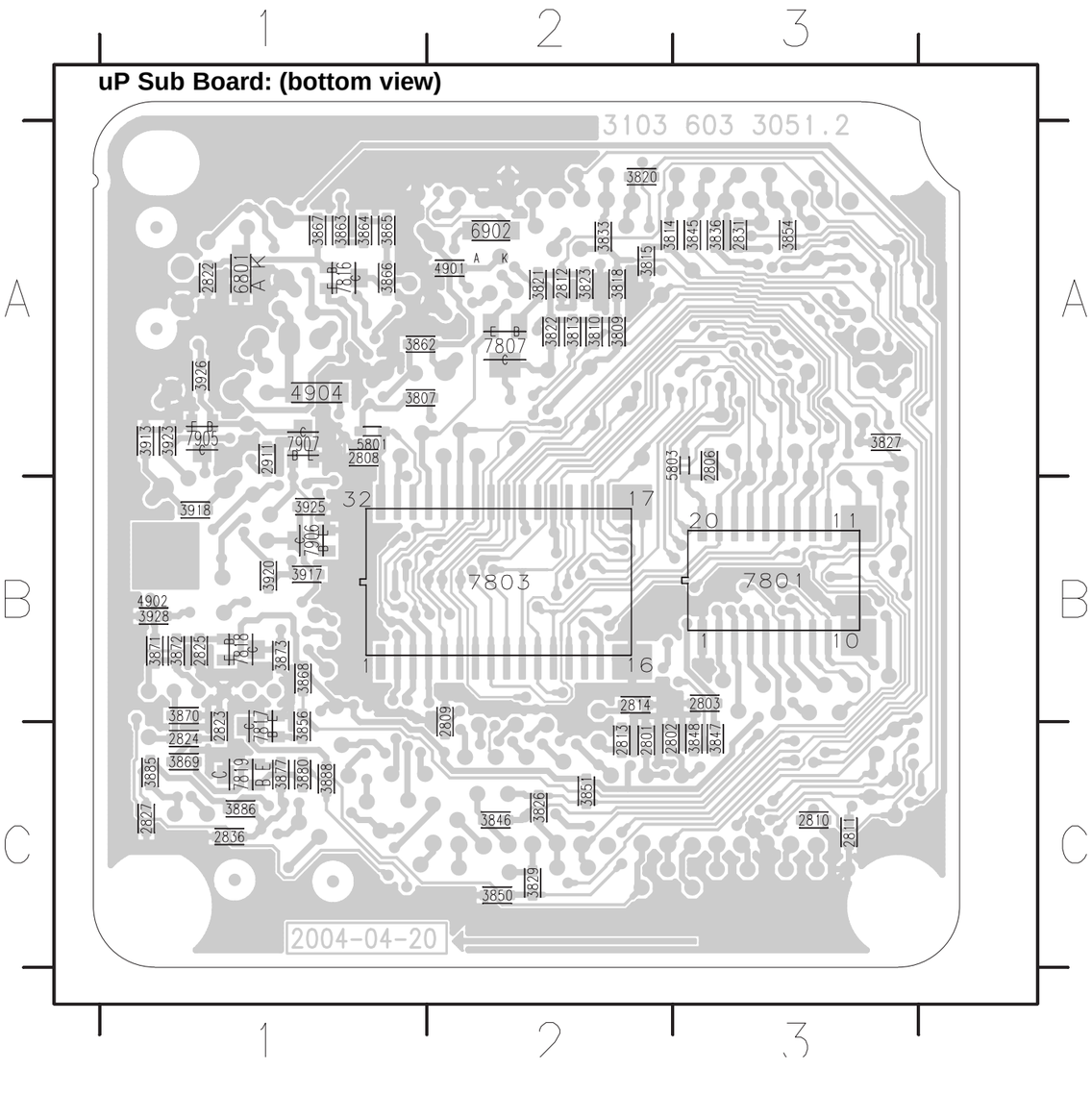

uP Sub Board

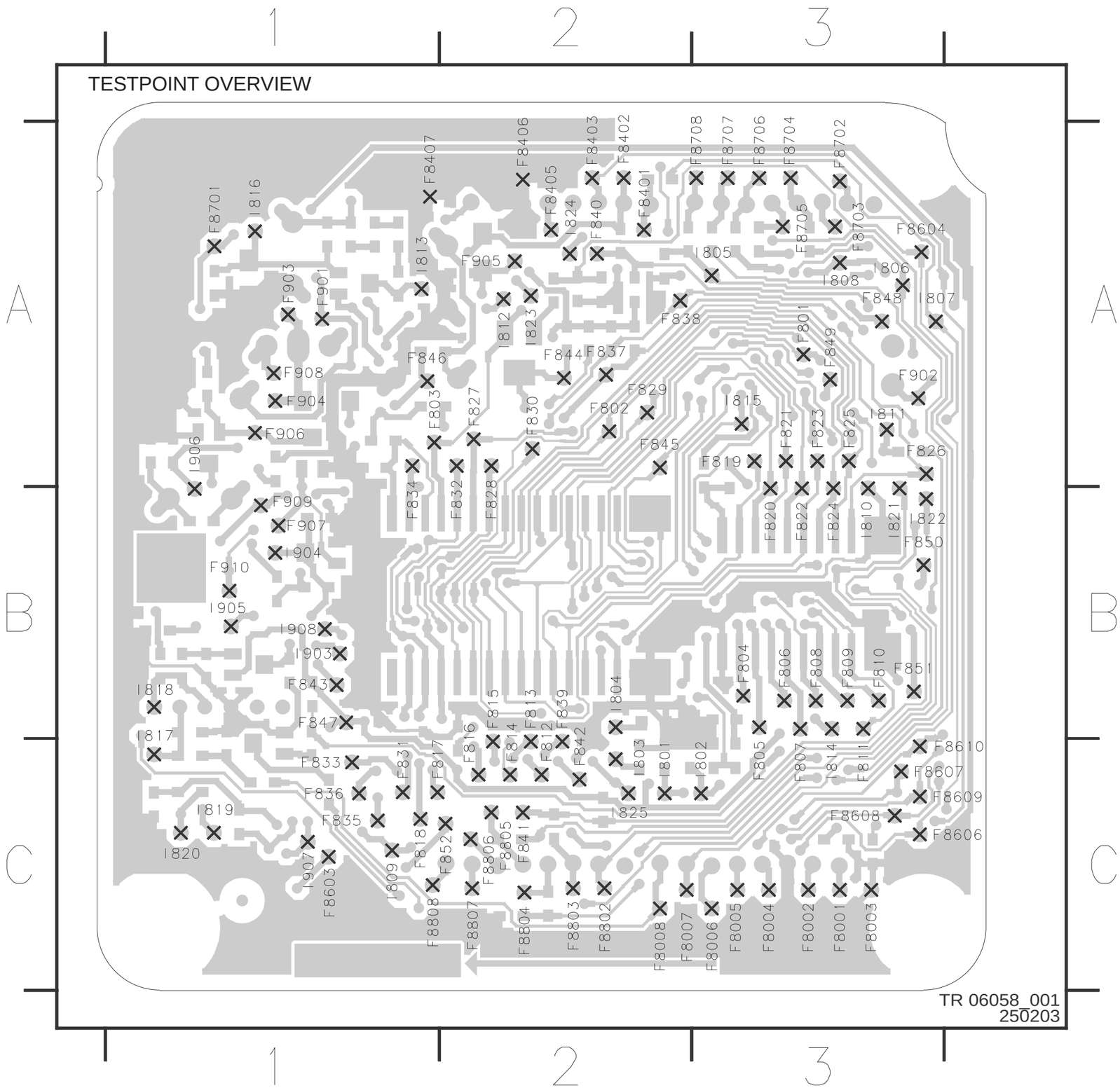

F8001 C3	F831 C1	F8610 C3	I808 A3
F8002 C3	F832 A2	F8701 A1	I809 C1
F8003 C3	F833 C1	F8702 A3	I810 B3
F8004 C3	F834 A1	F8703 A3	I811 A3
F8005 C3	F835 C1	F8704 A3	I812 A2
F8006 C3	F836 C1	F8705 A3	I813 A1
F8007 C2	F837 A2	F8706 A3	I814 B3
F8008 C2	F838 A2	F8707 A3	I815 A3
F801 A3	F839 C2	F8708 A3	I816 A1
F802 A2	F840 A2	F8802 C2	I817 C1
F803 A1	F8401 A2	F8803 C2	I818 B1
F804 B3	F8402 A2	F8804 C2	I819 C1
F805 B3	F8403 A2	F8805 C2	I820 C1
F807 B3	F8406 A2	F8806 C2	I821 B3
F812 C2	F8407 A1	F8807 C2	I822 B3
F813 C2	F841 C2	F8808 C1	I823 A2
F814 C2	F842 C2	F901 A1	I824 A2
F815 C2	F843 B1	F902 A3	I825 C2
F816 C2	F844 A2	F903 A1	I903 B1
F817 C1	F845 A2	F904 A1	I904 B1
F818 C1	F846 A1	F905 A2	I905 B1
F819 A3	F847 B1	F906 A1	I906 B1
F820 B3	F848 A3	F907 B1	I907 C1
F821 A3	F849 A3	F908 A1	I908 B1
F822 B3	F850 B3	F909 B1	
F823 A3	F851 B3	F910 B1	
F824 B3	F852 C2	I801 C2	
F825 A3	F8603 C1	I802 C3	
F826 A3	F8604 A3	I803 C2	
F827 A2	F8606 C3	I804 B2	
F828 A2	F8607 C3	I805 A3	
F829 A2	F8608 C3	I806 A3	
F830 A2	F8609 C3	I807 A3	

DIGITAL BOARD Chrysalis PPS E4 AV3+

TRUTH TABLE
NAND / NOR FLASH

XIO_SEL0	MPIO24	NANDFLASH	NORFLASH
0	0	1	0
0	1	0	1
1	0	1	1
1	1	1	1

for AV2 only

ANALOG BOARD

IDE1 Only

Service

1100	A10	4117	E6
1102	B14	4118	F8
1103	H14	4119	F8
1104	G9	4121	H6
1105	B10	4122	B5
1106	I5	4123	B5
2100	A8	4124	D11
2101	E4	4125	D11
2102	D7	5100	C4
2103	D3	5102	E11
2104	D8	5103	I13
2105	D8	5104	H8
2106	D8	5108	A5
2107	D8	6100	E5
2108	A7	6101	E6
2109	E9	6103	E11
2110	E9	7100	F5
2111	E9	7101	F6
2112	H11	7102-1	A4
2113	E6	7102-2	A5
2114	E12	7102-3	B4
2116	E11	7102-4	B5
2119	I12	7103	A8
2120	I8	7104-1	H2
2124	I5	7104-2	I3
2125	D3	7104-3	D2
2127	A3	7104-4	E2
2128	D11	7105	G5
2129	A13	7106	E5
3080	H7	7107-1	F2
3081	H7	7107-2	F2
3082	G10	7107-3	G2
3085	C7	7107-4	H5
3086	C7	7108	G6
3088	I6	7109	E12
3090	G2	7111-1	G11
3091	H2	7111-2	I11
3092	I12	7111-3	H11
3093	I12	7111-4	I11
3094	E8	7111-5	I6
3095	C2	7111-6	I7
3096	H5	F0001	B9
3097	I8	F0003	B9
3098	I7	F0005	B9
3099	I8	F0007	B9
3100	A12	F0009	B9
3101	A13	F0011	B9
3102	B9	F0015	A10
3103	A12	F0201	A14
3104	B8	F0202	B14
3105	B8	F0203	A13
3106	A12	F0204	A12
3107	B9	F0205	A13
3108	A12	F0206	A12
3109	B8	F0207	A13
3110	A12	F0208	A12
3111	B9	F0209	B13
3112	A12	F0210	B12
3113	B6	F0211	B13
3114	D5	F0212	B12
3115	B8	F0213	B13
3116	A12	F0214	B12
3117	I2	F0215	B13
3118	B12	F0216	C12
3119	A9	F0217	C13
3120	B12	F0218	C12
3121	F6	F0221	C13
3122	B12	F0223	C14
3123	F7	F0225	C13
3124	B12	F0227	D14
3125	G6	F0229	D13
3126	B12	F0231	D14
3127	G7	F0233	D13
3128	B12	F0234	D13
3129	G4	F0235	D13
3130	B12	F0236	E13
3131	C7	F0237	E14
3132	F5	F0238	E14
3133	C12	F0239	D12
3134	G4	F0301	H13
3135	C12	F0302	H13
3136	C7	F0303	H13
3137	G6	F0304	H13
3138	C12	F0305	H13
3139	C7	F0306	H13
3140	C7	F0307	I13
3141	C7	F0401	H9
3142	G7	F0402	H9
3143	C12	F0403	H9
3144	G7	F0404	H9
3145	C12	F0405	G9
3146	F11	F0406	G9
3147	E13	F0407	G9
3149	F13	F0408	G9
3150	I6	F0409	G9
3152	D8	F0410	G9
3154	D12	F0501	C10
3156	D12	F0503	D9
3157	D8	F0506	D9
3159	E13	F0508	B9
3161	D12	F0509	C9
3162	E2	F0510	C9
3163	D2	F0511	C9
3164	D12	F0512	C9
3165	D2	F0514	C9
3167	F13	F0601	I5
3168	D12	F0603	I5
3170	E13	F936	G3
3172	F13	I100	E6
3173	E2	I102	E6
3175	E14	I103	A3
3176	B3	I104	A3
3178	F14	I105	A5
3180	D12	I106	B5
3184	F2	I108	D3
3185	G11	I109	E3
3186	H12	I110	F3
3187	G2	I111	G3
3189	H12	I112	C3
3191	H11	I114	C1
3192	H12	I115	A4
3195	I10	I116	E11
3197	I12	I117	H8
3199	I12	I119	E2
4101	A8	I120	E2
4110	F8	I121	F2
4111	H7	I122	G2
4113	F8	I123	I2
4115	D1	I124	H2
4116	G5		

DIGITAL BOARD Chrysalis PPS E4 AV3+

for DV_IN only

PDI1394P25

PHY

LINK

BIAS VOLTAGE AND CURRENT GENERATOR

RECEIVED DATA DECODER/ TIMER

LINK INTERFACE

ARBITR'N AND CONTROL STATE MACHINE LOGIC

TRANSMIT DATA ENCODER

XTAL OSC. PLL CLOCK

LINK CORE

12KB BUFFER MEMORY

ISOCH & ASYNC PACKETS

CONTROL AND STATUS REGISTERS

ASYNC TRANSMITTER AND RECEIVER

TRANSMITTER / RECEIVER AV1

TRANSMITTER / RECEIVER AV2

8-BIT INTERFACE

not used

BOARD_ID

1201 D1 3289 H13
1203 A1 3290 I13
2200 B2 3291 I13
2201 C2 3292 I13
2202 D1 3293 I13
2203 D2 3294 F12
2204 D2 3295 F12
2205 D2 3296 F12
2206 G3 3297 F8
2207 F2 3298 F8
2209 G2 3299 F8
2210 G2 3315 F8
2212 H1 3316 F8
2214 H2 3317 F8
2215 H2 3318 F8
2217 I2 3319 F8
2218 I2 3320 F13
2219 I3 4201 D6
2220 I3 4202 D6
2221 I3 4203 G12
2222 I3 4204 G12
2223 I4 4205 A4
2224 I4 5200 F2
2225 I4 5201 F5
2226 I5 5202 G2
2227 I5 5203 H2
2228 I5 5204 I1
2229 I5 6200 G4
2230 I6 7200 A5
2231 I6 7201 B12
2232 I6 7202 H5
2233 I7 F1201 B1
2234 I7 F1202 A1
2235 A5 F1203 A1
2236 G3 F1204 A2
2237 B9 F1205 A2
2238 B6 F200 D12
3200 E6 F201 C9
3202 F12 F203 C3
3203 H5 F204 C13
3204 D6 F205 C13
3205 A2 F206 C13
3206 B7 F207 C13
3207 B8 F208 C13
3208 B7 F209 C13
3209 B8 F210 C13
3210 C12 F211 C13
3211 C12 F212 C13
3212 B2 F213 C13
3213 B3 F214 C13
3214 C12 F215 C13
3215 C12 F216 D13
3216 B6 F217 C13
3217 C12 I200 H4
3218 C12 I201 F2
3219 D13 I202 G2
3220 B7 I203 H2
3221 C12 I204 I2
3222 C12 I205 H11
3223 B6 I206 G4
3224 C12 I207 A3
3225 C7 I208 B3
3226 C12 I209 B3
3227 C12 I210 C2
3228 C6 I211 B7
3229 C12 I212 C7
3230 D13 I213 D6
3231 C7 I214 D6
3232 C2 I215 A6
3233 C2 I216 B6
3234 C6 I217 A8
3235 C13 I218 C7
3236 C7 I219 C7
3237 D12 I220 G12
3238 C6 I221 G12
3239 D12 I222 C7
3240 C2 I223 G12
3241 D12 I224 G8
3242 C7 I225 C7
3243 D12 I226 C7
3244 D12 I227 C7
3245 D6
3246 E12
3247 E12
3248 D8
3249 E12
3250 E12
3251 E12
3252 E12
3253 D2
3254 E12
3255 E13
3256 E13
3257 E13
3258 E13
3259 E13
3260 F12
3261 E3
3262 F8
3263 F8
3264 F8
3265 G8
3266 G8
3267 G8
3268 G8
3269 G8
3270 G12
3271 G12
3272 G13
3273 G8
3274 F12
3275 G5
3276 G7
3277 F12
3278 F12
3279 F12
3280 A7
3281 A7
3282 A8
3283 A2
3284 A8
3285 A6
3286 H13
3287 H13
3288 H13

DIGITAL BOARD Chrysalis PPS E4 AV3+

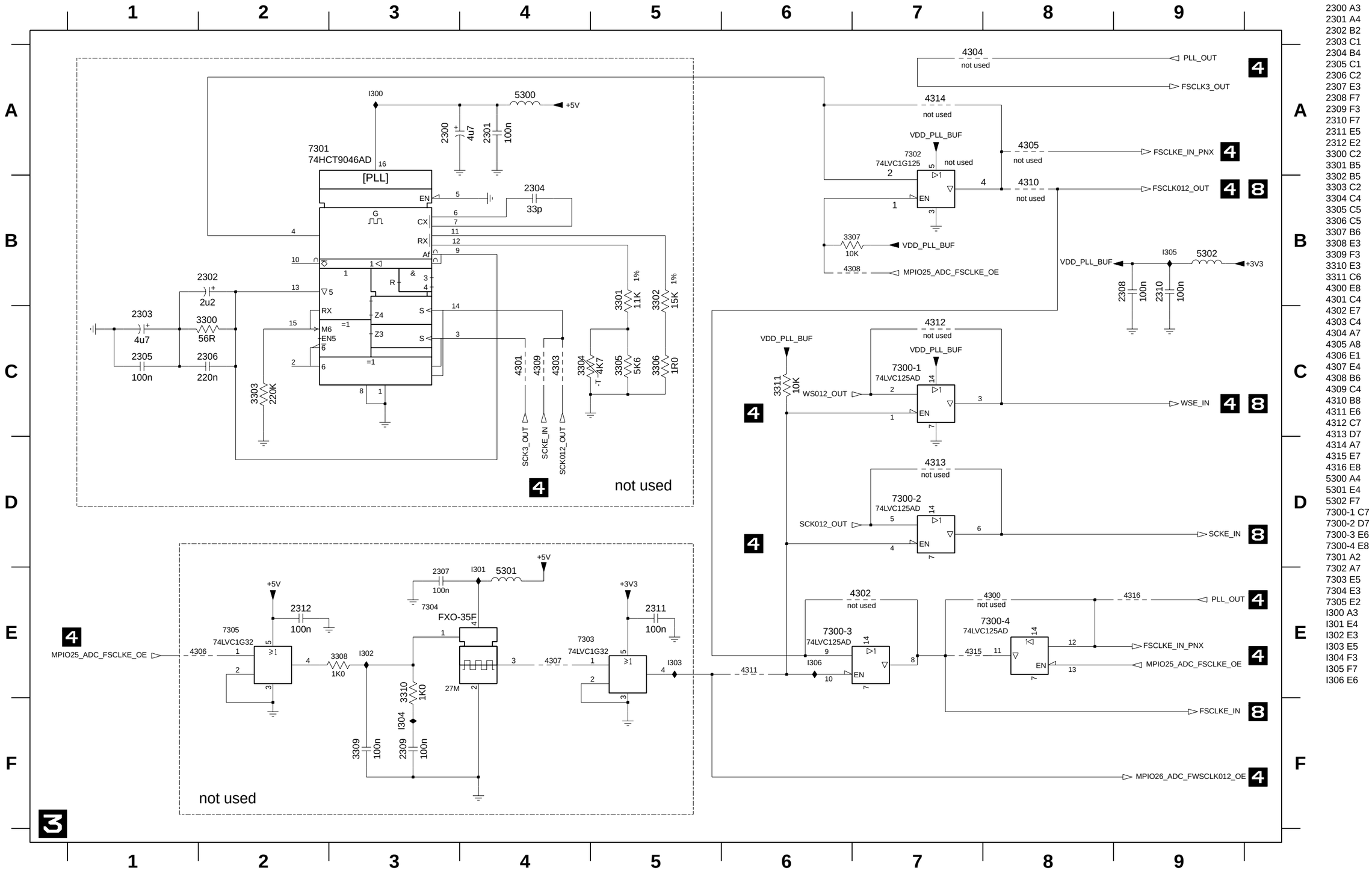

2300 A3
2301 A4
2302 B2
2303 C1
2304 B4
2305 C1
2306 C2
2307 E3
2308 F7
2309 F3
2310 F7
2311 E5
2312 E2
2300 C2
3301 B5
3302 B5
3303 C2
3304 C4
3305 C5
3306 C5
3307 B6
3308 E3
3309 F3
3310 E3
3311 C6
4300 E8
4301 C4
4302 E7
4303 C4
4304 A7
4305 A8
4306 E1
4307 E4
4308 B6
4309 C4
4310 B8
4311 E6
4312 C7
4313 D7
4314 A7
4315 E7
4316 E8
5300 A4
5301 E4
5302 F7
7300-1 C7
7300-2 D7
7300-3 E6
7300-4 E8
7301 A2
7302 A7
7303 E5
7304 E3
7305 E2
I300 A3
I301 E4
I302 E3
I303 E5
I304 F3
I305 F7
I306 E6

DIGITAL BOARD Chrysalis PPS E4 AV3+

* SDRAM

	3831	3823
32 MB	-	X
64 MB	X	-

1 UART0: DEBUG / SERVICE

1 UART1: DEV ONLY

1 UART2: S2B (BASIC ENGINE)

1 UART3: GATEWAY (ANALOG BOARD)

EJTAG pitch 1.27 mm

HS_IN — A: DC, 2 V/Div, 10us/Div

VS_IN — A: DC, 1 V/Div, 5ms/Div

IC7402 pin 3, F405 — A: DC, 1 V/Div, 50ns/Div

DIGITAL BOARD Chrysalis PPS E4 AV3+

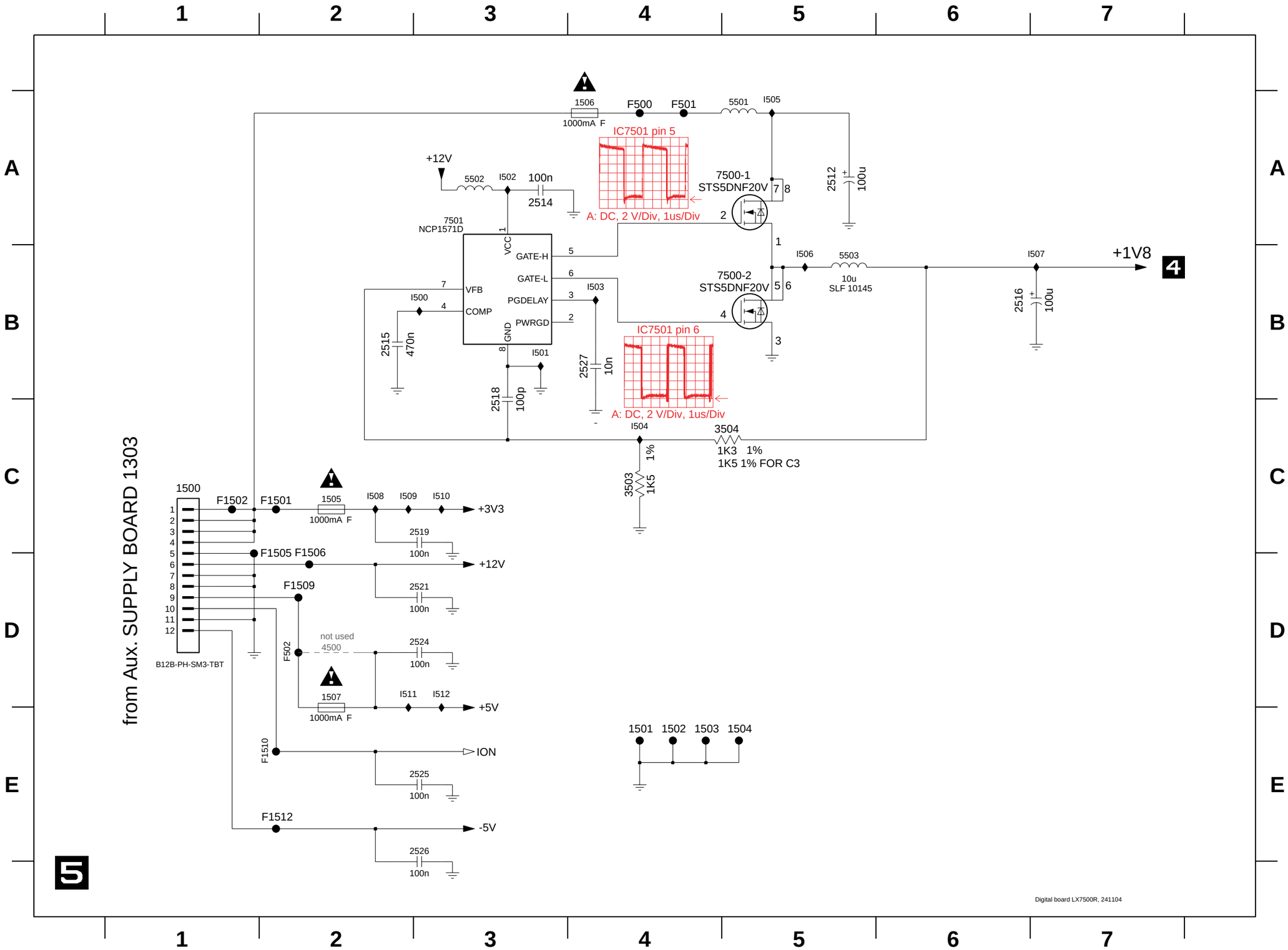

1500 C1
1501 E4
1502 E4
1503 E4
1504 E5
1505 C2
1506 A4
1507 D2
2512 A5
2514 A3
2515 B2
2516 B6
2518 C3
2519 C3
2521 D3
2524 D3
2525 E3
2526 E3
2527 B4
3503 C4
3504 C5
4500 D2
5501 A5
5502 A3
5503 B5
7500-1 A5
7500-2 B5
7501 A3
F1501 C2
F1502 C1
F1505 D2
F1506 D2
F1509 D2
F1510 D2
F1512 E2
F500 A4
F501 A4
F502 D2
I500 B3
I501 B3
I502 A3
I503 B4
I504 C4
I505 A5
I506 B5
I507 B6
I508 C2
I509 C2
I510 C3
I511 D2
I512 D3

DIGITAL BOARD Chrysalis PPS E4 AV3+

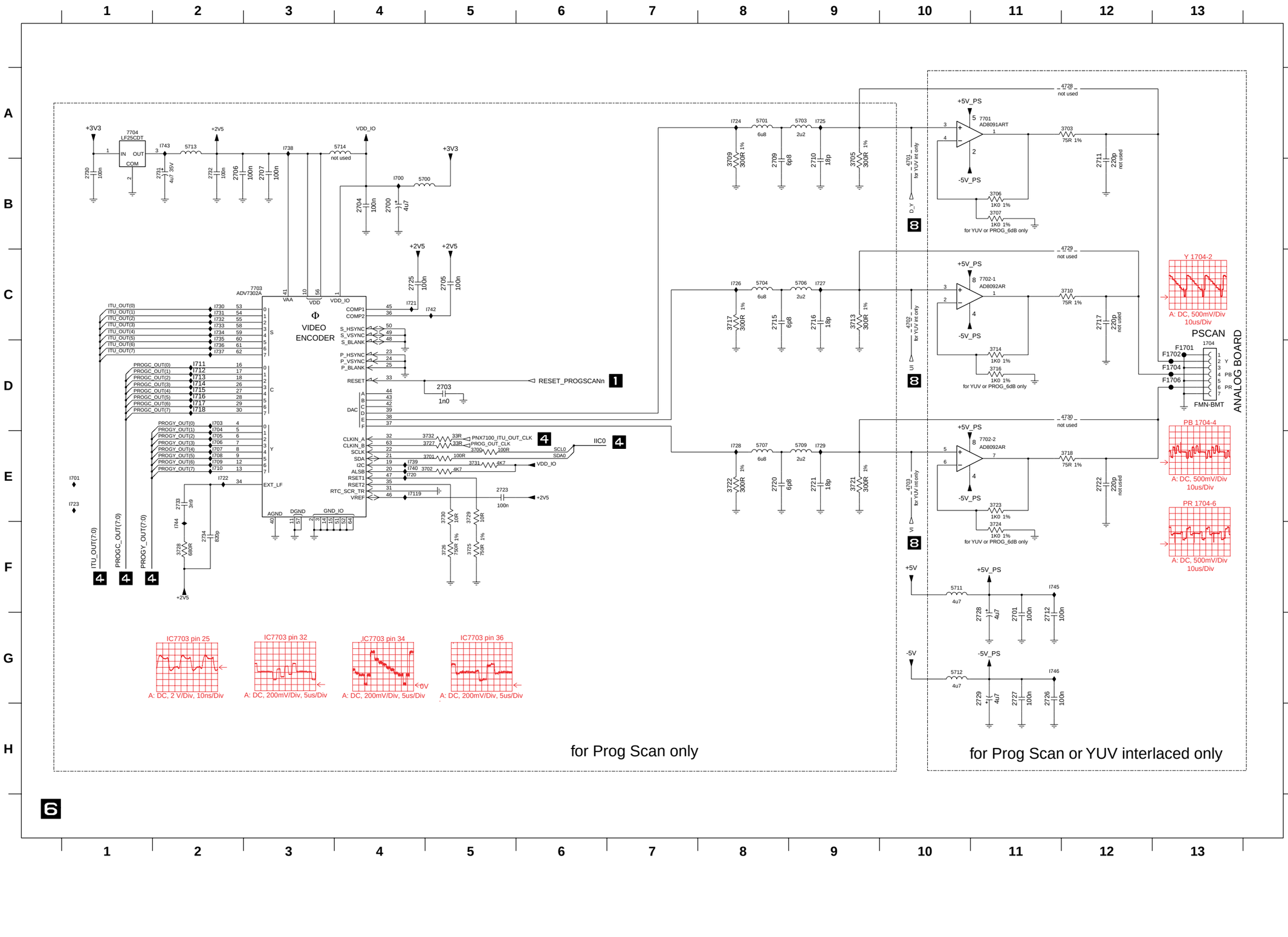

1704 D13 I727 C9
2700 B4 I728 E8
2701 G11 I729 E9
2703 D5 I730 C2
2704 B4 I731 C2
2705 C5 I732 C2
2706 B2 I733 C2
2707 B3 I734 C2
2709 B8 I735 C2
2710 B9 I736 D2
2711 B12 I737 D2
2712 G11 I738 A3
2715 C8 I739 E4
2716 C9 I740 E4
2717 C12 I742 C5
2720 E8 I743 A2
2721 E9 I744 F2
2722 E12 I745 F11
2723 E5 I746 G11
2725 C4
2726 G11
2727 G11
2728 G11
2729 G11
2730 B1
2731 B2
2732 B2
2733 E2
2734 F2
3700 E5
3701 E5
3702 E5
3703 A12
3705 B9
3706 B11
3707 B11
3709 B8
3710 C12
3713 C9
3714 D11
3716 D11
3717 C8
3718 E12
3721 E9
3722 E8
3723 E11
3724 F11
3725 F5
3726 F5
3727 E5
3728 F2
3729 E5
3730 E5
3731 E5
3732 E5
4701 B10
4702 C10
4703 E10
4728 A12
4729 C12
4730 D12
5700 B4
5701 A8
5703 A9
5704 C8
5706 C9
5707 E8
5709 E9
5711 F10
5712 G10
5713 A2
5714 A4
7701 A11
7702-1 C11
7702-2 E11
7703 C3
7704 A1
F1701 D13
F1702 D13
F1704 D13
F1706 D13
I700 B4
I701 E1
I703 D2
I704 D2
I705 E2
I706 E2
I707 E2
I708 E2
I709 E2
I710 E2
I711 D2
I7119 E4
I712 D2
I713 D2
I714 D2
I715 D2
I716 D2
I717 D2
I718 D2
I720 E4
I721 C4
I722 E2
I723 E1
I724 A8
I725 A9
I726 C8

DIGITAL BOARD Chrysalis PPS E4 AV3+

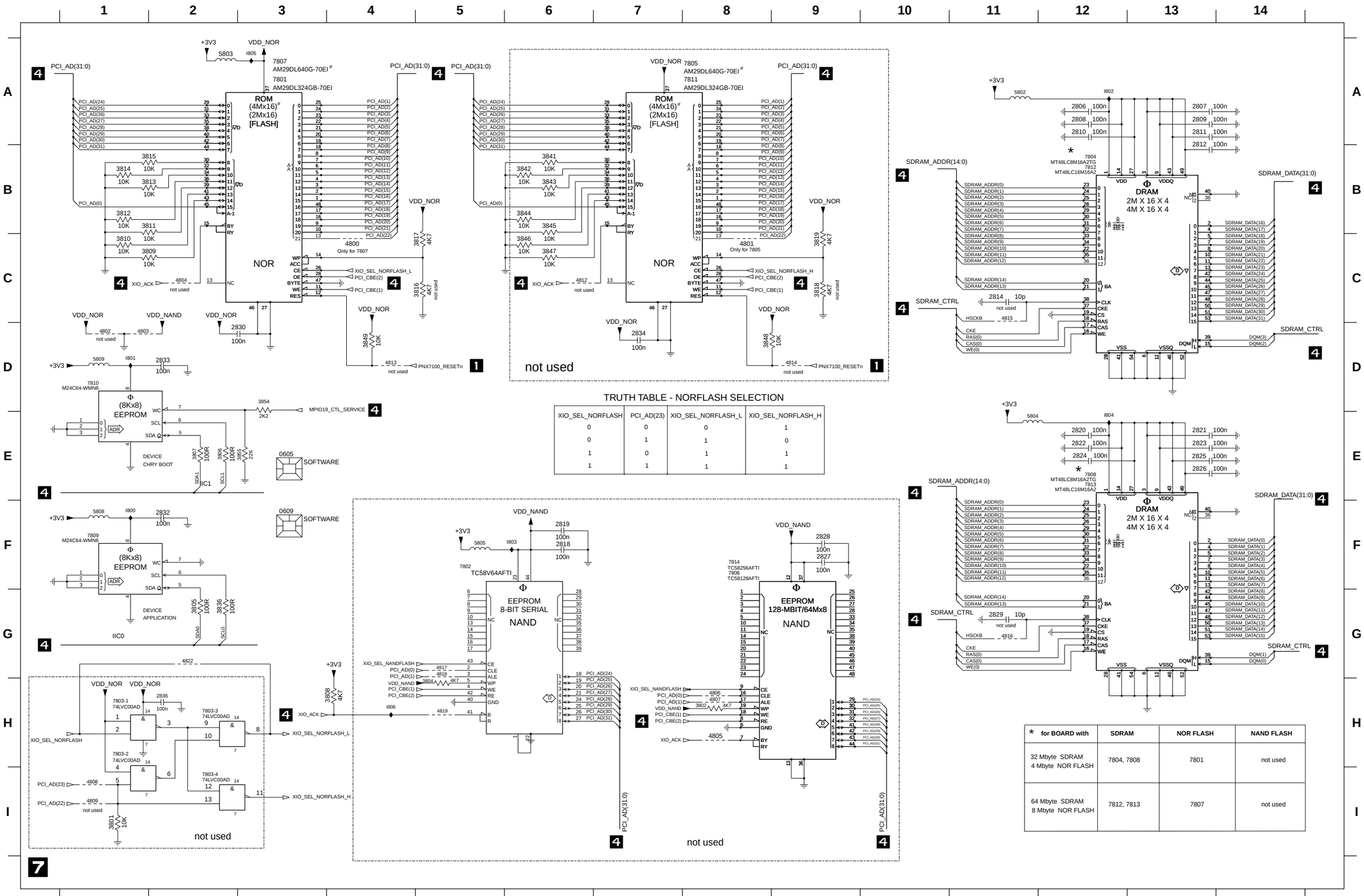

XIO_SEL_NORFLASH	PCI_AD(23)	XIO_SEL_NORFLASH_L	XIO_SEL_NORFLASH_H
0	0	0	1
0	1	1	0
1	0	1	1
1	1	1	1

* for BOARD with	SDRAM	NOR FLASH	NAND FLASH
32 Mbyte SDRAM 4 Mbyte NOR FLASH	7804, 7808	7801	not used
64 Mbyte SDRAM 8 Mbyte NOR FLASH	7812, 7813	7807	not used

0605 E3
0609 F3
2806 A12
2807 A13
2808 A12
2809 A13
2810 A12
2811 A13
2812 B13
2814 C11
2818 F6
2819 F6
2820 E12
2821 E13
2822 E12
2823 E13
2824 E12
2825 E13
2826 E13
2827 F9
2828 F9
2829 G11
2830 D3
2832 F2
2833 D2
2834 D7
2836 H2
3801 I1
3802 H8
3804 H5
3805 G2
3806 E2
3807 E2
3808 H4
3809 C2
3810 C1
3811 B2
3812 B1
3813 B2
3814 B1
3815 B2
3816 C5
3817 C5
3818 C9
3819 C9
3836 G2
3841 B6
3842 B6
3843 B6
3844 B6
3845 B6
3846 C6
3847 C6
3848 D8
3849 D4
3854 D3
3855 E3
4800 C4
4801 C8
4802 D1
4803 D1
4804 C2
4805 H8
4806 H8
4807 H8
4808 I1
4809 I1
4812 C6
4813 D4
4814 D9
4815 C11
4816 G11
4817 G5
4818 G5
4819 H5
4822 G2
5802 A11
5803 A2
5804 E11
5805 F5
5808 F1
5809 D1
7801 A3
7802 F5
7803-1 H1
7803-2 H1
7803-3 H2
7803-4 I2
7804 B12
7805 A8
7806 F8
7807 A3
7808 E12
7809 F1
7810 D1
7811 A8
7812 B12
7813 E12
7814 F8
I800 F1
I801 D1
I802 A12
I803 F6
I804 E12
I805 A3
I806 H4

DIGITAL BOARD Chrysalis PPS E4 AV3+

VIP_ANALOG_VIDEO_INPUT

ANALOG BOARD INTERFACE VIDEO IN/OUT

ANALOG BOARD INTERFACE AUDIO IN/OUT

DIGITAL_AUDIO

DAIO for IOE only

VIDEO_OUT

SPDIF_OPT_IN

SPDIF_COAX_IN

SPDIF_OUT

MPIO7_MUTE_LVn

only for NAFTA & C1

delete for I2C

for I2C only

delete for NAFTA_C1

only for NAFTA_C1 or YUV interlaced

only for NAFTA&C1

only for EU or NAFTA&C3

not used

delete for IOE

delete for 2004

for 2004 only

A: DC, 500mV/Div 10µs/Div

A: DC, 200mV/Div 10µs/Div

1900 E14	5913 H4
1901 G13	5914 F10
1904 A14	5915 F10
2036 I5	5916 H13
2046 G12	7900 E9
2900 A4	7901 F9
2901 A4	7902 G11
2902 A1	7903 I10
2903 A4	7904 D2
2904 A4	7905 H10
2905 B4	7906 F8
2906 B4	7907 F2
2907 B1	7908 G2
2908 C1	7909 G8
2909 C1	7910-1 F6
2910 I12	7910-2 H6
2911 D1	7911 I2
2912 E3	7912 I8
2913 E8	F1902 G12
2914 F1	F1903 G12
2915 F2	F1904 G12
2916 F4	F1907 F12
2917 F5	F1909 F12
2918 G11	F1911 F12
2919 G11	F1912 F12
2920 I11	F1914 E12
2921 G12	F1916 E12
2922 G11	F1918 E12
2923 G9	F1920 D12
2924 G3	F1921 D12
2925 G8	F1922 E13
2926 G1	I900 B12
2927 G2	I901 B12
2928 G4	I902 F2
2929 G5	I903 G2
2930 H14	I904 H2
2931 I14	I905 F1
2932 C4	I906 G1
2933 H3	I907 H1
2934 H8	I908 A12
2935 I1	I909 B14
2936 I2	I910 A12
2937 I4	I911 A12
2938 D2	I912 B12
2939 I14	I913 C12
2940 I14	I914 C12
2941 I11	I915 C12
2942 I12	I916 D12
2943 G13	I917 D12
3087 E11	I918 G9
3901 A2	I919 H14
3902 A2	I920 I14
3903 I11	I921 F4
3904 I12	I922 F5
3905 C2	I923 G4
3906 C2	I924 G5
3907 D3	I925 H4
3908 D2	I926 H5
3909 D11	I927 A2
3910 D11	I928 B2
3911 E2	I929 A1
3912 E2	I930 B1
3913 E11	I931 C1
3914 E11	I932 C1
3915 G10	I933 D1
3916 F11	I934 A3
3917 F11	I935 A3
3918 F1	I936 A3
3919 F2	I937 A3
3920 F4	I938 B3
3921 F8	I939 B3
3922 F11	I940 D2
3923 G11	I943 E7
3924 G1	I944 H7
3925 H9	
3926 G2	
3927 G4	
3928 G8	
3929 I11	
3930 I1	
3931 I2	
3932 I4	
3933 I8	
3934 F2	
3935 F5	
3936 G2	
3937 G5	
3938 I2	
3939 I5	
3940 G9	
3941 E6	
3942 F6	
3943 F6	
3944 F6	
3945 F6	
3946 F6	
3947 G6	
3948 H6	
3949 H6	
3950 I6	
3951 I6	
3952 I6	
3953 I6	
3954 I6	
3955 I12	
3956 I12	
4900 H12	
4901 H12	
4902 G10	
4903 D7	
4904 E6	
4905 F7	
4906 H6	
4907 I7	
4908 G13	
4909 G13	
4910 G13	
4911 E10	
4912 G10	
5901 G9	
5902 H13	
5903 I13	
5904 I11	
5905 E10	
5906 E10	
5907 F4	
5908 F1	
5909 F10	
5910 G1	
5911 G4	
5912 H1	

DIGITAL BOARD Chrysalis PPS E4 AV3+

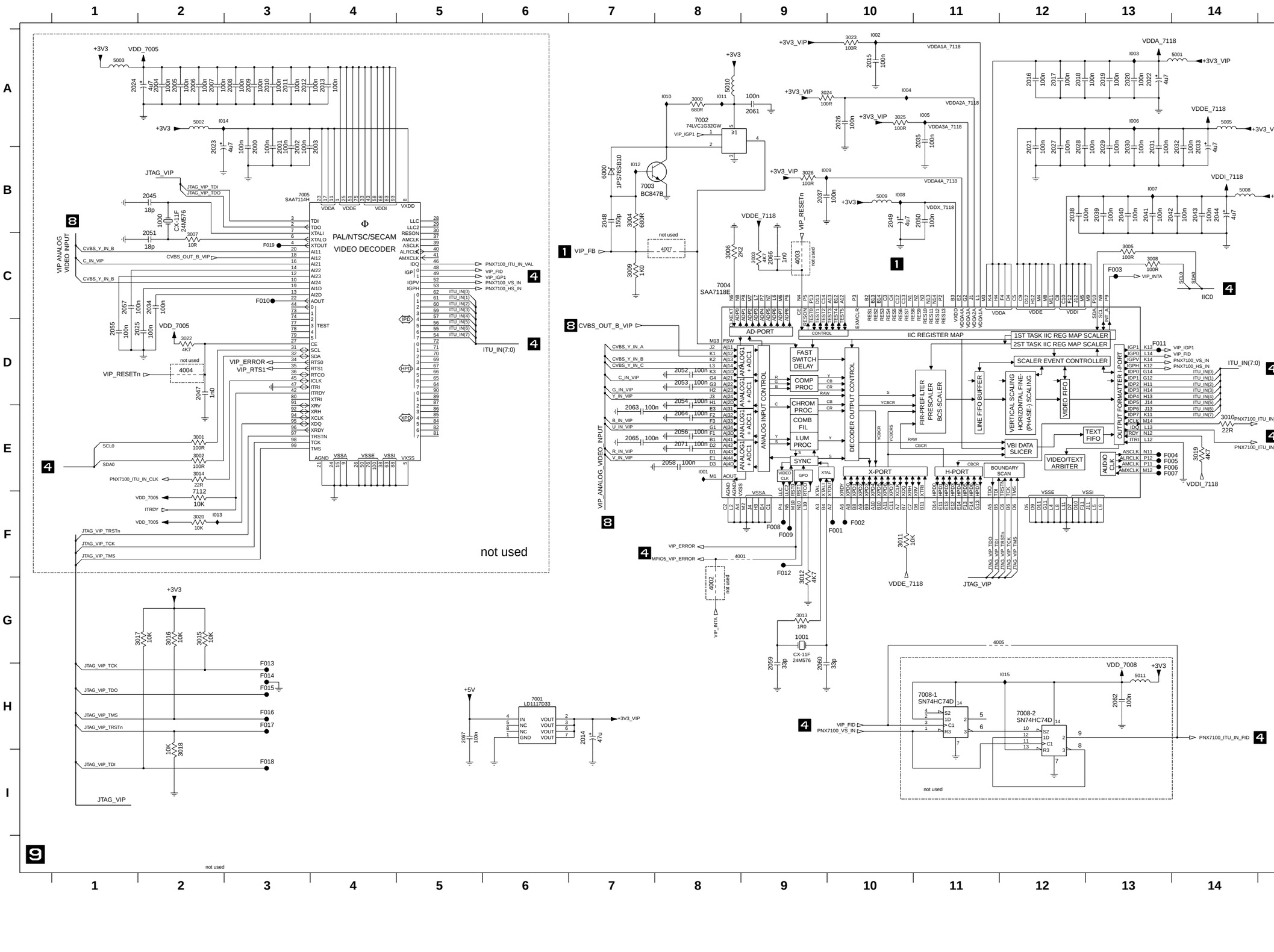

1000 B2 F011 D13
1001 G9 F012 F9
2000 B3 F013 H3
2001 B3 F014 H3
2002 B3 F015 H3
2003 B4 F016 H3
2004 A2 F017 H3
2005 A2 F018 I3
2006 A2 F019 C3
2007 A2 I001 E8
2008 A3 I002 A10
2009 A3 I003 A13
2010 A3 I004 A10
2011 A3 I005 A11
2012 A3 I006 A13
2013 A4 I007 B13
2014 H7 I008 B10
2015 A10 I009 B9
2016 A12 I010 A8
2017 A12 I011 A8
2018 A12 I012 B7
2019 A13 I013 F2
2020 A13 I014 A2
2021 B12 I015 H12
2022 A13
2023 B2
2024 A1
2025 D2
2026 A10
2027 B12
2028 B12
2029 B13
2030 B13
2031 B13
2032 B14
2033 B14
2034 C2
2035 A11
2037 B9
2038 B12
2039 B13
2040 B13
2041 B13
2042 B14
2043 B14
2044 B14
2045 B2
2047 D2
2048 B7
2049 B10
2050 B11
2051 C2
2052 D8
2053 D8
2054 D8
2055 D1
2056 E8
2057 C1
2058 E8
2059 H9
2060 H9
2061 A9
2062 H13
2063 D7
2064 E8
2065 E7
2066 C9
2067 H5
2071 E8
3000 A8
3001 E2
3002 E2
3003 C9
3004 B7
3005 C13
3006 C8
3007 C2
3008 C13
3009 C7
3010 E14
3011 F10
3012 G9
3013 G9
3014 E2
3015 G2
3016 G2
3017 G2
3018 I2
3019 E14
3020 F2
3022 D2
3023 A10
3024 A9
3025 A10
3026 B9
4001 F8
4002 G8
4003 C9
4004 D2
4005 G11
4007 C8
5001 A14
5002 A2
5003 A1
5005 A14
5008 B14
5009 B10
5010 A8
5011 H13
6000 B7
7001 H6
7002 A8
7003 B7
7004 C8
7005 B3
7008-1 H11
7008-2 H12
7112 F2
F001 F10
F002 F10
F003 C13
F004 E13
F005 E13
F006 E13
F007 E13
F008 F9
F009 F9
F010 C3

DIGITAL BOARD Chrysalis PPS E4 AV3 plus / top view

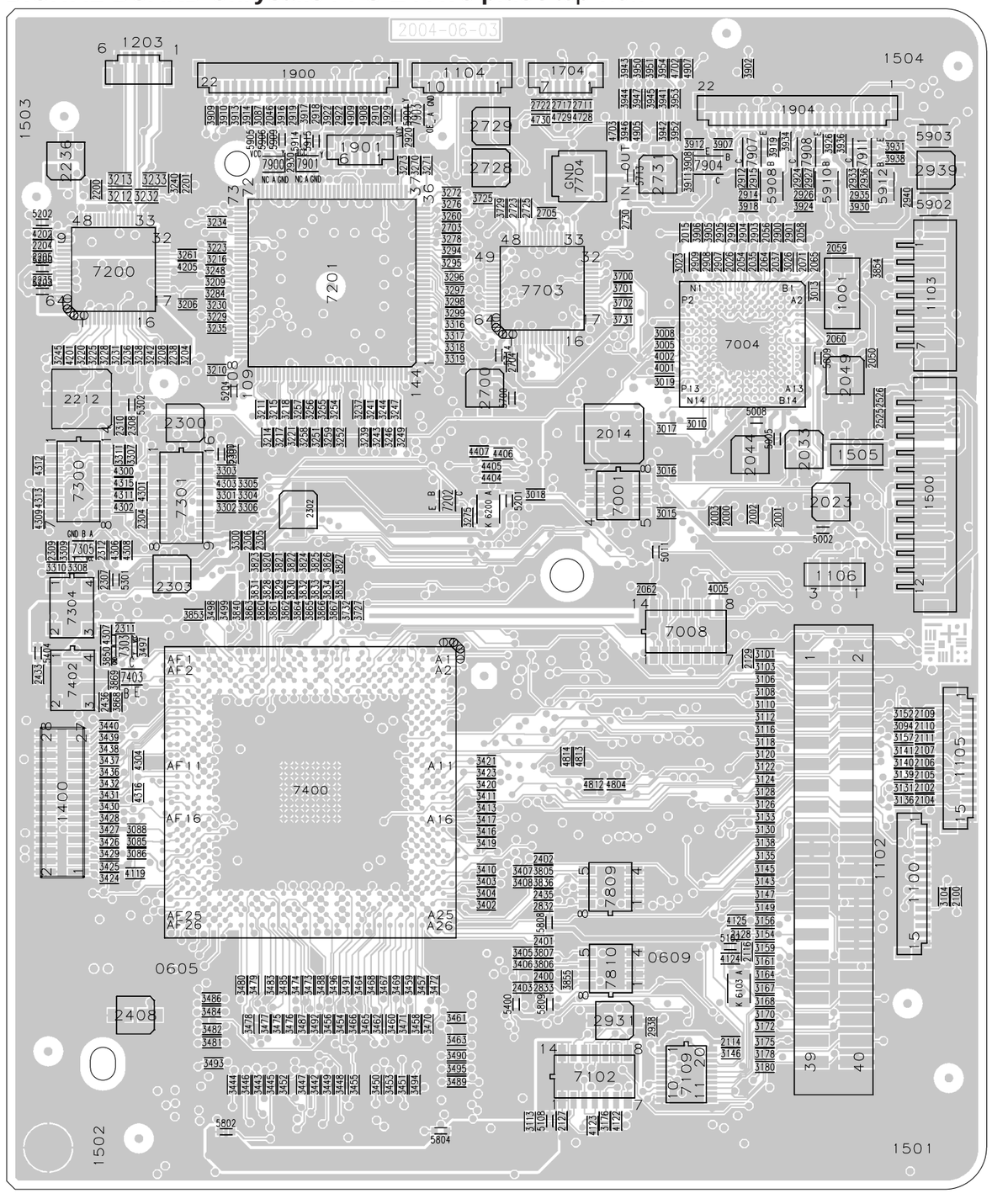

Digi board Chrysalis LX7500R, 191004

0605	D1	2901	A3	3223	A1	3450	D2	3913	A1	5914	A1				
0609	D3	2903	A3	3225	B1	3451	D2	3914	A1	5915	A2				
1001	A3	2904	A3	3228	B1	3452	D1	3916	A1	6103	D3				
1100	C3	2905	A3	3229	B1	3453	D2	3917	A2	6200	B2				
1102	C3	2906	A3	3230	A1	3454	D2	3918	A3	7001	B3				
1103	A3	2907	A3	3231	B1	3455	D2	3919	A3	7004	B3				
1104	A2	2908	A3	3232	A1	3456	D2	3922	A2	7008	C3				
1105	C3	2909	A3	3233	A1	3457	D2	3924	A3	7102	D3				
1106	B3	2910	A2	3234	A1	3458	D2	3926	A3	7109	D3				
1203	A1	2912	A3	3235	B1	3459	D2	3929	A2	7200	A1				
1400	C1	2914	A3	3236	B1	3460	D2	3930	A3	7201	A2				
1500	B3	2915	A3	3237	B2	3461	D2	3931	A3	7202	B2				
1505	B3	2918	A2	3238	B1	3462	D2	3934	A3	7300	B1				
1704	A2	2919	A1	3239	B2	3463	D2	3936	A3	7301	B1				
1900	A1	2920	A2	3240	A1	3464	D2	3938	A3	7303	C1				
1901	A2	2922	A2	3241	B2	3465	D2	3941	A3	7304	C1				
1904	A3	2924	A3	3242	B1	3466	D2	3942	A3	7305	B1				
2000	B3	2926	A3	3243	B2	3467	D2	3943	A3	7400	C2				
2001	B3	2927	A3	3244	B2	3468	D2	3944	A3	7402	C1				
2002	B3	2930	A1	3245	B1	3469	D2	3945	A3	7403	C1				
2003	B3	2931	D3	3246	B2	3470	D2	3946	A3	7703	A2				
2014	B3	2933	A3	3247	B2	3471	D2	3947	A3	7704	A2				
2015	A3	2935	A3	3248	A1	3472	D2	3950	A3	7809	C3				
2023	B3	2936	A3	3249	B2	3473	D2	3951	A3	7810	D3				
2026	A3	2938	D3	3251	B2	3474	D1	3952	A3	7900	A1				
2033	B3	2939	A3	3252	B2	3475	D1	3953	A3	7901	A2				
2035	A3	2940	A3	3254	B2	3476	D1	3954	A3	7903	A2				
2037	A3	3005	B3	3255	B2	3477	D1	4001	B3	7904	A3				
2044	B3	3008	B3	3256	B2	3478	D1	4002	B3	7907	A3				
2046	A1	3010	B3	3257	B1	3479	D1	4005	B3	7908	A3				
2049	B3	3013	A3	3258	B2	3480	D1	4119	C1	7911	A3				
2050	B3	3015	B3	3259	B2	3481	D1	4122	D3						
2054	A3	3016	B3	3260	A2	3482	D1	4123	D2						
2056	A3	3017	B3	3261	A1	3483	D1	4124	D3						
2058	A3	3018	B2	3270	A2	3484	D1	4125	D3						
2059	A3	3019	B3	3271	A2	3485	D1	4201	B1						
2060	B3	3023	A3	3272	A2	3486	D1	4202	A1						
2062	B3	3026	A3	3273	A2	3487	D2	4205	A1						
2064	A3	3085	C1	3275	B2	3488	D2	4300	B1						
2065	A3	3086	C1	3276	A2	3489	D2	4301	B1						
2071	A3	3087	A1	3278	A2	3490	D2	4302	B1						
2100	D3	3088	C1	3284	A1	3491	D2	4303	B1						
2102	C3	3094	C3	3294	A2	3492	D2	4304	C1						
2104	C3	3101	C3	3295	A2	3493	D1	4306	B1						
2105	C3	3103	C3	3296	A2	3494	D2	4307	C1						
2106	C3	3104	D3	3297	A2	3495	D2	4308	B1						
2107	C3	3106	C3	3298	A2	3496	D2	4309	B1						
2109	C3	3108	C3	3299	B2	3497	C1	4311	B1						
2110	C3	3110	C3	3300	B1	3498	C1	4312	B1						
2111	C3	3112	C3	3301	B1	3499	C1	4313	B1						
2114	D3	3113	D2	3302	B1	3700	A3	4315	B1						
2116	D3	3116	C3	3303	B1	3701	A3	4316	C1						
2127	D2	3118	C3	3304	B1	3702	A3	4404	B2						
2128	D3	3120	C3	3305	B1	3725	A2	4405	B2						
2129	C3	3122	C3	3306	B1	3727	C2	4406	B2						
2200	A1	3124	C3	3307	B1	3729	A2	4407	B2						
2201	A1	3126	C3	3308	B1	3731	B3	4702	A3						
2204	A1	3128	C3	3309	B1	3732	C2	4703	A3						
2205	A1	3130	C3	3310	B1	3805	C2	4728	A2						
2212	B1	3131	C3	3311	B1	3806	D2	4729	A2						
2235	A1	3133	C3	3316	B2	3807	D2	4730	A2						
2236	A1	3135	C3	3317	B2	3820	B1	4804	C3						
2238	B1	3136	C3	3318	B2	3821	B1	4812	C3						
2300	B1	3138	C3	3319	B2	3822	B1	4813	C2						
2301	B1	3139	C3	3402	D2	3823	B1	4814	C2						
2302	B2	3140	C3	3403	C2	3824	B2	4905	A3						
2303	B1	3141	C3	3404	C2	3825	B2	4907	A3						
2304	B1	3143	C3	3405	D2	3826	B2	4908	A2						
2305	B1	3145	C3	3406	D2	3827	B2	4909	A2						
2306	B1	3146	D3	3407	C2	3828	B1	5002	B3						
2307	B1	3147	C3	3408	C2	3829	B1	5005	B3						
2308	B1	3149	D3	3410	C2	3830	B1	5008	B3						
2309	B1	3152	C3	3411	C2	3831	B1	5009	B3						
2310	B1	3154	D3	3413	C2	3832	B2	5011	B3						
2311	C1	3156	D3	3416	C2	3833	B2	5102	D3						
2312	B1	3157	C3	3417	C2	3834	B2	5108	D2						
2400	D2	3159	D3	3419	C2	3835	B2	5200	A1						
2401	D2	3161	D3	3420	C2	3836	C2	5201	B2						
2402	C2	3164	D3	3421	C2	3840	C1	5202	A1						
2403	D2	3167	D3	3423	C2	3850	C1	5203	A1						
2408	D1	3168	D3	3424	C1	3853	C1	5204	B1						
2433	C1	3170	D3	3425	C1	3854	A3	5300	B1						
2435	C2	3172	D3	3426	C1	3855	D2	5301	B1						
2436	C1	3175	D3	3427	C1	3860	C1	5302	B1						
2525	B3	3176	D3	3428	C1	3861	C1	5400	D2						
2526	B3	3178	D3	3429	C1	3862	C1	5404	C1						
2700	B2	3180	D3	3430	C1	3863	C1	5700	B2						
2703	A2	3204	B1	3431	C1	3864	C1	5713	A3						
2704	B2	3206	A1	3432	C1	3865	C2	5714	B2						
2705	A2	3208	B1	3436	C1	3866	C2	5802	D1						
2711	A2	3209	A1	3437	C1	3867	C2	5804	D2						
2717	A2	3210	B1	3438	C1	3868	C1	5808	D2						
2722	A2	3211	B1	3439	C1	3869	C1	5809	D2						
2723	A2	3212	A1	3440	C1	3902	A3	5902	A3						
2725	A2	3213	A1	3442	D2	3905	A3	5903	A3						
2728	A2	3214	B1	3443	D1	3906	A3	5904	A2						
2729	A2	3215	B1	3444	D1	3907	A3	5905	A1						
2730	A3	3216	A1	3445	D1	3908	A3	5906	A1						
2731	A3	3217	B1	3446	D1	3909	A1	5908	A3						
2832	D2	3218	B1	3447	D2	3910	A1	5909	A1						
2833	D2	3220	B1	3448	D2	3911	A3	5910	A3						
2900	A3	3221	B1	3449	D2	3912	A3	5912	A3						

DIGITAL BOARD Chrysalis PPS E4 AV3 plus / bottom view

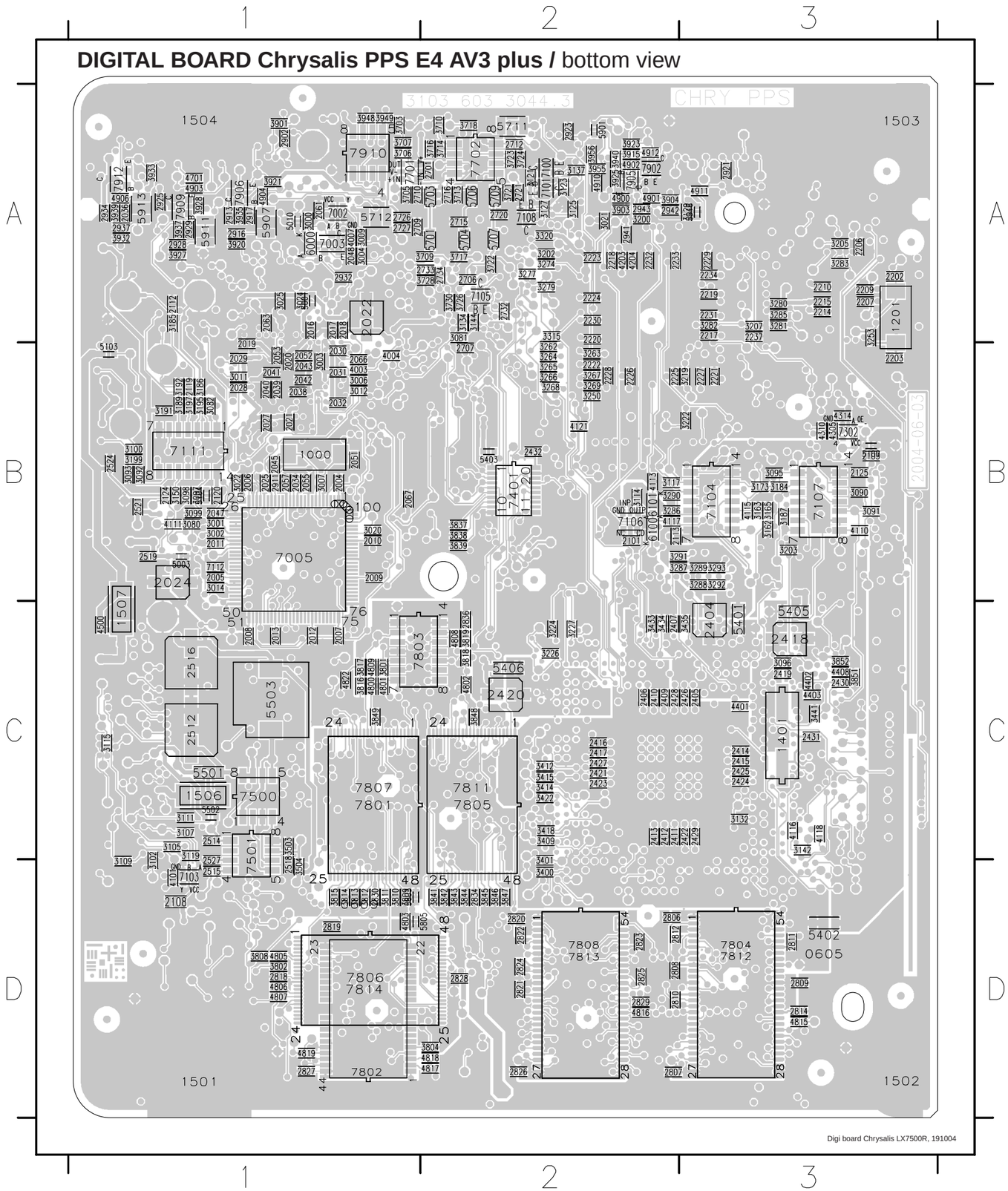

1000	B1	2421	C2	3099	B1	3724	A2	5010	A1
1201	A3	2422	C3	3100	B1	3726	A2	5100	B3
1401	C3	2423	C2	3102	D1	3728	A2	5103	B1
1506	C1	2424	C3	3105	C1	3730	A2	5104	B1
1507	C1	2425	C3	3107	C1	3801	C1	5401	C3
2004	B1	2426	C3	3109	D1	3802	D1	5402	D3
2005	B1	2427	C2	3111	C1	3804	D2	5403	B2
2006	B1	2428	C2	3114	B2	3808	D1	5405	C3
2007	C1	2429	C3	3115	C1	3809	D1	5406	C2
2008	C1	2430	C3	3117	B2	3810	D1	5501	C1
2009	B1	2431	C3	3119	C1	3811	D1	5502	C1
2010	B1	2432	B2	3121	A2	3812	D1	5503	C1
2011	B1	2512	C1	3123	A2	3813	D1	5701	A2
2012	C1	2514	C1	3125	A2	3814	D1	5703	A2
2013	C1	2515	D1	3127	A2	3815	D1	5704	A2
2016	A1	2516	C1	3129	A3	3816	C1	5706	A2
2017	A1	2518	D1	3132	C3	3817	C1	5707	A2
2018	A1	2519	B1	3134	A2	3818	C2	5709	A2
2019	B1	2521	B1	3137	A2	3819	C2	5711	A2
2020	B1	2524	B1	3142	C3	3837	B2	5712	A1
2021	B1	2527	D1	3144	A2	3838	B2	5803	D1
2022	A1	2701	A2	3150	B1	3839	B2	5805	D2
2024	B1	2706	A2	3162	B3	3841	D2	5901	A2
2025	B1	2707	B2	3163	B3	3842	D2	5907	A1
2027	B1	2709	A1	3165	B3	3843	D2	5911	A1
2028	B1	2710	A1	3173	B3	3844	D2	5913	A1
2029	B1	2712	A2	3184	B3	3845	D2	5916	A3
2030	B1	2715	A2	3185	A1	3846	D2	6000	A1
2031	B1	2716	A2	3186	B1	3847	D2	6100	B2
2032	B1	2720	A2	3187	B3	3848	C2	6101	B2
2034	B1	2721	A2	3189	B1	3849	C1	7002	A1
2036	A1	2726	A1	3191	B1	3851	C3	7003	A1
2038	B1	2727	A1	3192	B1	3852	C3	7005	B1
2039	B1	2732	A2	3195	B1	3901	A1	7100	A2
2040	B1	2733	A2	3197	B1	3903	A2	7101	A2
2041	B1	2734	A2	3199	B1	3904	A2	7103	D1
2042	B1	2806	D2	3200	A2	3915	A2	7104	B3
2043	B1	2807	D2	3202	A2	3920	A1	7105	A2
2045	B1	2808	D2	3203	B3	3921	A1	7106	B2
2047	B1	2809	D3	3205	A3	3923	A2	7107	B3
2048	A1	2810	D2	3207	A3	3925	A2	7108	A2
2051	B1	2811	D3	3219	B3	3927	A1	7111	B1
2052	B1	2812	D2	3222	B3	3928	A1	7112	B1
2053	B1	2814	D3	3224	C2	3932	A1	7302	B3
2055	B1	2818	D1	3226	C2	3933	A1	7401	B2
2057	B1	2819	D1	3227	C2	3935	A1	7500	C1
2061	A1	2820	D2	3250	B2	3937	A1	7501	C1
2063	A1	2821	D2	3253	A3	3939	A1	7701	A1
2066	B1	2822	D2	3262	B2	3940	A2	7702	A2
2067	B1	2823	D2	3263	B2	3948	A1	7801	C1
2101	B2	2824	D2	3264	B2	3949	A1	7802	D1
2103	B3	2825	D2	3265	B2	3955	A2	7803	C1
2108	D1	2826	D2	3266	B2	3956	A2	7804	D3
2112	A1	2827	D1	3267	B2	4003	B1	7805	C2
2113	B2	2828	D2	3268	B2	4004	B1	7806	D1
2119	B1	2829	D2	3269	B2	4007	A1	7807	C1
2120	B1	2830	D1	3274	A2	4101	D1	7808	D2
2124	B1	2834	D2	3277	A2	4110	B3	7811	C2
2125	B3	2836	C2	3279	A2	4111	B1	7812	D3
2202	A3	2902	A1	3280	A3	4113	B2	7813	D2
2203	B3	2911	B1	3281	A3	4115	B3	7814	D1
2206	A3	2913	A1	3282	A3	4116	C3	7902	A2
2207	A3	2916	A1	3283	A3	4117	B2	7905	A2
2209	A3	2917	A1	3285	A3	4118	C3	7906	A1
2210	A3	2921	A3	3286	B2	4121	B2	7909	A1
2214	A3	2923	A2	3287	B2	4203	A2	7910	A1
2215	A3	2925	A1	3288	B3	4204	A2	7912	A1
2217	A3	2928	A1	3289	B3	4305	B3		
2218	A2	2929	A1	3290	B2	4310	B3		
2219	A3	2932	A1	3291	B2	4314	B3		
2220	A2	2934	A1	3292	B3	4401	C3		
2221	B3	2937	A1	3293	B3	4402	C3		
2222	B2	2941	A2	3315	A2	4403	C3		
2223	A2	2942	A2	3320	A2	4408	C3		
2224	A2	2943	A2	3400	D2	4500	C1		
2225	B2	3000	A1	3401	D2	4701	A1		
2226	B2	3001	B1	3409	C2	4800	C1		
2227	B3	3002	B1	3412	C2	4801	C1		
2228	B2	3003	B1	3414	C2	4802	C2		
2229	A3	3004	A1	3415	C2	4803	D1		
2230	A2	3006	B1	3418	C2	4805	D1		
2231	A3	3007	B1	3422	C2	4806	D1		
2232	A2	3009	A1	3433	C2	4807	D1		
2233	A2	3011	B1	3434	C2	4808	C2		
2234	A3	3012	B1	3435	C3	4809	C1		
2237	A3	3014	B1	3441	C3	4815	D3		
2404	C3	3020	B1	3503	C1	4816	D2		
2405	C3	3021	A2	3504	D1	4817	D2		
2406	C2	3022	B1	3703	A1	4818	D2		
2407	C2	3024	A1	3705	A1	4819	D1		
2409	C2	3025	A1	3706	A1	4822	C1		
2410	C2	3080	B1	3707	A1	4900	A2		
2411	C2	3081	A2	3709	A2	4901	A2		
2412	C2	3082	B1	3710	A2	4902	A2		
2413	C2	3090	B3	3713	A2	4903	A1		
2414	C3	3091	B3	3714	A2	4904	A1		
2415	C3	3092	B1	3716	A2	4906	A1		
2416	C2	3093	B1	3717	A2	4910	A2		
2417	C2	3095	B3	3718	A2	4911	A3		
2418	C3	3096	C3	3721	A2	4912	A2		
2419	C3	3097	B1	3722	A2	5001	A1		
2420	C2	3098	B1	3723	A2	5003	B1		

DIGITAL BOARD / TESTPOINT OVERVIEW

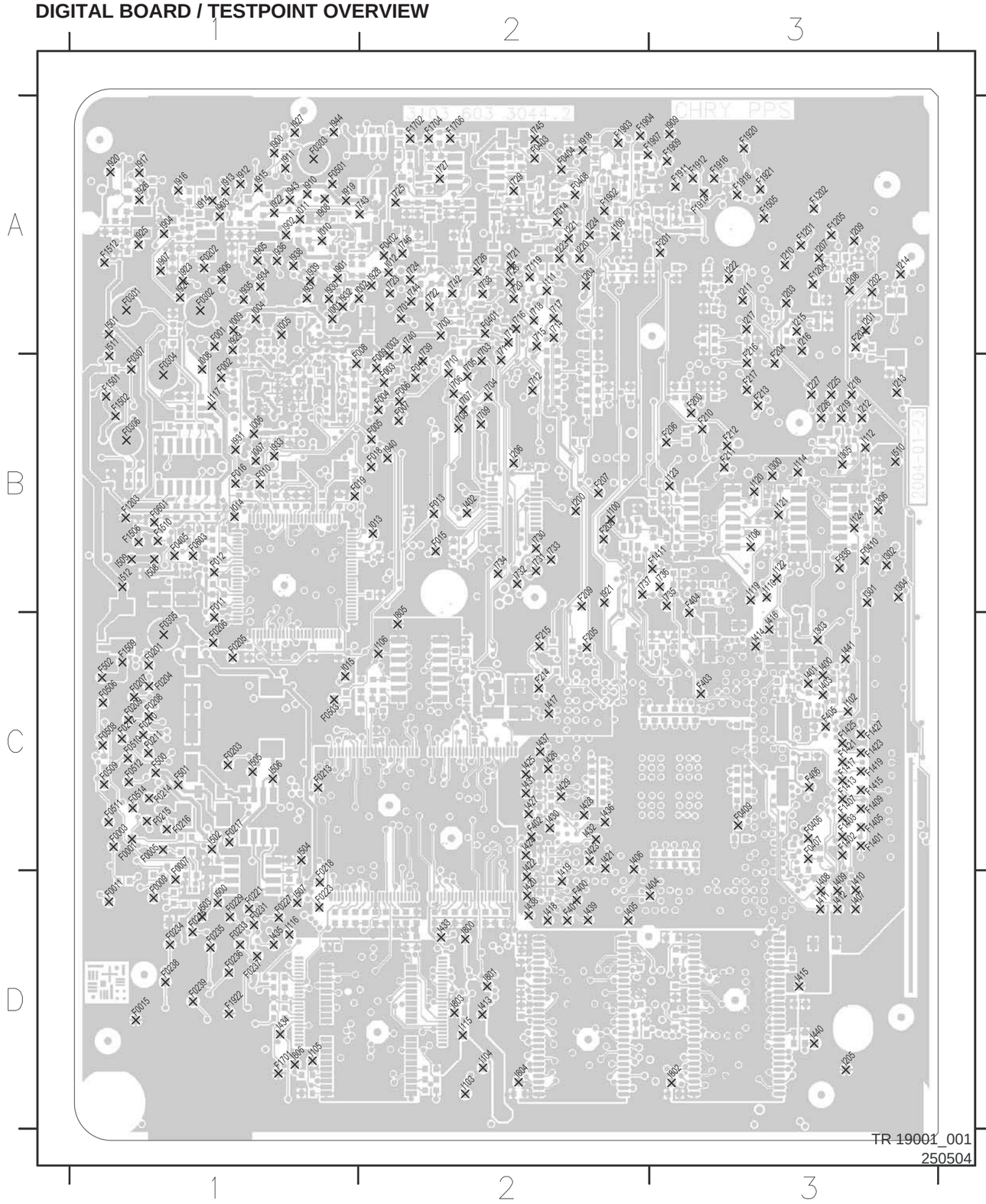

F0001 C1
F0003 C1
F0005 C1
F0007 D1
F0009 D1
F001 A1
F0011 D1
F0015 D1
F002 B1
F003 B2
F004 B2
F005 B2
F006 B2
F007 B2
F008 B1
F009 B2
F010 B1
F011 C1
F012 B1
F013 B2
F014 A2
F015 B2
F016 B1
F017 B2
F018 B2
F019 B1
F0201 C1
F0202 A1
F0203 C1
F0204 C1
F0205 C1
F0206 C1
F0207 C1
F0208 C1
F0209 C1
F0210 C1
F0211 C1
F0212 C1
F0213 C1
F0214 C1
F0215 C1
F0216 C1
F0217 C1
F0218 D1
F0221 D1
F0223 D1
F0225 D1
F0227 D1
F0229 D1
F0231 D1
F0233 D1
F0234 D1
F0235 D1
F0236 D1
F0237 D1
F0238 D1
F0239 D1
F0301 A1
F0302 A1
F0303 B1
F0304 B1
F0305 C1
F0306 B1
F0307 B1
F0401 A2
F0402 A2
F0403 A2
F0404 A2
F0405 B1
F0406 C3
F0407 C3
F0408 A2
F0409 C3
F0410 B3
F0501 A1
F0503 C1
F0506 C1
F0508 C1
F0509 C1
F0510 C1
F0511 C1
F0512 C1
F0514 C1
F0601 B1
F0603 B1
F1201 A3
F1202 A3
F1203 B1
F1204 A3
F1205 A3
F1401 C3
F1402 C3
F1403 C3
F1405 C3
F1407 C3
F1409 C3
F1411 B3
F1413 C3
F1415 C3
F1417 C3
F1419 C3
F1421 C3
F1423 C3
F1425 C3
F1427 C3
F1501 B1
F1502 B1
F1505 A3
F1506 B1
F1509 C1
F1510 B1
F1512 A1
F1701 D1
F1702 A2
F1704 A2
F1706 A2
F1902 A2
F1903 A2
F1904 A2
F1907 A2
F1909 A3
F1911 A3
F1912 A3
F1914 A3
F1916 A3
F1918 A3
F1920 A3
F1921 A3
F1922 D1
F200 B3
F201 A3
F203 A3
F204 B3
F205 C2
F206 B3
F207 B2
F208 B2
F209 B2
F210 B3
F211 B3
F212 B3
F213 B3
F214 C2
F215 C2
F216 B3
F217 B3
F400 D2
F401 D2
F402 C2
F403 C3
F404 C3
F405 C3
F406 C3
F500 C1
F501 C1
F502 C1
F936 B3
I001 A1
I002 A1
I003 B2
I004 A1
I005 A1
I006 B1
I007 B1
I008 B1
I009 A1
I010 A1
I011 A1
I012 A2
I013 B2
I014 B1
I015 C1
I100 B2
I102 C3
I103 D2
I104 D2
I105 D1
I106 C2
I108 B3
I109 A2
I110 B3
I111 A2
I112 B3
I114 B3
I115 D2
I116 D1
I117 B1
I119 B3
I120 B3
I121 B3
I122 B3
I123 B3
I124 B3
I200 B2
I201 A3
I202 A3
I203 A3
I204 A2
I205 D3
I206 B2
I207 A3
I208 A3
I209 A3
I210 A3
I211 A3
I212 B3
I213 B3
I214 A3
I215 A3
I216 B3
I217 A3
I218 B3
I219 B3
I220 A2
I221 A2
I222 A3
I223 A2
I224 A2
I225 B3
I226 B3
I227 B3
I300 B3
I301 B3
I302 B3
I303 C3
I304 B3
I305 B3
I306 B3
I400 C3
I401 C3
I402 B2
I403 C3
I404 D3
I405 D2
I406 C2
I407 D3
I408 D3
I409 D3
I410 D3
I411 D3
I412 D3
I413 D2
I414 C3
I415 D3
I416 C3
I417 C2
I418 D2
I419 D2
I420 D2
I421 C2
I422 D2
I423 C2
I424 C2
I425 C2
I426 C2
I427 C2
I428 C2
I429 C2
I430 C2
I431 C2
I432 C2
I433 D2
I434 D1
I435 D1
I436 C2
I437 C2
I438 D2
I439 D2
I440 D3
I441 C3
I441 C4
I500 D1
I501 A1
I502 C1
I503 D1
I504 C1
I505 C1
I506 C1
I507 D1
I508 B1
I509 B1
I510 B3
I511 B1
I512 B1
I700 A2
I701 A2
I703 B2
I704 B2
I705 B2
I706 B2
I707 B2
I708 B2
I709 B2
I710 B2
I711 B2
I7119 A2
I712 B2
I713 A2
I714 A2
I715 A2
I716 A2
I717 A2
I718 A2
I720 A2
I721 A2
I722 A2
I723 A2
I724 A2
I725 A2
I726 A2
I727 A2
I728 A2
I729 A2
I730 B2
I731 B2
I732 B2
I733 B2
I734 B2
I735 B3
I736 B3
I737 B2
I738 A2
I739 B2
I740 B2
I742 A2
I743 A2
I743 A5
I744 A2
I744 A5
I745 A2
I745 A5
I746 A2
I746 A5
I800 D2
I801 D2
I802 D3
I803 D2
I804 D2
I805 C2
I806 D1
I900 A1
I901 A1
I902 A1
I903 A1
I904 A1
I905 A1
I906 A1
I907 A1
I908 A1
I909 A3
I910 A1
I911 A1
I912 A1
I913 A1
I914 A1
I915 A1
I916 A1
I917 A1
I918 A2
I919 A1
I920 A1
I921 B2
I922 A1
I923 A1
I924 A1
I925 A1
I926 A1
I927 A1
I928 A2
I929 B1
I930 A1
I931 B1
I932 A1
I933 B1
I934 A1
I935 A1
I936 A1
I937 A1
I938 A1
I939 A1
I940 B2
I940 B5
I943 A1
I943 A6
I944 A1
I944 A6

8. Alignments

8.1 Alignment Instructions Analog Board

Test equipment:

1. Dual-trace oscilloscope
   Voltage range : 0.001 ~ 50 V/div
   Frequency : DC ~ 50 MHz
   Probe : 10:1, 1:1

2. DVM (Digital voltmeter)

3. Frequency counter

4. Sinus generator
   Sinus : 0 ~ 50 MHz

5. Test pattern generator

How to read the adjustment procedures:

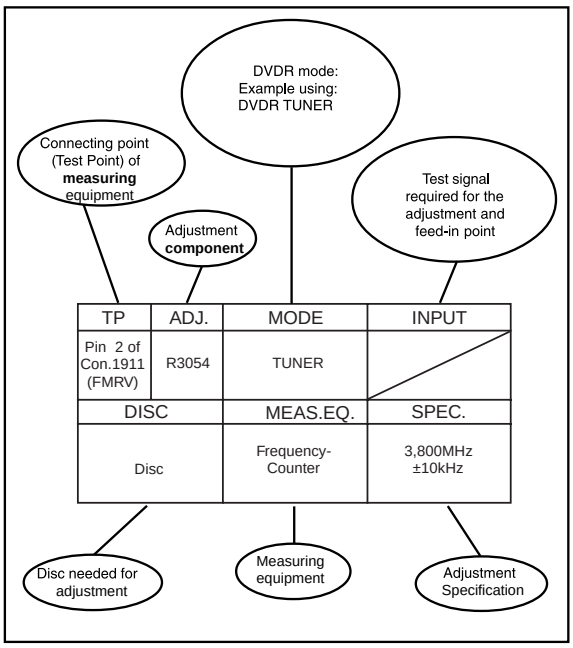

Front End (FV)

Service tasks after replacement of IC 7710, coil L5710 and L5711:

1 AFC Adjustment:

Purpose: Correct adjustment of demodulator AFC - circuit

Symptom, if incorrectly set:
Bad or disturbed TV channel reception.

PAL - AFC adjustment [5711]:

TP	ADJ.	MODE	INPUT
IC 7710 Pin 17 (F708)	L5711	TUNER	38,9MHz 500mV$_{pp}$ at Tuner 1705, Pin 11 (F710, IF-out)
DISC		MEAS.EQ.	SPEC.
		DC Voltmeter Frequ. Generator	2,5V ±0,1V

Storage in NVRAM via command mode interface of DSW:
After adjustment, the AFC reference value has to be stored in the NVRAM.
This reference value is 256 * measured voltage/Ucc. Ucc is 5.0V.
Store the reference value via command 732 , followed by the ref. value.
Example: DD:> 732 128

2 HF - AGC adjustment [3724]:

Service tasks after replacement of IC 7710:

Purpose: Set amplifier control.

Symptom, if incorrectly set:
Picture jitter if input level is too low and picture distortion if input level is too high.

TP	ADJ.	MODE	INPUT
Tuner 1705 Pin 11 (F710, IF-out)	R3707	Set tuned to channel 25 503.25 MHz	5mV(74dBµV) on aerial input PAL white picture, audio IF on, no modulation
DISC		MEAS.EQ.	SPEC.
		Oscilloscope Video Pattern Generator	500mV$_{pp}$ +/-0.5dB (use a 10:1 probe)

3 Attenuating the 40.4 MHz [5710]: (SECAM only)

Service tasks after replacement of coil 5710:

Purpose: To attenuate the band I carrier rests.

Symptom, if incorrectly set:
Bad picture quality when the filter attenuates the picture carrier (38.9MHz).

TP	ADJ.	MODE	INPUT
OFW 1701 Pin 1 (F709)	L5710	TUNER	40.4 MHz, 200mV$_{rms}$ at Tuner 1705, Pin 11 (F710, IF-out)
DISC		MEAS.EQ.	SPEC.
		Oscilloscope, Sinus Generator, Counter	adjust minimum amplitude

If the adjustment is correct the signal at pin 1 of OFW [1701] must be smaller than the input signal amplitude by at least 6 dB.

Figure 8-1

8.2 Reprogramming Procedure of NVM on the Microprocessor Sub PCB

The NVM, item 7808, on the Microprocessor Sub board contains the following factory settings:
1. Clock correction factor
2. AFC reference value
3. Slash version

The settings 1,2 and 3 are stored in the NVM during the production of the analogue board.
The slash version is stored at the end of the production line of the set.
In case of failure, the NVM must be replaced by an empty device. By way of commands via the Diagnostic Software or via ComPair, the factory settings must be restored in the NVM.

8.2.1 Clock Correction Adjustment

To guarantee an exact function of the real time clock, an adjustment of the clock frequency is possibe. The adjustment value is stored in the NVM.
Procedure:
- put the set in service command mode
- execute command 1117 to initiate that a signal with 32768 Hz is available on pin 3 of connector 1988
  example:
  DD:>1117
- measure the frequency fmeas of the Clock Crystal with an accuracy of 0.1 Hz.
- Calculate the parameter to be entered: 32768/fmeas * 106
- Normally the parameter must be between 999902 and 1000097. If the parameter and therefore the frequency of the crystal is outside this range, the crystal must be replaced.
- Execute command 1118 with the parameter as input
  example:
  DD:>1118 1000023

8.2.2 AFC Reference Voltage Tuner

This function stores the reference voltage for the tuner in the NVM. Before this value can be stored, the AFC adjustment, described in the adjustment instructions of the analogue board, must be carried out.
Procedure:
- Adjust AFC circuit
- Calculate the reference value
- Execute command 1119 and use the calculated reference value as parameter example: DD:>1119 128

8.2.3 Slash Version

The slash version is stored with command 1217, followed by the slash version as parameter.
The slash versions used in LX7500R are the following:
- LX7500R/01: 35
- LX7500R/05: 36
- LX7500R/04: 39
- LX7500R/69: 40

Example:
DD:>1217 35

Reset of Slash Version
Use command 1115 to reset the analogue board to the default setting.
Procedure:
- Put the set in DSW command mode
- Execute command 1115 with the following parameters:
  DD:> 1115 w 0xAE 2 0xD0 0x00
- Leave the DSW command mode and start up the set in application mode
  No background is visible on the TV screen. The analogue board is ready to accept the appropriate slash version

8.3 Rework Procedure IEEE Unique Number

8.3.1 Scope:

The procedure describes how to upgrade sets with a unique number after repair. This unique number is stored in the NVRAM (item 7809) of the digital board at the end of the production line.
This procedure is only valid or necessary when:
- The digital board is replaced
- NVRAM on the digital board is replaced
- NVRAM is cleared

In all other cases the repaired set retains its unique number.
The procedure defines several means to re-assure the unique number depending on the possibilities of repair or the state the faulty set is in.

8.3.2 Handling:

State of original (defective) board:
1. The digital board starts up in Diagnostics Mode: follow procedure A to retrieve the valid unique number
2. The digital board does NOT start up in Diagnostics Mode: follow procedure B.

8.3.3 Procedure A

1. Connect defective digital board to PC via serial cable (3122 785 90017)
2. start up hyper terminal or any other serial terminal via the correct settings (DSW command mode interface)
3. read out existing unique number via nucleus 1208
   example:
   DD:> 1208
   120800: DV Unique ID = 00D7A1FC6C Test OK @
4. note read out
5. program new digital board via nucleus 1207
   example:
   DD:> 1207 00D7A1FC6C 120700: Test OK @

The set has now the original unique number

8.3.4 Procedure B

1. Note the serial number of the set example:
   VN050136130156
   – VN = production centre (VN....Szekesfehervar).
     According to UAW-500: V=22 and N=14

- 05 = change code (this is not used for this calculation)
- 01 = YEAR
- 36 = Production WEEK
- 130156 = Lot and SERIAL number

2. Calculate the unique number: this number always exists out of 10 hexadecimal numbers.
3. First 5 numbers: First we calculate a decimal number according to the formula below:
   35828*YEAR + 676* WEEK + 26*V + N+ 8788
   The figures are fixed, YEAR + WEEK + factory code (V+ N) are variable
   Example: 35828*01+676*36+26*22+14+8788 = 69538 (decimal)
   Then we translate the decimal number to a hexadecimal number. example: 69538 (decimal)= 10FA2 (hex)
4. Last 5 numbers: The last 5 numbers exist out of the Lot and SERIAL number according formula below:
   serial nr + 1 * 100000
   Example: 130156 + 100000 = 230156 (decimal)
   230156 (decimal) = 3830C (hex)
5. Program new digital board via nucleus or 1207. Therefore we use the 10 hexadecimal numbers we calculated above: example:
   >1207 10D7A3830C
   12700: Test OK @

The set has now its original unique number

8.4 Alignments after replacing the Boot EEPROM 7810

The NVM, item 7810, on the Digitalt Board Chrysalis contains the “Diversity String” that tells the software during startup which hardware version is present.
The setting is stored in the NVM during the production of the Digital Board Chrysalis
In case of a fault the NVM must be replaced by a programmed device containing the boot script.
Via the Diagnostic Software the Diversity String is stored with command 1226, followed by the Diversity String as parameter.

The diversity strings used in HDRW720/0x are the following:

ChrysalisString
Board
Type
CHRY F EF3_AV3 44424849179020014546335
F41563300340303000001010200010100400808 00

Example:
DD:> 1226 44424849179020014546335F41
56330034030300000101020001010040080800

122600
Test OK @

With command 1228 the settings can be displayed.

9. Circuit-, IC descriptions and list of abbreviations

9.1 Display Board

9.1.1 Microcontroller

The core element of the Display Control unit is the microcontroller TMP87CH74AF [7103]. The TMP87CH74AF is an 8 bit microcontroller fitted with 32kB ROM and 1kB RAM. It requires 5V supply and is responsible for the following functions:

- Interface to Central Controller-P
- Evaluation of the keyboard matrix
- Decoding the remote control commands from the infra-red receiver
- Activation and control of the local display
- Heater voltage generation

The 8 MHz resonator (Pos. 1110) generates the system clock. The reset is generated by the CC-P via “POR_DC”-signal where the transistor [7104] is used as a level-shifter from 3V3 to 5V.

9.1.2 Interface to the Central Control µP

The communication to the main microcontroller (CC) on the P-Sub-PCB is done via Combi board microcontroller 7107, where the TMP87CH74AF acts in slave-mode.
An additional wire (“INT”-line) to the I^2C interface is used to signal the Central controller that data are ready, e.g. when a key has been pressed.

9.1.3 Evaluation of the keyboard matrix

There are 8 different keys on the display board. A resistor network is used to generate a specific direct voltage value, depending on the pressed key. Via the resistors 3107 and 3102 on the analog/digital (A/D) ports (7103 pin 36 and 37) the evaluation is done.

9.1.4 IR receiver and signal evaluation

The IR receiver [7107] contains a selectively controlled amplifier as well as a photo-diode. The photo-diode changes the received infra red transmission (approx. 940nm) to electrical pulses, which are then amplified and demodulated. On the output of the IR receiver [7107], a pulse sequence with TTL-level, which corresponds to the envelope curve of the received IR remote control command, can be measured. This pulse sequence is fed into the controller for further processing via port TC1 [7103, pin20].

9.1.5 Vacuum Fluorescence Display

The VFD “BJ900GNK” [POS 7100] is fully controlled by the microcontroller. The µC also includes the driving stages. Only two additional drivers [POS 7101 and 7102] are necessary for the grids 8 and 9 because of their large size.

9.1.6 VFD Heater Voltage Generator

The circuit around POS [7106, 7108 and 7109] is used to generate a proper AC-Voltage for the filament of the VFD. For this the microcontroller generates an appropriate rectangular signal with 50% duty-cycle and a frequency of 30 kHz at pin 19. Pos. [5104] and [2113] are acting as a resonance-circuit. Via Zener-Diode (POS[6100]) and resistors [3119, 3122 and 3123] the two heater-pins of the VFD (“FIL1” and “FIL2”) are clamped so that the grids and segments can be fully switched off.

9.1.7 REC-LED

The REC-LED-ring is made with 3 red LED, controlled via pin 3 (only for flashing) and pin 12 for on/off switching, of the microcontroller. The POS [7105] is used as a driver for the led.

9.1.8 STANDBY-LED

The STANDBY led is a red led and controlled from the pin 14 from the microcontroller. The POS [7110] is used as a driver for the led.

9.1.9 TRAY-LED

There are 6 leds (chip) necessary to illuminate the tray, these 6 leds are located on a little sub-pcb connected over a 4 pin connector POS [1911] from the DC-print. The leds are controlled from pin 11 of the microcontroller.

9.2 Microcontroller Sub Board (UP SUB Board)

9.2.1 General

This small PCB is directly soldered in on top of the Analogue-Board.
It is used with no diversity in all three different basic versions (Europe, NAFTA and APAC-Pal). Only the software being loaded into the external Flash-memory is not the same.

9.2.2 Microcontroller

The main part of the Sub-PCB is the central controller (CC) µP [7804] TMP91CW12AF, which is a 16-bit CPU with 128kBROM and 4kB RAM.
It works with a 3V3 supply and a system clock of 24,576MHz [1801].
The 3V3-supply is made out of the “5VSTBY” by the circuit around [7816].
After connecting the set to the mains (power-up) the IC [7806] generates a reset pulse. This signal (“IPOR”) is directly fed to first priority interrupt input (pin 63) for power fail detection and also to the Reset-Input of the CC (Pin30) via [7802], which is necessary to generate a reset only during power-up. In case of power fail pin 30 of the CC must be kept high (3V3).
The internal memory of the CC is too small for all necessary demands. Therefore an external Flash-ROM [7805] with 1MByte in size and a RAM [7803] with 128kByte are necessary. Both parts are connected to the µP via a parallel address-/data-bus. The lower eight bus-lines (AD0 to AD7) are multiplexed by [7801] and the “ALE”-signal of the CC.
For updating of the software the external Flash-ROM can be reprogrammed by the µP. During this process [7807] is switched on by the “WE”-signal.
When no mains is connected, the CC is supplied via Gold-Cap [2816] during the power backup period. The diode [6802] prevents unwanted current consumption of other components.
The internal ROM of the µP holds the program code for the Real-Time-Clock. Only the microprocessor is supplied by the backup cell, not the external memories and the µP operates in a low frequency mode with the clock crystal [1805] only (32.768 kHz). To adjust the clock the frequency can be measured at pin 87 of the µP in a special test-mode.

9.2.3 Control-Interfaces

The CC is communicating with the digital board via a serial connection, which operates at a speed of 19,4 kbit/s (“D_DATA”-, “A_DATA”, “D_RDY”- and “A_RDY”-signal on

[1986]). By generating a high level on pin 16 of the CC the digital PCB can be reset (inverter [7817] in between).
Most of the other parts are controlled by the µP via I2C-bus ("SDA"- and "SCL"-signal). The FETs [7821] and [7822] are used for adaptation of the 3V3-level on CC-side to the components supplied with 5V.
The CC can also reset the display-board-µP by pulling pin 39 to high.
The transistor [7819] acts as a level shifter for the "INT"-signal. In the European sets a bi-directional interface is established between the recording unit and the TV device at pin 10 of the Scart ("P50"-line/Easy Link). The processing is done via pin 14 (output) and pin 38 (input) of the CC and the circuit around [7813], [7814] and [7815].

9.2.4 EEPROM

The EEPROM M24C16 [7808] is an electrical erasable and programmable, non-volatile memory. The EEPROM stores data specific to the device, such as the AFC-reference value of the Europe IF-part, the clock-correction-factor, etc. It is accessed by the µP via the I^2C-bus.

9.2.5 Sync Separator

To detect whether a video signal is available or not a separate IC [7825] is used to extract the sync information out of the video signal that is also routed to the digital board for recording. While on the input a low-pass-filter ([2823] and [3869]) limits the bandwidth an additional filter (circuit around [7818]) on the output avoids distortions. Afterwards the sync-signal is routed to pin11 of the CC.

9.3 Analog board Europe

9.3.1 General

This PCB consists out of the following parts:
– Frontend (Audio & Video)
– Input-/Output-switching
– Audio ADC- & DAC-processing
– VPS/PDC- and Text-Data slicer
– Analog Follow-Me Circuit

All functional groups are either controlled via I2C-bus or via separate signal lines by the Central-Controller on the µP-Sub-Board. This sub board is directly soldered in onto the analog PCB. During Stand-By mode of the set, several parts are not supplied (Tuner, MSP, ...). The microprocessor is running and maintains the clock of the set.
To avoid bus blockades the I2C-bus ("SCLSW" & "SDASW") to/from these units is decoupled via transistors [7419], [7420] from the general bus ("SCL" & "SDA").

9.3.2 Frontend

This unit is designed to support two basic versions, which are distinguished by a different assembly variant only (one for multistandard and the second for Pal-I only) and comprises the following parts:
- Tuner UV1316K [1705]
- IF amplifier & video demodulator IC TDA 9818/9817 [7710]
- Sound processor MSP3415G [7600]

Tuner and IF selection
The Tuner [1705] converts the RF-signal coming from the antenna input to an IF-signal. The tuner is fully controlled via I^2C-bus of the CC-µP. [1705] is also equipped with a "passive-loop-through" between antenna-in and -out to save power in stand-by of the set, when the complete part is not supplied.
The IF frequency of the video carrier is 38.9 MHz for all systems except SECAM L' (34,0 MHz).

A quasi-split audio system is used. Separate surface-wave filters (SAW) are required. [1701], [1703] for video, [1702] for audio. [1701] is switched into the signal path for DK/I-SECAM L/L' reception, if the signal "SFS_TS" is "high". In this case the switches [7704], [7705] are open and the diode [6703] is conducting. [1703] is switched into the signal path for BG reception ("SFS_TS" is "low"). Then the switch [7712] is open and the diode [6704] is conducting. For DK/I-SECAM L/L' reception, an additional circuit for suppressing the audio carrier of the adjacent channel is used. This circuitry is adjusted by coil [5710] for maximum suppression at 40.4MHz.

IF demodulator
The signal from the tuner and IF-selection circuit is processed by the demodulator IC TDA 9818/9817 [7710]. The signal "PSS" to pin 3 switches between demodulation of positive (SECAM only) or negative modulated video carriers. A QSS-audio-IF signal SIF1 is generated for demodulation in the sound processor [7600]. The audio-IF carrier is selected in the audio SAW filter [1702]. This filter is switched for SECAM L'. If the signal "SB1" is "high", the switch [7714] is closed and the diode [6705] is not conducting. For all other standards the diode [6705] is conducting and the switch [7714] is open. The output signal of this SAW filter is firstly processed in the TDA 9818. Audio carriers are converted from the tuner IF level to the audio IF position and further processed in the audio demodulator [7600]. The AFC coil [5711] on the TDA 9818/9817 is adjusted so that when a frequency of 38.90 MHz is supplied to the IF output of the tuner, the AFC voltage on pin 17 of [7710] is 2.5V. The setting of the picture carrier frequency for SECAM L in the TDA 9818 is achieved by connecting pin 7 of the IC via a resistor [3710] to ground. The switch [7701] and the signal "SB1" do this. The HF-AGC is set using the potentiometer [3724] so that, with a sufficiently large antenna input signal (74 dBµV), the voltage at the IF output of the tuner [1705] pin 11 is 500 mVpp. This setting must be carried out when the audio carrier is switched off. The demodulated video signal appears on pin 16 of [7710]. The AGC voltage at pin 4 is used to determine the antenna signal strength after a buffer [7717] with the signal "AGC" and an analog input port of the CC-P. The trap [1704] reduces the sound carrier remainders in the video for BG standards. The trap [1706] works in the same way for the Pal-I standard only. For all other standards the switch [7713] is closed via [7706] and "SFS_TS"-line set "high" to bypass this trap. In these cases the selectivity of the SAW filter [1701] is sufficient. The coil [5713] for non-BG standards realizes a frequency response correction. This correction is not desired for SECAM L' and therefore short-circuited by [7716] (signal SB1 is "high" and [7702] has on-status). The demodulated video signal "VFV" is available after the buffer and limiting stage for noise peaks [7711]. The FM-PLL demodulator function of TDA 9818 is not necessary and therefore deactivated by the resistor [3739].

Audio demodulator
The sound demodulation is done by the MSP3415 [7600], which is also fully controlled via I^2C-bus by the CC-P (determination of bandwidth, amplitude, standard, ...).The audio signals are available at pin 30 and pin 31 of [7600] and fed as "AFER"- & "AFEL"-line to the audio-I/O for further processing.

9.3.3 Audio routing

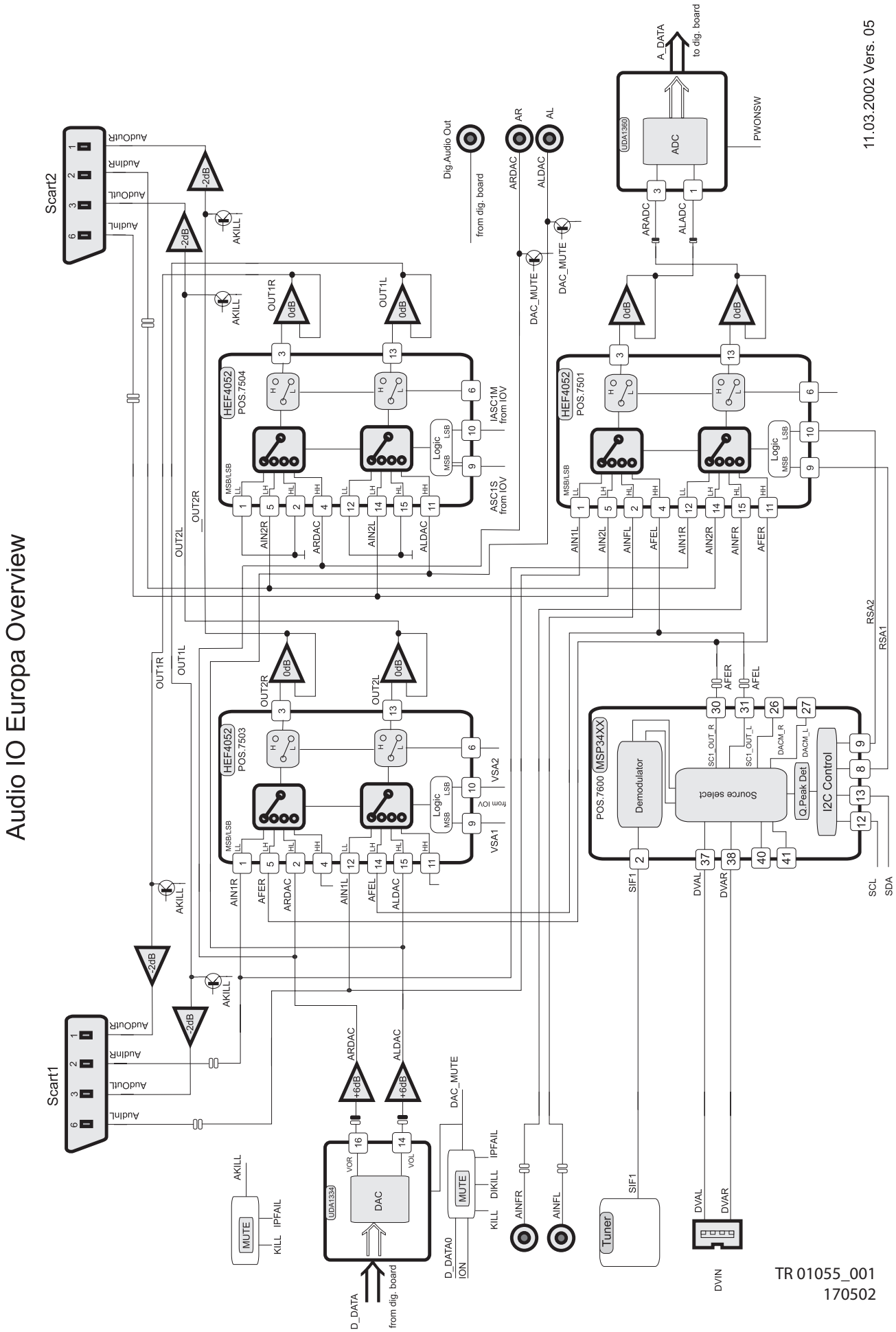

The processing of audio is always done in stereo (e.g. separate left- and right-channel) and the complete switching is realized by using HEF4052, which is a dual four-to-one multiplexer. In principle there are three independent selectors:

a) Scart 1-Output-Path:
Pos [7504] is used to select either Scart 2-Input ("AIN2L"/"AIN2R") or the signal directly from the audio DAC [7004] ("ALDAC"/"ARDAC") as the output source for Scart 1 ("AOUT1L"/"AOUT1R").
The control is done by means of the lines "ASC1S" coming from [7408] (IC [7408] acts as a port expander for the CC-P) and "IASC1M", which is directly coming from the CC. Pos [7412] is used for level adaptation (3V3 to 5V) for the "IASC1M"-signal.

b) Scart 2-Output-Path:
Pos [7503] selects between Scart 1-Input ("AIN1L"/"AIN1R"), signals from the internal frontend ("AFEL"/"AFER") via MSP [7600] or audio directly from the DAC [7004] ("ALDAC"/"ARDAC"). The outputs of this switch are routed to Scart 2 ("AOUT2L"/AOUT2R"). This switch is controlled via "VSA1"- and "VSA2"-line. These lines come from [7408] that is acting as a port expander for the CC-P.

c) Record-Path:
Pos [7501] selects either signals from Scart 1 ("AIN1L"/"AIN1R") or Scart 2 ("AIN2L"/"AIN2R") or Cinch-Front ("AINFL"/"AINFR") or the MSP [7600] ("AFEL"/"AFER") and routes to the audio ADC [7007] ("ALADC"/"ARADC") for record purposes. The switch is controlled via "RSA1"- and "RSA2"-signals. These signals come from the MSP [7600], which acts as a port expander of the CC-P. As there can also exist a fifth input in case of DV-In is present the corresponding analog audio signals from the DVIO-board are firstly routed via extra cable and connector [1960] to the MSP. The MSP acts as a preselector between audio from internal frontend or the DV-Input.
Each of these three selectors ([7501], [7503] & [7504]) has a separate Op-Amp on the output for level-adaptation-, performance- and line-driving-reasons. [7505-A & -B] for record, [7502-C & -D] for Scart 1-Output and [7502-A & -B] respectively for Scart 2. Every audio output line on the two Scart connectors can be "killed" (muted) by an extra transistors ([7506], [7508], [7509] &[7511]), which can be activated by the "AKILL"-line. This signal is generated by the circuit around [7404]/[7421] and is a combination of the "KILL"- from the CC-P and the "IPFAIL" of the power-supply-unit.

d) Line-Out-Path:
see chapter 9.3.5

e) Digital Audio Output-Path without IOE-Print:
Additionally to analog audio the set is also equipped with a digital output via cinch plug [1951]. The signal is generated on the dig. board and routed via audio interface cable and connector [1900] to the Ana-PCB. Here the "DAOUT"-line first passes a 6-fold inverter [7580] being used as a driver and for performance reasons (noise reduction, jitter, etc.). Afterwards a transformer [5580] is necessary to achieve the correct level and also to have a floating output with isolated ground before the signal is fed via [3580] to cinch plug [1951]. The capacitor [2580] performs an AC-coupling between connector- and set-ground.

f) Digital Audio Output-Path with IOE-Print:
In case of usage of the IOE-print the digital audio signals (input and output) are directly routed from digital board via interface cable to plug [1920] on the IOE-print. The "DAOUT"-line is splitted into two signals, one for cinch out and one for optical out. The signal to cinch out first passes a 5-fold inverter [7250] being used as a driver and for performance reasons (noise reduction, jitter, etc.). Afterwards a transformer [5250] is necessary to achieve the correct level and also to have a floating output with isolated ground before the signal is fed via [3259] to the cinch plug [1925] (or [1926-B] in case of option "DIGITAL IN"). The capacitors [2256] and [2266] perform an AC-coupling between connector- and set-ground. The second "DAOUT"-signal is fed directly via [3264] to the optical out transmitter [6255].

g) Digital Audio Input-Path with IOE-Print:
There are two possibilities for a digital audio input signal in case of option "DIGITAL IN". One is the signal from the optical receiver [6259], which is routed via [3269] directly to plug [1920]. The second is the signal from the cinch plug [1926-A]. This signal then passes an inverting amplifier [7250-6] and is then routed via [2253] to the plug [1920].

9.3.4 Audio ADC/DAC

a) PCBs with AD1852 [7004]:
The conversion of analog audio signals from the record-selector [7501] in the I/O ("ALADC"- & "ARADC") is done via UDA1361TS [7007]. This IC can process input signals up to 2Vrms by using external resistors [3047], [3053] in series to the input pins. As the level from the DVIO-Board is only 1Vrms a 6dB step can be performed by setting pin 7 of [7007] to 3,3V via [7008] and the "PWONSW"-line controlled by the CC-P to use the whole dynamic range of the ADC. All required clock signals are generated on the dig. board and only the audio data ("A_DAT"-line) are routed from Ana- to Dig.-PCB for further processing.
The transformation of dig. audio back into the analog domain is done by AD1852 [7004]. All necessary clock signals are coming from the dig. board and dig. audio data ("D_DATA0"-line) are converted into analog signals, which are available at pin 17/16 and pin 12/13 of [7004] as symmetrical signals. Afterwards an Op-Amp. [7003] (line driver & converting to unsymmetrical signal, gain = 1), which is also working as low-pass-filter to increase signal performance (noise, distortions,...), is passed. Then both signals ("ALDAC" & "ARDAC") are directly routed to the rear cinch output and also used in the audio-I/O for further processing. The DAC has also a mute possibility, which can be activated by setting pin 23 to 5V via [7001]. This mute is controlled either by the dig. board ("D_IKLL"-line) or the "IPFAIL"-signal from power-supply-unit (in this case it's the combination of "A_KILL" and "IPFAIL"). If the DAC is muted externally via pin 23 or if there are no audio data available (e.g. "D_DATA0"-line zero), the output pins 8 and 22 of the DAC change to high (+ 5V). These two signals are then combined with diode pos. 6006. After decoupling via [7009] the signal "DAC_MUTE" is used as mute signal for the mute transistors [7415], [7416] for cinch rear out.

b) PCBs with UDA1334BTS [7001]:
The conversion of analog audio signals from the record-selector [7501] in the I/O ("ALADC"- & "ARADC") is done via UDA1361TS [7005]. This IC can process input signals up to 2Vrms by using external resistors [3039], [3041] in series to the input pins. As the level from the DVIO-Board is only 1Vrms a 6dB step can be performed by setting pin 7 of [7005] to 3,3V via [7006] and the "PWONSW"-line controlled by the CC-P to use the whole dynamic range of the ADC. All required clock signals are generated on the dig. board and only the audio data ("A_DAT"-line) are routed from Ana- to Dig.-PCB for further processing.
The transformation of dig. audio back into the analog domain is done by UDA1334BTS [7001]. All necessary clock signals are coming from the dig. board and dig. audio data ("D_DATA0"-line) are converted into analog signals, which are available at pin 14 and pin 16 of [7001]. Afterwards an Op-Amp. [7002] (line driver & level adaptation, gain = 2) which is also working as low-pass-filter to increase signal performance (noise, distortions,...), is passed. Then both signals ("ALDAC" & "ARDAC") are directly routed to the rear cinch output and also used in the audio-I/O for further processing. The DAC has also a mute possibility, which can be activated by setting pin 8 to 3,3V via [7003]. This mute is controlled either by the dig. board

("D_IKLL"-line) or the "IPFAIL"-signal from power-supply-unit (in this case it's the combination of "A_KILL" and "IPFAIL").
In addition to that the DAC [7001] and the cinch outputs can be killed (muted) in case of "digital silence" by the circuit around [7008], [7009] and [7010], when no audio data are available (e.g. "D_DATA0"-line zero).
This function can be also activated via the "ION"-line (set to high during any stand-by mode). To avoid signal distortions (clipping) the mute transistors for cinch rear out [7415], [7416] are decoupled via [7011].

9.3.5 Video-routing

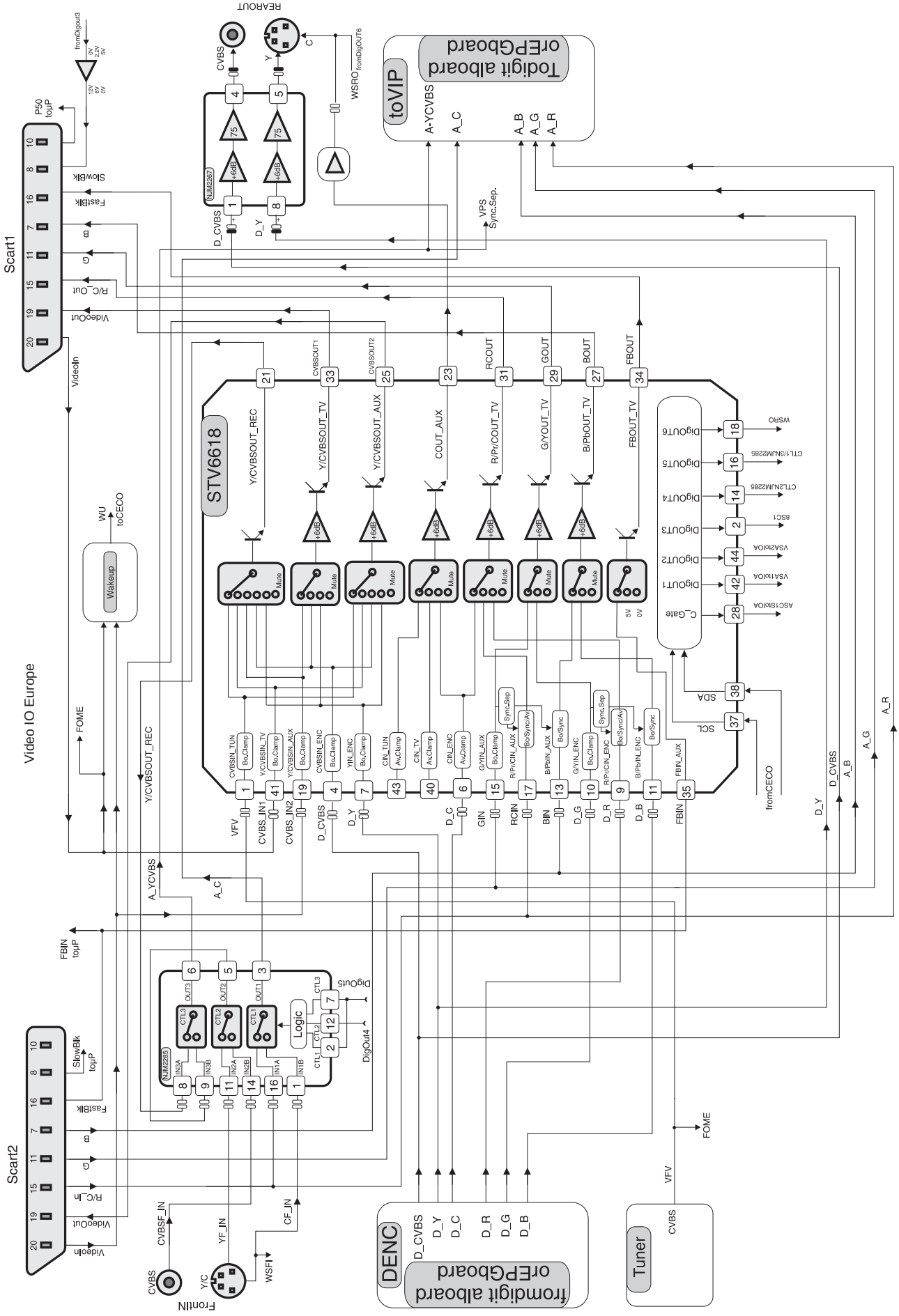

Figure 9-1

The Video-I/O-switching is basically realized by the matrix switch STV6618 [7408], which is controlled via I^2C-bus by the CC. All used outputs excluding pin 21 (Y/CVBS-REC) have a 6 dB-amplification and a 75 Ohms driver-stage inside. This IC includes also several digital outputs, which are used for switching purposes on the analog board. The record selector inside the switch selects between the CVBS from frontend ("VFV"), the input from Scart 1 ("YCVBSIN1") or the signal from Scart 2 ("YCVBSIN2"). Afterwards the signal passes another switch [7411] in which a selection between signals from the front or the preselected ones are done. The output signals of [7411] are fed as "A_YCVBS"- and "A_C"-line to the digital board for further processing.
To reduce the number of external presets there exists only one preset for CVBS- and Y/C-front. The set automatically detects between the two inputs depending on the presence of a video signal (sync separator-circuit on µP-sub-board) where Y/C has higher priority.
The R/G/B-inputs and the Fast-Blanking-line from Scart 2 are routed over the optional EPG board to the digital PCB. Also all other video signal from the analog board are routed through the EPG board if present. These signals are also available on the corresponding input-pins of the STV6618 to enable a loop-through in AV-Standby. In this mode the set has to behave like a cable between the two Scart-connectors. AV-Standby is activated either by a "high" level on pin 8 of Scart 2 ("active device is present") or by the "WU"-line (wake up). This signal is generated out of the circuit around [7401], [7402] & [7403] and will become "high" if there is a signal on pin 20 of Scart 1- or Scart 2. The detection of the input level on pin 8 of Scart 2 ("8SC2") is done via an analog input of the CC-P (less than 2V means inactive; 4,5V to 7V determines a source with 16:9 picture-ratio and greater than 9,5V is an active 4:3 source).
All signals from the digital board ("D_R", "D_G", "D_B", D_C", "D_Y" and "D_CVBS" are routed to the proper inputs of the STV6618 for amplification and driving purpose before they can be seen on the appropriate Scart outputs. In case of EPG the signals from the digital board are routed through the EPG board where the selection between digital board video or EPG OSD is taken.
The "D_CVBS"- and the "D_Y"-line are passing a 6 dB-amplifier and driver-IC [7410] and are then routed to the CVBS-Cinch and Y/C-out rear. The chroma signal for this Y/C out is coming from the STV6618 - which makes the 6 dB-amplification - and a driver [7406] in between.
The detection of the picture ratio information on the Y/C-input front is made by measuring the DC-level on the Chroma signal via analog input of the CC-P ("WSFI"-line). In case the level is higher than 3,5V the input signal is a 16:9 source. If the level is lower than 2,4V the picture ratio is 4:3.
For generation of the appropriate DC-voltage on the Y/C-out rear the "WSRO"-line is controlled via pin 18 of [7408] by the CC-P (Pin 18 set to low means 4:3, pin 18 set to high determines 16:9).
The control of the switching voltage (Pin 8 of Scart 1) is done via 3-level-pin (nr.2) of the STV6618 [7408] and the transistors [7405], [7407] & [7409]. A "low" on pin 2 of [7408] causes around 11V on pin 8-Scart 1 (e.g. source with 4:3 picture-ratio active). Medium level (2,5V) on pin 2 of the STV6618 generates medium level (approx. 6V) on pin 8-Scart 1 (e.g. active source with 16:9) and a "high" on pin 2 of the STV6618 pushes pin 8-Scart 1 to "low" (e.g. inactive).

9.3.6 VPS/PDC- and Text-Dataslicer

For extraction of relevant information out of the video signal (time controlled recording, net-name-identification, time- & date- download) the STV5348 [7931] is used. Data transfer to/ from the CC is fully done via I^2C-bus and the input signal for decoding is the same as the one being routed to the digital board for recording purposes ("A_YCVBS"-line).

9.3.7 Analog Follow-Me

This circuit compares the video signal from the internal frontend ("VFV") of the recorder with that one of the connected TV-set ("CVBS1"). The TV set delivers the signal via Scart-cable. A comparator [7934] and several additional parts ([7932], [7933], ...) are used to compare the two video signals. In case of both input signals are equal the output-line of this circuit ("FOME") is set to low. Detection is made via an input port of the CC-P.

9.4 Analog board NAFTA- & APAC-Pal- version

9.4.1 Frontend NAFTA

[1701] demodulates the video signal from the antenna input. Tuner and IF-demodulator are in one unit. Also a modulator is included in that part. The audio- and video-signal to the modulator are the ones from the selected input or the playback path of the set ("AMCO"- and "D_CVBS"-line). The control of the tuner is fully done via I^2C-bus by the CC-P. Via the "MSW"-signal and [7701] the modulator is switched on and off. In opposite to this the antenna loop-through is opened or closed.
In the APAC-Pal version POS [1700] is used with the difference that it demodulates only PAL- instead of NTSC-signals and has also no modulator. The "CSW_SSW" line switches the modulator between CH3 or CH4 in the NTSC-version.
To achieve optimal tuning the "AFC"-signal is detected by the CC via an analog input; [3701], [3702] and [3703] are used for level adaptation (5V to 3V3). Pos [7700] is a driver for the video signal.
The sound demodulation is realized by the MSP34x5 [7600], which is also fully controlled via I^2C-bus by the CC-P (determination of bandwidth, amplitude, standard, ...). The audio signals are available at pin 30 and pin 31 of [7600] and fed as "AFER"- & "AFEL"-line to the audio-I/O for further processing. As this PCB is used for different regions (NAFTA and APAC) either MSP3425 or MSP3415 are assembled.

9.4.2 Audio routing

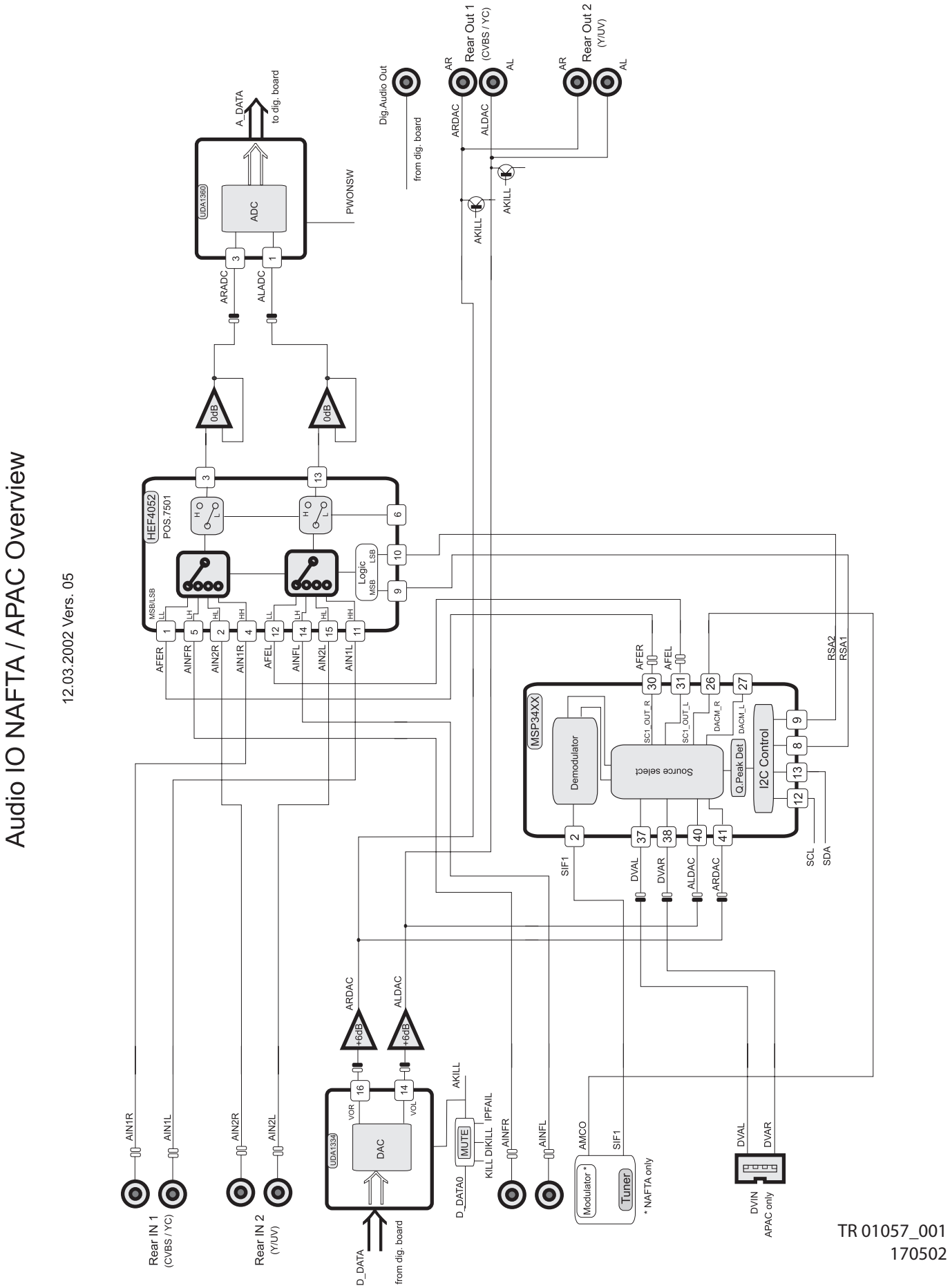

Figure 9-2

The sound processing is always done in stereo (that means separate left- and right-channel).

a) Record-Path:
The complete selection of the audio signal for recording is done by a HEF4052 [7501], which is a dual four-to-one multiplexer. The input lines for the selector [7501] are coming either from MSP [7600] (“AFEL”/”AFER”) or cinch rear in 1 (“AIN1L”/ ”AIN1R”) or cinch rear in 2 (“AIN2L”/”AIN2R”) or the cinch in front (“AINFL”/AINFR”). The [7501] is controlled via “RSA1”- and “RSA2”-signals coming from the MSP [7600]. The MSP acts as a port expander of the CC-P. The Op-Amp on the output [7504] is necessary for performance reasons and acts also as a driver. The selected signals “ARADC” and “ALADC” are directly fed to the Audio-ADC.
As there can exist also a fifth input in case of DV-In is present the corresponding analog audio signals from the DVIO-board are firstly routed via extra cable and connector [1960] to the MSP, which acts as a preselector between audio from internal frontend or the DV-Input.

b) Line-Out-Path:
see chapter 9.4.3

c) Digital Audio Output-Path without IOE-Print:
Additionally to analog audio the set is also equipped with a digital output via cinch plug [1951]. The signal is generated on the dig. board and routed via audio interface cable and connector [1900] to the Ana-PCB. Here the “DAOUT”-line first passes a 6-fold inverter [7580] being used as a driver and for performance reasons (noise reduction, jitter, etc.). Afterwards a transformer [5580] is necessary to achieve the correct level and also to have a floating output with isolated ground before the signal is fed via [3580] to cinch plug [1951]. The capacitors [2580], [2582] and [2583] perform an AC-coupling between connector- and set-ground.

d) Digital Audio Output-Path with IOE-Print:
see chapter 9.3.4.f

e) Digital Audio Input-Path with IOE-Print:
see chapter 9.3.4.g

9.4.3 Audio ADC/DAC

The conversion of analog audio signals from the record-selector [7501] in the I/O (“ALADC”- & “ARADC”) is done via UDA1361TS [7005]. This IC can process input signals up to 2Vrms by using an external resistor [3039], [3041] in series to the input pins. As the level from the DVIO-Board is only 1Vrms a 6dB step can be performed by setting pin 7 of [7005] to 3,3V via [7006] and “PWONSW”-line controlled by the CC-P to use the whole dynamic range of the ADC. All required clock signals are generated on the dig. board and only the audio data (“A_DAT”-line) are routed from Ana- to Dig.-PCB for further processing.
The transformation of dig. audio back to the analog domain is done by UDA1334BTS [7001]. All necessary clock signals are coming from the dig. board and dig. audio data (“D_DATA0”-line) are converted into analog signals, which are available at pin 14 and pin 16 of [7001]. Afterwards an Op-Amp. [7002] (line driver & level adaptation) which also works as a low-pass-filter to increase signal performance (noise, distortions,...) is passed. Then both signals (“ALDAC” & “ARDAC”) are directly routed to the rear cinch output. The DAC has also a mute possibility, which can be activated by setting pin 8 to 3,3V via [7003]. This mute is controlled either by the dig. board (“D_IKLL”-line) or the “IPFAIL”-signal from power-supply-unit. In addition to that the DAC [7001] and the cinch outputs can be killed (muted) in case of “digital silence” by the circuit around [7008], [7009] and [7010], when no audio data are available (e.g. “D_DATA0”-line zero).
The signals from the audio DAC part (“ARDAC”/”ALDAC”) are directly routed to both cinch rear outputs, which are connected in parallel. To avoid plops and any other audible noise on the output there is a mute-stage implemented [7509], [7511] for each channel. The activation is done via “AKILL”-line, which is a combination of the “KILL” from CC-P, “DAC_MUTE” from DAC-part and “IPFAIL” from the power-supply-unit. The circuit around [6430], [6431], [7430] and [7404] generates this signal.

9.4.4 Video-routing

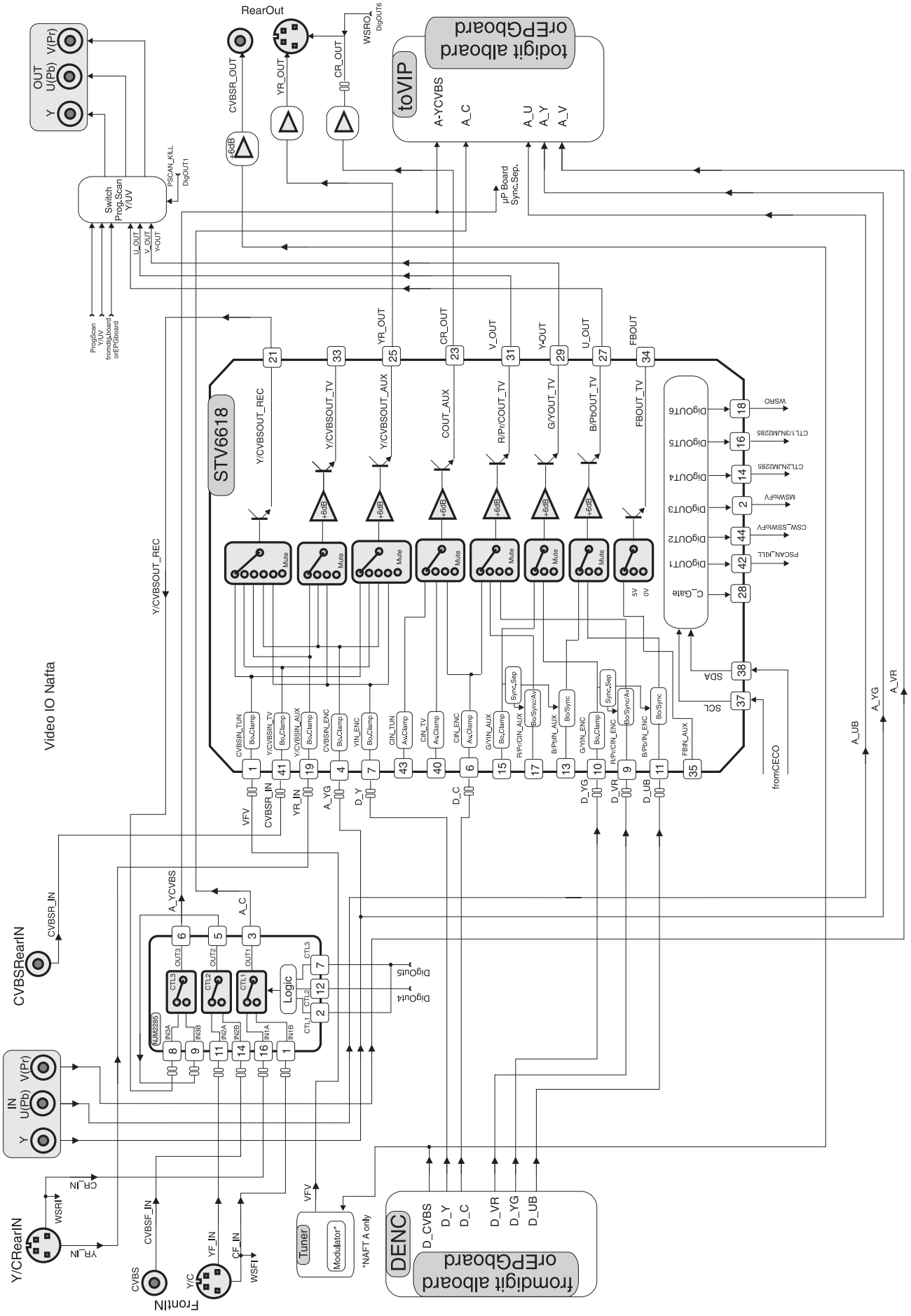

Figure 9-3

The Video-I/O-switching is basically realized by the matrix switch STV6618 [7408], which is controlled via I^2C-bus by the CC. All used outputs excluding pin 21 (Y/CVBS-REC) have a 6dB-amplification and a 75 Ohms-driver-stage inside. This IC also includes several digital outputs, which are used for switching purposes on the analog board. The record selector inside the switch selects between the CVBS from frontend, the CVBS from Cinch-Rear or Y from the S-Video-input rear. Afterwards the signal passes another switch [7411] in which a selection between signals from the front or the preselected ones is done. The output signals of [7411] are fed as "A_YCVBS"- and "A_C"-line to the digital board for further processing.
To reduce the number of external presets there is only one station for CVBS or Y/C (front and rear). The set automatically detects between the two inputs depending on the presence of a video signal (sync separator-circuit on µP-sub-board) where Y/C has higher priority.
The Y/U/V-inputs are routed over the optional EPG board to the digital PCB. Only the Y-line has to be present additionally on pin 4 of [7408] for video recognition. Also all other video signal from the analog board are routed through the EPG board if present.
The signals "D_C" and "D_Y" are fed through [7408] (6dB amplification) and via [7406], [7409] used as driver to the S-Video output connector. The "D_CVBS" line is directly routed to the modulator and via the circuit around [7431] and [7432] amplified by 6dB before it is fed to the CVBS output plug. In case of EPG the signals from the digital board are routet through the EPG board where the selection between digital board video or EPG OSD is taken.
The Y/U/V signals from the digital board are also passing [7408] for 6dB amplification and driving purpose.
To achieve optimal picture quality the set is equipped with a simple progressive scan function based on a so-called line doubler. The complete generation of the signal is done on the digital board and via a separate cable and connector [1946] the corresponding Y/U/V lines are routed to the analog PCB. Also the YUVprogressive signals are switchable to EPG OSD on the EPG board if implemented. As there is only one Y/U/V output available a switching between interlaced and progressive output is necessary. While the transistors [7421], [7422], [7424], [7425], [7427] and [7428] are used as driver for Y/U/V progressive, [7423], [7426] and [7429] together with [7405] are necessary for killing these signals via pin 42 of [7408] in case the interlaced is selected ("PSCAN_KILL"-line set to low). If progressive output is active the pins 27, 29 and 31 of [7408] are set to high impedance and "PSCAN_KILL" is also high (e.g. 5V).
The detection of the picture ratio information on the Y/C inputs (rear or front) is done by measuring the DC-level on the Chroma signal via an analog input of the CC-P ("WSRI"- and "WSFI"-line). In case the level is higher than 3,5V the input signal is a 16:9 source, if the level is lower than 2,4V the picture ratio is 4:3.
For generation of the appropriate DC-voltage on the Y/C output the "WSRO"-line is controlled via pin18 of [7408] by the CC-P (Pin 18 set to low means 4:3, pin 18 set to high determines 16:9).
During Stand-By there is also no loop-through of any input to any output performed.

9.5 Digital Board Chrysalis F

9.5.1 Introduction

Block diagram 2nd generation DVD recorder

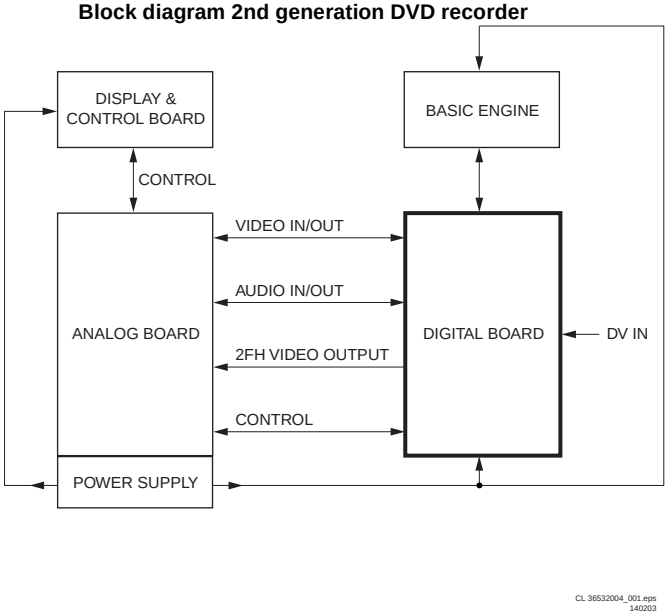

Figure 9-4

This 2nd generation Digital Board is based on the highly integrated 'Chrysalis' IC. Its predecessors, the 'Empire' and 'Empress' based boards, had two PWBs mounted on top of each other (due to separate DVIO board). For this new generation, all functionality is now available on one PWB in one BGA IC (Ball Grid Array) i.s.o. four VLSI ICs.

The board encodes and multiplexes analogue video and digital uncompressed audio (I2S) into an MPEG2 stream. This MPEG2 stream is formatted, to be recorded by the DVD+RW engine. In playback, the board will decode the MPEG2 stream into analogue and digital audio and into analogue video. In addition, a DV stream can be received via IEEE1394 (i-Link), and transformed to MPEG2 format.

There are versions foreseen, to generate a progressive scan analogue video output. In the standard Chrysalis board, the progressive video output is generated by the PNX7100. In the Chrysalis 'F' it is generated by the Faroudja FLi2301.

The Chrysalis Digital board is pin compatible with the Empress digital board in terms of A/V IO, BE interface, Power Supply, and Service interface. For functional enhancements, several connectors are added:IDE connector (HDD, AV3, PCMCIA, etc.).

9.5.2 Record Mode

Block diagram Chrysalis Digital Board

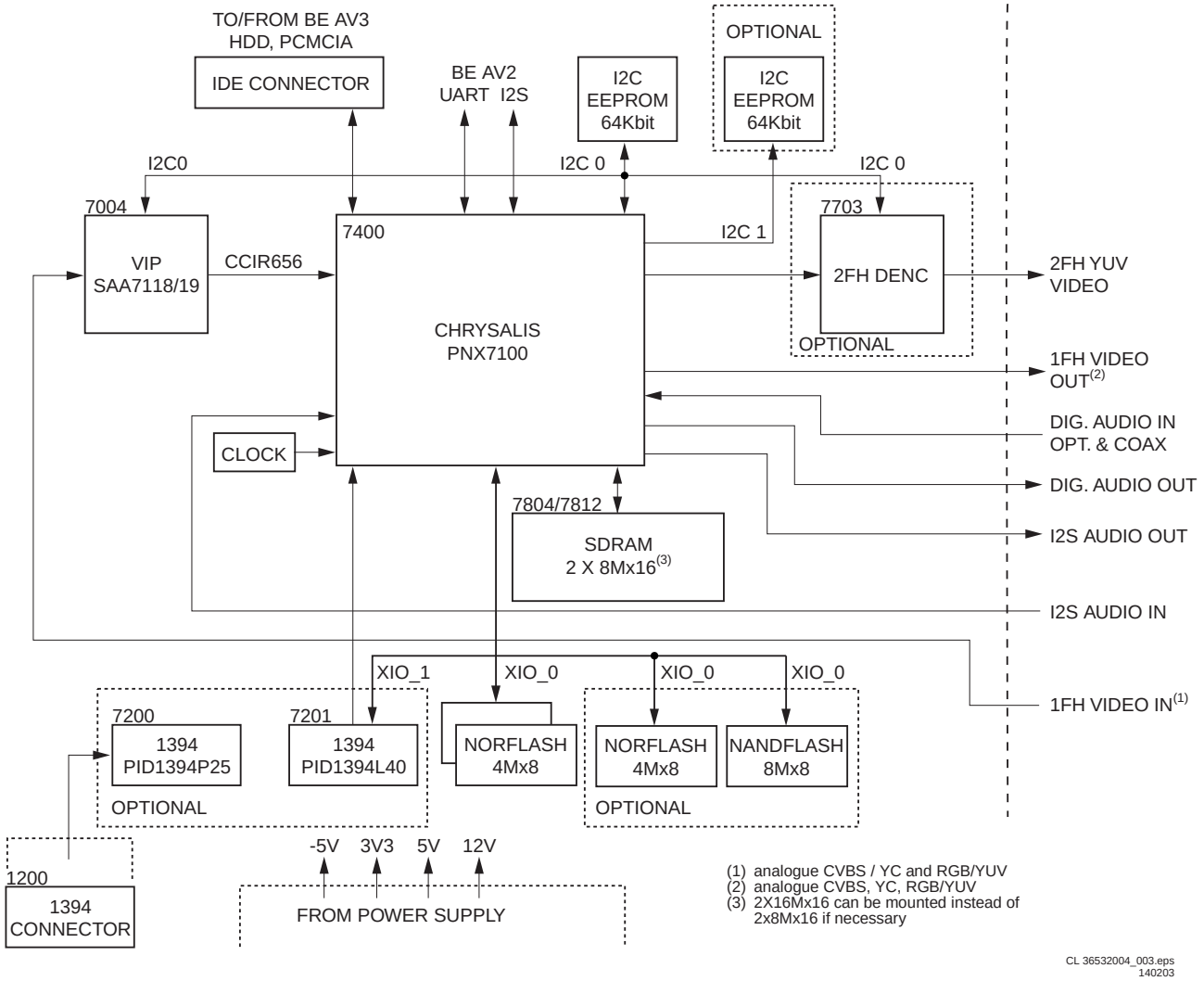

Figure 9-5

Video Part
The analogue video input signals CVBS, YC, and YUV/RGB (RGB for EURO and YUV for USA), are routed via the analogue board to connector 1904 and sent to IC7004 (SAA7118, Video Input Processor).
The digital video input signals are routed from the DV-In connector (item 1200) via ICs 7200 (1394 PHY) and 7201 (1394 LINK) to IC7400 (PNX7100, Chrysalis).
The multistandard Video Input Processor (VIP, IC7400) encodes the analogue video to digital video stream (CCIR656 format). It provides filtering of the analogue signals and separation of luminance and chrominance by a comb filter. The output stream, named ITU_IN(7:0), is then routed to the Chrysalis IC (PNX7100). This IC encodes and decodes the digital video stream into/from MPEG2 format.

Audio Part
I2S audio is sent from the analog board to the Chrysalis IC via connector 1900. The Chrysalis compresses the I2S audio data into an MPEG1-L2/AC3 audio stream.

Front-end I2S
IC7400 (Chrysalis) interfaces directly to the Basic Engine (BE) via connectors 1100 (clock and data) and 1105 (control). For future use (with AV3 BE module, HDD, or card reader) it also interfaces to an IDE bus via connector 1102 .
It buffers the data streams that are coming from (or going to) these hardware modules.

In the Chrysalis, the video MPEG2 stream and the audio AC3 stream are multiplexed into an I2S stream. The serial data are sent to the Basic Engine for recording.

Front-end IDE Interface
IC7400 (Chrysalis) interfaces directly to the Basic Engine (BE) IDE bus via connector 1102.
Via connector 1101 it connects to the hard disk.
The normal recording is always done on the hard disk. Only archiving and playback is done with optical disk.

9.5.3 Playback Mode

During playback, the serial data from the Basic Engine is going directly to the PNX7100 via the serial front-end I2S interface. The PNX7100 is an MPEG CoDec and has the following outputs:

- To the analogue board: analogue video RGB, YC, CVBS on connector 1904.
- I2S audio (PCM format) on connector 1900.
- SPDIF audio (digital audio output) on connector 1904.
- Progressive video on connector 1704.
- Communication gateway (RS232) on connector 1104.

9.5.4 Clock Distribution

Clock distribution on Chrysalis board

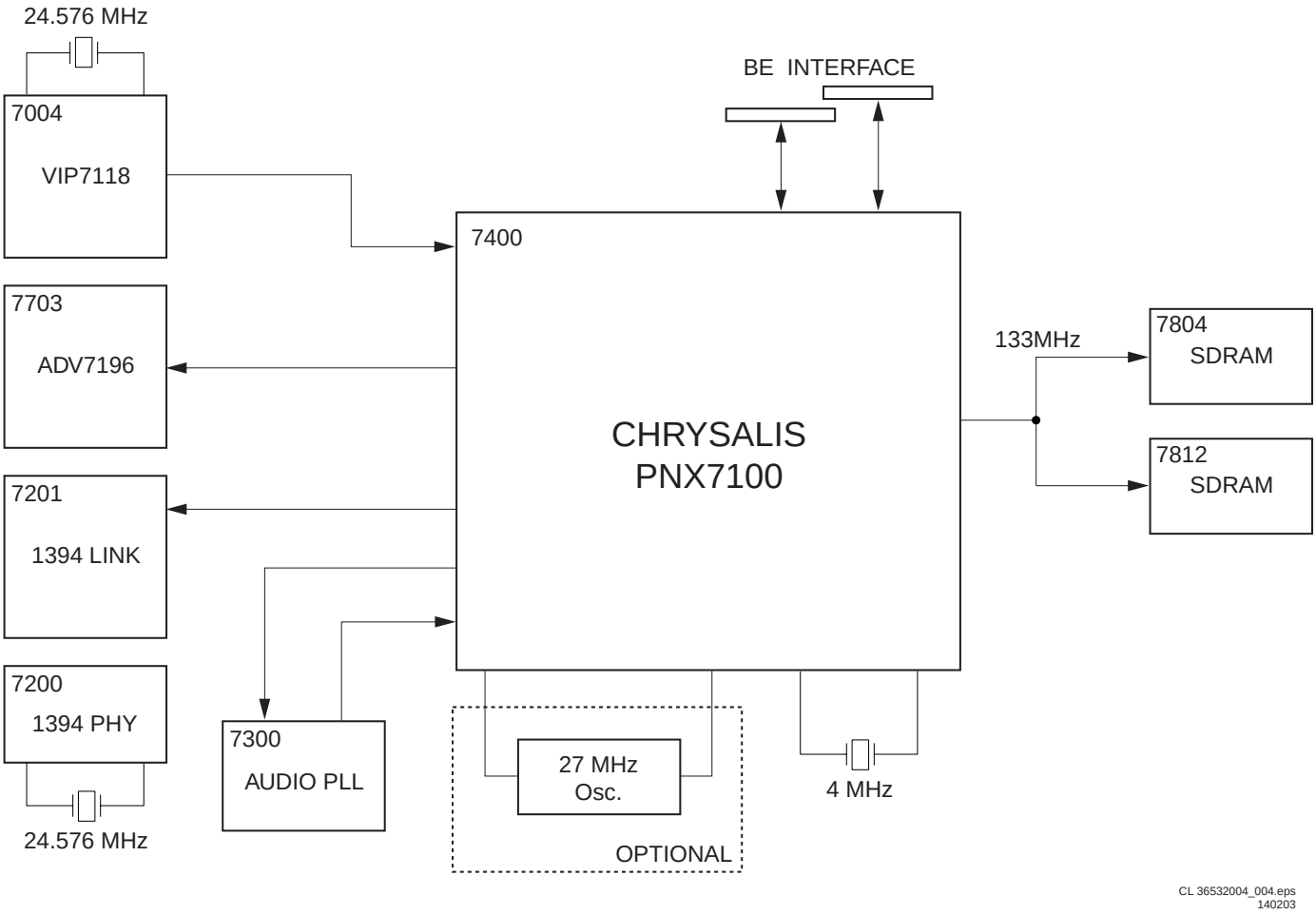

Figure 9-6

The PNX7100 has a complex clock system, which is needed to support the processes running at different frequencies such as video decoding, audio decoding or peripheral I/O devices etc. To ensure a synchronous initialisation of all the registers and state machines, all the PLLs are switched to their default frequency and the reset sequence is run at 4 MHz. Then when the booting control unit is correctly initialized and once it has captured all the booting parameters, it sets the PLLs to its functional frequency to allow the modules to run at their nominal frequencies. Thanks to a clock blocking mechanism, the frequency switching is glitch free.

System clocks:

- PNX7100 (IC7400, pins AF9 and AF10) : 4 MHz provided by the xtal oscillator 7402.
- SAA7118 (IC7004, pins A3 and B4): 24.576 MHz provided by xtal 1001.
- ADV7196 (IC7703, pin 25): 27 MHz provided by PNX7100.
- SDRAM (IC7804 and 7808, pin 38): 133 MHz provided by the PNX7100.
- 1394-LINK (IC7201, pin 88): 49.152 MHz provided by 1394-PHY.
- 1394-PHY (IC7200, pins 59 and 60): 24.576 MHz provided by xtal 1201.

9.5.5 Power Supply

The Digital Board is not powered in standby mode. The control signal 'ION' (Inverse On), coming from the analogue board, will enable the PSU, and power the digital board.

- ION = High: the digital board is in powered down standby mode.
- ION = Low: the power supply to the digital board is enabled.

The 3V3, +5V, -5V, and +12V come from the PSU, while the 1V8 core voltage is generated on the board by a low voltage buck controller (item 7501). It provides the control for a DC-DC power solution producing an 1.8V output voltage over a wide current range. The NCP1570-based solution is powered from 12 V with the output derived from the 3V3 supply. It contains all required circuitry for a synchronous NFET (IC7500-1 and -2) buck regulator.

9.5.6 Memory

Several memories are used on the Chrysalis Digital Board:

- EEPROM IC7810: this memory contains all the necessary boot parameters of the board.
- EEPROM IC7809: this memory contains all the necessary parameters for the application.
- FLASH IC7807(05/11): this memory contains the application-, diagnosis-, and service software.

9.5.7 Reset

Reset concept Chrysalis board

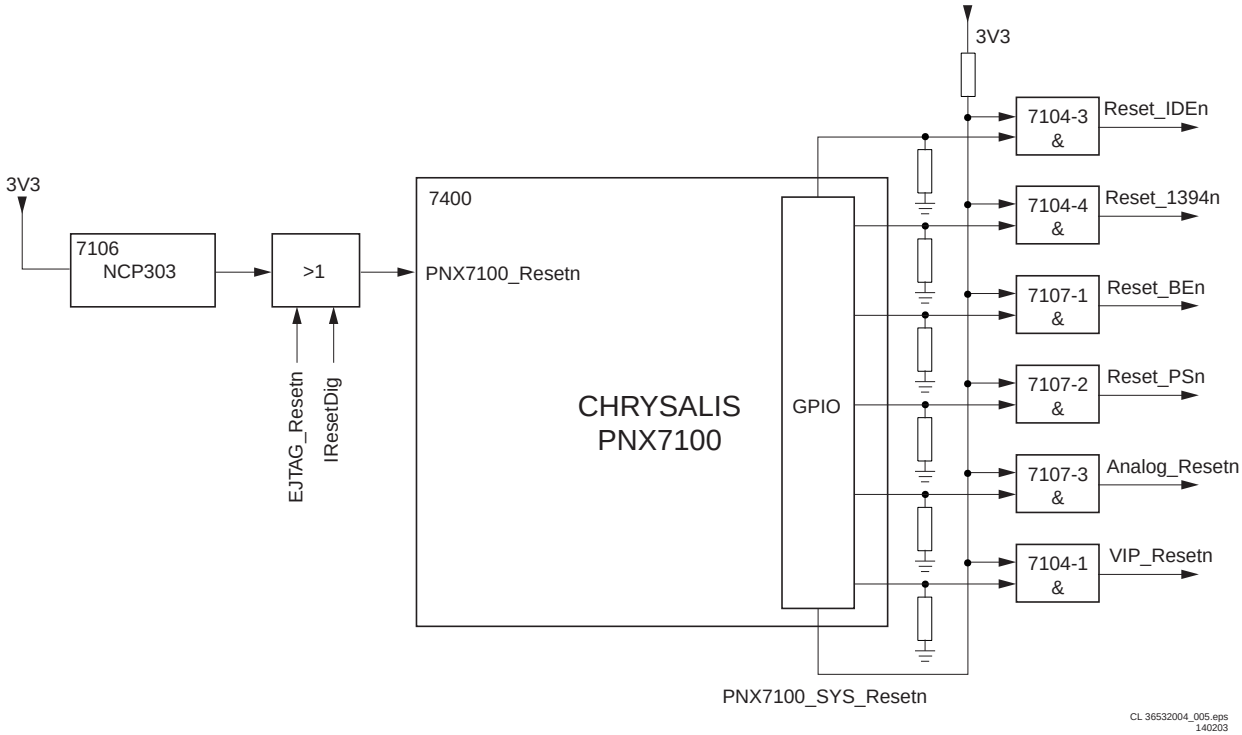

Figure 9-7

The voltage detector NCP303LSN29 (IC7600) provides the reset signal PNX7100_RESETn (active 'low') with the correct timing behavior. This circuitry functions as a Power-On Reset (POR) module, which detects the minimum functional voltage that is needed by the device. It also detects any voltage drop. When the power voltage is outside the nominal range, a reset signal is generated by the POR module and fed to the reset module which controls the individual reset of the different peripherals and processing units.
There are two control lines which can overrule this reset signal:

- IRESET_DIG (controlled by the microprocessor on the Analogue Board).
- EJTAG_RESETn (only for production).

They can pull the output of the NCP303LSN29 (item 7106) down via a shottky diode.
So when the output signal PNX7100_RESETn is 'low', the board will reset. When this signal is 'high', the board is up and running.

The PNX7100_SYS_RESETn is a general enabling signal for the different reset lines. All other reset lines are directly driven from Chrysalis port pins (e.g. MPIO13_IDE1_RESETn). All reset lines are logically connected via 74LVC08D (item 7104) and (item 7107) AND-gates. If both reset signals are low, all other external devices are initialised.

9.5.8 I2C Bus

The PNX7100 is the master of the I2C bus (during reset, external I2C masters are allowed). The following ICs are controlled by the I2C bus:

- IC7809.
- IC7810 NVRAMs.
- IC7004 VIP.
- IC7700 FLI2301 Video De-interlacer Line Doubler (for Chrysalis-F boards).
- IC7703 ADV7196 Video Enc (for progressive scan done by Chrysalis).

9.5.9 I/O Connectors

AIO Connector (item 1900)
The Audio In/Out (AIO) connector is used to interchange digital audio signals between Analog- and Digital Board.

DAIO Connector (item 1901)
The Digital Audio In/Out (DAIO) connector is used to interchange digital audio (SPDIF) signals between the IOE-Board and the Digital Board.

VIO Connector (item 1904)
The Video In/Out (VIO) connector is used to interchange analogue video signals between Analog- and Digital-Board.

9.5.10 Progressive Scan

Introduction
There are two versions foreseen, to generate a progressive scan analogue video output:

- In the standard Chrysalis board, the 'low end' progressive video output is generated by the PNX7100.
- In the Chrysalis 'F', the 'high end' progressive output is generated by the Faroudja FLI2301. This IC offers additionaly DCDi, upscaling to HDTV, and picture enhancement.

Description
The progressive scan part is integrated in the Digital Board and built around the FLI2301 de-interlace/line doubler (7701). This I2C controlled de-interlace uses a 64Mbit SDRAM (32bit x 2M) to perform high quality de-interlacing (meshing). The de-interlace gets its digital YUV input data from the PNX7100 (7400). The format of the digital YUV input to the Fli2301 is CCIR656 with separated Hsync, Vsync, and odd/even signal running on 27MHz.

9.6 Service UART Interface

Logic IC 74HCT14D (item 7111) is used to make a level conversion from microprocessor (LVTTL) to +/-5V (compatible with most RS232 interfaces) and vice versa. The control line MPIO19_CTL_SERVICE is used to activate service and diagnostic SW at start up procedure. The connectivity is provided via an external service tool.

9.7 I/O Extension Board

This board feeds the internal S/PDIF signal from the Digital board to an optical and/or digital out connector. For European players, also an YUV output is present on this board.

9.8 IC Descriptions

9.8.1 Display Board

IC 7103 TMP87CH74F Display Board, Front Microprocessor

Block Diagram

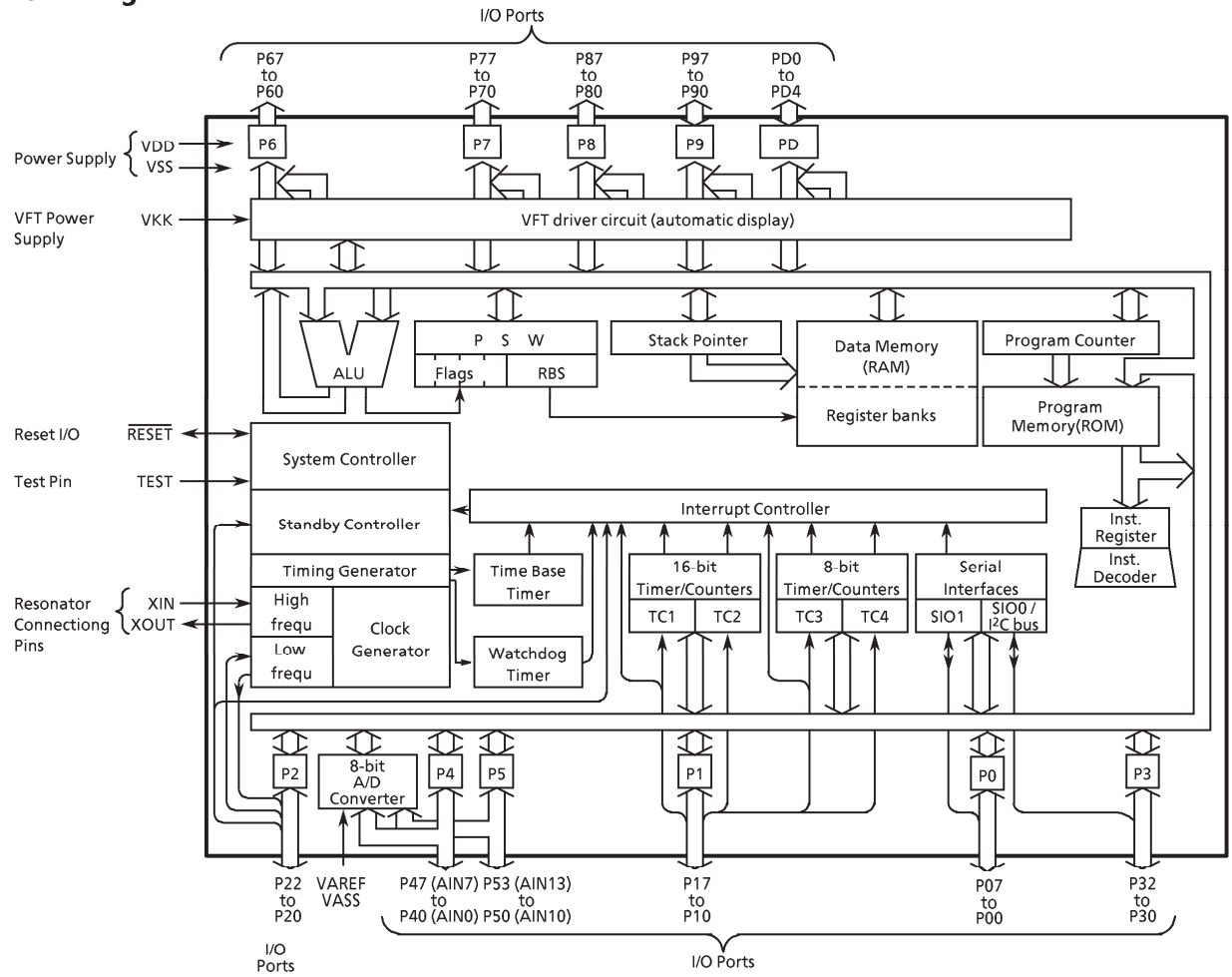

Figure 9-8

Pin Function

Pin Name	Input / Output	Function	
P07 to P03	I/O	Two 8-bit programmable input/output ports (tri-state). Each bit of these ports can be individually configured as an input or an output under software control. When used as a SIO input/output, an External interrupt input, a timer/counter input, the latch must be set to "0". When used as a PPG output or divider output, the latch must be set to "1".	
P02 (SO1)	I/O (Output)		SIO1 serial data Output
P01 (SI1)	I/O (Input)		SIO1 serial data Input
P00 ($\overline{SCK1}$)	I/O (I/O)		SIO1 serial clock input/output
P17 (INT4/TC3)	I/O (Input)		External interrupt input 4 or Timer/Counter 3 input
P16 (INT2)			External interrupt input 2
P15 (INT3/TC1)			External interrupt input 3 or Timer/Counter 1 input
P14 (TC4/$\overline{PDO}$/$\overline{PWM}$)	I/O (I/O)		Timer counter 4 input or 8-bit programmable divider output or 8-bit PWM output
P13 ($\overline{DVO}$)	I/O (Output)		Divider output
P12 (TC2/$\overline{PPG}$)	I/O (I/O)		Timer counter 2 input or Programmable pulse generator output
P11 (INT1)	I/O (Input)		External interrupt input 1
P10 ($\overline{INT0}$)			External interrupt input 0
P22 (XTOUT)	I/O (Output)	3-bit input/output port with latch. When used as input port, or external interrupt input, STOP mode release signal input, the latch must be set to "1".	Resonator connecting pins (32.768 kHz). For inputting external clock, XTIN is used and XTOUT is opened.
P21 (XTIN)	I/O (Input)		
P20 ($\overline{INT5}$/$\overline{STOP}$)			External interrupt input 5 or STOP mode release signal input
P32 ($\overline{SCK0}$)	I/O (I/O)	3-bit programmable input/output ports (Sink open drain). Each bit of these ports can be individually configured as an input or an output under software control. When used as a I²C input/output, the latch must be set to "1".	SIO0 serial clock input/output
P31 (SDA/SO0)	I/O (I/O/Output)		I²Cbus serial data input/output or SIO0 serial data output
P30 (SCL/SI0)	I/O (I/O/Input)		I²Cbus serial clock input/output or SIO0 serial data Input
P47 (AIN7) to P40 (AIN0)	I/O (Input)	8-bit programmable input/output ports (tri-state). Each bit of these ports can be individually configured as an input or an output under software control. When used as a analog input, the P4CR must be set to "0".	A/D converter analog inputs
P53 (AIN13) to P50 (AIN10)	I/O (Input)	4-bit programmable input/output ports (tri-state). Each bit of these ports can be individually configured as an input or an output under software control. When used as a analog input, the P5CR must be set to "0".	A/D converter analog inputs
P67 (V7) to P60 (V0)	I/O (Output)	Four 8-bit high brackdown voltage output ports with the latch. When used as a VFT driver output, the latch must be cleared to "0".	VFT driver outputs
P77 (V15) to P70 (V8)			
P87 (V23) to P80 (V16)			
P97 (V31) to P90 (V24)			
PD4 (V36) toPD0 (V32)	I/O (Output)	5-bit high breakdown voltage output ports with the latch. When used as a VFT driver output, the latch must be cleared to "0".	

Figure 9-9

Pin Name	Input / Output	Function
XIN, XOUT	Input, Output	Resonator connecting pins for high-frequency clock. For inputting external clock, XIN is used and XOUT is opened.
$\overline{\text{RESET}}$	I/O	Reset signal input or watchdog timer output/address-trap-reset output/system-clock-reset outputted.
TEST	Input	Test pin for out-going test. Be tied to low.
VDD, VSS	Power Supply	+ 5 V, 0 V (GND)
VKK		VFT driver power supply
VAREF, VASS		Analog reference voltage inputs (High, Low)

Figure 9-10

9.8.2 IC's Analog Board

IC7408: STV6618 Analog Board, Video Switch Matrix

1.2 Pin Description

Pin No.	Symbol	Description
1	Y/CVBSIN_TUN	Y/CVBS Input from Tuner
2	DIGOUT3	Digital Output Pin 3
3	GND1	Ground Supply 1 for Video Inputs
4	CVBSIN_ENC	CVBS Input from Encoder
5	DECV	Video decoupling capacitor
6	CIN_ENC	Chroma Input from Encoder
7	YIN_ENC	Y Input from Encoder
8	V_{CC}	+5 V Power Supply for Video Inputs
9	R/PR/CIN_ENC	Red or Pr or Chroma Input from Encoder
10	G/YIN_ENC	Green or Y Input from Encoder
11	B/PBIN_ENC	Blue or Pb Input from Encoder
12	GND2	Ground Supply 2 for Video Inputs
13	B/PBIN_AUX	Blue or Pb Input from Auxiliary (SCART2 or external Cinch)
14	DIGOUT4	Digital Output Pin 4
15	G/YIN_AUX	Green or Y Input from Auxiliary (SCART2 or external Cinch)
16	DIGOUT5	Digital Output Pin 5
17	R/PR/CIN_AUX	Red or Pr or Chroma input from Auxiliary (SCART2 or external Cinch)
18	DIGOUT6	Digital Output Pin 6
19	Y/CVBSIN_AUX	Y/CVBS Input from Auxiliary (SCART2 or external Cinch)
20	VCCB_REC	Video Output Recorder Buffer Supply Pin
21	Y/CVBSOUT_REC	Y/CVBS Output to Recorder
22	GNDB_REC	Ground Supply for Recorder Buffer
23	COUT_AUX	Chroma Output to Auxiliary (SCART2 or external Cinch)
24	VCCB1	Video Output Buffer Supply Pin
25	Y/CVBSOUT_AUX	Y/CVBS Output to Auxiliary (SCART2 or external Cinch)
26	GNDB	Ground Supply for Video Buffer
27	B/PBOUT_TV	Blue or Pb Output to TV (SCART1 or external Cinch)
28	C_GATE	External Transistor Command for Bidirectinnal B/C SCART I/O
29	G/YOUT_TV	Green or Y Output to TV (SCART1 or external Cinch)
30	VCCB2	Video Buffer
31	R/PR/COUT_TV	Red or Pr or Chroma Output to TV (SCART1 or external Cinch)
32	VCCB3	Video Output Buffer Supply Pin
33	Y/CVBSOUT_TV	Y/CVBS Output to TV (SCART1 or external Cinch)
34	FBOUT_TV	Fast Blanking Output to TV (SCART1)
35	FBIN_AUX	Fast Blanking Input from Auxiliary (SCART2)

Pin No.	Symbol	Description
36	VDD	+5 V Digital Power Supply
37	SCL	I²C Bus Clock
38	SDA	I²C Bus Data
39	GNDD	Digital Ground Supply
40	CIN_TV	Chroma Input from TV (SCART1 or external Cinch)
41	Y/CVBSIN_TV	Y/CVBS Input from TV (SCART1 or external Cinch)
42	DIGOUT1	Digital Output Pin 1
43	CIN_TUN	Chroma Input from Tuner
44	DIGOUT2	Digital Output Pin 2

Figure 2: STV6618 Input/Output Diagram

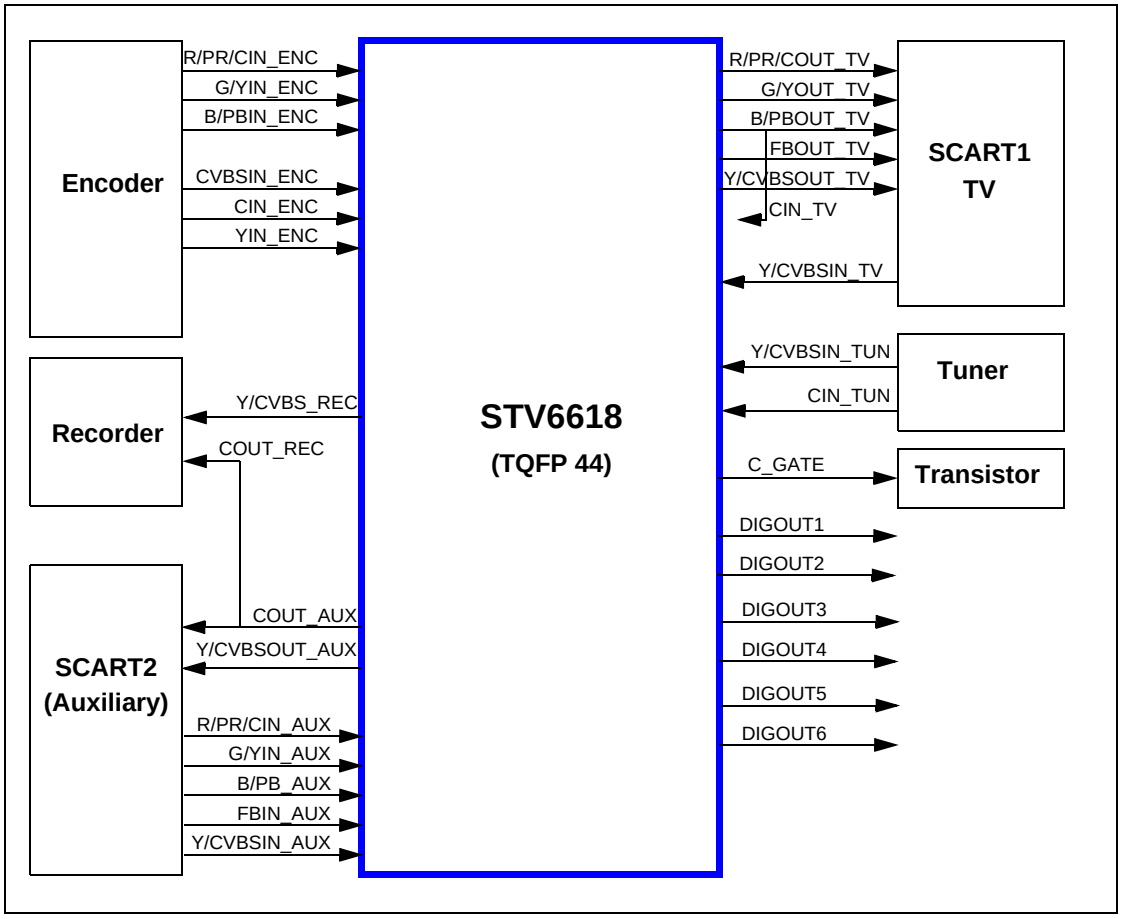

Figure 3: STV6618 Block Diagram

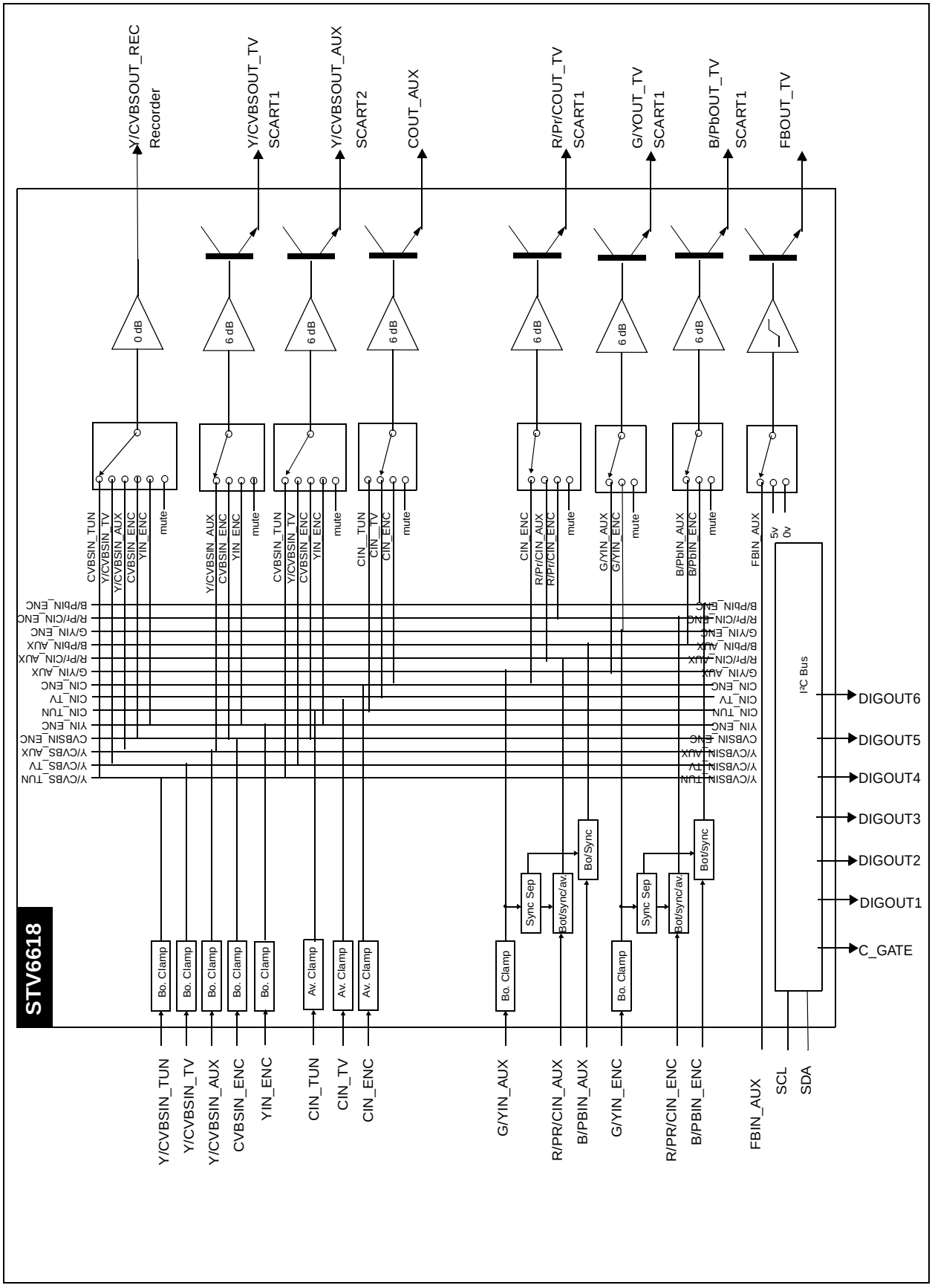

IC7411: NJM2285 Analog Board, Video Switch

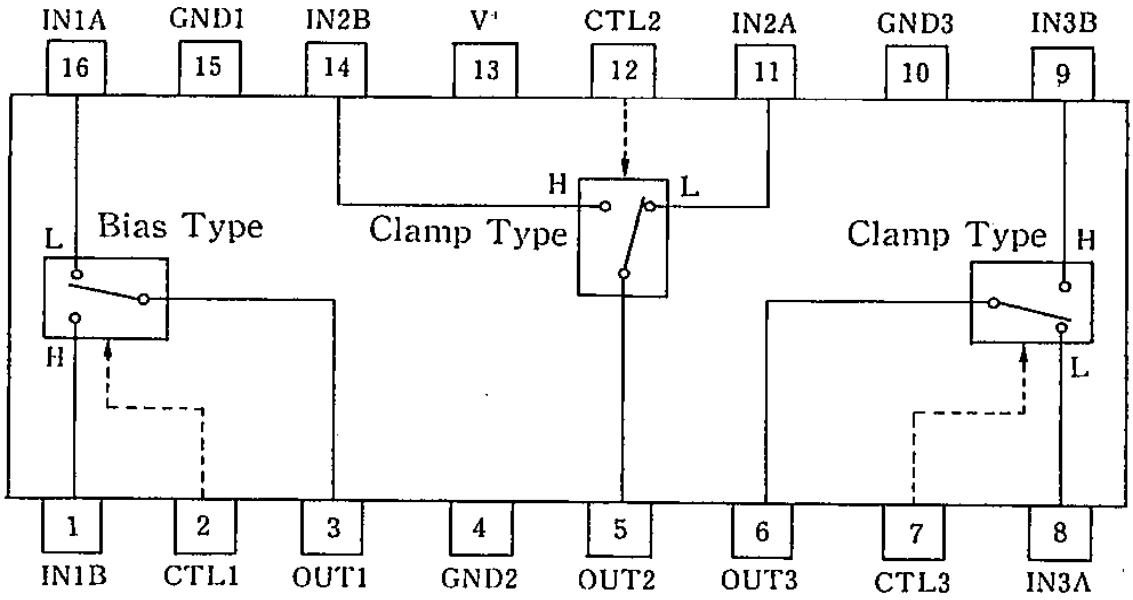

NJM2285D
NJM2285M
NJM2285V

IC7313 TEA 1507 Analog Board, Power Supply Control

BLOCK DIAGRAM

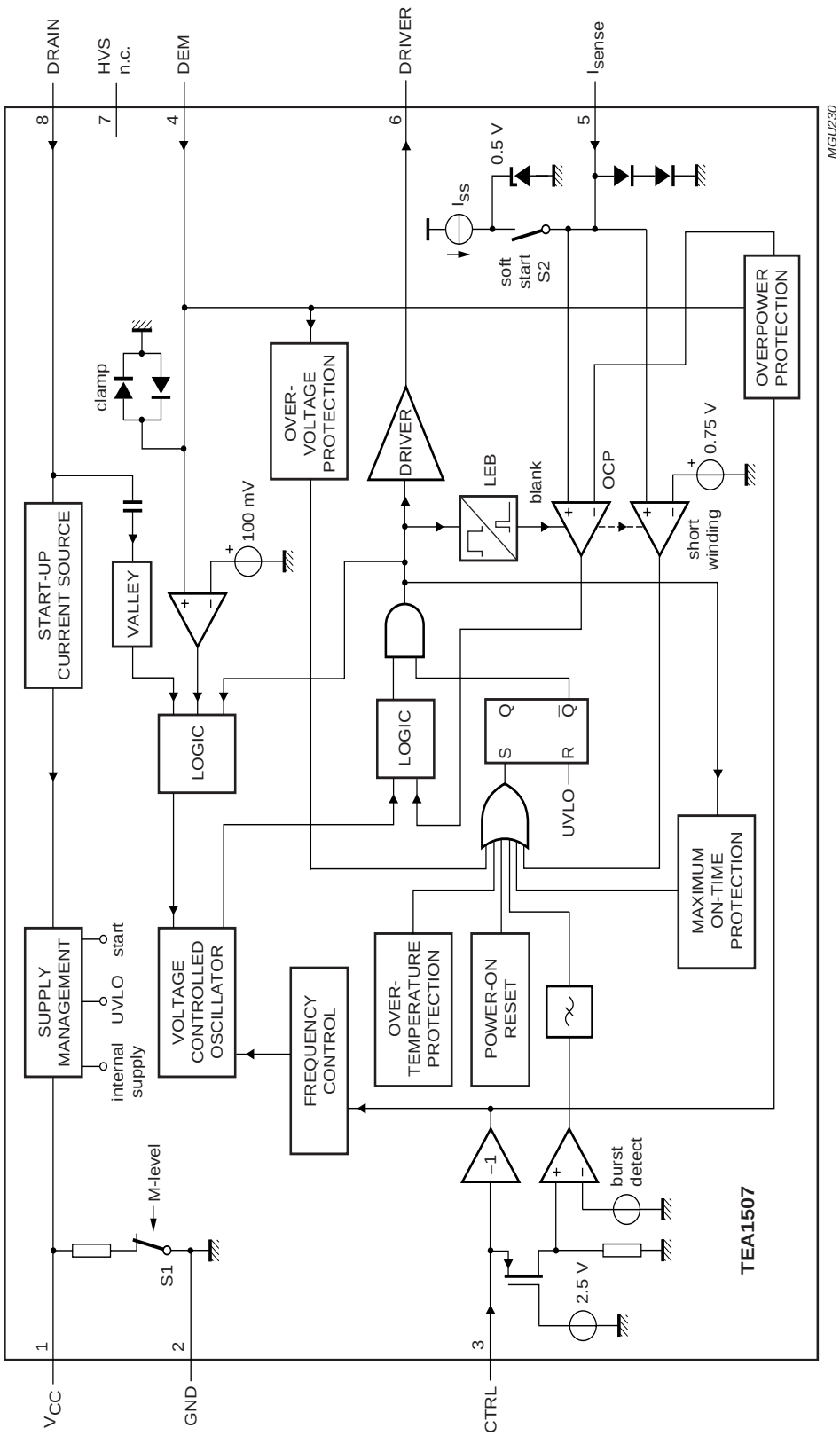

Fig.2 Block diagram.

IC7404: AD1582 Analog Board, Digital/Analogue Converter

FUNCTIONAL BLOCK DIAGRAM

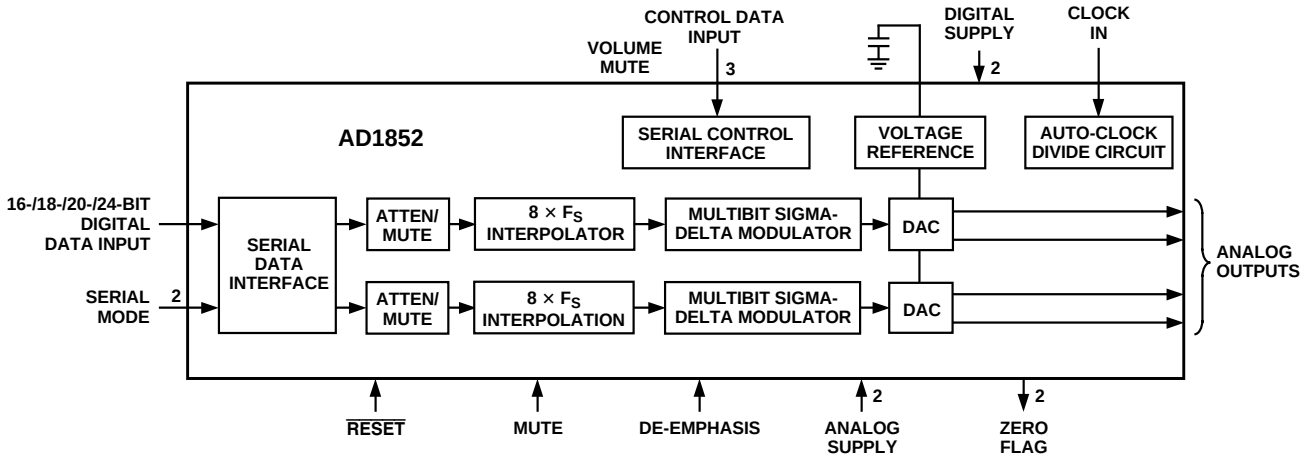

AD1852

PIN FUNCTION DESCRIPTIONS

Pin	Input/Output	Pin Name	Description
1	I	DGND	Digital Ground.
2	I	MCLK	Master Clock Input. Connect to an external clock source at either 256 F_S, 384 F_S, 512 F_S, 768 F_S, or 1024 F_S.
3	I	CLATCH	Latch Input for Control Data. This input is rising-edge sensitive.
4	I	CCLK	Control Clock Input for Control Data. Control input data must be valid on the rising edge of CCLK. CCLK may be continuous or gated.
5	I	CDATA	Serial Control Input, MSB first, containing 16 bits of unsigned data per channel. Used for specifying channel-specific attenuation and mute.
6		NC	No Connect.
7	I	192/$\overline{48}$	Selects 48 kHz (LO) or 192 kHz Sample Frequency.
8	O	ZEROR	Right Channel Zero Flag Output. This pin goes HI when Right Channel has no signal input for more than 1024 LR Clock Cycles.
9	I	DEEMP	De-Emphasis. Digital de-emphasis is enabled when this input signal is HI. This is used to impose a 50 µs/15 µs response characteristic on the output audio spectrum at an assumed 44.1 kHz sample rate. Curves for 32 kHz and 48 kHz sample rates may be selected via SPI control register.
10	I	96/$\overline{48}$	Selects 48 kHz (LO) or 96 kHz Sample Frequency.
11, 15	I	AGND	Analog Ground.
12	O	OUTR+	Right Channel Positive Line Level Analog Output.
13	O	OUTR–	Right Channel Negative Line Level Analog Output.
14	O	FILTR	Voltage Reference Filter Capacitor Connection. Bypass and decouple the voltage reference with parallel 10 µF and 0.1 µF capacitors to the AGND.
16	O	OUTL–	Left Channel Negative Line Level Analog Output.
17	O	OUTL+	Left Channel Positive Line Level Analog Output.
18	I	AVDD	Analog Power Supply. Connect to Analog 5 V Supply.
19		FILTB	Filter Capacitor Connection. Connect 10 µF capacitor to AGND (Pin 15).
20	I	IDPM1	Input Serial Data Port Mode Control One. With IDPM0, defines 1 of 4 serial modes.
21	I	IDPM0	Input Serial Data Port Mode Control Zero. With IDPM1, defines 1 of 4 serial modes.
22	O	ZEROL	Left Channel Zero Flag Output. This pin goes HI when Left Channel has no signal input for more than 1024 LR Clock Cycles.
23	I	MUTE	Mute. Assert HI to mute both stereo analog outputs. Deassert LO for normal operation.
24	I	$\overline{\text{RESET}}$	Reset. The AD1852 is reset on the rising edge of this signal. The serial control port registers are reset to the default values. Connect HI for normal operation.
25	I	L/$\overline{\text{R}}$CLK	Left/$\overline{\text{Right}}$ Clock Input for Input Data. Must run continuously.
26	I	BCLK	Bit Clock Input for Input Data. Need not run continuously; may be gated or used in a burst fashion.
27	I	SDATA	Serial Input, MSB first, containing two channels of 16, 18, 20, and 24 bits of twos complement data per channel.
28	I	DVDD	Digital Power Supply Connect to digital 5 V supply.

Table I. Serial Data Input Mode

IDPM1 (Pin 20)	IDPM0 (Pin 21)	Serial Data Input Format
0	0	Right-Justified
0	1	I^2S-Compatible
1	0	Left-Justified
1	1	DSP

9.8.3 ICs Digital Board Chrysalis

IC7106 NCP303LSN29, Digital Board 2.1 Chrysalis, Reset Circuit

NCP303LSNxxT1
Open Drain Output Configuration

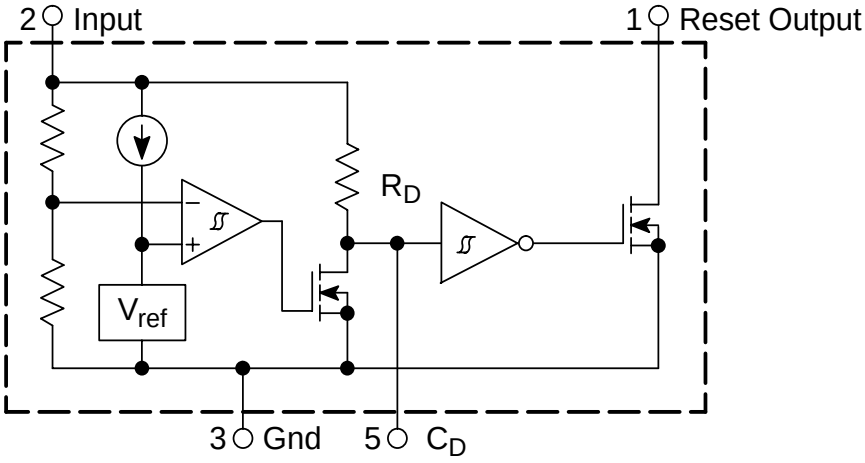

IC7501 NCP1570D, Digital Board 2.1 Chrysalis, DC/DC Converter Control

NCP1570

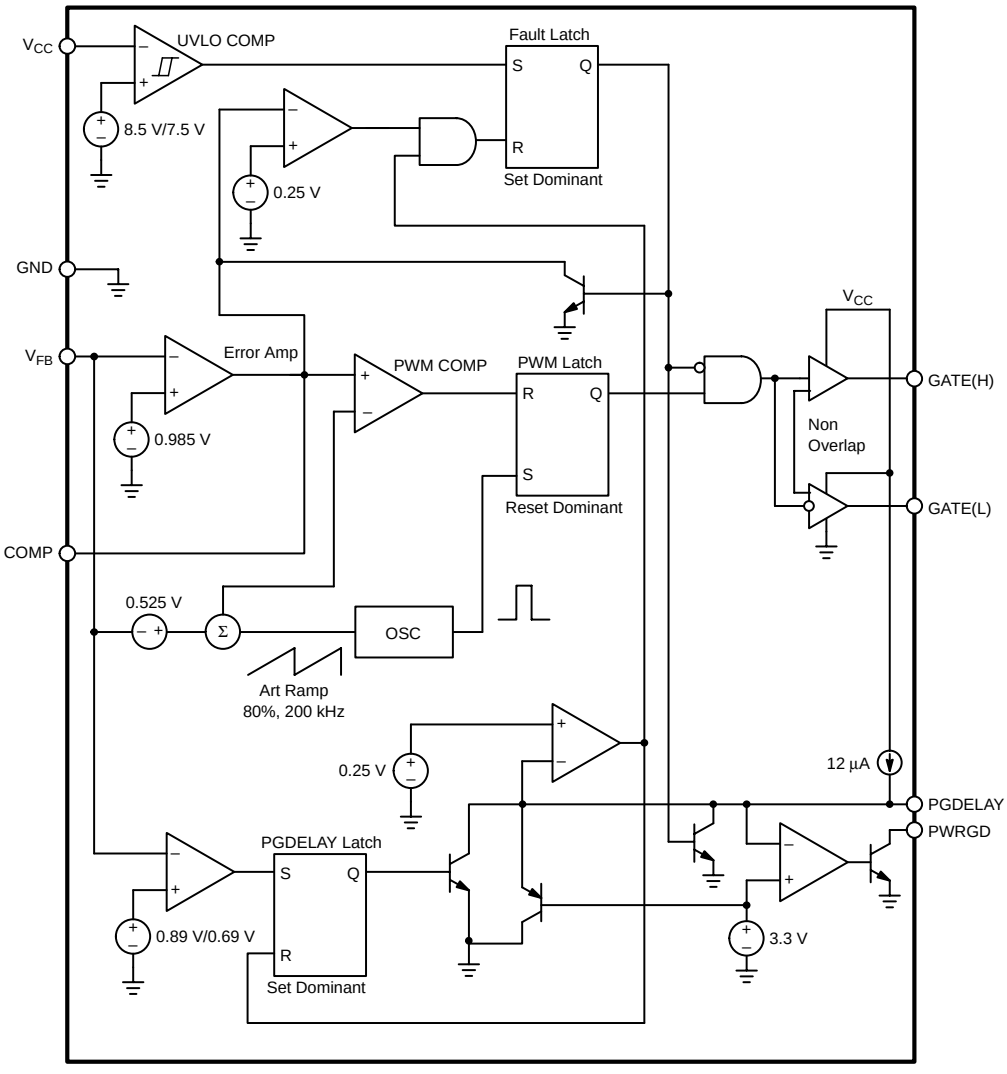

Figure 2. Block Diagram

PACKAGE PIN DESCRIPTION

PACKAGE PIN # SO–8	PIN SYMBOL	FUNCTION
1	V_{CC}	Power supply input.
2	PWRGD	Open collector output goes low when V_{FB} is out of regulation. User must externally limit current into this pin to less than 20 mA.
3	PGDELAY	External capacitor programs PWRGD low–to–high transition delay.
4	COMP	Error amp output. PWM comparator reference input. A capacitor to LGND provides error amp compensation and Soft Start. Pulling pin < 0.45 locks gate outputs to a zero percent duty cycle state.
5	GATE(H)	High–side switch FET driver pin. Capable of delivering peak currents of 1.5 A.
6	GATE(L)	Low–side synchronous FET driver pin. Capable of delivering peak currents of 1.5 A.
7	V_{FB}	Error amplifier and PWM comparator input.
8	GND	Power supply return.

IC7703 ADV7196A, Digital Board 2.1 Chrysalis, Progressive Scan Video Encoder

FUNCTIONAL BLOCK DIAGRAM

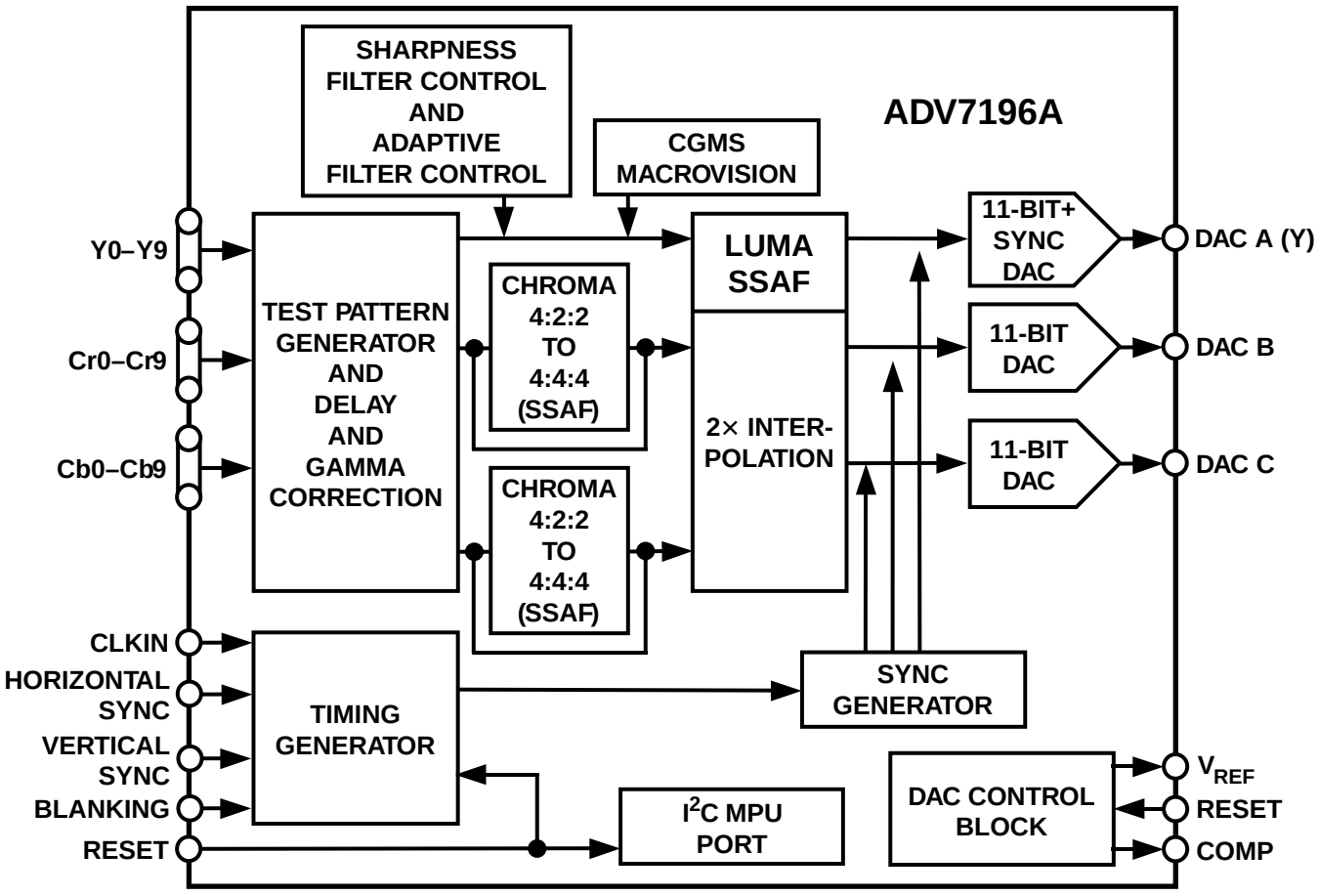

ADV7196A

PIN FUNCTION DESCRIPTIONS

Pin	Mnemonic	Input/Output	Function
1, 12	V_{DD}	P	Digital Power Supply
2–11	Y0–Y9	I	10-Bit Progressive Scan/HDTV Input Port for Y Data. Input for G data when RGB data is input.
13, 52	GND	G	Digital Ground
14–23	Cr0–Cr9	I	10-Bit Progressive Scan/HDTV Input Port for Color Data in 4:4:4 Input Mode. In 4:2:2 mode this input port is not used. Input port for R data when RGB data is input.
24, 35	V_{AA}	P	Analog Power Supply
25	CLKIN	I	Pixel Clock Input. Requires a 27 MHz reference clock for standard operation in Progressive Scan Mode or a 74.25 MHz (74.1758 MHz) reference clock in HDTV mode.
26, 33	AGND	G	Analog Ground
27	DV	I	Video Blanking Control Signal Input
28	$\overline{\text{VSYNC}}$/ TSYNC	I	$\overline{\text{VSYNC}}$, Vertical Sync Control Signal Input or TSYNC Input Control Signal in Async Timing Mode
29	$\overline{\text{HSYNC}}$/ $\overline{\text{SYNC}}$	I	$\overline{\text{HSYNC}}$, Horizontal Sync Control Signal Input or $\overline{\text{SYNC}}$ Input Control Signal in Async Timing Mode
30	SCL	I	MPU Port Serial Interface Clock Input
31	SDA	I/O	MPU Port Serial Data Input/Output
32	DAC C	O	Color Component Analog Output of Input Data on Cb/Cr9–0 Input Pins
34	DAC A	O	Y Analog Output
36	DAC B	O	Color Component Analog Output of Input Data on Cr9–Cr0 Input Pins
37	COMP	O	Compensation Pin for DACs. Connect 0.1 µF capacitor from COMP pin to V_{AA}.
38	R_{SET}	I	A 2470 Ω resistor (for input ranges 64–940 and 64–960; output standards EIA-770.1–EIA-770.3) must be connected from this pin to ground and is used to control the amplitudes of the DAC outputs. For input ranges 0–1023 (output standards RS-170, RS-343A) the R_{SET} value must be 2820 Ω.
39	V_{REF}	I/O	Optional External Voltage Reference Input for DACs or Voltage Reference Output (1.235 V)
40	$\overline{\text{RESET}}$	I	This input resets the on-chip timing generator and sets the ADV7196A into Default Register setting. Reset is an active low signal.
41	ALSB	I	TTL Address Input. This signal sets up the LSB of the MPU address. When this pin is tied high, the I^2C filter is activated which reduces noise on the I^2C interface. When this pin is tied low, the input bandwidth on the I^2C interface is increased.
42–51	Cb/Cr9–0	I	10-Bit Progressive Scan/HDTV Input Port for Color Data. In 4:2:2 mode the multiplexed CrCb data must be input on these pins. Input port for B data when RGB is input.

9.9 List of Abbreviations

Analog Board

+5VSTBY	Permanent Supply 5V
8SC2	Pin8 Scart2 (only for Europe)
A_DATA	Data from Analog- to Digital-Board (UART-Communication)
A_RDY	Analog-board ready (status information to digital-board)
A18 - A19	Parallel Address Bus (CC - Flash-ROM and S-RAM)
A8 - A17	Parallel Address Bus (CC - Flash-ROM and S-RAM)
AD0 - AD7	Parallel Address Bus (CC - Flash-ROM and S-RAM)
AFC	Automatic Frequency Control
AFEL	Audio Frontend Left
AFER	Audio Frontend Right
AGC / WSRI	Automatic Gain Control (for Europe), Wide Screen Rear In (for NTSC)
AINFL	Audio In Front Left
AINFR	Audio In Front Right
AKILL	Audio Kill Signal
ALADC	Audio Left to ADC
ALDAC	Audio Left from DAC
ALE	Address Latch Enable
AM0	Adress-mode 0
AM1	Adress-mode 1
ARADC	Audio Right to ADC
ARDAC	Audio Right from DAC
ASCC1	Audio Scart 1 Mute (System Clock Output for Real time Clock-Adjustment)
AVCC	Power Supply for A/D-converter
AVSS	GND-Pin for A/D-converter
CFIN	Chroma Front In
CS0_	Chip Select 0 (CC - S-RAM)
CS2_	Chip Select 2 (CC - Flash-ROM)
CVBSFIN	Video Front In
D_DATA	Data from Digital- to Analog-Board (UART-Communication)
D_RDY	Digital-board ready (status information from digital-board)
DAC_MUTE	Mute Signal for DAC
DAOUT	Digital Audio Out
DVAL	Audio from Digital Video In Left
DVAR	Audio from Digital Video In Right
DVCC1	Power Supply Pin
DVCC2	Power Supply Pin
DVCC3	Power Supply Pin
DVSS1	GND Pin
DVSS2	GND Pin
DVSS3	GND Pin
FAN_OFF	Fan for Basic engine
FBIN	Fast Blanking input
FOME	FOllow ME Status line (matching signals yes/no; only for Europe)
G1…10	DISPLAY GRID
INT	Interrupt OUT for the CC
INT	Interrupt – line from Display Print
ION	Inverse ON-Line
IPFAIL	Inverse Power Fail Detection
IPOR	Inverse Power On Reset
IRESET	Inverse Reset Input
K1	Key-Input-Line
K2	Key-Input-Line
KILL	Signal from IR-Receiver
P50 IN	P50 INput-line (only for Europe)
P50 OUT	P50 OUTput-line (only for Europe)
POR_DC	Power On Reset for Display Control Print (Ext_DL)
PSS	Output Enable ReaD (CC - Flash-ROM and S-RAM)
PWM_FIL	Control line for Filament Voltage Generation
PWONSW	Amplifier Switch Audio A/D Converter
RD_	Pal/Secam-Select
RECLED	Control Signal for REC-LED
RESET_DIG	Reset Line to Digital Board
RP_	Inverse Reset line to Flash-ROM
RSA1/2	Record Selector 1/2
RY/BY_	Ready/Busy – input line (from Flash-ROM)
SIF1	Sound intermediate frequency
SB1	Secam Band 1 (PCB-Test entrance)
SCL	IC-Bus
SCLSW	Switched I^2C-Bus
SDA	IC-Bus
SDASW	Switched I^2C-Bus
SFS_TS	SAW Filter Select Trap Select
STBY	Standby-Line (Flash_Toshiba)
SYNC	Video Sync input
TEMP_SENSE	Temperature Sense Line
VER	HW-version input
VFV	Video from Frontend
VKK	VFT Driver Power Supply
VREFH	Pin for Reference-voltage input to A/D-converter
VREFL	Pin for Reference-voltage input to A/D-converter
VS1/2	View Selector 1/2
WR_	Write Enable (CC - Flash-ROM and S-RAM)
WSFI	Wide Screen Signalling Front In
WU	Wake Up
X1	Oscillator Pin
X12	Oscillator Pin
XIN	Oscillator Pin
XOUT	Oscillator Pin
XT1	Low Frequency Oscillator Pin
XT2	Low Frequency Oscillator Pin
YFIN	Luminance Front In

Digital Board Chrysalis

ADC	Analog to Digital Converter
DAC	Digital to Analog Converter
DENC	Digital (Video) Encoder (Video DAC)
DV	Digital Video (Camcorder)
EF	Emitter Follower
OSD	On-Screen Display
VIP	Video Input Processor (Video ADC)
2Fh	Progressive scan video
2V5	+2V5 Power supply for Link+Codec IC7431
3V3	+3V3 Power supply
3V3_A	+3V3 Analog power supply for PHY IC7400
3V3_D	+3V3 Digital power supply for PHY IC7400
3V3_DLY	+3V3 Power supply for IC7500
3V3_LINK	+3V3 Power supply for Link+Codec IC7431
3V3_F	+3V3 Power supply for optional Flash memory IC7432
3V3_RAM	+3V3 Power supply for SDRAM IC7430
3V3_uP	+3V3 Power supply for Micro-controller IC7802
3V3_32kHz	+3V3 Power supply for audio format adaptation circuitry IC7507 and IC7508
3V3_AC	+3V3 Power supply for audio system clock generator IC7605 and IC7606
+5V	+5V Power supply
5V_PLL	+5V Power supply for VCO of audio PLL IC7604
A (1:17)	Flash address lines of uPD72893

A_MUTE	Audio Mute
ABCK	Audio Bit Clock
AD (1:10)	Address bus lines for Host I/F of Link+Codec IC7431
AEMP1	PCM1 emphasis ON/OFF for PCM1 output
AFS1	Audio sampling frequency indication signal
ALRCLK	Audio Word Select
AMCLK44	11.2896MHz (=256 * 44.1 kHz) audio master clock signal for 44.1 kHz audio
AMCLK48	12.288MHz (=256 * 48 kHz) audio master clock signal for 32 kHz and 48 kHz audio
APWM	PWM signal for audio PLL
ASIC	Application Specific Integrated Circuit
BUFENn_AUD	Buffer Enable Audio
BUFENn_VID	Buffer Enable Video
CLK27M_CON	27MHz Clock to Digital Board
CS	Parallel interface chip select input of Link+Codec IC7431
CTL (0:1)	Link interface control lines
CTSN	Clear to Send
D (0:15)	Flash data lines of Link+Codec IC7431
DCDi	Directional Correlational Deinterlacing. Circuitry that reduces jaggies on diagonal edges when deinterlacing video-sourced material.
DV_STATUS	Interrupt pin for reading DV-status
HS_CLK	Video clock input of Link+Codec IC7431
INT	Interrupt request output of Link+Codec IC7431 (input to Micro-Controller)
IOR	Parallel interface IO read control input of Link+Codec IC7431
ISPN	In System Programming signal (used for programming IC7802)
LKON	Link-on signal outputLPSLink power status inputLREQLink request input
MA (0:10)	SDRAM address lines of Link+Codec IC7431
MCAS	SDRAM column address strobe signal
MCLK	SDRAM clock signal
MD (0:15)	SDRAM data lines of Link+Codec IC7431
MRAS	SDRAM row-address strobe signal
MWE	SDRAM write enable signal
PCM1	Audio Serial Data Output of Link+Codec IC7431
PCM1_NEW	'MSB justified' to I2S converted audio serial data; audio serial data input of audio DAC UDA1334A
PD (0:15)	Data bus lines for Host I/F of Link+Codec IC7431
PHY_D (0:7)	Data bus connection between PHY and LINK device
RESETn	DVIO board reset
RESET_FM	Reset signal driven by Flashmaster programming device
RESTB	Reset input of Link+Codec IC7431
RTSN	Request to Send
RWZ	Parallel interface read/write control input of Link+Codec IC7431
RXD	Receive Data
SCLK	Link control output clock
TXD	Transmit Data
VPP	+10V switchable programming voltage of microcontroller
YUV (0:7)	Digital Video

ACCESSORIES

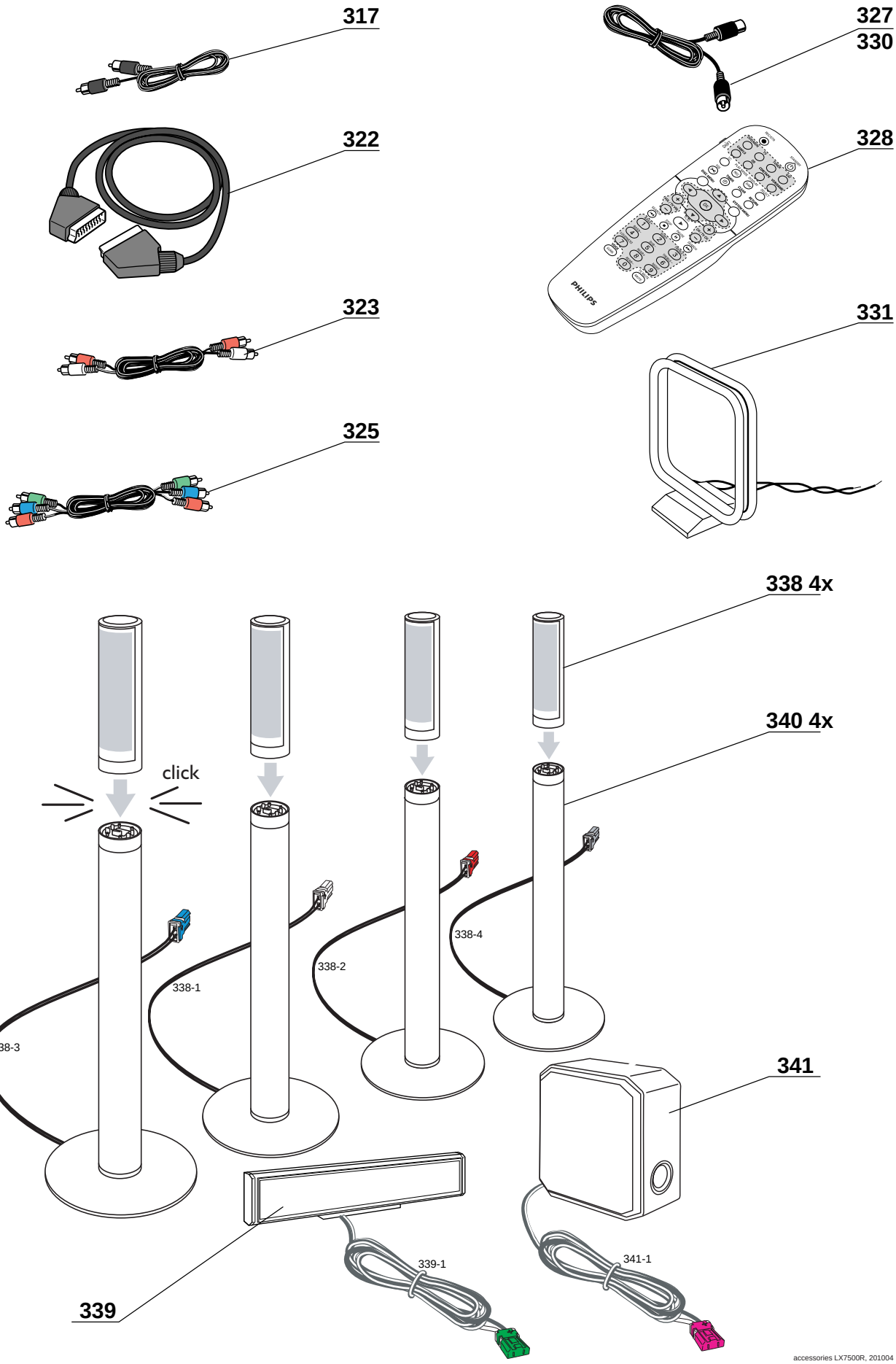

see also Exploded View drawings pages 66, 67, 68 and 150

MECHANICAL PARTS

102	3103 607 90861	FRONT ASSY MECH. LX7500/01/04
102	3103 607 90981	FRONT ASSY MECH. LX7500/05
106	3103 607 51321	KNOB VOLUME
111	3103 607 50341	BUTTON CAP, STANDBY
113	3103 607 50361	BUTTON CAP, OPEN CLOSE
119	3103 607 50411	BUTTON CAP, RECORD
120	3103 607 51311	WINDOW DISPLAY
124	3103 607 51101	RING, KEYS PLAY-STOP-REW-FFW
126	3103 607 51391	DOOR FRONT, LX7500/01/04
126	3103 607 51421	DOOR FRONT, LX7500/05
133	3103 604 00441	HINGE, DOOR FRONT
201-2	3103 604 00622	FOOT, RUBBER
201-3	3103 607 50491	FOOT ASSY
210	3103 607 90941	ORNAMENTAL COVER, TRAY LX7500R
215 ⚠	2422 070 98231	MAIN SCORD, IEC
215 ⚠	2422 070 98236	MAINS CORD, UK
230	3103 607 10051	FAN 60X60X20

ACCESSORIES

317	3103 308 92540	DIGITAL OUT CABLE, 75Ω
322	2422 076 00532	SCART CABLE, 21P
323	3103 308 92610	AUDIO CABLE STEREO CINCH 1.5m
325	2422 076 00374	CABLE CINCH/CINCH 1M5 GN/BU/RD
327	4822 320 50377	TV ANTENNA CABLE
328	3128 147 16432	REMOTE CONTROL, RC19046015/01
330	4822 320 50377	TV ANTENNA CABLE
331	2422 549 45813	LOOP ANTENNA, AM
338	9965 000 26097	SATELLITE BOX LX7500
339	3103 607 90961	CENTER BOX LX7500
340	3103 607 90971	ALUM. STAND FOR SATELL. SPEAKERS
341	3103 607 91031	SUBWOOFER

MISCELLANEOUS

1106	3103 608 51732	CHRYS. BOARD PPS E4_AV3_PLUS
1108 ⚠	2722 171 00139	SMPS AC6191 B, 230V
1109	2422 542 90137	RADIO TUNER MODULE, EU
8004	3103 308 95031	FLEXFOIL CABLE, 12P, 350mm, BD
8005	3103 308 94311	FLEXFOIL CABLE, 10P, 120mm, AD
8007	3103 308 94321	FLEXFOIL CABLE, 22P, 180mm, BD
8008	3103 308 94331	FLEXFOIL CABLE, 22P, 180mm, BD
8009	3103 308 94341	FLEXFOIL CABLE, 10P, 180mm, AD
8013	3139 110 35911	FLEXFOIL CABLE, 11P, 100mm, BD
8014	3103 308 94371	FLEXFOIL CABLE, 10P, 140mm, BD
8015	3103 308 94381	FLEXFOIL CABLE, 8P, 140mm, BD
8016	3103 308 94391	FLEXFOIL CABLE, 6P, 520mm, BD
8020	3103 308 94411	FIREWIRE CABLE, 650mm, EEE1394
8032	3103 308 94401	FLEXFOIL CABLE, 6P, 120mm, AD
8039	3103 308 94891	FLEXFOIL CABLE, 7P, 200mm, AD
8040	3103 308 94901	FLEXFOIL CABLE, 40P, 220mm, BD
338-1	9965 000 26175	LS-CABLE 2P 5M WHITE CON. FR-L
338-2	9965 000 26176	LS-CABLE 2P 5M RED CONN. FR-R
338-3	9965 000 26177	LS-CABLE 2P 15M BLUE REAR-L
338-4	9965 000 26178	LS-CABLE 2P 15M GREY REAR-R

AUXILIARY SUPPLY BOARD

MISCELLANEOUS

1304	2422 025 17897	FFC-CONNECTOR, 6P, SIDE ENTRY	
1306 ▲	2422 086 00618	FUSE SMD, F 2A, 125V UL	
1307© ▲	2422 086 11104	FUSE SMD, F 1A, 50V UL	

CAPACITORS

2300 ©	3198 017 31030	10nF	10%	50V
2301 ©	2022 552 05679	1µF	10%	16V
2302	2020 021 91506	1000µF	20%	16V
2303 ©	2022 552 05679	1µF	10%	16V
2304 ©	2022 552 05679	1µF	10%	16V
2305	3198 028 21090	10µF	20%	16V
2306	3198 028 21090	10µF	20%	16V
2307	3198 028 21090	10µF	20%	16V
2308	3198 028 21090	10µF	20%	16V
2309	3198 028 21090	10µF	20%	16V
2310	3198 028 21090	10µF	20%	16V
2311	3198 028 21090	10µF	20%	16V
2312	3198 028 21090	10µF	20%	16V
2313	2020 021 91668	2200µF	20%	10V
2314 ©	2022 552 05679	1µF	10%	16V
2315 ©	2022 552 05679	1µF	10%	16V
2316 ©	2022 552 05679	1µF	10%	16V
2317 ©	2222 580 15649	100nF	10%	50V
2318 ©	2222 580 15649	100nF	10%	50V
2319 ©	2222 580 15649	100nF	10%	50V

RESISTORS

3300 ©	3198 021 31030	10kΩ	5%	0,06W
3301 ©	3198 021 31520	1,5kΩ	5%	0,06W
3302 ©	3198 021 31020	1kΩ	5%	0,06W
3303 ©	3198 021 31030	10kΩ	5%	0,06W
3304 ©	3198 021 34720	4,7kΩ	5%	0,06W
3305 ©	3198 021 34720	4,7kΩ	5%	0,06W
3306 ©	3198 021 31540	150kΩ	5%	0,06W
3307 ©	3198 021 31030	10kΩ	5%	0,06W
3308 ©	3198 021 32240	220kΩ	5%	0,06W
3309 ©	3198 021 31030	10kΩ	5%	0,06W
3310 ©	3198 021 31030	10kΩ	5%	0,06W
3311 ©	3198 021 31540	150kΩ	5%	0,06W
3312 ©	3198 021 31030	10kΩ	5%	0,06W
3313 ©	3198 021 31030	10kΩ	5%	0,06W
3314 ©	3198 021 32720	2,7kΩ	5%	0,06W
3315 ©	3198 021 32240	220kΩ	5%	0,06W
3316 ©	3198 021 31030	10kΩ	5%	0,06W
3317 ©	3198 021 31030	10kΩ	5%	0,06W
3318 ©	3198 021 31520	1,5kΩ	5%	0,06W
3319 ©	3198 021 31030	10kΩ	5%	0,06W
3320 ©	3198 021 32720	2,7kΩ	5%	0,06W
3321 ©	3198 021 34720	4,7kΩ	5%	0,06W
3322 ©	3198 021 34720	4,7kΩ	5%	0,06W
3323 ©	3198 021 31020	1kΩ	5%	0,06W
3324 ©	3198 021 33320	3,3kΩ	5%	0,06W
3325 ©	3198 021 31090	10Ω	5%	0,06W
3326 ©	3198 021 32290	22Ω	5%	0,06W
3327 ©	3198 021 32290	22Ω	5%	0,06W
3328 ©	3198 021 36830	68kΩ	5%	0,06W
3329 ©	3198 021 36830	68kΩ	5%	0,06W
3330 ©	3198 021 31030	10kΩ	5%	0,06W
3331 ©	3198 021 31030	10kΩ	5%	0,06W
3332 ©	3198 021 31030	10kΩ	5%	0,06W
3333 ©	3198 021 31030	10kΩ	5%	0,06W
3334 ©	3198 021 31040	100kΩ	5%	0,06W
3335 ©	3198 021 31030	10kΩ	5%	0,06W
3336	3198 012 12210	220Ω	5%	1W

RESISTORS

3337 ©	3198 021 31540	150kΩ	5%	0,06W
3338 ©	3198 021 32240	220kΩ	5%	0,06W
3339 ©	3198 021 31010	100Ω	5%	0,06W
3340 ©	3198 021 31010	100Ω	5%	0,06W
3341 ©	3198 021 31010	100Ω	5%	0,06W
3342 ©	3198 021 31010	100Ω	5%	0,06W
4000 ©	3198 021 90030	CHIP JUMPER 0603		
4001 ©	3198 021 90030	CHIP JUMPER 0603		

COILS

5300	2422 536 00625	15µH, 20%
5301	4822 157 71736	10µH, 5%

DIODES

6300 ©	4822 130 11416	BZX384-C6V8
6301 ©	4822 130 11416	BZX384-C6V8
6304 ©	4822 130 80622	BAS316

TRANSISTORS

7300 ©	9340 575 20215	PMV60EN
7301 ©	3198 010 42310	BC847BW
7302 ©	9340 575 20215	PMV60EN
7303 ©	9340 575 20215	PMV60EN
7304 ©	3198 010 42310	BC847BW
7305 ©	9340 575 20215	PMV60EN
7306 ©	9340 575 20215	PMV60EN
7307 ©	3198 010 42310	BC847BW
7308 ©	9340 575 20215	PMV60EN
7309 ©	9340 575 20215	PMV60EN
7310 ©	9340 575 20215	PMV60EN
7311 ©	9322 207 91668	STS8DNF3LL
7319 ©	3198 010 42310	BC847BW
7320 ©	3198 010 42310	BC847BW
7321 ©	3198 010 42310	BC847BW
7322 ©	9340 575 20215	PMV60EN

INTEGRATED CIRCUITS

7317 ©	9322 211 76668	MAX1967EUB+

Note:
Components printed in grey colour are considered as standard spareparts and thus not available on service stock.
Code numbers are published for orientation only.

FRONT BOARDS

Display Board, Standby Board, Tray Light Boards

MISCELLANEOUS

1111	2422 129 16708	ROTARY ENCODER
1130	4822 276 13732	SWITCH, TACT
1160	4822 276 13732	SWITCH, TACT
1165	4822 276 13732	SWITCH, TACT
1166	4822 276 13732	SWITCH, TACT
1167	4822 276 13732	SWITCH, TACT
1168	4822 276 13732	SWITCH, TACT
1169	4822 276 13732	SWITCH, TACT
1170	4822 276 13732	SWITCH, TACT
1910	2422 025 18209	FFC-CONNECTOR, 12P, SIDE ENTRY
1920	2422 026 05301	SOCKET, CINCH, 3P, FJPJ1127 B
1921	2422 026 05307	SOCKET, S-VIDEO
1923	2422 026 05059	HEADPHONE SOCKET, 3,5mm, JACK
1924	4822 267 10731	FFC-CONNECTOR, 6P, TOP ENTRY
7100	2722 171 07736	DISPLAY, BJ900GNK
7107	9322 185 95667	TSOP4836ZC1, IR EYE

CAPACITORS

2100 ©	3198 017 31030	10nF	10%	50V
2101 ©	3198 017 34730	47nF	10%	16V
2102	3198 029 22290	22µF	20%	16V
2103 ©	3198 017 31030	10nF	10%	50V
2104 ©	2238 586 59812	100nF	10%	50V
2110	3198 029 31090	10µF	20%	25V
2111 ©	3198 017 34730	47nF	10%	16V
2112 ©	3198 017 42240	220nF	20%	16V
2113	3198 014 06840	680nF	10%	50V
2114 ©	3198 017 31020	1nF	10%	50V
2115 ©	3198 024 44730	47nF	5%	50V
2116	3198 029 22290	22µF	20%	16V
2117	2020 021 91529	22µF	20%	50V
2118 ©	3198 016 31010	100pF	5%	50V
2119 ©	3198 016 31010	100pF	5%	50V
2120 ©	3198 016 31010	100pF	5%	50V
2121 ©	3198 016 31010	100pF	5%	50V
2122 ©	3198 016 31010	100pF	5%	50V
2123 ©	3198 016 31010	100pF	5%	50V
2124 ©	3198 016 31010	100pF	5%	50V
2125 ©	3198 016 31010	100pF	5%	50V
2126 ©	3198 016 31010	100pF	5%	50V
2200 ©	3198 016 33310	330pF	NP0	50V
2201 ©	3198 016 33310	330pF	NP0	50V
2202 ©	3198 017 31040	100nF	10%	16V
2206 ©	3198 017 32230	22nF	10%	25V
2207 ©	3198 017 32230	22nF	10%	25V
2208 ©	3198 017 31020	1nF	10%	50V

RESISTORS

3100 ©	3198 021 32230	22kΩ	5%	0,06W
3101 ©	3198 021 32230	22kΩ	5%	0,06W
3102 ©	3198 021 32220	2,2kΩ	5%	0,06W
3103 ©	3198 021 32210	220Ω	5%	0,06W
3104 ©	3198 021 34720	4,7kΩ	5%	0,06W
3105 ©	3198 021 31020	1kΩ	5%	0,06W
3106 ©	3198 021 34730	47kΩ	5%	0,06W
3107 ©	3198 021 32220	2,2kΩ	5%	0,06W
3108 ©	3198 021 34730	47kΩ	5%	0,06W
3110 ©	3198 021 32210	220Ω	5%	0,06W
3111 ©	3198 021 32230	22kΩ	5%	0,06W
3112	3198 011 01020	1kΩ	5%	0,2W
3113 ©	3198 021 31020	1kΩ	5%	0,06W
3114 ©	3198 021 31010	100Ω	5%	0,06W
3115 ©	3198 021 31010	100Ω	5%	0,06W

RESISTORS

3116 ©	3198 021 33310	330Ω	5%	0,06W
3117 ©	3198 021 31030	10kΩ	5%	0,06W
3118 ©	3198 021 33310	330Ω	5%	0,06W
3119 ©	3198 021 34710	470Ω	5%	0,06W
3120 ©	3198 021 31020	1kΩ	5%	0,06W
3121	3198 011 02210	220Ω	5%	0,16W
3122 ©	3198 021 31030	10kΩ	5%	0,06W
3123 ©	3198 021 34710	470Ω	5%	0,06W
3124 ©	3198 021 31030	10kΩ	5%	0,06W
3125 ©	3198 021 34710	470Ω	5%	0,06W
3126 ©	3198 021 31010	100Ω	5%	0,06W
3127 ©	3198 021 31040	100kΩ	5%	0,06W
3128 ©	3198 021 31040	100kΩ	5%	0,06W
3130 ©	3198 021 31020	1kΩ	5%	0,06W
3132 ©	3198 021 31020	1kΩ	5%	0,06W
3134	4822 117 12063	10kΩ	5%	NTC
3136	3198 011 02710	270Ω	5%	0,16W
3137	3198 011 02710	270Ω	5%	0,16W
3139	3198 011 02710	270Ω	5%	0,16W
3140 ©	3198 021 31030	10kΩ	5%	0,06W
3141 ©	3198 021 34730	47kΩ	5%	0,06W
3143 ©	3198 021 31020	1kΩ	5%	0,06W
3144 ©	3198 021 31030	10kΩ	5%	0,06W
3145 ©	3198 021 31030	10kΩ	5%	0,06W
3146 ©	3198 021 32230	22kΩ	5%	0,06W
3147	3198 011 02230	22kΩ	5%	0,2W
3148	3198 011 02230	22kΩ	5%	0,2W
3149	3198 011 02230	22kΩ	5%	0,2W
3150 ©	3198 021 32230	22kΩ	5%	0,06W
3151 ©	3198 021 32230	22kΩ	5%	0,06W
3152 ©	3198 021 32230	22kΩ	5%	0,06W
3153 ©	3198 021 32230	22kΩ	5%	0,06W
3160 ©	3198 021 34720	4,7kΩ	5%	0,06W
3161 ©	3198 021 34720	4,7kΩ	5%	0,06W
3162 ©	3198 021 31020	1kΩ	5%	0,06W
3163 ©	3198 021 31020	1kΩ	5%	0,06W
3200 ©	3198 021 31020	1kΩ	5%	0,06W
3201 ©	3198 021 31050	1MΩ	5%	0,06W
3202 ©	3198 021 31020	1kΩ	5%	0,06W
3203 ©	3198 021 31050	1MΩ	5%	0,06W
3204 ©	3198 021 36890	68Ω	5%	0,06W
3205 ©	3198 021 37590	75Ω	5%	0,06W
3206 ©	3198 021 37590	75Ω	5%	0,06W
3207 ©	3198 021 37590	75Ω	5%	0,06W
3300 ©	3198 021 34720	4,7kΩ	5%	0,06W
3301	3198 011 02710	270Ω	5%	0,16W
3302	3198 011 02710	270Ω	5%	0,16W
3303	3198 011 02710	270Ω	5%	0,16W
3304	3198 011 02710	270Ω	5%	0,16W
3400 ©	3198 021 36810	680Ω	5%	0,06W
3500 ©	3198 021 36810	680Ω	5%	0,06W
4111 ©	3198 021 90030	CHIP JUMPER 0603		
4121 ©	3198 021 90030	CHIP JUMPER 0603		
4122 ©	3198 021 90030	CHIP JUMPER 0603		
4123 ©	3198 021 90030	CHIP JUMPER 0603		
4124 ©	3198 021 90030	CHIP JUMPER 0603		
4129 ©	3198 021 90030	CHIP JUMPER 0603		
4198 ©	3198 021 90030	CHIP JUMPER 0603		
4199 ©	3198 021 90030	CHIP JUMPER 0603		

COILS

1110	4822 242 82114	RESONATOR, 8MHZ
5100	4822 157 11706	10µH, 5%
5101 ©	2422 549 44607	FERRITE BEAD

COILS

5103©	2422 549 44607	FERRITE BEAD
5104	4822 157 50964	100µH, 10%
5201©	2422 549 44197	FILTER 100MHz
5202©	2422 549 44197	FILTER 100MHz
5203©	2422 549 44197	FILTER 100MHz

DIODES

6100©	4822 130 11416	BZX384-C6V8
6101©	9322 190 44676	LTL-1MHHR
6102©	9322 190 44676	LTL-1MHHR
6103©	9322 190 44676	LTL-1MHHR
6104©	9322 190 44676	LTL-1MHHR
6105©	4822 130 11397	BAS316
6106©	4822 130 11397	BAS316
6109©	4822 130 11397	BAS316
6111©	4822 130 11397	BAS316
6112©	4822 130 11397	BAS316
6200©	9322 146 61685	DF3A6.8FU
6201©	9322 146 61685	DF3A6.8FU
6202©	9322 146 61685	DF3A6.8FU
6203©	9322 146 61685	DF3A6.8FU
6204©	9322 146 61685	DF3A6.8FU
6400©	9322 203 48685	LTST-T670KRK
6401©	9322 203 48685	LTST-T670KRK
6402©	9322 203 48685	LTST-T670KRK
6500©	9322 203 48685	LTST-T670KRK
6501©	9322 203 48685	LTST-T670KRK
6502©	9322 203 48685	LTST-T670KRK

TRANSISTORS

7101©	3198 010 42310	BC847BW
7102©	3198 010 42310	BC847BW
7104©	3198 010 42310	BC847BW
7105©	3198 010 42310	BC847BW
7106	4822 130 40981	BC337-25
7108	4822 130 41246	BC327-25
7109©	3198 010 42310	BC847BW
7110©	3198 010 42310	BC847BW
7112©	4822 130 60854	PDTA124EU
7300©	4822 130 61553	PDTC124EU
7301©	4822 130 61553	PDTC124EU

INTEGRATED CIRCUITS

7103©	3103 165 13731	TMP87CH74F/LDCP1

Note:
Components printed in grey colour are considered as standard spareparts and thus not available on service stock.
Code numbers are published for orientation only.

COMBI BOARD

MISCELLANEOUS

1018	4822 265 11535	FFC-CONNECTOR, 8P, SIDE ENTRY
1020	2422 025 17897	FFC-CONNECTOR, 6P, SIDE ENTRY
1023©▲	2422 086 11091	FUSE, F 800MA, 50V UL
1024©▲	2422 086 11092	FUSE, 500mA, 50V UL
1025©▲	2422 086 11104	FUSE SM, F 1A, 50V UL
1026©▲	2422 086 11104	FUSE SM, F 1A, 50V UL
1027©▲	2422 086 11104	FUSE SM, F 1A, 50V UL
1028©▲	2422 086 00654	FUSE, F 1.6A, 50V UL
1029©▲	2422 086 11091	FUSE, F 800MA, 50V UL
1030©▲	2422 086 11091	FUSE, F 800MA, 50V UL
1100	2422 025 18013	FFC-CONNECTOR, 12P, SIDE ENTRY
1102	2422 025 15907	FFC-CONNECTOR, 10P, SIDE ENTRY
1200	2422 026 05441	CINCH SOCKET 6 FOLD
1202	2422 025 14541	FFC-CONNECTOR, 11P, SIDE ENTRY
1300	4822 265 11208	FFC-CONNECTOR, 10P, SIDE ENTRY
1302	4822 265 11207	FFC-CONNECTOR, 6P, SIDE ENTRY
1702	4822 267 31729	CINCH SOCKET, BLACK

CAPACITORS

2000	3198 028 41090	10µF	20%	35V
2001©	3198 017 31040	100nF	10%	16V
2002©	3198 017 31040	100nF	10%	16V
2003©	3198 017 31040	100nF	10%	16V
2004©	3198 017 31040	100nF	10%	16V
2005©	3198 017 31040	100nF	10%	16V
2006©	3198 017 31040	100nF	10%	16V
2007©	3198 017 31040	100nF	10%	16V
2008©	3198 017 31040	100nF	10%	16V
2009©	3198 017 31040	100nF	10%	16V
2010©	3198 017 31040	100nF	10%	16V
2011	3198 037 31010	100µF	20%	25V
2012©	3198 017 31040	100nF	10%	16V
2013	3198 037 31010	100µF	20%	25V
2014©	3198 017 31040	100nF	10%	16V
2015	3198 037 31010	100µF	20%	25V
2016©	3198 017 31040	100nF	10%	16V
2017	3198 037 31010	100µF	20%	25V
2018©	3198 017 31040	100nF	10%	16V
2019	3198 037 31010	100µF	20%	25V
2020©	3198 017 31040	100nF	10%	16V
2021	3198 037 34790	47µF	20%	25V
2022©	3198 017 31040	100nF	10%	16V
2023	3198 037 34790	47µF	20%	25V
2024©	3198 017 31040	100nF	10%	16V
2025	3198 037 51090	10µF	20%	50V
2026©	3198 017 31040	100nF	10%	16V
2027	3198 037 11010	100µF	20%	10V
2028©	3198 017 31040	100nF	10%	16V
2029©	3198 017 31020	1nF	10%	50V
2030©	3198 017 31040	100nF	10%	16V
2031©	3198 017 31040	100nF	10%	16V
2032©	3198 017 31040	100nF	10%	16V
2033	3198 037 52280	2,2µF	20%	50V
2034©	3198 016 35610	47pF	5%	50V
2035©	3198 016 34790	47pF	5%	50V
2036©	3198 017 31030	10nF	10%	50V
2037©	3198 016 35610	47pF	5%	50V
2038	3198 028 54770	0,47µF	20%	50V
2039©	3198 016 38290	82pF	NP0	50V
2040©	3198 017 31040	100nF	10%	16V
2041©	3198 017 31030	10nF	10%	50V
2042©	3198 016 34790	47pF	5%	50V
2045©	3198 016 31090	10pF	NP0	50V

CAPACITORS

2046 ©	3198 016 31890	18pF	NP0	50V
2048 ©	3198 016 31890	18pF	NP0	50V
2049 ©	3198 016 31890	18pF	NP0	50V
2050 ©	3198 016 31890	18pF	NP0	50V
2051 ©	3198 016 31890	18pF	NP0	50V
2052 ©	3198 016 31890	18pF	NP0	50V
2053 ©	3198 017 31040	100nF	10%	16V
2054 ©	3198 017 31040	100nF	10%	16V
2200	3198 037 54780	4,7µF	20%	50V
2201	3198 037 54780	4,7µF	20%	50V
2202 ©	3198 017 34710	470pF	20%	50V
2203	3198 028 44780	4,7µF	20%	35V
2204 ©	2222 780 15658	470nF	10%	16V
2204 ©	2022 552 05742	470nF	10%	16V
2205 ©	2222 780 15658	470nF	10%	16V
2205 ©	2022 552 05742	470nF	10%	16V
2206 ©	3198 017 32240	220nF	10%	10V
2207 ©	3198 017 01040	100nF	20%	16V
2208 ©	3198 017 34720	4,7nF		50V
2209 ©	2222 780 15658	470nF	10%	16V
2209 ©	2022 552 05742	470nF	10%	16V
2210 ©	3198 017 31020	1nF	10%	50V
2211 ©	3198 017 31020	1nF	10%	50V
2212 ©	2222 780 15658	470nF	10%	16V
2212 ©	2022 552 05742	470nF	10%	16V
2213	2020 021 91804	47µF	20%	16V
2214	2020 021 91804	47µF	20%	16V
2215 ©	3198 017 32230	22nF	10%	25V
2216 ©	2222 780 15658	470nF	10%	16V
2216 ©	2022 552 05742	470nF	10%	16V
2217	2020 021 91527	100µF	20%	10V
2228 ©	3198 016 31010	100pF	5%	50V
2229 ©	2222 780 15658	470nF	10%	16V
2229 ©	2022 552 05742	470nF	10%	16V
2233 ©	3198 016 34790	47pF	5%	50V
2234 ©	2022 552 05742	470nF	10%	16V
2234 ©	2222 780 15658	470nF	10%	16V
2235	3198 028 44780	4,7µF	20%	35V
2236 ©	3198 016 34790	47pF	5%	50V
2237 ©	3198 016 34790	47pF	5%	50V
2238 ©	3198 016 34790	47pF	5%	50V
2258 ©	2222 780 15658	470nF	10%	16V
2258 ©	2022 552 05742	470nF	10%	16V
2259 ©	3198 016 31010	100pF	5%	50V
2286	2020 021 91527	100µF	20%	10V
2287 ©	2222 780 15658	470nF	10%	16V
2287 ©	2022 552 05742	470nF	10%	16V
2289 ©	2222 780 15658	470nF	10%	16V
2289 ©	2022 552 05742	470nF	10%	16V
2290 ©	3198 017 31020	1nF	10%	50V
2291 ©	3198 017 31020	1nF	10%	50V
2292 ©	2022 552 05742	470nF	10%	16V
2292 ©	2222 780 15658	470nF	10%	16V
2293 ©	3198 017 34720	4,7nF		50V
2298 ©	2222 780 15658	470nF	10%	16V
2298 ©	2022 552 05742	470nF	10%	16V
2299 ©	2222 780 15658	470nF	10%	16V
2299 ©	2022 552 05742	470nF	10%	16V
2300 ©	3198 017 32240	220nF	10%	10V
2301 ©	3198 017 01040	100nF	20%	16V
2302	3198 037 54780	4,7µF	20%	50V
2303 ©	3198 016 32210	220pF	NP0	50V
2318 ©	3198 016 32210	220pF	NP0	50V
2319 ©	3198 016 32210	220pF	NP0	50V

CAPACITORS

2320 ©	3198 016 32210	220pF	NP0	50V
2321	3198 037 54780	4,7µF	20%	50V
2322	3198 037 54780	4,7µF	20%	50V
2323 ©	3198 017 34710	470pF	20%	50V
2324 ©	2022 552 05742	470nF	10%	16V
2324 ©	2222 780 15658	470nF	10%	16V
2325 ©	2222 780 15658	470nF	10%	16V
2325 ©	2022 552 05742	470nF	10%	16V
2326 ©	2022 552 05742	470nF	10%	16V
2326 ©	2222 780 15658	470nF	10%	16V
2327 ©	3198 017 34720	4,7nF		50V
2328 ©	3198 017 34710	470pF	20%	50V
2329 ©	3198 017 34710	470pF	20%	50V
2330 ©	3198 017 31020	1nF	10%	50V
2331	3198 028 24790	47µ	20%	16V
2332	2020 021 91804	47µF	20%	16V
2333	2020 021 91804	47µF	20%	16V
2334 ©	3198 017 32230	22nF	10%	25V
2335 ©	2238 586 55618	470pF	10%	50V
2336 ©	2238 586 55618	470pF	10%	50V
2337 ©	2222 780 15658	470nF	10%	16V
2337 ©	2022 552 05742	470nF	10%	16V
2338 ©	2022 552 05742	470nF	10%	16V
2338 ©	2222 780 15658	470nF	10%	16V
2339 ©	2222 780 15658	470nF	10%	16V
2339 ©	2022 552 05742	470nF	10%	16V
2340 ©	2022 552 05742	470nF	10%	16V
2340 ©	2222 780 15658	470nF	10%	16V
2341 ©	2022 552 05742	470nF	10%	16V
2341 ©	2222 780 15658	470nF	10%	16V
2342 ©	3198 016 34790	47pF	5%	50V
2343 ©	3198 016 34790	47pF	5%	50V
2344	3198 028 24790	47µ	20%	16V
2345 ©	3198 017 31020	1nF	10%	50V
2346 ©	3198 016 32210	220pF	NP0	50V
2347 ©	3198 016 32210	220pF	NP0	50V
2348 ©	3198 016 32210	220pF	NP0	50V
2349 ©	3198 016 32210	220pF	NP0	50V
2350 ©	2022 552 05742	470nF	10%	16V
2350 ©	2222 780 15658	470nF	10%	16V
2351 ©	3198 017 34720	4,7nF		50V
2352 ©	2222 780 15658	470nF	10%	16V
2352 ©	2022 552 05742	470nF	10%	16V
2353 ©	2222 780 15658	470nF	10%	16V
2353 ©	2022 552 05742	470nF	10%	16V
2354 ©	3198 017 34710	470pF	20%	50V
2355 ©	3198 017 34710	470pF	20%	50V
2401 ©	3198 017 04710	470pF	20%	50V
2402 ©	2222 780 15658	470nF	10%	16V
2402 ©	2022 552 05742	470nF	10%	16V
2403 ©	3198 017 34720	4,7nF		50V
2404 ©	3198 017 31020	1nF	10%	50V
2405	3198 028 24790	47µ	20%	16V
2406	3198 028 24790	47µ	20%	16V
2408	3198 028 24790	47µ	20%	16V
2409 ©	3198 017 32230	22nF	10%	25V
2410	3198 037 54780	4,7µF	20%	50V
2412 ©	2022 552 05742	470nF	10%	16V
2412 ©	2222 780 15658	470nF	10%	16V
2414 ©	3198 016 34790	47pF	5%	50V
2415 ©	3198 016 34790	47pF	5%	50V
2419 ©	3198 017 31020	1nF	10%	50V
2421 ©	2022 552 05742	470nF	10%	16V
2421 ©	2222 780 15658	470nF	10%	16V

CAPACITORS

2424 ©	3198 017 34720	4,7nF		50V
2425	3198 028 24790	47µ	20%	16V
2426 ©	2022 552 05742	470nF	10%	16V
2426 ©	2222 780 15658	470nF	10%	16V
2427 ©	2022 552 05742	470nF	10%	16V
2427 ©	2222 780 15658	470nF	10%	16V
2428 ©	2022 552 05429	56nF	10%	50V
2435 ©	2022 552 05742	470nF	10%	16V
2435 ©	2222 780 15658	470nF	10%	16V
2436 ©	2222 780 15658	470nF	10%	16V
2436 ©	2022 552 05742	470nF	10%	16V
2437 ©	3198 017 04710	470pF	20%	50V
2440 ©	3198 017 32230	22nF	10%	25V
2441	3198 037 32210	220µF	20%	25V
2442	2020 021 91804	47µF	20%	16V
2443 ©	3198 017 01040	100nF	20%	16V
2447 ©	3198 017 02220	2,2nF	20%	50V
2448	3198 028 24790	47µ	20%	16V
2449 ©	3198 017 32230	22nF	10%	25V
2450	3198 028 21010	100µF	20%	16V
2451	3198 037 11010	100µF	20%	10V
2452	3198 028 21090	10µF	20%	16V
2453	3198 028 54770	0,47µF	20%	50V
2454 ©	3198 016 31010	100pF	5%	50V
2455 ©	3198 016 31010	100pF	5%	50V
2456 ©	3198 016 31010	100pF	5%	50V
2457 ©	3198 016 31010	100pF	5%	50V
2500 ©	3198 017 31520	1,5nF	20%	50V
2501 ©	3198 017 33310	330pF	20%	50V
2503 ©	2238 586 55618	470pF	10%	50V
2504 ©	3198 017 31520	1,5nF	20%	50V
2505 ©	3198 017 33310	330pF	20%	50V
2506	2020 021 91804	47µF	20%	16V
2507 ©	3198 017 31040	100nF	10%	16V
2508 ©	3198 017 31030	10nF	10%	50V
2509 ©	3198 017 31030	10nF	10%	50V
2510 ©	3198 017 31040	100nF	10%	16V
2511	2020 021 91804	47µF	20%	16V
2512 ©	3198 017 31520	1,5nF	20%	50V
2513 ©	3198 017 33310	330pF	20%	50V
2514 ©	2238 586 55618	470pF	10%	50V
2515 ©	3198 017 31520	1,5nF	20%	50V
2516 ©	3198 017 33310	330pF	20%	50V
2517 ©	3198 017 31040	100nF	10%	16V
2518 ©	3198 017 31030	10nF	10%	50V
2519 ©	3198 017 31030	10nF	10%	50V
2520 ©	3198 017 31040	100nF	10%	16V
2521 ©	3198 017 31520	1,5nF	20%	50V
2522 ©	3198 017 33310	330pF	20%	50V
2523 ©	2238 586 55618	470pF	10%	50V
2524 ©	3198 017 31520	1,5nF	20%	50V
2525 ©	3198 017 33310	330pF	20%	50V
2526 ©	3198 017 31520	1,5nF	20%	50V
2527 ©	3198 017 33310	330pF	20%	50V
2528	3198 028 21090	10µF	20%	16V
2529 ©	2238 586 55618	470pF	10%	50V
2530 ©	2022 552 05638	100nF	10%	16V
2531 ©	3198 017 31520	1,5nF	20%	50V
2532 ©	3198 017 33310	330pF	20%	50V
2533 ©	3198 017 31520	1,5nF	20%	50V
2534 ©	3198 017 33310	330pF	20%	50V
2535 ©	2238 586 55618	470pF	10%	50V
2536 ©	3198 017 31520	1,5nF	20%	50V
2537 ©	3198 017 33310	330pF	20%	50V

CAPACITORS

2538 ©	3198 017 31520	1,5nF	20%	50V
2539 ©	3198 017 33310	330pF	20%	50V
2540 ©	2238 586 55618	470pF	10%	50V
2541 ©	3198 017 31030	10nF	10%	50V
2542 ©	3198 017 31520	1,5nF	20%	50V
2543 ©	3198 017 33310	330pF	20%	50V
2544	3198 028 54770	0,47µF	20%	50V
2545	3198 028 21010	100µF	20%	16V
2546 ©	2022 552 05638	100nF	10%	16V
2547	3198 037 51090	10µF	20%	50V
2548 ©	2022 552 05638	100nF	10%	16V
2549 ©	3198 017 31030	10nF	10%	50V
2550 ©	3198 017 31520	1,5nF	20%	50V
2551 ©	3198 017 33310	330pF	20%	50V
2552 ©	2022 552 05638	100nF	10%	16V
2553	3198 028 21090	10µF	20%	16V
2554 ©	2020 552 96137	2,7nF	10%	50V
2555 ©	2238 586 55618	470pF	10%	50V
2556 ©	3198 017 36810	680pF		50V
2557 ©	3198 017 31520	1,5nF	20%	50V
2558 ©	3198 017 33310	330pF	20%	50V
2559 ©	3198 017 31520	1,5nF	20%	50V
2560 ©	3198 017 33310	330pF	20%	50V
2561 ©	2238 586 55618	470pF	10%	50V
2562 ©	3198 016 31010	100pF	5%	50V
2563	3198 037 54780	4,7µF	20%	50V
2564 ©	3198 017 33310	330pF	20%	50V
2565	3198 037 54780	4,7µF	20%	50V
2566 ©	3198 017 31520	1,5nF	20%	50V
2567 ©	3198 017 33310	330pF	20%	50V
2568 ©	3198 016 31010	100pF	5%	50V
2569	3198 037 54780	4,7µF	20%	50V
2570 ©	3198 016 31010	100pF	5%	50V
2571 ©	3198 017 33310	330pF	20%	50V
2572	3198 037 54780	4,7µF	20%	50V
2573	3198 037 31010	100µF	20%	25V
2574 ©	3198 017 31040	100nF	10%	16V
2575 ©	3198 017 31040	100nF	10%	16V
2576 ©	3198 017 31040	100nF	10%	16V
2577 ©	3198 017 31040	100nF	10%	16V
2578 ©	3198 017 31040	100nF	10%	16V
2579 ©	3198 017 31040	100nF	10%	16V
2580	3198 037 31010	100µF	20%	25V
2581 ©	3198 017 31040	100nF	10%	16V
2582 ©	3198 017 31040	100nF	10%	16V
2583 ©	3198 017 31040	100nF	10%	16V
2584 ©	3198 017 31040	100nF	10%	16V
2585 ©	3198 017 31040	100nF	10%	16V
2586 ©	3198 017 31040	100nF	10%	16V
2587 ©	3198 016 31010	100pF	5%	50V
2588 ©	3198 016 31010	100pF	5%	50V
2589 ©	3198 016 31010	100pF	5%	50V
2700 ©	3198 016 31090	10pF	NP0	50V
2701 ©	3198 017 31040	100nF	10%	16V
2702 ©	3198 016 31890	18pF	NP0	50V
2703 ©	3198 016 31890	18pF	NP0	50V
2704	3198 037 51090	10µF	20%	50V
2705	3198 037 51090	10µF	20%	50V
2706 ©	3198 017 31030	10nF	10%	50V
2707	3198 028 54770	0,47µF	20%	50V
2708 ©	3198 017 31030	10nF	10%	50V
2709	3198 025 11010	100µF	20%	10V
2710 ©	3198 017 31040	100nF	10%	16V
2711 ©	3198 017 31040	100nF	10%	16V

CAPACITORS

2712 ©	3198 017 31040	100nF	10%	16V	
2713 ©	3198 017 31040	100nF	10%	16V	
2714 ©	3198 017 31040	100nF	10%	16V	
2715	3198 037 51090	10µF	20%	50V	
2716 ©	3198 017 31040	100nF	10%	16V	
2717 ©	3198 017 31020	1nF	10%	50V	
2718	3198 037 51090	10µF	20%	50V	
2719 ©	3198 017 31040	100nF	10%	16V	
2720	3198 025 11010	100µF	20%	10V	
2721 ©	3198 017 31040	100nF	10%	16V	
2722 ©	3198 017 31040	100nF	10%	16V	
2723 ©	3198 017 31040	100nF	10%	16V	
2724 ©	3198 017 31040	100nF	10%	16V	
2725	3198 037 51090	10µF	20%	50V	
2726 ©	3198 017 31040	100nF	10%	16V	
2727 ©	3198 016 34790	47pF	5%	50V	
2728 ©	3198 016 34790	47pF	5%	50V	
2731 ©	3198 016 34790	47pF	5%	50V	
2732 ©	3198 016 34790	47pF	5%	50V	
2733 ©	3198 016 34790	47pF	5%	50V	
2734 ©	3198 016 34790	47pF	5%	50V	
2737 ©	3198 016 34790	47pF	5%	50V	
2738 ©	3198 016 34790	47pF	5%	50V	
2739 ©	3198 016 34790	47pF	5%	50V	
2740 ©	3198 016 34790	47pF	5%	50V	
2741 ©	3198 016 34790	47pF	5%	50V	
2800	2020 021 91804	47µF	20%	16V	
2801 ©	3198 017 31040	100nF	10%	16V	
2802 ©	3198 017 31040	100nF	10%	16V	
2803 ©	3198 017 31040	100nF	10%	16V	
2804 ©	3198 017 31040	100nF	10%	16V	
2805	2020 021 91804	47µF	20%	16V	
2806 ©	3198 016 31890	18pF	NP0	50V	
2807 ©	3198 016 31890	18pF	NP0	50V	
2808 ©	3198 017 31040	100nF	10%	16V	
2809 ©	3198 016 34710	470pF	5%	50V	
2811 ©	2022 552 05638	100nF	10%	16V	
2812 ©	2022 552 05638	100nF	10%	16V	
2813 ©	3198 016 34710	470pF	5%	50V	
2814 ©	3198 016 34710	470pF	5%	50V	
2815 ©	3198 017 31040	100nF	10%	16V	
2816 ©	3198 017 31040	100nF	10%	16V	
2817 ©	3198 016 34790	47pF	5%	50V	
2820 ©	3198 017 31040	100nF	10%	16V	
2821 ©	3198 016 31510	150pF	NP0	50V	
2823 ©	3198 017 31040	100nF	10%	16V	
2825 ©	3198 016 31890	18pF	NP0	50V	
2826 ©	3198 016 31090	10pF	NP0	50V	
2828 ©	3198 016 31090	10pF	NP0	50V	

RESISTORS

3000 ▲	4822 052 10109	10Ω	5%	0,33W	NFR
3001 ©	3198 021 31020	1kΩ	5%	0,06W	
3002 ©	3198 021 38220	8,2kΩ	5%	0,06W	
3003 ©	3198 021 31520	1,5kΩ	5%	0,06W	
3004 ©	3198 021 31040	100kΩ	5%	0,06W	
3005 ©	3198 021 34730	47kΩ	5%	0,06W	
3006 ©	3198 021 31030	10kΩ	5%	0,06W	
3007 ©	3198 021 31030	10kΩ	5%	0,06W	
3008 ©	3198 021 31030	10kΩ	5%	0,06W	
3009 ©	3198 021 31030	10kΩ	5%	0,06W	
3010 ©	3198 021 31020	1kΩ	5%	0,06W	
3011 ©	3198 021 31830	18kΩ	5%	0,06W	
3012 ©	3198 021 31030	10kΩ	5%	0,06W	

RESISTORS

3013 ▲	4822 052 10228	2,2Ω	5%	0,33W	NFR
3014 ©	3198 021 31030	10kΩ	5%	0,06W	
3015 ©	3198 021 31020	1kΩ	5%	0,06W	
3016 ©	3198 021 31020	1kΩ	5%	0,06W	
3017 ©	3198 021 31030	10kΩ	5%	0,06W	
3018 ©	3198 021 34710	470Ω	5%	0,06W	
3019 ©	3198 021 34710	470Ω	5%	0,06W	
3020 ©	3198 021 34710	470Ω	5%	0,06W	
3021 ©	3198 021 34710	470Ω	5%	0,06W	
3022 ©	3198 021 31030	10kΩ	5%	0,06W	
3023 ©	3198 021 31010	100Ω	5%	0,06W	
3024 ©	3198 021 31030	10kΩ	5%	0,06W	
3025 ©	3198 021 31020	1kΩ	5%	0,06W	
3026 ©	3198 021 31020	1kΩ	5%	0,06W	
3027 ©	3198 021 31020	1kΩ	5%	0,06W	
3028 ©	3198 021 31020	1kΩ	5%	0,06W	
3029 ©	3198 021 31020	1kΩ	5%	0,06W	
3030 ©	3198 021 34710	470Ω	5%	0,06W	
3031 ©	3198 021 34710	470Ω	5%	0,06W	
3032 ©	3198 021 34710	470Ω	5%	0,06W	
3033 ©	3198 021 34710	470Ω	5%	0,06W	
3034 ©	3198 021 34710	470Ω	5%	0,06W	
3035 ©	3198 021 34710	470Ω	5%	0,06W	
3036 ©	3198 021 31050	1MΩ	5%	0,06W	
3037 ©	3198 021 31040	100kΩ	5%	0,06W	
3038 ©	3198 021 31020	1kΩ	5%	0,06W	
3039 ©	3198 021 34730	47kΩ	5%	0,06W	
3040 ©	3198 021 31520	1,5kΩ	5%	0,06W	
3041 ©	3198 021 31020	1kΩ	5%	0,06W	
3042 ©	3198 021 34710	470Ω	5%	0,06W	
3043 ©	3198 021 31020	1kΩ	5%	0,06W	
3044 ©	3198 021 34710	470Ω	5%	0,06W	
3045 ©	3198 021 31020	1kΩ	5%	0,06W	
3046 ©	3198 021 34710	470Ω	5%	0,06W	
3047 ©	3198 021 31020	1kΩ	5%	0,06W	
3049 ©	3198 021 34710	470Ω	5%	0,06W	
3050 ©	3198 021 34720	4,7kΩ	5%	0,06W	
3051 ©	3198 021 31020	1kΩ	5%	0,06W	
3053 ©	3198 021 31520	1,5kΩ	5%	0,06W	
3054 ©	3198 021 31020	1kΩ	5%	0,06W	
3055 ©	3198 021 31520	1,5kΩ	5%	0,06W	
3056 ©	3198 021 31020	1kΩ	5%	0,06W	
3057 ©	3198 021 31520	1,5kΩ	5%	0,06W	
3058 ©	3198 021 31020	1kΩ	5%	0,06W	
3059 ©	3198 021 31020	1kΩ	5%	0,06W	
3060 ©	3198 021 31020	1kΩ	5%	0,06W	
3061 ©	3198 021 31020	1kΩ	5%	0,06W	
3062 ©	3198 021 31020	1kΩ	5%	0,06W	
3063 ©	3198 021 31020	1kΩ	5%	0,06W	
3064 ©	3198 021 31020	1kΩ	5%	0,06W	
3065 ©	3198 021 31020	1kΩ	5%	0,06W	
3066 ©	3198 021 31020	1kΩ	5%	0,06W	
3067 ©	3198 021 31020	1kΩ	5%	0,06W	
3068 ©	3198 021 31020	1kΩ	5%	0,06W	
3069 ©	3198 021 31010	100Ω	5%	0,06W	
3070 ©	3198 021 31010	100Ω	5%	0,06W	
3071 ©	3198 021 31020	1kΩ	5%	0,06W	
3072 ©	3198 021 31010	100Ω	5%	0,06W	
3074 ©	3198 021 31010	100Ω	5%	0,06W	
3075 ©	3198 021 31020	1kΩ	5%	0,06W	
3076 ©	3198 021 31010	100Ω	5%	0,06W	
3077 ©	3198 021 31010	100Ω	5%	0,06W	
3078 ©	3198 021 31020	1kΩ	5%	0,06W	
3079 ©	3198 021 31030	10kΩ	5%	0,06W	

RESISTORS

3080 ©	3198 021 31030	10kΩ	5%	0,06W	
3081 ©	3198 021 31030	10kΩ	5%	0,06W	
3082 ©	3198 021 31030	10kΩ	5%	0,06W	
3083 ©	3198 021 31030	10kΩ	5%	0,06W	
3084 ©	3198 021 31010	100Ω	5%	0,06W	
3085 ©	3198 021 31020	1kΩ	5%	0,06W	
3086 ©	3198 021 31010	100Ω	5%	0,06W	
3087 ©	3198 021 31020	1kΩ	5%	0,06W	
3088 ©	3198 021 31010	100Ω	5%	0,06W	
3089 ©	3198 021 31010	100Ω	5%	0,06W	
3090 ©	3198 021 31010	100Ω	5%	0,06W	
3091 ©	3198 021 31010	100Ω	5%	0,06W	
3092 ©	3198 021 31010	100Ω	5%	0,06W	
3093 ©	3198 021 31030	10kΩ	5%	0,06W	
3094 ©	3198 021 31030	10kΩ	5%	0,06W	
3095 ©	3198 021 31030	10kΩ	5%	0,06W	
3096 ©	3198 021 31030	10kΩ	5%	0,06W	
3097 ▲	4822 052 10338	3,3Ω	5%	0,33W	NFR
3098 ©	3198 021 31030	10kΩ	5%	0,06W	
3099 ©	3198 021 31030	10kΩ	5%	0,06W	
3100 ©	3198 021 31030	10kΩ	5%	0,06W	
3101 ©	3198 021 31030	10kΩ	5%	0,06W	
3103 ©	3198 021 31020	1kΩ	5%	0,06W	
3104 ©	3198 021 31020	1kΩ	5%	0,06W	
3105 ©	3198 021 31040	100kΩ	5%	0,06W	
3106 ©	3198 021 31020	1kΩ	5%	0,06W	
3107 ©	3198 021 31030	10kΩ	5%	0,06W	
3108 ©	3198 021 34720	4,7kΩ	5%	0,06W	
3111 ©	3198 021 31030	10kΩ	5%	0,06W	
3113 ©	3198 021 32240	220kΩ	5%	0,06W	
3114 ©	3198 021 31010	100Ω	5%	0,06W	
3115 ©	3198 021 32240	220kΩ	5%	0,06W	
3116 ©	3198 021 31040	100kΩ	5%	0,06W	
3117 ©	3198 021 32220	2,2kΩ	5%	0,06W	
3119 ©	3198 021 31010	100Ω	5%	0,06W	
3122 ©	3198 021 31020	1kΩ	5%	0,06W	
3123 ©	3198 021 31010	100Ω	5%	0,06W	
3125 ©	3198 021 31010	100Ω	5%	0,06W	
3126 ©	3198 021 31020	1kΩ	5%	0,06W	
3200 ©	3198 021 31010	100Ω	5%	0,06W	
3201 ©	3198 021 34710	470Ω	5%	0,06W	
3202 ©	3198 021 34710	470Ω	5%	0,06W	
3203 ©	3198 021 32220	2,2kΩ	5%	0,06W	
3204 ©	3198 021 34730	47kΩ	5%	0,06W	
3205 ©	3198 021 31040	100kΩ	5%	0,06W	
3206 ©	3198 021 31020	1kΩ	5%	0,06W	
3207 ©	3198 021 31020	1kΩ	5%	0,06W	
3208 ©	3198 021 31030	10kΩ	5%	0,06W	
3209 ©	3198 021 31530	15kΩ	5%	0,06W	
3210 ©	3198 021 34720	4,7kΩ	5%	0,06W	
3211 ©	3198 021 31030	10kΩ	5%	0,06W	
3212 ©	3198 021 31030	10kΩ	5%	0,06W	
3213 ©	3198 021 36820	6,8kΩ	5%	0,06W	
3214 ©	3198 021 34790	47Ω	5%	0,06W	
3215 ©	3198 021 32220	2,2kΩ	5%	0,06W	
3216 ©	3198 021 34790	47Ω	5%	0,06W	
3217 ©	3198 021 31510	150Ω	5%	0,06W	
3218 ©	3198 021 32210	220Ω	5%	0,06W	
3219 ©	3198 021 31020	1kΩ	5%	0,06W	
3220 ©	3198 021 31030	10kΩ	5%	0,06W	
3221 ©	3198 021 33310	330Ω	5%	0,06W	
3222 ©	3198 021 32230	22kΩ	5%	0,06W	
3223 ©	3198 021 31020	1kΩ	5%	0,06W	
3224 ©	3198 021 34790	47Ω	5%	0,06W	

RESISTORS

3225 ©	3198 021 32220	2,2kΩ	5%	0,06W
3226 ©	3198 021 31030	10kΩ	5%	0,06W
3227 ©	3198 021 36820	6,8kΩ	5%	0,06W
3228 ©	3198 021 32730	27kΩ	5%	0,06W
3229 ©	3198 021 31020	1kΩ	5%	0,06W
3230 ©	3198 021 31030	10kΩ	5%	0,06W
3231 ©	3198 021 32730	27kΩ	5%	0,06W
3232 ©	3198 021 31020	1kΩ	5%	0,06W
3233 ©	3198 021 36820	6,8kΩ	5%	0,06W
3234 ©	3198 021 31530	15kΩ	5%	0,06W
3235 ©	3198 021 34790	47Ω	5%	0,06W
3236 ©	3198 021 31020	1kΩ	5%	0,06W
3237 ©	3198 021 31030	10kΩ	5%	0,06W
3238 ©	3198 021 34720	4,7kΩ	5%	0,06W
3239 ©	3198 021 32230	22kΩ	5%	0,06W
3240 ©	3198 021 33310	330Ω	5%	0,06W
3241 ©	3198 021 34720	4,7kΩ	5%	0,06W
3242 ©	3198 021 32210	220Ω	5%	0,06W
3243 ©	3198 021 31020	1kΩ	5%	0,06W
3244 ©	3198 021 31510	150Ω	5%	0,06W
3245 ©	3198 021 34720	4,7kΩ	5%	0,06W
3246 ©	3198 021 34720	4,7kΩ	5%	0,06W
3247 ©	3198 021 34720	4,7kΩ	5%	0,06W
3248 ©	3198 021 36820	6,8kΩ	5%	0,06W
3249 ©	3198 021 31030	10kΩ	5%	0,06W
3251 ©	3198 021 34720	4,7kΩ	5%	0,06W
3252 ©	3198 021 32730	27kΩ	5%	0,06W
3253 ©	3198 021 32730	27kΩ	5%	0,06W
3254 ©	3198 021 32730	27kΩ	5%	0,06W
3255 ©	3198 021 32730	27kΩ	5%	0,06W
3256 ©	3198 021 34710	470Ω	5%	0,06W
3257 ©	3198 021 34710	470Ω	5%	0,06W
3258 ©	3198 021 31020	1kΩ	5%	0,06W
3259 ©	3198 021 31010	100Ω	5%	0,06W
3260 ©	3198 021 31040	100kΩ	5%	0,06W
3261 ©	3198 021 31030	10kΩ	5%	0,06W
3262 ©	3198 021 32220	2,2kΩ	5%	0,06W
3263 ©	3198 021 34730	47kΩ	5%	0,06W
3267 ©	3198 021 31040	100kΩ	5%	0,06W
3268 ©	3198 021 31030	10kΩ	5%	0,06W
3269 ©	3198 021 34710	470Ω	5%	0,06W
3271 ©	3198 021 31020	1kΩ	5%	0,06W
3272 ©	3198 021 31020	1kΩ	5%	0,06W
3273 ©	3198 021 31020	1kΩ	5%	0,06W
3274 ©	3198 021 33930	39kΩ	5%	0,06W
3275 ©	3198 021 33930	39kΩ	5%	0,06W
3276 ©	3198 021 32220	2,2kΩ	5%	0,06W
3277 ©	3198 021 31010	100Ω	5%	0,06W
3278 ©	3198 021 31020	1kΩ	5%	0,06W
3279 ©	3198 021 34720	4,7kΩ	5%	0,06W
3280 ©	3198 021 31020	1kΩ	5%	0,06W
3281 ©	3198 021 34720	4,7kΩ	5%	0,06W
3282 ©	3198 021 31020	1kΩ	5%	0,06W
3283 ©	3198 021 34720	4,7kΩ	5%	0,06W
3284 ©	3198 021 34720	4,7kΩ	5%	0,06W
3285 ©	3198 021 31020	1kΩ	5%	0,06W
3286 ©	3198 021 31010	100Ω	5%	0,06W
3287 ©	3198 021 31090	10Ω	5%	0,06W
3288 ©	3198 021 31090	10Ω	5%	0,06W
3289 ©	3198 021 32220	2,2kΩ	5%	0,06W
3290 ©	3198 021 32730	27kΩ	5%	0,06W
3291 ©	3198 021 32730	27kΩ	5%	0,06W
3292 ©	3198 021 32730	27kΩ	5%	0,06W
3293 ©	3198 021 32730	27kΩ	5%	0,06W

RESISTORS

3294 ©	3198 021 34720	4,7kΩ	5%	0,06W		
3295 ©	3198 021 31020	1kΩ	5%	0,06W		
3296 ©	3198 021 34720	4,7kΩ	5%	0,06W		
3297 ©	3198 021 34710	470Ω	5%	0,06W		
3299 ©	3198 021 32730	27kΩ	5%	0,06W		
3306 ©	3198 021 32730	27kΩ	5%	0,06W		
3400 ©	3198 021 34710	470Ω	5%	0,06W		
3401 ©	3198 021 31030	10kΩ	5%	0,06W		
3402 ©	3198 021 31020	1kΩ	5%	0,06W		
3403 ©	3198 021 32220	2,2kΩ	5%	0,06W		
3404 ©	3198 021 31010	100Ω	5%	0,06W		
3406 ©	3198 021 31030	10kΩ	5%	0,06W		
3407 ©	3198 021 31020	1kΩ	5%	0,06W		
3408 ©	3198 021 31020	1kΩ	5%	0,06W		
3409 ©	3198 021 31020	1kΩ	5%	0,06W		
3410 ©	3198 021 31530	15kΩ	5%	0,06W		
3411 ©	3198 021 31020	1kΩ	5%	0,06W		
3412 ©	3198 021 31030	10kΩ	5%	0,06W		
3414 ©	3198 021 31010	100Ω	5%	0,06W		
3419 ©	3198 021 32220	2,2kΩ	5%	0,06W		
3420 ©	3198 021 34710	470Ω	5%	0,06W		
3424 ©	3198 021 31030	10kΩ	5%	0,06W		
3426 ©	3198 021 33320	3,3kΩ	5%	0,06W		
3433 ▲	4822 052 10109	10Ω	5%	0,33W	NFR	
3434 ©	2322 704 62703	27kΩ	1%	0,06W		
3435 ©	3198 021 31020	1kΩ	5%	0,06W		
3436 ©	2322 704 61804	180kΩ	1%	0,06W		
3438 ©	3198 021 31030	10kΩ	5%	0,06W		
3439 ©	3198 021 31030	10kΩ	5%	0,06W		
3440 ©	3198 021 34710	470Ω	5%	0,06W		
3441 ©	3198 021 31030	10kΩ	5%	0,06W		
3443 ©	3198 021 34790	47Ω	5%	0,06W		
3445 ©	3198 021 32210	220Ω	5%	0,06W		
3446 ©	3198 021 31030	10kΩ	5%	0,06W		
3447 ©	3198 021 34720	4,7kΩ	5%	0,06W		
3448 ©	3198 021 38220	8,2kΩ	5%	0,06W		
3449 ©	3198 021 31030	10kΩ	5%	0,06W		
3450 ©	3198 021 32240	220kΩ	5%	0,06W		
3451 ©	3198 021 31520	1,5kΩ	5%	0,06W		
3452 ©	3198 021 31520	1,5kΩ	5%	0,06W		
3453 ©	3198 021 38220	8,2kΩ	5%	0,06W		
3454 ©	3198 021 31030	10kΩ	5%	0,06W		
3455 ©	3198 021 31030	10kΩ	5%	0,06W		
3500 ©	3198 021 33320	3,3kΩ	5%	0,06W		
3501 ©	3198 021 33920	3,9kΩ	5%	0,06W		
3502 ©	3198 021 32210	220Ω	5%	0,06W		
3503 ©	3198 021 33920	3,9kΩ	5%	0,06W		
3505 ©	3198 021 33320	3,3kΩ	5%	0,06W		
3508 ©	3198 021 33920	3,9kΩ	5%	0,06W		
3510 ©	3198 021 33920	3,9kΩ	5%	0,06W		
3511 ©	3198 021 32210	220Ω	5%	0,06W		
3512 ©	3198 021 33920	3,9kΩ	5%	0,06W		
3513 ©	3198 021 33320	3,3kΩ	5%	0,06W		
3514 ©	3198 021 33920	3,9kΩ	5%	0,06W		
3515 ©	3198 021 33920	3,9kΩ	5%	0,06W		
3516 ©	3198 021 33320	3,3kΩ	5%	0,06W		
3517 ©	3198 021 33920	3,9kΩ	5%	0,06W		
3518 ©	3198 021 33320	3,3kΩ	5%	0,06W		
3519 ©	3198 021 33920	3,9kΩ	5%	0,06W		
3520 ©	3198 021 32210	220Ω	5%	0,06W		
3521 ©	3198 021 33920	3,9kΩ	5%	0,06W		
3522 ©	3198 021 31030	10kΩ	5%	0,06W		
3523 ©	3198 021 31030	10kΩ	5%	0,06W		
3524 ©	3198 021 31030	10kΩ	5%	0,06W		

RESISTORS

3525 ©	3198 021 31030	10kΩ	5%	0,06W
3526 ©	3198 021 31030	10kΩ	5%	0,06W
3527 ©	3198 021 33320	3,3kΩ	5%	0,06W
3528 ©	3198 021 33920	3,9kΩ	5%	0,06W
3529 ©	3198 021 31030	10kΩ	5%	0,06W
3530 ©	3198 021 33920	3,9kΩ	5%	0,06W
3531 ©	3198 021 32210	220Ω	5%	0,06W
3532 ©	3198 021 31030	10kΩ	5%	0,06W
3533 ©	3198 021 33920	3,9kΩ	5%	0,06W
3534 ©	3198 021 33320	3,3kΩ	5%	0,06W
3535 ©	3198 021 33920	3,9kΩ	5%	0,06W
3536 ©	3198 021 31010	100Ω	5%	0,06W
3538 ©	3198 021 33920	3,9kΩ	5%	0,06W
3539 ©	3198 021 31020	1kΩ	5%	0,06W
3540 ©	3198 021 31030	10kΩ	5%	0,06W
3541 ©	3198 021 33320	3,3kΩ	5%	0,06W
3542 ©	3198 021 33920	3,9kΩ	5%	0,06W
3543 ©	3198 021 31010	100Ω	5%	0,06W
3544 ©	3198 021 33320	3,3kΩ	5%	0,06W
3545 ©	3198 021 33920	3,9kΩ	5%	0,06W
3546 ©	3198 021 31090	10Ω	5%	0,06W
3547 ©	3198 021 32210	220Ω	5%	0,06W
3550 ©	3198 021 33920	3,9kΩ	5%	0,06W
3551 ©	3198 021 31010	100Ω	5%	0,06W
3552 ©	3198 021 31090	10Ω	5%	0,06W
3553 ©	3198 021 31090	10Ω	5%	0,06W
3554 ©	3198 021 31090	10Ω	5%	0,06W
3555 ©	3198 021 31090	10Ω	5%	0,06W
3556 ©	3198 021 33320	3,3kΩ	5%	0,06W
3557 ©	3198 021 33920	3,9kΩ	5%	0,06W
3558 ©	3198 021 31090	10Ω	5%	0,06W
3559 ©	3198 021 33920	3,9kΩ	5%	0,06W
3560 ©	3198 021 32210	220Ω	5%	0,06W
3561 ©	3198 021 31090	10Ω	5%	0,06W
3562 ©	3198 021 31030	10kΩ	5%	0,06W
3563 ©	3198 021 33920	3,9kΩ	5%	0,06W
3564 ©	3198 021 31010	100Ω	5%	0,06W
3565 ©	3198 021 33320	3,3kΩ	5%	0,06W
3566 ©	3198 021 33920	3,9kΩ	5%	0,06W
3567 ©	3198 021 34730	47kΩ	5%	0,06W
3568 ©	3198 021 31010	100Ω	5%	0,06W
3569 ©	3198 021 31010	100Ω	5%	0,06W
3570 ©	3198 021 31020	1kΩ	5%	0,06W
3571 ©	3198 021 31020	1kΩ	5%	0,06W
3572 ©	3198 021 31010	100Ω	5%	0,06W
3573 ©	3198 021 33920	3,9kΩ	5%	0,06W
3574 ©	3198 021 33320	3,3kΩ	5%	0,06W
3575 ©	3198 021 33920	3,9kΩ	5%	0,06W
3576 ©	3198 021 31040	100kΩ	5%	0,06W
3577 ©	3198 021 32240	220kΩ	5%	0,06W
3578 ©	3198 021 33320	3,3kΩ	5%	0,06W
3579 ©	3198 021 33920	3,9kΩ	5%	0,06W
3580 ©	3198 021 31010	100Ω	5%	0,06W
3581 ©	3198 021 32210	220Ω	5%	0,06W
3582 ©	3198 021 31040	100kΩ	5%	0,06W
3583 ©	3198 021 31010	100Ω	5%	0,06W
3584 ©	3198 021 33920	3,9kΩ	5%	0,06W
3585 ©	3198 021 31010	100Ω	5%	0,06W
3586 ©	3198 021 31010	100Ω	5%	0,06W
3587 ©	3198 021 31030	10kΩ	5%	0,06W
3588 ©	3198 021 31010	100Ω	5%	0,06W
3589 ©	3198 021 33320	3,3kΩ	5%	0,06W
3590 ©	3198 021 33920	3,9kΩ	5%	0,06W
3591 ©	3198 021 33920	3,9kΩ	5%	0,06W

RESISTORS

3592 ©	3198 021 32210	220Ω	5%	0,06W	
3593 ©	3198 021 33920	3,9kΩ	5%	0,06W	
3594 ©	3198 021 33320	3,3kΩ	5%	0,06W	
3595 ©	3198 021 33920	3,9kΩ	5%	0,06W	
3596 ©	3198 021 32210	220Ω	5%	0,06W	
3597 ©	3198 021 34720	4,7kΩ	5%	0,06W	
3598 ©	3198 021 32210	220Ω	5%	0,06W	
3599 ©	3198 021 33920	3,9kΩ	5%	0,06W	
3600 ©	3198 021 38230	82kΩ	5%	0,06W	
3601 ©	3198 021 33320	3,3kΩ	5%	0,06W	
3602 ©	3198 021 33320	3,3kΩ	5%	0,06W	
3603 ©	3198 021 33920	3,9kΩ	5%	0,06W	
3604 ©	3198 021 32210	220Ω	5%	0,06W	
3605 ⚠	4822 052 10109	10Ω	5%	0,33W	NFR
3606 ⚠	4822 052 10338	3,3Ω	5%	0,33W	NFR
3607 ©	3198 021 31030	10kΩ	5%	0,06W	
3608 ©	3198 021 32210	220Ω	5%	0,06W	
3609 ©	3198 021 33320	3,3kΩ	5%	0,06W	
3610 ©	3198 021 34720	4,7kΩ	5%	0,06W	
3611 ©	3198 021 33320	3,3kΩ	5%	0,06W	
3612 ©	3198 021 33320	3,3kΩ	5%	0,06W	
3613 ©	3198 021 38230	82kΩ	5%	0,06W	
3614 ©	3198 021 33320	3,3kΩ	5%	0,06W	
3615 ©	3198 021 31030	10kΩ	5%	0,06W	
3616 ©	3198 021 33320	3,3kΩ	5%	0,06W	
3617 ©	3198 021 33320	3,3kΩ	5%	0,06W	
3618 ©	3198 021 33320	3,3kΩ	5%	0,06W	
3619 ©	3198 021 31020	1kΩ	5%	0,06W	
3620 ©	3198 021 31020	1kΩ	5%	0,06W	
3621 ©	3198 021 31020	1kΩ	5%	0,06W	
3622 ©	3198 021 31020	1kΩ	5%	0,06W	
3702 ©	3198 021 31030	10kΩ	5%	0,06W	
3706 ©	3198 021 31810	180Ω	5%	0,06W	
3707 ©	3198 021 31010	100Ω	5%	0,06W	
3708 ©	3198 021 31050	1MΩ	5%	0,06W	
3709 ©	3198 021 31020	1kΩ	5%	0,06W	
3710 ©	3198 021 31030	10kΩ	5%	0,06W	
3712 ©	3198 021 31030	10kΩ	5%	0,06W	
3713 ©	3198 021 31030	10kΩ	5%	0,06W	
3714 ©	3198 021 31030	10kΩ	5%	0,06W	
3715 ©	3198 021 31010	100Ω	5%	0,06W	
3716 ©	3198 021 31010	100Ω	5%	0,06W	
3717 ©	3198 021 31010	100Ω	5%	0,06W	
3718 ©	3198 021 34730	47kΩ	5%	0,06W	
3719 ©	3198 021 31010	100Ω	5%	0,06W	
3720 ©	3198 021 31010	100Ω	5%	0,06W	
3721 ©	3198 021 31010	100Ω	5%	0,06W	
3722 ©	3198 021 31010	100Ω	5%	0,06W	
3723 ©	3198 021 31040	100kΩ	5%	0,06W	
3724 ©	3198 021 31020	1kΩ	5%	0,06W	
3725 ©	3198 021 31020	1kΩ	5%	0,06W	
3726 ©	3198 021 34730	47kΩ	5%	0,06W	
3727 ©	3198 021 32240	220kΩ	5%	0,06W	
3728 ©	3198 021 31040	100kΩ	5%	0,06W	
3729 ©	3198 021 31010	100Ω	5%	0,06W	
3730 ©	3198 021 31040	100kΩ	5%	0,06W	
3732 ©	3198 021 31010	100Ω	5%	0,06W	
3733 ©	3198 021 31010	100Ω	5%	0,06W	
3734 ©	3198 021 31010	100Ω	5%	0,06W	
3735 ©	3198 021 31040	100kΩ	5%	0,06W	
3737 ©	3198 021 31010	100Ω	5%	0,06W	
3738 ©	3198 021 31010	100Ω	5%	0,06W	
3739 ©	3198 021 31010	100Ω	5%	0,06W	
3740 ©	3198 021 31010	100Ω	5%	0,06W	

RESISTORS

3742 ©	3198 021 31010	100Ω	5%	0,06W	
3743 ©	3198 021 31010	100Ω	5%	0,06W	
3744 ©	3198 021 31010	100Ω	5%	0,06W	
3745 ©	3198 021 31030	10kΩ	5%	0,06W	
3746 ©	3198 021 31030	10kΩ	5%	0,06W	
3747 ©	3198 021 31030	10kΩ	5%	0,06W	
3748 ©	3198 021 31030	10kΩ	5%	0,06W	
3749 ©	3198 021 31010	100Ω	5%	0,06W	
3750 ©	3198 021 31010	100Ω	5%	0,06W	
3752 ©	3198 021 31010	100Ω	5%	0,06W	
3753 ©	3198 021 31010	100Ω	5%	0,06W	
3754 ©	3198 021 31010	100Ω	5%	0,06W	
3756 ©	3198 021 31010	100Ω	5%	0,06W	
3757 ©	3198 021 31010	100Ω	5%	0,06W	
3758 ©	3198 021 31010	100Ω	5%	0,06W	
3759 ©	3198 021 31010	100Ω	5%	0,06W	
3762 ©	3198 021 31010	100Ω	5%	0,06W	
3763 ©	3198 021 31090	10Ω	5%	0,06W	
3764 ©	3198 021 31090	10Ω	5%	0,06W	
3765 ©	3198 021 31090	10Ω	5%	0,06W	
3766 ©	3198 021 31010	100Ω	5%	0,06W	
3767 ©	3198 021 31090	10Ω	5%	0,06W	
3768 ©	3198 021 31030	10kΩ	5%	0,06W	
3769 ©	3198 021 31090	10Ω	5%	0,06W	
3770 ©	3198 021 31010	100Ω	5%	0,06W	
3771 ©	3198 021 31090	10Ω	5%	0,06W	
3772 ©	3198 021 31090	10Ω	5%	0,06W	
3773 ©	3198 021 31090	10Ω	5%	0,06W	
3774 ©	3198 021 31010	100Ω	5%	0,06W	
3775 ©	3198 021 31010	100Ω	5%	0,06W	
3776 ©	3198 021 31010	100Ω	5%	0,06W	
3777 ©	3198 021 31010	100Ω	5%	0,06W	
3778 ©	3198 021 31010	100Ω	5%	0,06W	
3780 ©	3198 021 31090	10Ω	5%	0,06W	
3781 ©	3198 021 31010	100Ω	5%	0,06W	
3782 ©	3198 021 31010	100Ω	5%	0,06W	
3783 ©	3198 021 31010	100Ω	5%	0,06W	
3784 ©	3198 021 31010	100Ω	5%	0,06W	
3800 ©	3198 021 31010	100Ω	5%	0,06W	
3801 ⚠	4822 052 10228	2,2Ω	5%	0,33W	NFR
3808 ©	3198 021 31050	1MΩ	5%	0,06W	
3809 ©	3198 021 31010	100Ω	5%	0,06W	
3810 ©	3198 021 31010	100Ω	5%	0,06W	
3811 ©	3198 021 31010	100Ω	5%	0,06W	
3812 ©	3198 021 31010	100Ω	5%	0,06W	
3813 ©	3198 021 31010	100Ω	5%	0,06W	
3814 ©	3198 021 31010	100Ω	5%	0,06W	
3816 ©	3198 021 31010	100Ω	5%	0,06W	
3817 ©	3198 021 31010	100Ω	5%	0,06W	
3818 ©	3198 021 34710	470Ω	5%	0,06W	
3819 ©	3198 021 31010	100Ω	5%	0,06W	
3820 ©	3198 021 37590	75Ω	5%	0,06W	
3821 ©	3198 021 34710	470Ω	5%	0,06W	
3822 ©	3198 021 31030	10kΩ	5%	0,06W	
3823 ©	3198 021 31030	10kΩ	5%	0,06W	
3825 ©	3198 021 31030	10kΩ	5%	0,06W	
3826 ©	3198 021 31030	10kΩ	5%	0,06W	
3827 ©	3198 021 31030	10kΩ	5%	0,06W	
3828 ©	3198 021 31010	100Ω	5%	0,06W	
3830 ©	3198 021 31090	10Ω	5%	0,06W	
3832 ©	3198 021 31010	100Ω	5%	0,06W	
3833 ©	3198 021 31030	10kΩ	5%	0,06W	
3834 ©	3198 021 31010	100Ω	5%	0,06W	
3836 ©	3198 021 31010	100Ω	5%	0,06W	

RESISTORS

3837 ©	2322 704 61803	18kΩ	1%	0,06W
3839 ©	3198 021 32220	2,2kΩ	5%	0,06W
3843 ©	2322 730 61399	39Ω	5%	0,06W
3850 ©	3198 021 34710	470Ω	5%	0,06W
3851 ©	3198 021 31090	10Ω	5%	0,06W
3852 ©	3198 021 31090	10Ω	5%	0,06W
3853 ©	3198 021 31040	100kΩ	5%	0,06W
4100 ©	3198 021 90030	CHIP JUMPER 0603		
4102 ©	3198 021 90030	CHIP JUMPER 0603		
4300 ©	3198 021 90030	CHIP JUMPER 0603		
4302 ©	3198 021 90030	CHIP JUMPER 0603		
4303 ©	3198 021 90030	CHIP JUMPER 0603		
4305 ©	3198 021 90030	CHIP JUMPER 0603		
4401 ©	3198 021 90030	CHIP JUMPER 0603		
4501 ©	3198 021 90030	CHIP JUMPER 0603		
4504 ©	3198 021 90030	CHIP JUMPER 0603		
4601 ©	3198 021 90030	CHIP JUMPER 0603		

COILS

1017	5322 242 73686	CERAMIC RESONATOR, 12MHZ
1019	2422 543 01254	XTAL 4,332MHz
1500 ©	2422 543 01425	XTAL 24.576MHZ
1600 ©	2422 543 01425	XTAL 24.576MHZ
5100	2422 535 94686	2,7µH
5101	2422 535 94686	2,7µH
5400 ©	2422 549 44919	FILTER, 600Ω at 100MHZ
5401 ©	2422 549 44919	FILTER, 600Ω at 100MHZ
5500 ©	2422 549 44919	FILTER, 600Ω at 100MHZ
5501 ©	2422 549 43062	FILTER 100MHz
5502 ©	2422 549 43062	FILTER 100MHz
5503 ©	2422 549 44919	FILTER, 600Ω at 100MHZ
5504 ©	2422 549 44919	FILTER, 600Ω at 100MHZ
5600	2422 536 00019	TRANSFORMER, DIGITAL OUT
5601 ©	2422 549 43062	FILTER, 600Ω at 100MHZ

DIODES

6100 ©	4822 130 10838	BZX384-C3V3
6101 ©	4822 130 10838	BZX384-C3V3
6200 ©	4822 130 11397	BAS316
6201 ©	4822 130 11397	BAS316
6202 ©	4822 130 11397	BAS316
6300 ©	4822 130 11397	BAS316
6301 ©	4822 130 11397	BAS316
6302 ©	4822 130 11397	BAS316
6303 ©	4822 130 11397	BAS316
6500 ©	4822 130 11397	BAS316
6600 ©	4822 130 11564	BZX384-C3V9
6601 ©	4822 130 11564	BZX384-C3V9
6603 ©	4822 130 10838	BZX384-C3V3
6604 ©	4822 130 10838	BZX384-C3V3
6605 ©	4822 130 10838	BZX384-C3V3

TRANSISTORS

7100 ©	3198 010 42310	BC847BW
7101	4822 130 41246	BC327-25
7102 ©	3198 010 42310	BC847BW
7103 ©	3198 010 42320	BC857BW
7104 ©	3198 010 42310	BC847BW
7105 ©	3198 010 42320	BC857BW
7106 ©	3198 010 42310	BC847BW
7110 ©	3198 010 42310	BC847BW
7112 ©	3198 010 42310	BC847BW
7200 ©	3198 010 42310	BC847BW
7201 ©	3198 010 42320	BC857BW

TRANSISTORS

7202 ©	4822 130 42804	BC817-25
7203 ©	4822 130 42804	BC817-25
7205 ©	4822 130 42804	BC817-25
7206 ©	3198 010 42320	BC857BW
7208 ©	4822 130 42804	BC817-25
7210 ©	3198 010 42320	BC857BW
7211 ©	3198 010 42320	BC857BW
7212 ©	3198 010 42310	BC847BW
7213 ©	4822 130 42804	BC817-25
7215 ©	4822 130 42804	BC817-25
7300 ©	4822 130 42804	BC817-25
7301 ©	3198 010 42320	BC857BW
7302 ©	4822 130 42804	BC817-25
7309 ©	5322 130 60159	BC847B
7310 ©	3198 010 42310	BC847BW
7311 ©	3198 010 42310	BC847BW
7408 ©	3198 010 42310	BC847BW
7409 ©	3198 010 42310	BC847BW
7502 ©	3198 010 42310	BC847BW
7503 ©	3198 010 42310	BC847BW
7504 ©	3198 010 42310	BC847BW
7605 ©	3198 010 42310	BC847BW
7606 ©	3198 010 42310	BC847BW
7607 ©	3198 010 42310	BC847BW

INTEGRATED CIRCUITS

7107 ©	9965 000 26213	TMP88PU74YF-V92
7108 ©	9322 206 24668	M24C02-WMN6P
7109 ©	9352 686 05118	SAA6581T, RDS DECODER IC
7204 ©	4822 209 31378	NJM4556AM
7207 ©	9322 150 74668	TDA7468D, SOURCE SEL. & SOUND
7214 ©	9322 150 74668	TDA7468D, SOURCE SEL. & SOUND
7303 ©	9322 150 74668	TDA7468D, SOURCE SEL. & SOUND
7308 ©	9322 186 70668	LM2931D
7400 ©	4822 209 30095	LM833D
7402 ©	4822 209 30095	LM833D
7404 ©	4822 209 30095	LM833D
7405 ©	9322 203 36668	CS42418-CQ
7410 ©	4822 209 30095	LM833D
7412 ©	4822 209 30095	LM833D
7414 ©	4822 209 30095	LM833D
7500 ©	9352 627 53165	74AHC1G04GW
7501 ©	9322 187 22668	LD1086D2T
7505 ©	9322 211 80671	DSPA56371AF180
7603 ©	9965 000 17380	AK4112BVF

Note:
Components printed in grey colour are considered as standard spareparts and thus not available on service stock.
Code numbers are published for orientation only.

AMPLIFIER BOARD

MECHANICAL PARTS

0008	3104 211 29861	SPRING, TRANSISTOR

MISCELLANEOUS

1302	4822 267 10729	FFC-CONNECTOR, 10P, TOP ENTRY
1331	4822 265 11515	FFC-CONNECTOR, 8P, TOP ENTRY

CAPACITORS

2101 ©	2222 580 15649	100nF	10%	50V
2102 ©	2222 580 15649	100nF	10%	50V
2104	2222 601 55649	100nF	10%	100V
2105 ©	2222 580 15649	100nF	10%	50V
2106	2020 021 91431	22µF	20%	100V
2107	2222 601 55649	100nF	10%	100V
2108 ©	2222 580 15649	100nF	10%	50V
2111 ©	4822 126 13188	15nF	5%	63V
2114 ©	2238 600 15619	560pF	10%	100V
2115 ©	2238 600 15619	560pF	10%	100V
2117	2222 601 55649	100nF	10%	100V
2118	5322 121 42498	680nF	5%	63V
2120 ©	4822 126 13188	15nF	5%	63V
2122 ©	2238 600 15619	560pF	10%	100V
2123	5322 121 42498	680nF	5%	63V
2124	2222 601 55649	100nF	10%	100V
2126 ©	2238 600 15619	560pF	10%	100V
2127 ©	2222 580 15649	100nF	10%	50V
2128 ©	2222 580 15649	100nF	10%	50V
2129 ©	2222 580 15649	100nF	10%	50V
2130 ©	2222 580 15649	100nF	10%	50V
2131 ©	4822 126 14241	330pF		50V
2132 ©	4822 126 14583	470nF	10%	16V
2133 ©	4822 126 14583	470nF	10%	16V
2134 ©	2238 780 55654	220nF	10%	16V
2135 ©	4822 126 14221	68pF	5%	50V
2136 ©	4822 126 14241	330pF		50V
2137 ©	4822 126 14583	470nF	10%	16V
2138 ©	4822 126 14583	470nF	10%	16V
2201 ©	2222 580 15649	100nF	10%	50V
2202 ©	2222 580 15649	100nF	10%	50V
2204	2222 601 55649	100nF	10%	100V
2205 ©	2222 580 15649	100nF	10%	50V
2206	2020 021 91431	22µF	20%	100V
2207	2222 601 55649	100nF	10%	100V
2208 ©	2222 580 15649	100nF	10%	50V
2211 ©	4822 126 13188	15nF	5%	63V
2214 ©	2238 600 15619	560pF	10%	100V
2215 ©	2238 600 15619	560pF	10%	100V
2217	2222 601 55649	100nF	10%	100V
2218	5322 121 42498	680nF	5%	63V
2220 ©	4822 126 13188	15nF	5%	63V
2222 ©	2238 600 15619	560pF	10%	100V
2223	5322 121 42498	680nF	5%	63V
2224	2222 601 55649	100nF	10%	100V
2226 ©	2238 600 15619	560pF	10%	100V
2227 ©	2222 580 15649	100nF	10%	50V
2228 ©	2222 580 15649	100nF	10%	50V
2229 ©	2222 580 15649	100nF	10%	50V
2230 ©	2222 580 15649	100nF	10%	50V
2231 ©	4822 126 14241	330pF		50V
2232 ©	4822 126 14583	470nF	10%	16V
2233 ©	4822 126 14583	470nF	10%	16V
2234 ©	2238 780 55654	220nF	10%	16V
2235 ©	4822 126 14221	68pF	5%	50V
2236 ©	4822 126 14241	330pF		50V
2237 ©	4822 126 14583	470nF	10%	16V
2238 ©	4822 126 14583	470nF	10%	16V
2301 ©	2222 580 15649	100nF	10%	50V
2302 ©	2222 580 15649	100nF	10%	50V

CAPACITORS

2304	2222 601 55649	100nF	10%	100V
2305 ©	2222 580 15649	100nF	10%	50V
2306	2020 021 91431	22µF	20%	100V
2307	2222 601 55649	100nF	10%	100V
2308 ©	2222 580 15649	100nF	10%	50V
2311 ©	4822 126 13188	15nF	5%	63V
2314 ©	2238 600 15619	560pF	10%	100V
2315 ©	2238 600 15619	560pF	10%	100V
2317	2222 601 55649	100nF	10%	100V
2318	5322 121 42498	680nF	5%	63V
2320 ©	4822 126 13188	15nF	5%	63V
2322 ©	2238 600 15619	560pF	10%	100V
2323	5322 121 42498	680nF	5%	63V
2324	2222 601 55649	100nF	10%	100V
2326 ©	2238 600 15619	560pF	10%	100V
2327 ©	2222 580 15649	100nF	10%	50V
2328 ©	2222 580 15649	100nF	10%	50V
2329 ©	2222 580 15649	100nF	10%	50V
2330 ©	2222 580 15649	100nF	10%	50V
2331 ©	4822 126 14241	330pF		50V
2332 ©	4822 126 14583	470nF	10%	16V
2333 ©	4822 126 14583	470nF	10%	16V
2334 ©	2238 780 55654	220nF	10%	16V
2335 ©	4822 126 14221	68pF	5%	50V
2336 ©	4822 126 14241	330pF		50V
2337 ©	4822 126 14583	470nF	10%	16V
2338 ©	4822 126 14583	470nF	10%	16V
2400 ©	2222 580 15649	100nF	10%	50V
2401	3198 038 44710	470µF	20%	35V
2402	3198 038 44710	470µF	20%	35V
2403 ©	2222 580 15649	100nF	10%	50V
2404	3198 038 44710	470µF	20%	35V
2405	3198 038 44710	470µF	20%	35V
2406	4822 123 14026	470µF	20%	35V
2407	4822 123 14026	470µF	20%	35V
2408 ©	5322 126 11578	1nF	10%	63V
2409 ©	5322 126 11578	1nF	10%	63V
2410 ©	5322 126 11578	1nF	10%	63V
2411 ©	5322 126 11578	1nF	10%	63V
2412 ©	5322 126 11578	1nF	10%	63V
2413 ©	5322 126 11578	1nF	10%	63V
2414 ©	5322 126 11578	1nF	10%	63V
2415 ©	5322 126 11578	1nF	10%	63V
2416 ©	5322 126 11578	1nF	10%	63V
2417 ©	5322 126 11578	1nF	10%	63V
2418 ©	5322 126 11578	1nF	10%	63V
2419 ©	2238 586 59812	100nF	10%	50V
2420 ©	5322 126 11578	1nF	10%	63V
2421 ©	5322 126 11578	1nF	10%	63V
2422 ©	5322 126 11578	1nF	10%	63V
2423 ©	2238 586 59812	100nF	10%	50V
2425 ©	5322 126 11578	1nF	10%	63V
2500 ©	4822 126 14585	100nF	10%	50V
2501 ©	4822 126 14585	100nF	10%	50V
2502 ©	4822 126 14585	100nF	10%	50V
2600 ©	2238 586 59812	100nF	10%	50V
2602 ©	2020 552 94427	100pF	5%	50V
2603 ©	2020 552 94427	100pF	5%	50V
2604 ©	2238 586 59812	100nF	10%	50V
2605 ©	4822 126 13881	470pF	5%	50V
2606 ©	5322 126 11578	1nF	10%	63V
2607 ©	2020 552 94427	100pF	5%	50V
2608 ©	2020 552 94427	100pF	5%	50V
2611 ©	2020 552 96507	10µF	20%	10V

CAPACITORS

2700 ©	2020 552 96507	10µF	20%	10V	

RESISTORS

3100 ©	4822 051 10568	5,6Ω	5%	0,25W
3101 ©	4822 051 10568	5,6Ω	5%	0,25W
3102 ©	4822 051 10568	5,6Ω	5%	0,25W
3103 ©	2322 762 60229	22Ω	5%	0,25W
3104 ©	2322 762 60229	22Ω	5%	0,25W
3105 ©	4822 051 10568	5,6Ω	5%	0,25W
3107 ©	4822 051 30109	10Ω	5%	0,06W
3109 ©	4822 051 30109	10Ω	5%	0,06W
3200 ©	4822 051 10568	5,6Ω	5%	0,25W
3201 ©	4822 051 10568	5,6Ω	5%	0,25W
3202 ©	4822 051 10568	5,6Ω	5%	0,25W
3203 ©	2322 762 60229	22Ω	5%	0,25W
3204 ©	2322 762 60229	22Ω	5%	0,25W
3205 ©	4822 051 10568	5,6Ω	5%	0,25W
3207 ©	4822 051 30109	10Ω	5%	0,06W
3209 ©	4822 051 30109	10Ω	5%	0,06W
3300 ©	4822 051 10568	5,6Ω	5%	0,25W
3301 ©	4822 051 10568	5,6Ω	5%	0,25W
3302 ©	4822 051 10568	5,6Ω	5%	0,25W
3303 ©	2322 762 60229	22Ω	5%	0,25W
3304 ©	2322 762 60229	22Ω	5%	0,25W
3305 ©	4822 051 10568	5,6Ω	5%	0,25W
3307 ©	4822 051 30109	10Ω	5%	0,06W
3309 ©	4822 051 30109	10Ω	5%	0,06W
3401 ©	4822 051 30562	5,6kΩ	5%	0,06W
3404 ©	4822 051 30221	220Ω	5%	0,06W
3405 ©	4822 051 30562	5,6kΩ	5%	0,06W
3408 ©	4822 051 30221	220Ω	5%	0,06W
3410 ©	4822 051 30562	5,6kΩ	5%	0,06W
3411 ©	4822 051 30562	5,6kΩ	5%	0,06W
3412 ©	4822 051 30221	220Ω	5%	0,06W
3413 ©	4822 051 30562	5,6kΩ	5%	0,06W
3414 ©	4822 051 30562	5,6kΩ	5%	0,06W
3415 ©	4822 051 30562	5,6kΩ	5%	0,06W
3420 ©	2322 615 33103	10kΩ	5%	NTC
3421 ©	4822 051 30562	5,6kΩ	5%	0,06W
3422 ©	4822 051 30101	100Ω	5%	0,06W
3423 ©	4822 051 30562	5,6kΩ	5%	0,06W
3424 ©	4822 051 30562	5,6kΩ	5%	0,06W
3425 ©	4822 051 30562	5,6kΩ	5%	0,06W
3426 ©	4822 051 30562	5,6kΩ	5%	0,06W
3600 ©	4822 051 10821	820Ω	2%	0,25W
3601 ©	4822 051 10821	820Ω	2%	0,25W
3602 ©	4822 117 13632	100kΩ	1%	0,06W
3604 ©	4822 051 30103	10kΩ	5%	0,06W
3605 ©	4822 051 30682	6,8kΩ	5%	0,06W
3606 ©	4822 117 13632	100kΩ	1%	0,06W
3607 ©	4822 051 30102	1kΩ	5%	0,06W
3608 ©	4822 051 30105	1MΩ	5%	0,06W
3609 ©	4822 117 13632	100kΩ	1%	0,06W
3610 ©	9965 000 23109	22Ω	5%	0,06W
3700 ©	4822 117 12925	47kΩ	1%	0,06W
3701 ©	4822 117 12925	47kΩ	1%	0,06W
3703 ©	4822 117 12925	47kΩ	1%	0,06W
3709 ©	4822 117 12925	47kΩ	1%	0,06W
3712 ©	4822 117 12925	47kΩ	1%	0,06W
3713 ©	4822 051 30103	10kΩ	5%	0,06W
3716 ©	4822 117 12925	47kΩ	1%	0,06W
3718 ©	4822 117 12925	47kΩ	1%	0,06W
3721 ©	4822 051 30103	10kΩ	5%	0,06W

RESISTORS

3722 ©	4822 051 30103	10kΩ	5%	0,06W
4410 ©	4822 051 30008	CHIP JUMPER 0603		
4501 ©	4822 051 30008	CHIP JUMPER 0603		
4512 ©	4822 051 30008	CHIP JUMPER 0603		
4521 ©	4822 051 30008	CHIP JUMPER 0603		

COILS

1600	2422 540 98514	CER. RESONATOR 602kHz
1601	2422 540 98568	CER. RESONATOR 700kHz
5102	2422 536 00625	15µH, 20%
5103	2422 536 00625	15µH, 20%
5202	2422 536 00625	15µH, 20%
5203	2422 536 00625	15µH, 20%
5302	2422 536 00625	15µH, 20%
5303	2422 536 00625	15µH, 20%
5400	4822 157 11411	FERRITE BEAD
5401	4822 157 11411	FERRITE BEAD

DIODES

6600 ©	3198 020 55680	BZX384-C5V6
6713 ©	4822 130 11397	BAS316
6714 ©	4822 130 11397	BAS316
6715 ©	4822 130 11397	BAS316

TRANSISTORS

7602 ©	5322 130 60159	BC846B
7608 ©	4822 130 60373	BC856B
7710 ©	5322 130 60159	BC846B
7716 ©	4822 130 60373	BC856B

INTEGRATED CIRCUITS

7100 ©	9352 719 94518	TDA8924TH/N1
7200 ©	9352 719 94518	TDA8924TH/N1
7300 ©	9352 719 94518	TDA8924TH/N1
7600 ©	5322 209 11517	PC74HCU04T, HEX INVERTER IC
7607 ©	5322 209 14477	HEF4013BT

Note:
Components printed in grey colour are considered as standard spareparts and thus not available on service stock.
Code numbers are published for orientation only.

AV BOARD /01 (EU)

MISCELLANEOUS

1001 ▲	2422 086 10919	FUSE 125mA 65V MP13	
1705	3139 147 17001	TV TUNER UV1316MK3	
1705	3139 147 17751	TUNER UV1316MK3	
1900	4822 265 11154	FFC-CON., 22P, TOP ENTRY	
1940	2422 025 18316	SCART SOCKET	
1940	2422 033 00334	SCART SOCKET	
1943	4822 267 11031	FFC-CONNECTOR, 10P, TOP ENTRY	
1946	2422 025 17367	FFC-CONNECTOR, 7P, TOP ENTRY	
1947	4822 265 11154	FFC-CON., 22P, TOP ENTRY	
1949	2422 026 05628	CINCH SOCKET, 3-FOLD, GR/BL/RD	
1951	4822 267 31729	CINCH SOCKET, BLACK	
7581	9322 203 28667	OPTICAL IN CONNECT. GP1FA553RZ	
7581	9322 155 48687	OPTICAL IN CONNECT. GP1FA550RZ	

CAPACITORS

2001	3198 029 04790	47µF	20%	6,3V
2002 ©	3198 023 41040	100nF	10%	25V
2003 ©	3198 023 41040	100nF	10%	25V
2004	3198 029 04790	47µF	20%	6,3V
2005	3198 029 01010	100µF	20%	6,3V
2006 ©	3198 016 34790	47pF	5%	50V
2007	3198 029 31090	10µF	20%	25V
2008 ©	3198 016 31020	1nF	5%	25V
2009 ©	3198 023 41040	100nF	10%	25V
2010	3198 029 04790	47µF	20%	6,3V
2011	3198 029 31090	10µF	20%	25V
2012 ©	3198 023 41040	100nF	10%	25V
2013	3198 029 01010	100µF	20%	6,3V
2014 ©	3198 023 41040	100nF	10%	25V
2015 ©	3198 023 41040	100nF	10%	25V
2018 ©	3198 023 41040	100nF	10%	25V
2019 ©	3198 023 41040	100nF	10%	25V
2020	3198 029 04790	47µF	20%	6,3V
2023	2020 009 90094	47µF	20%	16V
2024 ©	3198 016 32790	27pF	NP0	50V
2025 ©	3198 016 31020	1nF	5%	25V
2026 ©	3198 016 32790	27pF	NP0	50V
2029	2020 009 90094	47µF	20%	16V
2031	3198 029 52280	2,2µF	20%	50V
2033 ©	3198 016 34710	470pF	5%	50V
2034 ©	3198 016 34710	470pF	5%	50V
2037 ©	2022 552 05457	4,7nF	5%	50V
2038 ©	2022 552 05457	4,7nF	5%	50V
2039 ©	2022 552 05457	4,7nF	5%	50V
2040 ©	2022 552 05457	4,7nF	5%	50V
2332	3198 029 52280	2,2µF	20%	50V
2334 ©	3198 023 41040	100nF	10%	25V
2402 ©	3198 017 31040	100nF	10%	16V
2403	3198 029 04790	47µF	20%	6,3V
2404 ©	3198 023 41040	100nF	10%	25V
2405	3198 029 04790	47µF	20%	6,3V
2406 ©	3198 017 31030	10nF	10%	50V
2407 ©	3198 016 31090	10pF	NP0	50V
2408 ©	3198 017 41050	1µF	20%	10V
2409 ©	3198 023 41040	100nF	10%	25V
2410 ©	3198 017 41050	1µF	20%	10V
2411 ©	3198 023 41040	100nF	10%	25V
2412 ©	3198 016 31090	10pF	NP0	50V
2413	3198 029 04790	47µF	20%	6,3V
2414 ©	3198 023 41040	100nF	10%	25V
2416 ©	3198 017 41050	1µF	20%	10V
2417	2020 009 90074	10µF	20%	16V
2418 ©	3198 017 41050	1µF	20%	10V
2419 ©	3198 017 41050	1µF	20%	10V

CAPACITORS

2421	2020 009 90074	10µF	20%	16V
2423 ©	3198 017 41050	1µF	20%	10V
2427 ©	3198 017 41050	1µF	20%	10V
2428	2020 009 90074	10µF	20%	16V
2433 ©	3198 017 34730	47nF	10%	16V
2434	3198 029 04790	47µF	20%	6,3V
2435 ©	3198 023 41040	100nF	10%	25V
2436 ©	3198 017 41050	1µF	20%	10V
2437 ©	3198 017 41050	1µF	20%	10V
2438 ©	3198 017 41050	1µF	20%	10V
2439 ©	3198 017 31040	100nF	10%	16V
2440 ©	3198 017 41050	1µF	20%	10V
2441 ©	3198 017 41050	1µF	20%	10V
2446 ©	3198 017 41050	1µF	20%	10V
2449 ©	3198 016 36890	68pF	10%	50V
2450 ©	3198 017 31040	100nF	10%	16V
2451 ©	3198 023 41040	100nF	10%	25V
2452 ©	3198 023 41040	100nF	10%	25V
2453 ©	3198 023 41040	100nF	10%	25V
2459 ©	3198 017 41050	1µF	20%	10V
2464	3198 029 31090	10µF	20%	25V
2501 ©	3198 017 41050	1µF	20%	10V
2502 ©	3198 023 41040	100nF	10%	25V
2503 ©	3198 023 41040	100nF	10%	25V
2504 ©	3198 017 41050	1µF	20%	10V
2505 ©	3198 017 41050	1µF	20%	10V
2506 ©	3198 017 41050	1µF	20%	10V
2507 ©	3198 017 41050	1µF	20%	10V
2508 ©	3198 017 41050	1µF	20%	10V
2509 ©	3198 023 41040	100nF	10%	25V
2510	3198 029 01010	100µF	20%	6,3V
2511	2020 009 90097	100µF	20%	16V
2512 ©	3198 023 41040	100nF	10%	25V
2513 ©	2020 552 96807	1µF	10%	10V
2514 ©	3198 023 41040	100nF	10%	25V
2515 ©	2020 552 96807	1µF	10%	10V
2516	2020 009 90097	100µF	20%	16V
2517 ©	3198 017 31020	1nF	10%	50V
2518 ©	3198 023 41040	100nF	10%	25V
2519	3198 029 01010	100µF	20%	6,3V
2520 ©	3198 017 31020	1nF	10%	50V
2521 ©	3198 023 41040	100nF	10%	25V
2522	2020 009 90097	100µF	20%	16V
2523 ©	3198 017 31020	1nF	10%	50V
2524 ©	3198 017 41050	1µF	20%	10V
2525 ©	3198 017 41050	1µF	20%	10V
2526	2020 009 90097	100µF	20%	16V
2527 ©	3198 017 31020	1nF	10%	50V
2530 ©	3198 023 41040	100nF	10%	25V
2535 ©	3198 023 41040	100nF	10%	25V
2536 ©	3198 023 41040	100nF	10%	25V
2581 ©	3198 017 31040	100nF	10%	16V
2582 ©	3198 023 41040	100nF	10%	25V
2583 ©	3198 016 31010	100pF	5%	50V
2584 ©	3198 016 31010	100pF	5%	50V
2600	3198 029 31090	10µF	20%	25V
2601 ©	3198 017 31030	10nF	10%	50V
2602	3198 029 31090	10µF	20%	25V
2603 ©	3198 023 41040	100nF	10%	25V
2604 ©	3198 017 31030	10nF	10%	50V
2605	3198 029 31090	10µF	20%	25V
2606 ©	3198 023 41040	100nF	10%	25V
2607 ©	3198 016 35690	56pF	NP0	50V
2608	3198 029 31090	10µF	20%	25V

CAPACITORS

2609 ©	3198 016 35690	56pF	NP0	50V
2610 ©	3198 017 31030	10nF	10%	50V
2611	3198 029 24790	47µf	20%	16V
2612	3198 029 54780	4,7µF	20%	16V
2616 ©	3198 017 31020	1nF	10%	50V
2617 ©	3198 017 31020	1nF	10%	50V
2620 ©	3198 016 33380	3,3pF	10%	50V
2621 ©	3198 016 33380	3,3pF	10%	50V
2623 ©	3198 023 41040	100nF	10%	25V
2626	3198 029 52280	2,2µF	20%	50V
2627	3198 029 52280	2,2µF	20%	50V
2713	3198 029 22290	22µF	20%	16V
2719 ©	3198 016 32210	220pF	NP0	50V
2720	3198 029 01010	100µF	20%	6,3V
2721 ©	3198 016 31210	120pF	NP0	50V
2722	2020 021 91355	2,2µF	20%	50V
2723 ©	3198 016 34710	470pF	5%	50V
2724 ©	3198 023 41040	100nF	10%	25V
2727 ©	3198 023 41040	100nF	10%	25V
2728 ©	3198 017 31030	10nF	10%	50V
2729	3198 029 31090	10µF	20%	25V
2730 ©	3198 017 42240	220nF	20%	16V
2731 ©	2020 552 94523	8,2pF	5%	50V
2732	3198 029 52280	2,2µF	20%	50V
2733 ©	2238 586 59812	100nF	10%	50V
2734 ©	3198 017 31020	1nF	10%	50V
2735 ©	3198 016 32790	27pF	NP0	50V
2736 ©	3198 016 32790	27pF	NP0	50V
2737	3198 029 04790	47µF	20%	6,3V
2740	3198 029 52280	2,2µF	20%	50V
2741 ©	3198 017 31020	1nF	10%	50V
2742 ©	3198 017 31020	1nF	10%	50V
2932 ©	3198 023 41040	100nF	10%	25V
2933	3198 029 04790	47µF	20%	6,3V
2934 ©	3198 023 41040	100nF	10%	25V
2935 ©	3198 023 41040	100nF	10%	25V
2936 ©	3198 016 32290	22pF	5%	50V
2937 ©	3198 016 32290	22pF	5%	50V
2938 ©	3198 023 41040	100nF	10%	25V
2940 ©	3198 023 41040	100nF	10%	25V
2941	3198 029 31090	10µF	20%	25V
2942 ©	3198 017 32220	2,2nF	10%	50V
2943 ©	3198 016 31810	180pF	NP0	50V
2944 ©	3198 017 32220	2,2nF	10%	50V
2945 ©	3198 016 31810	180pF	NP0	50V
2946 ©	3198 017 41050	1µF	20%	10V
2947 ©	3198 017 41050	1µF	20%	10V

RESISTORS

3001 ©	3198 021 32280	2,2Ω	5%	0,06W
3002 ©	3198 021 32280	2,2Ω	5%	0,06W
3003 ©	3198 021 31030	10kΩ	5%	0,06W
3004 ©	3198 021 32290	22Ω	5%	0,06W
3005 ©	3198 021 32290	22Ω	5%	0,06W
3006 ©	3198 021 32290	22Ω	5%	0,06W
3007 ©	2322 704 64703	47kΩ	1%	0,06W
3008 ©	3198 021 34720	4,7kΩ	5%	0,06W
3009 ©	2322 704 64702	4,7kΩ	1%	0,06W
3010 ©	2322 704 61004	100kΩ	1%	0,06W
3011 ©	3198 021 31080	1Ω	5%	0,06W
3012 ©	2322 704 63301	330Ω	1%	0,06W
3013 ©	3198 021 32290	22Ω	5%	0,06W
3014 ©	3198 021 31030	10kΩ	5%	0,06W
3015 ©	3198 021 32280	2,2Ω	5%	0,06W

RESISTORS

3017 ©	3198 021 32280	2,2Ω	5%	0,06W
3018 ©	3198 021 32290	22Ω	5%	0,06W
3019 ©	3198 021 32290	22Ω	5%	0,06W
3020 ©	3198 021 32290	22Ω	5%	0,06W
3024 ©	2322 704 64703	47kΩ	1%	0,06W
3026 ©	3198 021 34730	47kΩ	5%	0,06W
3027 ©	2322 704 64702	4,7kΩ	1%	0,06W
3029 ©	3198 021 31080	1Ω	5%	0,06W
3030 ©	2322 704 63301	330Ω	1%	0,06W
3034 ©	3198 021 34730	47kΩ	5%	0,06W
3035	3198 011 01030	10kΩ	5%	0,16W
3039	3198 011 01030	10kΩ	5%	0,16W
3041	3198 011 01030	10kΩ	5%	0,16W
3043 ©	3198 021 32290	22Ω	5%	0,06W
3044 ©	3198 021 31030	10kΩ	5%	0,06W
3045 ©	3198 021 31040	100kΩ	5%	0,06W
3046 ©	3198 021 34710	470Ω	5%	0,06W
3047 ©	3198 021 31040	100kΩ	5%	0,06W
3048 ©	3198 021 31010	100Ω	5%	0,06W
3052 ©	3198 021 33320	3,3kΩ	5%	0,06W
3053 ©	2322 704 61004	100kΩ	1%	0,06W
3054 ©	3198 021 33320	3,3kΩ	5%	0,06W
3327 ©	3198 021 31050	1MΩ	5%	0,06W
3329 ©	3198 021 32250	2,2MΩ	5%	0,06W
3348 ©	3198 021 36810	680Ω	5%	0,06W
3349 ©	3198 021 34790	47Ω	5%	0,06W
3355 ©	3198 021 34790	47Ω	5%	0,06W
3362 ©	3198 021 36810	680Ω	5%	0,06W
3371 ©	3198 021 34790	47Ω	5%	0,06W
3372 ©	3198 021 33390	33Ω	5%	0,06W
3373 ©	3198 021 33390	33Ω	5%	0,06W
3401 ©	2322 704 67509	75Ω	1%	0,06W
3402 ©	2322 704 67509	75Ω	1%	0,06W
3403 ©	2322 704 67509	75Ω	1%	0,06W
3404 ©	3198 021 37590	75Ω	5%	0,06W
3405 ©	3198 021 32230	22kΩ	5%	0,06W
3406 ©	3198 021 32240	220kΩ	5%	0,06W
3407 ©	3198 021 33320	3,3kΩ	5%	0,06W
3408 ©	3198 021 33920	3,9kΩ	5%	0,06W
3409 ©	2322 704 67509	75Ω	1%	0,06W
3410 ©	2322 704 67509	75Ω	1%	0,06W
3411 ©	3198 021 37590	75Ω	5%	0,06W
3412	3198 011 07590	75Ω	5%	0,25W
3413 ©	3198 021 37590	75Ω	5%	0,06W
3414 ©	3198 021 37590	75Ω	5%	0,06W
3415 ©	3198 021 31020	1kΩ	5%	0,06W
3416 ©	3198 021 34720	4,7kΩ	5%	0,06W
3417 ©	3198 021 37590	75Ω	5%	0,06W
3418 ©	3198 021 31040	100kΩ	5%	0,06W
3419 ©	3198 021 32230	22kΩ	5%	0,06W
3420 ©	3198 021 31510	150Ω	5%	0,06W
3421 ©	3198 021 32730	27kΩ	5%	0,06W
3422	3198 011 08210	820Ω	5%	0,2W
3423 ©	3198 021 33910	390Ω	5%	0,06W
3424 ©	3198 021 33330	33kΩ	5%	0,06W
3426 ©	3198 021 33330	33kΩ	5%	0,06W
3427 ©	3198 021 37590	75Ω	5%	0,06W
3428 ©	3198 021 31040	100kΩ	5%	0,06W
3429 ©	3198 021 34730	47kΩ	5%	0,06W
3431 ©	2120 108 94172	4,7kΩ	5%	0,06W
3432	3198 011 01010	100Ω	5%	0,2W
3433	3198 011 01010	100Ω	5%	0,2W
3437 ©	3198 021 31030	10kΩ	5%	0,06W
3438 ©	3198 021 31030	10kΩ	5%	0,06W

RESISTORS

3439 ©	3198 021 31030	10kΩ	5%	0,06W	
3440 ©	3198 021 31030	10kΩ	5%	0,06W	
3442 ©	3198 021 31540	150kΩ	5%	0,06W	
3445 ©	3198 021 31510	150Ω	5%	0,06W	
3446 ©	3198 021 34730	47kΩ	5%	0,06W	
3447	3198 011 04730	47kΩ	5%	0,2W	
3451	3198 011 01030	10kΩ	5%	0,16W	
3452 ©	3198 021 31510	150Ω	5%	0,06W	
3454	3198 011 01020	1kΩ	5%	0,2W	
3455 ©	3198 021 31030	10kΩ	5%	0,06W	
3458 ©	3198 021 34720	4,7kΩ	5%	0,06W	
3459 ©	3198 021 31030	10kΩ	5%	0,06W	
3460 ©	3198 021 34720	4,7kΩ	5%	0,06W	
3461 ©▲	2122 551 00031	VDR 1MA/6V4			
3461 ©▲	2322 574 10402	VDR 1MA/6V4			
3462 ©▲	2122 551 00031	VDR 1MA/6V4			
3462 ©▲	2322 574 10402	VDR 1MA/6V4			
3463 ©▲	2322 574 10402	VDR 1MA/6V4			
3463 ©▲	2122 551 00031	VDR 1MA/6V4			
3464 ©▲	2322 574 10402	VDR 1MA/6V4			
3464 ©▲	2122 551 00031	VDR 1MA/6V4			
3465 ©▲	2122 551 00031	VDR 1MA/6V4			
3465 ©▲	2322 574 10402	VDR 1MA/6V4			
3466 ©▲	2322 574 10402	VDR 1MA/6V4			
3466 ©▲	2122 551 00031	VDR 1MA/6V4			
3467 ©▲	2122 551 00031	VDR 1MA/6V4			
3467 ©▲	2322 574 10402	VDR 1MA/6V4			
3468 ©▲	2322 574 10402	VDR 1MA/6V4			
3468 ©▲	2122 551 00031	VDR 1MA/6V4			
3469 ©	3198 021 31040	100kΩ	5%	0,06W	
3470 ©	3198 021 31040	100kΩ	5%	0,06W	
3471 ©	3198 021 31040	100kΩ	5%	0,06W	
3472 ©	3198 021 31040	100kΩ	5%	0,06W	
3475 ©	3198 021 31010	100Ω	5%	0,06W	
3476 ©	3198 021 31010	100Ω	5%	0,06W	
3477 ©	3198 021 31010	100Ω	5%	0,06W	
3478 ©	3198 021 31010	100Ω	5%	0,06W	
3489 ©	3198 021 38230	82kΩ	5%	0,06W	
3490 ©	3198 021 31510	150Ω	5%	0,06W	
3491 ©	3198 021 31510	150Ω	5%	0,06W	
3492 ©	3198 021 31510	150Ω	5%	0,06W	
3493 ©	3198 021 31510	150Ω	5%	0,06W	
3494 ©	3198 021 31510	150Ω	5%	0,06W	
3501 ©	3198 021 31020	1kΩ	5%	0,06W	
3502	3198 011 01020	1kΩ	5%	0,2W	
3503 ©	3198 021 31040	100kΩ	5%	0,06W	
3504 ©	3198 021 31040	100kΩ	5%	0,06W	
3505 ©	3198 021 31040	100kΩ	5%	0,06W	
3506 ©	3198 021 31040	100kΩ	5%	0,06W	
3507 ©	3198 021 31040	100kΩ	5%	0,06W	
3508 ©	3198 021 31020	1kΩ	5%	0,06W	
3509	3198 011 01020	1kΩ	5%	0,2W	
3510 ©	3198 021 31040	100kΩ	5%	0,06W	
3511 ©	3198 021 31040	100kΩ	5%	0,06W	
3512 ©	3198 021 31020	1kΩ	5%	0,06W	
3513 ©	3198 021 31020	1kΩ	5%	0,06W	
3514 ©	3198 021 31040	100kΩ	5%	0,06W	
3515	3198 011 01020	1kΩ	5%	0,2W	
3516 ©	3198 021 31040	100kΩ	5%	0,06W	
3517	3198 011 04720	4,7kΩ	5%	0,2W	
3518 ©	3198 021 31020	1kΩ	5%	0,06W	
3519	3198 011 04720	4,7kΩ	5%	0,2W	
3520 ©	3198 021 32210	220Ω	5%	0,06W	
3521 ©	3198 021 32210	220Ω	5%	0,06W	

RESISTORS

3522 ©	3198 021 32210	220Ω	5%	0,06W	
3523	3198 011 01020	1kΩ	5%	0,2W	
3524 ©	3198 021 38210	820Ω	5%	0,06W	
3525 ©	3198 021 32210	220Ω	5%	0,06W	
3526 ©	3198 021 31020	1kΩ	5%	0,06W	
3527 ©	3198 021 38210	820Ω	5%	0,06W	
3528 ©	3198 021 34720	4,7kΩ	5%	0,06W	
3529 ©	3198 021 34720	4,7kΩ	5%	0,06W	
3530 ©	3198 021 38210	820Ω	5%	0,06W	
3531 ©	3198 021 38210	820Ω	5%	0,06W	
3532	3198 011 01020	1kΩ	5%	0,2W	
3533	3198 011 01020	1kΩ	5%	0,2W	
3534 ©	3198 021 31040	100kΩ	5%	0,06W	
3584 ©	3198 021 37590	75Ω	5%	0,06W	
3585 ©	3198 021 33310	330Ω	5%	0,06W	
3586 ©	3198 021 34790	47Ω	5%	0,06W	
3587 ©	3198 021 31080	1Ω	5%	0,06W	
3588 ©	3198 021 31090	10Ω	5%	0,06W	
3600 ©	3198 021 31030	10kΩ	5%	0,06W	
3601	3198 011 01010	100Ω	5%	0,2W	
3602 ©	2120 108 94172	4,7kΩ	5%	0,06W	
3603	3198 011 01010	100Ω	5%	0,2W	
3606 ©	3198 021 31020	1kΩ	5%	0,06W	
3607 ©	3198 021 31020	1kΩ	5%	0,06W	
3611 ©	3198 021 31010	100Ω	5%	0,06W	
3612 ©	3198 021 31010	100Ω	5%	0,06W	
3701	3198 011 06810	680Ω	5%	0,2W	
3702 ©	3198 021 34710	470Ω	5%	0,06W	
3703	3198 011 01540	150kΩ	5%	0,2W	
3704 ©	3198 021 32210	220Ω	5%	0,06W	
3705 ©	3198 021 31030	10kΩ	5%	0,06W	
3710 ©	3198 021 35620	5,6kΩ	5%	0,06W	
3711 ©	3198 021 33330	33kΩ	5%	0,06W	
3714 ©	3198 021 31830	18kΩ5%0,06W			
3715 ©	3198 021 31030	10kΩ	5%	0,06W	
3716 ©	3198 021 34720	4,7kΩ	5%	0,06W	
3717 ©	3198 021 34720	4,7kΩ	5%	0,06W	
3720 ©	3198 021 33310	330Ω	5%	0,06W	
3724	2120 368 90124	TRIMPOT. 22kΩ LIN.			
3725 ©	3198 021 38220	8,2kΩ	5%	0,06W	
3726 ©	3198 021 31010	100Ω	5%	0,06W	
3728 ©	3198 021 31010	100Ω	5%	0,06W	
3730 ©	3198 021 34720	4,7kΩ	5%	0,06W	
3731 ©	3198 021 32710	270Ω	5%	0,06W	
3732 ©	3198 021 31020	1kΩ	5%	0,06W	
3733 ©	3198 021 34720	4,7kΩ	5%	0,06W	
3734 ©	3198 021 32720	2,7kΩ	5%	0,06W	
3735 ©	3198 021 33320	3,3kΩ	5%	0,06W	
3736 ©	3198 021 33310	330Ω	5%	0,06W	
3737 ©	3198 021 32220	2,2kΩ	5%	0,06W	
3738 ©	3198 021 36820	6,8kΩ	5%	0,06W	
3739 ©	3198 021 35620	5,6kΩ	5%	0,06W	
3740 ©	3198 021 36810	680Ω	5%	0,06W	
3741 ©	3198 021 34720	4,7kΩ	5%	0,06W	
3742 ©	3198 021 34720	4,7kΩ	5%	0,06W	
3743 ©	3198 021 35630	56kΩ	5%	0,06W	
3744 ©	3198 021 31040	100kΩ	5%	0,06W	
3745 ©	3198 021 35620	5,6kΩ	5%	0,06W	
3746 ©	3198 021 35620	5,6kΩ	5%	0,06W	
3758 ©	3198 021 31030	10kΩ	5%	0,06W	
3931 ©	3198 021 34730	47kΩ	5%	0,06W	
3932 ©	3198 021 34730	47kΩ	5%	0,06W	
3933 ©	3198 021 34730	47kΩ	5%	0,06W	
3934 ©	3198 021 31010	100Ω	5%	0,06W	

RESISTORS

3935 ©	3198 021 31010	100Ω	5%	0,06W
3936 ©	3198 021 31030	10kΩ	5%	0,06W
3937 ©	3198 021 32220	2,2kΩ	5%	0,06W
3938 ©	3198 021 32220	2,2kΩ	5%	0,06W
3939 ©	3198 021 34720	4,7kΩ	5%	0,06W
3940 ©	3198 021 31060	10MΩ	5%	0,06W
3941 ©	3198 021 31060	10MΩ	5%	0,06W
3942 ©	3198 021 33330	33kΩ	5%	0,06W
3943 ©	3198 021 33330	33kΩ	5%	0,06W
3944 ©	3198 021 33330	33kΩ	5%	0,06W
3945 ©	3198 021 33330	33kΩ	5%	0,06W
3946 ©	3198 021 33330	33kΩ	5%	0,06W
3947 ©	3198 021 33330	33kΩ	5%	0,06W
3948 ©	3198 021 34720	4,7kΩ	5%	0,06W
3950 ©	3198 021 31040	100kΩ	5%	0,06W
3951 ©	3198 021 32230	22kΩ	5%	0,06W
3952 ©	3198 021 32730	27kΩ	5%	0,06W
3953 ©	3198 021 34720	4,7kΩ	5%	0,06W
3954 ©	3198 021 34720	4,7kΩ	5%	0,06W
3955 ©	3198 021 31030	10kΩ	5%	0,06W

4003 ©	3198 021 90030	CHIP JUMPER 0603
4004 ©	3198 021 90030	CHIP JUMPER 0603
4301 ©	3198 021 90030	CHIP JUMPER 0603
4402 ©	3198 021 90030	CHIP JUMPER 0603
4403 ©	3198 021 90030	CHIP JUMPER 0603
4411 ©	3198 021 90030	CHIP JUMPER 0603
4413 ©	3198 021 90030	CHIP JUMPER 0603
4415 ©	3198 021 90030	CHIP JUMPER 0603
4416 ©	3198 021 90030	CHIP JUMPER 0603
4418 ©	3198 021 90030	CHIP JUMPER 0603
4419 ©	3198 021 90030	CHIP JUMPER 0603
4420 ©	3198 021 90030	CHIP JUMPER 0603
4421 ©	3198 021 90030	CHIP JUMPER 0603
4423 ©	3198 021 90030	CHIP JUMPER 0603
4424 ©	3198 021 90030	CHIP JUMPER 0603
4427 ©	3198 021 90030	CHIP JUMPER 0603
4428 ©	3198 021 90030	CHIP JUMPER 0603
4430 ©	3198 021 90030	CHIP JUMPER 0603
4431 ©	3198 021 90030	CHIP JUMPER 0603
4433 ©	3198 021 90030	CHIP JUMPER 0603
4434 ©	3198 021 90030	CHIP JUMPER 0603
4435 ©	3198 021 90030	CHIP JUMPER 0603
4437 ©	3198 021 90030	CHIP JUMPER 0603
4442 ©	3198 021 90030	CHIP JUMPER 0603
4443 ©	3198 021 90030	CHIP JUMPER 0603
4444 ©	3198 021 90030	CHIP JUMPER 0603
4447 ©	3198 021 90030	CHIP JUMPER 0603
4448 ©	3198 021 90030	CHIP JUMPER 0603
4449 ©	3198 021 90030	CHIP JUMPER 0603
4583 ©	3198 021 90030	CHIP JUMPER 0603
4584 ©	3198 021 90030	CHIP JUMPER 0603
4601 ©	3198 021 90030	CHIP JUMPER 0603
4999 ©	3198 021 90030	CHIP JUMPER 0603

COILS

1600	4822 242 10434	X-TAL, 18.432MHZ
1701	4822 242 81436	FILTER, 38.9MHZ, OFWK3953M
1702	2422 549 44341	FILTER OFWK9656M
1703	4822 242 10307	FILTER 38.9MHZ, OFWG3956M
1704	2422 549 44611	FILTER 5,5MHz
1990	4822 242 73552	XTAL, 13.875MHZ
5001 ©	2422 549 43062	FILTER 100MHz
5401	4822 157 11706	10µH, 5%
5402	4822 157 11706	10µH, 5%

COILS

5403	4822 157 11706	10µH, 5%
5406	4822 157 11706	10µH, 5%
5600 ⚠	4822 157 11706	10µH, 5%
5601 ⚠	4822 157 11706	10µH, 5%
5602 ⚠	4822 157 11706	10µH, 5%
5701 ©	2422 549 43062	FILTER 100MHz
5702 ©	2422 549 43062	FILTER 100MHz
5705	4822 157 11139	6,8µH, 5%
5709	4822 157 11139	6,8µH, 5%
5710	2422 549 44162	COIL VARIABLE
5711	2422 549 45833	COIL, VARIABLE
5713	4822 157 11747	15µH, 5%
5714	4822 157 11747	15µH, 5%
5931	4822 157 11706	10µH, 5%
5932 ©	2422 549 43062	FILTER 100MHz

DIODES

6001 ©	4822 130 11397	BAS316
6003 ©	4822 130 11397	BAS316
6314 ©	4822 130 10837	BZX384-C8V2
6320 ©	4822 130 11397	BAS316
6401 ©	9340 548 61115	BZX384-C12
6402 ©	9340 548 61115	BZX384-C12
6403 ©	9340 548 61115	BZX384-C12
6404 ©	9340 548 61115	BZX384-C12
6409 ©	4822 130 11416	BZX384-C6V8
6414 ©	4822 130 11416	BZX384-C6V8
6415 ©	9340 548 61115	BZX384-C12
6416 ©	9340 548 61115	BZX384-C12
6417 ©	9340 548 61115	BZX384-C12
6418 ©	9340 548 61115	BZX384-C12
6419 ©	9340 548 61115	BZX384-C12
6420 ©	9340 548 61115	BZX384-C12
6422 ©	4822 130 11564	BZX384-C3V9
6423 ©	9340 548 61115	BZX384-C12
6424 ©	9340 548 61115	BZX384-C12
6427 ©	9340 548 61115	BZX384-C12
6428 ©	9340 548 61115	BZX384-C12
6429 ©	9340 548 61115	BZX384-C12
6600 ©	4822 130 11397	BAS316
6703 ©	9340 552 30115	BA591
6704 ©	9340 552 30115	BA591
6705 ©	9340 552 30115	BA591

TRANSISTORS

7003 ©	4822 130 60854	PDTA124EU
7006 ©	3198 010 42320	BC857BW
7007 ©	4822 130 61553	PDTC124EU
7008 ©	3198 010 42310	BC847BW
7009 ©	3198 010 42310	BC847BW
7010 ©	4822 130 61553	PDTC124EU
7308 ©	4822 130 61553	PDTC124EU
7319 ©	3198 010 42310	BC847BW
7320 ©	9322 163 75685	SI2306DS
7321 ©	4822 130 61553	PDTC124EU
7401 ©	3198 010 42320	BC857BW
7402 ©	3198 010 42310	BC847BW
7403 ©	3198 010 42320	BC857BW
7404 ©	3198 010 42320	BC857BW
7405 ©	3198 010 42310	BC847BW
7407 ©	3198 010 42310	BC847BW
7409 ©	3198 010 42310	BC847BW
7412 ©	4822 130 61553	PDTC124EU
7421 ©	3198 010 42310	BC847BW

TRANSISTORS

7506 ©	9340 219 30115	BC817-25W
7508 ©	9340 219 30115	BC817-25W
7509 ©	9340 219 30115	BC817-25W
7511 ©	9340 219 30115	BC817-25W
7701 ©	4822 130 61553	PDTC124EU
7702 ©	4822 130 61553	PDTC124EU
7704 ©	4822 130 61553	PDTC124EU
7705 ©	4822 130 61553	PDTC124EU
7706 ©	4822 130 61553	PDTC124EU
7711 ©	3198 010 42320	BC857BW
7712 ©	4822 130 61553	PDTC124EU
7713 ©	3198 010 42320	BC857BW
7714 ©	3198 010 42310	BC847BW
7716 ©	3198 010 42320	BC857BW
7717 ©	9340 217 80115	BC847CW
7932 ©	3198 010 42310	BC847BW
7933 ©	3198 010 42310	BC847BW

INTEGRATED CIRCUITS

7001 ©	9352 668 47118	UDA1334BTS/N2
7002 ©	4822 209 62312	MC33078D
7004 ©	9322 173 41668	ST6618
7005 ©	9352 670 99118	UDA1361TS/N1
7408 ©	9322 186 87668	MSP3415G-QG-B8V3
7411 ©	9322 179 71668	NJM2285M
7419 ©	9340 560 36235	BSH111
7420 ©	9340 560 36235	BSH111
7501 ©	5322 209 11102	HEF4052BT
7502 ©	4822 209 32071	MC33079D
7503 ©	5322 209 11102	HEF4052BT
7504 ©	5322 209 11102	HEF4052BT
7505 ©	4822 209 62312	MC33078D
7709 ©	9352 606 11118	TDA9818T/V1
7931 ©	4822 209 17505	STV5348D
7934 ©	4822 209 60177	LM339D

Note:
Components printed in grey colour are considered as standard spareparts and thus not available on service stock.
Code numbers are published for orientation only.

A/V BOARD /05 (GB)

MISCELLANEOUS

1001 ⚠	2422 086 10919	FUSE 125mA 65V MP13
1705	3139 147 17751	TUNER UV1316MK3
1705	3139 147 17001	TV TUNER UV1316MK3
1900	4822 265 11154	FFC-CONNECTOR, 22P, TOP ENTRY
1940	2422 033 00334	SCART SOCKET
1940	2422 025 18316	SCART SOCKET
1943	4822 267 11031	FFC-CONNECTOR, 10P, TOP ENTRY
1946	2422 025 17367	FFC-CONNECTOR, 7P, TOP ENTRY
1947	4822 265 11154	FFC-CONNECTOR, 22P, TOP ENTRY
1949	2422 026 05628	CINCH SOCKET, 3-FOLD, GR/BL/RD
1951	4822 267 31729	CINCH SOCKET, BLACK
7581	9322 203 28667	OPTICAL IN CONNECT. GP1FA553RZ
7581	9322 155 48687	OPTICAL IN CONNECT. GP1FA550RZ

CAPACITORS

2001	3198 029 04790	47µF	20%	6,3V
2002 ©	3198 023 41040	100nF	10%	25V
2003 ©	3198 023 41040	100nF	10%	25V
2004	3198 029 04790	47µF	20%	6,3V
2005	3198 029 01010	100µF	20%	6,3V
2006 ©	3198 016 34790	47pF	5%	50V
2007	3198 029 31090	10µF	20%	25V
2008 ©	3198 016 31020	1nF	5%	25V
2009 ©	3198 023 41040	100nF	10%	25V
2010	3198 029 04790	47µF	20%	6,3V
2011	3198 029 31090	10µF	20%	25V
2012 ©	3198 023 41040	100nF	10%	25V
2013	3198 029 01010	100µF	20%	6,3V
2014 ©	3198 023 41040	100nF	10%	25V
2015 ©	3198 023 41040	100nF	10%	25V
2018 ©	3198 023 41040	100nF	10%	25V
2019 ©	3198 023 41040	100nF	10%	25V
2020	3198 029 04790	47µF	20%	6,3V
2023	2020 009 90094	47µF	20%	16V
2024 ©	3198 016 32790	27pF	NP0	50V
2025 ©	3198 016 31020	1nF	5%	25V
2026 ©	3198 016 32790	27pF	NP0	50V
2029	2020 009 90094	47µF	20%	16V
2031	3198 029 52280	2,2µF	20%	50V
2033 ©	3198 016 34710	470pF	5%	50V
2034 ©	3198 016 34710	470pF	5%	50V
2037 ©	2022 552 05457	4,7nF	5%	50V
2038 ©	2022 552 05457	4,7nF	5%	50V
2039 ©	2022 552 05457	4,7nF	5%	50V
2040 ©	2022 552 05457	4,7nF	5%	50V
2332	3198 029 52280	2,2µF	20%	50V
2334 ©	3198 023 41040	100nF	10%	25V
2402 ©	3198 017 31040	100nF	10%	16V
2403	3198 029 04790	47µF	20%	6,3V
2404 ©	3198 023 41040	100nF	10%	25V
2405	3198 029 04790	47µF	20%	6,3V
2406 ©	3198 017 31030	10nF	10%	50V
2407 ©	3198 016 31090	10pF	NP0	50V
2408 ©	3198 017 41050	1µF	20%	10V
2409 ©	3198 023 41040	100nF	10%	25V
2410 ©	3198 017 41050	1µF	20%	10V
2411 ©	3198 023 41040	100nF	10%	25V
2412 ©	3198 016 31090	10pF	NP0	50V
2413	3198 029 04790	47µF	20%	6,3V
2414 ©	3198 023 41040	100nF	10%	25V
2416 ©	3198 017 41050	1µF	20%	10V
2417	2020 009 90074	10µF	20%	16V
2418 ©	3198 017 41050	1µF	20%	10V
2419 ©	3198 017 41050	1µF	20%	10V

CAPACITORS

2421	2020 009 90074	10µF	20%	16V
2423 ©	3198 017 41050	1µF	20%	10V
2427 ©	3198 017 41050	1µF	20%	10V
2428	2020 009 90074	10µF	20%	16V
2433 ©	3198 017 34730	47nF	10%	16V
2434	3198 029 04790	47µF	20%	6,3V
2435 ©	3198 023 41040	100nF	10%	25V
2436 ©	3198 017 41050	1µF	20%	10V
2437 ©	3198 017 41050	1µF	20%	10V
2438 ©	3198 017 41050	1µF	20%	10V
2439 ©	3198 017 31040	100nF	10%	16V
2440 ©	3198 017 41050	1µF	20%	10V
2441 ©	3198 017 41050	1µF	20%	10V
2446 ©	3198 017 41050	1µF	20%	10V
2449 ©	3198 016 36890	68pF	10%	50V
2450 ©	3198 017 31040	100nF	10%	16V
2451 ©	3198 023 41040	100nF	10%	25V
2452 ©	3198 023 41040	100nF	10%	25V
2453 ©	3198 023 41040	100nF	10%	25V
2459 ©	3198 017 41050	1µF	20%	10V
2464	3198 029 31090	10µF	20%	25V
2501 ©	3198 017 41050	1µF	20%	10V
2502 ©	3198 023 41040	100nF	10%	25V
2503 ©	3198 023 41040	100nF	10%	25V
2504 ©	3198 017 41050	1µF	20%	10V
2505 ©	3198 017 41050	1µF	20%	10V
2506 ©	3198 017 41050	1µF	20%	10V
2507 ©	3198 017 41050	1µF	20%	10V
2508 ©	3198 017 41050	1µF	20%	10V
2509 ©	3198 023 41040	100nF	10%	25V
2510	3198 029 01010	100µF	20%	6,3V
2511	2020 009 90097	100µF	20%	16V
2512 ©	3198 023 41040	100nF	10%	25V
2513 ©	2020 552 96807	1µF	10%	10V
2514 ©	3198 023 41040	100nF	10%	25V
2515 ©	2020 552 96807	1µF	10%	10V
2516	2020 009 90097	100µF	20%	16V
2517 ©	3198 017 31020	1nF	10%	50V
2518 ©	3198 023 41040	100nF	10%	25V
2519	3198 029 01010	100µF	20%	6,3V
2520 ©	3198 017 31020	1nF	10%	50V
2521 ©	3198 023 41040	100nF	10%	25V
2522	2020 009 90097	100µF	20%	16V
2523 ©	3198 017 31020	1nF	10%	50V
2524 ©	3198 017 41050	1µF	20%	10V
2525 ©	3198 017 41050	1µF	20%	10V
2526	2020 009 90097	100µF	20%	16V
2527 ©	3198 017 31020	1nF	10%	50V
2530 ©	3198 023 41040	100nF	10%	25V
2535 ©	3198 023 41040	100nF	10%	25V
2536 ©	3198 023 41040	100nF	10%	25V
2581 ©	3198 017 31040	100nF	10%	16V
2582 ©	3198 023 41040	100nF	10%	25V
2583 ©	3198 016 31010	100pF	5%	50V
2584 ©	3198 016 31010	100pF	5%	50V
2600	3198 029 31090	10µF	20%	25V
2601 ©	3198 017 31030	10nF	10%	50V
2602	3198 029 31090	10µF	20%	25V
2603 ©	3198 023 41040	100nF	10%	25V
2604 ©	3198 017 31030	10nF	10%	50V
2605	3198 029 31090	10µF	20%	25V
2606 ©	3198 023 41040	100nF	10%	25V
2607 ©	3198 016 35690	56pF	NP0	50V
2608	3198 029 31090	10µF	20%	25V

CAPACITORS

2609 ©	3198 016 35690	56pF	NP0	50V
2610 ©	3198 017 31030	10nF	10%	50V
2611	3198 029 24790	47µf	20%	16V
2612	3198 029 54780	4,7µF	20%	16V
2616 ©	3198 017 31020	1nF	10%	50V
2617 ©	3198 017 31020	1nF	10%	50V
2620 ©	3198 016 33380	3,3pF	10%	50V
2621 ©	3198 016 33380	3,3pF	10%	50V
2623 ©	3198 023 41040	100nF	10%	25V
2626	3198 029 52280	2,2µF	20%	50V
2627	3198 029 52280	2,2µF	20%	50V
2713	3198 029 22290	22µF	20%	16V
2720	3198 029 01010	100µF	20%	6,3V
2722	2020 021 91355	2,2µF	20%	50V
2723 ©	3198 016 34710	470pF	5%	50V
2724 ©	3198 023 41040	100nF	10%	25V
2725 ©	3198 016 32290	22pF	5%	50V
2728 ©	3198 017 31030	10nF	10%	50V
2729	3198 029 31090	10µF	20%	25V
2730 ©	3198 017 42240	220nF	20%	16V
2731 ©	2020 552 94523	8,2pF	5%	50V
2732	3198 029 52280	2,2µF	20%	50V
2733 ©	2238 586 59812	100nF	10%	50V
2734 ©	3198 017 31020	1nF	10%	50V
2735 ©	3198 016 32790	27pF	NP0	50V
2736 ©	3198 016 32790	27pF	NP0	50V
2737	3198 029 04790	47µF	20%	6,3V
2740	3198 029 52280	2,2µF	20%	50V
2741 ©	3198 017 31020	1nF	10%	50V
2932 ©	3198 023 41040	100nF	10%	25V
2933	3198 029 04790	47µF	20%	6,3V
2934 ©	3198 023 41040	100nF	10%	25V
2935 ©	3198 023 41040	100nF	10%	25V
2936 ©	3198 016 32290	22pF	5%	50V
2937 ©	3198 016 32290	22pF	5%	50V
2938 ©	3198 023 41040	100nF	10%	25V
2940 ©	3198 023 41040	100nF	10%	25V
2941	3198 029 31090	10µF	20%	25V
2942 ©	3198 017 32220	2,2nF	10%	50V
2943 ©	3198 016 31810	180pF	NP0	50V
2944 ©	3198 017 32220	2,2nF	10%	50V
2945 ©	3198 016 31810	180pF	NP0	50V
2946 ©	3198 017 41050	1µF	20%	10V
2947 ©	3198 017 41050	1µF	20%	10V

RESISTORS

3001 ©	3198 021 32280	2,2Ω	5%	0,06W
3002 ©	3198 021 32280	2,2Ω	5%	0,06W
3003 ©	3198 021 31030	10kΩ	5%	0,06W
3004 ©	3198 021 32290	22Ω	5%	0,06W
3005 ©	3198 021 32290	22Ω	5%	0,06W
3006 ©	3198 021 32290	22Ω	5%	0,06W
3007 ©	2322 704 64703	47kΩ	1%	0,06W
3008 ©	3198 021 34720	4,7kΩ	5%	0,06W
3009 ©	2322 704 64702	4,7kΩ	1%	0,06W
3010 ©	2322 704 61004	100kΩ	1%	0,06W
3011 ©	3198 021 31080	1Ω	5%	0,06W
3012 ©	2322 704 63301	330Ω	1%	0,06W
3013 ©	3198 021 32290	22Ω	5%	0,06W
3014 ©	3198 021 31030	10kΩ	5%	0,06W
3015 ©	3198 021 32280	2,2Ω	5%	0,06W
3017 ©	3198 021 32280	2,2Ω	5%	0,06W
3018 ©	3198 021 32290	22Ω	5%	0,06W
3019 ©	3198 021 32290	22Ω	5%	0,06W

RESISTORS

3020 ©	3198 021 32290	22Ω	5%	0,06W
3024 ©	2322 704 64703	47kΩ	1%	0,06W
3026 ©	3198 021 34730	47kΩ	5%	0,06W
3027 ©	2322 704 64702	4,7kΩ	1%	0,06W
3029 ©	3198 021 31080	1Ω	5%	0,06W
3030 ©	2322 704 63301	330Ω	1%	0,06W
3034 ©	3198 021 34730	47kΩ	5%	0,06W
3035	3198 011 01030	10kΩ	5%	0,16W
3039	3198 011 01030	10kΩ	5%	0,16W
3041	3198 011 01030	10kΩ	5%	0,16W
3043 ©	3198 021 32290	22Ω	5%	0,06W
3044 ©	3198 021 31030	10kΩ	5%	0,06W
3045 ©	3198 021 31040	100kΩ	5%	0,06W
3046 ©	3198 021 34710	470Ω	5%	0,06W
3047 ©	3198 021 31040	100kΩ	5%	0,06W
3048 ©	3198 021 31010	100Ω	5%	0,06W
3052 ©	3198 021 33320	3,3kΩ	5%	0,06W
3053 ©	2322 704 61004	100kΩ	1%	0,06W
3054 ©	3198 021 33320	3,3kΩ	5%	0,06W
3327 ©	3198 021 31050	1MΩ	5%	0,06W
3329 ©	3198 021 32250	2,2MΩ	5%	0,06W
3348 ©	3198 021 36810	680Ω	5%	0,06W
3349 ©	3198 021 34790	47Ω	5%	0,06W
3355 ©	3198 021 34790	47Ω	5%	0,06W
3362 ©	3198 021 36810	680Ω	5%	0,06W
3371 ©	3198 021 34790	47Ω	5%	0,06W
3372 ©	3198 021 33390	33Ω	5%	0,06W
3373 ©	3198 021 33390	33Ω	5%	0,06W
3401 ©	2322 704 67509	75Ω	1%	0,06W
3402 ©	2322 704 67509	75Ω	1%	0,06W
3403 ©	2322 704 67509	75Ω	1%	0,06W
3404 ©	3198 021 37590	75Ω	5%	0,06W
3405 ©	3198 021 32230	22kΩ	5%	0,06W
3406 ©	3198 021 32240	220kΩ	5%	0,06W
3407 ©	3198 021 33320	3,3kΩ	5%	0,06W
3408 ©	3198 021 33920	3,9kΩ	5%	0,06W
3409 ©	2322 704 67509	75Ω	1%	0,06W
3410 ©	2322 704 67509	75Ω	1%	0,06W
3411 ©	3198 021 37590	75Ω	5%	0,06W
3412	3198 011 07590	75Ω	5%	0,25W
3413 ©	3198 021 37590	75Ω	5%	0,06W
3414 ©	3198 021 37590	75Ω	5%	0,06W
3415 ©	3198 021 31020	1kΩ	5%	0,06W
3416 ©	3198 021 34720	4,7kΩ	5%	0,06W
3417 ©	3198 021 37590	75Ω	5%	0,06W
3418 ©	3198 021 31040	100kΩ	5%	0,06W
3419 ©	3198 021 32230	22kΩ	5%	0,06W
3420 ©	3198 021 31510	150Ω	5%	0,06W
3421 ©	3198 021 32730	27kΩ	5%	0,06W
3422	3198 011 08210	820Ω	5%	0,2W
3423 ©	3198 021 33910	390Ω	5%	0,06W
3424 ©	3198 021 33330	33kΩ	5%	0,06W
3426 ©	3198 021 33330	33kΩ	5%	0,06W
3427 ©	3198 021 37590	75Ω	5%	0,06W
3428 ©	3198 021 31040	100kΩ	5%	0,06W
3429 ©	3198 021 34730	47kΩ	5%	0,06W
3431 ©	2120 108 94172	4,7kΩ	5%	0,06W
3432	3198 011 01010	100Ω	5%	0,2W
3433	3198 011 01010	100Ω	5%	0,2W
3437 ©	3198 021 31030	10kΩ	5%	0,06W
3438 ©	3198 021 31030	10kΩ	5%	0,06W
3439 ©	3198 021 31030	10kΩ	5%	0,06W
3440 ©	3198 021 31030	10kΩ	5%	0,06W
3442 ©	3198 021 31540	150kΩ	5%	0,06W

RESISTORS

3445 ©	3198 021 31510	150Ω	5%	0,06W
3446 ©	3198 021 34730	47kΩ	5%	0,06W
3447	3198 011 04730	47kΩ	5%	0,2W
3451	3198 011 01030	10kΩ	5%	0,16W
3452 ©	3198 021 31510	150Ω	5%	0,06W
3454	3198 011 01020	1kΩ	5%	0,2W
3455 ©	3198 021 31030	10kΩ	5%	0,06W
3458 ©	3198 021 34720	4,7kΩ	5%	0,06W
3459 ©	3198 021 31030	10kΩ	5%	0,06W
3460 ©	3198 021 34720	4,7kΩ	5%	0,06W
3461 ©▲	2122 551 00031	VDR 1MA/6V4		
3461 ©▲	2322 574 10402	VDR 1MA/6V4		
3462 ©▲	2122 551 00031	VDR 1MA/6V4		
3462 ©▲	2322 574 10402	VDR 1MA/6V4		
3463 ©▲	2322 574 10402	VDR 1MA/6V4		
3463 ©▲	2122 551 00031	VDR 1MA/6V4		
3464 ©▲	2322 574 10402	VDR 1MA/6V4		
3464 ©▲	2122 551 00031	VDR 1MA/6V4		
3465 ©▲	2122 551 00031	VDR 1MA/6V4		
3465 ©▲	2322 574 10402	VDR 1MA/6V4		
3466 ©▲	2322 574 10402	VDR 1MA/6V4		
3466 ©▲	2122 551 00031	VDR 1MA/6V4		
3467 ©▲	2122 551 00031	VDR 1MA/6V4		
3467 ©▲	2322 574 10402	VDR 1MA/6V4		
3468 ©▲	2322 574 10402	VDR 1MA/6V4		
3468 ©▲	2122 551 00031	VDR 1MA/6V4		
3469 ©	3198 021 31040	100kΩ	5%	0,06W
3470 ©	3198 021 31040	100kΩ	5%	0,06W
3471 ©	3198 021 31040	100kΩ	5%	0,06W
3472 ©	3198 021 31040	100kΩ	5%	0,06W
3475 ©	3198 021 31010	100Ω	5%	0,06W
3476 ©	3198 021 31010	100Ω	5%	0,06W
3477 ©	3198 021 31010	100Ω	5%	0,06W
3478 ©	3198 021 31010	100Ω	5%	0,06W
3489 ©	3198 021 38230	82kΩ	5%	0,06W
3490 ©	3198 021 31510	150Ω	5%	0,06W
3491 ©	3198 021 31510	150Ω	5%	0,06W
3492 ©	3198 021 31510	150Ω	5%	0,06W
3493 ©	3198 021 31510	150Ω	5%	0,06W
3494 ©	3198 021 31510	150Ω	5%	0,06W
3501 ©	3198 021 31020	1kΩ	5%	0,06W
3502	3198 011 01020	1kΩ	5%	0,2W
3503 ©	3198 021 31040	100kΩ	5%	0,06W
3504 ©	3198 021 31040	100kΩ	5%	0,06W
3505 ©	3198 021 31040	100kΩ	5%	0,06W
3506 ©	3198 021 31040	100kΩ	5%	0,06W
3507 ©	3198 021 31040	100kΩ	5%	0,06W
3508 ©	3198 021 31020	1kΩ	5%	0,06W
3509	3198 011 01020	1kΩ	5%	0,2W
3510 ©	3198 021 31040	100kΩ	5%	0,06W
3511 ©	3198 021 31040	100kΩ	5%	0,06W
3512 ©	3198 021 31020	1kΩ	5%	0,06W
3513 ©	3198 021 31020	1kΩ	5%	0,06W
3514 ©	3198 021 31040	100kΩ	5%	0,06W
3515	3198 011 01020	1kΩ	5%	0,2W
3516 ©	3198 021 31040	100kΩ	5%	0,06W
3517	3198 011 04720	4,7kΩ	5%	0,2W
3518 ©	3198 021 31020	1kΩ	5%	0,06W
3519	3198 011 04720	4,7kΩ	5%	0,2W
3520 ©	3198 021 32210	220Ω	5%	0,06W
3521 ©	3198 021 32210	220Ω	5%	0,06W
3522 ©	3198 021 32210	220Ω	5%	0,06W
3523	3198 011 01020	1kΩ	5%	0,2W
3524 ©	3198 021 38210	820Ω	5%	0,06W

RESISTORS

3525 ©	3198 021 32210	220Ω	5%	0,06W	
3526 ©	3198 021 31020	1kΩ	5%	0,06W	
3527 ©	3198 021 38210	820Ω	5%	0,06W	
3528 ©	3198 021 34720	4,7kΩ	5%	0,06W	
3529 ©	3198 021 34720	4,7kΩ	5%	0,06W	
3530 ©	3198 021 38210	820Ω	5%	0,06W	
3531 ©	3198 021 38210	820Ω	5%	0,06W	
3532	3198 011 01020	1kΩ	5%	0,2W	
3533	3198 011 01020	1kΩ	5%	0,2W	
3534 ©	3198 021 31040	100kΩ	5%	0,06W	
3584 ©	3198 021 37590	75Ω	5%	0,06W	
3585 ©	3198 021 33310	330Ω	5%	0,06W	
3586 ©	3198 021 34790	47Ω	5%	0,06W	
3587 ©	3198 021 31080	1Ω	5%	0,06W	
3588 ©	3198 021 31090	10Ω	5%	0,06W	
3600 ©	3198 021 31030	10kΩ	5%	0,06W	
3601	3198 011 01010	100Ω	5%	0,2W	
3602 ©	2120 108 94172	4,7kΩ	5%	0,06W	
3603	3198 011 01010	100Ω	5%	0,2W	
3606 ©	3198 021 31020	1kΩ	5%	0,06W	
3607 ©	3198 021 31020	1kΩ	5%	0,06W	
3611 ©	3198 021 31010	100Ω	5%	0,06W	
3612 ©	3198 021 31010	100Ω	5%	0,06W	
3701	3198 011 06810	680Ω	5%	0,2W	
3702 ©	3198 021 34710	470Ω	5%	0,06W	
3703	3198 011 01540	150kΩ	5%	0,2W	
3704 ©	3198 021 32210	220Ω	5%	0,06W	
3711 ©	3198 021 33330	33kΩ	5%	0,06W	
3714 ©	3198 021 31830	18kΩ5%0,06W			
3715 ©	3198 021 31030	10kΩ	5%	0,06W	
3720 ©	3198 021 33310	330Ω	5%	0,06W	
3724	2120 368 90124	TRIMPOT. 22kΩ LIN.			
3725 ©	3198 021 38220	8,2kΩ	5%	0,06W	
3731 ©	3198 021 33310	330Ω	5%	0,06W	
3732 ©	3198 021 31020	1kΩ	5%	0,06W	
3734 ©	3198 021 32720	2,7kΩ	5%	0,06W	
3735 ©	3198 021 33320	3,3kΩ	5%	0,06W	
3736 ©	3198 021 33310	330Ω	5%	0,06W	
3739 ©	3198 021 35620	5,6kΩ	5%	0,06W	
3743 ©	3198 021 35630	56kΩ	5%	0,06W	
3744 ©	3198 021 31040	100kΩ	5%	0,06W	
3931 ©	3198 021 34730	47kΩ	5%	0,06W	
3932 ©	3198 021 34730	47kΩ	5%	0,06W	
3933 ©	3198 021 34730	47kΩ	5%	0,06W	
3934 ©	3198 021 31010	100Ω	5%	0,06W	
3935 ©	3198 021 31010	100Ω	5%	0,06W	
3936 ©	3198 021 31030	10kΩ	5%	0,06W	
3937 ©	3198 021 32220	2,2kΩ	5%	0,06W	
3938 ©	3198 021 32220	2,2kΩ	5%	0,06W	
3939 ©	3198 021 34720	4,7kΩ	5%	0,06W	
3940 ©	3198 021 31060	10MΩ	5%	0,06W	
3941 ©	3198 021 31060	10MΩ	5%	0,06W	
3942 ©	3198 021 33330	33kΩ	5%	0,06W	
3943 ©	3198 021 33330	33kΩ	5%	0,06W	
3944 ©	3198 021 33330	33kΩ	5%	0,06W	
3945 ©	3198 021 33330	33kΩ	5%	0,06W	
3946 ©	3198 021 33330	33kΩ	5%	0,06W	
3947 ©	3198 021 33330	33kΩ	5%	0,06W	
3948 ©	3198 021 34720	4,7kΩ	5%	0,06W	
3950 ©	3198 021 31040	100kΩ	5%	0,06W	
3951 ©	3198 021 32230	22kΩ	5%	0,06W	
3952 ©	3198 021 32730	27kΩ	5%	0,06W	
3953 ©	3198 021 34720	4,7kΩ	5%	0,06W	
3954 ©	3198 021 34720	4,7kΩ	5%	0,06W	

RESISTORS

3955 ©	3198 021 31030	10kΩ	5%	0,06W	
4003 ©	3198 021 90030	CHIP JUMPER 0603			
4004 ©	3198 021 90030	CHIP JUMPER 0603			
4301 ©	3198 021 90030	CHIP JUMPER 0603			
4402 ©	3198 021 90030	CHIP JUMPER 0603			
4403 ©	3198 021 90030	CHIP JUMPER 0603			
4411 ©	3198 021 90030	CHIP JUMPER 0603			
4413 ©	3198 021 90030	CHIP JUMPER 0603			
4415 ©	3198 021 90030	CHIP JUMPER 0603			
4416 ©	3198 021 90030	CHIP JUMPER 0603			
4418 ©	3198 021 90030	CHIP JUMPER 0603			
4419 ©	3198 021 90030	CHIP JUMPER 0603			
4420 ©	3198 021 90030	CHIP JUMPER 0603			
4421 ©	3198 021 90030	CHIP JUMPER 0603			
4423 ©	3198 021 90030	CHIP JUMPER 0603			
4424 ©	3198 021 90030	CHIP JUMPER 0603			
4427 ©	3198 021 90030	CHIP JUMPER 0603			
4428 ©	3198 021 90030	CHIP JUMPER 0603			
4430 ©	3198 021 90030	CHIP JUMPER 0603			
4431 ©	3198 021 90030	CHIP JUMPER 0603			
4433 ©	3198 021 90030	CHIP JUMPER 0603			
4434 ©	3198 021 90030	CHIP JUMPER 0603			
4435 ©	3198 021 90030	CHIP JUMPER 0603			
4437 ©	3198 021 90030	CHIP JUMPER 0603			
4442 ©	3198 021 90030	CHIP JUMPER 0603			
4443 ©	3198 021 90030	CHIP JUMPER 0603			
4444 ©	3198 021 90030	CHIP JUMPER 0603			
4447 ©	3198 021 90030	CHIP JUMPER 0603			
4448 ©	3198 021 90030	CHIP JUMPER 0603			
4449 ©	3198 021 90030	CHIP JUMPER 0603			
4583 ©	3198 021 90030	CHIP JUMPER 0603			
4584 ©	3198 021 90030	CHIP JUMPER 0603			
4601 ©	3198 021 90030	CHIP JUMPER 0603			
4700 ©	3198 021 90030	CHIP JUMPER 0603			
4701 ©	3198 021 90030	CHIP JUMPER 0603			
4999 ©	3198 021 90030	CHIP JUMPER 0603			

COILS

1600	4822 242 10434	RESONATOR 18,432MHz
1702	2422 549 44341	FILTER OFWK9656M
1703	4822 242 81436	FILTER, 38.9MHZ, OFWK3953M
1706	4822 242 81572	FILTER, 6MHZ, TPSR*MBQ2
1990	4822 242 73552	RESONATOR 13,875MHz
5001 ©	2422 549 43062	COIL 100MHZ, 600Ω
5401	4822 157 11706	10µH, 5%
5402	4822 157 11706	10µH, 5%
5403	4822 157 11706	10µH, 5%
5406	4822 157 11706	10µH, 5%
5600 ⚠	4822 157 11706	10µH, 5%
5601 ⚠	4822 157 11706	10µH, 5%
5602 ⚠	4822 157 11706	10µH, 5%
5701 ©	2422 549 43062	COIL 100MHZ, 600Ω
5702 ©	2422 549 43062	COIL 100MHZ, 600Ω
5705	4822 157 11139	6,8µH, 5%
5709	4822 157 11139	6,8µH, 5%
5711	2422 549 45833	COIL, VARIABLE
5714	4822 157 11747	15µH, 5%
5931	4822 157 11706	10µH, 5%
5932 ©	2422 549 43062	COIL 100MHZ, 600Ω

DIODES

6001 ©	4822 130 11397	BAS316
6003 ©	4822 130 11397	BAS316
6314 ©	4822 130 10837	UDZS8.2B
6320 ©	4822 130 11397	BAS316
6401 ©	9340 548 61115	PDZ12B
6402 ©	9340 548 61115	PDZ12B
6403 ©	9340 548 61115	PDZ12B
6404 ©	9340 548 61115	PDZ12B
6409 ©	4822 130 11416	PDZ6.8B
6414 ©	4822 130 11416	PDZ6.8B
6415 ©	9340 548 61115	PDZ12B
6416 ©	9340 548 61115	PDZ12B
6417 ©	9340 548 61115	PDZ12B
6418 ©	9340 548 61115	PDZ12B
6419 ©	9340 548 61115	PDZ12B
6420 ©	9340 548 61115	PDZ12B
6422 ©	4822 130 11564	BZX384-C3V9
6423 ©	9340 548 61115	PDZ12B
6424 ©	9340 548 61115	PDZ12B
6427 ©	9340 548 61115	PDZ12B
6428 ©	9340 548 61115	PDZ12B
6429 ©	9340 548 61115	PDZ12B
6600 ©	4822 130 11397	BAS316

TRANSISTORS

7003 ©	4822 130 60854	PDTA124EU-W
7006 ©	3198 010 42320	BC857BW
7007 ©	4822 130 61553	PDTC124EU
7008 ©	3198 010 42310	BC847BW
7009 ©	3198 010 42310	BC847BW
7010 ©	4822 130 61553	PDTC124EU
7308 ©	4822 130 61553	PDTC124EU
7319 ©	3198 010 42310	BC847BW
7320 ©	9322 163 75685	SI2306DS
7321 ©	4822 130 61553	PDTC124EU
7401 ©	3198 010 42320	BC857BW
7402 ©	3198 010 42310	BC847BW
7403 ©	3198 010 42320	BC857BW
7404 ©	3198 010 42320	BC857BW
7405 ©	3198 010 42310	BC847BW
7407 ©	3198 010 42310	BC847BW
7409 ©	3198 010 42310	BC847BW
7412 ©	4822 130 61553	PDTC124EU
7421 ©	3198 010 42310	BC847BW
7506 ©	9340 219 30115	BC817-25W
7508 ©	9340 219 30115	BC817-25W
7509 ©	9340 219 30115	BC817-25W
7511 ©	9340 219 30115	BC817-25W
7711 ©	3198 010 42320	BC857BW
7717 ©	9340 217 80115	BC847CW
7932 ©	3198 010 42310	BC847BW
7933 ©	3198 010 42310	BC847BW

INTEGRATED CIRCUITS

7001 ©	9352 668 47118	UDA1334BTS/N2
7002 ©	4822 209 62312	MC33078
7004 ©	9322 173 41668	ST6618
7005 ©	9352 670 99118	UDA1361TS/N1
7408 ©	9322 186 87668	MSP3415G-QG-B8V3
7411 ©	9322 179 71668	NJM2285M
7419 ©	9340 560 36235	BSH111
7420 ©	9340 560 36235	BSH111
7501	5322 209 11102	HEF4052BT
7502 ©	4822 209 32071	MC33079D

INTEGRATED CIRCUITS

7503	5322 209 11102	HEF4052BT
7504	5322 209 11102	HEF4052BT
7505 ©	4822 209 62312	MC33078
7710 ©	9352 621 13118	TDA9817T/V1
7931 ©	4822 209 17505	STV5348D, VPS DECODER
7934 ©	4822 209 60177	LM339D, 4X OPAMP

Note:
Components printed in grey colour are considered as standard spareparts and thus not available on service stock.
Code numbers are published for orientation only.

sub µP BOARD

MISCELLANEOUS

1986	2422 025 16677	FFC-CONNECTOR, 10P, SIDE ENTRY

CAPACITORS

2800	©	3198 023 41040	100nF	10%	25V
2801	©	3198 016 31590	15pF	5%	50V
2802	©	3198 016 31590	15pF	5%	50V
2803	©	3198 023 41040	100nF	10%	25V
2804	©	3198 023 41040	100nF	10%	25V
2805	©	3198 023 41040	100nF	10%	25V
2806	©	3198 023 41040	100nF	10%	25V
2807	©	3198 017 32240	220nF	10%	10V
2808	©	3198 023 41040	100nF	10%	25V
2809	©	3198 023 41040	100nF	10%	25V
2810	©	3198 016 31090	10pF	NP0	50V
2811	©	3198 016 31090	10pF	NP0	50V
2812	©	3198 017 31030	10nF	10%	50V
2813	©	3198 016 31090	10pF	NP0	50V
2814	©	3198 016 31090	10pF	NP0	50V
2815	©	3198 016 32210	220pF	NP0	50V
2816		4822 124 11968	220mF	20%	5,5V
2817	©	3198 023 41040	100nF	10%	25V
2818	©	3198 016 32210	220pF	NP0	50V
2819		3198 029 01010	100µF	20%	6,3V
2820	©	3198 017 31030	10nF	10%	50V
2821	©	3198 017 31030	10nF	10%	50V
2822	©	3198 023 41040	100nF	10%	25V
2823	©	3198 017 31020	1nF	10%	50V
2824	©	3198 017 41050	1µF	20%	10V
2825	©	3198 016 31010	100pF	5%	50V
2828	©	3198 023 41040	100nF	10%	25V
2829		3198 029 31090	10µF	20%	25V
2830	©	3198 023 41040	100nF	10%	25V
2831	©	3198 017 31030	10nF	10%	50V
2836	©	3198 023 41040	100nF	10%	25V

RESISTORS

3800	©	3198 021 31010	100Ω	5%	0,06W
3801	©	3198 021 31030	10kΩ	5%	0,06W
3802	©	3198 021 31010	100Ω	5%	0,06W
3803	©	3198 021 31020	1kΩ	5%	0,06W
3804	©	3198 021 31030	10kΩ	5%	0,06W
3805	©	3198 021 31010	100Ω	5%	0,06W
3806	©	3198 021 32230	22kΩ	5%	0,06W
3807	©	3198 021 31040	100kΩ	5%	0,06W
3808	©	3198 021 31040	100kΩ	5%	0,06W
3809	©	3198 021 31040	100kΩ	5%	0,06W
3810	©	3198 021 31040	100kΩ	5%	0,06W
3811	©	3198 021 31010	100Ω	5%	0,06W
3812	©	3198 021 32230	22kΩ	5%	0,06W
3813	©	3198 021 31030	10kΩ	5%	0,06W
3814	©	3198 021 31030	10kΩ	5%	0,06W
3815	©	3198 021 31830	18kΩ	5%	0,06W
3816	©	3198 021 31030	10kΩ	5%	0,06W
3817	©	3198 021 32720	2,7kΩ	5%	0,06W
3818	©	3198 021 32720	2,7kΩ	5%	0,06W
3819	©	3198 021 31030	10kΩ	5%	0,06W
3820	©	3198 021 31020	1kΩ	5%	0,06W
3821	©	3198 021 31030	10kΩ	5%	0,06W
3822	©	3198 021 31030	10kΩ	5%	0,06W
3823	©	3198 021 31040	100kΩ	5%	0,06W
3824	©	3198 021 31020	1kΩ	5%	0,06W
3825	©	3198 021 31030	10kΩ	5%	0,06W
3826	©	3198 021 31020	1kΩ	5%	0,06W

RESISTORS

3827	©	3198 021 31020	1kΩ	5%	0,06W
3828	©	3198 021 31030	10kΩ	5%	0,06W
3829	©	3198 021 31030	10kΩ	5%	0,06W
3830	©	3198 021 31020	1kΩ	5%	0,06W
3831	©	3198 021 31020	1kΩ	5%	0,06W
3832	©	3198 021 33330	33kΩ	5%	0,06W
3833	©	3198 021 31020	1kΩ	5%	0,06W
3834	©	3198 021 31020	1kΩ	5%	0,06W
3835	©	3198 021 31020	1kΩ	5%	0,06W
3836	©	3198 021 31010	100Ω	5%	0,06W
3837	©	3198 021 31230	12kΩ	5%	0,06W
3838	©	3198 021 31020	1kΩ	5%	0,06W
3839	©	3198 021 32730	27kΩ	5%	0,06W
3840	©	3198 021 34720	4,7kΩ	5%	0,06W
3841	©	3198 021 31040	100kΩ	5%	0,06W
3842	©	3198 021 32240	220kΩ	5%	0,06W
3843	©	3198 021 33330	33kΩ	5%	0,06W
3844	©	3198 021 32210	220Ω	5%	0,06W
3845	©	3198 021 31020	1kΩ	5%	0,06W
3846	©	3198 021 33330	33kΩ	5%	0,06W
3847	©	3198 021 31030	10kΩ	5%	0,06W
3849	©	3198 021 34730	47kΩ	5%	0,06W
3850	©	3198 021 31830	18kΩ	5%	0,06W
3851	©	3198 021 31030	10kΩ	5%	0,06W
3852	©	3198 021 31030	10kΩ	5%	0,06W
3854	©	3198 021 31020	1kΩ	5%	0,06W
3855	©	3198 021 34710	470Ω	5%	0,06W
3856	©	3198 021 31030	10kΩ	5%	0,06W
3857	©	3198 021 31030	10kΩ	5%	0,06W
3858	©	3198 021 31040	100kΩ	5%	0,06W
3860	©	3198 021 32220	2,2kΩ	5%	0,06W
3861	©	3198 021 32250	2,2MΩ	5%	0,06W
3862	©	3198 021 31030	10kΩ	5%	0,06W
3863	©	3198 021 34780	4,7Ω	5%	0,06W
3864	©	3198 021 34780	4,7Ω	5%	0,06W
3865	©	3198 021 34780	4,7Ω	5%	0,06W
3866	©	3198 021 34780	4,7Ω	5%	0,06W
3867	©	3198 021 37590	75Ω	5%	0,06W
3868	©	3198 021 31030	10kΩ	5%	0,06W
3869	©	3198 021 33310	330Ω	5%	0,06W
3870	©	3198 021 31040	100kΩ	5%	0,06W
3871	©	3198 021 31030	10kΩ	5%	0,06W
3872	©	3198 021 31030	10kΩ	5%	0,06W
3873	©	3198 021 34720	4,7kΩ	5%	0,06W
3874	©	3198 021 31030	10kΩ	5%	0,06W
3875	©	3198 021 31030	10kΩ	5%	0,06W
3876	©	3198 021 31030	10kΩ	5%	0,06W
3877	©	3198 021 31020	1kΩ	5%	0,06W
3878	©	3198 021 31020	1kΩ	5%	0,06W
3879	©	3198 021 31020	1kΩ	5%	0,06W
3880	©	3198 021 31010	100Ω	5%	0,06W
3881	©	3198 021 34730	47kΩ	5%	0,06W
3882	©	3198 021 34730	47kΩ	5%	0,06W
3884	©	3198 021 31010	100Ω	5%	0,06W
3885	©	3198 021 31010	100Ω	5%	0,06W
3886	©	3198 021 34720	4,7kΩ	5%	0,06W
3887	©	3198 021 34720	4,7kΩ	5%	0,06W
3888	©	3198 021 34710	470Ω	5%	0,06W
3889	©	3198 021 31830	18kΩ	5%	0,06W
3916	©	3198 021 32730	27kΩ	5%	0,06W
3917	©	2322 704 63603	36kΩ	1%	0,06W
3919	©	2120 108 93058	33kΩ	1%	0,06W
3920	©	3198 021 35620	5,6kΩ	5%	0,06W
3922	©	3198 021 31020	1kΩ	5%	0,06W

RESISTORS

3923 ©	3198 021 31030	10kΩ	5%	0,06W
3924 ©	3198 021 31030	10kΩ	5%	0,06W
3925 ©	2322 704 61003	10kΩ	1%	0,06W
3927 ©	3198 021 33330	33kΩ	5%	0,06W
4902 ©	3198 021 90030	CHIP JUMPER 0603		
4903 ©	3198 021 90030	CHIP JUMPER 0603		

COILS

1801 ©	2422 543 01368	XTAL 24.576MHZ
1801	2422 543 01115	RESONATOR 24M576 CX-11F
1805	4822 242 70938	XTAL 32.768kHz
5801 ©	2422 549 44607	FERRITE BEAD
5802 ©	2422 549 44607	FERRITE BEAD
5803 ©	2422 549 44607	FERRITE BEAD
5804 ©	2422 549 44607	FERRITE BEAD

DIODES

6800 ©	4822 130 11397	BAS316
6801 ©	4822 130 11564	UDZ3.9B
6802 ©	4822 130 10654	BAT254
6803 ©	4822 130 10654	BAT254
6804 ©	4822 130 10654	BAT254
6805 ©	4822 130 10654	BAT254
6902 ©	4822 130 10654	BAT254

TRANSISTORS

7802 ©	4822 130 61553	DTC124EU
7807 ©	4822 209 73852	PMBT2369
7813 ©	3198 010 42310	BC847BW
7814 ©	3198 010 42310	BC847BW
7815 ©	3198 010 42310	BC847BW
7816 ©	3198 010 42310	BC847BW
7817 ©	3198 010 42310	BC847BW
7818 ©	4822 130 60854	DTA124EU
7819 ©	3198 010 42320	BC857BW
7906 ©	4822 130 61553	DTC124EU
7908 ©	4822 130 61553	DTC124EU

INTEGRATED CIRCUITS

7801 ©	9352 190 00118	74LVC573AD, SHIFT REGISTER
7803 ©	9322 186 16668	CY62128VLL-70SC, 128K RAM
7803 ©	9322 202 01668	M68AW127BM-70MC6
7804 ©	3103 165 13721	TMP91CW12AF/LIRP1, CECO
7805 ©	9965 000 26212	M29W800DT-70N6
7806 ©	9322 163 26685	NCP301LSN30, RESET IC
7808 ©	9322 130 40668	M24C16-WMN6
7808 ©	4822 209 16907	M24C16-MN6
7821 ©	9340 560 36235	BSH111
7822 ©	9340 560 36235	BSH111
7825 ©	9322 181 92682	LA7213
7902 ©	4822 209 63709	LM324D

Note:
Components printed in grey colour are considered as standard spareparts and thus not available on service stock.
Code numbers are published for orientation only.

DIGITAL BOARD

MISCELLANEOUS

1102	2422 025 18185	FFC-CONNECTOR, 40P, TOP ENTRY
1103	2422 025 17104	FFC-CONNECTOR, 7P, TOP ENTRY
1104	2422 025 16729	FFC-CONNECTOR, 10P, TOP ENTRY
1203	2422 025 17955	FFC-CONNECTOR, 6P, TOP ENTRY
1400	2422 025 18219	FFC-CONNECTOR, 28P, TOP ENTRY
1500	2422 025 17441	CONNECTOR, 12P, TOP ENTRY
1505©⚠	2422 086 11087	FUSE, F 1A, 125V UL
1506©⚠	2422 086 11087	FUSE, F 1A, 125V UL
1507©⚠	2422 086 11087	FUSE, F 1A, 125V UL
1704	2422 025 16794	FFC-CONNECTOR, 7P, TOP ENTRY
1900	2422 025 16389	FFC-CONNECTOR, 22P, TOP ENTRY
1904	2422 025 16389	FFC-CONNECTOR, 22P, TOP ENTRY

CAPACITORS

2014 ©	3198 030 44790	47µF	20%	16V
2015 ©	3198 017 31040	100nF	10%	16V
2016 ©	3198 017 31040	100nF	10%	16V
2017 ©	3198 017 31040	100nF	10%	16V
2018 ©	3198 017 31040	100nF	10%	16V
2019 ©	3198 017 31040	100nF	10%	16V
2020 ©	3198 017 31040	100nF	10%	16V
2021 ©	3198 017 31040	100nF	10%	16V
2022 ©	3198 030 74780	4,7µF	20%	35V
2026 ©	3198 017 31040	100nF	10%	16V
2027 ©	3198 017 31040	100nF	10%	16V
2028 ©	3198 017 31040	100nF	10%	16V
2029 ©	3198 017 31040	100nF	10%	16V
2030 ©	3198 017 31040	100nF	10%	16V
2031 ©	3198 017 31040	100nF	10%	16V
2032 ©	3198 017 31040	100nF	10%	16V
2033 ©	3198 030 74780	4,7µF	20%	35V
2035 ©	3198 017 31040	100nF	10%	16V
2036 ©	3198 016 32710	270pF	10%	50V
2037 ©	3198 017 31040	100nF	10%	16V
2038 ©	3198 017 31040	100nF	10%	16V
2039 ©	3198 017 31040	100nF	10%	16V
2040 ©	3198 017 31040	100nF	10%	16V
2041 ©	3198 017 31040	100nF	10%	16V
2042 ©	3198 017 31040	100nF	10%	16V
2043 ©	3198 017 31040	100nF	10%	16V
2044 ©	3198 030 74780	4,7µF	20%	35V
2046 ©	3198 016 32290	22pF	5%	50V
2048 ©	3198 016 31510	150pF	NP0	50V
2049 ©	3198 030 74780	4,7µF	20%	35V
2050 ©	3198 017 31040	100nF	10%	16V
2052 ©	3198 017 31040	100nF	10%	16V
2053 ©	3198 017 31040	100nF	10%	16V
2054 ©	3198 017 31040	100nF	10%	16V
2056 ©	3198 017 31040	100nF	10%	16V
2058 ©	3198 017 31040	100nF	10%	16V
2059 ©	3198 016 33390	33pF		50V
2060 ©	3198 016 33390	33pF		50V
2061 ©	3198 017 31040	100nF	10%	16V
2063 ©	3198 017 31040	100nF	10%	16V
2064 ©	3198 017 31040	100nF	10%	16V
2065 ©	3198 017 31040	100nF	10%	16V
2066 ©	3198 016 31020	1nF	5%	25V
2067 ©	3198 017 31040	100nF	10%	16V
2071 ©	3198 017 31040	100nF	10%	16V
2101 ©	3198 017 32230	22nF	10%	25V
2103 ©	3198 017 31040	100nF	10%	16V
2108 ©	3198 017 01040	100nF	20%	16V
2112 ©	3198 017 31520	1,5nF	20%	50V
2113 ©	3198 016 34710	470pF	5%	50V
2114 ©	3198 017 31040	100nF	10%	16V
2119 ©	3198 017 31520	1,5nF	20%	50V
2120 ©	3198 017 31040	100nF	10%	16V

CAPACITORS

2125 ©	3198 017 31040	100nF	10%	16V
2129 ©	3198 016 34710	470pF	5%	50V
2200 ©	3198 017 41050	1µF	20%	10V
2201 ©	3198 016 32710	270pF	10%	50V
2202 ©	3198 016 31290	12pF	NP0	50V
2203 ©	3198 016 31290	12pF	NP0	50V
2206 ©	3198 017 31040	100nF	10%	16V
2207 ©	3198 017 31040	100nF	10%	16V
2209 ©	3198 017 31040	100nF	10%	16V
2210 ©	3198 017 31040	100nF	10%	16V
2212 ©	3198 030 41010	100µF	20%	16V
2214 ©	3198 017 31040	100nF	10%	16V
2215 ©	3198 017 31040	100nF	10%	16V
2217 ©	3198 017 31040	100nF	10%	16V
2218 ©	3198 017 31040	100nF	10%	16V
2219 ©	3198 017 31040	100nF	10%	16V
2220 ©	3198 017 31040	100nF	10%	16V
2221 ©	3198 017 31040	100nF	10%	16V
2222 ©	3198 017 31040	100nF	10%	16V
2223 ©	3198 017 31040	100nF	10%	16V
2224 ©	3198 017 31040	100nF	10%	16V
2225 ©	3198 017 31040	100nF	10%	16V
2226 ©	3198 017 31040	100nF	10%	16V
2227 ©	3198 017 31040	100nF	10%	16V
2228 ©	3198 017 31040	100nF	10%	16V
2229 ©	3198 017 31040	100nF	10%	16V
2230 ©	3198 017 31040	100nF	10%	16V
2231 ©	3198 017 31040	100nF	10%	16V
2232 ©	3198 017 31040	100nF	10%	16V
2233 ©	3198 017 31040	100nF	10%	16V
2234 ©	3198 017 31040	100nF	10%	16V
2235 ©	3198 016 31020	1nF	5%	25V
2236 ©	3198 030 74780	4,7µF	20%	35V
2237 ©	3198 017 31040	100nF	10%	16V
2238 ©	3198 017 31040	100nF	10%	16V
2308 ©	3198 017 31040	100nF	10%	16V
2310 ©	3198 017 31040	100nF	10%	16V
2403 ©	3198 017 31040	100nF	10%	16V
2404 ©	3198 030 41090	10µF	20%	16V
2405 ©	3198 017 31040	100nF	10%	16V
2406 ©	3198 017 31040	100nF	10%	16V
2407 ©	3198 017 31040	100nF	10%	16V
2408 ©	3198 030 41090	10µF	20%	16V
2409 ©	3198 017 31040	100nF	10%	16V
2410 ©	3198 017 31040	100nF	10%	16V
2411 ©	3198 017 31040	100nF	10%	16V
2412 ©	3198 017 31040	100nF	10%	16V
2413 ©	3198 017 31040	100nF	10%	16V
2414 ©	3198 017 31040	100nF	10%	16V
2415 ©	3198 017 31040	100nF	10%	16V
2416 ©	3198 017 31040	100nF	10%	16V
2417 ©	3198 017 31040	100nF	10%	16V
2418 ©	3198 030 41090	10µF	20%	16V
2419 ©	3198 017 31040	100nF	10%	16V
2420 ©	3198 030 41090	10µF	20%	16V
2421 ©	3198 017 31040	100nF	10%	16V
2422 ©	3198 017 31040	100nF	10%	16V
2423 ©	3198 017 31040	100nF	10%	16V
2424 ©	3198 017 31040	100nF	10%	16V
2425 ©	3198 017 31040	100nF	10%	16V
2426 ©	3198 017 31040	100nF	10%	16V
2427 ©	3198 017 31040	100nF	10%	16V
2428 ©	3198 017 31040	100nF	10%	16V
2429 ©	3198 017 31040	100nF	10%	16V

CAPACITORS

2433 ©	3198 017 31040	100nF	10%	16V
2436 ©	3198 016 33390	33pF		50V
2512 ©	2020 021 91672	100µF	20%	6,3V
2512 ©	2020 021 91857	100µF	20%	6,3V
2514 ©	3198 017 31040	100nF	10%	16V
2515 ©	3198 017 44740	470nF	20%	10V
2516 ©	2020 021 91672	100µF	20%	6,3V
2516 ©	2020 021 91857	100µF	20%	6,3V
2518 ©	3198 016 31010	100pF	5%	50V
2519 ©	3198 017 31040	100nF	10%	16V
2521 ©	3198 017 31040	100nF	10%	16V
2524 ©	3198 017 31040	100nF	10%	16V
2525 ©	3198 017 31040	100nF	10%	16V
2526 ©	3198 017 31040	100nF	10%	16V
2527 ©	3198 017 31030	10nF	10%	50V
2700 ©	3198 030 74780	4,7µF	20%	35V
2701 ©	3198 017 31040	100nF	10%	16V
2703 ©	3198 016 31020	1nF	5%	25V
2704 ©	3198 017 31040	100nF	10%	16V
2705 ©	3198 017 31040	100nF	10%	16V
2706 ©	3198 017 31040	100nF	10%	16V
2707 ©	3198 017 31040	100nF	10%	16V
2709 ©	3198 016 36880	6,8pF	NP0	50V
2710 ©	3198 016 33390	33pF		50V
2712 ©	3198 017 31040	100nF	10%	16V
2715 ©	3198 016 36880	6,8pF	NP0	50V
2716 ©	3198 016 33390	33pF		50V
2720 ©	3198 016 36880	6,8pF	NP0	50V
2721 ©	3198 016 33390	33pF		50V
2723 ©	3198 017 31040	100nF	10%	16V
2725 ©	3198 017 31040	100nF	10%	16V
2726 ©	3198 017 31040	100nF	10%	16V
2727 ©	3198 017 31040	100nF	10%	16V
2728 ©	3198 030 74780	4,7µF	20%	35V
2729 ©	3198 030 74780	4,7µF	20%	35V
2730 ©	3198 017 31040	100nF	10%	16V
2731 ©	3198 030 74780	4,7µF	20%	35V
2732 ©	3198 017 31040	100nF	10%	16V
2733 ©	2238 586 15631	3,9nF	10%	50V
2734 ©	3198 016 38210	820pF	10%	25V
2806 ©	3198 017 31040	100nF	10%	16V
2807 ©	3198 017 31040	100nF	10%	16V
2808 ©	3198 017 31040	100nF	10%	16V
2809 ©	3198 017 31040	100nF	10%	16V
2810 ©	3198 017 31040	100nF	10%	16V
2811 ©	3198 017 31040	100nF	10%	16V
2812 ©	3198 017 31040	100nF	10%	16V
2820 ©	3198 017 31040	100nF	10%	16V
2821 ©	3198 017 31040	100nF	10%	16V
2822 ©	3198 017 31040	100nF	10%	16V
2823 ©	3198 017 31040	100nF	10%	16V
2824 ©	3198 017 31040	100nF	10%	16V
2825 ©	3198 017 31040	100nF	10%	16V
2826 ©	3198 017 31040	100nF	10%	16V
2832 ©	3198 017 31040	100nF	10%	16V
2833 ©	3198 017 31040	100nF	10%	16V
2834 ©	3198 017 31040	100nF	10%	16V
2900 ©	3198 017 31040	100nF	10%	16V
2901 ©	3198 017 31040	100nF	10%	16V
2902 ©	3198 017 31040	100nF	10%	16V
2903 ©	3198 017 31040	100nF	10%	16V
2904 ©	3198 017 31040	100nF	10%	16V
2905 ©	3198 017 31040	100nF	10%	16V
2906 ©	3198 017 31040	100nF	10%	16V

CAPACITORS

2907 ©	3198 017 31040	100nF	10%	16V
2908 ©	3198 017 31040	100nF	10%	16V
2909 ©	3198 017 31040	100nF	10%	16V
2910 ©	3198 016 31510	150pF	NP0	50V
2911 ©	3198 017 32230	22nF	10%	25V
2912 ©	3198 017 31040	100nF	10%	16V
2913 ©	3198 017 31040	100nF	10%	16V
2914 ©	3198 016 32710	270pF	10%	50V
2915 ©	3198 016 32710	270pF	10%	50V
2916 ©	3198 016 32710	270pF	10%	50V
2917 ©	3198 016 32710	270pF	10%	50V
2918 ©	3198 016 32290	22pF	5%	50V
2919 ©	3198 016 32290	22pF	5%	50V
2920 ©	3198 017 31040	100nF	10%	16V
2921 ©	3198 016 32290	22pF	5%	50V
2922 ©	3198 016 36890	68pF	10%	50V
2924 ©	3198 017 31040	100nF	10%	16V
2925 ©	3198 017 31040	100nF	10%	16V
2926 ©	3198 016 32710	270pF	10%	50V
2927 ©	3198 016 32710	270pF	10%	50V
2928 ©	3198 016 32710	270pF	10%	50V
2929 ©	3198 016 32710	270pF	10%	50V
2930 ©	3198 017 31040	100nF	10%	16V
2931 ©	3198 030 74780	4,7µF	20%	35V
2933 ©	3198 017 31040	100nF	10%	16V
2934 ©	3198 017 31040	100nF	10%	16V
2935 ©	3198 016 32710	270pF	10%	50V
2936 ©	3198 016 32710	270pF	10%	50V
2937 ©	3198 016 32710	270pF	10%	50V
2938 ©	3198 017 31040	100nF	10%	16V
2939 ©	3198 030 74780	4,7µF	20%	35V
2940 ©	3198 017 31040	100nF	10%	16V
2943 ©	3198 017 31030	10nF	10%	50V

RESISTORS

3000 ©	3198 021 36810	680Ω	5%	0,06W
3003 ©	3198 021 34720	4,7kΩ	5%	0,06W
3004 ©	3198 021 36810	680Ω	5%	0,06W
3005 ©	3198 021 31010	100Ω	5%	0,06W
3006 ©	3198 021 32220	2,2kΩ	5%	0,06W
3008 ©	3198 021 31010	100Ω	5%	0,06W
3009 ©	3198 021 31020	1kΩ	5%	0,06W
3010 ©	3198 021 32290	22Ω	5%	0,06W
3011 ©	3198 021 31030	10kΩ	5%	0,06W
3012 ©	3198 021 34720	4,7kΩ	5%	0,06W
3013 ©	3198 021 31080	1Ω	5%	0,06W
3015 ©	3198 021 31030	10kΩ	5%	0,06W
3016 ©	3198 021 31030	10kΩ	5%	0,06W
3017 ©	3198 021 31030	10kΩ	5%	0,06W
3018 ©	3198 021 31030	10kΩ	5%	0,06W
3019 ©	3198 021 34720	4,7kΩ	5%	0,06W
3023 ©	3198 021 31010	100Ω	5%	0,06W
3024 ©	3198 021 31010	100Ω	5%	0,06W
3025 ©	3198 021 31010	100Ω	5%	0,06W
3026 ©	3198 021 31010	100Ω	5%	0,06W
3082 ©	3198 021 31040	100kΩ	5%	0,06W
3087 ©	3198 021 34790	47Ω	5%	0,06W
3088 ©	3198 021 31040	100kΩ	5%	0,06W
3090 ©	3198 021 34720	4,7kΩ	5%	0,06W
3092 ©	3198 021 31040	100kΩ	5%	0,06W
3093 ©	3198 021 36820	6,8kΩ	5%	0,06W
3095 ©	3198 021 34720	4,7kΩ	5%	0,06W
3096 ©	3198 021 34720	4,7kΩ	5%	0,06W
3098 ©	3198 021 31040	100kΩ	5%	0,06W

RESISTORS

3100 ©	3198 021 31030	10kΩ	5%	0,06W
3101 ©	3198 021 33390	33Ω	5%	0,06W
3103 ©	3198 021 33390	33Ω	5%	0,06W
3106 ©	3198 021 33390	33Ω	5%	0,06W
3108 ©	3198 021 33390	33Ω	5%	0,06W
3110 ©	3198 021 33390	33Ω	5%	0,06W
3112 ©	3198 021 33390	33Ω	5%	0,06W
3113 ©	3198 021 31030	10kΩ	5%	0,06W
3114 ©	3198 021 34720	4,7kΩ	5%	0,06W
3116 ©	3198 021 33390	33Ω	5%	0,06W
3117 ©	3198 021 34720	4,7kΩ	5%	0,06W
3118 ©	3198 021 33390	33Ω	5%	0,06W
3119 ©	3198 021 31030	10kΩ	5%	0,06W
3120 ©	3198 021 33390	33Ω	5%	0,06W
3122 ©	3198 021 33390	33Ω	5%	0,06W
3124 ©	3198 021 33390	33Ω	5%	0,06W
3126 ©	3198 021 33390	33Ω	5%	0,06W
3128 ©	3198 021 33390	33Ω	5%	0,06W
3130 ©	3198 021 33390	33Ω	5%	0,06W
3132 ©	3198 021 31010	100Ω	5%	0,06W
3133 ©	3198 021 33390	33Ω	5%	0,06W
3135 ©	3198 021 33390	33Ω	5%	0,06W
3137 ©	3198 021 31010	100Ω	5%	0,06W
3138 ©	3198 021 33390	33Ω	5%	0,06W
3142 ©	3198 021 31010	100Ω	5%	0,06W
3143 ©	2322 702 60829	82Ω	5%	
3144 ©	3198 021 31010	100Ω	5%	0,06W
3145 ©	3198 021 35620	5,6kΩ	5%	0,06W
3147 ©	3198 021 34790	47Ω	5%	0,06W
3149 ©	3198 021 34790	47Ω	5%	0,06W
3154 ©	2322 702 60829	82Ω	5%	
3156 ©	3198 021 34720	4,7kΩ	5%	0,06W
3159 ©	3198 021 34790	47Ω	5%	0,06W
3161 ©	2322 702 60829	82Ω	5%	
3162 ©	3198 021 34720	4,7kΩ	5%	0,06W
3164 ©	3198 021 31030	10kΩ	5%	0,06W
3167 ©	3198 021 34790	47Ω	5%	0,06W
3170 ©	3198 021 34790	47Ω	5%	0,06W
3172 ©	3198 021 34790	47Ω	5%	0,06W
3173 ©	3198 021 34720	4,7kΩ	5%	0,06W
3175 ©	3198 021 34790	47Ω	5%	0,06W
3178 ©	3198 021 34790	47Ω	5%	0,06W
3184 ©	3198 021 34720	4,7kΩ	5%	0,06W
3185 ©	3198 021 31010	100Ω	5%	0,06W
3186 ©	3198 021 31030	10kΩ	5%	0,06W
3187 ©	3198 021 34720	4,7kΩ	5%	0,06W
3189 ©	3198 021 31030	10kΩ	5%	0,06W
3191 ©	3198 021 31040	100kΩ	5%	0,06W
3192 ©	3198 021 36820	6,8kΩ	5%	0,06W
3195 ©	3198 021 31040	100kΩ	5%	0,06W
3197 ©	3198 021 31010	100Ω	5%	0,06W
3199 ©	3198 021 31030	10kΩ	5%	0,06W
3200 ©	3198 021 31030	10kΩ	5%	0,06W
3202 ©	3198 021 32210	220Ω	5%	0,06W
3204 ©	3198 021 31030	10kΩ	5%	0,06W
3205 ©	2322 704 66342	6,3kΩ	NP0	0,06W
3210 ©	3198 021 33390	33Ω	5%	0,06W
3211 ©	3198 021 33390	33Ω	5%	0,06W
3212 ©	2322 734 65609	56Ω	1%	0,06W
3213 ©	2322 734 65609	56Ω	1%	0,06W
3214 ©	3198 021 33390	33Ω	5%	0,06W
3215 ©	3198 021 33390	33Ω	5%	0,06W
3216 ©	3198 021 31090	10Ω	5%	0,06W
3217 ©	3198 021 33390	33Ω	5%	0,06W

RESISTORS

3218 ©	3198 021 33390	33Ω	5%	0,06W
3219 ©	3198 021 31030	10kΩ	5%	0,06W
3220 ©	3198 021 31090	10Ω	5%	0,06W
3221 ©	3198 021 33390	33Ω	5%	0,06W
3222 ©	3198 021 33390	33Ω	5%	0,06W
3223 ©	3198 021 31090	10Ω	5%	0,06W
3224 ©	2322 702 60829	82Ω	5%	
3225 ©	3198 021 31090	10Ω	5%	0,06W
3226 ©	3198 021 33390	33Ω	5%	0,06W
3227 ©	3198 021 33390	33Ω	5%	0,06W
3228 ©	3198 021 31090	10Ω	5%	0,06W
3229 ©	3198 021 33390	33Ω	5%	0,06W
3230 ©	3198 021 31030	10kΩ	5%	0,06W
3231 ©	3198 021 31090	10Ω	5%	0,06W
3232 ©	2322 734 65609	56Ω	1%	0,06W
3233 ©	2322 734 65609	56Ω	1%	0,06W
3234 ©	3198 021 31090	10Ω	5%	0,06W
3235 ©	3198 021 31030	10kΩ	5%	0,06W
3236 ©	3198 021 31090	10Ω	5%	0,06W
3237 ©	3198 021 33390	33Ω	5%	0,06W
3238 ©	3198 021 31090	10Ω	5%	0,06W
3239 ©	3198 021 33390	33Ω	5%	0,06W
3240 ©	2322 704 65102	5,1kΩ	1%	0,06W
3241 ©	3198 021 33390	33Ω	5%	0,06W
3242 ©	3198 021 31090	10Ω	5%	0,06W
3243 ©	3198 021 33390	33Ω	5%	0,06W
3244 ©	3198 021 33390	33Ω	5%	0,06W
3245 ©	3198 021 31090	10Ω	5%	0,06W
3246 ©	3198 021 33390	33Ω	5%	0,06W
3247 ©	3198 021 33390	33Ω	5%	0,06W
3248 ©	3198 021 32290	22Ω	5%	0,06W
3249 ©	3198 021 33390	33Ω	5%	0,06W
3250 ©	3198 021 34720	4,7kΩ	5%	0,06W
3251 ©	3198 021 33390	33Ω	5%	0,06W
3252 ©	3198 021 33390	33Ω	5%	0,06W
3253 ©	3198 021 31080	1Ω	5%	0,06W
3254 ©	3198 021 33390	33Ω	5%	0,06W
3255 ©	3198 021 34720	4,7kΩ	5%	0,06W
3256 ©	3198 021 34720	4,7kΩ	5%	0,06W
3257 ©	3198 021 32230	22kΩ	5%	0,06W
3258 ©	3198 021 32230	22kΩ	5%	0,06W
3259 ©	3198 021 34720	4,7kΩ	5%	0,06W
3260 ©	3198 021 32210	220Ω	5%	0,06W
3261 ©	3198 021 31080	1Ω	5%	0,06W
3262 ©	3198 021 34720	4,7kΩ	5%	0,06W
3263 ©	3198 021 34720	4,7kΩ	5%	0,06W
3264 ©	3198 021 34720	4,7kΩ	5%	0,06W
3265 ©	3198 021 34720	4,7kΩ	5%	0,06W
3266 ©	3198 021 34720	4,7kΩ	5%	0,06W
3267 ©	3198 021 34720	4,7kΩ	5%	0,06W
3268 ©	3198 021 34720	4,7kΩ	5%	0,06W
3269 ©	3198 021 34720	4,7kΩ	5%	0,06W
3270 ©	3198 021 32210	220Ω	5%	0,06W
3271 ©	3198 021 32210	220Ω	5%	0,06W
3272 ©	3198 021 32210	220Ω	5%	0,06W
3273 ©	3198 021 33390	33Ω	5%	0,06W
3274 ©	3198 021 32210	220Ω	5%	0,06W
3276 ©	3198 021 31020	1kΩ	5%	0,06W
3277 ©	3198 021 32210	220Ω	5%	0,06W
3278 ©	3198 021 32210	220Ω	5%	0,06W
3279 ©	3198 021 32210	220Ω	5%	0,06W
3280 ©	3198 021 31030	10kΩ	5%	0,06W
3281 ©	3198 021 31030	10kΩ	5%	0,06W
3282 ©	3198 021 31030	10kΩ	5%	0,06W

RESISTORS

3285 ©	3198 021 31090	10Ω	5%	0,06W
3287 ©	3198 021 34720	4,7kΩ	5%	0,06W
3289 ©	3198 021 34720	4,7kΩ	5%	0,06W
3290 ©	3198 021 34720	4,7kΩ	5%	0,06W
3292 ©	3198 021 34720	4,7kΩ	5%	0,06W
3294 ©	3198 021 32210	220Ω	5%	0,06W
3295 ©	3198 021 32210	220Ω	5%	0,06W
3296 ©	3198 021 32210	220Ω	5%	0,06W
3297 ©	3198 021 32210	220Ω	5%	0,06W
3298 ©	3198 021 32210	220Ω	5%	0,06W
3299 ©	3198 021 32210	220Ω	5%	0,06W
3307 ©	3198 021 31030	10kΩ	5%	0,06W
3311 ©	3198 021 31030	10kΩ	5%	0,06W
3315 ©	3198 021 32210	220Ω	5%	0,06W
3316 ©	3198 021 32210	220Ω	5%	0,06W
3317 ©	3198 021 32210	220Ω	5%	0,06W
3318 ©	3198 021 32210	220Ω	5%	0,06W
3319 ©	3198 021 32210	220Ω	5%	0,06W
3320 ©	3198 021 31030	10kΩ	5%	0,06W
3400 ©	3198 021 34720	4,7kΩ	5%	0,06W
3401 ©	3198 021 34720	4,7kΩ	5%	0,06W
3402 ©	3198 021 34720	4,7kΩ	5%	0,06W
3403 ©	3198 021 34720	4,7kΩ	5%	0,06W
3404 ©	3198 021 34720	4,7kΩ	5%	0,06W
3405 ©	3198 021 33320	3,3kΩ	5%	0,06W
3406 ©	3198 021 33320	3,3kΩ	5%	0,06W
3407 ©	3198 021 33320	3,3kΩ	5%	0,06W
3408 ©	3198 021 33320	3,3kΩ	5%	0,06W
3409 ©	3198 021 34720	4,7kΩ	5%	0,06W
3410 ©	3198 021 34720	4,7kΩ	5%	0,06W
3411 ©	3198 021 34720	4,7kΩ	5%	0,06W
3412 ©	3198 021 34720	4,7kΩ	5%	0,06W
3413 ©	3198 021 34720	4,7kΩ	5%	0,06W
3414 ©	3198 021 34720	4,7kΩ	5%	0,06W
3415 ©	3198 021 34720	4,7kΩ	5%	0,06W
3416 ©	3198 021 34720	4,7kΩ	5%	0,06W
3417 ©	3198 021 34720	4,7kΩ	5%	0,06W
3418 ©	3198 021 34720	4,7kΩ	5%	0,06W
3419 ©	3198 021 34720	4,7kΩ	5%	0,06W
3420 ©	3198 021 34720	4,7kΩ	5%	0,06W
3421 ©	3198 021 34720	4,7kΩ	5%	0,06W
3422 ©	3198 021 34720	4,7kΩ	5%	0,06W
3423 ©	3198 021 34720	4,7kΩ	5%	0,06W
3424 ©	3198 021 31030	10kΩ	5%	0,06W
3425 ©	3198 021 31030	10kΩ	5%	0,06W
3426 ©	3198 021 31030	10kΩ	5%	0,06W
3427 ©	3198 021 31030	10kΩ	5%	0,06W
3428 ©	3198 021 31030	10kΩ	5%	0,06W
3429 ©	3198 021 33390	33Ω	5%	0,06W
3430 ©	3198 021 33390	33Ω	5%	0,06W
3431 ©	3198 021 33390	33Ω	5%	0,06W
3432 ©	3198 021 33390	33Ω	5%	0,06W
3433 ©	2322 704 61202	1,2kΩ	1%	0,06W
3434 ©	3198 021 31590	15Ω	5%	0,06W
3435 ©	3198 021 31590	15Ω	5%	0,06W
3436 ©	3198 021 33390	33Ω	5%	0,06W
3437 ©	3198 021 33390	33Ω	5%	0,06W
3438 ©	3198 021 33390	33Ω	5%	0,06W
3439 ©	3198 021 33390	33Ω	5%	0,06W
3440 ©	3198 021 33390	33Ω	5%	0,06W
3441 ©	3198 021 33310	330Ω	5%	0,06W
3442 ©	3198 021 32290	22Ω	5%	0,06W
3443 ©	3198 021 32290	22Ω	5%	0,06W
3444 ©	3198 021 32290	22Ω	5%	0,06W

RESISTORS

3445 ©	3198 021 32290	22Ω	5%	0,06W
3446 ©	3198 021 32290	22Ω	5%	0,06W
3447 ©	3198 021 32290	22Ω	5%	0,06W
3448 ©	3198 021 32290	22Ω	5%	0,06W
3449 ©	3198 021 32290	22Ω	5%	0,06W
3450 ©	3198 021 32290	22Ω	5%	0,06W
3451 ©	3198 021 32290	22Ω	5%	0,06W
3452 ©	3198 021 32290	22Ω	5%	0,06W
3453 ©	3198 021 32290	22Ω	5%	0,06W
3454 ©	3198 021 32290	22Ω	5%	0,06W
3455 ©	3198 021 32290	22Ω	5%	0,06W
3456 ©	3198 021 32290	22Ω	5%	0,06W
3457 ©	3198 021 32290	22Ω	5%	0,06W
3458 ©	3198 021 32290	22Ω	5%	0,06W
3459 ©	3198 021 32290	22Ω	5%	0,06W
3460 ©	3198 021 32290	22Ω	5%	0,06W
3461 ©	3198 021 32290	22Ω	5%	0,06W
3462 ©	3198 021 32290	22Ω	5%	0,06W
3463 ©	3198 021 32290	22Ω	5%	0,06W
3464 ©	3198 021 32290	22Ω	5%	0,06W
3465 ©	3198 021 32290	22Ω	5%	0,06W
3466 ©	3198 021 32290	22Ω	5%	0,06W
3467 ©	3198 021 32290	22Ω	5%	0,06W
3468 ©	3198 021 32290	22Ω	5%	0,06W
3469 ©	3198 021 32290	22Ω	5%	0,06W
3470 ©	3198 021 32290	22Ω	5%	0,06W
3471 ©	3198 021 32290	22Ω	5%	0,06W
3472 ©	3198 021 32290	22Ω	5%	0,06W
3473 ©	3198 021 32290	22Ω	5%	0,06W
3474 ©	3198 021 32290	22Ω	5%	0,06W
3475 ©	3198 021 32290	22Ω	5%	0,06W
3476 ©	3198 021 32290	22Ω	5%	0,06W
3477 ©	3198 021 32290	22Ω	5%	0,06W
3478 ©	3198 021 32290	22Ω	5%	0,06W
3479 ©	3198 021 32290	22Ω	5%	0,06W
3480 ©	3198 021 32290	22Ω	5%	0,06W
3481 ©	3198 021 32290	22Ω	5%	0,06W
3482 ©	3198 021 32290	22Ω	5%	0,06W
3483 ©	3198 021 32290	22Ω	5%	0,06W
3484 ©	3198 021 32290	22Ω	5%	0,06W
3485 ©	3198 021 32290	22Ω	5%	0,06W
3486 ©	3198 021 32290	22Ω	5%	0,06W
3487 ©	3198 021 32290	22Ω	5%	0,06W
3488 ©	3198 021 32290	22Ω	5%	0,06W
3489 ©	3198 021 32290	22Ω	5%	0,06W
3490 ©	3198 021 32290	22Ω	5%	0,06W
3491 ©	3198 021 32290	22Ω	5%	0,06W
3492 ©	3198 021 32290	22Ω	5%	0,06W
3493 ©	3198 021 32290	22Ω	5%	0,06W
3494 ©	3198 021 32290	22Ω	5%	0,06W
3495 ©	3198 021 32290	22Ω	5%	0,06W
3496 ©	3198 021 33390	33Ω	5%	0,06W
3497 ©	3198 021 31040	100kΩ	5%	0,06W
3498 ©	3198 021 31030	10kΩ	5%	0,06W
3499 ©	3198 021 31030	10kΩ	5%	0,06W
3503 ©	2322 704 61502	1,5kΩ	1%	0,06W
3504 ©	2322 704 61502	1,5kΩ	1%	0,06W
3700 ©	3198 021 31010	100Ω	5%	0,06W
3701 ©	3198 021 31010	100Ω	5%	0,06W
3702 ©	3198 021 34720	4,7kΩ	5%	0,06W
3703 ©	2322 704 67509	75Ω	1%	0,06W
3705 ©	2322 704 63001	300Ω	1%	0,06W
3706 ©	2322 704 61002	1kΩ	1%	0,06W
3707 ©	2322 704 61002	1kΩ	1%	0,06W

RESISTORS

3709 ©	2322 704 63001	300Ω	1%	0,06W
3710 ©	2322 704 67509	75Ω	1%	0,06W
3713 ©	2322 704 63001	300Ω	1%	0,06W
3714 ©	2322 704 61002	1kΩ	1%	0,06W
3716 ©	2322 704 61002	1kΩ	1%	0,06W
3717 ©	2322 704 63001	300Ω	1%	0,06W
3718 ©	2322 704 67509	75Ω	1%	0,06W
3721 ©	2322 704 63001	300Ω	1%	0,06W
3722 ©	2322 704 63001	300Ω	1%	0,06W
3723 ©	2322 704 61002	1kΩ	1%	0,06W
3724 ©	2322 704 61002	1kΩ	1%	0,06W
3725 ©	2322 704 87501	750Ω	1%	0,06W
3726 ©	2322 704 87501	750Ω	1%	0,06W
3727 ©	3198 021 33390	33Ω	5%	0,06W
3728 ©	3198 021 36810	680Ω	5%	0,06W
3729 ©	3198 021 31090	10Ω	5%	0,06W
3730 ©	3198 021 31090	10Ω	5%	0,06W
3731 ©	3198 021 34720	4,7kΩ	5%	0,06W
3732 ©	3198 021 33390	33Ω	5%	0,06W
3805 ©	3198 021 31010	100Ω	5%	0,06W
3806 ©	3198 021 31010	100Ω	5%	0,06W
3807 ©	3198 021 31010	100Ω	5%	0,06W
3808 ©	3198 021 34720	4,7kΩ	5%	0,06W
3809 ©	3198 021 31030	10kΩ	5%	0,06W
3810 ©	3198 021 31030	10kΩ	5%	0,06W
3811 ©	3198 021 31030	10kΩ	5%	0,06W
3812 ©	3198 021 31030	10kΩ	5%	0,06W
3813 ©	3198 021 31030	10kΩ	5%	0,06W
3814 ©	3198 021 31030	10kΩ	5%	0,06W
3815 ©	3198 021 31030	10kΩ	5%	0,06W
3817 ©	3198 021 34720	4,7kΩ	5%	0,06W
3820 ©	3198 021 34720	4,7kΩ	5%	0,06W
3821 ©	3198 021 34720	4,7kΩ	5%	0,06W
3822 ©	3198 021 34720	4,7kΩ	5%	0,06W
3823 ©	3198 021 34720	4,7kΩ	5%	0,06W
3825 ©	3198 021 34720	4,7kΩ	5%	0,06W
3826 ©	3198 021 34720	4,7kΩ	5%	0,06W
3827 ©	3198 021 34720	4,7kΩ	5%	0,06W
3832 ©	3198 021 34720	4,7kΩ	5%	0,06W
3836 ©	3198 021 31010	100Ω	5%	0,06W
3840 ©	3198 021 31030	10kΩ	5%	0,06W
3849 ©	3198 021 31030	10kΩ	5%	0,06W
3850 ©	3198 021 31030	10kΩ	5%	0,06W
3851 ©	3198 021 31030	10kΩ	5%	0,06W
3852 ©	3198 021 31030	10kΩ	5%	0,06W
3854 ©	3198 021 32220	2,2kΩ	5%	0,06W
3855 ©	3198 021 32230	22kΩ	5%	0,06W
3860 ©	3198 021 32290	22Ω	5%	0,06W
3861 ©	3198 021 32290	22Ω	5%	0,06W
3862 ©	3198 021 32290	22Ω	5%	0,06W
3863 ©	3198 021 32290	22Ω	5%	0,06W
3864 ©	3198 021 32290	22Ω	5%	0,06W
3865 ©	3198 021 32290	22Ω	5%	0,06W
3866 ©	3198 021 32290	22Ω	5%	0,06W
3867 ©	3198 021 32290	22Ω	5%	0,06W
3868 ©	3198 021 31220	1,2kΩ	5%	0,06W
3869 ©	3198 021 34720	4,7kΩ	5%	0,06W
3901 ©	2322 704 61801	180Ω	1%	0,06W
3902 ©	2322 704 65601	560Ω	1%	0,06W
3905 ©	2322 704 61801	180Ω	1%	0,06W
3906 ©	2322 704 65601	560Ω	1%	0,06W
3907 ©	3198 021 31010	100Ω	5%	0,06W
3908 ©	3198 021 31810	180Ω	5%	0,06W
3909 ©	3198 021 36890	68Ω	5%	0,06W

RESISTORS

3910	©	3198 021 36890	68Ω	5%	0,06W
3911	©	3198 021 35610	560Ω	5%	0,06W
3912	©	3198 021 32220	2,2kΩ	5%	0,06W
3913	©	3198 021 32290	22Ω	5%	0,06W
3914	©	3198 021 36890	68Ω	5%	0,06W
3916	©	3198 021 34790	47Ω	5%	0,06W
3917	©	3198 021 34790	47Ω	5%	0,06W
3918	©	2322 704 67509	75Ω	1%	0,06W
3919	©	3198 021 31020	1kΩ	5%	0,06W
3920	©	2322 704 67509	75Ω	1%	0,06W
3921	©	3198 021 31020	1kΩ	5%	0,06W
3922	©	3198 021 36890	68Ω	5%	0,06W
3924	©	2322 704 67509	75Ω	1%	0,06W
3925	©	3198 021 31030	10kΩ	5%	0,06W
3926	©	3198 021 31020	1kΩ	5%	0,06W
3927	©	2322 704 67509	75Ω	1%	0,06W
3928	©	3198 021 31020	1kΩ	5%	0,06W
3929	©	2322 704 65609	56Ω	1%	0,06W
3930	©	2322 704 67509	75Ω	1%	0,06W
3931	©	3198 021 31020	1kΩ	5%	0,06W
3932	©	2322 704 67509	75Ω	1%	0,06W
3933	©	3198 021 31020	1kΩ	5%	0,06W
3934	©	2322 704 67509	75Ω	1%	0,06W
3935	©	2322 704 67509	75Ω	1%	0,06W
3936	©	2322 704 67509	75Ω	1%	0,06W
3937	©	2322 704 67509	75Ω	1%	0,06W
3938	©	2322 704 67509	75Ω	1%	0,06W
3939	©	2322 704 67509	75Ω	1%	0,06W
3955	©	3198 021 31080	1Ω	5%	0,06W
4001	©	3198 021 90030	CHIP JUMPER 0603		
4005	©	3198 021 90030	CHIP JUMPER 0603		
4111	©	3198 021 90030	CHIP JUMPER 0603		
4113	©	3198 021 90030	CHIP JUMPER 0603		
4115	©	3198 021 90030	CHIP JUMPER 0603		
4117	©	3198 021 90030	CHIP JUMPER 0603		
4123	©	3198 021 90030	CHIP JUMPER 0603		
4125	©	3198 021 90030	CHIP JUMPER 0603		
4201	©	3198 021 90030	CHIP JUMPER 0603		
4202	©	3198 021 90030	CHIP JUMPER 0603		
4204	©	3198 021 90030	CHIP JUMPER 0603		
4205	©	3198 021 90030	CHIP JUMPER 0603		
4308	©	3198 021 90030	CHIP JUMPER 0603		
4311	©	3198 021 90030	CHIP JUMPER 0603		
4315	©	3198 021 90030	CHIP JUMPER 0603		
4316	©	3198 021 90030	CHIP JUMPER 0603		
4401	©	3198 021 90030	CHIP JUMPER 0603		
4402	©	3198 021 90030	CHIP JUMPER 0603		
4404	©	3198 021 90030	CHIP JUMPER 0603		
4406	©	3198 021 90030	CHIP JUMPER 0603		
4407	©	3198 021 90030	CHIP JUMPER 0603		
4803	©	3198 021 90030	CHIP JUMPER 0603		
4815	©	3198 021 90030	CHIP JUMPER 0603		
4816	©	3198 021 90030	CHIP JUMPER 0603		
4822	©	3198 021 90030	CHIP JUMPER 0603		
4900	©	3198 021 90030	CHIP JUMPER 0603		
4901	©	3198 021 90030	CHIP JUMPER 0603		
4902	©	3198 021 90030	CHIP JUMPER 0603		
4904	©	3198 021 90030	CHIP JUMPER 0603		
4906	©	3198 021 90030	CHIP JUMPER 0603		
4910	©	3198 021 90030	CHIP JUMPER 0603		

Note:
Components printed in grey colour are considered as standard spareparts and thus not available on service stock.
Code numbers are published for orientation only.

COILS

1001 ©	2422 543 89017	XTAL 24.576MHZ
1001 ©	2422 543 01422	XTAL 24.576MHZ
1201	2422 543 01115	RESONATOR 24M576 CX-11F
1201 ©	2422 543 01368	XTAL 24.576MHZ
5001 ©	4822 157 11499	FILTER 100MHz
5005 ©	4822 157 11499	FILTER 100MHz
5008 ©	4822 157 11499	FILTER 100MHz
5009 ©	4822 157 11499	FILTER 100MHz
5010 ©	4822 157 11499	FILTER 100MHz
5100 ©	4822 157 11499	FILTER 100MHz
5103 ©	4822 157 11499	FILTER 100MHz
5104 ©	4822 157 11499	FILTER 100MHz
5200 ©	4822 157 11499	FILTER 100MHz
5202 ©	4822 157 11499	FILTER 100MHz
5203 ©	4822 157 11499	FILTER 100MHz
5204 ©	4822 157 11499	FILTER 100MHz
5302 ©	4822 157 11499	FILTER 100MHz
5400 ©	4822 157 11499	FILTER 100MHz
5401 ©	4822 157 11717	BML31P500SPT
5402 ©	4822 157 11717	BML31P500SPT
5404 ©	4822 157 11499	FILTER 100MHz
5405 ©	4822 157 11717	BML31P500SPT
5406 ©	4822 157 11717	BML31P500SPT
5501 ©	4822 157 11717	BML31P500SPT
5502 ©	4822 157 11499	FILTER 100MHz
5503 ©	2422 535 94995	10µH, 20%
5700 ©	4822 157 11499	FILTER 100MHz
5701 ©	4822 157 10586	2,2µH, 10%
5703 ©	4822 157 10586	2,2µH, 10%
5704 ©	4822 157 10586	2,2µH, 10%
5706 ©	4822 157 10586	2,2µH, 10%
5707 ©	4822 157 10586	2,2µH, 10%
5709 ©	4822 157 10586	2,2µH, 10%
5711 ©	4822 157 70649	4,7µH, 5%
5712 ©	4822 157 70649	4,7µH, 5%
5713 ©	4822 157 11499	FILTER 100MHz
5802 ©	4822 157 11499	FILTER 100MHz
5803 ©	4822 157 11499	FILTER 100MHz
5804 ©	4822 157 11499	FILTER 100MHz
5808 ©	4822 157 11499	FILTER 100MHz
5809 ©	4822 157 11499	FILTER 100MHz
5901 ©	4822 157 11499	FILTER 100MHz
5902 ©	4822 157 70649	4,7µH, 5%
5903 ©	4822 157 70649	4,7µH, 5%
5904 ©	3198 018 90050	BEAD, 1kΩ at 100MHZ
5905 ©	2422 549 45634	BEAD, 60Ω at 100MHZ
5906 ©	2422 549 45634	BEAD, 60Ω at 100MHZ
5907 ©	3198 018 41580	1,5µH, 5%
5908 ©	3198 018 41580	1,5µH, 5%
5909 ©	2422 549 45634	BEAD, 60Ω at 100MHZ
5910 ©	3198 018 41580	1,5µH, 5%
5911 ©	3198 018 41580	1,5µH, 5%
5912 ©	3198 018 41580	1,5µH, 5%
5913 ©	3198 018 41580	1,5µH, 5%
5914 ©	2422 549 45634	BEAD, 60Ω at 100MHZ
5915 ©	2422 549 45634	BEAD, 60Ω at 100MHZ
5916 ©	4822 157 11499	FILTER 100MHz
7402 ©	2722 171 08819	XTAL 4MHZ, FXO34FL

DIODES

6000 ©	4822 130 11528	1PS76SB10
6100 ©	4822 130 11528	1PS76SB10
6101 ©	4822 130 11528	1PS76SB10

TRANSISTORS

7003 ©	5322 130 60159	BC846B
7403 ©	3198 010 42310	BC847BW
7500 ©	9322 188 69668	STS5DNF20V
7902 ©	4822 130 61553	DTC124EU
7904 ©	5322 130 60159	BC847B
7906 ©	5322 130 60159	BC847B
7907 ©	5322 130 60159	BC847B
7908 ©	5322 130 60159	BC847B
7909 ©	5322 130 60159	BC847B
7911 ©	5322 130 60159	BC847B
7912 ©	5322 130 60159	BC847B

INTEGRATED CIRCUITS

7001 ©	9322 116 74668	LD1117D33
7002 ©	9352 683 81115	74LVC1G32GW
7004 ©	9352 673 95518	SAA7118E/V1
7103 ©	9352 683 81115	74LVC1G32GW
7104 ©	9352 500 20118	74LVC08AD
7106 ©	9322 191 99685	NCP303LSN29
7107 ©	9352 500 20118	74LVC08AD
7109 ©	9352 115 40118	74LVC245APW
7111 ©	5322 209 71568	PC74HCT14D
7200 ©	9352 683 02157	PDI1394P25BD
7201 ©	9352 682 52557	PDI1394L40
7300 ©	9352 317 00118	74LVC125AD
7400 ©	9352 745 77557	PNX7100EH/C3
7501 ©	9322 207 93668	NCP1571D
7701 ©	9322 200 00685	AD8091ART
7702 ©	9322 205 55668	AD8092AR
7703 ©	9322 190 09671	ADV7302AKST
7704 ©	9322 142 88668	LF25CDT
7801 ©	9965 000 26236	AM29DL324GB-70EI
7804 ©	9322 182 03668	MT48LC8M16A2TG-75
7808 ©	9322 182 03668	MT48LC8M16A2TG-75
7809 ©	9322 130 41668	M24C64, EEPROM
7810 ©	9965 000 18099	M24C64, EEPROM
7900 ©	9352 684 56115	74LVC1G04GW
7901 ©	9352 684 56115	74LVC1G04GW
7903 ©	9352 456 80115	74HCT1G125GW

Note:
Components printed in grey colour are considered as standard spareparts and thus not available on service stock.
Code numbers are published for orientation only.

REVISION LIST

SERVICE MANUAL 3103 785 25300

First edition with still missing/incomplete information (Block Diagrams, partslist without 4822... code numbers)

SERVICE MANUAL 3103 785 25301

- Block Diagrams completed/corrected
- Minor updates added to several schematic diagrams
- A/V Board: Oscillograms added to schematic diagrams
  Test points added to assembly drawings
- Partslist updated