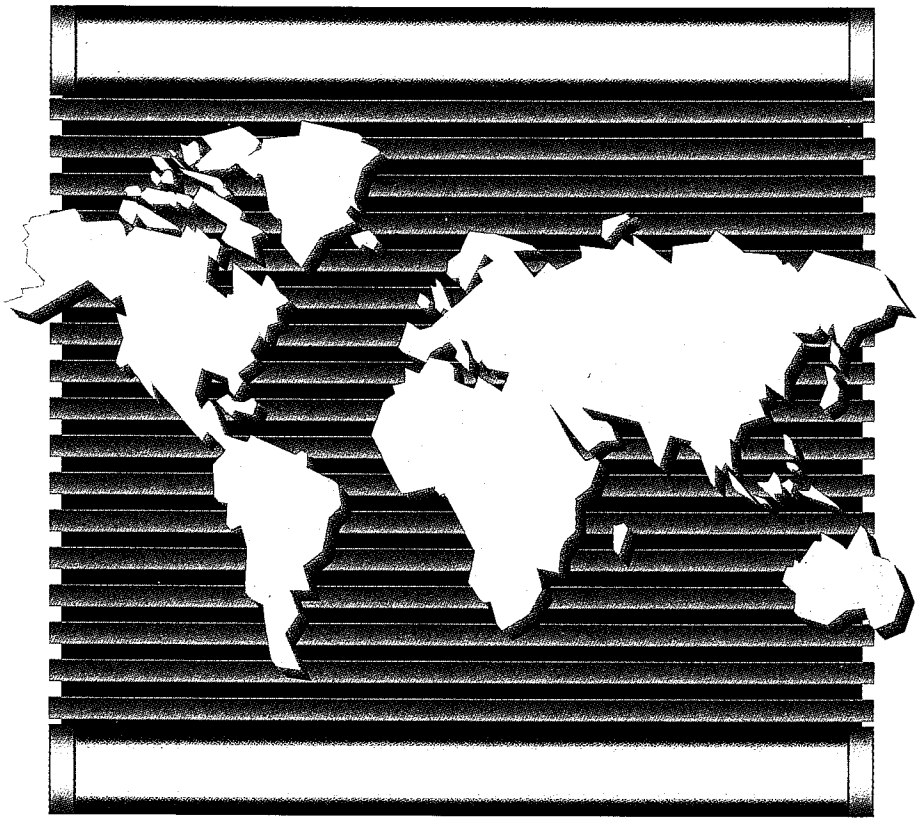

SX-100/200 SUPERSWITCH

Generic 205 - Volume II

MITEL®

SX-100™/SX-200™
SUPERSWITCH
VOLUME II (GENERIC 205) DOCUMENT LIST

SECTION	TITLE	LOCATOR
MITL9105/9110-98-000	DOCUMENTATION INDEX	
MITL9105/9110-98-200	SHIPPING, RECEIVING AND INSTALLATION	
MITL9105/9110-98-205	INSTALLATION FORMS	
MITL9105/9110-98-210	SYSTEM PROGRAMMING	
MITL9105/9110-98-215	INSTALLATION TEST PROCEDURES	
MITL9105/9110-98-320	EXTENSION TEST PROCEDURES	
MITL9105/9110-98-350	TROUBLESHOOTING	

SX-100*/SX-200*
SUPERSWITCH*
ELECTRONIC PRIVATE AUTOMATIC BRANCH EXCHANGES
DOCUMENTATION INDEX

1. GENERAL

1.01 This section lists Mitel Standard Practices which have been issued pertaining to the SX-100 and SX-200 Private Automatic Branch Exchanges.

2. DOCUMENTATION INDEX

2.01 The complete set of Practices are contained in two volumes as listed in Tables 2-1 and 2-2. Volume I basically covers the description and operation of the PABX's; while Volume II is concerned with the installation and maintenance aspects of the systems.

2.02 Sections commencing with MITL9105- and MITL9110- contain information specific to the SX-100 and SX-200 PABX respectively, while those commmencing with MITL9105/9110- embrace both types of PABX.

TABLE 2-I
DOCUMENTATION INDEX - VOLUME I

MITL9105/9110-98-000	Documentation Index
MITL9105-98-100	General Description
MITL9110-98-100	General Description
MITL9105/9110-98-105	Feature and Services Description
MITL9105-98-150	Physical Description and Ordering Information
MITL9110-98-150	Physical Description and Ordering Information
MITL9105/9110-98-180	Engineering Information
MITL9105/9110-98-212	Multi Digit Toll Control
MITL9105/9110-98-220	Speed Call
MITL9105/9110-98-300	Attendant Console Description-Commercial
MITL9105/9110-98-305	Attendant Console Description-Hotel/Motel
MITL9105/9110-98-310	Programming and Maintenance Console Description
MITL9105/9110-98-450	Traffic Measurement
MITL9105/9110-98-451	Station Message Detail Recording
MITL9105/9110-98-500	General Maintenance Information

TABLE 2-2
DOCUMENTATION INDEX - VOLUME II

MITL9105/9110-98-000	Documentation Index
MITL9105/9110-98-200	Shipping Receiving and Installation
MITL9105/9110-98-205	Installation Forms
MITL9105/9110-98-210	System Programming
MITL9105/9110-98-215	Installation Test Procedures
MITL9105/9110-98-320	Extension Test Procedures
MITL9105/9110-98-350	Troubleshooting

* PRINTED IN CANADA

© MITEL Corporation 1980

SX-100* AND SX-200* SUPERSWITCH* ELECTRONIC PRIVATE AUTOMATIC BRANCH EXCHANGE SHIPPING, RECEIVING AND INSTALLATION INFORMATION

CONTENTS PAGE

1. INTRODUCTION 2
General 2
Documentation 2

2. IDENTIFICATION 2
General 2
Equipment Cabinet SX-100 3
Equipment Cabinet SX-200 3
Equipment Shelves. 3
Circuit Cards. 7
Equipment Shelf and Card Identification 8
Features and Services 8
Attendant Console 8
Connecting Cables..... 8
Power Fail Transfer 8
Power Fail Transfer Reset 9
Test Line 9
Reserve Power Supply 9
Paging, Dictation, and Music On Hold Equipment 9
Night Relays 9

3. SHIPPING AND RECEIVING 10
Introduction 10
System Shipment 10

4. PACKAGING 10
System Package 10
Consoles.....1 2
Equipment Shelves. 12
Reserve Power Shelf 12
Printed Circuit Cards 12

5. DELIVERY CHECK 12

8. UNPACKING AND HANDLING 12
Cabinet 12
Shelves and Circuit Cards 12

7. INSPECTION 12
Cabinet 12
Shelves 12
Cards.. 12
Defective Items. 12

8. REPACKING FOR RESHIPMENT 16

9. INSTALLATION REQUIREMENTS 16
Environmental Requirements 16
Floor Space 16
Equipment Cabinet Location 16
Power Supply Requirements 16
Equipment Ground 17

10. CABLING AND CROSS CONNECTIONS . . 19
General 19
Telephone Set and Trunk Cabling. 19
Cable Terminations SX-100 19
Cable Terminations SX-200 20
Cross-Connections 20
FCC Cross Connect Field Recommendations. 45

11. DESIGNATIONS 45
General 45

12. INSTALLATION 49
General 4 9

APPENDIX 1 Mitel Action Procedures ..... AI-I

APPENDIX 2 FCC Interconnection Requirements. A2-1

APPENDIX 3 SX-100 Installation Procedures A3-1/2
Unpack SX-100 Equipment (MAP200.301) A3-3
Unpack Consoles (MAP200-302) A3.5
Install Console Faceplate Designations (MAP200.303) A3-9
Inspect Equipment (MAP200.304) A3-15
Install and Connect Equipment (MAP200-305) A3.19
Set Card Switches (MAP200-306) ... A3-29/30
Power-Up System (MAP200-307) A3-31

APPENDIX 4 SX-200 Installation Procedures A4-1
Unpack Equipment Cabinet (MAP200.401) A4.3
Unpack Consoles (MAP200.402). A4-7

© MITEL Corporation 1980

* Registered Trademark of MITEL Corporation

CONTENTS PAGE

Install Console Faceplate Designations (MAP200-403) A4-11
Inspect Equipment (MAP200-404) A4-15
Connect Cables (MAP200.405) A4-19
Set Card Switches (MAP200.408) . . . A4.23124
Power-Up System (MAP200-407) A4-25

APPENDIX 5 Card Switch Settings A5-1
Set CO Trunk Option and Status Switches (MAP200-501) A5-3
Set E and M/Tie Trunk Option Switches (MAP200-502) A5-9
Set DID Tie Trunk Option Switches (MAP200-503) A5.17
Set Scanner Card Baud Rate Switch (MAP200-504) A5.23

APPENDIX 8 Additional Equipment Installation A6-1/2
Shelf 2 Installation (MAP200-601) A6-3
Install New Cards (MAP200.602). A6-7
Reserve Power Supply Installation (MAP200-603) A6-15
Console Interface Board Installation (MAP200.604) A6.23
Backplane Translator Board Installation (MAP200-605) A6-31
Installation of RCP Card (MAP200-606) . A6-39
Reserve Power Supply Installation (SX-100) (MAP200-607) A6-43

1. INTRODUCTION

General

1.01 This section provides general identification, installation, shipping, receiving and cabling information for the SX-100 and SX-200 Electronic Private Automatic Branch Exchanges (PABXs). The systems consist of two major components, the equipment cabinet, containing the switching equipment and power supply and the attendant console(s).

Reason for Reissue

1.02 This section is reissued to include Generic 205 features and applicable details.

Documentation

1.03 Table I-I lists all MITEL practices, associated with the Electronic PABX.

2. IDENTIFICATION

General

2.01 The SX-100 and SX-200 are multicustomer electronic switching systems providing the following capacities:

- **SX-100:** Capacity of 160 ports with 112 ports available for lines, trunks and additional receivers

TABLE I-I DOCUMENTATION

Document No.	Title	Applicable to sx-1 00	sx-200
MITL9105-98-100	General Description	✓	
MITL91 10-98-100	General Description		✓
MITL91 0519110-98-105	Features Description	✓	✓
MITL9105-98-150	Physical Description and Ordering Information	✓	
MITL911O-98-1 50	Physical Description and Ordering Information		✓
MITL9105/9110-98-180	Engineering Information	✓	✓
MITL9105/911O-98-200	Shipping, Receiving and Installation	✓	✓
MITL9105/911O-98-205	Installation Forms	✓	✓
MITL9105/9110-98-210	System Programming	✓	✓
MITL9105/9110-98-212	Toll Control	✓	✓
MITL9105/911O-98-21 5	System Test Procedures (Installation)	✓	✓
MITL9105/911O-98-220	Speed Call	✓	✓
MITL9105/911O-98-300	Attendant Console Description	✓	✓
MITL9105/911O-98-305	Attendant Console (Hotel/Motel) Description	✓	✓
MITL9105/9110-98-310	Programming and Maintenance Console Description	✓	✓
MITL9105/911O-98-320	Station Test Procedures	✓	✓
MITL9105/9110-98-350	Troubleshooting Instructions	✓	✓
MITL9105/911O-98-450	Traffic Measurement	✓	✓
MITL9105/911O-98-451	Station Message Detail Recording	✓	✓
MITL9105/911O-98-500	General Maintenance Information	✓	✓

- SX-200: Capacity of 256 ports with 208 ports available for lines, trunks and additional receivers

2.02 The systems are electrically compatible with most existing station, key telephone, Private Branch Exchange (PBX) and Central Office (CO) equipment. The PABXs provide:

- service to a maximum of four individual customers
- the use of a flexible numbering plan
- the simultaneous use of DTMF and rotary dial stations
- optional use of attendant consoles - 2 maximum
- the sharing of attendant consoles between tenants
- extensive selection of standard and optional features
- freedom from scheduled maintenance
- automatic diagnostics
- six power fail transfer trunks (SX-100)
- twelve power fail transfer trunks (SX-200)
- optional reserve power supply

Equipment Cabinet, SX-100

2.03 The SX-100 equipment cabinet (Fig. 2-1) consists of a metal frame enclosed by back and top panels. Access to the equipment shelf is provided by the front door of the cabinet. The rear panel allows access to the line and trunk cable plugs.

Equipment Cabinet, SX-200

2.04 The SX-200 equipment cabinet (Fig. 2-2) consists of a metal frame which is enclosed by side and top panels. Access to the equipment shelves is provided by the front door of the cabinet. The hinged rear panels hold the power supply and allow access to the line and trunk cable plugs.

2.05 Reserve power for the SX-200 system, if required, may be supplied from the optional battery pack shelf located at the bottom of the equipment cabinet. In the case of the SX-100 reserve power supply it forms a separate base unit upon which the SX-100 can be installed.

Equipment Shelves

2.06 The SX-100 is equipped with one shelf, but the SX-200 may be equipped with one or two equipment shelves depending on the number of lines and trunks required. Each equipment shelf (Fig. 2-3) is 10.75in. (273mm) high, 19in. (485mm) wide and 16.375in. (415mm) deep. The shelves are mounted in the equipment cabinet with the backplane assembly towards the rear of the cabinet. The shelves are held in position by mounting screws which locate the shelves in the main frame.

2.07 The physical characteristics and part numbers of the shelves, power supplies and maintenance panel are given in Table 2-1. The weight for each shelf is for a shelf containing a full complement of circuit cards.

2.08 The equipment shelves used in the SX-100 and the SX-200 are identical. Fig. 2-3 shows two views of an equipment shelf.

2.09 The equipment shelves hold up to 22 circuit cards. Each card plugs into a connector mounted on the shelf backplane. A locking bar assembly which passes through the sides of the shelf ensures that the circuit packs are seated correctly in the backplane connectors.

2.10 A number of card positions within each shelf are reserved for control cards. These card positions are identified by color coded identification strips along the top and bottom edges of the shelf. Only cards with locking clips of the same color as the identification strip should be plugged into that card position. Circuit card and/or system damage may otherwise occur.

2.11 Card positions, 14, 13, and 12 on equipment shelf 1, may be used for line, trunk or receiver cards. These positions are marked with a blue and black identification strip, indicating that any card coded with either of the identification color codes may be used in these positions.

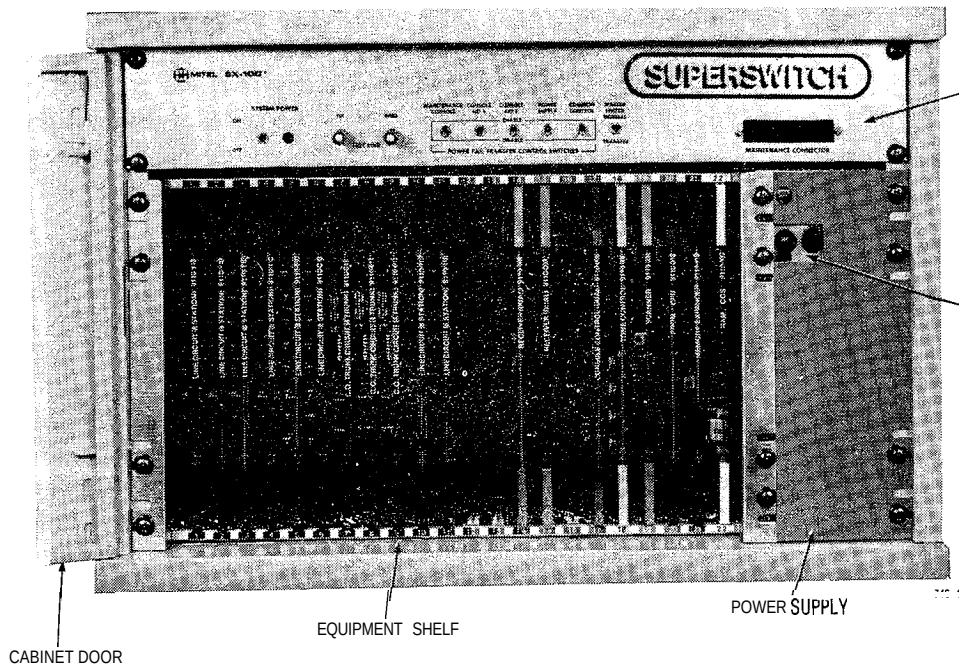

FRONT VIEW

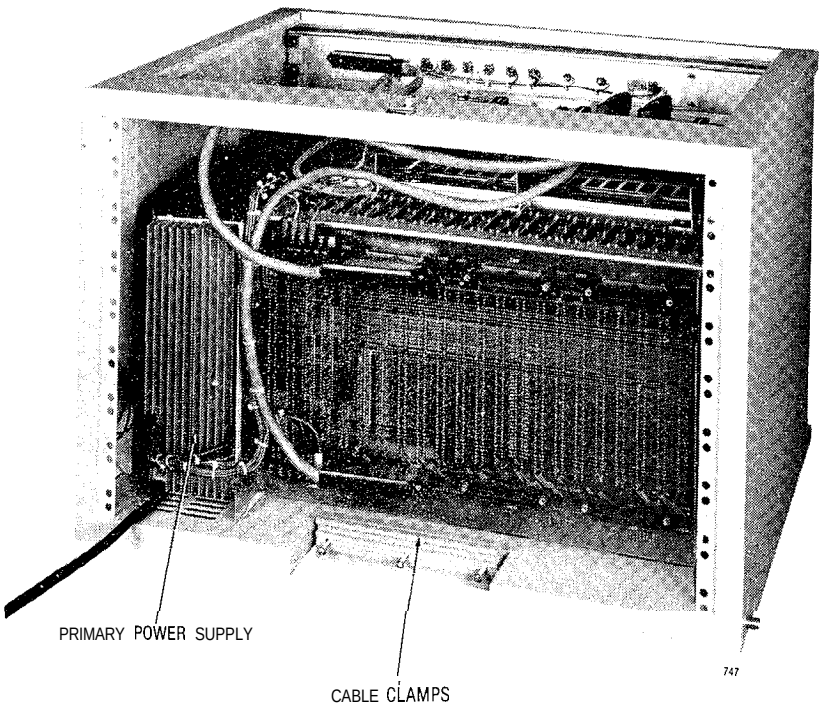

REAR VIEW

WEIGHT	HEIGHT	WIDTH	DEPTH
70lbs (31.8kg)	16.62in. (422mm)	25.0in. (635mm)	18.5in (470mm)

Fig. 2-I SX-100 Equipment Cabinet

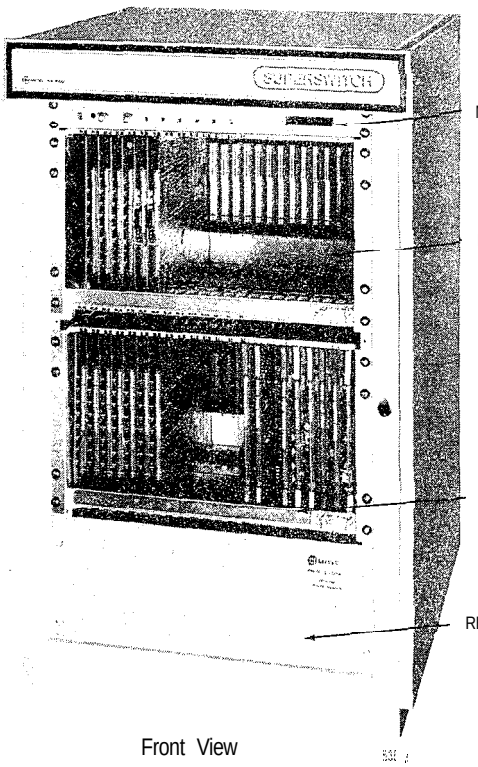

Front View

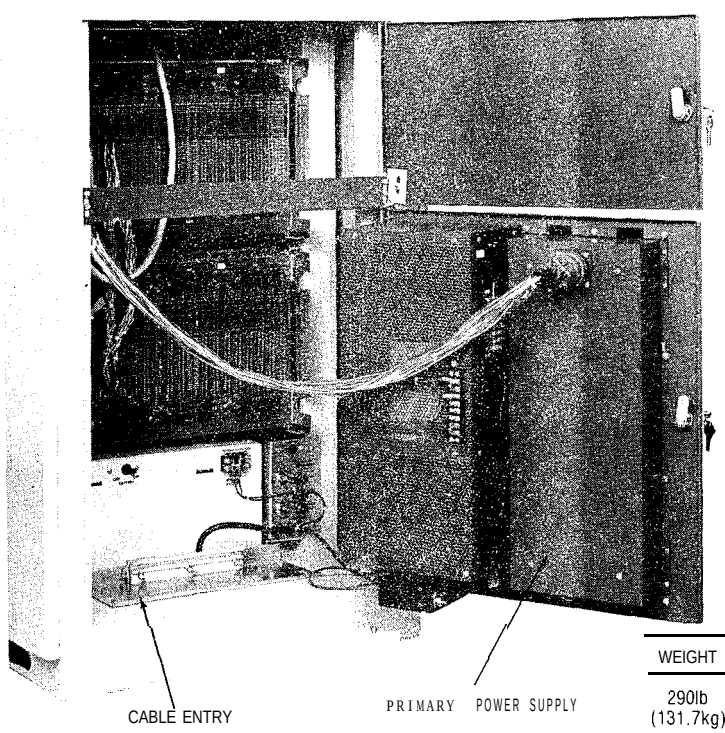

Rear View

WEIGHT	HEIGHT	WIDTH	DEPTH
290lb (131.7kg)	38.0in. (960mm)	23.5in. (600mm)	27.5in. (700mm)

537-1

Fig. 2-2 SX-200 Equipment Cabinet

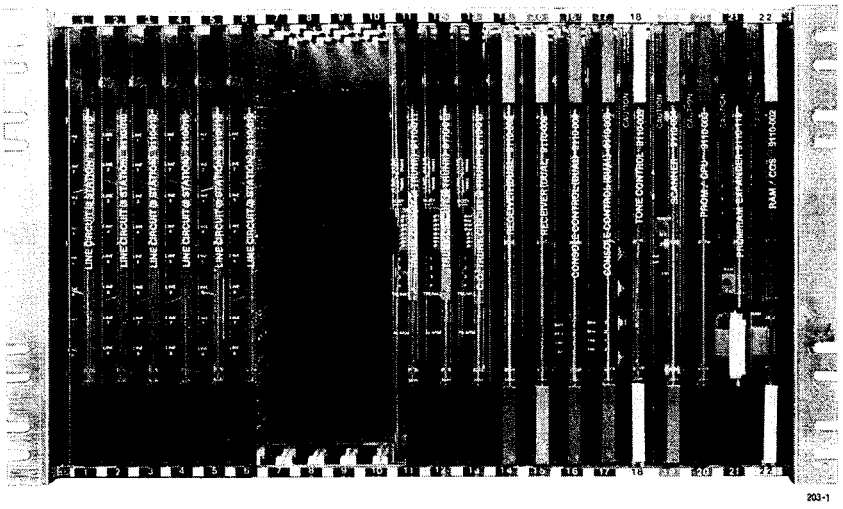

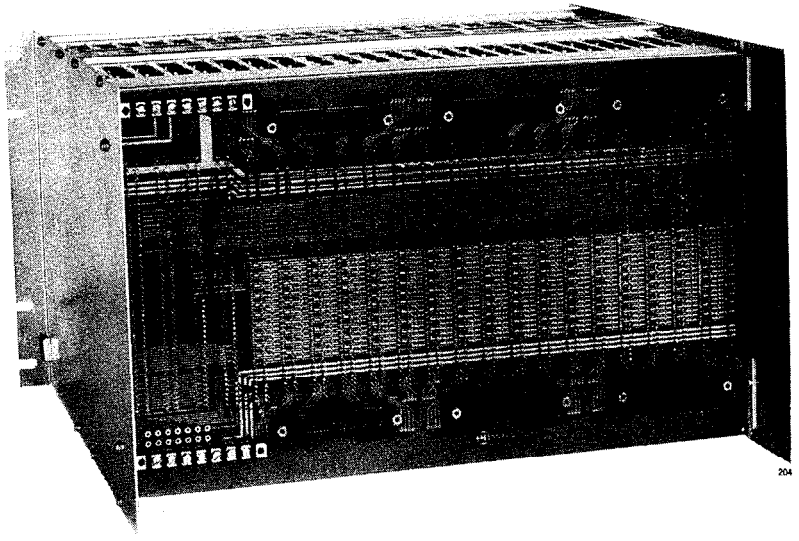

Fig. 2-3 Equipment Shelf

TABLE 2-1 PHYSICAL CHARACTERISTICS

Shelf Type	SX-100 Part Number	SX-200 Part Number	Weight lbs	Weight Kg	Maximum No. Circuit Cards
Maintenance Panel	9105-025	9110-125	2	0.9	—
Equipment Shelf	9110-012	9110-012	38	17	22
Reserve Power	9105014	9110-014	125	57	—
Primary Power	9105-008	911 O-008 or 108	16/70	7132	—

2.12 Line or trunk cards can be placed in any position identified with black color code strips. It is recommended that line cards be placed in the lowest numbered card positions and trunk cards in the highest card positions for the following reasons:

- the maintenance test line is permanently wired to card position 1, hardware position 001
- separation of line and trunk cards allow ease of identification of card type during installation and maintenance
- ease of system programming

NOTE: If more than one receiver card is used, the second receiver card MUST be placed in card position 14, the third in position 13, and the fourth in position 12. It is therefore recommended that these card positions be used for trunk cards only when all other card positions are in use.

Circuit Cards

2.13 The circuit cards (Fig. 2-4) used in the equipment shelves measure 10in. (254mm) high, 13in. (330mm) deep, and are manufactured from fiberglass board. The light emitting diodes (LEDs) mounted at the front of each card indicate the operational status of the card. The transparent front panel protects the LEDs while allowing their status to be observed.

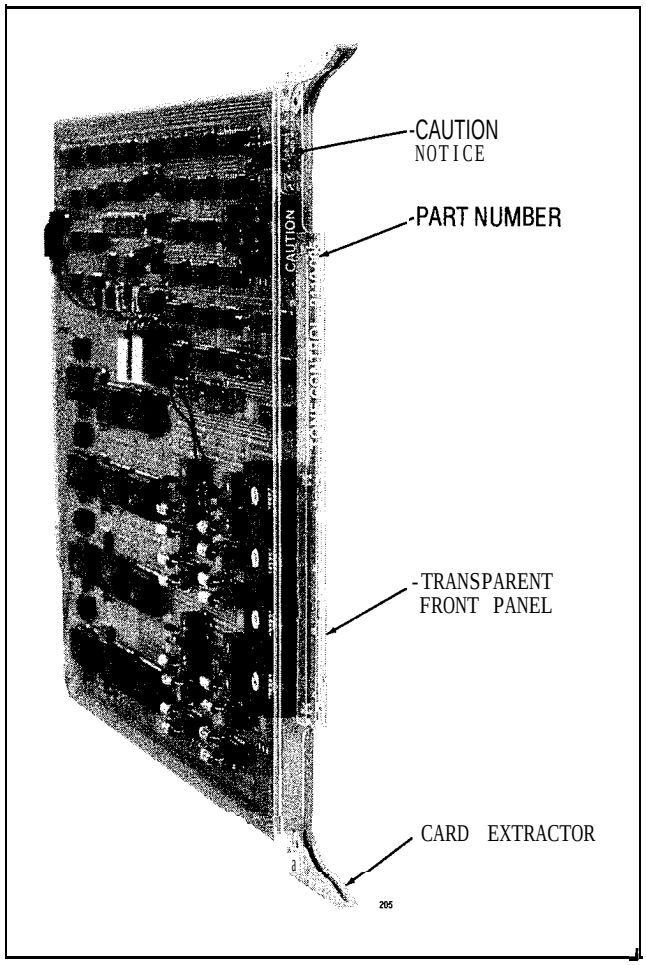

Fig. 2-4 Typical Circuit Card

TABLE 2-2
EQUIPMENT CODING

Type	Part Number	Card Extractor Color Code
Equipment Shelf (Note 1)	9110-012	—
RAM/COS Card	911 O-002	White
Memory Expander	9110-019	Brown
PROM/RAM Expander	9110-l 19	Brown
PROM/CPU Card	911 O-003	Red
Scanner Card	91 10-004 or -104	Orange
Tone Control Card	911 O-005	Yellow
Console Control Card	911 O-006	Green
Remote Control - PABX Card (Note 2)	9110-017	Green
Receiver Card (Dual or Quad)	911 O-009 or -016	Blue
CO Trunk Card (4 trunk)	9110-011 or -211	Black
E&M Trunk Card (2 trunk)	9110-013	Black
DID/Tie Trunk Card (2 trunk)	911 O-031	Black
Line Card (8 station)	9110-110	Black

Note: 1. All equipment shelves are identical.
2. The RCP is supplied only if required that the PABX be accessed by RMAT facilities (see Section MITL9105/9110-98-101 Remote Maintenance Administration and Test System).

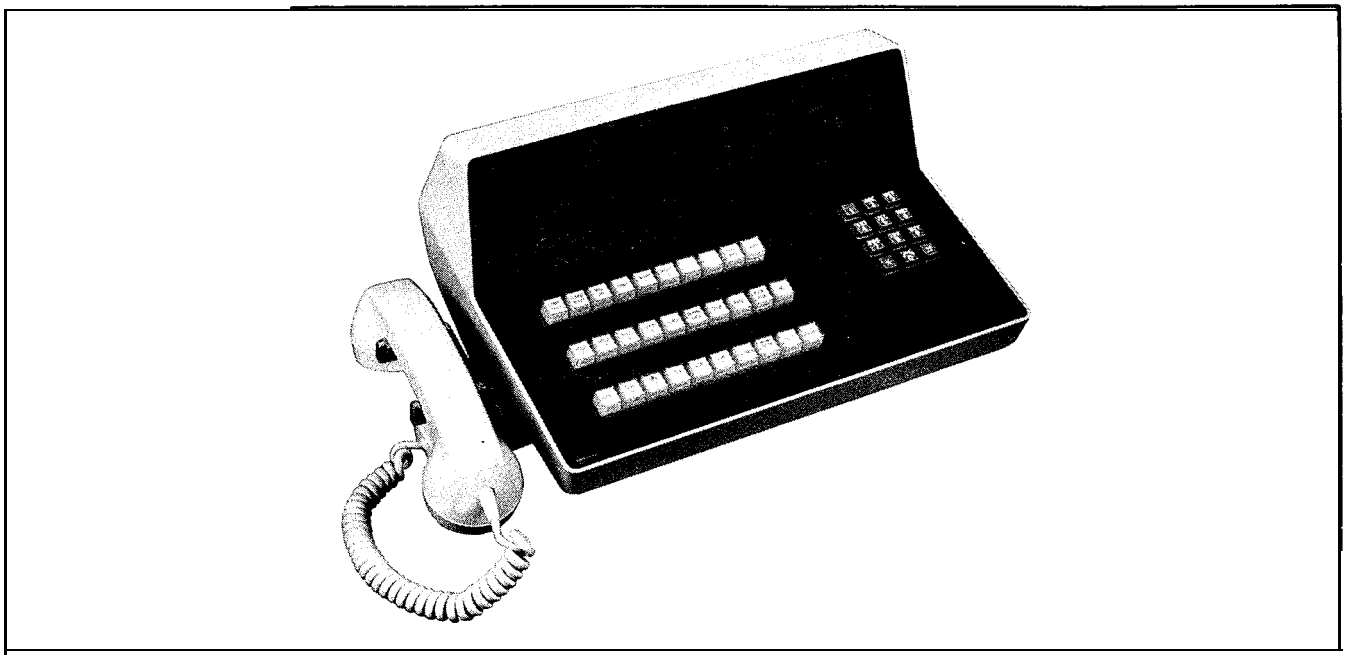

Fig. 2-5 Attendant Console

2.14 On the front panel of each card, is the card part number and its type. Cards which must not be removed or inserted while the system power is on carry a Caution notice as shown in Fig. 2-4.

2.15 Each card is equipped with two card extractors which enable the card to be easily removed. In the locked position the card extractors in conjunction with the locking bar ensure that the circuit cards are held firmly in position.

Equipment Shelf and Card Identification

2.16 Table 2-2 lists all shelf and card part numbers, types and color codes.

Features and Services

2.17 The features and service codes are entered into the system memory through a console. No wiring or strapping is required when assigning features.

Attendant Console

2.18 The attendant console (Fig. 2-5) is a self-contained unit, connected to the equipment cabinet by a plug-ended 25 pair cable.

2.19 The console is equipped with two sets of handset/headset jacks. These jacks will accept all standard handsets or headsets presently in general use.

Connecting Cables

2.20 All connections to the attendant console and the equipment cabinet, are made using plug or connector-ended 25 pair cables.

Power Fail Transfer

2.21 In the event of a major alarm condition the power fail transfer relays located on the Power Fail Transfer card, will connect Central Office trunks to selected station lines (maximum 6 trunks for SX-100, 12 trunks for SX-200). Power fail transfer will take place under any of the following conditions:

- commercial power failure (if no reserve power supply is used)
- common control failure
- operating voltages out of accepted tolerance
- manual transfer from a console or the equipment cabinet

(a) **Incoming Calls** After a power fail transfer has occurred, ringing of extensions for incoming calls is applied directly to the selected extension line from the Central Office (CO).

(b) **Outgoing Calls** To place an outgoing call through a ground start CO trunk, with the system in the power fail transfer mode, the extension originating the call must be equipped with a ground key. When the ground key is momentarily pressed, a ground is applied to the Ring side of the line, energizing the CO equipment. One side of the ground key must be connected to a ground and the other to the Ring conductor of the station line. Call origination over loop start trunks does not require the use of a ground start key.

Power Fail Transfer Reset

2.22 The system may be returned to normal operation from power fail transfer in one of three ways.

(a) **Major Alarm** If the system was placed in the power fail transfer mode because of a major alarm condition it will return to normal operation and turn off the major alarm lamp when the alarm condition is corrected.

(b) **Manual Reset** When the system has been placed in the power fail transfer mode by operation of the transfer switch, the major alarm lamp will light, indicating that transfer has taken place. Setting the transfer switch to NORMAL will reset the system to normal operation and turn off the alarm lamp if the alarm condition has been corrected. If the alarm condition has not been corrected the alarm lamp will remain lit indicating that the system has remained in the power fail transfer mode.

(c) **Reset From Commercial Power Failure** The system will automatically return to normal operation when commercial power is restored.

Note: When the system returns to normal operation from the power fail transfer mode all connections established through the power fail transfer circuits will be maintained until the completion of the calls.

Test Line

2.23 The test line, permanently assigned to hardware position 001, has the Tip and Ring connections wired to the two terminals on the face of the maintenance panel. The service person can:

- seize individual trunks
- seize individual receivers
- seize individual speech paths
- initialize card slots
- busy out selected receivers, trunks or speech paths.
- clear all alarms and raise associated busy-out conditions
- reset the systems (Generic 203, 204)
- initiate a system dump (Generic 204)
- control the printer (Generic 204)

Reserve Power Supply

2.24 The optional reserve power supply (in the form of batteries and charging system) is housed in the SX-200 equipment cabinet; or in a package that forms a base for the SX-100 cabinet. The power supply is designed to maintain system operation for a minimum of two hours in the event of main power failure.

Paging, Dictation, and Music on Hold Equipment

2.25 All paging, dictation and music on hold equipment is located external to the PABX. This equipment should be located in an environment specified by the individual supplier and connected to the PABX through the cross-connect field.

Night Relays

2.28 Four relays are provided for use during night service. One is operated permanently during night service, and the other three may be assigned to various trunks to ring night bells.

Power, supplied from the power supply and required to operate night bells must be connected at the cross-connect field.

3. SHIPPING AND RECEIVING

Introduction

3.01 This part describes the procedures to be used when shipping or receiving the Electronic PABX equipment.

System Shipment

3.02 The PABX cabinet is shipped in a single carton containing the equipment cabinet. The consoles and reserve power supply, if required are packaged and shipped separately from the system equipment package.

4. PACKAGING

System Package

4.01 The equipment is shipped with some cards and all shelves in position. The equipment cabinet is enclosed in a polyethylene sheet and positioned on the shock absorbant shipping pallet. Foam sheet is placed around and on top of the cabinet to protect it from damage and the complete assembly encased in a tri-board sleeve. Four transportation straps are then fastened to the pallet to prevent any movement of the cabinet package. The tri-wall cap is placed over the sleeve, and the complete assembly secured to the shipping pallet by two metal retaining straps. Figs. 4-1 and 4-2 respectively show the packaging arrangements for the SX-100 and SX-200.

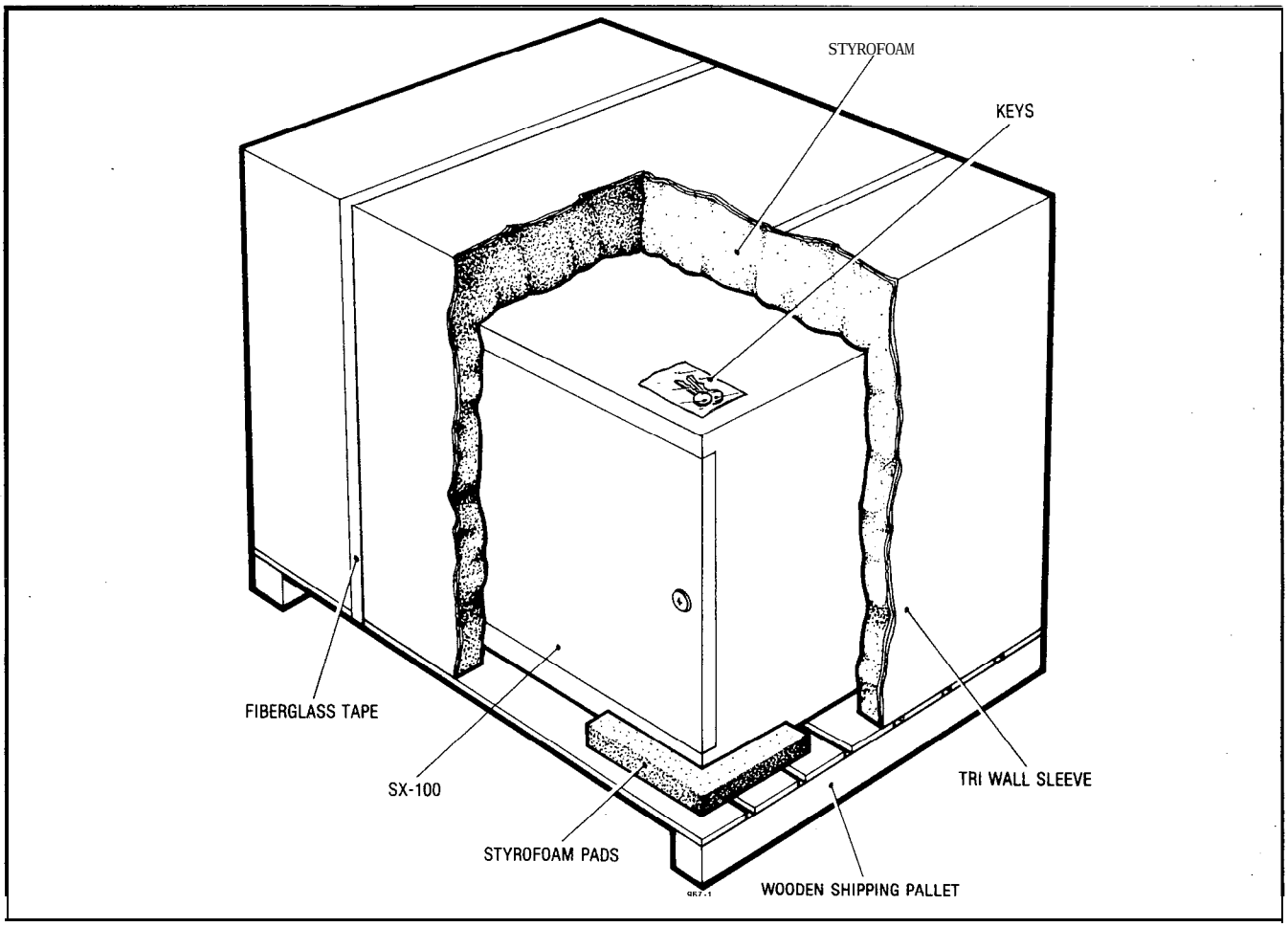

Fig. 4-I System Packaging

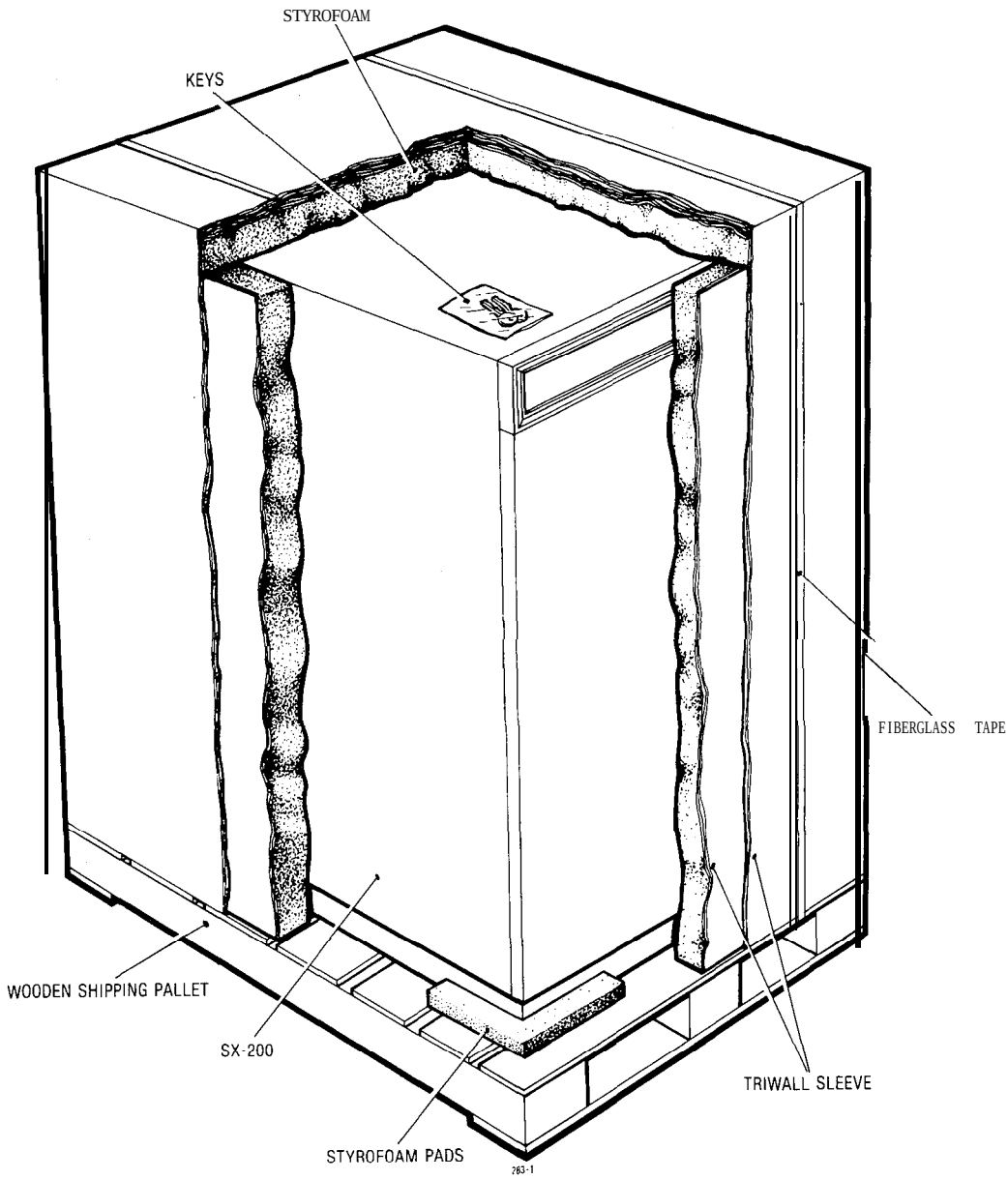

Fig. 4-2 System Packaging

Consoles

4.02 Each console is wrapped in a polyethylene sheet and placed in a cardboard packing carton and protected with shock absorbent foam inserts. The handset and cradle are placed in bags and inserted in the corners of the box at one end. The console manual is placed at the other end of the box, and the Extension Features Operation booklets are distributed in the box to fill the available space. The completed package is secured with fibreglass tape (See Fig. 4-3).

Equipment Shelves

4.03 Equipment shelves, when shipped separately, are packaged in a similar manner. A shelf, with all cards removed, is enclosed in a cardboard protector to prevent damage to the shelf backplane. The protected shelf is then wrapped in a polyethylene sheet and placed in a formed foam insert. The complete assembly is finally encased in a packing carton and secured by fibreglass tape (Fig. 4-4).

Reserve Power Shelf

4.04 The method of packaging the reserve power shelf is the same as for equipment shelves, except a heavy duty commercial packing carton is used in place of the regular packing cartons, due to the weight of the battery packs in the reserve power shelf.

Printed Circuit Cards

4.05 All printed circuit cards, if shipped separately, are packaged as shown in Fig. 4-5. If a large number of circuit cards are to be shipped, they are individually packed and shipped in groups of ten per carton.

5. DELIVERY CHECK

5.01 At the time of delivery at the installation site all items delivered must be checked against the order form and packaging slip. Any discrepancies must be reported immediately.

6. UNPACKING AND HANDLING

Cabinet

6.01 The procedure to be used when handling and unpacking the equipment are detailed in Appendices 3 and 4.

Shelves and Circuit Cards

6.02 Shelves and circuit cards shipped separately from the equipment cabinet should not be unpacked before they are required for use. When required, the shelf and cards are to be transported to the equipment location packaged in their original containers when possible.

7. INSPECTION

Cabinet

7.01 After positioning and unpacking the equipment, a visual inspection should be performed prior to installation to ensure that:

(a) The cabinet has not been dented or scratched during shipment.

(b) The door on the front of the cabinet opens and closes easily.

(c) The shelves are mounted firmly in the cabinet.

(d) The shelves are not bent or otherwise damaged.

(e) All cards are seated firmly in their connectors.

(f) Rear doors open and close easily.

(g) All components mounted in the rear panel power supply are secure.

(h) All interconnecting cables and plugs are secure.

(j) All connections to the power supply are tight.

Shelves

7.02 Inspect the shelf to ensure that:

(a) Edge connector contacts are undamaged and do not contain any foreign matter.

(b) No circuit card guides are broken.

(c) No wires are broken.

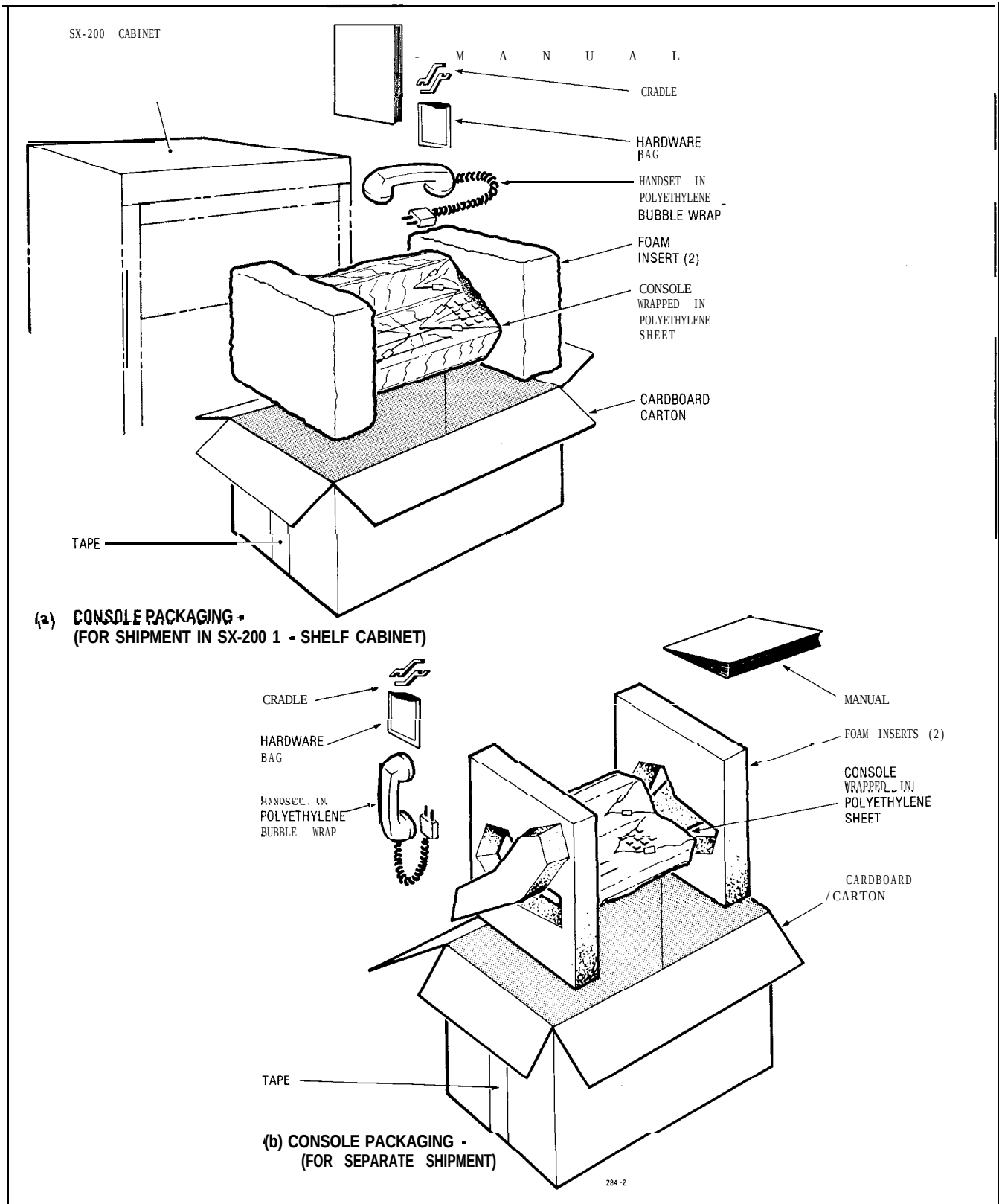

Fig. 4-3 Console Packaging

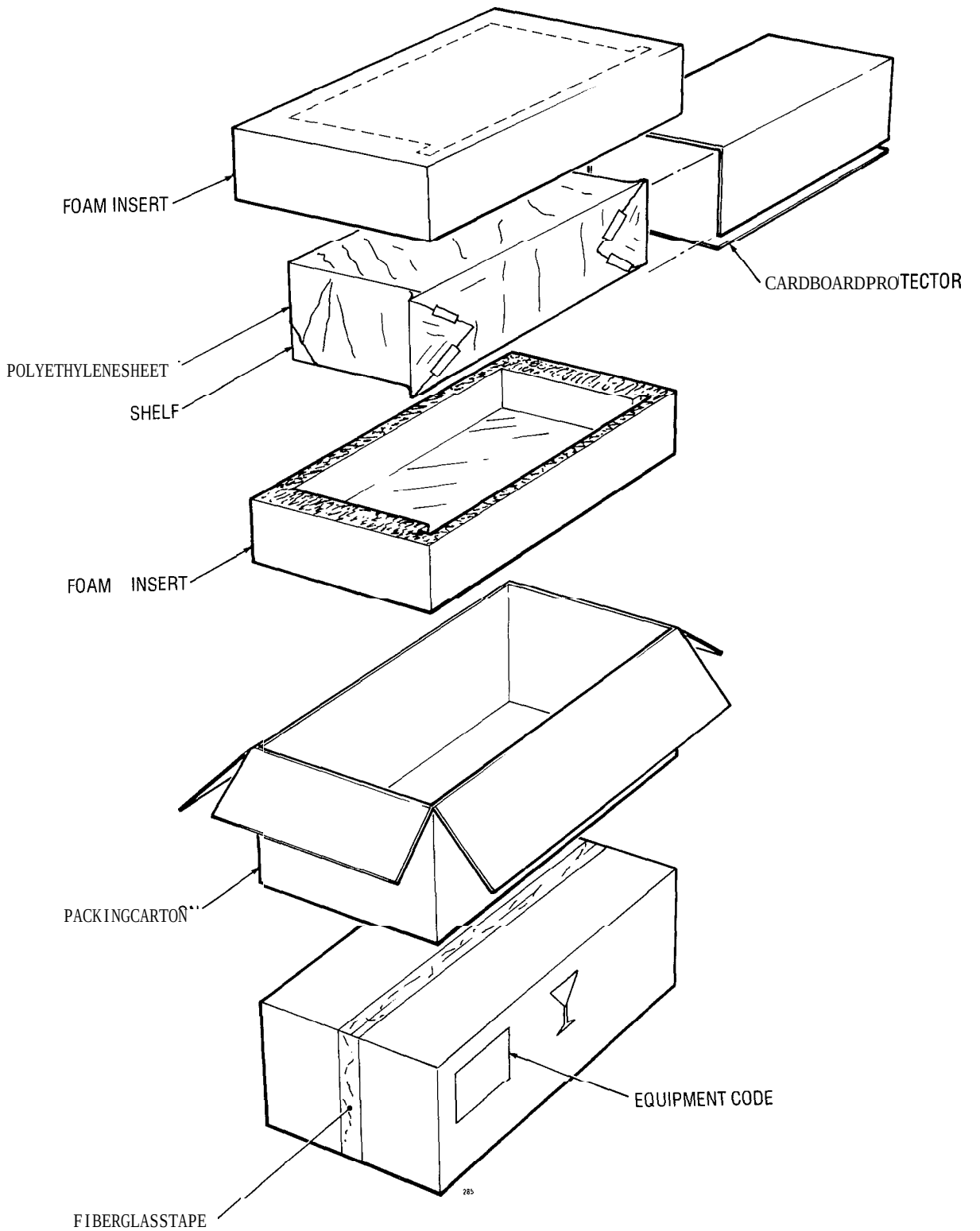

Fig. 4-4 Equipment Shelf Packaging

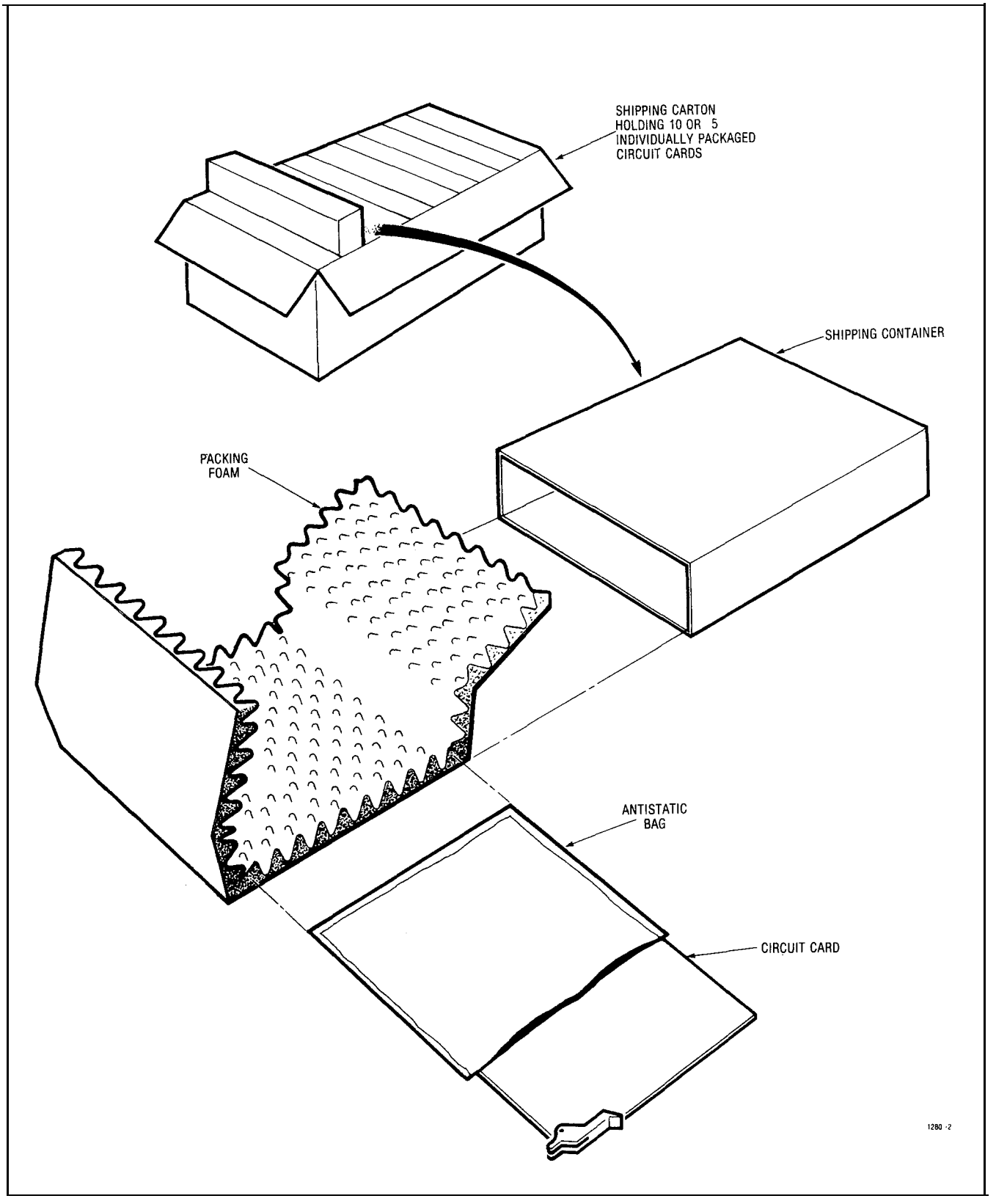

Fig. 4-5 Circuit Card Packaging

(d) The backplane is not cracked.

(e) No connector pins are broken or bent.

Cards

CAUTION: Hand/e Circuit Cards by their edges only. Handling the board faces or components may cause damage.

7.03 If printed circuit cards are shipped separately from the equipment, inspect each circuit card to ensure that:

(a) The fibreboard is not cracked.

(b) No loose leads or components are apparent.

(c) The card front panel is not broken.

Circuit cards shipped in the equipment do not require individual inspection unless equipment shelf damage has been found.

Defective Items

7.04 If any defective item is found it should be tagged and returned to the supplier in accordance with accepted procedures. (See Part 8)

8. REPACKING FOR RESHIPMENT

8.01 When the PABX equipment is shipped from one location to another, all items must be packaged to prevent damage. Figs. 4-1 through 4-5 show how the equipment was originally packaged. This method of packaging should be followed as closely as possible.

8.02 If the original packaging material is no longer available, the returned parts should be wrapped in several layers of air-cushion type wrap, placed in a suitable container, and surrounded with paper to minimize movement of the items.

9. INSTALLATION REQUIREMENTS

Environmental Requirements

9.01 The PABX equipment cabinet may be installed in any location which fullfills the requirements of 9.02, and is within the following temperature and humidity limits:

- Temperature 0 - 40 °C (32 - 113 °F)
- Relative Humidity 10 - 90%

Floor Space

9.02 The minimum floor space for installation and subsequent maintenance of the SX-100 and SX-200 Electronic PABXs is shown in Figs. 9-1 and 9-2 respectively.

Equipment Cabinet Location

9.03 The following requirement must be met when selecting a location for the PABX equipment. For cooling purposes the PABX cabinet equipments use natural air convection flow. For this reason the bottom areas of the cabinets must be allowed free air flow, and must not be obstructed, for example, by rug pile blocking the air vent entries.

The location MUST BE:

- dry and clean
- well ventilated
- well lit
- easily accessible

The location MUST NOT BE:

- near a sprinkler system, sweating pipes, steam pipes or steam vents
- in areas with extreme heat or cold
- in areas where corrosive fumes or exhaust from machinery is present
- in passageways used for moving equipment
- next to a reproducing or copying machine. A minimum clearance of 10 feet (3m) must be provided and the room should be ventilated by an exhaust fan if the reproducing machine is not equipped with a filtering system

Power Supply Requirements

9.04 The customer must provide a single phase power receptacle, with the following recommendations:

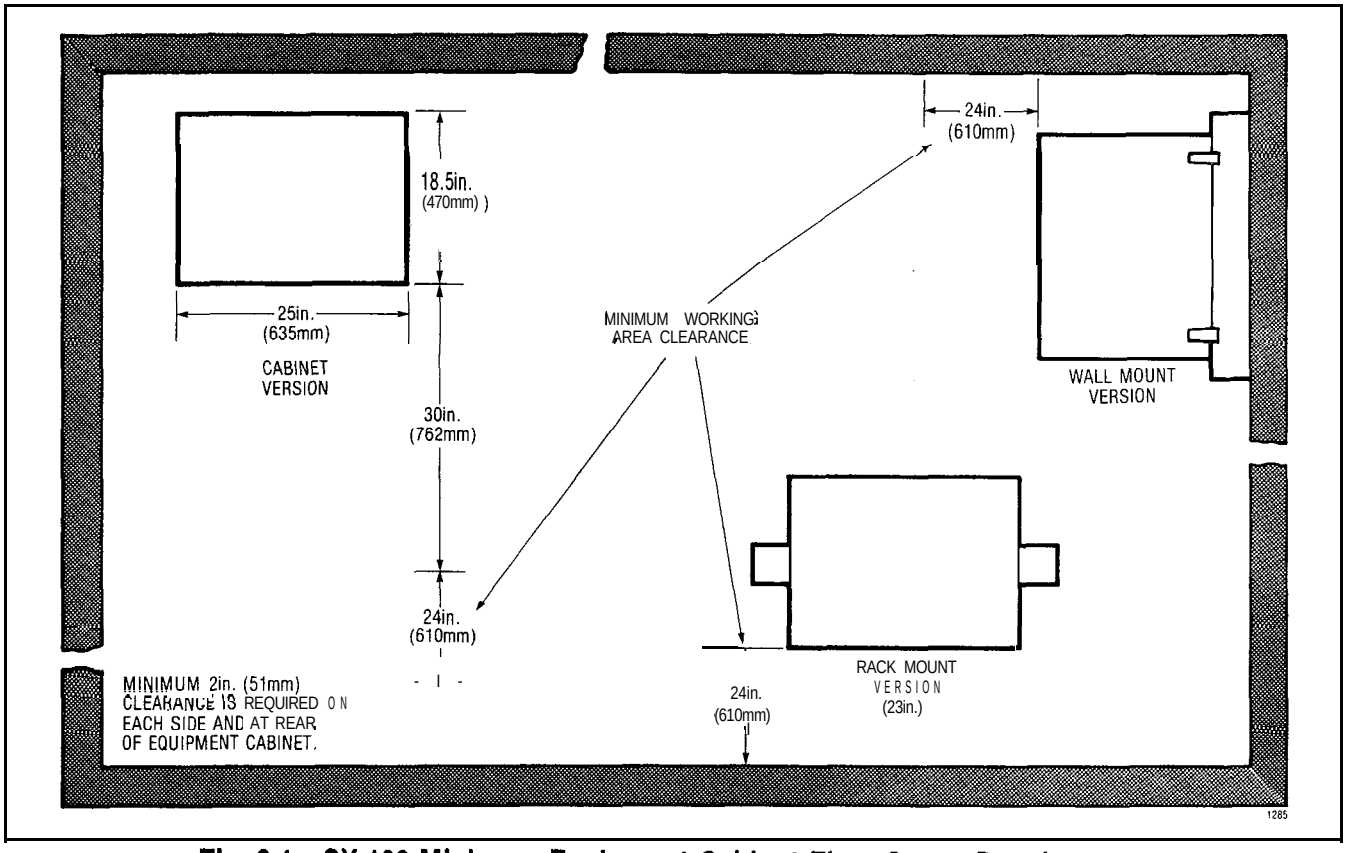

Fig. 9-1 SX-100 Minimum Equipment Cabinet Floor Space Requirements

- 115V, 60Hz fused, and capable of delivering 4A; or 250V, 50Hz fused, and capable of delivering 2A
- the power receptacle should be wired and fused independently from all other receptacles
- a warning tag should be attached to circuit-breaker-type fuses to prevent unauthorized manual operation
- the power receptacle must not be controlled by a switch
- the live and neutral conductors at the receptacle shall be wired to their proper respective connections
- the power receptacle must be a 3-wire type, with the third wire connected to the ground of the electrical system
- the receptacle should be easily accessible for the removal of the plug for maintenance
- the receptacle location should be selected to prevent accidental removal of the power cord
- the power cord between the cabinet and the receptacle should not present a hazard to the subscriber
- a warning tag should be attached to the plug end of the power cord to prevent accidental removal of the cord by the subscriber

Equipment Grounding

9.05 The following is a description of the required PBX equipment grounding practice:

(a) All circuit commons within the cabinet shall derive ground from a single ground concentration point within the cabinet. Each cabinet's ground concentration point shall derive ground from a single ground concentration point serving all system

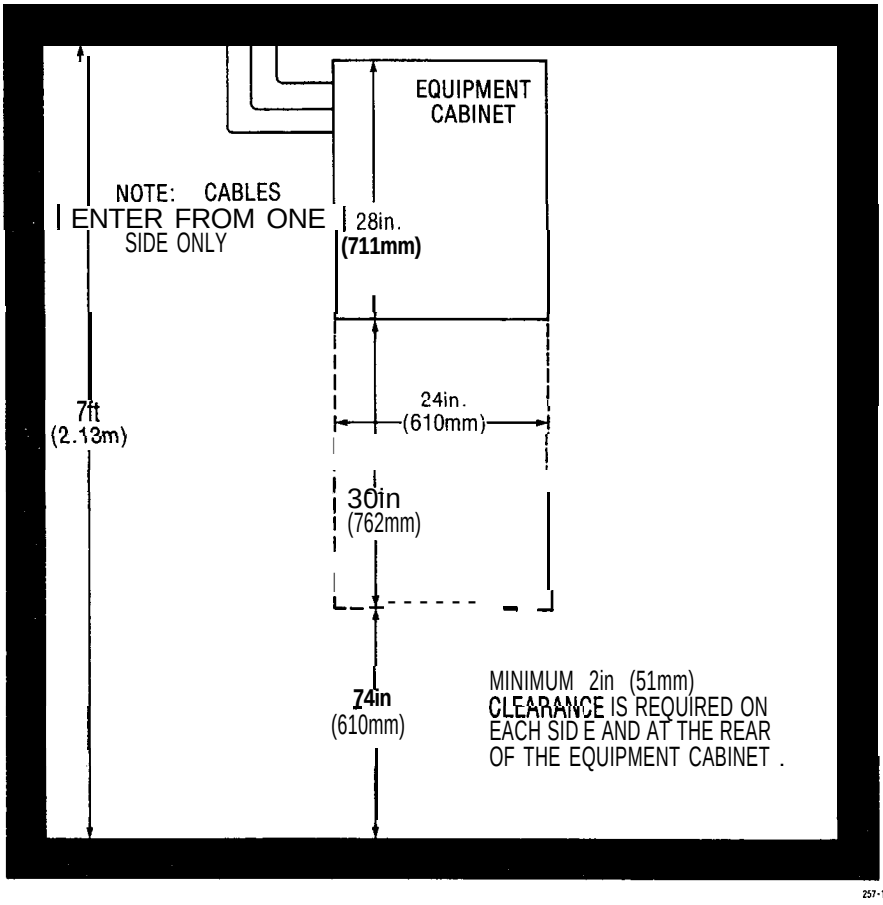

Fig. 9-2 SX-200 Minimum Equipment Cabinet Floor Space Requirements

cabinets and peripherals colocated with the system.

(b) The system cabinets and all associated ducting hardware along with all colocated peripherals shall not be exposed to any ground source other than the system single point ground described in (a) above.

(c) AC service wires bringing ac power to the cabinets shall not share an enclosure or raceway with any other system grounds, DC power distribution wires, or signaling wires. All non-connectorized ac power terminations shall be enclosed by raceways and termination boxes whether these enclosures appear outside or within system cabinets. This is to ensure that ac service wires cannot fault to circuitry within system cabinets or associated ducting hardware.

(d) All system hardware shall be provided with an ac fault return path to the system single point ground which in turn shall be provided with a reliable path to the equipment grounding conductor (i.e. green wire ground or safety ground). The path from system equipment to system single point ground need not be a direct dedicated path but can be any reliable path to other system hardware which receives the above grounding path.

(e) All sources of external ground (i.e. system signaling ground to the approved ground source, etc.) shall connect only to the system single point ground. The intent of providing for a system single point ground is to minimize ground loops and prevent lightning from finding a path through system components.

(f) A separate grounding conductor (minimum size, 14AWG) shall be separately run from the system single point ground to the communications ground system on the cross-connect field.

10. CABLING AND CROSS-CONNECTIONS

General

10.01 This part details the cabling and cross-connections required when installing the PABX.

Telephone Set and Trunk Cabling

10.02 Telephone set and trunk cabling terminates on the building cross-connect terminal in the normal manner. The cabling requirements and limits for stations and consoles are shown in Fig. 10-1(a) and (b).

Cable Terminations, SX-100

10.03 All interconnecting cables must be terminated in accordance with Tables 10-1, 10-2 and Fig. 10-2.

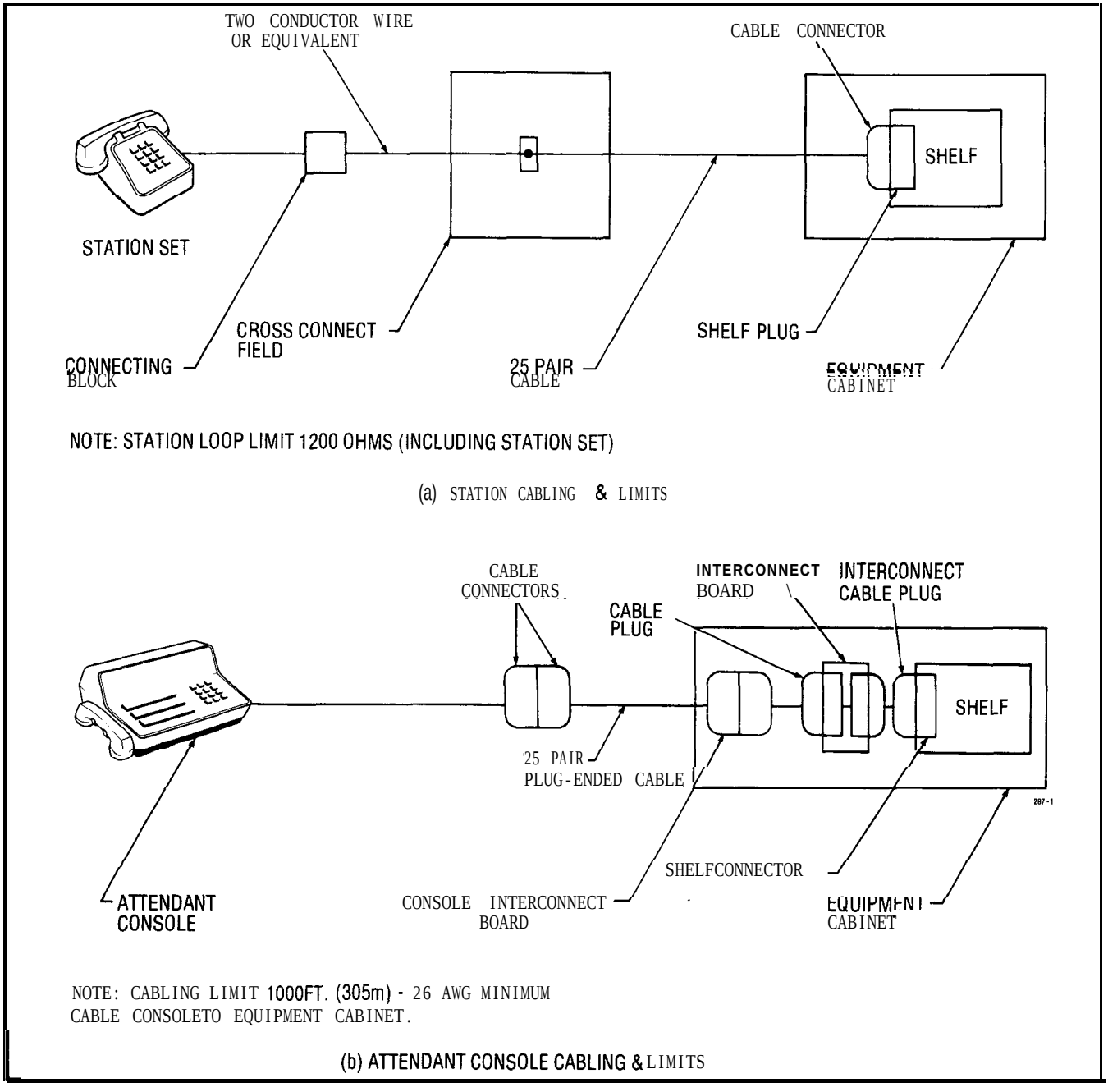

Fig. 10-I Station and Console Cabling Requirements

Cable Terminations, SX-200

10.04 All interconnecting cables must be terminated in accordance with Fig. 10-3 and Tables 10-1, 10-2, 10-3, and 10-5. In addition if Shelf 2 is installed the interconnecting cables listed in Table 10-4 must be terminated.

Cross-Connections

10.05 Jumpers should be run using Z type 24AWG cross-connecting cables.

10.06 Connection between the equipment cabinet, cross connect field, stations, trunks and consoles should be made using 26AWG connector ended cable in accordance with Tables IO-1 through 10-5.

10.07 Cabling connections between shelf 1, the interconnect board, and cross connect field are shown in Figs 10-2 and 10-3.

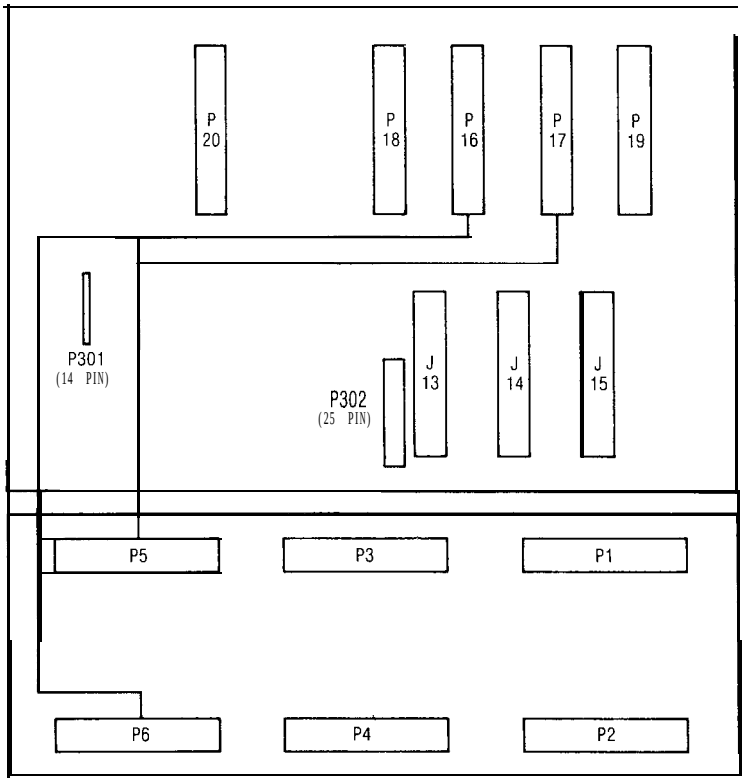

BOARD	CONNECTOR NO.	DESTINATION	BOARD	CONNECTOR NO.	DESTINATION
SHELF BACKPLANE	P1	X - CONNECT	INTERCONNECT	J13	MAINTENANCE CONSOLE
	P2	X - CONNECT		J14	ATTENDANT CONSOLE 2
	P3	X - CONNECT		J15	ATTENDANT CONSOLE1
	P4	X - CONNECT		P16	P6
	P5	P17		P17	P5
	P6	P16		P18	X-CONNECT
				P19	X-CONNECT
				P20	X-CONNECT
				P302	PRINTER OR RECORDING DEVICE
				P301	MAINTENANCE PANEL

NOTE: ALL PLUGS AND CONNECTORS EXCEPT AS NOTED ARE STANDARD 25 PAIR (AMPHENOL TYPE). THE MALE AND FEMALE DESIGNATORS REFER TO THE CONNECTORS MOUNTED ON THE EQUIPMENT. NOTTOTHECABLECONNECTORS.

1315

Fig. 10-2 SX-100 Connector Locations

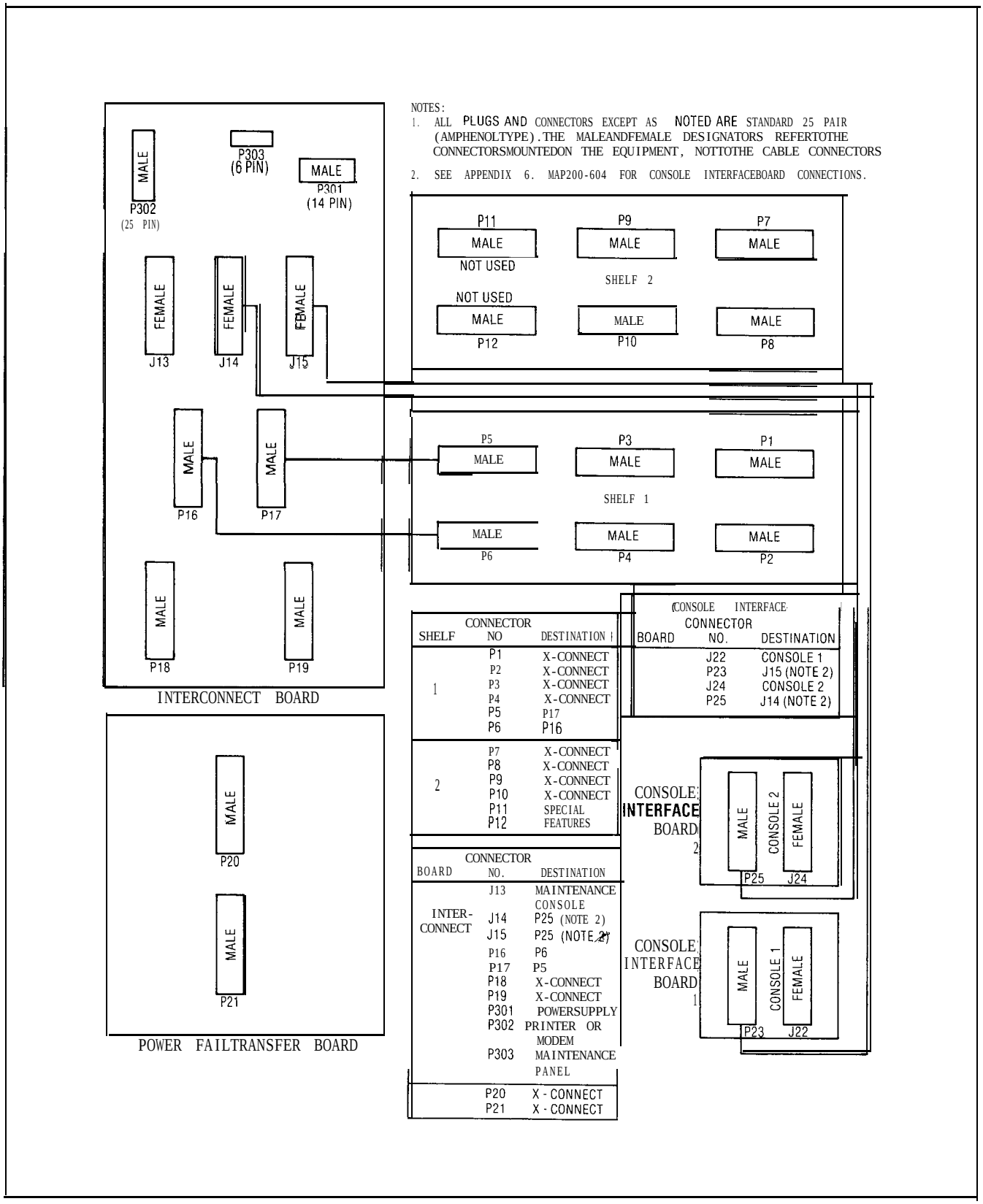

Fig. 10-3 SX-200 Connector Locations

TABLE 10-1 SHELF 1 EXTERNAL PLUG AND JACK CONNECTIONS

PLUG P1 (Connects to Cross Connect Field)

Pin	Pair Color	Lead Designation Line	Lead Designation CO	DID/TIE	Trunks E&M†	Card Positions
26	W-BL	TI reserved for	T1	T1	T1	
1	BL-W	R1 test line	R1	R1	R1	
27	w-o	T2	XT2		TR1	
2	o-w	R2	XT1		RR1	1
26	W-G	T3	T2		EI	
3	G-W	R3	R2		MI	
29	W-BR	T4				
4	BR-W	R4				
30	w-s	T1	T1	T1	T1	
5	s-w	RI	R1	RI	R1	
31	R-BL	T2	XT2		TR1	
6	BL-R	R2	XT1		RR1	2
32	R-O	T3	T2		EI	
7	O-R	R3	R2		MI	
33	R-G	T4				
a	G-R	R4				
34	R-BR	T1	TI	T1	T1	
9	BR-R	R1	R1	R1	R1	
35	R-S	T2	XT2		TR1	
10	S-R	R2	XT1		RR1	
36	BK-BL	T3	T2		EI	3
11	BL-BK	R3	R2		MI	
37	BK-0	T4				
12	0-BK	R4				
38	BK-G	T1	T1	T1	T1	
13	G-BK	R1	RI	R1	R1	
39	BK-BR	T2	XT2		TR1	
14	BR-BK	R2	XT1		RR1	
40	BK-S	T3	T2		EI	4
15	S-BK	R3	R2		MI	
41	Y-BL	T4				
16	BL-Y	R4				
42	Y-O	T1	T1	T1	T1	
17	O-Y	R1	R1	RI	R1	
43	Y-G	T2	XT2		TR1	
Ia	G-Y	R2	XT1		RR1	
44	Y-BR	T3	T2		EI	5
19	BR-Y	R3	R2		MI	
45	Y-S	T4				
20	S-Y	R4				
46	V-BL	T1	T1	T1	T1	
21	BL-V	R1	R1	R1	R1	
47	v-o	T2	XT2		TR1	
22	o-v	R2	XT1		RR1	
48	V-G	T3	T2		EI	6
23	G-V	R3	R2		MI	
49	V-BR	T4				
24	BR-V	R4				
50	v-s	SPARE	SPARE			
25	s-v	SPARE	SPARE			

†For P-Wire E&M Trunk operation DO NOT connect RR and TR leads

TABLE 10-1 SHELF 1 EXTERNAL PLUG AND JACK CONNECTIONS (CONT'D)

PLUG P2 (Connects to Cross Connect Field)

Pin	Fair Color	Lead	Designation Lines	Lead	Designation	Trunks	Card Position:
				co	DID/TIE	E&M†	
26	W-BL	T5		T3	T2	T2	
1	BL-W	R5		R3	R2	R2	
27	w-o	T6		XT4		TR2	
2	o-w	R6		XT3		RR2	1
28	W-G	T7		T4		E2	
3	G-W	R7		R4		M2	
29	W-BR	T8					
4	BR-W	R8					
30	w-s	T5		T3	T2	T2	
5	s-w	R5		R3	R2	R2	
31	R-BL	T6		XT4		TR2	
6	BL-R	R6		XT3		RR2	
32	R-O	T7		T4		E2	2
7	O-R	R7		R4		M2	
33	R-G	T8					
8	G-R	R8					
34	R-BR	T5		T3	T2	T2	
9	BR-R	R5		R3	R2	R2	
35	R-S	T6		XT4		TR2	
10	S-R	R6		XT3		RR2	
36	BK-BL	T7		T4		E2	3
11	BL-BK	R7		R4		M2	
37	BK-0	T8					
12	0-BK	R8					
38	BK-G	T5		T3	T2	T2	
13	G-BK	R5		R3	R2	R2	
39	BK-BR	T6		XT4		TR2	
14	BR-BK	R6		XT3		RR2	4
40	BK-S	T7		T4		E2	
15	S-BK	R7		R4		M2	
41	Y-BL	T8					
16	BL-Y	R8					
42	Y-O	T5		T3	T2	T2	
17	O-Y	R5		R3	R2	R2	
43	Y-G	T6		XT4		TR2	
18	G-Y	R6		XT3		RR2	
44	Y-BR	T7		T4		E2	5
19	BR-Y	R7		R4		M2	
45	Y-S	T8					
20	S-Y	R8					
46	V-BL	T5		T3	T2	T2	
21	BL-V	R5		R3	R2	R2	
47	v-o	T6		XT4		TR2	
22	o-v	R6		XT3		RR2	
48	V-G	T7		T4		E2	6
23	G-V	R7		R4		M2	
49	V-BR	T8					
24	BR-V	R8					
50	v-s	SPARE		SPARE			
25	s-v	SPARE		SPARE			

†For P-Wire E&M Trunk operation DO NOT connect RR and TR leads

TABLE 10-1 SHELF 1 EXTERNAL PLUG AND JACK CONNECTIONS (CONT'D)

PLUG P3 (Connects to Cross Connect Field)

Pin	Pair Color	Lead Designation Line	Lead Designation CO	Lead Designation DID/TIE	Trunks E&M†	Card Positions
26	W-BL	TI	T1	T1	T1	
1	BL-W	R1	R1	R1	R1	
27	w-o	T2	XT2		TR1	
2	o-w	R2	XT1		RR1	7
28	W-G	T3	T2		EI	
3	G-W	R3	R2		MI	
29	W-BR	T4				
4	BR-W	R4				
30	w-s	T1	T1	T1	T1	
5	s-w	R1	R1	R1	R1	
31	R-BL	T2	XT2		TR1	
6	BL-R	R2	XT1		RR1	8
32	R-O	T3	T2		EI	
7	O-R	R3	R2		MI	
33	R-G	T4				
8	G-R	R4				
34	R-BR	T1	T1	T1	T1	
9	BR-R	R1	R1	R1	R1	
3.5	R-S	T2	XT2		TR1	
10	S-R	R2	XT1		RR1	
36	BK-BL	T3	T2		EI	9
11	BL-BK	R3	R2		MI	
37	BK-0	T4				
12	0-BK	R4				
38	BK-G	T1	T1	T1	T1	
13	G-BK	R1	R1	R1	R1	
39	BK-BR	T2	XT2		TR1	
14	BR-BK	R2	XT1		RR1	
40	BK-S	T3	T2		EI	10
15	S-BK	R3	R2		MI	
$1	Y-BL	T4				
16	BL-Y	R4				
42	Y-O	T1	TI	T1	T1	
17	O-Y	R1	R1	R1	R1	
43	Y-G	T2	XT2		TR1	
18	G-Y	R2	XT1		RR1	
44	Y-BR	T3	T2		EI	11
19	BR-Y	R3	R2		M1	
45	Y-S	T4				
20	S-Y	R4				
46	v-BL	T1	T1	T1	T1	
21	BL-V	R1	R1	R1	R1	
47	v-o	T2	XT2		TR1	
22	o-v	R2	XT1		RR1	
48	V-G	T3	T2		EI	12
23	G-V	R3	R2		MI	
49	V-BR	T4				See Note
24	BR-V	R4				
50	v-s	SPARE	SPARE			
25	s-v	SPARE	SPARE			

Note: Position 12 can be used for lines, trunks, or receiver #4 card.

†For 2-Wire E&M Trunk operation DO NOT connect RR and TR leads

TABLE 10-1 SHELF 1 EXTERNAL PLUG AND JACK CONNECTIONS (CONT'D)

PLUG P4 (Connects to Cross Connect Field)

Pin	Pair Color	Lead Designation Lines	Lead Designation Trunks c o	DID/TIE	E&M†	Card Positions
26	W-BL	T5	T3	T2	T2	
1	BL-w	R5	R3	R2	R2	
27	w-o	T6	XT4		TR2	
2	o-w	R6	XT3		RR2	7
28	W-G	T7	T4		E2	
3	G-W	R7	R4		M2	
29	W-BR	T8				
4	BR-W	R8				
30	w-s	T5	T3	T2	T2	
5	s-w	R5	R3	R2	R2	
31	R-BL	T6	XT4		TR2	
6	BL-R	R6	XT3		RR2	
32	R-O	T7	T4		E2	8
7	O-R	R7	R4		M2	
33	R-G	T8				
8	G-R	R8				
34	R-BR	T5	T3	T2	T2	
9	BR-R	R5	R3	R2	R2	
35	R-S	T6	XT4		TR2	
10	S-R	R6	XT3		RR2	
36	BK-BL	T7	T4		E2	9
11	BL-BK	R7	R4		M2	
37	BK-0	T8				
12	0-BK	R8				
38	BK-G	T5	T3	T2	T2	
13	G-BK	R5	R3	R2	R2	
39	BK-BR	T6	XT4		TR2	
14	BR-BK	R6	XT3		RR2	10
40	BK-S	T7	T4		E2	
15	S-BK	R7	R4		M2	
41	Y-BL	T8				
16	BL-Y	R8				
42	Y-O	T5	T3	T2	T2	
17	O-Y	R5	R3	R2	R2	
43	Y-G	T6	XT4		TR2	
18	G-Y	R6	XT3		RR2	
44	Y-BR	T7	T4		E2	11
19	BR-Y	R7	R4		M2	
45	Y-S	T8				
20	S-Y	R8				
46	V-BL	T5	T3	T2	T2	
21	BL-V	R5	R3	R2	R2	
47	v-o	T6	XT4		TR2	
22	o-v	R6	XT3		RR2	
48	V-G	T7	T4		E2	12
23	G-V	R7	R4		M2	See Note
49	V-BR	T8				
24	BR-V	R8				
50	v-s	SPARE	SPARE			
25	s-v	SPARE	SPARE			

Note: Position 12 can be used for lines. trunks or receiver card #4.

i-For P-Wire E&M Trunk operation DO NOT connect RR and TR leads

TABLE 10-1 SHELF 1 EXTERNAL PLUG AND JACK CONNECTIONS (CONT'D)

PLUG P5 (Connects to Plug P17)

Pin	Pair Color	Lead Designation Line	Lead Designation CO	DID/TIE	Trunks E&M†	Card Positions
26	W-BL	T1	T1	T1	T1	
1	BL-W	R1	R1	R1	R1	
27	w-o	T2	XT2		TR1	
2	o-w	R2	XT1		RR1	
28	W-G	T3	T2		EI	13
3	G-W	R3	R2		MI	See Note
29	W-BR	T4				
4	%R-W	R4				
30	w-s	T1	T1	T1	T1	
5	s-w	R1	RI	R1	R1	
31	R-BL	T2	XT2		TR1	
6	BL-R	R2	XT1		RR1	
32	R-O	T3	T2		EI	14
7	O-R	R3	R2		MI	See Note
33	R-G	T4				
8	G-R	R4				
34	R-BR					
9	BR-R					
35	R-S					
10	S-R	RECEIVER No. 1				15
36	BK-BL					
11	BL-BK					
37	BK-0					
12	0-BK					
38	BK-G	T (A)				
13	G-BK	R (A)				
39	BK-BR	S DATA OUT T (A)	ATTENDANT CONSOLE			
14	BR-BK	S DATA OUT R (A)	No. 2			16
40	BK-S	S DATA IN T (A)				
15	S-BK	S DATA ON R (A)				
41	Y-BL	PA2 Control B				
16	BL-Y	PA2 Control A				
42	Y-O	T (A)				
17	O-Y	R (A)				
43	Y-G	S DATA OUT T (A)	ATTENDANT CONSOLE			
18	G-Y	S DATA OUT R (A)	No. 1			17
44	Y-BR	S DATA IN T (A)				
19	BR-Y	S DATA IN R (A)				
45	Y-S	PA1 Control B				
20	S-Y	PA1 Control A				
46	V-BL	MUSIC IN B	MUSIC ON HOLD			
21	BL-V	MUSIC IN A				
47	v-o	SPARE				
22	o-v	SPARE				18
48	V-G	PA1 OUT B				
23	G-V	PA1 OUT A				
49	V-BR	PA2 OUT B				
24	BR-V	PA2 OUT A				
50	v-s	SPARE	SPARE			
25	s-v	SPARE	SPARE			

Note: Positions 14 and 13 can be used for lines or trunks, or for receiver cards #2 and #3 respectively.

†**For 2-Wire E&M Trunk operation DO NOT connect RR and TR leads**

TABLE 10-1 SHELF 1 EXTERNAL PLUG AND JACK CONNECTIONS (CONT'D)

PLUG P8 (Connects to Plug P18)

Pin	Pair Color	Lead Designation Line	Lead Designation Trunks c o	DID/TIE	E&M†	Card Positions
26	W-BL	T5	T1	T1	T1	
1	BL-W	R5	R1	R1	R1	
27	w-o	T6	XT2		TR1	13
2	o-w	R6 Lines	XT1		RR1	See Note
28	W-G	T7	T2		EI	
3	G-W	R7	R2		MI	
29	W-BR	T8				
4	BR-W	R8				
30	w-s	T5	T1	T1	T1	
5	s-w	R5	R1	R1	R1	
31	R-BL	T6	XT2		TR1	
6	BL-R	R6 Lines	XT1		RR1	14
32	R-O	T7	T2		EI	See Note
7	O-R	R7	R2		MI	
33	R-G	T8				
8	G-R	R8				
34	R-BR					
9	BR-R					
35	R-S					
10	S-R	RECEIVER No. 1				15
36	BK-BL					
11	BL-BK					
37	BK-0					
12	0-BK					
38	BK-G	T (A)				
13	G-BK	R (A)				
39	BK-BR	S DATA OUT T(B)	ATTENDANT CONSOLE			
14	BR-BK	S DATA OUT R(B)	SPARE			
40	BK-S	S DATA IN T(B)				16
15	S-BK	S DATA IN R(B)	NOT USED			
41	Y-BL	R(K1)				
16	BL-Y	K1	NIGHT BELL 1		(See Notes for Plug P18)	
42	Y-O	T(A)				
17	O-Y	R(A)				
43	Y-G	S DATA OUT T(B)	MAINTENANCE			
18	G-Y	S DATA OUT R(B)	CONSOLE			17
44	Y-BR	S DATA IN T(B)				
19	BR-Y	S DATA IN R(B)				
45	Y-S	UART IN				
20	S-Y	UART OUT				
16	V-BL	R(K5)	NIGHT BELL 1			
21	BL-V	K5				
47	v-o	R(K4)	NIGHT SERVICE			18
22	o-v	K4				
48	V-G	R(K3)	NIGHT BELL 3		(See Notes For Plug P18	
23	G-V	K3				
49	V-BR	R(K2)	NIGHT BELL 2		(See Notes for Plug P18)	
24	BR-V	K2				
50	v-s	SPARE	SPARE			
25	s-v	SPARE	SPARE			

Note: Positions 14 and 13 can be used for lines or trunks or for receiver cards #2 and #3 respectively.

†**For P-Wire E&M Trunk operation DO NOT connect RR and TR leads**

TABLE 10-2 INTERCONNECT BOARD PLUG AND JACK CONNECTIONS

CONNECTOR J13 MAINTENANCE CONSOLE (Connected To Maintenance Panel)

Pin	Pair Color	Lead Designation
26	W-BL	ELECTROSTATIC GROUND
1	BL-W	ELECTROSTATIC GROUND
27	w-o	ELECTROSTATIC GROUND
2	o-w	ELECTROSTATIC GROUND
28	W-G	ELECTROSTATIC GROUND
3	G-W	ELECTROSTATIC GROUND
29	W-BR	ELECTROSTATIC GROUND
4	BR-W	ELECTROSTATIC GROUND
30	w-s	DATA IN COMMON
5	s-w	DATA IN
31	R-BL	ELECTROSTATIC GROUND
6	BL-R	ELECTROSTATIC GROUND
32	R-O	DATA OUT COMMON
7	O-R	DATA OUT
33	**R-G**	ELECTROSTATIC GROUND
8	**G-R**	ELECTROSTATIC GROUND
34	R-BR	ELECTROSTATIC GROUND
9	BR-R	ELECTROSTATIC GROUND
35	R-S	CUTOVER SWB
10	S-R	CUTOVER SWA
36	BK-BL	ELECTROSTATIC GROUND
11	BL-BK	ELECTROSTATIC GROUND
37	BK-0	MAJOR ALARM
12	0-BK	MAJOR ALARM
38	BK-G	TIP
13	G-BK	RING
39	BK-BR	ELECTROSTATIC GROUND
14	BR-BK	ELECTROSTATIC GROUND
40	BK-S	ELECTROSTATIC GROUND
15	S-BK	ELECTROSTATIC GROUND
41	Y-BL	ELECTROSTATIC GROUND
16	BL-Y	ELECTROSTATIC GROUND
42	Y-O	ELECTROSTATIC GROUND
17	O-Y	ELECTROSTATIC GROUND
43	Y-G	ov
18	G-Y	−48V
44	Y-BR	OV
19	BR-Y	-48V
45	Y-S	ov
20	S-Y	-48V
46	V-BL	OV
21	BL-V	-48V
47	v-o	ov
22	o-v	-48V
48	V-G	ov
23	G-V	-48V
49	V-BR	0V
24	BR-V	-48V
50	v-s	ov
25	s-v	-48V

CONNECTOR J14 ATTENDANT CONSOLE NO 2 (See Note For J15)

Pin	Pair Color	Lead Designation
26	W-BL	ELECTROSTATIC GROUND
1	BL-W	ELECTROSTATIC GROUND
27	w-o	ELECTROSTATIC GROUND
2	o-w	ELECTROSTATIC GROUND
26	W-G	ELECTROSTATIC GROUND
3	G-W	ELECTROSTATIC GROUND
29	W-BR	ELECTROSTATIC GROUND
4	BR-W	ELECTROSTATIC GROUND
30	w-s	DATA IN COMMON
5	s-w	DATA IN
31	R-BL	ELECTROSTATIC GROUND
6	BL-R	ELECTROSTATIC GROUND
32	R-O	DATA OUT COMMON
7	O-R	DATA OUT
33	**R-G**	ELECTROSTATIC GROUND
8	**G-R**	ELECTROSTATIC GROUND
34	R-BR	ELECTROSTATIC GROUND
9	BR-R	ELECTROSTATIC GROUND
35	R-S	CUTOVER SWB
10	S-R	CUTOVER SWA
36	BK-BL	ELECTROSTATIC GROUND
11	BL-BK	ELECTROSTATIC GROUND
37	BK-0	MAJOR ALARM
12	0-BK	MAJOR ALARM
38	BK-G	TIP
13	G-BK	RING
39	BK-BR	ELECTROSTATIC GROUND
14	BR-BK	ELECTROSTATIC GROUND
40	BK-S	ELECTROSTATIC GROUND
15	S-BK	ELECTROSTATIC GROUND
41	Y-BL	ELECTROSTATIC GROUND
16	BL-Y	ELECTROSTATIC GROUND
42	Y-O	ELECTROSTATIC GROUND
17	O-Y	ELECTROSTATIC GROUND
43	Y-G	ov
18	G-Y	-48V
44	Y-BR	OV
19	BR-Y	-48V
45	Y-S	ov
20	S-Y	-48V
46	V-BL	OV
21	BL-V	−48V
47	v-o	ov
22	o-v	-48V
48	V-G	ov
23	G-V	-48V
49	V-BR	OV
24	BR-V	-48V
50	v-s	ov
25	s-v	-48V

TABLE 10-2 INTERCONNECT BOARD PLUG AND JACK CONNECTIONS (CONT'D)
CONNECTOR J15 ATTENDANT CONSOLE NO 1
(See Note)

Pin	Pair Color	Lead Desianation
26	W-BL	ELECTROSTATIC GROUND
1	BL-W	ELECTROSTATIC GROUND
27	w-o	ELECTROSTATIC GROUND
2	o-w	ELECTROSTATIC GROUND
28	W-G	ELECTROSTATIC GROUND
3	G-W	ELECTROSTATIC GROUND
29	W-BR	ELECTROSTATIC GROUND
4	BR-W	ELECTROSTATIC GROUND
30	W-S	DATA IN COMMON
5	S-W	DATA IN
31	R-BL	ELECTROSTATIC GROUND
6	BL-R	ELECTROSTATIC GROUND
32	R-O	DATA OUT COMMON
7	O-R	DATA 0 UT
33	R-G	ELECTROSTATIC GROUND
8	G-R	ELECTROSTATIC GROUND
34	R-BR	ELECTROSTATIC GROUND
9	BR-R	ELECTROSTATIC GROUND
35	R-S	CUTOVER SWB
10	S-R	CUTOVER SWA
36	BK-BL	ELECTROSTATIC GROUND
11	BL-BK	ELECTROSTATIC GROUND
37	BK-0	MAJOR ALARM
12	0-BK	MAJOR ALARM
38	BK-G	TIP
13	G-BK	RING
39	BK-BR	ELECTROSTATIC GROUND
14	BR-BK	ELECTROSTATIC GROUND
40	BK-S	ELECTROSTATIC GROUND
15	S-BK	ELECTROSTATIC GROUND
41	Y-BL	ELECTROSTATIC GROUND
16	BL-Y	ELECTROSTATIC GROUND
42	Y-O	ELECTROSTATIC GROUND
17	O-Y	ELECTROSTATIC GROUND
43	Y-G	ov
18	G-Y	-48V
44	Y-BR	ov
19	BR-Y	-48V
45	Y-S	ov
20	S-Y	-48V
46	V-BL	0V
21	BL-V	-48V
47	v-o	ov
22	o-v	-48V
48	V-G	ov
23	G-V	-48V
49	V-BR	ov
24	BR-V	-48V
50	V-S	0V
25	s-v	-48V

NOTE: Connector J15 connected either direct to Attendant Console 1 or via plug P23 and jack J22 to console. Connector J14 similarly connected either direct to attendant console 2 or via plug P25 and jack J22.

TABLE 10-2 INTERCONNECT BOARD PLUG AND JACK CONNECTIONS (CONT'D)

PLUG P18 (Interconnect Cable to P8)

Pin	Pair Color	Lead Designation Line	Lead Designation CO	Lead Designation DID/TIE	Trunks E&M†	Card Positions
26	w-BL	T5	T3	T2	T2	
1	BL-W	R5	R3	R2	R2	
27	w-o	T6	TX3		TR2	
2	o-w	R6	RX4		RR2	
28	W-G	T7	T4		E2	13
3	G-W	R7	R4		M2	
29	W-BR	T8				
4	BR-W	R8				
30	w-s	T5	T3	T2	T2	
5	s-w	R5	R3	R2	R2	
31	R-BL	T6	TX3		TR2	
6	BL-R	R6	RX4		RR2	
32	R-O	T7	T4		E2	14
7	O-R	R7	R4		M2	
33	R-G	T8				
8	G-R	R8				
34	R-BR					
9	BR-R					
35	R-S					
10	S-R		RECEIVER 1			15
36	BK-BL					
11	BL-BK					
37	BK-0					
12	0-BK					
38	BK-G	SPARE				
13	G-BK	SPARE				
39	BK-BR	SPARE				
14	BR-BK	SPARE				16
40	BK-S	SPARE				
15	S-BK	SPARE				
41	Y-BL	NIGHT BELL 1 B	See Notes for Plug P18			
16	BL-Y	NIGHT BELL IA				
42	Y-O	TIP				
17	O-Y	RING				
43	Y-G	DATA IN COMMON				
18	G-Y	DATA IN	MAINTENANCE			17
44	Y-BR	DATA OUT COMMON	CONSOLE			
19	BR-Y	DATA OUT				
45	Y-S	UART B				
20	S-Y	UART A				
46	V-BL	ALARM B				
21	BL-V	ALARM A				
47	v-o	NIGHT SERVICE B				
22	o-v	NIGHT SERVICE A				18
48	V-G	NIGHT BELL 3B	See Notes for Plug P18			
23	G-V	NIGHT BELL 3A				
49	V-BR	NIGHT BELL 2B				
24	BR-V	NIGHT BELL 2A	See Notes for Plug P18			
50	v-s	SPARE				
25	s-v	SPARE				

†**For 2-Wire E&M Trunk operation DO NOT connect RR and TR leads**

TABLE 10-2 INTERCONNECT BOARD PLUG AND JACK CONNECTIONS (CONT'D)

PLUG P17 (Interconnect Cable to P5)

Pin	Pair Color	Lead Designation Line	Lead Designation CO	Lead Designation DID/TIE	Trunk E&M†	Card Position
26	W-BL	T1	TI	T1	T1	
1	BL-W	R1	R1	R1	R1	
27	w-o	T2	XT2		TR1	
2	o-w	R2	XT1		RR1	13
28	W-G	T3	T2		EI	
3	G-W	R3	R2		MI	
29	W-BR	T4				
4	BR-W	R4				
30	w-s	T1	T1	T1	T1	
5	s-w	R1	R1	R1	R1	
31	R-BL	T2	XT2		TR1	
6	BL-R	R2	XT1		RR1	14
32	R-O	T3	T2		EI	
7	O-R	R3	R2		MI	
33	R-G	T4				
8	G-R	R4				
34	R-BR					
9	BR-R					
35	R-S					
10	S-R					
36	BK-BL		RECEIVER 1			15
11	BL-BK					
37	BK-0					
12	0-BK					
38	BK-G	TIP (A)				
13	G-BK	RING (A)	ATTENDANT			
39	BK-BR	S DATA IN R (A)	CONSOLE			
14	BR-BK	S DATA IN T (A)	No. 2			16
40	BK-S	S DATA OUT R (A)				
15	S-BK	S DATA OUT T (A)				
41	Y-BL	PA2 CONTROL B				
16	BL-Y	PA2 CONTROL A				
42	Y-O	TIP				
17	O-Y	RING	ATTENDANT			
43	Y-G	DATA IN COMMON	CONSOLE			
18	G-Y	DATA IN	No. 1			17
44	Y-BR	DATA OUT COMMON				
19	BR-Y	DATA OUT				
45	Y-S	PA1 CONTROL B				
20	S-Y	PA1 CONTROL A				
46	V-BL	MUSIC IN B				
21	BL-V	MUSIC IN A				
47	v-o	MAINT TIP				
22	o-v	MAINT RING				18
48	V-G	PA1 OUT B				
23	G-V	PA1 OUT A				
49	V-BR	PA2 OUT B	**(See Notes For**			
24	BR-V	PA2 OUT A	Plug **P18)**			
50	v-s	SPARE				
25	s-v	SPARE				

†**For 2-Wire E&M Trunk operation DO NOT connect RR and TR leads**

TABLE 10-2 INTERCONNECT BOARD PLUG AND JACK CONNECTIONS (CONT'D)

PLUG P18 (Miscellaneous Connections to Cross Connect Field)

Pin	Pair Color	Lead Designation
26	w-BL	SPARE
1	BL-W	SPARE
27	w-o	SPARE
2	o-w	SPARE
28	W-G	SPARE
3	G-W	SPARE
29	W-BR	SPARE
4	BR-W	
30	w-s	SPARE
5	s-w	SPARE
31	R-BL	SPARE
6	BL-R	SPARE
32	R-O	SPARE
7	O-R	SPARE
33	R-G	SPARE
8	G-R	
34	R-BR	SPARE
9	BR-R	SPARE
35	R-S	SPARE
10	S-R	SPARE
36	BK-BL	SPARE
11	BL-BK	SPARE
37	BK-0	SPARE
12	0-BK	
38	BK-G	SPARE
13	G-BK	SPARE
39	BK-BR	SPARE
14	BR-BK	SPARE
40	BK-S	SPARE
15	S-BK	SPARE
41	Y-BL	SPARE
16	BL-Y	SPARE
42	Y-O	MUSIC IN B
17	O-Y	MUSIC IN A
43	Y-G	PA2 OUT B
18	G-Y	PA2 OUT A
44	Y-BR	NIGHT BELL 2B
19	BR-Y	NIGHT BELL 2A
45	Y-S	PA1 OUT B
20	S-Y	PA1 OUT A
46	V-BL	NIGHT BELL 1 B
21	BL-V	NIGHT BELL 1A
47	v-o	PA 1 CONTROL B
22	o-v	PA 1 CONTROL A
48	V-G	PA 2 CONTROL B
23	G-V	PA 2 CONTROL A
49	V-BR	NIGHT SERVICE E
24	BR-V	NIGHT SERVICE A
50	v-s	NIGHT BELL 3B
25	s-v	NIGHT BELL 3A

Note:

(1) Night service relay operates permanently when in night service.
Night Bell continuous rating:
Open circuit voltage 120Vrms
Closed circuit current 75mArms
See Fig. 10-7 for connections

(2) Music in 100mV
Impedance 600 Ohms

(3) PA Output Level 100mV
Impedance 600 Ohms

TABLE 10-2 PLUG AND JACK CONNECTIONS TO INTERCONNECT BOARD (CONT'D)

PLUG PI9 ON INTERCONNECT CARD PN9110-02A

(Miscellaneous Connections to Cross Connect Field)

Pin	Pair Color	Lead Line Designation	Lead Designation c o	DID/TIE	Trunk E&M:	CARD POSITIONS
26	W-BL	SPARE				
1	BL-W	SPARE				
27	W-O					
2	O-W					
28	W-G					
3	G-W	RECEIVER 1				15
29	W-BR					
4	BR-W					
30	w-s					
5	s-w					
31	R-BL	T8				
6	BL-R	R8				
32	R-O	T7	T4		E2	
7	O-R	R7	R4		M2	14
33	R-G	T6	XT3		TR2	
8	G-R	R6	XT4		RR2	
34	R-BR	T5	T3	T2	T2	
9	BR-R	R5	R3	R2	R2	
35	R-S	T8				
10	S-R	R8				
36	BK-BL	T7	T4		E2	
11	BL-BK	R7	R4		M2	13
37	BK-0	T6	XT3		TR2	
12	0-BK	R6	XT4		RR2	
38	BK-G	T5	T3	T2	T2	
13	G-BK	R5	R3	R2	R2	
39	BK-BR					
14	BR-BK					
40	BK-S					
15	S-BK	RECEIVER 1				15
41	Y-BL					
16	BL-Y					
42	Y-O					
17	O-Y					
43	Y-G	T4				
18	G-Y	R4				
44	Y-BR	T3	T2		EI	
19	BR-Y	R3	R2		MI	14
45	Y-S	T2	XT1		TR1	
20	S-Y	R2	XT2		RR1	
46	V-BL	T1	T1	T1	T1	
21	BL-V	R1	R1	R1	R1	
47	v-o	T4				
22	o-v	R4				
48	V-G	T3	T2		EI	
23	G-V	R3	R2		MI	
49	V-BR	T2	XT1		TR1	13
24	BR-V	R2	XT2		RR1	
50	v-s	T1	T1	T1	T1	
25	s-v	R1	R1	R1	R1	

†For P-Wire E&M Trunk operation DO NOT connect RR and TR leads

TABLE 10-2 INTERCONNECT BOARD PLUG AND JACK CONNECTIONS (CONT'D)

CONNECTOR P302
DATA PORT (SEE NOTES)

Pin	Lead Designation
1	o v
2	TRANSMIT DATA
3	RECEIVE DATA
4	
5	CLEAR TO SEND
6	DATA SET READY
7	SIGNAL GROUND
8	CARRIER DETECT
9	
10	
11	
12	
13	
14	
15	
16	
17	
18	
19	
20	DATA TERM READY
21	
22	
23	
24	
25	

Note 1. Connector P302 is common to the SX-100 and SX-200 PABX.
2. See Section MITL9105/9110-98-450, Traffic Measurement, for applications of the connector.

TABLE 10-3 POWER FAIL TRANSFER BOARD PLUG AND JACK CONNECTIONS

PLUG P20
(Power Fail Transfer Connections to Cross Connect Field)

Pin	Pair Color	Lead Designation
26	W-BL	STATION T1
1	BL-W	STATION R1
27	w-o	LINE CARD T1
2	o-w	LINE CARD R1
28	W-GR	TRUNK T1
3	GR-W	TRUNK R1
29	W-BR	TRUNK CARD T1
4	BR-W	TRUNK CARD R1
30	w-s	STATION T2
5	s-w	STATION R2
31	R-BL	LINE CARD T2
6	BL-R	LINE CARD R2
32	R-O	TRUNK T2
7	O-R	TRUNK R2
33	R-G	TRUNK CARD T2
8	G-R.	TRUNK CARD R2
34	R-BR	STATION T3
9	BR-R	STATION R3
35	R-S	LINE CARD T3
10	S-R	LINE CARD R3
36	BK-BL	TRUNK T3
11	BL-BK	TRUNK R3
37	BK-0	TRUNK CARD T3
12	0-BK	TRUNK CARD R3
3 8	BK-G	STATION T4
13	G-BK	STATION R4
39	BK-BR	LINE CARD T4
14	BR-BK	LINE CARD R4
40	BK-S	TRUNK T4
15	S-BK	TRUNK R4
41	Y-BL	TRUNK CARD T4
16	BL-Y	TRUNK CARD R4
42	Y-O	STATION T5
17	O-Y	STATION R5
43	Y-G	LINE CARD T5
18	G-Y	LINE CARD R5
44	Y-BR	TRUNK T5
19	BR-Y	TRUNK R5
45	Y-S	TRUNK CARD T5
20	S-Y	TRUNK CARD R5
46	V-BL	STATION T6
21	BL-V	STATION R6
47	v-o	LINE CARD T6
22	o-v	LINE CARD R6
48	V-G	TRUNK T6
23	G-V	TRUNK R6
49	V-BR	TRUNK CARD T6
24	BR-V	TRUNK CARD R6
50	v-s	SPARE
25	s-v	SPARE

PLUG P21
(Power Fail Transfer Connections to Cross Connect Field)

Pin	Pair Color	Lead Designation
26	W-BL	STATION T7
1	BL-W	STATION R7
27	w-o	LINE CARD T7
2	o-w	LINE CARD R7
28	W-G	TRUNK T7
3	G-W	TRUNK R7
29	W-BR	TRUNK CARD T7
4	BR-W	TRUNK CARD R7
30	w-s	STATION T8
5	s-w	STATION R8
31	R-BL	LINE CARD T8
6	BL-R	LINE CARD R8
32	R-O	TRUNK T8
7	O-R	TRUNK R8
33	R-G	TRUNK CARD T8
8	G-R	TRUNK CARD R8
34	R-BR	STATION T9
9	BR-R	STATION R9
35	R-S	LINE CARD T9
10	S-R	LINE CARD R9
36	BK-BL	TRUNK T9
11	BL-BK	TRUNK R9
37	BK-0	TRUNK CARD T9
12	0-BK	TRUNK CARD R9
38	BK-G	STATION T10
13	G-BK	STATION R10
39	BK-BR	LINE CARD T10
14	BR-BK	LINE CARD R10
40	BK-S	TRUNK T10
15	S-BK	TRUNK RIO
41	Y-BL	TRUNK CARD T10
16	BL-Y	TRUNK CARD R10
42	Y-O	STATION T1 1
17	O-Y	STATION R11
43	Y-G	LINE CARD T11
18	G-Y	LINE CARD R1 1
44	Y-BR	TRUNK T1 1
19	BR-Y	TRUNK R11
45	Y-S	TRUNK CARD T11
20	S-Y	TRUNK CARD R11
46	V-BL	STATION T12
21	BL-V	STATION R12
47	v-o	LINE CARD T12
22	o-v	LINE CARD R12
48	V-G	TRUNK T12
23	G-V	TRUNK R12
49	V-BR	TRUNK CARD T12
24	BR-V	TRUNK CARD R12
50	v-s	SPARE
25	s-v	SPARE

Note: Plug 21 is not installed on SX-100 equipment.

TABLE 10-4 SHELF 2 EXTERNAL PLUG AND JACK CONNECTIONS

PLUG P7 (Connects to Cross Connect Field)

Pin	Pair Color	Lead	Designation Line	Lead CO	Designation DID/TIE	Trunks E&M†	Card Positions
26	W-BL	TI		T1	T1	T1	
1	BL-W	R1		R1	R1	R1	
27	w-o	T2		XT2		TR1	
2	o-w	R2		XT1		RR1	1
28	W-G	T3		T2		EI	
3	G-W	R3		R2		MI	
29	W-BR	T4					
4	BR-W	R4					
30	w-s	T1		T1	T1	T1	
5	s-w	R1		R1	R1	R1	
31	R-BL	T2		XT2		TR1	
6	BL-R	R2		XT1		RR1	2
32	R-O	T3		T2		EI	
7	O-R	R3		R2		M1	
33	R-G	T4					
8	G-R	R4					
34	R-BR	T1		T1	T1	T1	
9	BR-R	R1		R1	R1	R1	
35	R-S	T2		XT2		TR1	
10	S-R	R2		XT1		RR1	
36	BK-BL	T3		T2		EI	3
11	BL-BK	R3		R2		MI	
37	BK-0	T4					
12	0-BK	R4					
38	BK-G	T1		T1	T1	T1	
13	G-BK	R1		R1	R1	R1	
39	BK-BR	T2		XT2		TR1	
14	BR-BK	R2		XT1		RR1	
40	BK-S	T3		T2		EI	4
15	S-BK	R3		R2		MI	
41	Y-BL	T4					
16	BL-Y	R4					
42	Y-O	T1		T1	T1	T1	
17	O-Y	R1		R1	R1	R1	
43	Y-G	T2		XT2		TR1	
18	G-Y	R2		XT1		RR1	
44	Y-BR	T3		T2		EI	5
19	BR-Y	R3		R2		MI	
45	Y-S	T4					
20	S-Y	R4					
46	V-BL	T1		T1	T1	T1	
21	BL-V	R1		R1	R1	R1	
47	v-o	T2		XT2		TR1	
22	O-V	R2		XT1		RR1	
48	V-G	T3		T2		EI	6
23	G-V	R3		R2		MI	
49	V-BR	T4					
24	BR-V	R4					
50	v-s	SPARE		SPARE			
25	s-v	SPARE		SPARE			

†For P-Wire E&M Trunk operation DO NOT connect RR and TR leads

TABLE 10-4 SHELF 2 EXTERNAL PLUG AND JACK CONNECTIONS (CONT'D)

PLUG P8 (Connects to Cross Connect Field)

Pin	Pair Color	Lead Designation Lines	Lead Designation Trunks c o	DID/TIE	E&M†	Card Positions
26	W-BL	T5	T3	T2	T2	
1	BL-W	R5	R3	R2	R2	
27	w-o	T6	XT4		TR2	
2	o-w	R6	XT3		RR2	1
28	W-G	T7	T4		E2	
3	G-W	R7	R4		M2	
29	W-BR	T8				
4	BR-W	R8				
30	W-S	T5	T3	T2	T2	
5	s-w	R5	R3	R2	R2	
31	R-BL	T6	XT4		TR2	
6	BL-R	R6	XT3		RR2	
32	R-O	T7	T4		E2	2
7	O-R	R7	R4		M2	
33	R-G	T8				
8	G-R	R8				
34	R-BR	T5	T3	T2	T2	
9	BR-R	R5	R3	R2	R2	
35	R-S	T6	XT4		TR2	
10	S-R	R6	XT3		RR2	
36	BK-BL	T7	T4		E2	3
11	BL-BK	R7	R4		M2	
37	BK-0	T8				
12	O-BK	R8				
38	BK-G	T5	T3	T2	T2	
13	G-BK	R5	R3	R2	R2	
39	BK-BR	T6	XT4		TR2	
14	BR-BK	R6	XT3		RR2	4
40	BK-S	T7	T4		E2	
15	S-BK	R7	R4		M2	
41	Y-BL	T8				
16	BL-Y	R8				
42	Y-O	T5	T3	T2	T2	
17	O-Y	R5	R3	R2	R2	
43	Y-G	T6	XT4		TR2	
18	G-Y	R6	XT3		RR2	
44	Y-BR	T7	T4		E2	5
19	BR-Y	R7	R4		M2	
45	Y-S	T8				
20	S-Y	R8				
46	V-BL	T5	T3	T2	T2	
21	BL-V	R5	R3	R2	R2	
47	v-o	T6	XT4		TR2	
22	o-v	R6	XT3		RR2	
48	V-G	T7	T4		E2	6
23	G-V	R7	R4		M2	
49	V-BR	T8				
24	BR-V	R8				
50	v-s	SPARE	SPARE			
25	s-v	SPARE	SPARE			

†For P-Wire E&M Trunk operation DO NOT connect RR and TR leads

TABLE 10-4 SHELF 2 EXTERNAL PLUG AND JACK CONNECTIONS (CONT'D)

PLUG P9 (Connects to Cross Connect Field)

Pin	Pair Color	Lead Designation Line	Lead CO	Designation DID/TIE	Trunks E&M†	Card Positions
26	W-BL	TI	T1	T1	T1	
1	BL-W	R1	R1	R1	R1	
27	w-o	T2	XT2		TR1	
2	o-w	R2	XT1		RR1	7
28	W-G	T3	T2		EI	
3	G-W	R3	R2		MI	
29	W-BR	T4				
4	BR-W	R4				
30	w-s	T1	T1	T1	T1	
5	s-w	R1	R1	R1	RI	
31	R-BL	T2	XT2		TR1	
6	BL-R	R2	XT1		RR1	8
32	R-O	T3	T2		EI	
7	O-R	R3	R2		M1	
33	R-G	T4				
8	G-R	R4				
34	R-BR	T1	TI	T1	T1	
9	BR-R	R1	R1	R1	R1	
35	R-S	T2	XT2		TR1	
10	S-R	R2	XT1		RR1	
36	BK-BL	T3	T2		EI	9
11	BL-BK	R3	R2		MI	
37	BK-0	T4				
12	0-BK	R4				
38	BK-G	T1	T1	T1	T1	
13	G-BK	R1	R1	R1	R1	
39	BK-BR	T2	XT2		TR1	
14	BR-BK	R2	XT1		RR1	
40	BK-S	T3	T2		EI	10
15	S-BK	R3	R2		M1	
41	Y-BL	T4				
16	BL-Y	R4				
42	Y-O	T1	T1	T1	T1	
17	O-Y	R1	R1	R1	R1	
43	Y-G	T2	XT2		TR1	
18	G-Y	R2	XT1		RR1	
44	Y-BR	T3	T2		EI	11
19	BR-Y	R3	R2		M1	
45	Y-S	T4				
20	S-Y	R4				
46	V-BL	T1	T1	T1	T1	
21	BL-V	R1	R1	RI	R1	
47	v-o	T2	XT2		TR1	
22	o-v	R2	XT1		RR1	
48	V-G	T3	T2		EI	12
23	G-V	R3	R2		M1	
49	V-BR	T4				
24	BR-V	R4				
50	v-s	SPARE	SPARE			
25	s-v	SPARE	SPARE			

†For P-Wire E&M Trunk operation DO NOT connect RR and TR leads

TABLE 10-4 SHELF 2 EXTERNAL PLUG AND JACK CONNECTIONS (CONT'D)

PLUG P10 (Connects to Cross Connect Field)

Pin	Pair Color	Lead Designation Lines	Lead Designation CO	DID/TIE	Trunks E&MI-	Card Positions
26	W-BL	T5	T3	T2	T2	
1	BL-W	R5	R3	R2	R2	
27	w-o	T6	XT4		TR2	
2	o-w	R6	XT3		RR2	7
28	W-G	T7	T4		E2	
3	G-W	R7	R4		M2	
29	W-BR	T8				
4	BR-W	R8				
30	w-s	T5	T3	T2	T2	
5	s-w	R5	R3	R2	R2	
31	R-BL	T6	XT4		TR2	
6	BL-R	R6	XT3		RR2	
32	R-O	T7	T4		E2	8
7	O-R	R7	R4		M2	
33	R-G	T8				
8	G-R	R8				
34	R-BR	T5	T3	T2	T2	
9	BR-R	R5	R3	R2	R2	
35	R-S	T6	XT4		TR2	
10	S-R	R6	XT3		RR2	
36	BK-BL	T7	T4		E2	9
11	BL-BK	R7	R4		M2	
37	BK-0	T8				
12	0-BK	R8				
38	BK-G	T5	T3	T2	T2	
13	G-BK	R5	R3	R2	R2	
39	BK-BR	T6	XT4		TR2	
14	BR-BK	R6	XT3		RR2	10
40	BK-S	T7	T4		E2	
15	S-BK	R7	R4		M2	
41	Y-BL	T8				
16	BL-Y	R8				
42	Y-O	T5	T3	T2	T2	
17	O-Y	R5	R3	R2	R2	
43	Y-G	T6	XT4		TR2	
18	G-Y	R6	XT3		RR2	
44	Y-BR	T7	T4		E2	11
19	BR-Y	R7	R4		M2	
45	Y-S	T8				
20	S-Y	R8				
46	V-BL	T5	T3	T2	T2	
21	BL-V	R5	R3	R2	R2	
47	v-o	T6	XT4		TR2	
22	o-v	R6	XT3		RR2	
48	V-G	T7	T4		E2	12
23	G-V	R7	R4		M2	
49	V-BR	T8				
24	BR-V	R8				
50	v-s	SPARE	SPARE			
25	s-v	SPARE	SPARE			

†For 2-Wire E&M Trunk operation DO NOT connect RR and TR leads

TABLE 10-5 CONSOLE INTERFACE BOARD PLUG AND JACK CONNECTIONS (SX-200 ONLY)

JACK J22
(Connects to Attendant Console 1)

Pin	Pair Color	Lead Designation
26	W-BL	ELECTROSTATIC GROUND
1	BL-W	ELECTROSTATIC GROUND
27	w-o	ELECTROSTATIC GROUND
2	o-w	ELECTROSTATIC GROUND
28	W-G	ELECTROSTATIC GROUND
3	G-W	ELECTROSTATIC GROUND
29	W-BR	ELECTROSTATIC GROUND
4	BR-W	ELECTROSTATIC GROUND
30	w-s	DATA IN COMMON
5	s-w	DATA IN
31	R-BL	ELECTROSTATIC GROUND
6	BL-R	ELECTROSTATIC GROUND
32	R-O	DATA OUT COMMON
7	O-R	DATA 0 UT
33	R-G	ELECTROSTATIC GROUND
8	G-R	ELECTROSTATIC GROUND
34	R-BR	ELECTROSTATIC GROUND
9	BR-R	ELECTROSTATIC GROUND
35	R-S	CUTOVER SWB
10	S-R	CUTOVER SWA
36	BK-BL	ELECTROSTATIC GROUND
11	BL-BK	ELECTROSTATIC GROUND
37	BK-0	MAJOR ALARM
12	0-BK	MAJOR ALARM
38	BK-G	TIP
13	G-BK	RING
39	BK-BR	ELECTROSTATIC GROUND
14	BR-BK	ELECTROSTATIC GROUND
40	BK-S	ELECTROSTATIC GROUND
15	S-BK	ELECTROSTATIC GROUND
41	Y-BL	ELECTROSTATIC GROUND
16	BL-Y	ELECTROSTATIC GROUND
42	Y-O	ELECTROSTATIC GROUND
17	O-Y	ELECTROSTATIC GROUND
43	Y-G	ov
18	G-Y	-48V
44	Y-BR	OV
19	BR-Y	-48V
4.5	Y-S	ov
20	S-Y	-48V
46	V-BL	OV
21	BL-V	-48V
47	v-o	ov
22	o-v	-48V
48	V-G	ov
23	G-V	-48V
49	V-BR	OV
24	BR-V	-48V
50	v-s	ov
25	s-v	-48V

PLUG P23
(Connects to Jack J15)

Pin	Pair Color	Lead Designation
26	W-BL	ELECTROSTATIC GROUND
1	BL-W	ELECTROSTATIC GROUND
27	w-o	ELECTROSTATIC GROUND
2	o-w	ELECTROSTATIC GROUND
28	W-G	ELECTROSTATIC GROUND
3	G-W	ELECTROSTATIC GROUND
29	W-BR	ELECTROSTATIC GROUND
4	BR-W	ELECTROSTATIC GROUND
330	w-s	DATA IN COMMON
5	s-w	DATA IN
331	R-BL	ELECTROSTATIC GROUND
6	BL-R	ELECTROSTATIC GROUND
332	R-O	DATA OUT COMMON
7	O-R	DATA OUT
333	R-G	ELECTROSTATIC GROUND
8	G-R	ELECTROSTATIC GROUND
34	R-BR	ELECTROSTATIC GROUND
9	BR-R	ELECTROSTATIC GROUND
35	R-S	CUTOVER SWB
10	S-R	CUTOVER SWA
36	BK-BL	ELECTROSTATIC GROUND
11	BL-BK	ELECTROSTATIC GROUND
37	BK-0	MAJOR ALARM
12	0-BK	MAJOR ALARM
38	BK-G	TIP
13	G-BK	RING
39	BK-BR	ELECTROSTATIC GROUND
14	BR-BK	ELECTROSTATIC GROUND
40	BK-S	ELECTROSTATIC GROUND
15	S-BK	ELECTROSTATIC GROUND
41	Y-BL	ELECTROSTATIC GROUND
16	BL-Y	ELECTROSTATIC GROUND
42	Y-O	ELECTROSTATIC GROUND
17	O-Y	ELECTROSTATIC GROUND
43	Y-G	ov
18	G-Y	-48V
44	Y-BR	OV
19	BR-Y	-48V
45	Y-S	ov
20	S-Y	-48V
46	V-BL	OV
21	BL-V	-48V
47	v-o	ov
22	o-v	-48V
48	V-G	ov
23	G-V	-48V
49	V-BR	OV
24	BR-V	-48V
50	v-s	ov
25	s-v	-48V

TABLE 10-5 CONSOLE INTERFACE BOARD PLUG AND JACK CONNECTIONS (SX-200 ONLY) (CONT'D)

JACK J24
(Connects to Attendant Console 2)

Pin	Pair Color	Lead Designation
26	W-BL	ELECTROSTATIC GROUND
1	BL-W	ELECTROSTATIC GROUND
27	w-o	ELECTROSTATIC GROUND
2	o-w	ELECTROSTATIC GROUND
28	W-G	ELECTROSTATIC GROUND
3	G-W	ELECTROSTATIC GROUND
29	W-BR	ELECTROSTATIC GROUND
4	BR-W	ELECTROSTATIC GROUND
30	w-s	DATA IN COMMON
5	s-w	DATA IN
31	R-BL	ELECTROSTATIC GROUND
6	BL-R	ELECTROSTATIC GROUND
32	R-O	DATA OUT COMMON
7	O-R	DATA OUT
33	R-G	ELECTROSTATIC GROUND
8	G-R	ELECTROSTATIC GROUND
34	R-BR	ELECTROSTATIC GROUND
9	BR-R	ELECTROSTATIC GROUND
35	R-S	CUTOVER SWB
10	S-R	CUTOVER SWA
36	BK-BL	ELECTROSTATIC GROUND
11	BL-BK	ELECTROSTATIC GROUND
37	BK-0	MAJOR ALARM
12	0-BK	MAJOR ALARM
38	BK-G	TIP
13	G-BK	RING
39	BK-BR	ELECTROSTATIC GROUND
14	BR-BK	ELECTROSTATIC GROUND
40	BK-S	ELECTROSTATIC GROUND
15	S-BK	ELECTROSTATIC GROUND
41	Y-BL	ELECTROSTATIC GROUND
16	BL-Y	ELECTROSTATIC GROUND
42	Y-O	ELECTROSTATIC GROUND
17	O-Y	ELECTROSTATIC GROUND
43	Y-G	ov
18	G-Y	-48V
44	Y-BR	OV
19	BR-Y	-48V
45	Y-S	ov
20	S-Y	-48V
46	V-BL	OV
21	BL-V	-48V
47	v-o	ov
22	o-v	-48V
48	V-G	ov
23	G-V	-48V
49	V-BR	0V
24	BR-V	-48V
50	v-s	ov
25	s-v	-48V

PLUG P25
(Connects to Jack J14)

Pin	Pair Color	Lead Designation
26	W-BL	ELECTROSTATIC GROUND
1	BL-W	ELECTROSTATIC GROUND
27	w-o	ELECTROSTATIC GROUND
2	o-w	ELECTROSTATIC GROUND
28	W-G	ELECTROSTATIC GROUND
3	G-W	ELECTROSTATIC GROUND
29	W-BR	ELECTROSTATIC GROUND
4	BR-W	ELECTROSTATIC GROUND
30	w-s	DATA IN COMMON
5	s-w	DATA IN
31	R-BL	ELECTROSTATIC GROUND
6	BL-R	ELECTROSTATIC GROUND
32	R-O	DATA OUT COMMON
7	O-R	DATA OUT
33	R-G	ELECTROSTATIC GROUND
8	G-R	ELECTROSTATIC GROUND
34	R-BR	ELECTROSTATIC GROUND
9	BR-R	ELECTROSTATIC GROUND
35	R-S	CUTOVER SWB
10	S-R	CUTOVER SWA
36	BK-BL	ELECTROSTATIC GROUND
11	BL-BK	ELECTROSTATIC GROUND
37	BK-0	MAJOR ALARM
12	0-BK	MAJOR ALARM
38	BK-G	TIP
13	G-BK	RING
39	BK-BR	ELECTROSTATIC GROUND
14	BR-BK	ELECTROSTATIC GROUND
40	BK-S	ELECTROSTATIC GROUND
15	S-BK	ELECTROSTATIC GROUND
41	Y-BL	ELECTROSTATIC GROUND
16	BL-Y	ELECTROSTATIC GROUND
42	Y-O	ELECTROSTATIC GROUND
17	O-Y	ELECTROSTATIC GROUND
43	Y-G	ov
18	G-Y	-48V
44	Y-BR	OV
19	BR-Y	-48V
45	Y-S	ov
20	S-Y	-48V
46	V-BL	OV
21	BL-V	-48V
47	v-o	ov
22	o-v	-48V
48	V-G	ov
23	G-V	-48V
49	V-BR	OV
24	BR-V	-48V
50	v-s	ov
25	S-V	-48V

10.08 Figs. 10-4 and 10-5 illustrate typical block and wiring diagrams for a power fail transfer circuit. Fig. 10-6 illustrates typical night bell wiring connections and Fig. 10-7 shows the connections for music and PA requirements.

10.09 When backplane translator boards are used with the lines and trunk circuits different terminal connections result. In this case the cabling arrangements must conform to the termination connections shown in Fig. 605-2, MAP200-605, Appendix 6.

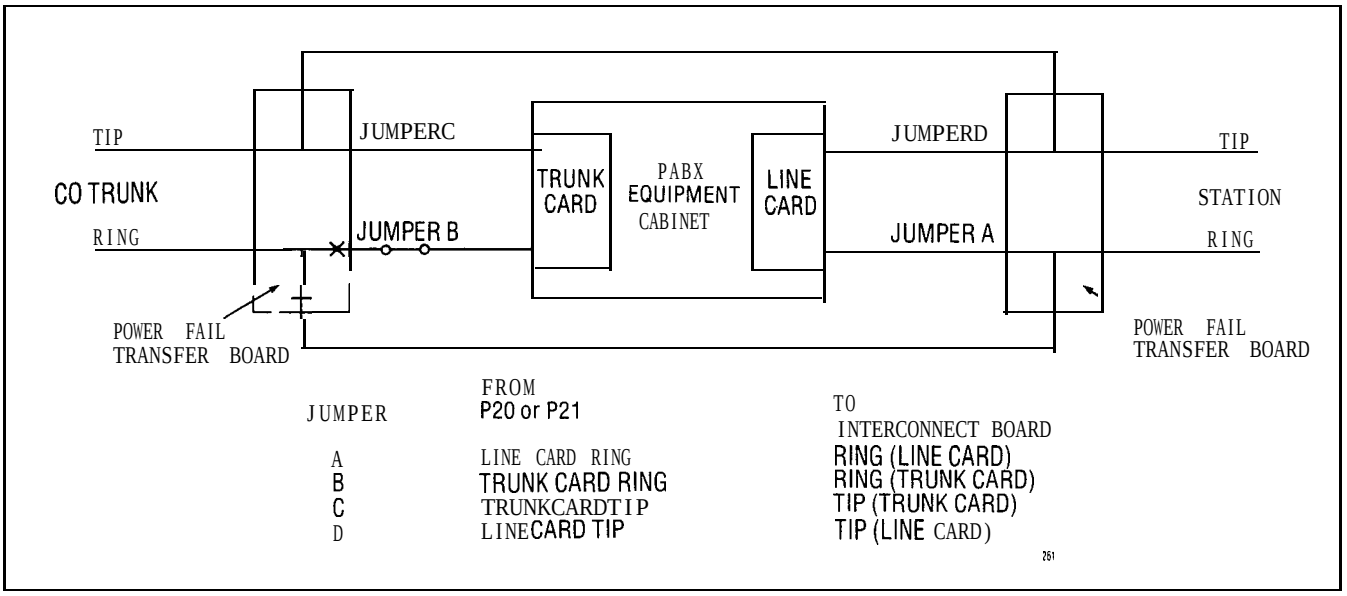

Fig. 10-4 Power Fail Transfer Block Diagram

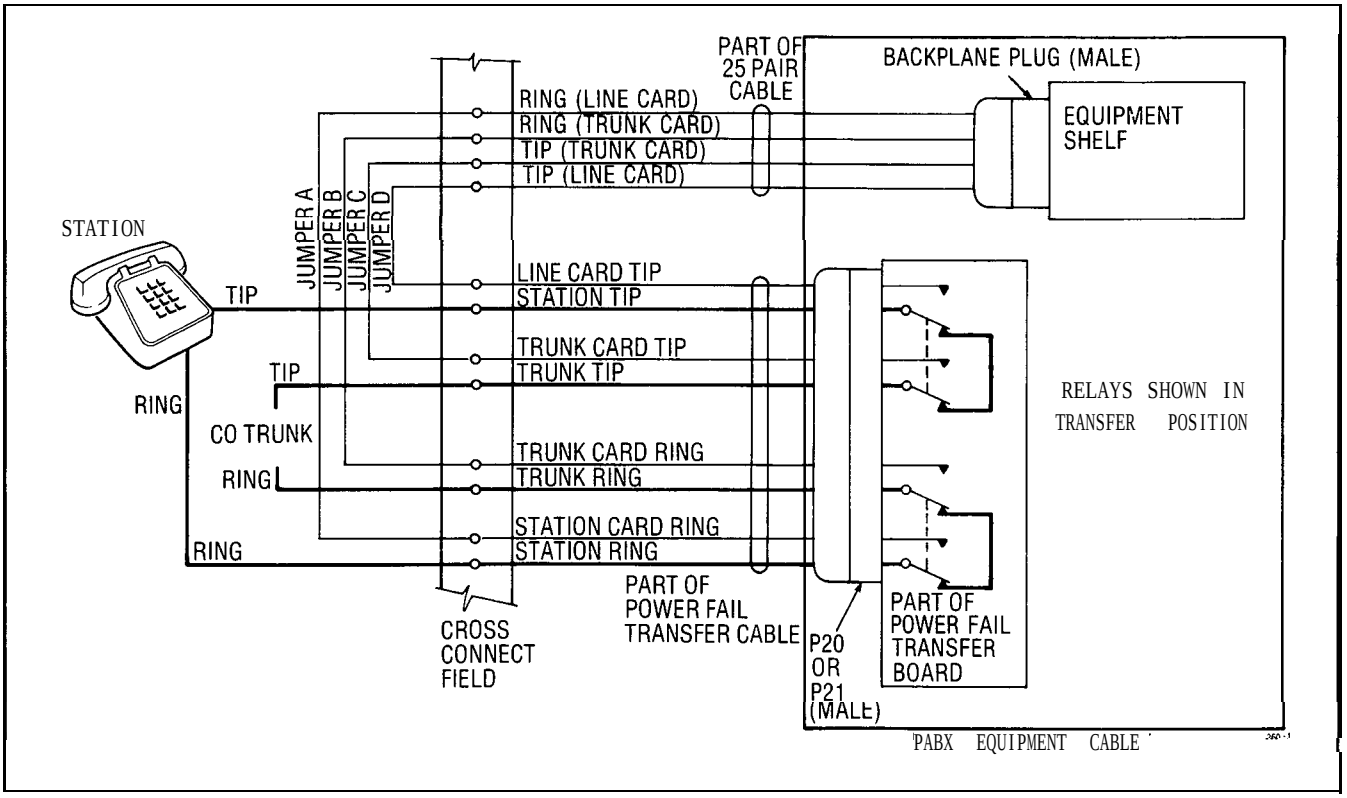

Fig. 10-5 Power Fail Transfer Wiring Diagram

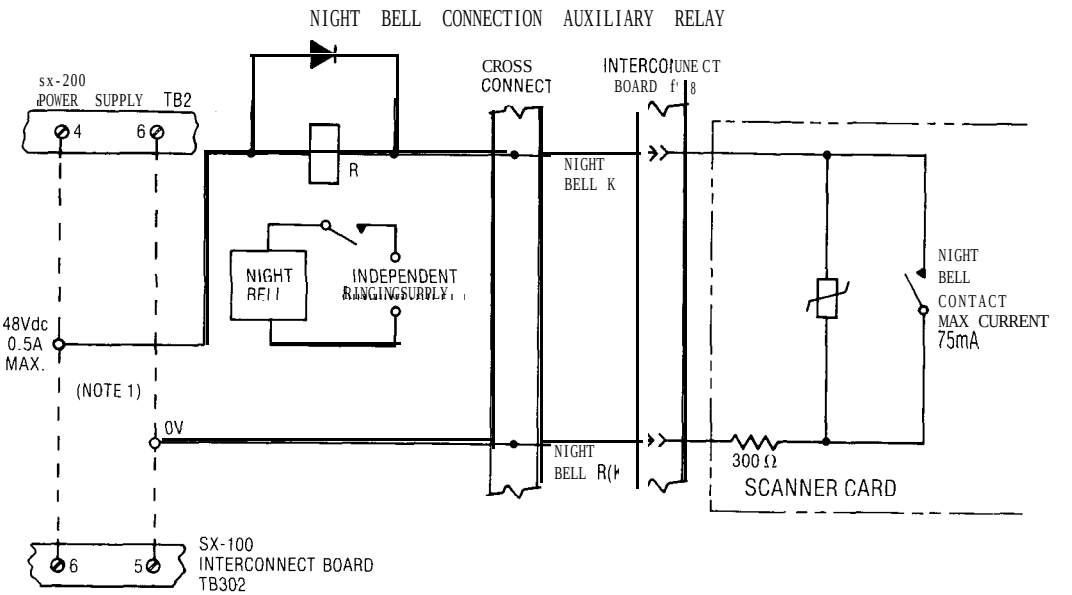

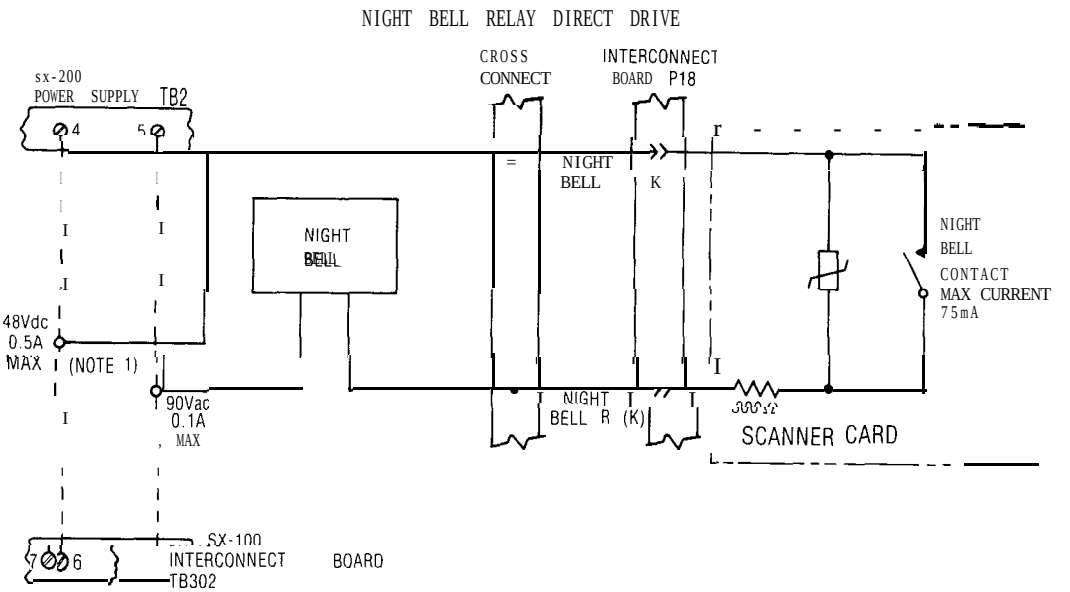

INTERCONNECT BOARD PLUG P18					
PIN	DESTINATION	PIN	DESTINATION	PIN	DESTINATION
46	NIGHT BELL 1 K1	44	NIGHT BELL 2 K2	50	NIGHT BELL 3 K3
21	NIGHT BELL 1 R(K1)	19	NIGHT BELL 2 R(K2)	25	NIGHT BELL 3 R(K3)

NOTE 1. THE FACILITY IS WIRED TO EITHER THE SX-100 OR THE SX-200 TERMINAL BLOCKS, AS INDICATED BY THE DASHED LINES

Fig. 10-6 Night Bell Connections

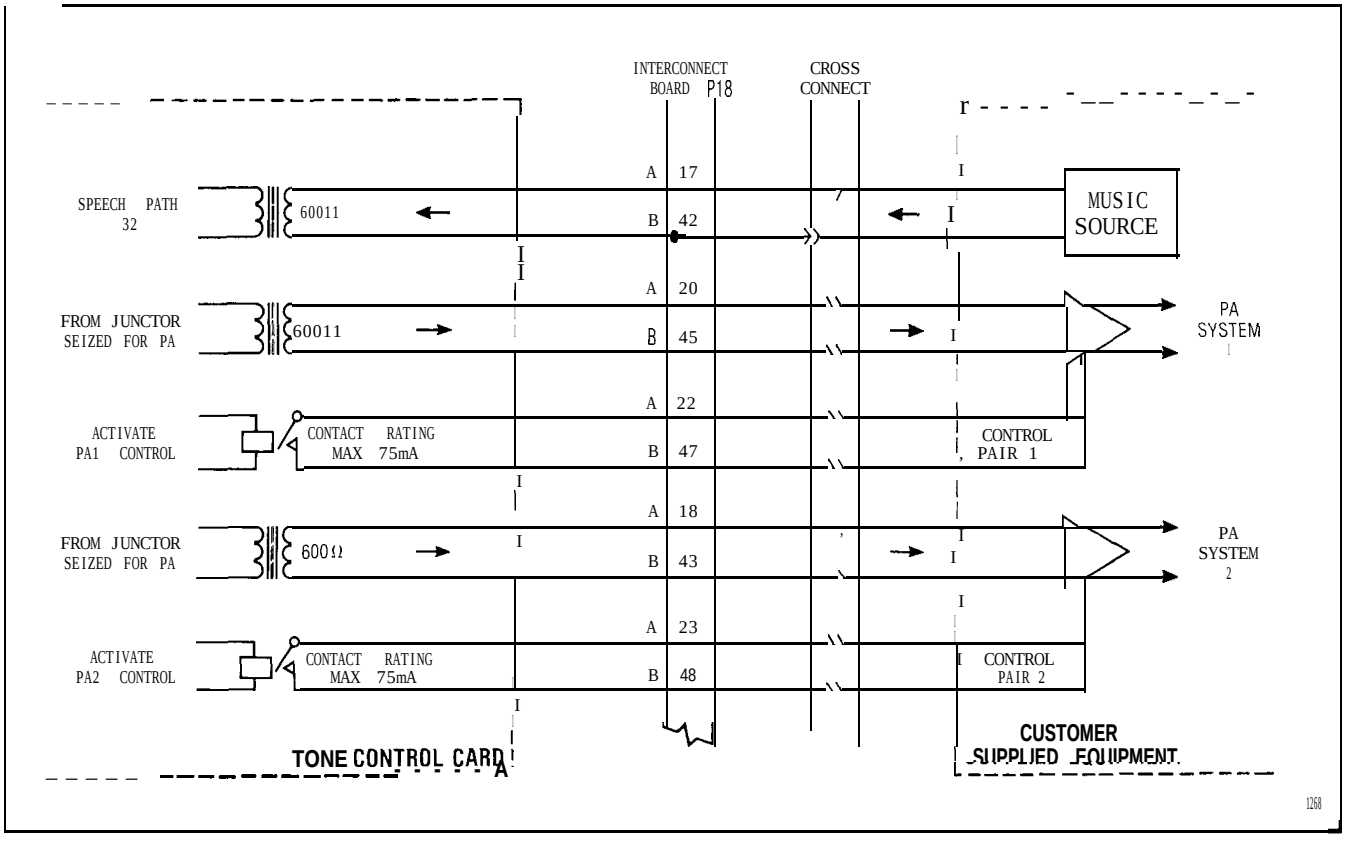

Fig. 10-7 Music and PA Connections

FCC CROSS CONNECT FIELD RECOMMENDATIONS

10.10 Trunk circuits must be connected to the telephone company interface jack sequentially. A cross connect field is necessary to separate the lines and trunks which occur in the same cable that is connected to the shelf connector.

10.11 All cables containing trunk circuit pairs must be connectorized; thus, the cross connect field must also be connectorized. Refer to Appendix 2 for details.

11. DESIGNATIONS

General

11.01 Designations are an integral part of the installation procedures. Correct identification of all cables and terminations improves service by reducing search time.

11.02 This part describes one method of identification. Modular cross-connecting fields are referenced to throughout this description as the SX-200 system crossconnection may show the cross connect field with other PBX equipment. This procedure for terminating the cables and equipment are shown in Table 11-I and Fig. 11-1, 11-2 and 11-3.

TABLE II-I
TERMINATING PROCEDURE

STEP	ACTION
1	Mount cross connecting blocks
2	Run and connect building cables
3	Identify cables using identification tape
4	Attach designation strips to required cross connecting blocks (Fig. 11-2 and 11-3)
5	Run and connect equipment cables
6	Run and connect required jumpers

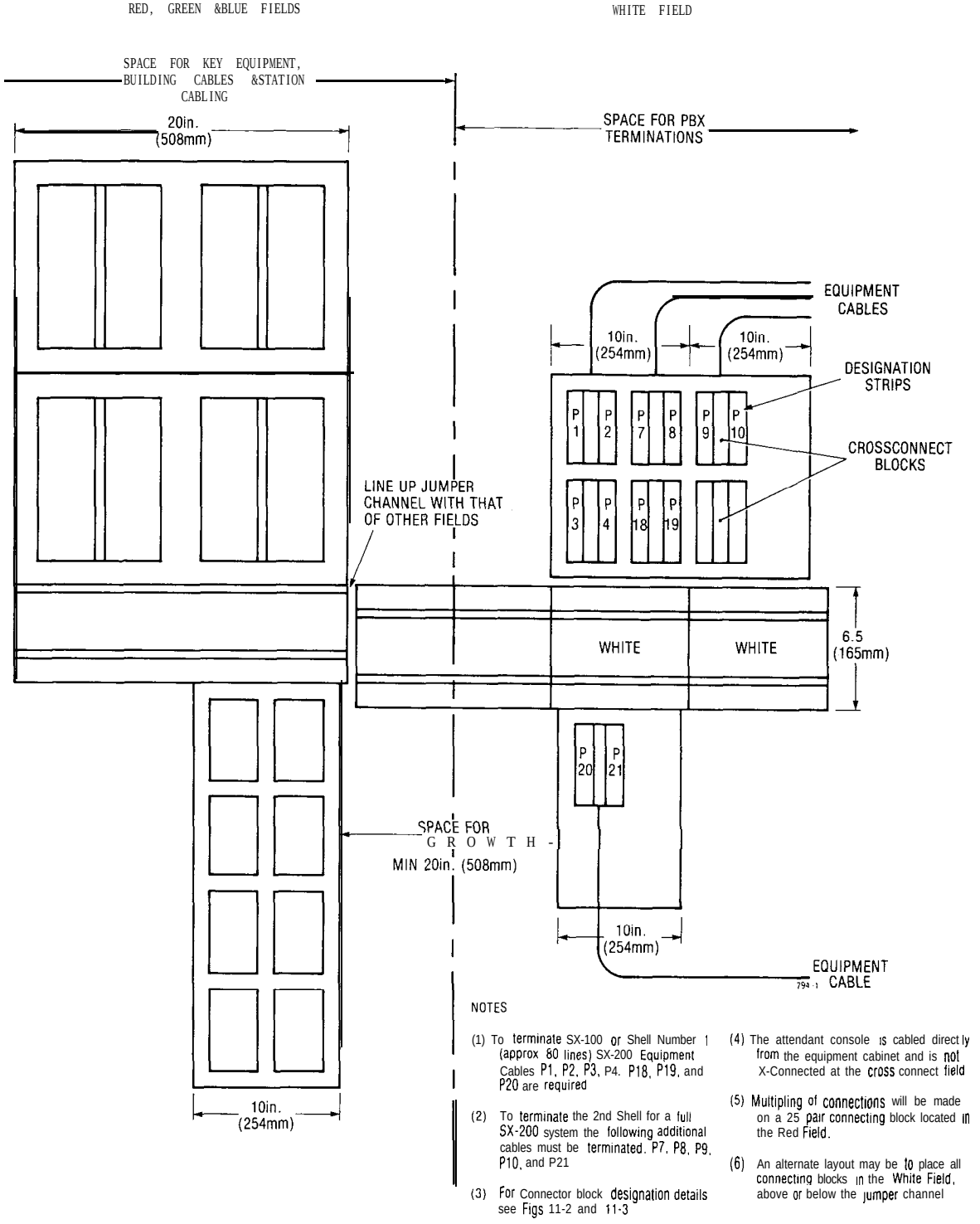

Fig. 11-1 Typical Terminal Layout

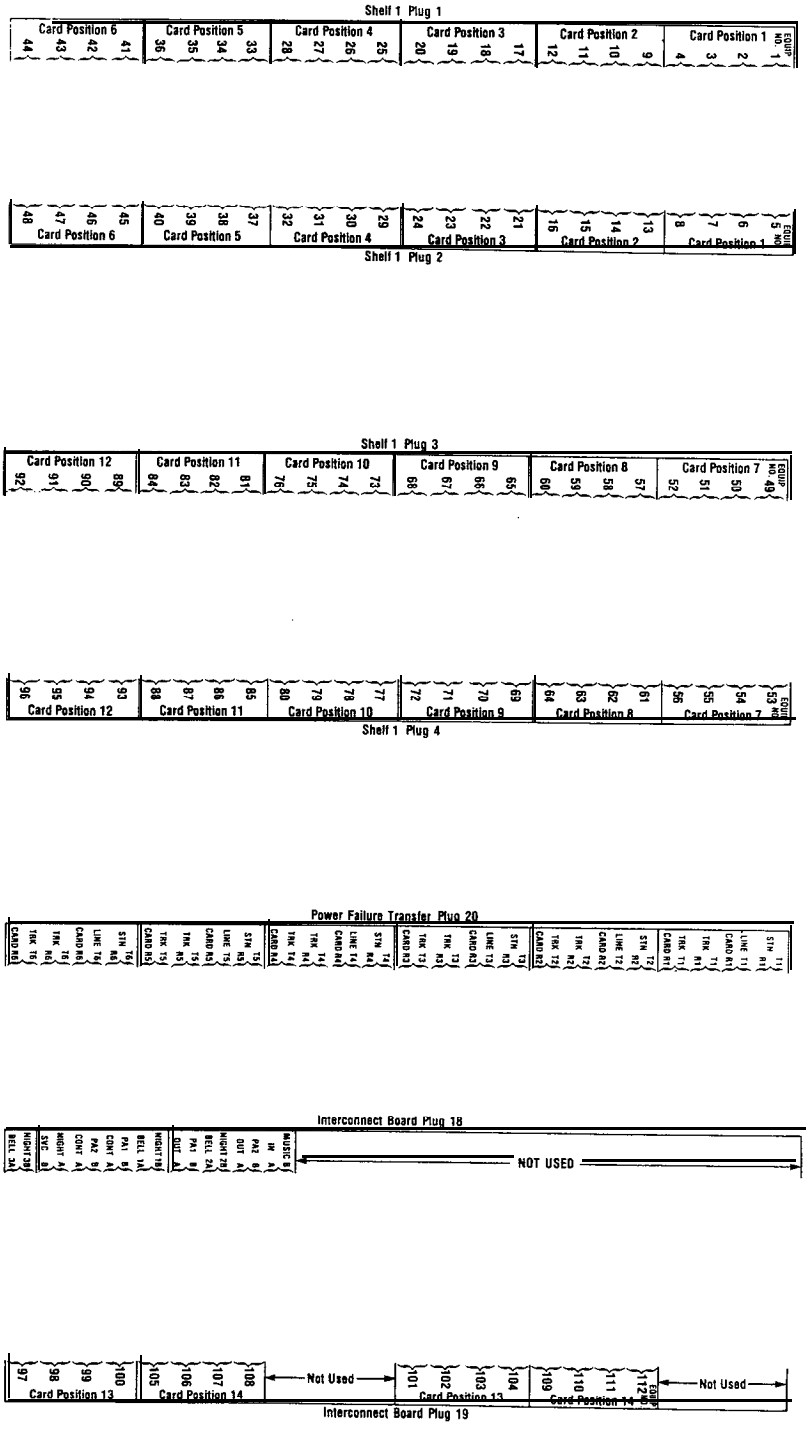

Fig. 11-2 Cross Connecting Block Designation Strips (SX-100/SX-200)

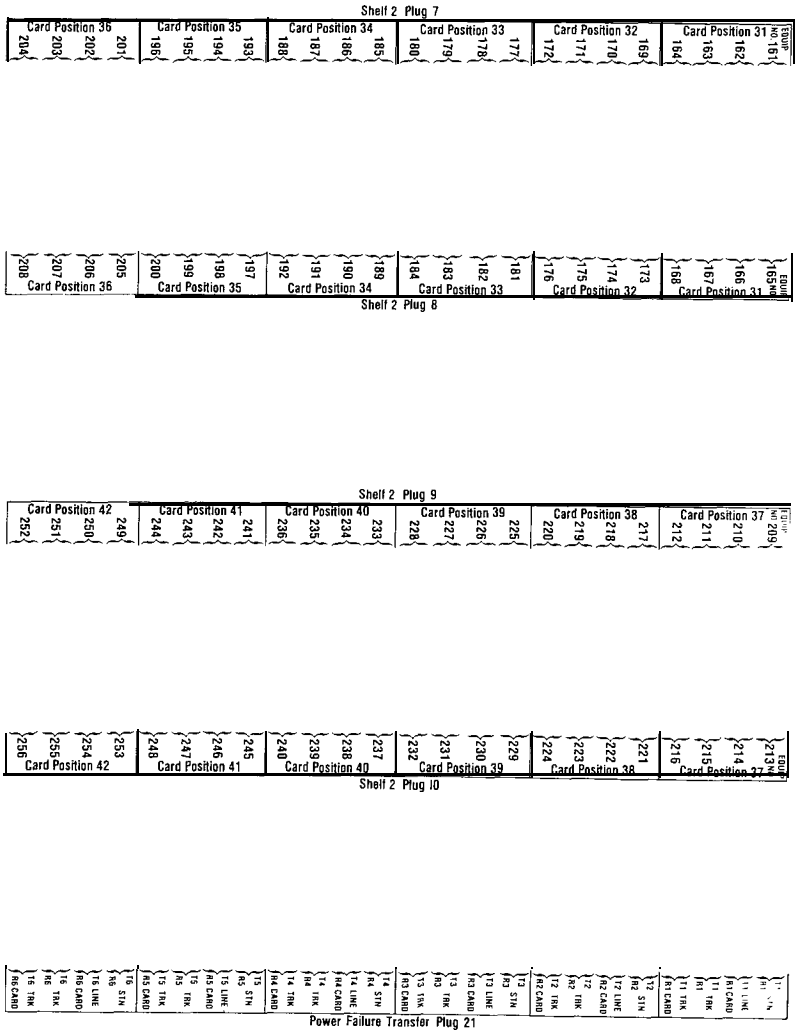

NOTES:

1. PLUG DESIGNATION STRIPS FOR PLUGS 7 THROUGH 10 ONLY REQUIRED WHEN SHELF 2 IS INSTALLED IN SX-ZOO

2 PLUG DESIGNATION STRIP FOR PLUG 21 IS APPLICABLE TO SX-ZOO ONLY

Fig. 11-3 Cross Connecting Block Designation Strips (SX-200 Only)

12. INSTALLATION

General

12.01 The SX-100 and SX-200 systems should be installed in accordance with the following steps:

(a) Consult Appendix 1 for a review of Mitel Action Procedures (MAP's)

(b) Consult Appendix 2 for certain FCC interconnection requirements

(c) For installation of SX-100 equipment proceed with the steps listed in Table A3-1, Appendix 3

(d) For installation of SX-200 equipment proceed with the steps listed in Table A4-1, Appendix 4

(e) Appendix 5 lists setting of trunk card switches which are required to be performed during the installation of the PABX equipment

(f) Appendix 6 lists miscellaneous installation procedures which may be required during the PABX installation or the installation of additional equipment

APPENDIX 1

MITEL ACTION PROCEDURES

GENERAL

AI.01 Task oriented functions in this section are implemented using MITEL ACTION PROCEDURES (MAP's).

AI.02 A MAP is a step by step procedure using a flow chart principle, written and illustrated where necessary to a level of detail that allows both experienced and inexperienced personnel to carry out the tasks detailed. A MAP contains two levels of information as follows:

(a) For experienced personnel, a series of steps (level one) each numbered [n] and annotated with minimal information.

(b) For inexperienced personnel, each step referred to in (a) above is amplified by a connected series of numbered substeps [nA] (level two).

AI.03 A typical example of a MAP is shown in Fig. AI, with the two levels detailed

MAP SYMBOLS

AI.04 There are four basic symbol shapes which may be used in a MAP, and are defined as follows.

AI.05 AND Block: Used to indicate a level one step that must be performed. Consists of a square with the word AND centred in the block.

AI.08 OR Block: Used to indicate a choice of level one steps, one of which must be performed. Consists of a rectangle, with the text centred in the block, and with the word OR appearing between the alternative operations.

AI.07 The rectangle is also used to border instructions which imply that the operative must perform a task outside the scope of the MAP. The text is centred in the rectangle.

AI.08 DECISION Block: Used to indicate a decision within the level one steps which must be made. The symbol is based on a hexagon with the top and bottom sides extended. Decision text is centred in the symbol.

AI.09 START/FINISH/JUMP TO Block: Used to indicate the start and finish of a MAP. Also used to indicate 'jump to' points within the MAP, for example "go to [n]'' or "from [n]" or "return to [n]". The symbol is a rectangle with semi circular ends. Text is centred in the symbol.

THE OPERATORS USE OF MAP'S

Experienced Operator

AI.10 For the experienced operator to complete a task using a MAP, reference to the sequential short form level one steps is usually all that is necessary. Using Fig. AI as an example, the experienced operator would proceed as follows.

AI.11 At [1] makes a decision based on the information within the block. If the answer is YES the operator must proceed to a different MAP. If the answer is NO the operator is faced with another decision at block [2].

AI.12 At [2] if the decision is NO there is no requirement to proceed further and the test is abandoned. This naturally results in a FINISH block. If the decision is YES the operator proceeds to [3] and [4] in succession, i.e. dials the DID station number and completes the call to the check extension.

AI.13 The description of the instructions carried out in AI.05 and AI.06 have assumed that the level of competence of the operator is such that short form level one steps contain sufficient information, and therefore the operator reads only the centre column of the MAP, top to bottom of the page.

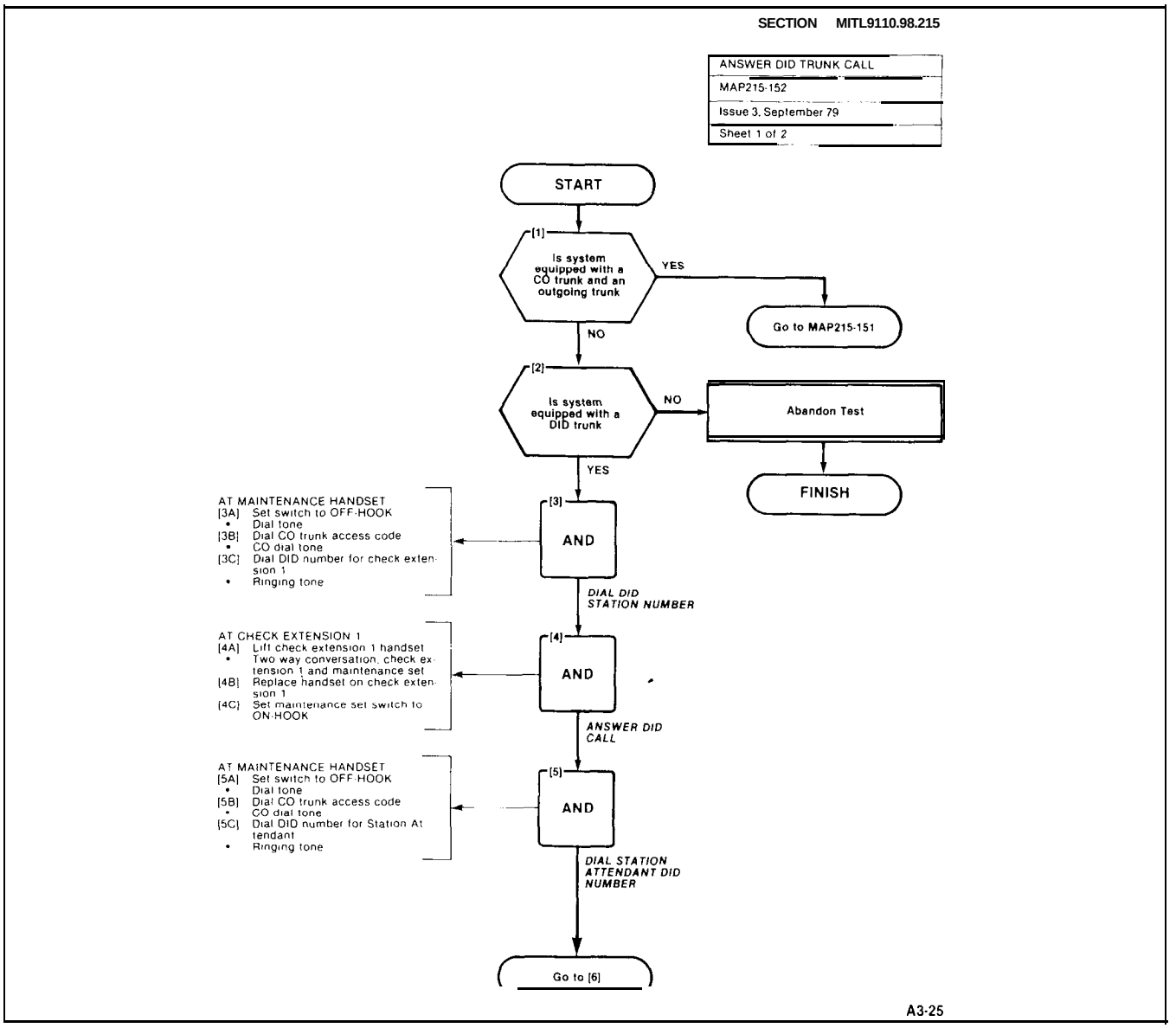

Fig. Al Typical Map Page

Inexperienced Operator

Al.14 If the operator's experience is such that the level one instructions do not contain sufficient information, the level two substeps should be referred to as follows.

Al.15 Using Fig. Al as an example the path followed should be:

(a) At [1] and [2] make the decisions called for at these steps as before.

(b) At step [3] dial the DID station number by performing substeps [3A], [3B] and [3C].

In terms of steps and substeps, the operative follows a decision, decision then step and substep paths in the example shown.

TOOLS, TEST EQUIPMENT AND SPECIAL INSTRUCTIONS

Al.16 Any tools, test equipment or special instructions that the operator requires or needs to know are stated on the first page of each MAP. If the MAP is long, and contains a number of sub procedures, these are listed in synopsis form on the first page.

APPENDIX 2
FCC INTERCONNECTION REQUIREMENTS

A. TELEPHONE COMPANY INTERCONNECTION

General

A.01 This equipment has been approved by the Federal Communications Commission (FCC) as not being harmful to the telephone network when connected directly to the telephone lines through the standard 50-pin blue ribbon plug prescribed by the FCC Rule. This section is applicable to telephone interconnection in the United States.

Notification

A.02 Prior to the interconnection of this equipment, the local telephone company is to be notified; inform the company that you have FCC-registered equipment which you wish to connect to their trunks. Give them the following information:

The PABX being connected is a Mitel Incorporated Model SX-100 or a Model SX-200.

The 14 digit FCC Registration Number for the SX-100 is BN285B67126PFE

The 14 digit FCC Registration Number for the SX-200 is BN285B67126PFE.

The Ringer Equivalence Number which is 2.1B.

The jacks or connectors required are RJ2IX, RJ2EX or RJ2GX as shown in Table A2-1.

Connection Limitations

A.03 Due to the FCC Part 68 Rule, no connection can be made to party lines and to coin telephone service.

Network Changes

A.04 The telephone company may make changes to its communication service; such changes may include the change of trunk circuits, changes in the operational characteristics of its trunk, etc. Before doing this, however, the company shall provide official notification, so that the operation of the PABX service will not be interrupted.

Maintenance Limitations

A.05 This equipment has been registered with the FCC for direct connection to the telephone network. Under the FCC Program, the user is restricted from making any changes or repairs and from performing any maintenance operations other than those specifically included in this Standard Practice.

A.08 Circuit cards may be removed by the user; however, replacement cards are to be supplied only by MITEL or its authorized agent. No field repair of circuit cards by the user is authorized.

A.07 No cabling or wiring changes within the console are permitted by the user. Plug-ended cables, as detailed in this Standard Practice, are to be used for all external connections between the console and the telephone company interface jack.

A.08 Power supply components and cabling is only to be changed or maintained by MITEL or by an authorized agent of MITEL.

Trouble Corrections

A.09 Most troubles are diagnosed by the circuitry of the system, and the console read-out indicates the circuit and card that is malfunctioning. Card replacement can be made by the user.

A.1 0 For more complex malfunctions, appropriate field service is provided by MITEL or its authorized agents.

TABLE A2-1
USOC CONNECTOR PIN DESIGNATIONS

Pin	Pair Color	Connector Type RJ2IX	RJ2EX	RJ2GX
26	W-BL	T	T	T
1	BL-W	R	R	R
27	w-o	T	E	T1
2	o-w	R	M	R1
28	W-G	T	T	E
3	G-W	R	R	M
29	W-BR	T	E	T
4	BR-W	R	M	R
30	w-s	T	T	T1
5	s-w	R	R	R1
31	R-BL	T	E	E
6	BL-R	R	M	M
32	R-O	T	T	T
7	O-R	R	R	R
33	R-G	T	E	T1
8	G-R	R	M	R1
34	R-BR	T	T	E
9	BR-R	R	R	M
35	R-S	T	T	E
10	S-R	R	M	R
36	BK-BL	T	T	T1
11	BL-BK	R	R	R1
37	BK-0	T	E	E
12	0-BK	R	M	M

Pin	Pair Color	Connector Type RJ2IX	RJ2EX	RJ2GX
38	BK-G	T	T	T
13	G-BK	R	R	R
39	BK-BR	T	E	T1
14	BR-BK	R	M	R1
40	BK-S	T	T	E
15	S-BK	R	R	M
41	Y-BL	T	E	T
16	BL-Y	R	M	R
42	Y-O	T	T	T1
17	O-Y	R	R	R1
43	Y-G	T	E	E
18	G-Y	R	M	M
44	Y-BR	T	T	T
19	BR-Y	R	R	R
45	Y-S	T	E	T1
20	S-Y	R	M	R1
46	V-BL	T	T	E
21	BL-V	R	R	M
47	v-o	T	E	T
22	o-v	R	M	R
48	V-G	T	T	T1
23	G-V	R	R	R1
49	V-BR	T	E	E
24	BR-V	R	M	M
50	V-S	SPARE		
25	S-V	SPARE		

Remarks

The types of Universal Service Order Code (USOC) connectors shown have pin designations according to type of interface required by the Telephone Company. Use of these connectors are determined as follows:

RJ2IX: 2-wire loop, or ground start trunk
2-wire reverse battery (DID)
2-wire off-premises extension (Class A through E)
2-wire Automatic Identified Outward Dialing (AIOD)
2-wire message register

RJ2EX: 2-wire tie trunk with E and M Type I signaling

RJ2GX: I-wire tie trunk with E and M Type I signaling

APPENDIX 3
SX-100 INSTALLATION PROCEDURES

1. GENERAL

A3.01 The MAP's contained in this Appendix detail the procedures to be performed to complete the installation of an SX-100 PABX.

TABLE A3-1
SX-100 INSTALLATION PROCEDURE

Step	Procedure	Reference
1	Unpack SX-100 Equipment	MAP200-301
2	Unpack Console(s)	MAP200-302
3	Install Console Faceplate Designation	MAP200-303
4	Inspect Equipment	MAP200-304
5	Install and Connect Equipment	MAP200-305
6	Set Card Switches (Appendix 5)	MAP200-306
7	Power-Up System (See Note)	MAP200-307
8	Program System	Section MITL9105/9110-98-210
9	Perform System Tests	Section MITL9105/9110-98-215

Note: Appendix 6 lists miscellaneous installation requirements which may be required prior to power-up of system. This appendix should be reviewed for applicability.

UNPACK SX-100 EQUIPMENT	1
MAP200-301	
Issue 1, December 1979	
Sheet 1 of 2	

TOOLS REQUIRED

1. Set of strap cutters

START

[1] AND

AT RECEIVING DOCK
[1A] Cut and remove retaining straps
[1B] Remove tri wall box from shipping package (Fig. 301-l)

WARNING

Gloves must be worn when unpacking equipment cabinet.

REMOVE EXTERNAL PACKING (FIG. 301-1)

[2] AND

[2A] Position equipment so that approx. ten inches of equipment overhangs shipping pallet (Fig. 301-2)
[2B] Tip equipment so that rear of cabinet touches floor
[2C] Remove shipping pallet from under equipment
[2D] Gently lower equipment onto floor

CAUTION

Care must be taken while moving equipment to avoid damage.

REMOVE SHIPPING PALLET (FIG. 301-2)

[3] Was the shipment improperly packaged or damaged

YES

NO

[4] AND

[4A] Identify type of damage by referring to the Damage Report Form at rear of this Section
[4B] Complete appropriate portion of Form

REPORT DAMAGE

FINISH

UNPACK SX-100 EQUIPMENT
MAP200-301
Issue 1, December 1979
Sheet 2 of 2

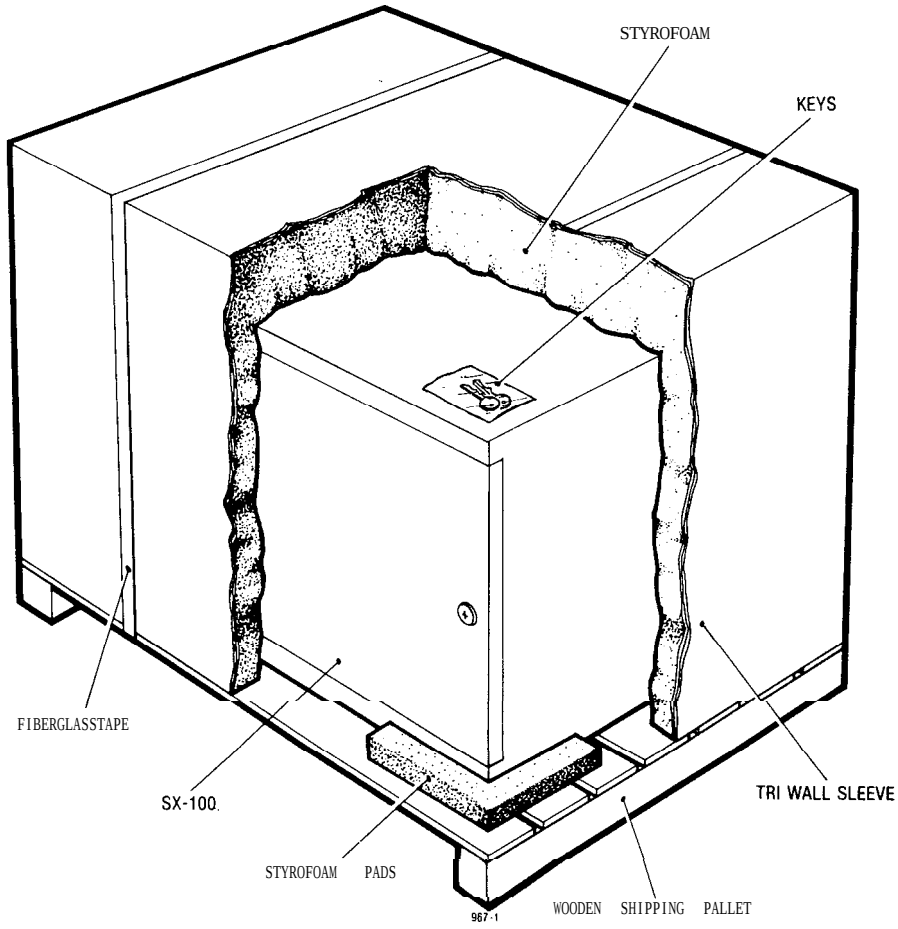

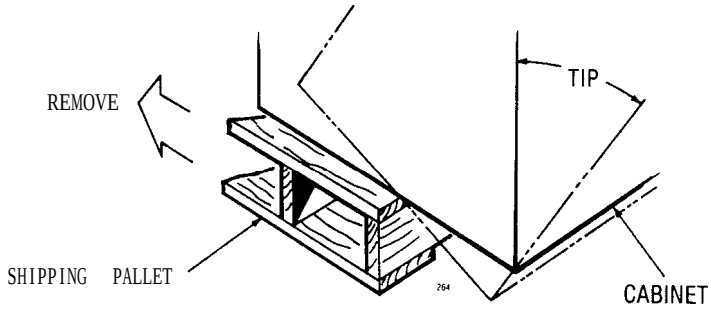

UNPACK CONSOLES
MAP200-302
Issue 1, December 1979
Sheet 1 of 3

TOOLS REQUIRED

1 Screwdriver 0.25 inch blade

START

[1] AND

AT CONSOLE LOCATION

- **[1A]** Remove fiberglass tape from top of packing case
- **[1B]** Open packing case and remove foam sheet
- **[1C]** Remove cardboard insert
- **[1D]** Remove console accessory bag from insert
- **[1E]** Remove console from packing case
- **[1F]** Remove polyethylene sheet from console
- **[1G]** Place all packing material in packing case for use in reshipment

UNPACK CONSOLE

[2] AND

- **[2A]** Remove the two cradle hooks and four panhead screws from accessory bag
- **[2B]** Place console face down on desk top
- **[2C]** Position one cradle hook as shown in Fig. 302-I. (Cradle hook may be placed at other end of console if preferred)
- **[2D]** Attach cradle hook to console using two panhead screws
- **[2E]** Position remaining cradle hook (Fig. 302-I)
- **[2F]** Attach cradle hook to console with two panhead screws

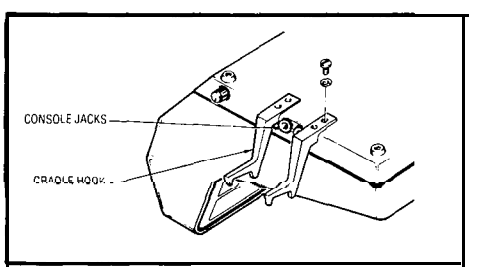

Fig. 302-I

INSTALL CRADLE HOOKS (FIG. 302-I)

[3] AND

- **[3A]** Remove the four screws securing the connector cover plate (Fig. 302-2)
- **[3B]** Remove connector cover plate

*REMOVE CONNECTOR COVER PLATE (FIG. **302-2**)*

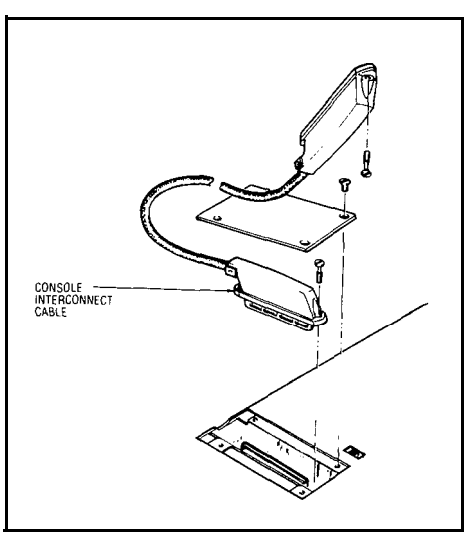

Fig. **302-2**

To [4]

UNPACK CONSOLES
MAP200-302
Issue 1, December 1979
Sheet 2 of 3

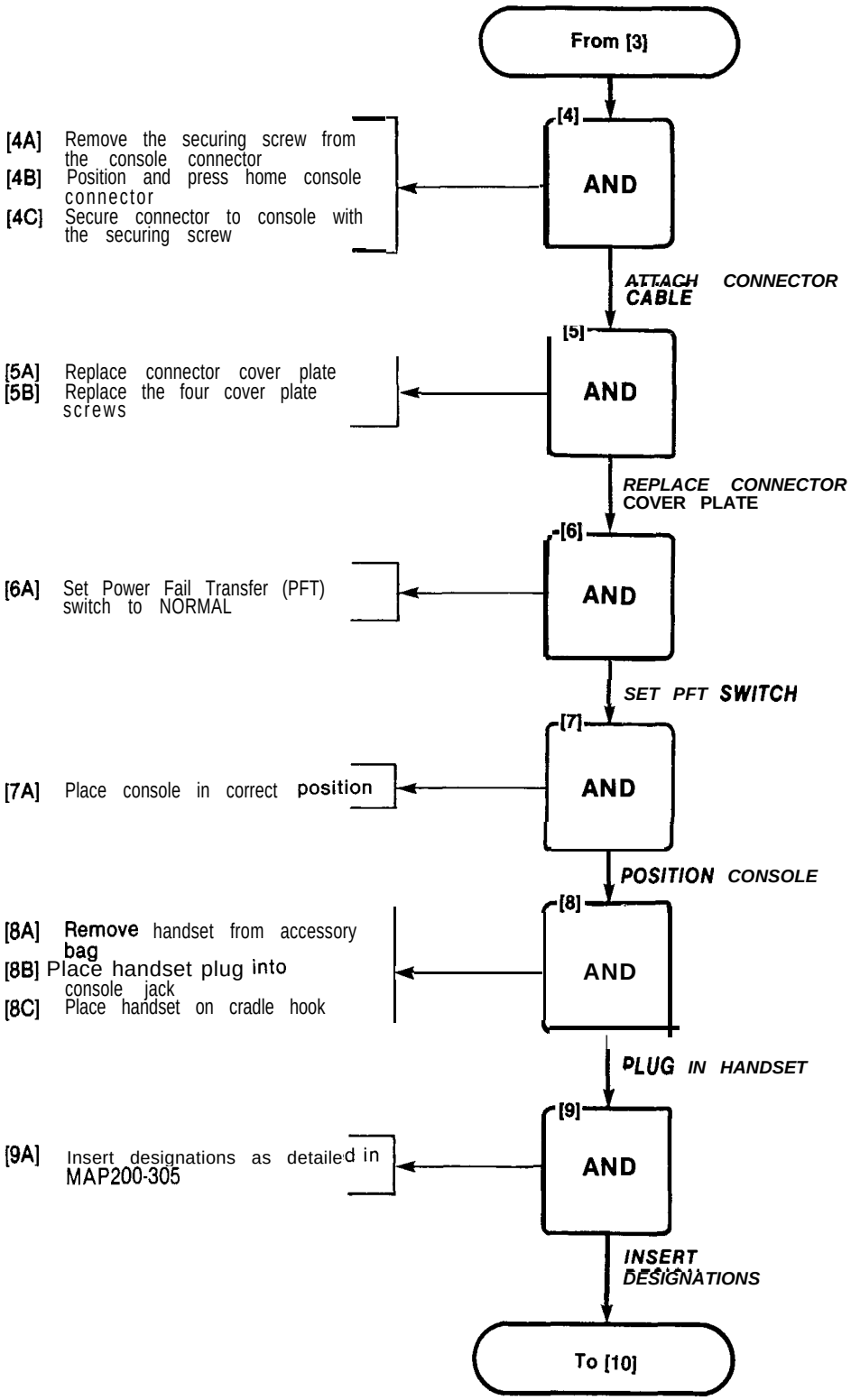

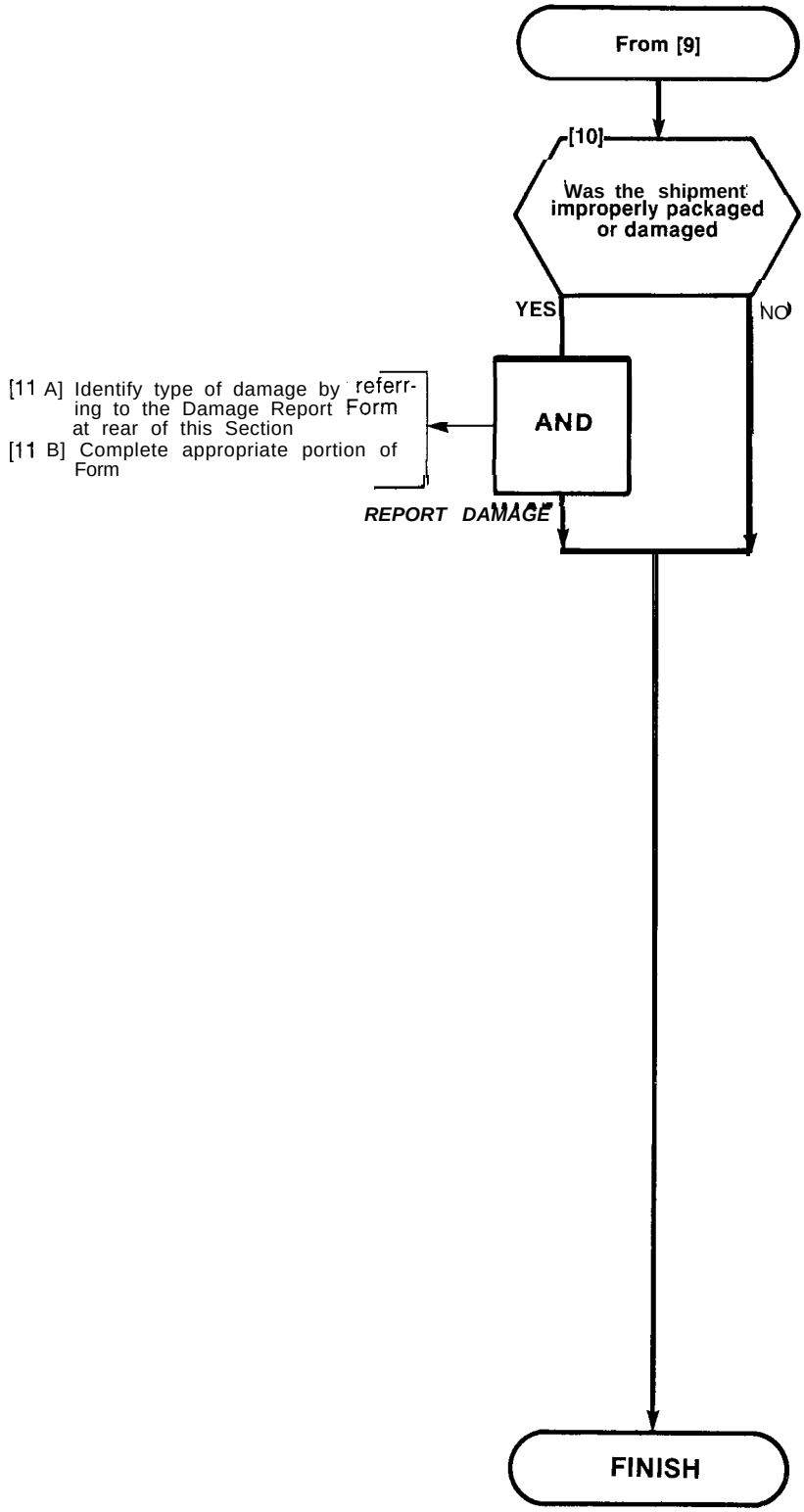
From [9]
[10]
Was the shipment improperly packaged or damaged
YES
NO
AND
[11 A] Identify type of damage by referring to the Damage Report Form at rear of this Section
[11 B] Complete appropriate portion of Form
REPORT DAMAGE
FINISH

INSTALL CONSOLE
FACEPLATE DESIGNATIONS
MAP200-303
Issue 1, December 1979
Sheet 1 of 5

START

[1] AND

[1A] Grasp key cap and pull upward from key
[1B] Remove key designation tab

REMOVE KEY CAP

[2] AND

[2A] Check required console layout (Figs 303-1, -2 or -3)
[2B] Push out required designation tab from designation sheet
[2C] Place designation tab on top of key

INSERT DESIGNATION TAB (FIG. *303-1,* -2 OR -3)

[3] AND

[3A] Place key cap over key checking that locking tabs are lined up correctly. (Fig. 303-4)
[3B] Push down on key top

REPLACE KEY CAP (FIG. 303-4)

To [4]

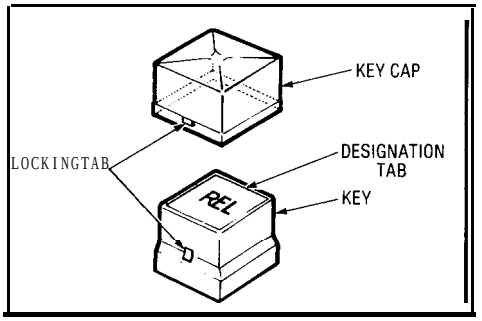

Fig. 303-4

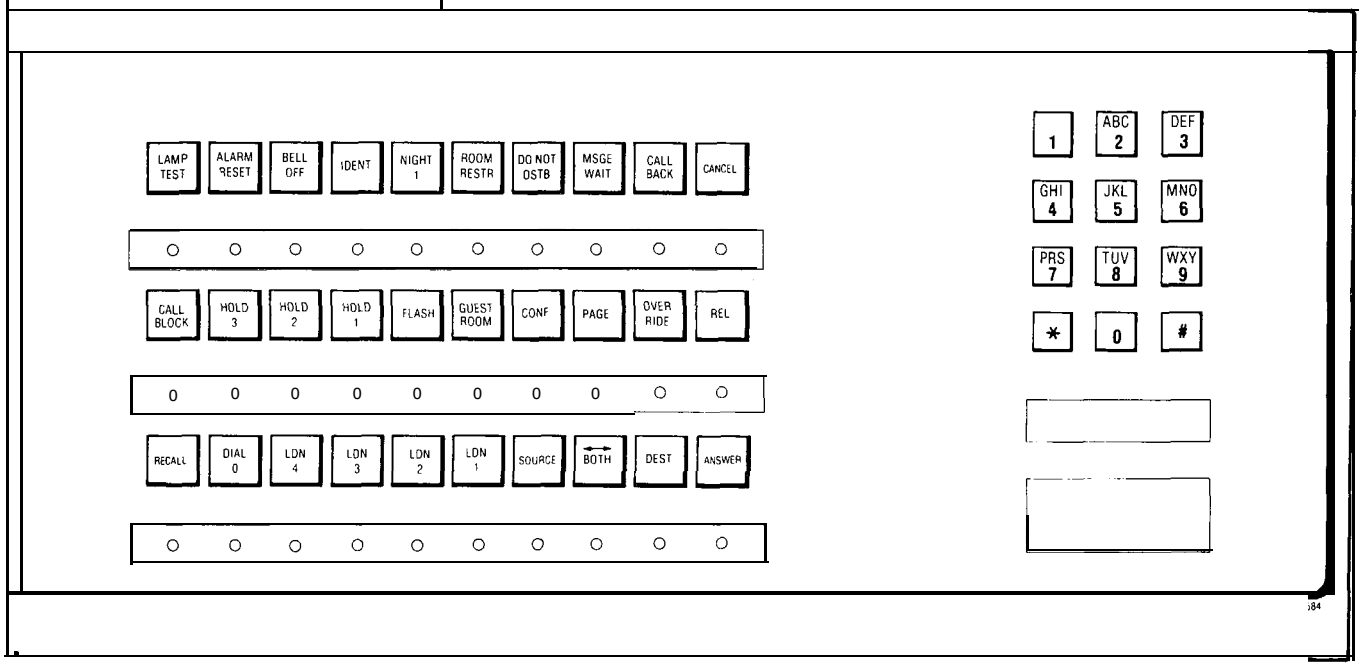

Fig. 303-l Attendant Console Key Designations, Hotel/Motel

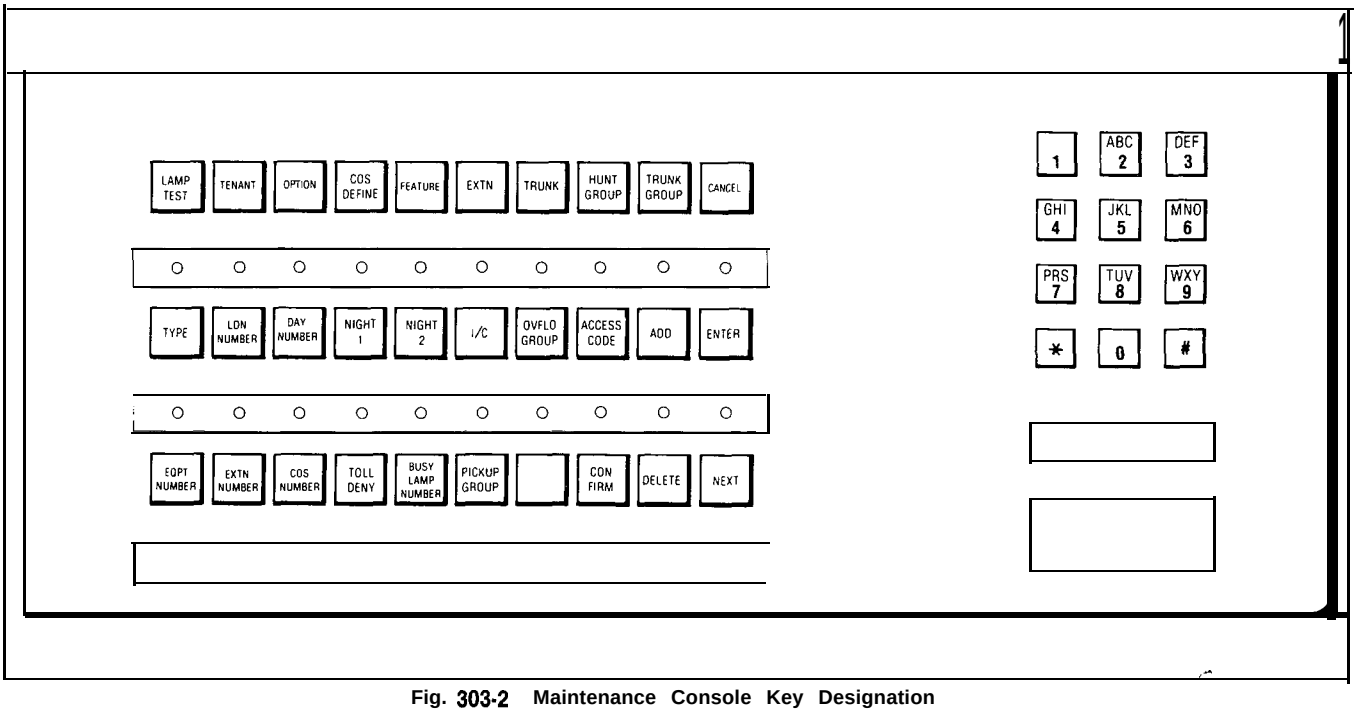

Fig. 303-2 Maintenance Console Key Designation

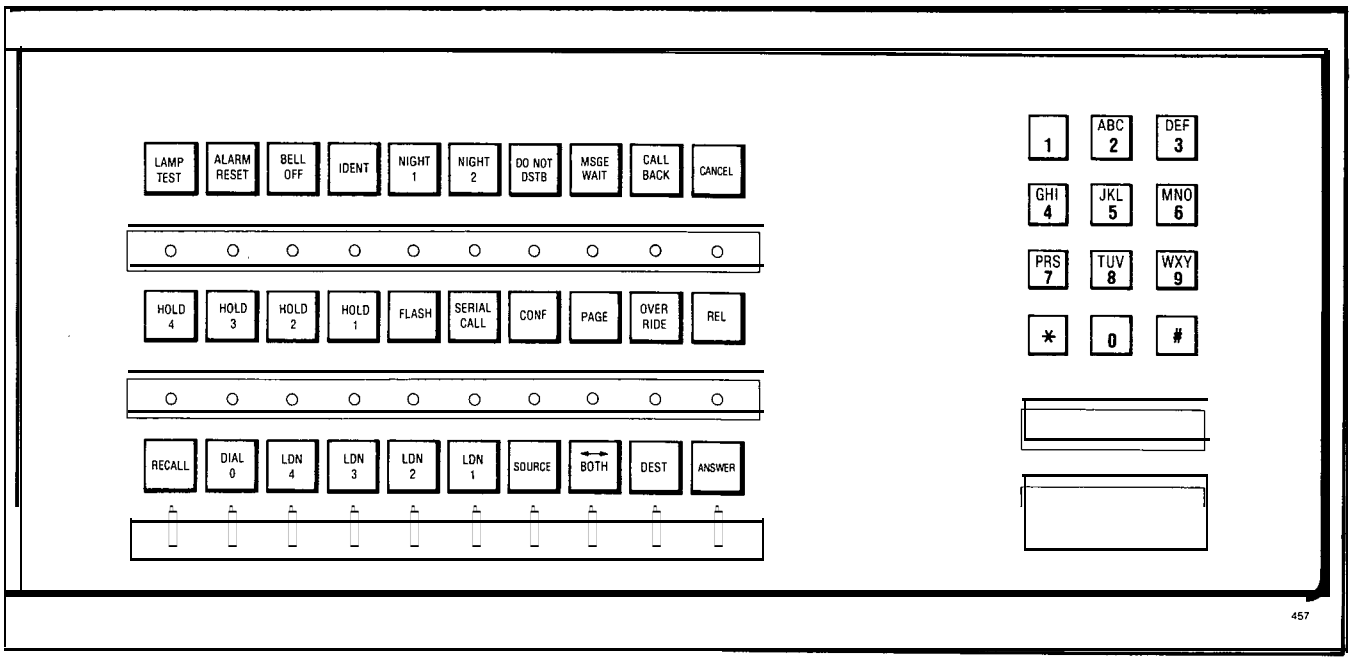

Fig. 303-3 Attendant Console Key Designations • Commercial

INSTALL CONSOLE
FACEPLATE DESIGNATIONS
MAP200-303
Issue 1, December 1979
Sheet 4 of 5

From [3]

[4] Have all designation tabs been inserted

NO → Return to [1]

YES

[5] Are the busy lamp field designations to be inserted

NO → FINISH

YES

[6] AND

[6A] Remove the two faceplate securing screws (Fig. 303-5)
[6B] Insert screwdriver blade into faceplate cutout (Fig. 303-5)
[6C] Move screwdriver to the vertical position
[6D] Slide screwdriver to opposite end of console
[6E] Remove console faceplate

REMOVE CONSOLE FACEPLATE (FIG. 303-S)

[7] AND

[7A] Cut required busy lamp numbers from designation sheet
[7B] Position number so that it will be seen clearly through busy lamp field window (Fig. 303-5)
[7C] Press number firmly in place

ATTACH BUSY LAMP *NUMBER*

To [8]

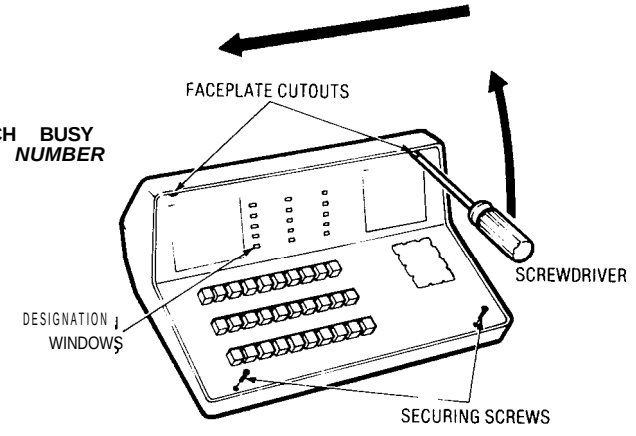

Fig. 303-5

INSTALL CONSOLE FACEPLATE DESIGNATIONS

MAP200-303

Issue 1, December 1979

Sheet 5 of 5

From [7]

[8] Have all Busy Lamp Field designations been attached

NO → Return to [7]

YES

[9] AND

[9A] Place bottom edge of faceplate against console lip.

[9B] Place faceplate over keys.

[9C] Press down firmly on console faceplate and press one corner under the top edge of the console housing as shown in Fig. 303-6

[9D] Continuing the downward pressure, press the remainder of top edge of the faceplate under the housing lip.

El Replace the two faceplate screws.

REPLACE CONSOLE FACEPLATE (FIG. 303-6)

FINISH

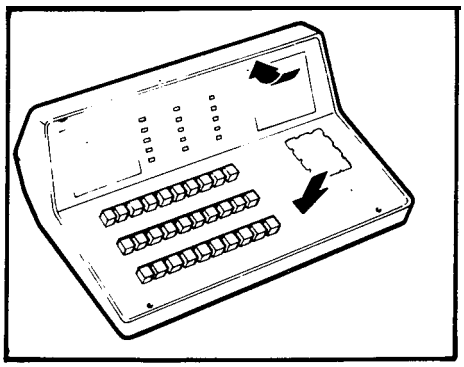

Fig. 303-6

INSPECT EQUIPMENT
MAP200-304
Issue 1, December 1979
Sheet 1 of 4

TOOLS REQUIRED

1 Phillips Screwdriver # 2
1 Slot Screwdriver - 0.25in.
1 Slot Screwdriver - 0.375in.

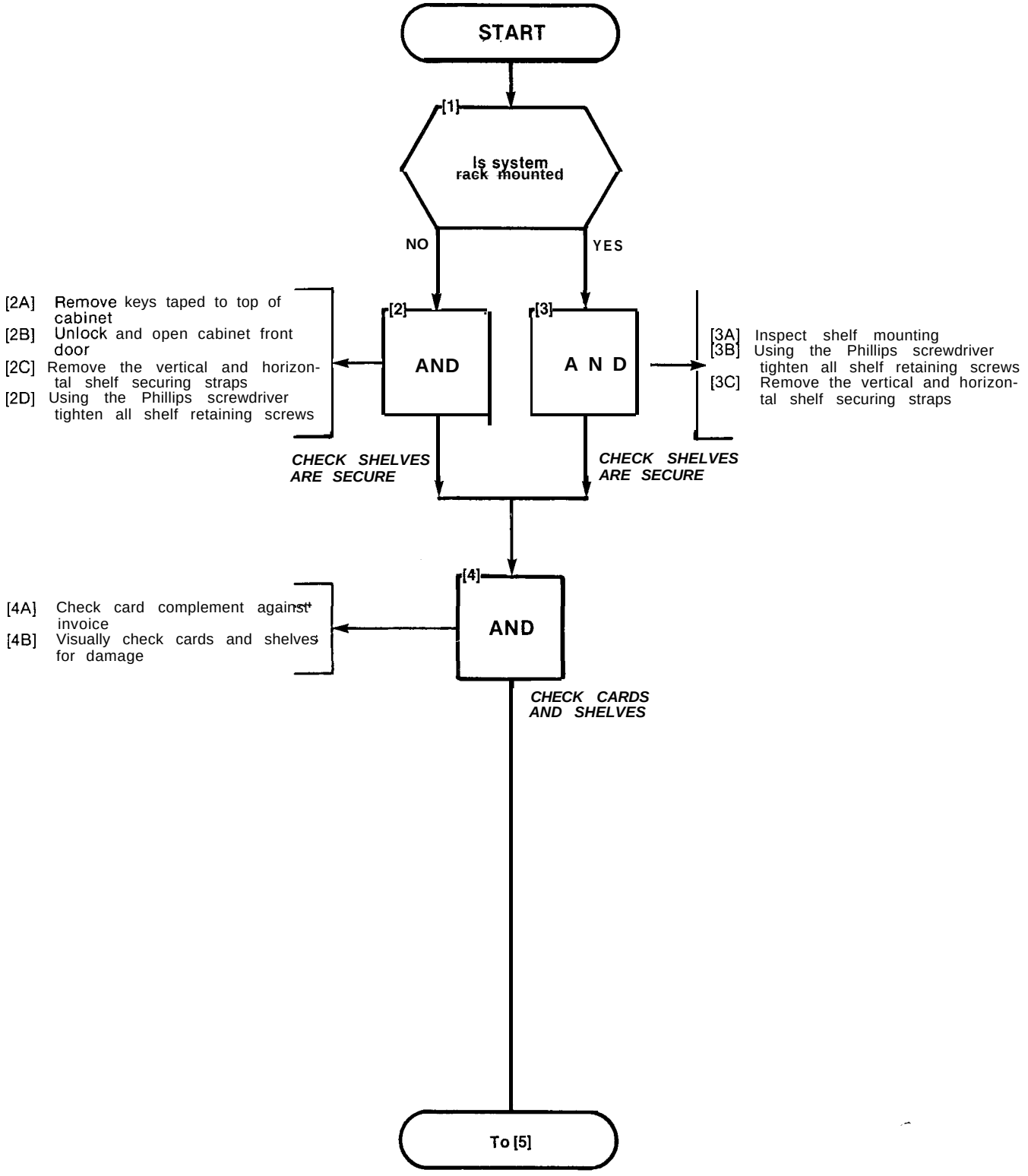

INSPECT EQUIPMENT
MAP200-304
Issue 1. December 1979
Sheet 2 of 4

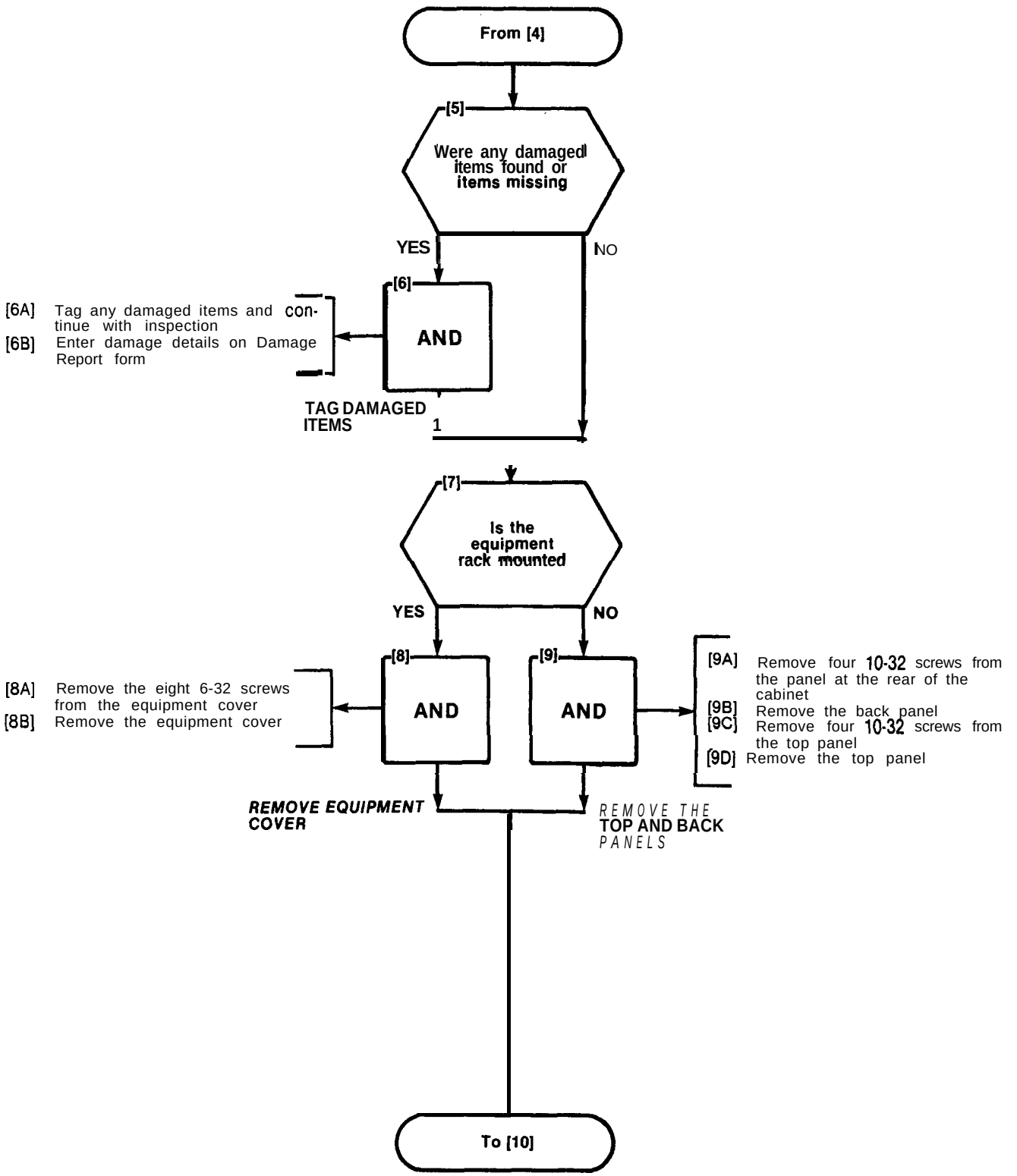

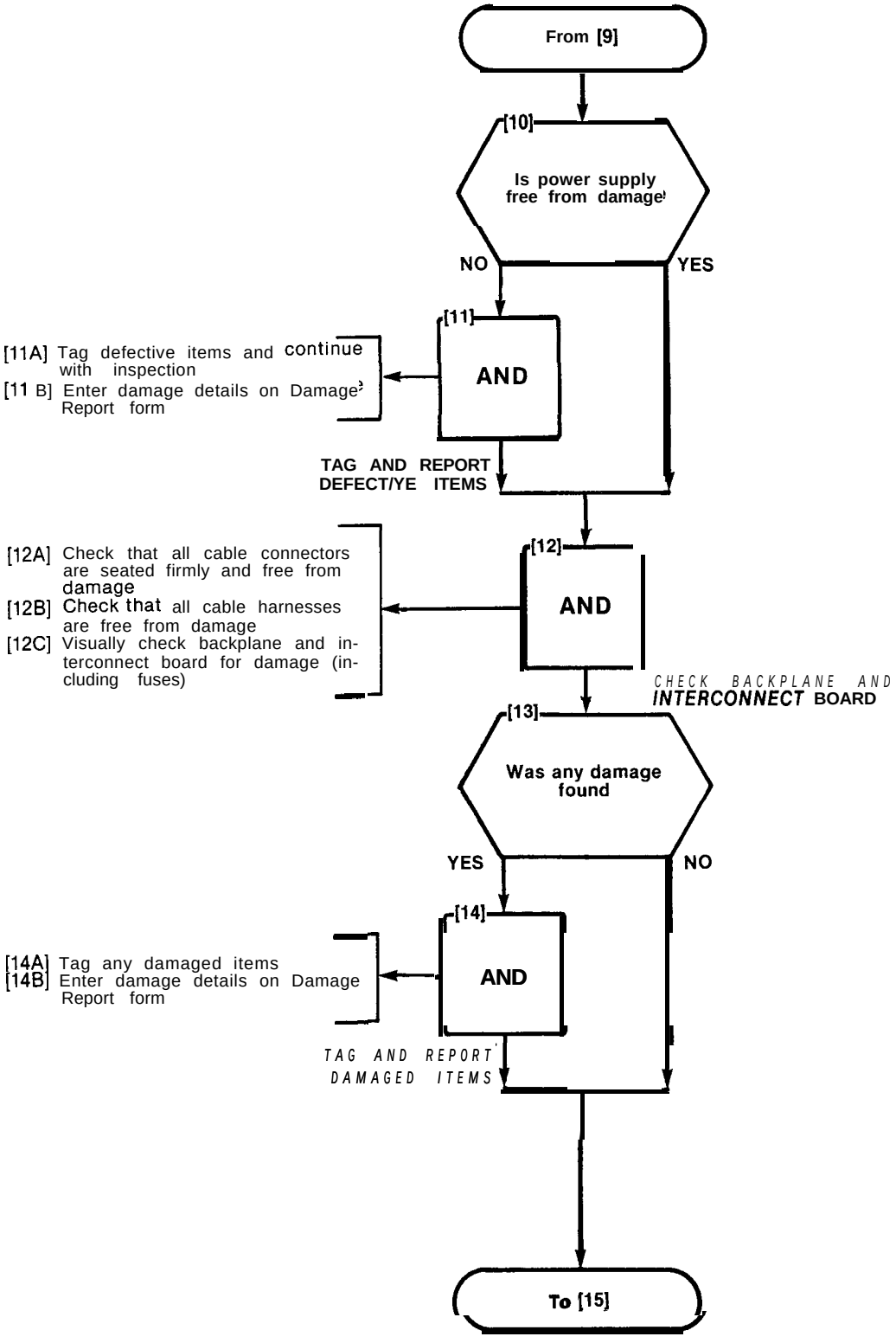
From [9]
[10]
Is power supply free from damage
NO
YES
[11]
AND
[11A] Tag defective items and continue with inspection
[11 B] Enter damage details on Damage Report form
TAG AND REPORT DEFECT/YE ITEMS
[12]
AND
[12A] Check that all cable connectors are seated firmly and free from damage
[12B] Check that all cable harnesses are free from damage
[12C] Visually check backplane and interconnect board for damage (including fuses)
CHECK BACKPLANE AND INTERCONNECT BOARD
[13]
Was any damage found
YES
NO
[14]
AND
[14A] Tag any damaged items
[14B] Enter damage details on Damage Report form
TAG AND REPORT DAMAGED ITEMS
To [15]

INSPECT EQUIPMENT
MAP200-304
Issue 1, December 1979
Sheet 4 of 4

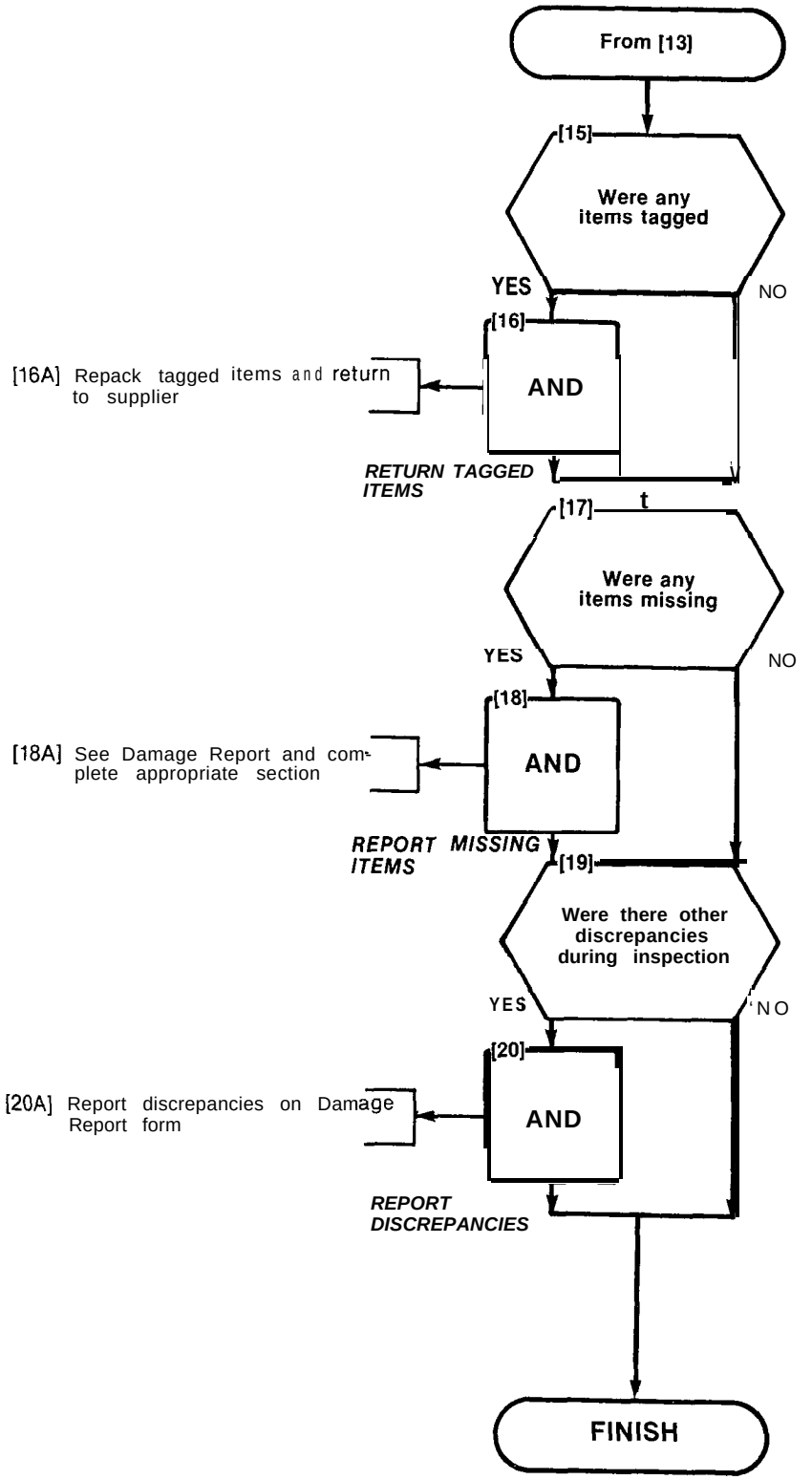

INSTALL EQUIPMENT
MAP200-305
Issue 1, December 1979
Sheet 1 of 10

TOOLS REQUIRED
0.75in. Slotted Screwdriver
0.75in. thick wooden backboard
(Wall-mount installation only)

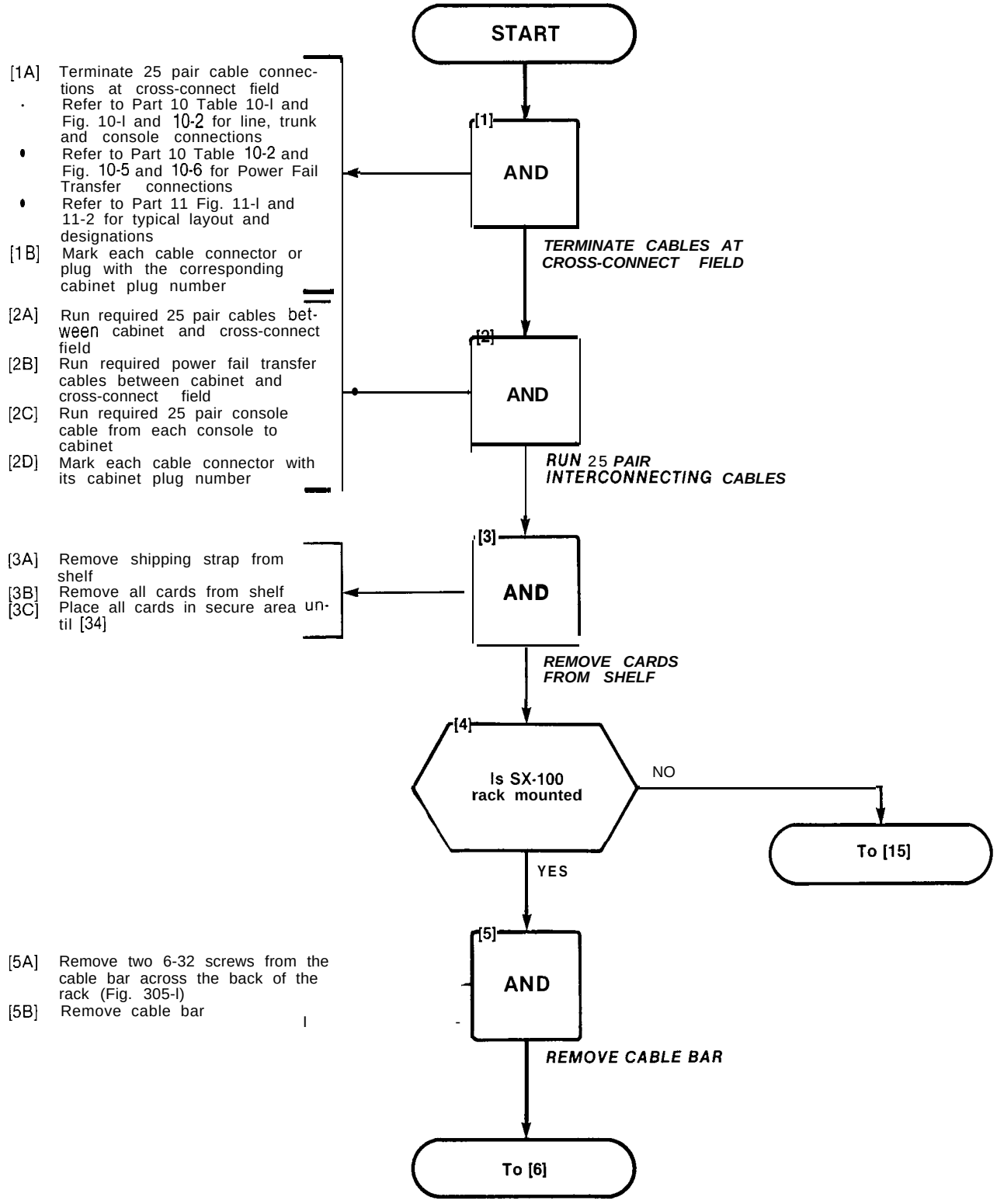

[1A] Terminate 25 pair cable connections at cross-connect field
- Refer to Part 10 Table 10-I and Fig. 10-I and 10-2 for line, trunk and console connections
- Refer to Part 10 Table 10-2 and Fig. 10-5 and 10-6 for Power Fail Transfer connections
- Refer to Part 11 Fig. 11-I and 11-2 for typical layout and designations

[1B] Mark each cable connector or plug with the corresponding cabinet plug number

[2A] Run required 25 pair cables between cabinet and cross-connect field

[2B] Run required power fail transfer cables between cabinet and cross-connect field

[2C] Run required 25 pair console cable from each console to cabinet

[2D] Mark each cable connector with its cabinet plug number

[3A] Remove shipping strap from shelf

[3B] Remove all cards from shelf

[3C] Place all cards in secure area until [34]

[5A] Remove two 6-32 screws from the cable bar across the back of the rack (Fig. 305-I)

[5B] Remove cable bar

INSTALL EQUIPMENT
MAP200-305
Issue 1, December 1979
Sheet 2 of 10

From [5]

[6] AND

[6A] Remove three 10-32 screws and washers from the front of SX-100 (Fig. 305-1)
[6B] Remove the mounting bracket
[6C] Repeat steps 6A and 6B for second mounting bracket

REMOVE MOUNTING BRACKETS

[7] AND

[7A] Remove four 8-32 screws and washers from front of maintenance panel
[7B] Remove the maintenance panel from the front of the equipment

REMOVE MAINTENANCE PANEL

To [8]

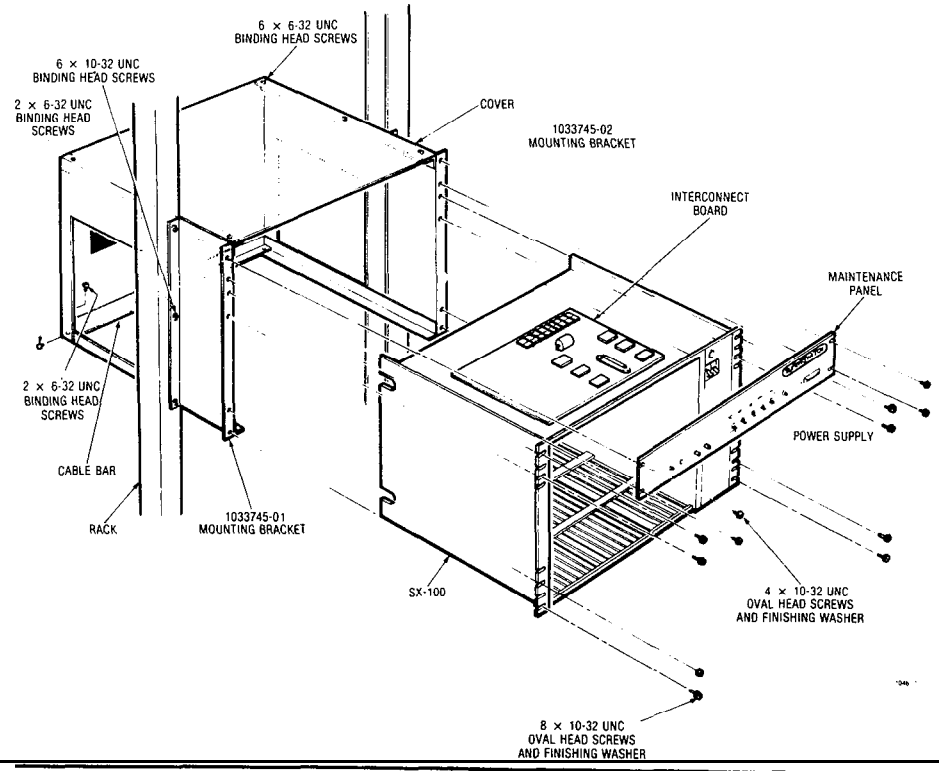

Fig. 305-1 Rack Mounting

INSTALL EQUIPMENT
MAP200-305
Issue 1, December 1979
Sheet 3 of 10

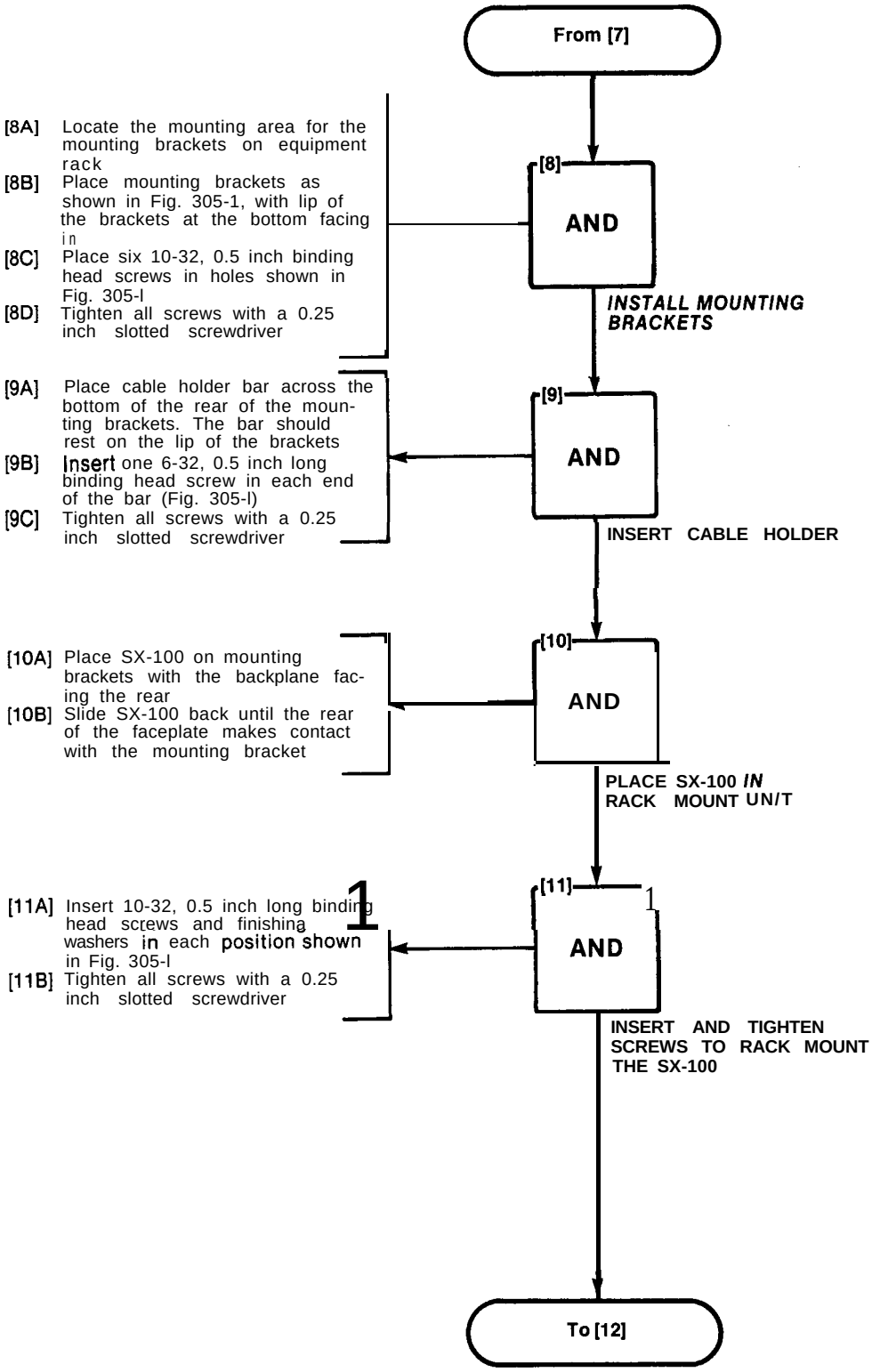

INSTALL EQUIPMENT
MAP200-305
Issue 1, December 1979
Sheet 4 of 10

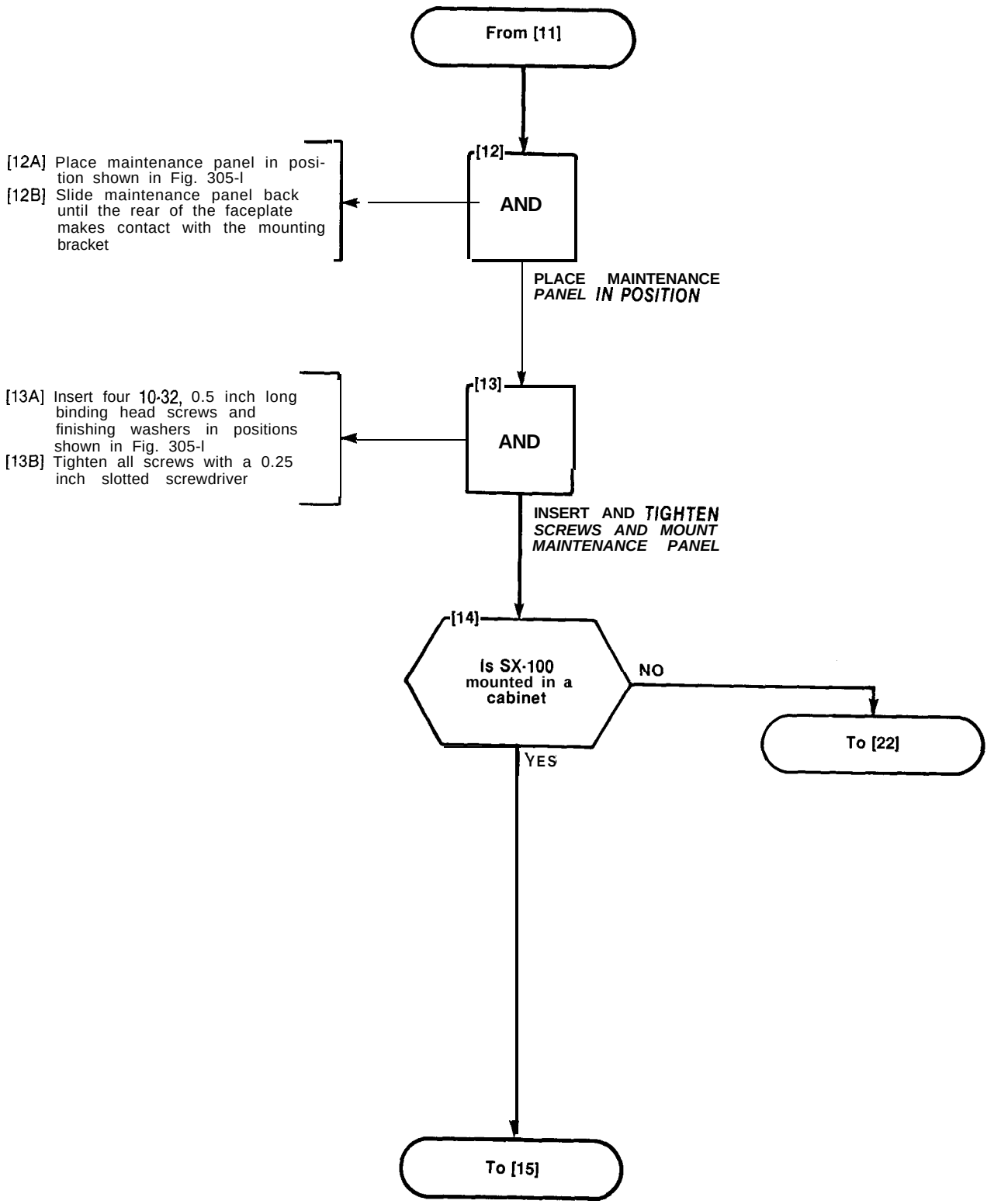

INSTALL EQUIPMENT
MAP200305
Issue 1, December 1979
Sheet 5 of 10

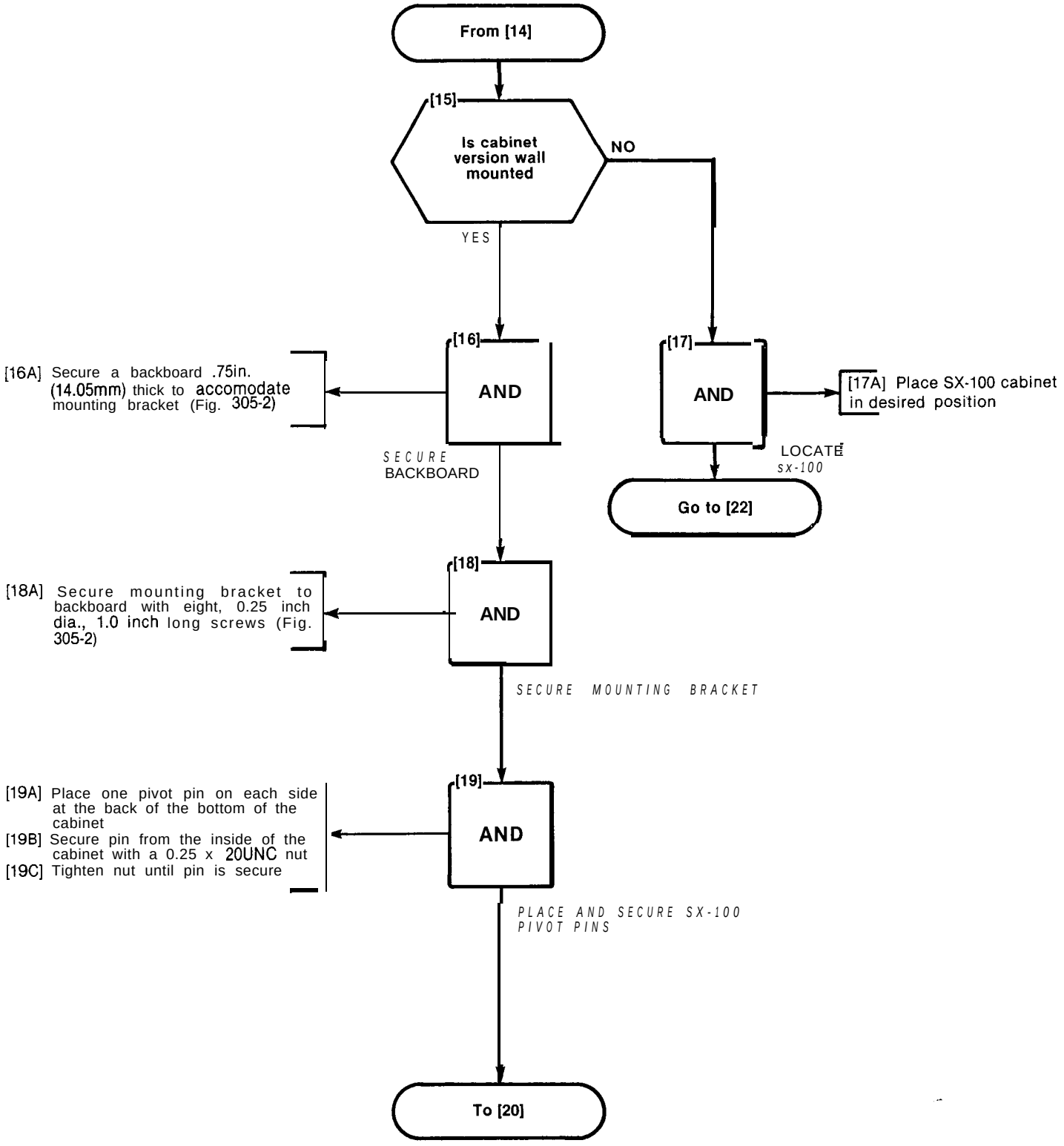

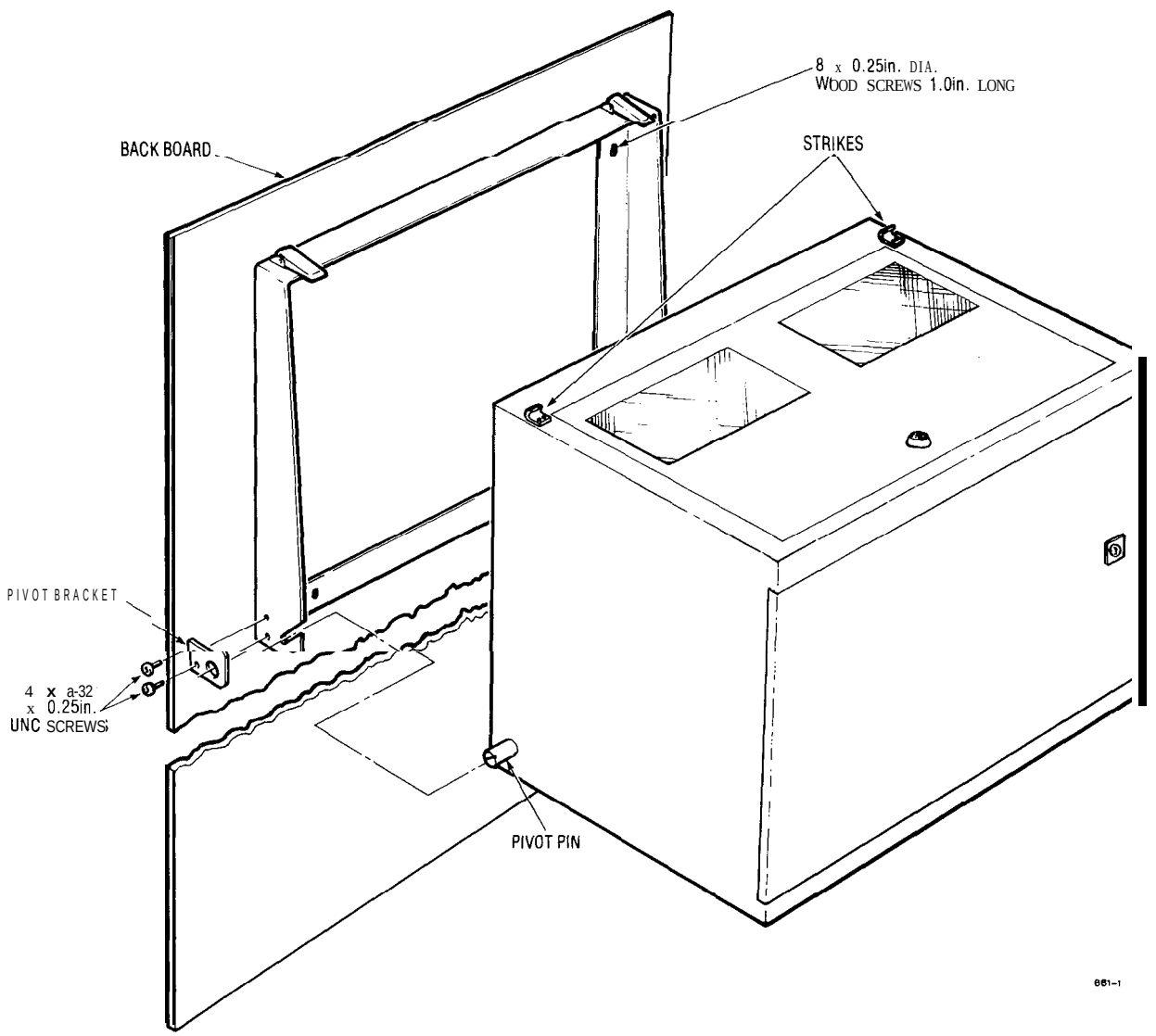

Fig. 305-2 Wall Mounting

INSTALL EQUIPMENT
MAP200-305
Issue 1, December 1979
Sheet 7 of 10

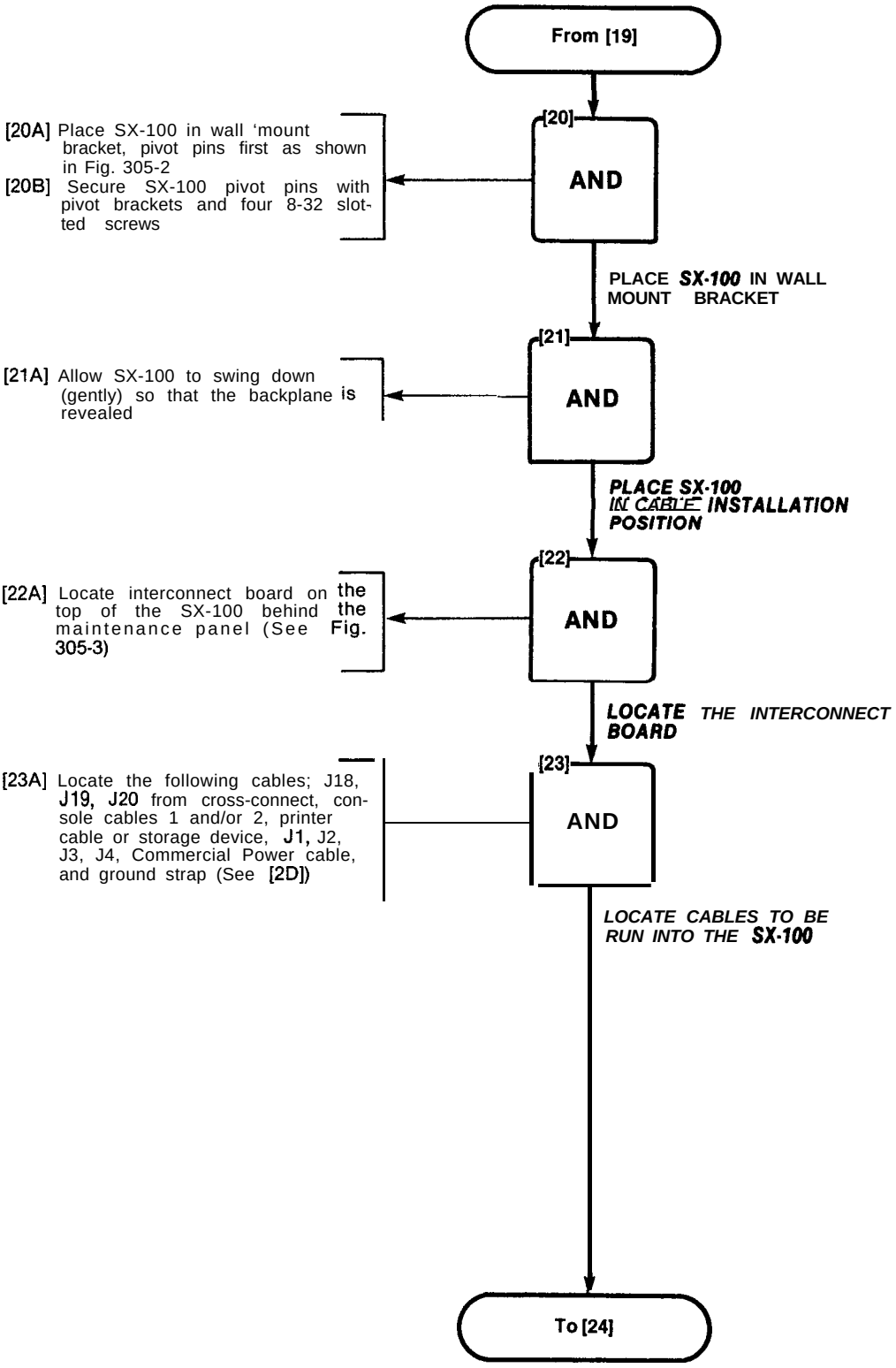

INSTALL EQUIPMENT
MAP200-305
Issue 1, December 1979
Sheet 8 of 10

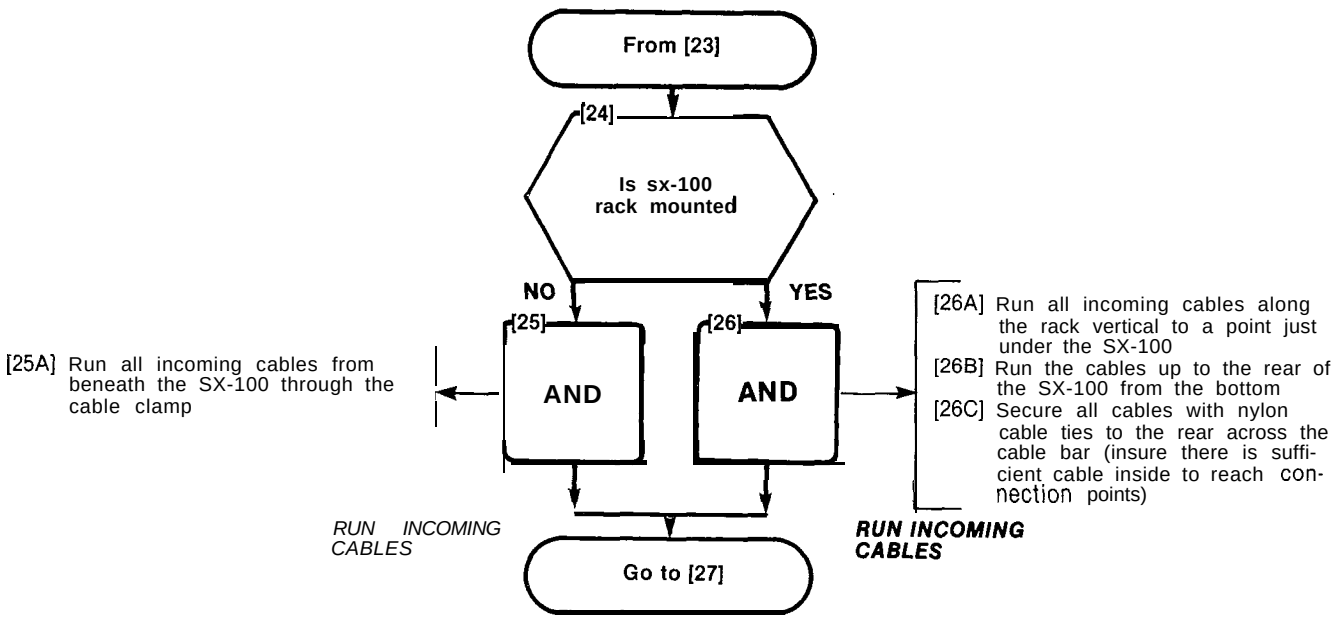

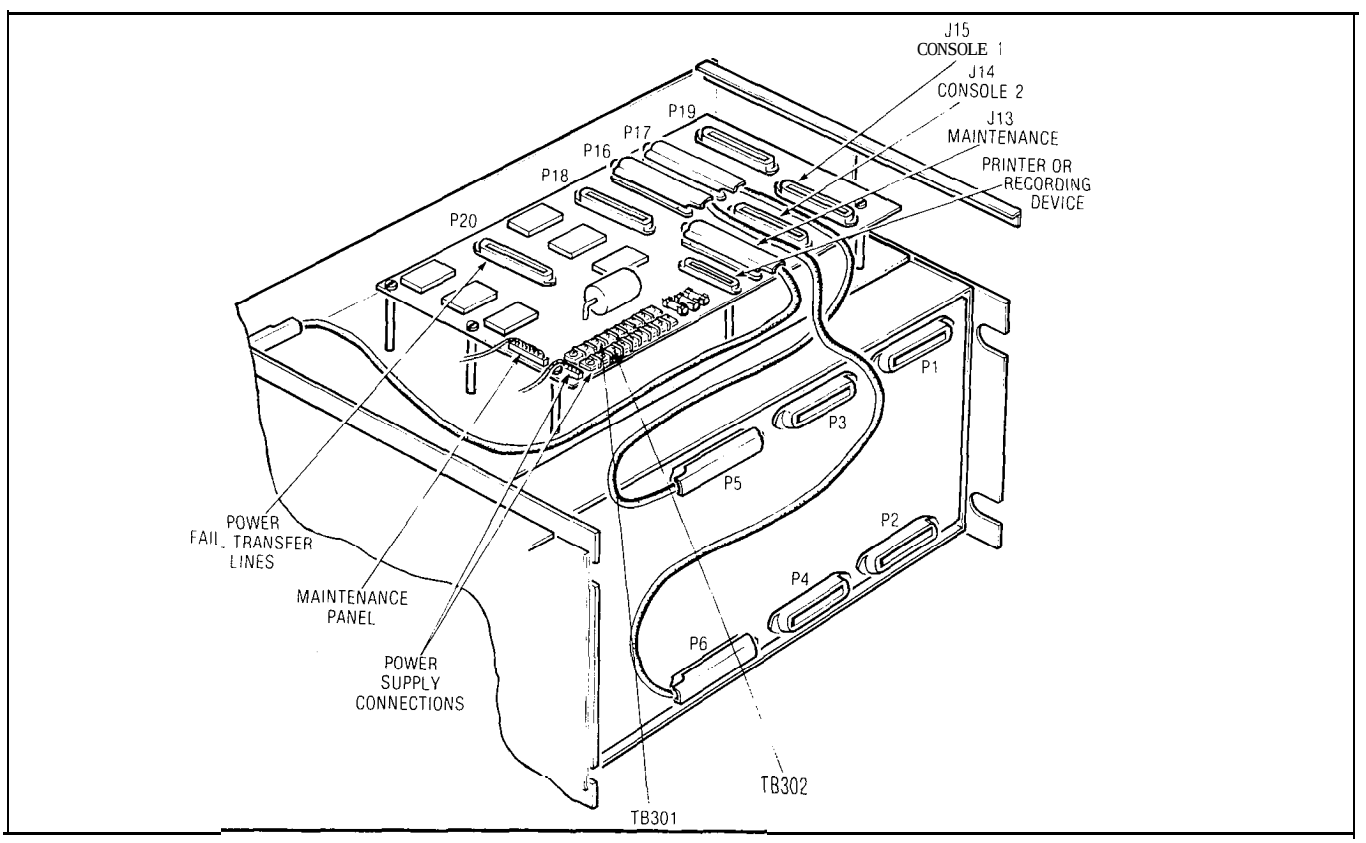

Fig. 305-3 Cable Connections

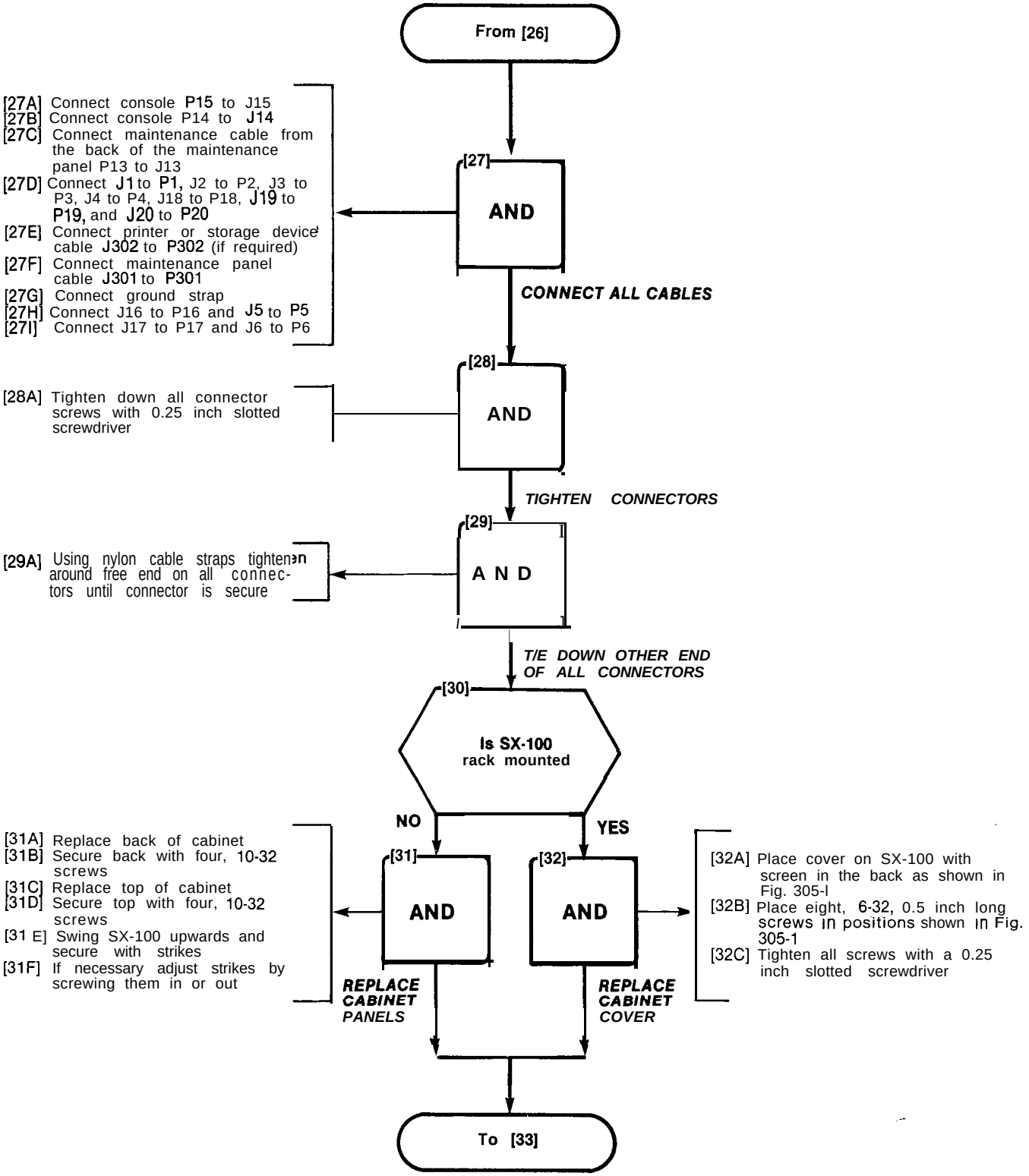
From [26]
[27A] Connect console P15 to J15
[27B] Connect console P14 to J14
[27C] Connect maintenance cable from the back of the maintenance panel P13 to J13
[27D] Connect J1 to P1, J2 to P2, J3 to P3, J4 to P4, J18 to P18, J19 to P19, and J20 to P20
[27E] Connect printer or storage device cable J302 to P302 (if required)
[27F] Connect maintenance panel cable J301 to P301
[27G] Connect ground strap
[27H] Connect J16 to P16 and J5 to P5
[27I] Connect J17 to P17 and J6 to P6
[27]
AND
CONNECT ALL CABLES
[28]
AND
[28A] Tighten down all connector screws with 0.25 inch slotted screwdriver
TIGHTEN CONNECTORS
[29]
AND
[29A] Using nylon cable straps tighten around free end on all connectors until connector is secure
T/E DOWN OTHER END OF ALL CONNECTORS
[30]
Is SX-100 rack mounted
NO
YES
[31]
AND
[31A] Replace back of cabinet
[31B] Secure back with four, 10-32 screws
[31C] Replace top of cabinet
[31D] Secure top with four, 10-32 screws
[31 E] Swing SX-100 upwards and secure with strikes
[31F] If necessary adjust strikes by screwing them in or out
REPLACE CABINET PANELS
[32]
AND
[32A] Place cover on SX-100 with screen in the back as shown in Fig. 305-l
[32B] Place eight, 6-32, 0.5 inch long screws in positions shown in Fig. 305-1
[32C] Tighten all screws with a 0.25 inch slotted screwdriver
REPLACE CABINET COVER
To [33]

INSTALL EQUIPMENT
MAP200-305
Issue 1, December 1979
Sheet 10 of 10

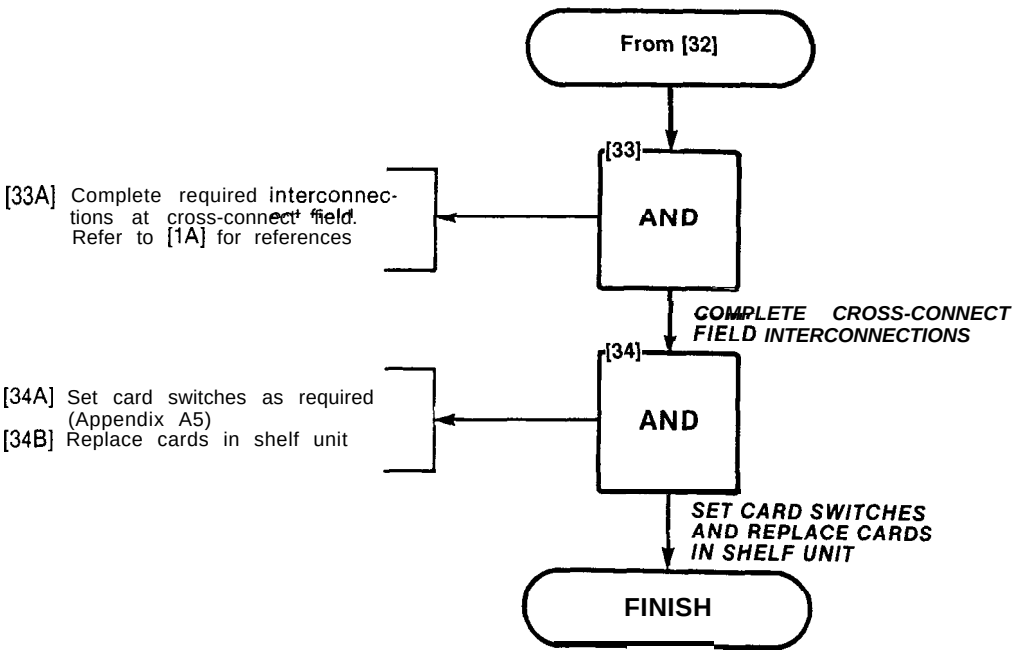

The setting of switches, to result in the required mode of operation on the Trunk Cards is detailed in the MAP's contained in Appendix A-5. The installer should ensure that these cards are properly switched for the correct mode of operation prior to performing "Power-Up" as detailed in MAP200-307.

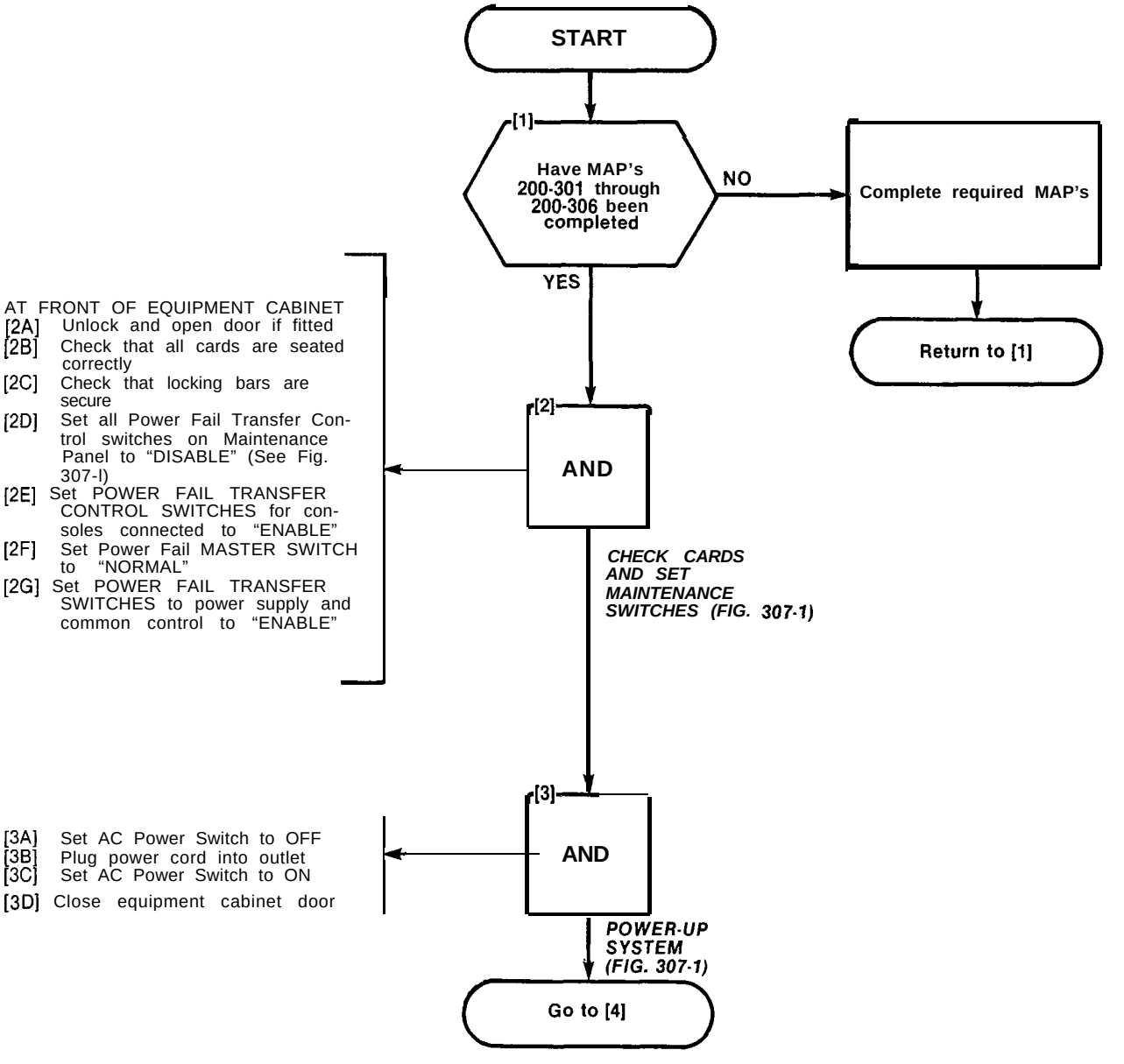
START
[1]
Have MAP's 200-301 through 200-306 been completed
NO
Complete required MAP's
Return to [1]
YES
AT FRONT OF EQUIPMENT CABINET
[2A] Unlock and open door if fitted
[2B] Check that all cards are seated correctly
[2C] Check that locking bars are secure
[2D] Set all Power Fail Transfer Control switches on Maintenance Panel to "DISABLE" (See Fig. 307-I)
[2E] Set POWER FAIL TRANSFER CONTROL SWITCHES for consoles connected to "ENABLE"
[2F] Set Power Fail MASTER SWITCH to "NORMAL"
[2G] Set POWER FAIL TRANSFER SWITCHES to power supply and common control to "ENABLE"
[2]
AND
CHECK CARDS AND SET MAINTENANCE SWITCHES (FIG. 307-1)
[3]
AND
[3A] Set AC Power Switch to OFF
[3B] Plug power cord into outlet
[3C] Set AC Power Switch to ON
[3D] Close equipment cabinet door
POWER-UP SYSTEM (FIG. 307-1)
Go to [4]

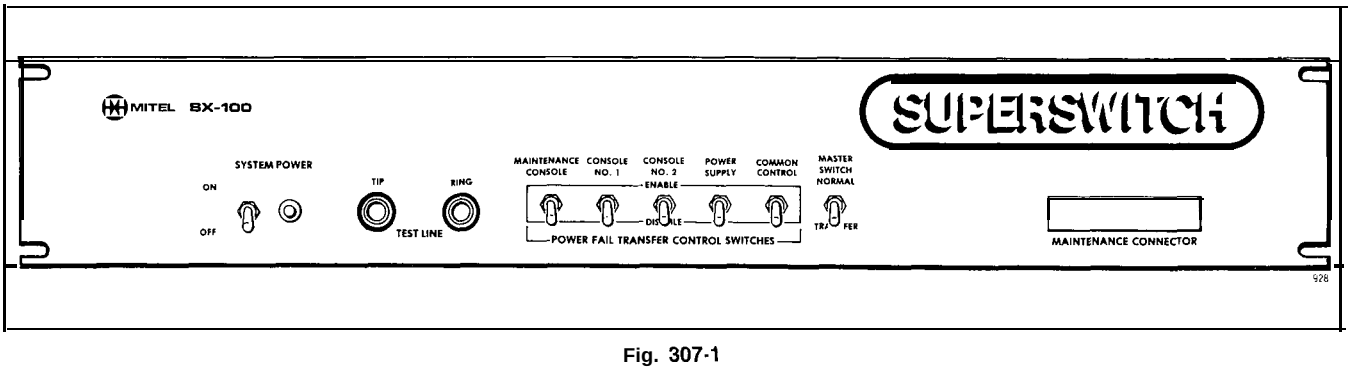
MITEL SX-100
SUPERSWITCH
SYSTEM POWER
ON
OFF
TIP
RING
TEST LINE
MAINTENANCE CONSOLE
CONSOLE NO. 1
CONSOLE NO. 2
POWER SUPPLY
COMMON CONTROL
MASTER SWITCH NORMAL
ENABLE
DISABLE
TRANSFER
POWER FAIL TRANSFER CONTROL SWITCHES
MAINTENANCE CONNECTOR
928

Fig. 307-1

POWER-UP SYSTEM
MAP200-307
Issue 1, December 1979
Sheet 2 of 2

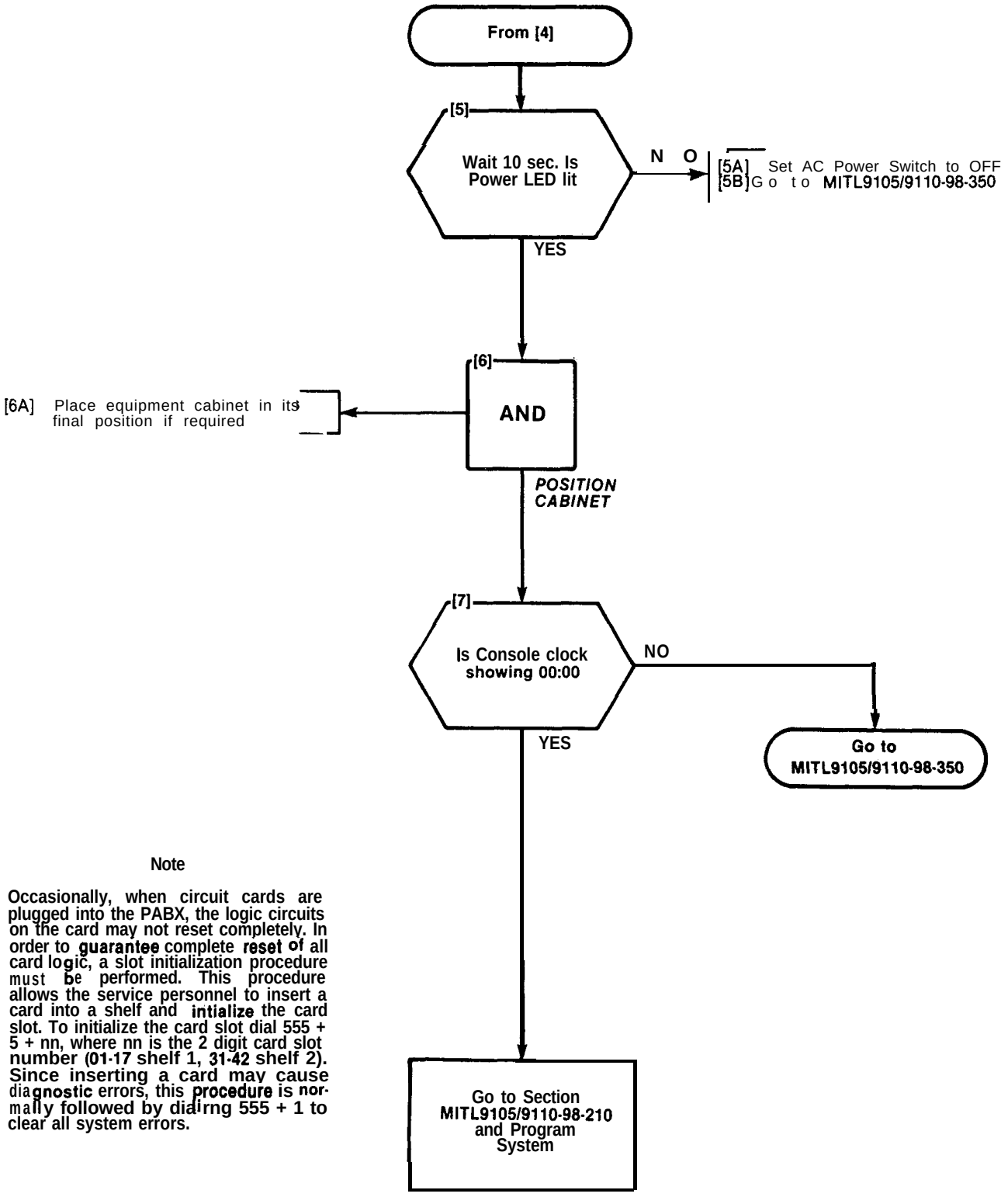

Note

Occasionally, when circuit cards are plugged into the PABX, the logic circuits on the card may not reset completely. In order to guarantee complete reset of all card logic, a slot initialization procedure must be performed. This procedure allows the service personnel to insert a card into a shelf and intialize the card slot. To initialize the card slot dial 555 + 5 + nn, where nn is the 2 digit card slot number (01-17 shelf 1, 31-42 shelf 2). Since inserting a card may cause diagnostic errors, this procedure is normally followed by dialrng 555 + 1 to clear all system errors.

APPENDIX 4
SX-200 INSTALLATION PROCEDURES

1. General

A4.01 The following Table A4-1 details the procedures to be performed to complete the installation of an SX-200 PABX.

TABLE A4-1
SX-200 INSTALLATION

Step	Procedure	Reference
1	Unpack Equipment Cabinet	MAP200-401
2	Unpack Consoles	MAP200-402
3	Install Console Faceplate Designation	MAP200-403
4	Inspect Equipment	MAP200-404
5	Connect Cables	MA P200-405
6	Set Card Switches (Appendix 5)	MAP200-406
7	Power-Up System (See Note)	MAP200-407
8	Program System	Section MITL9105/9110-98-210
9	Perform System Tests	Section MITL9105/9110-98-205

Note: Appendix 6 lists miscellaneous installation requirements which may be required prior to power-up of system. This appendix should be reviewed for applicability.

UNPACK EQUIPMENT CABINET

MAP200-401

issue 1, January 1980

Sheet 1 of 3

TOOLS REQUIRED
1. Set of strap cutters

START

WARNING
Gloves must be worn when unpacking equipment cabinet.

[1]
AND

[1A] Cut and remove retaining straps
[1B] Open tri wall outer sleeve
[1C] Remove inner tri wall sleeve

REMOVE EXTERNAL PACKING (FIG. 401-1)

[2]
AND

[2A] Position equipment so that approx. ten inches of cabinet overhangs shipping pallet (Fig. 401-2)
[2B] Tip equipment so that rear of cabinet touches floor
[2C] Remove shipping pallet from under cabinet
[2D] Gently lower cabinet onto floor

REMOVE SHIPPING PALLET (FIG. 401-2)

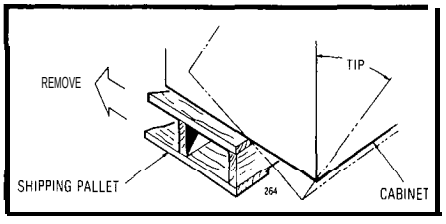

Fig. 401-2

[3]
AND

[3A] Push cabinet to its required location

CAUTION
Care must be taken while moving cabinet to avoid damage.

[3B] Position cabinet as shown in Fig. 401-3
[3C] Remove plastic sheet from cabinet

POSITION CABINET (FIG. 401-3)

[4]
Was equipment properly packaged and undamaged

NO **YES**

[5]
AND

[5A] Complete relevant entries on Damage Report Form

COMPLETE DAMAGE REPORT

FINISH

UNPACK EQUIPMENT CABINET
MAP200-401
Issue 1, January 1980
Sheet 2 of 3

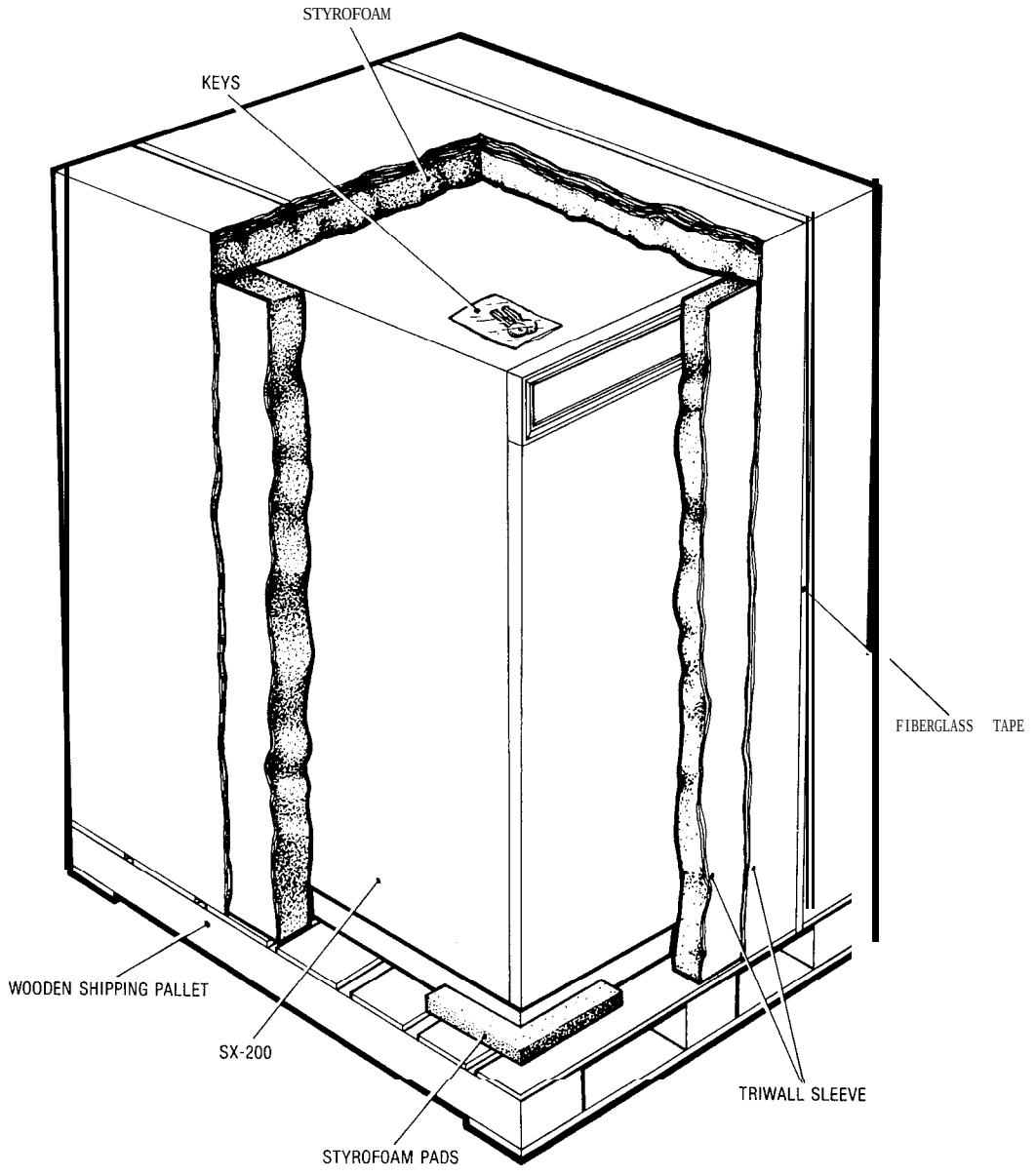

Fig. 401-l

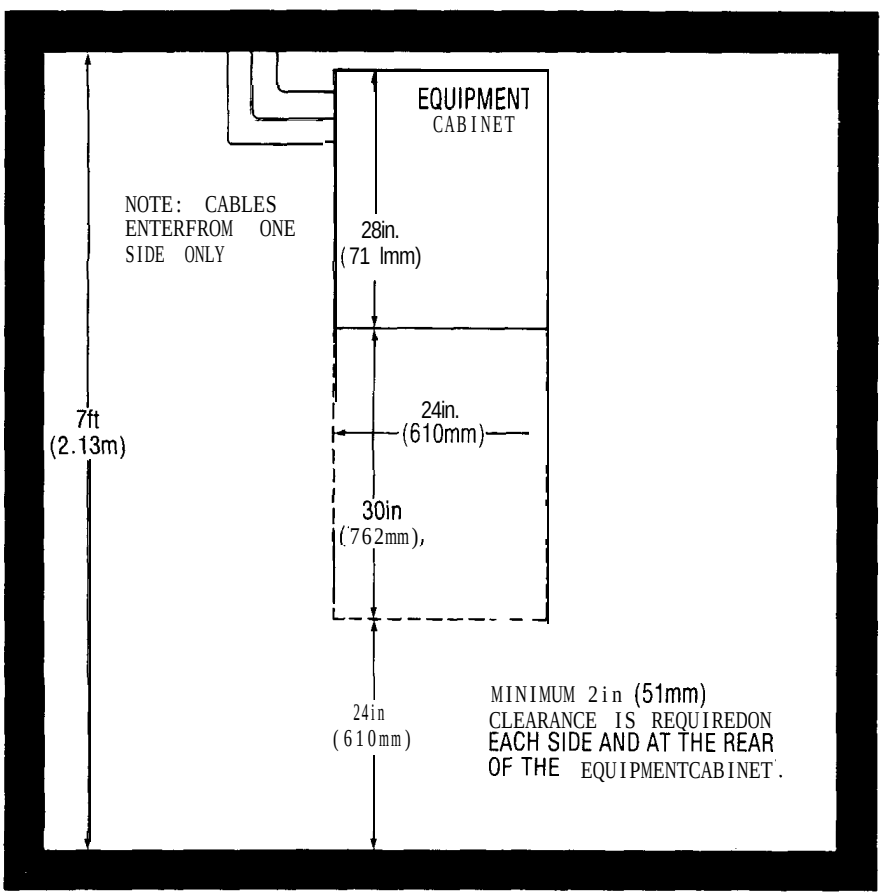
EQUIPMENT
CABINET
NOTE: CABLES
ENTERFROM ONE
SIDE ONLY
28in.
(71 lmm)
7ft
(2.13m)
24in.
(610mm)
30in
(762mm),
24in
(610mm)
MINIMUM 2in (51mm)
CLEARANCE IS REQUIREDON
EACH SIDE AND AT THE REAR
OF THE EQUIPMENTCABINET.
257-1

Fig. 401-3

UNPACK CONSOLES
MAP200-402
issue 1, January 1980
Sheet 1 of 3

TOOLS REQUIRED
1 Screwdriver ¼ inch blade

START

At Console Location

[1A] Remove fiberglass tape from top of packing case
[1B] Open packing case and remove foam sheet
[1C] Remove foam inserts from ends of console (if installed)
[1D] Remove console accessory bag from insert
[1E] Remove console from packing case
[1F] Remove polyethylene sheet from console
[1G] Place all packing materials in packing case for use in reshipment

[1] AND

UNPACK CONSOLE

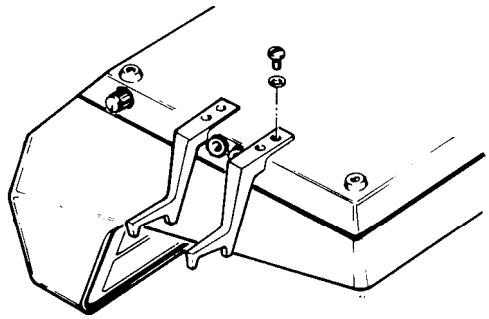

Fig. 402-I

[2A] Remove the two cradle hooks and four panhead screws from accessory bag
[2B] Place console face down on desk top
[2C] Position one cradle hook as shown in Fig. 402-I. (Cradle hook may be placed at other end of console if preferred)
[2D] Attach cradle hook to console using two panhead screws
[2E] Position remaining cradle hook (Fig. 402-I)
[2F] Attach cradle hook to console with two panhead screws

[2] AND

INSTALL CRADLE HOOKS (FIG. 402-1)

[3A] Remove the four screws securing the connector cover plate (Fig. 402-2)
[3B] Remove connector cover plate

[3] AND

REMOVE CONNECTOR COVER PLATE (FIG. 402-2)

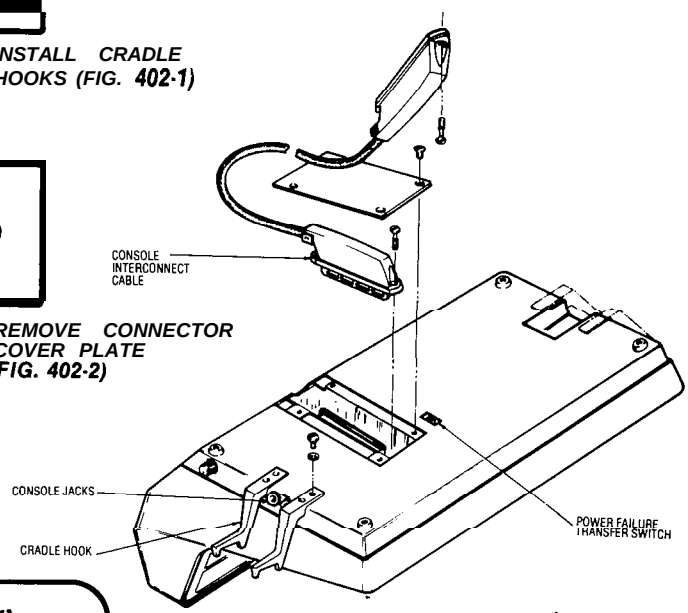

Fig. 402-2

Go to [4]

UNPACK CONSOLES
MAP200-402
Issue 1, January 1980
Sheet 2 of 3

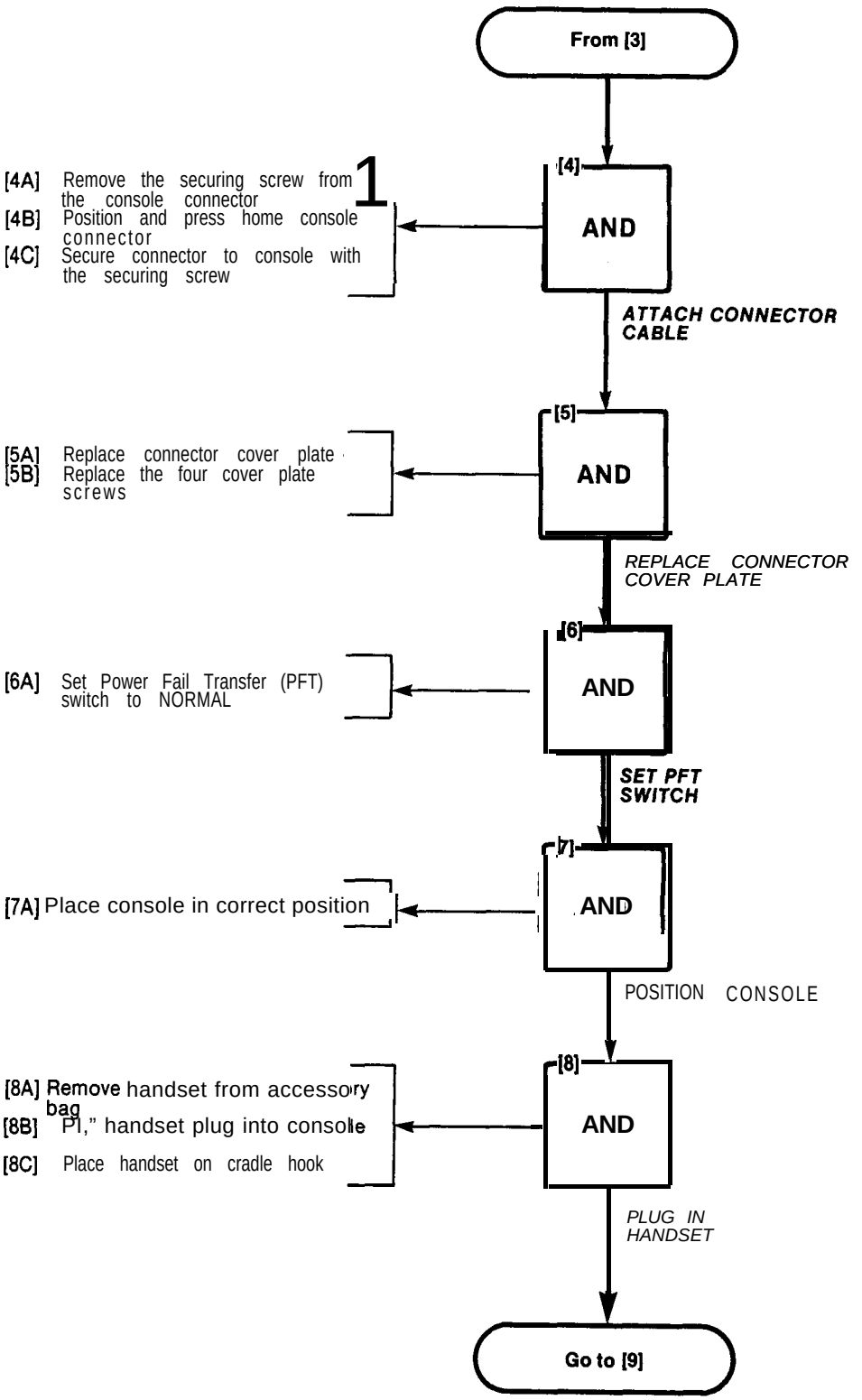

UNPACK CONSOLES
MAP200-402
Issue 1, January 1980
Sheet 3 of 3

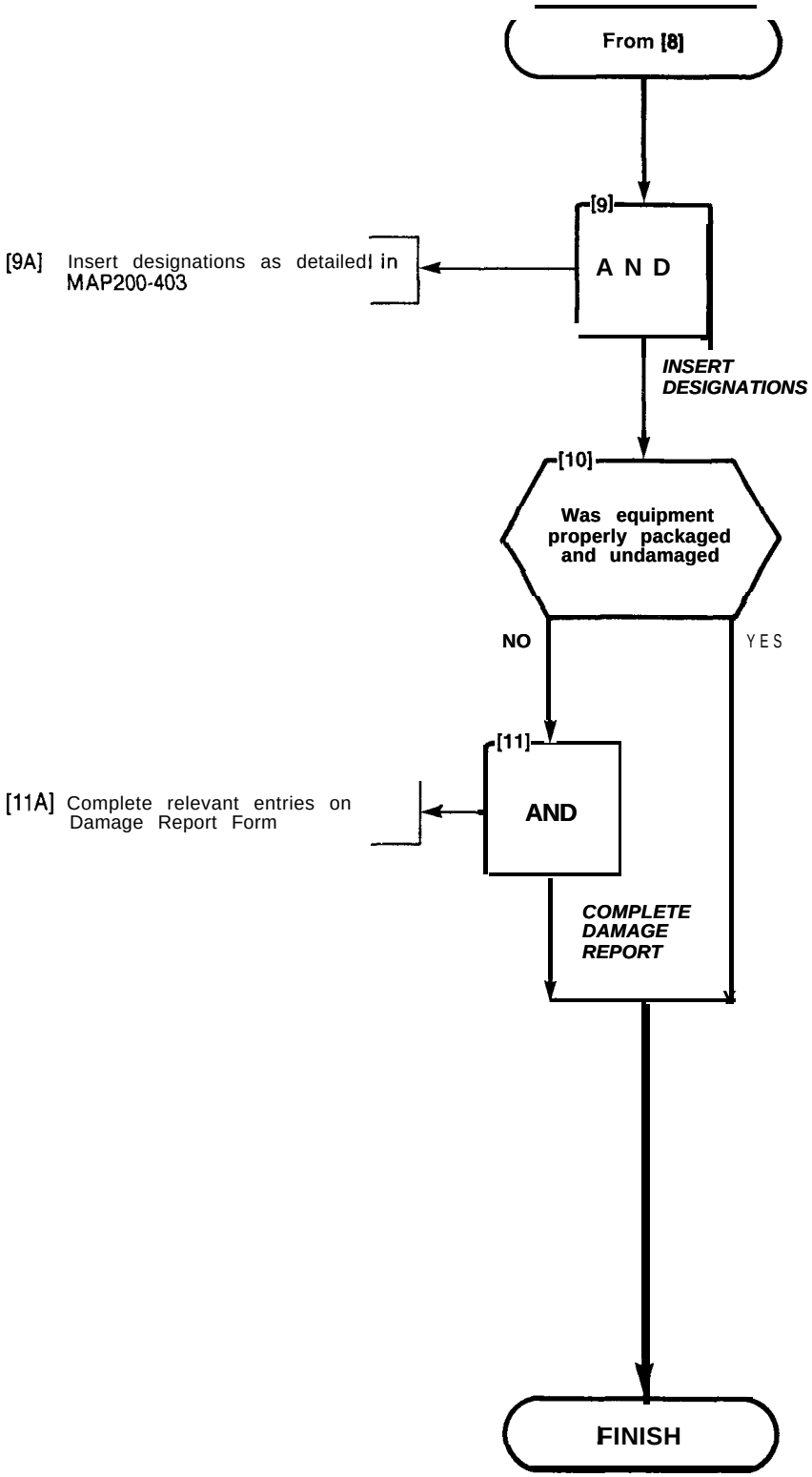

INSTALL CONSOLE FACEPLATE DESIGNATIONS
MAP200-403
Issue 1, January 1980
Sheet 1 of 4

START

[1] AND

[1A] Grasp key cap and pull upward from key
[1B] Remove key designation tab

REMOVE KEY CAP

[2] AND

[2A] Check required console layout (Figs 403-1, -2 or -3)
[2B] Push out required designation tab from designation sheet
[2C] Place designation tab on top of key

INSERT DESIGNATION TAB (FIGS 403-1, -2 OR -3)

[3] AND

[3A] Place key cap over key checking that locking tabs are lined up correctly. (Fig. 403-4)
[3B] Push down on key top

REPLACE KEY CAP (FIG. 403-4)

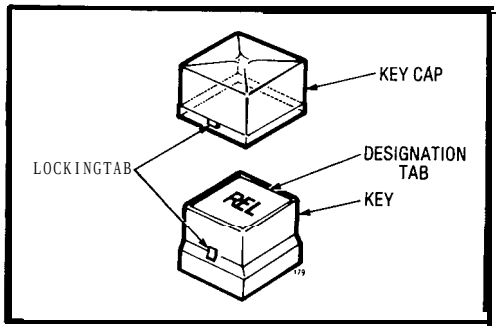

Fig. 403-4

[4] Have all designation tabs been inserted

NO → Return to [1]

YES → To [5]

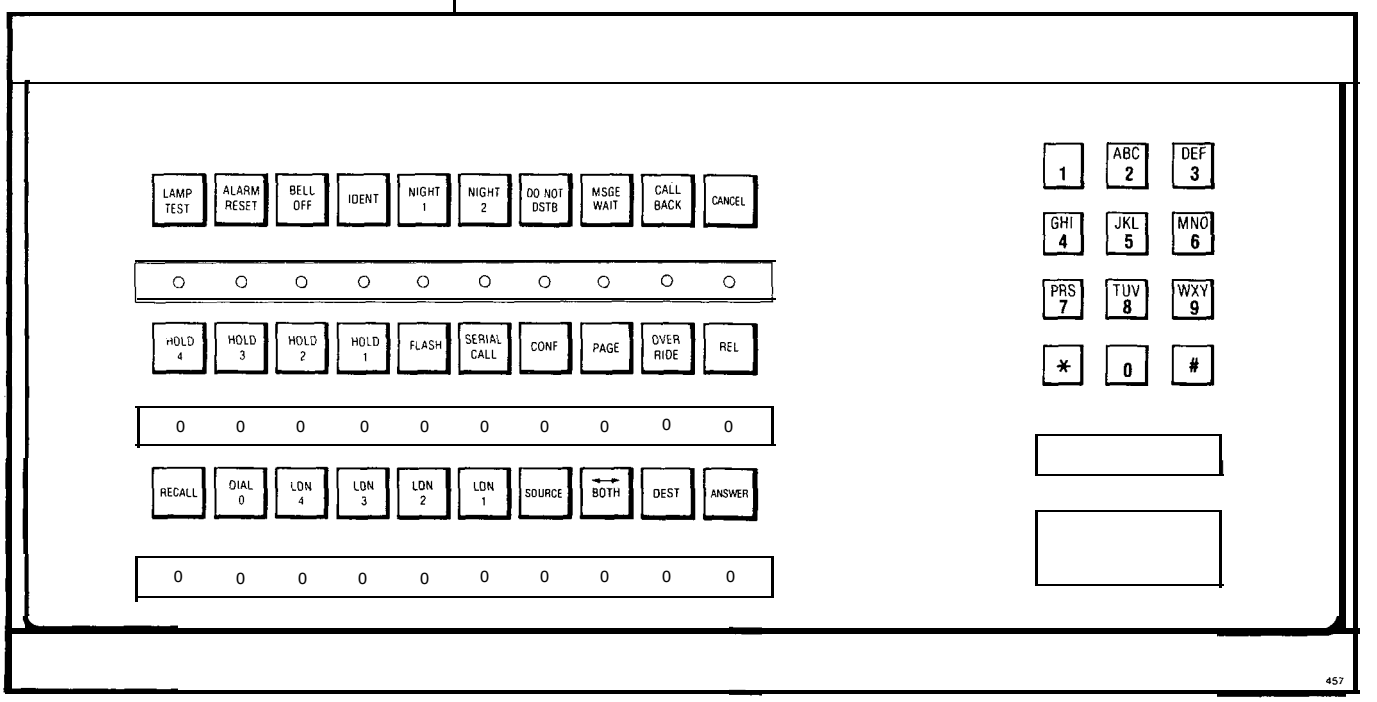

Fig. 403-I Commercial

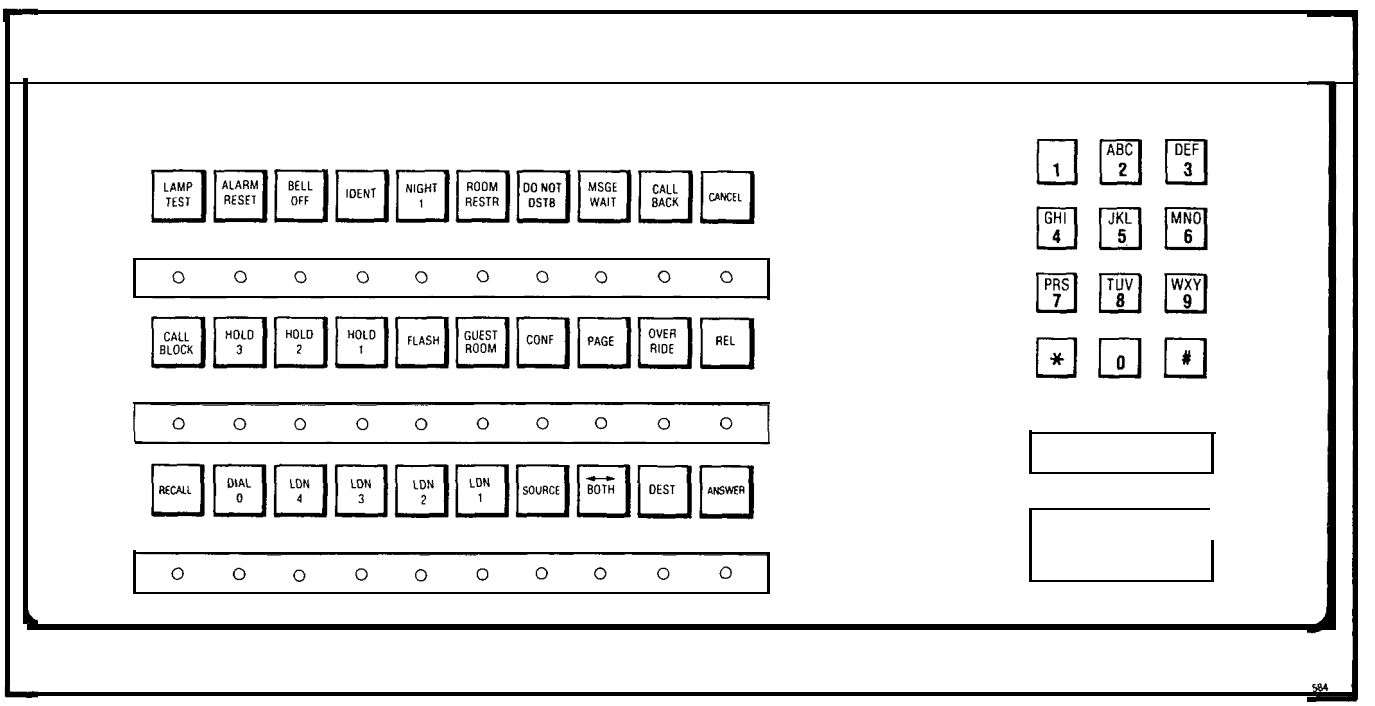

Fig. 403-2 Hotel/Motel

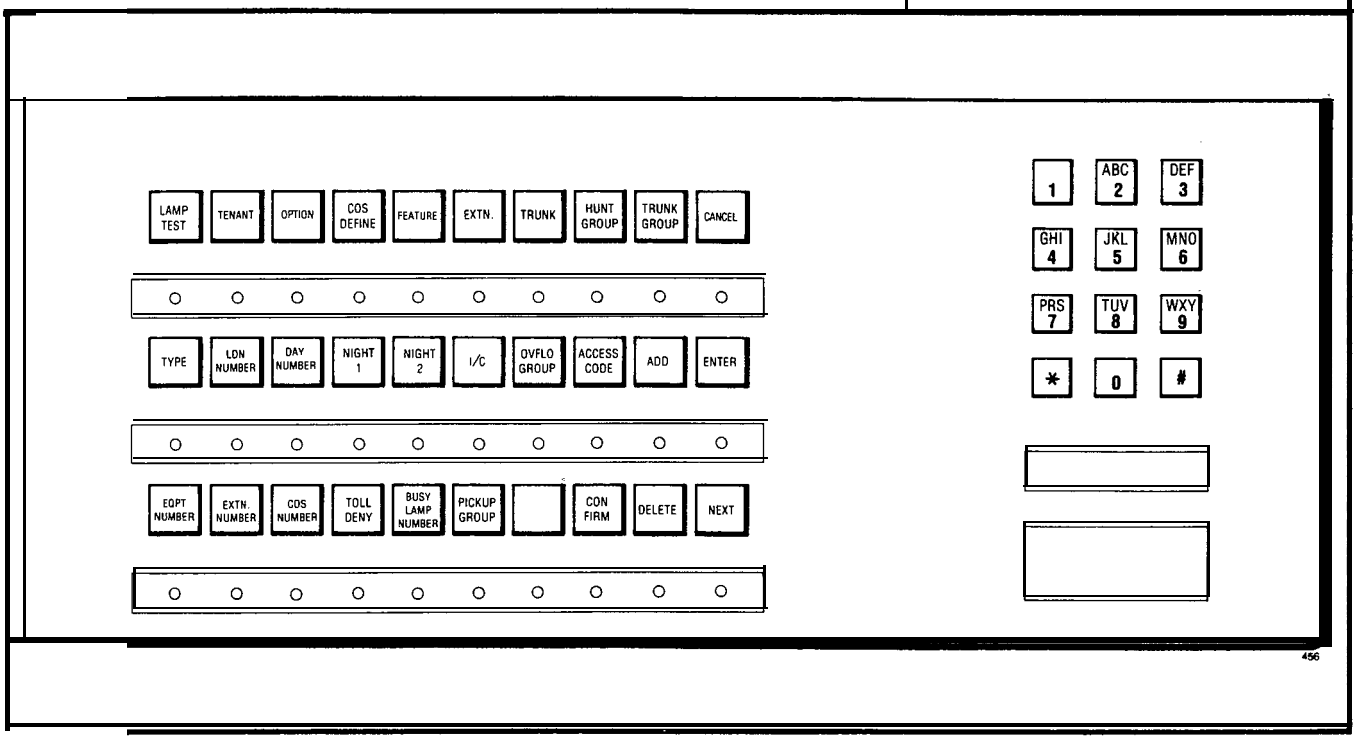

Fig. 403-3 Programming

INSTALL CONSOLE FACEPLATE DESIGNATIONS
MAP200-403
Issue 1, January 1980
Sheet 4 of 4

From [4]

[5] Are the busy lamp field designations to be inserted

NO → FINISH

YES

[6] AND

[6A] Remove the two faceplate securing screws (Fig. 403-5)
[6B] Insert screwdriver blade into faceplate cutout (Fig. 403-5)
[6C] Move screwdriver to the vertical position
[6D] Slide screwdriver to opposite end of console
[6E] Remove console faceplate

REMOVE CONSOLE FACEPLATE (FIG. 403-5)

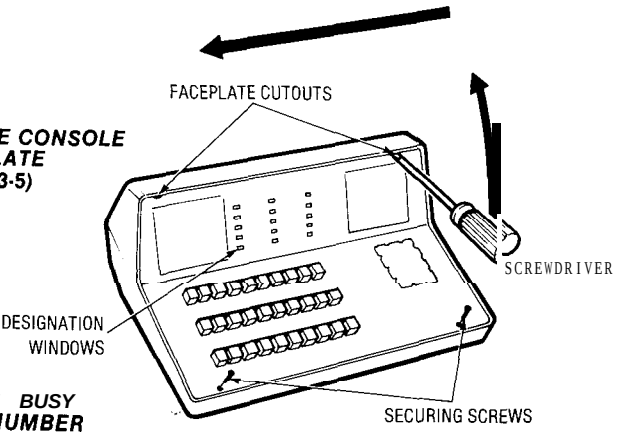

Fig. 403-5

[7] AND

[7A] Cut required busy lamp numbers from designation sheet
[7B] Position number so that it will be seen clearly through busy lamp field window (Fig. 403-5)
[7C] Press number firmly in place

ATTACH BUSY LAMP NUMBER

[8] Have all Busy Lamp Field designations been attached

NO → Return to [7]

YES

[9] AND

[9A] Place bottom edge of faceplate against console lip
[9B] Place faceplate over keys
[9C] Press down firmly on console faceplate and press one corner under the top edge of the console housing as shown in Fig. 403-6
[9D] Continuing the downward pressure, press the remainder of top edge of the faceplate under the housing lip
[9E] Replace the two faceplate screws

REPLACE CONSOLE FACEPLATE (FIG. 403-6)

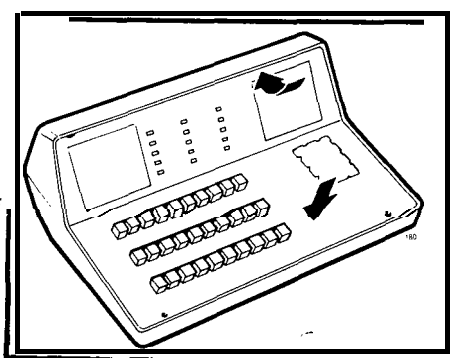

Fig. 403-6

FINISH

INSPECT EQUIPMENT
MAP200-404
Issue 1, January 1980
Sheet 1 of 4

TOOLS REQUIRED

1 Slot Screwdriver - 1/4 in.
1 Slot Screwdriver - 3/8 in.
1 Phillips Screwdriver #2

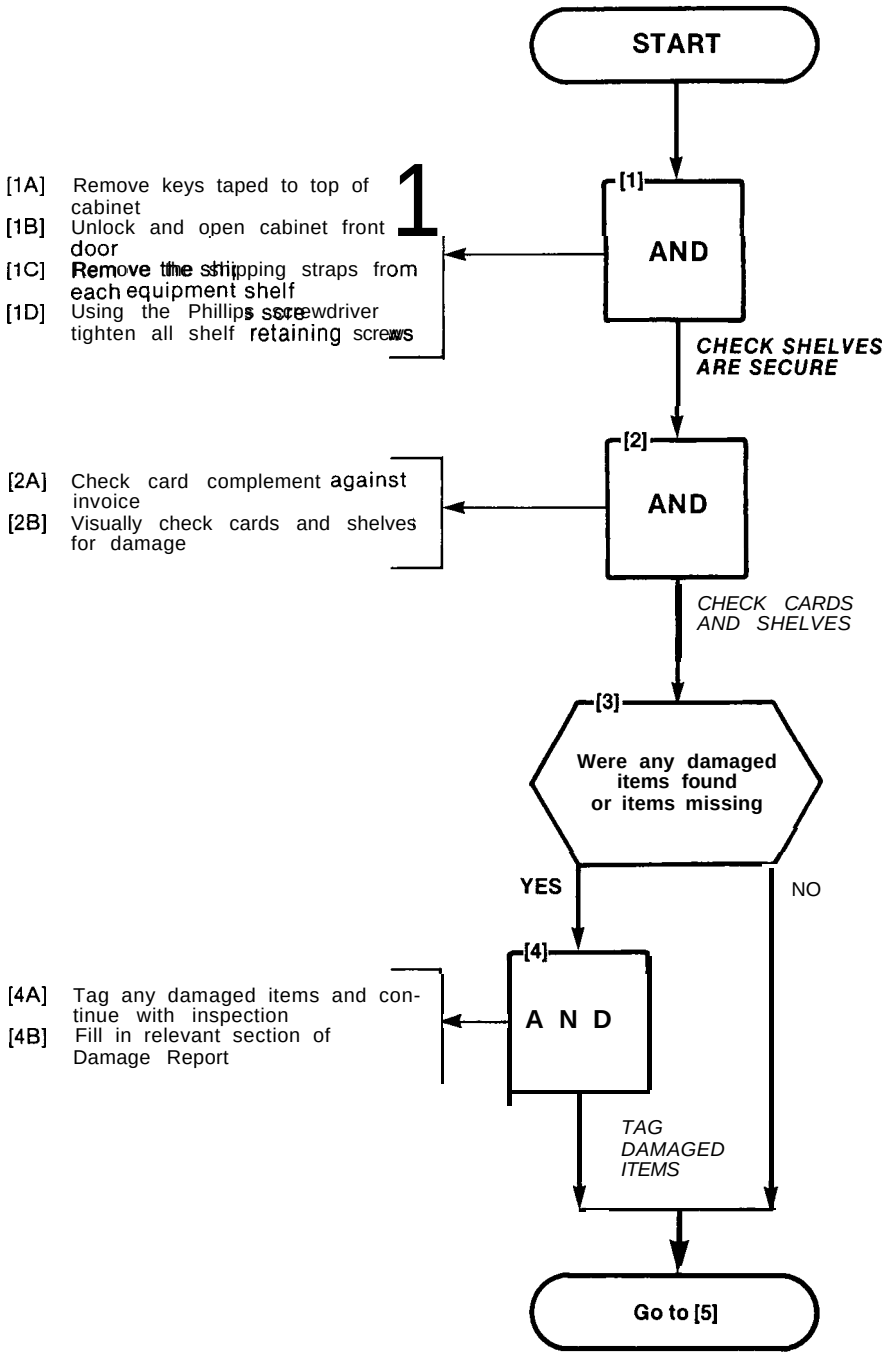

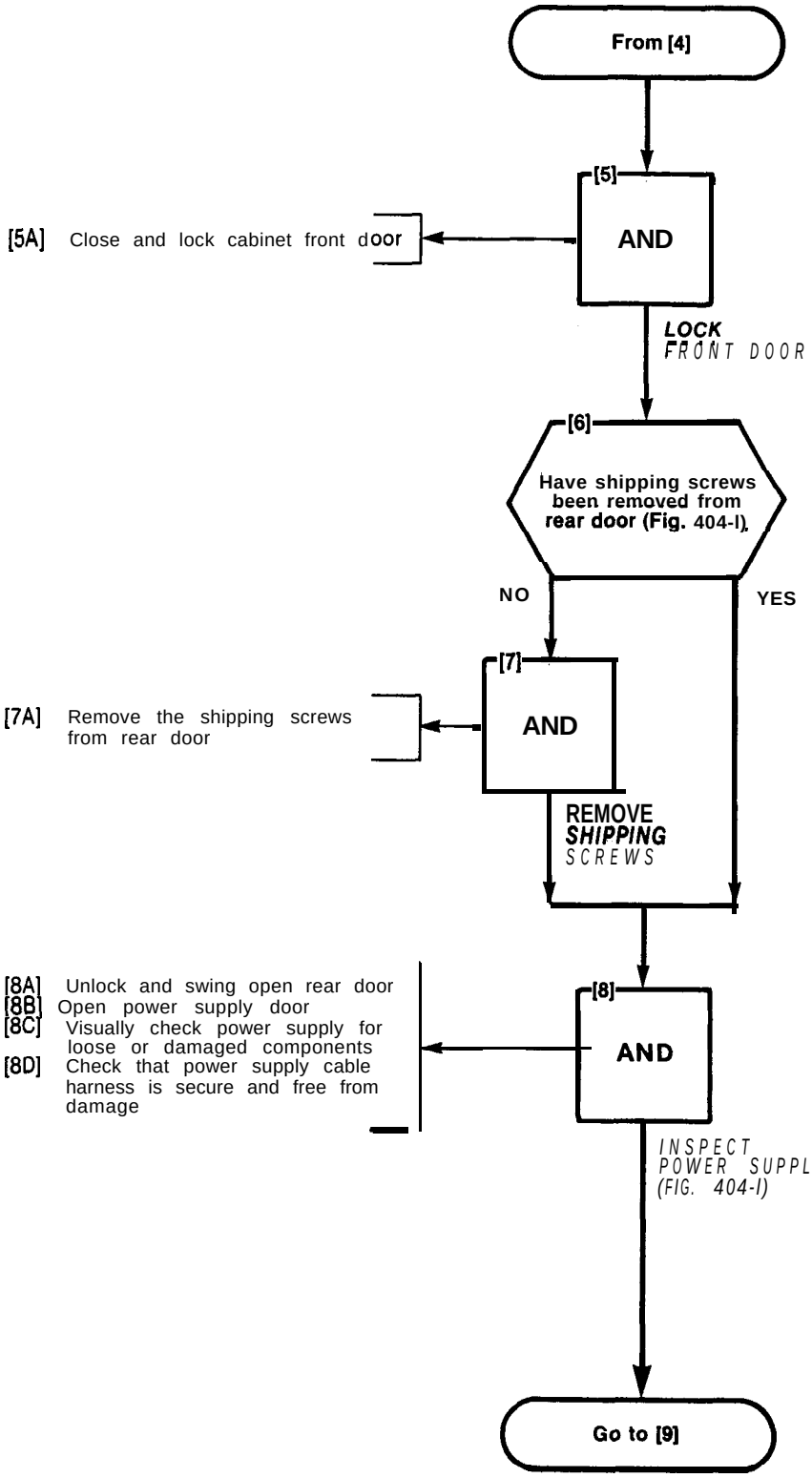
From [4]
[5]
AND
[5A] Close and lock cabinet front door
LOCK FRONT DOOR
[6]
Have shipping screws been removed from rear door (Fig. 404-I)
NO
YES
[7]
AND
[7A] Remove the shipping screws from rear door
REMOVE SHIPPING SCREWS
[8]
AND
[8A] Unlock and swing open rear door
[8B] Open power supply door
[8C] Visually check power supply for loose or damaged components
[8D] Check that power supply cable harness is secure and free from damage
INSPECT POWER SUPPLY (FIG. 404-I)
Go to [9]

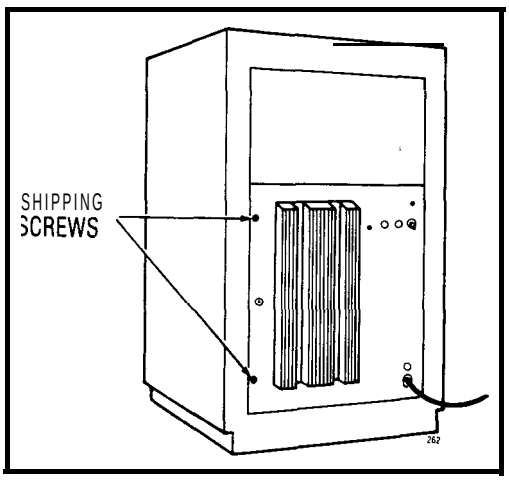
SHIPPING SCREWS
262

Fig. 401-I

INSPECT EQUIPMENT
MAP200-404
Issue 1, January 1980
Sheet 3 of 4

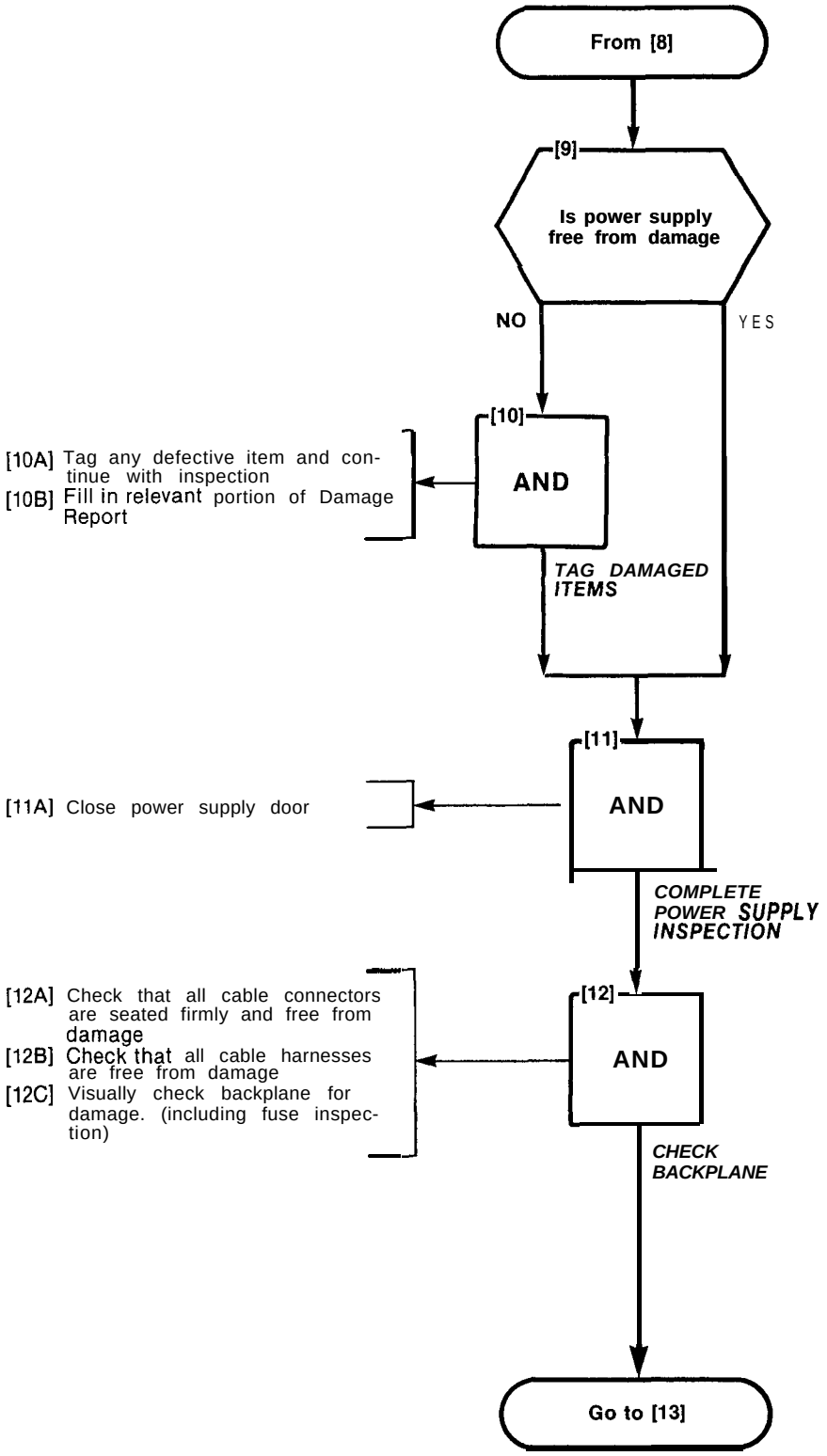

INSPECT EQUIPMENT
MAP200-404
Issue 1, January 1960
Sheet 4 of 4

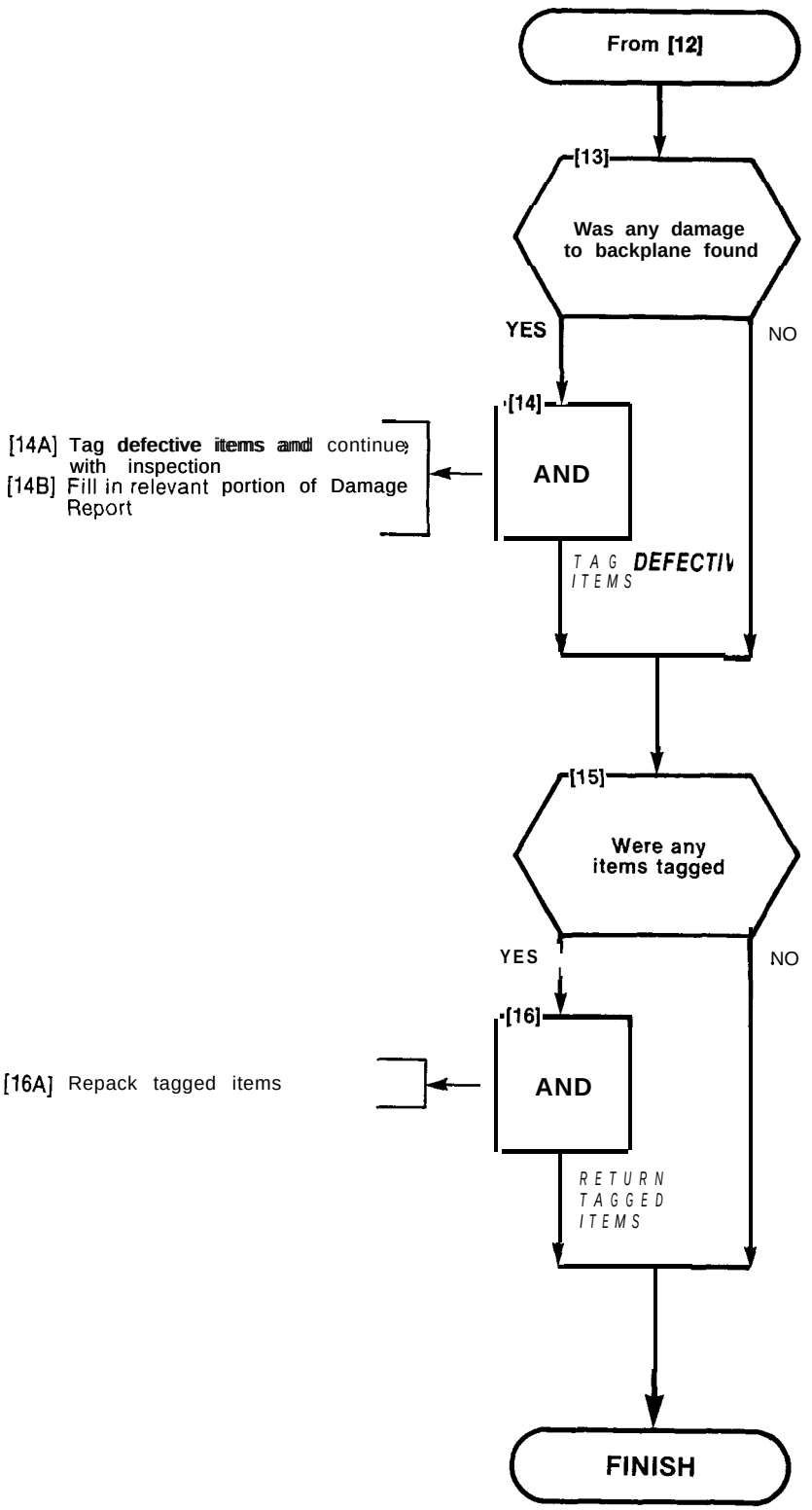

CONNECT CABLES
MAP200-405
Issue 1, January 1980
Sheet 1 of 3

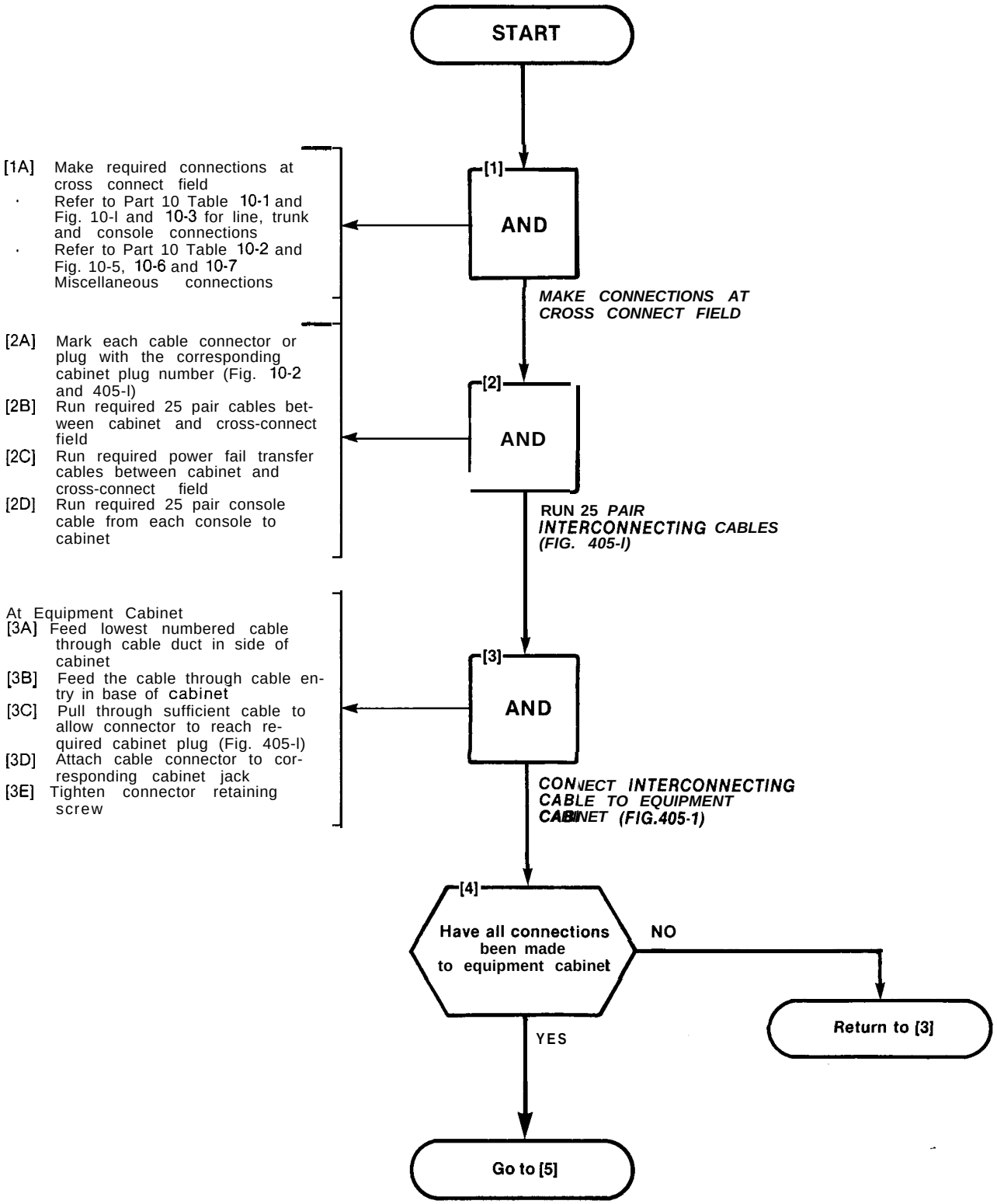

CONNECT CABLES
MAP200-405
Issue 1, January 1980
Sheet 2 of 3

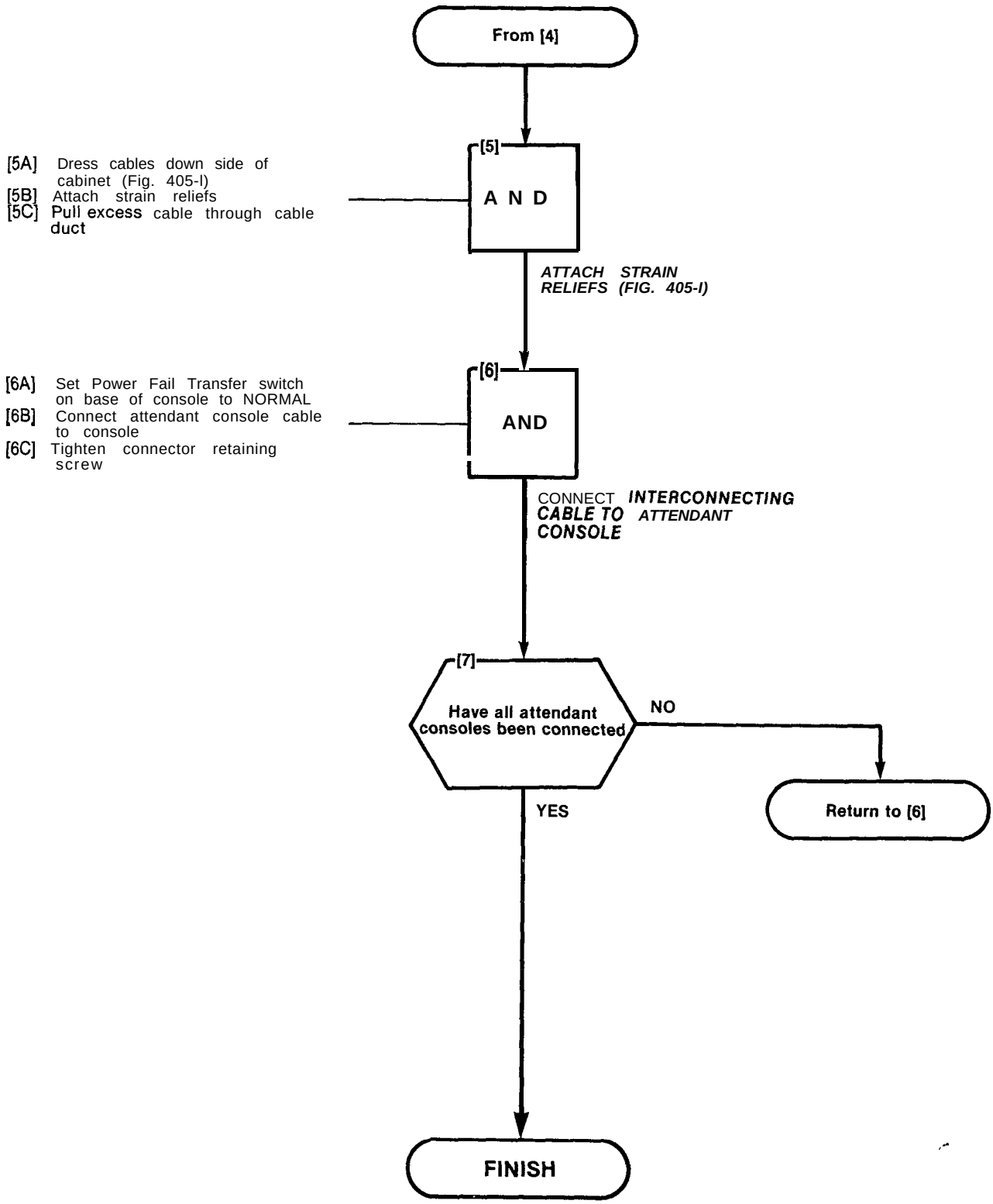

CONNECT CABLES
MAP200-405
Issue 1, January 1980
Sheet 3 of 3

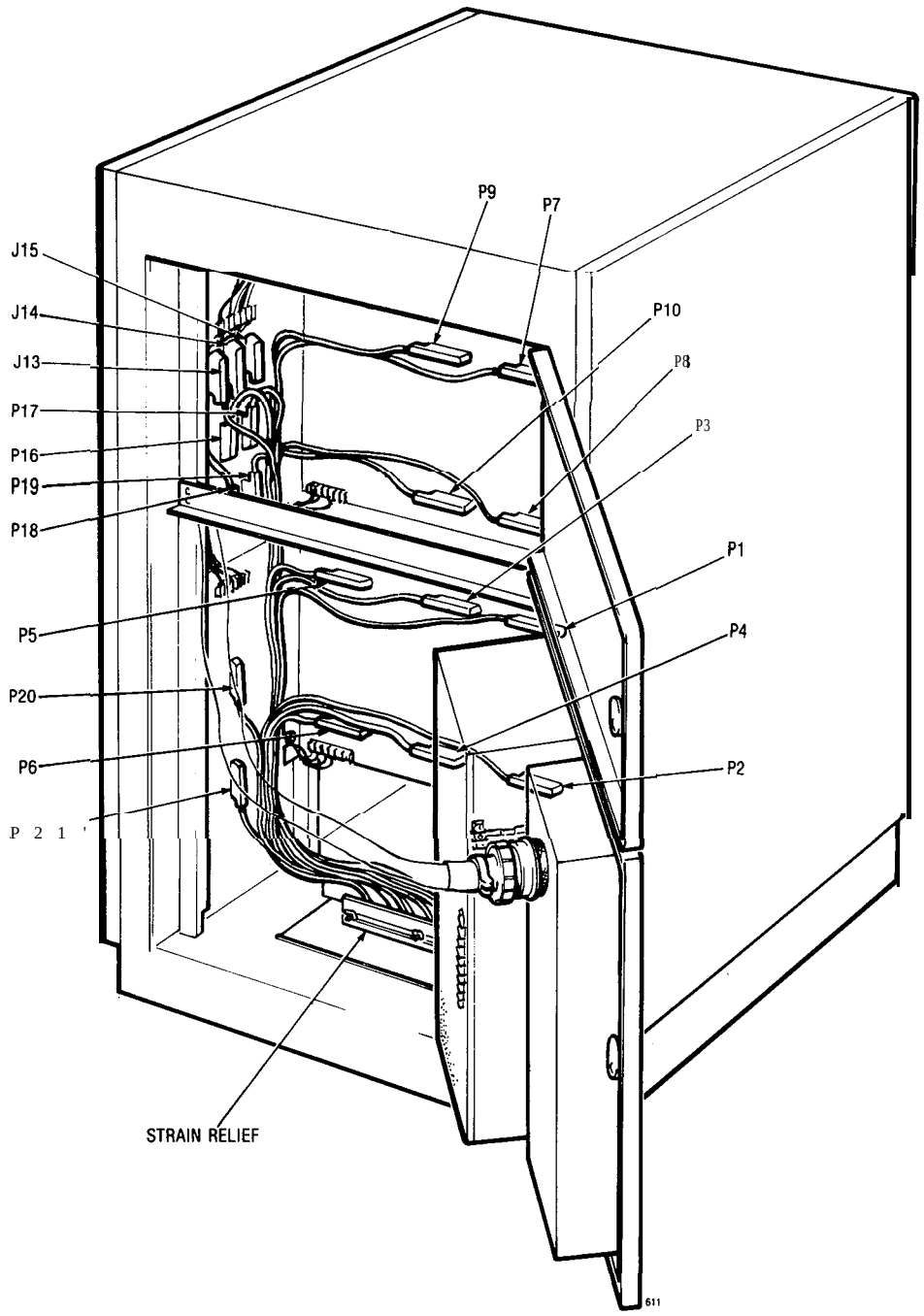

Fig. 405-1

SET CARD SWITCHES
MAP200-406
Issue 1, January 1980
Sheet 1 of 1

The setting of switches, to result in the required mode of operation on the Trunk Cards is detailed in the MAP's contained in Appendix A-5. The installer should ensure that these cards are properly switched for the correct mode of operation prior to performing "Power-Up" as detailed in MAP200-407.

POWER-UP SYSTEM
MAP200-407
Issue 1, January 1980
Sheet 1 of 3

START

[1] Have MAP's 200-401 through 200-406 been completed

NO → Complete required MAP's → Return to [1]

YES

At Front of Cabinet
[2A] Unlock and open door
[2B] Check that all cards are seated correctly
[2C] Check that locking bar(s) are secure
[2D] Set all POWER FAIL TRANSFER CONTROL switches to DISABLE (Fig. 407-l)
[2E] Set POWER FAIL TRANSFER CONTROL switches for consoles connected to ENABLE
[2F] Set MASTER switch to NORMAL
[2G] Set POWER FAIL TRANSFER switches for power supply and common control to ENABLE
[2H] Set SYSTEM POWER switch to OFF

[2] AND

CHECK CARDS AND SET ***MAINTENANCE*** *SWITCHES (FIG.* ***407-1)***

At Rear of Cabinet
[3A] Plug power supply power cord into the power outlet
[3B] AC POWER ON LED lit
[3C] Set CONVERTER INPUT switch to ON
CONVERTER INPUT LED lit

[3] AND

APPLY POWER TO SYSTEM (FIG. ***407-2)***

To [4]

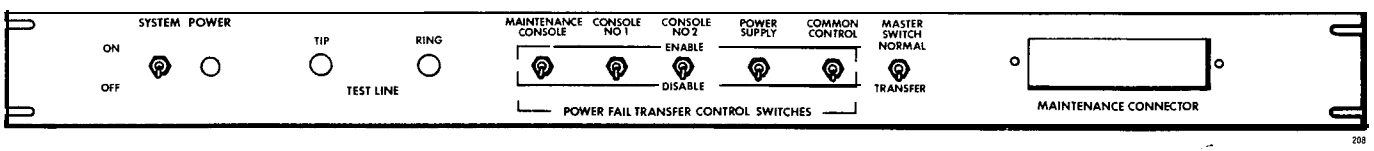

Fig. 407-1

POWER-UP SYSTEM
MAP200-407
Issue 1, January 1960
Sheet 2 of 3

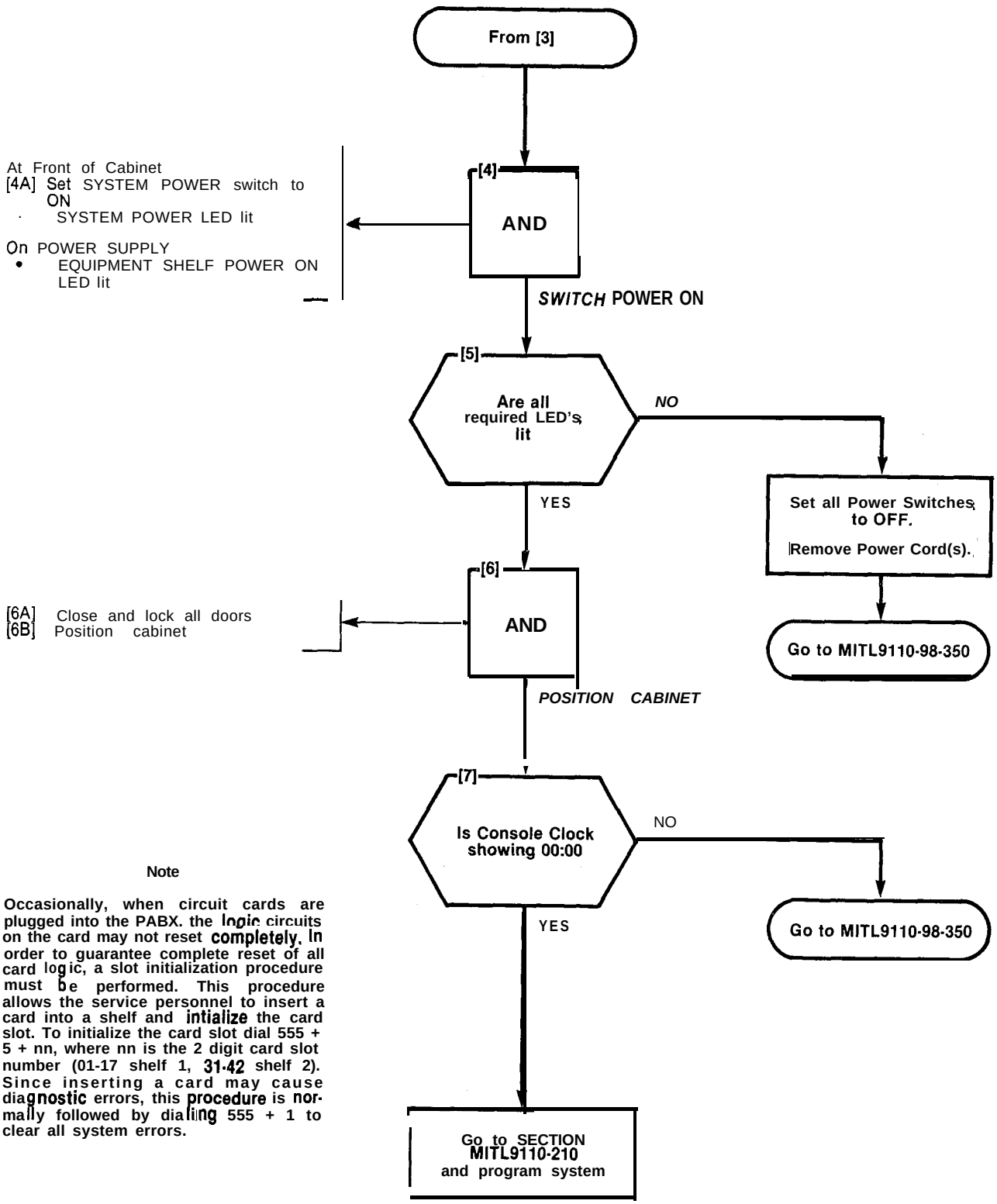

Note

Occasionally, when circuit cards are plugged into the PABX. the logic circuits on the card may not reset completely. In order to guarantee complete reset of all card logic, a slot initialization procedure must be performed. This procedure allows the service personnel to insert a card into a shelf and intialize the card slot. To initialize the card slot dial 555 + 5 + nn, where nn is the 2 digit card slot number (01-17 shelf 1, 31-42 shelf 2). Since inserting a card may cause diagnostic errors, this procedure is normally followed by dialing 555 + 1 to clear all system errors.

POWER-UP SYSTEM
MAP200-407
Issue 1, January 1980
Sheet 3 of 3

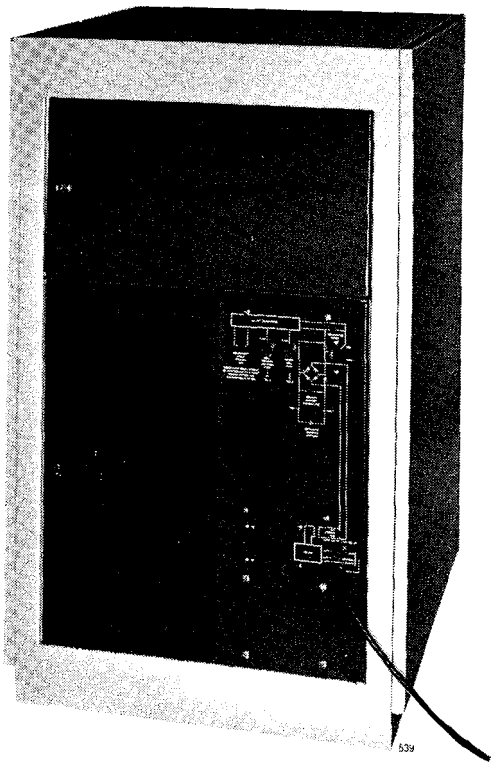

Fig. 407-2

APPENDIX 5
CARD SWITCH SETTINGS

1. General

A5.01 The MAPs contained in this Appendix (see Table A5-1) detail the procedures to be performed to result in the correct settings of the Trunk Card switches i.e. those required to meet the particular needs of the installation.

A5.02 These procedures are performed during the installation of the SX-100 or SX-200 PABX systems, (referenced in Appendices 3 and 4).

TABLE A5-1
SETTING TRUNK CARD SWITCHES

Step	Procedure	Reference
1	Set CO Trunk Option and Status Switches	MAP200501
2	Set E and M/Tie Trunk Option Switches	MAP200502
3	Set DID Tie Trunk Option Switches	MAP200-503
4	Set Scanner Card Baud Rate Switch	MAP200-504

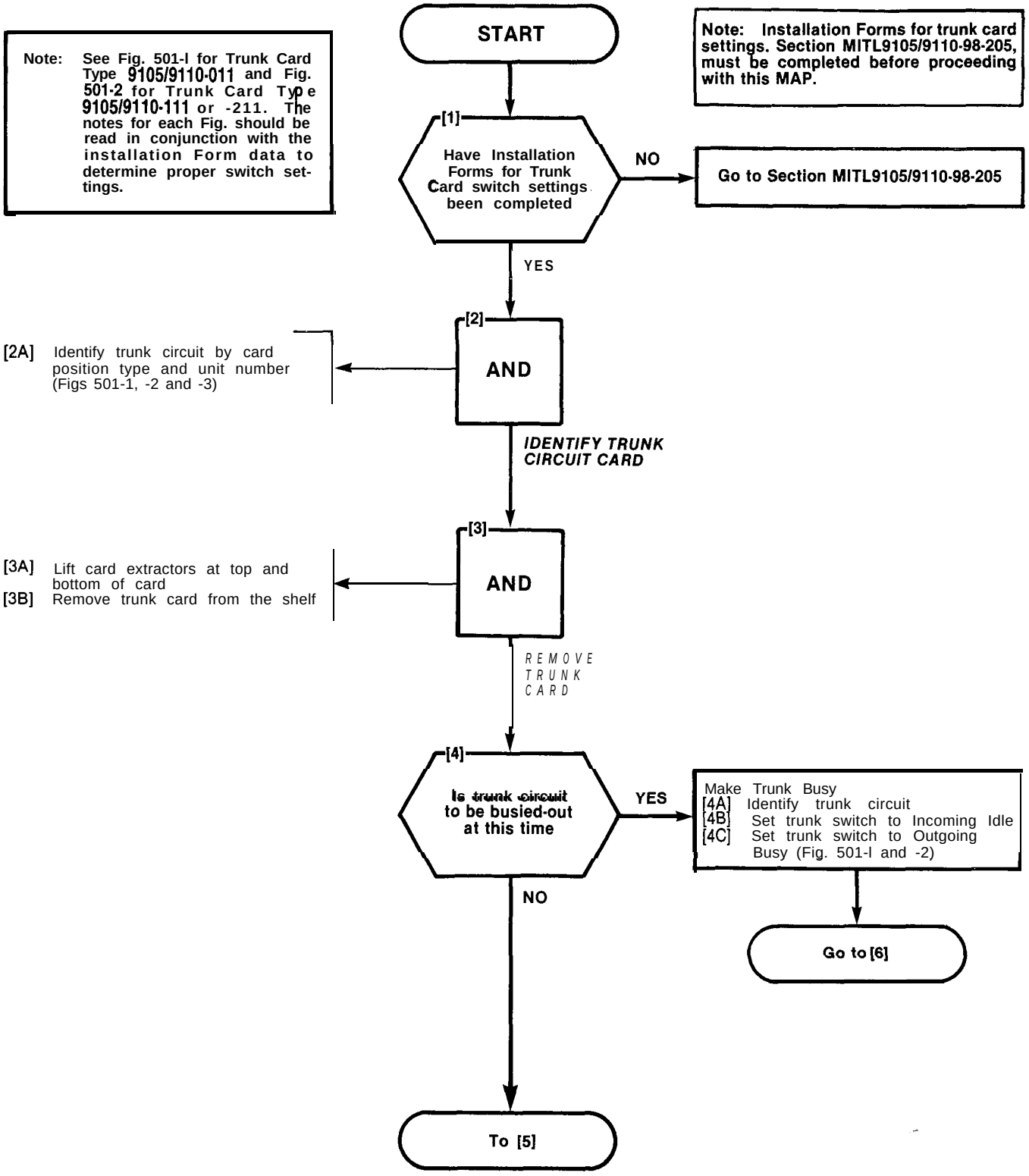
START
Note: See Fig. 501-l for Trunk Card Type 9105/9110-011 and Fig. 501-2 for Trunk Card Type 9105/9110-111 or -211. The notes for each Fig. should be read in conjunction with the installation Form data to determine proper switch settings.
Note: Installation Forms for trunk card settings. Section MITL9105/9110-98-205, must be completed before proceeding with this MAP.
[1]
Have Installation Forms for Trunk Card switch settings been completed
NO
Go to Section MITL9105/9110-98-205
YES
[2]
AND
[2A] Identify trunk circuit by card position type and unit number (Figs 501-1, -2 and -3)
IDENTIFY TRUNK CIRCUIT CARD
[3]
AND
[3A] Lift card extractors at top and bottom of card
[3B] Remove trunk card from the shelf
REMOVE TRUNK CARD
[4]
Is trunk circuit to be busied-out at this time
YES
Make Trunk Busy
[4A] Identify trunk circuit
[4B] Set trunk switch to Incoming Idle
[4C] Set trunk switch to Outgoing Busy (Fig. 501-l and -2)
Go to [6]
NO
To [5]

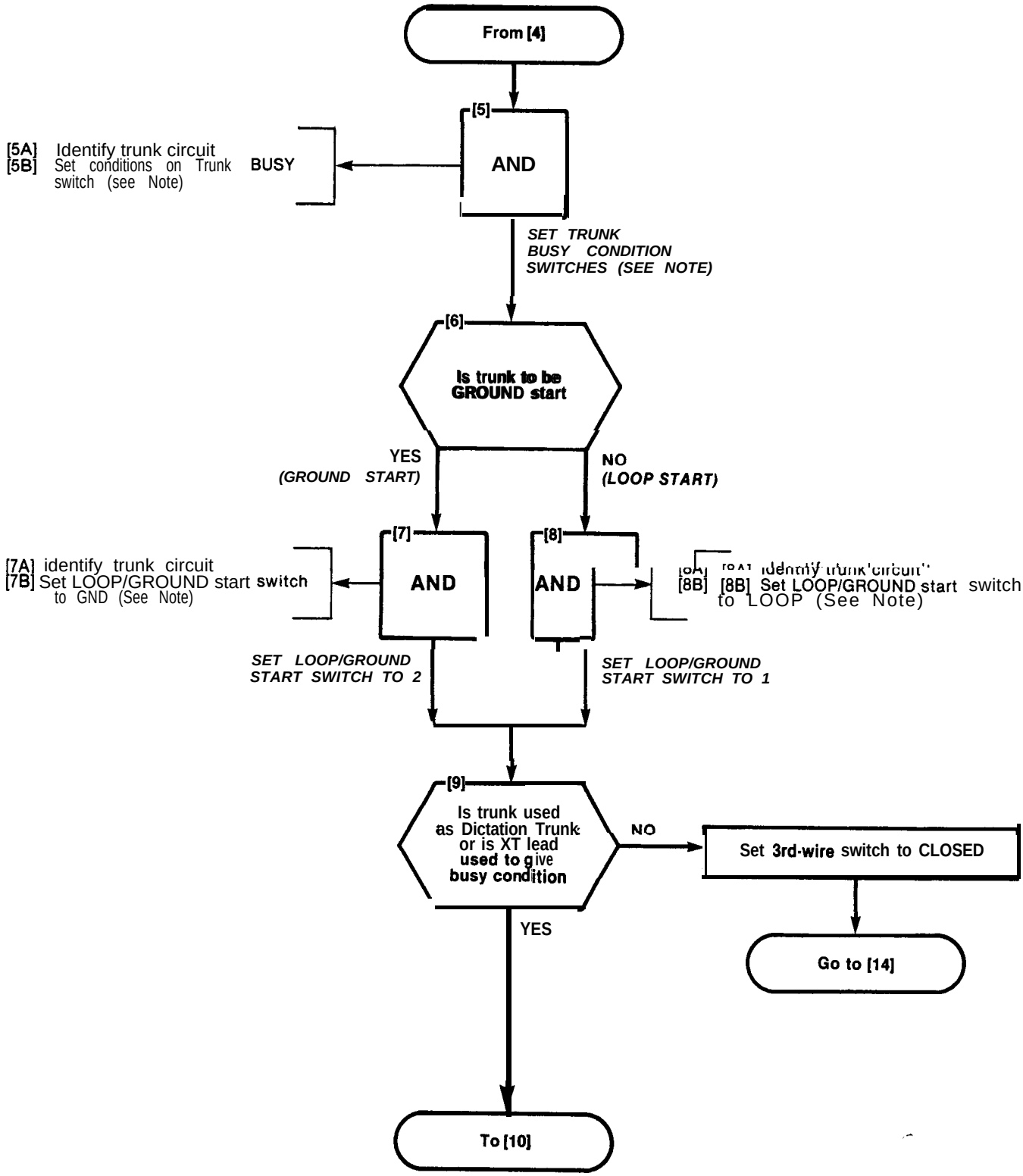
From [4]
[5]
AND
[5A] Identify trunk circuit
[5B] Set conditions on Trunk switch (see Note)
BUSY
SET TRUNK BUSY CONDITION SWITCHES (SEE NOTE)
[6]
Is trunk to be GROUND start
YES (GROUND START)
NO (LOOP START)
[7]
AND
[7A] identify trunk circuit
[7B] Set LOOP/GROUND start switch to GND (See Note)
SET LOOP/GROUND START SWITCH TO 2
[8]
AND
[8A] Identify trunk circuit
[8B] Set LOOP/GROUND start switch to LOOP (See Note)
SET LOOP/GROUND START SWITCH TO 1
[9]
Is trunk used as Dictation Trunk or is XT lead used to give busy condition
NO
Set 3rd-wire switch to CLOSED
Go to [14]
YES
To [10]

SET CO TRUNK OPTION AND STATUS SWITCHES
MAP200-501
Issue 2, August 1980
Sheet 3 of 8

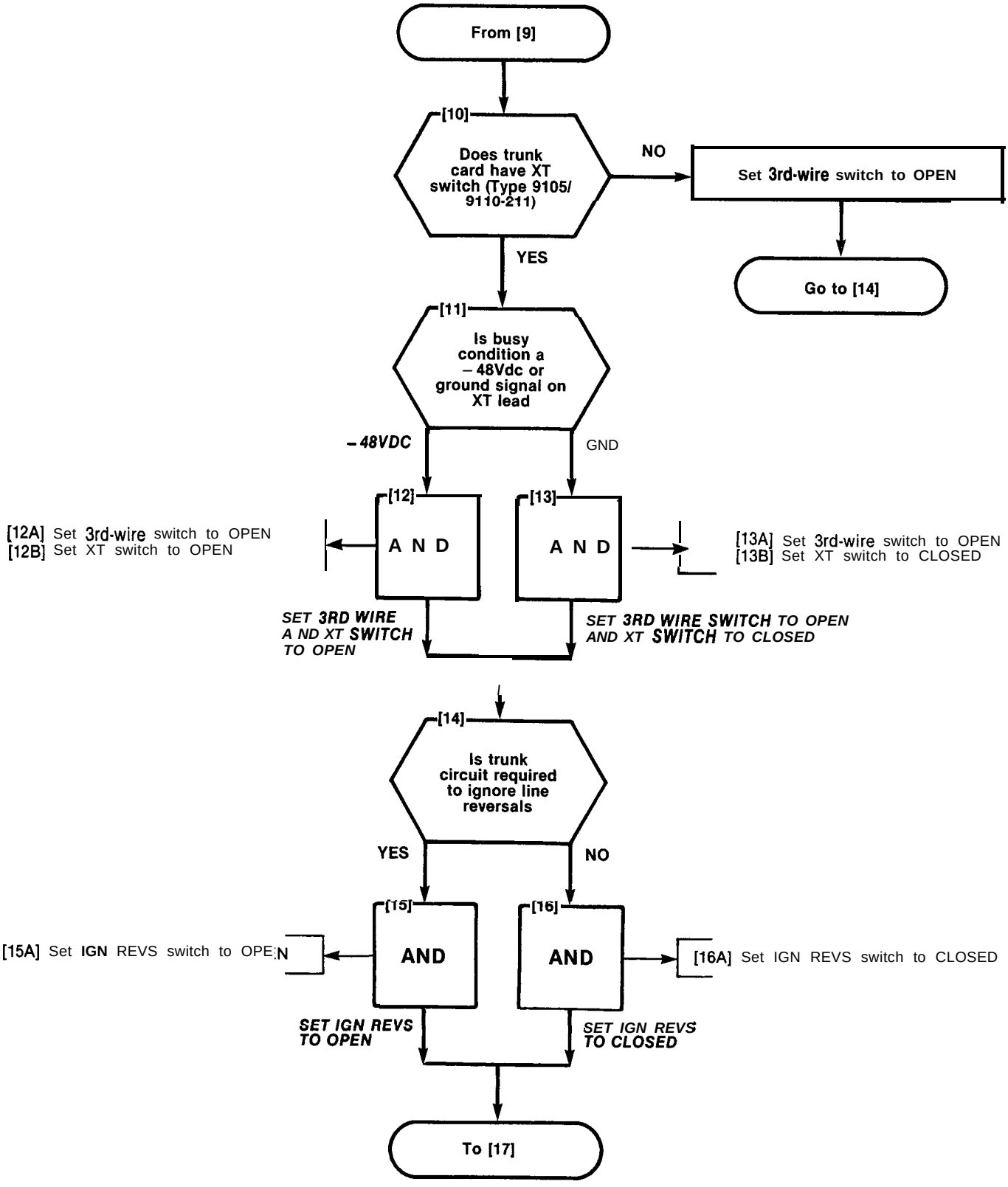

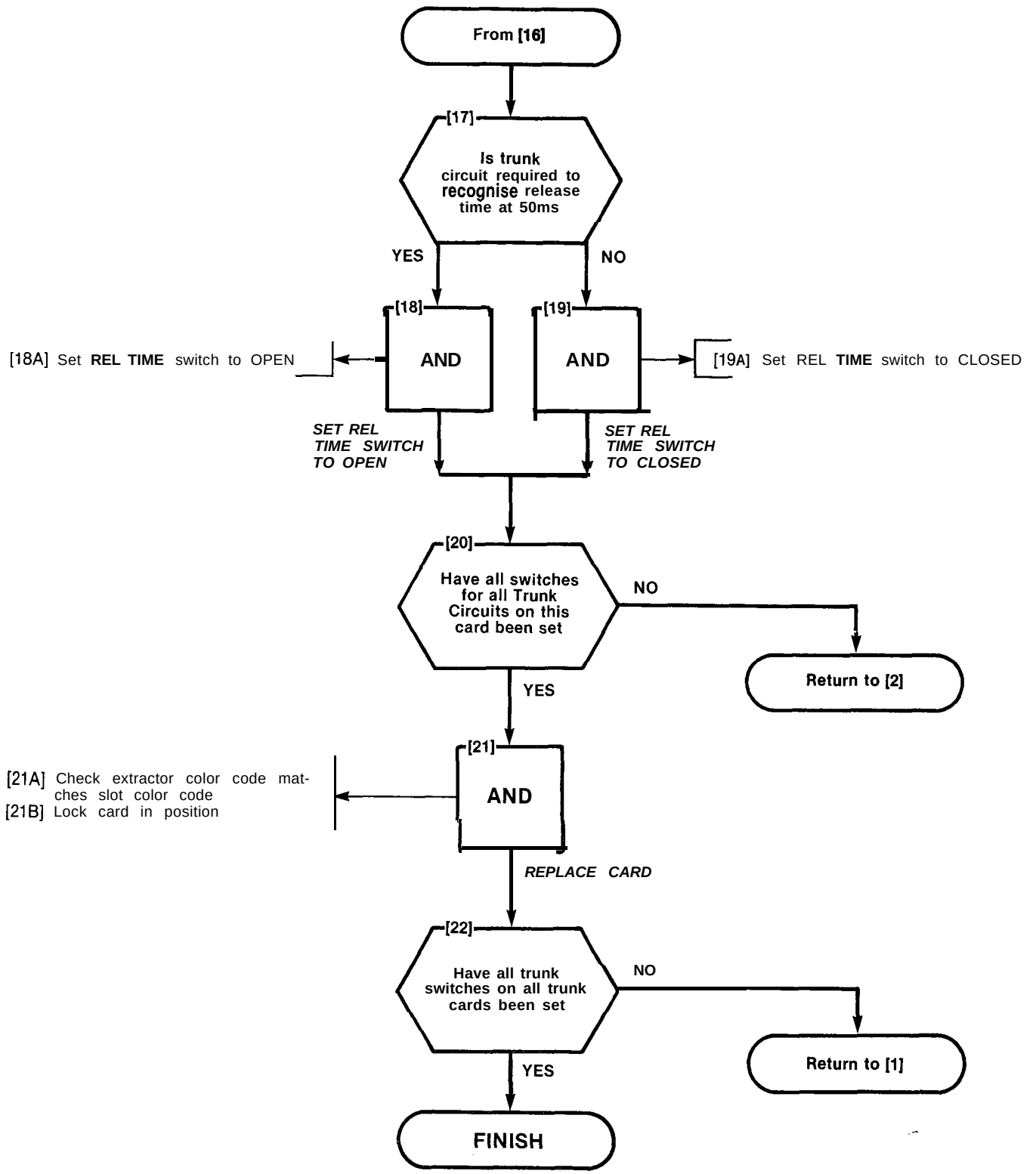
From [16]
[17]
Is trunk circuit required to recognise release time at 50ms
YES
NO
[18]
AND
[19]
AND
[18A] Set REL TIME switch to OPEN
[19A] Set REL TIME switch to CLOSED
SET REL TIME SWITCH TO OPEN
SET REL TIME SWITCH TO CLOSED
[20]
Have all switches for all Trunk Circuits on this card been set
NO
Return to [2]
YES
[21]
AND
[21A] Check extractor color code matches slot color code
[21B] Lock card in position
REPLACE CARD
[22]
Have all trunk switches on all trunk cards been set
NO
Return to [1]
YES
FINISH

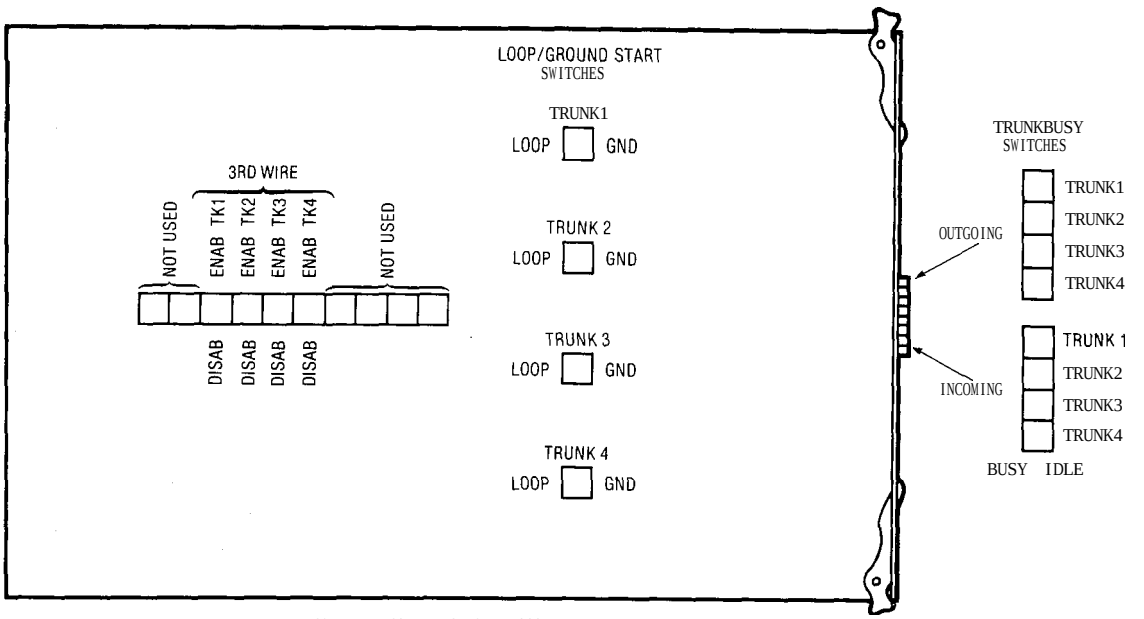

COTRUNK CARD- SINGLE ASSEMBLY
(TYPE 011)

NOTES:

TRUNKBUSY SWITCHES

1. OUTGOING BUSY SWITCHES (1 PER TRUNK)CAN BE SET FOR EITHER OF THE FOLLOWING CONDITIONS:
   IDLE SETTING • NORMAL TRUNK OPERATION
   BUSY SETTING -TRUNKCANNOT BE SEIZED FOR OUTGOING CALL

2. THE "OUTGOING BUSY" CONDITION MAY BE SET EITHER BY THE OUTGOING BUSY SWITCH (NOTE 1), OR BY THE CONSOLE "TRUNK BUSY OUT" FUNCTION. WHEN THIS CONDITION IS IN EFFECT THE INCOMING BUSYSWITCH AFFECTSTHETRUNK CONDITION AS FOLLOWS:
   IDLE SETTING • NO ANSWER WILL BE GIVEN TO INCOMING CO CALLS
   BUSY SETTING -APERMANENT SEIZURE CONDITION IS GIVEN TOWARDS THE CO

LOOP/GROUND START SWITCHES

3. THE LOOP/GROUND START SWITCHES (1 PER TRUNK) CAN BE SET TO RESULT IN THE FOLLOWING CONDITIONS:
   LOOP (1)SETTING • USED FOR LOOP-STARTTYPETRUNKS
   GROUND (2) SETTING • USED FOR GROUND-STARTTYPETRUNKS

3RD-WIRE SWITCHES

4. THE 3RD-WIRE SWITCH (1 PER TRUNK) IS USED WHEN THE THIRD WIRE (XT LEAD) OF ATRUNKIS REQUIREDTO INDICATE A BUSY (GROUND) CONDITION ON EXTERNAL EQUIPMENT (e.g. DICTATION TRUNK). THE SWITCH SETTINGS AREAS FOLLOWS:
   OPEN SETTING RECOGNISES GROUNDASA BUSY CONDITION
   CLOSED SETTING • 3RD-WIRE CONDITION IS INEFFECTIVE

Fig. 501-I Single Assembly Card

1267

NOTES.

TRUNK BUSY SWITCHES

1. OUTGOING BUSY SWITCHES (1 PER TRUNK) CAN BE SET FOR EITHER OF THE FOLLOWING CONDITIONS:
   IDLE SETTING NORMAL TRUNK OPERATION
   BUSY SETTING TRUNK CANNOT BE SEIZED FOR OUTGOING CALL

2 THE "OUTGOING BUSY" CONDITION MAY BE SET EITHER BY THE OUTGOING BUSY SWITCH (NOTE 1). OR BY THE CONSOLE "TRUNK BUSY OUT" FUNCTION. WHEN THIS CONDITION IS IN EFFECT THE INCOMING BUSY SWITCH AFFECTS THE TRUNK CONDITION AS FOLLOWS
   IDLE SETTING ND ANSWER WILL BE GIVEN TO INCOMING CO CALLS
   BUSY SETTING A PERMANENT SEIZURE CONDITION IS GIVEN TOWARDS THE CO

LOOP/GROUND START SWITCHES

3. THE LOOP/GROUND START SWITCHES (1 PER TRUNK) CAN BE SET TO RESULT IN THE FOLLOWING CONDITIONS
   LOOP (1) SETTING - USED FOR LOOP-START TYPE TRUNKS
   GROUND (2) SETTING USED FOR GROUND-START TYPE TRUNKS

4. THE 3RD WIRE (XT) LEAD WHEN REQUIRED IS CONNECTED TO THE CO TO PROVIDE CERTAIN FACILITIES. THESE INCLUDE THE RECORDING OF METER PULSES (EXTENDED FROM THE CO); OR ANOTHER REQUIREMENT MAY BE A BUSY CONDITION WHEN DICTATION OR CODE CALLING EQUIPMENT AT THE CO HAS BEEN TAKEN INTO SERVICE BY OTHER TRUNKS.

   THE XT SWITCH (1 PER TRUNK) IS USED IN CONJUNCTION WITH THE 3RD WIRE SWITCH (NOTE 5) AND CAN BE SET TO PROVIDE FOR THE FOLLOWING CONDITIONS
   - 48 SETTING THE CIRCUIT RESPONDS TO A - 4BVDC SIGNAL (i.e. WHEN IT IS A METER PULSE OR A BUSY CONDITION). A GROUND OR OPEN SIGNAL IS THE IDLE CONDITION
   GND SETTING - THE CIRCUIT RESPONDS TO A GROUND SIGNAL (i.e. WHEN IT IS A METER PULSE OR A BUSY CONDITION). AN OPEN OR -48VDC SIGNAL IS THE IDLE CONDITION

3RD-WIRE SWITCH

5. THE 3RD-WIRE SWITCHES (1 PER TRUNK) ENABLE THE XT SWITCH (NOTE 4) AND THEIR SETTINGS GIVE THE FOLLOWING CONDITIONS:
   ENAB SETTING ENABLES THE CORRESPONDING XT SWITCH
   DIS SETTING MAKES THE XT SWITCH INEFFECTIVE i.e. A BUSY CONDITION ON THE XT LEAD CANNOT BE RECOGNISED

SENSE REVS SWITCH

6. IF LINE REVERSALS ON THE TRUNK CIRCUITS ARE REQUIRED TO HAVE NO EFFECT THE SENSE REVS SWITCH IS SET TO IGN (IGNORE). IF LINE REVERSALS ARE TO BE EFFECTIVE THE SWITCH IS SET TO EFF.

RELEASE TIMING SWITCHES

7. RELEASE TIMING SWITCHES "A" AND "B" OPERATE IN CONJUNCTION TO PRODUCE THE RELEASE TIMES SHOWN FOR THE FOLLOWING SETTINGS:

"A" SETTING	"B" SETTING	RELEASE TIME
SHORT	SHORT	49ms
LONG	SHORT	490ms
SHORT	LONG	2500ms
LONG	LONG	INFINITE (NON-RELEASE)

HI-Z SWITCH

8. THE HI-Z SWITCH ALLOWS THE PROPER IMPEDANCE ON INCOMING CALLS. TO BE PRESENTED ACCORDING TO REQUIREMENTS. THE TWO SETTINGS FOR THE SWITCH RESULT IN THE FOLLOWING:
   HI-Z SETTING - PRESENTS THE NORMAL IMPEDANCE TO INCOMING RINGING SIGNALS, BUT A HIGH BLOCKING IMPEDANCE TO VOICE SIGNALS
   NORM SETTING - PRESENTS A NORMAL IMPEDANCE TO BOTH RINGING SIGNALS AND VOICE SIGNALS

M/B RATIO SWITCH

9. THE MAKE/BREAK RATIO SWITCH SETS THE RATIO OF THE MAKE-TO-BREAK INTERVALS OF THE OUTPULSING ON THE TRUNK. THE SWITCH SETTINGS RESULT IN THE FOLLOWING CONDITIONS:
   33/66 SETTING 33% MAKE; 66% BREAK
   40/60 SETTING - 40% MAKE; 60% BREAK

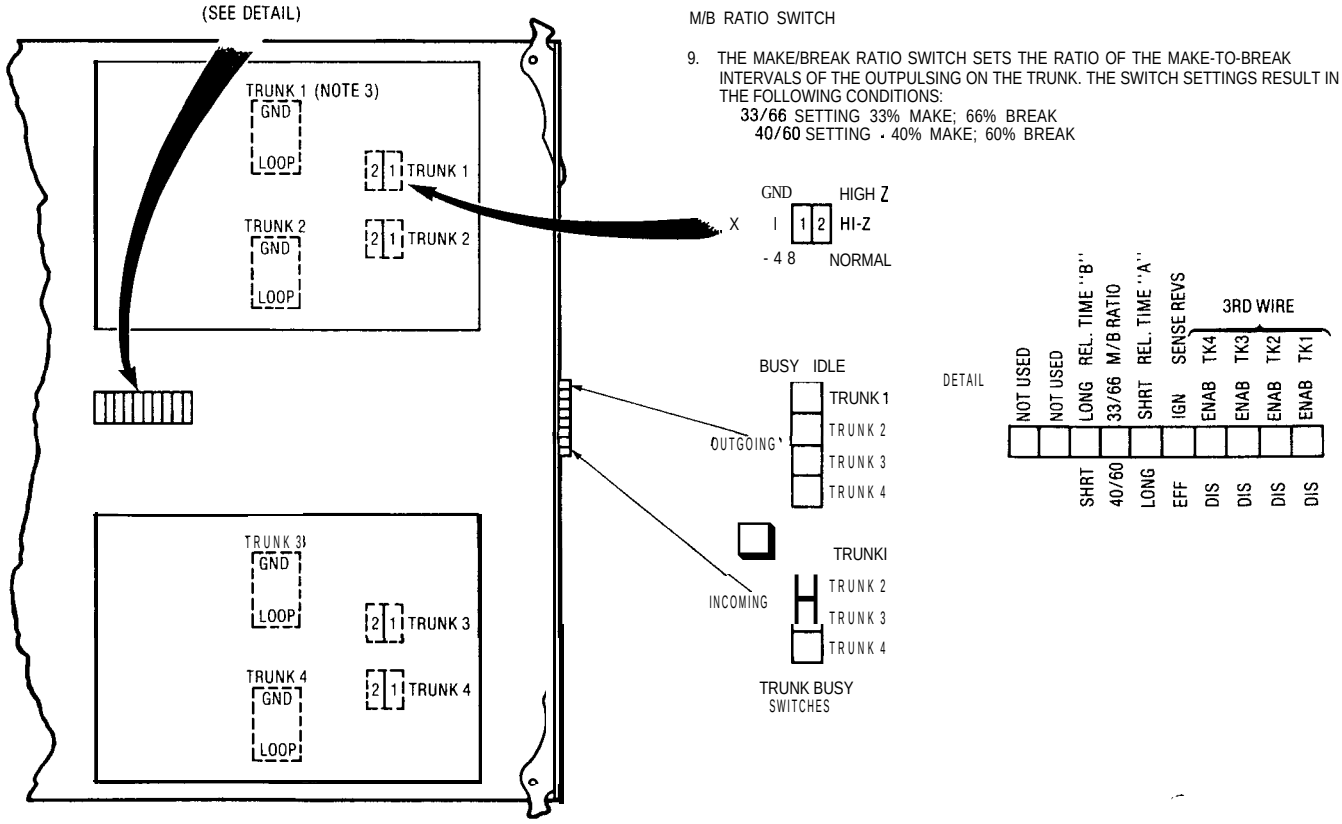

CO TRUNK CARD - MODULAR ASSEMBLIES

Fig. 501-2 Mother Board Assembly Card

1266 -1

SET E&M/TIE TRUNK OPTION SWITCHES
MAP200-502
Issue 2, August 1980
Sheet 1 of 7

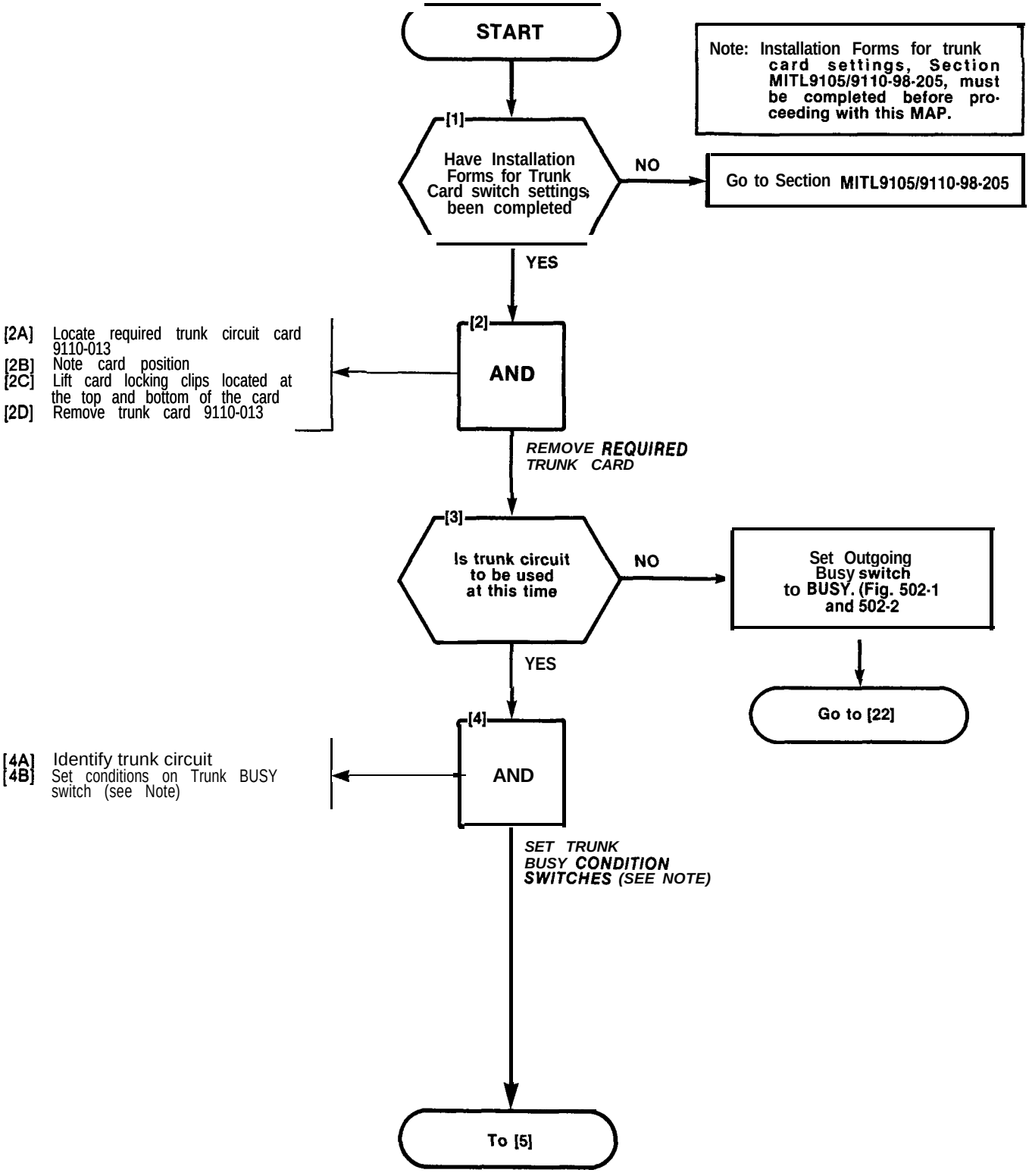

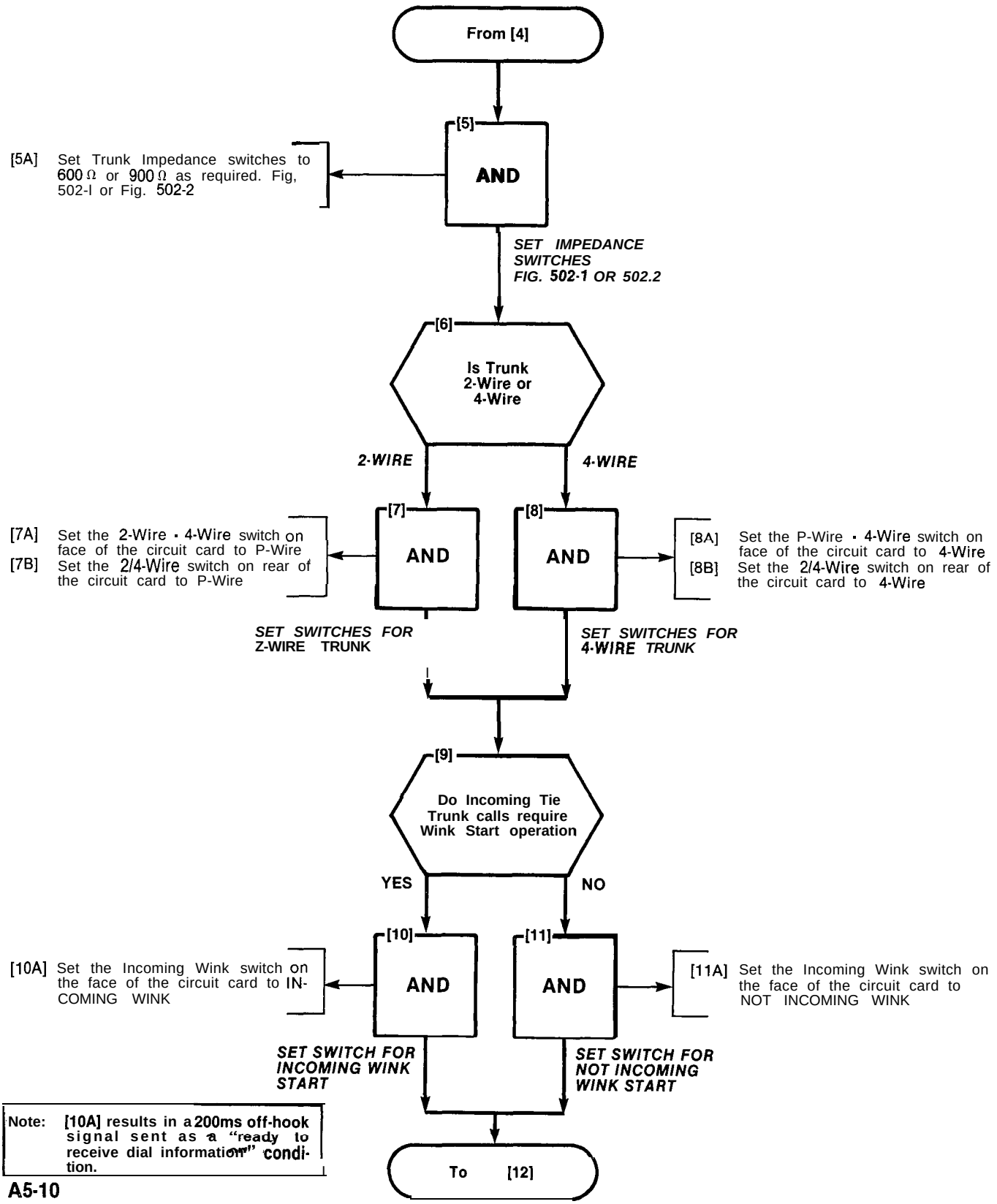

Note: **[10A] results in a 200ms off-hook signal sent as a "ready to receive dial information" condition.**

SET E&M/TIE TRUNK OPTION SWITCHES
MAP200-502
Issue 2, August 1980
Sheet 3 of 7

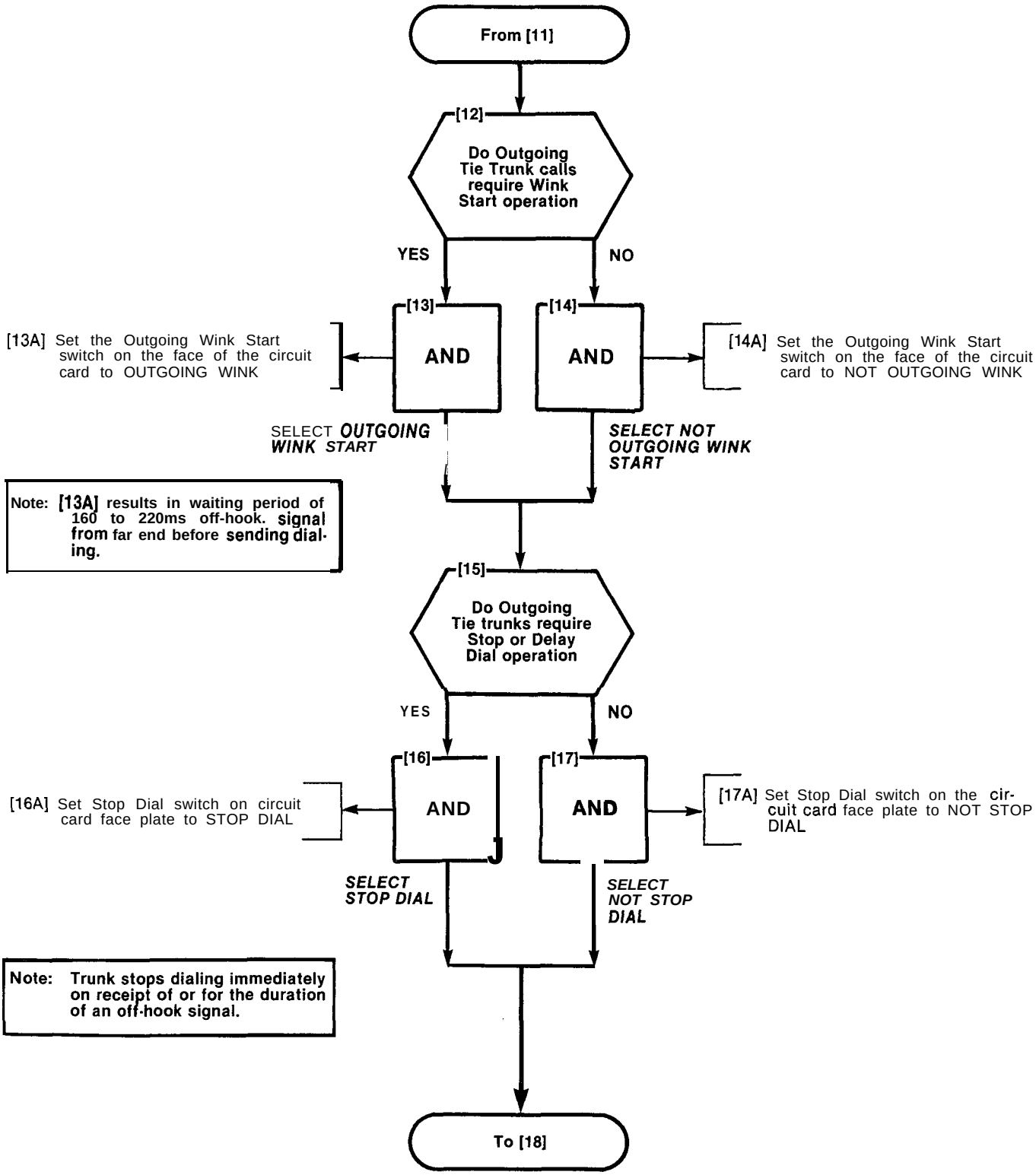

SET E&M/TIE TRUNK OPTION SWITCHES
MAP200602
Issue 2, August 1980
Sheet 4 of 7

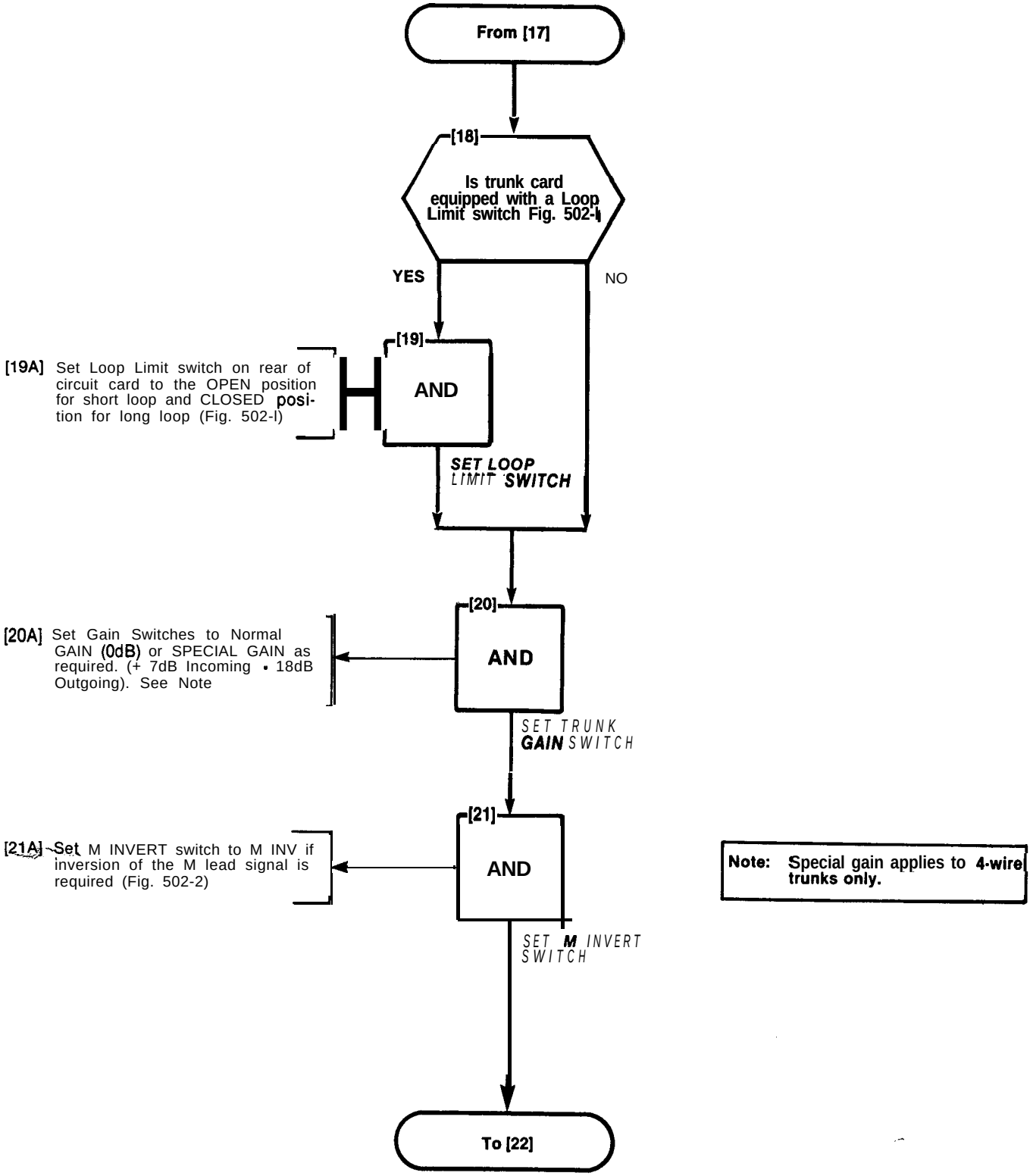

Note: Special gain applies to 4-wire trunks only.

SET E&M/TIE TRUNK OPTION SWITCHES
MAP200-502
Issue 2, August 1980
Sheet 5 of 7

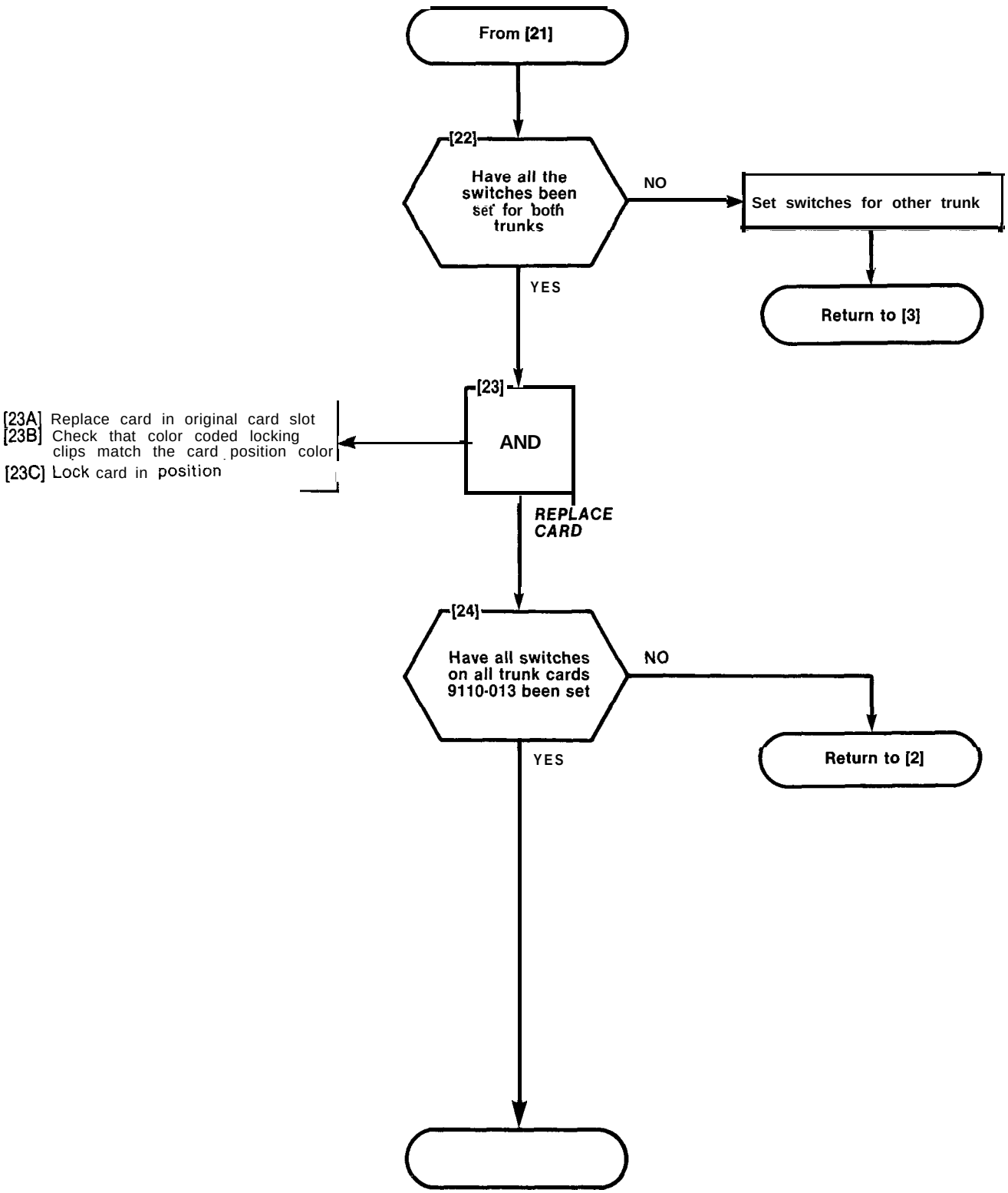

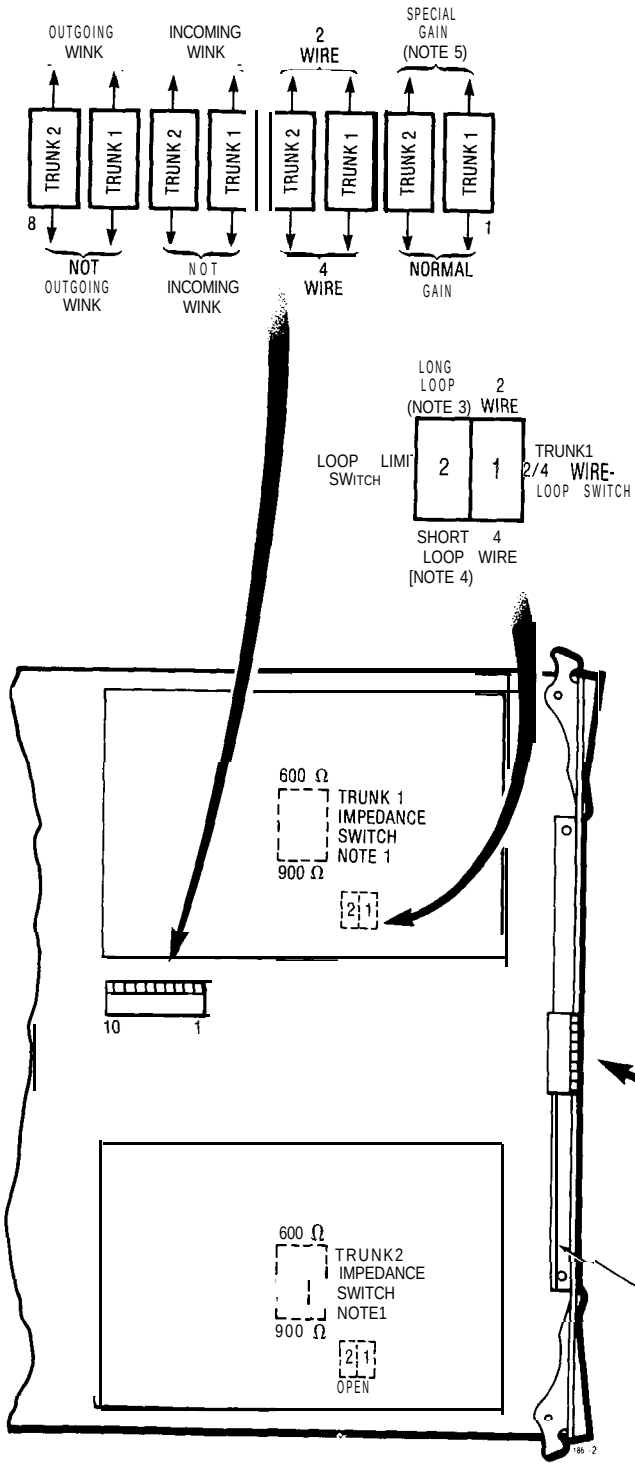

NOTE 1: TRUNK IMPEDANCE SWITCHES ARE LOCATEDON THE REAR FACE OFTHETRUNK CARD.

NOTE 2: OUTGOING/INCOMING SWITCH SETTINGS

OUTGOING BUSY SWITCH SET TO	INCOMING BUSY SWITCH SET TO	RESULT
IDLE	BUSY	NORMAL TRUNK OPERATION - IF TRUNK IS MADE BUSY BY ATTENDANT, OUTGOING BUSY, INCOMING BUSY CONDITION RESULTS. SEE BELOW.
BUSY	BUSY	TRUNKCANNOT BE SEIZED, INCOMING OR OUTGOING FROM THE PABX. RECOMMENDEDSETTING IF TRUNK IS NOTCONNECTEDTO TRUNK CIRCUIT.
BUSY	IDLE	OUTGOING CALLS RECEIVE BUSY TONE. INCOMING CALLS RECEIVE RINGINGTONE BUTCANNOTBE ANSWERED
IDLE	IDLE	IF TRUNK IS MADE BUSY BY ATTENDANT, OUTGOING BUSY, INCOMING IDLE CONDITION RESULTS. SEE BELOW.

INCOMING BUSYSWITCH, WHEN OPERATED, WILL PROVIDE AN OUTGOING SEIZE SIGNAL WHENEVER THE TRUNK IS MADE OUTGOING BUSY (EITHER FROM THE OUTGOING BUSY SWITCH ON THE TRUNK, OR FROM THE CONSOLE).

NOTE 3: LONG LOOPSETTING AT LOOP LIMIT SWITCH RESULTS IN 10 Ω RESISTANCE IN SERIES WITH M LEAD

NOTE 4: SHORT LOOPSETTING OF LOOP LIMIT SWITCH RESULTS IN 110 Ω RESISTANCE IN SERIES WITH M LEAD

NOTE5: NORMALGAIN PROVIDES 0.5dB INSERTION LOSSTHROUGH THE PABX. SPECIAL GAIN PROVIDES FOR 4-WIRE OPERATION WITH CARRIER SYSTEMS REQUIRING SIGNAL LEVELS OF + 7dB ON THE Rx PAIR. AND -16dB ON THE Tx PAIR.

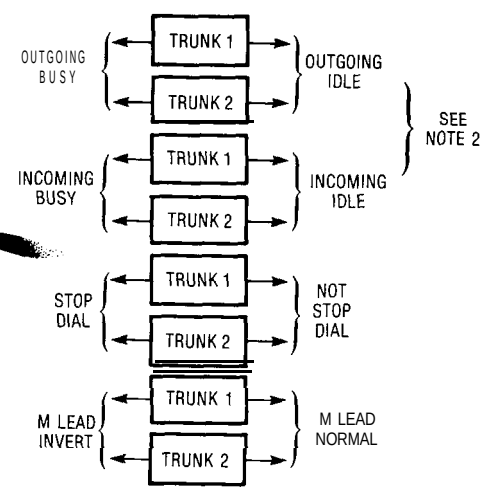

Fig. 502-I

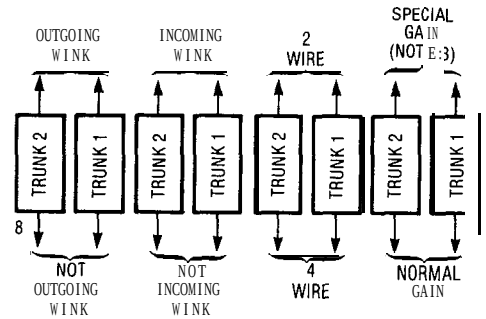

NOTE 1: TRUNK IMPEDANCE SWITCHES ARE LOCATED ON THE REAR FACEOFTHETRUNKCARO.

NOTE 2: OUTGOING/INCOMING SWITCH SETTINGS

OUTGOING BUSY SWITCH SET TO	INCOMING BUSY SWITCH SET TO	RESULT
IDLE	BUSY	NORMAL TRUNK OPERATION - IF TRUNK IS MADE BUSY BY ATTENDANT, OUTGOING BUSY, INCOMING BUSY CONDITION RESULTS. SEE BELOW.
BUSY	BUSY	TRUNKCANNOT BE SEIZED, INCOMING OR OUTGOING FROM THE PABX. RECOMMENDED SETTING IF TRUNK IS NOT CONNECTED TO TRUNK CIRCUIT.
BUSY	IDLE	OUTGOING CALLS RECEIVE BUSY TONE. INCOMING CALLS RECEIVE RINGINGTONE BUT CANNOT BE ANSWERED
IDLE	IDLE	IF TRUNK IS MADE BUSY BYATTENDANT, OUTGOING BUSY, INCOMING IDLE CONDITION RESULTS. SEE BELOW.

INCOMING BUSYSWITCH. WHEN OPERATED, WILL PROVIDE AN OUTGOING SEIZE SIGNAL WHENEVER THE TRUNK IS MADEOUTGOING BUSY (EITHER FROM THE OUTGOING BUSY SWITCH ON THE TRUNK, OR FROM THE CONSOLE).

NOTE 3: NORMAL GAIN PROVIDES 0.5dB INSERTION LOSSTHROUGH THE PABX. SPECIAL GAIN PROVIDES FOR 4-WIRE OPERATION WITH CARRIER SYSTEMS REQUIRING SIGNAL LEVELS OF + 7dB ON THE Rx PAIR, AND -16dB ON THE Tx PAIR.

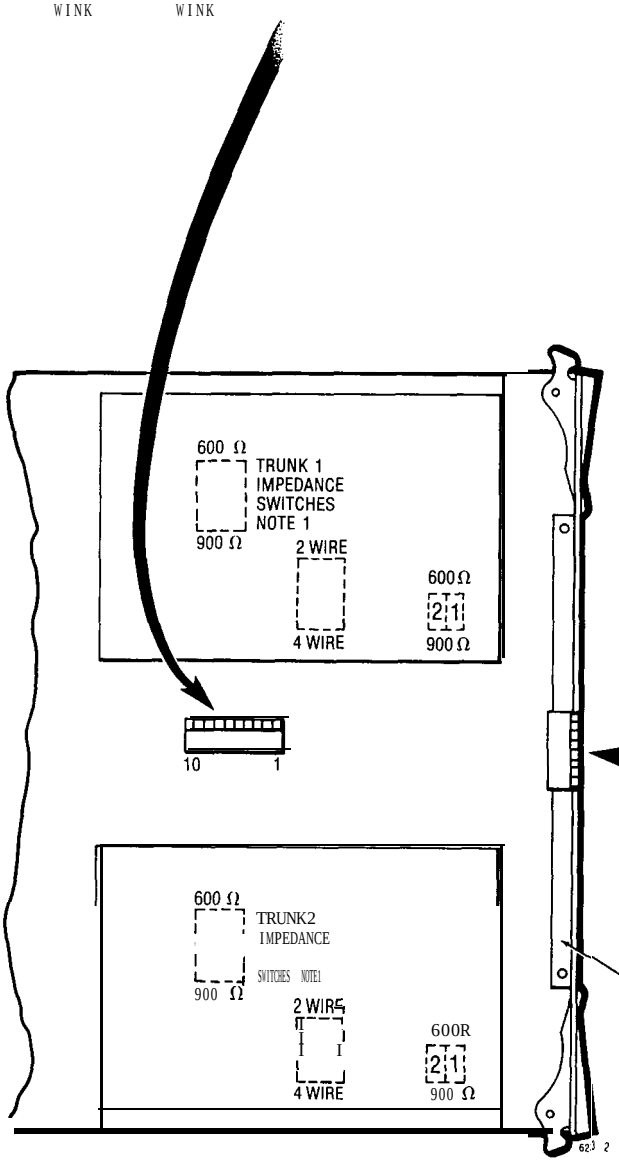

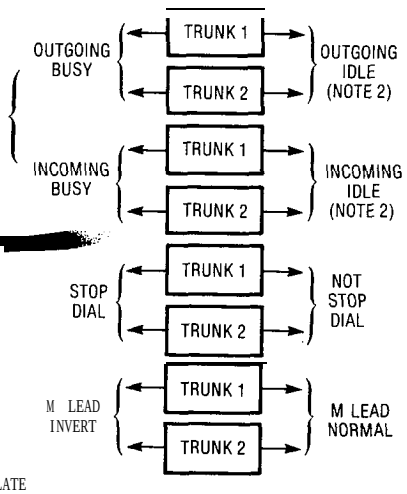

Fig. 502-2

SET DID/TIE TRUNK OPTION SWITCHES
MAP200-503
Issue 2, August 1980
Sheet 1 of 5

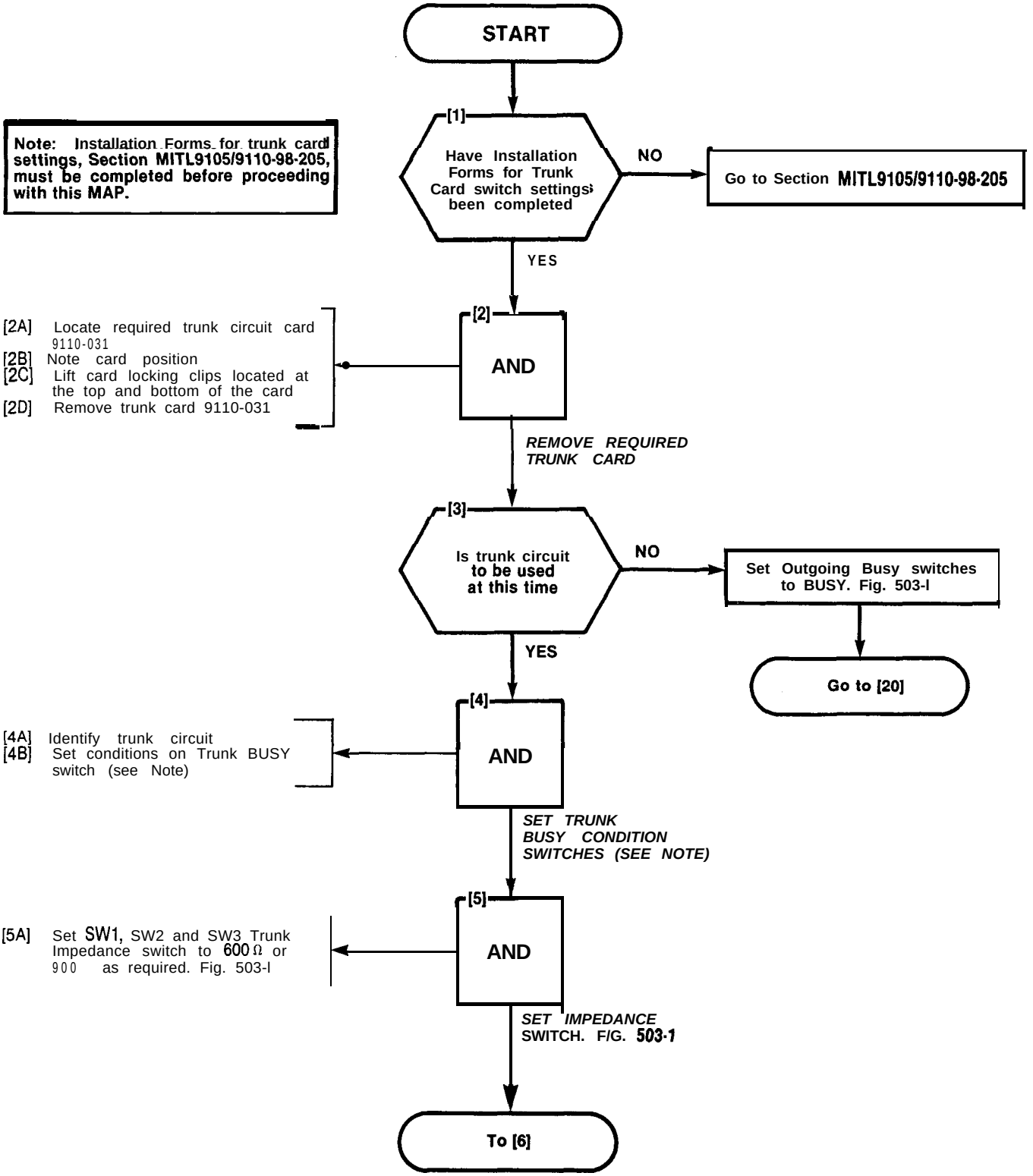

I

SET DID/TIE TRUNK OPTION SWITCHES
MAP200-503
Issue 2, August 1980
Sheet 2 of 5

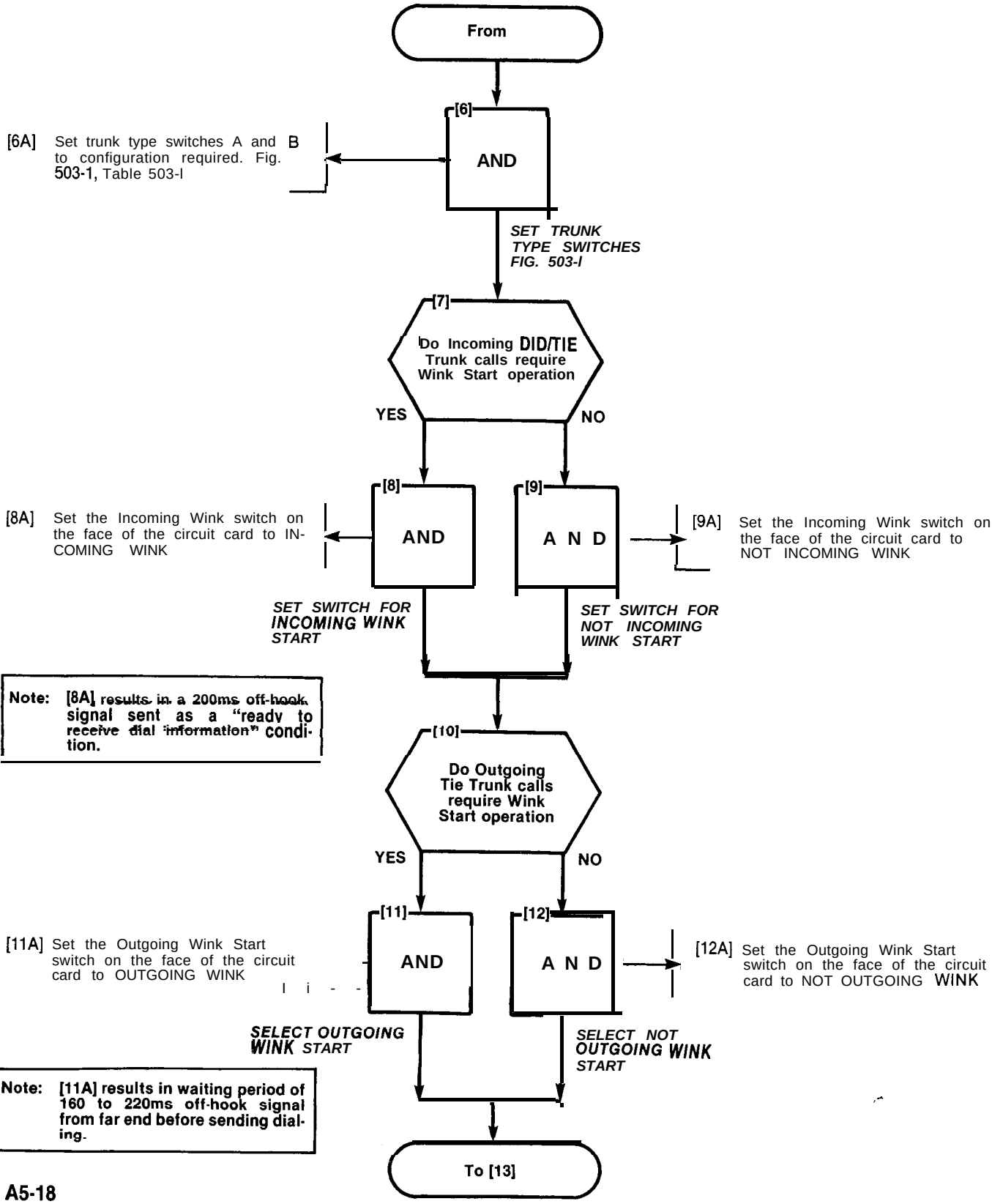

SET DID/TIE TRUNK OPTION SWITCHES
MAP200-503
Issue 2, August 1980
Sheet 3 of 5

From [12]

[13] Is trunk signaling to be loop pulse

YES *LOOP PULSE*

NO *BATTERY AND GROUND PULSING*

[14] AND

[15] AND

[14A] Set the BG-PULS switch to LOOP PULSING Fig. 503-I and 503-2

[15A] Set the PG-PULS switch to BATTERY and GROUND PULSING. Fig. 503-I and 503-3

SELECT LOOP PULSING

SELECT BATTERY AND GROUND PULSING

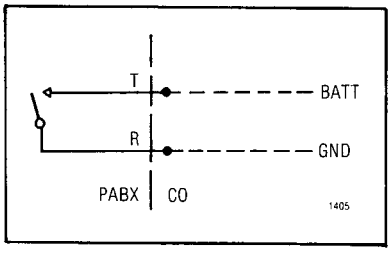

Fig. 503-2

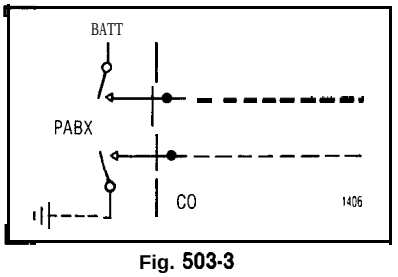

Fig. 503-3

[16] Do DID/Tie Trunk require Stop or Delay Dial Operation

YES *STOP DIAL*

NO

[17] AND

[18] AND

[17A] Set the STOP DIAL switch to STOP DIAL Fig. 503-I

[18A] Set the STOP DIAL switch to NOT STOP DIAL. Fig. 503-I

Note: Trunk stops dialing immediately on receipt of or for the duration of an off-hook signal.

SET TO STOP DIAL

SET TO NOT STOP DIAL

To [19]

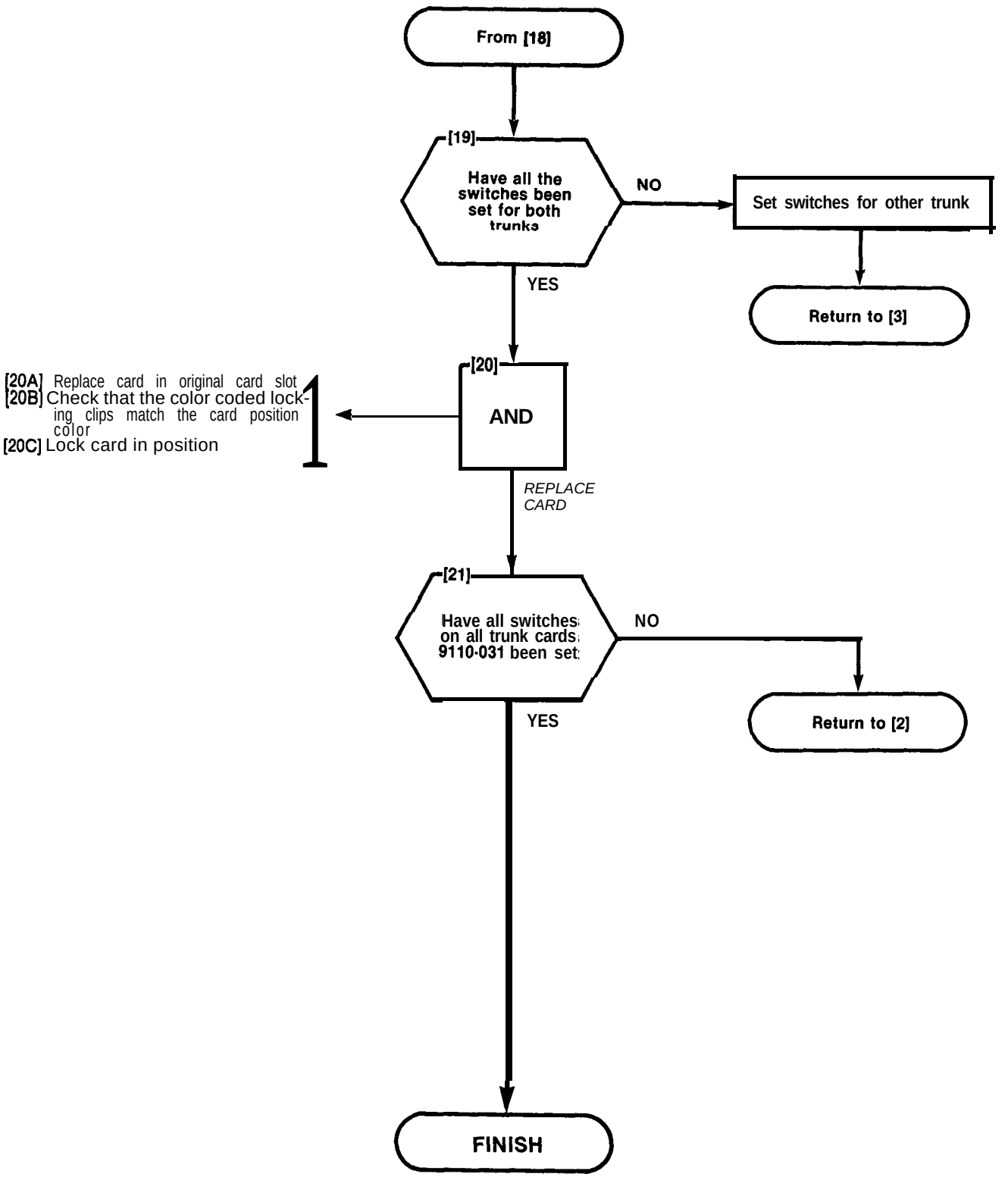
From [18]
[19]
Have all the switches been set for both trunks
NO
Set switches for other trunk
Return to [3]
YES
[20]
AND
[20A] Replace card in original card slot
[20B] Check that the color coded locking clips match the card position color
[20C] Lock card in position
REPLACE CARD
[21]
Have all switches on all trunk cards 9110-031 been set
NO
Return to [2]
YES
FINISH

TABLE 503-1

TRUNK TYPE	SWITCH A	SWITCH B
DID TRUNK	CLOSED	CLOSED
LOOP TIE TRUNK	CLOSED	OPEN
INCOMING DIAL-OUTGOING AUTO	OPEN	CLOSED
NOT USED	OPEN	OPEN

NOTES

1. TRUNK IMPEDANCE SWITCHES ARE LOCATED ON THE REAR FACE OF THE TRUNK CARD.

TRUNK BUSY SWITCHES

2. OUTGOING BUSY SWITCHES (1 PER TRUNK) CAN BE SET FOR EITHER OF THE FOLLOWING CONDITIONS:
   IDLE SETTING NORMAL TRUNK OPERATION
   BUSY SETTING TRUNK CANNOT BE SEIZED FOR OUTGOING CALL

3. THE "OUTGOING BUSY" CONDITION MAY BE SET EITHER BY THE OUTGOING BUSY SWITCH (NOTE 2). OR BY THE CONSOLE "TRUNK BUSY OUT' FUNCTION. WHEN THIS CONDITION IS IN EFFECT THE INCOMING BUSY SWITCH AFFECTS THE TRUNK CONDITION AS FOLLOWS:
   IDLE SETTING NO ANSWER WILL BE GIVEN TO INCOMING TRUNK CALLS
   BUSY SETTING • A PERMANENT SEIZURE CONDITION IS GIVEN TOWARDS THE TRUNK

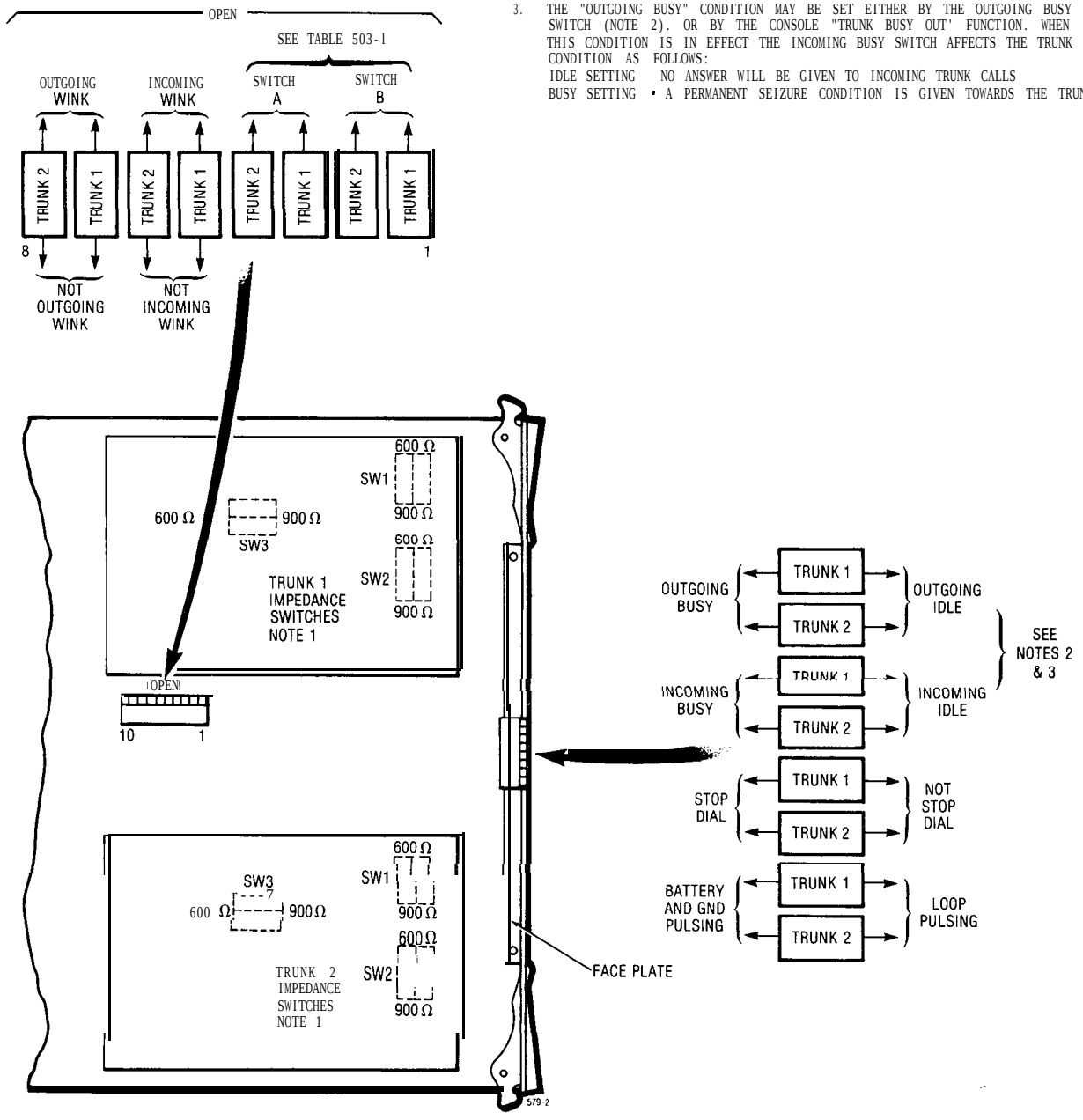

Fig. 503-I

SET SCANNER CARD BAUD RATE SWITCH
MAP200-504
Issue 1, January 1980
Sheet 1 of 1

CAUTION
Do not remove Scanner Card from an active PABX without following relevant procedures in MAP200-602.

START

[1] Is the RS232 data port to be used

NO → FINISH

YES

[2] AND

[2A] Identify Scanner card by card slot position (19) in shelf 1

IDENTIFY SCANNER CARD

[3] AND

[3A] Lift card extractors at top and bottom of card
[3B] Remove Scanner card from the shelf

REMOVE SCANNER CARD

[4] AND

[4A] Identify the required baud rate from the circuit requirements

IDENTIFY BAUD RATE SPEED

[5] AND

[5A] Locate the baud rate switch (Fig. 504-1)
[5B] Place the switch to the required baud rate

SET BAUD RATE SWITCH

[6] AND

[6A] Replace Scanner card in Slot 19 of Shelf 1
[6B] Lock card in position

REPLACE CARD

FINISH

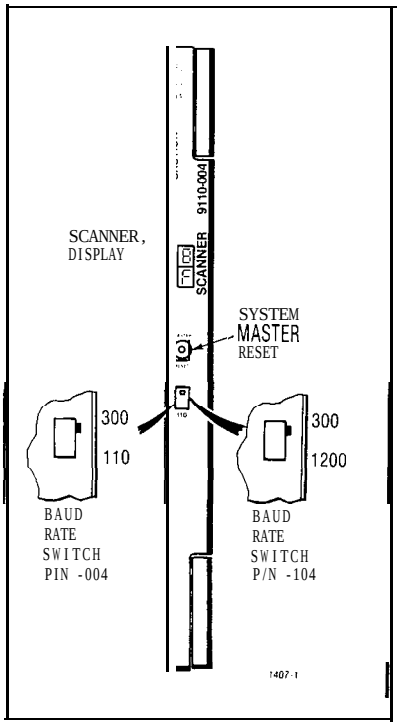

Fig. 504-I

APPENDIX 6
ADDITIONAL EQUIPMENT INSTALLATION

1. General

A8.01 The MAPs contained in this Appendix are concerned with additional installation requirements which may be required during initial or subsequent installation phases.

A6.02 A list of these additional requirements are shown in Table A6-1.

TABLE A6-1
ADDITIONAL INSTALLATION REQUIREMENTS

Step	Procedure	Reference
1	Shelf 2 Installation (SX-200)	MAP200-601
2	Install New Cards	MAP200-602
3	Reserve Power Supply installation (SX-200)	MAP200-603
4	Console Interface Board Installation (SX-200)	MAP200-604
5	Backplane Translator Board Installation	MAP200-605
6	Installation of RCP Card	MAP200-606
7	Reserve Power Supply Installation (SX-100)	MAP200-607

SHELF 2 INSTALLATION (SX-200)
MAP200-601
issue 1, January 1980
Sheet 1 of 3

Tools Required
1 • Screwdriver ¼ blade
1 • Screwdriver No. 10 Phillips

Note: This MAP applies only to SX-200 equipment.

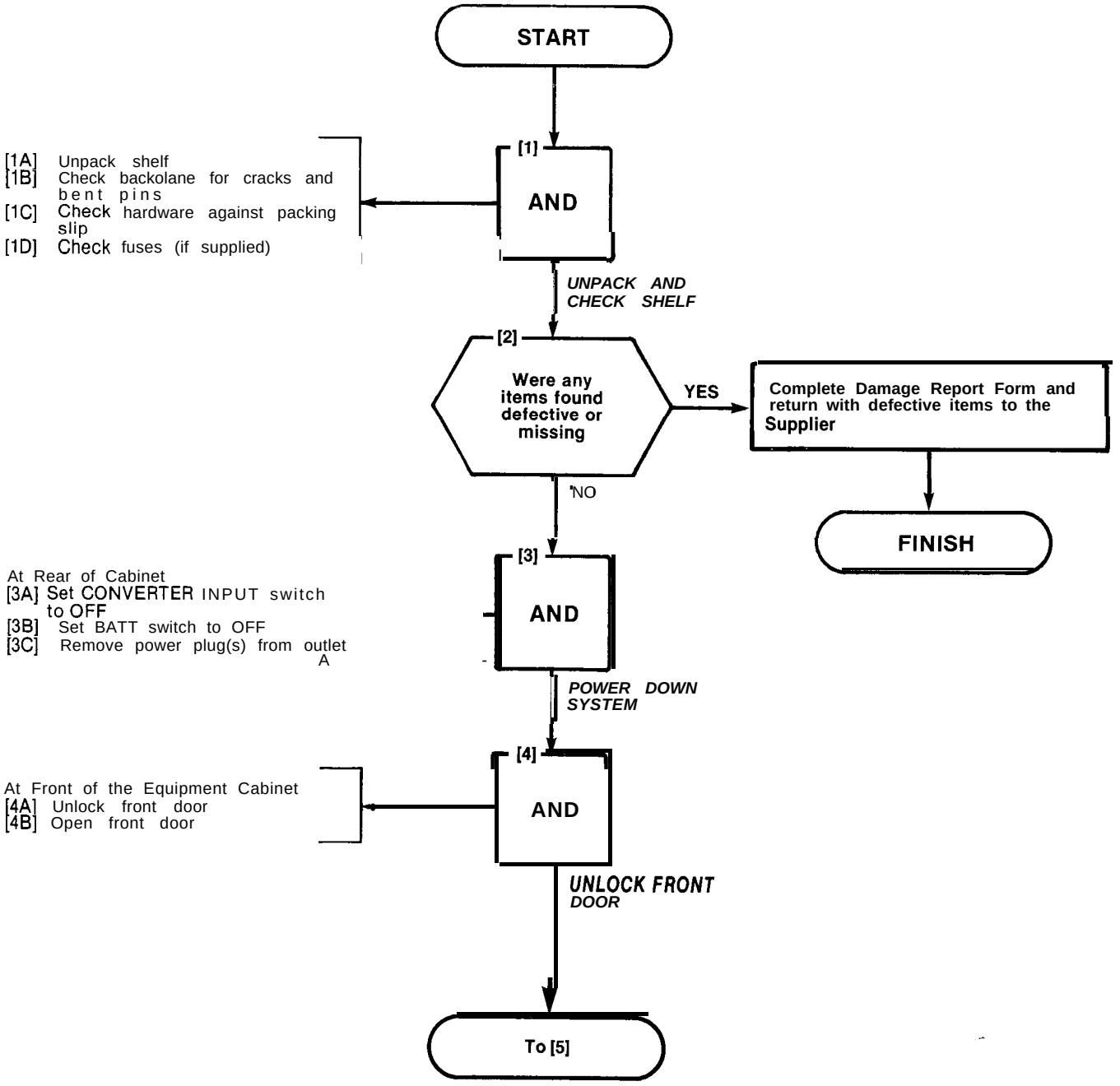

SHELF 2 INSTALLATION (SX-200)
MAP200-601
Issue 1, January 1980
Sheet 2 of 3

From [4]

[5] AND

[5A] Place shelf onto shelf guides
[5B] Fasten shelf to equipment cabinet using the eight No. 10 pan head Phillips screws (Fig. 601-1)

INSTALL SHELF FIG. 601-1

On Shelf 2
At Rear of Equipment Cabinet

[6] AND

[6A] Remove insulation tube from all cables
[6B] Connect violet wire to TB1 terminal 2(−10V)(Fig. 601-2)
[6C] Connect yellow wire to TB1 terminal 3(−5V)
[6D] Connect brown wire to TB1 terminal 4(0V)
[6E] Connect orange wire to TB1 terminal 5(+8V)
[6F] Connect gray wire to TB2 terminal 3(90V RINGING)
[6G] Connect brown wire to TB2 terminal 5(GND)
[6H] Connect blue wire to TB2 terminal 6(−48V)

CONNECT CABLE HARNESS FIG. 601-2

[7] AND

[7A] Connect interconnect cable 101 to shelf 2 J101 and shelf 1 J101
[7B] Connect interconnect cable 102 to shelf 2 J102 and shelf 1 J102 (Fig. 601-2)
[7C] Connect interconnect cable 103 to shelf 2 J103 and shelf 1 J103
[7D] Connect interconnect cable 104 to shelf 2 J104 and shelf 1 J104

CONNECT SHELF INTERCONNECT CABLES FIG. 601-2

[8] AND

[8A] Perform the "Power-Up" procedure in accordance with MAP200-407

POWER UP

FINISH

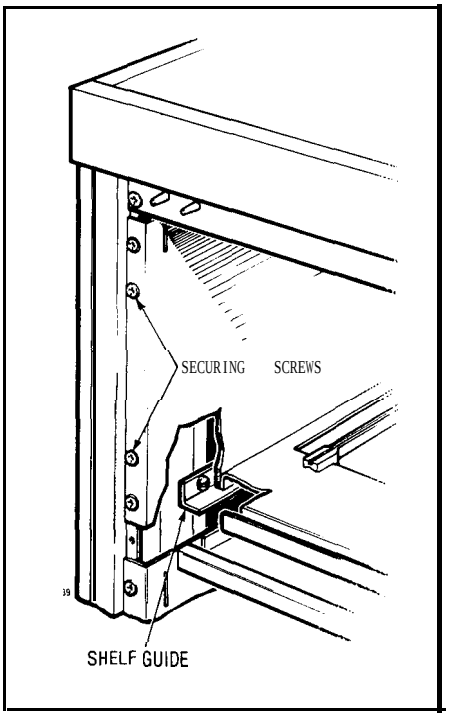

Fig. 601-l

CAUTION
Ensure tagged end of each interconnect cable is plugged into shelf 2.
DO NOT FORCE CONNECTOR

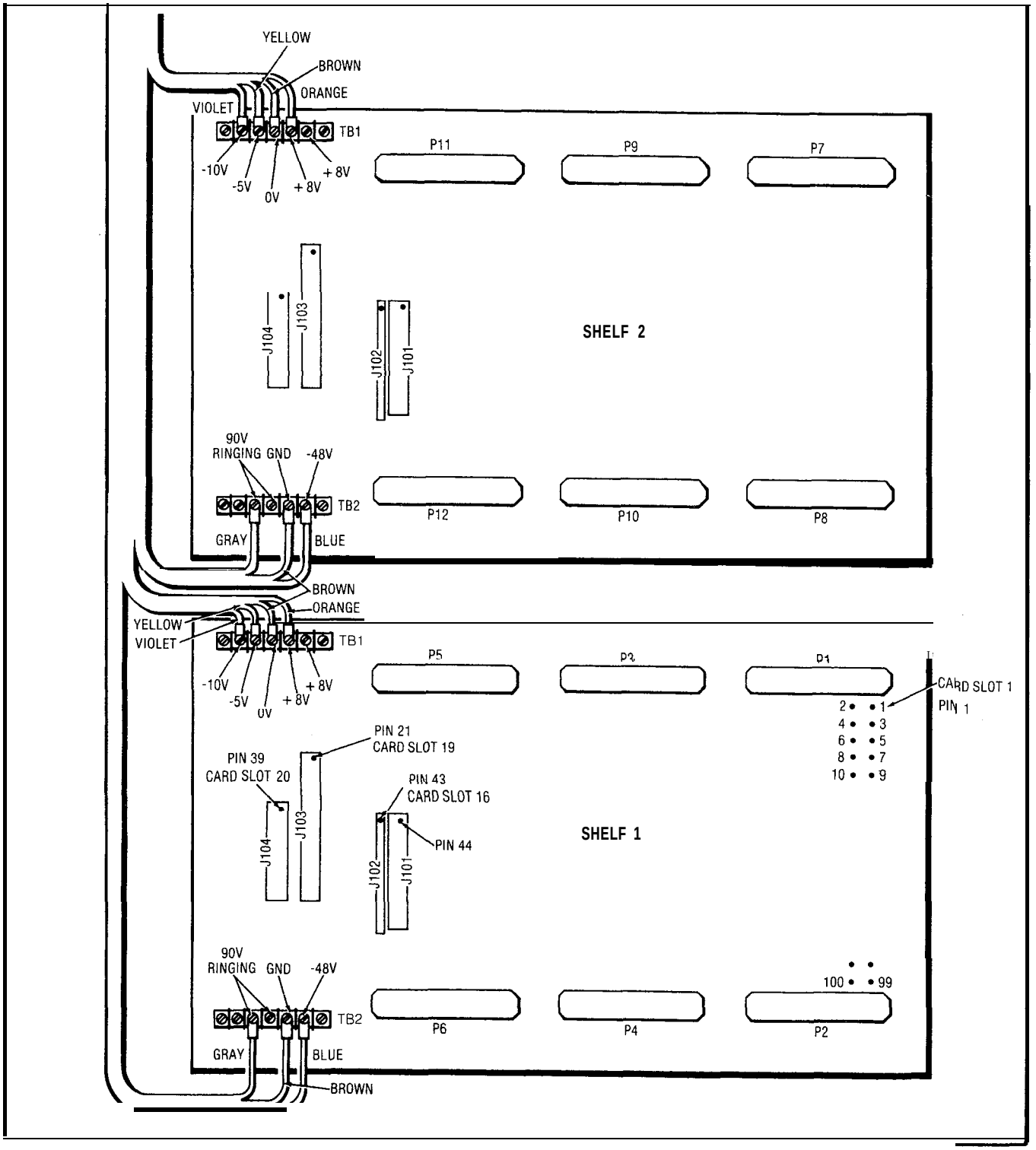
YELLOW
BROWN
ORANGE
VIOLET
TB1
-10V
-5V
0V
+8V
+8V
P11
P9
P7
J104
J103
J102
J101
SHELF 2
90V RINGING
GND
-48V
TB2
GRAY
BLUE
P12
P10
P8
BROWN
ORANGE
YELLOW
VIOLET
TB1
-10V
-5V
0V
+8V
+8V
P5
P3
P1
CARD SLOT 1
PIN 1
2 • • 1
4 • • 3
6 • • 5
8 • • 7
10 • • 9
PIN 21
CARD SLOT 19
PIN 39
CARD SLOT 20
PIN 43
CARD SLOT 16
PIN 44
J104
J103
J102
J101
SHELF 1
90V RINGING
GND
-48V
TB2
GRAY
BLUE
BROWN
100 • • 99
P6
P4
P2

Fig. 601-2

INSTALL NEW CARDS
MAP200-602
Issue 1, January 1980
Sheet 1 of 8

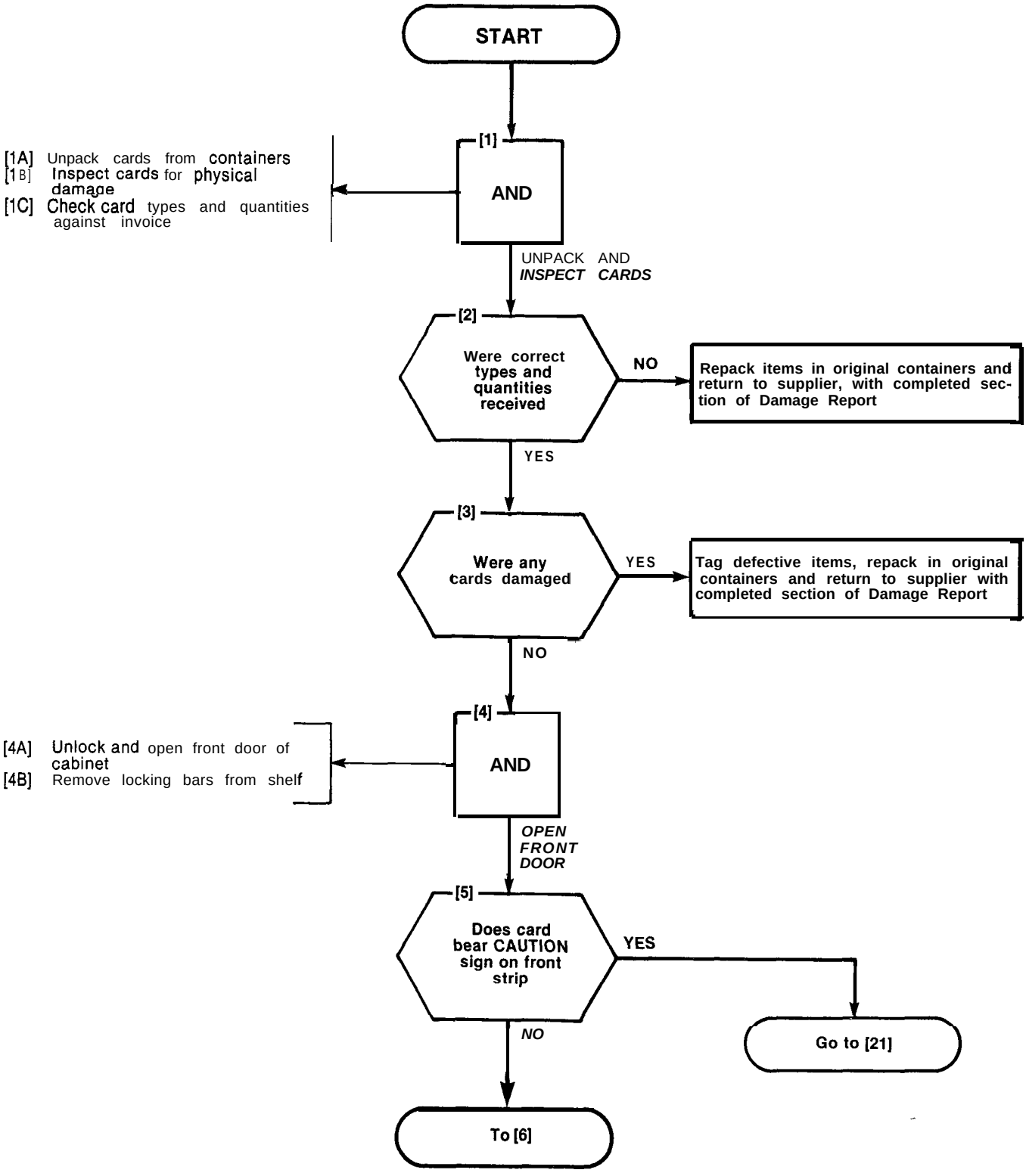

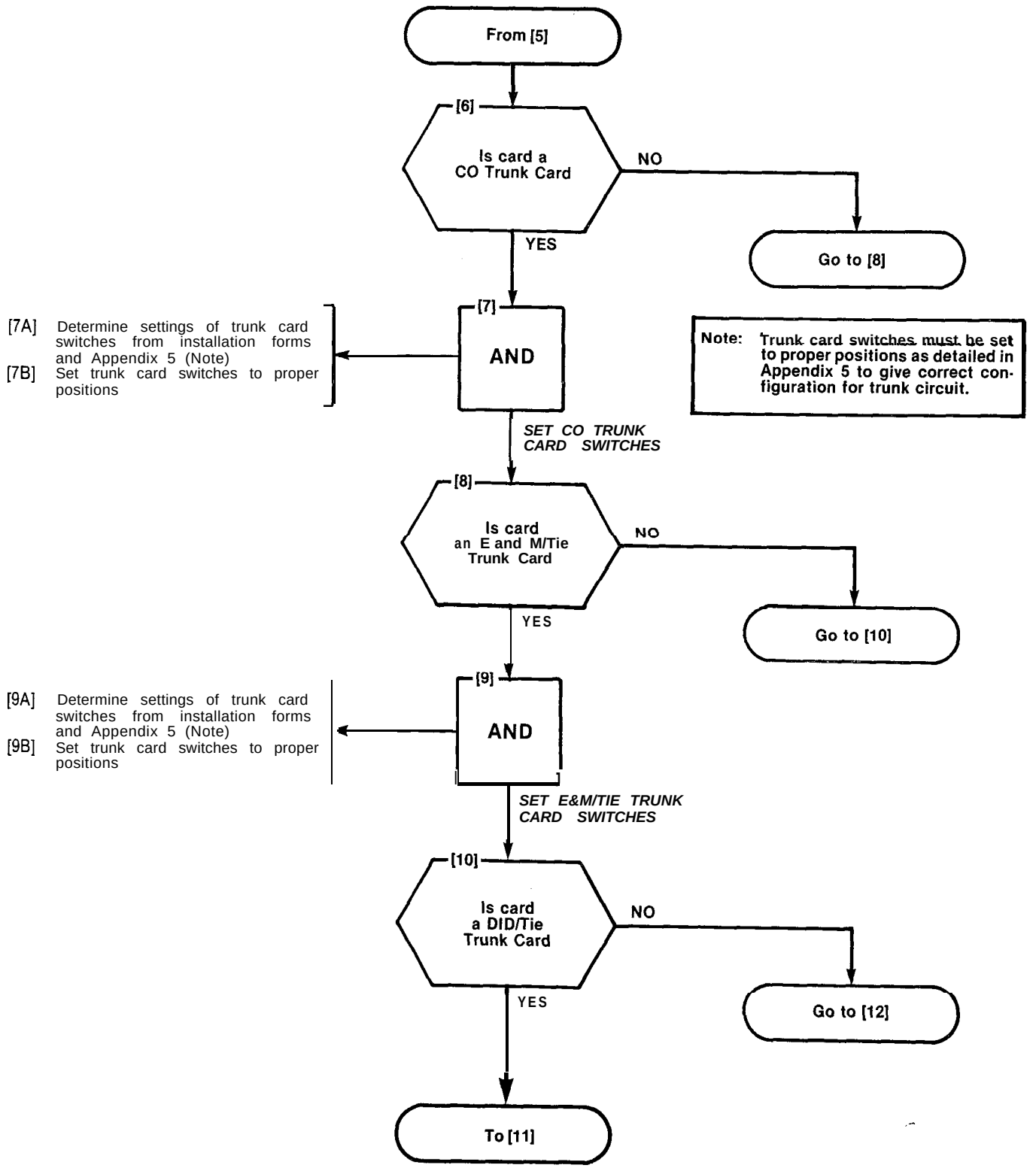
From [5]
[6]
Is card a CO Trunk Card
NO
YES
Go to [8]
[7]
AND
[7A] Determine settings of trunk card switches from installation forms and Appendix 5 (Note)
[7B] Set trunk card switches to proper positions
Note: Trunk card switches must be set to proper positions as detailed in Appendix 5 to give correct configuration for trunk circuit.
SET CO TRUNK CARD SWITCHES
[8]
Is card an E and M/Tie Trunk Card
NO
YES
Go to [10]
[9]
AND
[9A] Determine settings of trunk card switches from installation forms and Appendix 5 (Note)
[9B] Set trunk card switches to proper positions
SET E&M/TIE TRUNK CARD SWITCHES
[10]
Is card a DID/Tie Trunk Card
NO
YES
Go to [12]
To [11]

INSTALL NEW CARDS
MAP200-602
Issue 1, January 1980
Sheet 3 of 8

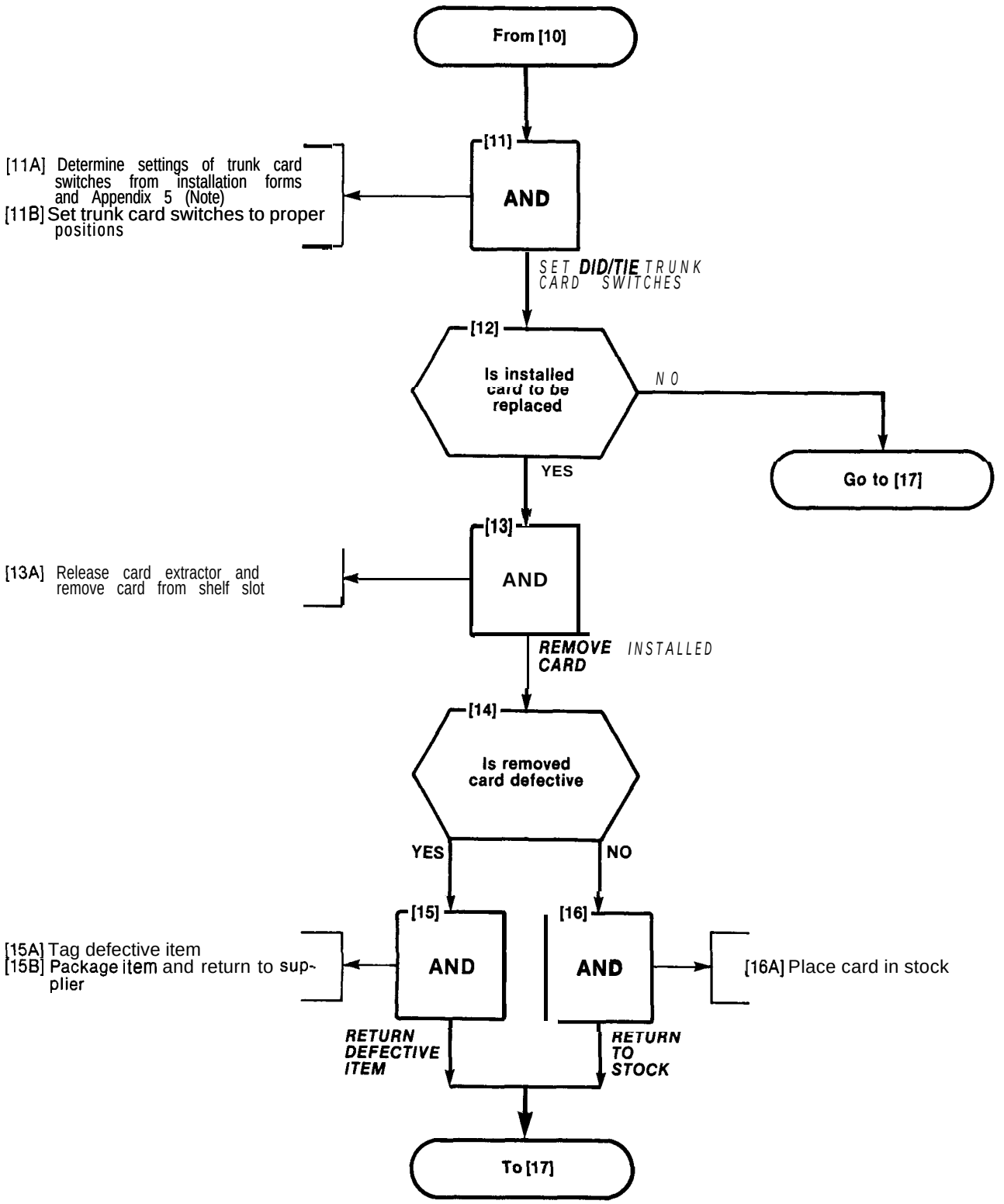

INSTALL NEW CARDS
MAP200-602
Issue 1, January 1980
Sheet 4 of 8

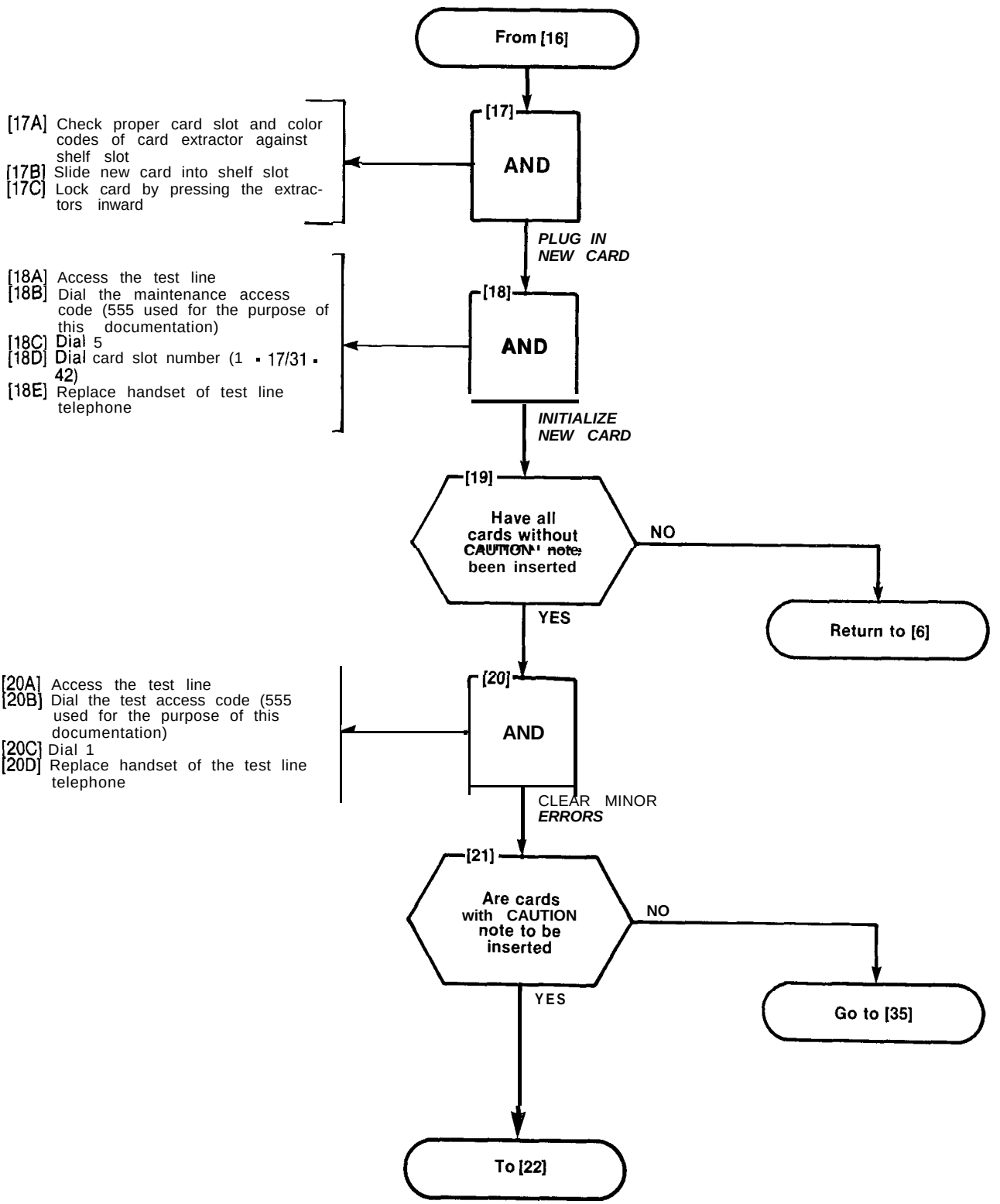

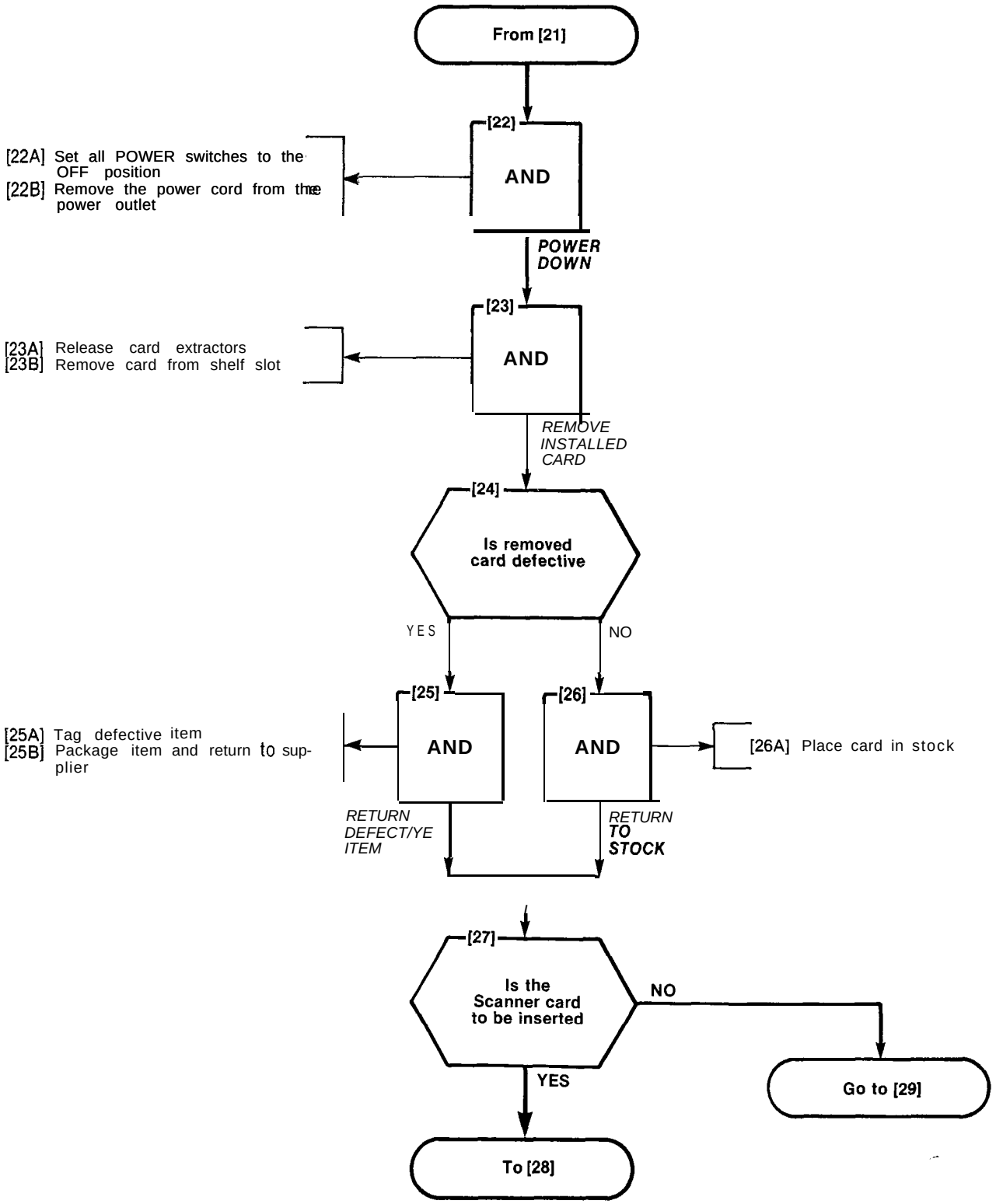
From [21]
[22]
AND
[22A] Set all POWER switches to the OFF position
[22B] Remove the power cord from the power outlet
POWER DOWN
[23]
AND
[23A] Release card extractors
[23B] Remove card from shelf slot
REMOVE INSTALLED CARD
[24]
Is removed card defective
YES
NO
[25]
AND
[25A] Tag defective item
[25B] Package item and return to supplier
RETURN DEFECT/YE ITEM
[26]
AND
[26A] Place card in stock
RETURN TO STOCK
[27]
Is the Scanner card to be inserted
NO
YES
Go to [29]
To [28]

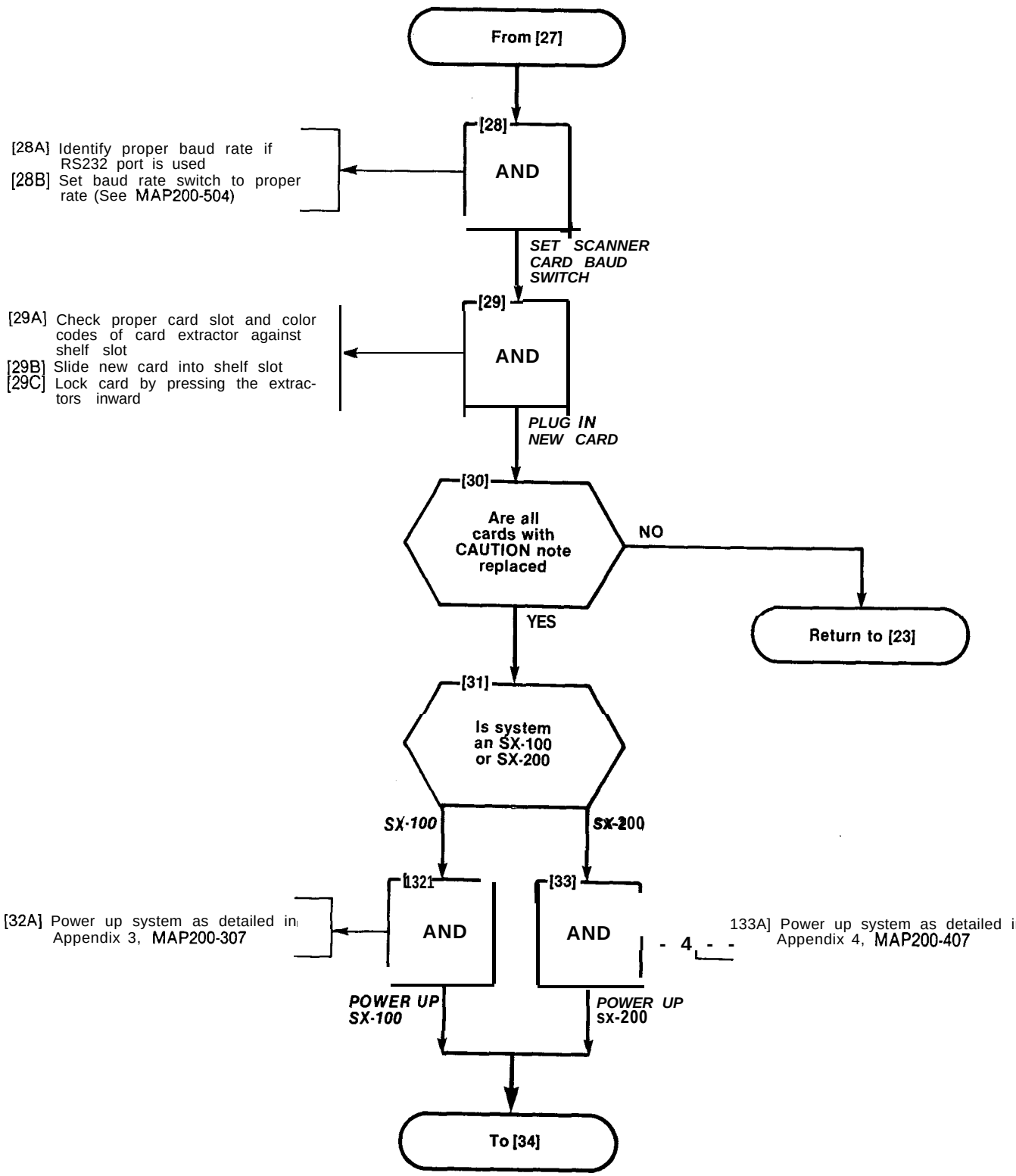
From [27]
[28]
AND
[28A] Identify proper baud rate if RS232 port is used
[28B] Set baud rate switch to proper rate (See MAP200-504)
SET SCANNER CARD BAUD SWITCH
[29]
AND
[29A] Check proper card slot and color codes of card extractor against shelf slot
[29B] Slide new card into shelf slot
[29C] Lock card by pressing the extractors inward
PLUG IN NEW CARD
[30]
Are all cards with CAUTION note replaced
NO
Return to [23]
YES
[31]
Is system an SX-100 or SX-200
SX-100
SX-200
[32]
AND
[32A] Power up system as detailed in Appendix 3, MAP200-307
[33]
AND
133A] Power up system as detailed in Appendix 4, MAP200-407
- 4 - -
POWER UP SX-100
POWER UP SX-200
To [34]

INSTALL NEW CARDS
MAP200-602
Issue 1, January 1980
Sheet 7 of 8

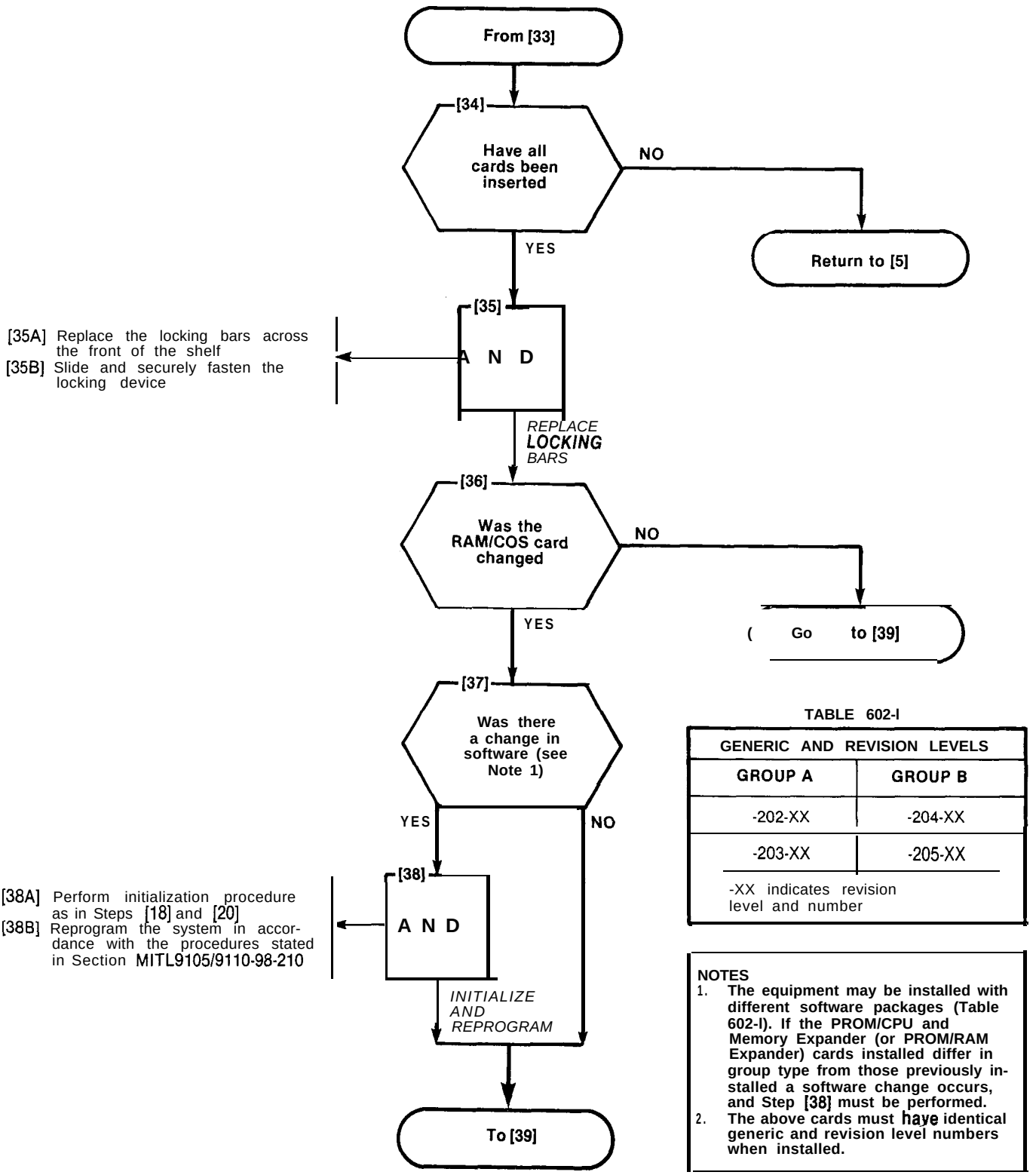

TABLE 602-I

GENERIC AND REVISION LEVELS	
GROUP A	GROUP B
-202-XX	-204-XX
-203-XX	-205-XX

-XX indicates revision level and number

NOTES

1. **The equipment may be installed with different software packages (Table 602-I). If the PROM/CPU and Memory Expander (or PROM/RAM Expander) cards installed differ in group type from those previously installed a software change occurs, and Step [38] must be performed.**
2. **The above cards must have identical generic and revision level numbers when installed.**

INSTALL NEW CARDS
MAP200-602
issue 1, January 1980
Sheet 8 of 8

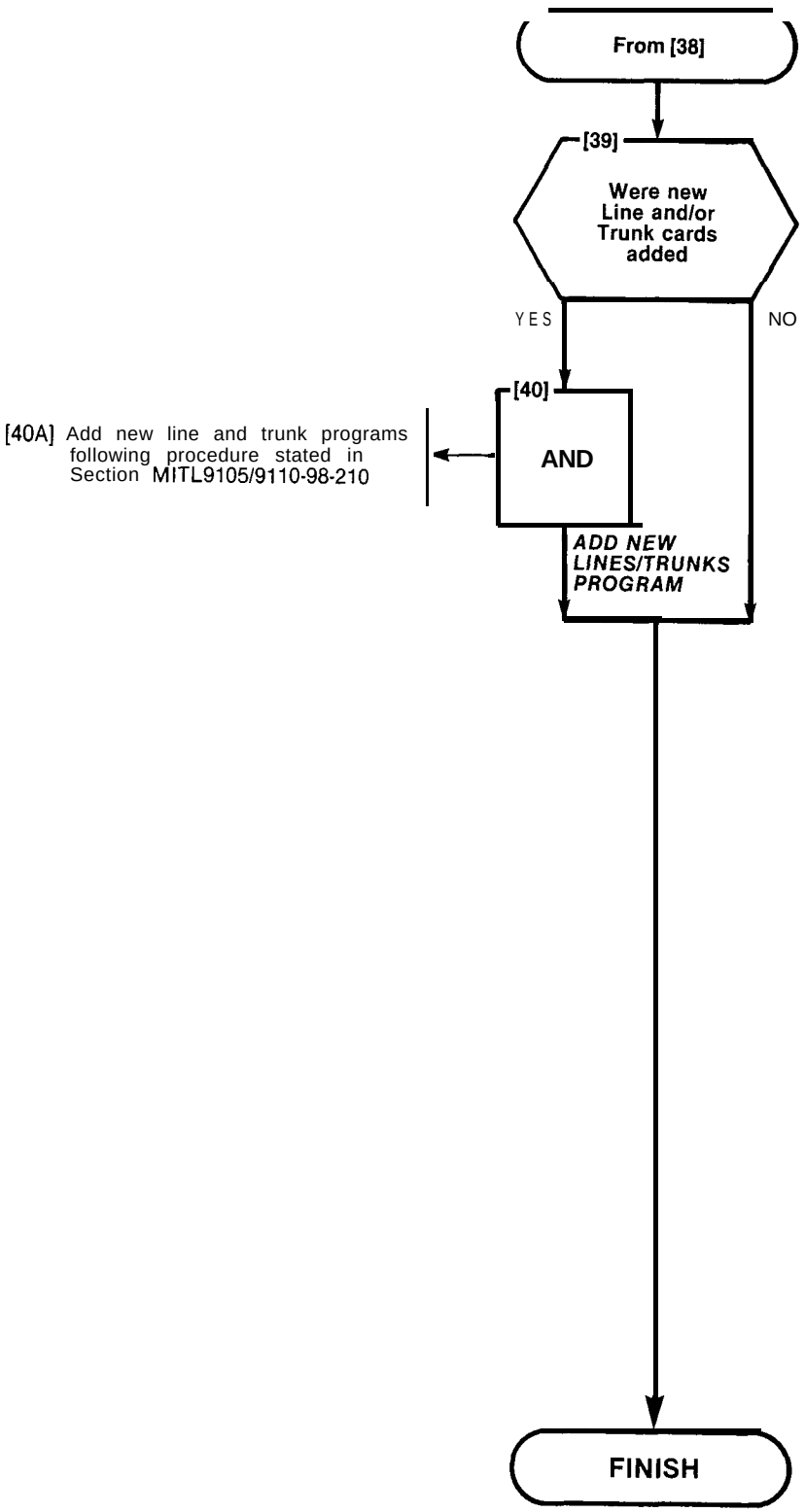

RESERVE POWER SUPPLY INSTALLATION (SX-200)

MAP200-603

Issue 1, January 1980

Sheet 1 of 7

Note: This MAP applies only to SX-200 equipment.

Tools Required

Non Predrilled Cabinet
- 1 - Electric drill
- 1 - No. 22 (0.157 inch) twist drill
- 1 - Slot screwdriver ½ inch

Predrilled Cabinet
- 1 - Slot screwdriver ½ inch

CAUTION

Check that the BATTERY switch on the reserve battery pack is set to OFF.
Check that the three switches on the battery charging unit is set to OFF.

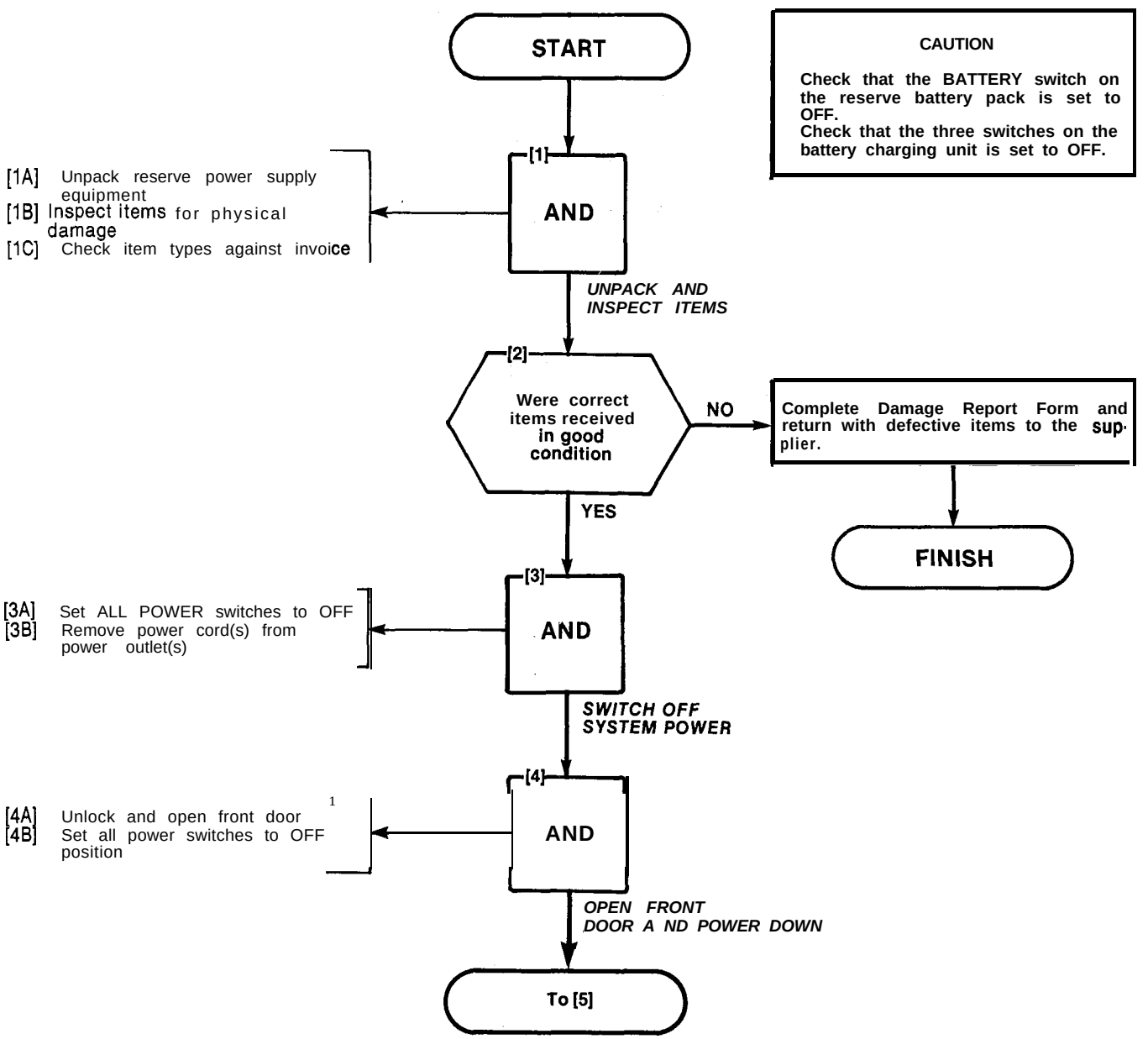

RESERVE POWER SUPPLY INSTALLATION (SX-200)
MAP200-603
Issue 1, January 1980
Sheet 2 of 7

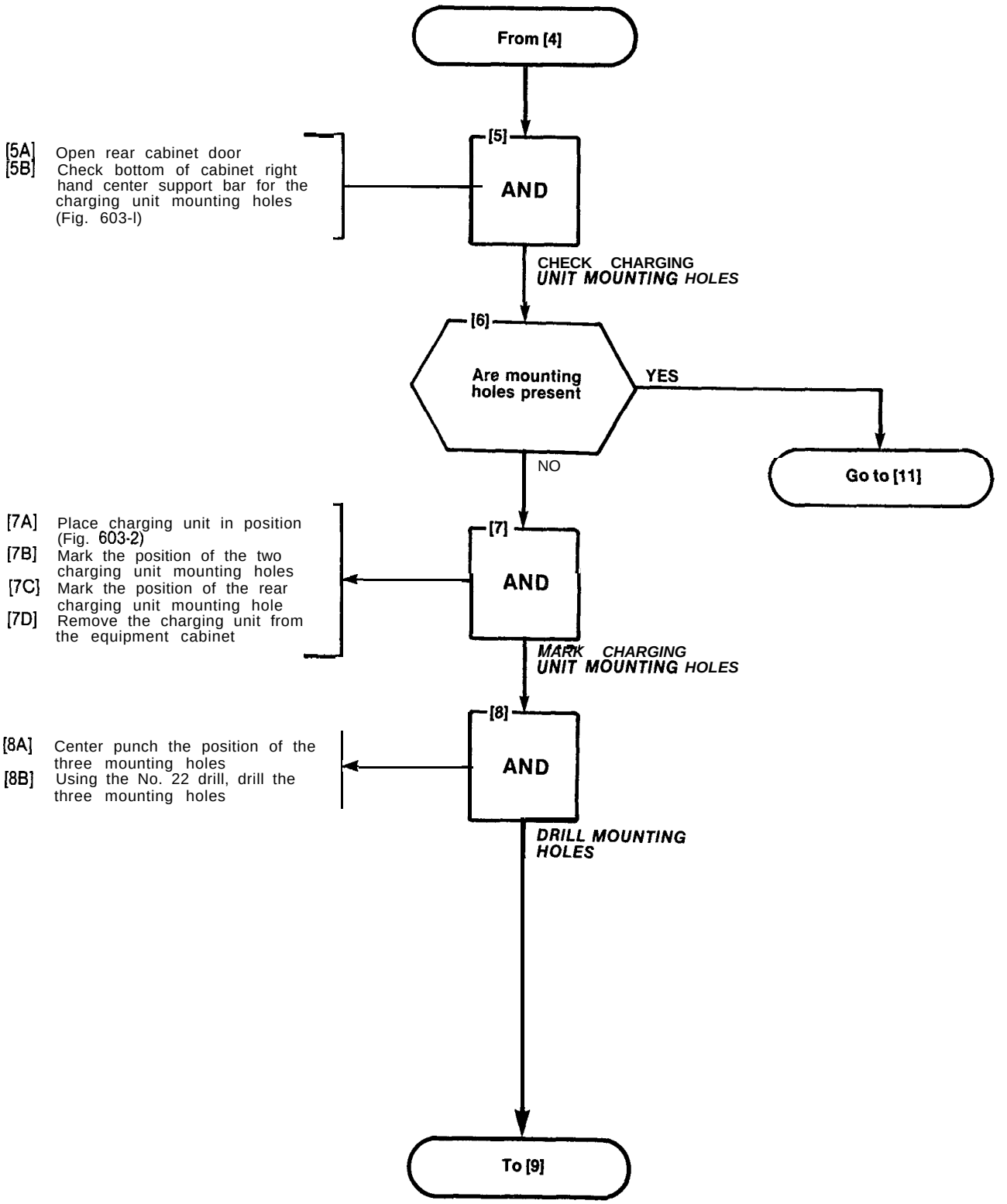

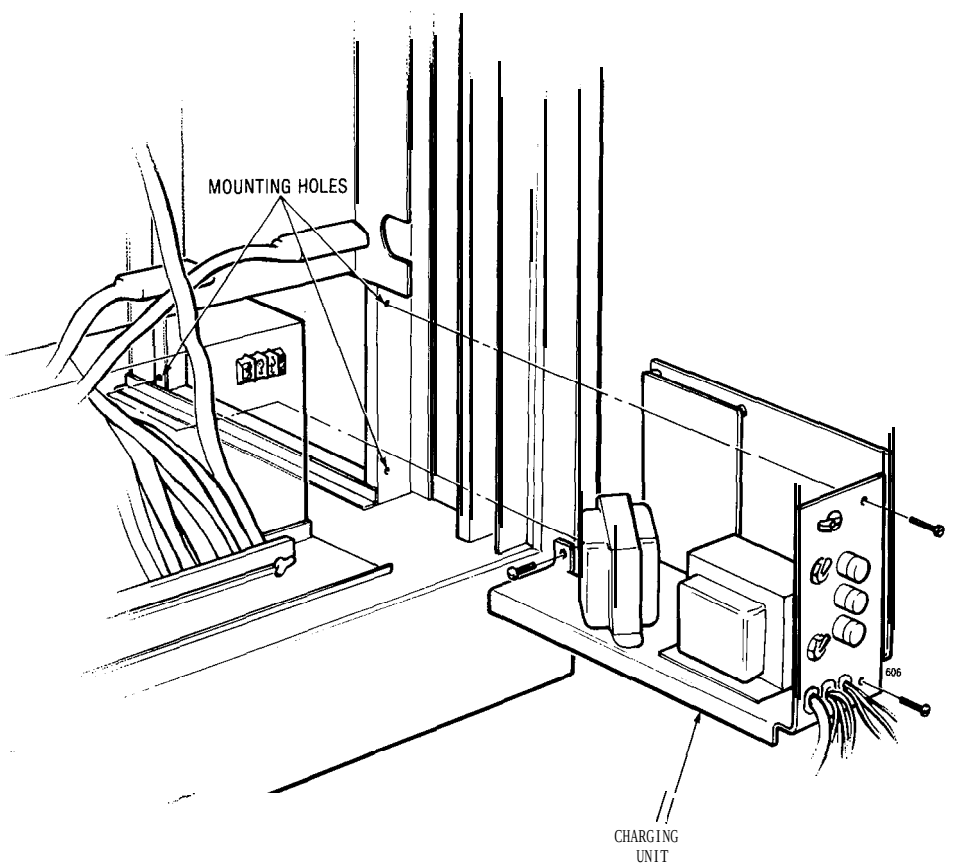

Fig. 603-1

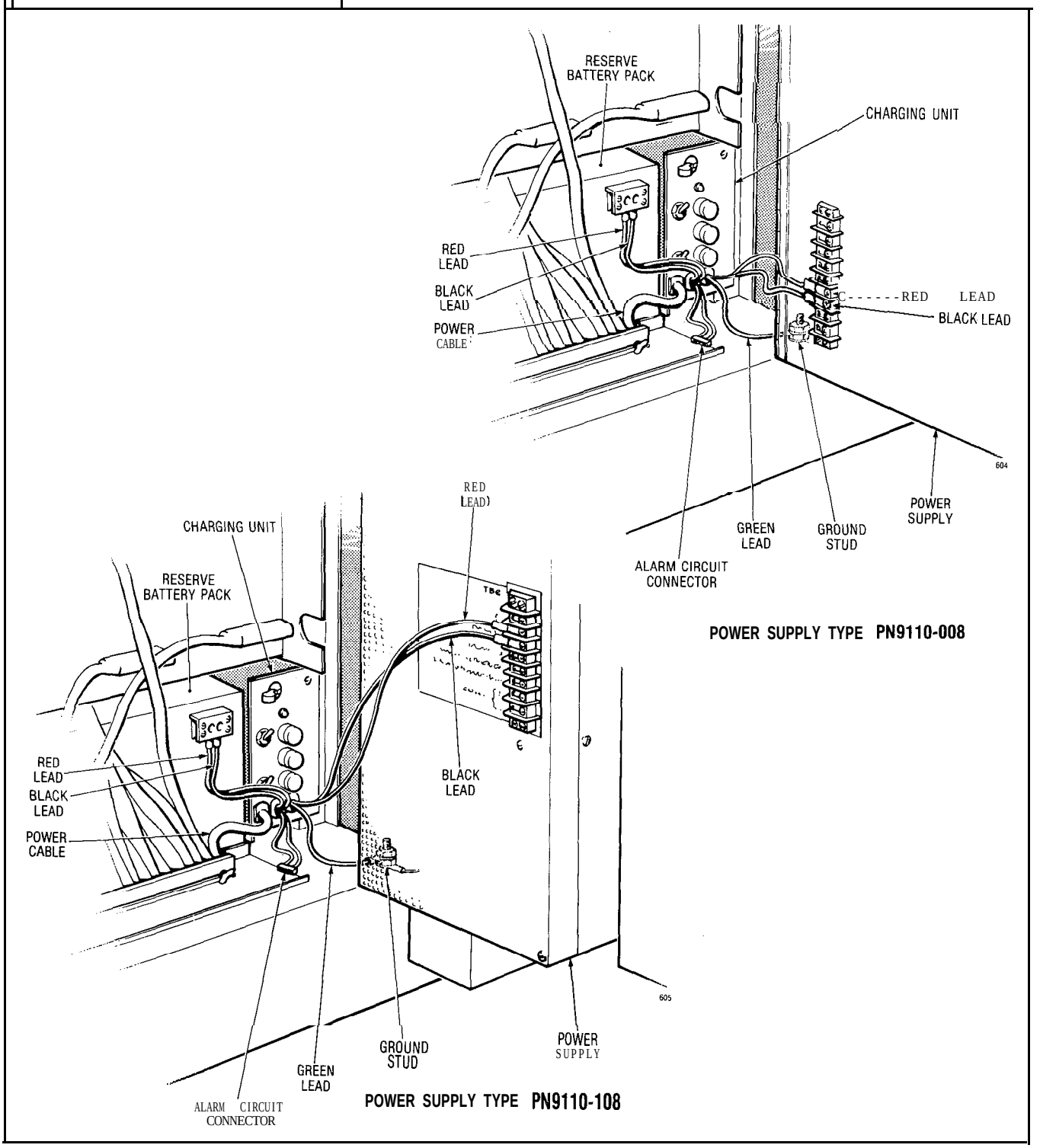
RESERVE BATTERY PACK
CHARGING UNIT
RED LEAD
BLACK LEAD
POWER CABLE
RED LEAD
BLACK LEAD
604
POWER SUPPLY
GREEN LEAD
GROUND STUD
ALARM CIRCUIT CONNECTOR
POWER SUPPLY TYPE PN9110-008
RED LEAD
CHARGING UNIT
RESERVE BATTERY PACK
TBC
RED LEAD
BLACK LEAD
POWER CABLE
BLACK LEAD
605
GROUND STUD
POWER SUPPLY
GREEN LEAD
ALARM CIRCUIT CONNECTOR
POWER SUPPLY TYPE PN9110-108

Fig. 603-2

RESERVE POWER SUPPLY INSTALLATION (SX-200)

MAP200-603

Issue 1, January 1980

Sheet 5 of 7

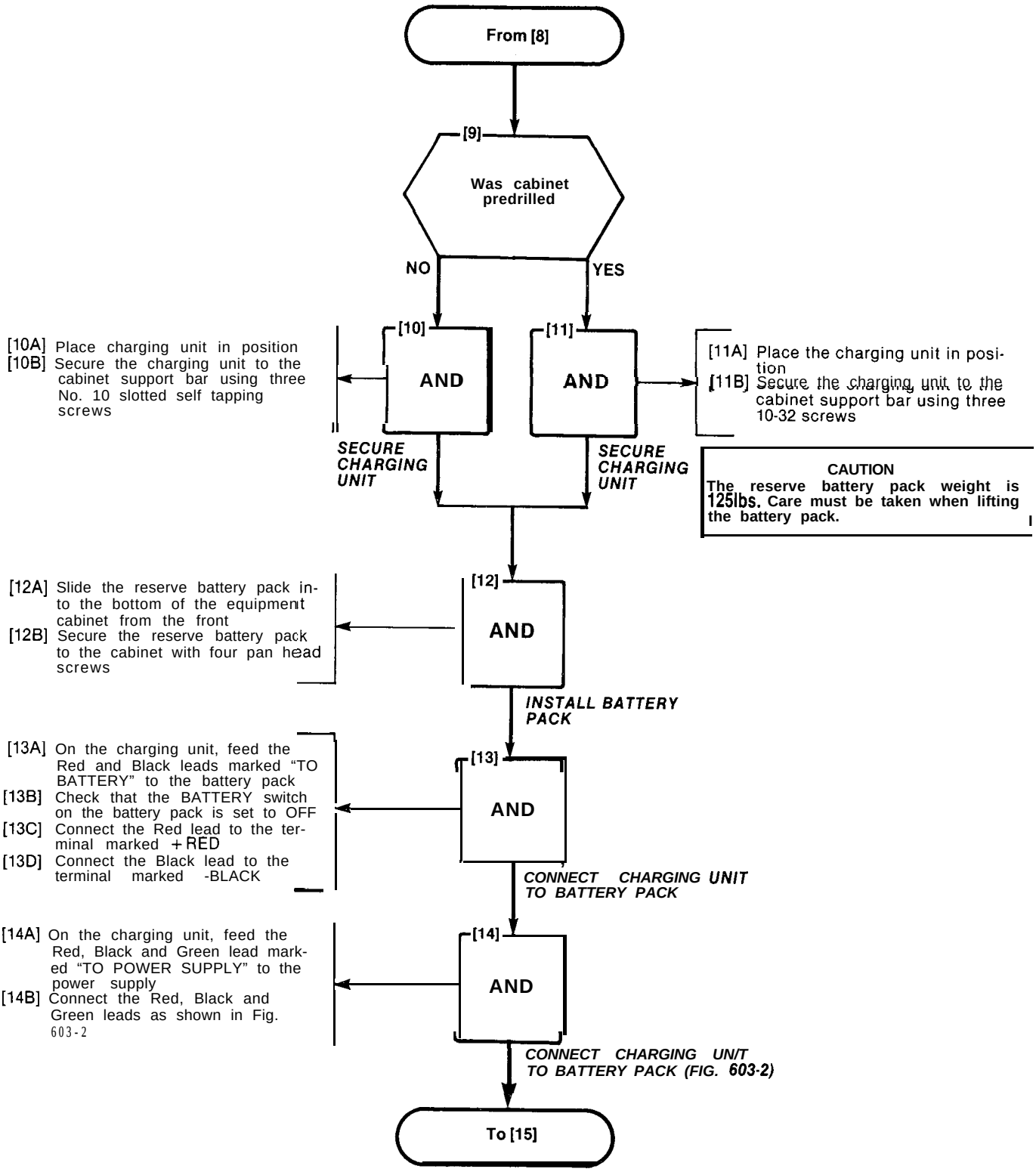

RESERVE POWER SUPPLY INSTALLATION (SX-200)
MAP200-603
Issue 1, January 1980
Sheet 6 of 7

From [14]

[15] Is the battery alarm circuit to be connected at this time

NO → Go to [18]

YES

[16A] Run two wire cable from the alarm indicator to the equipment cabin et
[16B] Feed the cable through the equipment cabinet cable duct. (Fig. 603-3)
[16C] Connect the two wires to the Molex plug supplied
[16D] Insert the Molex plug into the receptacle

[16] AND

CONNECT BATTERY ALARM (FIG. *603-3)*

[17A] Feed the charging unit power lead through the cable duct
[17B] Run the power lead to the power outlet
[17C] Plug system power lead into power outlet
• AC power LED in on
[17D] Plug charging unit power lead into power outlet

1171 AND

PLUG IN SYSTEM

On Battery Pack
[18A] Set BATTERY switch to ON

[18] AND

SWITCH BATTERY PACK ON

On Charging Unit
[19A] Set AC switch to ON
[19B] Set DC switch to ON
[19C] Set BATTERY switch to ON
• BATTERY CHARGING LED lights

[19] AND

SWITCH CHARGING UNIT ON

To [20]

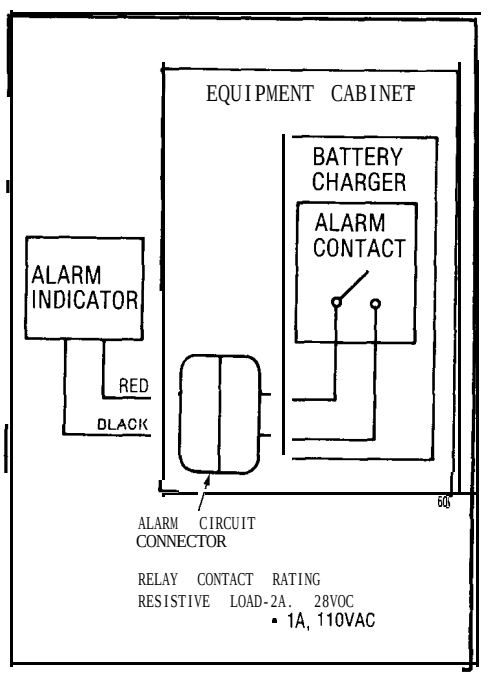

Fig. 603-3

RESERVE POWER SUPPLY INSTALLATION (SX-200)
MAP200-603
Issue 1, January 1980
Sheet 7 of 7

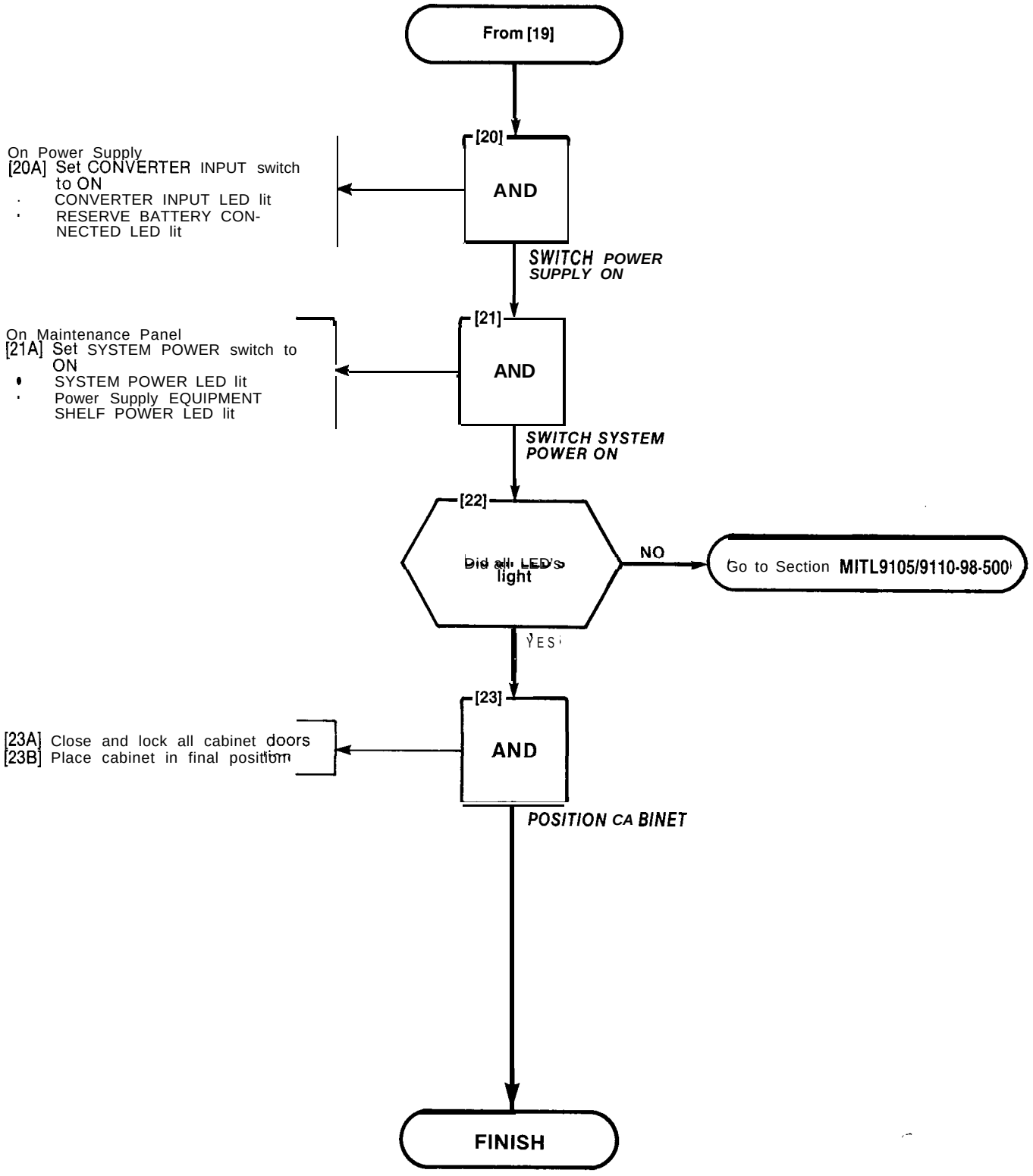

CONSOLE INTERFACE BOARD INSTALLATION (SX-200)

MAP200-604

Issue 1, January 1980

Sheet 1 of 7

Tools Required

1 Wrench ½ inch
1 Slotted screwdriver ¼ inch

Note: This MAP applies only to SX-200 equipment.

CAUTION

Check that main power is off
Check that the three switches on the battery charging unit are set to OFF.
If there is a reserve battery pack set it to off.

NOTE

Step 2 is required to make room to affix Console card to bracket in Step 7.

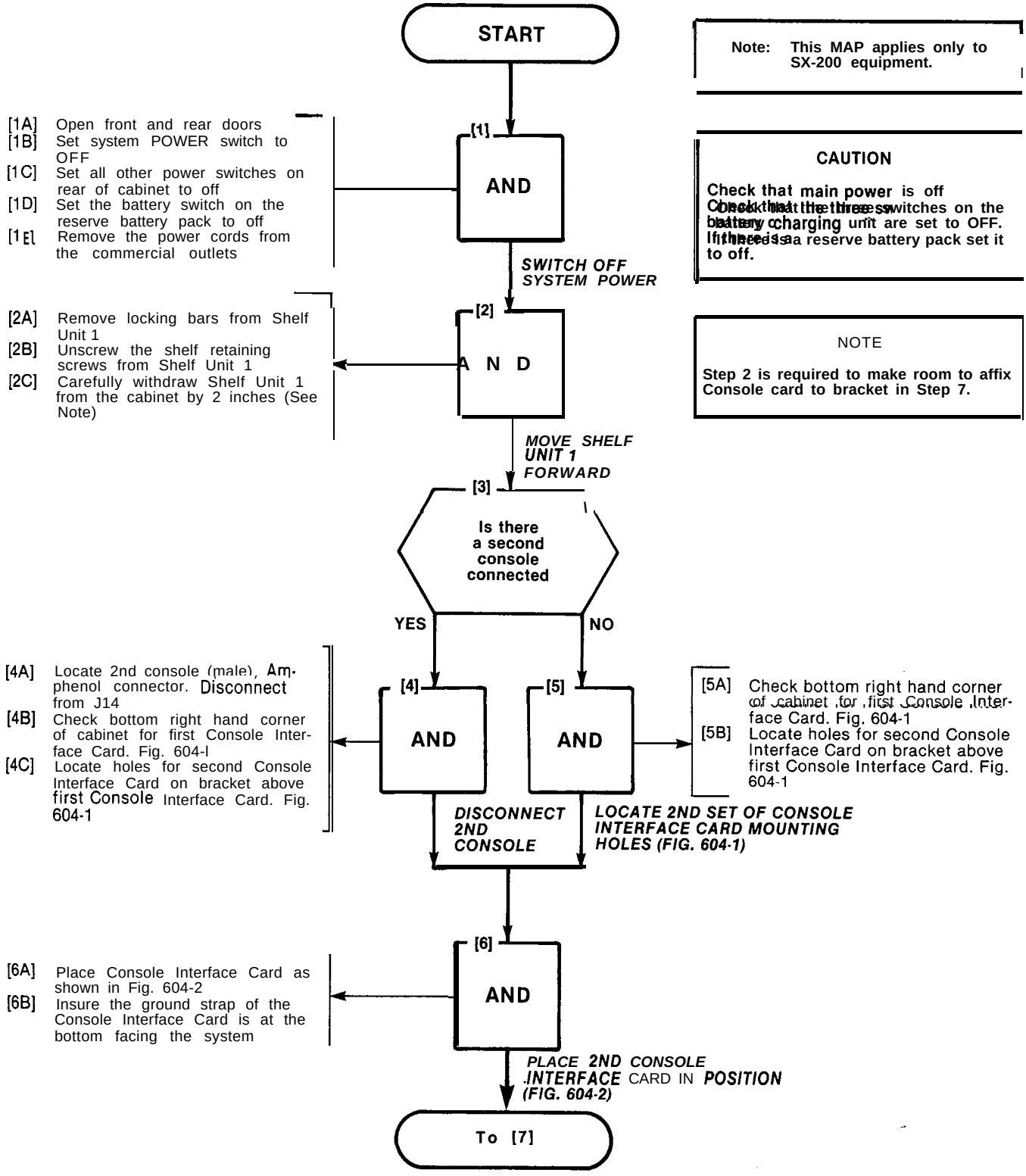

CONSOLE INTERFACE BOARD INSTALLATION (SX-200)

MAP200-604

Issue 1, January 1980

Sheet 2 of 7

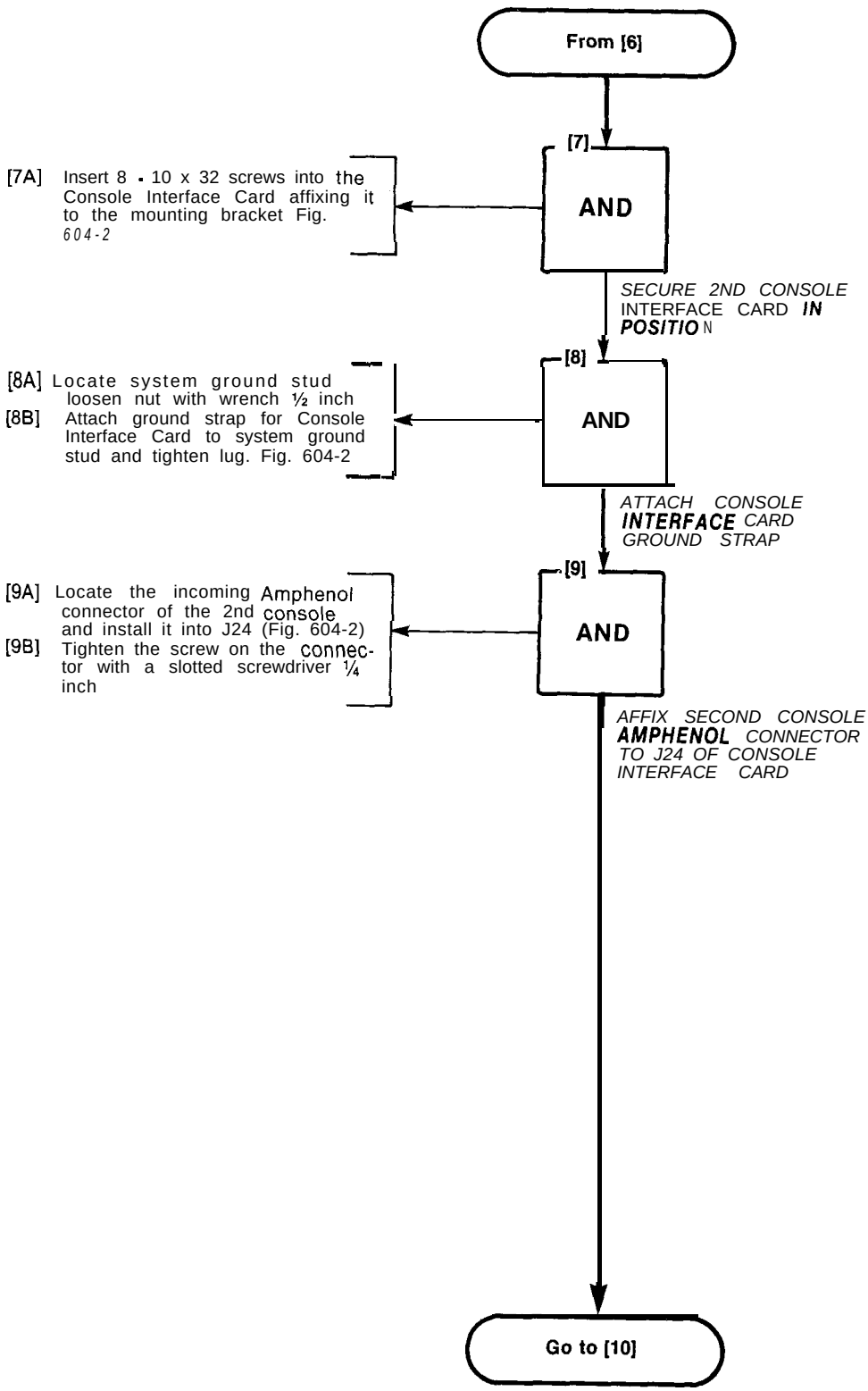

CONSOLE INTERFACE BOARD INSTALLATION (SX-200)
MAP200-604
Issue 1, January 1980
Sheet 3 of 7

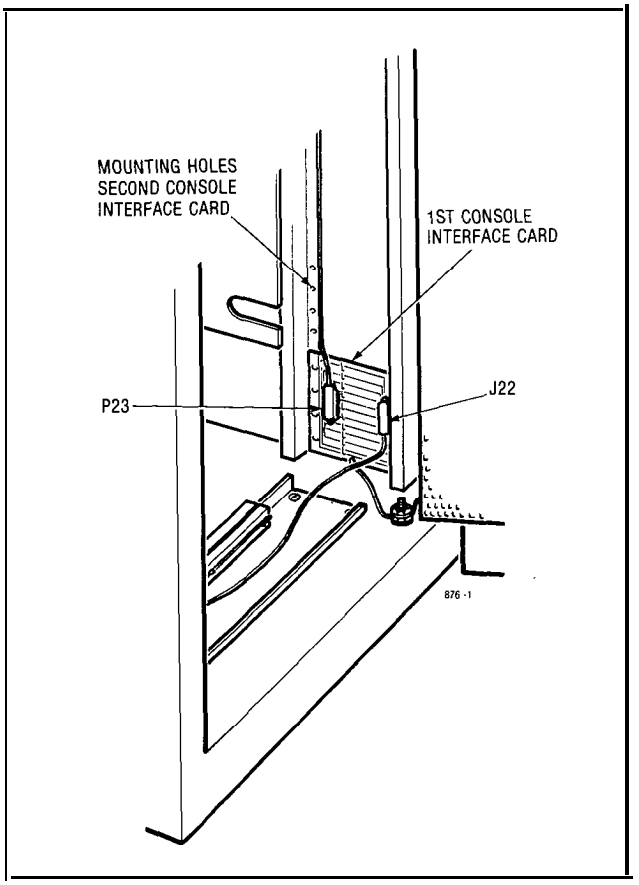

Fig. 604-1

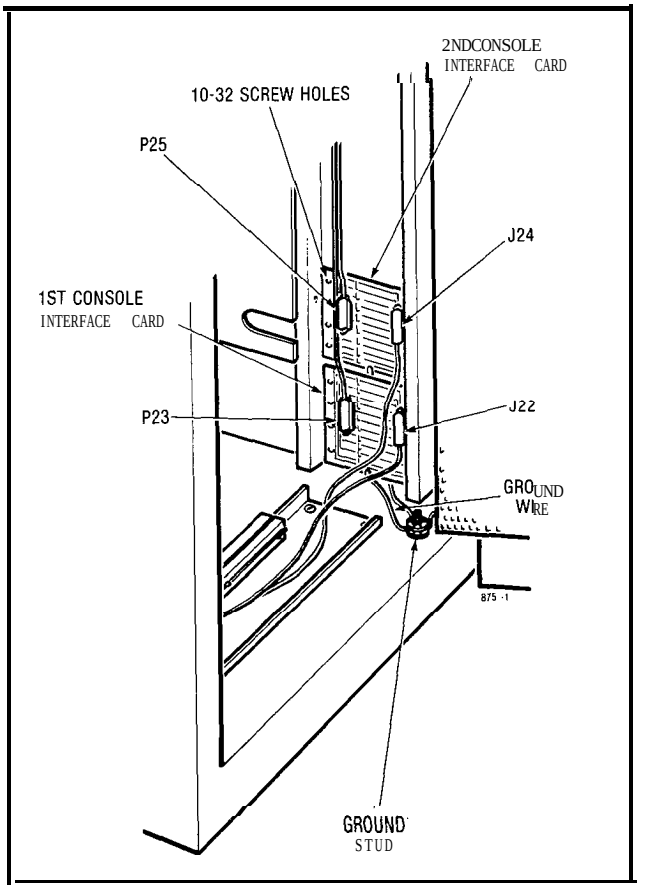

Fig. 604-2

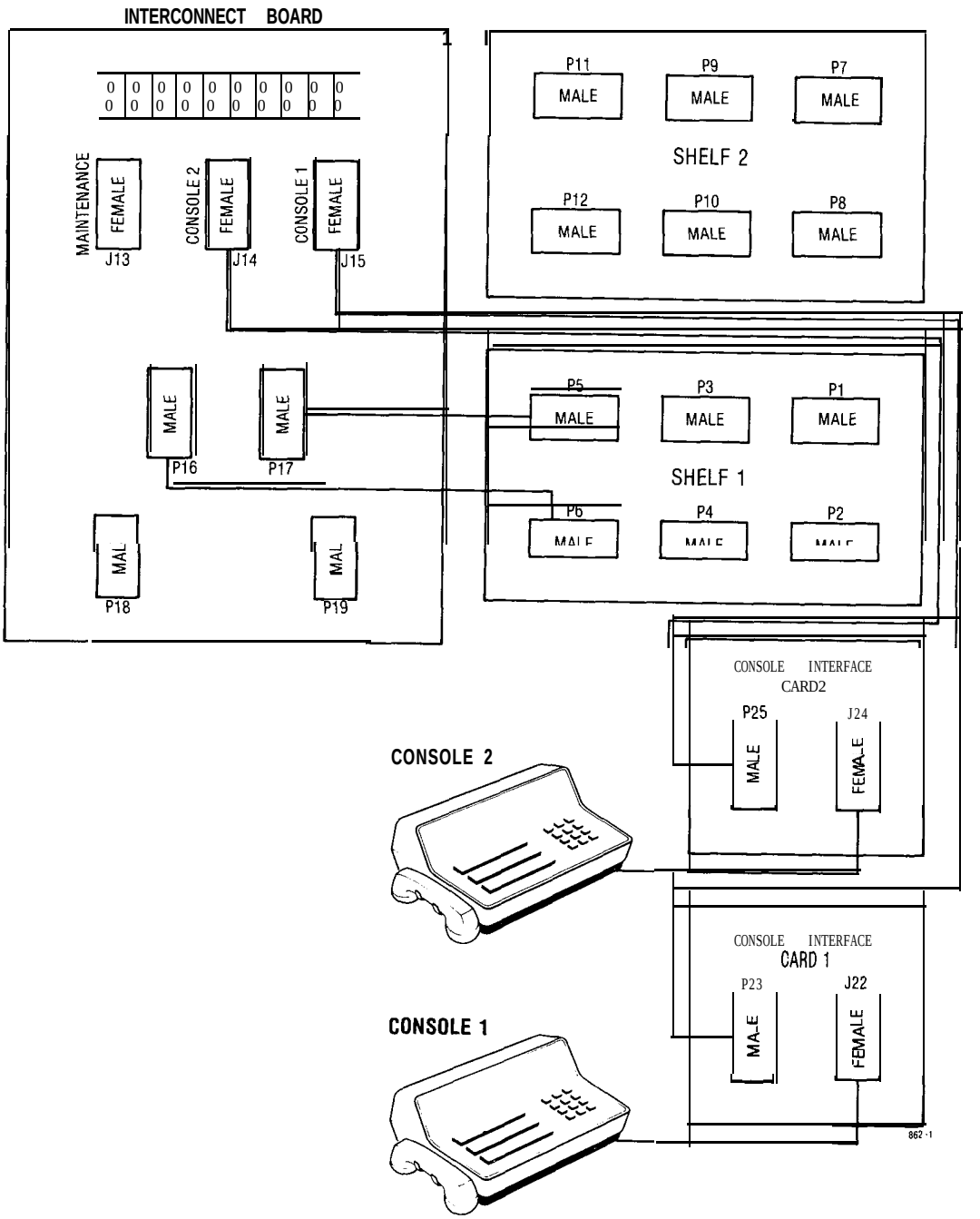
INTERCONNECT BOARD
MAINTENANCE
FEMALE
J13
CONSOLE 2
FEMALE
J14
CONSOLE 1
FEMALE
J15
MALE
P16
MALE
P17
MAL
P18
MAL
P19
P11
MALE
P9
MALE
P7
MALE
SHELF 2
P12
MALE
P10
MALE
P8
MALE
P5
MALE
P3
MALE
P1
MALE
SHELF 1
P6
MALE
P4
MALE
P2
MALE
CONSOLE INTERFACE CARD2
P25
MALE
J24
FEMALE
CONSOLE 2
CONSOLE INTERFACE CARD 1
P23
MALE
J22
FEMALE
CONSOLE 1
862-1

Fig. 604-3

CONSOLE INTERFACE BOARD INSTALLATION (SX-200)

MAP200-604

Issue 1, January 1980

Sheet 5 of 7

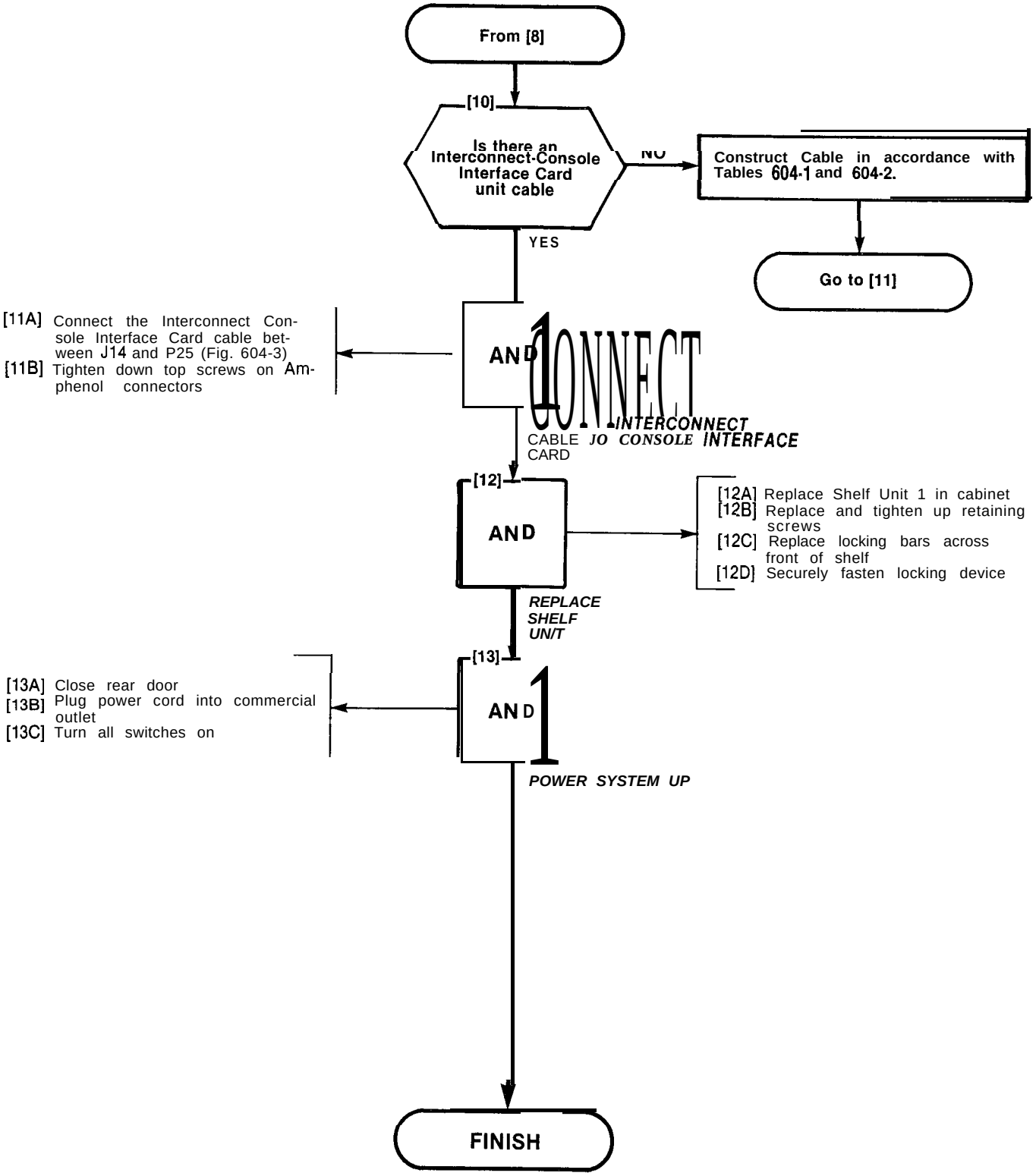

TABLE 604-i

INTERCONNECT BLOCK - CONSOLE INTERFACE CARD

Pin No.	Pair Colour	Lead Designation
26	W-BL	ELECTROSTATIC GROUND
1	BL-W	ELECTROSTATIC GROUND
27	w-o	ELECTROSTATIC GROUND
2	o-w	ELECTROSTATIC GROUND
28	W-G	ELECTROSTATIC GROUND
3	G-W	ELECTROSTATIC GROUND
29	W-BR	ELECTROSTATIC GROUND
4	BR-W	ELECTROSTATIC GROUND
30	w-s	DATA IN COMMON
5	s-w	DATA IN
31	R-BL	ELECTROSTATIC GROUND
6	BL-R	ELECTROSTATIC GROUND
32	R-O	DATA OUT COMMON
7	O-R	DATA OUT
33	R-G	ELECTROSTATIC GROUND
8	G-R	ELECTROSTATIC GROUND
34	R-BR	ELECTROSTATIC GROUND
9	BR-R	ELECTROSTATIC GROUND
35	R-S	CUTOVER SWB
10	S-R	CUTOVER SWA
36	BK-BL	ELECTROSTATIC GROUND
11	BL-BK	ELECTROSTATIC GROUND
37	BK-O	MAJOR ALARM
12	O-BK	MAJOR ALRAM
38	BK-G	TIP
13	G-BK	RING
39	BK-BR	ELECTROSTATIC GROUND
14	BR-BK	ELECTROSTATIC GROUND
40	BK-S	ELECTROSTATIC GROUND
15	S-BK	ELECTROSTATIC GROUND
41	Y-BL	ELECTROSTATIC GROUND
16	BL-Y	ELECTROSTATIC GROUND
42	Y-O	ELECTROSTATIC GROUND
17	O-Y	ELECTROSTATIC GROUND
43	Y-G	ov
18	G-Y	-48V
44	Y-BR	ov
19	BR-Y	-48v
45	Y-S	ov
20	S-Y	-48v
46	V-BL	ov
21	BL-V	-48V
47	v-o	ov
22	o-v	-48V
48	V-G	ov
23	G-V	-48V
49	V-BR	ov
24	BR-V	-48V
50	v-s	ov
25	s-v	-48V

TABLE 604-2

POSITION	LEAD DESIGNATION	P5	P17	J14	P25	J24				
	CONSOLE2									
	T (A)	38	38	38	38	38				
	R (A)	13	13	13	13	13				
	S DATA OUT T (A)	39	39	32	32	32				
	S DATA OUT R (A)	14	14	7	7	7				
	S DATA IN T (A)	40	40	30	30	30				
	S DATA IN R(A)	15	15	5	5	5				
	MAJOR ALARM TB1-5			12 37	12 37	12 37				
16	– 48V TB 301			181920	181920	181920				
				21 22 23	21 22 23	212223				
				24 25	24 25	24 25				
	OVTB301-1			434445	434445	434445				
				464748	46 4748	464748				
				49 50	49 50	49 50				
	CUT OVER SWA			35	35	35				
	CUTOVERSWB			10	10	10				
	ALL UNLISTED PINS GO TO ESG TB301-3									
		P5	P17	J15	P23	J22				
	CONSOLE1									
	T (A)	42	42	38	38	38				
	R (A)	17	17	13	13	13				
	SDATAINT(A)	18	18	5	5	5				
	SDATAIN R(A)	43	43	30	30	30				
	S DATA OUT T (A)	19	19	7	7	7				
	S DATA OUT R (A)	44	44	32	32	32				
	MAJOR ALARM TB1-5			12 37	12 37	12 37				
17	– 48V TB 301			18 19 20	18 1920	1819 20				
	OVTB 301-1			21 2223	21 2223	212223				
				24 25	24 25	24 25				
				434445	434445	434445				
				46 4748	464748	464740				
				49 50	49 50	49 50				
	CUT OVER SWB			35	35	35				
	CUTOVERSWA			10	10	10				
	ALL UNLISTED PINS GO TO ESG TB301-3									

BACKPLANE TRANSLATOR BOARD INSTALLATION
MAP200-605
Issue 1, January 1980
Sheet 1 of 7

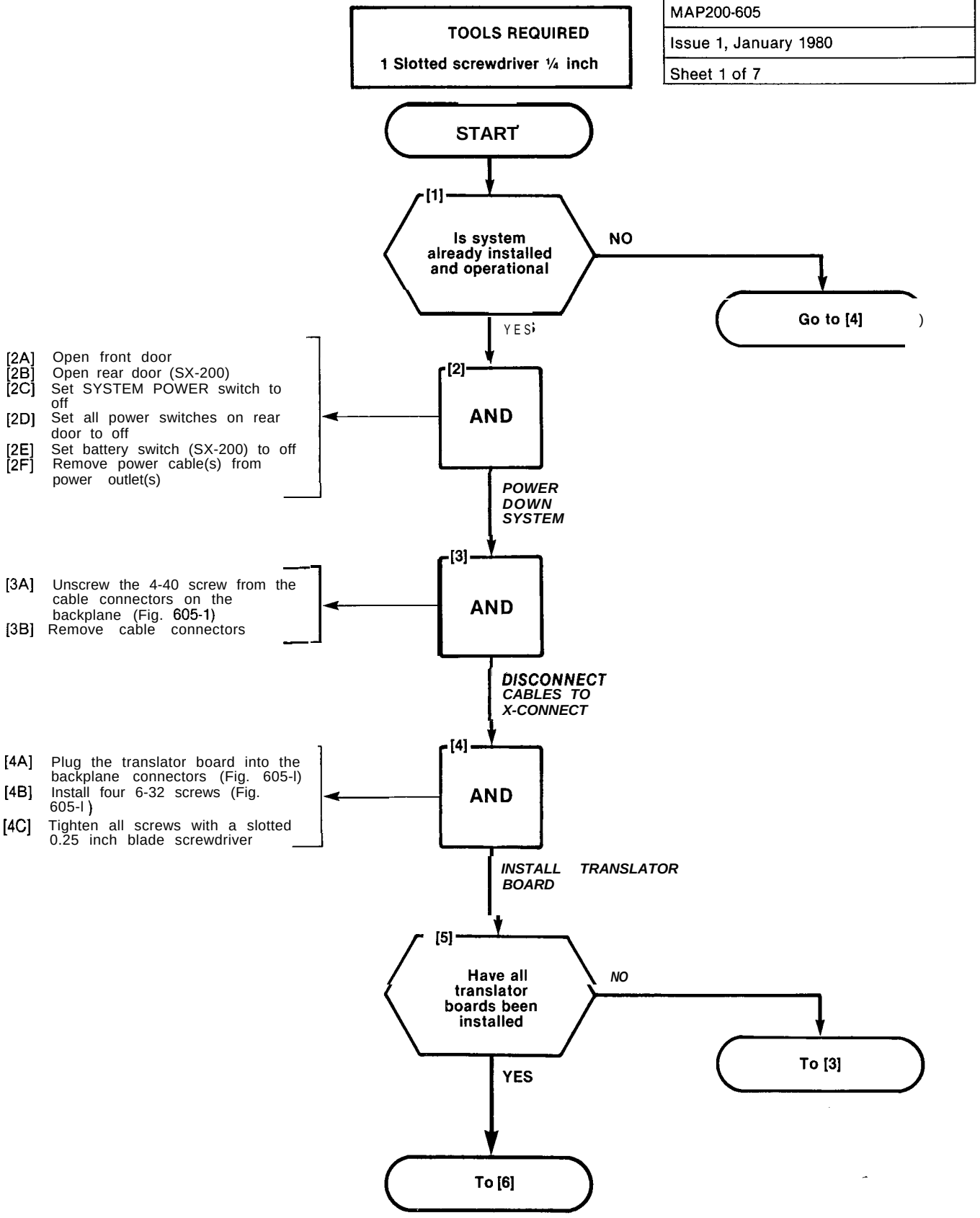

BACKPLANE TRANSLATOR BOARD INSTALLATION

MAP200-605

Issue 1, January 1980

Sheet 2 of 7

Note Installation of translator boards changes pin-out configuration on plugs. Lines and trunks must therefore be configured to accommodate the equipment numbers shown in Fig. 605-2.

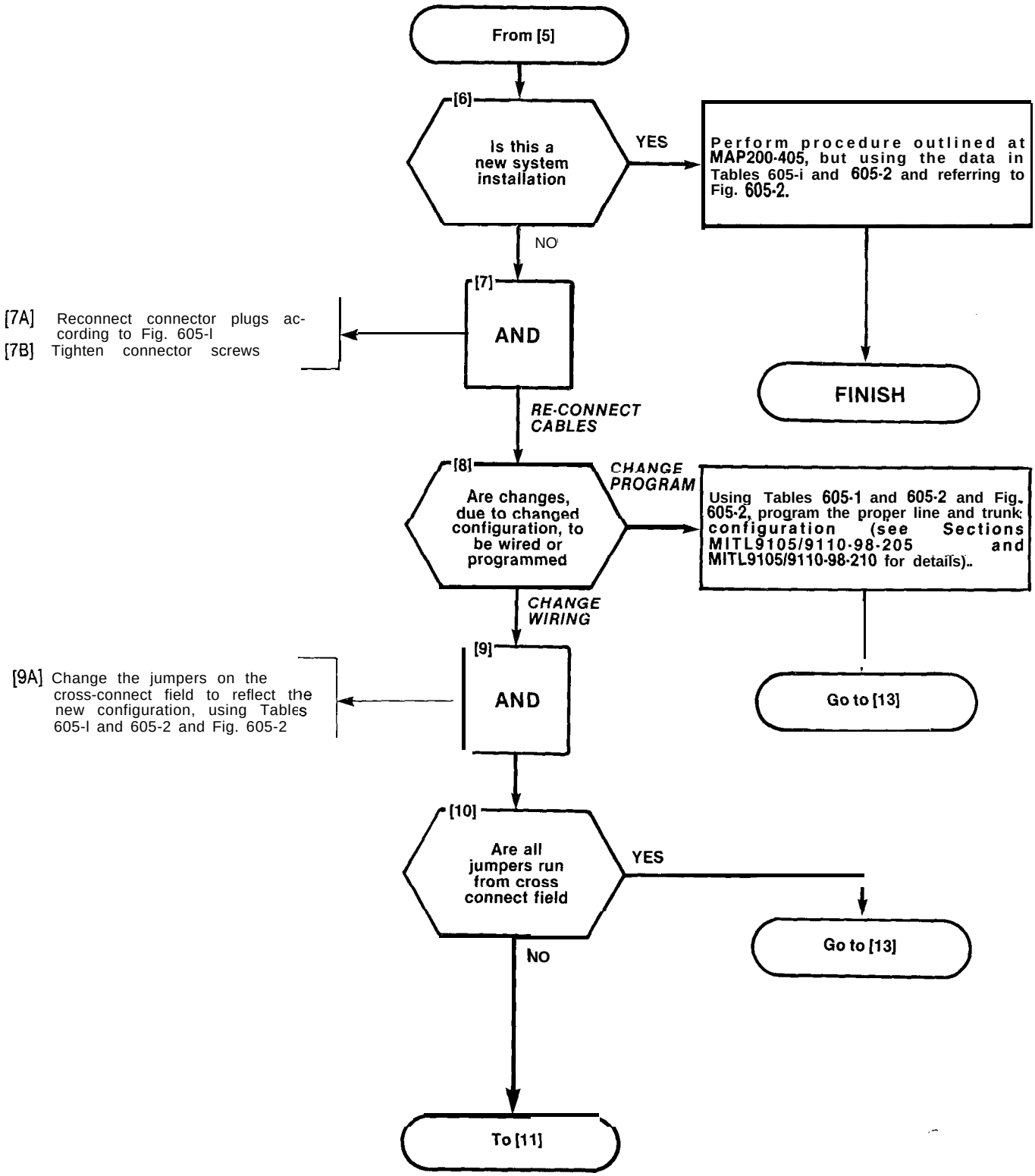

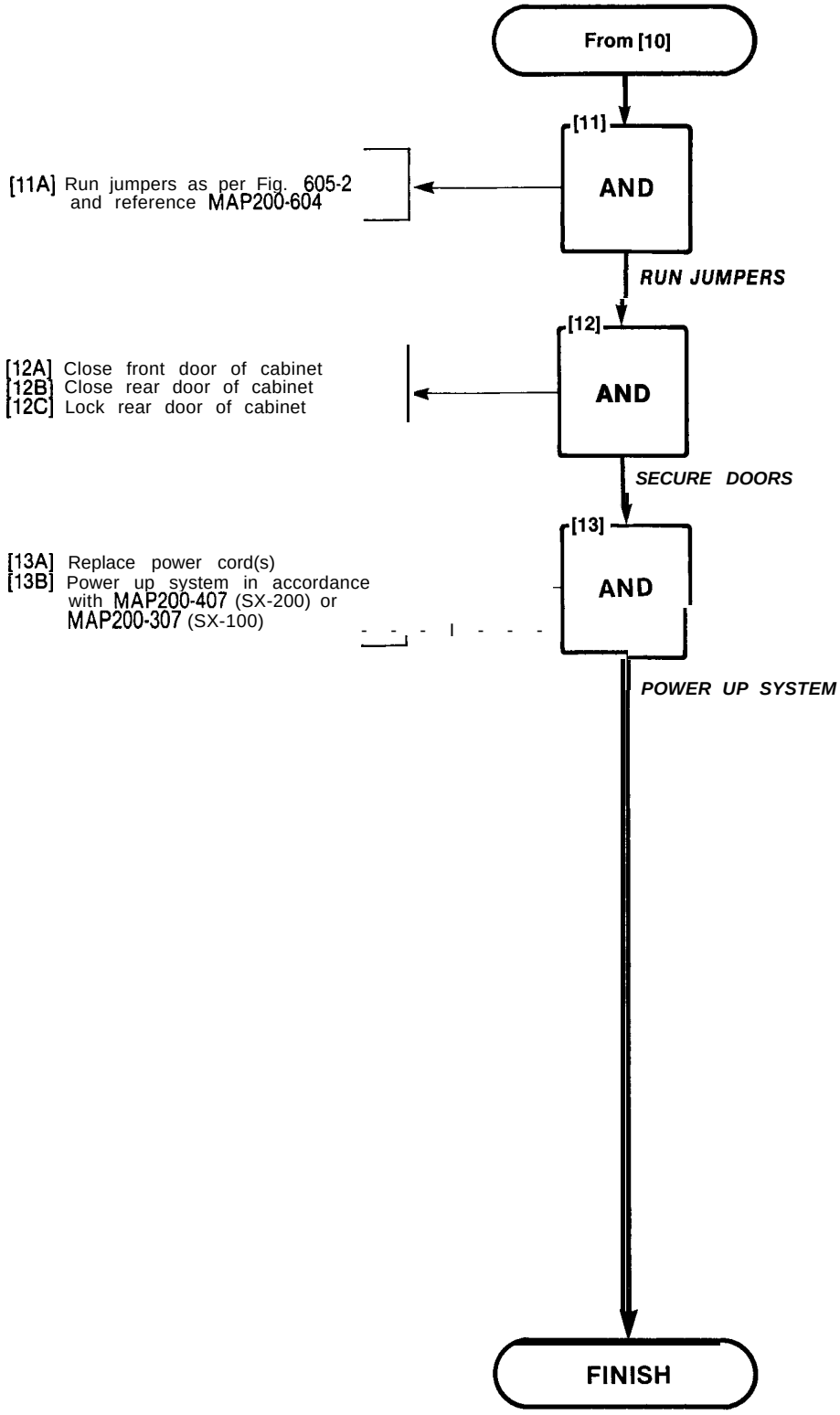
From [10]
[11]
AND
[11A] Run jumpers as per Fig. 605-2 and reference MAP200-604
RUN JUMPERS
[12]
AND
[12A] Close front door of cabinet
[12B] Close rear door of cabinet
[12C] Lock rear door of cabinet
SECURE DOORS
[13]
AND
[13A] Replace power cord(s)
[13B] Power up system in accordance with MAP200-407 (SX-200) or MAP200-307 (SX-100)
POWER UP SYSTEM
FINISH

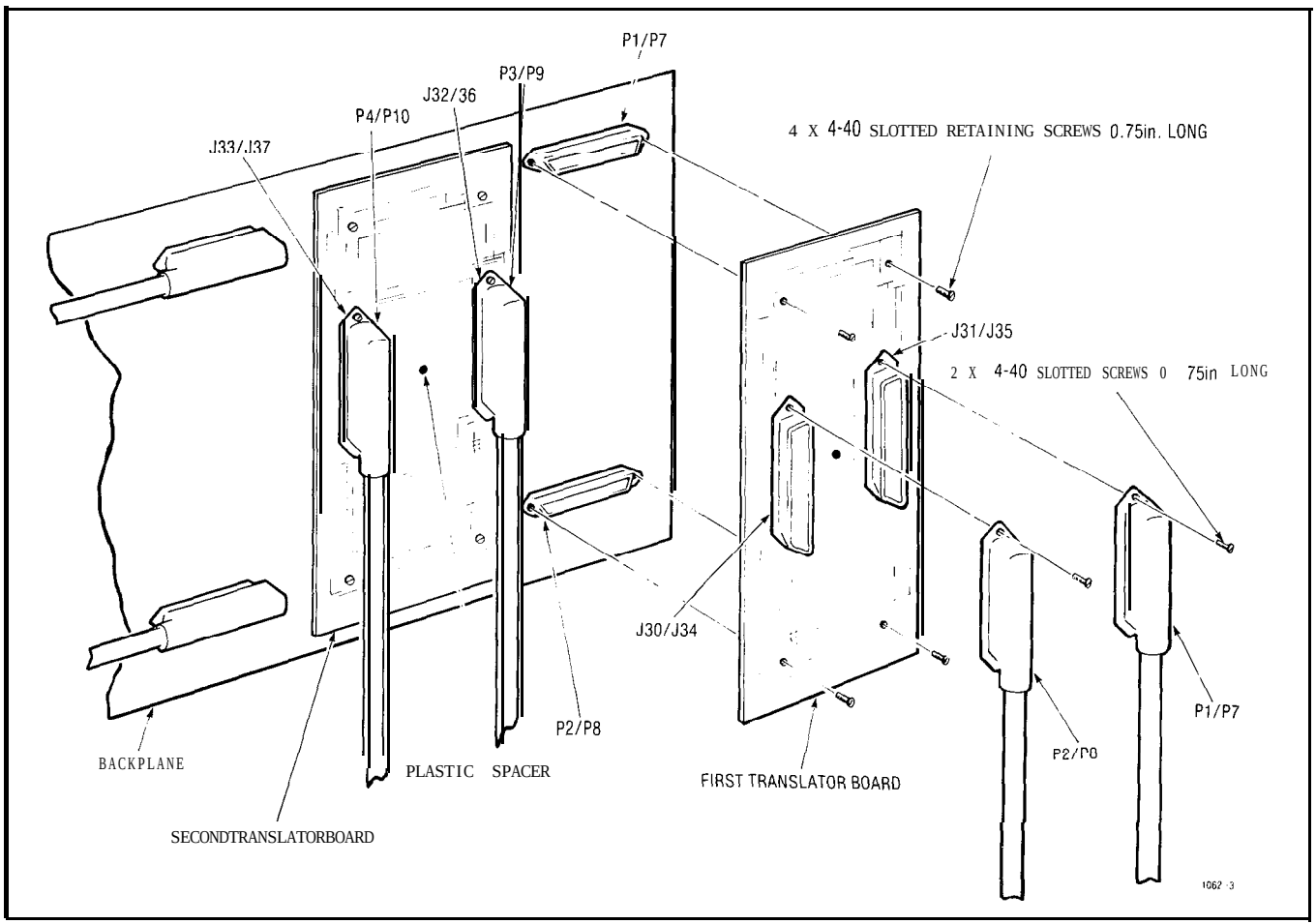

Fig. 606-l Translator Board Installation

TABLE 605-1 BACKPLANE TRANSLATOR BOARD CONNECTIONS (SHELF 1) TO CROSS-CONNECT FIELD

Pin	Pair Color	Line and Trunk Connections: Extn	c o	DID/Tie	E & M†	Shelf 1 Translator Board Plug Numbers: P1	P2	P3	P4
26	W-BL	T1	T1	T1	T1	001	025	049	073
1	BL-W	R1	R1	R1	R1				
27	w-o	T2	XT2		TR1	002	026	050	074
2	o-w	R2	XT1		RR1				
28	W-G	T3	T2		EI	003	027	051	075
3	G-W	R3	R2		MI				
29	W-BR	T4				004	028	052	076
4	BR-W	R4							
30	w-s	T5	T3	T2	T2	005	029	053	077
5	s-w	R5	R3	R2	R2				
31	R-BL	T6	XT4		TR2	006	030	054	078
6	BL-R	R6	XT3		RR2				
32	R-O	T7	T4		E2	007	031	055	079
7	O-R	R7	R4		M2				
33	R-G	T8				008	032	056	080
8	G-R	R8				Equipment Numbers Card Position 1	Equipment Numbers Card Position 4	Equipment Numbers Card Position 7	Equipment Numbers Card Position 10
34	R-BR	T1	T1	T1	T1	009	033	057	081
9	BR-R	R1	R1	R1	R1				
35	R-S	T2	XT2		TR1	010	034	058	082
10	S-R	R2	XT1		RR1				
36	BK-BL	T3	T2		EI	011	035	059	083
11	BL-BK	R3	R2		MI				
37	BK-0	T4				012	036	060	084
12	0-BK	R4							
38	BK-G	T5	T3	T2	T2	013	037	061	085
13	G-BK	R5	R3	R2	R2				
39	BK-BR	T6	XT4		TR2	014	038	062	086
14	BR-BK	R6	XT3		RR2				
40	BK-S	T7	T4		E2	015	039	063	087
15	S-BK	R7	R4		M2				
41	Y-BL	T8				016	040	064	088
16	BL-Y	R8				Equipment Numbers Card Position 2	Equipment Numbers Card Position 5	Equipment Numbers Card Position 8	Equipment Numbers Card Position 11
42	Y-O	T1	T1	T1	T1	017	041	065	089
17	O-Y	R1	R1	R1	R1				
43	Y-G	T2	XT2		TR1	018	042	066	090
18	G-Y	R2	XT1		RR1				
44	Y-BR	T3	T2		EI	019	043	067	091
19	BR-Y	R3	R2		MI				
45	Y-S	T4				020	044	068	092
20	S-Y	R4							
46	V-BL	T5	T3	T2	T2	021	045	069	093
21	BL-V	R5	R3	R2	R2				
47	v-o	T6	XT4		TR2	022	046	070	094
22	o-v	R6	XT3		RR2				
48	V-G	T7	T4		E2	023	047	071	095
23	G-V	R7	R4		M2				
49	V-BR	T8				024	048	072	096
24	BR-V	R8				Equipment Numbers Card Position 3	Equipment Numbers Card Position 6	Equipment Numbers Card Position 9	Equipment Numbers Card Position 12 (See Note)
50	v-s	SPARE							
25	s-v	SPARE							

Note: Position 12 can be used for lines, trunks or receiver #4 card.
† For 2-Wire E&M Trunk operation DO NOT connect RR and TR leads.

TABLE 605.2 BACKPLANE TRANSLATOR BOARD CONNECTIONS (SHELF 2) TO CROSS-CONNECT FIELD

Pin	Pair Color	Line and Trunk Connections				Shelf 2 Translator Board Plug Numbers			
		Extn	c o	DID/Tie	E & M†	P7	P8	P9	P10
26	W-BL	T1	T1	T1	T1	161	185	209	233
1	BL-W	R1	R1	R1	R1				
27	w-o	T 2	XT2		TR1	162	186	210	234
2	0-W	R2	XT1		RR1				
28	W-G	T 3	T2		F1	163	187	211	235
3	G-W	R3	R2		M1				
29	W-BR	T4				164	188	212	236
4	BR-W	R4							
30	W-S	T5	T3	T2	T2	165	189	213	237
5	S-W	R5	R3	R2	R2				
31	R-BL	T6	XT4		TR2	166	190	214	238
6	BL-R	R6	XT3		RR2				
32	R-O	T 7	T4		E2	167	191	215	239
7	O-R	R7	R4		M2				
33	R-G	T8				168	192	216	240
8	G-R	R8							
34	R-BR	T1	T1	T1	T1	169	193	217	241
9	BR-R	R1	R1	R1	R1				
35	R-S	T 2	XT2		TR1	170	194	218	242
10	S-R	R2	XT1		RR1				
36	BK-BL	T3	T2		E1	171	195	219	243
11	BL-BK	R 3	R 2		M1				
37	BK-0	T 4				172	196	220	244
12	0-BK	R 4							
38	BK-G	T5	T 3	T 2	T 2	173	197	221	245
13	G-BK	R5	R 3	R 2	R 2				
39	BK-BR	T 6	XT4		TR2	174	198	222	246
14	BR-BK	R 6	XT3		RR2				
40	BK-S	T7	T 4		E 2	175	199	223	247
15	S-BK	R.7	RA		M2				
41	Y-BL	T8				176	200	224	248
16	BL-Y	R 8							
42	Y-O	T1	T1	T1	T1	177	201	225	249
17	Q-Y	R1	R1	R1	R1				
43	Y-G	T 2	XT2		TR1	178	202	226	250
18	G-Y	R 2	XT1		RR1				
44	Y-BR	T3	T2		E1	179	203	227	251
19	BR-Y	R3	R2		M1				
45	Y-S	T4				180	204	228	252
20	S-Y	R4							
46	V-BL	T5	T3	T2	T2	181	205	229	253
21	BL-V	R5	R3	R2	R2				
47	v-o	T 6	XT4		TR2	182	206	230	254
22	o-v	R 6	XT3		RR2				
48	V-G	T 7	T 4		E 2	183	207	231	255
23	G-V	R 7	R 4		M 2				
49	V-BR	T8				184	208	232	256
24	BR-V	R8							
50	V-S	SPARE							
25	S-V	SPARE							

Equipment Numbers Card Position 1
Equipment Numbers Card Position 2
Equipment Numbers Card Position 3
Equipment Numbers Card Position 4
Equipment Numbers Card Position 5
Equipment Numbers Card Position 6
Equipment Numbers Card Position 7
Equipment Numbers Card Position 8
Equipment Numbers Card Position 9
Equipment Numbers Card Position 10
Equipment Numbers Card Position 11
Equipment Numbers Card Position 12

HARDWARE/EQUIPMENT NUMBERING

HARDWARE POSITION NUMBER	PLUG7			PLUG8			PLUG9			PLUG10		
	161	169	177	185	193	201	209	217	225	233	241	249
	162	170	178	186	194	202	210	218	226	234	242	250
	163	171	179	187	195	203	211	219	227	235	243	251
	164	172	180	188	196	204	212	220	228	236	244	252
	165	173	181	189	197	205	213	221	229	237	245	253
	166	174	182	190	198	206	214	222	230	238	246	254
	167	175	183	191	199	207	215	223	231	239	247	255
	168	176	184	192	200	208	216	224	232	240	248	256
	1	2	3	4	5	6	7	8	9	10	11	12

SHELF 2 (SX-200)

HARDWARE POSITION NUMBER	PLUG P1			PLUGP2			PLUGP3			PLUGP4		
	001	009	017	025	033	041	049	057	065	073	081	089
	002	010	018	026	034	042	050	058	066	074	082	090
	003	011	019	027	035	043	051	059	067	075	083	091
	004	012	020	028	036	044	052	060	068	076	084	092
	005	013	021	029	037	045	053	061	069	077	085	093
	006	014	022	030	038	046	054	062	070	078	086	094
	007	015	023	031	039	047	055	063	071	079	087	095
	008	016	024	032	040	048	056	064	072	080	088	096
	1	2	3	4	5	6	7	8	9	10	11	12

1318

SHELF 1

NOTE: EQUIPMENT POSITION 001 IS RESERVED FORTHETEST LINE AND MUST THEREFORE BE EQUIPPED WITH A LINE CARD. TRUNK EQUIPMENT NUMBER IS SAME AS INDIVIDUAL TRUNK ACCESS CODE.

Fig. 605-2 BACKPLANE TRANSLATOR BOARD PLUG APPEARANCES

INSTALLATION OF RCP CARD

MAP200-606

Issue 1, February 1980

Sheet 1 of 4

Note: **The RCP card provides a remote access facility. See Section MITL9105/9110-98-101 Remote Maintenance, Administration and Test Description for details.**

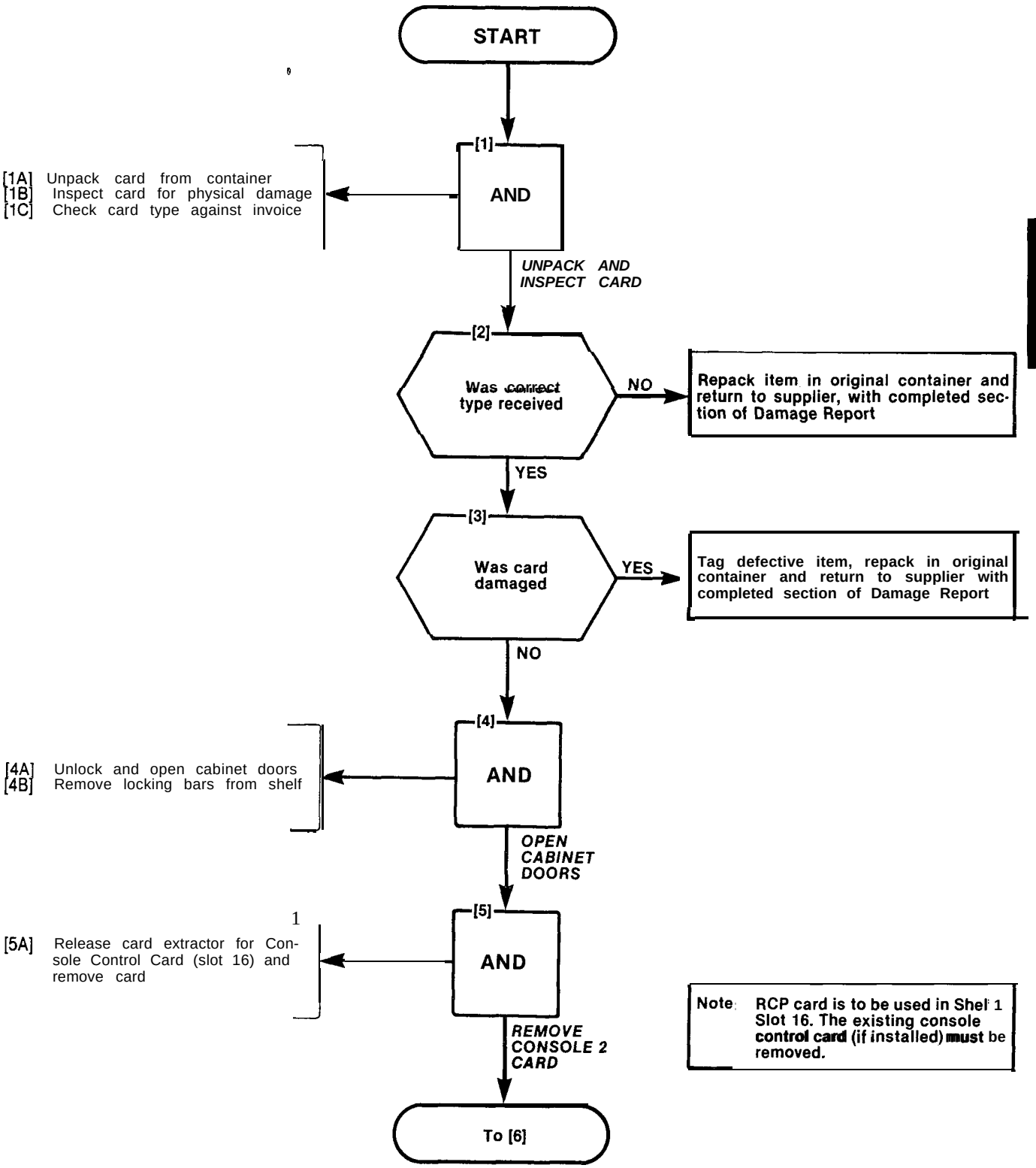

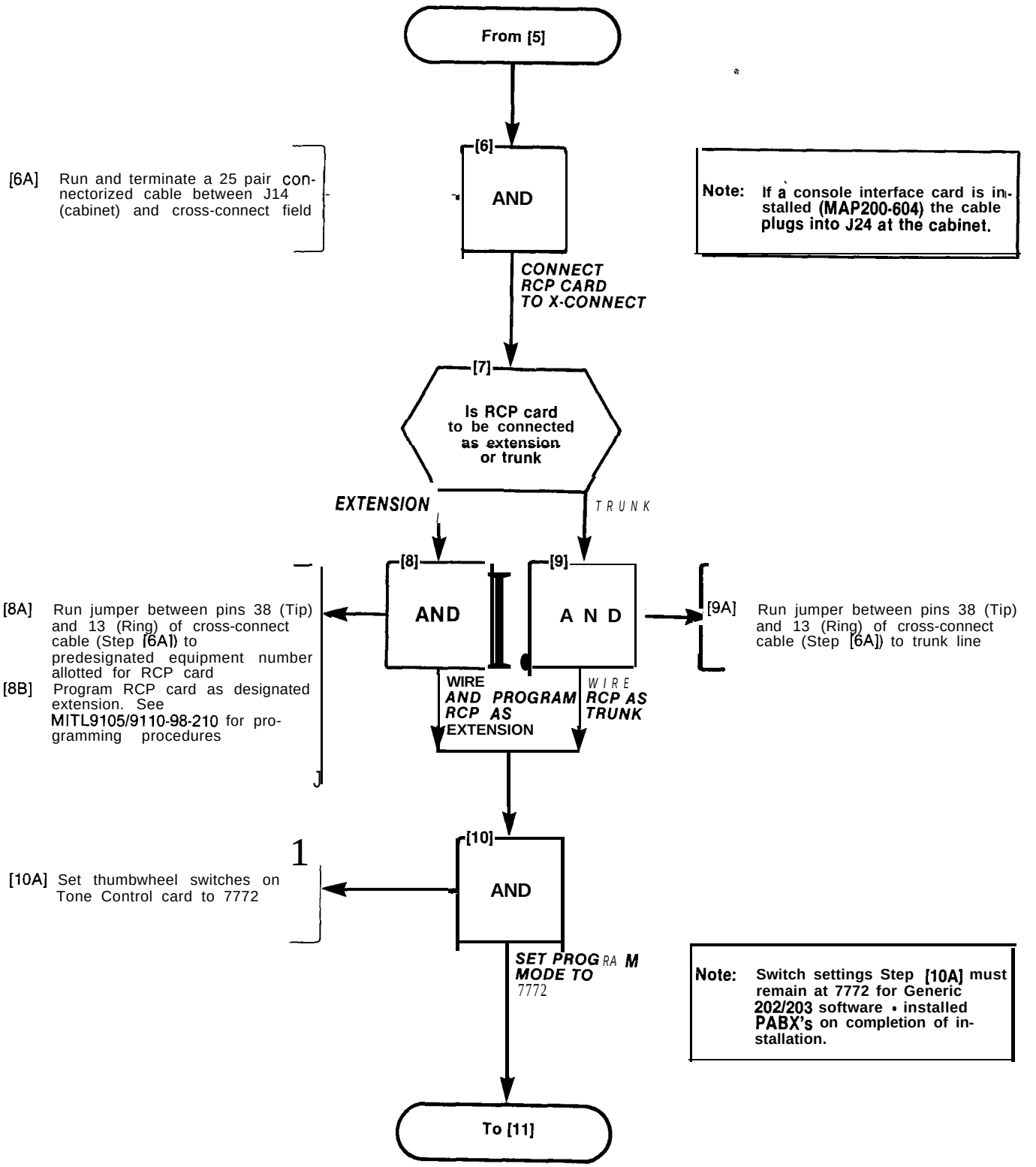

[6A] Run and terminate a 25 pair connectorized cable between J14 (cabinet) and cross-connect field

Note: If a console interface card is installed (MAP200-604) the cable plugs into J24 at the cabinet.

[8A] Run jumper between pins 38 (Tip) and 13 (Ring) of cross-connect cable (Step [6A]) to predesignated equipment number allotted for RCP card

[8B] Program RCP card as designated extension. See MITL9105/9110-98-210 for programming procedures

[9A] Run jumper between pins 38 (Tip) and 13 (Ring) of cross-connect cable (Step [6A]) to trunk line

[10A] Set thumbwheel switches on Tone Control card to 7772

Note: Switch settings Step [10A] must remain at 7772 for Generic 202/203 software installed PABX's on completion of installation.

INSTALLATION OF RCP CARD
MAP200-606
Issue 1, February 1980
Sheet 3 of 4

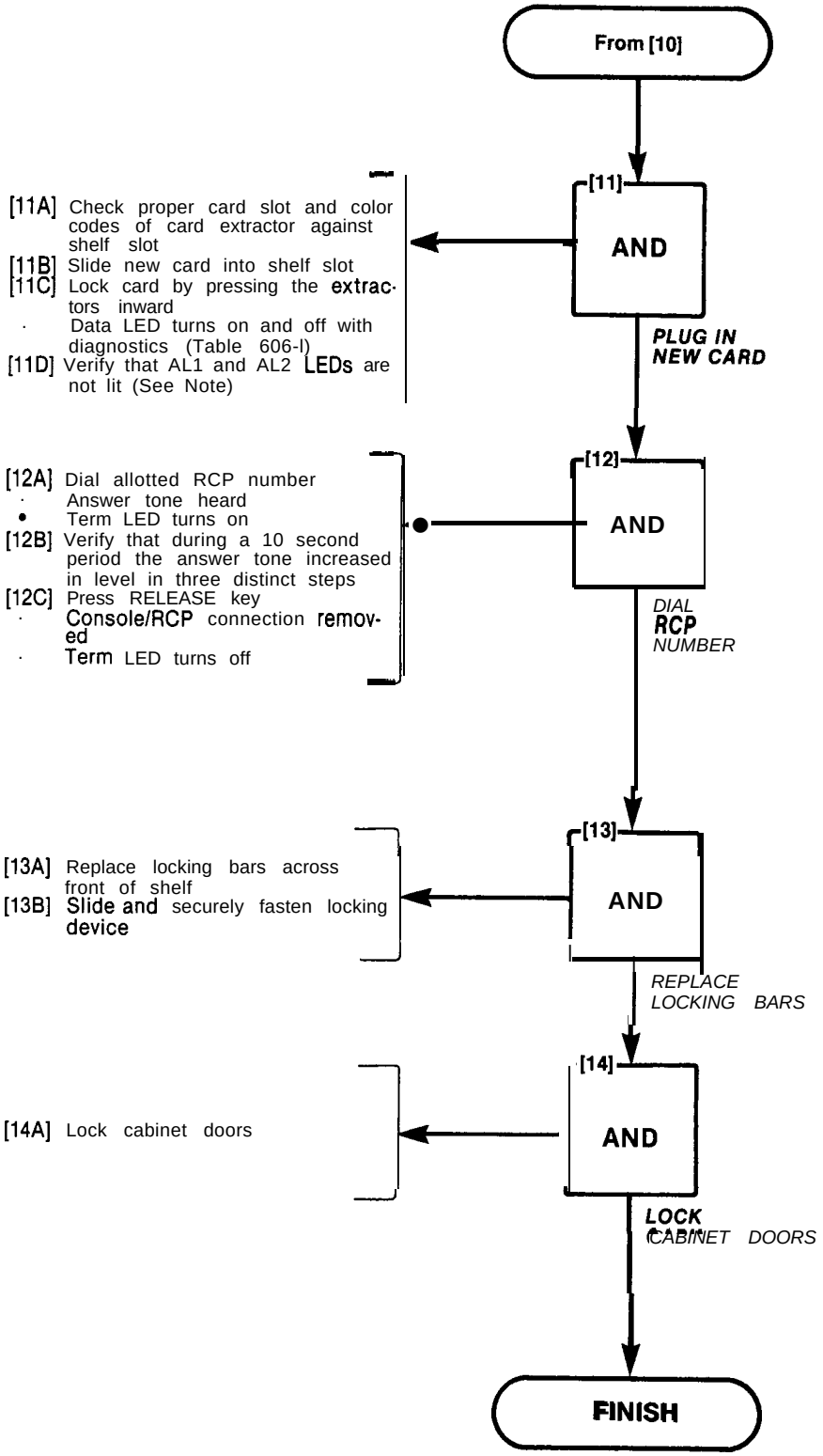

Note: **If AL2 LED is lit at Step [11D] replace the RCP card**

TABLE 606-I
RCP LED INDICATIONS

DESIGNATION	DESCRIPTION OF INDICATIONS
DATA	1. LED lit when the RCP is connected to the RMAT Controller and data is being transmitted. 2. LED lit during diagnostic tests. Tests consist of three 10 second periods followed by 17 seconds during which LED is off.
TERM	LED is lit when the RCP answers the RMAT Controller
AL1	Alarm LED AL1 is lit when alarm is activated by the watchdog timer
AL2	Alarm LED flashes if failure occurs during the RCP self-test diagnotics. The LED is lit steadily if a checksum or RAM failure occurs during initialization.

RESERVE POWER SUPPLY INSTALLATION (SX-100)

MAP200-607

issue 1, April 80

Sheet 1 of 11

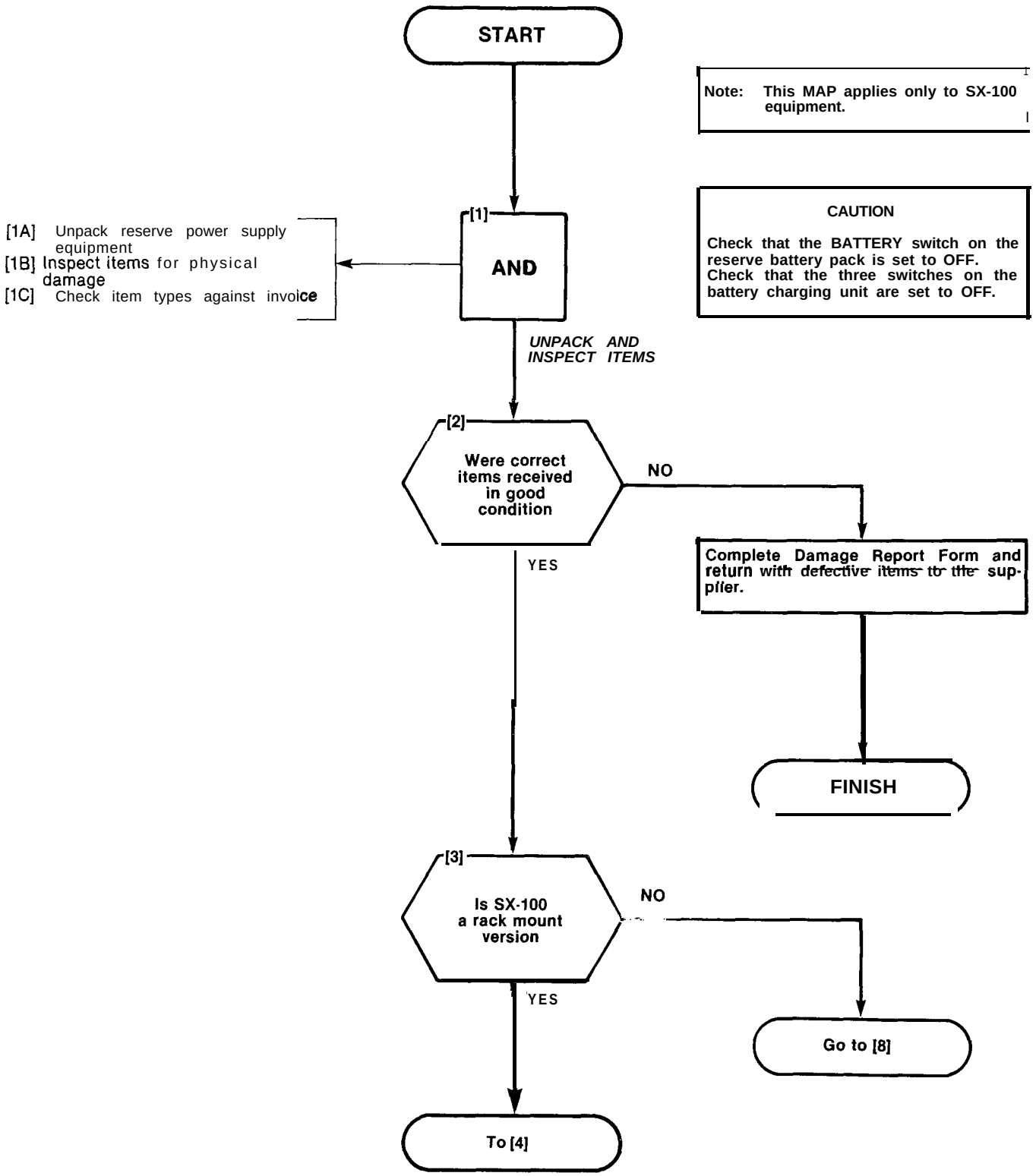

RESERVE POWER SUPPLY INSTALLATION (SX-100)
MAP200-607
Issue 1, April 80
Sheet 2 of 11

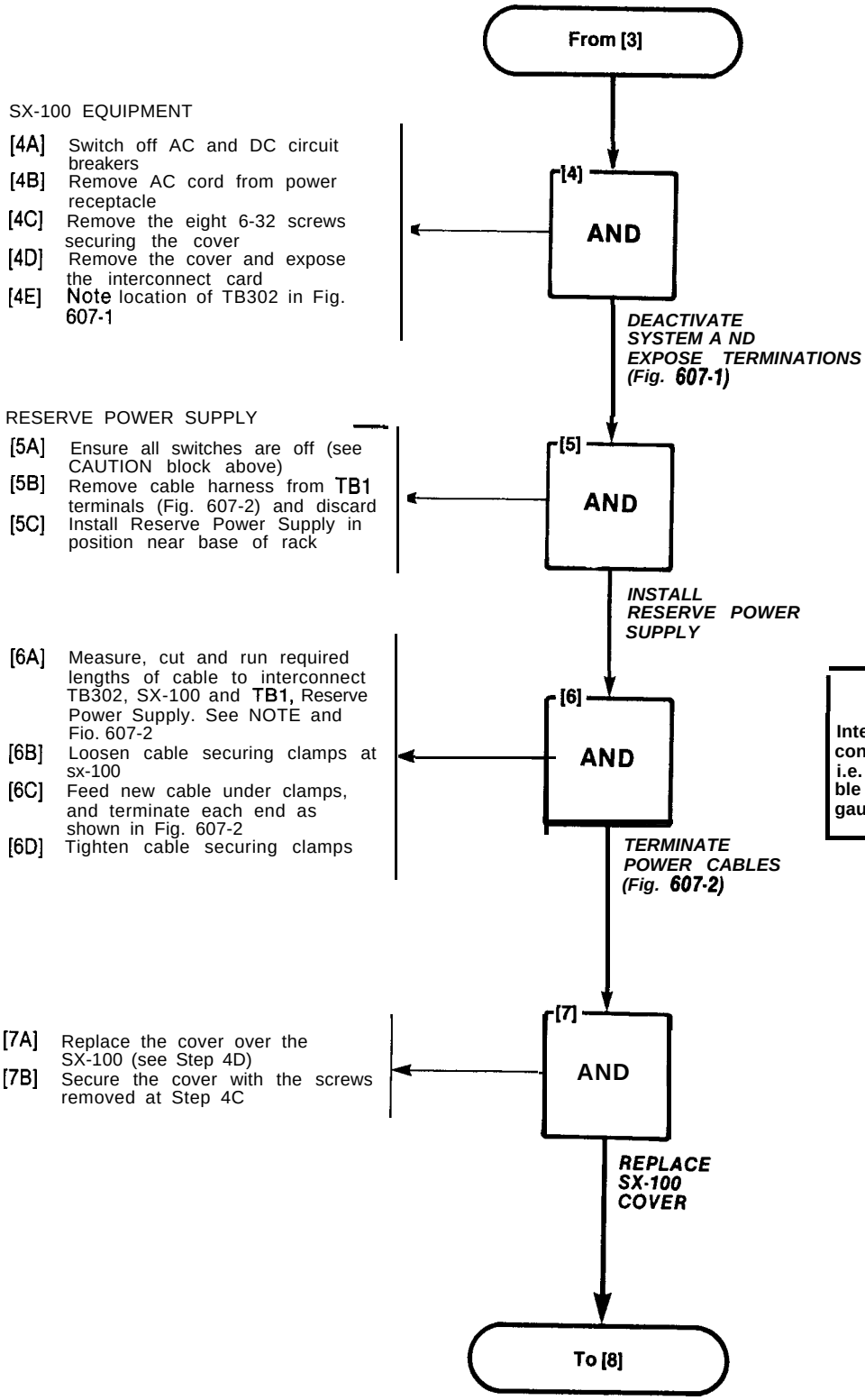

Note

Interconnecting cable must be of equal construction to standard cable harness, i.e. red, black and green insulated flexible strand leads of at least 14AWG gauge.

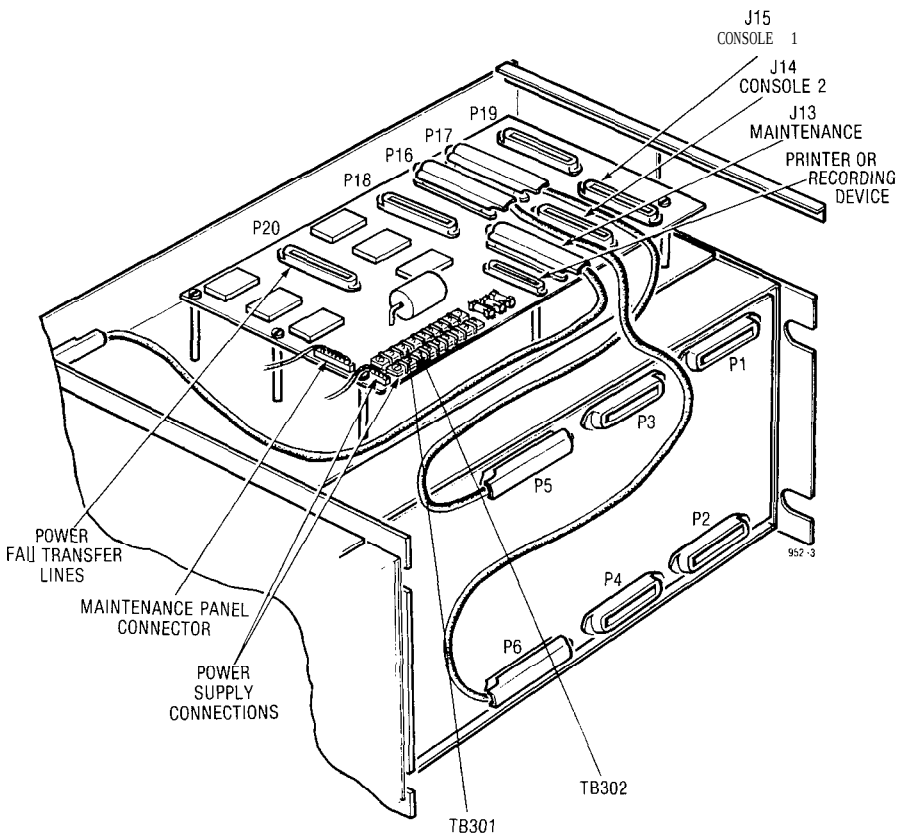

Fig. 607-l Cable Connections

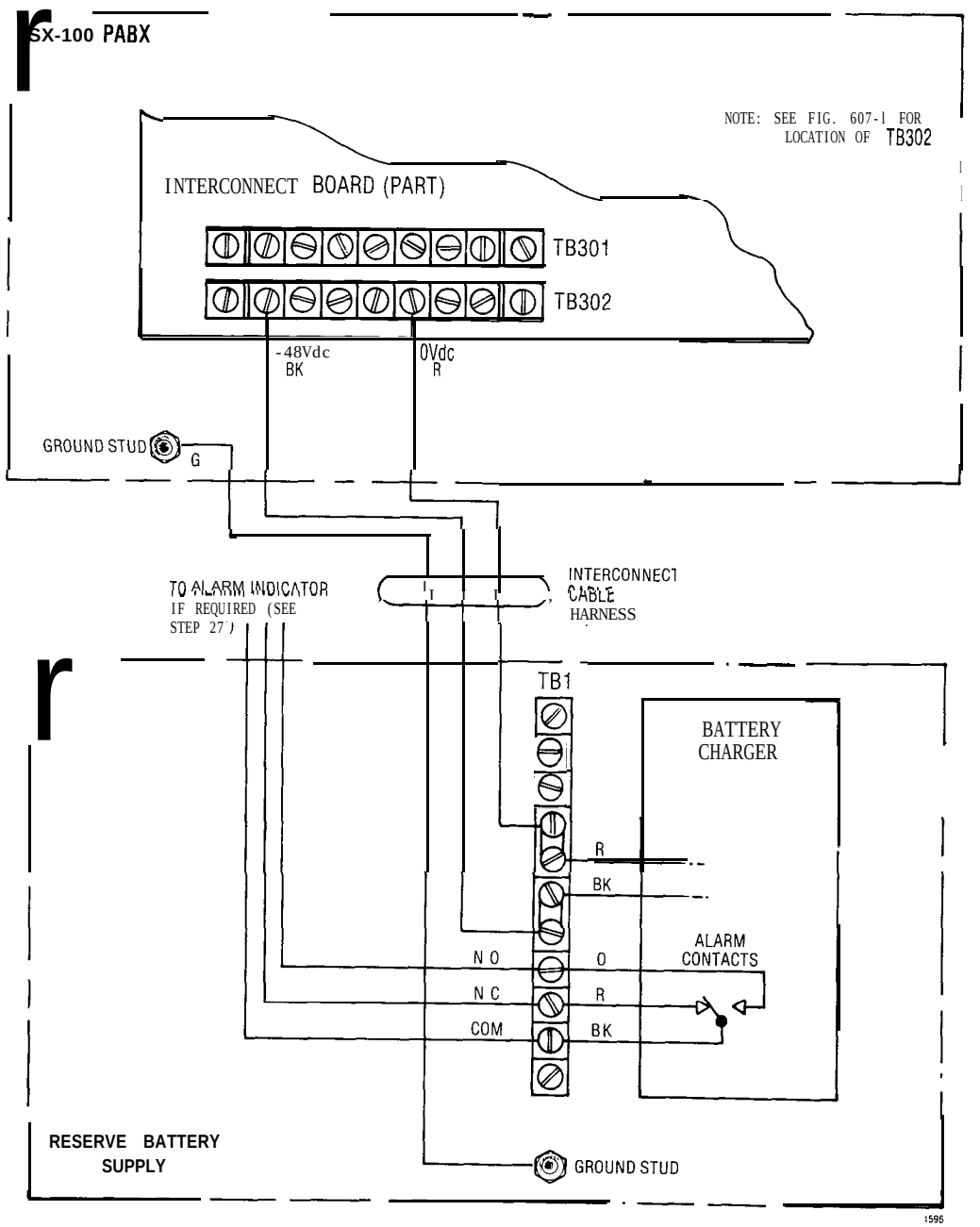

Fig. 607-2 Cable Harness Interconnections

RESERVE POWER SUPPLY INSTALLATION (SX-100),
MAP200-607
Issue 1, April 80
Sheet 5 of 11

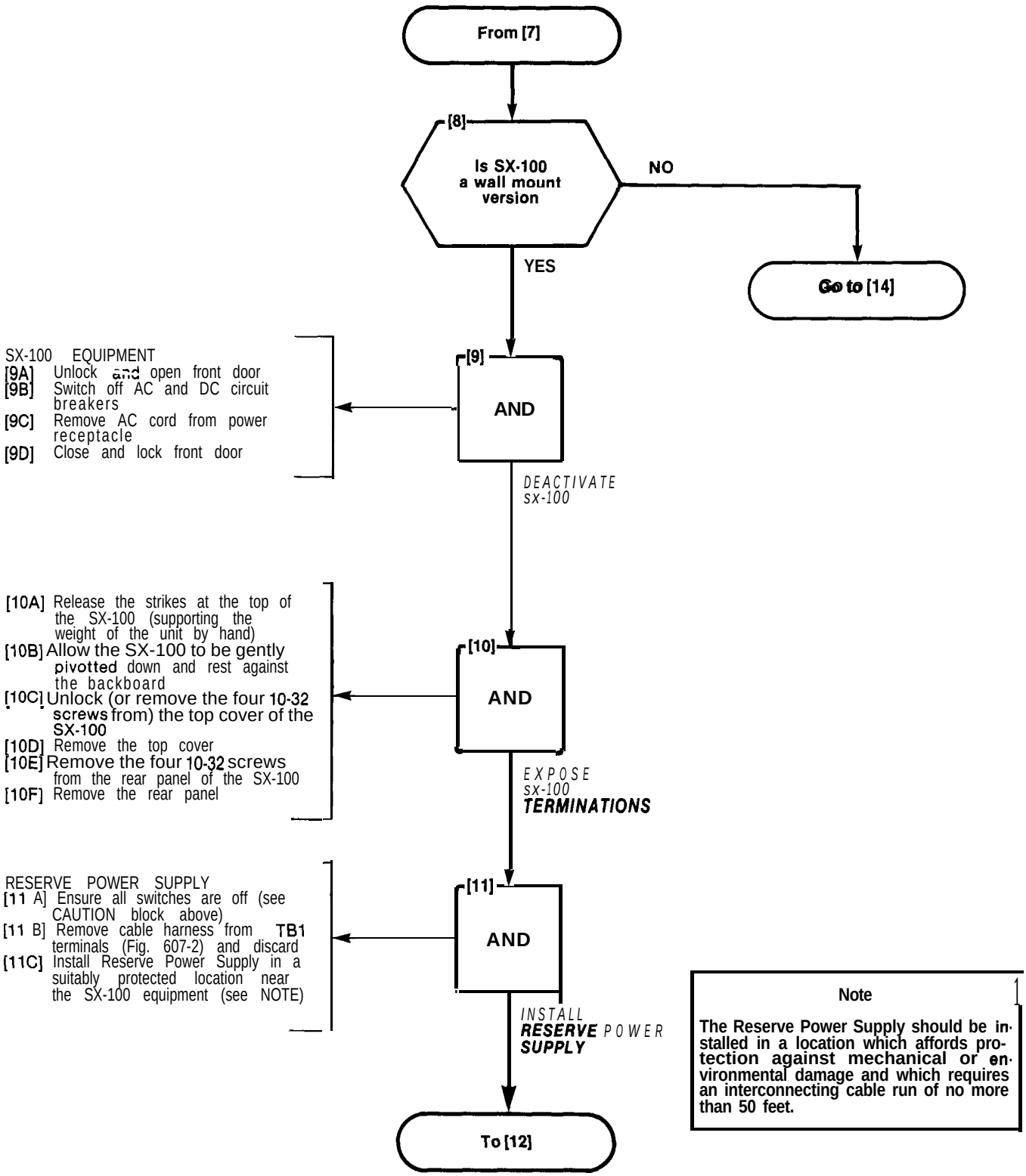

Note

The Reserve Power Supply should be installed in a location which affords protection against mechanical or environmental damage and which requires an interconnecting cable run of no more than 50 feet.

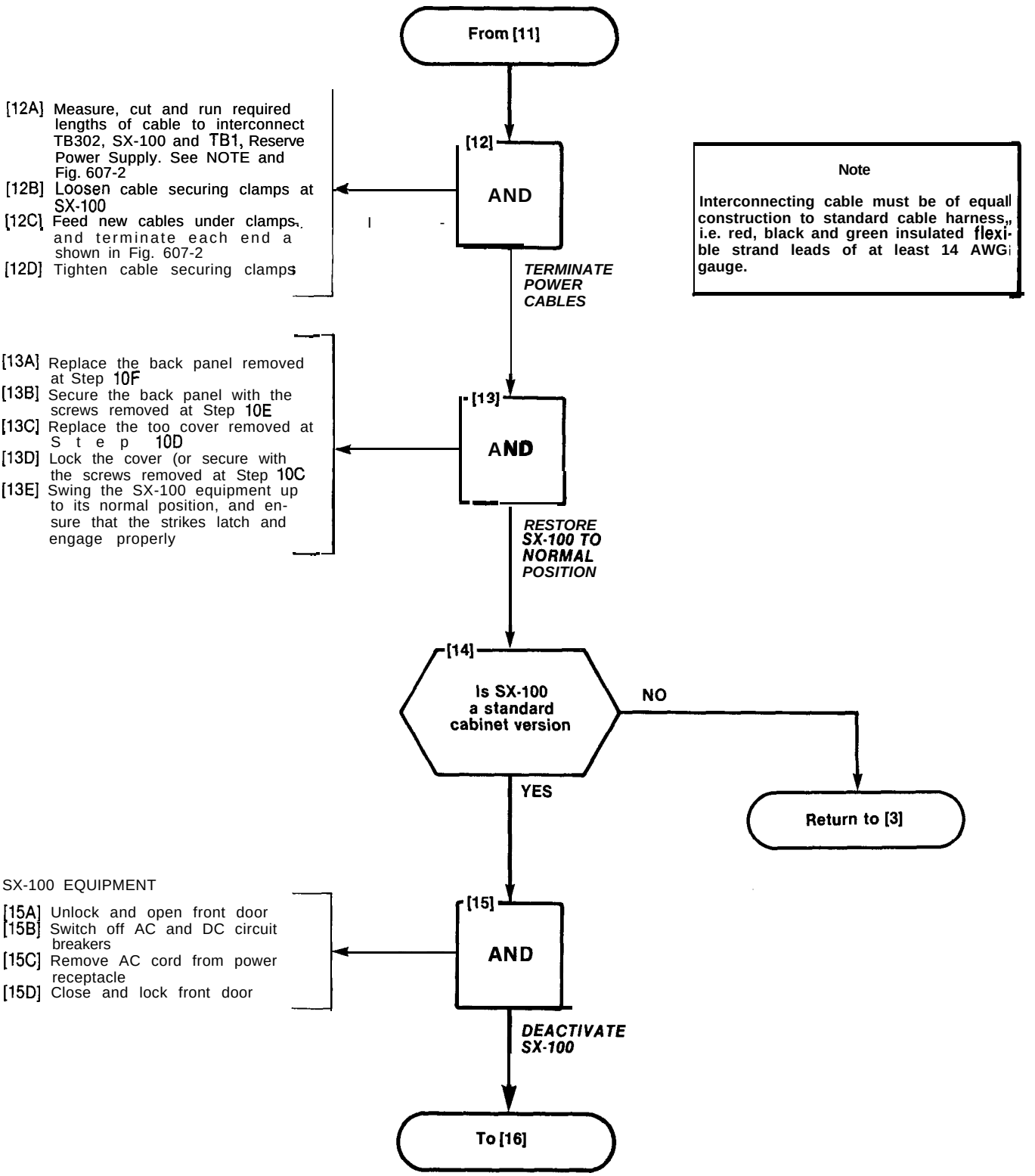
From [11]
[12]
AND
[12A] Measure, cut and run required lengths of cable to interconnect TB302, SX-100 and TB1, Reserve Power Supply. See NOTE and Fig. 607-2
[12B] Loosen cable securing clamps at SX-100
[12C] Feed new cables under clamps, and terminate each end a shown in Fig. 607-2
[12D] Tighten cable securing clamps
TERMINATE POWER CABLES
Note
Interconnecting cable must be of equall construction to standard cable harness,, i.e. red, black and green insulated flexible strand leads of at least 14 AWG gauge.
[13]
AND
[13A] Replace the back panel removed at Step 10F
[13B] Secure the back panel with the screws removed at Step 10E
[13C] Replace the too cover removed at Step 10D
[13D] Lock the cover (or secure with the screws removed at Step 10C
[13E] Swing the SX-100 equipment up to its normal position, and ensure that the strikes latch and engage properly
RESTORE SX-100 TO NORMAL POSITION
[14]
Is SX-100 a standard cabinet version
NO
YES
Return to [3]
SX-100 EQUIPMENT
[15]
AND
[15A] Unlock and open front door
[15B] Switch off AC and DC circuit breakers
[15C] Remove AC cord from power receptacle
[15D] Close and lock front door
DEACTIVATE SX-100
To [16]

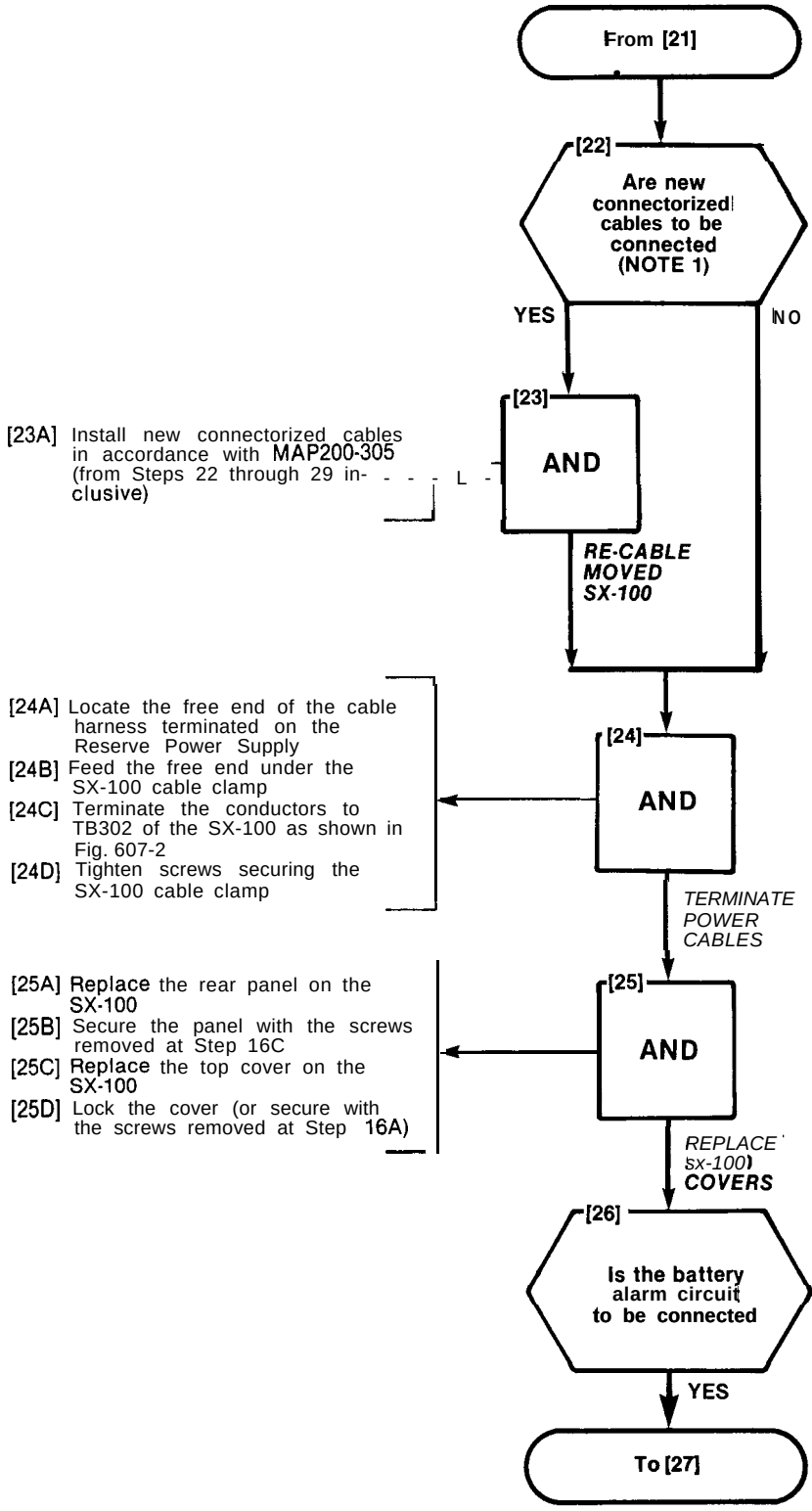

[23A] Install new connectorized cables in accordance with MAP200-305 (from Steps 22 through 29 inclusive)

[24A] Locate the free end of the cable harness terminated on the Reserve Power Supply
[24B] Feed the free end under the SX-100 cable clamp
[24C] Terminate the conductors to TB302 of the SX-100 as shown in Fig. 607-2
[24D] Tighten screws securing the SX-100 cable clamp

[25A] Replace the rear panel on the SX-100
[25B] Secure the panel with the screws removed at Step 16C
[25C] Replace the top cover on the SX-100
[25D] Lock the cover (or secure with the screws removed at Step 16A)

[16A] Unlock (or remove the four 10-32 screws from) the top cover of the sx-100
[16B] Remove the top cover
[16C] Remove the four 10-32 screws from the rear panel of the SX-100
[16D] Remove the rear panel

[18A] Move SX-100 aside to make room for new power supply position (see NOTE 1)

RESERVE POWER SUPPLY
[20A] Ensure all switches are OFF (see CAUTION block)
[20B] Place Reserve Power Supply in required position

[21A] Place SX-100 on top of Reserve Power Supply, ensuring that protrusions in base fit into depressions on top of Reserve Power Supply (Fig. 607-3)

RESERVE POWER SUPPLY INSTALLATION (SX-100)

MAP200-607

Issue 1, April 80

Sheet 10 of 11

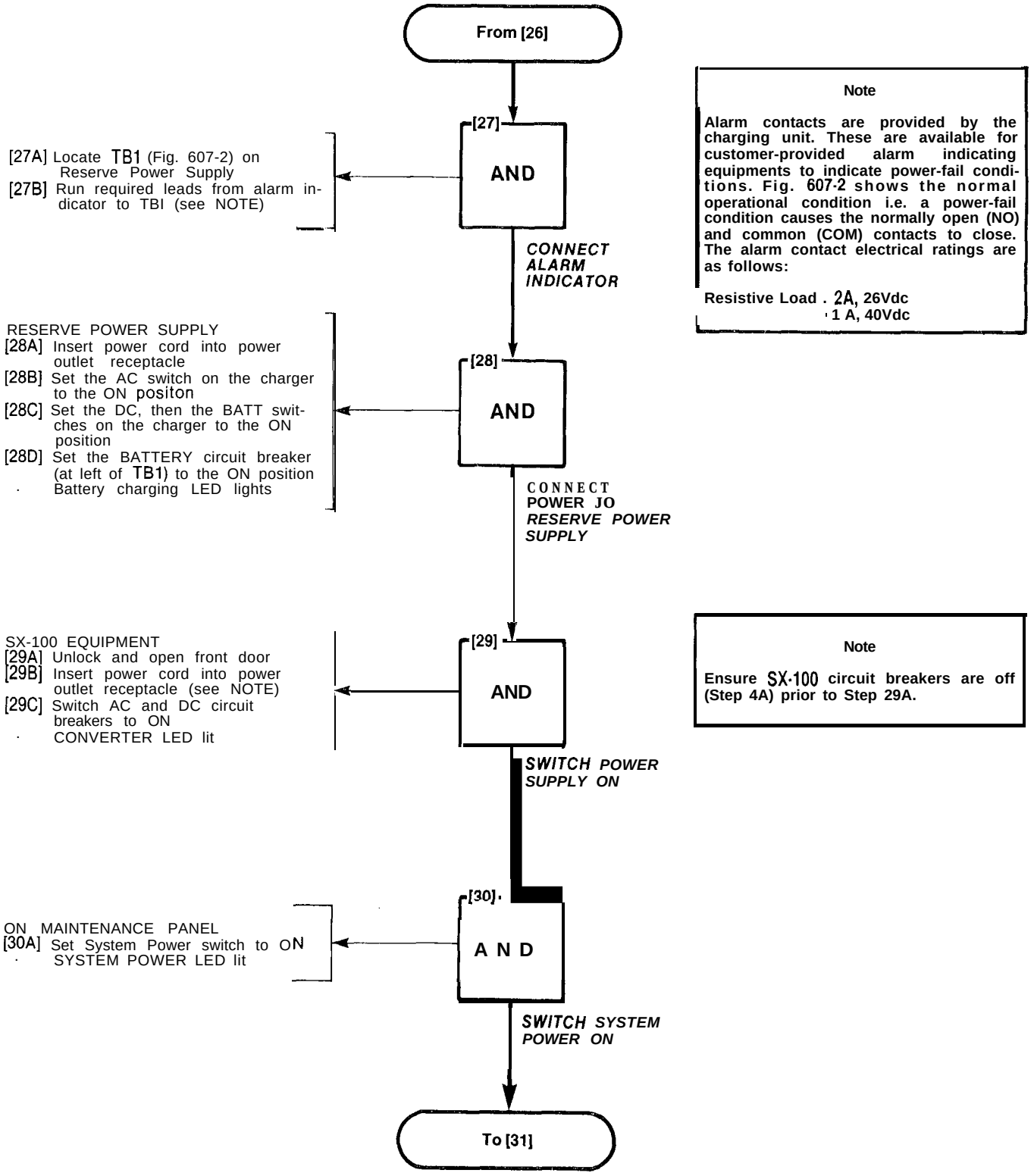

Note

Alarm contacts are provided by the charging unit. These are available for customer-provided alarm indicating equipments to indicate power-fail conditions. Fig. 607-2 shows the normal operational condition i.e. a power-fail condition causes the normally open (NO) and common (COM) contacts to close. The alarm contact electrical ratings are as follows:

Resistive Load . 2A, 26Vdc
· 1 A, 40Vdc

Note

Ensure SX-100 circuit breakers are off (Step 4A) prior to Step 29A.

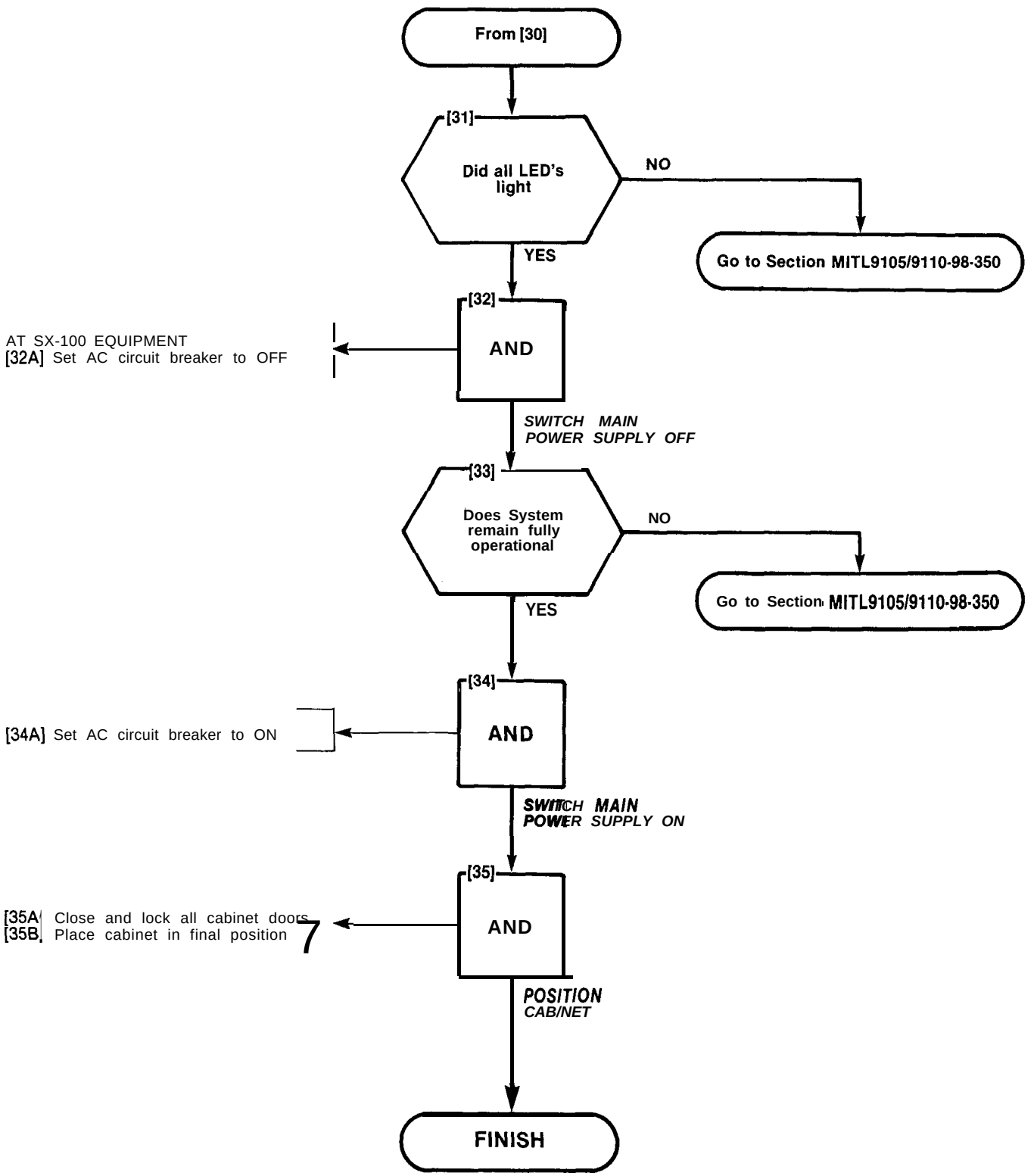
From [30]
[31]
Did all LED's light
NO
Go to Section MITL9105/9110-98-350
YES
[32]
AND
AT SX-100 EQUIPMENT
[32A] Set AC circuit breaker to OFF
SWITCH MAIN POWER SUPPLY OFF
[33]
Does System remain fully operational
NO
Go to Section MITL9105/9110-98-350
YES
[34]
AND
[34A] Set AC circuit breaker to ON
SWITCH MAIN POWER SUPPLY ON
[35]
AND
[35A] Close and lock all cabinet doors
[35B] Place cabinet in final position
POSITION CAB/NET
FINISH

SX-100* AN D SX-200* SUPERSWITCH" ELECTRONIC PRIVATE AUTOMATIC BRANCH EXCHANGE INSTALLATION FORMS

CONTENTS PAGE

1. INTRODUCTION 1
General 1
Reason for Reissue 1

2. INSTALLATION.. 1
Cabling 1
Programming 1

3. INSTALLATION FORMS 2
General 2
Identification.. 2
Code Entry 2
Forms Included
APPENDIX 1. . . . . AI-I
Programming Error Codes AI-3
Programming Confirm Codes . . . . . Al -4
Extended Programming Error Codes AI.5
Extended Programming Confirm Codes AI-8
Speed Call Error Codes . . . . . Al -7
Installation Forms . . . . . .
Trunk Card Switch Settings. . . . . .

1. INTRODUCTION

General

1.01 installation of the SX-100 or SX-200 PABX consists of connecting the system to the cross-connect frame, applying power, and programming. SECTION MITL9105/9110-98-200 details the system cabling requirements, SECTION MITL9105/9110-98-210 gives detailed instructions for programming the system and SECTION MITL9105/9110-98-215 details the test procedures to be performed after the system programming is completed. This section contains a general description of the system installation, the type of installation forms and the data required to complete the installation.

Reason For Reissue

1.02 This section is reissued to include all Generic 205 information

2. INSTALLATION

Cabling

2.01 All connections for the line and trunk circuits are made from the cross-connect frame to the PABX equipment cabinet through 25 pair connector ended cables. The attendant consoles are connected to the equipment cabinet through standard 25 pair cables with a plug on the cabinet end and a connector at the console.

Programming

2.02 The system contains ten individual programs. Each program details a different aspect of the system configuration.

- **Tenant Service (Generic 203 or higher)-If** the system is to be used by multiple tenants "Tenant Service" must be selected when programming is started.

- **System Options-The** system options are those options which affect all extensions and trunks within the system. A number of options are provided (code numbers 100 through 234) any of which may be selected.

- **Features-A** number of features (code numbers 1 through 42) require access codes to be dialed by the extension user to gain access to the features. The Feature program allows the selected access codes to be assianed.

© MITEL Corporation 1980

* Trademark of MITEL Corporation

- **Class of Service Options-A** maximum of 16 different Classes of Service (COS) may be defined. Each COS specifies the features and services (code numbers 33 through 94) that may be accessed by an extension or dial-in trunk assigned to that cos.

- **Extension-The** Extension program allows the tenant, equipment number, directory (extension) number, COS (the features and services which may be accessed), toll restrictions, and the optional busy lamp and pick-up group assignments to be made for each extension.

- **Hunt Groups-This** program defines the extensions within a tenant that form a hunt group and the type of hunting to be performed. A maximum of 12 individual hunt groups may be specified per system.

- **Trunks-This** program allows the tenant, equipment number, busy lamp assignment, trunk type, console appearance, day and night number assignments, COS, toll restriction, and incoming number definitions of each trunk to be made.

- **Trunk Groups-A** maximum of 12 different trunk groups may be programmed per system. The access code and type, the toll restriction and the overflow group (the trunk group to which the trunk will hunt when all trunks in the trunk group are busy) of each trunk group are specified.

- **Multi Digit Toll Control (Generic 204/Up)—**If Toll Control is to be employed, refer to Section MITL9105/9110-98-212 for instructions.

- **Speed Call (Generic 205)—**If Speed Call is to be employed, refer to Section MITL9105/911 o-98-220.

3. INSTALLATION FORMS

General

3.01 A complete set of installation forms is contained in Mitel publication SX-100/SX-200 Installation Forms. For descriptive purposes a copy of each type of installation form is included in this section. Each installation form is divided into a number of columns, the headings of which serve two purposes-

(a) to identify the information that should be entered into the column, and

(b) to show the actions to be performed to enter the codes into the system memory.

3.02 A list of features or options is included on the relevant installation form if applicable. These features and options, and any conflicts (mutual exclusions), are described in Section MITL9105/9110-98-105 Features and Services Description.

3.03 In addition to the “programming” installation forms the various types of trunks require the trunk card switches to be set to meet the proper operational configuration. This type of form is also included at the rear of this Section.

Identification

3.04 The name of the button shown at the top of each column identifies the type of code to be entered in that column. The number following the button name shows the range of codes associated with the operation.

Code Entry

3.05 To enter the information contained in each table the button shown at the top of the column must be pressed and the code number dialed. An example is shown in Fig. 3-1, Typical Programming Entry.

3.08 Table 3-1 is a list of all forms included in Mitel publication SX-lOO/SX-200 Installation Forms. The number of pages of each type of form is also included.

To assign feature access codes.

(1) Press FEATURE button.

(2) Dial feature number (range i-42).

(3) Press ACCESS CODE button.

(4) Dial the access code to be assigned to the feature

(5) Press the ENTER button to store the information entered.

(6) Repeat steps (1) through (5) as required.

Fig. 3-1 Typical Programming Entry

TABLE 3-1
INSTALLATION FORMS

Title	Number of Forms
Customer Changes	4
System Options	3
Features	1
Class of Service Options	2
Extensions*	16
Hunt Groups	2
Non Dial-In Trunks	6
Dial-In Trunks*	6
DID/CCSA Trunks	6
Trunk Groups	2
Multi Digit Toll Control	
Toll Control — Outline Forms	
TC1 — 4	
TC2 — 4	
TC3 — 6	
TC4 — 1	
TC5 — 6	
Absorb Plan (Note 1)	2
Class of Restriction (Note 1)	3
Control Plan (Note 1)	5
Restriction Tables (Note 1)	12
4 Entry Restriction Table	6
20 Range Restriction Table	6
800 Range Restriction Table	
Speed Call Forms	
SC1 (Note 2)	1
SC2 (Note 2)	1
Trunk Card Switch Settings CO Trunks	2
Trunk Card Switch Settings E & M/Tie Trunks	6
Trunk Card Switch Settings DID/Tie Trunk Card	6

* Includes column for Multi-Digit Toll Control Generic 204/Up. For further information see Section MITL9105/9110-98-212.

Note 1: These forms are peculiar to Multi-Digit Toll Control Generic 204/Up.

Note 2: These forms are peculiar to Speed Call Generic 205.

APPENDIX1

EQUIPMENT AND BUSY LAMP NUMBERS AND PROGRAMMING ERROR CODES

1. GENERAL

Al.01 The equipment numbers used in the SX-100 and SX-200 are shown in Fig. A1-1, and the busylamp field numbering in Fig. Al-2.

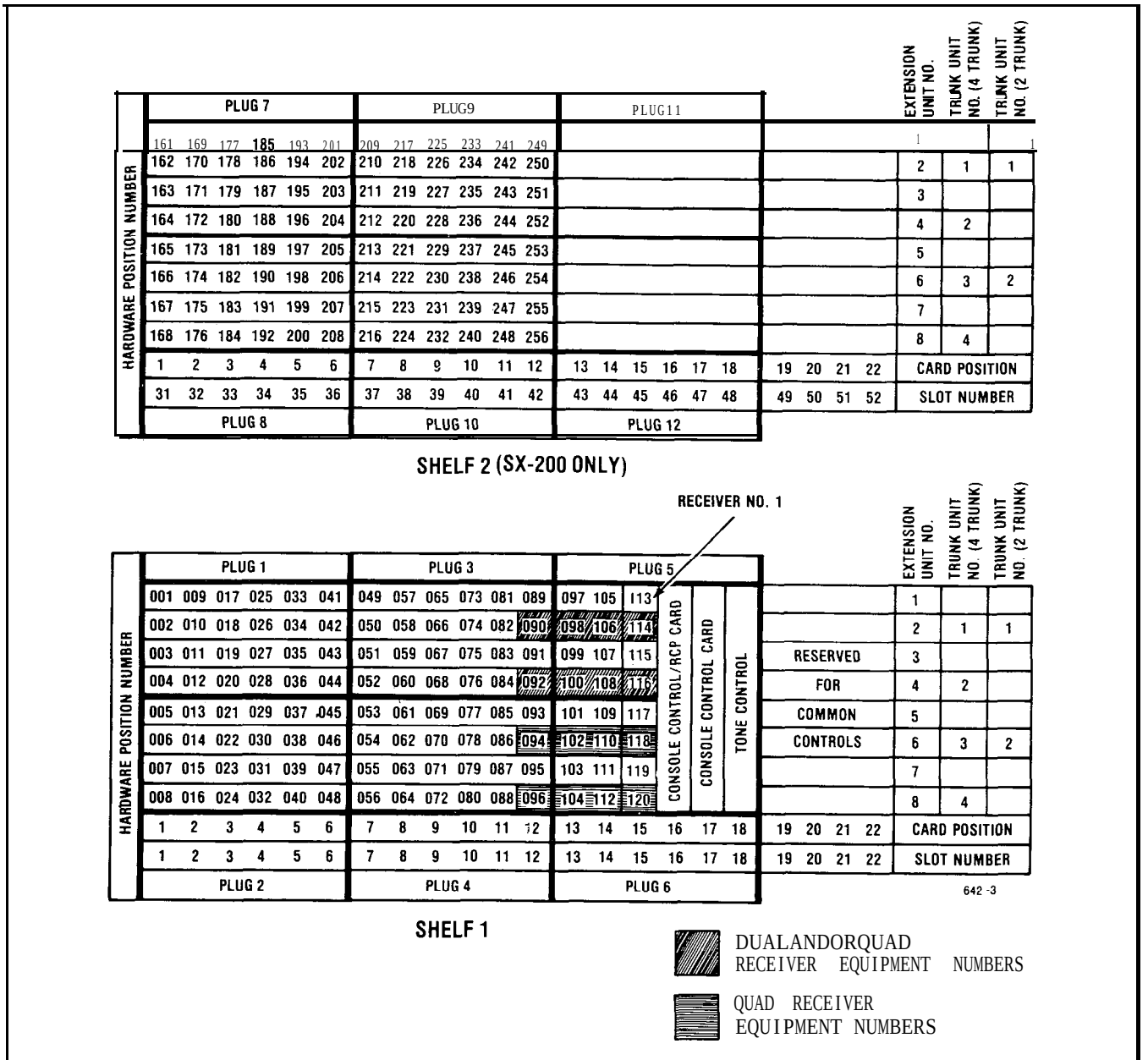

NOTES: 1. EQUIPMENT POSITION 001 IS RESERVED FORTHETEST LINE AND MUST THEREFORE BE EQUIPPED WITH A LINE CARD.
2, TRUNKEQUIPMENTNUMBERISSAMEASINDIVIDUALTRUNKACCESSCODE.

Fig. Al-l Hardware/Equipment Numbering

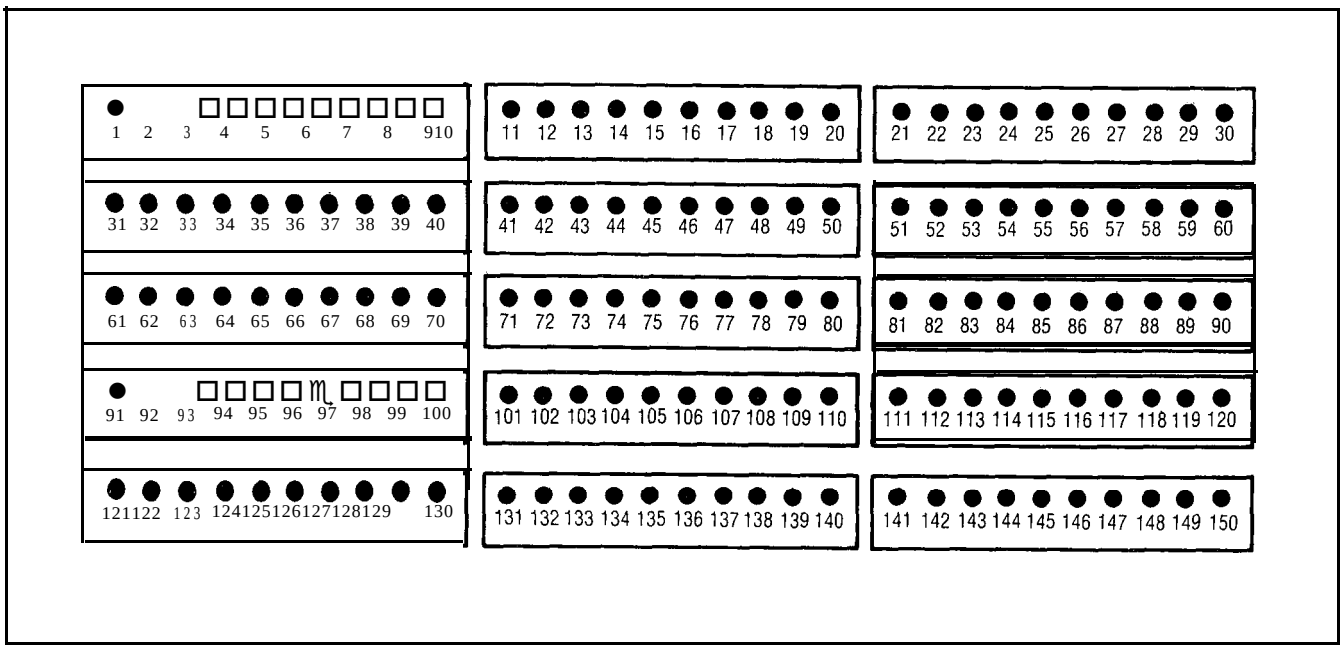

Fig. Al-2 Busy Lamp Position Numbering

Al.02 Error codes and confirm codes, which may appear as console displays during programming, are respectively described in Tables Al-l and Al-2, Al-3, Al-4 and A1-5.

Al.03 Standard and Extended Programming Overlays appear in Fig. Al-3.

Al.04 Before a system can be initially programmed, the RAM (and the extended RAM if applicable) must be initialized. Until the RAM(s) have been initialized system diagnostics may present an error E021___at the console.

Al.05 Refer to Fig. Al-4 for the proper initialization procedure of the RAM (Standard Programming). Refer to Fig. Al-5 for the proper initialization procedure of the RAM (Extended Programming).

Al.08 Refer to Fig. Al-6 to enter or exit programming (Extended or Standard).

TABLE AI-I
STANDARD PROGRAMMING ERROR CODES

Error code	Cause	Key affected	Key flashing	Meaning	Action Required
E0	Invalid key pressed.	ALL	None	The last key pressed is invalid at this time.	Check procedure and press correct key.
E1	Invalid number.	ALL	None	The number entered is out of range or contains corrupted data.	Press key associated with entry and re-enter number.
E2	Key other than ENTER or CANCEL pressed.	LAMP TEST, TENANT, OPTION COS DEFINE, FEATURE EXTN NUMBER, HUNT GROUP, TRUNK GROUP, NEXT, EQPT NUMBER	ENTER, CANCEL	An attempt was made to leave the current mode after some parameters were changed but before ENTER or CANCEL were pressed. ENTER may be used to write the new programming information back to the non-volatile RAM or use CANCEL to ignore all programming changes made since the last time ENTER was pressed.	Press ENTER to transfer the data to permanent store or CANCEL to remove the data from the temporary store.
E3	Access code has not been entered.	HUNT GROUP TRUNK GROUP	ACCESS CODE	In Trunk mode an attempt is made to delete a member of a trunk group. Equipment Numbers desired must be entered.	Press ACCESS CODE key an enter required access code.
E4	The extension number or access code entered is already assigned.	EXTN, ACCESS CODE	None	In Trunk Group mode an attempt is made to place a trunk into a trunk group while that trunk is currently programmed into another trunk group. Attempting to enter members into a Hunt or Trunk group before an access code has been assigned to the group. The extension number or access code entered is already assigned to an extension, feature, hunt group or trunk group. Callback and Executive Override conflict, i.e. trying to enter a Callback code while same code assigned to Executive Busy Override and vice-versa.	Check code entered. 1 If code is correct, terminate entry, remove other appearance of code and re-enter all new data. 2 If code is incorrect, press key associated with entry and re-enter extension number or access code.
E5	Number entered contains incorrect number of digits or conflicting option enabled in this COS.	EXTN NUMBER ACCESS CODE	None	The extension number or access code is in conflict with the existing numbering plan. Attempting to add an option to a COS in which a conflicting option is enabled. Attempting to add a System Option when a conflicting COS option exists.	Check entry. Press key associated with entry and re-enter number.
E6	Incorrect equipment number entered.	EQPT NUMBER	None	Attempting to assign an equipment number that is: • undefined • defined as a trunk to an extension hunt group or extension • defined as an extension to a trunk group or a trunk • an extension with message registration to hunt group or pickup group An equipment number assigned to an extension must be deleted as an extension before being programmed as a trunk. An equipment number assigned to a trunk must be deleted as a trunk before being programmed as an extension (Generic 204/up).	Remove conflicting option (a) Assign equipment number correctly (b) Enter new equipment number

TABLE AI-I (Cont'd)
STANDARD PROGRAMMING ERROR CODES

Error code	Cause	Key affected	Key flashing	Meaning	Action Required
E7	System is busy.	ENTER, TENANT	None	(a) Attempting to initialize system while PABX is in use.	(a) Wait until system is idle
				(b) Attempting to change data of an extension or trunk while that extension or trunk is in use. It must be idle or busied-out.	(b) Wait until extension or trunk is idle
	Extension has a message register that is not zeroed or has a message waiting, or has Do Not Disturb set.	ENTER	None	• a valid message register exists for this extension • extension has a message waiting or Do Not Disturb set	Zero message register, reset message waiting or Do Not Disturb and reprogram
E8	Trunk or equipment number already assigned. In Tenant Service, pressing the Hunt Group key when all hunt groups are assigned to other tenants, In Tenant Service, pressing the Trunk Group key when all trunk groups are assigned to other tenants. In Tenant Service, attempting to put an extension assigned to one tenant into a hunt group of a different tenant. In Tenant Service, attempting to put a trunk assigned to one tenant into a trunk group of a different tenant. In Tenant Service, entering a hunt group number assigned to a different tenant (after pressing HUNT GROUP). In Tenant Service, Trunk Group Programming, selecting an overflow group that belongs to another tenant. In Tenant Service, entering a trunk group number assigned to a different tenant (after pressing TRUNK GROUP).	ENTER	None	Attempting to assign a trunk or equipment number to more than one tenant at the same time.	(a) Key proper trunk or equipment number (b) Press ENTER
E9	Non-Volatile RAM error.	ENTER	None	Ones and Zeros test failed prior to initializing Non-Volatile RAM.	Go to Section MITL9105/9110-98-350
E022-22	At Power up		None	RAM programmed in Generic 202 or 203 is used with Generic 204/up	Non-Volatile RAM must be initialized and/or reprogrammed

TABLE AI-2
STANDARD PROGRAMMING CONFIRM CODES

Confirm code	Cause	Key affected	Flashing lamp	Action
c o	Attempting to assign an equipment number for an extension to a slot containing a trunk card	EQPT NUMBER	CONFIRM	Check assignment — • if correct press CONFIRM key. Equipment number entered is accepted as the number for the equipment type being programmed. All data associated with the original appearance of the equipment number is removed • if incorrect press EQPT NUMBER and re-enter new equipment number
	Attempting to assign an equipment number for a trunk to an empty slot or a slot containing an extension card.	EQPT NUMBER	CONFIRM	
Cl	Attempting to assign an extension that already exists	EXTN NUMBER	CONFIRM	Check assignment — • if correct press CONFIRM key. The extension number entered is accepted as the extension number for the equipment being defined. ALL data associated with the original appearance of the extension number is removed. • if incorrect press EXTN NUMBER and re-enter extension number.
c2	The busy lamp assigment already exists	BUSY LAMP	CONFIRM	Check assignment • if correct press CONFIRM key. Busy lamp assignment is accepted for this equipment. All data associated with original assignment is removed • if incorrect press BUSY LAMP and re-enter busy lamp assignment.

TABLE AI-3
TOLL CONTROL PROGRAMMING ERROR CODES

Error	Applies to:	Meaning
E0	All modes	Invalid key pressed. Consult MAP for correct procedure.
El	Absorb Plan mode Trunk Group mode Control Plan mode	Number is not within the range of the parameter being defined. Re-enter parameter key defined.
E2	All modes	An attempt was made to leave the current mode after some parameters were changed but before ENTER or CANCEL was pressed. ENTER may be used to write the new programming information back to the non-volatile RAM or use CANCEL to ignore all programming changes made since the last time ENTER was pressed.

TABLE AI-3 (Cont'd)
TOLL CONTROL PROGRAMMING ERROR CODES

Error	Applies to:	Meaning
E3	Control Plan mode Table mode	The table number entered is not valid for the current configuration. Re-enter a number which exists for the configuration of the extended non-volatile customer RAM.
E4	Table mode	The table entry code is invalid for the table programmed. This occurs in the following situation: 1. A code of more than 3 digits in length for an 800-entry or 20-range table. 2. A code not in the range of 200-999 for an 800-entry table. 3. A code which already exists or a code which would be ambiguous in conjunction with the existing table entries, for a 4-entry table.
E5	Table mode	The table is full and cannot hold the entry.
E6	Not used in extended programming	
E7	Configuration mode	Configuration is not allowed because the Tone Control card switches are not 7776 or the system is not idle.
E8	Not used in extended programming	
E9	Configuration mode	A hardware failure was detected while clearing the extended customer non-volatile RAM.

TABLE AI-4
TOLL CONTROL PROGRAMMING CONFIRM CODES

Error	Applies To:	Meaning
C5	Control Plan mode Table mode	An attempt was made to assign a table which is currently assigned elsewhere. Pressing the confirm key will de-assign the table from wherever it was previously assigned to assign it to the specified place.
C6	Table mode	A request has been made to delete all entries in a table. If CONFIRM is pressed all entries will be de-assigned. The old data in the non-volatile RAM will not be destroyed until the ENTER key is pressed, and the table itself can be reprogrammed as desired before the ENTER key is used.

TABLE AI-5
SPEED CALL PROGRAMMING ERROR CODES

Error	Applies To:	Meaning
EI	EQPT NUMBER	The equipment number entered is outside the range of valid numbers
EI	NUMBER REDIAL	An invalid number redial value was entered
E3	TABLE	The table number entered is not consistent with that allowed for the current configuration of the extended NV RAM
E4	ACCESS NUMBER	An attempt was made to enter an access number for a common-use table
E4	NUMBER REDIAL	An attempt was made to enter a number redial digit for a common-use table
E5	ACCESS NUMBER	The access number entered already exists for another table assigned to the same equipment number
E5	NUMBER REDIAL	Number redial already exists for another table assigned to the same equipment number, (only 1 number redial attribute per user is allowed)
E6	SPEED CALL	The Configuration of the extended NV RAM does not include the speed call feature

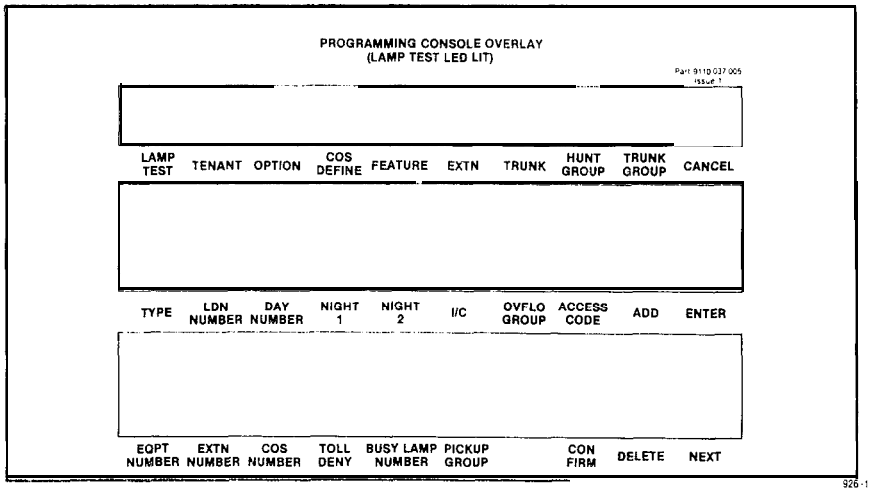

(a) Basic Programming

Fig. A1-3 Programming Overlays

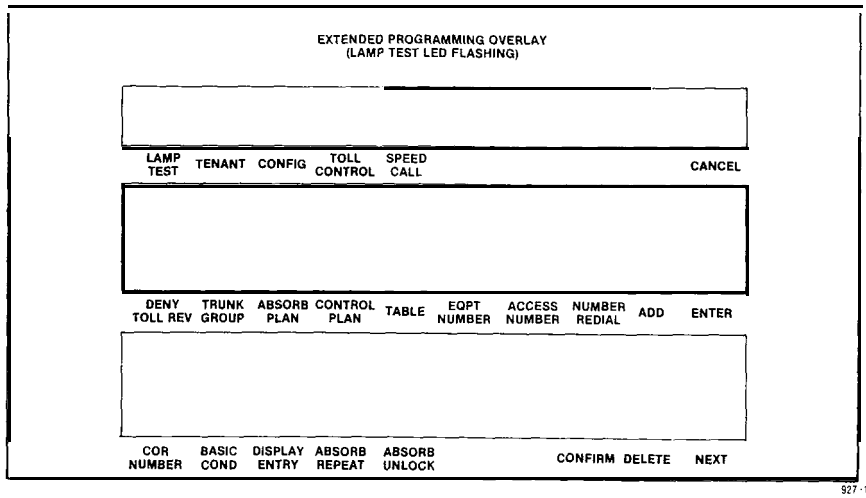

(b) Extended Programming

Fig. AI-3 Programming Overlays (cont'd)

CAUTION

ONE OF THE FOLLOWING PROCEDURES MUST BE PERFORMED FOR STANDARD PROGRAMMING OF THE SYSTEM SEESECTION MITL9105/9110-98-210.

SELECT PROGRAMMING MODESTANDARD OR EXTENDED THEN PERFORM ONE OF THE FOLLOWING STEPS IF THESYSTEM IS TO BECOMPLETELY PROGRAMMED

TO CHANGE FROM MULTI-TENANT SERVICE TO SINGLE TENANT SERVICE OR TO ORIGINALLY PROGRAM SINGLE TENANT SERVICE (INITIALIZE)

SETTHUMBWHEEL SWITCHESTO 7776 — PRESS — PRESS RESET BUTTON ON SCANNER CARD WHEN COMPLETED — ENTER

SET THUMBWHEEL SWITCHESTO 777X (WHERE XIS THE PROGRAMMING CONSOLE) — PRESS — LAMP TEST

TO ORIGINALLY SET-UP MULTI-TENANT SERVICE OR CHANGE FROM SINGLE TENANT SERVICE TO MULTI-TENANT SERVICE.

SET THUMBWHEEL SWITCHES TO 7776 — PRESS — PRESS RESET BUTTON ON SCANNER CARD WHEN COMPLETED — ENTER

SET THUMBWHEEL SWITCHESTO 777X (WHEREX IS THE PROGRAMMING CONSOLE) — PRESS — LAMP TEST

NOTE 1: IF TENANT SERVICE IS REQUIRED, THIS STEP MUSTBEDONE BEFORE ANY OTHER STEPS. IF A SYSTEMISTOBECHANGEDFROM NON-TENANTTOTENANTSERVICE, THEMEMORYMUSTBE INITIALIZED AND ALL DATA RE-ENTERED. STARTING WITH THE ABOVE STEP. IT IS RECOMMENDEDTHATALLDATA FOR ONETENANT BE ENTERED BEFORE CHANGING TENANTS.

565-3

Fig. A1-4 Initialization of RAM (Standard Programming)

CAUTION

THE DATA OF THE FOLLOWING FORMS CAN BE ENTERED AFTER THE CONSOLE HAS BEEN PLACED IN THE DESIRED PROGRAMMING MODE (STANDARD OR EXTENDED)

TO ENTER STANDARD PROGRAMMING MDDE:

SET THUMBWHEEL SWITCHES TO 777X WHERE X = THE PROGRAMMING CONSOLE	PRESS	LAMP TEST	LAMP TEST LEO LIT

OR

DIAL FEATURE ACCESS CODE FOR FEATURE NUMBER 29 FROM THE CONSOLE (GENERIC 204/UP)

TO ENTER EXTENDED PROGRAMMING MODE:

ENTER STANDARD PROGRAMMING	PRESS	NEXT (c l)	LAMP TEST LED FLASHES

TO TERMINATE EXTENDED PROGRAMMING MODE.

PRESS	NEXT (c l)	LAMP TEST LEO LIT SOLID	SYSTEM IS IN STANDARD PROGRAMMING MODE	

TO TERMINATE STANDARD PROGRAMMING MODE:

IF THE SYSTEM WAS PUT IN STANDARD PROGRAMMING MODE WITH FEATURE NUMBER 29	PRESS	LAMP TEST (c l)	LAMP TEST LED UNLIT SYSTEM OUT OF PROGRAMMING MODE
IF THE SYSTEM WAS PUT IN STANDARD PROGRAMMING MODE BY CHANGING THE THUMBWHEEL SWITCHES SET THUMBWHEEL SWITCHES TD 7780	PRESS	LAMP TEST	LAMP TEST LEO UNLIT SYSTEM OUT OF PROGRAMMING MODE

Fig. A1-5 Initialization of Extended RAM (Generic 204/up)

CAUTION

THE FOLLOWING PROCEDURE **MUST BE** PERFORMED WHEN COMPLETELY PROGRAMMING THESYSTEM

A. THE SYSTEM MUST BE IN STANDARD PROGRAMMING MODE
B. THE SYSTEM MUST HAVE BEEN INITIALIZED IN STANDARD PROGRAMMING (FIG. A1-4)
C. SELECTTHE EXTENDED PROGRAMMINGOVERLAY

PRESS NEXT c l SET THETHUMBWHEEL SWITCHES TO 7776

PRESS CONFIG DIAL SINGLE DIGIT CONFIGURATION CODE-(SEE NOTE 2)

PRESS ENTER PRESS RESET BUTTON ON THESCANNERCARD (THE SYSTEM WILL EXIT FROM PROGRAMMING)

PRESS LAMP TEST PRESS NEXT THE SYSTEM IS NOW IN EXTENDED PROGRAMMING

NOTE 1: INITIALIZATION IS NOT POSSIBLE IF SYSTEM IS IN USE

NOTE 2: IN GENERIC 204/205 SYSTEMSTHEREARE FOUR CONFIGURATIONS AVAILABLE:

1. AUTOMATIC WAKEUP AND TOLL CONTROL STANDARD (2040NLY)
2. TOLLCONTROL STANDARD AND SPEEDCALL STANDARD (205 ONLY)
3. TOLLCONTROL BASIC AND SPEEDCALL EXTENDED (205 ONLY)
4. TOLLCONTROL EXTENDED(204 ONLY)

Fig. A1-6 Enter or Exit Programming

MITEL

CUSTOMER CHANGES

CUSTOMER NAME: _____

CUSTOMER SITE : _____

_____

_____

DATE OF CHANGE	SERVICE PERSON	TYPE OF CHANGE	REMARKS

SYSTEM OPTIONS

OPTION

OPTION NAME	OPTION NUMBER	ADD
DISCRIMINATING RINGING	100	✓
TRANSFER DIAL TDNF	101	
FLEXIBLE NIGHT SERVICE	102	
NIGHT SERVICE AUTOMATIC SWITCHING	103	
TAFAS AVAILABLE DURING DAY	104	
OUTGOING TRUNK CAMP-ON	105	
OUTGOING TRUNK CALLBACK	106	
CAN FLASH IF TALKING TO AN INCOMING TRUNK	107	
CAN FLASH IF TALKING TO AN OUTGOING TRUNK	108	
CAN FLASH IF TALKING TO STATION	109	
CANNOT DIAL A TRUNK AFTER FLASHING	110	
CANNOT DIAL A TRUNK AFTER FLASHING IF HOLDING OR IN CONFERENCE WITH A TRUNK	111	
LOCKOUT ALARM ENABLE	112	
TENANT SERVICE (SET AUTOMATICALLY WHEN TENANT SERVICE IS SELECTED WHEN PROGRAMMING)	113*	
TENANT SERVICE - SEPARATE CONSOLES (GENERIC 203/UP) OR	114*	
FLASH TIME 0.7SEC (GENERIC 202.05/UP)	114	
VACANT NUMBER INTERCEPT TO ATTENDANT	115	
ILLEGAL ACCESS INTERCEPT TO ATTENDANT	116	
DID/DIAL-IN/CCSA VACANT/ILLEGAL INTERCEPT TO ATTENDANT	117	
ATTENDANT CAMP-ON	118	
ATTENDANT CONFERENCE	119	
ATTENDANT BUSY OVERRIDE	120	
ATTENDANT SERIAL CALL	121	
BELL OFF ENABLE	122	
PAGE BUTTON ENABLE	123	
NEW CALL TONE ENABLE	124	
BOTH MODE STANDARD	125	
CALLBACK BUTTON ENABLE	126	
TRUNK BUSY-OUT ENABLE	127	
BOTH BUTTON ENABLE	128	

OPTION NAME	OPTION NUMBER	ADD
ATTENDANT CO TRUNK-CO TRUNK CONNECT ENABLE	129	
ATTENDANT CO TRUNK-NON CO TRUNK CONNECT ENABLE	130	
ATTENDANT NON CO TRUNK-NON CO TRUNK CONNECT ENABLE	131	
CONTROLLED OUTGOING RESTRICTION SET-UP	132	
CONTROLLED STATION RESTRICTION SET-UP	133	
CONTROLLED STATION TO STATION RESTRICTION SET-UP	134	
ATTENDANT DISA CODE SET-UP ENABLE	135	
LIMITED WAIT FOR DIAL TONE	136	
MESSAGE WAITING SET-UP (LAMP)	137	
MESSAGE WAITING SET-UP (BELL)	138*	
ATTENDANT TIMED RECALL - CAMP-ON - 20s	139	
ATTENDANT TIMED RECALL - CAMP-ON 40s	140	
ATTENDANT TIMED RECALL - DON'T ANSWER - 20s	141	
ATTENDANT TIMED RECALL - DON'T ANSWER - 40s	142	
ATTENDANT TIMED RECALL - HOLD - 20s	143	
ATTENDANT TIMED RECALL - HOLD - 40s	144	
NIGHT SERVICE TIMEOUT - 20s	145	
NIGHT SERVICE TIMEOUT - 40s	146	
CALL FORWARDING - DON'T ANSWER TIMEOUT -20s	147	
CALL FORWARDING DON'T ANSWER TIMEOUT -40s	148	
CALL FORWARDING BUSY (SYSTEM, DID. DIAL-IN TIE TRUNK, CCSA)	149	
CALL FORWARDING - DON'T ANSWER (SYSTEM, DID. DIAL-IN TIE TRUNK, CCSA)	150	
PARK AND CALL-HOLD RECALL - 2 MINUTES	151	
PARK AND CALL-HOLD RECALL - 4 MINUTES	152	
END'OF DIAL SIGNAL FOR OUTGOING TRUNKS (#)	153	
24 HOUR CLOCK	154	
FIRST DIGIT TOLL DENY		
MESSAGE REGISTRATION ENABLE	156*	
MESSAGE REGISTRATION: COUNT ADDITIONAL SUPERVISIONS	157*	

1283 d

SYSTEM OPTIONS

OPTION

OPTION NAME	OPTION NUMBER (100-234)	ADD
MESSAGE REGISTRATION: TIMER = 20 SECONDS	158'	
MESSAGE REGISTRATION: TIMER = 40 SECONDS		
MESSAGE REGISTRATION: MULTIPLIER = 4 UNITS		
MESSAGE REGISTRATION: MULTIPLIER = 3 UNITS		
MESSAGE REGISTRATION: MULTIPLIER = 2 UNITS	162*	
MESSAGE REGISTRATION: SURCHARGE = 8 UNITS	163'	
MESSAGE REGISTRATION: SURCHARGE = 7 UNITS	164'	
MESSAGE REGISTRATION: SURCHARGE = 6 UNITS	165*	
MESSAGE REGISTRATION: SURCHARGE = 5 UNITS	166*	
MESSAGE REGISTRATION: SURCHARGE = 4 UNITS	167*	
MESSAGE REGISTRATION: SURCHARGE = 3 UNITS	168*	
MESSAGE REGISTRATION: SURCHARGE = 2 UNITS	169*	
MESSAGE REGISTRATION: SURCHARGE = 1 UNIT	170*	
DID TO NON-CO TRUNKS VIA ATTENDANT INHIBIT	171*	
GUEST ROOM BUTTON ENABLE	172*	
ROOM STATUS BUTTON ENABLE & DISPLAY ENABLE	173*	
DO NOT DISTURB INTERCEPT TO ATTENDANT	174*	
DO NOT DISTURB AND MESSAGE WAITING DISPLAYS	175*	
SINGLE DIGIT DIALING ENABLE	176*	✓
SINGLE DIGIT DIALING TIME-OUT = 3 SECONDS	177*	
SINGLE DIGIT DIALING TIME-OUT = 5 SECONDS	178'	
ATTENDANT STATION BUSY-OUT ENABLE	179'	
FLASH TIMING = 0.7 SECONDS	180'	
FLASH TIMING = 0 9 SECONDS	181*	
FLASH TIMING = 1.1 SECONDS	182'	
TRUNK RECALL PARTIAL INHIBIT	183'	
RESERVED	184	
RESERVED	185	
RESERVED	186	
RESERVED	187	
RESERVED	188	
RESERVED	189	
AUTOMATIC WAKEUP ENABLE	190"	

OPTION NAME	OPTION NUMBER (100-234)	ADD
AUTOMATIC WAKEUP PRINT		
AUTOMATIC WAKEUP MUSIC ON HOLD		
ROOM MESSAGE REGISTER AUDIT ENABLE		
ROOM STATUS AUDIT ENABLE		
MESSAGE REGISTER&MESSAGE WAITING CHANGE PRINT ENABLE	195"'	
IGNORE PRINT ENABLE	196†*	✓
REMOTF SYSTFM RFSFT PROTECTION OVERRIDE	197†*	✓
EXTENSION NON-CO TRUNK TO TRUNK CONNECT ENABLE	198†*	✓
MULTI DIGIT TOLL CONTROL ENABLE	199†*	
TRAFFIC MEASUREMENT ENABLE	200**	
TRAFFIC MEASUREMENT EXTREME VALUE MODE	201**	
TRAFFIC MEASUREMENT COMPACT REPORT	202**	
TRAFFIC MEASUREMENT POLLING	203**	
TRAFFIC MEASUREMENT AUTOPRINT	204**	
IDENTIFIED TRUNK GROUP ENABLE	205†*	✓
INHIBIT AUTOMATIC SUPERVISION	206†*	
PRINTER CARRIAGE RETURN DELAY	207†*	
ZERO MESSAGE REGISTER AFTER ROOM REGISTER AUDIT	208**	
TRAFFIC MEASUREMENT: CONSOLE FUNCTION ENABLE	209**	
ATTENDANT PRINTER CONTROL ENABLE	210†*	
SYSTEM ID ENABLE	211†*	
NIGHTBELL 3 WITH MINOR ALARM ENABLE	212†	
PRINTOUTS: EXTRA LINE FEEDS	213†**	
WAKE-UPALARM ENABLE	214"	
RESERVED	215	
SPEED CALL ENABLE	216†	
SPEED CALL PROGRAMMING ENABLE	217†	✓
SPEED CALL CONFIDENTIAL ENLARGED DISPLAY ENABLE	218†	
RESERVED	219†	
STATION MESSAGE DETAIL RECORDING OUTGOING CALLS	220†	
STATION MESSAGE DETAIL RECORDING INCOMINGCALLS	221†	

1283-4

[redacted]

SYSTEM OPTIONS [OPTION]

OPTION NAME	[OPTION] DIAL OPTION NUMBER (100-234) OPTION NUMBER	ADD c 1
SMDR: EXTENDED RECORD		
SMDR: RECORD METER PULSES		
SMDR: INDICATE LONG CALLS		
SMDR: DROP INCOMPLETE OUTGOING CALLS	225†	
SMDR:RECORD ONLY INCOMING CO CALLS(CCSA & NON DIAL TIE TRUNKS)	226†	
SMDR: DROPCALLS OF LESS THAN 8 DIGITS	227†	
DISCRIMINATING DIAL TONE	228†	✓
SPECIAL ANI FEATURE	229†	
ACCOUNT CODEENABLE	230†	
ACCOUNT CODE LENGTH:4 DIGITS	231t	
ACCOUNT CODE LENGTH: 8 DIGITS	232†	
ACCOUNT CODE LENGTH: 12 DIGITS		
VARIABLE LENGTH ACCOUNTCODES	234†	
AFTER ALL OPTIONS ARE ADDED		[ENTER]

NOTES

TO DELETE SYSTEM OPTIONS

[OPTION] DIAL OPTION NUMBER [DELETE]

AFTER ALL REQUIREDOPTIONS HAVE BEEN REMOVED

ENTER

c 1

TO REVIEW SYSTEM OPTIONS

[OPTION] [NEXT] [NEXT] • • •

'GENERIC 203/UP
**GENERIC 204 BUT NOT 205
†* GENERIC 204AND 205
† GENERIC 205 BUT NOT 204

1283

FEATURES

DESCRIPTION	FEATURE DIAL 1-42	ACCESS CODES ASSIGN AND DIAL ACCESS CODE	ENTER
	FEATURE NUMBER		
ATTENDANT ACCESS	1		
CALLBACK-DON'T ANSWER	2		
CALL FORWARD-BUSY	3		
CALL FORWARD DON'T ANSWER	4		
CALL FORWARD FOLLOW ME	5		
CALL PARK	6		
DIAL CALL PICKUP	7		
DIRECTED CALL PICKUP	8		
MEET-ME CONFERENCE	9		
PAGER 1	10		
PAGER 2	11		
HOLD PICKUP ACCESS	12		
PAGER 1 AND 2	13		
TAFAS ALL	14		
TAFAS 1	15		
TAFAS 2	16		
TAFAS 3	17		
ATTENDANT FUNCTION	18		
MAINTENANCE FUNCTION	19		
DID ATTENDANT ACCESS CODE	20		
DIRECT INWARD SYSTEM ACCESS	21		
EXECUTIVE BUSY OVERRIDE (SINGLE DIGIT)".	22		
CALLBACK BUSY (SINGLE DIGIT)***	23		
ROOM DO NOT DISTURB	24*		
CALL HOLD	25*		
CALL RETRIEVE (LOCAL)	26*		

	FEATURE DIAL 1-42	ACCESS CODES ASSIGN AND DIAL ACCESS CODES	ENTER
CALL RETRIEVE (REMOTE)	27*		
ROOM STATUS UPDATE (MAID IN ROOM)	28'		
PROGRAMMING SECURITY CODE	29"		
ALARM CALL	39**		
ACCOUNTCODE	31††		
SPEED CALL	32tt		
ASSIGN ACCESS CODES 33-42 TO TRUNK TRUNK GROUP 1 IF NECESSARY			
TRUNKGROUP ACCESS CODE33	33*†		
TRUNKGROUP ACCESS CODE 34	34*†		
TRUNKGROUP ACCESS CODE 35	35*†		
TRUNKGROUP ACCESS CODE 36	36*†		
TRUNKGROUP ACCESS CODE 37	37*†		
TRUNK GROUP ACCESS CODE 38	38*†		
TRUNKGROUP ACCESSCOOE39	39*†		
TRUNK GROUP ACCESS CODE 40	40*†		
TRUNKGROUP ACCESS CODE41	41*†		
TRUNK GROUP ACCESS CODE 42	42*†		

NOTES

TO DELETE A FEATURE

FEATURE → ACCESS CODE → DELETE → ENTER

TO REVIEW ACCESS CODES

FEATURE → NEXT → NEXT → • • •

'GENERIC 203/UP

**GENERIC 204/UP

*** FIRST DIGIT CONFLICT ALLOWED WITH OTHER ACCESS CODES

*† GENERICS 204AND 205

† GENERIC 204 ONLY

†† GENERIC205

1284.3

MITEL

CLASS OF SERVICE OPTIONS

PRESS [COS DEFINE] DIAL COS NUMBER 1-16

TO CHANGE ANY OPTION FOR A COS 1-16: PRESS [OPTION] DIAL OPTION NUMBER 33-94 PRESS [ADD] TO ENABLE OR PRESS [DELETE] TO REMOVE

REPEAT FOR EACH OPTION IN THE COS

OPTION #	1	2	3	4	5	6	7	8	9	10	11	12	13	14	15	16
33																
34																
35																
36																
37																
38																
39																
40																
41																
42																
43*																
44																
45																
46																
47																
48																
49																
50																
51																
52																
53																
54																
55																
56†																
57																
58																
59																
60																
61																
62																
63*																
64*																
65																
66																
67																
68																
69																
70																
71																
72																
73																
74																
75																
76																

OPTION #	OPTION NAME
33	AUTOMATIC CALLBACK
34	CALL FORWARDING - BUSY
35	CALL FORWARDING - DON'T ANSWER
36	CALL FORWARDING - FOLLOW ME
37	CALL PARK
38	NEVER A FORWARDEE
39	DIRECTED CALL PICKUP
40	EXECUTIVE BUSY OVERRIDE
41	DATA SECURITY
42	STATION OVERRIDE SECURITY
43*	INWARD RESTRICTION (DID)
44	ORIGINATE ONLY
45	RECEIVER ONLY
46	FLASH DISABLE
47	NEVER A CONSULTEE
48	BROKER'S CALL
49	STATION CONFERENCE
50	MEET-ME CONFERENCE
51	CAMP-ON
52	DO NOT OVERFLOW
53	PAGING ACCESS
54	TAFAS ACCESS
55	HOLD PICKUP
56†	ACCOUNT CODE ACCESS
57	MANUAL LINE
58	CONTACT MONITOR
59	NON-CO TRUNKS VIA ATTENDANT INHIBIT
60	CO TRUNKS VIA ATTENDANT INHIBIT
61	NO DIAL TONE
62	FLASH FOR ATTENDANT
63*	H/M STN-STN RESTRICT APPLIES
64*	MESSAGE REGISTER
65	TRUNK GROUP 1 ACCESS
65	TRUNK GROUP 2 ACCESS
67	TRUNK GROUP 3 ACCESS
68	TRUNK GROUP 4 ACCESS
69	TRUNK GROUP 5 ACCESS
70	TRUNK GROUP 6 ACCESS
71	TRUNK GROUP 7 ACCESS
72	TRUNK GROUP 8 ACCESS
73	TRUNK GROUP 9 ACCESS
74	TRUNK GROUP 10 ACCESS
75	TRUNK GROUP 11 ACCESS
76	TRUNK GROUP 12 ACCESS

[redacted]

CLASS **OF SERVICE OPTIONS**

PRESS [COS DEFINE] DIAL COS NUMBER 1-16

TO CHANGE ANYOPTION FOR ACOS 1-16 PRESS [OPTION] DIAL OPTION NUMBER 33-94 PRESS [ADD] TO ENABLE OR PRESS [DELETE] TO REMOVE

REPEAT FOR EACH OPTION IN THE COS

OPTION #	1	2	3	4	5	6	7	8	9	10	11	12	13	14	15	16
*																
*																
*																
*																
*																
**																
†																
†																
†																
†																
†																
†																
†																
†																
†																
†																
†																
†																
†																

OPTION #	OPTION NAME
77*	MESSAGE WAITING APPLIES
78*	ROOM DO NOT DISTURB ENABLE
79*	CALL HOLD AND RETRIEVE ACCESS
80*	ROOM STATUS APPLIES
81*	CALL FORWARD SYSTEM INHIBIT
82**	ALARM CALL ENABLE
83†	FORCED ACCOUNT CODE ENTRY
84†	NO SMDR RECORD APPLIES
85†	SPEED CALL TABLE 1 & 2 ACCESS
86†	SPEED CALL TABLE 3 & 4 ACCESS
87†	SPEED CALL TABLE 5 & 6 ACCESS
88†	SPEED CALL TABLE 7 & 8 ACCESS
89†	SPEED CALL TABLE 9 & 10 ACCESS
90†	SPEED CALL TABLE 11 & 12 ACCESS
91†	SPEED CALL TABLE 13 & 14 ACCESS
92†	SPEED CALL TABLE 15 & 16 ACCESS
93†	SPEED CALL TABLE 17 & 18 ACCESS
94†	CANNOT DIAL A TRUNK AFTER FLASHING

PRESS [ENTER] TO ENTER ALL INFORMATION IN THE COS AFTER ALL OPTIONS IN THAT COS HAVE BEEN DEFINED

TO REVIEW THE OPTIONS WITHIN A COS [COS DEFINE] DIAL COS NUMBER [OPTION] [NEXT] [NEXT] ●

NOTE: AN EXTENSION OR TRUNK CAN NOT CHANGE ITS COSIFTHE EXTENSION OR TRUNK IS BUSY, HAS MESSAGE WAITING OR DO NOT DISTURB SET. IT ALSO CAN NOT BECHANGED UNLESSTHE MESSAGE REGISTER IS CLEARED.

* GENERIC 203/UP
* GENERIC 204
† GENERIC 205

MITEL

EXTENSIONS

APPLIES TO GENERIC 203 AN0 ABOVE

IF TENANT SERVICE IS IN USE
ALL ENTRIES MADE ARE ASSIGNED TO THE TENANT NUMBER DIALED

TENANT | DIAL 1-4 | ENTER

TENANT NUMBER | 1

TD ENTER EXTENSION PROGRAMMING PRESS [ ] EXTN L - I

NAME	EQPT NUMBER c I DIAL 1-112 OR 161-256 (SEE NOTE 1)	EXTN NUMBER DIAL CODE OR SEE NOTES 2, 3, OR 4	cos NUMBER c I DIAL 1-16	(TOLL DENY) ADD TOLL DENY OR DIAL COR CODE 1, 2, OR 3 OR (TOLL ALLOW) DELETE NOTE 5	BUSY LAMP NUMBER DIAL 1-150 OR DELETE c I	PICKUP GROUP c I DIAL 1-50 OR DELETE	ENTER

NOTES'

1. EQUIPMENT NUMBERS 161-256 APPLIES TO SX-200 ONLY
2. TO ASSIGN NON CONFLICTING SINGLE DIGIT DIRECTORY NUMBER ENTER N#, WHEN N IS THE SINGLE DIGIT.
3. TO REMOVE EXTENSION PROGRAMMING

EXTN | EQPT NUMBER | DIAL EQUIPMENT NUMBER | EXTN NUMBER | DELETE (EXTENSION MUST BE REMOVED FROM ANY HUNT GROUP BEFORE REMOVING THE EXTENSION PROGRAMMING)

4. TO SEE THE NEXT EQPT NUMBER ASSIGNED AS AN EXTENSION:

EQPT NUMBER | NEXT • • •

5 COR 1-3 APPLIES ONLY, IF TOLL CONTROL (GENERIC 204/UP) IS USED

MITEL

APPLIES TO GENERIC 203 AND ABOVE

IF TENANT SERVICE IS IN USE
ALL ENTRIES MADE ARE ASSIGNED TO THE TENANT NUMBER DIALED

TENANT | DIAL 1-4 | ENTER

HUNT GROUPS

HUNT GROUP

(EXTENSION INFORMATION MUST BE ENTERED BEFORE HUNT GROUP DATA)

TENANT NUMBER

HUNT GROUP — DIAL 1-12

ACCESS CODE — DIAL CODE OR DELETE

PRESS EQPT NUMBER BEFORE DIALING EACH EQUIPMENT NUMBER ENTRY

AFTER LAST ENTRY IN EACH GROUP PRESS ENTER

TO SEETHEEQUIPMENTNUMBERS CURRENTLY IN A HUNT GROUP

HUNT GROUP | DIAL NUMBER 1-12 | EQPT NUMBER | NEXT | NEXT . . .

TO SE6 ALL HUNT GROUPS

HUNT GROUP | NEXT | NEXT • • •

TO MAKE A CHANGE TO A HUNT GROUP, THE LIST OF MEMBERS MUST BE RE-ENTERED. INDIVIDUAL MEMBERS CANNOT BE DELETED OR CHANGED. THE EXISTING GROUP LIST IS AUTOMATICALLY DELETED WHEN YOU STARTTD ENTER A NEW ONE

FOR CIRCULAR HUNTGROUPS FIRST AND LASTNUMBERS MUST BE IDENTICAL.

MITEL

NON DIAL-IN TRUNKS

APPLIES TO GENERIC 203 AND ABOVE

IF TENANT SERVICE IS IN USE
ALL ENTRIES MADE ARE ASSIGNED TO THETENANT NUMBER DIALED

TENANT | DIAL 1-4 | ENTER

TO ENTERTRUNK PROGRAMMING PRESS

TRUNK

TENANT NUMBER								
LDN NUMBER	EQPT NUMBER DIAL Z-112 OR 162-256 (SEE NOTES 1 AND 2)	SEE NOTE 3 TYPE c 1 DIAL 1, 5, 11. 51 OR DELETE c 1	LDN NUMBE DIAL 1-4	(SEE NOTE 4) DAY NUMBER DIAL #0-#3 OR *1-*12 OR 1-112 OR 161-256	(SEE NOTE 4) NIGHT 1 #0-#3 OR *1-*12 OR 1-112 OR 161-256	(SEE NOTE 4) NIGHT 2 DIAL #0-#3 OR *1-*12 OR 1-112 OR 161 256	BUSY LAMP NUMBER 1-150 OR DELETE	ENTE

NOTES:

1 EQUIPMENT NUMBERS 162-256 APPLY TO SX-200 ONLY

2 ONLY EVEN EQUIPMENT NUMBERS MAY BE ASSIGNED TO TRUNKS

3 TYPE 1 = STANDARDEOTHWAY COTRUNKVNL
TYPE 5 = NON DIAL IN TIE TRUNK (NON CO)VNL
TYPE 11= STANDARD BOTHWAY CO TRUNK NON VNL
TYPE 51 = NON DIAL IN TIE TRUNK (NON CO)NON VNL

4 #0 CONSOLEONLY
#1-CONSOLE AND NIGHT BELL 1
#2 CONSOLE AND NIGHT BELL 2
#3 CONSOLE AND NIGHT BELL 3

5 TO REMOVE A TRUNK ASSIGNMENT
(NOTE. TRUNK MUST FIRST BE REMOVEDFROM TRUNK GROUP]

EQPT NUMBER | DIAL EQUIPMENT NUMBER | TYPE | DELETE | ENTER

*1-*12 ASSIGNS THE TRUNK TO THE HUNTGROUPSELECTED
1-112, 161-256 ASSIGNS THE TRUNK TO THE SPECIFIED EXTENSION

6. TO SEETHE NEXT EQUIPMENT NUMBER PROGRAMMED AS A TRUNK:

EQPT NUMBER | NEXT | • • •

GENERIC 202 TYPE CODE DISPLAY DEFAULTS TO 1 WHEN TRUNK IS DELETED

DIAL-IN TRUNKS

APPLIES TO GENERIC 203 AN0 ABOVE

IF TENANT SERVICE IS IN USE
ALL ENTRIES MADE ARE ASSIGNED TO THE TENANT NUMBER DIALED

TENANT | DIAL 1-4 | ENTER

TO ENTERTRUNK PROGRAMMING PRESS TRUNK L - 1

TENANT NUMBER: 1

LDN NUMBER	EQPT NUMBER DIAL 2-112 OR 162-256 (SEE NOTE 1 AND 2)	SEE NOTE 3 TYPE DIAL 2, 4, 21, OR 41 OR DELETE	COS NUMBER DIAL 1-16	(TOLL DENY) ADD TOLL DENY OR DIAL COR CODE 1, 2, OR 3 OR NOTE 6 (TOLL ALLOW) DELETE	LAMP NUMBER 1-150 OR DELETE	ENTER

NOTES:

1. EQUIPMENT NUMBERS 162-256 APPLIES TO SX-200 ONLY

2. EVEN EQUIPMENT NUMBERS ONLY MAY GE ASSIGNED TO TRUNKS

TYPE 2 = DIRECT INWARD SYSTEM ACCESS VNL
TYPE 4 = DIAL IN TIE TRUNK (NON CO) VNL
TYPE 21 = DIRECT INWARD SYSTEM ACCESS NON VNL
TYPE 41=DIAL IN TIE TRUNK (NON CO) NON VNL

4 TO REMOVE A TRUNK ASSIGNMENT:
NOTE TRUNK MUST FIRST GE REMOVE0 FROM TRUNK GROUP

EQPT NUMBER | DIAL EQUIPMENT NUMBERS | TYPE | DELETE

GENERIC 202-02 TYPE CODE DISPLAY DEFAULTS TO 1 WHEN TRUNK IS DELETED.

5. TO SEE THE NEXT EOPT NUMBER ASSIGNED AS A TRUNK

EQPT NUMBER | NEXT

6. COR I-3 APPLIES ONLY, IF TOLL CONTROL (GENERIC 204/UP) IS USED

MITEL

187 -5

APPLIESTO GENERIC 203ANDABOVE

IF TENANT SERVICE IS IN USE
ALL ENTRIES MADE ARE ASSIGNED TO THE TENANT NUMBER DIALED

TENANT | DIAL 1-4 | ENTER

DID/CCSA TRUNKS
(GENERIC 203/UP)

TO ENTER TRUNK PROGRAMMING PRESS

TRUNK

TENANT NUMBER

LDN NUMBER	EQPT NUMBER DIAL 2-110 OR 162-254 (SEE NOTES 1 AND 2)	SEE NOTE3 TYPE DIAL 3, 6, 31 OR 61 DELETE	N/C DIAL NMX CODE (NOTE 4) N M X	BUSY LAMP NUMBER DIAL 1-150 OR DELETE	ENTER

NOTES:

1. EQUIPMENT NUMBERS 162-254 APPLY TO SX-200 ONLY
2. ALTERNATE EVEN NUMBERS ONLY MAY BE ASSIGNED TO DID/CCSA TRUNKS
3. TYPE 3 = DID VNL
   TYPE 31 = DID NON VNL
   TYPE 6 = CCSA VNL
   TYPE 61 = CCSA NON VNL
4. N = NUMBER OF DIGITS TO BE RECEIVED AFTER TRUNK IS SEIZED (I-9)
   M = NUMBER OF DIGITS TO BE ABSORBED AFTER TRUNK IS SEIZED (O-B)
   X = LEADING DIGIT TO BE INSERTED, IF REWIRED.
   MAXIMUM NUMBER OF DIGITS IS 4 (3 IF TENANT SERVICE) AFTER ABSORPTION (M) AND ADDING A DIGIT (X).

5. TO REMOVE A TRUNK ASSIGNMENT. (TRUNK MUST FIRST BE REMOVED FROM TRUNK GROUP)

EQPT NUMBER | DIAL EQUIPMENT NUMBERS | DELETE | ____

6. TO SEE THE NEXT EQPT NUMBER ASSIGNED AS A TRUNK

EQPT NUMBER | NEXT | • • •

MITEL

TRUNK GROUPS

APPLIES TO GENERIC 203ANOABOVE

IF TENANT SERVICE IS IN USE
ALL ENTRIES MADE ARE ASSIGNED TO THE TENANT NUMBER DIALED

TENANT | DIAL 1-4 | ENTER

TO ENTER TRUNK GROUP PROGRAMMING PRESS

TRUNK GROUP (TRUNK INFORMATION MUST BE ENTERED BEFORE TRUNK GROUP DATA)

TENANT NUMBER

TRUNK GROUP	DIAL 1-12	ACCESS CODE	DIAL CODE OR DELETE	TYPE	SEE NOTE 6				TOLL DENY NOTE 8	ADD OR DELETE	OVFLO GROUP NOTE 5	DIAL 1-12 OR DELETE	SEE NOTE 4 AND 7 PRESS EQPT NUMBER BEFORE DIALING EACH EQUIPMENT NUMBER ENTRY. AFTER LAST ENTRY PRESS ENTER
					1ST DIGIT	2ND DIGIT	3RD DIGIT	4TH DIGIT					

NOTES

TO SEETHE TRUNKS IN A TRUNK GROUP: TRUNK GROUP | DIAL NUMBER (1-12) | EQPT NUMBER | NEXT | NEXT . . .

TO SEEALLTRUNKGROUPS: TRUNK GROUP | NEXT | NEXT . . .

TO DELETETRUNKGROUP: TRUNK GROUP | DIAL NUMBER (1-12) | ACCESS CODE | DELETE n | ENTER . . .

TO MAKE A CHANGE TO A TRUNK GROUP, THE LIST OF MEMBERS MUST BE RE-ENTERED. INDIVIDUAL MEMBERS CANNOT BE DELETED OR CHANGED. THE EXISTING TRUNK GROUP LIST IS AUTOMATICALLY DELETED WHEN YOU START TO ENTER A NEW ONE

ORIGINAL AND OVERFLOW TRUNK GROUPS MUST BE THE SAMETYPEAND HAVE THE SAME TOLL RESTRICTION CHARACTERISTICS.
IF GENERIC 202 IS USED THE TRUNKS WITHIN A GROUP MAY ONLY BE PROGRAMMED FOR CIRCULAR HUNTING.

6. TRUNK GROUP TYPE IS 4 DIGITS

1st DIGIT
1-NO SUPERVISION
Z-ANSWER SUPERVISION
3-TOLL REVERSAL
4-OUTGOING AUDIO INHIBITED UNTIL ANSWER SUPERVISION TIMEOUT OR # DIALLED (GENERIC 203/UP)

2nd DIGIT
I-NO MESSAGE REGISTER
Z-MESSAGE REGISTER (GENERIC 203/UP)
3-SMDR WITH MESSAGE REGISTER (GENERIC 205)
4-SMDR WITHOUT MESSAGE REGISTER (GENERIC 205)

3rd DIGIT
I-ROTARY DIAL OFFICE, NO WAIT FOR DIAL TONE
2-ROTARY DIAL OFFICE, WAIT FOR DIAL TONE
3-TOUCH-TONE DIAL OFFICE, NO WAIT FOR DIAL TONE
4-TOUCH-TONE DIAL OFFICE, WAIT FOR DIAL TONE

4th DIGIT
I-CENTRAL OFFICE
2-NON-CO
3-IDENTIFIED TRUNK GROUP (NON-CO)

7. IFGENERIC 2030R HIGHER IS USED, THE TRUNKS WITHIN A TRUNK GROUP MAY BE PROGRAMMED FOR EITHER TERMINAL OR CIRCULAR HUNTING, IFTERMINAL HUNTING IS REQUIRED, ENTER TRUNK EQUIPMENT NUMBERSIN REQUIRED SEQUENCE.
IF CIRCULAR HUNTING IS REQUIRED MAKELASTTRUNK EQUIPMENT NUMBER THESAMEASTHE FIRSTTRUNK EQUIPMENT NUMBER.

8. DOES NOT APPLY IF TOLL CONTROL (GENERIC 204/UP) IS USED
SEE SECTION MITL9105/9110-98-212 OR TOLL CONTROL FORMSTHIS SECTION.

MITEL

MULTI DIGIT TOLL CONTROL FORMS

GENERICS 2041205

TRUNK GROUP DEFINITION

THE FOLLOWING FORMS; TC1, TC2, TC3, TC4, TC5 FORMULATE A SYSTEM WIDE TOLL CONTROL PLAN. THESE FORMS ALLOW THE INSTALLER TO LIST ALL INFORMATION IN AN ORGANIZED FORM. THIS INFORMATION MAY THEN BE TRANSFERRED TO THE FOLLOWING TOLL CONTROL FORMS TO BE ENTERED DURING PROGRAMMING.

TRUNK GROUP	ACCESS CODE	CLASS OF SERVICE																COR CONTROL PLAN			ABSORB PLAN 1								ABSORB PLAN 2							
		1	2	3	4	5	6	7	8	9	10	11	12	13	14	15	16	1	2	3	REPEAT				UNLOCK				REPEAT				UNLOCK			
1																																			
2																																			
3																																			
4																																			
5																																			
6																																			
7																																			
8																																			
9																																			
10																																			
11																																			
12																																			

1925

[redacted]

CONTROL PLAN	TOLL REV. A/D	0		TOLL PREFIX 1			NO TOLL PREFIX		
		A/D	EXEMPT NUMBER	X 0/1 X	XNX	EXCEPT	X 0/1 X	XNX	EXCEPT
COLUMN	1	2	3	4	5	6	7	8	9
1									
2									
3									
4									
5									
6									
7									
8									
9									
10									
11									
12									
13									
14									
15									

ENTER A FOR BASIC ALLOWAL AND D FOR BASIC DENIAL IN COLUMNS 2.4. 5. 7 AND 8.

ENTER A CONSECUTIVE NUMBER FOR EACH SET OF EXCEPTIONS IN COLUMNS 3.0 AND 9 IF APPLICABLE.

TOLL CONTROL ▪ EXCEPTION LIST STRUCTURE

1. WRITE ALL NUMBERSOFTHE EXCEPTION LIST IN COLUMN 1.
2. WRITE ALL NUMBERS IN NUMERICAL ORDER OF THE FIRST THREE DIGITS (I.E. 613, 614, 615) IN COLUMN 2.
3. WRITE ALL NUMBERS IN NUMERICAL ORDER OF THE SECONDTHREE DIGITS (I.E. 592. 593, 594)IN COLUMN 3.
4. WRITE ALL NUMBERS IN NUMERICAL ORDER OF THE NEXT FOUR DIGITS (I.E. 4000, 4001, 4002) IN COLUMN 4

EXCEPTION LIST _____ CONTROLPLAN _____ BASIC CONDITION _____ SHEET _____

COLUMN 1	COLUMN 2	COLUMN 3	COLUMN4

1928

1. COMPLETE ALL REQUIRED TC3 FORMS. ALL NUMBER GROUPS OF COLUMN 2 REPRESENT ONETABLE. ALL NUMBER GROUPS OF TABLE 3 AND 4 REPRESENT ONE TABLE (IF THEY HAVE THE SAME PREVIOUS NUMBER GROUP IN COLUMN 2).

2. IDENTIFY NUMBER GROUPS WITH MORE THAN 3 DIGITS AND ASSIGN A 4-ENTRY TABLE FOR EACH SUCH GROUP.

3. IDENTIFYREMAINING NUMBER GROUPS WHICH HAVE A FIRST DIGIT 0 OR 1. ALLOCATE A 4-ENTRY TABLE IF THE NUMBER OF DIGITS DOES NOT EXCEED 4 OTHERWISE ALLOCATE A 20 RANGE TABLE.

4. ASSIGN ALL NUMBERS WHICH REQUIRE BOO ENTRYTABLES. ENSURETHAT ALL THE LOWERTABLES (4 ENTRY, 20 RANGE) HAVE BEEN FILLED.

1929

TABLE ASSIGNMENTS

TOLL CONTROL

THIS FORM IS INTENDEDTO PROVIDE AN OVERVIEWOF THE TABLE STRUCTURE USED FOR A PARTICULAR SYSTEM INSTALLATION.

800 ENTRY								20 RANGE							4ENTRY							
		#	CP	L1	L2	L3	L4		#	CP	L1	L2	L3	L4			#	CP	L1	L2	L3	L4
B		1						B	21						B		51					
B		2						B	22						B		52					
B		3						B	23						B		53					
B		4						B	24						B		54					
S		5						B	25						B		55					
S		6						B	26						B		56					
S		7						B	27						B		57					
E		a						S	28						B		58					
E		9						S	29						B		59					
								E	30						B		60					
								E	31						B		61					
								E	32						B		62					
								E	33						S		63					
															S		64					
															S		65					
															S		66					
															S		67					
															E		68					
															E		69					
															E		70					
															E		71					
															E		72					
															E		73					

B Basic

S Standard

E Extended

CP....TO ENTER NUMBER OF CONTROL PLAN THE TABLE IS USED IN

LX....X IS NUMBERDF LEVEL OF EXCEPTION TABLE; ENTER TABLE NUMBERS OF PREVIOUS EXCEPTION TABLES AND MARK AN 'X'WHEREVER THE PARTICULAR TABLE IS USED.

I.E.

CP	LI	L2	L3
5	5	1	22	X

TABLE 5 IS USED IN CONTROL PLAN 5 AS AN EXCEPTION TO TABLE 22. WHICH IS AN EXCEPTION TO TABLE 1.

1930

TOLL CONTROL ABSORB PLAN

ABSORB PLAN c DIAL 1 OR 2 l	ABSORB REPEAT c DIAL REPEAT DIGITS (MAX 4) OR [DELETE] l	[ABSORB UNLOCK] DIAL UNLOCK DIGITS (MAX 4) OR [DELETE]	
ABSORB PLAN NUMBER 1			
ABSORB PLAN NUMBER 2			
			[ENTER]

TO VIEW THE ABSORB PLANS'

[ABSORB PLAN] [NEXT] [NEXT]

PLAN NUMBER 1 DISPLAYED

PLAN NUMBER 2 DISPLAYED

GENERIC **205/UP**

MITEL

8t

TOLL CONTROL

CLASS OF RESTRICTION

(TRUNKGROUP)

TRUNK GROUP c l — DIAL 1-12	ABSORB PLAN — DIAL 1-2 OR DELETE	DIAL 1-3	CONTROL PLAN — DIAL 1-15 OR DELETE c l	
		1		
		2		
		3		
		1		
		2		
		3		
		1		
		2		
		3		
		1		
		2		
		3		
		1		
		2		
		3		
				ENTER

TO REVIEW CLASS OF RESTRICTION OF A TRUNK GROUP

TRUNK GROUP — DIAL 1-12 — COR — DIAL 1 — DISPLAY ENTRY (COR 1) — NEXT (COR 2) — NEXT (COR 3)

TO SEE NEXT TRUNK GROUP CLASS OF RESTRICTION

TRUNK GROUP — DIAL 1-12 — DISPLAY ENTRY — NEXT

MITEL

87

TOLL CONTROL

CONTROL PLAN

CONTROL PLAN DIAL 1-15	DENY TOLL REV — ADD OR DELETE	BASIC COND DIAL 1-5 (NOTE 2)	ADD OR DELETE (NOTE 1)	TABLE — DIAL 1-9 (800 ENTRY) 21-33 (20 RANGE) 51-73 (4 ENTRY) OR DELETE	
		1 (0)			
		2 (1-XNX)			
		3 (1-X 0/1 X)			
		4 (XNX)			
		5 (X 0/1 X)			
		1 (0)			
		2 (1-XNX)			
		3 (1-X 0/1 X)			
		4 (XNX)			
		5 (X 0/1 X)			
		1 (0)			
		2 (1-XNX)			
		3 (1-X 0/1 X)			
		4 (XNX)			ENTER
		5 (X 0/1 X)			

OTE 1

ADD -ALLOW ALL COOES EXCEPTTHOSE LISTED IN THE TABLE SPECIFIED

DELET — OENYALLCODES EXCEPTTHOSE LISTED IN THE TABLE SPECIFIED

TO REVIEW CONTROL PLAN ASSIGNMENTS

CONTROL PLAN — DIAL 1-15 — DISPLAY ENTRY — NEXT

TO REVIEW THE BASIC CONDITIONS OF A CONTROL PLAN

CONTROL PLAN — DIAL 1-15 — BASIC COND — DIAL 1 — DISPLAY ENTRY — NEXT — NEXT

DISPLAY BASIC CONDITION 1 — DISPLAY BASIC CONDITION 2 — DISPLAY BASIC CONDITION 3

'OTE 2 N IS ANY NUMBER 2-9
XIS ANY NUMBER 0-9

[redacted]

4 ENTRY EXCEPTION TABLE

FROM BASIC CONDITION_____
OR TABLE NUMBER_____ **CONTROL PLAN** __

TOLL CONTROL

THIS TABLE LISTS ALLTHECODES THATAREALLOWED ☐
THIS TABLE LISTS ALL THE CODESTHAT ARE DENIED ☐

TARIF DIAL 1-73 DISPLAY ENTRY

PRESS ADD BEFORE DIALING EACH ENTRY

IF AN EXCEPTION TABLE IS TO BE APPLIEDTO THIS ENTRY
TABLE DIAL 51-73

TABLE NUMBER				

ENTER

TO SEARCH FOR A SPECIFIC ENTRY
DISPLAY ENTRY DIAL ENTRY DISPLAY ENTRY
A DASH IS DISPLAYED IF THE ENTRY DOES NOT EXIST

TO DELETETHE ENTRY BEING DISPLAYED
DELETE ENTER

NOTE: ANY OPERATION MAY BE PERFORMED IN ANY ORDER.

TO DISPLAYTHE NEXT ENTRY IN THE TABLE
AFTER AN ENTRY HAS BEEN SELECTED
NEXT

TO DELETE ALL ENTRIES FROM A TABLE
TABLE DIAL 51-73 DELETE CONFIRM ENTER

MITEL

20 RANGE EXCEPTION TABLE

FROM BASIC CONDITION-
OR TABLE NUMBER- **CONTROL PLAN** ____

TOLL CONTROL

THIS TABLE LISTS ALL THE CODES THAT ARE ALLOWED ☐
THIS TABLE LISTS ALL THE CODES THAT ARE DENIED ☐

TABLE DIAL 1-73 DISPLAY ENTRY

PRESS ADD BEFORE DIALING EACH ENTRY

IF AN EXCEPTION TABLE IS TO BE APPLIED TO THIS ENTRY

TABLE DIAL 21-33

TABLE NUMBER				

ENTER

TO SEARCH FOR A SPECIFIC ENTRY

DISPLAY ENTRY DIAL ENTRY DISPLAY ENTRY

IF THE ENTRY DOES NOT EXIST DASHES ARE SHOWN IN THE ENTRY DISPLAY.

TO DISPLAY THE NEXT ENTRY IN THE TABLE AFTER AN ENTRY HAS BEEN SELECTED

NEXT

c I

TO DELETE THE ENTRY BEING DISPLAYED

DELETE ENTER

NOTE: ANYOPERATION MAY BE PERFORMED IN ANYOROER.

TO DELETE ALL ENTRIES FROM A TABLE

TABLE DIAL 21-33 DELETE CONFIRM ENTER

MITEL

1925

[redacted]

800 ENTRY EXCEPTION TABLE

FROM BASIC CONDITION-
OR TABLE NUMBER_____ **CONTROL PLAN** ____

TOLL CONTROL

THIS TABLE LISTS ALL THE CODES THAT ARE ALLOWED ☐
THIS TABLE LISTS ALL THE CODES THAT ARE DENIED ☐

TARIF DIAL 1-73 DISPLAY ENTRY	PRESS ADD BEFORE DIALING EACH ENTRY	IF AN EXCEPTION TABLE IS TO BE APPLIED TO THIS ENTRY TABLE DIAL 1-9	
TABLE NUMBER			ENTER

TO SEARCH FOR A SPECIFIC ENTRY

DISPLAY ENTRY — DIAL ENTRY — DISPLAY ENTRY

IF THE ENTRY DOES NOT EXIST DASHES ARE SHOWN IN THE ENTRY DISPLAY.

TO DISPLAY THE NEXT ENTRY IN THE TABLE AFTER AN ENTRY HAS BEEN SELECTED

NEXT

TO DELETE THE ENTRY BEING DISPLAYED

DELETE — ENTER

NOTE: ANYOPERATION MAY BE PERFORMED IN ANYORDER.

TO DELETE ALL ENTRIES FROM A TABLE

TABLE — DIAL 1-9 — DELETE — CONFIRM — ENTER

MITEL

872-5

SPEED CALL FORMS

GENERIC 205

MITEL

SPEED CALL TABLE ALLOCATIONS FORM SC-I

TABLE NUMBER	ENTRY ACCESS NUMBERS		EQPT NUMBER	REDIAL	CLASS OF SERVICE															
	COMMON-USE	PERSONAL			1	2	3	4	5	6	7	8	9	10	11	12	13	14	15	16
1	10-14																			
2	15-19																			
3	20-24																			
4	25-29																			
5	30-34																			
6	35-39																			
7	40-44																			
8	45-49																			
9	50-54																			
10	55-59																			
11	60-64																			
12	65-69																			
13	70-74																			
14	75-79																			
15	80-84																			
16	85-89																			
17	90-94																			
18	95-99																			
19																				
20																				
21																				
22																				
23																				
24																				
25																				

1807

NOTES: 1. STRIKE THROUGH NUMBERS IN COMMON-USE COLUMN, IF TABLE IS TO BE A PERSONAL TABLE; THEN ENTER NEW ENTRY ACCESS NUMBERS IN PERSONAL COLUMN.
2. CHECK (✓) IN REMAINING COLUMNS AS REQUIRED IN RESPECT TO EACH TABLE.

MITEL

PERSONAL TABLE PROGRAMMING FORMSC-2

(SYSTEM MUST BE IN EXTENDED PROGRAMMING)

PRESS [SPEED CALL]

GENERIC 205

TABLE DIAL TABLE NO.	EQPT NUMBER DIAL EQUIPMENT NO. (I-11 2; 161-256) OR DELETE	(NOTE 2 & 10) ACCESS NUMBER DIAL ACCESS NO	NUMBER REDIAL ADD OR DELETE	
1				
7				
3				
4				
7				
a				
9				
10				
11				
12				
13				
14				
15				
16				
17				
18				
19				
20				
21				
22				
23				
24				
25				

SEE NOTE 5 TO ENTER DATA

NOTES

1. Use the entries made on Form SC-1 for the Personal tables by transcribing these in turn to their respective columns against the same Table numbers on Form SC-2. Common-use tables have blank entries.

2. Only the first Access Number for each Personal table is required to be entered. The remaining access numbers are automatically allocated for that table.

3. The Saved Number Redial operation is initially omitted if not required. For subsequent programming see Notes 8 and 9.

4. Personal table data is programmed in Extended Programming Mode. See Section MITL9105/9110-98-210 Appendix 2 for full details.

5. The ENTER button may be pressed at any time to enter data, or pressed when all data is entered.

6. Removing a Personal table removes all its contents, Access Numbers and Redial value (if any).

7. To remove a Personal table;

[SPEED CALL] [TABLE] DIAL TABLE NUMBER [EQPT NUMBER] [DELETE] [ENTER]

8. To add a Redial attribute:

[SPEED CALL] [TABLE] DIAL TABLE NUMBER [NUMBER REDIAL] [ADD] [ENTER]

9. To remove a Redial attribute:

[SPEED CALL] [TABLE] DIAL TABLE NUMBER [NUMBER REDIAL] [DELETE] [ENTER]

10. To change a Speed Call Access Number:

[SPEED CALL] [TABLE] DIAL TABLE NUMBER [ACCESS NUMBER] DIAL NEW ACCESS NUMBER [ENTER]

MITEL

SPEED CALL NUMBER RECORDS FORM SC-3 (Sheet 1 of 4)

SPEED CALL FEATURE CODE

SPEEDCALL NUMBER

TABLE	COS	ENTRY ACCESS NUMBER	1 5 10 15 20 25 28	DIGITS USED	DIGITS UNUSED 56	CALLED PARTY
1		10				
2		15				
3		20				

SPECIALSEQUENCES CAN BE ENTEREOATANY POINT IN THETELEPHONE NUMBER LISTING:

* 1 OCCUPIES 1 DIGIT SPACE AND CAUSES A 5 SEC. PAUSE IN USE
* 2 OCCUPIES 1 DIGIT SPACE AND CAUSES WAIT FOR DIALTONE(SYSTEM OPTION 136 APPLIES)
* 3QQ OCCUPIES 2 DIGIT SPACE AND ENABLES MANUALLY DIALED DIGITS TO BE ENTERED.
QQ REPRESENTS THE NUMBER OF DIGITS TO BE DIALED IN RANGE 01 TO 16.

LISTING YOUR NUMBERS

1. TABLES AVAILABLE FOR USE ARE INDICATED ON THE FORM BY THE INSTALLER. YOUR FEATURE ACCESS CODE AND CLASSES OF SERVICE HAVE BEEN ALSO ENTERED.
2. OPPOSITETHE FIRST AVAILABLE ENTRY ACCESS NUMBER, WRITE IN YOUR FIRST TELEPHONE NUMBER, INCLUDING THE TRUNK GROUP ACCESS CODE. YOU CAN USE SPECIAL SEQUENCES (SEE ABOVE).
3. WRITE IN THE NEXT ENTRY ACCESS NUMBER, UNDER THE FIRST ENTRY NUMBER, USING A FRESH LINE AND CONTINUING WITH THE NEXTTELEPHONE NUMBER OPPOSITE THISSECOND ENTRY NUMBER.
4. COMPLETE YOUR LIST OF NUMBERS FOLLOWING THE ABOVE PROCEDURE.

SEE CONSOLEOPERATING INSTRUCTIONS FOR OTHER DETAILS

INSTRUCTIONS FOR USER(ATTENDANT)

HOW TO ENTER OR CHANGE A NUMBER

5. DIAL FEATURE ACCESS CODE.
6. DIAL 0.
7. DIAL ENTRY ACCESS NUMBER REQUIRED.
8. DIALTELEPHONE NUMBER FOR THAT ENTRY NUMBER.
9. PRESS THE RELEASE BUTTON.
10. REPEATTHE ABOVE SEQUENCE FOR EACH OF THE REMAINING ENTRIES ON THE LIST.

HOWTD DELETE A NUMBER

11. PERFORM STEPS 5 THROUGH 9 BUT OMIT STEP 8.

HOW TO DIAL A SPEED CALL NUMBER

12. DIAL FEATURE ACCESS CODE.
13 DIAL ENTRY ACCESS NUMBER.
14. CALL PROCEEDSIN USUAL MANNER

[redacted]

MITEL

SPEED CALL NUMBER RECORDS FORM SC-3 (SHEET 2 OF 4)

SPEED CALL FEATURE CODE

SPEED CALL NUMBER

SPECIAL SEQUENCES CAN BE ENTEREDATANY POINT IN THE TELEPHONE NUMBER LISTING:

* 1 OCCUPIES 1 DIGIT SPACE AND CAUSES A 5 SEC. PAUSE IN USE
* 2 OCCUPIES 1 DIGIT SPACE AND CAUSES WAIT FOR DIAL TONE (SYSTEM OPTION 136 APPLIES)
* 3QQ OCCUPIES 2 DIGIT SPACE AND ENABLES MANUALLY DIALED DIGITS TO BE ENTERED. QQ REPRESENTS THE NUMBER OF DIGITS TO BE DIALED IN RANGE 01 TO 16.

TABLE	COS	ENTRY ACCESS NUMBER	1 5 10 15 20 25 28	DIGITS USED	DIGITS UNUSED 56	CALLED PARTY
4		25				
5		30				
6		35				
7		40				
a		45				

MITEL

SPEED CALL NUMBER RECORDS FORM SC-3 (SHEET 3 OF 4)

SPEED CALL FEATURE CODE

SPEED CALL NUMBER

SPECIAL SEQUENCES CAN BE ENTEREDATANY POINT IN THETELEPHONE NUMBER LISTING.

* 1 OCCUPIES 1 DIGITSPACEANDCAUSESA5 SEC. PAUSE IN USE
* 2 OCCUPIES 1 DIGIT SPACE AND CAUSES WAIT FOR DIAL TONE (SYSTEM OPTION 136 APPLIES)
* 3QQ OCCUPIES 2 DIGIT SPACE AND ENABLES MANUALLY DIALED DIGITS TO BE ENTERED.
QQ REPRESENTSTHE NUMBER OF DIGITS TO BE DIALED IN RANGE 01 TO 16.

TABLE	COS	ENTRY ACCESS NUMBER	1 5 10 15 20 25 28	DIGITS USED	DIGITS UNUSED	CALLED PARTY
9		50				
10		55				
11		60				
12		65				
13		70				

MITEL

SPECIAL SEQUENCES CAN BE ENTERED AT ANY POINT IN THE TELEPHONE NUMBER LISTING:

* 1 OCCUPIES 1 DIGIT SPACE AND CAUSES A 5 SEC. PAUSE IN USE
* 2 OCCUPIES 1 DIGIT SPACE AND CAUSES WAIT FOR DIAL TONE (SYSTEM OPTION 136 APPLIES)
* 3QQ OCCUPIES 2 DIGIT SPACE AND ENABLES MANUALLY DIALED DIGITS TO BE ENTERED.
  QQ REPRESENTS THE NUMBER OF DIGITS TO BE DIALED IN RANGE 01 TO 16.

TABLE	COS	ENTRY ACCESS NUMBER	1 5 10 15 20 25 28	DIGITS USED	DIGITS UNUSED 56	CALLED PARTY
14		75				
15		80				
16		85				
17		90				
18		95				

[redacted]

TRUNK CARD SWITCH SETTINGS - CD TRUNK CARDS

	CO DIRECTORY NO.	SHELF NO.		CARD TRUNK NO.	TRUNK EQPT. NUMBER	INCOMING CONDITION		OUTGOING CONDITION		LOOP/GND START		3RD WIRE CONDITION		SENSE REVERSALS		RELEASE TIMES				M/B RATIO		XT		HI - Z	
																"B" SHRT		"B" LONG							
		1	2			BUSY	IDLE	BUSY	IDLE	LOOP	GND	ENAB	DIS	IGN	EFF	"A" SHRT	"A" LONG	"A" SHRT	"A" LONG	33/66	40/60	GND	– 48V	HI-Z	NORM
CARD SLOT NO:				1																					
				2																					
				3																					
				4																					
CARD SLOT NO:				1																					
				2																					
				3																					
				4																					
CARD SLOT NO:				1																					
				2																					
				3																					
				4																					
CARD SLOT NO:				1																					
				2																					
				3																					
				4																					
CARD SLOT NO:				1																					
				2																					
				3																					
				4																					

1299-2

NOTES

1. EARLIER TRUNK CARDVERSIONS 00 NOT HAVE ALL SWITCHES LISTED ABOVE
2. CHECK APPROPRIATE COLUMN E.G. "BUSY" OR "IDLE" FOR DESIRED SETTING
3. SEE SECTION MITL9105/9110-98-200 APPENDIX 5 FOR PROCEDURES USED IN SETTING TRUNK CARD SWITCHES.

[redacted]

TRUNK CARD SWITCH SETTINGS - DID/TIE TRUNK CARD

CIRCUIT REFERENCE NUMBERS
TRUNK 1 _____
TRUNK 2 _____
SHELFNUMBER _____
CARD SLOT NUMBER _____
TRUNKCARD _____

SWITCH SETTINGS		TRUNK 1	TRUNK 2
EQPT NUMBER			
INCOMING CONDITIONS	BUSY		
	IDLE		
OUTGOING CONDITIONS	BUSY		
	IDLE		
SWITCH "A" SETTING	CLOSED		
	OPEN		
SWITCH "B" SETTING	CLOSED		
	OPEN		
INCOMING WINK	WINK		
	NO WINK		
OUTGOING WINK	WINK		
	NO WINK		
TRUNK IMPEDANCE SWITCHES (3)	900 Ω		
	600 Ω		
PULSING CONDITION	BATTERY/GROUND		
	LOOP		
DIALING CONDITIONS	STOP DIAL		
	NOT STOP DIAL		

CIRCUIT REFERENCE NUMBERS
TRUNK 1 _____
TRUNK 2 _____
SHELFNUMBER _____
CARD SLOT NUMBER _____
TRUNKCARD _____

SWITCH SETTINGS		TRUNK 1	TRUNK 2
EQPT NUMBER			
INCOMING CONDITIONS	BUSY		
	IDLE		
OUTGOING CONDITIONS	BUSY		
	IDLE		
SWITCH "A" SETTING	CLOSED		
	OPEN		
SWITCH "B" SETTING	CLOSED		
	OPEN		
INCOMING WINK	WINK		
	NO WINK		
OUTGOING WINK	WINK		
	NO WINK		
TRUNK IMPEDANCE SWITCHES (3)	900 Ω		
	600 Ω		
PULSING CONDITION	BATTERY/GROUND		
	LOOP		
DIALING CONDITIONS			

NOTES: 1. TRUNK CARD SWITCHES MUST BE SET TO ONE OFTHETWO POSSIBLE SETTINGS FOR EACHSWITCH AS DETAILED IN SECTION MITL9105/9110-98-200 APPENDIX 5 MAP200-503.

1293-1

TRUNK CARD SWITCH SETTINGS - E AND M/TIE TRUNK CARD

CIRCUIT REFERENCE NUMBERS
TRUNK1
TRUNK2
CARD SLOT NUMBER
SHELFNUMBER
EPPTNUMBER

TRUNK CARD (NOTE 1) SWITCH SETTINGS		TRUNK 1	TRUNK 2
EQPT NUMBER			
INCOMING CONDITIONS	BUSY		
	IDLE		
OUTGOING CONDITIONS	BUSY		
	IDLE		
OUTGOING WINK	WINK		
	NO WINK		
INCOMING WINK	WINK		
	NO WINK		
2/4 WIRE CONDITIONS	2 WIRE		
	4 WIRE		
GAIN	SPECIAL		
	NORMAL		
TRUNK IMPEDANCE	600 OHM		
	900 OHM		
LOOP CONDITION	SHORT		
	LONG		
DIALING CONDITION	STOP DIAL		
	NOT STOP DIAL		
M-LEAD CONDITION	NORMAL		
	INVERT		

CIRCUIT REFERENCE NUMBERS
TRUNK1
TRUNK2
CARD SLOT NUMBER
SHELF NUMBER
EQPTNUMBER

TRUNK CARD (NOTE 1) SWITCH SETTINGS		TRUNK 1	TRUNK 2
EQPT NUMBER			
INCOMING CONDITIONS	BUSY		
	IDLE		
OUTGOING CONDITIONS	BUSY		
	IDLE		
OUTGOING WINK	WINK		
	NO WINK		
INCOMING WINK	WINK		
	NO WINK		
2/4 WIRE CONDITIONS	2 WIRE		
	4 WIRE		
GAIN	SPECIAL		
	NORMAL		
TRUNK IMPEDANCE	600 OHM		
	900 OHM		
LOOP CONDITION	SHORT		
	LONG		
DIALING CONDITION	STOP DIAL		
	NOT STOP DIAL		
M-LEAD CONDITION	NORMAL		
	INVERT		

NOTES: 1. TRUNK CARD SWITCHES MUST BE SET TO ONE OFTHETWO POSSIBLE SETTINGS FOR EACHSWITCH AS DETAILED IN SECTION MITL9105/9110-98-200 APPENDIX 5 MAP200-502

SX-100" AND SX-200* SUPERSWITCH* ELECTRONIC PRIVATE AUTOMATIC BRANCH EXCHANGE SYSTEM PROGRAMMING

CONTENTS PAGE

1. GENERAL 1
Introduction 1
Reason for Reissue 2
Purpose.. 2

2. PROGRAM DESCRIPTION 2
General 2
Tenant Mode 2
System Options 3
Class-Of-Setvice Options 7
Feature Access Codes. 8
Extensions 9
Hunt Groups 12
Trunks 12
Trunk Groups 14

3. PROGRAMMING 15
General 15
Error/Confirm Codes 15
Attendant Function Access Codes 15
Maintenance Function Access Codes ... 15
Timeout Information 15

4. EXAMPLES 25
Introduction 25

APPENDIX 1 - MITEL ACTION PROCEDURES AI.1

APPENDIX 2 - SYSTEM PROGRAMMING MAPS A2-1/2
System Programming (MAP21 0-201) A2.3
Select Programming Mode (MAP21 0-202) A2.5
Program System Options (MAP21 0-203) A2.9
Program COS Options (MAP210-204) A2-13
Assign Feature Access Codes (MAP210-205) A2-19
Program Extensions (MAP210-206) A2.23
Program Extension Hunt Groups (MAP210-207) A2-31
Program Non Dial-In Trunks (MAP210-208) A2-37
Program Dial-In Tie Trunks (MAP210-209) A2-47
Program DID Trunks (MAP21 0-210) A2-55
Program Trunk Groups (MAP210-211) A2-61
Terminating Programming Mode (MAP210-212) A2-69

1. GENERAL

Introduction

1.01 The SX-100 and SX-200 PABX's are processor-controlled switching systems. In order to process calls the central processor needs to know certain information about the calling and called equipment. This information is described by blocks of data held in the system memories. A number of service change programs are provided to allow additions, deletions and changes to be made to the blocks of data to reflect changes made to the equipment configuration. The eight service change programs provided are:

- **Tenant** Mode-Defines whether the system is to be used by single or multi tenants.
- **System Options**—Describes the options which may be enabled on a system basis.
- Class Of Service Options-Each class of service specifies the features which may be used by stations assigned that Class Of Service (COS). A maximum of sixteen different classes of service may be specified for each system.
- **Feature Access** Codes-A number of features within the system are accessed by

© MITEL Corporation 1979

* Trademark of MITEL Corporation

dialing a special access code. This program allows the access codes for the features to be defined.

Extensions-This program allows the equipment number, extension number, Class Of Service (features allowed), toll access, busy lamp field assignment and pick-up group assignment for each extension to be made.

Hunt Groups-This program allows the extensions within each hunt group to be specified, together with the hunt group master number (access code).

Trunks-This program allows each trunk to be described in terms of the equipment number, trunk type, listed directory number, day and night numbers, busy lamp number, COS and toll access.

Trunk Group-This program allows the trunks within each group to be specified, together with trunk group type, access code and overflow group.

1.02 Other additional service programs, dependant upon the type of software Generic installed in the PABX, may be implemented. These are listed below and include relevant MITEL Practice references, which should be consulted for descriptions and programming requirements.

a) Traffic Measurement (Generic 204 only). See Section MITL9105/9110-98-450

b) Multi Digit Toll Control (Generic 204 or 205 only). See Section MITL9105/9110-98-212

c) Station Message Detail Recording (Generic 2050nly). See Section MITL9105/9110-98-451

d) Speed Call (Generic 205 only). See Section MITL9105/9110-98-220

Reason For Reissue

1.03 This Section is reissued to incorporate Generic 205 information for the SX-100 and SX-200 PABX's.

Purpose

1.04 This Section consists of four parts, each part explaining a different facet of the system programming.

Part 1 General-general description of system programming contents and purpose of the programming manual.

Part 2 Program Description-a description of each program and definition of each entry and possible response.

Part 3 Programming-this part contains a general introduction to the system programming and MITEL Action Procedures (MAP's) which detail how to use each program. When entering data, the system checks each entry to ensure that the codes entered are correct and if an error is detected it sounds the console ringer and displays the required error code. These codes and their meaning are defined in this part.

Part 4 Examples-The examples in this part show how the programs are used to define a typical system.

2. PROGRAM DESCRIPTION

General

2.01 Because the PABX is controlled by a processor, data describing each extension, trunk, feature etc. must be entered into the system. This is done by pressing keys and dialing codes. The codes dialed are held in the system memories and used by the system during call processing. Eight basic programs are provided which allow data to be entered into the system as equipment is added, or existing data to be changed or removed as the system configuration changes. The following paragraphs describe the eight programs (see 1.01). These programs specify the keys to be pressed and explain the entries that may be made. The Appendices to this section contain an introduction to MITEL Action Procedures (MAP's) and the actual MAP's which detail each step in system programming. A complete description of each feature and option is given in Section MITL9105/9110-98-105 Features and Services Description. Other types of programs are referenced in 1.02.

Tenant Mode

2.02 The tenant program allows a user to specify the number of the tenant for which entries are to be made. If multi-tenant service is to be selected the system must be placed in the pro-

gramming mode then the TENANT key pressed and the tenant number entered. If single tenant service is required TENANT mode should not be selected.

System Options

2.03 The system options are selected by the console keys as described below:

- **OPTION** This key selects the option program which allows the system to set-up or change the active option list. The code entered (Table 2-l) after selecting the option program defines the option to be added or removed from the active option list, but see Table 2-2 for possible option conflicts.
- **ADD** When pressed, this key adds the option code to the active system option list, making the option available for use by the system.
- **DELETE** Pressing the DELETE key after dialing an option code removes the code from the active option list inhibiting further use of that option.
- **CANCEL** As entries are made during the option program they are stored in a temporary memory. If after making a number of entries an error is discovered, all new entries may be removed by pressing the CANCEL key.
- **ENTER** After all entries have been made to the system option, they may be moved from the temporary storage to permanent storage by pressing the ENTER key. Additional changes may be made by reentering the option program.

TABLE 2-1
SYSTEM OPTIONS

Option Number	Option Name
100	Discriminating Ringing
101	Transfer Dial Tone
102	Flexible Night Service
103	Night Service Automatic Switching
104	TAFAS Available During Day
105	Outgoing Trunk Camp-on
106	Outgoing Trunk Callback
107	Can Flash if on an Incoming Trunk
108	Can Flash if on an Outgoing Trunk
109	Can Flash if Talking to Station
110	Cannot Dial a Trunk After Flashing
111	Cannot dial a Trunk After Flashing if Holding or in Conference with a Trunk
112	Lockout Alarm Enable
113*	Tenant Service (set automatically when tenant service is selected when programming)
114	Flash Timer 0.7 seconds (Generic 202 only and REV 5 up) (See also 180-182 for Generic 203/up)
114*	Tenant Service - Separate Consoles
115	Vacant Number Intercept to Attendant
116	Illegal Access Intercept to Attendant
117	DID/Dial-In/CCSA Vacant/Illegal Access Intercept to Attendant
118	Attendant Camp-On
119*	Attendant Conference
120	Attendant Busy Over-ride
121	Attendant Serial Call
122	Bell Off Enable
123	Page Button Enable
124	New Call Tone Enable
125	Both Mode Standard
126	Callback Button Enable

TABLE 2-1 (Cont'd)
SYSTEM OPTIONS

Option Number	Option Name
127	Trunk Busy-Out Enable
128	Both Button Enable
129	Attendant CO Trunk-CO Trunk Connect Enable
130	Attendant CO Trunk-Non CO Trunk Connect Enable
131	Attendant Non CO Trunk-Non CO Trunk Connect Enable
132*	Controlled Outgoing Restriction Set-Up (Room Restriction)
133*	Controlled Station Restriction Set-Up (Do Not Disturb)
134*	Controlled Station to Station Restriction Set-Up (Call Blocking)
135	Attendant DISA Code Set-Up Enable
136	Limited Wait For Dial Tone
137*	Message Waiting Set-Up (lamp)
138*	Message Waiting Set-Up (bell)
139	Attendant Timed Recall - Camp-On - 20s
140	Attendant Timed Recall - Camp-On - 40s
141	Attendant Timed Recall - Don't Answer - 20s
142	Attendant Timed Recall - Don't Answer - 40s
143	Attendant Timed Recall - Hold - 20s
144	Attendant Timed Recall - Hold - 40s
145	Night Service Timeout - 20s
146	Night Service Timeout - 40s
147	Call Forwarding - Don't Answer Timeout - 20s
148	Call Forwarding - Don't Answer Timeout - 40s
149	Call Forwarding - Busy (System, DID Dial-In Tie Trunk, CCSA)
150	Call Forwarding - Don't Answer (System, DID Dial-In Tie Trunk, CCSA)
151	Park and Call-Hold Recall - 2 minutes
152	Park and Call-Hold Recall - 4 minutes
153	End of Dial Signal for Outgoing Trunks (#)
154	24 Hour Clock
155	First Digit Toll Deny
156*	Message Registration Enable
157*	Message Registration: Count Additional Supervisions
158*	Message Registration: Timer = 20 s
159*	Message Registration: Timer = 40 s
160*	Message Registration: Multiplier = 4 units
161*	Message Registration: Multiplier = 3 units
162*	Message Registration: Multiplier = 2 units
163*	Message Registration: Surcharge = 8 units
164'	Message Registration: Surcharge = 7 units
165*	Message Registration: Surcharge = 6 units
166*	Message Registration: Surcharge = 5 units
167*	Message Registration: Surcharge = 4 units
168*	Message Registration: Surcharge = 3 units
169*	Message Registration: Surcharge = 2 units
170*	Message Registration: Surcharge = 1 unit
171*	DID to Non-CO Trunks via Attendant Inhibit
172*	GUEST ROOM Button Enable
173*	ROOM STATUS Button/Display/Change Enable
174*	Do Not Disturb Intercept to Attendant
175*	Do Not Disturb and Message Waiting Displays

TABLE 2-1 (Cont'd)
SYSTEM OPTIONS

Option Number	Option Name
176*	Single Digit Dialing Enable
177*	Single Digit Dialing Time-Out = 3 s
178*	Single Digit Dialing Time-Out = 5 s
179*	Attendant Station Busy-Out Enable
180*	Flash Timing = 0.7 s
181*	Flash Timing = 0.9 s
182*	Flash Timing = 1.1 s
183*	Trunk Recall Partial Inhibit
184	Reserved
185	Reserved
186	Reserved
187	Reserved
188	Reserved
189	Reserved
190**	Automatic Wakeup Enable
191**	Automatic Wakeup Print
192**	Automatic Wakeup Music On Hold
193**	Room Register Audit Enable
194*.	Message Register Print
195**	Message Register & Message Waiting Change Print Enable
196***	Ignore Print Enable
197**.	Remote System Reset - Protection Override
198***	Enable Non-CO Trunk to Trunk Connect by Extension
199***	Toll Control Enable
200**	Traffic Measurement Enable
201**	Traffic Measurement Extreme Value Mode
202**	Traffic Measurement Compact Report
203**	Traffic Measurement Polling
204*.	Traffic Measurement Autoprint
205**.	Identified Trunk Group Enable
206'..	Inhibit Automatic Supervision
207*..	Printer Carriage Return Delay
208**	Zero Message Register after Room Register Audit
209**	Traffic Measurement - Console Enable
210**.	Attendant Printer Control Enable
211**.	System ID Enable
212**.	Night Bell 3 with Minor Alarm Enable
213**	H/M Printouts: Extra Line Feeds
214**	Automatic Wakeup Alarm
215	Reserved
216†	Speed Call Enable
217†	Speed Call Programming Enable
218†	Speed Call: Confidential Number Display and Change Enable
219†	Reserved
220†	Station Message Detail Recording: Outgoing Calls
221 †	Station Message Detail Recording: Incoming Calls
222†	SMDR: Extended Record
223†	SMDR: Record Meter Pulses
224†	SMDR: Indicate Long Calls
225†	SMDR: Drop Incomplete Outgoing Calls

TABLE 2-1 (CONT'D)
SYSTEM OPTIONS

Option Number	Option Name
226†	SMDR: Record Only Incoming calls (CCSA & Non-dial tie trunks)
227t	SMDR: Drop Calls of Less Than 8 Digits
228-t	Discriminating Dial Tone
229†	Special ANI Feature
230†	Account Code Enable
231 †	Account Code Length, 4 Digits
232†	Account Code Length, 8 Digits
233†	Account Code Length, 12 Digits
234-t	Variable Length Account Codes

* Generic 203 and above • ** Generic 204 and 205
** Generic 204 only † Generic 205 only

TABLE 2-2
SYSTEM OPTION CONFLICTS

The following System Options are mutually exclusive, i.e. they cannot be simultaneously enabled on the same PABX.

105 and 229	Outgoing Trunk Camp-On & Special ANI Feature
106 and 229	Outgoing Trunk Call Back & Special ANI Feature
106 and 230	Outgoing Trunk Call Back & Account Code Enable
113 and 132	Tenant Service & Controlled Outgoing Restriction Setup.
113 and 134	Tenant Service & Controlled Station to Station Restriction Setup.
113 and 156	Tenant Service & Message Registration Enable.
113 and 172	Tenant Service & GUEST ROOM Button.
113 and 173	Tenant Service & ROOM STATUS Enable.
113 and 190	Tenant Service & Automatic Wakeup Enable.
113 and 205	Tenant Service & Identified Trunk Group Enable.
114 and 132	Tenant Service-Separate Consoles & Controlled Outgoing Restriction Setup.
114 and 134	Tenant Service-Separate Consoles & Controlled Station to Station Restriction Setup.
114 and 156	Tenant Service-Separate Consoles & Message Registration Enable.
114 and 172	Tenant Service-Separate Consoles & GUEST ROOM Button Enable.
114 and 173	Tenant Service-Separate Consoles & Room Status Eanble.
114and 190	Tenant Service - Separate Consoles & Automatic Wakeup Enable.
114 and 205	Tenant Service & Identified Trunk Group Enable.
121 and 172	Attendant Serial Call & GUEST ROOM Button Enable.
121 and 173	Room Status Enable & Attendant Serial Call.
137 **and 138**	Message Waiting Set-ups (lamp or bell)
191 and 203	Automatic Wakeup Print & Traffic Measurement Polling.
193 and 203	Room Audit Enable & Traffic Measurement Polling.
194 and 203	Message Register Print & Traffic Measurement Polling.
195 and 203	Message Register and Message Waiting Change Print Enable & Traffic Measurement Polling.
203 and 204	Traffic Measurement Polling & Traffic Measurement Autoprint.
205 and 229	Identified Trunk Group Enable & Special ANI Feature
207 and 229	Printer Carriage Return Delay & Special ANI Feature
220 and 229	Station Message Detail Recording: Outgoing Calls & Special ANI Feature
221 and 229	Station Message Detail Recording: Incoming Calls & Special ANI Feature

/-

TABLE 2-2 (CONT'D)
SYSTEM OPTION CONFLICTS

In addition to the above system options, some console service features are mutually exclusive. These features are listed below:

ROOM RESTRICT and NIGHT 2.	CALL BLOCK and HOLD 4.
ROOM STATUS and NIGHT 2.	SERIAL CALL and GUEST ROOM.

NOTE: The Room Restriction and Room Status features utilize the same button, but are not mutually exclusive, as the Room Status feature can be arranged to include the Room Restriction function if System Option 132 is selected.

Class-Of-Service Options

2.04 Each system may contain up to 16 different Classes Of Service (COS). The COS defines which of the available options (Table 2-3) are active, and therefore available for use by any extensions assigned that COS.

2.05 The individual Classes of Service are selected by the console keys as described below:

- **COS DEFINE** This key selects the Class Of Service program which permits changes to be made to any of the 16 individual COS. The entry made after selecting the program identifies which COS is to be modified.
- **OPTION** The code entered (Table 2-3) after pressing the OPTION key defines the extension option which is to be added or removed from the COS specified.
- **ADD** Add the option to this COS.
- **DELETE** Remove the option from the cos.
- **CANCEL** If after entering a number of codes for a COS, an error is discovered, the new entries may be removed from the system by pressing the CANCEL key.

TABLE 2-3
CLASS-OF-SERVICE OPTIONS

Option Number	Extension Options	Option Number	Extension Options
33	Automatic Callback	54	TAFAS Access
34	Call Forwarding - Busy	55	Hold Pickup
35	Call Forwarding - Don't Answer	56	Account Code Access
36	Call Forwarding - Follow Me	57	Manual Line
37	Call Park	58	Contact Monitor
38	Never a Forwardee	†56	*Account Code Access*
39	Directed Call Pickup	59	Non-CO Trunks via Attendant Inhibit
40	Executive Busy Over-ride	60	CO Trunks via Attendant Inhibit
41	Data Security	61	No Dial Tone
42	Station Over-ride Security	62	Flash for Attendant
*43	Inward Restriction (DID or CCSA)	'63	Call Blocking Applies
44	Originate Only	*64	Message Register
45	Receive Only	65	Trunk Group 1 Access
46	Flash Disable	66	Trunk Group 2 Access
47	Never a Consultee	67	Trunk Group 3 Access
48	Broker's Call	68	Trunk Group 4 Access
49	Station Conference	69	Trunk Group 5 Access
50	Meet-Me Conference	70	Trunk Group 6 Access
51	Camp-On	71	Trunk Group 7 Access
52	Do Not Overflow	72	Trunk Group 8 Access
53	Paging Access	73	Trunk Group 9 Access

* Generic 203 and above † Generic 205 only
** Generic 204 only

TABLE 2-3 (Cont'd)
CLASS-OF-SERVICE OPTIONS

Option Number	Extension Options
74	Trunk Group 10 Access
75	Trunk Group 11 Access
76	Trunk Group 12 Access
*77	Message Waiting Applies
•78	Room Do Not Disturb Setup Enable
•79	Call Hold and Retrieve Access
*80	Room Status Applies
*81	Call Forward System Inhibit
**82	Alarm Call Setup Enable
†83	Forced Account Code Entry
†84	No SMDR Record for This Line
†85	Speed Call Table 1 and 2 Access
†86	Speed Call Table 3 and 4 Access
†87	Speed Call Table 5 and 6 Access
†88	Speed Call Table 7 and 8 Access
†89	Speed Call Table 9 and 10 Access
†90	Speed Call Table 11 and 12 Access
†91	Speed Call Table 13 and 14 Access
†92	Speed Call Table 15 and 16 Access
†93	Speed Call Table 17 and 18 Access
†94	Cannot Dial a Trunk After Flashing

• Generic 203 and above † Generic 205 only
• * Generic 204 only

OPTION CONFLICTS

45	Receive Only		58	Contact Monitor
46	Flash Disable		48	Broker's Cal l
46	Flash Disable		49	Station Conference
46	Flash Disable	**and**	62	Flash for Attendant
48	Broker's Call		49	Station Conference
62	Flash for Attendant		49	Station Conference
62	Flash for Attendant		48	Broker's Call

157A-1

- **ENTER** After all entries have been made for the COS the entries may be transferred to permanent storage by pressing the ENTER key.

Feature Access Codes

2.06 A number of features (Table 2-4) require access codes to allow the extension users to select and use the features. Each feature access code must be unique within the system. The feature access codes are programmed from the console keys as described below:

- FEATURE This key selects the feature program and allows the access codes to be defined. The number dialed (Table 2-4) after pressing the FEATURE key specifies the feature to which the access code is to be assigned.

- **ACCESS CODE** After pressing this key the number dialed (1 to 4 digits) is assigned as the access code of the feature selected. The system automatically checks to see if the code is assigned to any other equipment or feature within the system, and if a match is found displays an error message.
- **CANCEL** The access just assigned to a feature may be removed by pressing the CANCEL key. The new access code may be assigned immediately.
- **DELETE** Pressing this key deletes the access code assigned to the feature, rendering the feature inoperative.
- **ENTER** Transfers all new entries to permanent memory.

Extensions

2.07 The extension program allows all data associated with extensions to be specified,

TABLE 2-4
FEATURE ASSIGNMENTS

Feature Number	Description
1	Attendant Access
2	Callback - Don't Answer
3	Call Forward - Busy
4	Call Forward - Don't Answer
5	Call Forward - Follow Me
6	Call Park
7	Dial Call Pickup
8	Directed Call Pickup
9	Meet-Me Conference
10	Pager 1
11	Pager 2
12	Hold Pickup Access
13	Pager 1 and 2
14	TAFAS-AI I
15	TAFAS-1
16	TAFAS-2
17	TAFAS3
18	Attendant Function
19	Maintenance Function
20	DID Attendant Access Code
21	Direct Inward System Access
22	Executive Busy Override† (Single Digit)
23	Callback - Busy† (Single Digit)
24*	Room Do Not Disturb Setup and Cancel
25*	Call Hold
26*	Call Retrieve (Local)
27*	Call Retrieve (Remote)
28*	Room Status Update (Maid in Room)
29†*	Programming Security Code
30**	Alarm Call
31†	Account Code
32†	Speed Call
33 - 42†*	Trunk Group 1 Assign access codes 33-42 to Trunk Group 1 if necessary

* Generic 203 and above † Generic 205 only 1575 1
• * Generic 204 only †* Generic 204 and 205

† First digit conflicts between these codes and other access codes are allowed. See Section MITL9105/9110-98-105 for complete description of feature operation.

changed, or removed from the system memories. The extension program is selected by the console keys as described below:

- **TENANT** The number, 1 to 4, entered after pressing the TENANT key specifies the tenant for which the extensions are being programmed, if the system is to be used as a multi-tenant system. If the system is to be used by a single tenant, the TENANT key must not be pressed.
- **EXTN** Pressing this key enables the extension program which allows new data to be entered or existing data to be changed or removed.

* **EQPT NUMBER** The number (I-112, 161-256) entered after pressing the EQPT NUMBER key defines the equipment number of the line circuit serving the extension (Fig. 2-I).

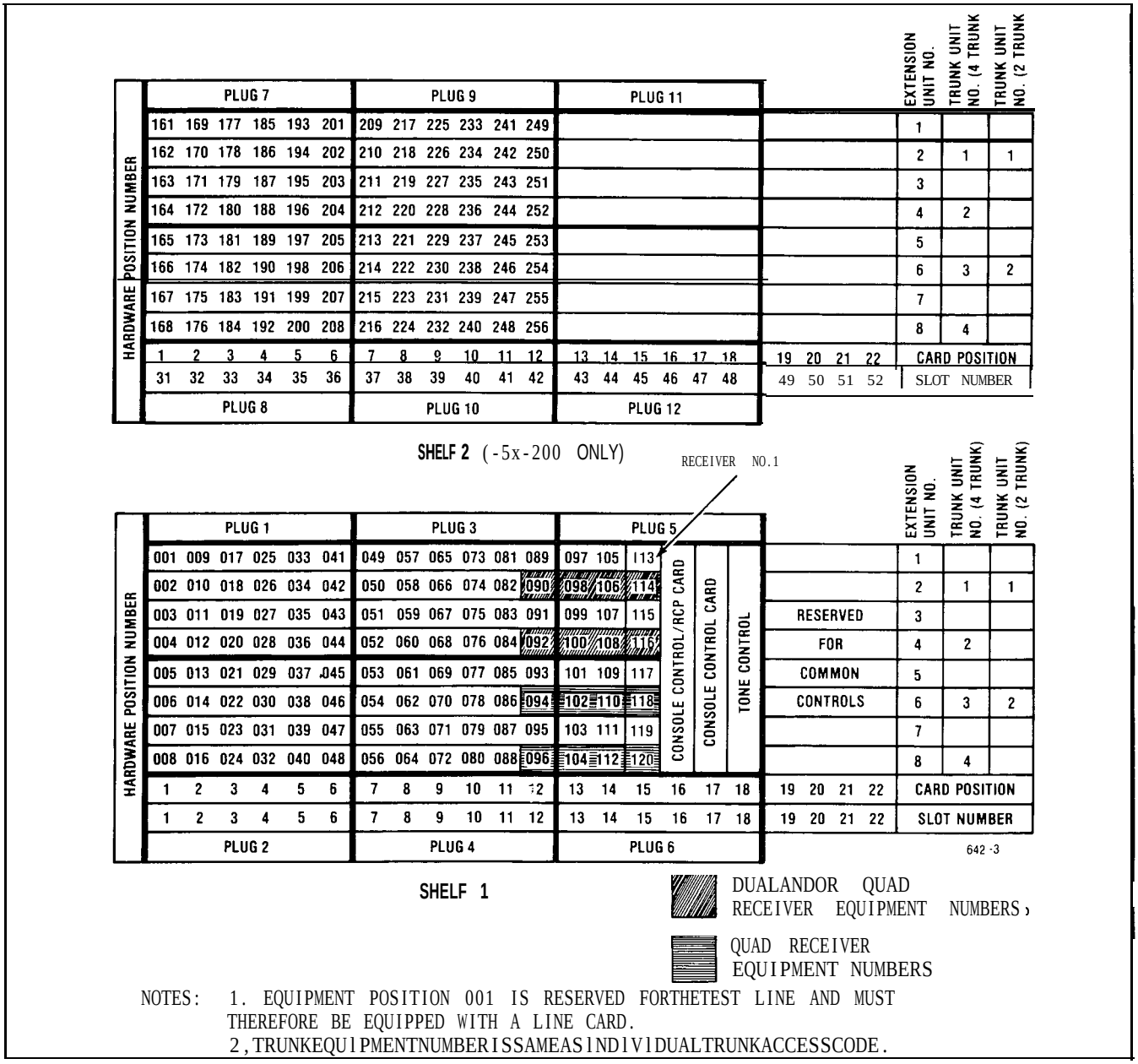

NOTES: 1. EQUIPMENT POSITION 001 IS RESERVED FORTHETEST LINE AND MUST THEREFORE BE EQUIPPED WITH A LINE CARD.
2, TRUNKEQUIPMENTNUMBERISSAMEASINDIVIDUALTRUNKACCESSCODE.

Fig. 2-I Equipment Number

- **EXTN NUMBER** The 1, 2, 3 or 4 digit number entered after pressing the EXTN NUMBER key specifies the extension number of the telephone set being added or changed. This number must not conflict with other extension numbers or access codes. If non-conflicting single digit dialing is required, enter N#, where N is the single digit.

- **COS NUMBER** The number (1-16) entered, after pressing the COS NUMBER key, specifies the Class-Of-Service, and therefore the features, that may be accessed by the extension. See 2.04 Class-Of-Service Option.

- **TOLL DENY** Each extension may be defined as TOLL ALLOWED-allowed to originate calls to the toll network; or TOLL DENIED-not allowed to make calls to the toll network. To make the extension TOLL ALLOWED press the TOLL DENY key then the DELETE key. To make the extension TOLL DENIED press the TOLL DENY key then the ADD key. The extension will be TOLL DENIED only if the extension and the trunk group are TOLL DENIED. This allows Toll Denial on a trunk group basis if System Option 199 was enabled. See also Section MITL9105/9110-98-212 Multi-Digit Toll Control.

- **BUSY LAMP NUMBER** After pressing this key the number entered (I-150) defines the position (Fig. 2-2) of the busy lamp to be associated with the extension. If the extension is not to be assigned a busy lamp, no entry is required.

- **DELETE** Pressing the DELETE key removes the existing busy lamp assignment.

- **PICKUP GROUP** The system may hold up to 50 independant call pickup groups. An extension may be made a member of any group, by entering the pickup group number after pressing the PICKUP GROUP key. Any number of extensions may be assigned to a pickup group, but an extension may only be a member of one group at any time. Membership in a pickup group is mutually exclusive with message registration and room status.

- **CANCEL** Pressing the CANCEL key, prior to the operation of the ENTER key, removes any data entered during the foregoing Extension Program sequence.

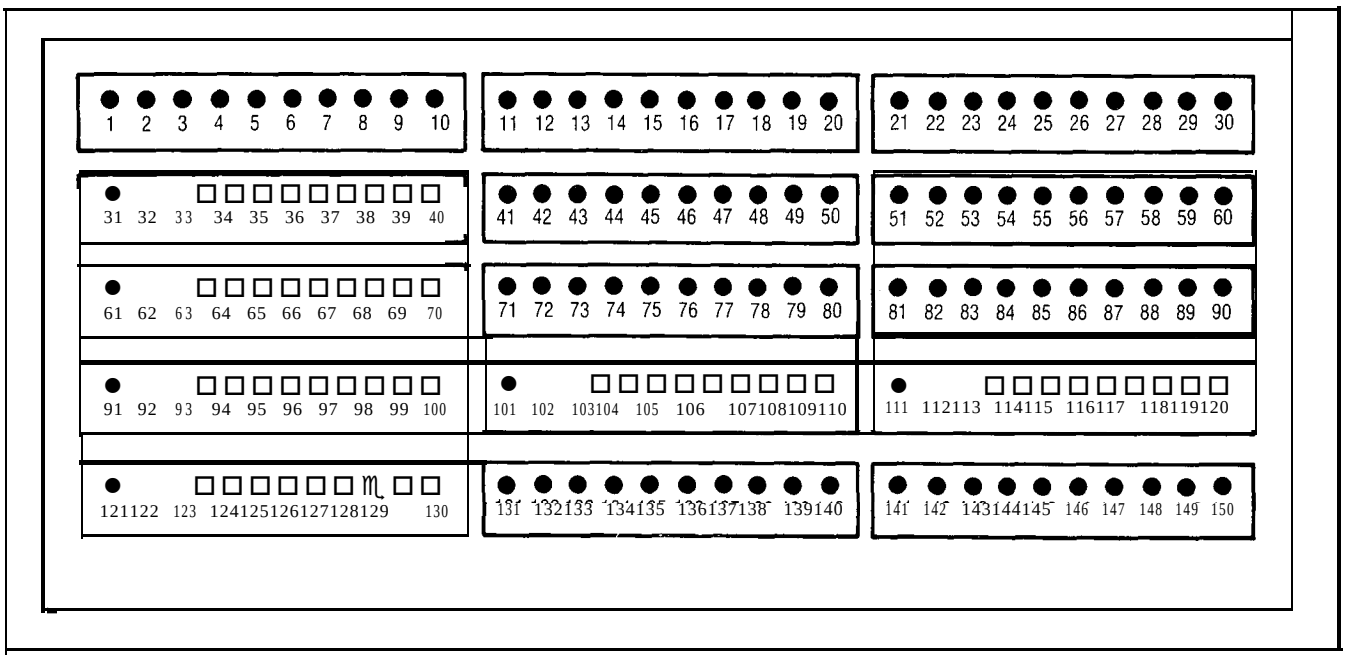

Fig. 2-2 Busy Lamp Position Numbering

- **ENTER** Transfer all new data for the extension to permanent memory.

Hunt Groups

2.08 The system can hold up to 12 different hunt groups. Each hunt group may contain an unlimited number of members and be specified as:

- **TERMINAL HUNTING** The hunt group sequence starts at the first equipment number and ends at the last number in the hunt chain. The call is completed at the first idle number encountered.

- **CIRCULAR HUNTING** Hunting starts at the last equipment number reached and hunts over all members of the hunt group. The call is completed at the first idle number found.

- **SECRETARIAL HUNTING** This is terminal hunting where the last number is common to two or more extension hunt groups.

- **DUAL NUMBER ACCESS** An extension may be programmed to allow it to be accessed by two different numbers. The first number is assigned when programming the extension and the second number by programming a hunt group with the extension as the only member. The extension may therefore be accessed by dialing the extension number or the hunt group master number (see Section MITL9105/9110-98-105, Single Digit Dialing).

  Note: When changing the list of members of a hunt group in any way, all members of the hunt group must be re-entered.

2.09 The following console keys are activated to program the hunt groups:

- **TENANT** If multi-tenant service is to be selected the number (l-4) entered after pressing the TENANT key, specifies the tenant for which the hunt groups are being programmed. If single tenant operation is to be used, the TENANT key must not be pressed.

- **HUNT GROUP** Allows the hunt group required to be selected by dialing the hunt group number (1-12).

- **ACCESS CODE** Allows the 1, 2, 3 or 4 digit code identifying the hunt group master number to be entered.

- **DELETE** Pressing this key deletes the hunt group from the system memory.

- **EQPT NUMBER** This key must be pressed before dialing the equipment number of each extension in the hunt group. If circular hunting is to be defined, the last entry in the hunt group must be the same as the first entry. Membership in a hunt group is mutually exclusive with “message registration” and “room status” for this extension.

- **CANCEL** Deletes all new data entered associated with the hunt group.

- **ENTER** Transfers all new data for the hunt group to permanent memory.

Trunks

2.10 This program allows the type, console appearances, day and night assignment, COS and toll deny codes of each trunk to be specified.

2.11 The following console keys are employed to enter this program:

- **TENANT** If the multi-tenant service is to be selected the number (l-4) entered after pressing the TENANT key, specifies the tenant for which the hunt groups are being programmed. If single tenant operation is to be used, the TENANT key must not be pressed.

- **TRUNK** Selects the trunk program

- **EQPT NUMBER** The number entered (2-112; 162-256, even numbers only) specifies the equipment number of the trunk circuit serving this trunk (Pig. 2-l).

- **TYPE** The code entered, defines the type of trunk being specified. (See MITL9105/9110-98-105 Features and Services Description for definition of VNL)

Code 1 - CO trunk + VNL
Code 2 - DISA trunk + VNL
Code 3 - DID trunk + VNL
Code 4 - Dial-In tie trunk + VNL
Code 5 - Non Dial-In tie trunk + VNL
Code 6 - CCSA trunk + VNL
Code 11 - CO trunk + NON VNL
Code 21 - DISA trunk + NON VNL
Code 31 - DID trunk + NON VNL
Code 41 - Dial-In tie trunk + NON VNL
Code 51 - Non Dial-In tie trunk + NON VNL
Code 61 - CCSA trunk + NON VNL

- **DELETE** If this key is pressed, the information associated with this trunk is removed from the system memory.

- **BUSY LAMP NUMBER** The number (l-150) defines the position (Fig. 2-2) of the busy lamp to be associated with this trunk. If the trunk is not to be assigned a busy lamp no entry is required.

- **DELETE** If this key is pressed the busy lamp assignment for this trunk is deleted.

- **LDN NUMBER** (Types 1, 5, 11, 51 only) This single digit entry defines the Listed Directory Number key (LDN 1, 2, 3 or 4) on the attendant console which is to be associated with the trunk. If the trunk is not to appear on the attendant console, no entry is required. DID trunk calls to the attendant always appear on LDN 4.

- **DAY NUMBER** (Types 1, 5, 11, 51 only) The code entered for Day Number specifies any special assignments of the trunk during normal day time service. These assignments may be:

  - no assignment to bells, extensions or hunt groups, console appearance only (Default code #0)

  - assigned to ring bell 1, code #1

  - assigned to ring bell 2, code #2

  - assigned to ring bell 3, code #3

  - assigned to one extension - enter equipment number of extension

  - assigned to a hunt group, codes 1 to 12

- **I/C** (Types 3, 6, 31, 61 only) This two or three digit entry for DID or CCSA trunks defines the number of incoming digits, the number of digits to be absorbed; and the digit to be added to the incoming number after absorbtion.

- **NIGHT 1** (Types 1, 5, 11, 51 only) This entry defines the assignment of the trunk during Night Service 1. Assignment is made in the same manner as for DAY NUMBER assignment.

- **NIGHT** 2 The entry defines the assignment of the trunk during Night Service 2. This assignment is made in the same manner as for DAY NUMBER assignment.

- **COS NUMBER** (Types 2, 4, 21, 41 only) The number (l-16) entered, after pressing this key, specifies the Class-of-Service and therefore the features, that may be accessed by the dial-in trunk. See 2.04 Class of. Service Option.

- **TOLL DENY** (Types 2, 4, 21, 41 only) Each dial-in trunk may be defined as TOLL ALLOWED-allowed to originate calls to the toll network; or TOLL DENIED-not allowed to make calls to the toll network. To make the tie trunk TOLL ALLOWED press the TOLL DENY key then the DELETE key. To make the tie trunk TOLL DENIED press the TOLL DENY key then the ADD key. If System Option 199 is enabled see also Section MITL9105/9110-98-212 Multi-Digit Toll Control.

- **CANCEL** Pressing this key, prior to the operation of the ENTER key, removes any data entered in the temporary storage.

- **ENTER** Deletes previous data associated with this trunk and stores the new data.

Trunk Groups

2.12 The trunk group program specifies the trunks forming the trunk group, the restrictions and options common to all trunks in the group. The trunk group may employ terminal or circular hunting (see 2.08). When making any change to the list of members of a trunk group all members of the group must be re-entered. The following console keys are activated to program the trunk groups:

- **TENANT** The number, 1 to 4, entered after pressing the TENANT key specifies the tenant for which the extensions are being programmed, if the system is to be used as a multi-tenant system. If the system is to be used by a single tenant, the TENANT key must not be pressed.
- **TRUNK GROUP** The number (1-12) entered specifies the trunk group to be set-up or changed.
- **ACCESS CODE** Allows the 1, 2, 3 or 4 digit code identifying the trunk group to be specified.
- **DELETE** Pressing this key deletes the trunk group from the system memory.
- **TYPE** The four digit code entered after pressing the TYPE key specifies the trunk group type parameters as detailed in Table 2-5.

TABLE 2-5
TRUNK GROUP TYPE CODES

First Digit (Note 1)	Second Digit	Third Digit (Note 2)	Fourth Digit
1 No supervision	1 No message register	†1 Dial pulse, no wait for dial tone	1 CO trunk
2 Answer supervision	● 2 Message register	†2 Dial pulse, wait for dial tone	2 Non CO trunk
3 Toll reversal	Ø3 SMDR Enable	$3 DTMF, no wait for dial tone	**3 Identified Trunk Group (Type XX13 only is valid)
4 Outgoing audio inhibited until answer supervision	Ø4 SMDR Enable and Message Register Enable	‡4 DTMF, wait for dial tone	

* Available in Generic 203 and above Ø Generic 205 only 1576

• * Available in Generic 204

† If extensions are DTMF the trunk will convert to dial pulse. Early line split is not provided.

‡ Trunks will repeat DTMF or dial pulse signals.

Note 1 • If answer supervision is not required (or not provided by the CO), then use 1 · (No supervision).

- If trunks provide answer supervision and tandem trunking or message registration is used, then specify 2, (Answer Supervision).
- If supervision is used to indicate toll calls, and this feature is required, then use 3 · (Toll supervision).
- If audio cut-through on tie-trunk tandem calls is required only after receipt of answer supervision, then use 4 · (Outgoing audio inhibit until answer supervision),
- If audio cut-through on tie-trunk tandem calls is required only after receipt of answer supervision, then use 4 · (Outgoing audio inhibit until answer supervision). In addition for Generic 205 the audio is inhibited until timed out or unless a # is dialed.

Note 2 • If "wait for dial tone" is selected then any digits dialed prior to receipt of CO dial tone are ignored by the PABX. This prevents circumvention of the toll denial by dialing a fast valid digit before CO dial tone is received.

- **TOLL DENY** Each trunk group may be specified as TOLL ALLOWED-allowed to originate calls to the toll network or TOLL DENIED-not allowed to make calls to the toll network. To make the trunk group TOLL ALLOWED press the TOLL DENY key then the DELETE key. To make the trunk group TOLL DENIED press the TOLL DENY key then the ADD key. Toll Denial is effective only when both the trunk group and the extension or dial-in trunk involved are TOLL DENIED.

- **OVERFLOW** The number entered (1-12) specifies the trunk overflow group number. If all trunks within the trunk group being defined are busy, any additional calls directed to the trunk group will be rerouted to the overflow group. Overflow arrangements which direct the call back to the original group must NOT be specified.

- **EQPT NUMBER** This key must be pressed before dialing the equipment number (2-112; 162-256) of each trunk in the group. If circular hunting is to be defined, the last entry in the hunt group must be the same as the first entry. If circular hunting is not required, the trunk group is terminal hunting (see 2.08).

- **CANCEL** Pressing the CANCEL key removes all new data entered for the trunk group, leaving any existing data unchanged.

- **ENTER** Removes all old data associated with the trunk group and transfers the new data entered to permanent memory.

3. PROGRAMMING

General

3.01 After all installation procedures have been completed in accordance with Section MITL9105/9110-98-200 the system should be programmed as detailed in the MITEL Action Procedures (MAPs) contained in Appendix 1 and 2.

Error/Confirm Codes

3.02 During standard system programming the console DESTINATION display may show "error" or "confirm" codes, with the meanings indicated in Tables 3-1 and 3-2 respectively. These tables also indicate required action when the code is displayed. In the extended programming mode errors may also be displayed at the console. Figs 3-3 and 3-4 show the meanings of these errors.

Attendant Function Access Codes

3.03 Table 3-5 is a listing of the attendant function access codes. To select any of the attendant functions the access code for Feature 18 must have been dialed. The code * is used in Table 3-5.

Maintenance Function Access Codes

3.04 Table 3-6 lists the maintenance function access codes. To select any of the maintenance functions the access code assigned for the maintenance function must be dialed (Feature Number 19). The code 555 is used in Table 3-6, for the maintenance code and may be dialed from the test line or console.

Timeout Information

3.05 During programming it may be necessary to know the timeout information with regard to certain functions. Table 3-7 is such a listing of the timeout information.

TABLE 3-1
PROGRAMMING ERROR CODES

Error code	Cause	Key affected	Key flashing	Meaning	Action Required
E 0	Invalid key pressed.	ALL	None	The last key pressed is invalid at this time.	Check procedure and press correct key.
El	Invalid number.	ALL	None	The number entered is out of range or contains corrupted data.	Press key associated with entry and re-enter number.
E 2	Key other than ENTER or CANCEL pressed.	LAMP TEST, TENANT, OPTION COS DEFINE, FEATURE EXTN NUMBER, TRUNK HUNT GROUP, TRUNK GROUP, NEXT, EQPT NUMBER	ENTER, CANCEL	An attempt was made to leave the current mode after some parameters were changed but before ENTER or CANCEL was pressed. ENTER may be used to write the new programming information back to the non-volatile RAM or use CANCEL to ignore all programming changes made ssince the last time ENTER was pressed.	Press ENTER to transfer the data to permanent store or CANCEL to remove the data from the temporary store.
E 3	Access code has not been entered.	HUNT GROUP TRUNKGROUP	ACCESS CODE	Attempting to enter members into a Hunt or Trunk group before an access code has been assigned to the group.	Press ACCESS CODE key and enter required access code.
E 4	The extension number or access code entered is already assigned.	EXTN, ACCESS CODE	None	The extension number or access code entered is already assigned to an extension, feature, hunt group or trunk group. In Trunk mode an attempt is made to delete a member of a trunk group. Equipment Numbers desired must be entered. In Trunk Group mode an attempt is made to place a trunk into a trunk group while that trunk is currently programmed into another trunk group. Callback and Executive Override conflict, i.e. trying to enter a Callback code while same code assigned to Executive Busy Override and vice-versa.	Check code entered. 1 If code is correct, terminate entry, remove other appearance of code and re-enter all new data. 2 If code is incorrect, press key associated with entry and re-enter extension number or access code.
E 5	Number entered contains incorrect, number of digits or conflicting option enabled in this COS.	EXTN NUMBER ACCESS CODE	None	The extension number or access code is in conflict with the existing numbering plan. Attempting to add an option to a COS in which a conflicting option is enabled. Attempting to add a System Option when a conflicting option exists.	Check entry. Press key associated with entry and re-enter number.
E 6	Incorrect equipment number entered.	EQPT NUMBER	None	Attempting to assign an equipment number that is: • undefined • defined as a trunk to an extension hunt group or extension • defined as an extension to a trunk group or a trunk • an extension with message registration to hunt group or pickup group An equipment number assigned to an extension must be deleted as an extension before being programmed as a trunk. An equipment number assigned to a trunk must be deleted as a trunk before being programmed as an extension (Generic 204/up).	Remove conflicting option (a) Assign equipment number correctly (b) Enter new equipment number

1577-1

TABLE 3-1 (Cont'd)
PROGRAMMING ERROR CODES

Error code	Cause	Key affected	Key flashing	Meaning	Action Required
E7	System is busy.	**ENTER,** TENANT	None	(a)Attempting to initialize system while PABX is in use.	(a) Wait until system is idle
				(b) Attempting to change data of an extension or trunk while that extension or trunk is in use. It must be idle or busied-out.	(b) Wait until extension or trunk is idle
E7	Extension has a message register that is not zeroed or has a message waiting, or has Do Not Disturb set.	ENTER	None	• a valid message register exists for this extension • extension has a message waiting or Do Not Disturb set	Zero message register, reset message waiting or Do Not Disturb and reprogram
E8	Trunk or equipment number already assigned.	ENTER	None	Attempting to assign a trunk or equipment number to more than one tenant at the same time. In Tenant Service, pressing the Hunt Group key when all hunt groups are assigned to other tenants. In Tenant Service, pressing the Trunk Group key when all trunk groups are assigned to other tenants. In Tenant Service, attempting to put an extension assigned to one tenant into a hunt group of a different tenant. In Tenant Service, attempting to put a trunk assigned to one tenant into a trunk group of a different tenant. In Tenant Service, entering a hunt group number assigned to a different tenant (after pressing HUNT GROUP). In Tenant Service, Trunk Group Programming, selecting an overflow group that belongs to another tenant. In Tenant Service, entering a trunk group number assigned to a different tenant (after pressing TRUNK GROUP).	(a) Key proper trunk or equipment number (b) Press ENTER
E9	Non-Volatile RAM error.	ENTER	None	Ones and Zeros test failed prior to initializing Non-Volatile RAM.	Go to Section MITL9105/9110-98-350
E022-22	At Power up		None	RAM programmed in Generic 202 or 203 is used with Generic 204/up	Non-Volatile RAM must be initialized and/or reprogrammed

TABLE 3-2
CONFIRM CODES

Confirm Code	Cause	Key Affected	Flashing Lamp	Action
c o	Attempting to assign an equipment number for an extension to a slot containing a trunk card	EQPT NUMBER	CONFIRM	Check assignment- • if correct press CONFIRM key. Equipment number entered is accepted as the number for the equipment type being programmed. All data associated with the original appearance of the equipment number is removed • if incorrect press EQPT NUMBER and re-enter new equipment number
c o	Attempting to assign an equipment number for a trunk to an empty slot or a slot containing an extension card.	EQPT NUMBER	CONFIRM	
CI	Attempting to assign an extension that already exists	EXTN NUMBER	CONFIRM	Check assignment- • if correct press CONFIRM key. The extension number entered is accepted as the extension number for the equipment being defined. All data associated with the original appearance of the extension number is removed. • if incorrect press EXTN NUMBER and re-enter extension number.
c2	The busy lamp assignment already exists	BUSY LAMP	CONFIRM	Check assignment- • if correct pass CONFIRM key. Busy lamp assignment is accepted for this equipment. All data associated with original assignment is removed. • if incorrect press BUSY LAMP and re-enter busy lamp assignment

1578

TABLE 3-3
EXTENDED PROGRAMMING ERROR CODES · TOLL CONTROL

Error	Applies to:	Meaning
EO	All modes	Invalid key pressed. Consult MAP for correct procedure.
El	Absorb Plan mode Trunk Group mode Control Plan mode	Number is not within the range of the parameter being defined. Re-enter parameter key defined.
E2	All modes	An attempt was made to leave the current mode after some parameters were changed but before ENTER or CANCEL was pressed. ENTER may be used to write the new programming information back to the non-volatile RAM or use CANCEL to ignore all programming changes made since the last time ENTER was pressed.
E3	Control Plan mode Table mode	The table number entered is not valid for the current configuration. Re-enter a number which exists for the configuration of the extended non-volatile customer RAM.

TABLE 3-3 (Cont'd)

EXTENDED PROGRAMMING ERROR CODES -TOLL CONTROL

E4	**Table** mode	The table entry code is invalid for the table programmed. This occurs in the following situation: 1. A code of more than 3 digits in length for an 800-entry or 20-range table. 2. A code not in the range of 200-999 for an 800-entry table. 3. A code which already exists or a code which would be ambiguous in conjunction with the existing table entries, for a 4-entry table.
E5	Table mode	The table is full and cannot hold the entry.
E7	Configuration mode	Configuration is not allowed because the Tone Control card switches are not 7776 or the system is not idle.
E9	Configuration mode	A hardware failure was detected while clearing the extended customer non-volatile RAM.

TABLE 3-4
EXTENDED PROGRAMMING ERROR CODES - SPEED CALL

Error Code	Key Involved	Explanation
E1	EQPT NUMBER	The equipment number entered is outside the range of valid numbers. Check procedure and press key then redial proper digits.
E1	ACCESS NUMBER	The access number entered is not the first of the five-number group. Enter the proper access number.
E1	NUMBER REDIAL	An invalid number redial value was entered. Enter the proper redial value.
E3	TABLE	The table number entered is not consistent with that allowed for the current Configuration of the extended NV RAM. Check the Configuration number.
E4	ACCESS NUMBER	An attempt was made to enter an access number for a common-use table.
E4	NUMBER REDIAL	An attempt was made to enter a number redial digit for a common-use table.
E5	ACCESS NUMBER	The access number entered already exists for another table assigned to the same equipment number.
E5	NUMBER REDIAL	Number redial already exists for another table assigned to the same equipment number, (only 1 number redial attribute per user is allowed).
E6	SPEED CALL	The Configuration of the extended NV RAM does not include the speed call feature.

TABLE 3-5
ATTENDANT FUNCTION ACCESS CODES

These codes assume the use of * as the Attendant Function code (Feature number 16).

To cancel all call forwarding:

a) Dial * 1
b) Dial #
c) Press RELEASE

To access an individual trunk:

a) Dial * 2
b) Dial individual trunk access number (equipment number)
c) Dial *
d) Press RELEASE

To force-release an individual trunk:

a) Dial * 2
b) Dial individual trunk access number (equipment number)
c) Dial # #
d) Press RELEASE

† To make flexible night service assignments:

a) Dial * 3
b) Dial individual trunk access number (equipment number)
c) Press Night 1 or Night 2
d) Dial extension number
e) Press RELEASE

To cancel all system callbacks:

a) Dial * 4
b) Dial #
c) Press RELEASE

To set the clock time:

a) Dial * 5
b) Dial time (hour plus minutes)
c) Dial * for p.m., otherwise a.m.
d) Press RELEASE

To make trunk group dial access:

a) Dial * 6
b) Dial trunk group (1 through -12)
c) Dial #
d) Press RELEASE

To make trunk group attendant access:

a) Dial * 6
b) Dial trunk group (1 through 12)
c) Dial+
d) Press RELEASE

To change the Direct Inward System Access Code:

a) Dial * 7
b) Dial DISA code
c) Press RELEASE

To cancel a minor alarm: (Note 1)

a) Dial * 8
b) Dial #
c) Press RELEASE

† To busy out an individual trunk:

a) Dial * 9
b) Dial individual trunk access number (equipment number)
c) Dial *
d) Press RELEASE

† To de-busy an individual trunk:

a) Dial * 9
b) Dial individual trunk access number (equipment number)
c) Dial #
d) Press RELEASE

† To change the status of all occupied clean rooms to occupied and needs cleaning: (Note 2)

a) Dial * 10
b) Dial *
c) Press RELEASE

† To change the status of all occupied rooms in the need of cleaning to occupied clean: (Note 2)

a) Dial * 10
b) Dial #
c) Press RELEASE

TABLE 3-5 (CONT'D)
ATTENDANT FUNCTION ACCESS CODES

To set up call forwarding: (Note 2)

a) Dial * llnnn, where nnn is the extension number of the forwarding extension
b) Dial call forwarding code (l-3)
c) Dial nnn, where nnn is the number to which the calls are to be forwarded
d) Press RELEASE

To cancel call forwarding for an extension:(Note 2)

a) Dial * llnnn, where nnn is the extension number of the forwarding extension
b) Dial #
cj Press RELEASE

To busy out an extension:(Note 2)

a) Dial* 12nnn, where nnn is the number of the extension to be busied out
b) Dial+
c) Press RELEASE

To de-busy an extension: (Note 2)

a) Dial * 12nnn, where nnn is the number of the extension to be de-busied
b) Dial #
c) Press RELEASE

† To suspend the printer: (Note 3)

a) Dial * 14 *
b) Press RELEASE

† To purge and ignore the printer: (Note 3)

a) Dial * 14 00
b) Press RELEASE

† To enable the printer: (Note 3)

a) Dial * 14 #
b) Press RELEASE

To change the date: (Note 3)

a) Dial * 15 and 3 or 4 digit date (one or two digit month, two digit day)
b) Press RELEASE

† To print the room audit (registers): (Notes 3 and 4)

a) Dial * 16
b) Press RELEASE

† To display system identity: (Note 3)

a) Dial * 17
b) Press RELEASE

† To change the system identity: (Note 3)

a) Dial* 17 nnn (where nnn is a 1 to 3 digit ID, O-999)
b) Press RELEASE

† To print the "room status" audit: (Notes 3 and 4)

a) Dial * 18
b) Press RELEASE

Note 1 The errors will be sequentially stacked in the memory and may be recalled sequentially (most recent first) by repeating the above procedure.
Note 2 Applies to Generic 203/up
Note 3 Applies to Generic 204/up
Note 4 Printer starts after RELEASE key is pressed.
† Requires system option programming

TABLE 3-8
MAINTENANCE FUNCTION ACCESS CODES

To select any of the functions the access code assigned for the maintenance function must be dialed Feature Number 19). The code 555 is used in the following part for the maintenance code and may be lialed from the test line or console in Generic 203/up.

Clear all errors:

a) Dial 555 + 1

Direct trunk or station access:

a) Dial 555 + 2
b) Dial individual equipment number (3 digit equipment number for trunk or station)

Busy out of a receiver:

a) Dial 555 + 3
b) Dial equipment number of receiver

Busy out of a speech path:

a) Dial 555 + 33
b) Dial speech path number (01-31)

De-busy a receiver:

a) Dial 555 + 4
b) Dial equipment number of receiver

De-busy a speech path:

a) Dial 555 + 43
b) Dial speech path number (01-31)

Initialize card slot:

a) Dial 555 + 5
b) Dial card slot number (01-17, 31-42)

†* System reset: (Note 2)

a) Dial 555 + 6

**To initiate system dump (from test line):

a) Dial 555 + 7 and hang up
b) Go off-hook
c) Dial 555 + 8 + # (or 2)

**To initiate system dump (from console):

a) Dial 555 + 7
b) Dial * 14 #

**To suspend printer:

a) Dial 555 + 8 + * (or 1), or
b) Dial * 14 * (console only)

• *To enable printer:

a) Dial 555 + 8 + # (or 2), or
b) Dial * 14 # (console only)

†**To purge and ignore printer:

a) Dial 555 + 8 + 00, or
b) Dial * 1400 (console only)

1505-2

† Requires System Option Programming
• Generic 203/up
• * Generic 204/up

Notes
1. For Traffic Measurement Access Codes see MITL9105/9110-98-450.
2. System Reset requires thumbwheel switches be set to 777n (n = 0 to 9) on Tone Control card for Generic 203/up.

TABLE 3-7
SYSTEM TIMEOUT INFORMATION

Description	Timeout
Attendant Timed Recall (Don't Answer)	20s, 30s, or 40s
Attendant Timed Recall (Camp-On)	20s, 30s, or 40s
Attendant Timed Recall (Hold)	20s, 30s, or 40s
Automatic Night Switching	20s, 30s, or 40s
Dial Tone Timeout	15s
Interdigit Timeout (Extensions)	15s
Interdigit Timeout (Trunks)	10s
Lockout Timeout	45s
Callback Clear Timeout	8 hours
Callback Don't Answer Reset	6 rings
Call Park Recall	2, 3 or 4 minutes
Call Hold Recall	2, 3 or 4 minutes
Call Forward - Don't Answer Timeout	20s, 30s, or 40s
Switchhook Flash	Min. 200ms Max. 0.7s, 0.9s, 1.1s or 4.5s
Ringing Timeout	5 minutes
Automatic Wakeup Ringing	6 rings, 3s each
Automatic Wakeup Attempts	3 at 5 minute Intervals

1580

4. EXAMPLES

Introduction

4.01 This part describes the steps required to program the SX-100 and SX-200 PABX's using the Installation Forms, and provides typical examples of completed Installation Forms.

4.02 System Options

Step	Operation
1.	Press the OPTION key.
2.	Dial the number of the required option. (See Tables 2-I and 2-2)
3.	Press the ADD key to add the option,
	OR
	Press the DELETE key to remove the option
4.	Repeat steps 1, 2, and 3 above until all required options have been added or deleted.
5.	Press the ENTER key to enter all options into the memory.

SYSTEM OPTIONS

OPTION

OPTION NAME	DIAL OPTION NUMBER (100-234)	ADD
DISCRIMINATING RINGING	100	✓
TRANSFER DIAL TONE	101	✓
FLEXIBLE NIGHT SERVICE	102	✓
NIGHT SERVICE AUTOMATIC SWITCHING	103	✓
TAFAS AVAILABLE DURING DAY	104	✓
OUTGOINGTRUNKCAMP-ON	105	✓
OUTGOINGTRUNK CALLBACK	106	✓
CAN FLASH IF TALKING TO AN INCOMINGTRUNK	107	✓
CAN FLASH IFTALKING TO AN OUTGOINGTRUNK	108	✓
CAN FLASH IF TALKING TO STATION	109	✓
CANNOT DIAL ATRUNKAFTER FLASHING	110	✓
CANNOT DIAL A TRUNK AFTER FLASHING IF HOLDING OR IN CONFERENCEWITH A TRUNK	111	✓
LOCKOUT ALARM ENABLE	112	✓
TENANT SERVICE (SET AUTOMATICALLY WHEN TENANT SERVICE IS SELECTED WHEN PROGRAMMING)	113*	✓
TENANT SERVICE - SEPARATE CONSOLES (GENERIC 203/UP) OR	114*	✓
FLASH TIME 0.7SEC (GENERIC 202.05/UP)	114	✓
JACANT NUMBER INTERCEPTTO ATTENDANT	115	✓
LLEGALACCESS INTERCEPT TO ATTENDANT	116	✓
DID/DIAL-IN/CCSA VACANT/ILLEGAL INTERCEPT TO ATTENDANT	117	✓
ATTENDANT CAMP-ON	1	✓
ATTENDANT CONFERENCE	11.	✓
ATTENDANT BUSY OVERRIDE	120	✓
ATTENDANT SERIAL CALL	121	✓
BELL OFF ENABLE	122	✓
'AGE BUTTON ENABLE	123	✓
NEW CALL TONE ENABLE	124	✓
10TH MODESTANDARD	125	✓
CALLBACK BUTTON ENABLE	126	✓
RUNK BUSY-OUTENABLE	127	✓
BOTH BUTTON ENABLE	128	✓

OPTION NAME	DIAL OPTION NUMBER (100-234)	ADD c l
ATTENDANT CO TRUNK-CO TRUNK CONNECT ENABLE	129	✓
ATTENDANT CO TRUNK-NON CO TRUNK CONNECT ENABLE	130	✓
ATTENDANTNON COTRUNK-NONCOTRUNKCONNECT ENABLE	131	
CONTROLLEDOUTGOING RESTRICTION SE' F-UP	132'	
CONTROLLEDSTATION RESTRICTION SET-UP	133'	
CONTROLLED STATION TO STATION RESTRICTION SET-UP	134'	
ATTENDANT DISA CODE SET-UP ENABLE	135	
LIMITED WAIT FOR DIAL TONE	136	
MESSAGE WAITING SET-UP (LAMP)	137'	
MESSAGE WAITING SET-UI '(BELL)	138'	
ATTENDANT TIMED RECALL - CAMP-ON - 20s	139	
ATTENDANT TIMED RECALL - CAMP-ON -40s	140	
ATTENDANTTIMED RECALL-DON'T ANSWER - 20s	141	
ATTENDANTTIMED RECALL-DON'T ANSWER 40s	142	
ATTENDANT TIMED RECALL - HOLD - 20s	143	
ATTENDANT TIMED RECALL	144	
NIGHT SERVICE	145	
	146	
DON'T ANSWER TIMEOUT -20s	147	
FORWARDING OON'T ANSWER TIMEOUT -40s	146	
CALL FORWARDING - BUSY (SYSTEM, DID, DIAL-IN TIE TRUNK,CCSA)	149	
CALL FORWARDING - DON'T ANSWER (SYSTEM, DID, DIAL-IN TIETRUNK. CCSA)	150	
PARK AND CALL-HOLD RECALL 2 MINUTES	151	
PARK AND CALL-HOLD RECALL - 4 MINUTES	152	
END OF DIAL SIGNAL FOR OUTGOING TRUNKS (#)	153	
24 HOURCLOCK	154	
FIRST DIGIT TOLL DENY	155	
MESSAGE REGISTRATION ENABLE	156'	
MESSAGE REGISTRATION: COUNT ADDITIONAL SUPERVISIONS	157'	

EXAMPLE ONLY

SYSTEM OPTIONS

OPTION

OPTION NAME	OPTION NUMBER	ADD	OPTION NAME	OPTION NUMBER	ADD
MESSAGE REGISTRATION: TIMER = 20 SECONDS	158'		AUTOMATIC WAKEUP PRINT	191**	
MESSAGE REGISTRATION: TIMER = 40 SECONDS	159'		AUTOMATIC WAKEUP MUSIC ON HOLD	192"'	
MESSAGE REGISTRATION: MULTIPLIER = 4 UNITS	160'		ROOM MESSAGE REGISTER AUDIT ENABLE	193"	
MESSAGE REGISTRATION: MULTIPLIER = 3 UNITS	161*		ROOM STATUS AUDIT ENABLE	194"	
MESSAGE REGISTRATION: MULTIPLIER = 2 UNITS	162'		MESSAGE REGISTER & MESSAGE WAITING CHANGE		
MESSAGE REGISTRATION: SURCHARGE = 8 UNITS	163*		PRINT ENABLE	195**	
MESSAGE REGISTRATION: SURCHARGE = 7 UNITS	164*		IGNORE PRINT ENABLE	196†*	
MESSAGE REGISTRATION: SURCHARGE = 6 UNITS	165*		REMOTE SYSTEM RESET - PROTECTION OVERRIDE	197†*	
MESSAGE REGISTRATION: SURCHARGE = 5 UNITS	166*		EXTENSION NON-CO TRUNK TO TRUNK CONNECT ENABLE	198†*	
MESSAGE REGISTRATION: SURCHARGE = 4 UNITS	167*		MULTI DIGIT TOLL CONTROL ENABLE	199†*	
MESSAGE REGISTRATION: SURCHARGE = 3 UNITS	168*		TRAFFIC MEASUREMENT ENABLE	200**	
MESSAGE REGISTRATION: SURCHARGE = 2 UNITS	169*		TRAFFIC MEASUREMENT EXTREME VALUE MODE	201**	
MESSAGE REGISTRATION: SURCHARGE = 1 UNIT	170*		TRAFFIC MEASUREMENT COMPA	202**	
DID TO NON-CO TRUNKS VIA ATTENDANT INHIBIT	171*		TRAFFIC MEASUR	203**	
GUEST ROOM BUTTON ENABLE	172*		TRA	204**	
ROOM STATUS BUTTON ENABLE & DISPLAY ENABLE	173*		ENABLE	205†*	
DO NOT DISTURB INTERCEPT TO ATTENDANT	174*		OMATIC SUPERVISION	206†*	
DO NOT DISTURB AND MESSAGE WAITING DISPLAYS	175*		PRINTER CARRIAGE RETURN DELAY	207†*	
SINGLE DIGIT DIALING ENABLE	1		ZERO MESSAGE REGISTER AFTER ROOM REGISTER AUDIT	208**	
SINGLE DIGIT DIALING TIME-OUT = 3 SECONDS	17		TRAFFIC MEASUREMENT: CONSOLE FUNCTION ENABLE	209**	
SINGLE DIGIT DIALING TIME-OUT = 5 SECONDS	178		ATTENDANT PRINTER CONTROL ENABLE	210†*	
ATTENDANT STATION BUSY-OUT ENABLE ~~FLASH TIMING =~~ 0.7 SECONDS	179* 180*	✓	SYSTEM ID ENABLE NIGHTBELL 3 WITH MINOR ALARM ENABLE	211†* 212†*	
FLASH TIMING = 0.9 SECONDS	181*		H/M PRINTOUTS: EXTRA LINE FEEDS	213†*	
FLASH TIMING = 1.1 SECONDS	182*		WAKE-UP ALARM	214**	
TRUNK RECALL PARTIAL INHIBIT	183*		RESERVED	215	
RESERVED	184		SPEED CALL ENABLE	216†	
RESERVED	185		SPEED CALL PROGRAMMING ENABLE	217†	
RESERVED	186		SPEED CALL CONFIDENTIAL NUMBER DISPLAY ENABLE	218†	
RESERVED	187		RESERVED	219†	
RESERVED	188		STATION MESSAGE DETAIL RECORDING		
RESERVED	189		OUTGOING CALLS	220†	
~~AUTOMATIC~~ WAKEUP ENABLE	190**		STATION MESSAGE DETAIL RECORDING INCOMING CALLS	221†	

EXAMPLE ONLY

1783 3

SYSTEM OPTIONS [OPTION]

OPTION NAME	OPTION NUMBER
SMOR. EXTENOEORECORO	222†
SMDR RECORD METER PULSES	223†
SMDR: INDICATE LONG CALLS	224†
SMDR DROP INCOMPLETE OUTGOING CALLS	225†
SMDR: RECORDONLY INCOMING CO CALLS	226†
SMDR: DROP CALLS OF LESS THAN 8 DIGITS	227†
DISCRIMINATING DIAL TONE	228†
SPECIAL ANI FEATURE	229†
ACCOUNTCODE ENABLE	230t
ACCOUNT CODE LENGTH:4 DIGITS	231†
ACCOUNT CODE LENGTH. 8 DIGITS	232t
ACCOUNT CODE LENGTH. 12 DIGITS	
VARIABLE LENGTH ACCOUNT CODES	234†

[OPTION] DIAL OPTION NUMBER (100-234) — [ADD]

AFTER ALL OPTIONS ARE ADDED — ENTER

c l

NOTES

TO DELETE SYSTEM OPTIONS

[OPTION] DIAL OPTION NUMBER [DELETE]

AFTER ALL REQUIRED OPTIONS HAVE BEEN REMOVED

[ENTER]

TO REVIEWSYSTEM OPTIONS

n n n • • •

[OPTION] [NEXT] [NEXT]

203/UP

GENERIC 204 BUT NOT 205

** GENERIC 204 AND 205

† GENERIC 205 BUT NOT 204

EXAMPLE ONLY

4.03 COS Options

Step	Operation
1.	Press the **COS DEFINE** key.
2.	Dial the number of the COS required (1 through 16).
3.	Press the OPTION key.
4.	Dial the number of the extension option required to be added or deleted to the COS selected in step 2. (See CLASS-OF-SERVICE DEFINITIONS).
5.	Press the ADD key to add the option to the selected COS. OR Press the DELETE key to remove the option from the selected COS.
6.	Repeat steps 3, 4, and 5 until all required extension options have been added or deleted to the selected COS.
7.	Press the ENTER key to enter all COS options into the memory.
8.	Repeat steps 1 through 7 for the next required COS.

MITEL

CLASS OF SERVICE OPTIONS

PRESS [COS DEFINE] DIAL COS NUMBER 1-16

TO CHANGE ANY OPTION FOR A COS 1-16: PRESS [OPTION] DIAL OPTION NUMBER 33-94 PRESS [ADD] TO ENABLE OR PRESS [DELETE] TO REMOVE

REPEAT FOR EACH OPTION IN THE COS

OPTION #	1	2	3	4	5	6	7	8	9	10	11	12	13	14	15	16	OPTION #	OPTION NAME
33	✓	✓															33	AUTOMATIC CALLBACK
34	✓	✓															34	CALL FORWARDING - BUSY
35	✓	✓															35	CALL FORWARDING - DON'T ANSWER
36	✓	✓															36	CALL FORWARDING - FOLLOW ME
37	✓	✓															37	CALL PARK
38																	38	NEVER A FORWARDEE
39	✓																39	DIRECTED CALL PICKUP
40	✓	✓															40	EXECUTIVE BUSY OVERRIDE
41																	41	DATA SECURITY
42		✓															42	STATION OVERRIDE SECURITY
43*																	43*	INWARD RESTRICTION (DID)
44			✓														44	ORIGINATE ONLY
45																	45	RECEIVER ONLY
46			✓														46	FLASH DISABLE
47																	47	NEVE[illegible]NSULTEE
48		✓															48	[illegible]LL
49	✓	✓															49	[illegible]ERENCE
50	✓	✓																[illegible]ERENCE
51																		[illegible]
52																		DO NOT OVERFLOW
53																		PAGING ACCESS
54																		TAFAS ACCESS
55																	55	HOLD PICKUP
56†																	56†	ACCOUNT CODE ACCESS
57			✓														57	MANUAL LINE
58																	58	CONTACT MONITOR
59																	59	NON-CO TRUNKS VIA ATTENDANT INHIBIT
60			✓														60	CO TRUNKS VIA ATTENDANT INHIBIT
61																	61	NO DIAL TONE
62		✓															62	FLASH FOR ATTENDANT
63*																	63*	H/M STN-STN RESTRICT APPLIES
64*																	64*	MESSAGE REGISTER
65	✓	✓															65	TRUNK GROUP 1 ACCESS
66	✓	✓															66	TRUNK GROUP 2 ACCESS
67	✓	✓															67	TRUNK GROUP 3 ACCESS
68		✓															68	TRUNK GROUP 4 ACCESS
69																	69	TRUNK GROUP 5 ACCESS
70																	70	TRUNK GROUP 6 ACCESS
71																	71	TRUNK GROUP 7 ACCESS
72																	72	TRUNK GROUP 8 ACCESS
73																	73	TRUNK GROUP 9 ACCESS
74																	74	TRUNK GROUP 10 ACCESS
75																	75	TRUNK GROUP 11 ACCESS
76																	76	TRUNK GROUP 12 ACCESS

EXAMPLE ONLY

CLASS OF SERVICE OPTIONS

PRESS COS DEFINE DIAL COS NUMBER 1-16

TO CHANGE ANYOPTION FOR A COS 1-16 PRESS OPTION DIALOPTION NUMBER 33-94 PRESS ADD TO ENABLE OR PRESS DELETE TO REMOVE

REPEAT FOR EACH OPTION IN THE COS

OPTION #	1	2	3	4	5	6	7	8	9	10	11	12	13	14	15	16
77*																
78*																
79*																
80*																
81*																
82**																
83†																
84†																
85†	✓	✓														
86†	✓	✓														
87†	✓	✓														
88†		✓														
89†																
90†																
91†																
92†																
93†																
94†																

OPTION #	OPTION NAME
77*	MESSAGE WAITING APPLIES
78*	ROOM DO NOT DISTURB SETUP ENABLE
79*	CALL HOLD AND RETRIEVE ACCESS
80*	ROOM STATUS APPLIES
81*	CALL FORWARD SYSTEM INHIBIT
82**	ALARM CALL SETUP ENABLE
83†	FORCED ACCOUNT CODE ENTRY
84†	NO SMDR RECORD APPLIES
85†	SPEED CALL TABLE 1 & 2 ACCESS
86†	SPEED CALL TABLE 3 & 4 ACCESS
87†	SPEED CALL TABLE 5 & 6 ACCESS
88†	SPEED CALL TABLE 7 & 8 ACCESS
89†	SPEED CALL TABLE 9 & 10 ACCESS
90†	SPEED CALL TABLE 11 & 12 ACCESS
91†	BLE 13 & 14 ACCESS
92†	LE 15 & 16 ACCESS
	LE 17 & 18 ACCESS
	DIAL A TRUNK AFTER FLASHING

EXAMPLE ONLY

PRESS ENTER TO ENTER ALL INFORMATION IN THE COS AFTER ALL OPTIONS IN THAT COS HAVE BEEN DEFINED

TO REVIEW THE OPTIONS WITHIN A COS COS DEFINE DIAL COS NUMBER OPTION NEXT NEXT

NOTE: AN EXTENSION OR TRUNK CAN NOT CHANGE ITS COS IF THE EXTENSION OR TRUNK IS BUSY. IT ALSO CAN NOT BE CHANGED UNLESS THE MESSAGE REGISTER IS CLEARED.

*GENERIC 203/UP
* GENERIC 204
† GENERIC 205

MITEL

4.04 **Features**

Step	Operation
1.	Press the FEATURE key.
2.	Dial the number of the required feature. (See FEATURE ASSIGNMENTS TABLE 2-4)
3.	Press the ACCESS CODE button.
4.	Dial the access code to be assigned to the feature. OR Press the DELETE key to remove an access code
5.	Press the ENTER key to enter information into the memory.
6.	Repeat steps 1 through 5 until all required access codes have been assigned or deleted.

FEATURES

DESCRIPTION	FEATURE DIAL 1-42	ACCESS CODES DIAL ACCESS CODES	ENTER
	FEATURE NUMBER		
ATTENDANT ACCESS	1	0	
CALLBACK - DON'T ANSWER	2	61	
CALL FORWARD - BUSY	3	41	
CALL FORWARD - DON'T ANSWER	4	42	
CALL FORWARD - FOLLOW ME	5	43	
CALL PARK	6	44	
DIAL CALL PICKUP	7	45	
DIRECT CALL PICKUP	8	46	
MEET-ME CONFERENCE	9	69	
PAGER 1	10	81	
PAGER 2	11	—	
HOLD PICKUP ACCESS	12	51	
PAGER 1 AND 2	13	—	
TAFAS - ALL	14	89	
TAFAS - 1	15		
TAFAS - 2	16		
TAFAS - 3	17		
ATTENDANT FUNCTION	18		
MAINTENANCE FUNCTION	19	555	
DID ATTENDANT ACCESS CODE	20	—	
DIRECT INWARD SYSTEM ACCESS	21	—	
EXECUTIVE BUSY OVERRIDE (SINGLE DIGIT)	22	8	
CALLBACK. BUSY (SINGLE DIGIT)	23	b	
ROOM DO NOT DISTURB SETUP AND CANCEL	24'		
CALL HOLD	25'		
CALL RETRIEVE (LOCAL)	26'		

EXAMPLE ONLY

NOTES

TO DELETE A FEATURE

FEATURE → ACCESS CODE → DELETE → ENTER

TO REVIEWACCESS CODES

FEATURE → NEXT → NEXT → •••

*GENERIC 203/UP

**GENERIC 204

*** FIRST DIGIT CONFLICT ALLOWED WITH OTHER ACCESS CODES

FEATURES

	FEATURE DIAL 1-42	ACCESS CODES DIAL ACCESS CODE	ENTER
CALL RETRIEVE (REMOTE)	27'		
ROOM STATUS UPDATE (MAID IN ROOM)	28'		
PROGRAMMING SECURITYCODE	29**		
ALARM CALL	30"		
RESERVED	31		
RESERVED	32		
ASSIGN ACCESS CODE TRUNK GROUP			
TRUNK GROUP ACCESS CODE 33	33**		
TRUNK GROUP ACCESS CODE 34	34**		
TRUNK GROUP ACCESS CODE 35	35**		
TRUNK GROUP ACCESS CODE 36	36**		
TRUNK GROUP ACCESS CODE 37	37**		
TRUNKGROUP ACCESS CODE 38	38**		
TRUNKGROUP ACCESS CODE34	39**		
TRUNK GROUP ACCESS CODE 40	40**		
TRUNK GROUP ACCESS CODE 41	41**		
TRUNK GROUP ACCESS CODE 42	42**		

1284.1

4.05 Extensions

Step	Operation
	If TENANT service is used commence at Step 1. If TENANT service is not used, start at Step 4 (Note 1).
1.	Press TENANT key.
2.	Dial required tenant number (1, 2, 3 or 4).
3.	Press ENTER key.
4.	Press the EXTN key.
5.	Press the EQPT NUMBER key.
6.	Dial the required equipment number (see EQUIPMENT NUMBERING, Fig. 2-l).
7.	Press the EXTN NUMBER key.
a.	Dial the required extension number OR Press the DELETE key to remove existing extension information.
9.	Press the COS Number key.
IO.	Dial the required COS number (1 through 16).
II.	Press the TOLL DENY key. (See Note 2)
12.	Press the ADD key to implement toll denial for the extension selected OR Press the DELETE key to remove toll denial for the extension selected.
13.	Press the BUSY LAMP NUMBER key.
14.	Dial the number of the busy lamp which is to be associated with the selected extension. (See BUSY LAMP POSITION NUMBERING, Fig. 2-2) OR Press the DELETE key if no busy lamp is required.
15.	Press the PICKUP GROUP key.
16.	Dial the number of the required pickup group (1 through 50) OR Press the DELETE key if no pickup group assignment is required.
17.	Press the ENTER key to enter all extension information into the memory.
18.	Repeat steps 1 through 18 or 4 through 18 for all required extensions.

Notes:

1. All extensions in one tenant group should be entered in succession following the listed steps. The next group of extensions are are entered in a similar manner using the TENANT and ENTER keys again.
2. For Multi-Digit Toll Control, see Section MITL9105/9110-98-212 Programming Procedures.

EXTENSIONS

APPLIES TO GENERIC 203 AND ABOVE

IF TENANT SERVICE IS IN USE
ALL ENTRIES MADE ARE ASSIGNED TO THE TENANT NUMBER DIALED

TENANT | DIAL 1-4 | ENTER

TO ENTER EXTENSION PROGRAMMING PRESS EXTN

TENANT NUMBER

NAME	EQPT NUMBER (DIAL 1-112 OR 161-256 (SEE NOTE 1))	EXTN NUMBER (DIAL CODE OR SEE NOTES 2. 3. OR 4)	NUMBER (DIAL 1-16)	(TOLL DENY) ADD / TOLL DENY / OR DIAL COR CODE 1, 2, OR 3 OR (TOLL ALLOW) DELETE NOTE 5	BUSY LAMP NUMBER (1-150 OR) DELETE	PICKUP GROUP (1-50 OR) DELETE	ENTER
	001	200	1	1	1	1	
	002	201	1	1	2	1	
	003	202	2	3	3	DELETE	
	004	203	2	3	4	DELETE	
	005	204	2	3	5	DELETE	
	006	301	2	3	31	DELETE	
	007	302	2	ADD	32	DELETE	
	008	303	2	ADD	33	DELETE	
	009	304	2	ADD	34	DELETE	
	010	305	2	ADD	35	DELETE	
	011	2#	2	DELETE	40	DELETE	

NOTES

1 EQUIPMENT NUMBERS 161-256 APPLIES TO SX-200 ONLY

2 TO ASSIGN NON CONFLICTING SINGLE DIGIT DIRECTORY N
WHEN N IS THE SINGLE DIGIT.

3 TO REMOVE EXTENSION PROGRAMMING

EXTN | EQPT NUMBER | DIAL EQUIPMENT NUMBER | EXTN NUMBER | DELETE (EXTENSION MUST BE REMOVED FROM ANY HUNT GROUP BEFORE REMOVING THE EXTENSION PROGRAMMING)

EXAMPLE ONLY

...NED AS AN EXTENSION: EQPT NUMBER | NEXT • • •

...LES ONLY. IF TOLL CONTROL (GENERIC 204/UP) IS USED

MITEL

4b

Step	Operation
	If TENANT service is used commence at Step 1. If TENANT service is not used start at Step 4 (Note 1)
1.	Press TENANT key
2.	Dial required tenant number (1, 2, 3 or 4)
3.	Press ENTER key
4.	Press the HUNT GROUP key.
5.	Dial the number of the required hunt group (1 through 12).
6.	Press the ACCESS CODE key.
7.	Dial the required ACCESS CODE (master number).
	OR
	Press the DELETE key to remove an existing hunt group.
8.	Press the EQPT NUMBER key.
9.	Dial the equipment number of the first extension in the hunt group.
10.	Press the EQPT NUMBER key.
11.	Dial the equipment number of the next extension in the hunt group.
12.	Repeat steps 10 and 11 until all required extensions have been dialed.
13.	Press the ENTER key to enter all hunt group information into the memory.
14.	Repeat steps 1 through 13 for all required hunt groups.

Notes:

1. All extensions in one tenant group should be entered in succession following the listed steps. The next group of extensions are entered in a similar manner using the TENANT and ENTER keys again.
2. If the hunt group is to be a circular hunt group, then the first equipment number entered must be reentered as the last number.

APPLIES TO GENERIC 203ANOABOVE

IF TENANT SERVICE IS IN USE
ALL ENTRIES MADE ARE ASSIGNED TO THE TENANT NUMBER DIALED

TENANT , DIAL 1-4 ENTER

HUNT GROUPS

HUNT GROUP (EXTENSION OR TRUNK INFORMATION MUSTBEENTEREDBEFORETRUNKGROUPDATA)

TENANT NUMBER

HUNT GROUP DIAL 1-12 | ACCESS CODE DIAL CODE OR DELETE c l | PRESS EQPT NUMBER BEFORE DIALING EACH EGUIPMENT NUMBER ENTRY — AFTER LAST ENTRY IN EACH GROUP PRESS ENTER c l

1	191	051	052	053										
2	192	076	077	078	076									
2	193	092	094	095	096									

EXAMPLE ONLY

TO SEETHE EQUIPMENT NUMBERS CURRENTLY IN A HUNT GROUP

HUNT GROUP — DIAL NUMBER 1-12 — EQPT NUMBER — NEXT — NEXT . . .

TO SEE ALL HUNTGROUPS

HUNT GROUP — NEXT — NEXT • • •

TO MAKE A CHANGE TO A HUNT GROUP, THE LIST OF MEMBERS MUST BE RE-ENTERED. INDIVIDUAL MEMBERS CANNOT BE DELETEDOR CHANGED.THE EXISTING GROUP LIST IS AUTOMATICALLY DELETED WHEN YOU START TO ENTERANEWONE.

FOR CIRCULAR HUNT GROUPS FIRST AND LAST NUMBERS MUST BE IDENTICAL

MITEL

4.07 Trunks

(a) Trunk Card Settings

Before programming the trunk circuits the Installation Forms which detail the trunk card switch settings must have been completed, and the switches on these cards set to their proper positions. Full details of the switch setting procedures are given in Appendix 5 to Section MITL9105/9110-98-200. Typical configurations are shown in the following examples.

CO TRUNK CARD SWITCH SETTINGS: The example shown has the following meaning:

Trunk 1 - Trunk is active with a ground start configuration
Trunk 2 - Trunk is the same configuration as Trunk 1
Trunk 3 - Trunk is similar to Trunk 1 but is a spare trunk
Trunk 4 - Trunk is a dictation trunk with loop start and the 3rd wire condition active

DID/TIE TRUNK CARD SWITCH SETTINGS: The example shown has the following meanings:

Trunk 1 - Trunk is a loop tie trunk with no wink or “stop-dial” requirements
Trunk 2 - Trunk is a DID/Tie trunk with no wink or “stop-dial” requirements and uses loop pulsing

TRUNK CARD SWITCH SETTINGS - CD TRUNK CARDS

CO DIRECTORY NO.	SHELF NO. 1	SHELF NO. 2	CARD TRUNK NO.	TRUNK EQPT. NUMBER	INCOMING CONDITION BUSY	INCOMING CONDITION IDLE	OUTGOING CONDITION BUSY	OUTGOING CONDITION IDLE	LOOP/GND START LOOP	LOOP/GND START GND	3RD WIRE CONDITION ENAB	3RD WIRE CONDITION DIS	SENSE REVERSALS IGN	SENSE REVERSALS EFF	RELEASE TIMES "B" SHRT "A" SHRT	RELEASE TIMES "B" SHRT "A" LONG	RELEASE TIMES "B" LONG "A" SHRT	RELEASE TIMES "B" LONG "A" LONG	M/B RATIO 33/66	M/B RATIO 40/60	XT GND	XT −48V	HI-Z HI-Z	HI-Z NORM
CARD SLOT NO: 10																								
592 2122	✓		1		✓			✓		✓		✓	✓		✓				✓		✓			
592 2123	✓		2		✓			✓		✓		✓	✓		✓									
SPARE	✓		3			✓	✓			✓		✓	✓											✓
DICTATION	✓		4		✓			✓	✓		✓										✓			✓

1299-2

EXAMPLE ONLY

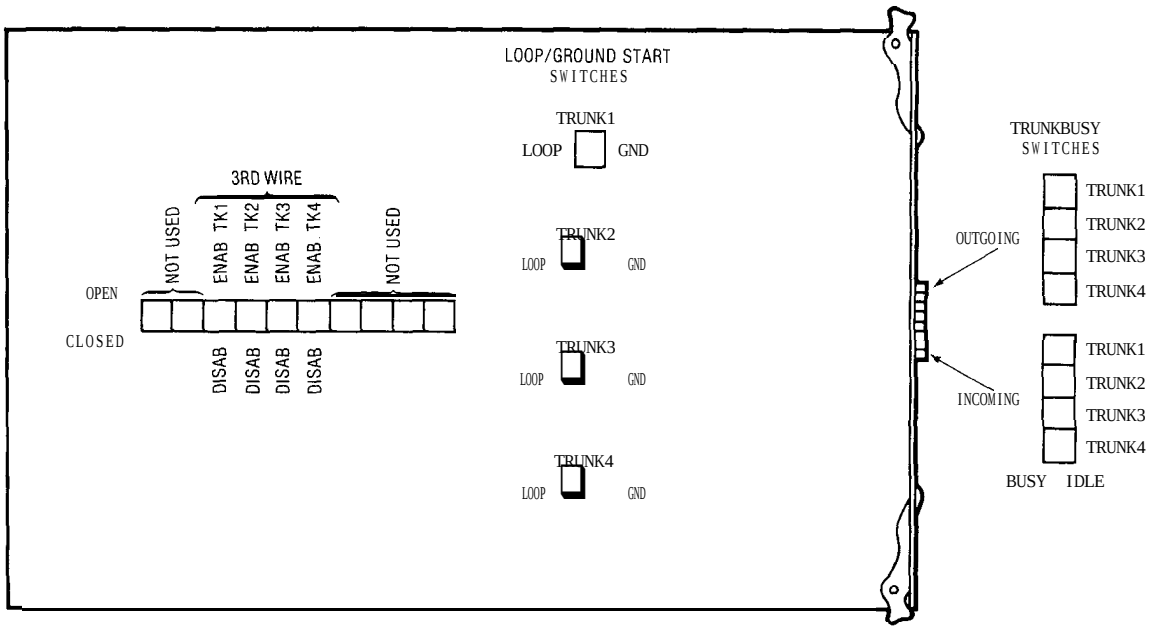

CO TRUNKCARD- SINGLE ASSEMBLY
(TYPE 011)

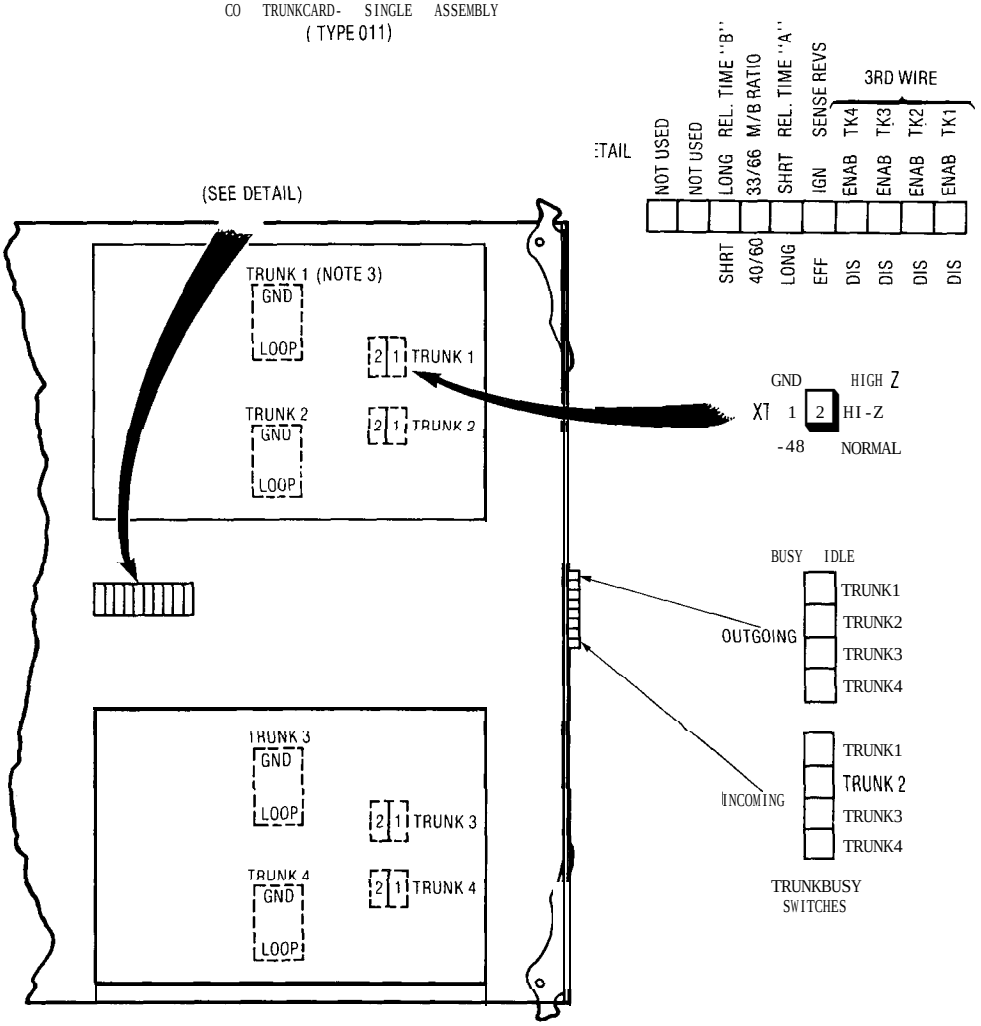

COTRUNKCARD-MODULARASSEMBLIES

CO Trunk Card Switch identification

TRUNK CARD SWITCH SETTINGS - DID/TIE TRUNK CARD

CIRCUIT REFERENCE NUMBERS
TRUNK 1 _____
TRUNK 2 _____
SHELF NUMBER 1
CARD SLOT NUMBER 12
TRUNK CARD 2

SWITCH SETTINGS		TRUNK 1	TRUNK 2
EQPT NUMBER			
INCOMING CONDITIONS	BUSY	✓	✓
	IDLE		
OUTGOING CONDITIONS	BUSY		
	IDLE	✓	✓
SWITCH "A" SETTING	CLOSED	✓	✓
	OPEN		
SWITCH "B" SETTING	CLOSED		✓
	OPEN	✓	
INCOMING WINK	WINK		
	NO WINK	✓	✓
OUTGOING WINK	WINK		
	NO WINK	✓	✓
TRUNK IMPEDANCE SWITCHES (3)	900 Ω	✓	✓
	600 Ω		
PULSING CONDITION	BATTERY/GROUND		
	LOOP	✓	✓
DIALING CONDITIONS	STOP DIAL		
	NOT STOP DIAL	✓	✓

CIRCUIT REFERENCE NUMBERS
TRUNK 1 _____
TRUNK 2 _____
SHELF NUMBER _____
CARD SLOT NUMBER _____
TRUNK CARD _____

SWITCH SETTINGS		TRUNK	TRUNK 2
EQPT NUMBER			
INCOMING CONDITIONS	BUSY		
	IDLE		
OUTGOING CONDITIONS	BUSY		
	IDLE		
SWITCH "A" SETTING	CLOSED		
	OPEN		
INCOMING WINK	WINK		
	NO WINK		
OUTGOING WINK	WINK		
	NO WINK		
TRUNK IMPEDANCE SWITCHES (3)	900 Ω		
	600 Ω		
PULSING CONDITION	BATTERY/GROUND		
	LOOP		
DIALING CONDITIONS	STOP DIAL		
	NOT STOP DIAL		

EXAMPLE ONLY

NOTES: 1. TRUNK CARD SWITCHES MUST BE SET TO ONE OF THE TWO POSSIBLE SETTINGS FOR EACH SWITCH AS DETAILED IN SECTION MITL9105/9110-98-200 APPENDIX 5 MAP200-503.

1293 -1

(b) Non Dial-h Trunks

step	Operation
	If TENANT service is used commence at step 1. If TENANT service is not used, start at step 4 (Note 1)
1.	Press TENANT key.
2.	Dial required tenant number (1, 2, 3 or 4).
3.	Press ENTER key.
4.	Press the TRUNK key.
5.	Press the EQPT NUMBER key.
6.	Dial the equipment number to be associated with the required trunk (See EQUIPMENT NUMBERING, Fig. 2-1)
7.	Press the TYPE key.
8.	Dial the required trunk type number (1 -Standard Bothway CO Trunk VNL, 5 - Non Dial-In Tie Trunk VNL, 11 - Standard Bothway CO Trunk Non VNL and 51 . Non Dial-In Tie Trunk Non VNL). OR Press the DELETE key to delete all trunk information.
9.	Press the LDN NUMBER key.

Step	Operation
10.	Dial the number of LDN key with which the trunk is to be associated. (1 through 4)
11.	Press the DAY NUMBER key.
12.	Dial equipment number, or # (night bell number), or * (hunt group number).
13.	Press the NIGHT 1 key.
14.	Dial equipment number, or # (night bell number), or * (hunt group number).
15.	Press the NIGHT 2 key.
16.	Dial equipment number, or # (night bell number), or * (hunt group number).
17.	Press the BUSY LAMP NUMBER key.
18.	Dial the number of the busy lamp to be associated with the trunk (see BUSY LAMP POSITION NUMBERING, Fig. 2-2) OR Press the DELETE key if no busy lamp is required.
19.	Press the ENTER key to enter all trunk information into the memory.
20.	Repeat steps 1 through 20for all trunks required

Notes:

1. All trunks in one tenant group should be entered in succession following the listed steps. The next group of trunks are entered in a similar manner using the TENANT and ENTER keys again.
2. For Multi-Digit Toll Control, see Section MITL9105/9110-98-212 Programming Procedures.

NON DIAL-IN TRUNKS

APPLIESTO GENERIC 203ANDABOVE

IF TENANT SERVICE IS IN USE
ALL ENTRIES MADE ARE ASSIGNED TO THE TENANT NUMBER DIALED

TENANT | DIAL 1-4 | ENTER

TO ENTERTRUNK PROGRAMMING PRESS

TRUNK

TENANT NUMBER

LDN NUMBER	EQPT NUMBER DIAL Z-112 OR 162-256 (SEE NOTES AND 2)	SEE NOTE 3 TYPE DIAL 1, 5, 11. 51 OR DELETE c I	LDN NUMBER DIAL 1-4	(SEE NOTE 4) DAY NUMBER DIAL #0-#3 OR *1-*12 OR i-112 OR 161-256	(SEE NOTE 4) NIGHT 1 DIAL #0-#3 OR *1-*12 OR 1-112 OR 161-256	(SEENOTE4) NIGHT 2 DIAL #0-#3 OR *1-*12 OR 1-112 OR 161 256	BUSY LAMP NUMBER DIAL I-150 OR DELETE	ENTER
	066	I	I	#0	#1	#2	141	
	068	1	1	#0	#2	#2	142	
	070	1	2	#0	#3		43	
	072	1	3	#0			144	

EXAMPLE ONLY

NOTES'

1 EQUIPMENT NUMBERS 162-256 APPLY TO SX-200 ONLY

2 ONLY EVEN EQUIPMENT NUMBERS MAY BE ASSIGNED TO TRUNKS

3 TYPE 1 = STANDARD BOTHWAY CO TRUNK VNL
TYPE 5 = NON DIAL IN TIE TRUNK (NON CO) VNL
TYPE 11 = STANOARD BOTHWAY CO TRUNK NON VNL
TYPE 51 = NON DIAL IN TIE TRUNK (NON CO) NON VNL

4. #0 - CONSOLEONLY
#1 CONSOLE AND NIGHT BELL 1
#2 -CONSOLE ANO NIGHT BELL 2
#3 - CONSOLE AND NIGHT BELL3

5. TO REMOVE A TRUNK ASSIGNMENT
(NOTE TRUNK MUST FIRST BE REMOVED FROM TRUNK GROUP).

EQPT NUMBER | DIAL EQUIPMENT NUMBER | TYPE | DELETE | ENTER

*1-*12 ASSIGNS THE TRUNK TO THE HUNT GROUPSELECTED
1-112, 161-256 ASSIGNS THE TRUNK TO THE SPECIFIED EXTENSION

6. TO SEETHE NEXT EQUIPMENT NUMBER PROGRAMMED ASATRUNK:

EQPT NUMBER | NEXT | • • •

GENERIC 202TYPE CODE DISPLAY DEFAULTS TO 1 WHEN TRUNK IS DELETED

MITEL

(c) Dial-h Trunks

Step	Operation
	If TENANT service is used commence at step 1. If TENANT service is not used, start at step 4 (Note 1).
1.	Press TENANT key.
2.	Dial required tenant number (1, 2, 3 or 4).
3.	Press ENTER key.
4.	Press the TRUNK key.
5.	Press the EQPT NUMBER key.
6.	Dial the equipment number to be associated with the required trunk (See EQUIPMENT NUMBERING, Fig. 2-2)
7.	Press the TYPE key.
8.	Dial the required trunk type number (2 -Direct Inward System Access or 4 - Dial-In Tie Trunk).
	OR
	Press the DELETE key to delete all trunk information.
9.	Press the COS number key.
10.	Dial the required COS number (1 through 16).
11.	Press the TOLL DENY key.
12.	Press the ADD key to implement toll denial for the trunk selected.
	OR
	Press the DELETE key to remove toll denial for the trunk selected.
13.	Press the BUSY LAMP NUMBER key.
14.	Dial the number of the busy lamp which is to be associated with the selected trunk. (See BUSY LAMP POSITION NUMBERING, Fig. 2-2)
	OR
	Press the DELETE key if no busy lamp is required.
15.	Press the ENTER key to enter all Dial-In Trunk information into the memory.
16.	Repeat steps 1 through 16 for all Dial-In trunks required.

Notes:

1. All extensions in one tenant group should be entered in succession following the listed steps. The next group of extensions are entered using the TENANT and ENTER keys again.
2. For Multi-Digit Toll Control, see Section MITL9105/9110-98-212 Programming Procedures.

DIAL-IN TRUNKS

APPLIESTO GENERIC 203ANDABOVE

IF TENANT SERVICE IS IN USE
ALL ENTRIES MADE ARE ASSIGNED TO THE TENANT NUMBER DIALED

TENANT | DIAL 1-4 | ENTER

TO ENTERTRUNK PROGRAMMING PRESS TRUNK
c 1

TENANT NUMBER						
LDN NUMBER	EQPT NUMBER DIAL 2-112 OR 162-256 (SEE NOTE 1 AND 2)	SEE NOTE 3 TYPE DIAL 2, 4, 21, OR 41 OR DELETE c 1	COS NUMBER DIAL 1-16	(TOLL DENY) ADD TOLL DENY OR DIAL COR CODE 1, 2, OR 3 OR (TOLL ALLOW) DELETE NOTE 6	BUSY LAMP NUMBER DIAL 1-150 OR DELETE c 1	ENTER
	074	2	2	DELETE	74	
	078	2	2	DELETE	75	
	082	2	2	DELETE	76	
	086	21	2	DELETE	77	

EXAMPLE ONLY

1 EQUIPMENT NUMBERS 162-256 APPLIES TO SX-200 ONLY

2 EVEN EQUIPMENT NUMBERS ONLY MAY BE ASSIGNED TO TRUNKS

3 TYPE 2 = DIRECT INWARD SYSTEM ACCESS VNL
TYPE 4 = DIAL IN TIE TRUNK (NON CO) VNL
TYPE 21 = DIRECT INWARD SYSTEM ACCESS NON VNL
TYPE 41 = DIAL IN TIE TRUNK (NON CO)NON VNL

4 TO REMOVEATRUNKASSIGNMENT:
NOTETRUNK MUST FIRST BE REMOVED FROM TRUNKGROUP

EQPT NUMBER | TYPE | DELETE

GENERIC 202-02 TYPE CODE DISPLAY DEFAULTS TO 1 WHEN TRUNK IS DELETED.

5. TOSEETHENEXT EQPT NUMBER ASSIGNED AS A TRUNK

EQPT NUMBER | NEXT • • •

6 COR 1-3 APPLIES ONLY, IF TOLL CONTROL (GENERIC 204/UP) IS USED

MITEL

(d) DID/CCSA Dial-In Tie Trunks

Step	Operation
	If TENANT service is used commence at step 1. If TENANT service is not used, start at step 4 (Note 1)
1.	Press TENANT key.
2.	Dial required tenant number (1, 2, 3 or 4).
3.	Press ENTER key.
4.	Press the TRUNK key.
5.	Press the EQPT NUMBER key.
6.	Dial the equipment number to be associated with the required trunk (See EQUIPMENT NUMBERING, Fig. 2-1)
7.	Press the TYPE key.
8.	Dial the required trunk type code (3 - DID VNL, 6 - CCSA VNL, 31 - DID Non VNL and 61 - CCSA Non VNL) OR Press the DELETE key to delete all trunk information.

Step	Operation
9.	Press the I/C key.
10.	Dial the required NMX code (N - number of digits to be received after the trunk is seized, M - number of digits to be absorbed after the trunk is seized, X - the actual leading digit to be inserted, if required).
11.	Press the BUSY LAMP NUMBER key.
12.	Dial the number of the busy lamp which is to be associated with the selected trunk (see BUSY LAMP POSITION NUMBERING, Fig. 2-2) OR Press the DELETE key, if no busy lamp is required.
13.	Press the ENTER key to enter all DID/CCSA Dial-In Tie Trunk information into the memory.
14.	Repeat steps 1 through 13 for all DID/CCSA trunks required.

Notes:

1. All trunks in one tenant group should be entered in succession following the listed steps. The next group of trunks are entered in a similar manner using the TENANT and ENTER keys again.
2. For Multi-Digit Toll Control, see Section MITL9105/9110-98-212 Programming Procedures.

APPLIES TO GENERIC 203 AND ABOVE

IF TENANT SERVICE IS IN USE
ALL ENTRIES MADE ARE ASSIGNED TO THE TENANT NUMBER DIALED

TENANT | DIAL 1-4 | ENTER

DID/CCSA TRUNKS

(GENERIC 203/UP)

TO ENTER TRUNK PROGRAMMING PRESS

TRUNK

TENANT NUMBER

LDN NUMBER	EQPT NUMBER DIAL 2-110 OR 162-254 (SEE NOTES 1 AND 2)	SEE NOTE 3 TYPE	DIAL 3, 6, 31 OR 61 DELETE	I/C N	DIAL NMXCODE (NOTE 4) M	X	BUSY LAMP NUMBER	DIAL 1-150 OR DELETE	ENTER
	090	3		3	2		78		
	094	3		3	2		79		

EXAMPLE ONLY

NOTES.

1. EQUIPMENT NUMBERS 162-254 APPLY TO SX-200 ONLY
2. ALTERNATE EVEN NUMBERS ONLY MAY BE ASSIGNED TO DID/CCSA TRUNKS
3. TYPE3 = OIOVNL
   TYPE 31 = DID NON VNL
   TYPE 6 = CCSAVNL
   TYPE 61 = CCSA NON VNL
4. N = NUMBER OF DIGITS TO BE RECEIVED AFTER TRUNK IS SEIZED (1-9)
   M = NUMBER OF DIGITS TO BE ABSORBED AFTER TRUNK IS SEIZED (0-8)
   X = LEADING DIGIT TO BE INSERTED, IF REQUIRED.
   MAXIMUM NUMBER OF DIGITS IS 4 (3 IF TENANT SERVICE) AFTER ABSORPTION (M) AND ADDING A DIGIT (X).
5. TO REMOVE A TRUNK ASSIGNMENT: (TRUNK MUST FIRST BE REMOVED FROM TRUNK GROUP)

   EQPT NUMBER | TYPE | DELETE

6. TO SEE THE NEXT EQPT NUMBER ASSIGNED AS A TRUNK

   EQPT NUMBER | NEXT | • • •

MITEL

Step	Operation
	If TENANT service is used commence at step 1. If TENANT service is not used, start at step 4 (Note 1)
1.	Press TENANT key.
2.	Dial required tenant number (1, 2, 3 or 4).
3.	Press ENTER key.
4.	Press the TRUNK GROUP key.
5.	Dial the required trunk group number (1 through 12).
6.	Press the ACCESS CODE key.
7.	Dial the required trunk group access code
	OR
	Press the DELETE key to remove all trunk group information.
a.	Press the TYPE key.
9.	Dial the four-digit trunk group type (See TRUNK GROUP TYPE CODES, Table 2-4).
10.	Press the TOLL DENY key.
11.	Press the ADD key to provide toll denial on the trunk group.
	OR
	Press the DELETE key if toll denial is not required on the trunk group.
12.	Press the OVFLO GROUP key.
13.	Dial the number of the trunk group (1 through 12) to which calls will overflow if the trunk group is busy. You must not overflow into the same group. (See Note 1)
	OR
	Press the DELETE key if no overflow is required.
14.	Press the EQPT NUMBER key.
15.	Dial the equipment number of the first trunk in the trunk group.
16.	Press the EQPT NUMBER key.
17.	Dial the equipment number of the next trunk in the trunk group.
18.	Repeat steps 16 and 17 until all required equipment numbers have been dialed.
19.	Press the ENTER key to enter all trunk group information into the memory.
20.	Repeat steps 1 through 19 for all required trunk groups.

Note 1: If a call to a trunk group is routed to the overflow group the restrictions of the overflow group are in effect for that call.

TRUNKGROUPS

APPLIES TO GENERIC 203 AND ABOVE

IF TENANT SERVICE IS IN USE
ALL ENTRIES MADE ARE ASSIGNED TO THE TENANT NUMBER DIALED

TENANT | DIAL 1-4 | ENTER

TO ENTER TRUNK GROUP PROGRAMMING PRESS

TRUNK GROUP (TRUNK INFORMATION MUST BE ENTERED BEFORE TRUNK GROUPDATA)

TENANT NUMBER

TRUNK GROUP (DIAL 1-12)	ACCESS CODE (DIAL CODE OR DELETE)	TYPE (NOTE 6) 1ST DIGIT	2ND DIGIT	3RD DIGIT	4TH DIGIT	TOLL DENY (NOTE 8)	ADD OR DELETE	OVFLO GROUP (NOTE 5)	DIAL 1-12 OR DELETE	SEE NOTE 4 AND 7 — PRESS EQPT NUMBER BEFORE DIALING EACH EQUIPMENT NUMBER ENTRY; AFTER LAST ENTRY PRESS ENTER								
1	9	1	1	1	1	ADD			✓	066	068							
2	81	2	3	4	1	DELETE			✓	070	072							

NOTES

TO SEE THE TRUNKS IN A TRUNK GROUP: TRUNK GROUP | DIAL NUMBER (1-12) | EQPT NUMBER | NEXT | NEXT | • • •

TO SEE ALL TRUNK GROUPS: TRUNK GROUP | NEXT | NEXT | . . .

TO DELETE TRUNK GROUP: TRUNK GROUP | DIAL NUMBER (1-12) | ACCESS CODE | DELETE | ENTER | . . .

TO MAKE A CHANGE TO A TRUNK GROUP. THE LIST OF MEMBERS MUST BE RE-ENTERED. INDIVIDUAL MEMBERS CAN'NOT BE DELETED OR CHANGED. THE EXISTING TRUNK GROUP LIST IS AUTOMATICALLY DELETED WHEN YOU START TO ENTER A NEW ONE

ORIGINAL AND OVERFLOW TRUNK GROUPS MUST BE THE SAME TYPE AND HAVE THE SAME TOLL RESTRICTION CHARACTERISTICS.
IF GENERIC 202 IS USED THE TRUNKS WITHIN A GROUP MAY ONLY BE PROGRAMMED FOR CIRCULAR HUNTING.

6. TRUNK GROUP TYPE IS 4 DIGITS

1st DIGIT
1-NO SUPERVISION
P-ANSWER SUPERVISION
3-TOLL REVERSAL
4-OUTGOING AUDIO INHIBITED UNTIL ANSWER SUPERVISION (GENERIC 203. 204)
OUTGOING AUDIO INHIBITED UNTIL ANSWER SUPERVISION TIMEOUT OR # DIALED (GENERIC 205)

2nd DIGIT
1-NO MESSAGE REGISTER
Z-MESSAGE REGISTER (GENERIC 203/UP)
3-SMDR WITHOUT MESSAGE REGISTER (GENERIC 205)
4-SMDR WITH MESSAGE REGISTER (GENERIC 205)

3rd DIGIT
1-ROTARY DIAL OFFICE, NO WAIT FOR DIAL TONE
2-ROTARY DIAL OFFICE, WAIT FOR DIAL TONE
3-TOUCH-TONE DIAL OFFICE, NO WAIT FOR DIAL TONE
4-TOUCH-TONE DIAL OFFICE. WAIT FOR DIAL TONE

4th DIGIT
1-CENTRAL OFFICE
P-NON-CO
3-IDENTIFIED TRUNK GROUP (NON-CO)

7. IF GENERIC 203 OR HIGHER IS USED, THE TRUNKS WITHIN A TRUNK GROUP MAY BE PROGRAMMED FOR EITHER TERMINAL OR CIRCULAR HUNTING, IF TERMINAL HUNTING IS REQUIRED, ENTER TRUNK EQUIPMENT NUMBERS IN REQUIRED SEQUENCE.
IF CIRCULAR HUNTING IS REQUIRED MARE LAST TRUNK EQUIPMENT NUMBER THE SAME AS THE FIRST TRUNK EQUIPMENT NUMBER.

8. USE OF TOLL DENY KEY DOES NOT APPLY IF TOLL CONTROL (GENERIC 204/UP) IS USED
SEE SECTION MITL9105/9110-98-212 OR TOLL CONTROL FORMS THIS SECTION.

MITEL

APPENDIX 1

MITEL ACTION PROCEDURES

GENERAL

AI.01 Task oriented functions in this section are implemented using MITEL ACTION PROCEDURES (MAP's).

AI.02 A MAP is a step by step procedure using a flow chart principle, written and illustrated where necessary to a level of detail that allows both experienced and inexperienced personnel to carry out the tasks detailed. A MAP contains two levels of information as follows:

(a) For experienced personnel, a series of steps (level one) each numbered [n] and annotated with minimal information.

(b) For inexperienced personnel, each step referred to in (a) above is amplified by a connected series of numbered substeps [nA] (level two).

AI.03 A typical example of a MAP is shown in Fig. AI, with the two levels detailed.

MAP SYMBOLS

AI.04 There are four basic symbol shapes which may be used in a MAP, and are defined as follows.

AI.05 AND Block: Used to indicate a level one step that must be performed. Consists of a square with the word AND centred in the block.

AI.08 OR **Block:** Used to indicate a choice of level one steps, one of which must be performed. Consists of a rectangle, with the text centred in the block, and with the word OR appearing between the alternative operations.

AI.07 The rectangle is also used to border instructions which imply that the operator must perform a task outside the scope of the MAP. The text is centred in the rectangle.

AI.08 DECISION Block: Used to indicate a decision within the level one steps which must be made. The symbol is based on a hexagon with the top and bottom sides extended. Decision text is centred in the symbol.

AI.09 START/FINISH/JUMP TO Block: Used to indicate the start and finish of a MAP. Also used to indicate 'jump to' points within the MAP, for example "go to [n]" or "from [n]" or "return to [n]". The symbol is a rectangle with semi circular ends. Text is centred in the symbol.

THE OPERATORS USE OF MAP'S

Experienced Operator

AI.10 For the experienced operator to complete a task using a MAP, reference to the sequential short form level one steps is usually all that is necessary. Using Fig. AI-l as an example, the experienced operator would proceed as follows.

AI.11 At [1] makes a decision based on the information within the block. If the answer is YES the operator must proceed to a different MAP. If the answer is NO the operator is faced with another decision at block [2].

AI.12 At [2] if the decision is NO there is no requirement to proceed further and the test is abandoned. This naturally results in a FINISH block. If the decision is YES the operator proceeds to [3] and [4] in succession, i.e. dials the DID station number and completes the call to the check extension.

AI.13 The description of the instructions carried out in AI.05 and AI.06 have assumed that the level of competence of the operator is such that short form level one steps contain sufficient information, and therefore the operator reads only the centre column of the MAP,-top to bottom of the page.

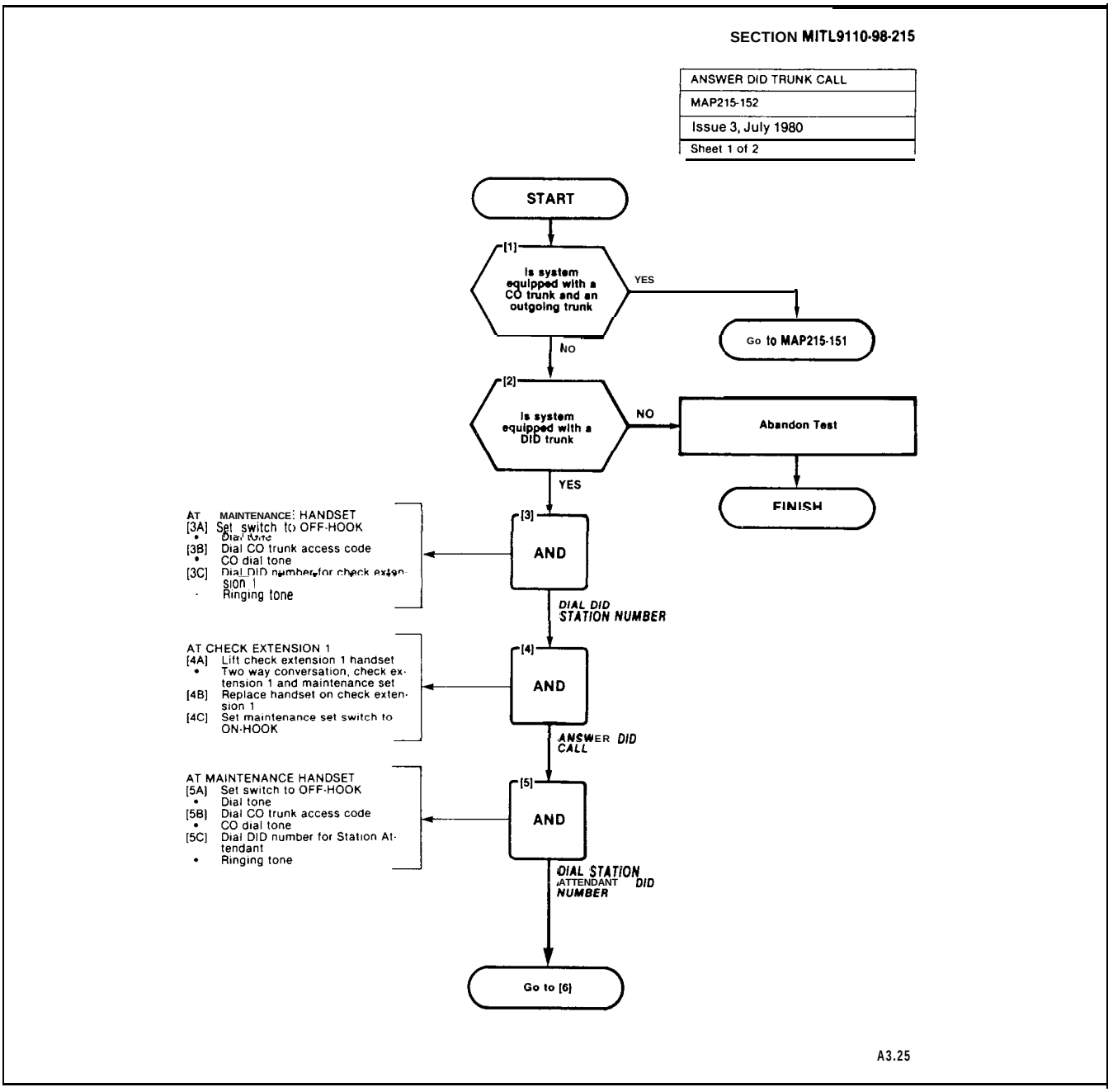

Fig. Al Typical Map Page

Al.15 Using Fig. **Al as** an example the path followed should be:

(a) At [1] and [2] make the decisions called for at these steps as before.

(b) At step [3] dial the DID station number by performing substeps [3A], [3B] and [3C].

TOOLS, TEST EQUIPMENT AND SPECIAL INSTRUCTIONS

Al.18 Any tools, test equipment or special instructions that the operator requires or needs to know are stated on the first page of each MAP. If the MAP is long, and contains a number of sub procedures, these are listed in synopsis form on the first page.

APPENDIX 2
PROGRAMMING PROCEDURES

1. GENERAL

A2.01 This appendix details the preferred order in which the SX-100 or SX-200 PABX should be programmed for features and options required by the customer. This appendix also includes procedures for programming Multi Digit Toll Control and Speed Call.

A2.02 Multi Digit Toll Control is available in Generic 204/up. Speed Call is available in generic 205 only, Note that both features require the use of the Extended Programming mode. In this appendix MAP210-221 will cover entering the Extended mode for both features. MAP210-244 will cover exiting the Extended mode for both features.

A2.03 Table A2-1 details the order of the standard system programming procedures. Table A2-2 details the order of the Multi Digit Toll Control programming procedures. Table A2-3 details the order of Speed Call programming of the system.

TABLE A2-1
STANDARD

Step	Title	MAP
1	System Programming	21 0-201
2	Select Programming Options	21 0-202
3	Program System Options	21 0-203
4	Program COS Options	21 0-204
5	Assign Feature Access Codes	21 0-205
6	Program New Extensions	21 0-206
7	Program Extension Hunt Group	21 0-207
8	Program New Non Dial-In Trunks	21 0-208
9	Program New Dial-In Trunks	21 0-209
10	Program New DID Trunks	210-210
11	Program Trunk Groups	21 o-21 1
12	Terminate Programming Mode	210-212

TABLE A2-2
MULTI DIGIT TOLL CONTROL

Order	Option	MAP No.
1	Selection of Extended Programming	21 o-221
2	Absorb Plan	21 o-222
3	Control Plan	21 0-223
4	Trunk Group Class of Restriction	21 0-224
5	Restriction Tables	21 0-225
6	Add an Entry	21 0-226
7	Displaying Sequential Entrys	21 0-227
8	Search for an Entry	21 0-228
9	Delete an Entry	2 1 o-229
10	Terminating Programming	21 0-244

TABLE A2-3
SPEED CALL

Order	Option	MAP No.
1	Selection of Extended Programming	21 0-221
2	Programming Personal Tables	21 0-242
3	Convert Tables From Personal to Common Use	21 0-243
4	Terminating Programming	21 0-244

START

[1]

Is the system in programming mode

(I)

YES

NO

[2]

AND

REMOVE PROGRAM MODE

At Equipment:
[2A] Set thumbwheel switch on tone control card (slot 18, yellow) to 8888

[3]

AND

PERFORM LAMP TEST

At the Programming Console:
[3A] Press LAMP TEST key
- All LEDs light, tone ringer sounds

OR

- All displays show 8

[3B] Press LAMP TEST key
- All displays show 8

OR

- All LEDs light, tone ringer sounds

[4]

Were lamp test displays correct

NO

Go to Section MITL9105/9110-98-350

YES

[5]

AND

IDENTIFY GENERIC ISSUE AND CONSOLE (FIG. 201-1)

[5A] Press IDENT key
- Source display shows software generic number and its issue (Fig. 201-l)
- DESTINATION display shows the MITEL internal issue number and the code number for the console (Fig. 201-l)

To [6]

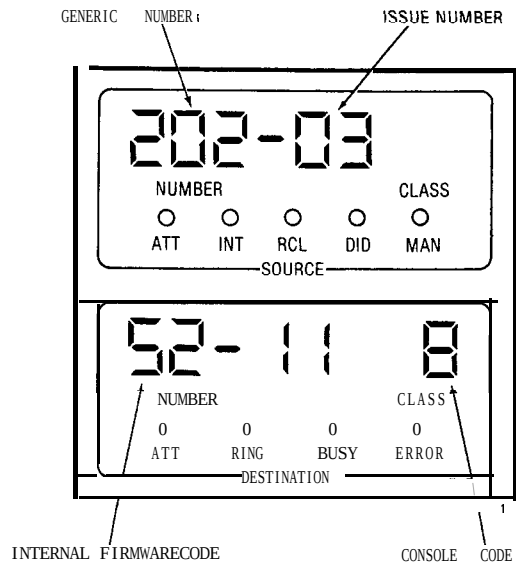

CODE	CONSOLE
0	Maintenance
1	Attendant 1
2	Attendant 2

Fig. 201-l

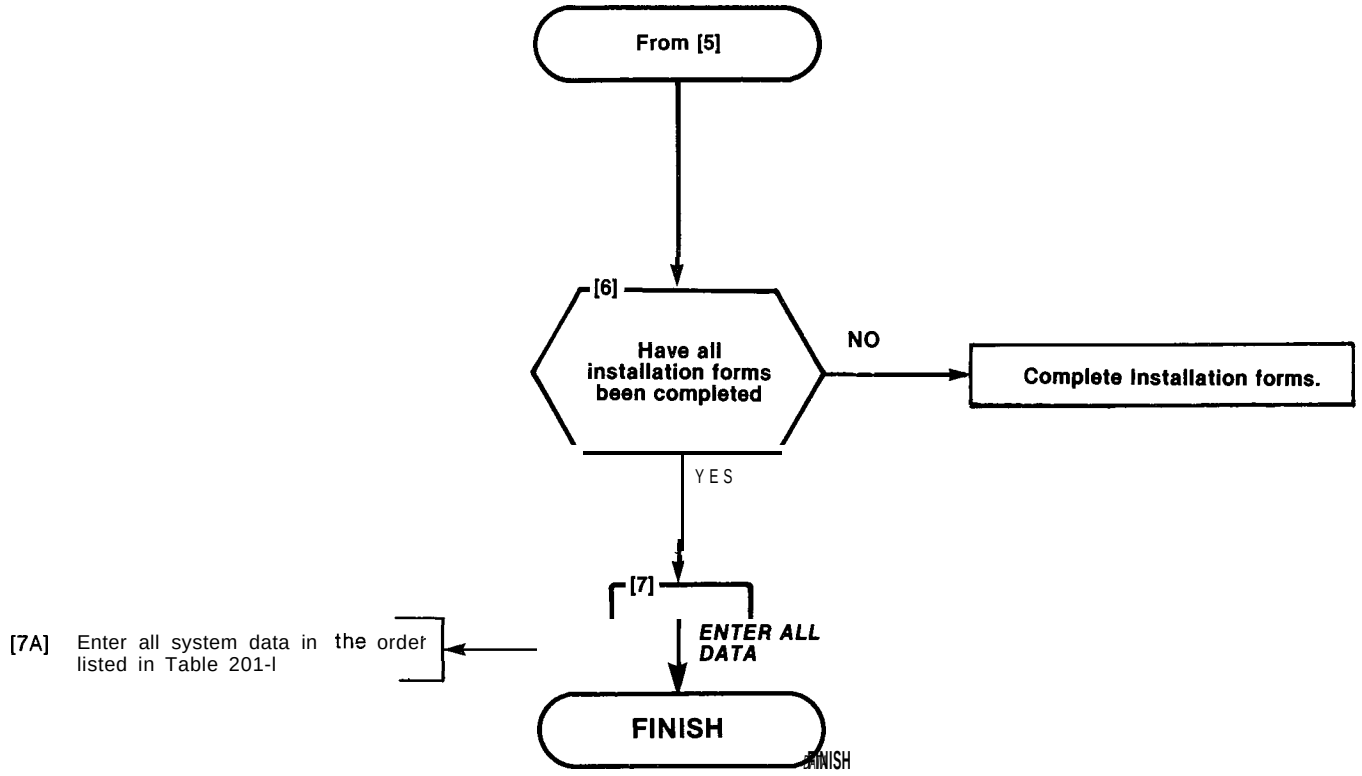

TABLE 201-I

Step	Title	MAP
1	Select Programming Mode	21 0-202
2	Program System Options	21 0-203
3	Program COS Options	21 0-204
4	Assign Feature Access Codes	21 0-205
5	Program New Extensions	21 0-206
6	Progam Extension Hunt Group	21 0-207
7	Program New Non Dial-In Trunks	21 0-208
8	Program New Dial-In Trunks	21 0-209
9	Program New DID Trunks	210-210
10	Program Trunk Groups	21 o-21 1
11	Terminate Programming Mode	210-212

* Not supplied with Generic 202

SELECT PROGRAMMING MODE
MAP210-202
Issue 3, July 1980
Sheet 1 of 3

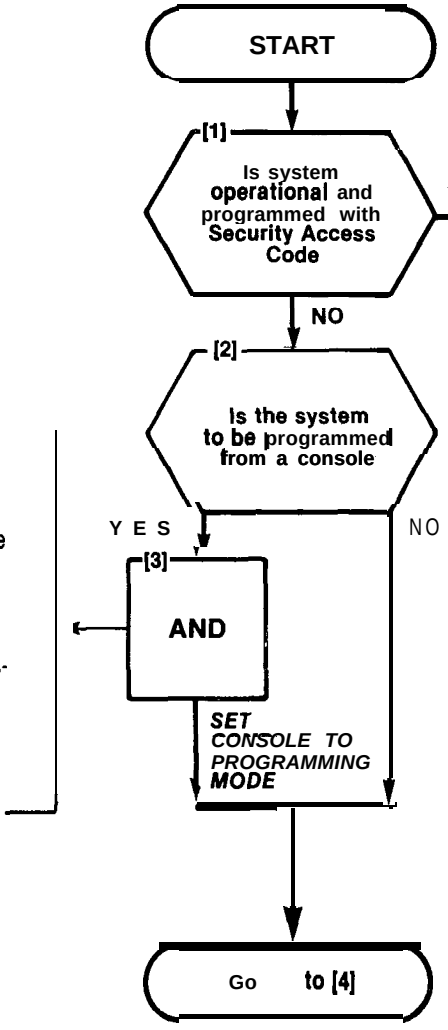

Place console in programming mode
[3A] Place programming console overlay over console faceplate (Fig. 202-1)
[3B] Press ENTER key twice
- All displays dark

[3C] Set thumbwheel switches on tone control card (card position 18, yellow) to appropriate position (Table 202-1)
[3D] Press LAMP TEST key
- LAMP TEST lamp lit

CAUTION
Equipment must be in non-program mode at start. See MAP210-201 Step [2].

Place console in program mode by dialing Security Access Code and go to required MAPs (210-203 through -214)

NOTE
To use Programming Security Access Code the following criteria must apply:
- Feature 29 (MAP210-205) is programmed with the code
- Generic 204/up is installed

NOTE
When using the Maintenance console, plug it in to the maintenance connector on the cabinet maintenance panel.

TABLE 202-1

CODE	CONSOLE
7770	Maintenance
7771	Attendant No. 1
7772	Attendant No. 2

SELECT PROGRAMMING MODE
MAP210-202
Issue 3, July 1980
Sheet 2 of 3

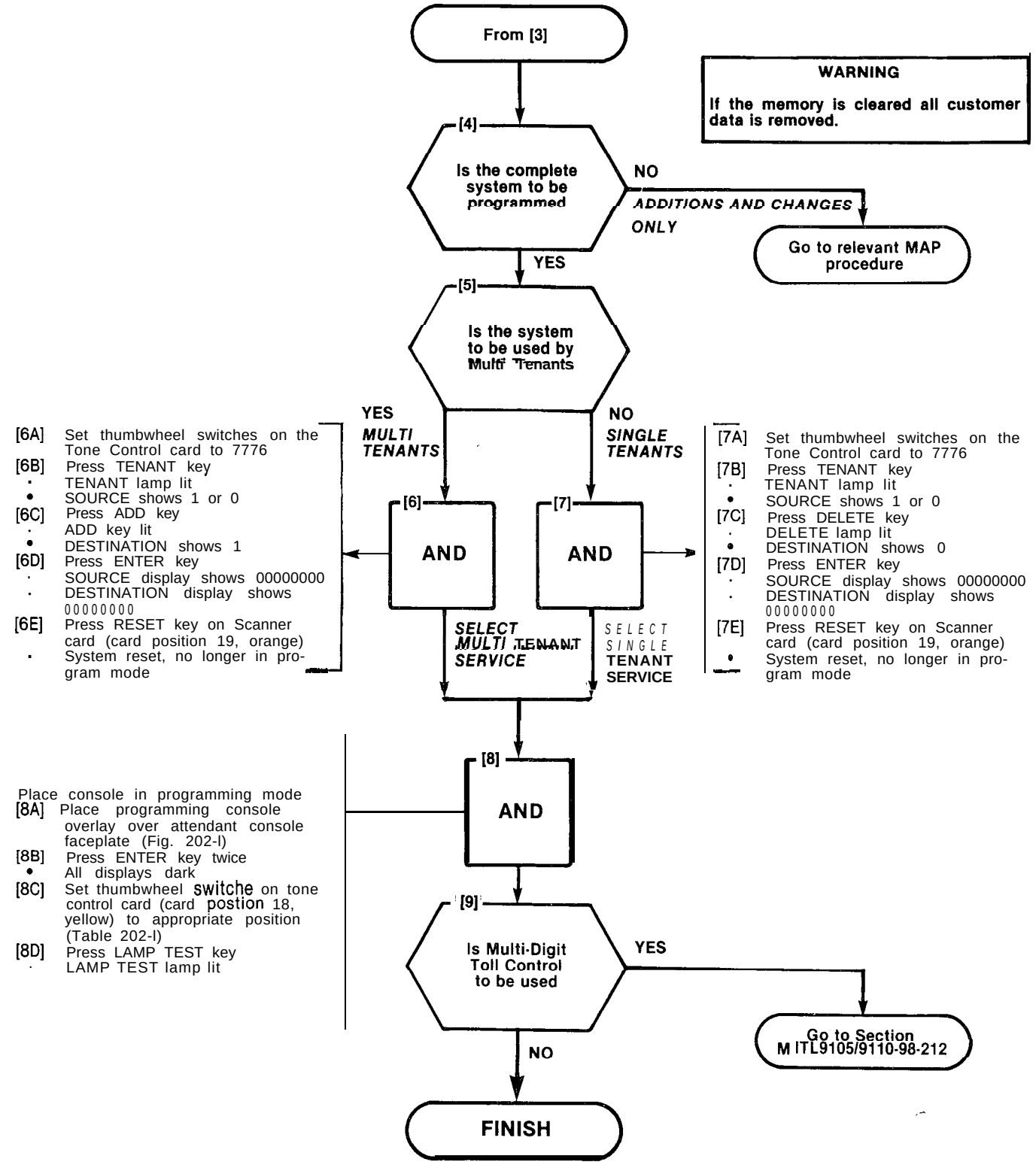

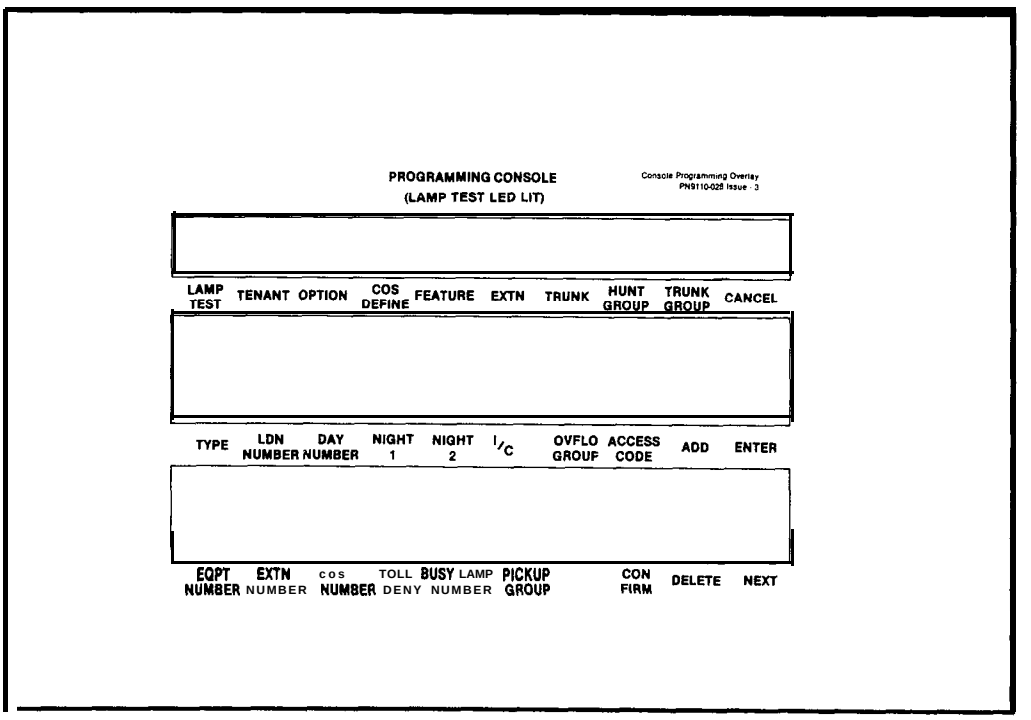

Fig. 202-1 Programming Console Overlay

NOTES
(1) All entries are made from the console dial pad.
(2) OPTION lamp lit throughout procedure.
(3) A display of EO indicates that an incorrect key had been pressed. Press the key specified.

SYNOPSIS
Select option mode.
Enter required system codes. (100 - 234)
Press ADD or DELETE keys.
Press ENTER key.

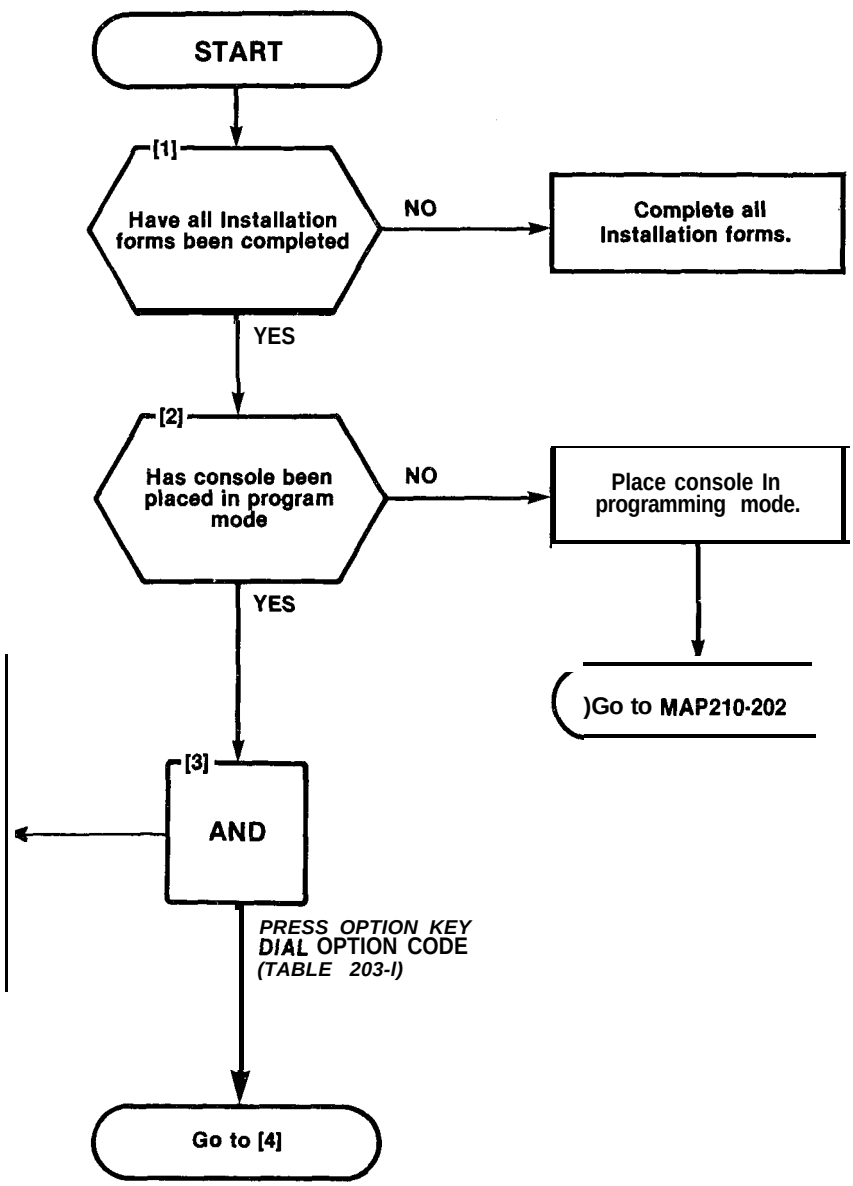

Select System Option
[3A] Press OPTION key.
- OPTION lamp lit
- SOURCE display shows 100 and 0 if no options enabled or the number of the first option enabled and 1.

[3B] Dial option number required (100 - 234) Table 203-I
- SOURCE display shows number dialed and 1 if the option enabled or 0 if the option is not enabled

TABLE 203-I
SYSTEM OPTIONS

Option Number	Option Name
100	Discriminating Ringing
101	Transfer Dial Tone
102	Flexible Night Service
103	Night Service Automatic Switching
104	TAFAS Available During Day
105	Outgoing Trunk Camp-On
106	Outgoing Trunk Callback
107	Can Flash if on an Incoming Trunk
108	Can Flash if on an Outgoing Trunk
109	Can Flash if Talking to Station
110	Cannot Dial a Trunk After Flashing
111	Cannot Dial a Trunk After Flashing if Holding or in Conference with a Trunk
112	Lockout Alarm Enable
113'	Tenant Service (set automatically when tenant service is selected when programming)
114	Flash Time 0.7s (Only in Generic 202 and REV 5 up)
114'	Tenant Service - Separate Consoles
115	Vacant Number Intercept to Attendant
116	Illegal Access Intercept to Attendant
117	DID/Dial-In/CCSA Vacant/Illegal Intercept to Attendant
118	Attendant Camp-On
119*	Attendant Conference
120	Attendant Busy Override
121	Attendant Serial Call
122	Bell Off Enable
123	Page Button Enable
124	New Call Tone Enable
125	Both Mode Standard
126	Callback Button Enable
127	Trunk Busy-Out Enable
128	Both Button Enable
129	Attendant CO Trunk-CO Trunk Connect Enable
130	Attendant CO Trunk-Non CO Trunk Connect Enable
131	Attendant Non CO Trunk-Non CO Trunk Connect Enable
132*	Controlled Outgoing Restriction Set-Up (Room Restriction)
133*	Controlled Station Restriction Set-Up (Do Not Disturb)
134'	Controlled Station to Station Restriction Set-Up (Call Blocking)
135	Attendant DISA Code Set-Up Enable
136	Limited Wait For Dial Tone
137*	Message Waiting Set-Up (lamp)
138'	Message Waiting Set-Up (bell)
139	Attendant Timed Recall - Camp-On -20s
140	Attendant Timed Recall - Camp-On -40s
141	Attendant Timed Recall - Don't Answer - 20s
142	Attendant Timed Recall - Don't Answer - 40s
143	Attendant Timed Recall - Hold - 20s
144	Attendant Timed Recall - Hold - 40s
145	Night Service Timeout - 20s
146	Night Service Timeout - 40s
147	Call Forwarding Don't Answer Timeout -20s
148	Call Forwarding - Don't Answer Timeout -40s
149	Call Forwarding - Busy (System, DID Dial-In Tie Trunk, CCSA)

TABLE 203-I (CONT'D)
SYSTEM OPTIONS

Option Number	Option Name
150	Call Forwarding - Don't Answer (System, DID Dial-In Tie Trunk, CCSA)
151	Park and Call-Hold Recall - 2 minutes
152	Park and Call-Hold Recall - 4 minutes
153	End of Dial Signal for Outgoing Trunks (#)
154	24 Hour Clock
155	First Digit Toll Deny
156'	Message Registration Enable
157*	Message Registration: Count Additional Supervisions
158'	Message Registration: Timer = 20 seconds
159*	Message Registration: Timer = 40 seconds
160'	Message Registration: Multiplier = 4 units
161'	Message Registration: Multiplier = 3 units
162'	Message Registration: Multiplier = 2 units
163'	Message Registration: Surcharge = 8 units
164'	Message Registration: Surcharge = 7 units
165*	Message Registration: Surcharge = 6 units
166"	Message Registration: Surcharge = 5 units
167*	Message Registration: Surcharge = 4 units
168'	Message Registration: Surcharge = 3 units
169'	Message Registration: Surcharge = 2 units
170'	Message Registration: Surcharge = 1 unit
171*	DID to Non-CO Trunks via Attendant Inhibit
172*	GUEST ROOM Button Enable
173'	ROOM STATUS Button Enable & Display Enable
174*	Do Not Disturb Intercept to Attendant
175'	Do Not Disturb and Message Waiting Displays
176'	Single Digit Dialing Enable
177'	Single Digit Dialing Time-Out = 3 seconds
178'	Single Digit Dialing Time-Out = 5 seconds
179'	Attendant Station Busy-Out Enable
180'	Flash Timing = 0.7 seconds
181'	Flash Timing = 0.9 seconds
182'	Flash Timing = 1.1 seconds
183*	Trunk Recall Partial Inhibit
184	Reserved
185	Reserved
186	Reserved
187	Reserved
188	Reserved
189	Reserved
190"	Automatic Wakeup Enable
191"	Automatic Wakeup Print
192**	Automatic Wakeup Music On Hold
193"	Room Register Audit Enable
194"	Room Status Audit Enable
195"	Message Register & Message Waiting Change Print Enable
196"	Ignore Print Enable
197**	Remote System Reset - Protection Override
198**	Enable Non-CO Trunk to Trunk Connect
199"	Toll Control Enable
200**	Traffic Measurement Enable
201"	Traffic Measurement Extreme Value Mode
202**	Traffic Measurement Compact Report
203**	Traffic Measurement Polling
204**	Traffic Measurement Autoprint
205'.	Identified Trunk Group Enable
206*.	Inhibit Automatic Supervision
207"	Printer Carriage Return Delay
208**	Zero Message Register After Room Register Audit
209*.	Traffic Measurement - Console Enable
210**	Attendant Printer Control Enable
211"	System ID Enable
212**	Nightbell 3 with Minor Alarm Enable
213**	HIM Printouts: Extra Line Feeds
214**	Automatic Wakeup Alarm
215	Reserved
216†	Speed Call Enable
217†	Speed Call Programming Enable
218†	Speed Call: Confidential Number Display and Change Enable
219†	Reserved
220†	Station Message Detail Recording: Outgoing Calls
221†	Station Message Detail Recording: Incoming Calls
222†	SMDR: Extended Record
223†	SMDR: Record Meter Pulses
224†	SMDR: Indicate Long Calls
225†	SMDR: Drop Incomplete Outgoing Calls
226†	SMDR: Record Only Incoming calls (CCSA & Non-dial tie trunks)
227†	SMDR: Drop Calls of Less Than 8 Digits
228†	Discriminating Dial Tone
229†	Special ANI Feature
230†	Account Code Enable
231 †	Account Code Length, 4 Digits
232†	Account Code Length, 8 Digits
233†	Account Code Length, 12 Digits
234†	Variable Length Account Codes

" Generic 203 and above *. * Generic 204 and 205
** Generic 204 only † Generic 205 only

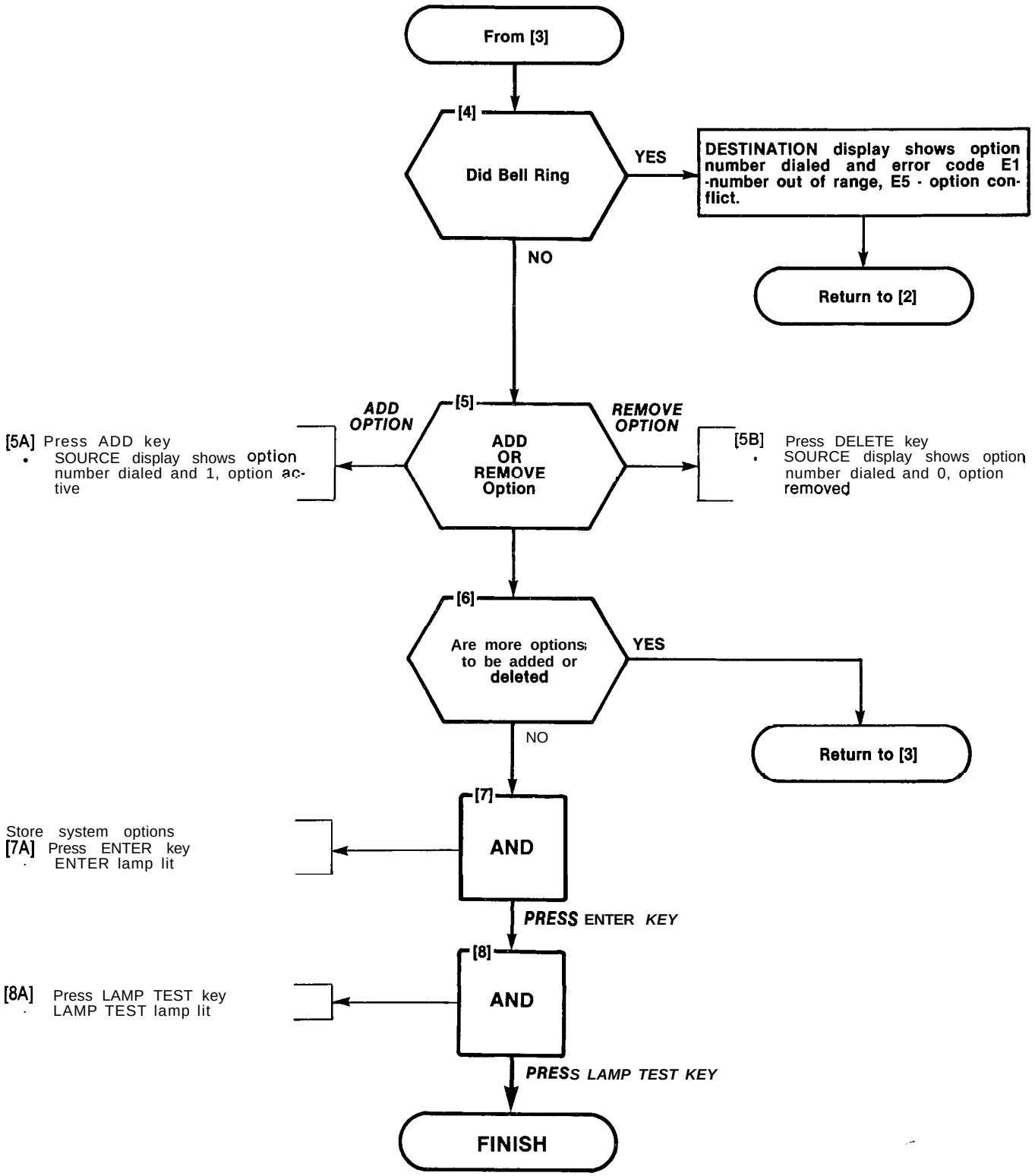
From [3]
[4]
Did Bell Ring
YES
DESTINATION display shows option number dialed and error code E1 -number out of range, E5 - option conflict.
Return to [2]
NO
[5]
ADD OR REMOVE Option
ADD OPTION
REMOVE OPTION
[5A] Press ADD key
• SOURCE display shows option number dialed and 1, option active
[5B] Press DELETE key
• SOURCE display shows option number dialed and 0, option removed
[6]
Are more options to be added or deleted
YES
NO
Return to [3]
[7]
AND
Store system options
[7A] Press ENTER key
• ENTER lamp lit
PRESS ENTER KEY
[8]
AND
[8A] Press LAMP TEST key
• LAMP TEST lamp lit
PRESS LAMP TEST KEY
FINISH

PROGRAM COS OPTIONS
MAP210-204
Issue 3, July 1980
Sheet 1 of 6

(1) All entries are made from the console dial pad
(2) COS DEFINE lamp remains lit through procedure
(3)A display of EO indicates that an incorrect key was pressed; press key specified

SYNOPSIS
Define COS group (1 . 16)
Enter all option codes (33 . 94)
Press ADD or DELETE keys
Press ENTER key

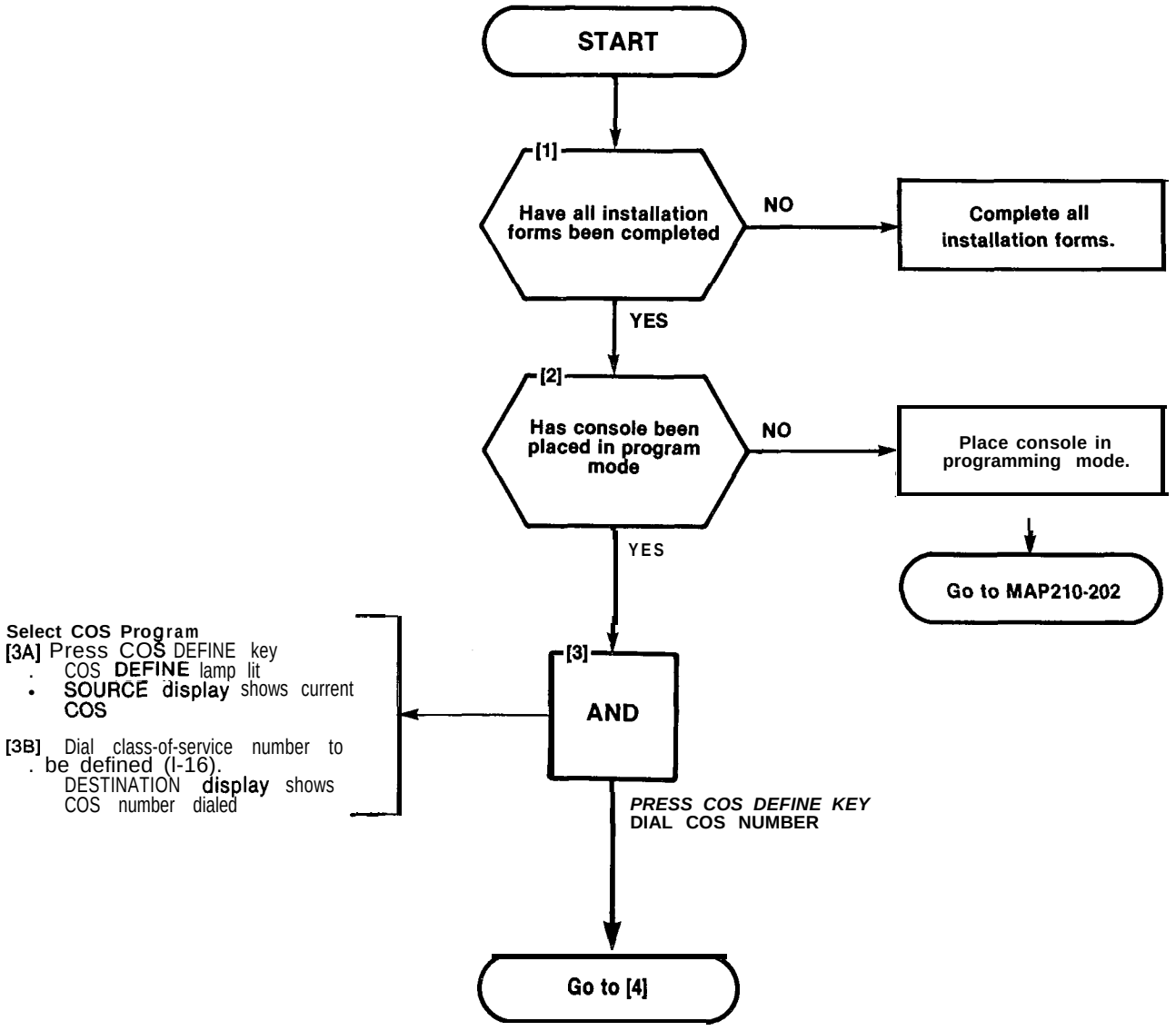

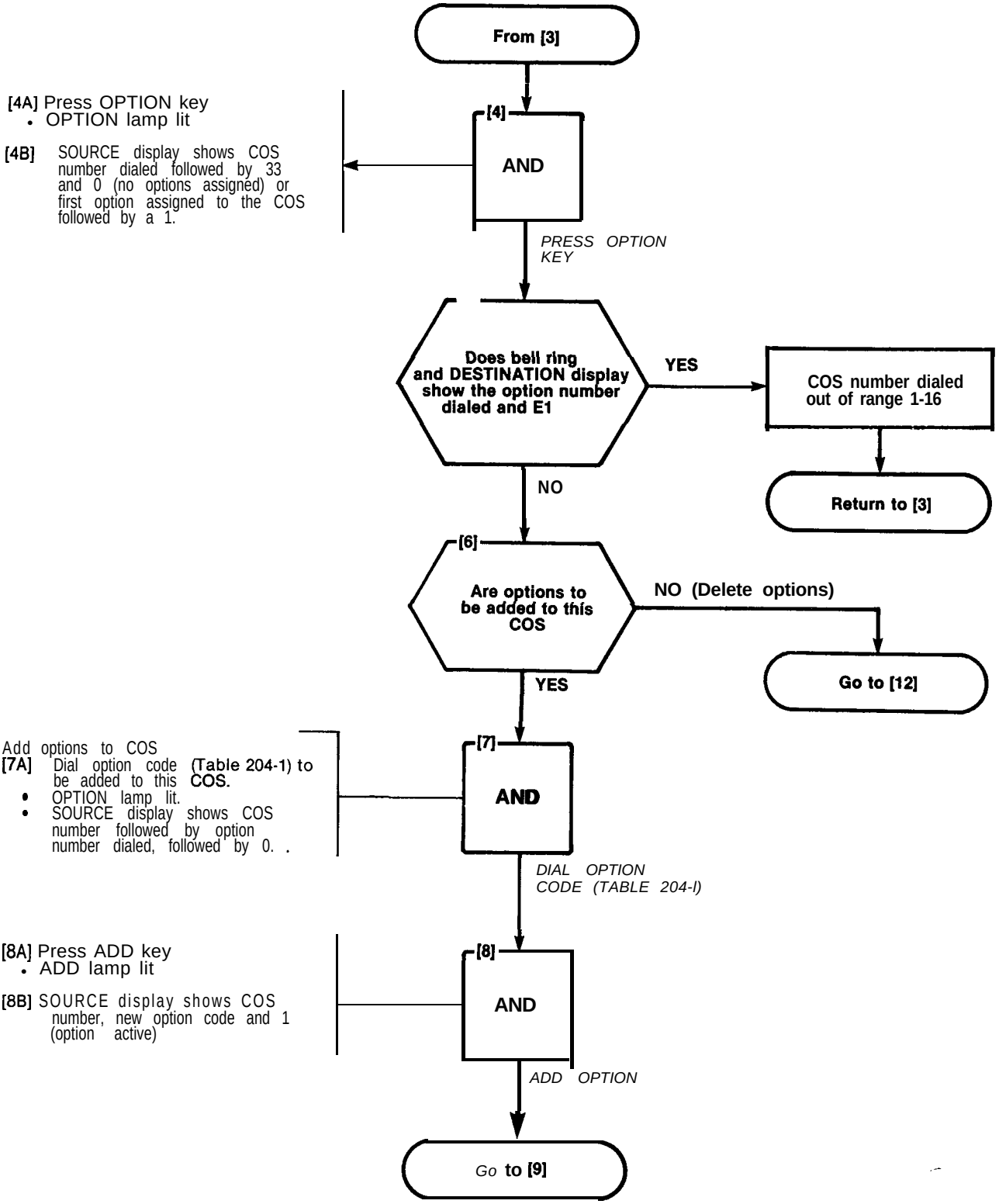
From [3]
[4]
AND
[4A] Press OPTION key
• OPTION lamp lit
[4B] SOURCE display shows COS number dialed followed by 33 and 0 (no options assigned) or first option assigned to the COS followed by a 1.
PRESS OPTION KEY
Does bell ring and DESTINATION display show the option number dialed and E1
YES
COS number dialed out of range 1-16
Return to [3]
NO
[6]
Are options to be added to this COS
NO (Delete options)
Go to [12]
YES
[7]
AND
Add options to COS
[7A] Dial option code (Table 204-1) to be added to this COS.
• OPTION lamp lit.
• SOURCE display shows COS number followed by option number dialed, followed by 0. .
DIAL OPTION CODE (TABLE 204-I)
[8]
AND
[8A] Press ADD key
• ADD lamp lit
[8B] SOURCE display shows COS number, new option code and 1 (option active)
ADD OPTION
Go to [9]

TABLE 204-I
CLASS-OF-SERVICE OPTIONS

Option Number	Extension Options	Option Number	Extension Options
33	Automatic Callback	65	Trunk Group 1 Access
34	Call Forwarding - Busy	66	Trunk Group 2 Access
35	Call Forwarding Don't Answer	67	Trunk Group 3 Access
36	Call Forwarding - Follow Me	68	Trunk Group 4 Access
37	Call Park	69	Trunk Group 5 Access
38	Never a Forwardee	70	Trunk Group 6 Access
39	Directed Call Pickup	71	Trunk Group 7 Access
40	Executive Busy Override	72	Trunk Group 8 Access
41	Data Security	73	Trunk Group 9 Acess
42	Station Override Security	74	Trunk Group 10 Access
'43	Inward Restriction (DID)	75	Trunk Group 11 Access
44	Originate Only	76	Trunk Group 12 Access
45	Receive Only	'77	Message Waiting Applies
46	Flash Disable	● 78	Room Do Not Disturb Setup Enable
47	Never a Consultee	● [illegible]	Call Hold and Retrieve Access
48	Broker's Call	● 80	Room Status Applies
49	Station Conference	*81	Call Forward System Inhibit
50	Meet-Me Conference	"82	Alarm Call Setup Enable
51	Camp-On	†83	Forced Account Code Entry
52	Do Not Overflow	†84	No SMDR Record for This Line
53	Paging Access	†85	Speed Call Table 1 and 2 Access
54	TAFAS Access	†86	Speed Call Table 3 and 4 Access
55	Hold Pickup	†87	Speed Call Table 5 and 6 Access
56	Account Code Access	†88	Speed Call Table 7 and 8 Access
57	Manual Line	†89	Speed Call Table 9 and 10 Access
58	Contact Monitor	†90	Speed Call Table 11 and 12 Access
59	Non-CO Trunk via Attendant Inhibit	†91	Speed Call Table 13 and 14 Access
60	CO Trunks via Attendant Inhibit	†92	Speed Call Table 15 and 16 Access
61	No Dial Tone	†93	Speed Call Table 17 and 18 Access
62	Flash for Attendant	†94	Cannot Dial a Trunk After Flashing
'63	Call Blocking		
● 64	Message Register		

* Generic 203 and above
** Generic 204 only
† Generic 205 only

TABLE 204-2
OPTION CONFLICTS

Option			Option	
45	Receive Disable		58	Contact Monitor
46	Flash Disable		48	Brokers Call
46	Flash Disable		49	Station Conference
46	Flash Disable	and	62	Flash for Attendant
48	Brokers Call		49	Station Conference
62	Flash for Attendant		49	Station Conference
62	Flash for Attendant		48	Brokers Call

PROGRAM COS OPTIONS
MAP210-204
Issue 3, July 1980
Sheet 4 of 6

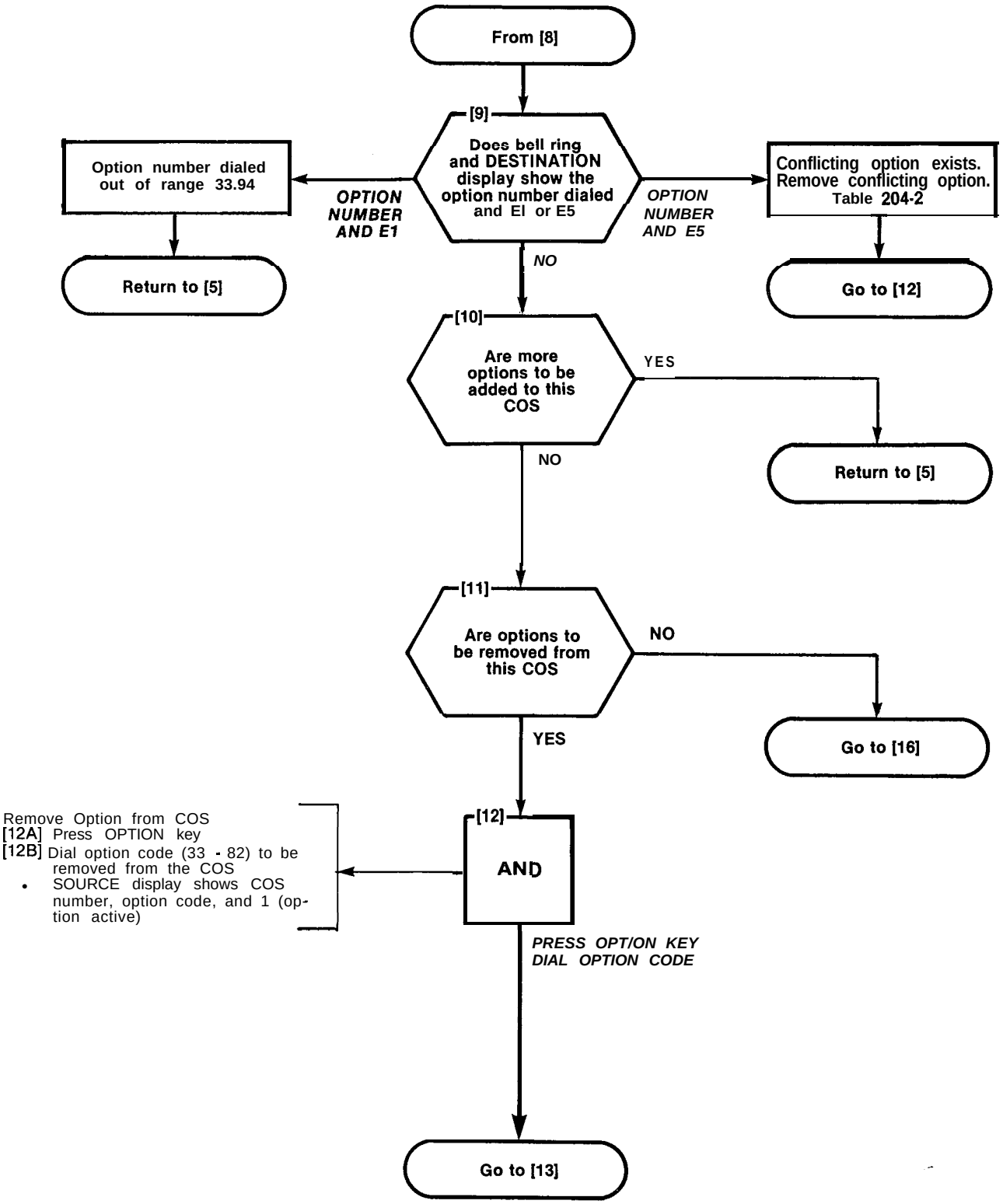

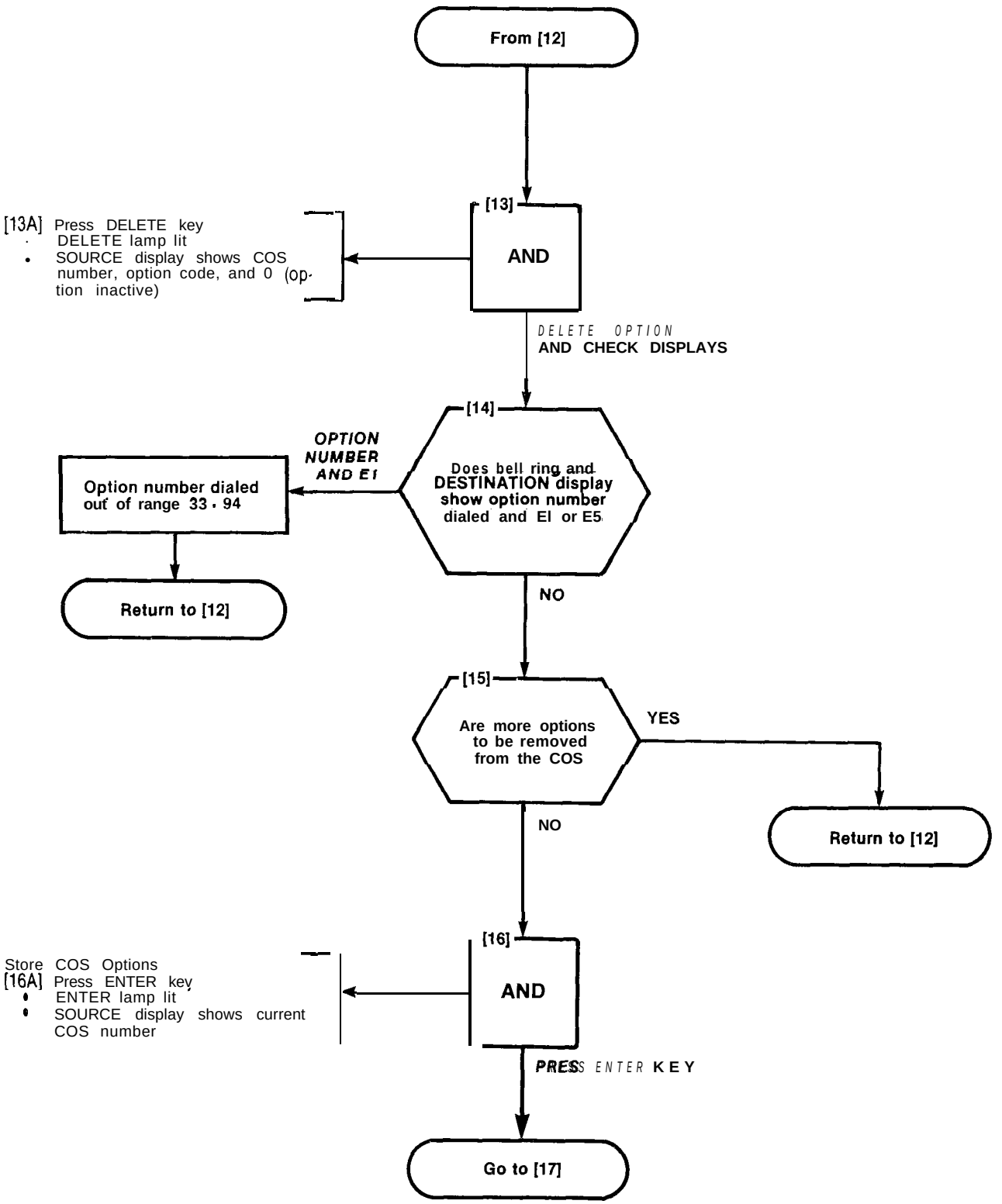
From [12]
[13]
AND
[13A] Press DELETE key
DELETE lamp lit
SOURCE display shows COS number, option code, and 0 (option inactive)
DELETE OPTION AND CHECK DISPLAYS
[14]
Does bell ring and DESTINATION display show option number dialed and EI or E5
OPTION NUMBER AND E1
Option number dialed out of range 33 - 94
Return to [12]
NO
[15]
Are more options to be removed from the COS
YES
Return to [12]
NO
[16]
AND
Store COS Options
[16A] Press ENTER key
ENTER lamp lit
SOURCE display shows current COS number
PRESS ENTER KEY
Go to [17]

PROGRAM COS OPTIONS
MAP210-204
Issue 3, July 1980
Sheet 6 of 6

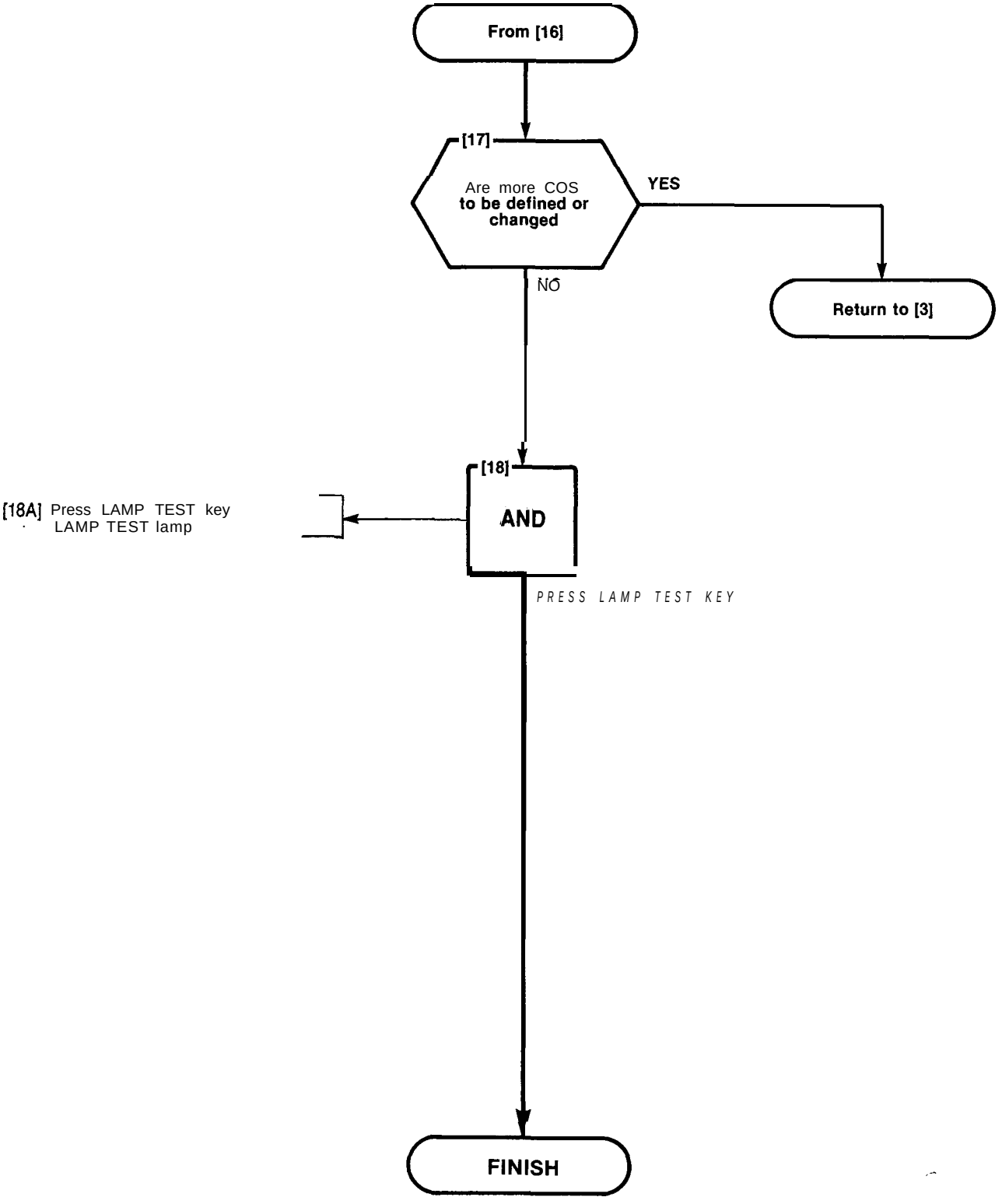

ASSIGN FEATURE ACCESS CODES

MAP210-205

Issue 3, July 1980

Sheet 1 of 3

NOTES

1. All entries are made from the console dial pad.
2. FEATURE lamp lit throughout procedure.
3. A display of EO indicates that an incorrect key was pressed, check procedure and press correct key.

SYNOPSIS

Enter feature number.
Assign or delete access code.
Press ENTER key.
Repeat for all required features.

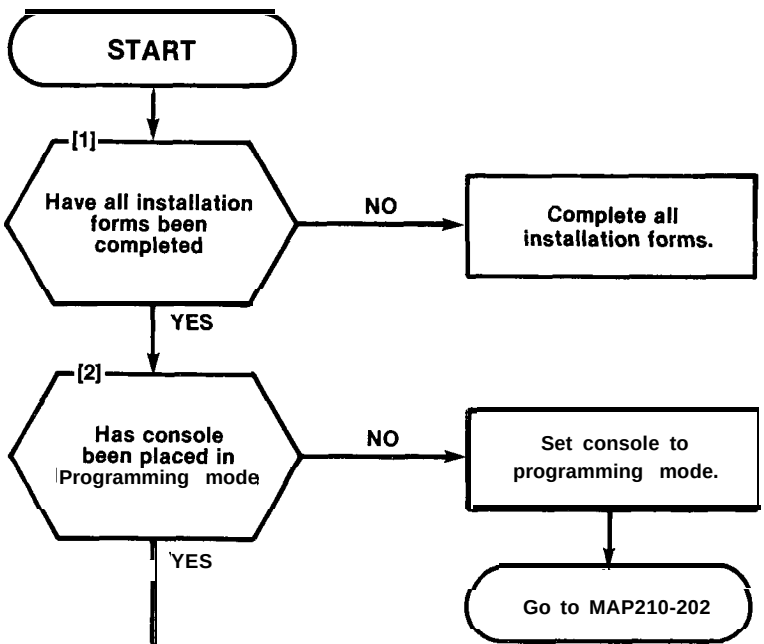

SELECT FEATURE ACCESS CODE PROGRAM

[3A] Press FEATURE key.
- SOURCE display shows feature number and its assigned access code or the feature number and ----, no access code assigned to the feature.

[3B] Dial number of feature to be added or changed (Table 205-I)
- SOURCE display shows feature number and its assigned access code or the feature number and ----, no access code assigned to the feature.
- DESTINATION display shows feature number dialed.

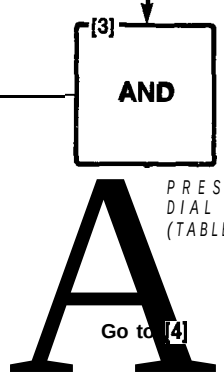

PRESS FEATURE KEY
DIAL FEATURE CODE
(TABLE 205-I)

Go to [4]

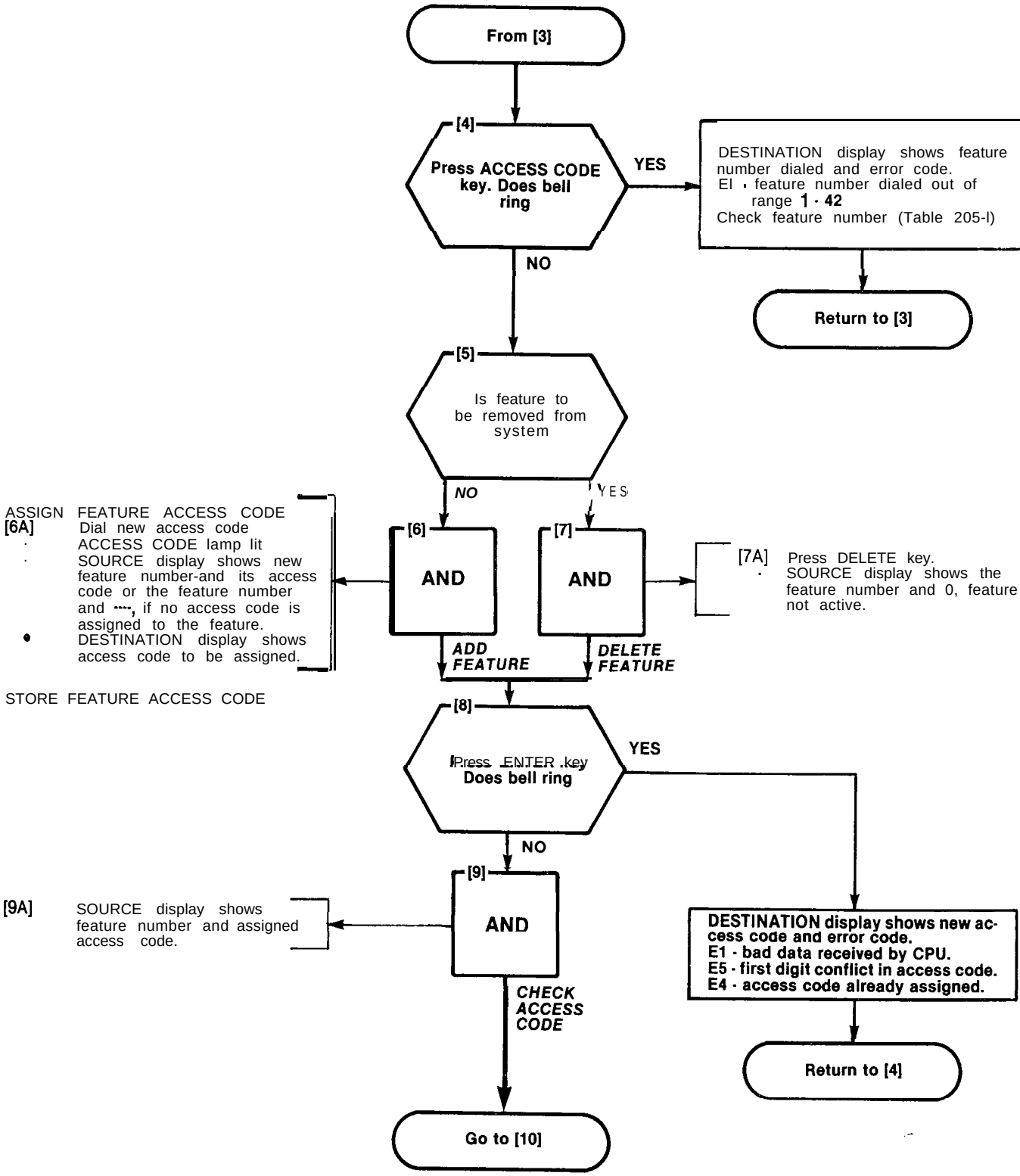
From [3]
[4]
Press ACCESS CODE key. Does bell ring
YES
DESTINATION display shows feature number dialed and error code.
El - feature number dialed out of range 1 - 42
Check feature number (Table 205-l)
Return to [3]
NO
[5]
Is feature to be removed from system
NO
YES
ASSIGN FEATURE ACCESS CODE
[6A] Dial new access code
ACCESS CODE lamp lit
SOURCE display shows new feature number-and its access code or the feature number and ----, if no access code is assigned to the feature.
DESTINATION display shows access code to be assigned.
[6]
AND
[7]
AND
[7A] Press DELETE key.
SOURCE display shows the feature number and 0, feature not active.
ADD FEATURE
DELETE FEATURE
STORE FEATURE ACCESS CODE
[8]
Press ENTER key
Does bell ring
YES
NO
[9]
AND
[9A] SOURCE display shows feature number and assigned access code.
CHECK ACCESS CODE
DESTINATION display shows new access code and error code.
E1 - bad data received by CPU.
E5 - first digit conflict in access code.
E4 - access code already assigned.
Return to [4]
Go to [10]

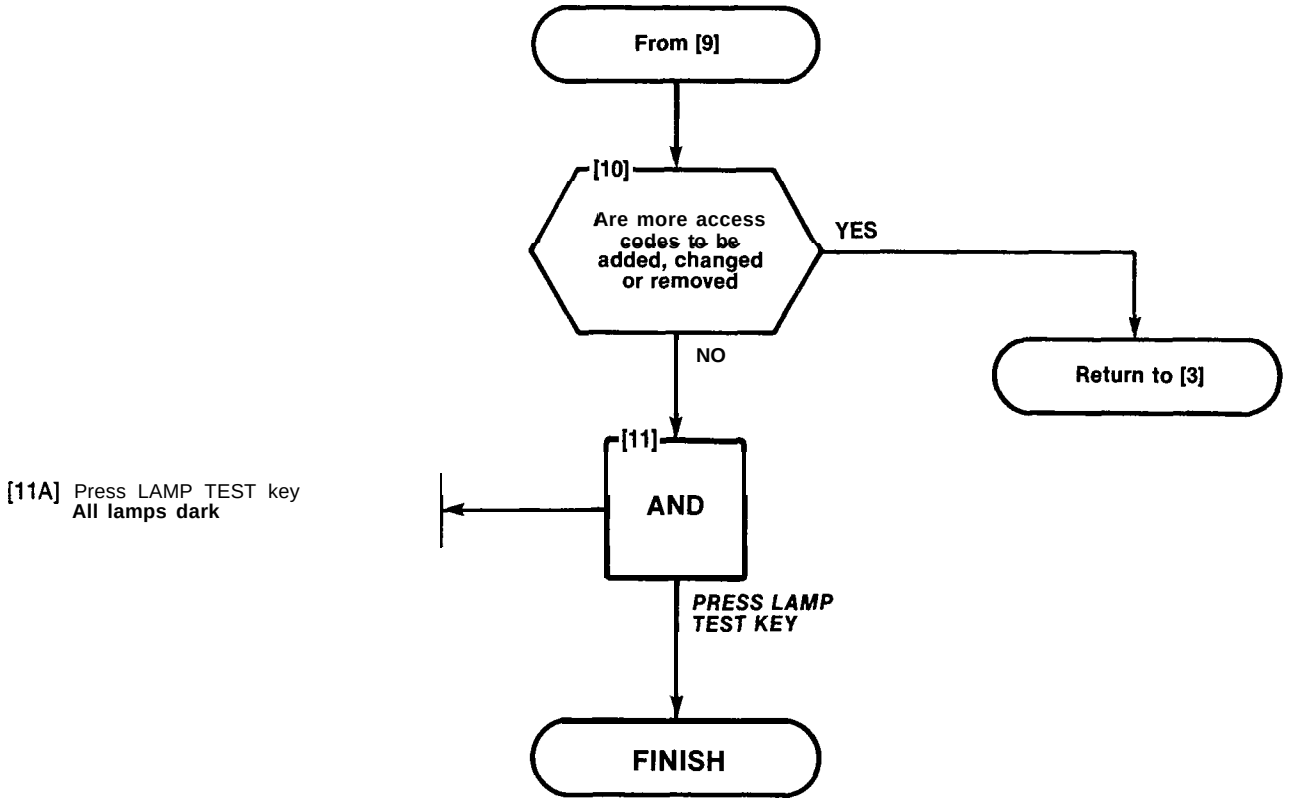

TABLE 205-I
FEATURE ASSIGNMENTS

Feature Number	Description	Feature Number	Description
	Attendant Access	22	Executive Busy Override† (Single Digit)
2	Callback - Don't Answer	23	Callback - Busy† (Single Digit)
3	Call Forward - Busy	24*	Room Do Not Disturb Setup and Cancel
4	Call Forward - Don't Answer	25*	Call Hold
5	Call Forward Follow Me	26*	Call Retrieve (Local)
6	Call Park	27*	Call Retrieve (Remote)
7	Dial Call Pickup	28*	Room Status Update (Maid in Room)
8	Directed Call Pickup	29**	Programming Security Code
9	Meet-Me Conference	30**	Alarm Call
10	Pager 1	33 - 42**	Trunk Group 1 Assign access codes 33-42 to Trunk Group 1 if necessary
11	Pager 2		
12	Hold Pickup Access		
13	Pager 1 and 2		
14	TAFAS-All		
15	TAFAS-1		
16	TAFAS-2		
17	TAFAS-3		
18	Attendant Function		
19	Maintenance Function		
20	DID Attendant Access Code		
21	Direct Inward System Access		

* **Generic** 203 and above
** Generic 204 only
† First digit conflicts between these codes and other access codes are allowed. See Section MITL9105/9110-98-105 for complete description of feature operation.

PROGRAM EXTENSIONS	1
MAP210-206	
Issue 3, July 1980	
Sheet 1 of 7	

NOTES

(1) All entries are made from the console dial pad.
(2) EXTN lamp lit throughout procedure.
(3) A display of E0 indicates that an incorrect key has been pressed. Press the key specified in the MAP.

CAUTION
If Multi-Digit Toll Control (Generic 204) is required, this MAP is not applicable. Extensions must be programmed in accordance with Section MITL9105/9110-98-212.

SYNOPSIS
Select required tenants (l-4)
Enter extension equipment number.
Enter extension number.
Enter COS number.
Enter toll allow/deny.
Enter busy lamp position number.
Enter pickup group number.
Press ENTER key.

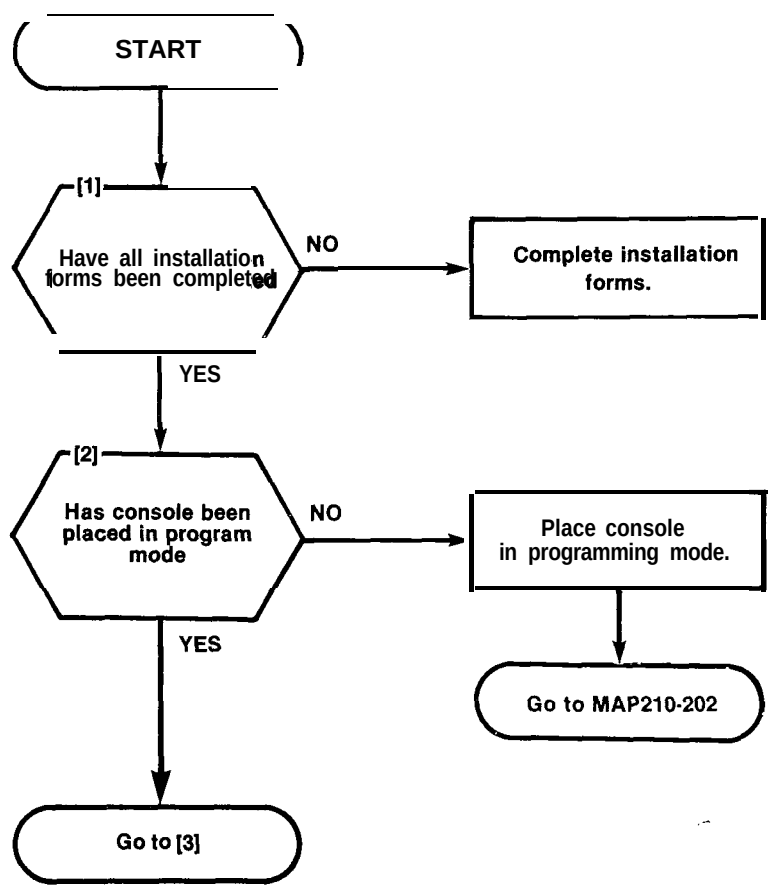

PROGRAM EXTENSIONS
MAP210-206
Issue 3, July 1980
Sheet 2 of 7

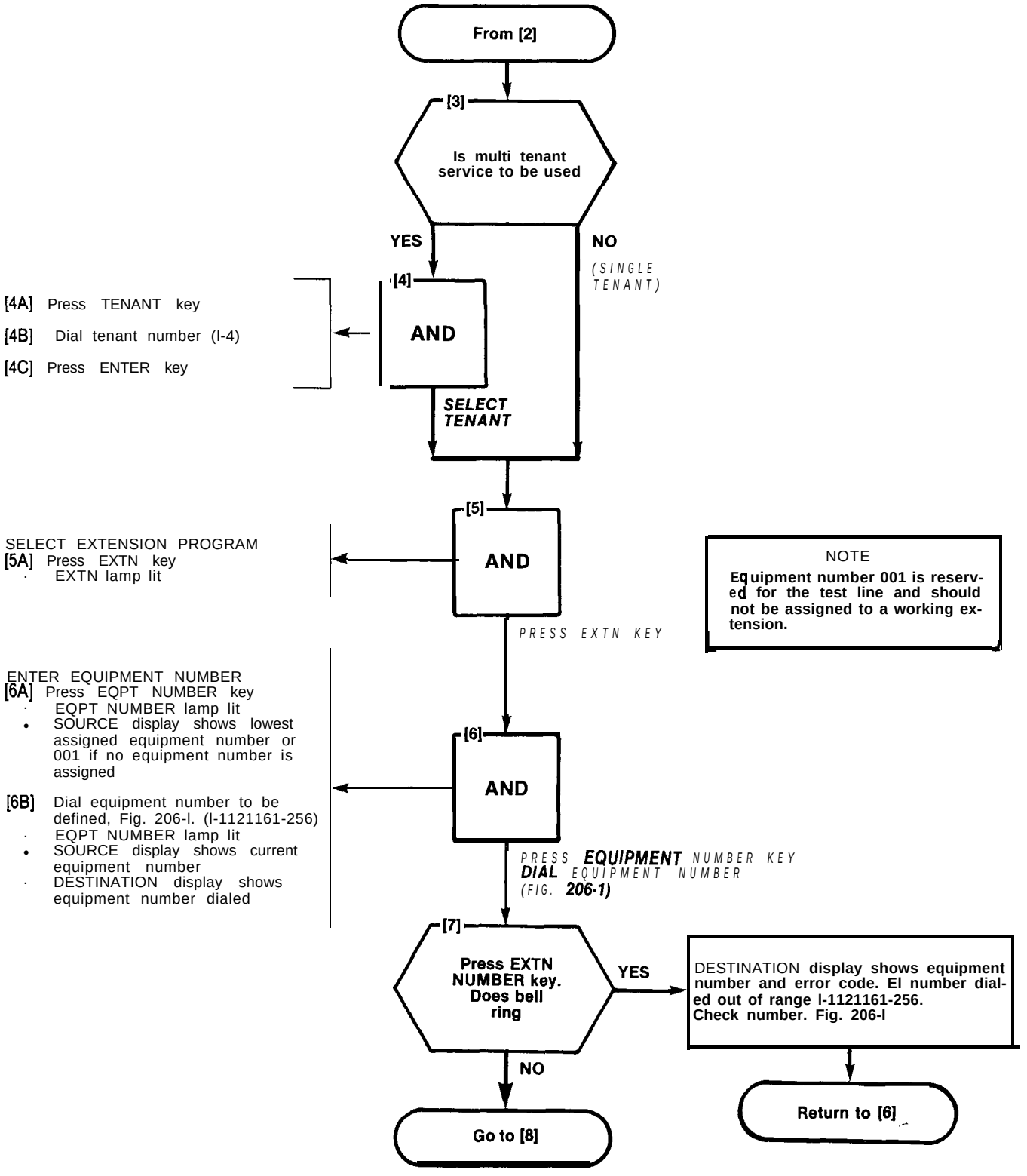

HARDWARE POSITION NUMBER	PLUG 7	PLUG 9	PLUG 11		EXTENSION UNIT NO.	TRUNK UNIT NO. (4 TRUNK)	TRUNK UNIT NO. (2 TRUNK)
	161 169 177 185 193 201	209 217 225 233 241 249			1		
	162 170 178 186 194 202	210 218 226 234 242 250			2	1	1
	163 171 179 187 195 203	211 219 227 235 243 251			3		
	164 172 180 188 196 204	212 220 228 236 244 252			4	2	
	165 173 181 189 197 205	213 221 229 237 245 253			5		
	166 174 182 190 198 206	214 222 230 238 246 254			6	3	2
	167 175 183 191 199 207	215 223 231 239 247 255			7		
	168 176 184 192 200 208	216 224 232 240 248 256			8	4	
	1 2 3 4 5 6	7 8 9 10 11 12	13 14 15 16 17 18	19 20 21 22	CARD POSITION		
	31 32 33 34 35 36	37 38 39 40 41 42	43 44 45 46 47 48	49 50 51 52	SLOT NUMBER		
	PLUG 8	PLUG 10	PLUG 12				

SHELF 2 (SX-200 ONLY)

EQUIPMENT POSITION NUMBER	PLUG1	PLUG3	PLUG5						EXTENSION UNIT NO.	TRUNK UNIT NO. (4 TRUNK)	TRUNK UNIT NO. (2 TRUNK)
	001 009 017 025 033 041	049 057 065 073 081 089	097 105	RECEIVER NO. 1	CONSOLE CONTROL CARD	CONSOLE CONTROL CARD	TONE CONTROL		1		
	002 010 018 026 034 042	050 058 066 074 082 090	098 106						2	1	1
	003 011 019 027 035 043	051 059 067 075 083 091	099 107					RESERVED	3		
	004 012 020 028 036 044	052 060 068 076 084 092	100 108					FOR	4	2	
	005 013 021 029 037 045	053 061 069 077 085 093	101 109					COMMON	5		
	006 014 022 030 038 046	054 062 070 078 086 094	102 110					CONTROLS	6	3	2
	007 015 023 031 039 047	055 063 071 079 087 095	103 111						7		
	008 016 024 032 040 048	056 064 072 080 088 096	104 112						8	4	
2	1 2 3 4 5 6	7 8 9 10 11 12	13 14 15 16 17 18					19 20 21 22	CARD POSITION		
	1 2 3 4 5 6	7 8 9 10 11 12	13 14 15 16 17 18					19 20 21 22	SLOTNUMBER		
	PLUG2	PLUG4	PLUG6								

SHELF1

NOTES: 1. EQUIPMENT POSITION 001 IS RESERVED FOR THE TEST LINE AND MUST THEREFORE BE EQUIPPED WITH A LINE CARD.
2. TRUNK EQUIPMENT NUMBER IS SAME AS INDIVIDUAL TRUNK ACCESS CODE.

Fig. 206-1 Hardware/Equipment **Numbering**

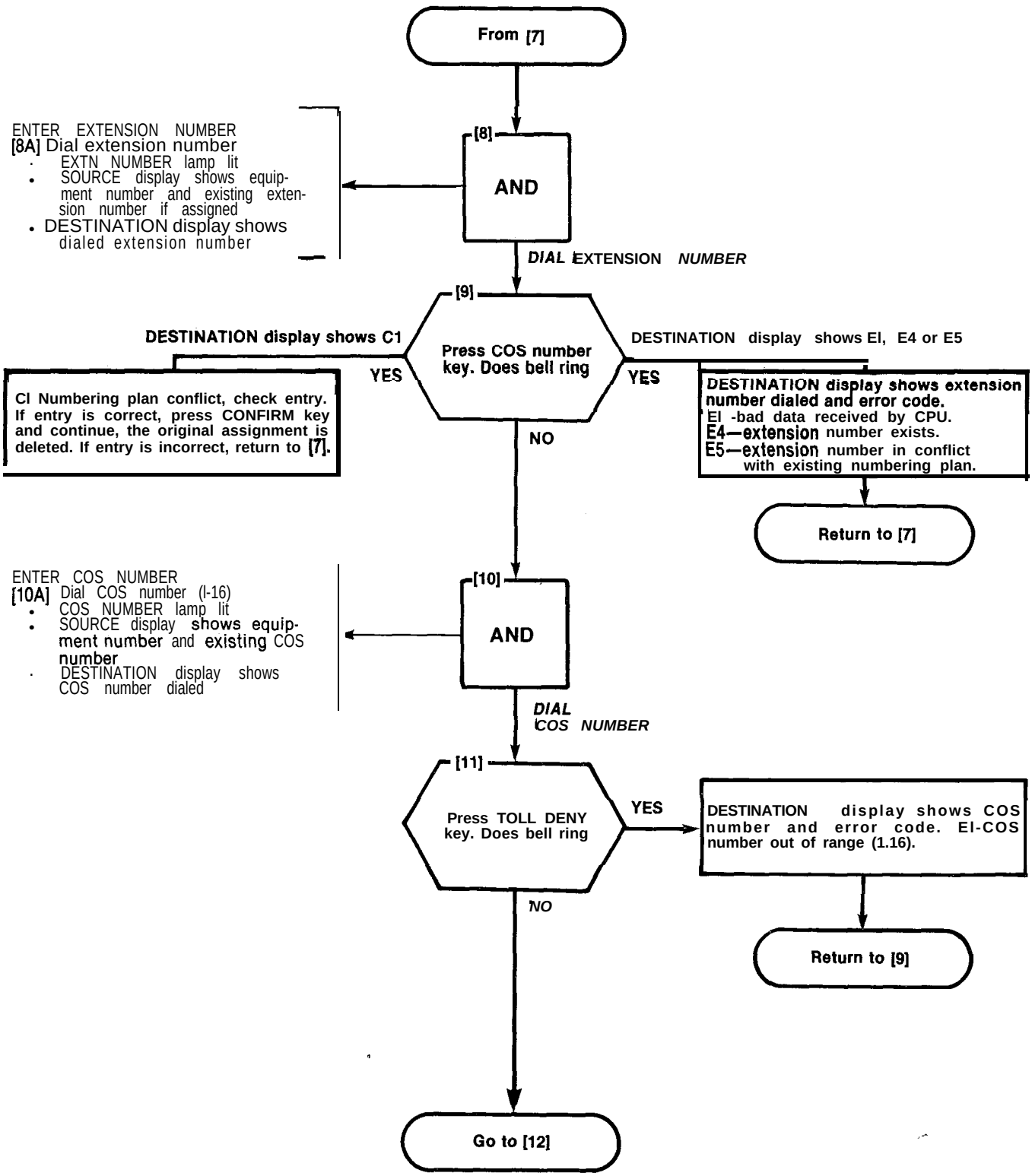
From [7]
[8]
AND
ENTER EXTENSION NUMBER
[8A] Dial extension number
• EXTN NUMBER lamp lit
• SOURCE display shows equipment number and existing extension number if assigned
• DESTINATION display shows dialed extension number
DIAL EXTENSION NUMBER
[9]
Press COS number key. Does bell ring
DESTINATION display shows C1
YES
C1 Numbering plan conflict, check entry. If entry is correct, press CONFIRM key and continue, the original assignment is deleted. If entry is incorrect, return to [7].
DESTINATION display shows E1, E4 or E5
YES
DESTINATION display shows extension number dialed and error code.
E1 -bad data received by CPU.
E4—extension number exists.
E5—extension number in conflict with existing numbering plan.
Return to [7]
NO
[10]
AND
ENTER COS NUMBER
[10A] Dial COS number (1-16)
• COS NUMBER lamp lit
• SOURCE display shows equipment number and existing COS number
• DESTINATION display shows COS number dialed
DIAL COS NUMBER
[11]
Press TOLL DENY key. Does bell ring
YES
DESTINATION display shows COS number and error code. E1-COS number out of range (1.16).
Return to [9]
NO
Go to [12]

PROGRAM EXTENSIONS
MAP210-206
Issue 3, July 1980
Sheet 5 of 7

From [11]

[12] Is this extension to be

TOLL ALLOWED / TOLL DENIED

See CAU [redacted] MAP210-206.

ASSIGN TOLL ACCESS
[13A] Press DELETE key
- DELETE lamp lit
- SOURCE display shows equipment number and existing Toll Allow/Deny code (0 = Allow, 1 = Deny)
- DESTINATION display shows O-Toll Allow

[13] AND — PRESS DELETE KEY

[14] AND — PRESS ADD KEY

[14A] Press ADD key
- ADD lamp lit
- SOURCE display shows equipment number and the existing toll access code
- DESTINATION display shows code 1 (Deny)

[15] Press BUSY LAMP NUMBER key. Does bell ring

YES → DESTINATION display shows Toll Allow or Deny code and error code. EI, bad data received by CPU.

Return to [11]

NO

ASSIGN EXTENSION TO BUSY LAMP FIELD
[16A] Dial BUSY LAMP NUMBER (I-150) to be assigned to extension (See Fig. 206-2
- BUSY LAMP NUMBER lamp lit
- SOURCE display shows equipment number and existing Busy Lamp assignment
- DESTINATION display shows new Busy Lamp Number

[16] AND

DIAL REQUIRED BUSY LAMP NUMBER (FIG. 206-2)

Go to [17]

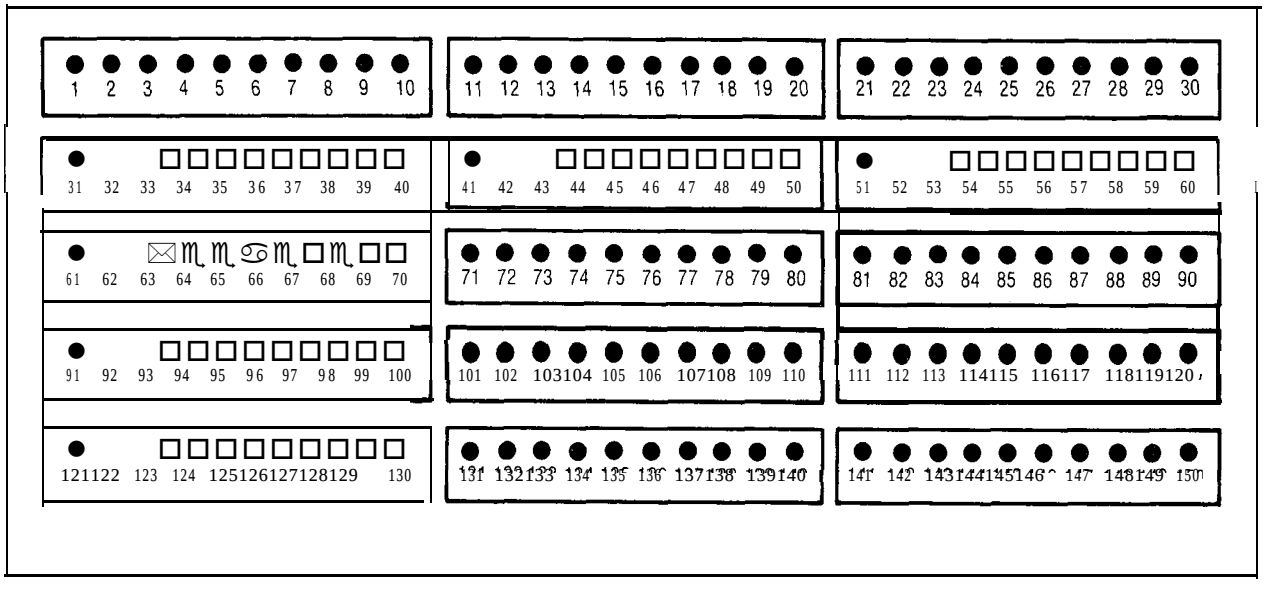

Fig. 206-2 Busy Lamp Position Numbering

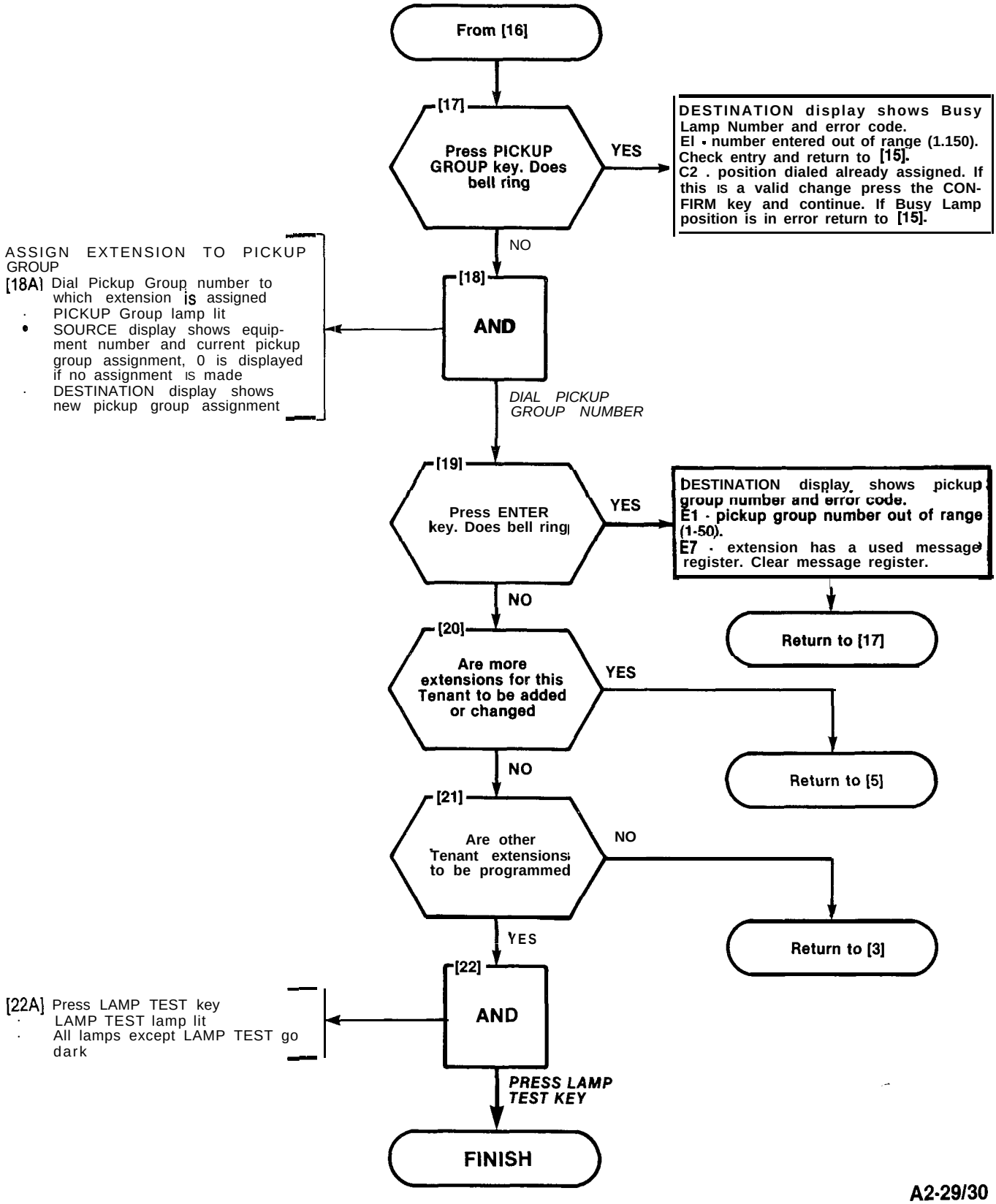
From [16]
[17]
Press PICKUP GROUP key. Does bell ring
YES
DESTINATION display shows Busy Lamp Number and error code.
E1 - number entered out of range (1.150). Check entry and return to [15].
C2 . position dialed already assigned. If this is a valid change press the CONFIRM key and continue. If Busy Lamp position is in error return to [15].
NO
[18]
AND
ASSIGN EXTENSION TO PICKUP GROUP
[18A] Dial Pickup Group number to which extension is assigned
· PICKUP Group lamp lit
• SOURCE display shows equipment number and current pickup group assignment, 0 is displayed if no assignment is made
· DESTINATION display shows new pickup group assignment
DIAL PICKUP GROUP NUMBER
[19]
Press ENTER key. Does bell ring
YES
DESTINATION display shows pickup group number and error code.
E1 - pickup group number out of range (1-50).
E7 - extension has a used message register. Clear message register.
Return to [17]
NO
[20]
Are more extensions for this Tenant to be added or changed
YES
Return to [5]
NO
[21]
Are other Tenant extensions to be programmed
NO
Return to [3]
YES
[22]
AND
[22A] Press LAMP TEST key
· LAMP TEST lamp lit
· All lamps except LAMP TEST go dark
PRESS LAMP TEST KEY
FINISH

NOTES

(1) All entries are made from the console dial pad.

(2) HUNT GROUP lamp remains lit throughout procedure.

(3) A display of EO indicates that an incorrect key has been pressed. Press the key specified in the MAP.

(4) If any equipment number is to be changed wrthin a hunt group, the hunt group must be re-entered.

SYNOPSIS

Select required tenant.
Enter hunt group number (l-12).
Enter master hunt number.
Enter all required equipment numbers.
Determine type of hunting
Press ENTER key.

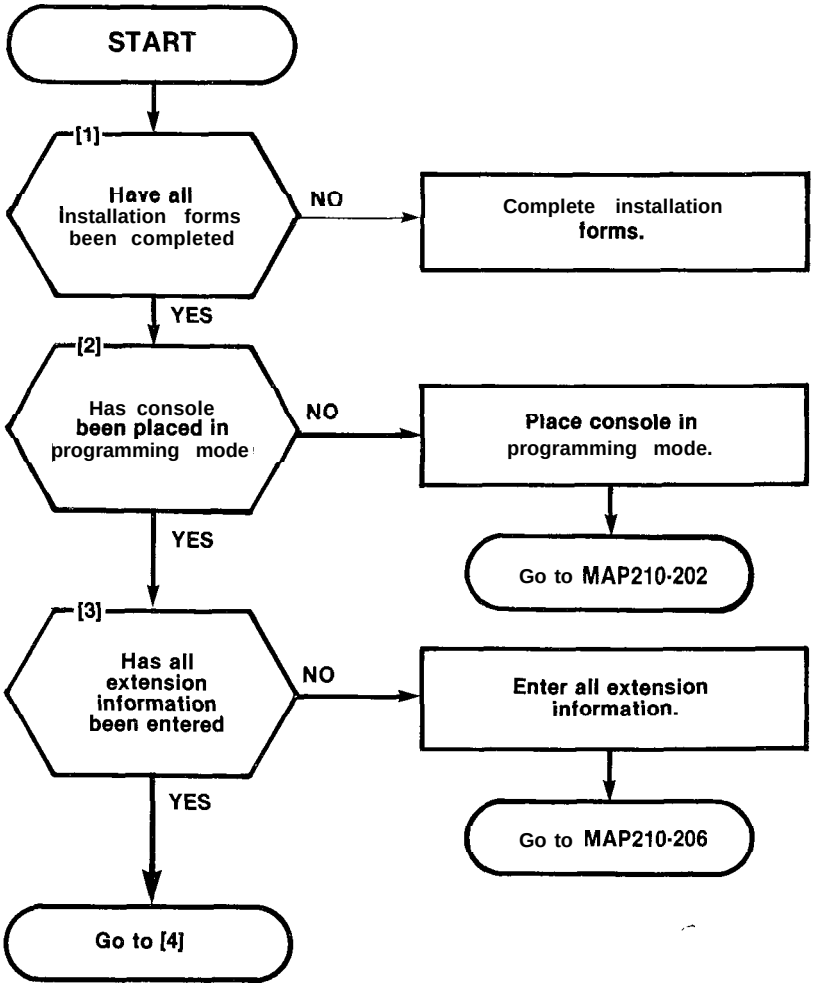

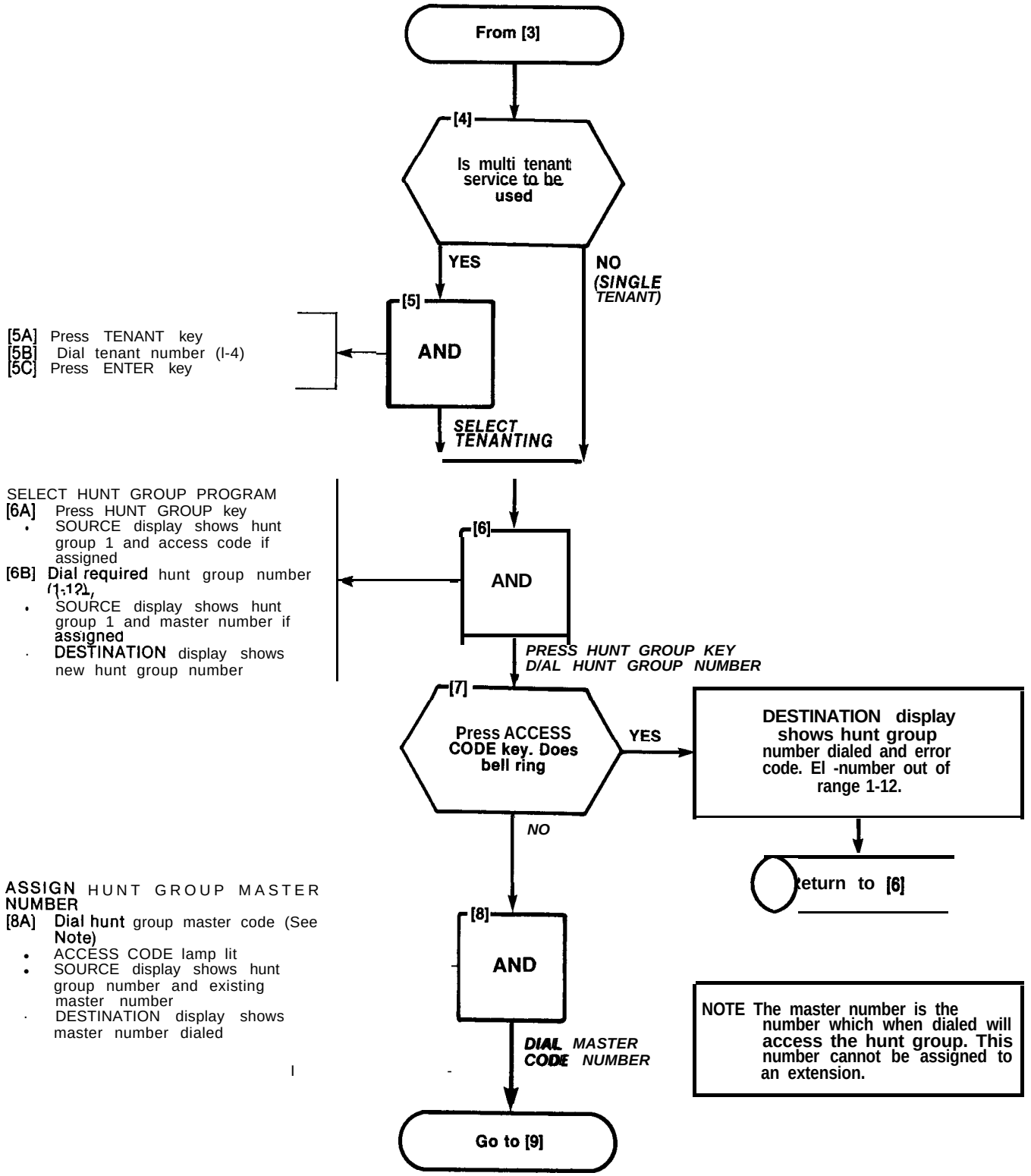
From [3]
[4]
Is multi tenant service to be used
YES
NO (SINGLE TENANT)
[5]
AND
[5A] Press TENANT key
[5B] Dial tenant number (I-4)
[5C] Press ENTER key
SELECT TENANTING
SELECT HUNT GROUP PROGRAM
[6A] Press HUNT GROUP key
• SOURCE display shows hunt group 1 and access code if assigned
[6B] Dial required hunt group number (1-12)
• SOURCE display shows hunt group 1 and master number if assigned
• DESTINATION display shows new hunt group number
[6]
AND
PRESS HUNT GROUP KEY
DIAL HUNT GROUP NUMBER
[7]
Press ACCESS CODE key. Does bell ring
YES
DESTINATION display shows hunt group number dialed and error code. El -number out of range 1-12.
Return to [6]
NO
ASSIGN HUNT GROUP MASTER NUMBER
[8A] Dial hunt group master code (See Note)
• ACCESS CODE lamp lit
• SOURCE display shows hunt group number and existing master number
• DESTINATION display shows master number dialed
[8]
AND
DIAL MASTER CODE NUMBER
NOTE The master number is the number which when dialed will access the hunt group. This number cannot be assigned to an extension.
Go to [9]

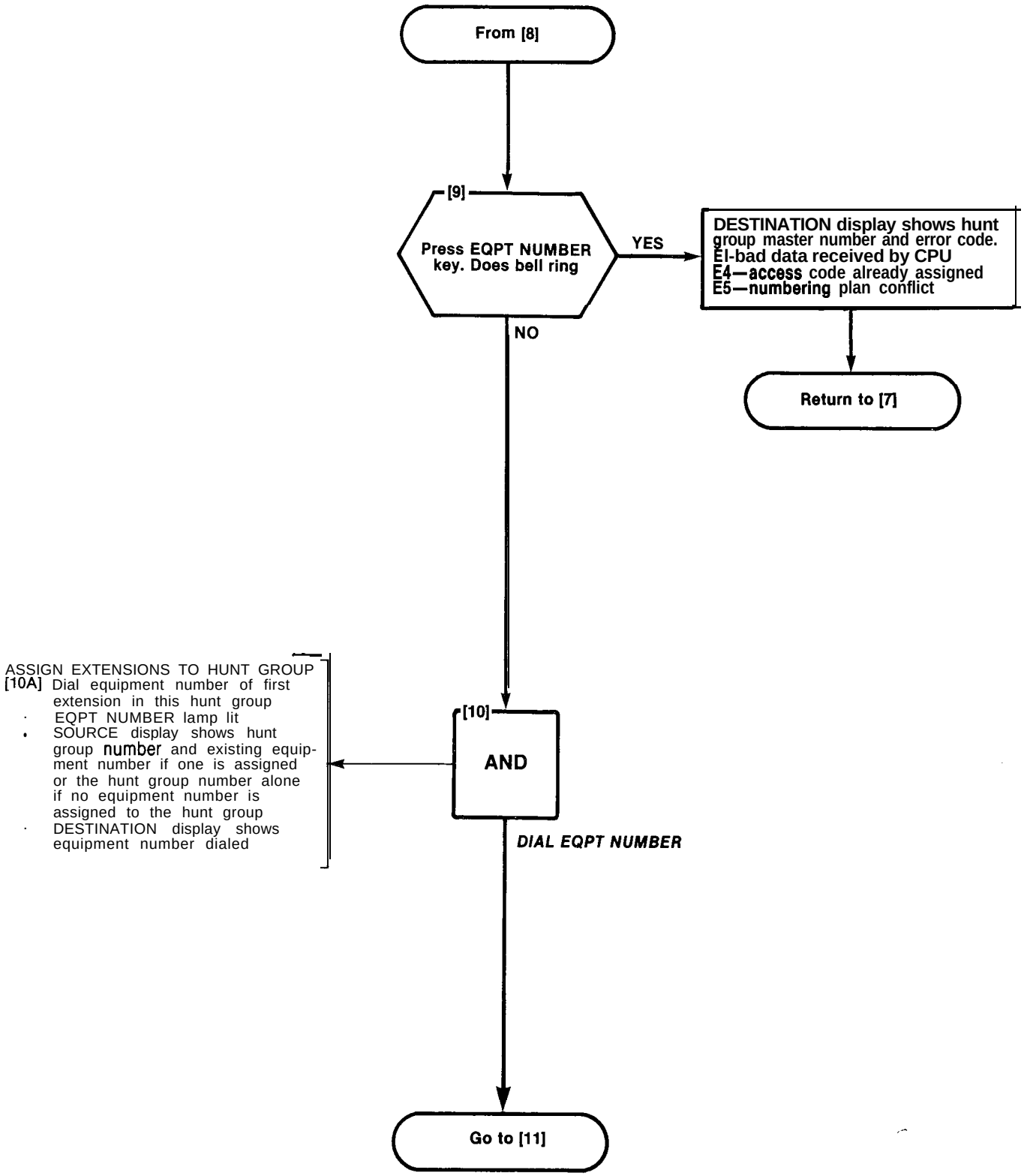
From [8]
[9]
Press EQPT NUMBER key. Does bell ring
YES
DESTINATION display shows hunt group master number and error code.
E1-bad data received by CPU
E4—access code already assigned
E5—numbering plan conflict
Return to [7]
NO
ASSIGN EXTENSIONS TO HUNT GROUP
[10A] Dial equipment number of first extension in this hunt group
· EQPT NUMBER lamp lit
· SOURCE display shows hunt group number and existing equipment number if one is assigned or the hunt group number alone if no equipment number is assigned to the hunt group
· DESTINATION display shows equipment number dialed
[10]
AND
DIAL EQPT NUMBER
Go to [11]

PROGRAM EXTENSION HUNT GROUPS
MAP210-207
Issue 3, July 1980
Sheet 4 of 6

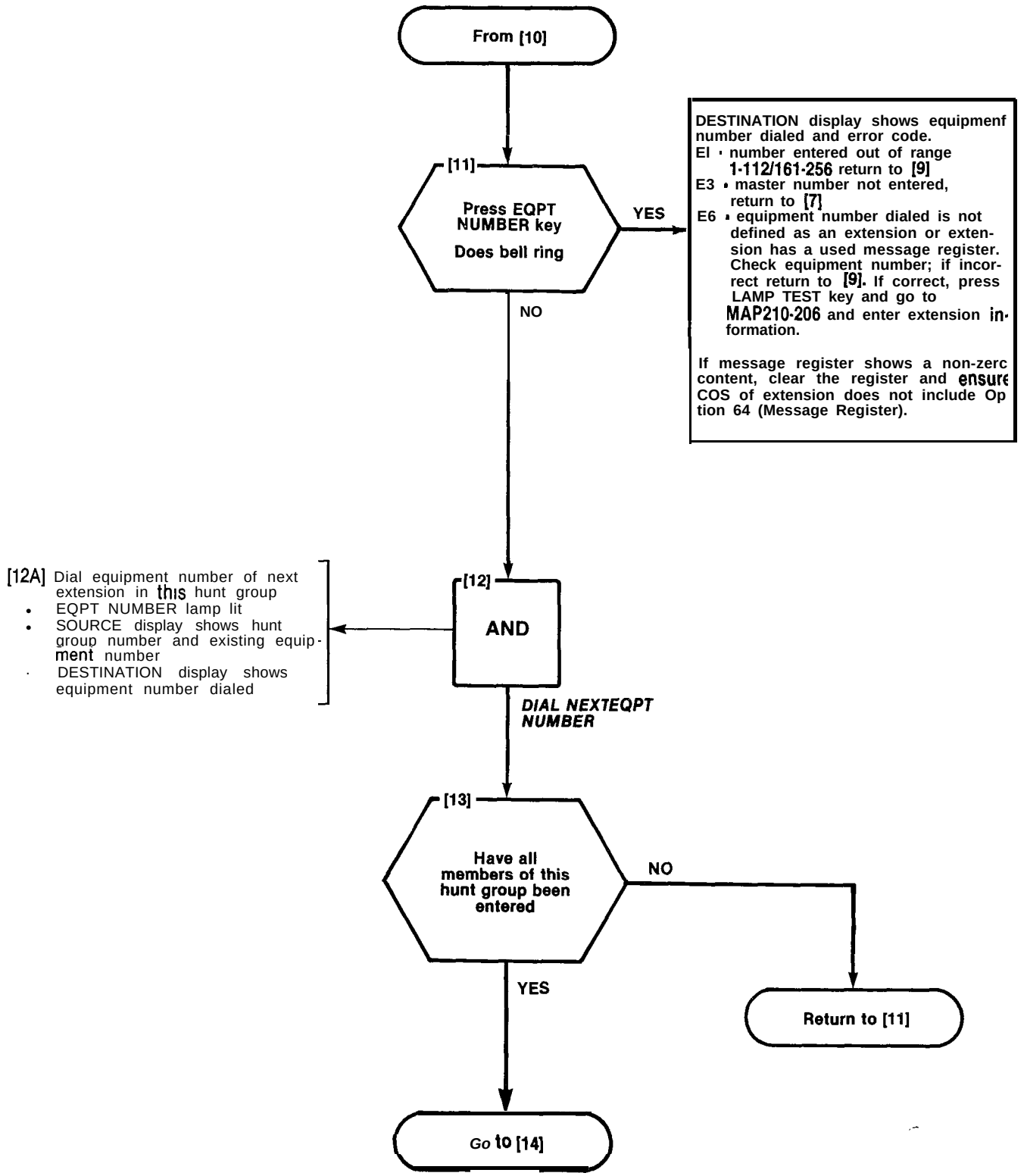

PROGRAM EXTENSION HUNT GROUPS
MAP210-207
Issue 3, July 1980
Sheet 5 of 6

ASSIGN TYPE OF HUNTING

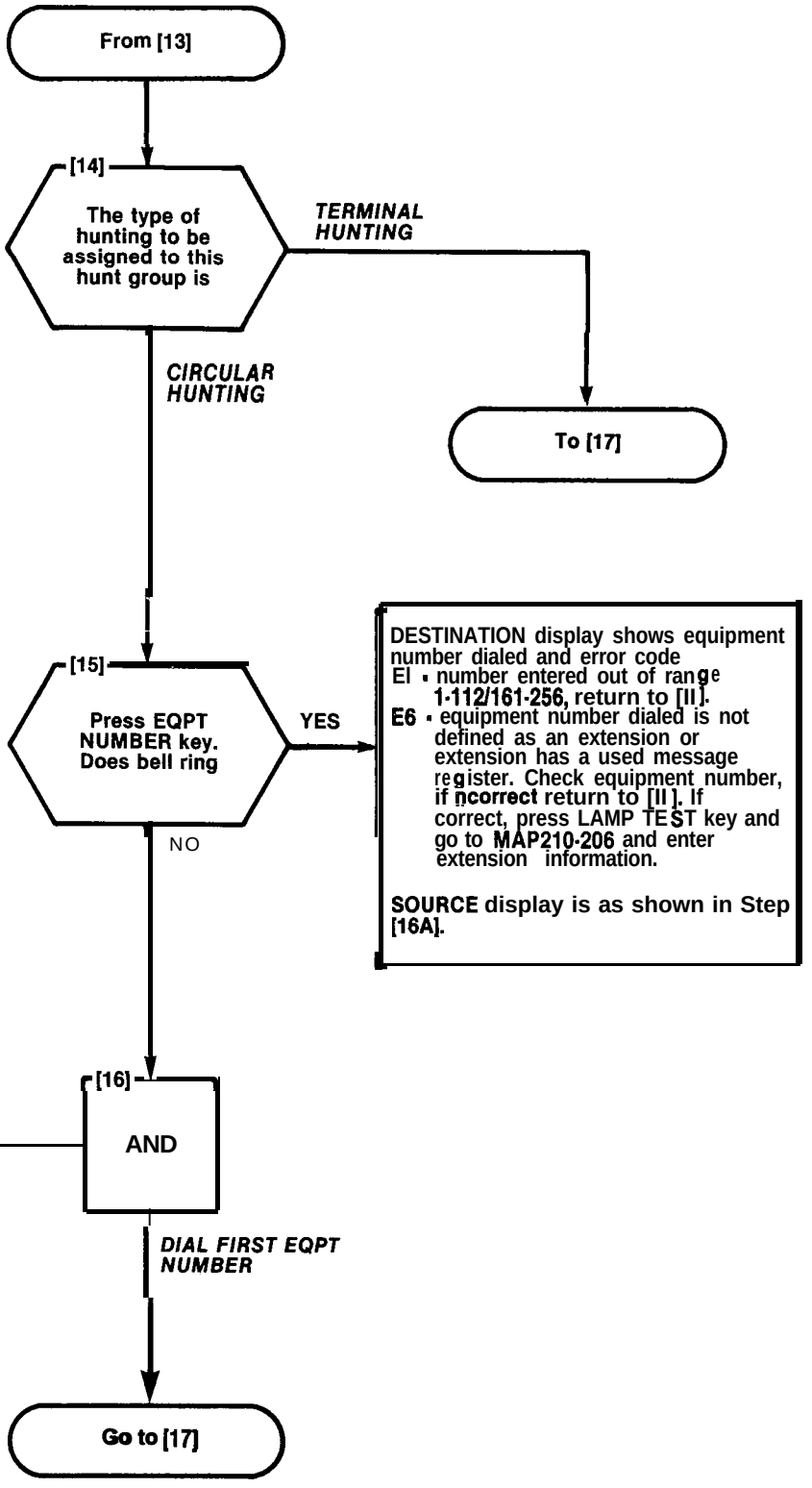

[16A] Dial first equipment number on this hunt group
- EQPT NUMBER lamp lit
- SOURCE display shows hunt group and last equipment number entered
- DESTINATION display shows first equipment number entered

STORE HUNT GROUP DATA

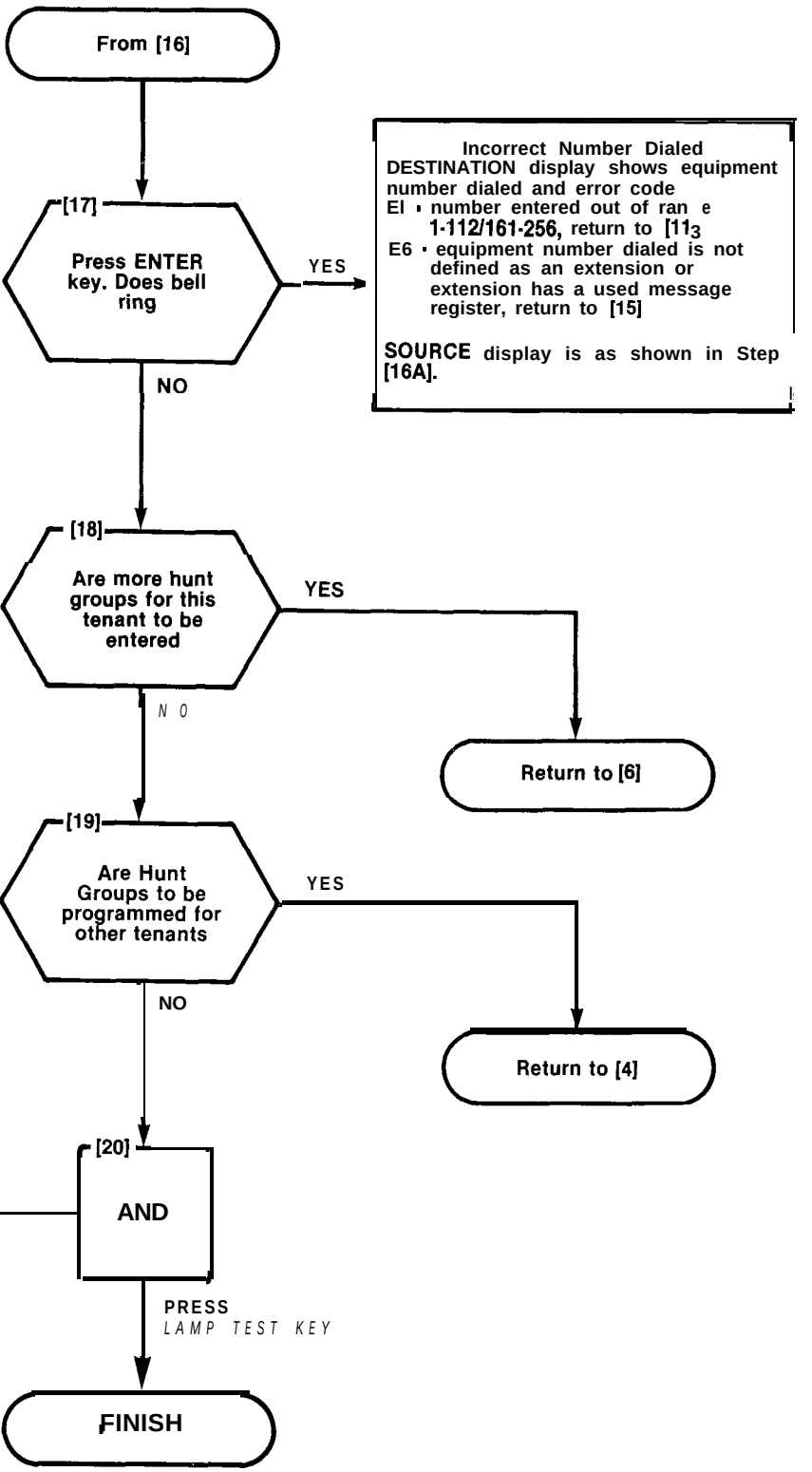

[20A] Press LAMP TEST key
- All displays dark
- All lamps dark except LAMP TEST lamp

PROGRAM NON DIAL-IN TRUNKS
MAP210-208
Issue 3, July 1980
Issue 1 of 10

NOTES

(1) All entries are made from the console dial pad
(2) TRUNK lamp remains lit throughout procedure
(3) A display of EO indicates that an incorrect key was pressed. Press the key specified in MAP and proceed.

SYNOPSIS

Select tenant service if required
Enter equipment number (2-112/162-256)
Enter Trunk type number (1 or 5,11 or 51)
Enter LDN assignment
Enter DAY assignment
Enter NIGHT 1 assignment
Enter NIGHT 2 assignment
Enter Busy Lamp Position number
Press ENTER key

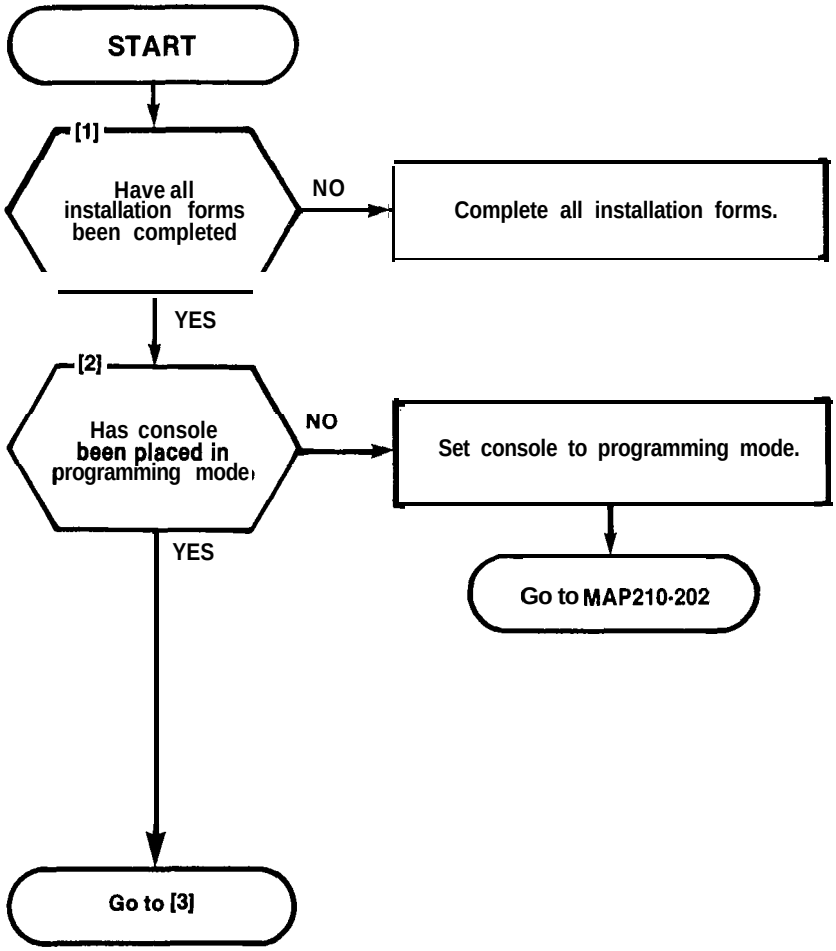

PROGRAM NON DIAL-IN TRUNKS
MAP210-208
Issue 3, July 1980
Issue 2 of 10

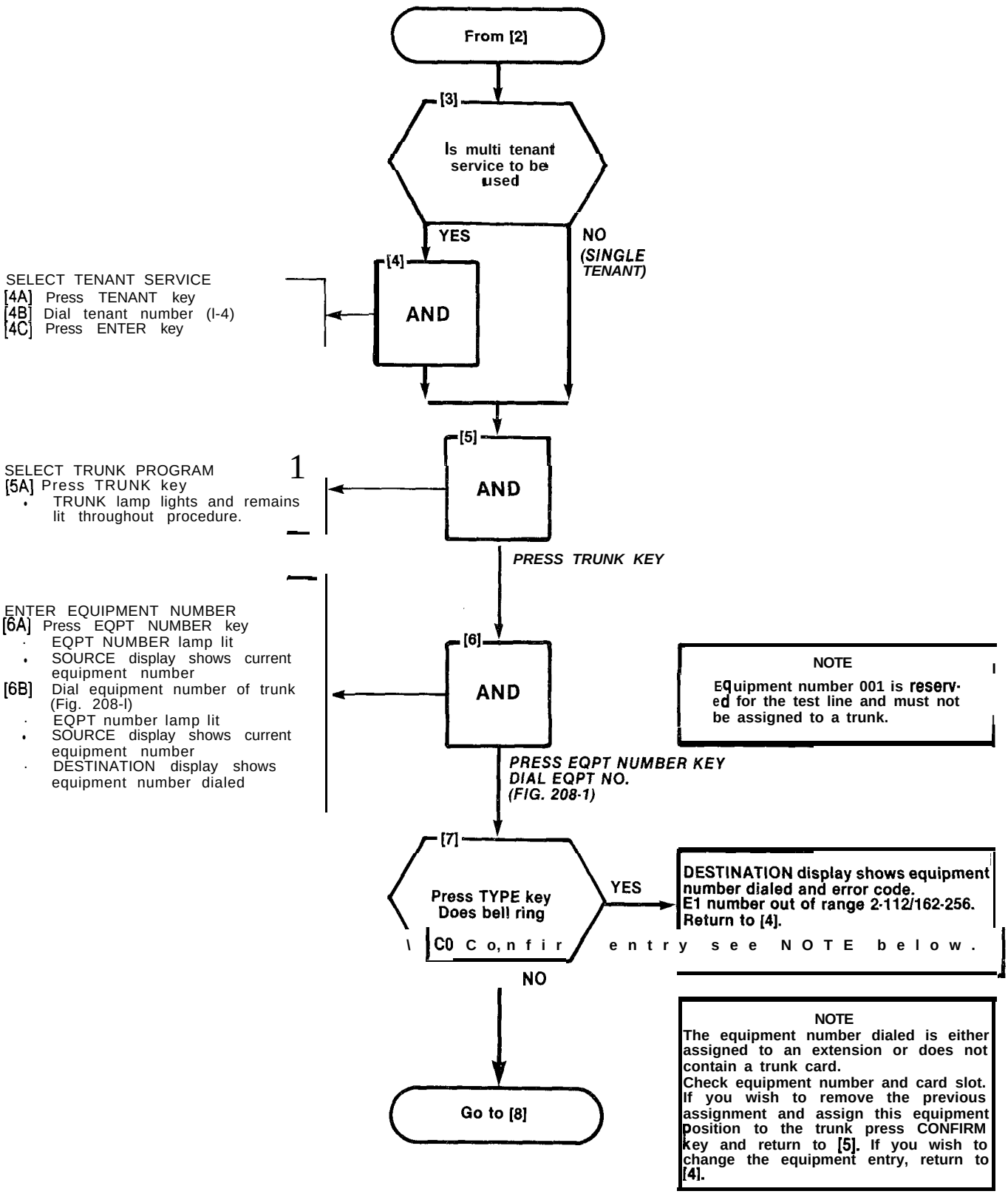

PROGRAM NON DIAL-INTRUNKS
MAP210-208
Issue 3, July 1980
Issue 3 of 10

HARDWARE POSITION NUMBER	PLUG 7	PLUG 9	PLUG 11		EXTENSION UNIT NO.	TRUNK UNIT NO. (4 TRUNK)	TRUNK UNIT NO. (2 TRUNK)
	161 169 177 185 193 201	209 217 225 233 241 249			1		
	162 170 178 186 194 202	210 218 226 234 242 250			2	1	1
	163 171 179 187 195 203	211 219 227 235 243 251			3		
	164 172 180 188 196 204	212 220 228 236 244 252			4	2	
	165 173 181 189 197 205	213 221 229 237 245 253			5		
	166 174 182 190 198 206	214 222 230 238 246 254			6	3	2
	167 175 183 191 199 207	215 223 231 239 247 255			7		
	168 176 184 192 200 208	216 224 232 240 248 256			8	4	
	1 2 3 4 5 6	7 8 9 10 11 12	13 14 15 16 17 18	19 20 21 22	CARD POSITION		
	31 32 33 34 35 36	37 38 39 40 41 42	43 44 45 46 47 48	49 50 51 52	SLOT NUMBER		
	PLUG 8	PLUG 10	PLUG 12				

SHELF 2 (SX-200 ONLY)

HARDWARE POSITION NUMBER	PLUG1	PLUG3	PLUG5						EXTENSION UNIT NO.	TRUNK UNIT NO. (4 TRUNK)	TRUNK UNIT NO. (2 TRUNK)
	001 009 017 025 033 041	049 057 065 073 081 089	097 105	RECEIVER NO. 1	CONSOLE CONTROL CARD	CONSOLE CONTROL CARD	TONE CONTROL		1		
	002 010 018 026 034 042	050 058 066 074 082 090	098 106						2	1	1
	003 011 019 027 035 043	051 059 067 075 083 091	099 107					RESERVED	3		
	004 012 020 028 036 044	052 060 068 076 084 092	100 108					FOR	4	2	
	005 013 021 029 037 045	053 061 069 077 085 093	101 109					COMMON	5		
	006 014 022 030 038 046	054 062 070 078 088 094	102 110					CONTROLS	6	3	2
	007 015 023 031 039 047	055 063 071 079 087 095	103 111						7		
	008 016 024 032 040 048	056 064 072 080 088 096	104 112						8	4	
	1 2 3 4 5 6	7 8 9 10 11 12	13 14 15 16 17 18					19 20 21 22	CARD POSITION		
	1 2 3 4 5 6	7 8 9 10 11 12	13 14 15 16 17 18					19 20 21 22	SLOT NUMBER		
	PLUG2	PLUG4	PLUG6								

642

SHELF 1

NOTES: 1. EQUIPMENT POSITION 001 IS RESERVED FOR THE TEST LINE AND MUST THEREFORE BE EQUIPPED WITH A LINE CARD.
2. TRUNK EQUIPMENT NUMBER IS SAME AS INDIVIDUAL TRUNK ACCESS CODE.

Fig. 208-l Hardware/Equipment Numbering

PROGRAM NON DIAL-IN TRUNKS
MAP210-208
Issue 3, July 1980
Issue 4 of 10

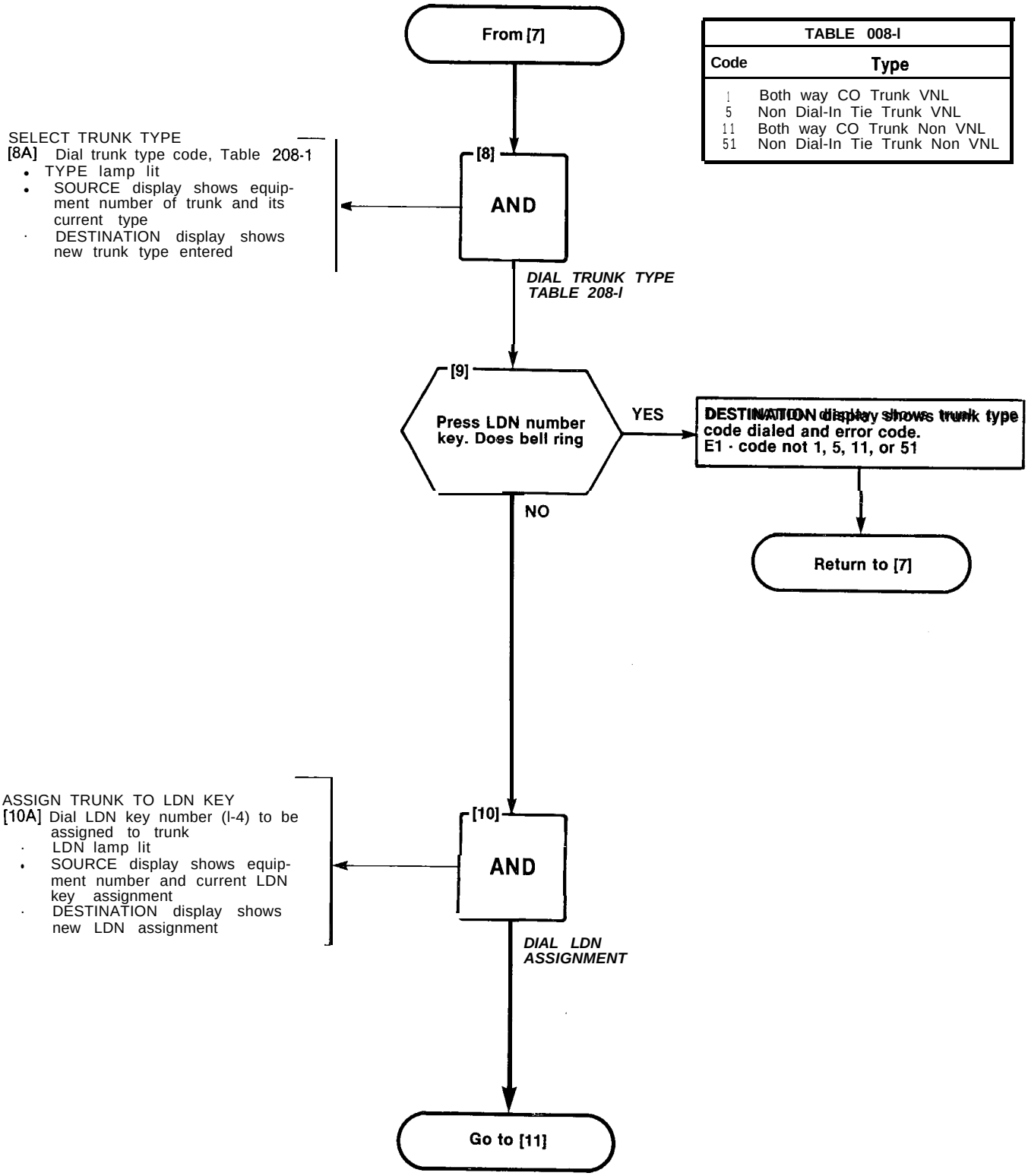

PROGRAM NON DIAL-IN TRUNKS
MAP210-208
Issue 3, July 1980
Issue 5 of 10

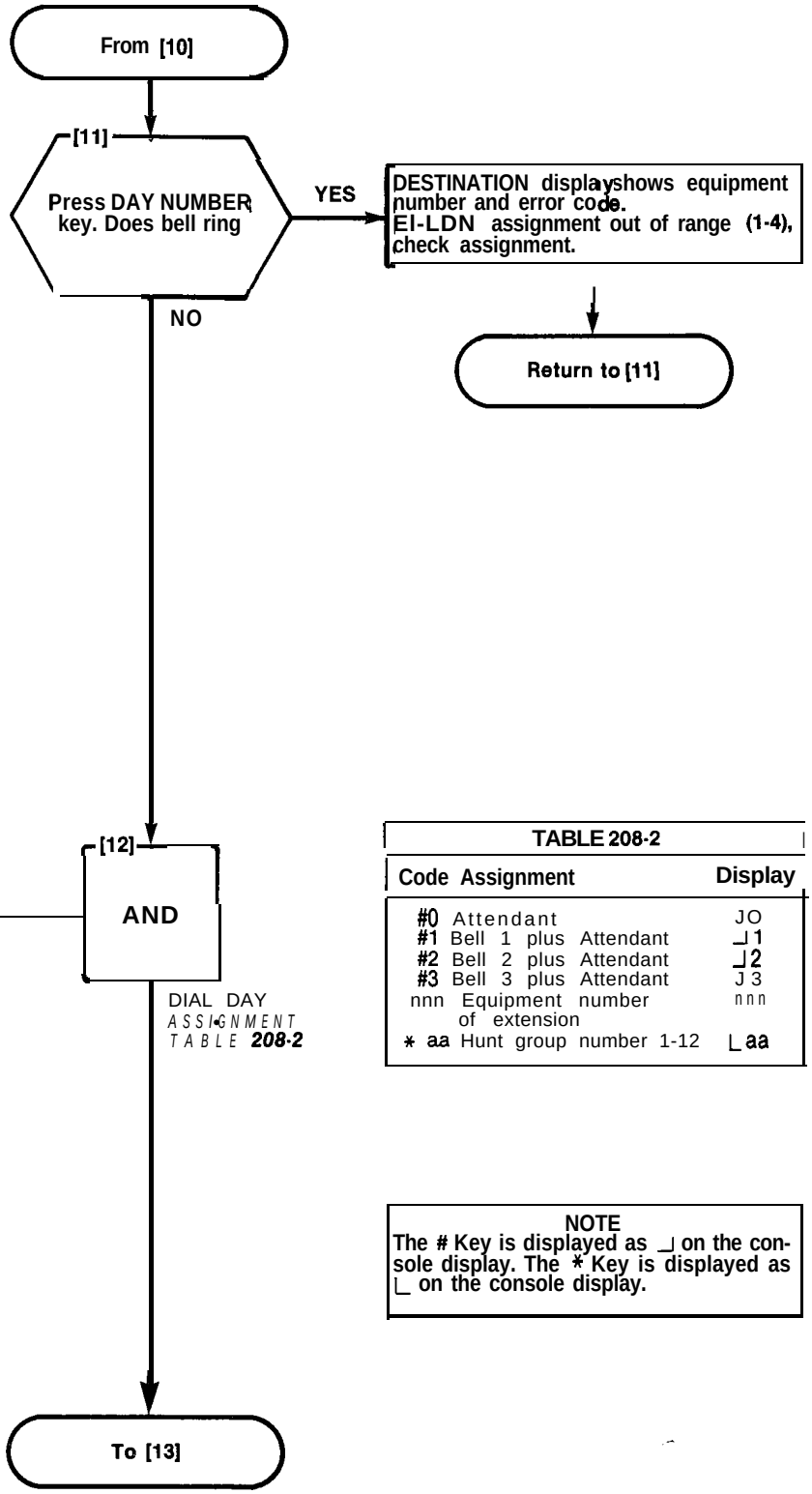

TABLE 208-2

Code	Assignment	Display
#0	Attendant	JO
#1	Bell 1 plus Attendant	⌟1
#2	Bell 2 plus Attendant	⌟2
#3	Bell 3 plus Attendant	J3
nnn	Equipment number of extension	nnn
* aa	Hunt group number 1-12	⌞aa

NOTE
The # Key is displayed as ⌟ on the console display. The * Key is displayed as ⌞ on the console display.

PROGRAM NON DIAL-IN TRUNKS
MAP210-208
Issue 3, July 1980
Sheet 6 of 10

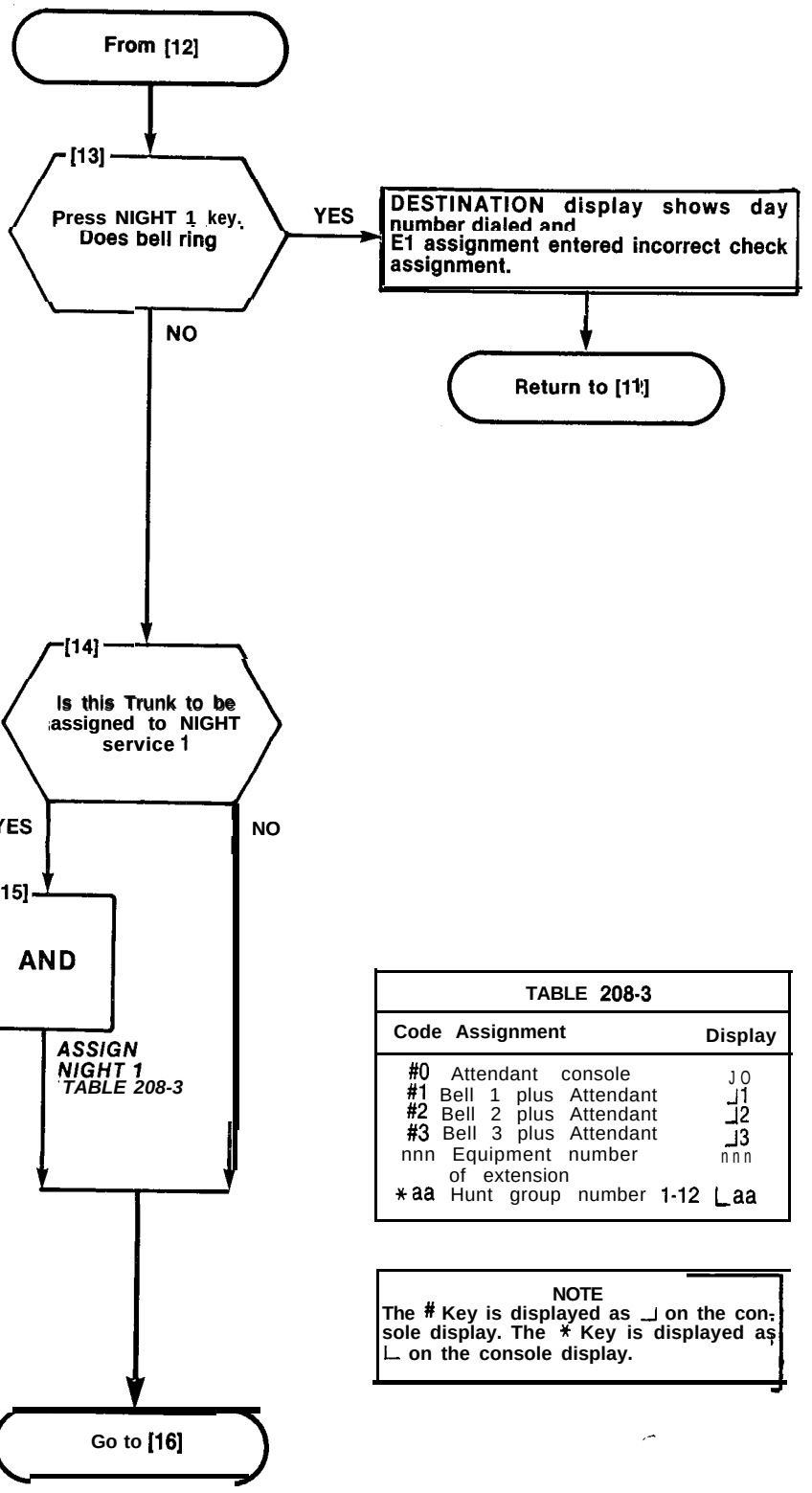

TABLE 208-3

Code	Assignment	Display
#0	Attendant console	J O
#1	Bell 1 plus Attendant	⌟1
#2	Bell 2 plus Attendant	⌟2
#3	Bell 3 plus Attendant	⌟3
nnn	Equipment number of extension	nnn
*aa	Hunt group number 1-12	⌞aa

NOTE
The # Key is displayed as ⌟ on the console display. The * Key is displayed as ⌞ on the console display.

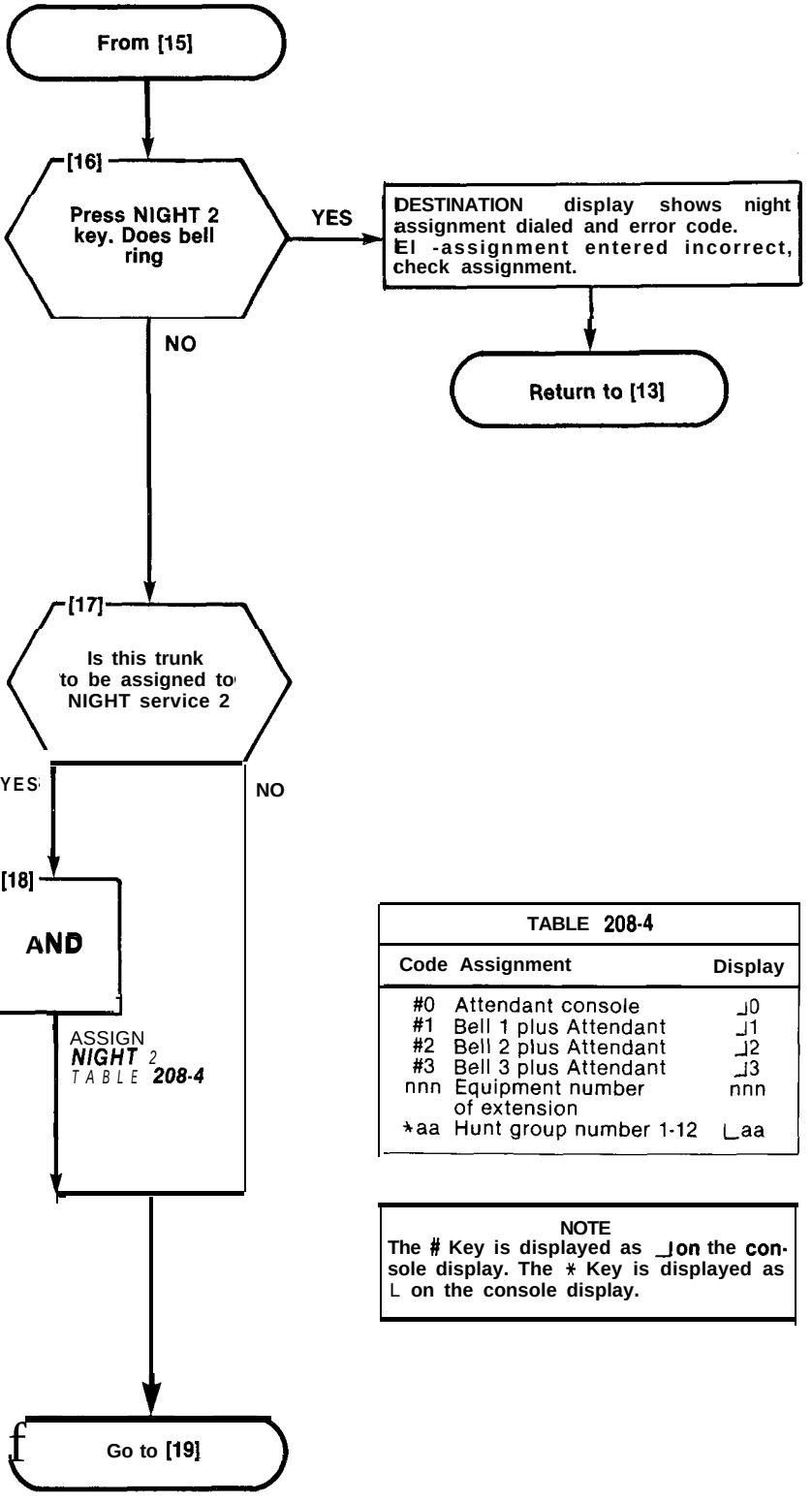

ENTER NIGHT 2 ASSIGNMENT

[18A] Dial code of equipment to which trunk is to be connected. Table 208-4

- NIGHT 2 lamp lit
- SOURCE display shows current assignment of trunk
- DESTINATION display shows code dialed

TABLE 208-4

Code	Assignment	Display
#0	Attendant console	⌟0
#1	Bell 1 plus Attendant	⌟1
#2	Bell 2 plus Attendant	⌟2
#3	Bell 3 plus Attendant	⌟3
nnn	Equipment number of extension	nnn
*aa	Hunt group number 1-12	⌞aa

NOTE
The # Key is displayed as ⌟on the console display. The * Key is displayed as ⌞ on the console display.

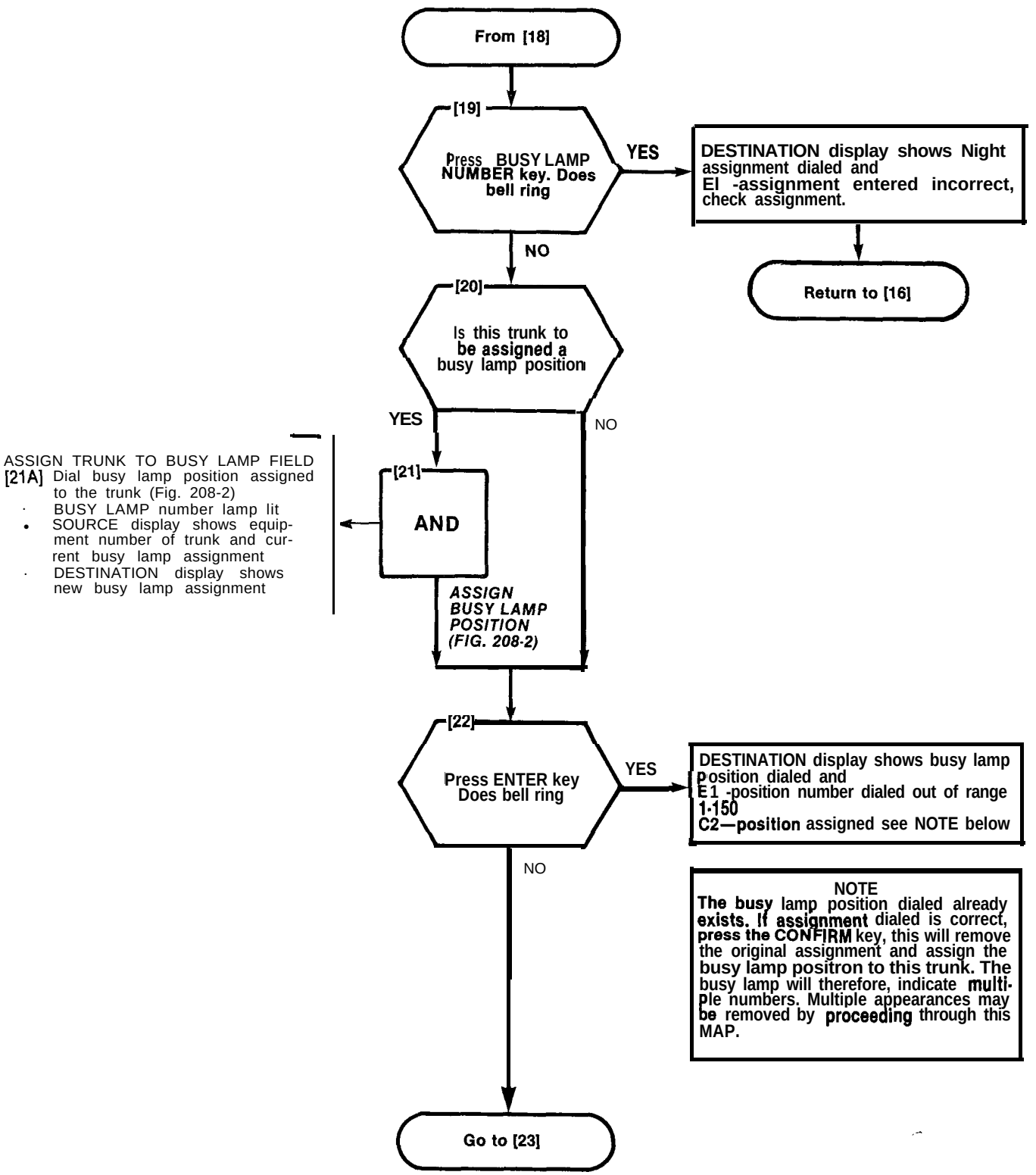
From [18]
[19]
Press BUSY LAMP NUMBER key. Does bell ring
YES
DESTINATION display shows Night assignment dialed and
E1 -assignment entered incorrect, check assignment.
Return to [16]
NO
[20]
Is this trunk to be assigned a busy lamp position
YES
NO
ASSIGN TRUNK TO BUSY LAMP FIELD
[21A] Dial busy lamp position assigned to the trunk (Fig. 208-2)
· BUSY LAMP number lamp lit
• SOURCE display shows equipment number of trunk and current busy lamp assignment
· DESTINATION display shows new busy lamp assignment
[21]
AND
ASSIGN BUSY LAMP POSITION (FIG. 208-2)
[22]
Press ENTER key Does bell ring
YES
DESTINATION display shows busy lamp position dialed and
E1 -position number dialed out of range 1-150
C2—position assigned see NOTE below
NO
NOTE
The busy lamp position dialed already exists. If assignment dialed is correct, press the CONFIRM key, this will remove the original assignment and assign the busy lamp positron to this trunk. The busy lamp will therefore, indicate multiple numbers. Multiple appearances may be removed by proceeding through this MAP.
Go to [23]

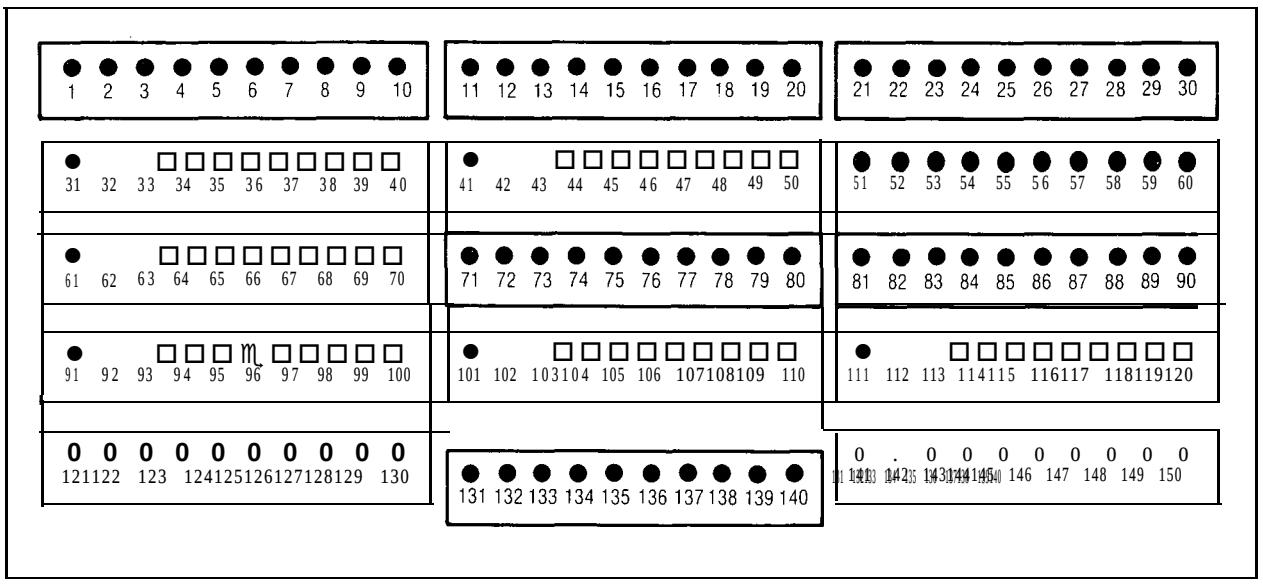

Fig. 208-2 Busy Lamp Position Numbering

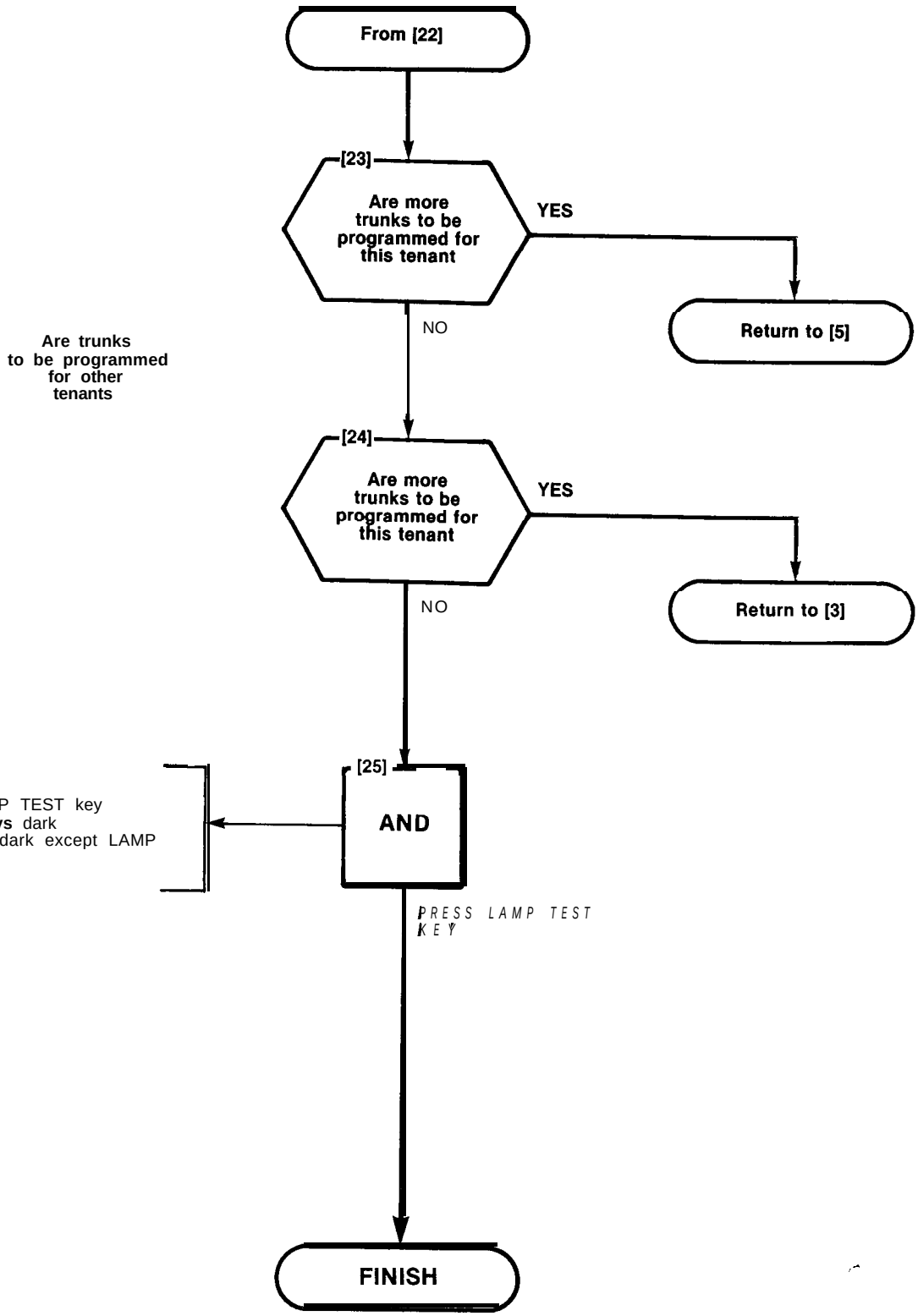
From [22]
[23]
Are more trunks to be programmed for this tenant
YES
NO
Return to [5]
Are trunks to be programmed for other tenants
[24]
Are more trunks to be programmed for this tenant
YES
NO
Return to [3]
[25]
AND
[25A] Press LAMP TEST key
· All displays dark
· All lamps dark except LAMP TEST lamp
PRESS LAMP TEST KEY
FINISH

PROGRAM DIAL-IN TRUNKS

MAP210-209

Issue 3, July 1980

Sheet 1 of 8

NOTES

(1) All entries are made from the console dial pad

(2) TRUNK lamp remains lit throughout procedure

(3) A display of EO indicates that an incorrect key was pressed. Press the key specified in MAP and proceed.

(4) This flow chart applies to E&M, LOOP and DX Tie Trunks

CAUTION

If Multi-Digit Toll Control (Generic 204) is required this MAP is not applicable. Trunks must be programmed in accordance with Section MITL9105/9110-98-212.

SYNOPSIS

Select tenant service if required.
Press TRUNK key.
Enter Equipment number (2-112/162-256)
Enter Trunk type number 2 or 4, 21 or 41
Enter Trunk COS
Enter Toll Allow/Deny code
Enter Busy Lamp Position number
Press ENTER

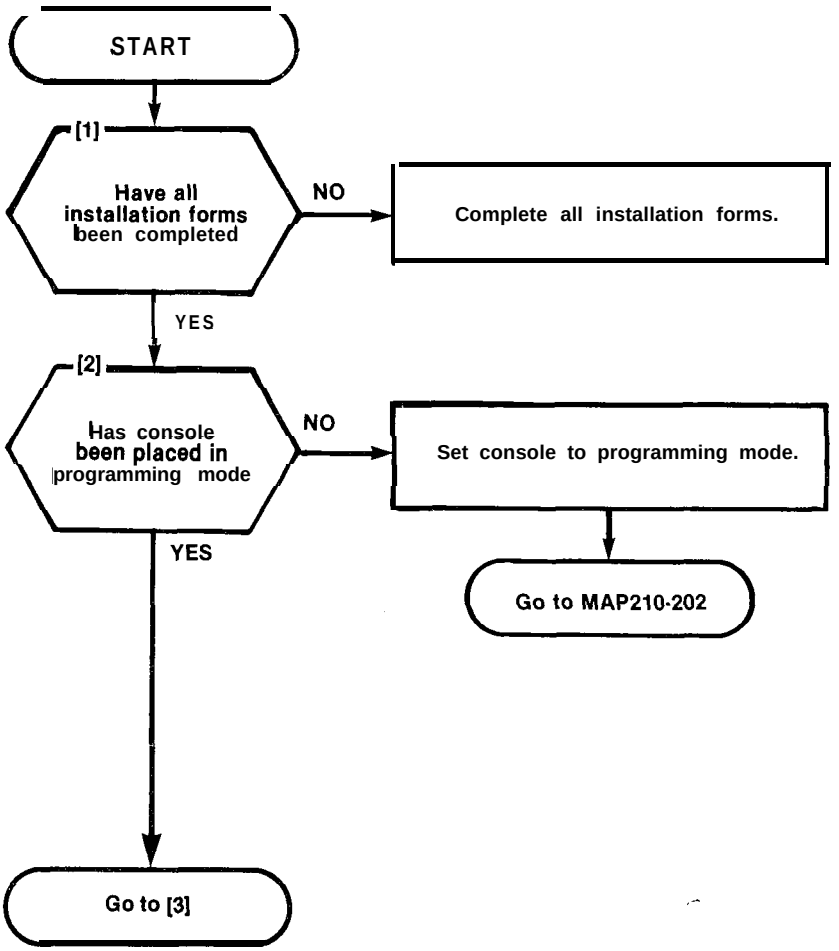

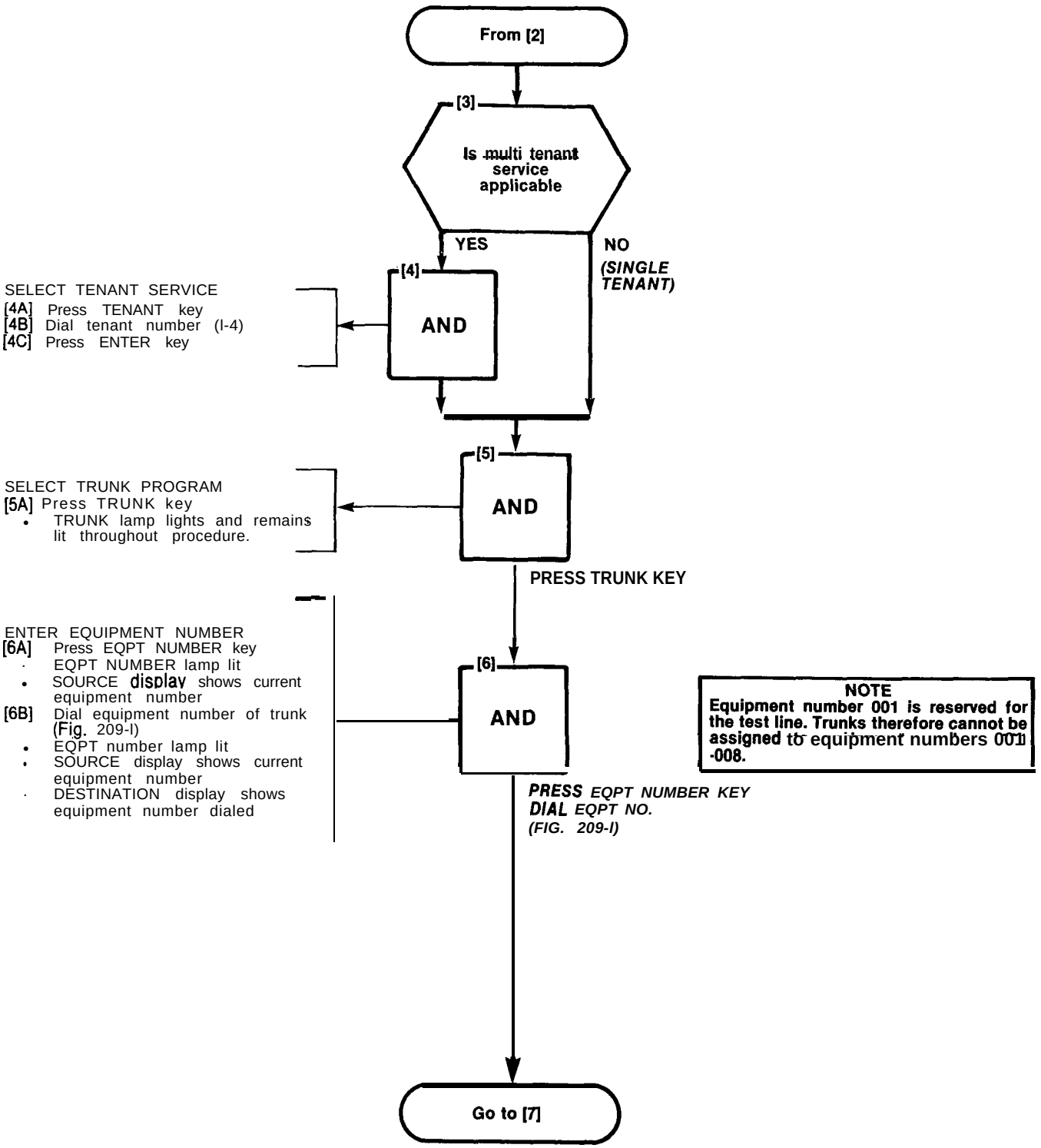
From [2]
[3]
Is multi tenant service applicable
YES
NO
(SINGLE TENANT)
[4]
AND
SELECT TENANT SERVICE
[4A] Press TENANT key
[4B] Dial tenant number (I-4)
[4C] Press ENTER key
[5]
AND
SELECT TRUNK PROGRAM
[5A] Press TRUNK key
• TRUNK lamp lights and remains lit throughout procedure.
PRESS TRUNK KEY
[6]
AND
ENTER EQUIPMENT NUMBER
[6A] Press EQPT NUMBER key
• EQPT NUMBER lamp lit
• SOURCE display shows current equipment number
[6B] Dial equipment number of trunk (Fig. 209-I)
• EQPT number lamp lit
• SOURCE display shows current equipment number
• DESTINATION display shows equipment number dialed
NOTE
Equipment number 001 is reserved for the test line. Trunks therefore cannot be assigned to equipment numbers 001 -008.
PRESS EQPT NUMBER KEY
DIAL EQPT NO.
(FIG. 209-I)
Go to [7]

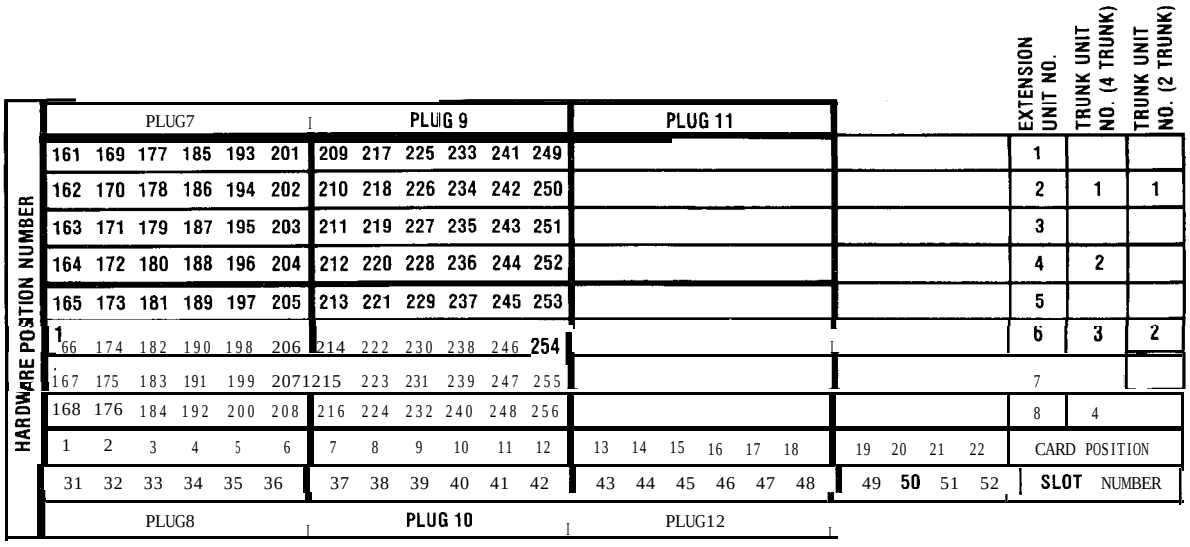

SHELF 2 (SX-200 ONLY)

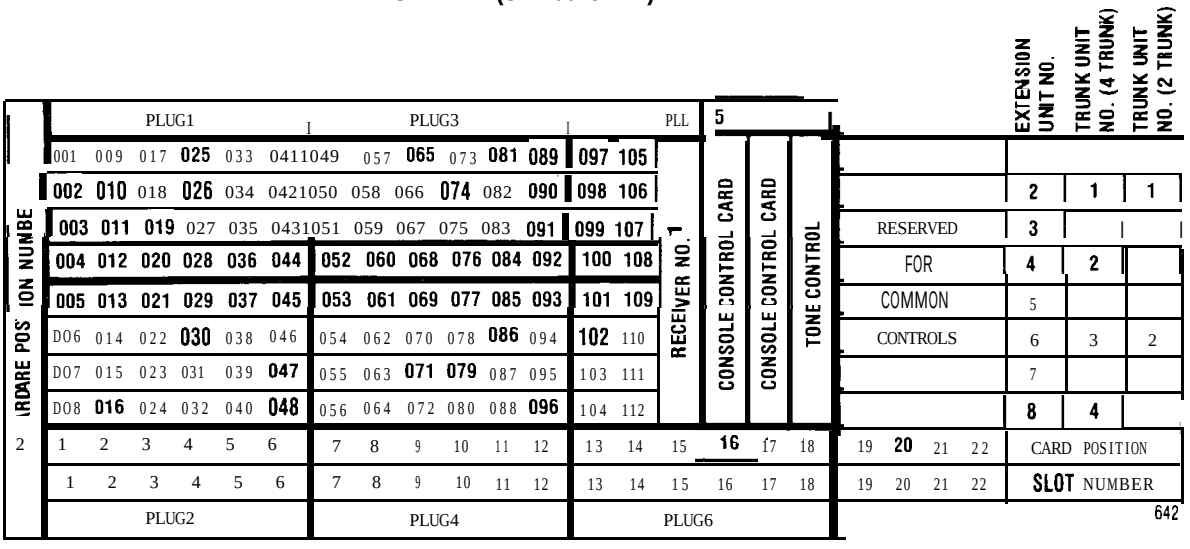

SHELF 1

NOTES: 1. EQUIPMENT POSITION 001 IS RESERVED FORTHETEST LINE AND MUST THEREFORE BE EQUIPPED WITH A LINE CARD.
2, TRUNKEQUIPMENTNUMBERISSAMEASINDlVlDUALTRUNKACCESSCODE.

Fig. 209-I Hardware/Equipment Numbering

PROGRAM NEW DIAL-IN TRUNKS
MAP210-209
Issue 3, July 1980
Sheet 4 of 8

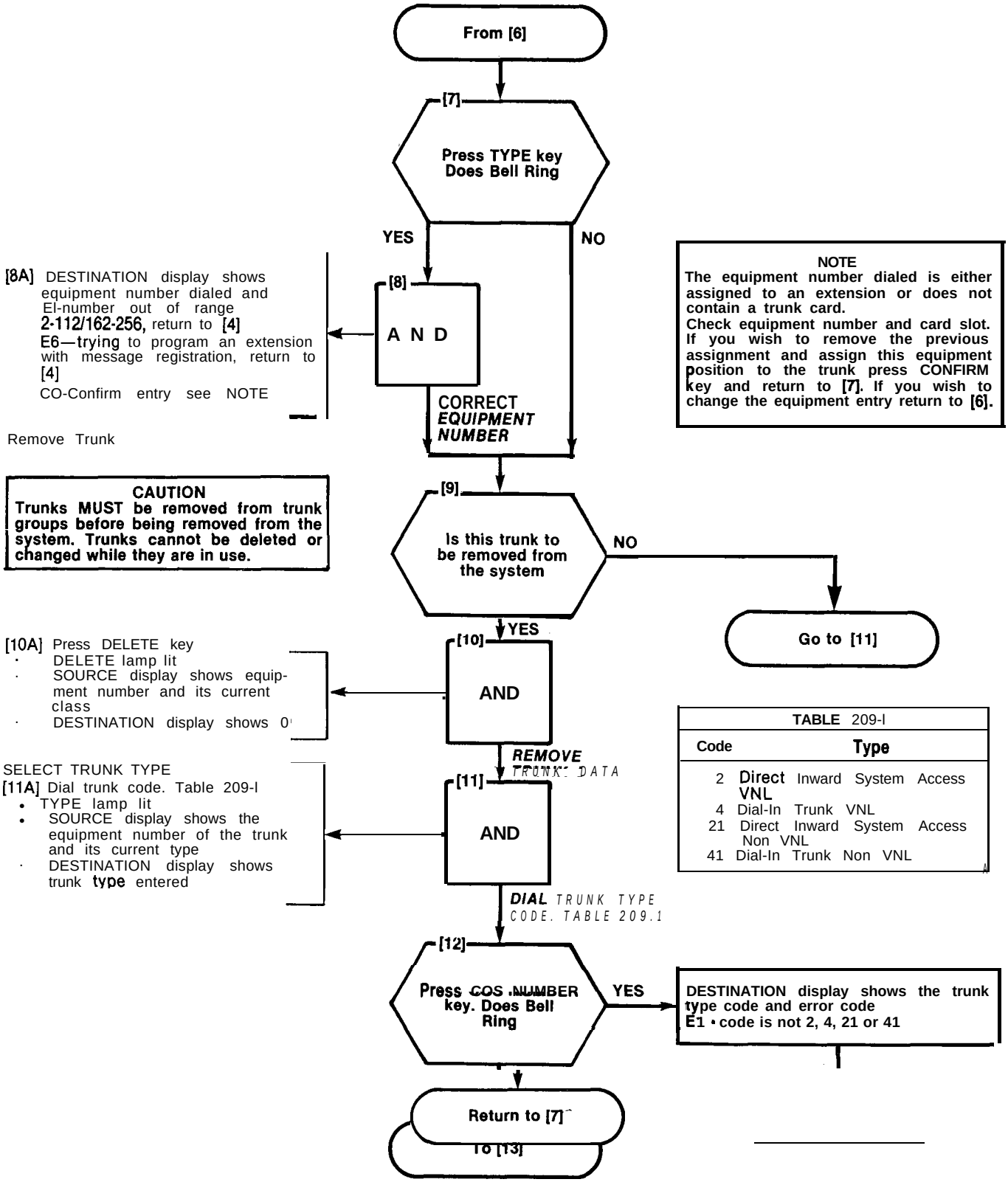

PROGRAM DIAL-IN TRUNKS
MAP210-209
Issue 3, July 1980
Sheet 5 of 8

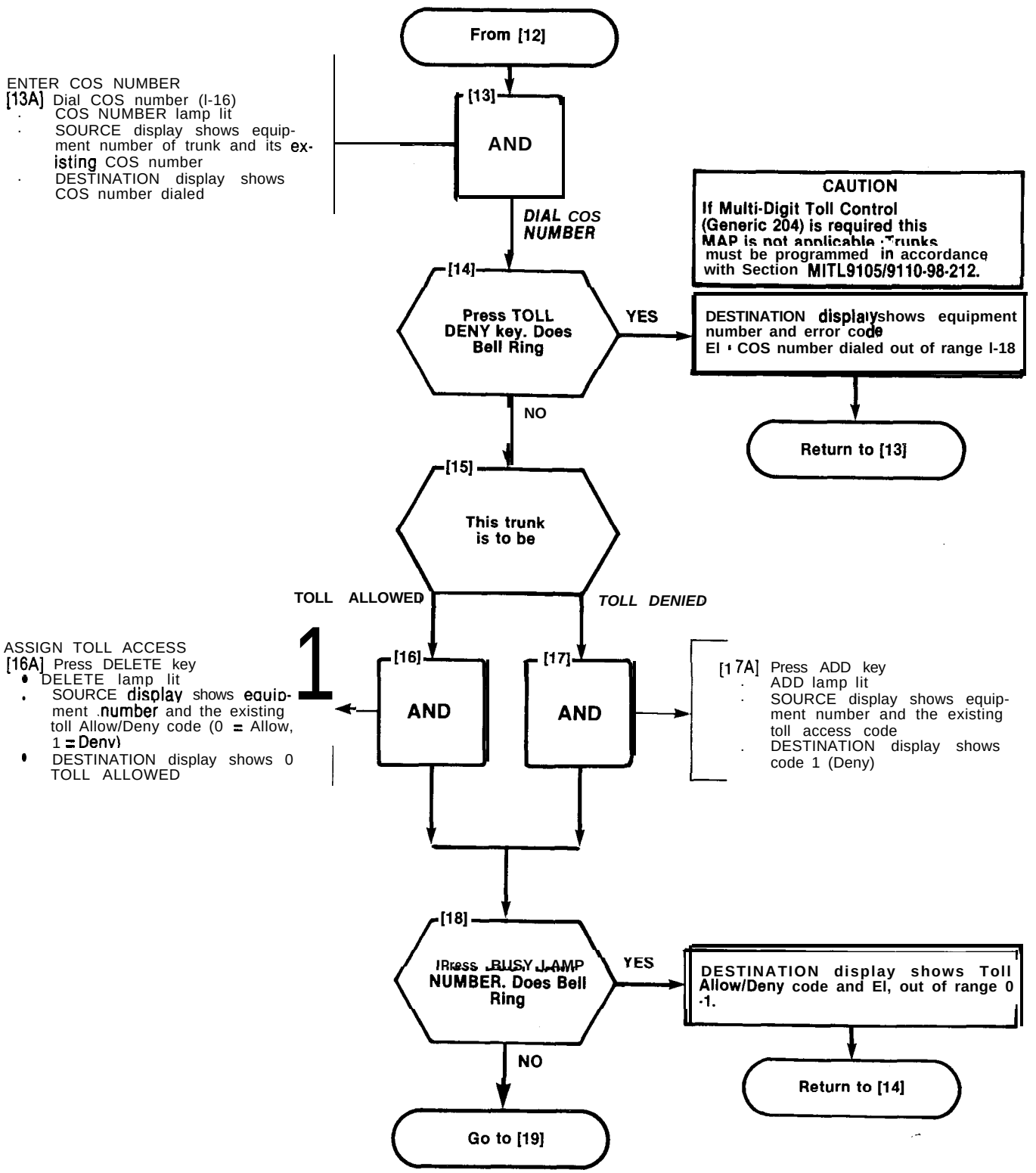

PROGRAM DIAL-IN TRUNKS
MAP210-209
Issue 3, July 1980
Sheet 6 of 8

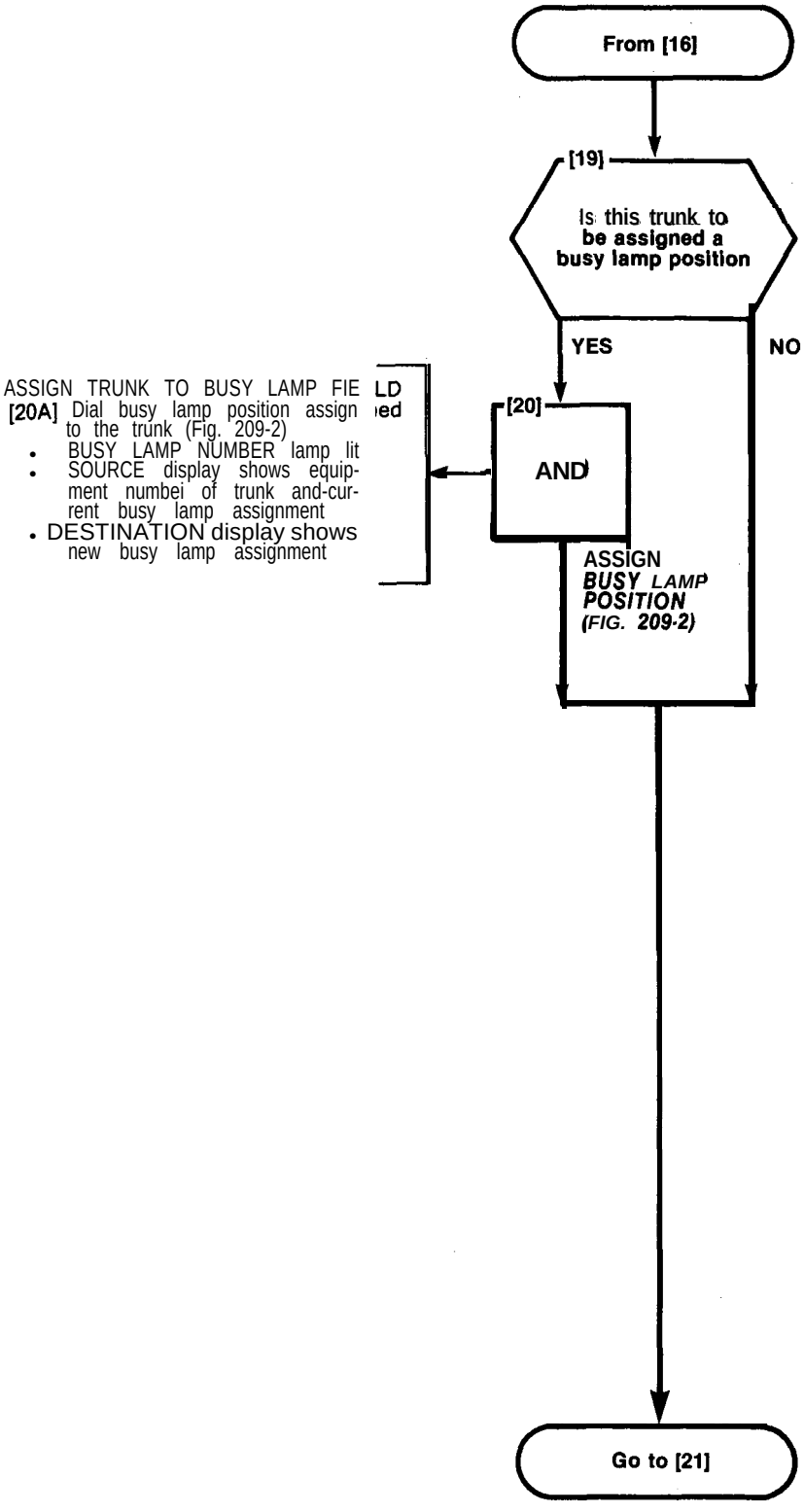

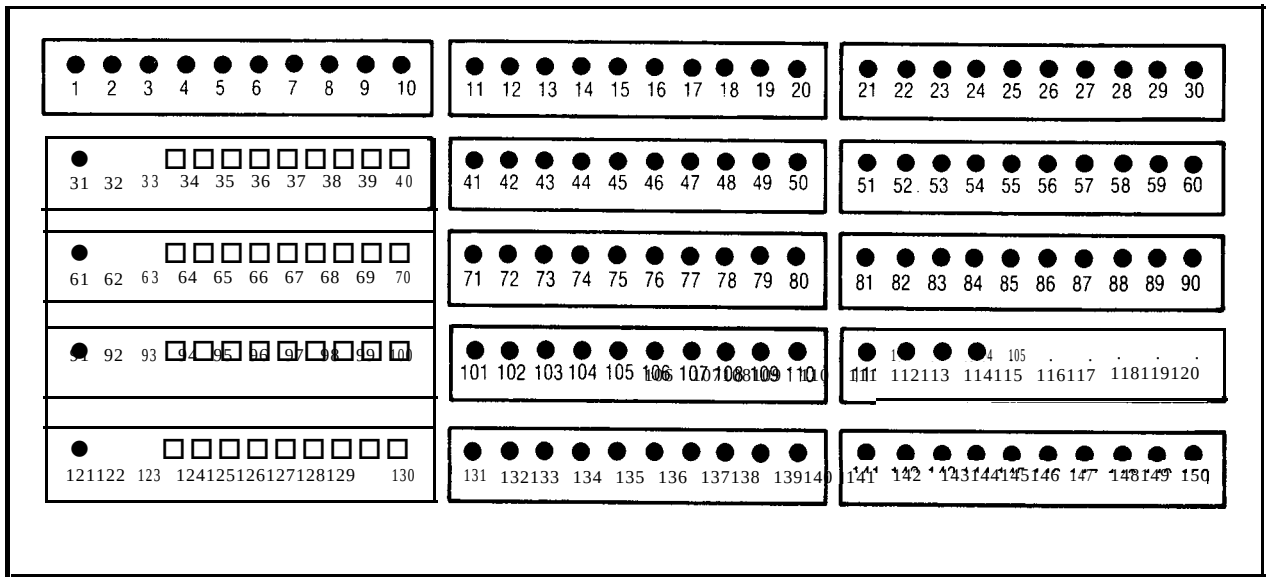

Fig. 209-2 Busy Lamp Position Numbering

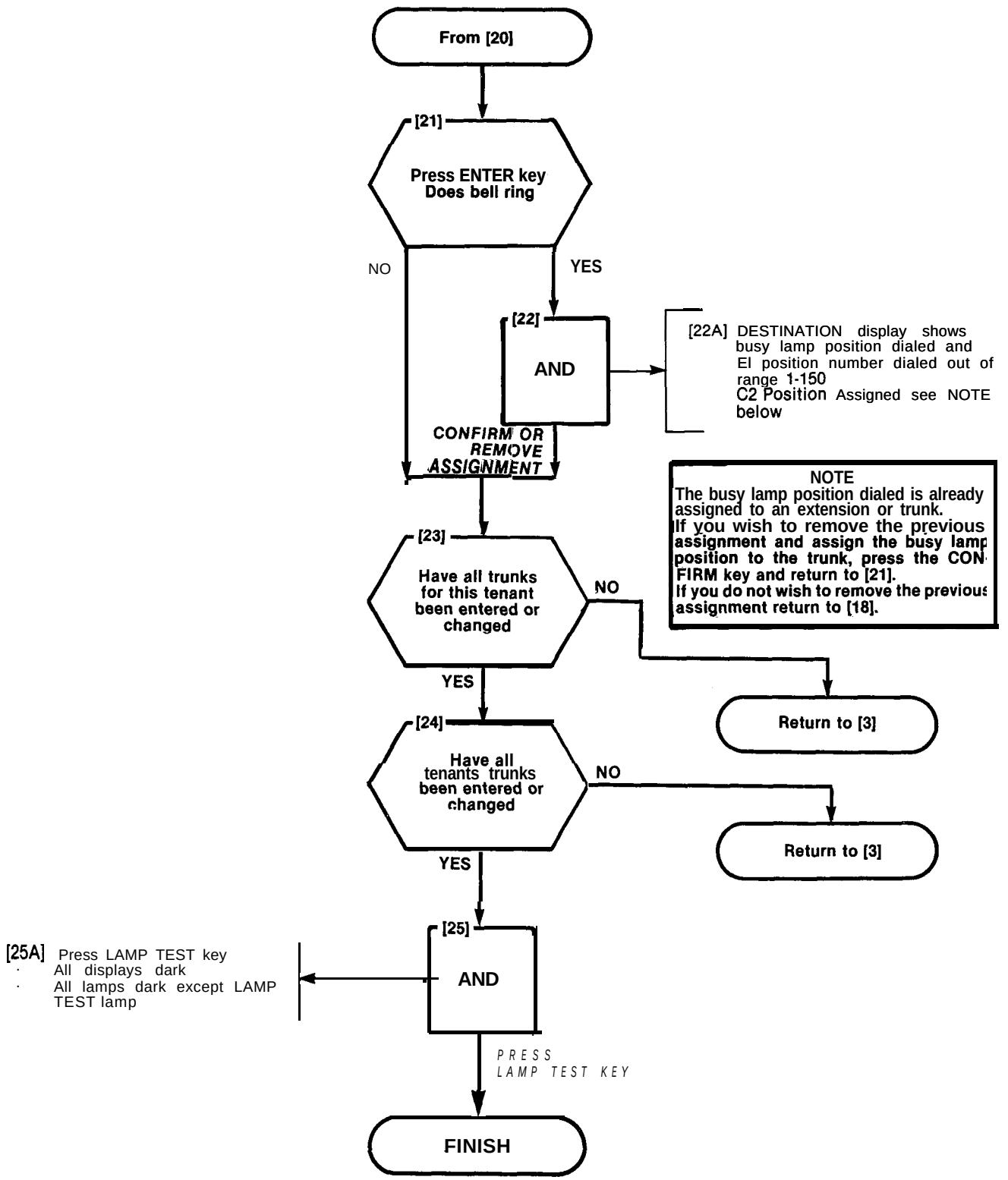
From [20]
[21]
Press ENTER key
Does bell ring
NO
YES
[22]
AND
[22A] DESTINATION display shows busy lamp position dialed and EI position number dialed out of range 1-150
C2 Position Assigned see NOTE below
CONFIRM OR REMOVE ASSIGNMENT
NOTE
The busy lamp position dialed is already assigned to an extension or trunk.
If you wish to remove the previous assignment and assign the busy lamp position to the trunk, press the CONFIRM key and return to [21].
If you do not wish to remove the previous assignment return to [18].
[23]
Have all trunks for this tenant been entered or changed
NO
YES
Return to [3]
[24]
Have all tenants trunks been entered or changed
NO
YES
Return to [3]
[25]
AND
[25A] Press LAMP TEST key
· All displays dark
· All lamps dark except LAMP TEST lamp
PRESS LAMP TEST KEY
FINISH

PROGRAM DID TRUNKS

MAP210-210

Issue 3, July 1980

Sheet 1 of 6

NOTES

(1) All entries are made from the console dial pad.

(2) Trunk lamp remains lit throughout procedure.

(3) A display of EO indicates that an incorrect key has been pressed. Press the key specified in the MAP and proceed.

CAUTION

If Multi-Digit Toll Control (Generic 204) is required this MAP is not applicable. Trunks must be programmed in accordance with Section MITL9105/9110-98-212.

SYNOPSIS

Select required tenant.
Enter equipment number
2-112/162-256
Enter trunk type code 3, 31, 6, or 61.
Enter I/C code.
Enter Busy Lamp assignment.
Press ENTER.

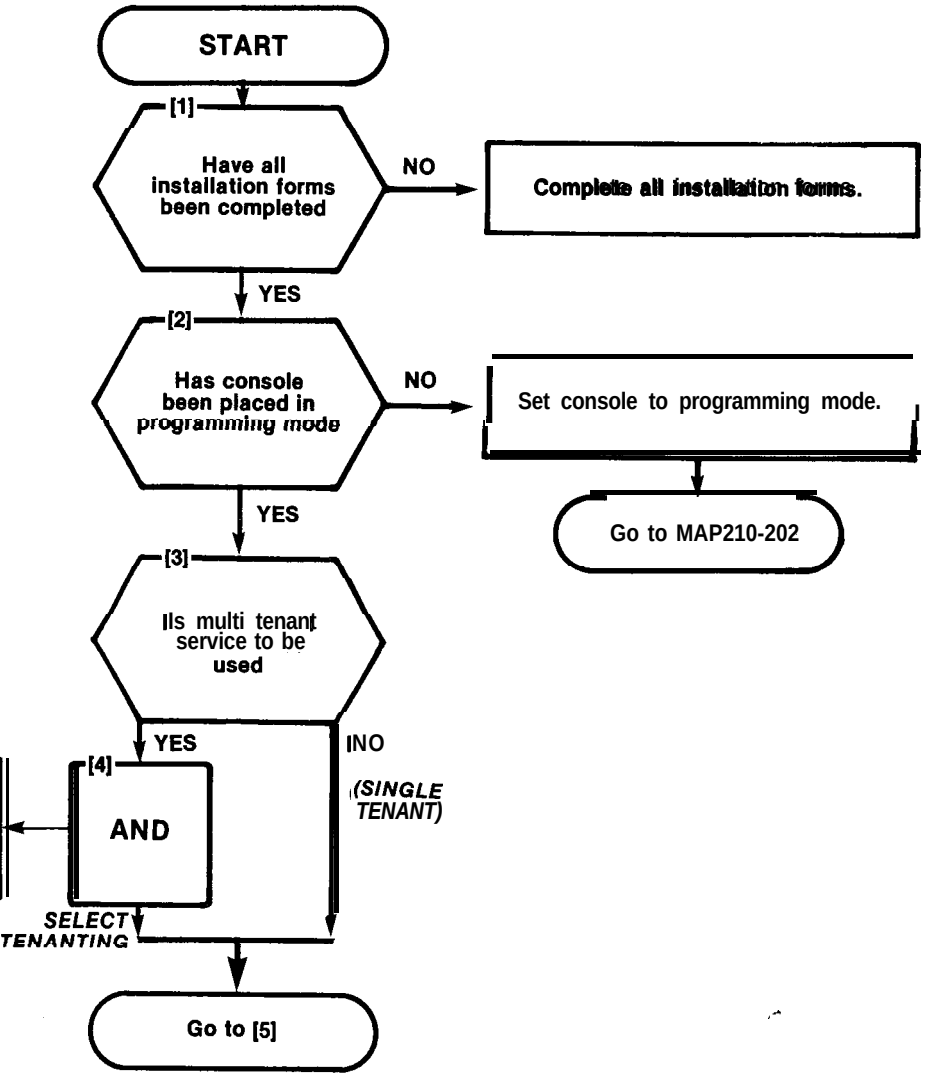

SELECT TENANT SERVICE
[4A Press TENANT key
[4B Dial tenant number (l-4)
[4C Press ENTER key

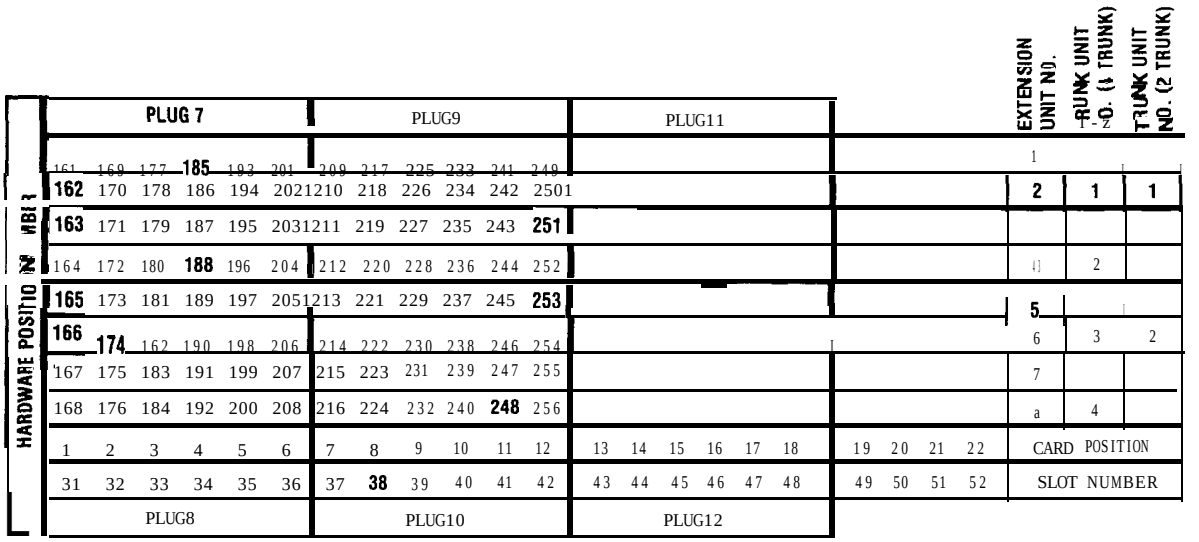

SHELF 2 (SX-200 ONLY)

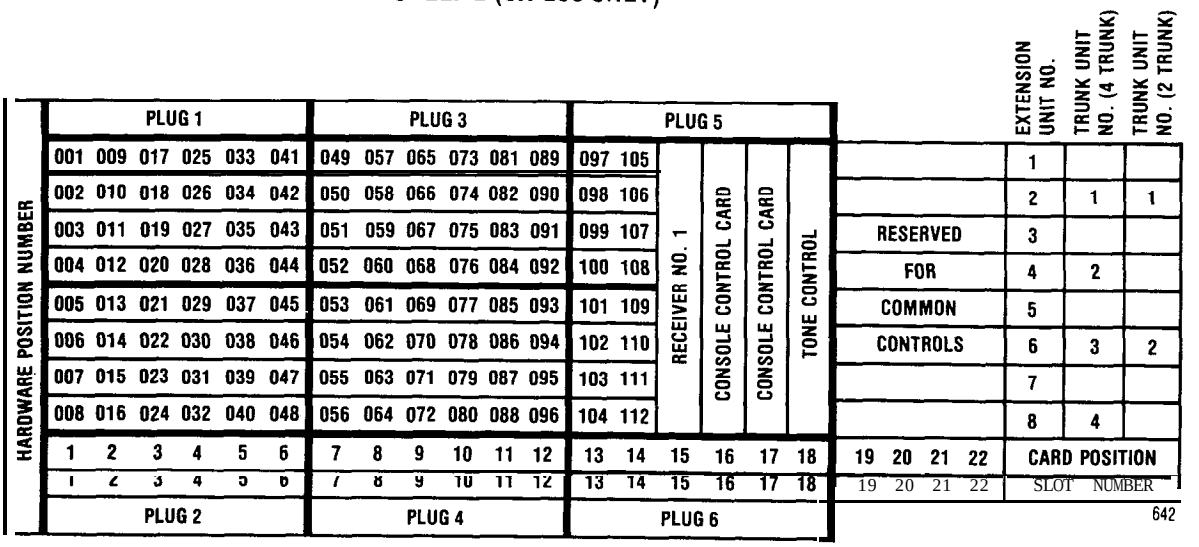

SHELF1

NOTES: 1. EQUIPMENT POSITION 001 IS RESERVED FOR THE TEST LINE AND MUST THEREFORE BE EQUIPPED WITH A LINE CARD.
2. TRUNK EQUIPMENT NUMBER IS SAME AS INDIVIDUAL TRUNK ACCESS CODE.

Fig. 210-l Hardware/Equipment Numbering

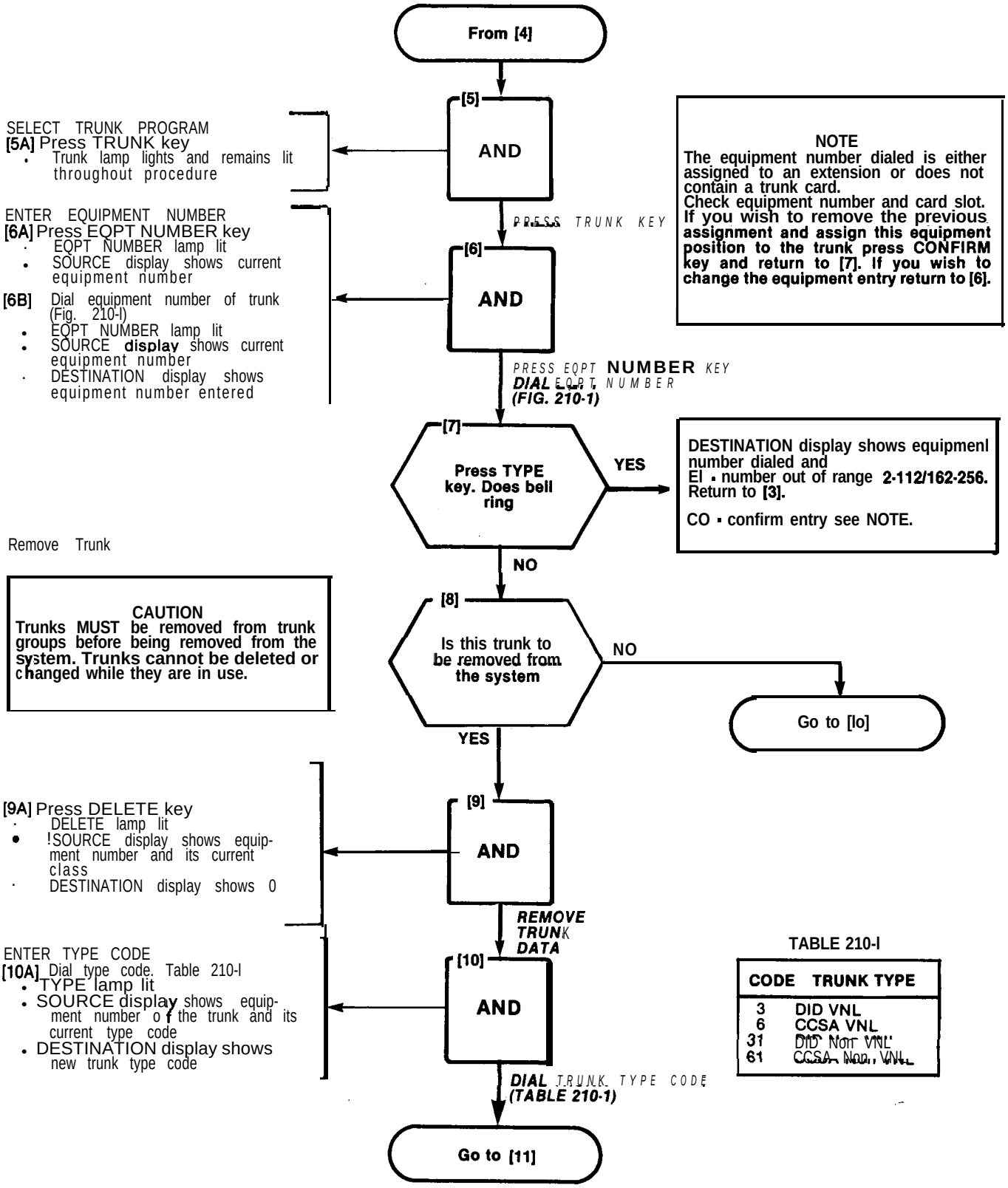

TABLE 210-I

CODE	TRUNK TYPE
3	DID VNL
6	CCSA VNL
31	DID Non VNL
61	CCSA Non VNL

PROGRAM DID TRUNKS
MAP210-210
Issue 3, July 1980
Sheet 4 of 6

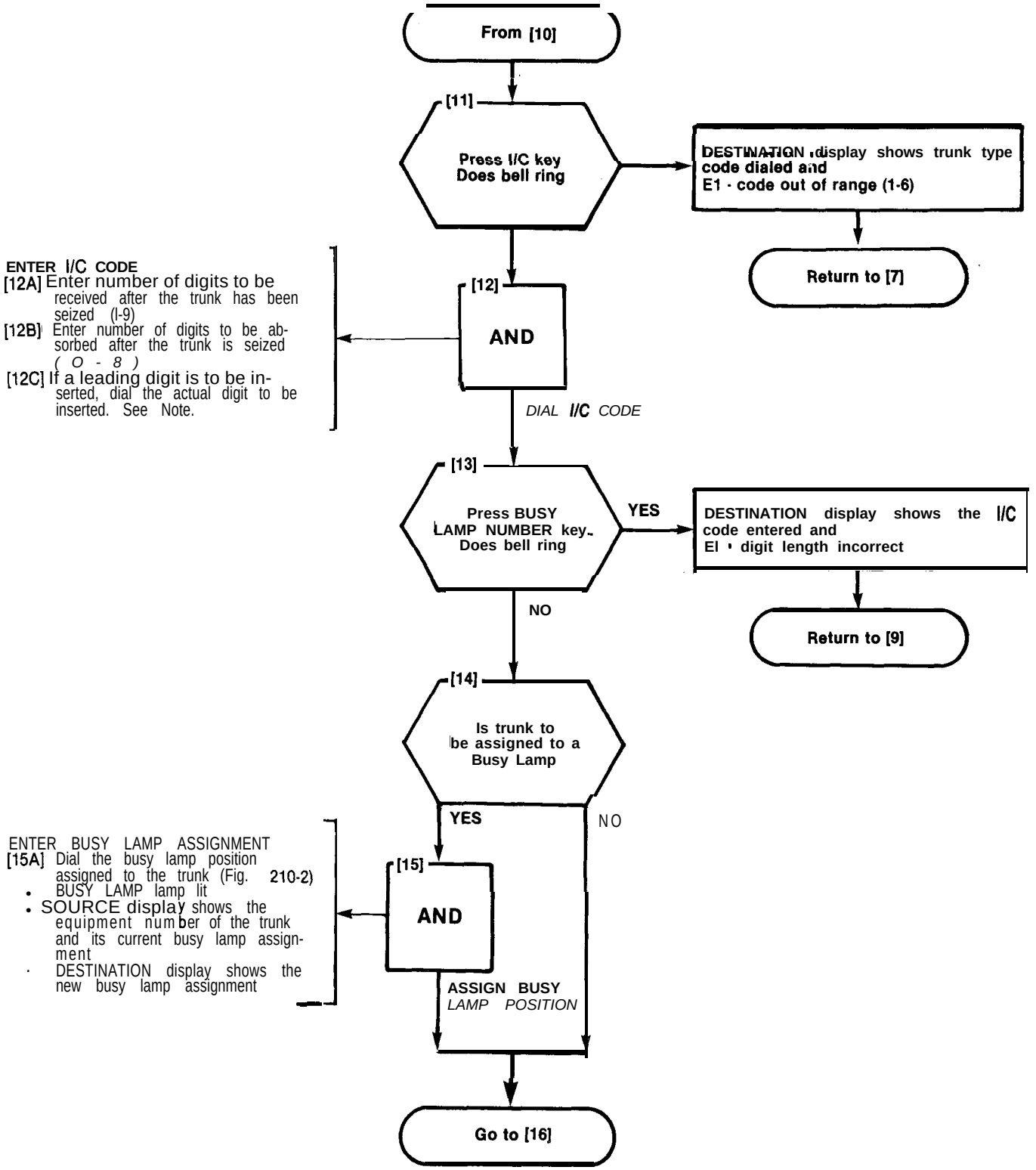

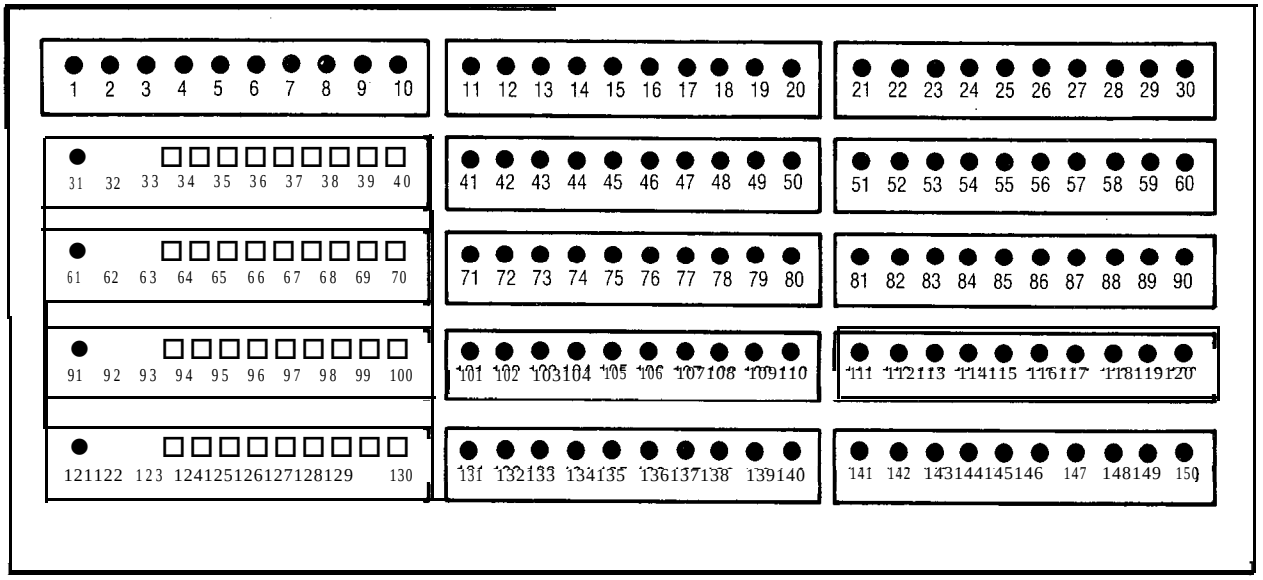

Fig. 210-2 Busy Lamp Position Numbering

PROGRAM DID TRUNKS
MAP210-210
Issue 3, July 1980
Sheet 6 of 6

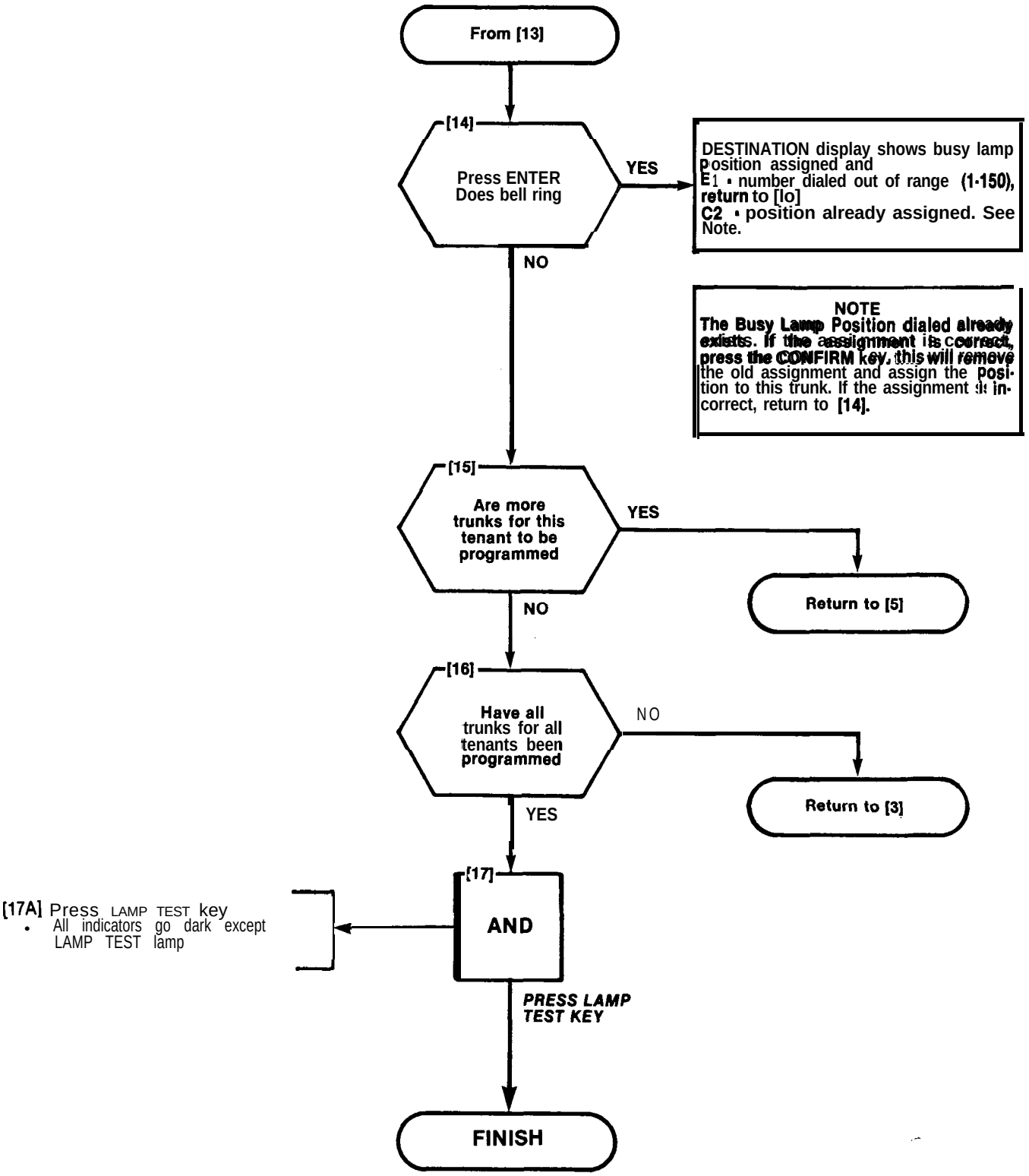

PROGRAM TRUNK GROUPS

MAP210-211

Issue 3, July 1980

Sheet 1 of 7

NOTES

(1) All entries are made from the console dial pad.

(2) TRUNK GROUP lamp remains lit throughout procedure.

(3) A display of EO indicates that an incorrect key has been pressed, press the key specified in the MAP.

(4) If an equipment number is to be changed all trunks within the trunk group must be re-entered.

CAUTION

If Multi-Digit Toll Control (Generic 204) is required this MAP is not applicable. Trunks must be programmed in accordance with Section MITL9105/9110-98-212.

SYNOPSIS

Select required tenant.
Set up trunk group and access code.
Assign trunk group type, Toll Deny and Overflow Group codes.
Enter all trunk equipment numbers assigned to the trunk group.

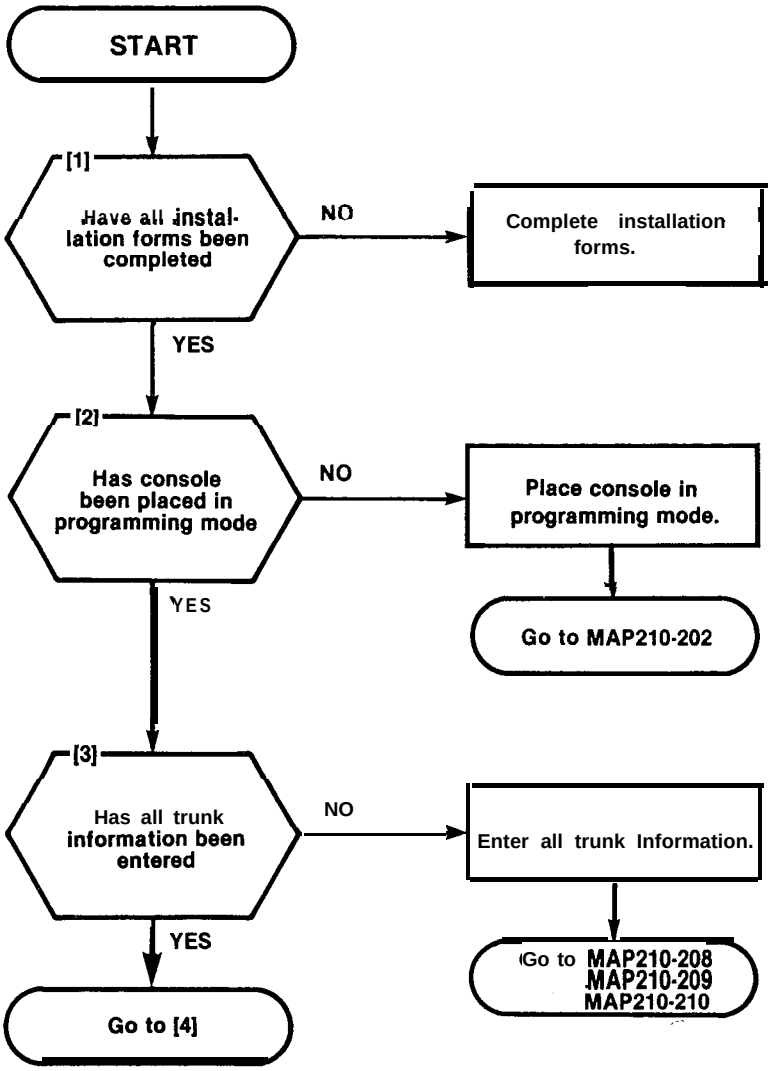

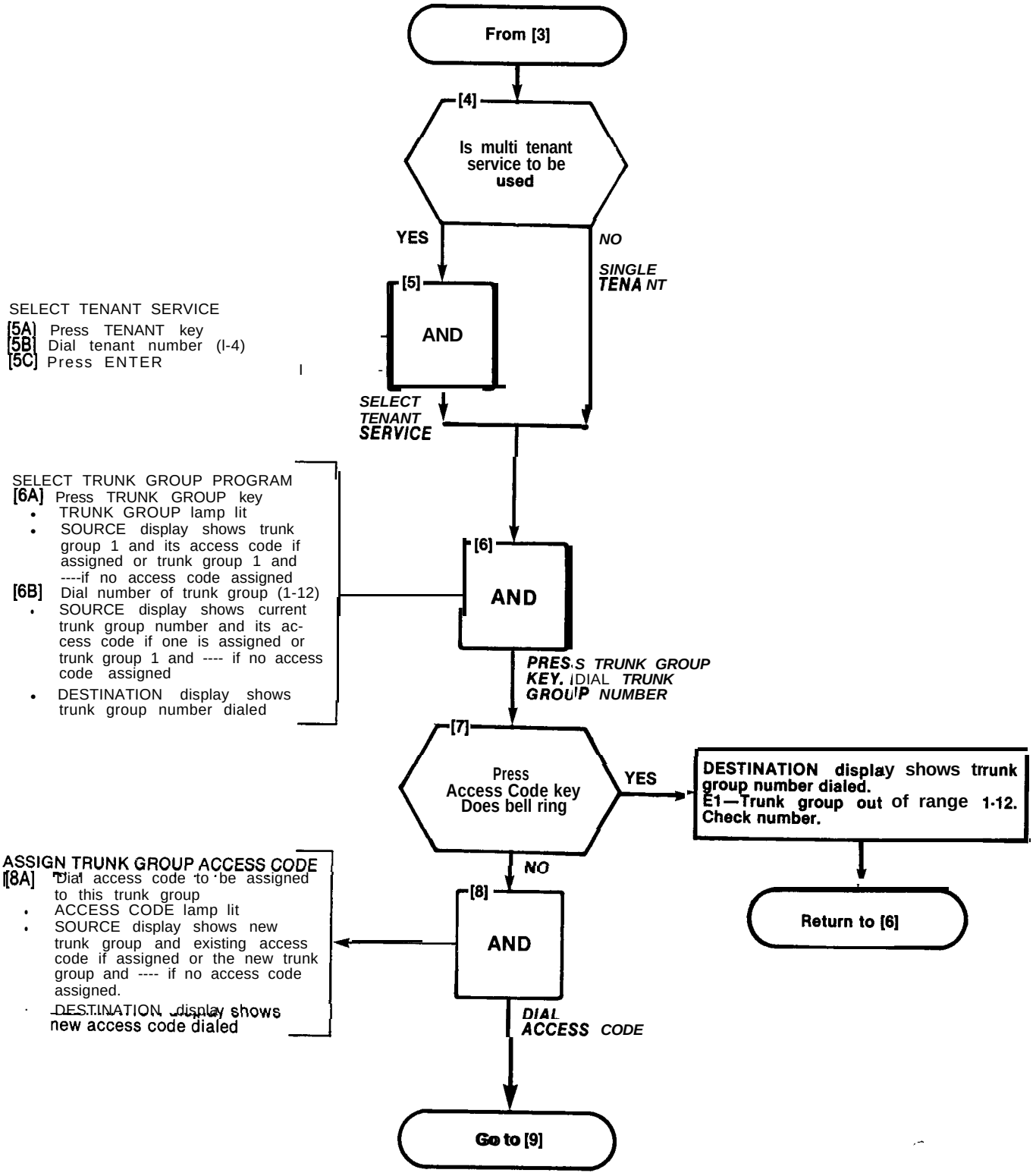
From [3]
[4]
Is multi tenant service to be used
YES
NO
SINGLE TENANT
[5]
AND
SELECT TENANT SERVICE
SELECT TENANT SERVICE
[5A] Press TENANT key
[5B] Dial tenant number (1-4)
[5C] Press ENTER
SELECT TRUNK GROUP PROGRAM
[6A] Press TRUNK GROUP key
• TRUNK GROUP lamp lit
• SOURCE display shows trunk group 1 and its access code if assigned or trunk group 1 and ----if no access code assigned
[6B] Dial number of trunk group (1-12)
• SOURCE display shows current trunk group number and its access code if one is assigned or trunk group 1 and ---- if no access code assigned
• DESTINATION display shows trunk group number dialed
[6]
AND
PRESS TRUNK GROUP KEY. DIAL TRUNK GROUP NUMBER
[7]
Press Access Code key Does bell ring
YES
DESTINATION display shows trunk group number dialed.
E1—Trunk group out of range 1-12. Check number.
Return to [6]
NO
ASSIGN TRUNK GROUP ACCESS CODE
[8A] Dial access code to be assigned to this trunk group
• ACCESS CODE lamp lit
• SOURCE display shows new trunk group and existing access code if assigned or the new trunk group and ---- if no access code assigned.
• DESTINATION display shows new access code dialed
[8]
AND
DIAL ACCESS CODE
Go to [9]

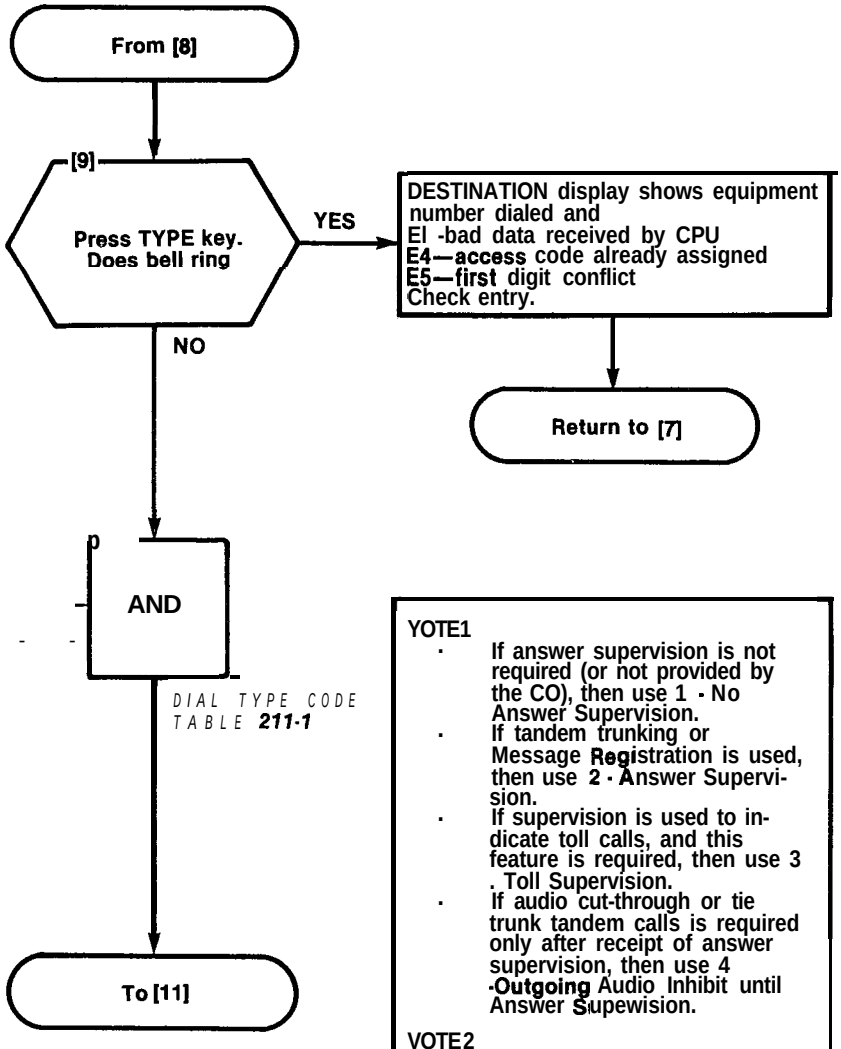

ASSIGN TRUNK TYPE

[10A] Dial trunk type code (Table 211-1)
- TYPE lamp lit
- SOURCE display shows trunk group number and current type
- DESTINATION display four digit type code dialed

TABLE 211-1

Entry	Code	Description
First digit Note (1)	1	No Answer Supervisior
	2	Answer Supervision
	3	Toll Supervision
	4	Outgoing audio inhibited until answer supervision
econd digit	1	No message register
	2	Message register
	3	SMDR without messagr register
	4	SMDR with message register
Third digit Note (2)	†1	Rotary dial office, no wait for dial tone
	†2	Rotary dial office, wait for dial tone
	$3	DTMF dial office, no wait for dial tone
	$4	DTMF dial office, wait for dial tone tone
'ourth digit Note (3)	1	CO trunk
	2	Non-CO trunk
	3	Non-CO with identification

YOTE1
- If answer supervision is not required (or not provided by the CO), then use 1 - No Answer Supervision.
- If tandem trunking or Message Registration is used, then use 2 - Answer Supervision.
- If supervision is used to indicate toll calls, and this feature is required, then use 3 . Toll Supervision.
- If audio cut-through or tie trunk tandem calls is required only after receipt of answer supervision, then use 4 -Outgoing Audio Inhibit until Answer Supewision.

VOTE2
- If "wait for dial tone" is selected then any digits dial. ed prior to recei t of CO dial tone are ignore8 by the PABX. This prevents circumvention of the toll denial by dialing a fast valid digit before CO dial tone is received.

NOTE 3
- If the fourth digit selected is 3, the third digit must be 1.

t If extensions are DTMF the trunk will convert to dial pulse. Early line split is not provided.

‡ Trunks will repeat DTMF or dial pulse signals.

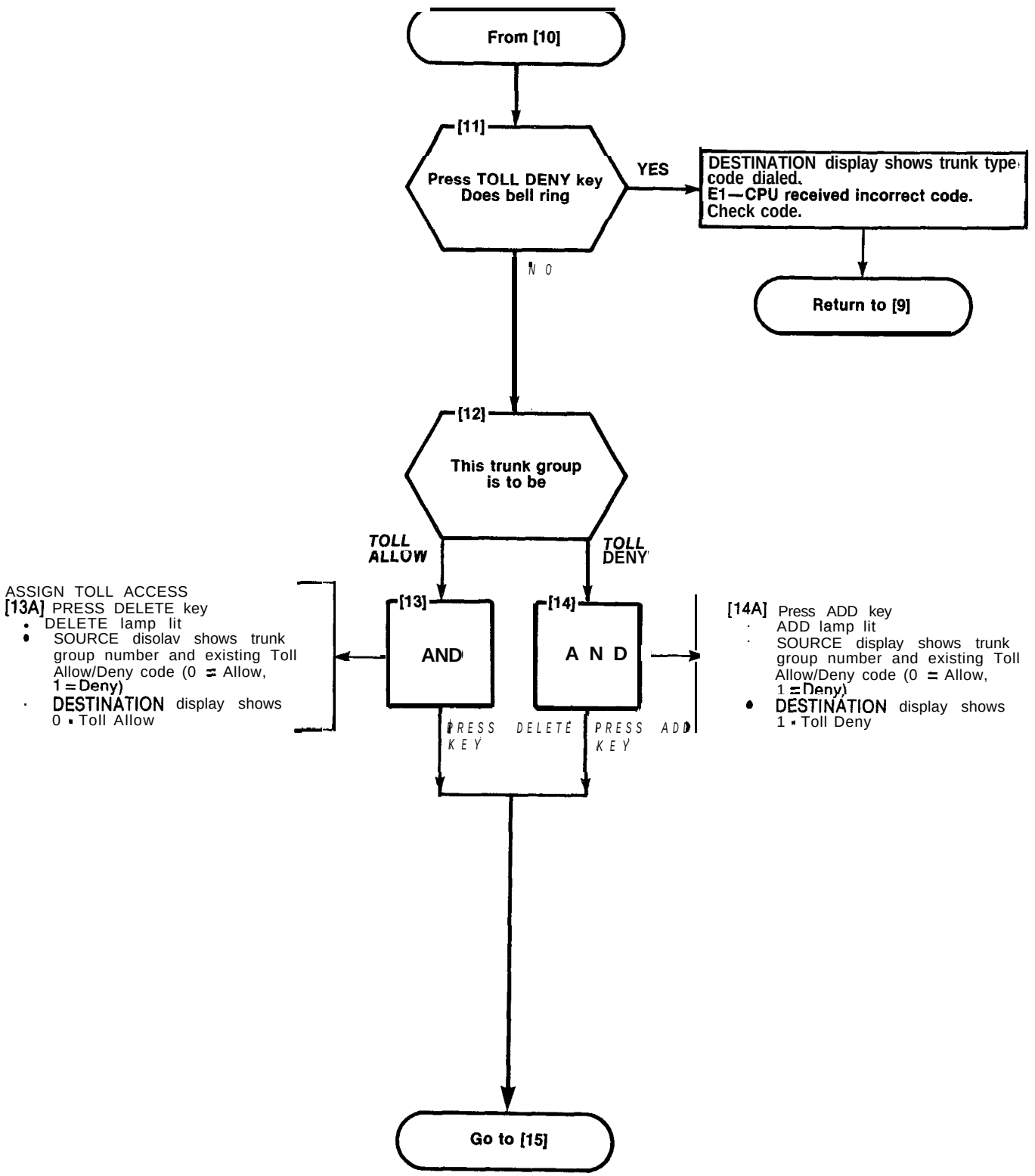
From [10]
[11]
Press TOLL DENY key
Does bell ring
YES
DESTINATION display shows trunk type code dialed.
E1—CPU received incorrect code.
Check code.
Return to [9]
NO
[12]
This trunk group is to be
TOLL ALLOW
TOLL DENY
ASSIGN TOLL ACCESS
[13A] PRESS DELETE key
• DELETE lamp lit
• SOURCE disolav shows trunk group number and existing Toll Allow/Deny code (0 = Allow, 1 = Deny)
• DESTINATION display shows 0 = Toll Allow
[13]
AND
[14]
A N D
[14A] Press ADD key
• ADD lamp lit
• SOURCE display shows trunk group number and existing Toll Allow/Deny code (0 = Allow, 1 = Deny)
• DESTINATION display shows 1 = Toll Deny
PRESS KEY
DELETE
PRESS KEY
ADD
Go to [15]

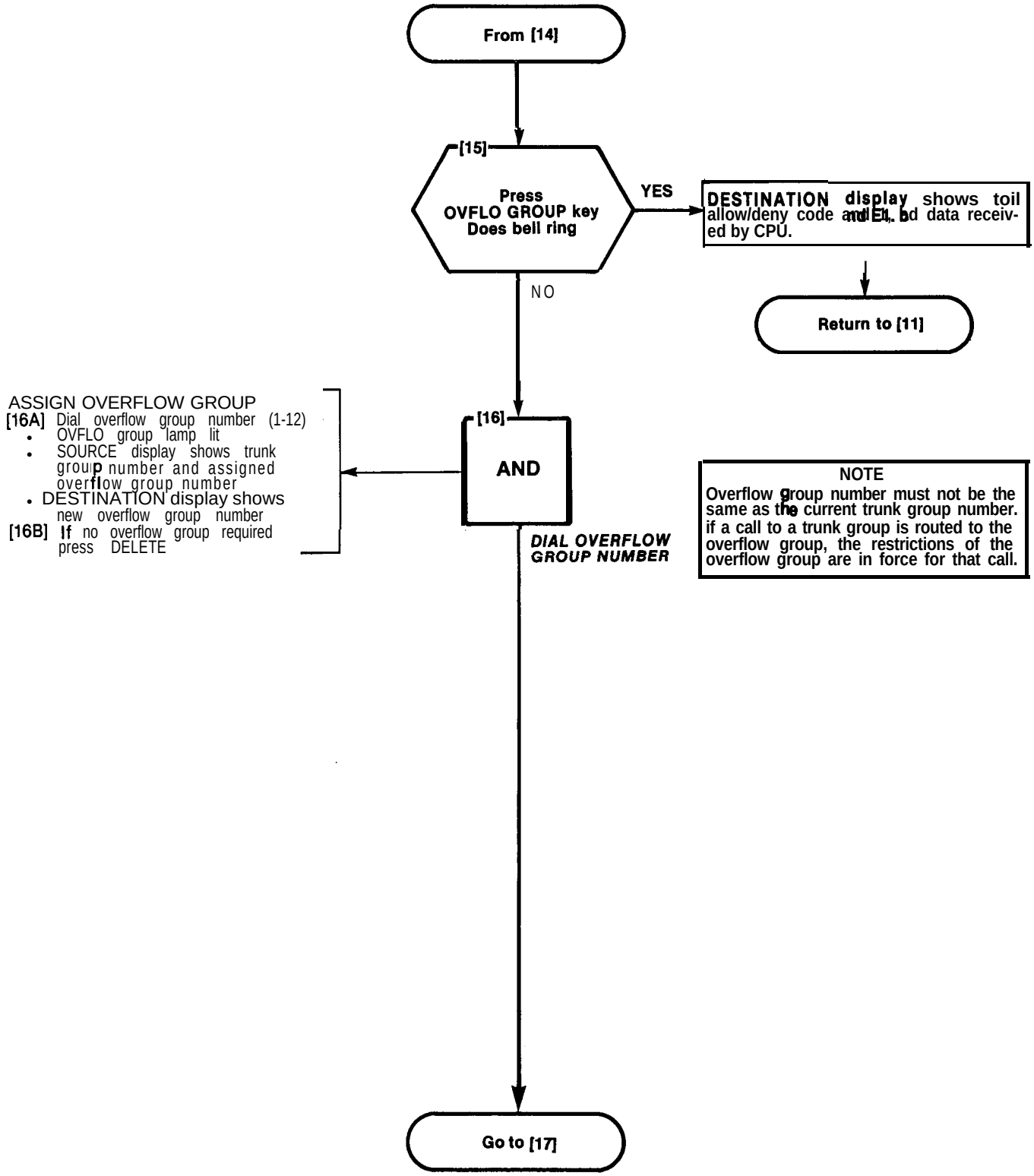
From [14]
[15]
Press OVFLO GROUP key Does bell ring
YES
DESTINATION display shows toll allow/deny code and ETA data received by CPU.
Return to [11]
NO
[16]
AND
DIAL OVERFLOW GROUP NUMBER
ASSIGN OVERFLOW GROUP
[16A] Dial overflow group number (1-12)
• OVFLO group lamp lit
• SOURCE display shows trunk group number and assigned overflow group number
• DESTINATION display shows new overflow group number
[16B] If no overflow group required press DELETE
NOTE
Overflow group number must not be the same as the current trunk group number. if a call to a trunk group is routed to the overflow group, the restrictions of the overflow group are in force for that call.
Go to [17]

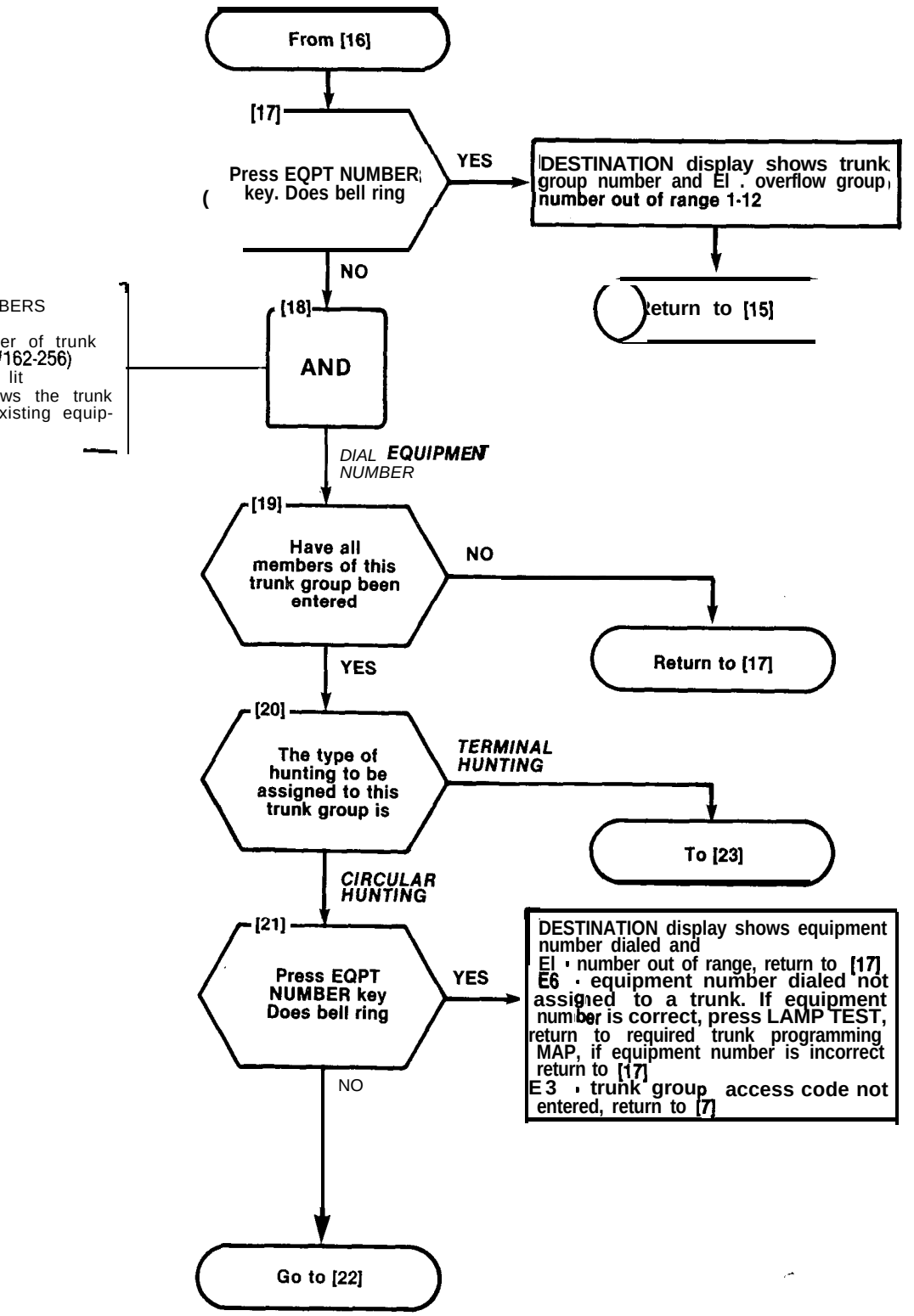
From [16]
[17]
Press EQPT NUMBER key. Does bell ring
YES
DESTINATION display shows trunk group number and E1 . overflow group number out of range 1-12
Return to [15]
NO
[18]
AND
ASSIGN EQUIPMENT NUMBERS TO THIS TRUNK GROUP
[18A] Dial equipment number of trunk in trunk group (2-112/162-256)
· EQPT NUMBER lamp lit
· SOURCE display shows the trunk group number and existing equipment number
DIAL EQUIPMENT NUMBER
[19]
Have all members of this trunk group been entered
NO
Return to [17]
YES
[20]
The type of hunting to be assigned to this trunk group is
TERMINAL HUNTING
To [23]
CIRCULAR HUNTING
[21]
Press EQPT NUMBER key Does bell ring
YES
DESTINATION display shows equipment number dialed and
E1 · number out of range, return to [17]
E6 · equipment number dialed not assigned to a trunk. If equipment number is correct, press LAMP TEST, return to required trunk programming MAP, if equipment number is incorrect return to [17]
E3 · trunk group access code not entered, return to [7]
NO
Go to [22]

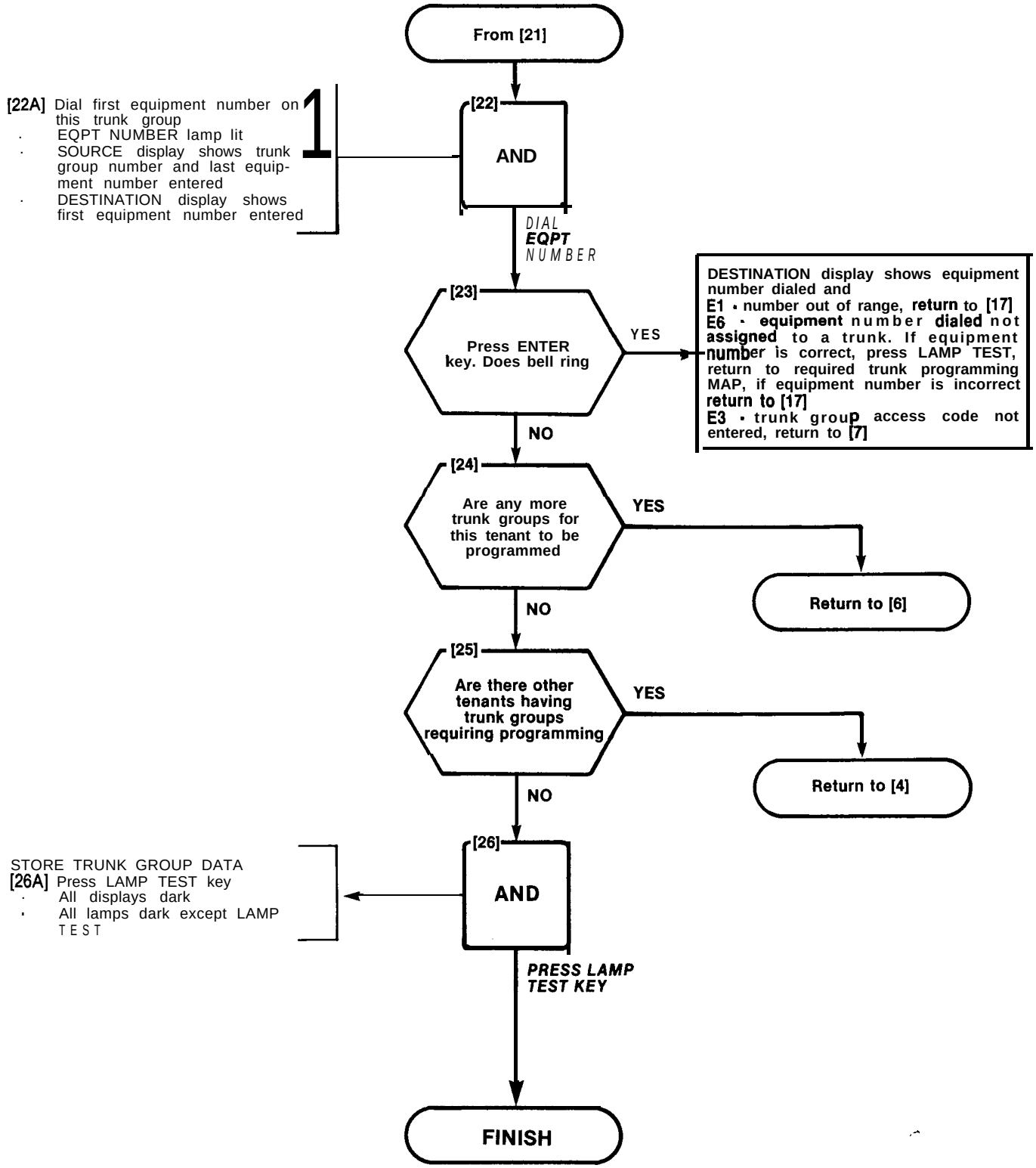
From [21]
[22]
AND
1
[22A] Dial first equipment number on this trunk group
· EQPT NUMBER lamp lit
· SOURCE display shows trunk group number and last equipment number entered
· DESTINATION display shows first equipment number entered
DIAL EQPT NUMBER
[23]
Press ENTER key. Does bell ring
YES
DESTINATION display shows equipment number dialed and
E1 - number out of range, return to [17]
E6 - equipment number dialed not assigned to a trunk. If equipment number is correct, press LAMP TEST, return to required trunk programming MAP, if equipment number is incorrect return to [17]
E3 - trunk group access code not entered, return to [7]
NO
[24]
Are any more trunk groups for this tenant to be programmed
YES
Return to [6]
NO
[25]
Are there other tenants having trunk groups requiring programming
YES
Return to [4]
NO
[26]
AND
STORE TRUNK GROUP DATA
[26A] Press LAMP TEST key
· All displays dark
· All lamps dark except LAMP TEST
PRESS LAMP TEST KEY
FINISH

TERMINATING PROGRAMMING MODE
MAP210-212
Issue 3, July 1980
Sheet 1 of 1

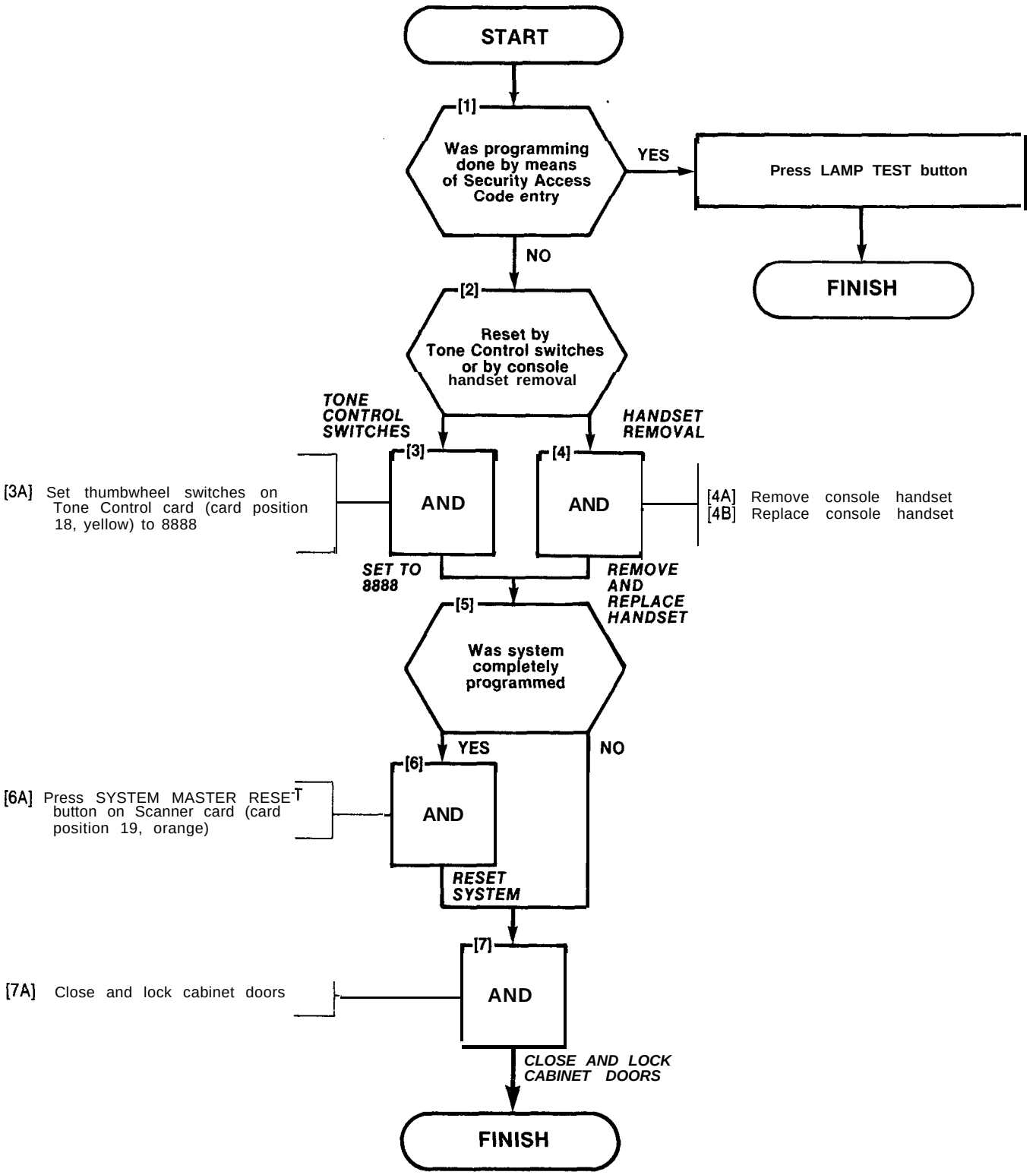

SELECTION OF EXTENDED PROGRAMMING
MAP210-221
Issue 3, July 1980
Sheet 1 of 2

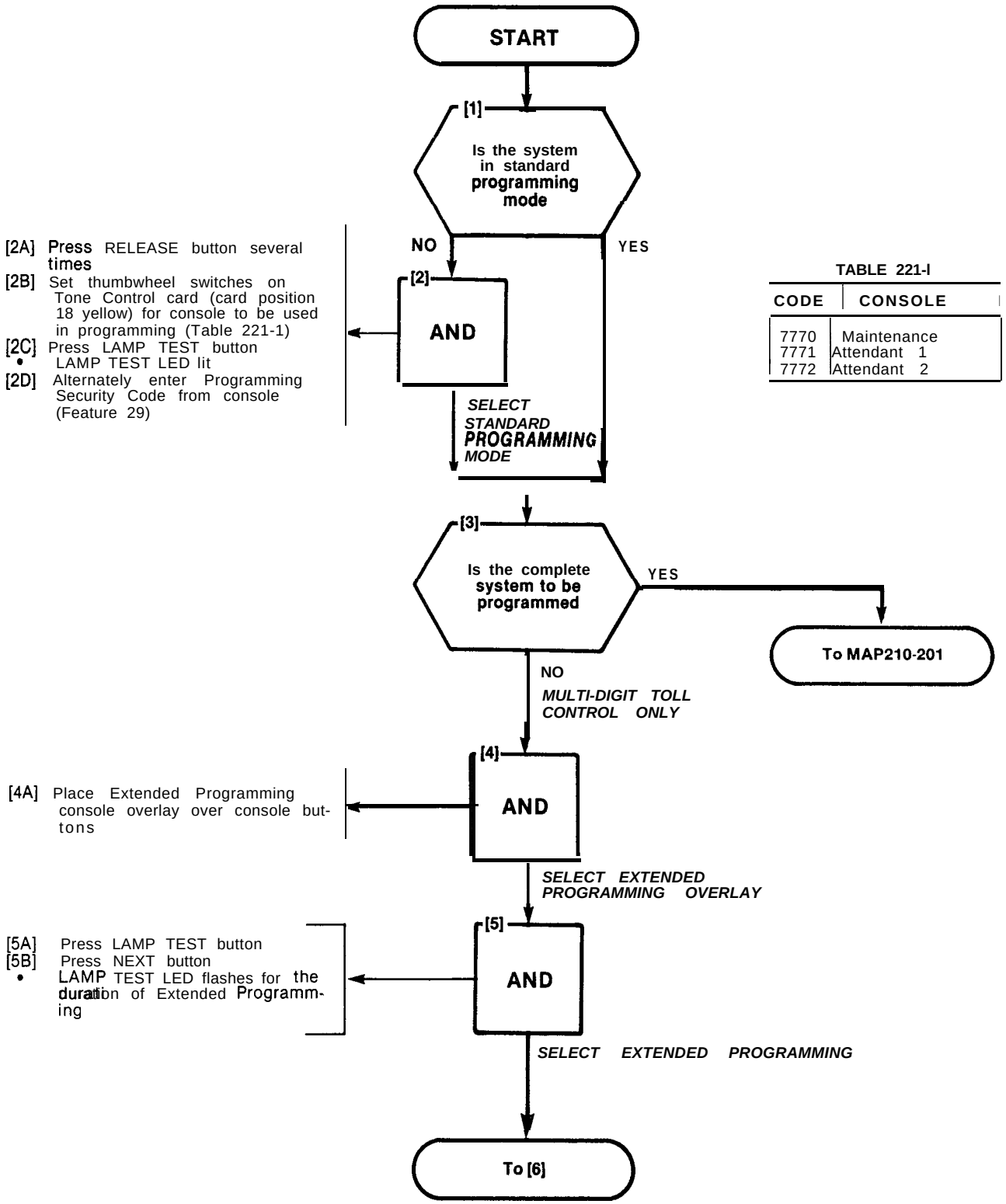

TABLE 221-I

CODE	CONSOLE
7770	Maintenance
7771	Attendant 1
7772	Attendant 2

SELECTION OF EXTENDED PROGRAMMING
MAP210-221
Issue 3, July 1980
Sheet 2 of 2

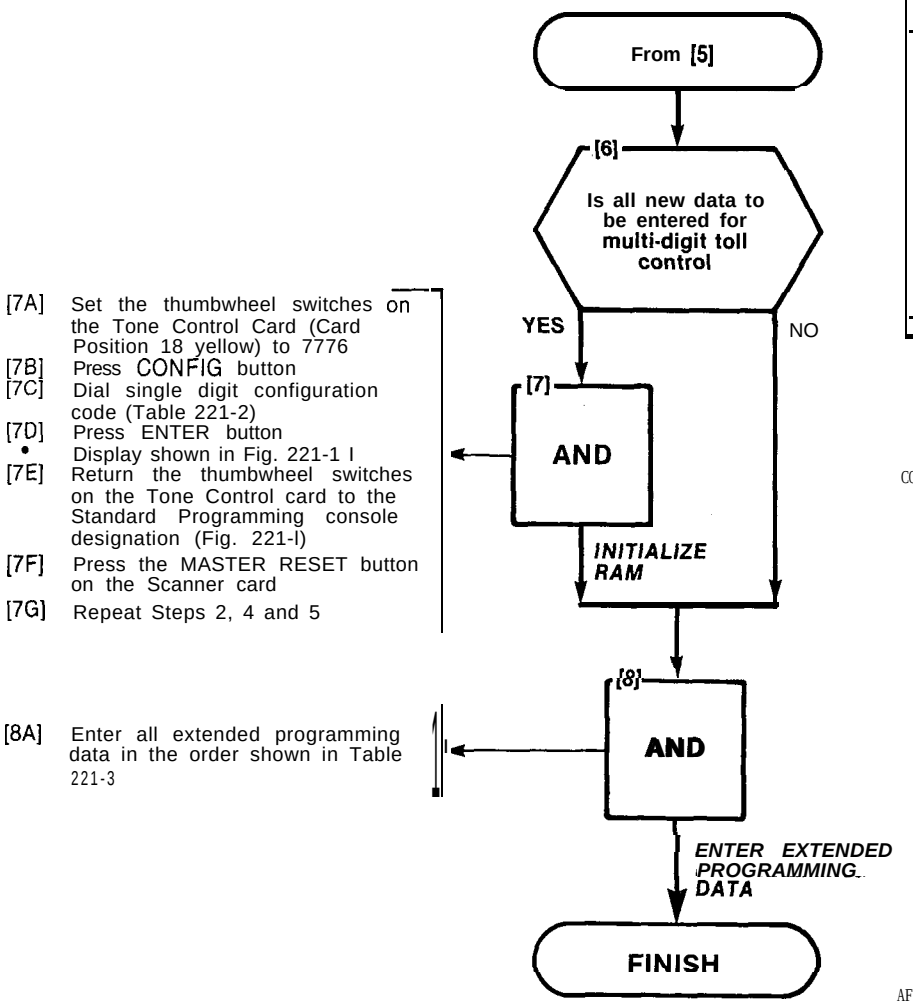

[7A] Set the thumbwheel switches on the Tone Control Card (Card Position 18 yellow) to 7776
[7B] Press CONFIG button
[7C] Dial single digit configuration code (Table 221-2)
[7D] Press ENTER button
• Display shown in Fig. 221-1 I
[7E] Return the thumbwheel switches on the Tone Control card to the Standard Programming console designation (Fig. 221-l)
[7F] Press the MASTER RESET button on the Scanner card
[7G] Repeat Steps 2, 4 and 5

[8A] Enter all extended programming data in the order shown in Table 221-3

TABLE 221-2

CONFIGURATION CODE	DESCRIPTION
1	Automatic Wakeup Toll Control Standard
2	Toll Control Standard and Speed Call Standard
3	Toll Control Basic and Speed Call Extended
4	Toll Control Extended (No Automatic Wakeup)

NOTE
To have Automatic Wakeup and Multi-Digit Toll Control, select Configuration code 1 (Table 221-2)

CONFIGURATION COPE

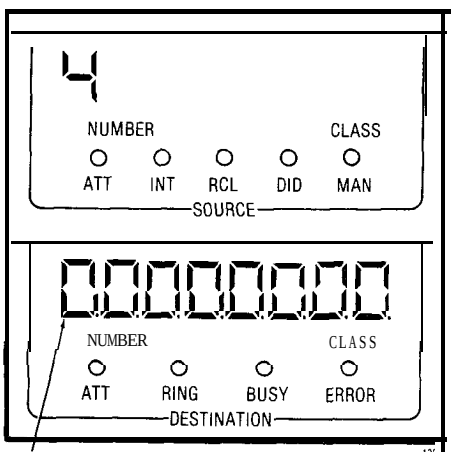

DISPLAY AFTER ENTER BUTTON PRESSED

Fig. 221-I

TABLE 221-3

ORDER	MAP	TITLE
1	002	Absorb Plan Data
2	003	Control Plan
3	004	Trunk Group Class of Restriction
4	005	Restriction Tables
5	010	Terminating Programming

ABSORB PLAN
MAP210-222
Issue 3, July 1980
Sheet 1 of 3

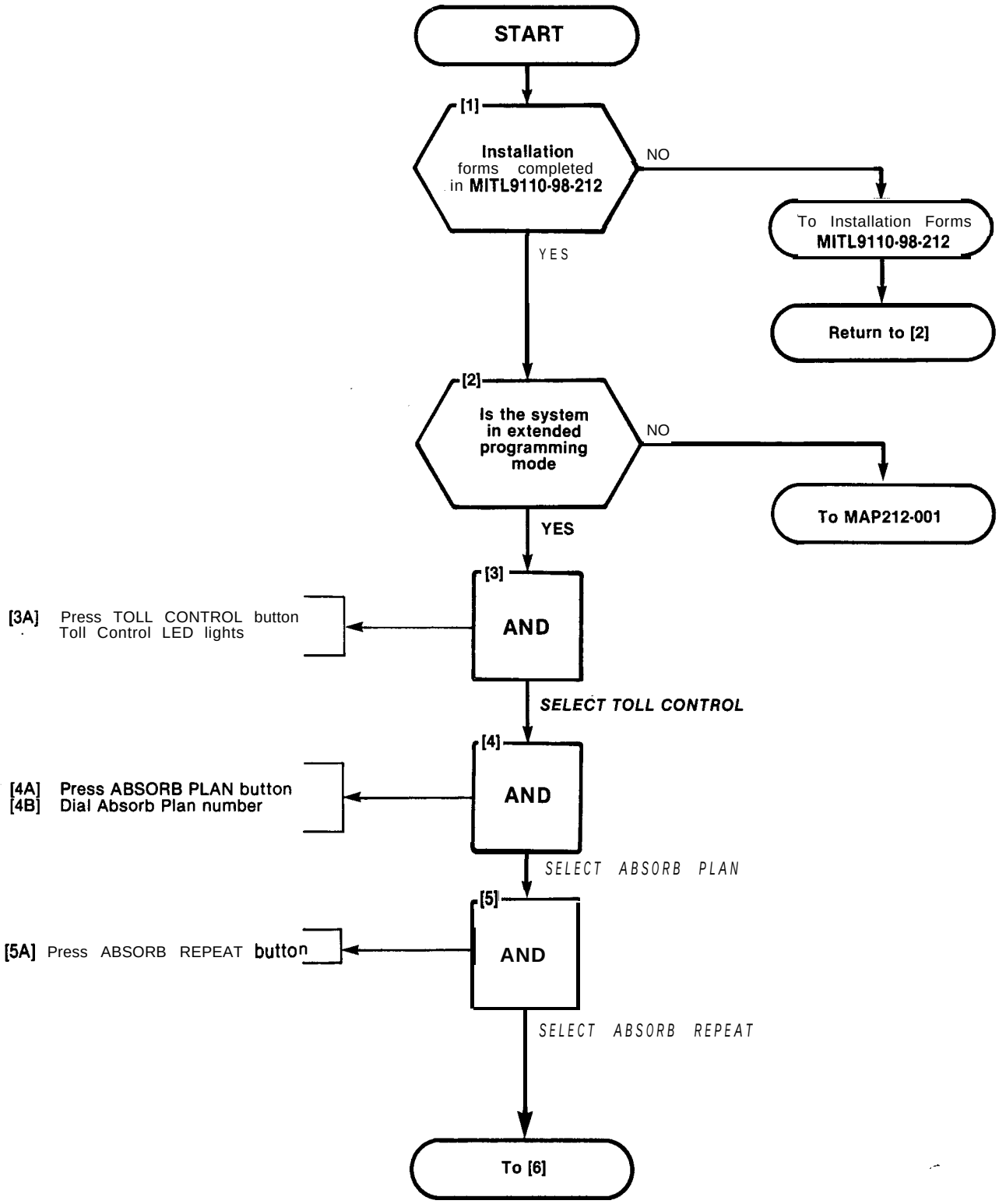

ABSORB PLAN
MAP210-222
Issue 3, July 1980
Sheet 2 of 3

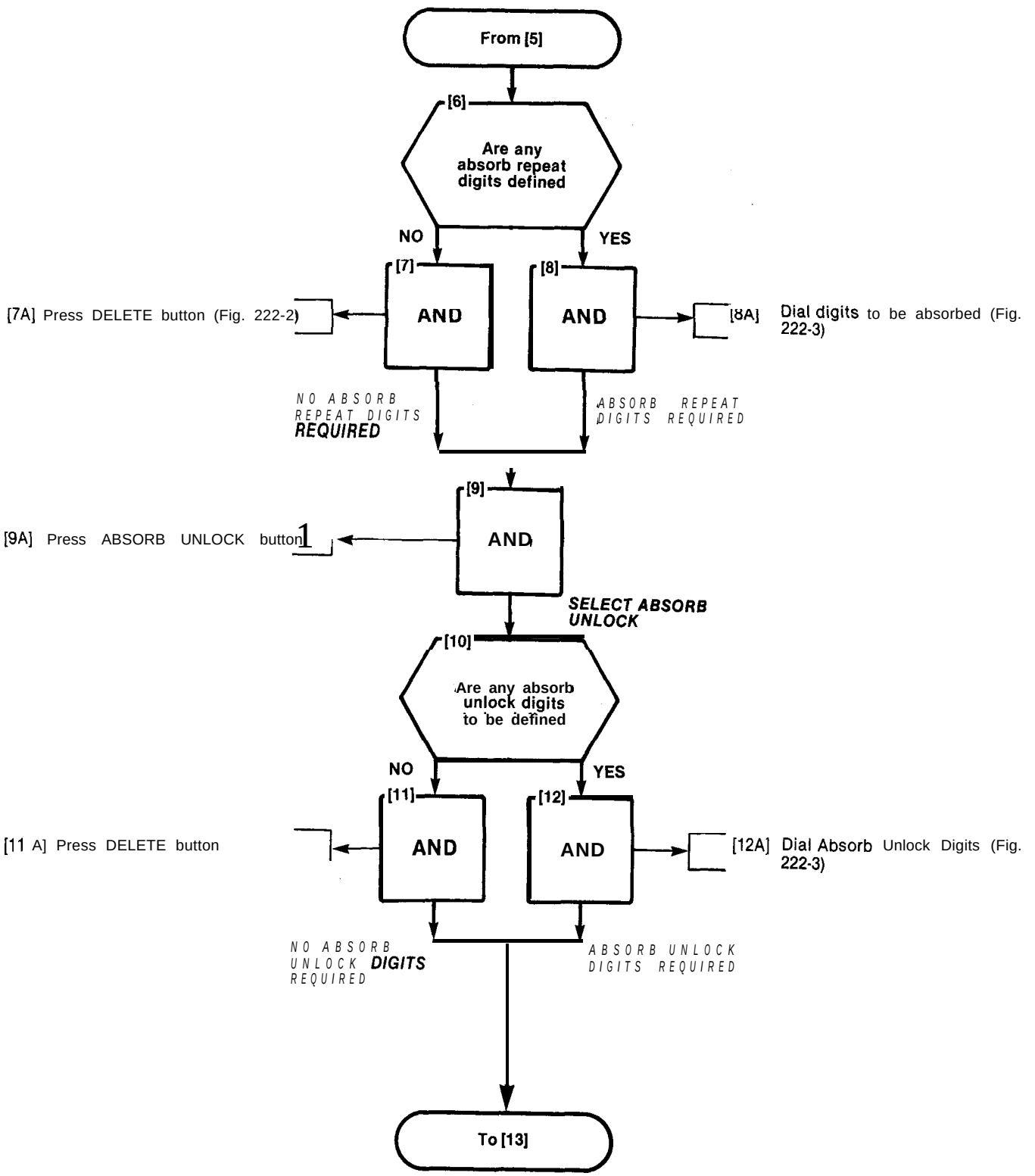

ABSORB PLAN
MAP210-222
Issue 3, July 1980
Sheet 3 of 3

From [12]

[13] Is there a second absorb plan to be programmed

YES → Return to [4]

NO

[14] AND

[14A] Press the ENTER button

ENTER ABSORB DATA

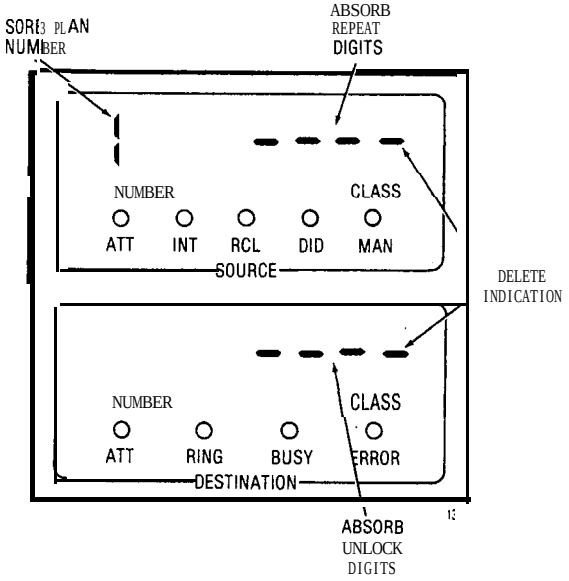

Fig. 222-2

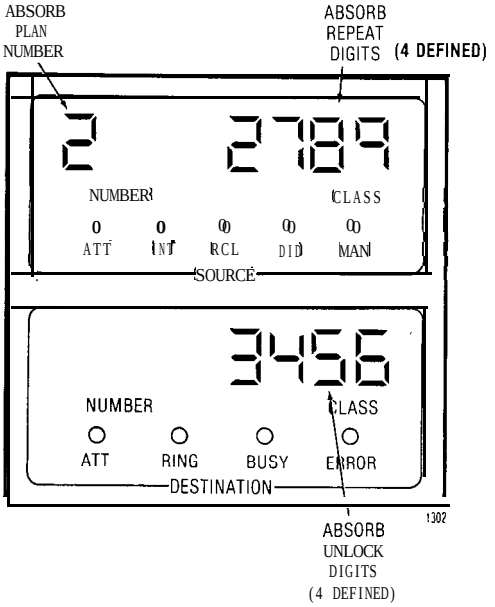

Fig. 222.3

FINISH

CONTROL PLAN
MAP210-223
Issue 3, July 1980
Sheet 1 of 4

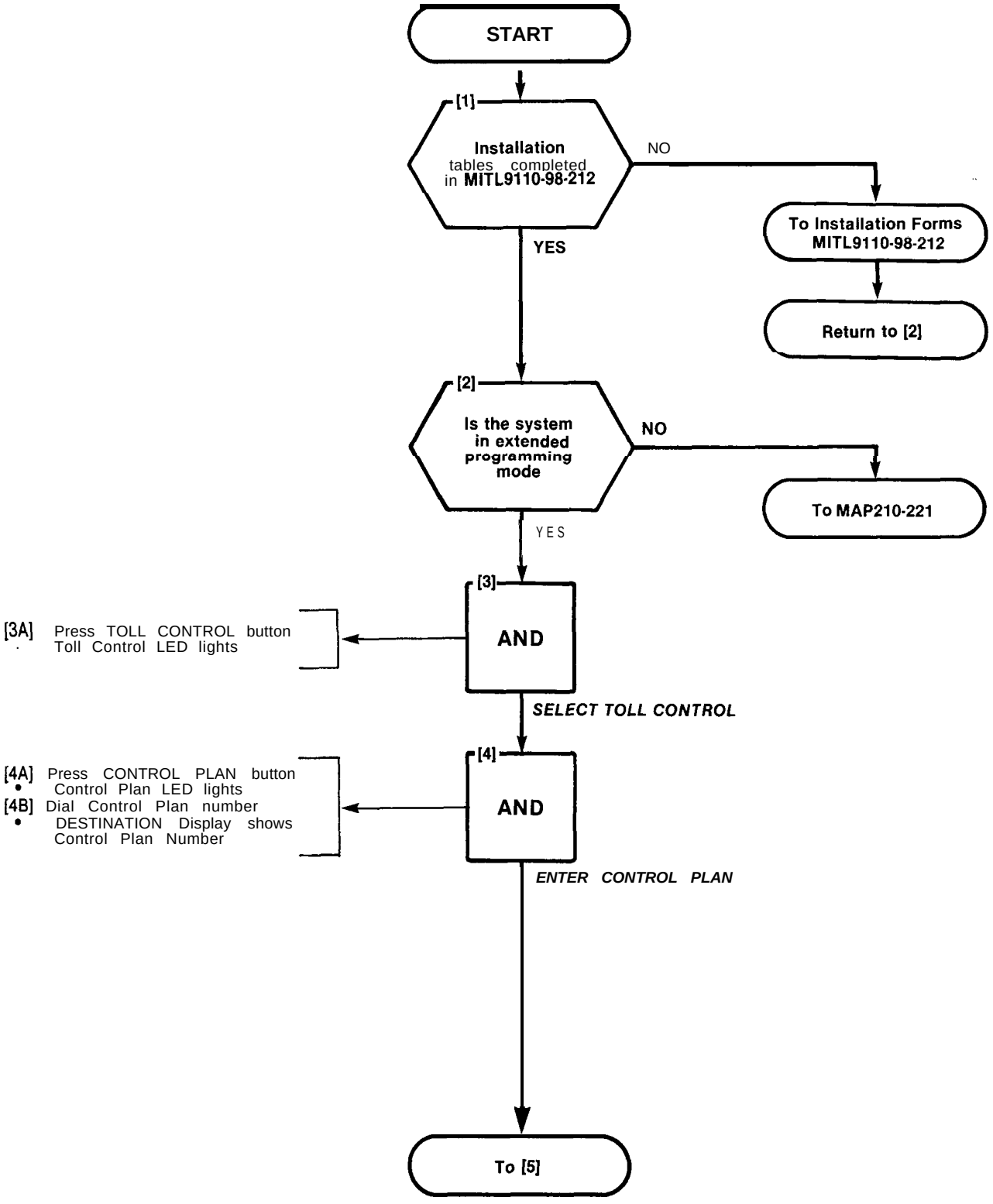

CONTROL PLAN
MAP210-223
Issue 3, July 1980
Sheet 2 of 4

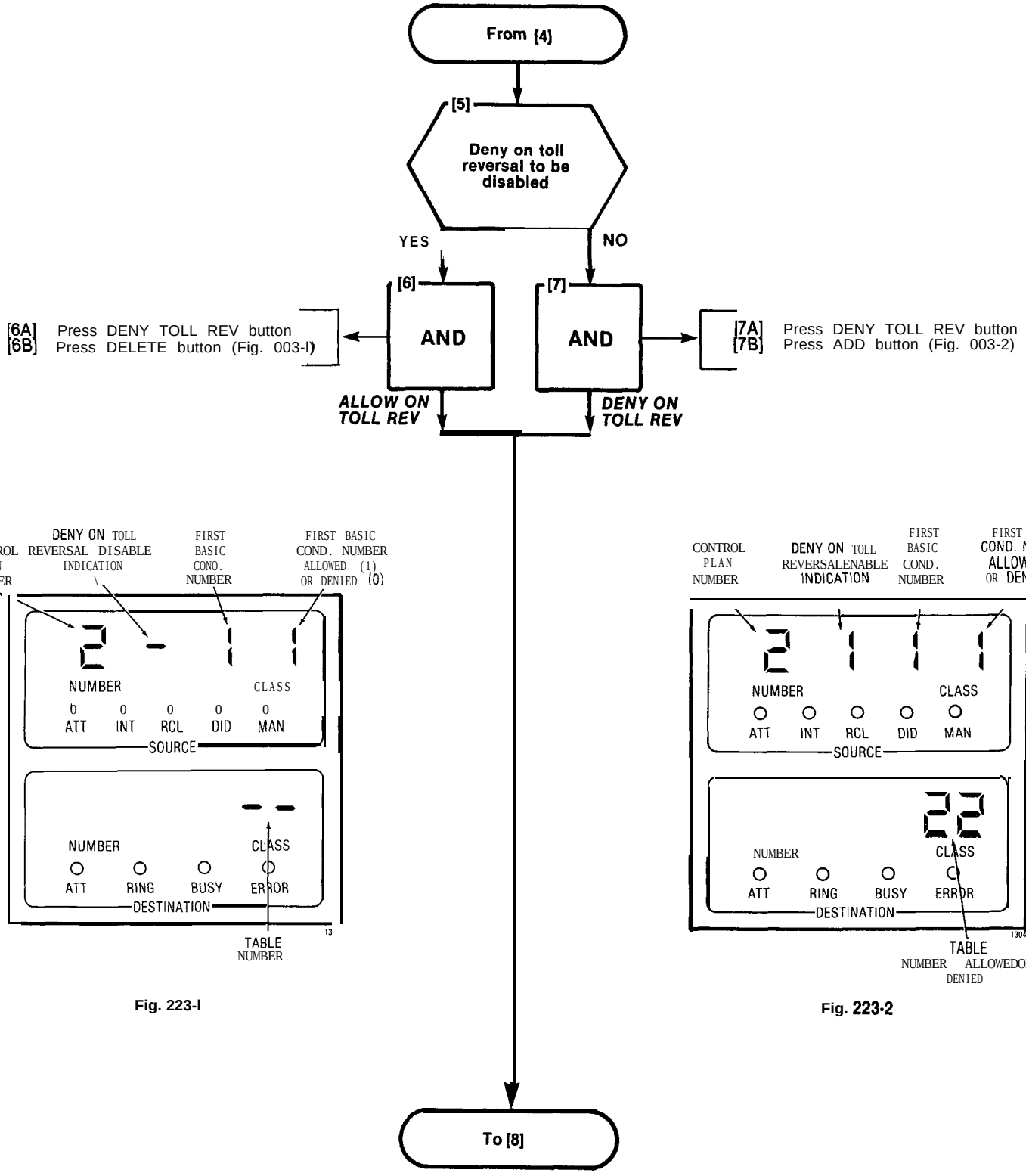

Fig. 223-I

Fig. 223-2

CONTROL PLAN
MAP210-223
Issue 3, July 1980
Sheet 3 of 4

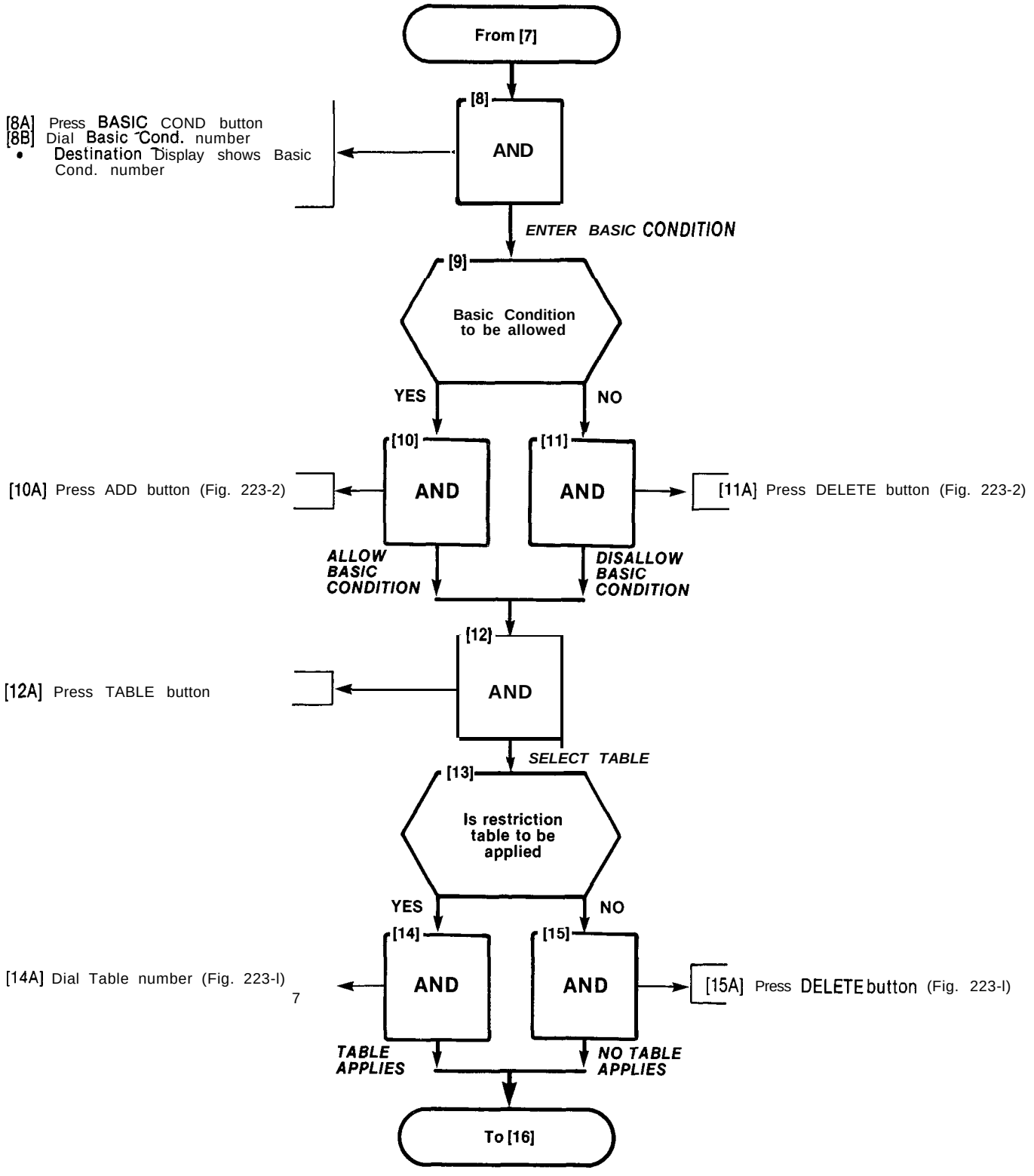

CONTROL PLAN
MAP210-223
Issue 3, July 1980
Sheet 4 of 4

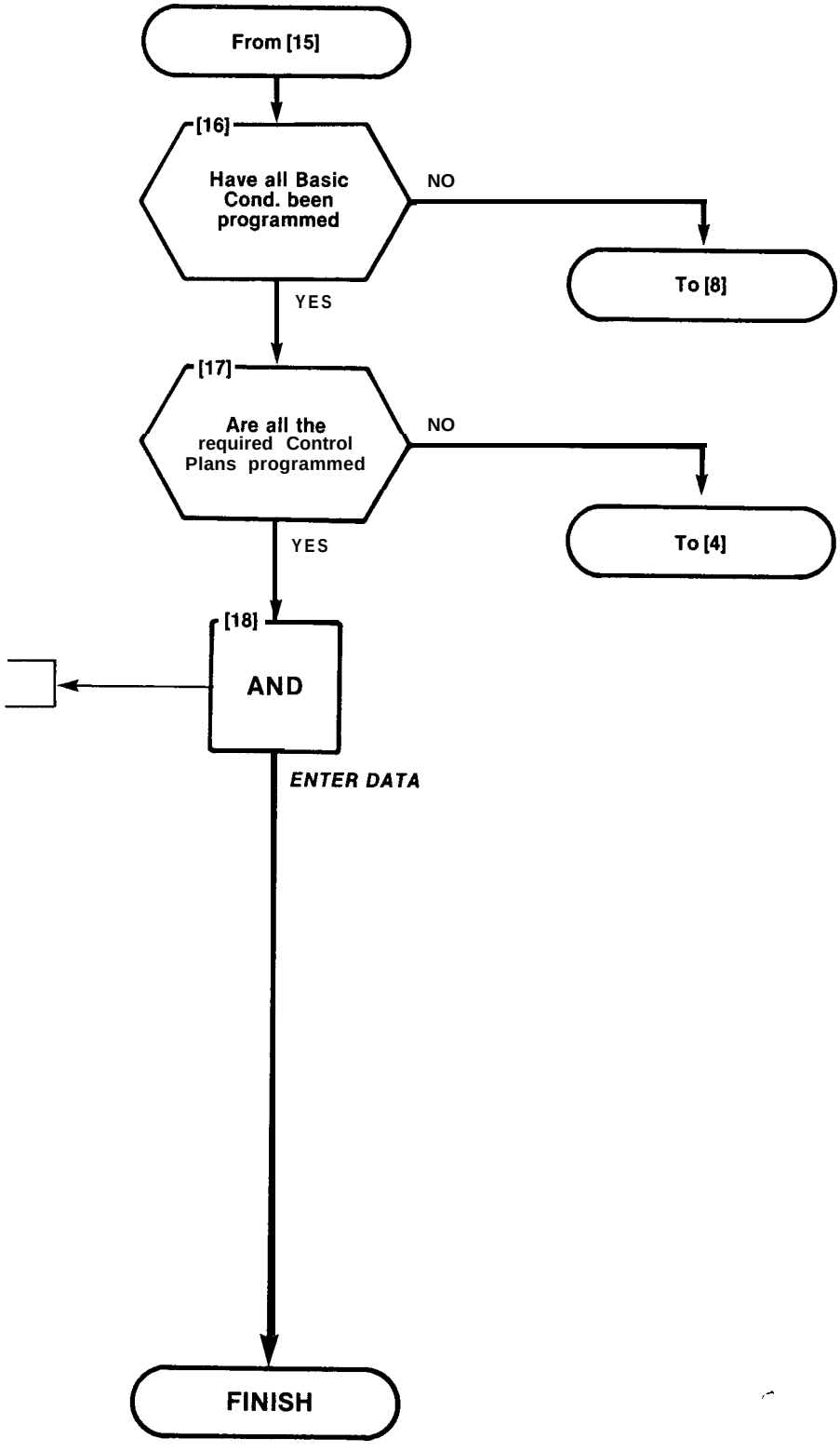

[18A] Press ENTER button

TRUNK GROUP CLASS OF RESTRICTION
MAP210-224
Issue 3, July 1980
Sheet 1 of 3

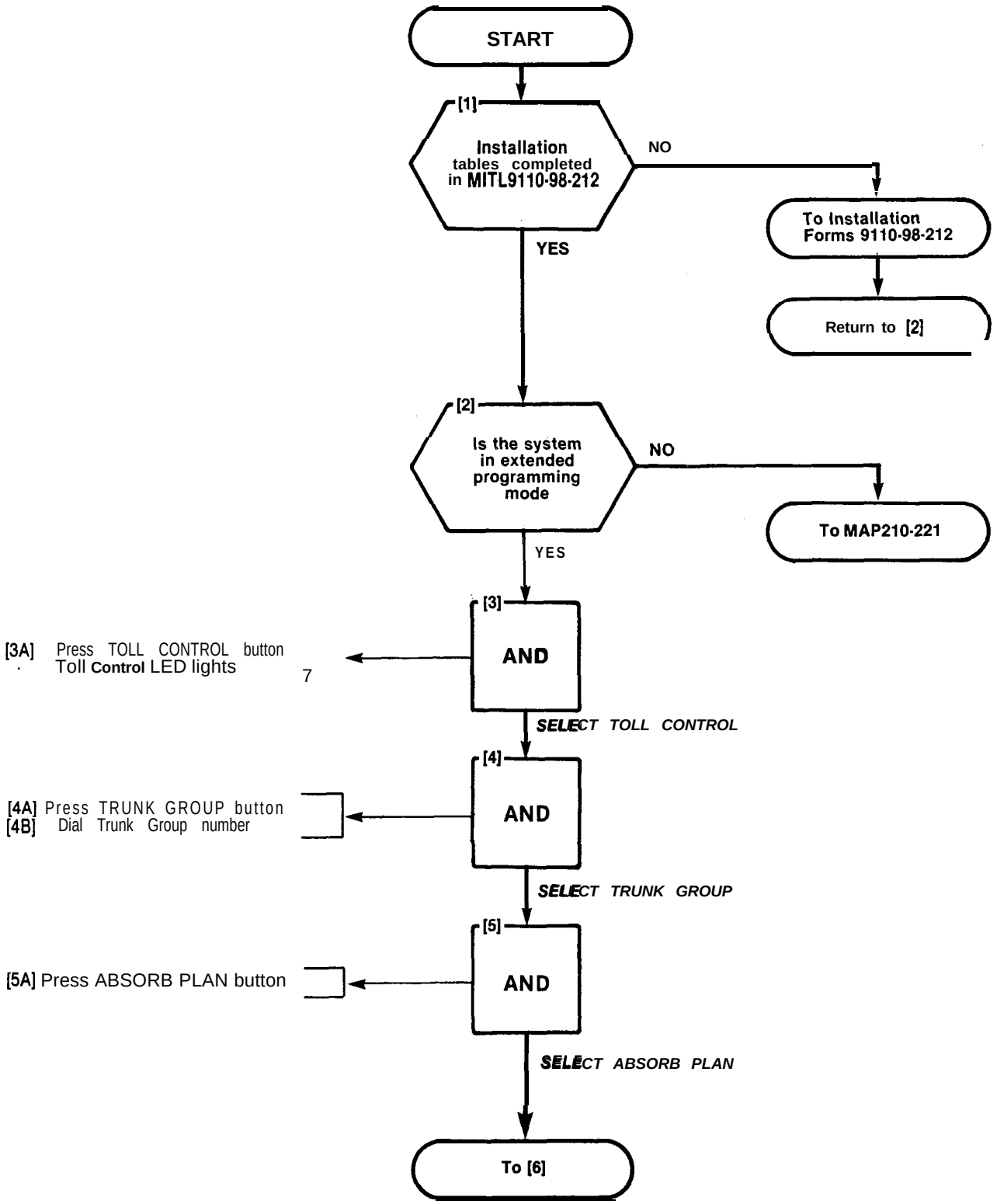

TRUNK GROUP CLASS OF RESTRICTION
MAP210-224
Issue 3, July 1980
Sheet 2 of 3

From [5]

[6] Is an Absorb Plan to be applied

NO → [7] AND → NO ABSORB PLAN APPLIES

YES → [8] AND → ABSORB PLAN APPLIES

[7A] Press DELETE button (Fig. 224-1)

[8A] Dial ABSORB PLAN 1 or 2 (Fig. 224-2)

To [9]

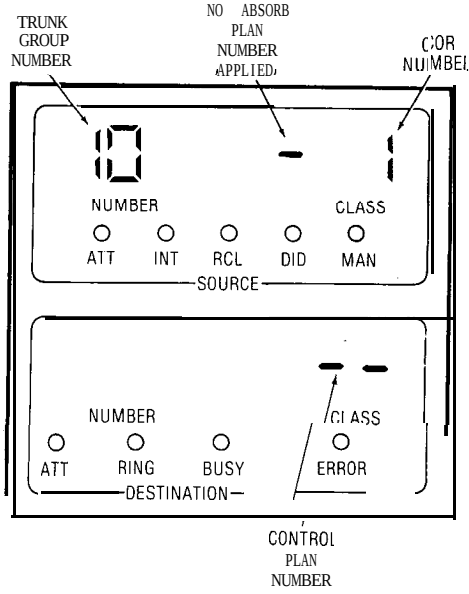

Fig. 224-I

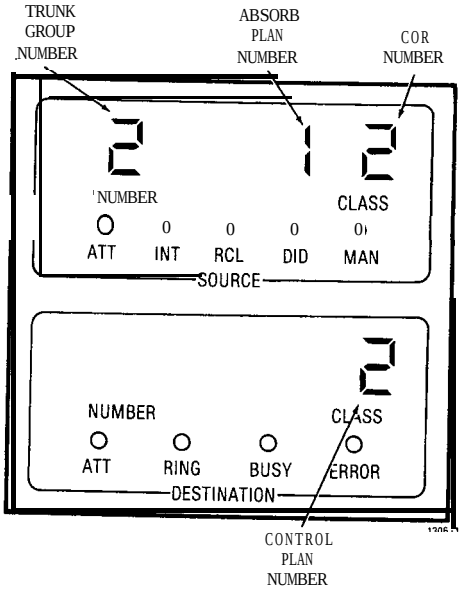

Fig. 224.2

TRUNK GROUP CLASS OF RESTRICTION
MAP210-224
Issue 3, July 1980
Sheet 3 of 3

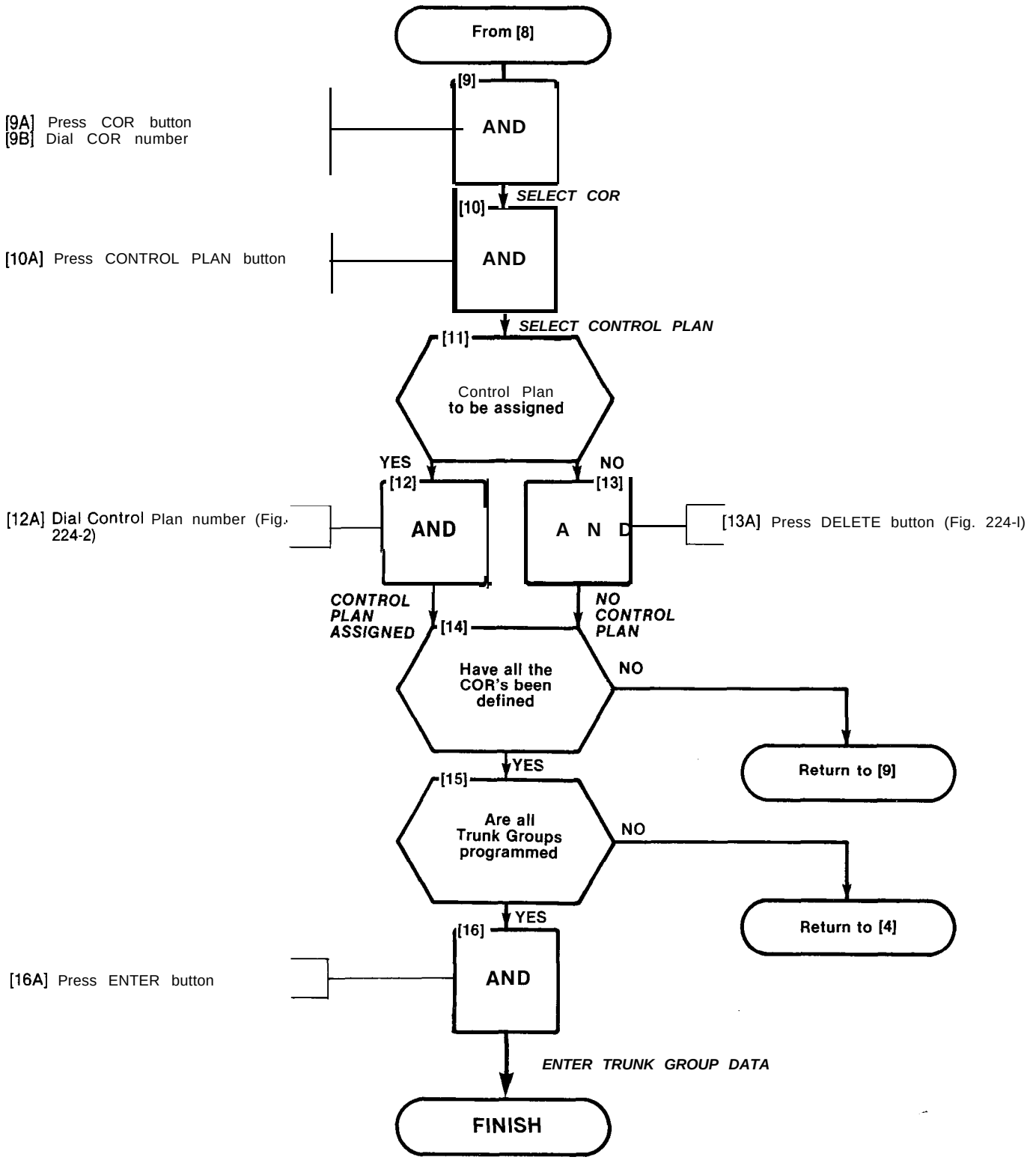

RESTRICTION TABLES
MAP210-225
Issue 3, July 1980
Sheet 1 of 2

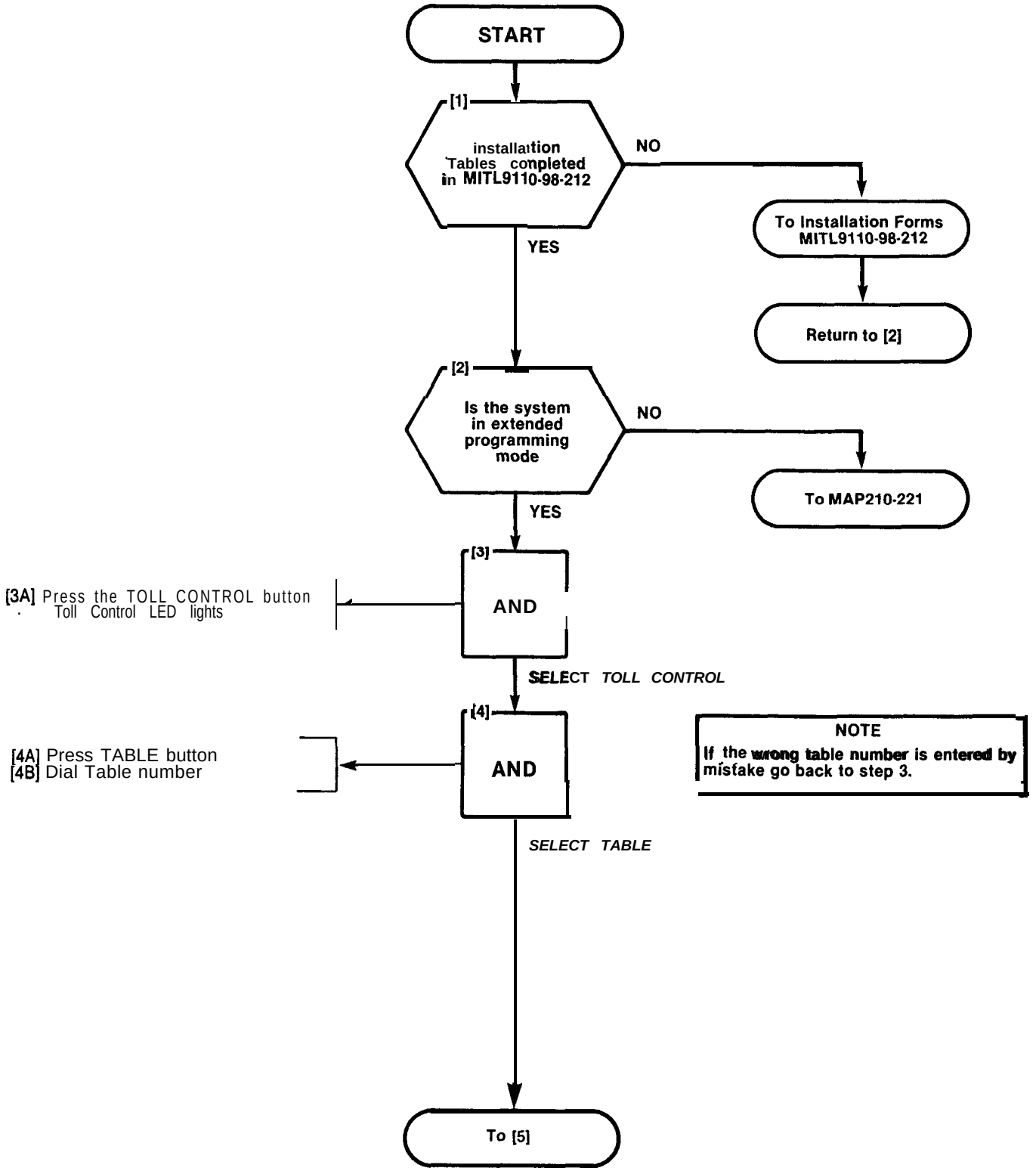

RESTRICTION TABLES
MAP210-225
Issue 3, July 1980
Sheet 2 of 2

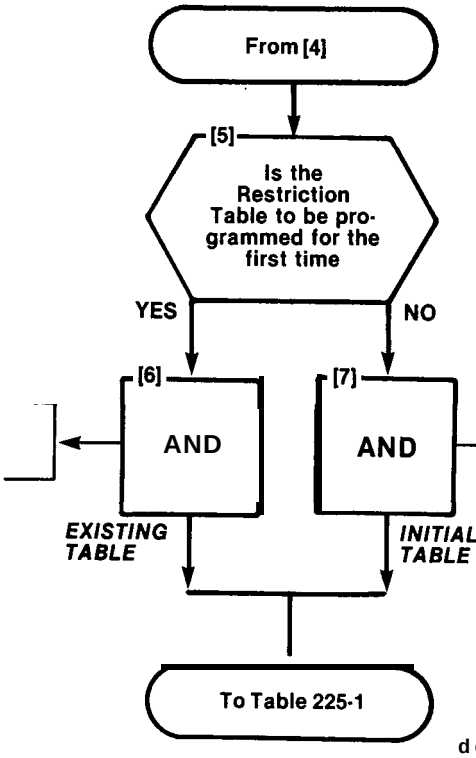

[6A] Press DELETE button
[6B] Press CONFIRM button
[6C] Press ENTER button

[7A] Press DISPLAY ENTRY button

NOTE: Use these MAPs to perform desired modifications.

TABLE 225-I

OPTION	MAP NUMBER
Add an entry	210-226
Display sequential entries	210-227
Search for a specific entry	210-228
Delete entry being displayed	210-229

NOTE 1: If the wrong entry digits are keyed by mistake, attempt to add the entry as it was keyed. If the entry is accepted remove it with the delete key. If an error is given no further action is required, as the entry was ignored.

ADD AN ENTRY
MAP210-226
Issue 3, July 1980
Sheet 1 of 1

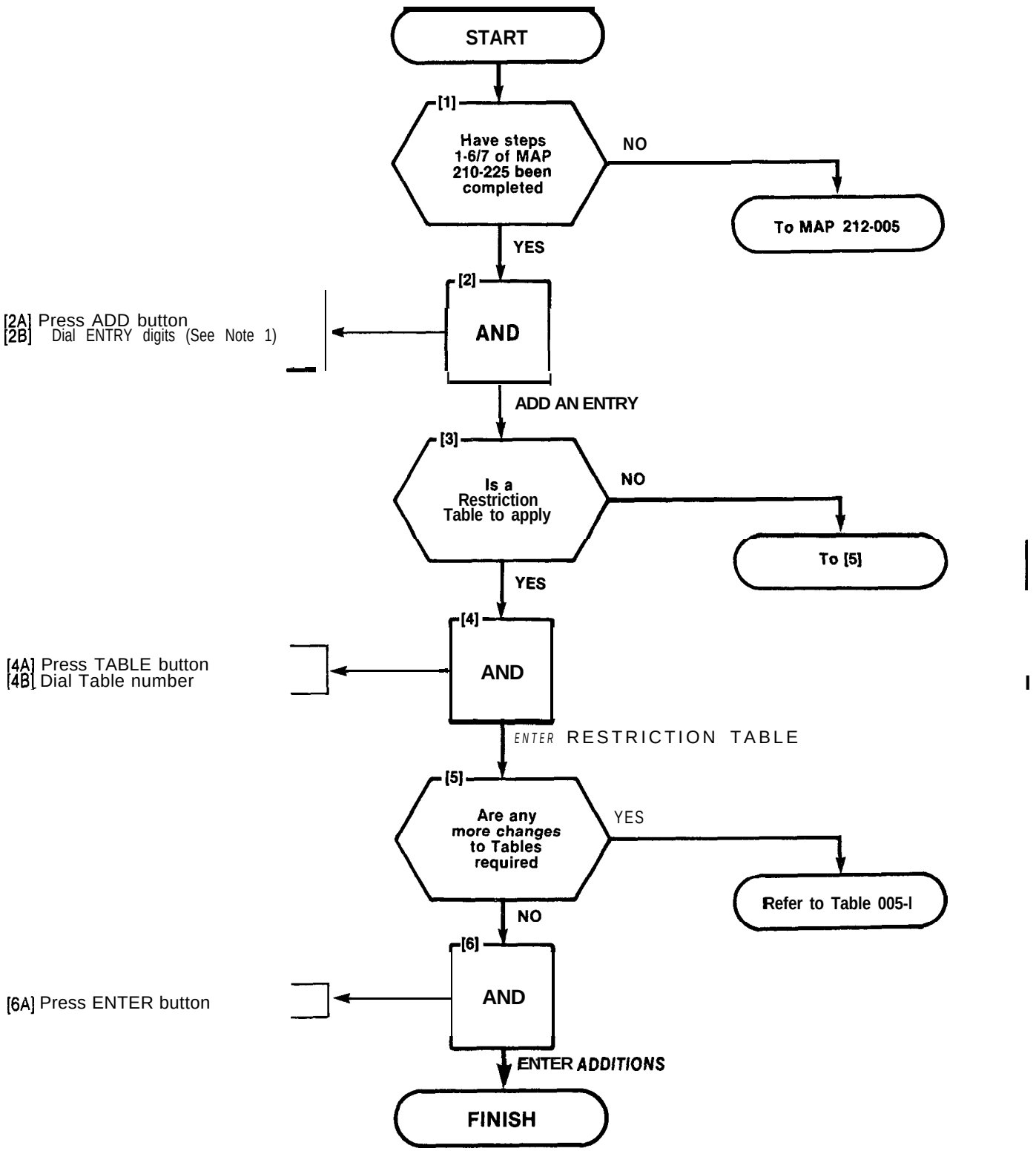

DISPLAYING SEQUENTIAL ENTRIES
MAP210-227
Issue 3, July 1980
Sheet 1 of 1

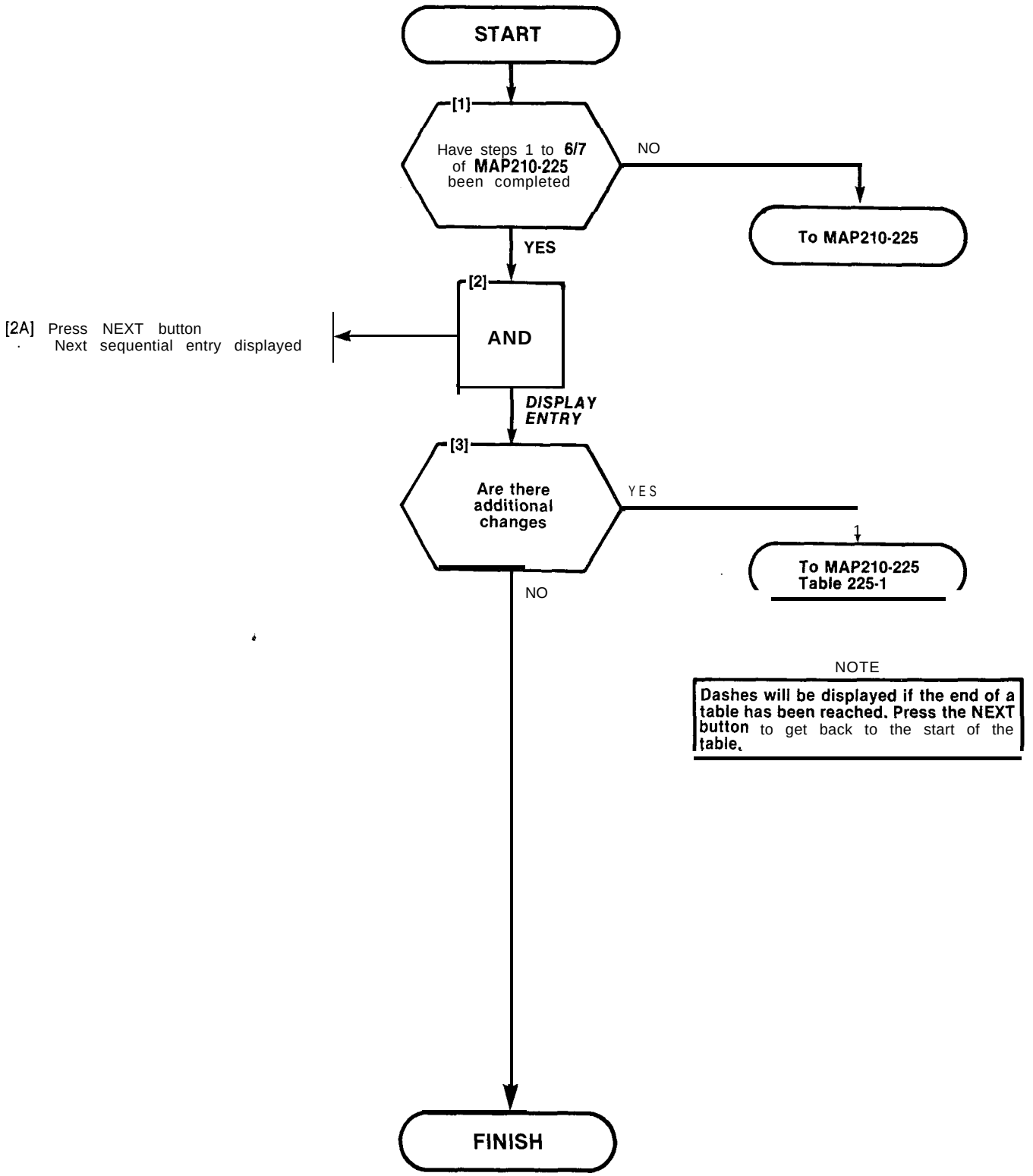

NOTE

Dashes will be displayed if the end of a table has been reached. Press the NEXT button to get back to the start of the table.

SEARCH FOR AN ENTRY

MAP210-228

Issue 3, July 1980

Sheet 1 of 1

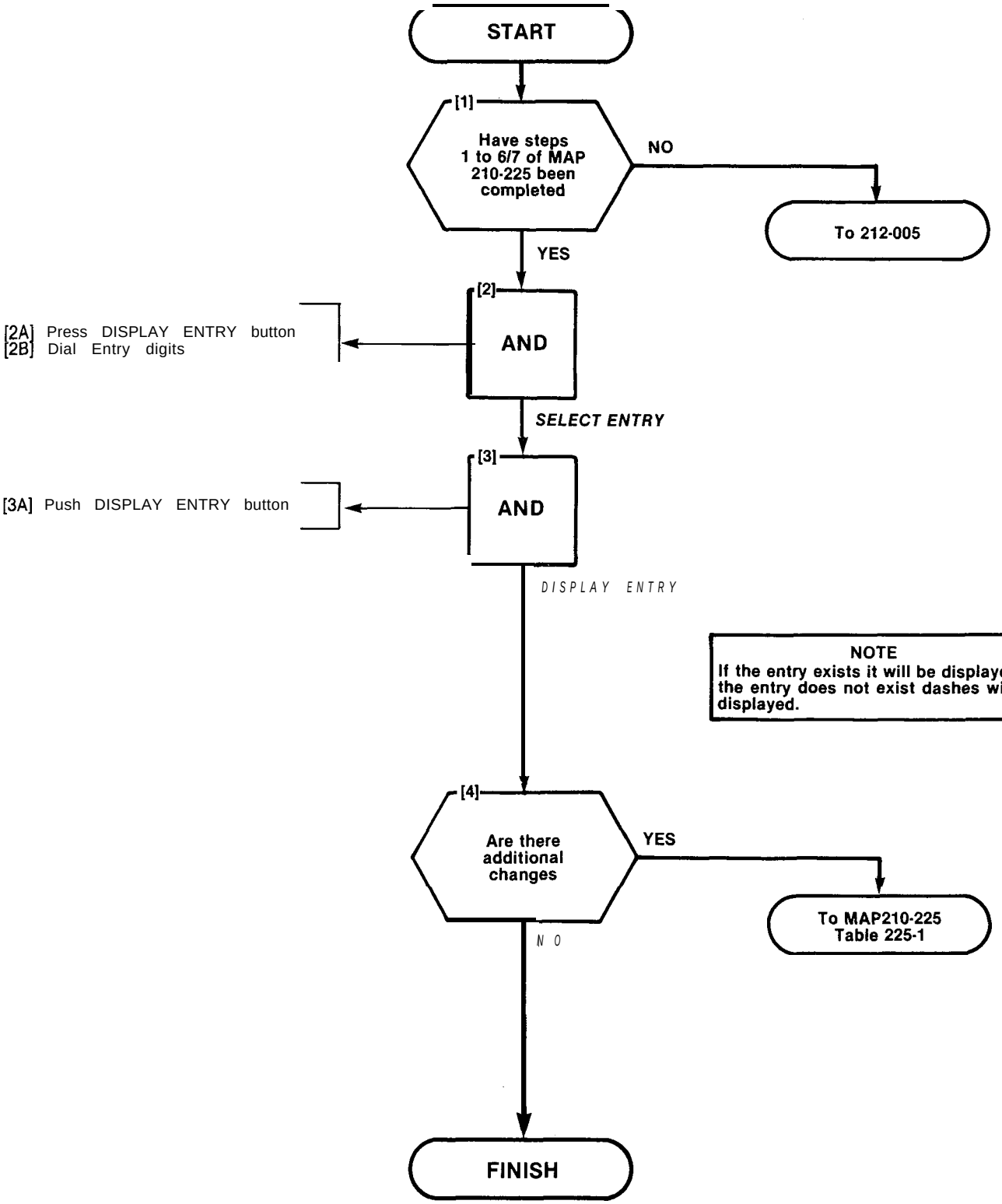

DELETE AN ENTRY
MAP210-229
Issue 3, July 1980
Sheet 1 of 1

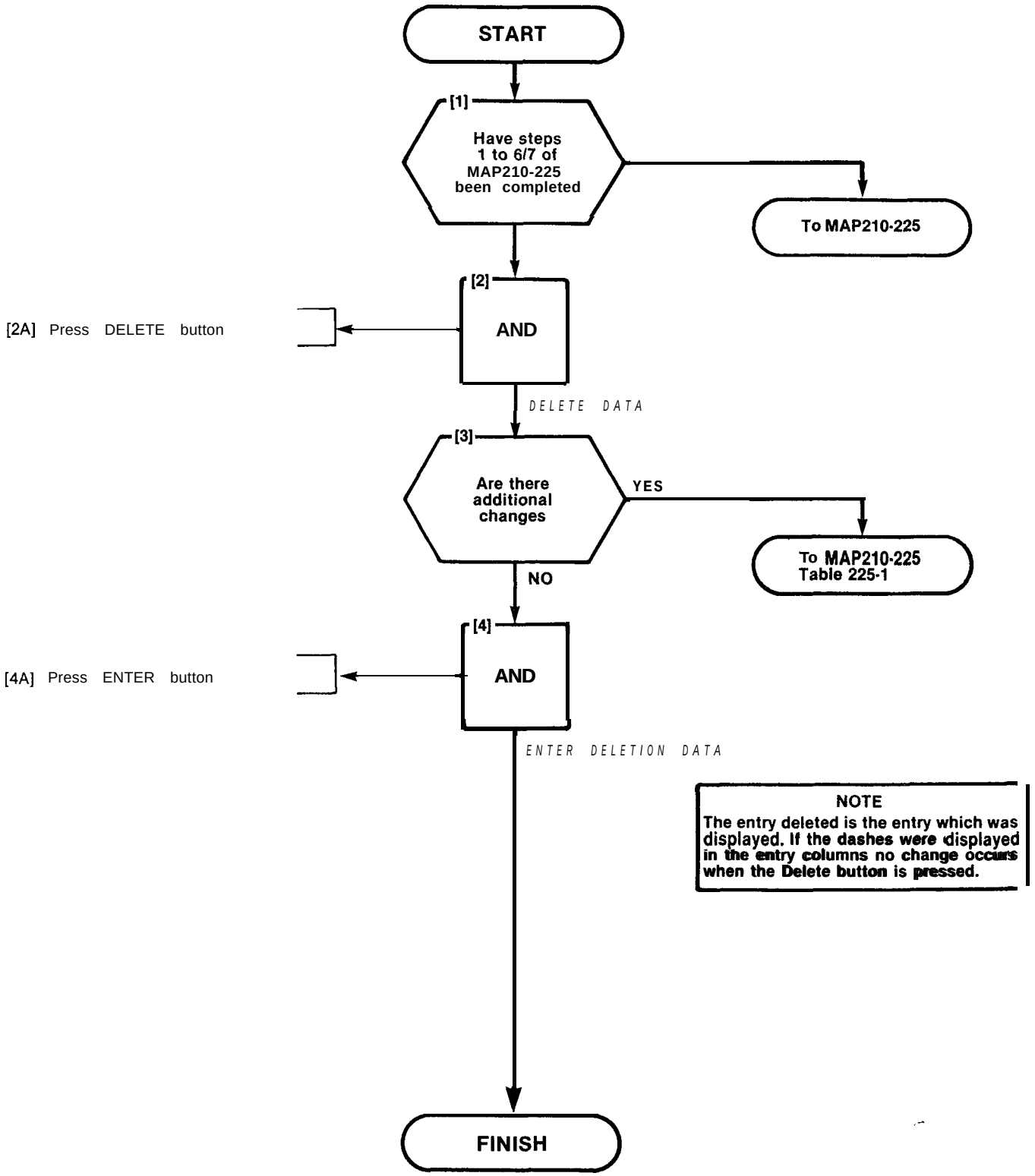

NOTE
The entry deleted is the entry which was displayed. If the dashes were displayed in the entry columns no change occurs when the Delete button is pressed.

PROGRAMMING PERSONAL TABLES
MAP210-242
Issue 3, July 1980
Sheet 1 of 4

NOTES

1. Prior to making programming entries on this MAP, Form SC-2 must have been completed. The completed form is used in conjunction with the relevant steps noted in this MAP.

2. After digit entries are made (e.g. Step (4)), the bell may ring and an error code may appear in the DESTINATION display when the key in the next sequence is pressed. In this event refer to Tables 242-I or 242-2, and repeat the sequence, i.e. the relevant function key and its digit entries, in order to correct the previous entry. Fig. 242-2 shows a typical error code entry.

TABLE 242-I

ERROR CODE	DESCRIPTION
E1	The equipment number entered is not that for a station
E3	The table number entered is not valid for the current size CONFIGURATION
E6	The CONFIGURATION (MAP210-221) entered does not include Speed Call

NOTE

The SPEED CALL LED remains lit during programming in the Speed Call mode.

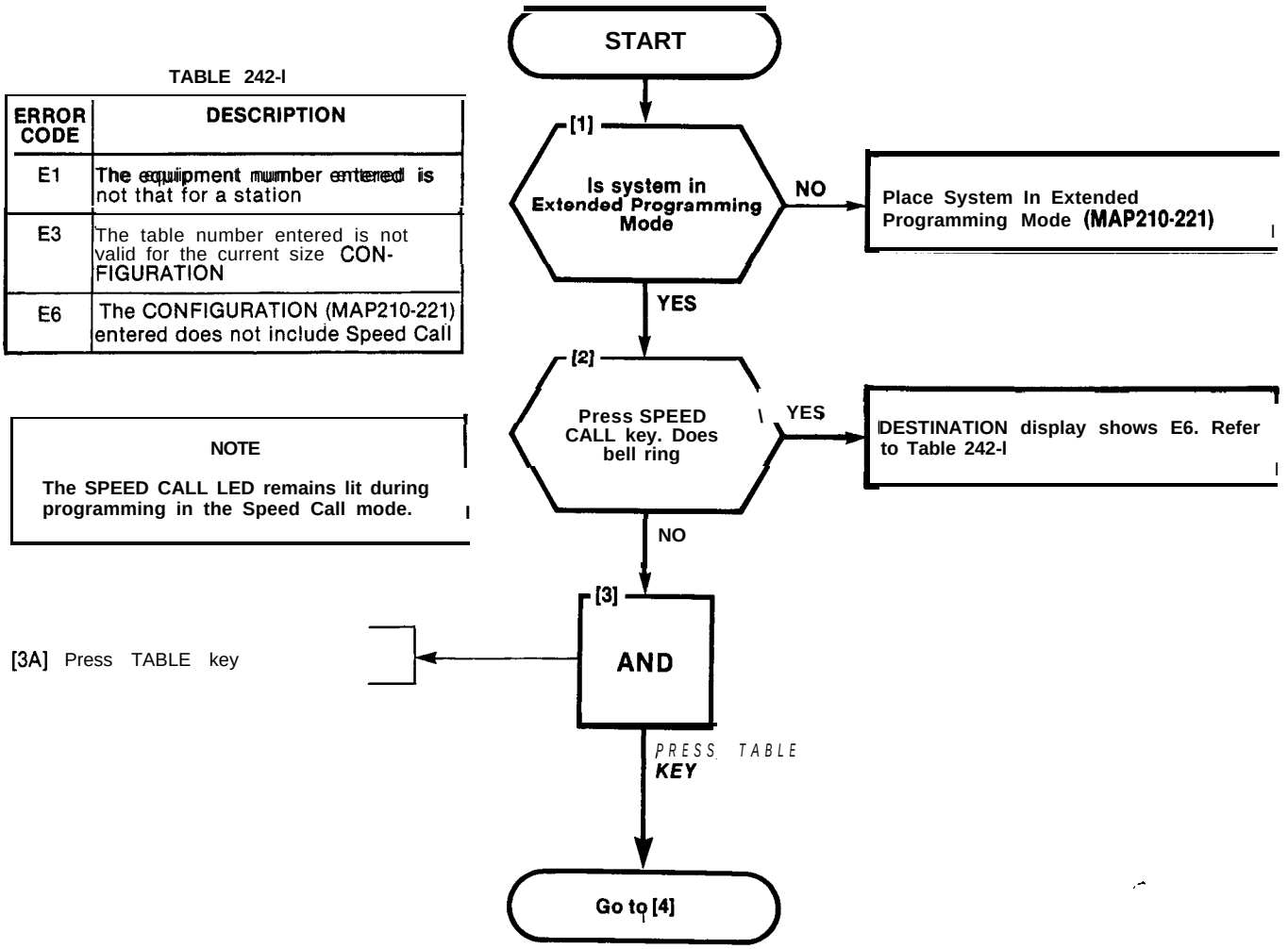

From [3]

[4] AND

DIAL TABLE NUMBER

[4A] Enter Table number required (See Form SC-2)
- DESTINATION display shows number entered (Fig. 242-l)
- When a subsequent Key operation occurs the number is transferred to the SOURCE display and three hyphens appear as shown in Fig. 242-l)

NOTE
Error E3 (Table 242-l) may occur after a subsequent key operation. See Note 2 and Fig. 242-2

SPEED CALL TABLE NUMBER

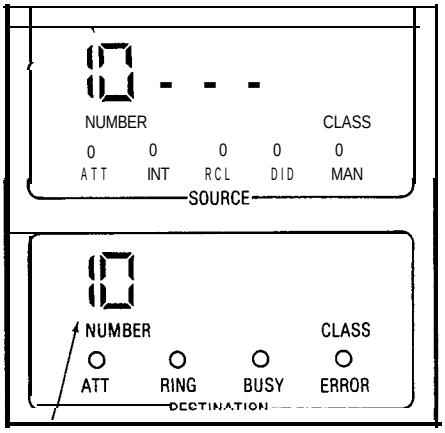

Fig. 242-l Typical Entry Displays

[5] Is a current Access Number to be changed — YES → Go to [9]

NO

[6] Is a current Number Redial code to be changed — YES → Go to [12]

NO

[7] AND 1

[7A] Press EQPT NUMBER key
- EQPT NUMBER LED is lit

PRESS EQPT NUMBER KEY

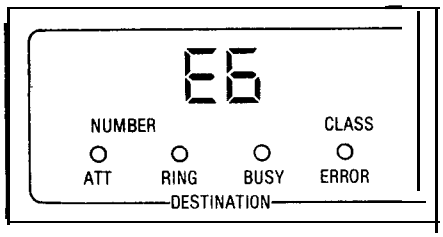

Fig. 242.2 Typical Error Code Display

Go to [8]

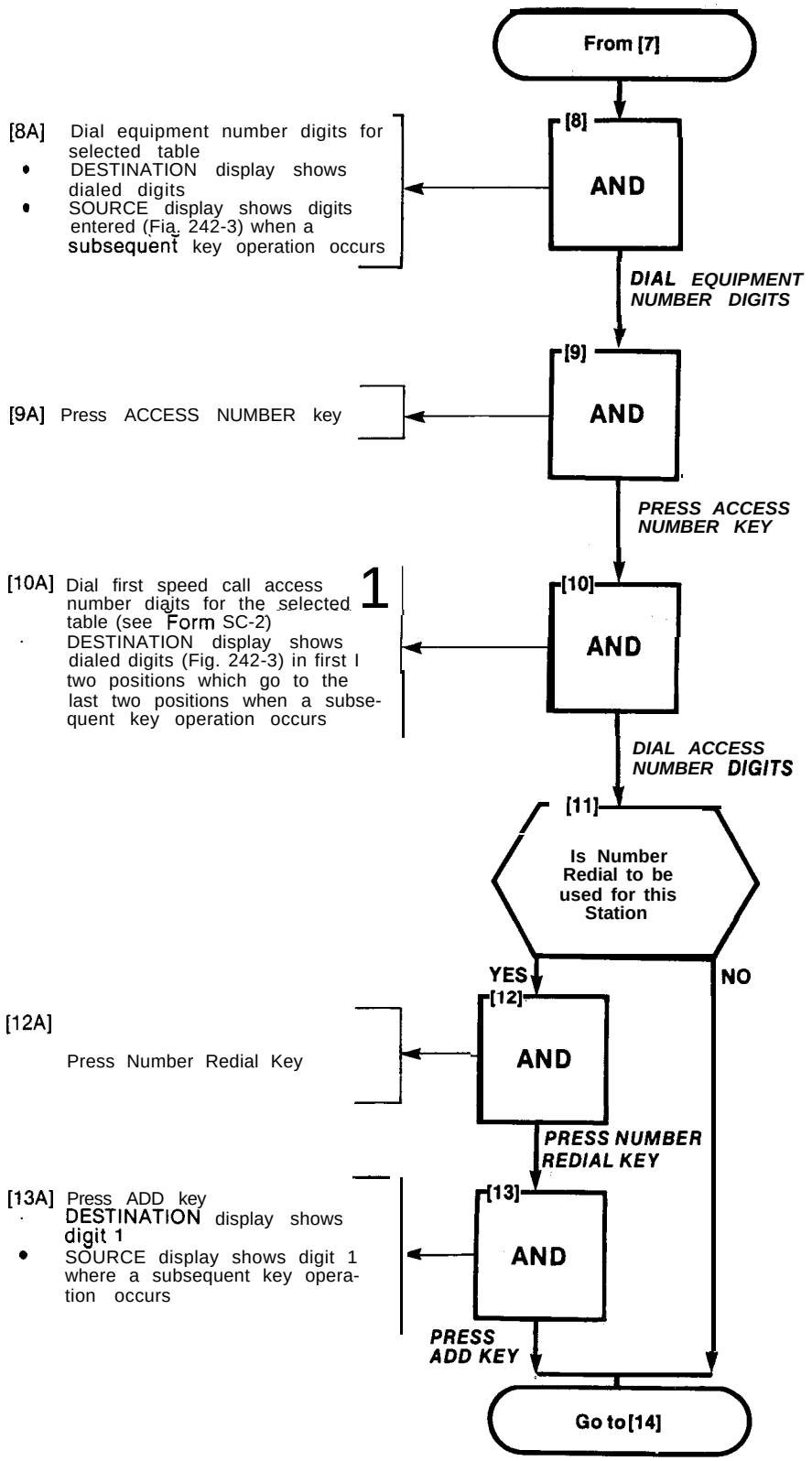

NOTE
Error EI (Table 242-I) may occur after a subsequent key operation. See Note 2 and Fig. 242-2.

NOTE
Error EI (Table 242-1), or Error E5 (Table 242-2) may occur after Step [10]. See Note 2 and Fig. 242-2

NOTE
Error E5 (Table 242-3) may occur after Step (13). See Note 2 and Fig. 242-2

Table 242-2

ERROR CODE	DESCRIPTION
E4	Indicates attempt to enter access number (Step 10) for a common-use table
E4	Indicates attempt made to allocate number redial digits in a common-use table (Step 12)
E5	Indicates number redial already exists for another table (Step 13) assigned to the same equipment
E5	Indicates access number (Step 10) already exists for another table assigned to the equipment

PROGRAMMING PERSONAL TABLES
MAP210-242
Issue 3, July 1980
Sheet 4 of 4

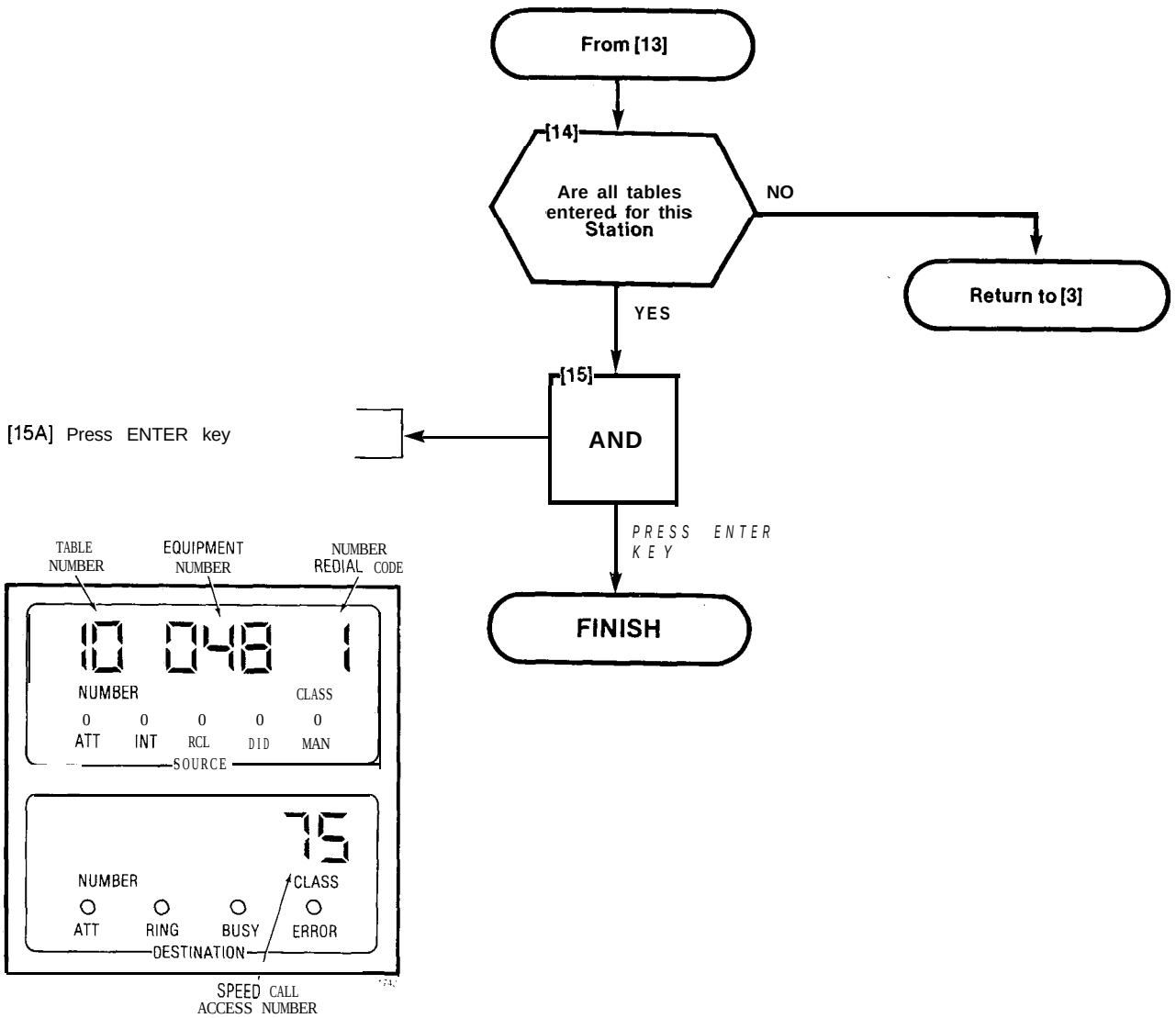

Fig. 242-3 Completed Entries Dislay

COMMON-USE TABLES DO NOT REQUIRE PROGRAMMING. THIS MAP IS THE PROCEDURE USED TO CONVERT A PERSONAL TABLE TO A COMM-USE TABLE.

NOTES

1. Prior to making programming entries on this MAP, Form SC-2 must have been completed. The completed form is used in conjunction with the relevant steps noted in this MAP.

2. After digit entries are made (e.g. Step (4)), the bell may ring and an error code may appear in the DESTINATION display when the key in the next sequence is pressed. In this event refer to Table 243-1, and repeat the sequence, i.e. the relevant function key and its digit entries, in order to correct the previous entry. Fig. 243-2 shows a typical error code entry.

TABLE 243-I

ERROR CODE	DESCRIPTION
E3	The table number entered is not valid for the current size CONFIGURATION
E6	The CONFIGURATION (MAP210-221) entered does not include Speed Call

NOTE

The SPEED CALL LED remains lit during programming in the Speed Call Mode.

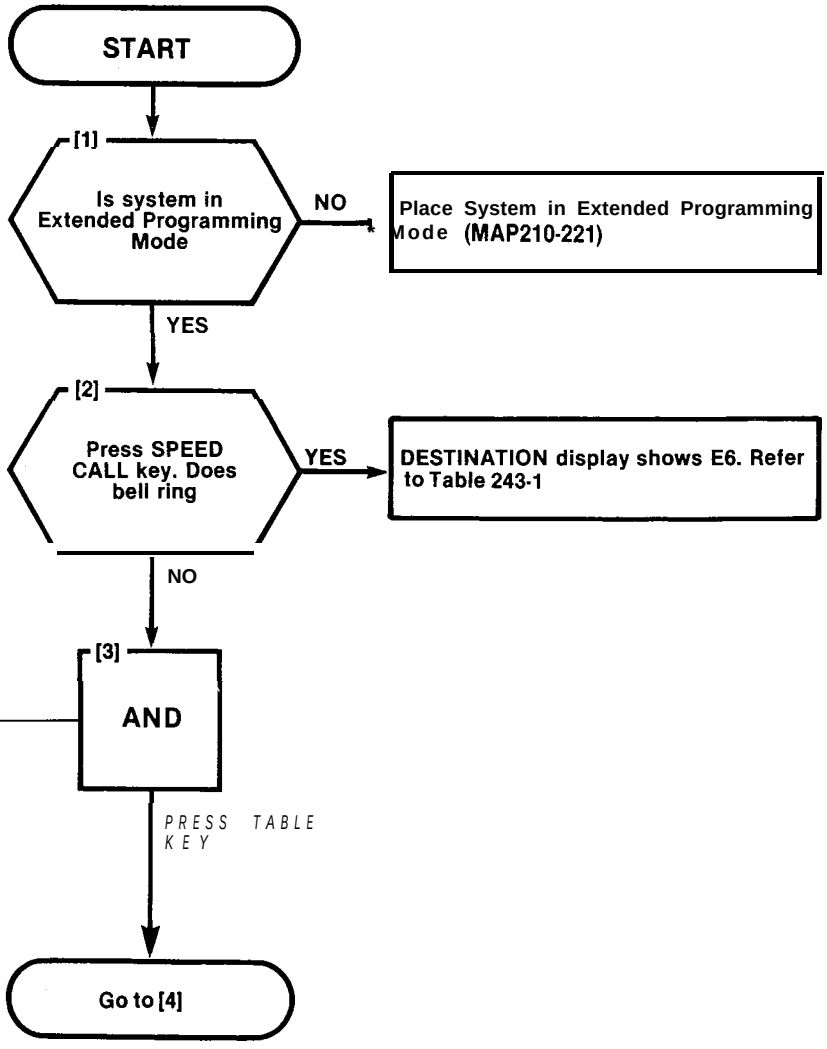

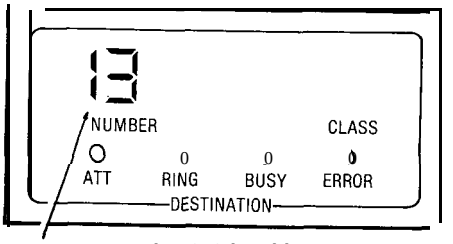

Fig. 243-I Table Number Display

From [3]

[4] AND

[4A] Enter Table number required (See Form SC-2)
DESTINATION display shows number entered (Fig. 243-I).

DIAL TABLE NUMBER

[5] AND

[5A] Press EQPT NUMBER key
SOURCE display shows the data associated with the table (Fig. 243-1)
DESTINATION display shows the first access number of the table, and the table number (Step 4) disappears

PRESS EQPT NUMBER KEY

[6] AND

[6A] Press DELETE key
DELETE LED is lit
SOURCE display shows Table number (Fig. 243-4), and three hyphens (indicating table is now common-use)

PRESS DELETE KEY

[7] Are other Tables to be entered

YES → Return to [3]

NO

[8] AND

[8A] Press ENTER key

PRESS ENTER KEY

FINISH

NOTE

Error E3 (Table 003-I) may occur after Step (4). See Note 2 and Fig. 243-3

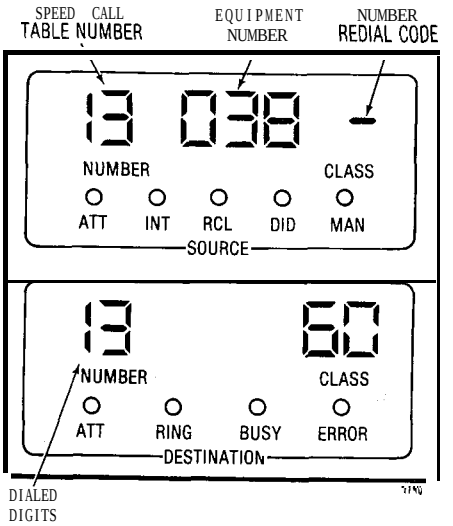

Fig. 243-2 Typical Entry Displays

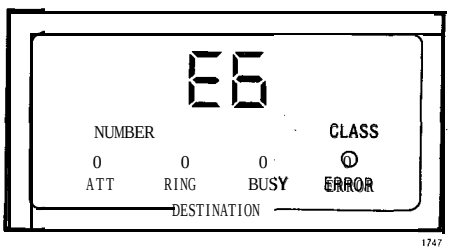

Fig. 243-3 Typical Error Code Display

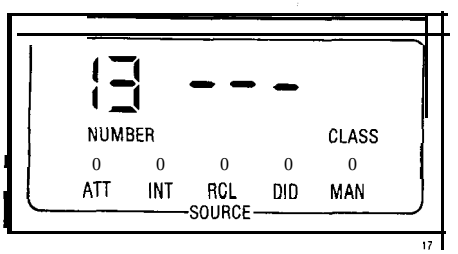

Fig. 243-4 Completed Entry Display

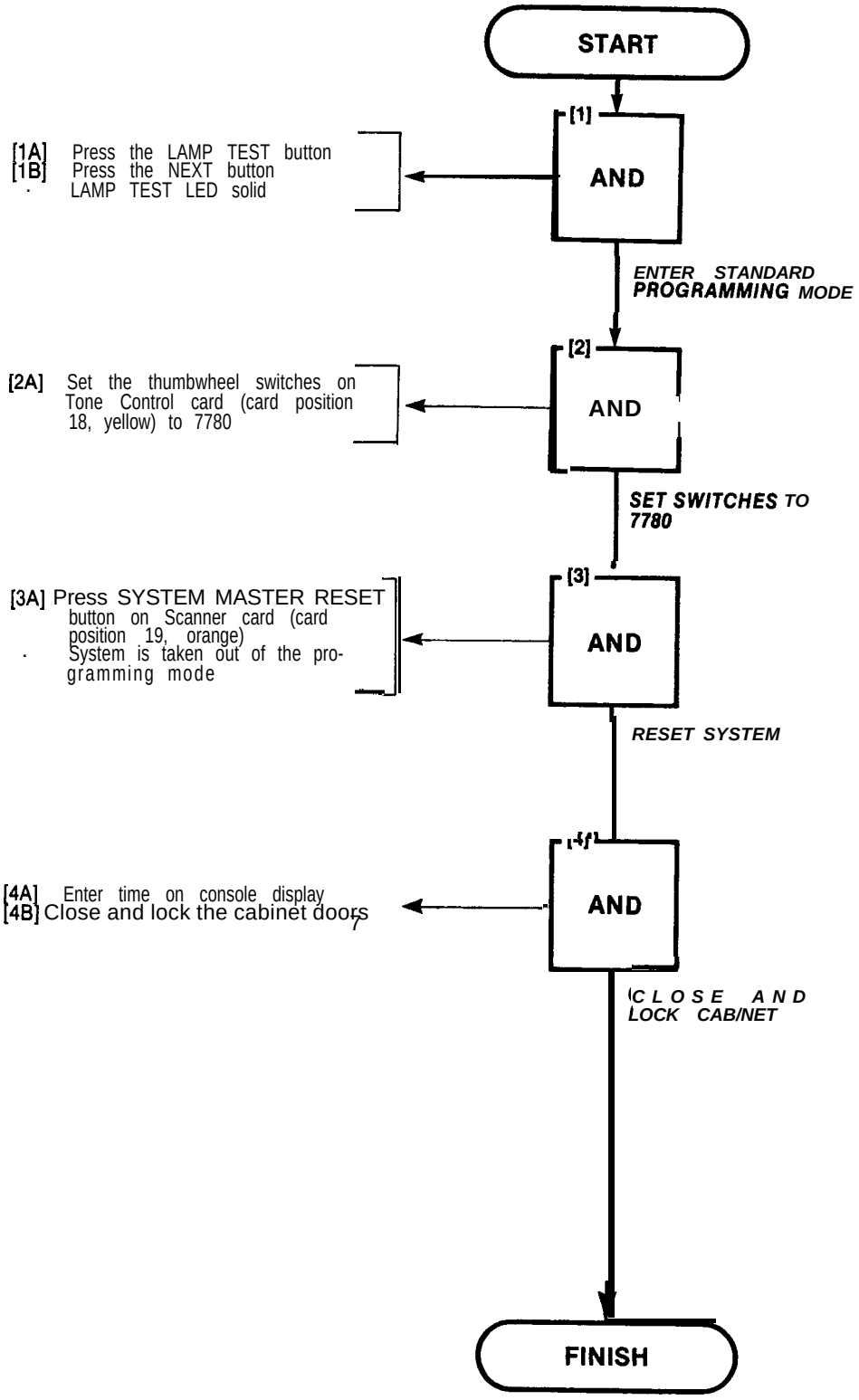
START
[1]
AND
[1A] Press the LAMP TEST button
[1B] Press the NEXT button
· LAMP TEST LED solid
ENTER STANDARD PROGRAMMING MODE
[2]
AND
[2A] Set the thumbwheel switches on Tone Control card (card position 18, yellow) to 7780
SET SWITCHES TO 7780
[3]
AND
[3A] Press SYSTEM MASTER RESET button on Scanner card (card position 19, orange)
· System is taken out of the programming mode
RESET SYSTEM
[4]
AND
[4A] Enter time on console display
[4B] Close and lock the cabinet doors
CLOSE AND LOCK CAB/NET
FINISH

SX-100* AND SX-200* SUPERSWITCH" ELECTRONIC PRIVATE AUTOMATIC BRANCH EXCHANGE SYSTEM TEST PROCEDURES

CONTENTS PAGE

1. INTRODUCTION 2
General 2
Reason for Issue 2

2. DETAILED TEST PROCEDURES 2
General 2
System Test Procedures - Generic 202 Equipment. 2
System Test Procedures - Generic 203 Equipment. 2
System Test Procedures - Generic 204 Equipment. 3

APPENDIX 1 MITEL ACTION PROCEDURES . A1-1

APPENDIX 2 GENERIC 202 SYSTEM TESTS. . A2-1

Set Up Test Equipment (MAP215201). . . . A2-3
Test Extension Options (MAP215202) . . . A2-5
Test Console Features (MAP215-203) . . A2-7/8
Broker's Call (MAP215-204) A2-9/10
Call Forwarding - Busy (MAP215-205) A2-11/12
Call Forwarding - Don't Answer (MAP21 5-206) A2-13/14
Call Forwarding - Follow Me (MAP21 5-207) A2-15/16
Call Park (MAP215-208) A2-17/18
Call Pick-up (MAP215-209) A2-19
Camp-On (MAP215-210) A2-21/22
Consultation Hold/Transfer/Add-On (MAP215-211) A2-23/24
Automatic Callback - Don't Answer (MAP215-212) A2-25/26
Automatic Callback - Busy (MAP21 5-213) A2-27/28
Meet-Me Conference (MAP21 5-214) . . A2-29/30
Executive Busy Override (MAP215-215) A2-31/32
Paging (MAP21 5-216) A2-33/34
Answer Incoming Call (MAP215-217) . . . A2-35
Automatic Callback (MAP215-218) . . . A2-39/40
Extending Internal Calls (MAP21 5-219) A2-41/42
Answering Recall (MAP215-220) A2-43
Override (MAP215-221) A2-45/46
Flexible Night Service (MAP215-222) . A2-47/48
Trunk Busy Operation (MAP215-223) A2-50
Trunk Group Attendant Access (MAP21 5-224) A2-51/52
Trunk Group Dial Access (MAP21 5-225) A2-53/54
Test Termination (MAP215-226) A2-55

APPENDIX 3 GENERIC 203 SYSTEM TESTS A3-1/2

Test Extension Options (MAP215-300) . . A3-3/4
Do Not Disturb (MAP215-301) . . , ...A3-5/6
Call Block (MAP215-302) A3-7
Call Hold (MAP215-303) A3-9
Single Digit Dialing (MAP215-304) A3-13
Transfer Into Busy (MAP215-305) A3-15/16
Common Alerting Devices (MAP215-306) A3-17/18

Test Console Features (MAP21 5-350) A3-19/20
Answer Incoming CO Trunk Call (MAP215-351) A3-21
Answer DID Trunk Call (MAP215-352) . . . A3-25
Attendant Do Not Disturb (MAP215-353) A3-27
Message Waiting (MAP215-354) A3-29
Attendant Call Forwarding - Busy (MAP21 5-355) A3-31
Attendant Call Forwarding - Don't Answer (MAP215-356) A3-33/34
Attendant Call Forwarding - Follow Me (MAP21 5-357) A3-35/36
Attendant Controlled Conference (MAP21 5-358) A3-37
Attendant Station Busy-Out (MAP21 5-359) A3-39/40

Test Console Features (H/M) (MAP21 5-300) A3-41
Attendant Do Not Disturb (H/M) (MAP21 5-360) A3-43

© MITEL Corporation 1980

* Trademark of MITEL Corporation

CONTENTS PAGE

Message Waiting (H/M) (MAP21 5-361) A3-47/48
Message Registration
(MAP21 5-362) A3-49/50
Controlled Outgoing Call Restriction (H/M)
(MAP215-363) A3-51
Room Status (H/M) (MAP215-364) A3-53

APPENDIX 4 GENERIC 204 SYSTEM
TESTS A4-1/2

Test Extension Option (MAP215-400) ... A4-3/4
Automatic Wake-Up (Alarm Call)
(MAP215-401) A4-5/6
Enable Non-CO Trunk to
Trunk Connect (MAP215-402) A4-7/8

Test Extensions Options (MAP21 5-450) A4-9/10
Console Date Display and
Date Utility (MAP215-451) A4-11/12
Customer Program Dump/Load
(MAP215-452) A4-13/14
Room Audit (MAP215-453) A4-17/18
Automatic Wakeup (MAP215-454) ... A4-19/20
System Identifier (MAP215-455) A4-21/22

APPENDIX 5 GENERIC 205 SYSTEM
TESTS A5-1

Test Extension Options (MAP21 5-500) .. A5-3/4
Use a Personal Speed Call
(MAP21 5-501) A5-5/6
Use a Common Use Speed Call
(MAP21 5-502) A5-7/8
Test Console Options (MAP215-504) .. A5-9/10
Speed Call (MAP215-505) A5-11/12

1. INTRODUCTION

General

1.01 This Section details the system test procedures to be performed after the system installation (Section MITL9105/9110-98-200) and programming (Section MITL9105/9110-98-210) have been completed. Upon completion of the tests listed in this Section all programmed system options and features will have been checked.

Reason for Issue

1.02 This section is issued to incorporate procedures for Generic 205 information.

1.03 It should be noted that a particular system test is valid only if the required option(s) has been programmed to satisfy the system test result.

2. DETAILED TEST PROCEDURES

General

2.01 All test procedures in this Section are performed in accordance with MITEL Action Procedures (MAPs). An outline of the purpose and use of MAPs is contained in Appendix 1. Actual system test procedures to be used for the PABX are as detailed in the following paragraphs.

System Test Procedures - Generic 202 Equipment

2.02 The system test procedures for Generic 202 equipment are detailed in Appendix 2. Procedures are performed in a set order as follows:

- Set up the required test conditions
- Perform the tests required for extension features
- Perform the tests required for console features
- Remove the test conditions
- Perform a final console "lamp-test" verification

These procedures are listed in Tables 2-1 and 2-2 in addition to appearing in Appendix 2.

System Test Procedures - Generic 203 Equipment

2.03 The system test procedures for Generic 203 equipment are detailed in Appendix 3. Procedures are similar to those performed for Generic 202 equipment, but are modified due to the fact that Generic 203 equipment can provide three basic configurations which are:

- A standard single customer configuration

- A system configured for use with more than one customer (tenant)
- A system configured to provide facilities which are peculiar to a hotel or motel environment

2.04 The pattern of test procedures for Generic 203 equipment closely parallels that shown in 2.02, with the exception, that in so far as the console tests are concerned a choice of procedures is given; ie. the choice is dependant upon whether the system has been programmed with or without "hotel/motel" features. Tables 2-3 and 2-4 list the procedures to be followed with Table 2-4 listing the choice of console features.

System Test Procedures - Generic 204 Equipment

2.05 The system test procedures for Generic 204 equipment are detailed in Appendix 4. Procedures are similar to those performed for Generic 203 but are modified for the additional features in Generic 204.

2.08 The system test procedures for Generic 205 equipment are detailed in Appendix 5. Procedures are similar to Generics 203 and 204 but are modified for the additional features in Generic **205.**

2.07 Where several customers (tenants) share one PABX (Generic 203/up) then the test procedures to be performed (listed in Tables 2-3, 2-4, 2-5, 2-6, 2-7 and 2-8) are in respect to the "Non-Hotel/Motel" options, ie. they are the same as for a single customer configuration. It should be noted however that the console SOURCE and DESTINATION displays, during the test procedures, will reflect the fact that a multi-tenant configuration is in effect. These displays will show the "tenant" digit which prefixes the extension number. A typical example of this difference is illustrated in Figs. 2-1 and 2-2, respectively showing a single customer extension display, and a display which indicates that the calling extension (333) forms part of Tenant group 2.

TABLE 2-I
GENERIC 202 EQUIPMENT - EXTENSION OPTIONS
TEST ORDER

Order	Option	MAP No.
1	Set Up Test Equipment	MAP215-201
2	Test Extension Options	MAP215-202
3	Broker's Call	MAP215-204
4	Call Forwarding - Busy	MAP215-205
5	Call Forwarding - Don't Answer.	MAP215-206
6	Call Forwarding - Follow Me	MAP215-207
7	Call Park	MAP215-208
8	Call Pickup	MAP215-209
9	Camp-on	MAP215-210
10	Consultation Hold/Transfer/Add-On	MAP215-211
11	Automatic Callback - Don't Answer	MAP215-212
12	Automatic Callback - Busy	MAP215-213
13	Meet-Me Conference	MAP215-214
14	Executive Busy Override	MAP215-215

TABLE 2-2
GENERIC 202 EQUIPMENT - CONSOLE OPTIONS
TEST ORDER

Order	Option	MAP No.
1	Test Console Features	MAP215203
2	Answer Incoming Call	MAP215217
3	Automatic Callback	MAP215218
4	Extending Internal Calls	MAP215219
5	Answering a Recall	MAP215-220
6	Override	MAP215-221
7	Flexible Night Service	MAP21 5-222
8	Trunk Busy Operation	MAP21 5-223
9	Trunk Group Attendant Access	MAP21 5-224
10	Trunk Group Dial Access	MAP21 5-225
11	Test Termination	MAP215-226

TABLE 2-3
GENERIC 203 EQUIPMENT - EXTENSION OPTIONS
TEST ORDER

Order	Option	MAP No.
1	Set Up Test Equipment	MAP215-201
2	Test Extension Options	MAP21 5-300
3	Broker's Call	MAP21 5-204
4	Call Forwarding - Busy	MAP215-205
5	Call Forwarding - Don't Answer	MAP21 5-206
6	Call Forwarding - Follow Me	MAP21 5-207
7	Call Park	MAP215-208
8	Call Pick-Up	MAP215-209
9	Camp-On	MAP215-210
10	Consultation Hold/Transfer/Add-On	MAP215-211
11	Automatic Callback - Don't Answer	MAP215212
12	Automatic Callback - Busy	MAP215-213
13	Meet Me Conference	MAP215-214
14	Executive Busy Override	MAP215-215
15	Paging	MAP215-216
16	Do Not Disturb	MAP21 5-301
17	Call Block	MAP215-302
18	Call Hold	MAP215-303
19	Single Digit Dialing	MAP215-304
20	Transfer Into Busy	MAP215-305
21	Common Alerting Devices	MAP21 5-306

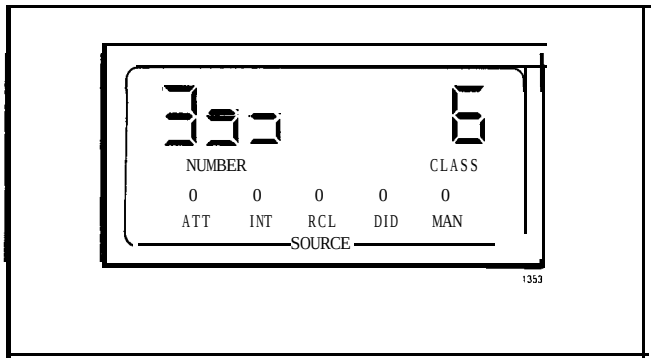

Fig. 2-1 Single Customer Display

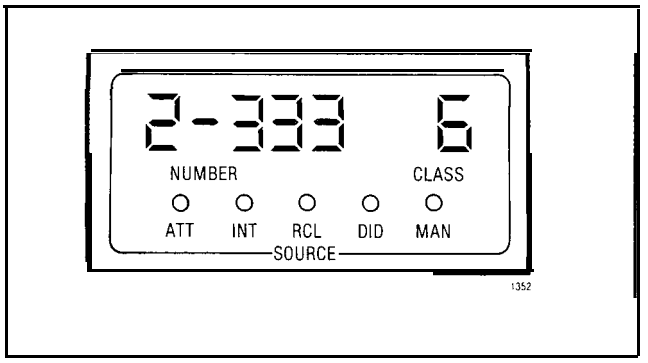

Fig. 2-2 Multi-Tenant Display

TABLE 2-4
GENERIC 203 EQUIPMENT - CONSOLE OPTIONS
TEST ORDER

OPTION	MAP NO.	ORDER		NOTES
		NON-H/M	H/M	
Test Console Features	MAP215350	1		1
Test Console Features	MAP215300		1	1
Answer CO Trunk Call	MAP215351	2	2	
Answer DID Trunk Call	MAP215-352	3		2
Attendant Do Not Disturb	MAP215353	4	3	3
Message Waiting	MAP215-354	5	4	4
Call Forwarding - Busy	MAP21 5-355	6	5	
Call Forwarding - Don't Answer	MAP21 5-356	7	6	
Call Forwarding - Follow Me	MAP215-357	8	7	
Attendant Controlled Conference	MAP21 5-358	9	8	
Attendant Station Busy-Out	MAP21 5-359	10	9	
Attendant Do Not Disturb	MAP215-360		11	3,5
Message Waiting	MAP21 5-361		12	4,5
Message Registration	MAP21 5-362		13	5
Controlled Outgoing Restriction	MAP21 5-363		14	5
Room Status	MAP21 5-364		15	5
Answer Incoming Call	MAP215-217			6
Automatic Callback	MAP215218	11	16	
Extending Internal Calls	MAP215-219	12	17	
Answering a Recall	MAP215-220	13	18	
Override	MAP215-221	14	19	
Flexible Night Service	MAP215-222	15	20	
Trunk Busy Operation	MAP215-223	16	21	
Trunk Group Attendant Access	MAP215-224	17	22	
Trunk Group Dial Access	MAP215-225	18	23	
Test Termination	MAP21 5-226	19	24	

TABLE 2-5
GENERIC 204 EQUIPMENT - EXTENSION OPTIONS
TEST ORDER

Order	Option	MAP No.
1	Set Up Test Equipment	MAP215001
2	Test Extension Options	MAP215300
3	Broker's Call	MAP21 5-204
4	Call Forwarding - Busy	MAP215205
5	Call Forwarding - Don't Answer	MAP21 5-206
6	Call Forwarding - Follow Me	MAP215-207
7	Call Park	MAP215-208
8	Call Pick-Up	MAP21 5-209
9	Camp-On	MAP215-210
10	Consultation Hold/Transfer/Add-On	MAP215-211
11	Automatic Callback - Don't Answer	MAP21 5-212
12	Automatic Callback - Busy	MAP215-213
13	Meet Me Conference	MAP215-214
14	Executive Busy Override	MAP215-215
15	Paging	MAP215-216
16	Do Not Disturb	MAP215-301
17	Call Block	MAP21 5-302
18	Call Hold	MAP215-303
19	Single Digit Dialing	MAP215-304
20	Transfer Into Busy	MAP21 5-305
21	Common Alerting Devices	MAP215-306
22	Automatic Wake-Up (Alarm Call)	MAP21 5-401
23	Enable Non-CO Trunk to Trunk Connect	MAP215-402

TABLE 2-6
GENERIC 204 EQUIPMENT - CONSOLE OPTIONS
TEST ORDER

OPTION	MAP NO.	ORDER		NOTES
		NON-H/M	HIM	
Test Console Features	MAP21 5-350	1		1
Test Console Features	MAP215-300		1	1
Answer CO Trunk Call	MAP21 5-351	2	2	
Answer DID Trunk Call	MAP21 5-352	3		2
Attendant Do Not Disturb	MAP21 5-353	4	3	3
Message Waiting	MAP215-354	5	4	4
Call Forwarding - Busy	MAP215-355	6	5	
Call Forwarding - Don't Answer	MAP21 5-356	7	6	
Call Forwarding - Follow Me	MAP215-357	8	7	
Attendant Controlled Conference	MAP215-358	9	8	
Attendant Station Busy-Out	MAP215-359	10	9	
Attendant Do Not Disturb	MAP21 5-360		11	3,5

TABLE 2-6
GENERIC 204 EQUIPMENT - CONSOLE OPTIONS
TEST ORDER

OPTION	MAP NO.	ORDER		NOTES
		NON-H/M	HIM	
Message Waiting	MAP21 5-361		12	4,5
Message Registration	MAP21 5-362		13	5
Controlled Outgoing Restriction	MAP215363		14	5
Room Status	MAP215364		15	5
Answer Incoming Call	MAP21 5-217			6
Automatic Callback	MAP215-218	11	16	
Extending Internal Calls	MAP215-219	12	17	
Answering a Recall	MAP215-220	13	18	
Override	MAP215-221	14	19	
Flexible Night Service	MAP21 5-222	15	20	
Trunk Busy Operation	MAP215-223	16	21	
Trunk Group Attendant Access	MAP21 5-224	17	22	
Trunk Group Dial Access	MAP21 5-225	18	23	
Test Termination	MAP215-226	19	24	
Console Date Display and Date Utility	MAP215-451	20	24	
Customer Program Dump/Load	MAP215-452	21	25	7, 8
Room Audit	MAP21 5-453		27	
Automatic Wake-Up	MAP21 5-454		28	
System I.D.	MAP215-455	22		

NOTES

1. The Generic 203 console features to be tested depend on whether the equipment is programmed with or without Hotel/Motel features, and respectively refer to columns "H/M" or "NON-H/M" in the above Table.

2. DID Trunks (see MAP215-352) are not provided for Hotel/Motel use.

3. The "Attendant Do Not Disturb" facility (MAP215-353) is applicable in the "NON-H/M" and "H/M" column. MAP215-301 applies only to a Hotel/Motel environment as it tests the use of the "Hotel/Motel" console keys.

4. The "Message Waiting" facility (MAP215-354) is applicable in the "NON-H/M" and "H/M" column. MAP215-302 applies only to a Hotel/Motel environment as it tests the use of the "Hotel/Motel" console keys.

5. MAPs 215-301 through -305 inclusive are applicable only to Hotel/Motel options.

6. MAP215-016 tests are performed on Generic 202/up equipment. Generic 202/up equipment tests are listed in Table 2-4 starting at MAP215-151 incorporating the use of the SERIAL/GUEST ROOM key.

7. A printer is required for use with some Generic 204 options.

8. A storage device is required for use with some Generic 204 options.

TABLE 2-7
GENERIC 205 EQUIPMENT - EXTENSION OPTIONS
TEST ORDER

Order	Option	MAP No.
1	Set Up Test Equipment	MAP215201
2	Test Extension Options	MAP215500
3	Broker's Cal l	MAP21 5-304
4	Call Forwarding - Busy	MAP215-205
5	Call Forwarding - Don't Answer	MAP215-206
6	Call Forwarding - Follow Me	MAP21 5-207
7	Call Park	MAP215-208
8	Call Pick-Up	MAP215-209
9	Camp-On	MAP215-210
10	Consultation Hold/Transfer/Add-On	MAP215-211
11	Automatic Callback - Don't Answer	MAP215-212
12	Automatic Callback - Busy	MAP215-213
13	Meet Me Conference	MAP215-214
14	Executive Busy Override	MAP215-215
15	Paging	MAP21 5-216
16	Do Not Disturb	MAP215-301
17	Call Block	MAP215-302
18	Call Hold	MAP21 5-303
19	Single Digit Dialing	MAP215-304
20	Transfer Into Busy	MAP215-305
21	Common Alerting Devices	MAP215-306
22	Enable Non-CO Trunk to Trunk Connect	MAP215-402
23	Use a Personnel Speed Call	MAP21 5-501
24	Use a Common Use Speed Call	MAP21 5-502

TABLE 2-8
GENERIC 205 EQUIPMENT - CONSOLE OPTIONS
TEST ORDER

OPTION	MAP NO.	ORDER	NOTES
Test Console Features	MAP215504	1	
Answer CO Trunk Call	MAP21 5-351	2	
Answer DID Trunk Call	MAP21 5-352	3	
Attendant Do Not Disturb	MAP215-353	4	
Message Waiting	MAP21 5-354	5	
Call Forwarding - Busy	MAP215-355	6	
Call Forwarding - Don't Answer	MAP215-356	7	
Call Forwarding - Follow Me	MAP215-357	8	
Attendant Controlled Conference	MAP215-358	9	
Attendant Station Busy-Out	MAP21 5-359	10	
Attendant Do Not Disturb	MAP215-360	11	
Answer Incoming Call	MAP21 5-217	12	1
Automatic Callback	MAP215-218	13	
Extending Internal Calls	MAP215-219	14	
Answering a Recall	MAP215-220	15	
Override	MAP215-221	16	
Flexible Night Service	MAP215-222	17	
Trunk Busy Operation	MAP215-223	18	
Trunk Group Attendant Access	MAP215-224	19	
Trunk Group Dial Access	MAP215-225	20	
Test Termination	MAP21 5-226	21	
Console Date Display and Date Utility	MAP21 5-451	22	
Customer Program Dump/Load	MAP215-452	23	2, 3
System I.D.	MAP215-455	24	
Speed Call	MAP21 5-505	25	

Notes 1. MAP 215-216 tests are performed on Generic 202/up equipment. Generic 202/up equipment tests are listed in Table 2-4 starting at MAP212-351 incorporating the use of the Serial/Guest Room key.
2. A printer may be used.
3. A storage device may be used.

APPENDIX 1

MITEL ACTION PROCEDURES

GENERAL

A1.01 Task oriented functions in this section are implemented using MITEL ACTION PROCEDURES (MAP's).

A1.02 A MAP is a step by step procedure using a flow chart principle, written and illustrated where necessary to a level of detail that allows both experienced and inexperienced personnel to carry out the tasks detailed. A MAP contains two levels of information as follows:

(a) For experienced personnel, a series of steps (level one) each numbered [n] and annotated with minimal information.

(b) For inexperienced personnel, each step referred to in (a) above is amplified by a connected series of numbered substeps [nA] (level two).

A1.03 A typical example of a MAP is shown in Fig. A1, with the two levels detailed

MAP SYMBOLS

A1.04 There are four basic symbol shapes which may be used in a MAP, and are defined as follows.

A1.05 AND Block: Used to indicate a level one step that must be performed. Consists of a square with the word AND centred in the block.

A1.06 OR Block: Used to indicate a choice of level one steps, one of which must be performed. Consists of a rectangle, with the text centred in the block, and with the word OR appearing between the alternative operations.

A1.07 The rectangle is also used to border instructions which imply that the operative must perform a task outside the scope of the MAP. The text is centred in the rectangle.

A1.08 DECISION Block: Used to indicate a decision within the level one steps which must be made. The symbol is based on a hexagon with the top and bottom sides extended. Decision text is centred in the symbol.

A1.09 START/FINISH/JUMP TO Block: Used to indicate the start and finish of a MAP. Also used to indicate 'jump to' points within the MAP, for example "go to [n]" or "from [n]" or "return to [n]". The symbol is a rectangle with semi circular ends. Text is centred in the symbol.

THE OPERATORS USE OF MAP'S

Experienced Operator

A1.10 For the experienced operator to complete a task using a MAP, reference to the sequential short form level one steps is usually all that is necessary. Using Fig. A1 as an example, the experienced operator would proceed as follows.

A1.11 At [1] makes a decision based on the information within the block. If the answer is YES the operator must proceed to a different MAP. If the answer is NO the operator is faced with another decision at block [2].

A1.12 At [2] if the decision is NO there is no requirement to proceed further and the test is abandoned. This naturally results in a FINISH block. If the decision is YES the operator proceeds to [3] and [4] in succession, i.e. dials the DID station number and completes the call to the check extension.

A1.13 The description of the instructions carried out in A1.05 and A1.06 have assumed that the level of competence of the operator is such that short form level one steps contain sufficient information, and therefore the operator reads only the centre column of the MAP, top to bottom of the page.

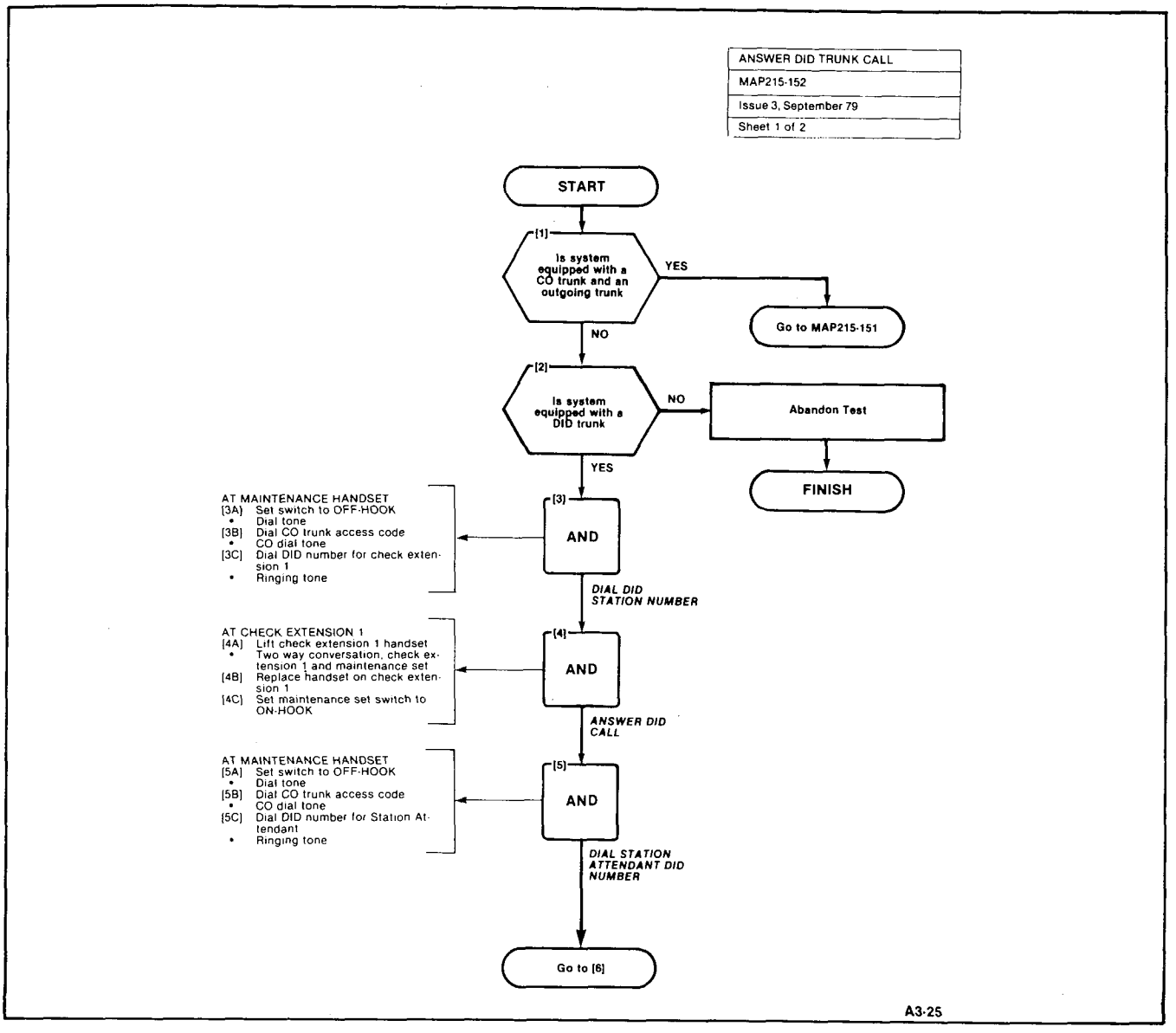

Fig. A1 Typical Map Page

Inexperienced Operator

A1.14 If the operator's experience is such that the level one instructions do not contain sufficient information, the level two substeps should be referred to as follows.

A1.15 Using Fig. A1 as an example the path followed should be:

(a) At [1] and [2] make the decisions called for at these steps as before.

(b) At step [3] dial the DID station number by performing substeps [3A], [3B] and [3C].

In terms of steps and substeps, the operative follows a decision, decision then step and-substep paths in the example shown.

TOOLS, TEST EQUIPMENT AND SPECIAL INSTRUCTIONS

A1.16 Any tools, test equipment or special instructions that the operator requires or needs to know are stated on the first page of each MAP. If the MAP is long, and contains a number of sub procedures, these are listed in synopsis form on the first page.

APPENDIX 2

GENERIC 202 SYSTEM TESTS

General

A2.1 The SX-100 or SX-200 programmed with Generic 202 is tested in the order shown in the following Tables using the MAPs shown which appear in Appendix 2:

TABLE A2-1 EXTENSION OPTIONS

Order	Option	MAP No.
1	Set Up Test Equipment	MAP215-201
2	Test Extension Options	MAP215-202
3	Broker's Call	MAP215-204
4	Call Forwarding - Busy	MAP215-205
5	Call Forwarding - Don't Answer	MAP215-206
6	Call Forwarding - Follow Me	MAP215-207
7	Call Park	MAP215-208
8	Call Pick-up	MAP215-209
9	Camp-on	MAP215-210
10	Consultation Hold/Transfer/Add-On	MAP215-211
11	Automatic Callback - Don't Answer	MAP215-212
12	Automatic Callback - Busy	MAP215-213
13	Meet-Me Conference	MAP215-214
14	Executive Busy Override	MAP215-215
15	Paging	MAP215-216

TABLE A2-2 CONSOLE OPTIONS

Order	Option	MAP No.
1	Test Console Features	MAP215-203
2	Answer Incoming Call	MAP215-217
3	Automatic Callback	MAP215-218
4	Extending Internal Calls	MAP215-219
5	Answering a Recall	MAP215-220
6	Override	MAP215-221
7	Flexible Night Service	MAP215-222
8	Trunk Busy Operation	MAP215-223
9	Trunk Group Attendant Access	MAP215-224
10	Trunk Group Dial Access	MAP215-225
11	Test Termination	MAP215-226

SET UP TEST EQUIPMENT
MAP215-201
Issue 2, July 80
Sheet 1 of 2

TEST EQUIPMENT REQUIRED
Maintenance Handset (BUTT IN)
Console
2 Telephone Sets (Check Extensions 1 and 2 located within reach of equipment cabinet)

START

[1A] Unlock and open cabinet door on cabinet versions

ON MAINTENANCE PANEL

[1B] Connect maintenance handset Tip lead to TIP stud (Fig. 001-1)

[1C] Connect maintenance handset Ring lead to RING stud

[1D] Insert console connector into MAINTENANCE CONNECTOR

AT CHECK EXTENSION 1

[1E] Connect check extension Tip and Ring lead to TIP and RING pins on CROSS CONNECT FIELD

[1] **AND**

CONNECT TEST EQUIPMENT (FIG. 201-1)

Note: Check extension must have access to all features to be tested.

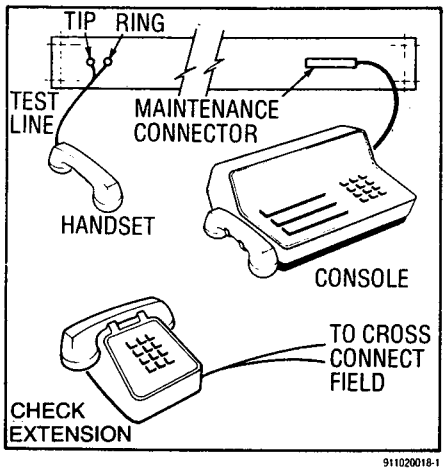

Fig. 201-1

AT MAINTENANCE HANDSET

[2A] Set switch to OFF-HOOK
- Dial tone

[2B] Dial 0
- Ringing tone
- Console rings

AT CONSOLE

[2C] Press ANSWER
- SOURCE display shows number and class-of-service of test line, ATT lamp lit

[2D] Note number of test line

[2E] Press RELEASE

[2F] Set maintenance handset switch to ON-HOOK

[2] **AND**

DETERMINE NUMBER OF TEST LINE

Go to [3]

SET UP TEST EQUIPMENT
MAP215-201
Issue 2, July 80
Sheet 2 of 2

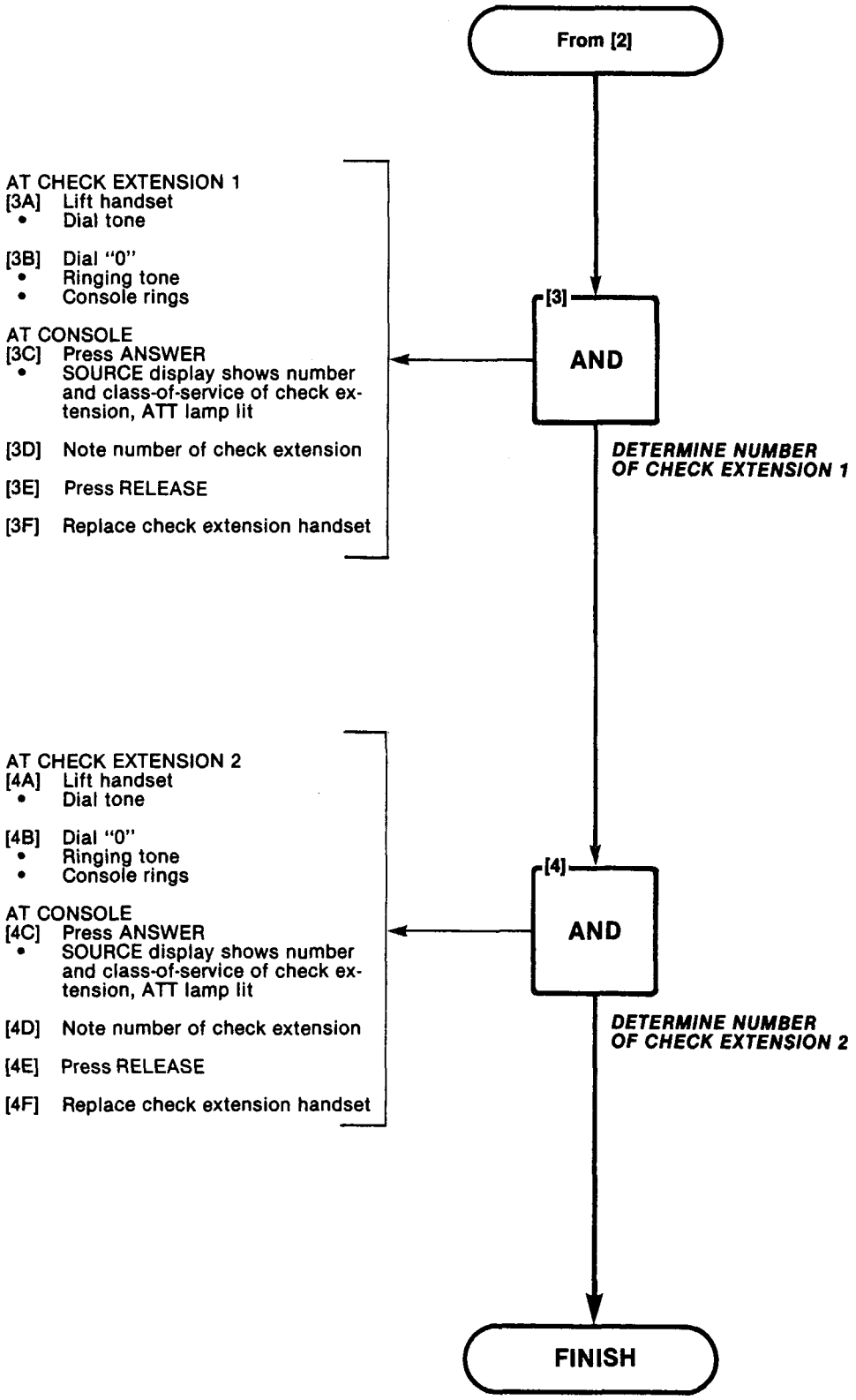

TEST EXTENSION OPTIONS
MAP215-202
Issue 2, July 80
Sheet 1 of 2

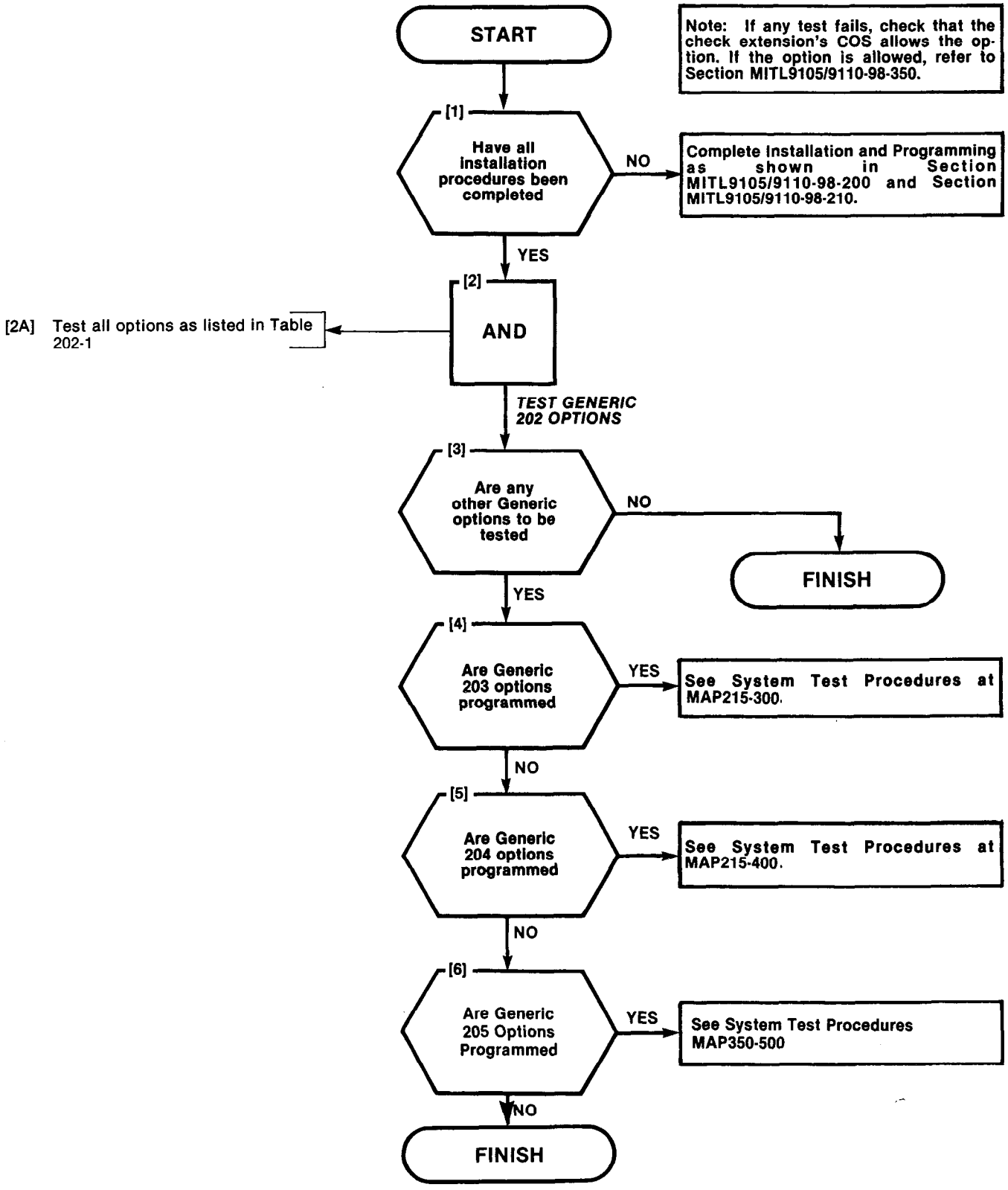

TABLE 202-1

EXTENSION OPTIONS - TEST ORDER

Order	Option Name	MAP No.
1	Broker's Call	215-204
2	Call Forwarding - Busy	215-205
3	Call Forwarding - Don't Answer	215-206
4	Call Forwarding - Follow Me	215-207
5	Call Park	215-208
6	Call Pick-up	215-209
7	Camp-On	215-210
8	Consultation Hold/Transfer/Add-On	215-211
9	Automatic Callback - Don't Answer	215-212
10	Automatic Callback - Busy	215-213
11	Meet-Me Conference	215-214
12	Executive Busy Override	215-215
	Paging	215-216

TEST CONSOLE FEATURES
MAP215-203
Issue 2, July 80
Sheet 1 of 2

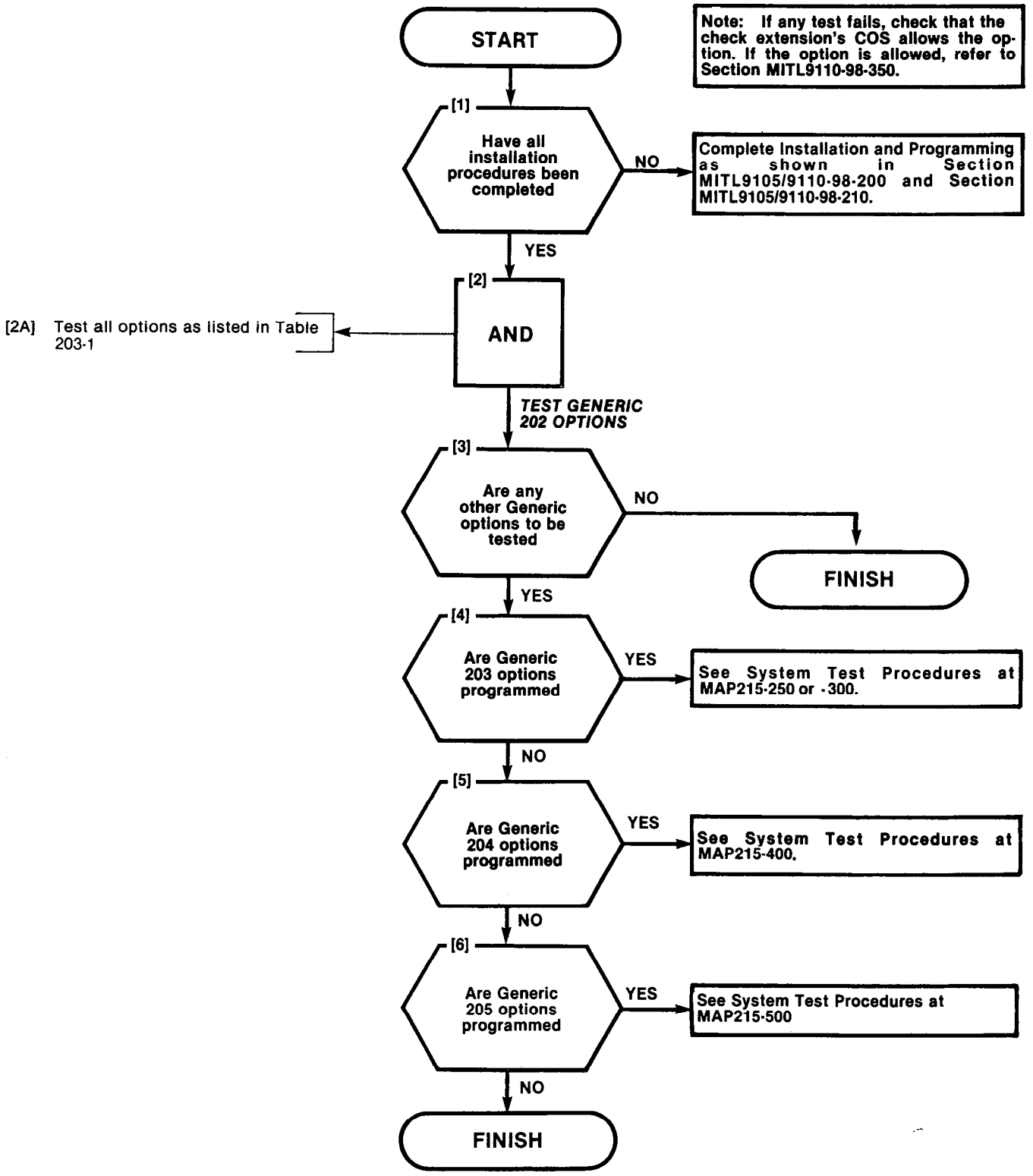

TABLE 203-1

CONSOLE OPTIONS - TEST ORDER

Order	Option Name	MAP No.
1	Answer An Incoming Call	215-217
2	Automatic Callback	215-218
3	Extending Internal Calls	215-219
4	Answering A Recall	215-220
5	Override	215-221
6	Flexible Night Service	215-222
7	Trunk Busy Operation	215-223
8	Trunk Group Attendant Access	215-224
9	Trunk Group Dial Access	215-225
10	Test Termination	215-226

BROKER'S CALL
MAP215-204
Issue 2, July 80
Sheet 1 of 1

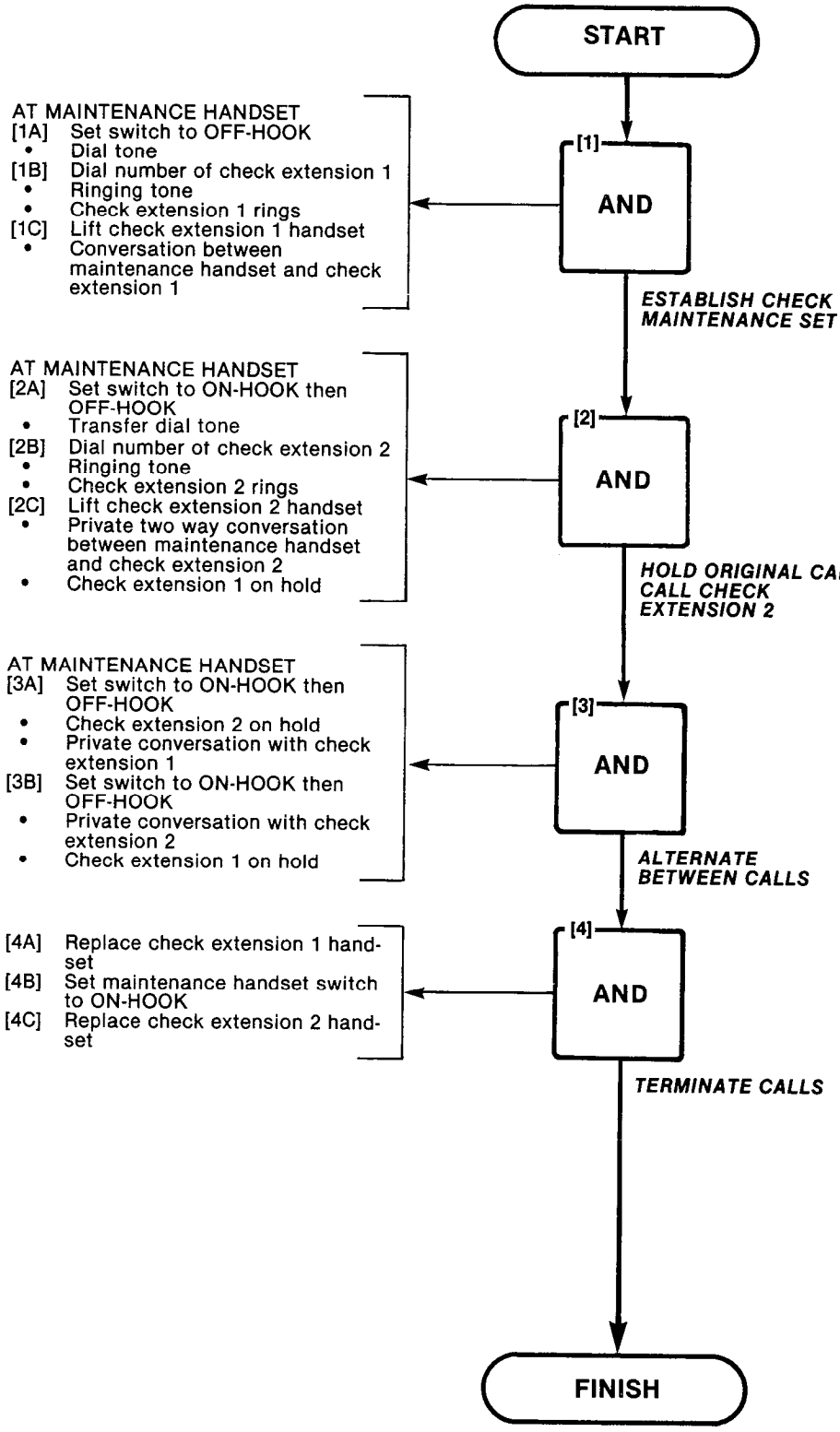

CALL FORWARDING - BUSY
MAP215-205
Issue 2, July 80
Sheet 1 of 1

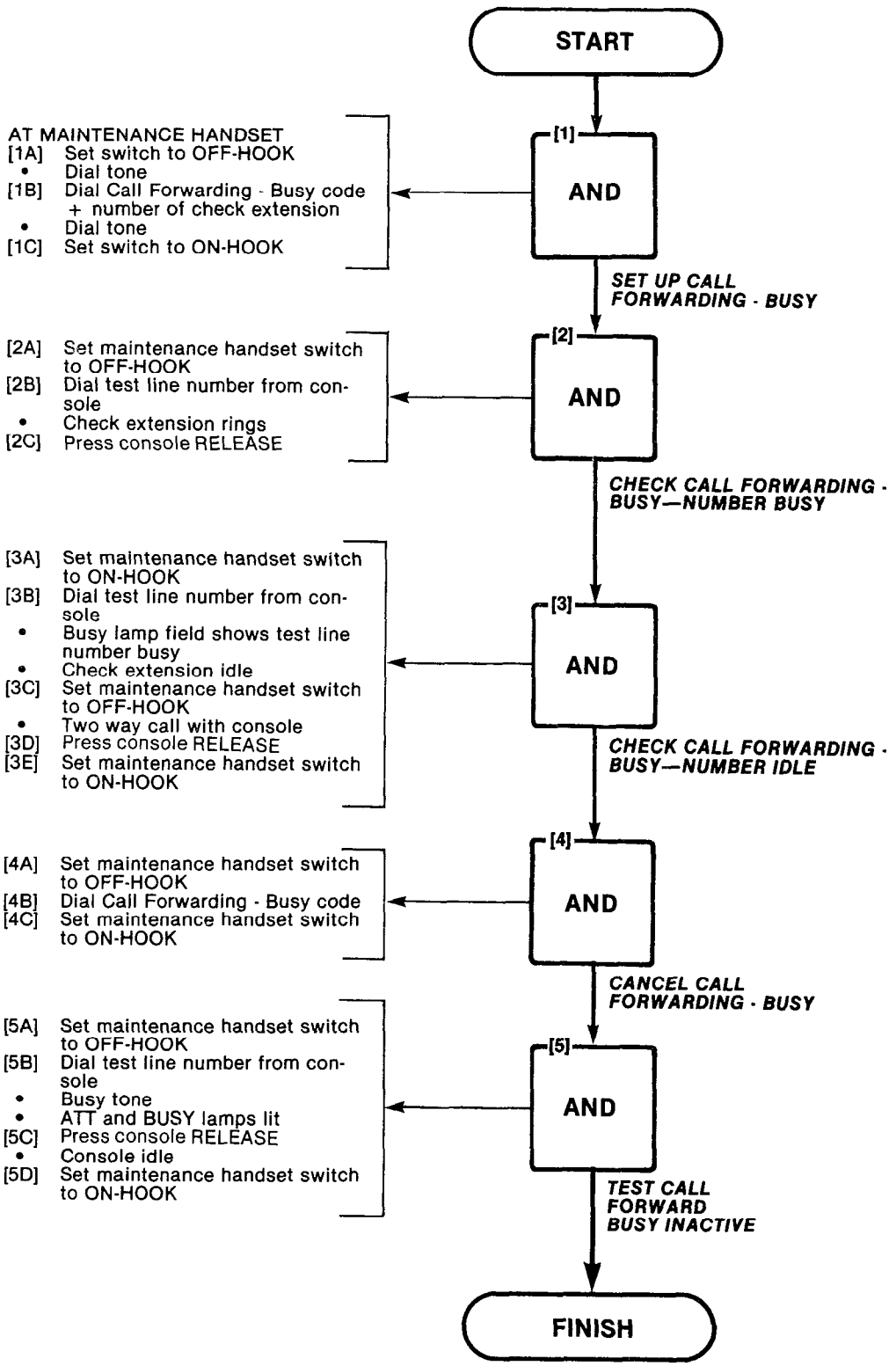

CALL FORWARDING - DON'T ANSWER
MAP215-206
Issue 2, July 80
Sheet 1 of 1

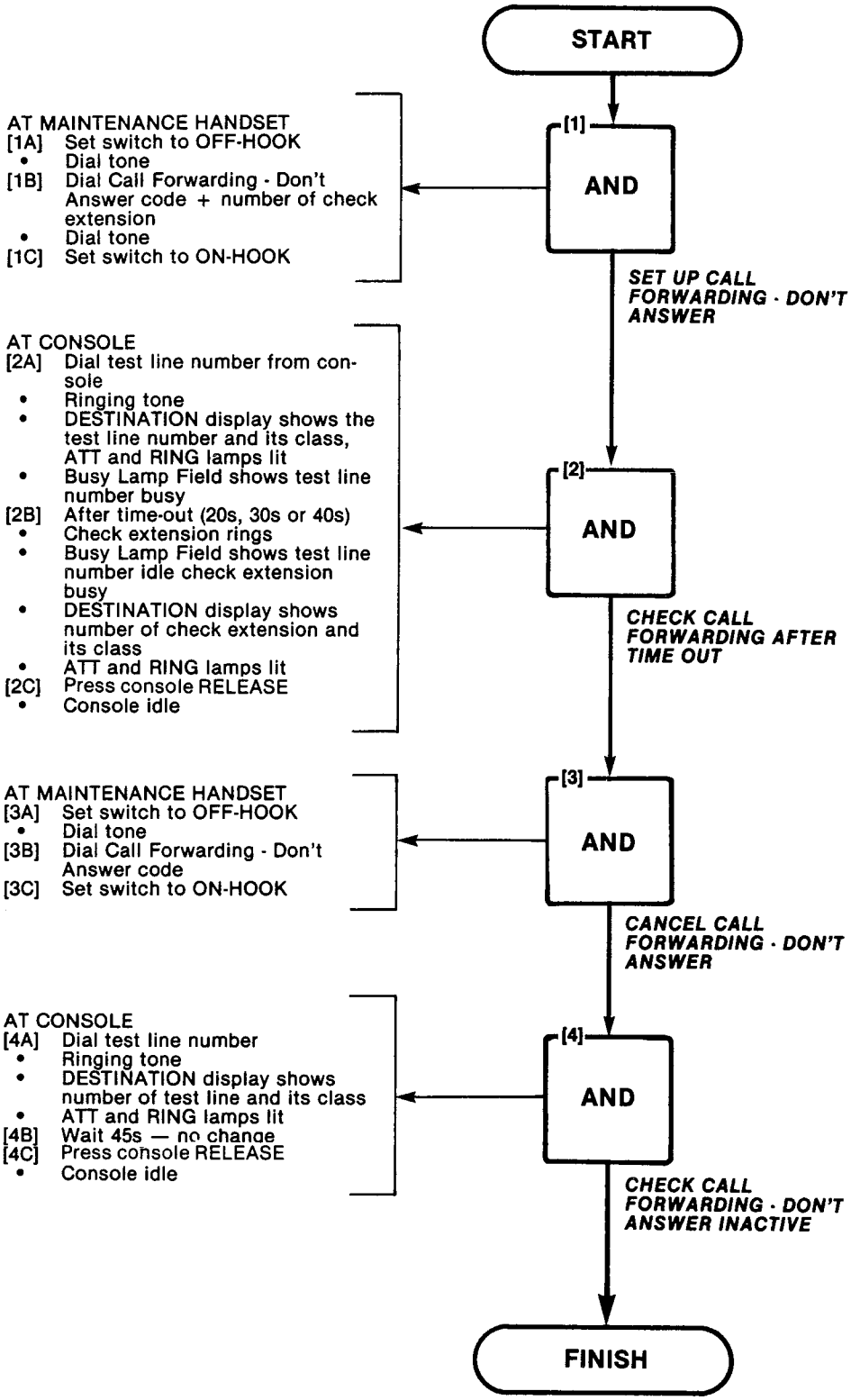

CALL FORWARDING - FOLLOW ME
MAP215-207
Issue 2, July 80
Sheet 1 of 1

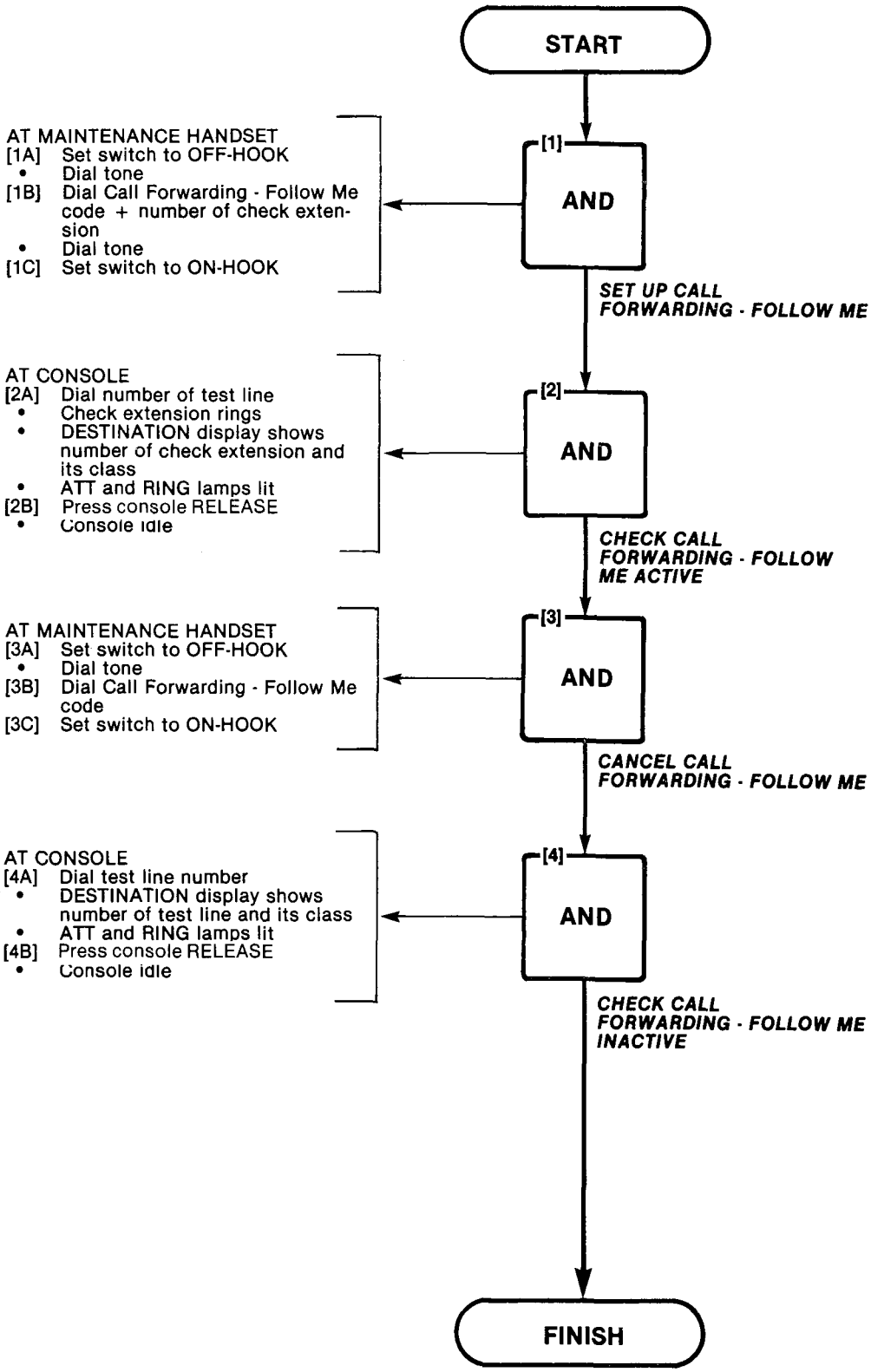

CALL PARK
MAP215-208
Issue 2, July 80
Sheet 1 of 1

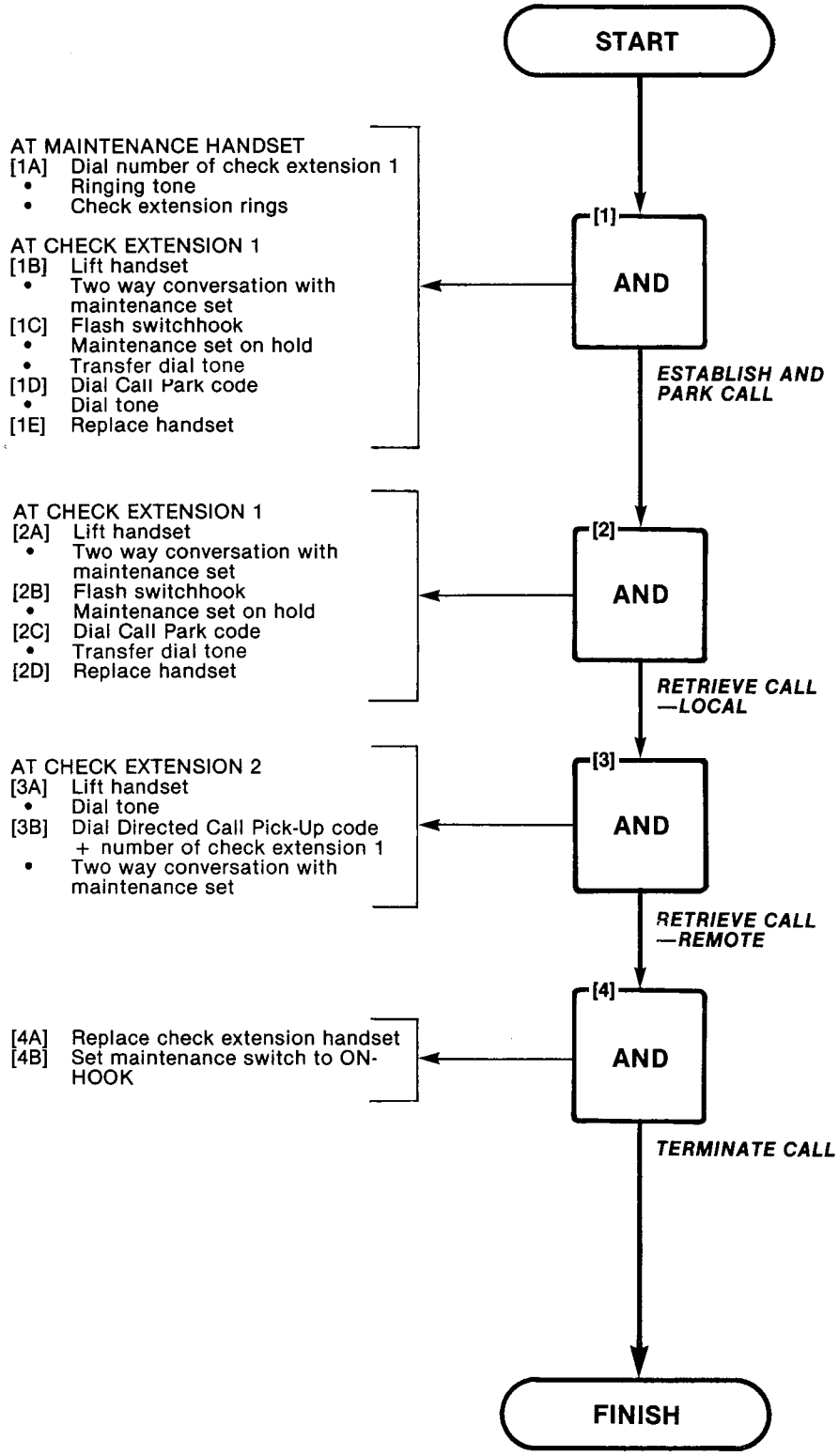

CALL PICK-UP
MAP215-209
Issue 2, July 80
Sheet 1 of 2

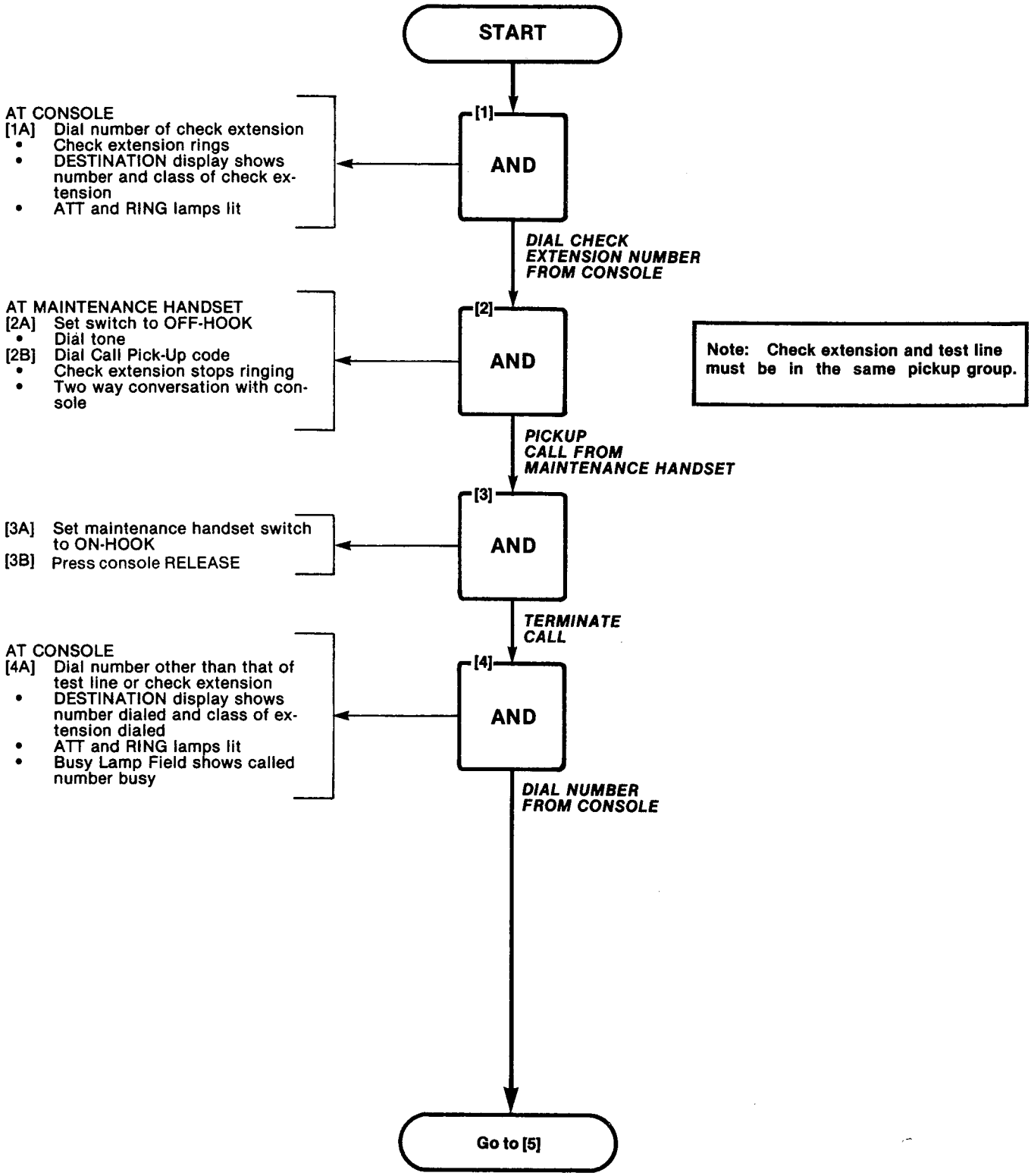

CALL PICK-UP
MAP215-209
Issue 2, July 80
Sheet 2 of 2

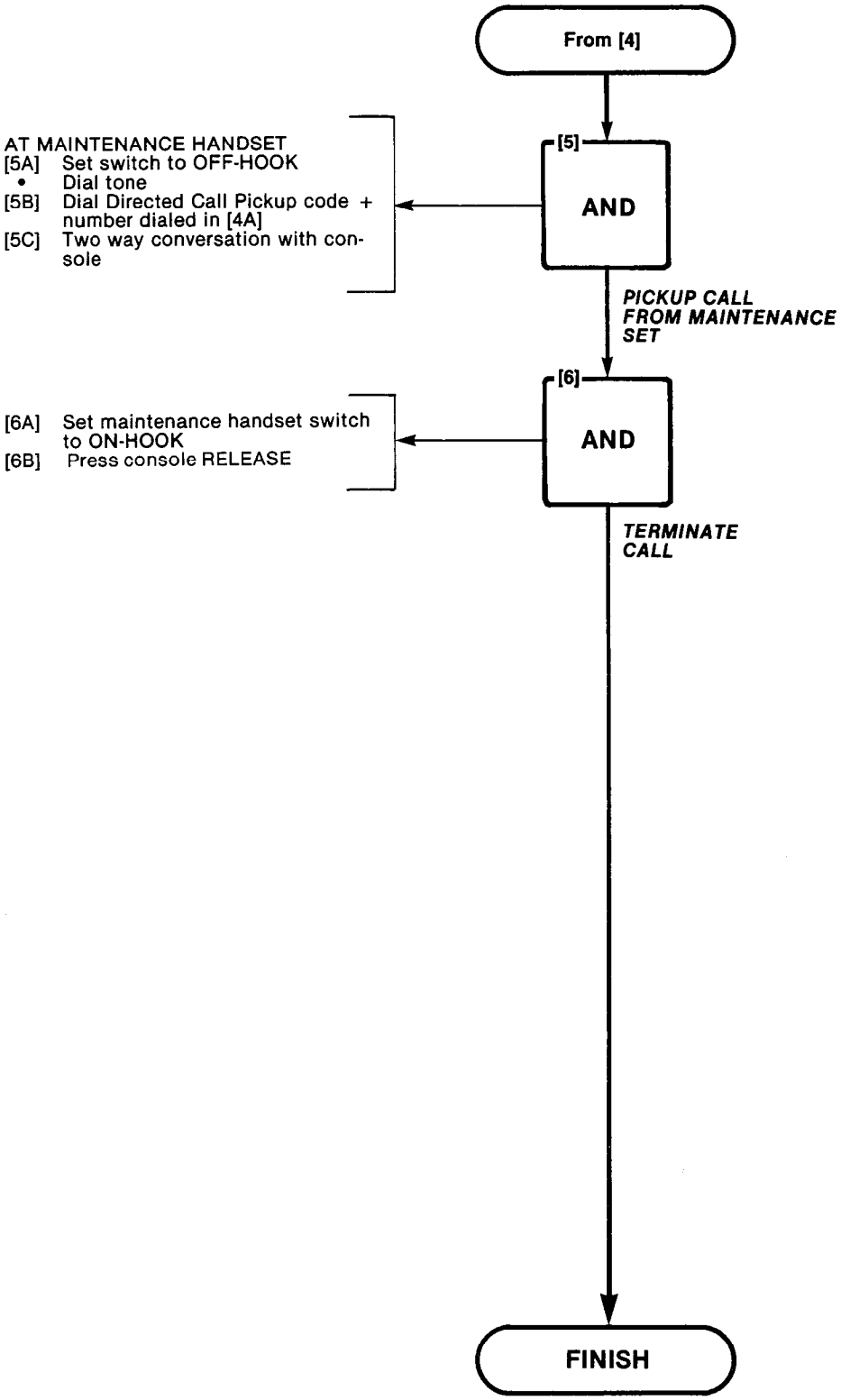

CAMP-ON
MAP215-210
Issue 2, July 80
Sheet 1 of 1

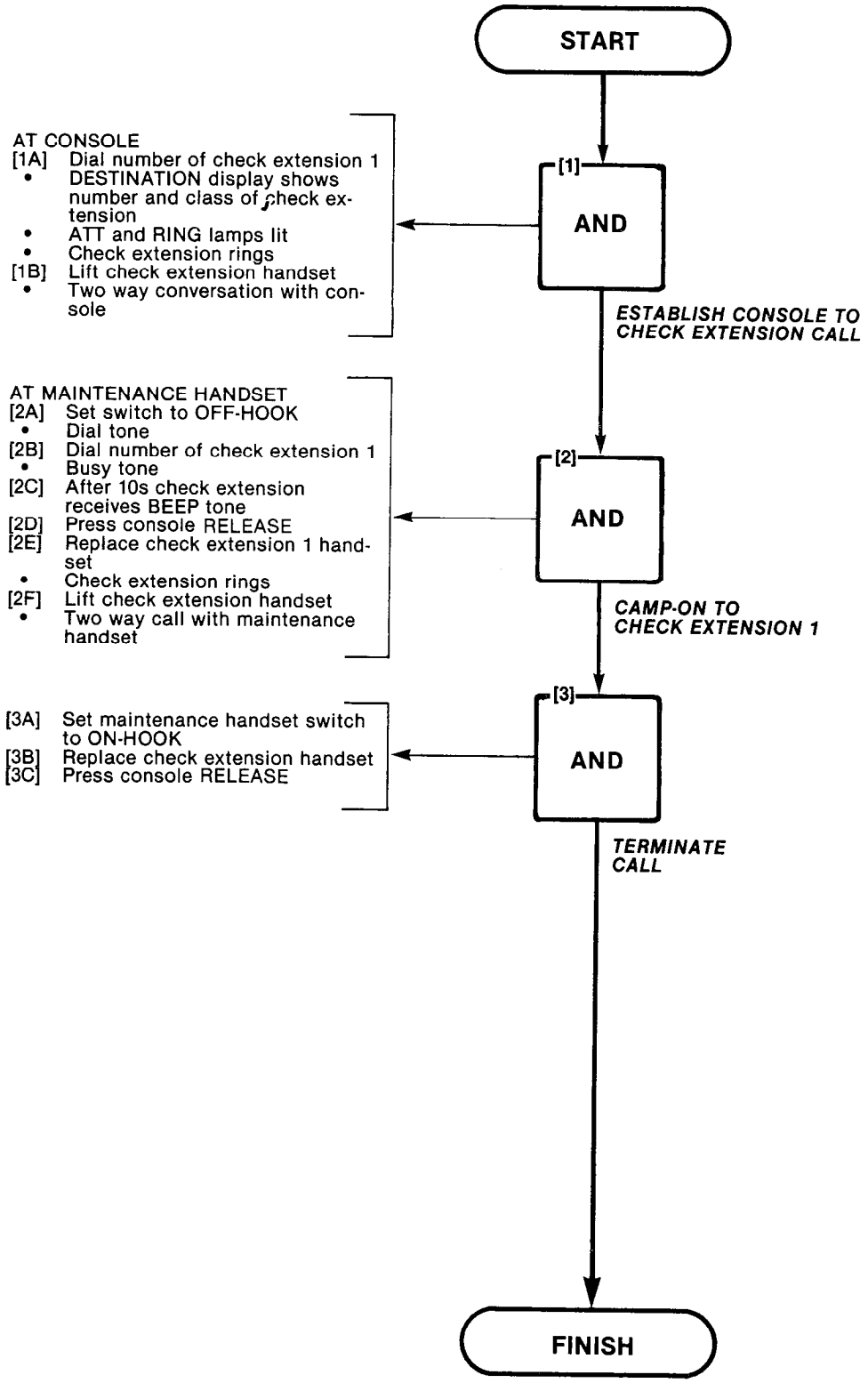

CONSULTATION HOLD/TRANSER/ADD-ON
MAP215-211
Issue 2, July 80
Sheet 1 of 1

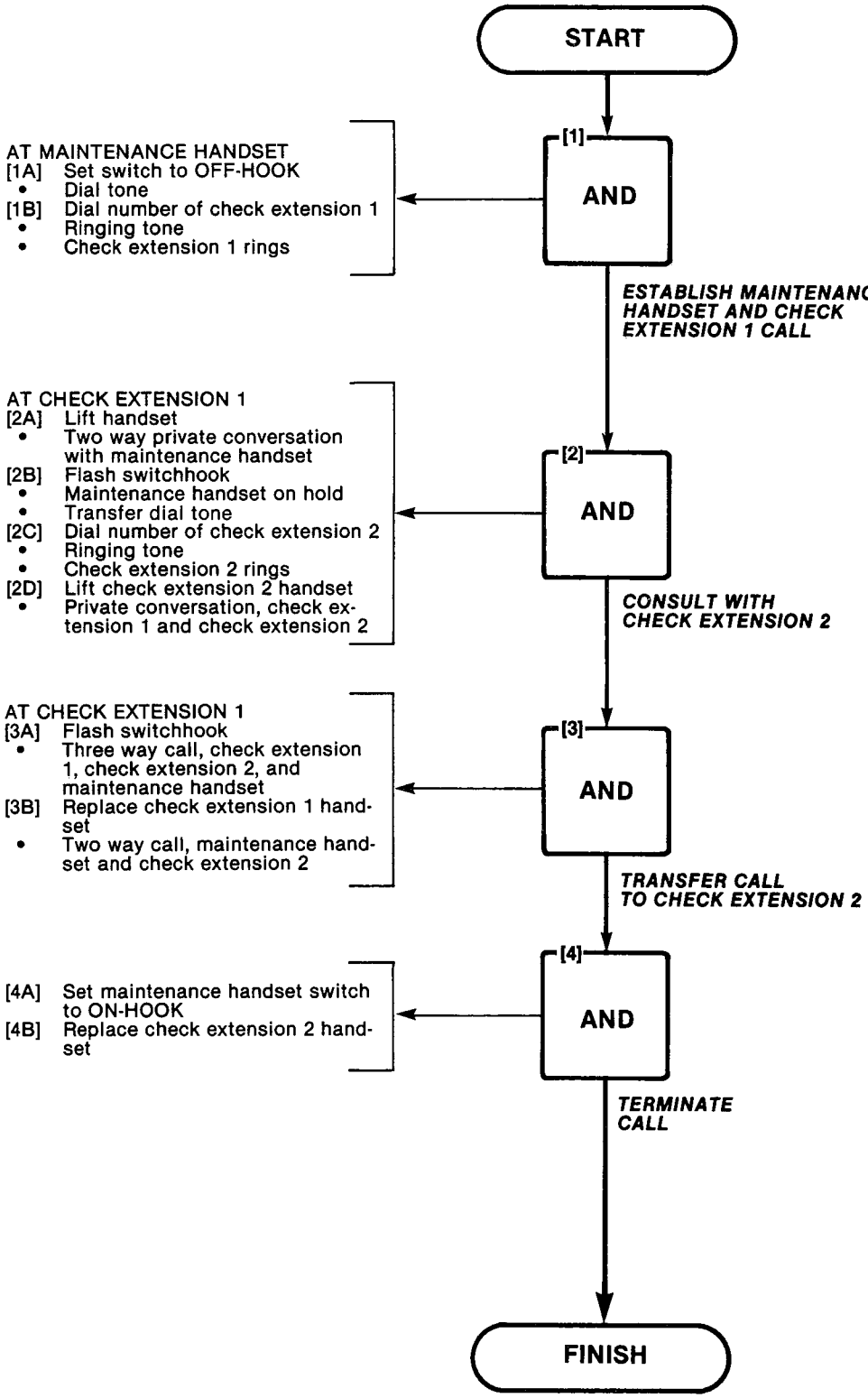

AUTOMATIC CALLBACK - DON'T ANSWER
MAP215-212
Issue 2, July 80
Sheet 1 of 1

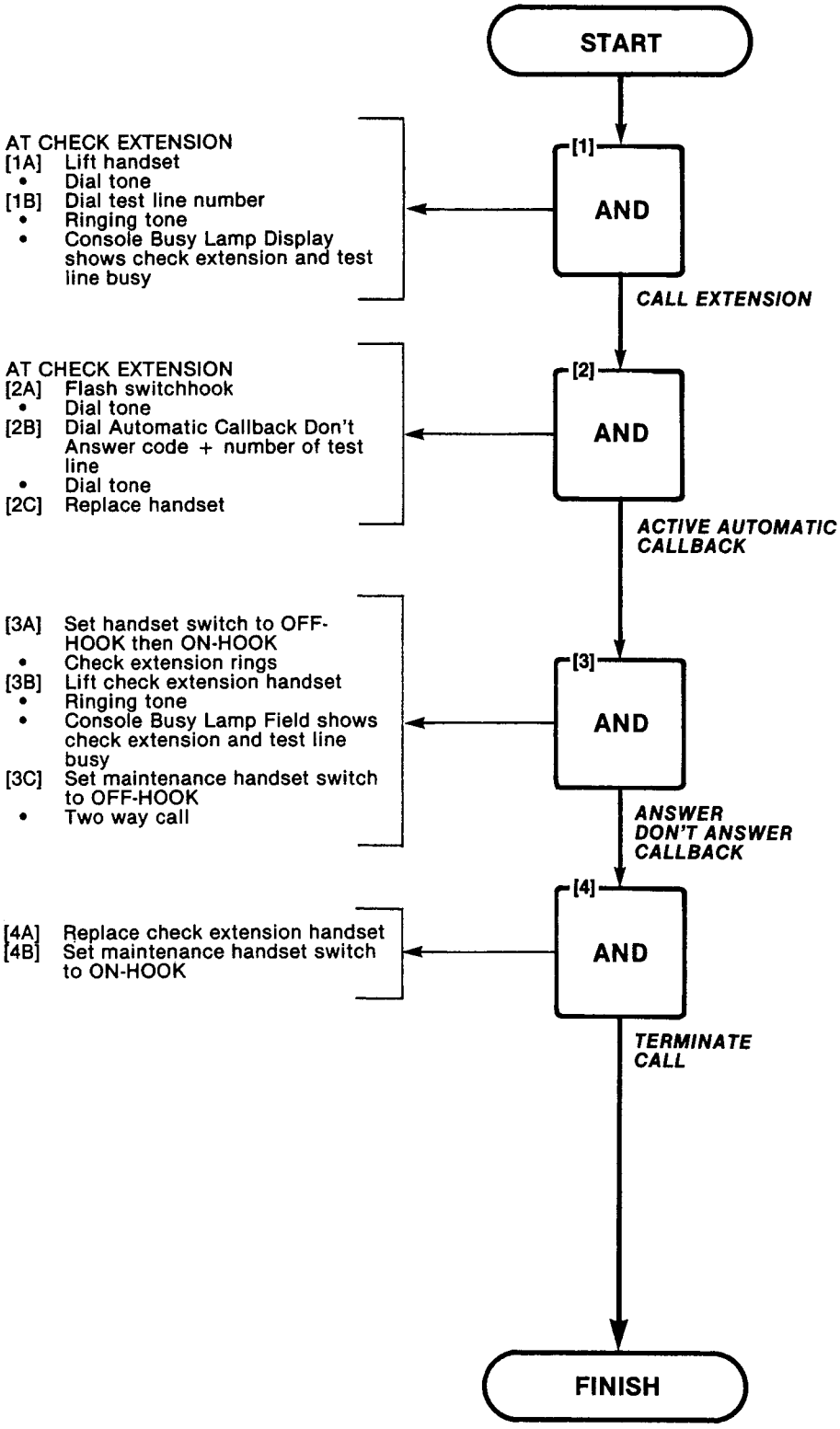

AUTOMATIC CALLBACK - BUSY
MAP215-213
Issue 2, July 80
Sheet 1 of 1

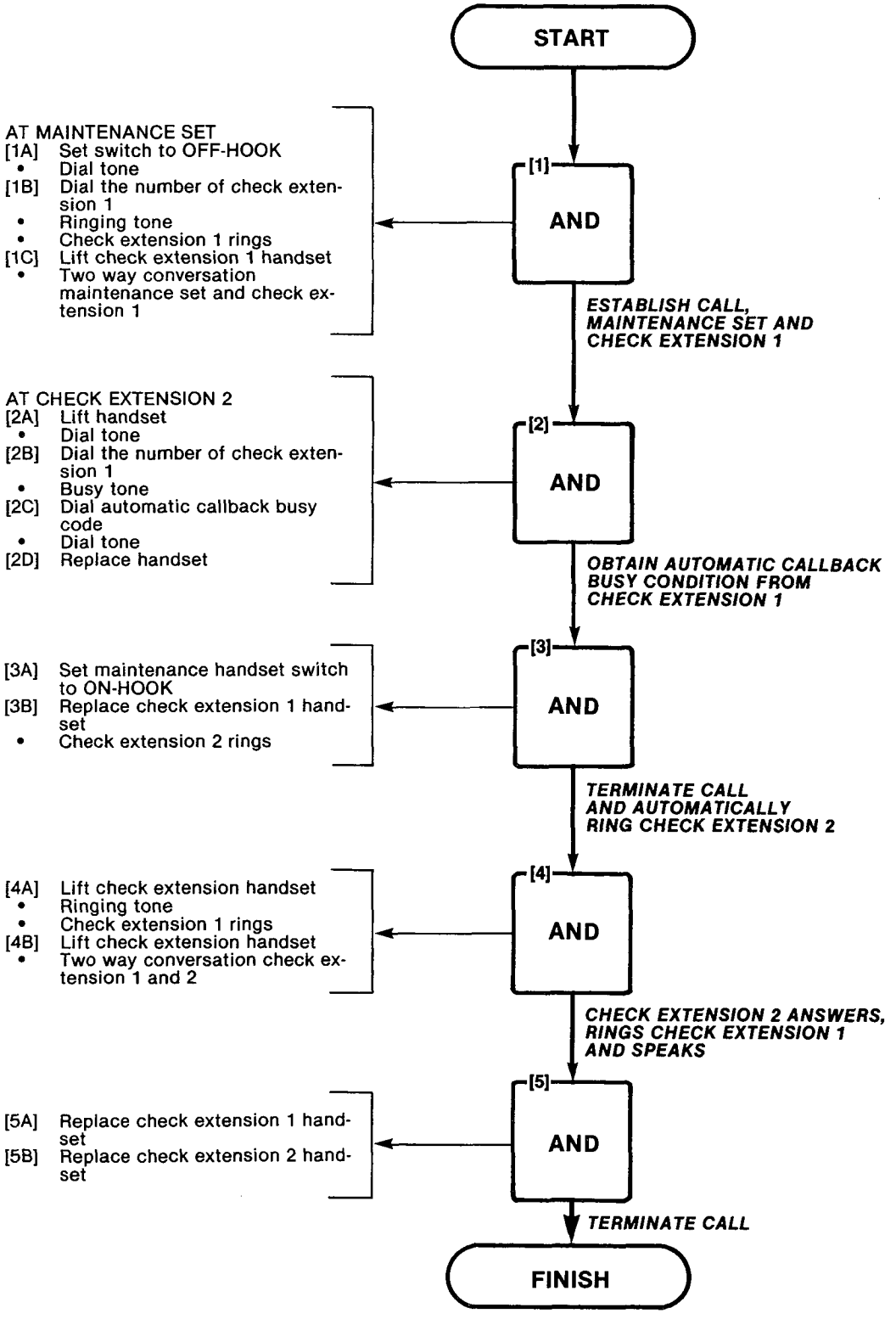

MEET-ME CONFERENCE
MAP215-214
Issue 2, July 80
Sheet 1 of 1

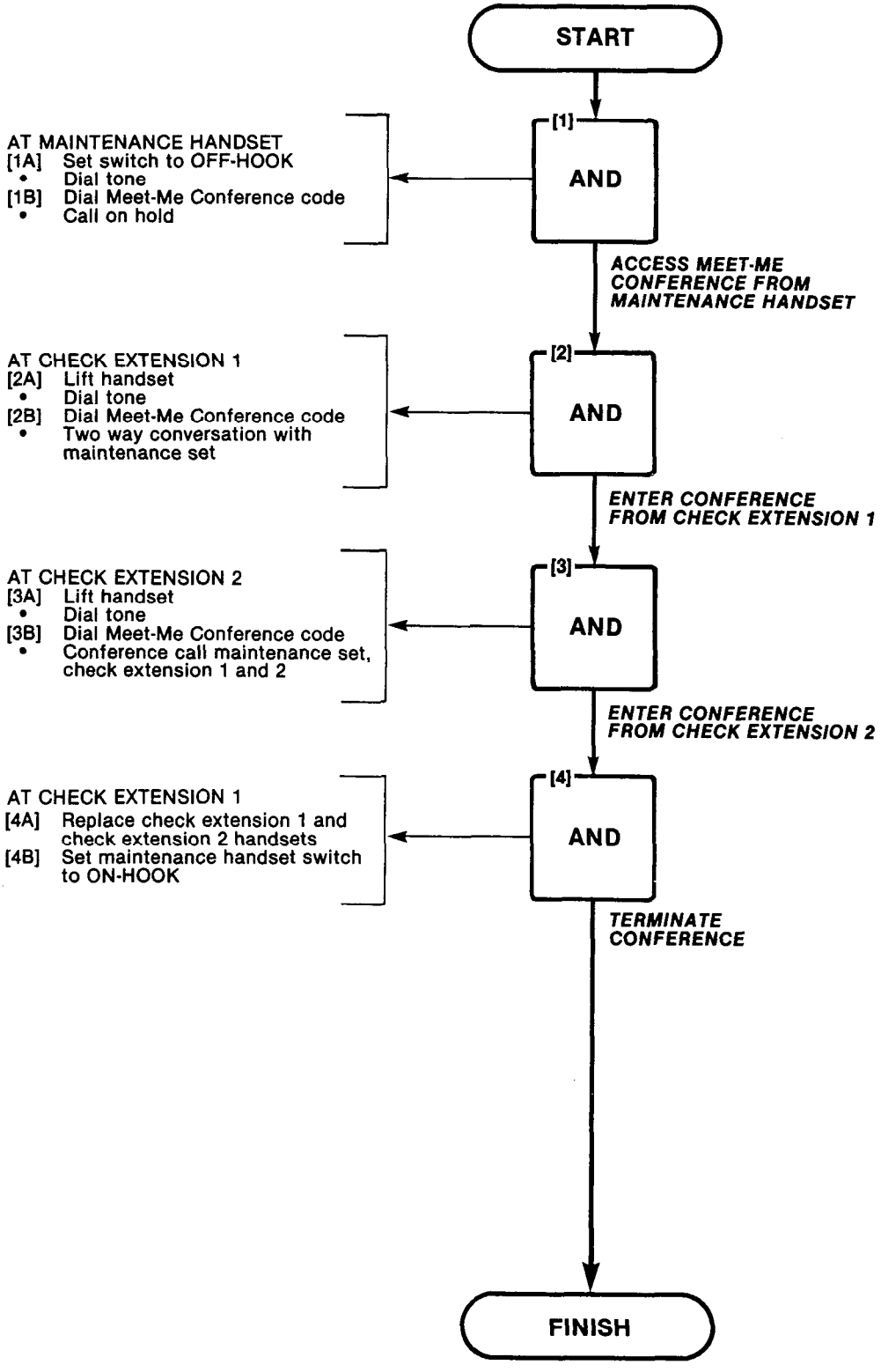

EXECUTIVE BUSY OVERRIDE
MAP215-215
Issue 2, July 80
Sheet 1 of 1

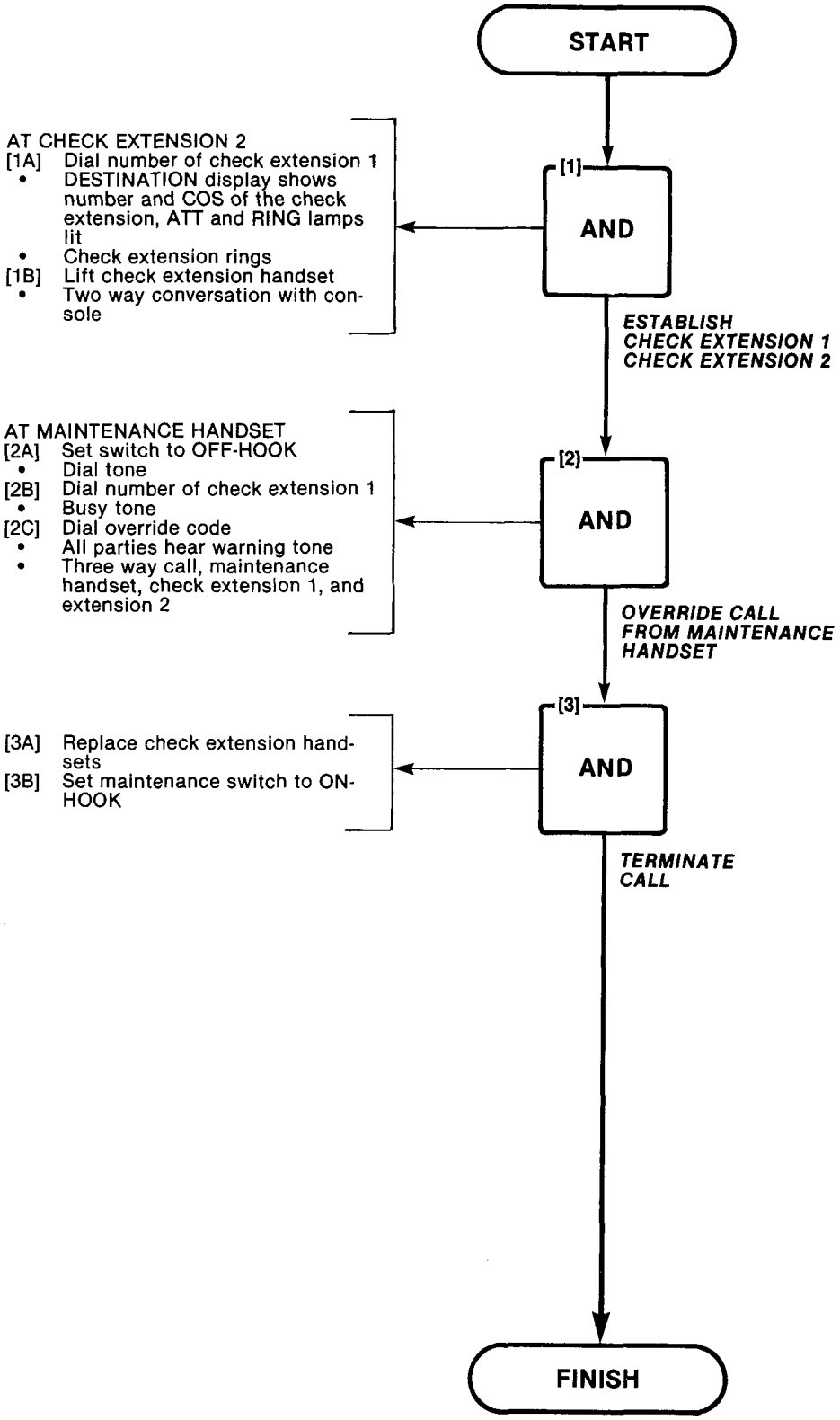

PAGING
MAP215-216
Issue 2, July 80
Sheet 1 of 1

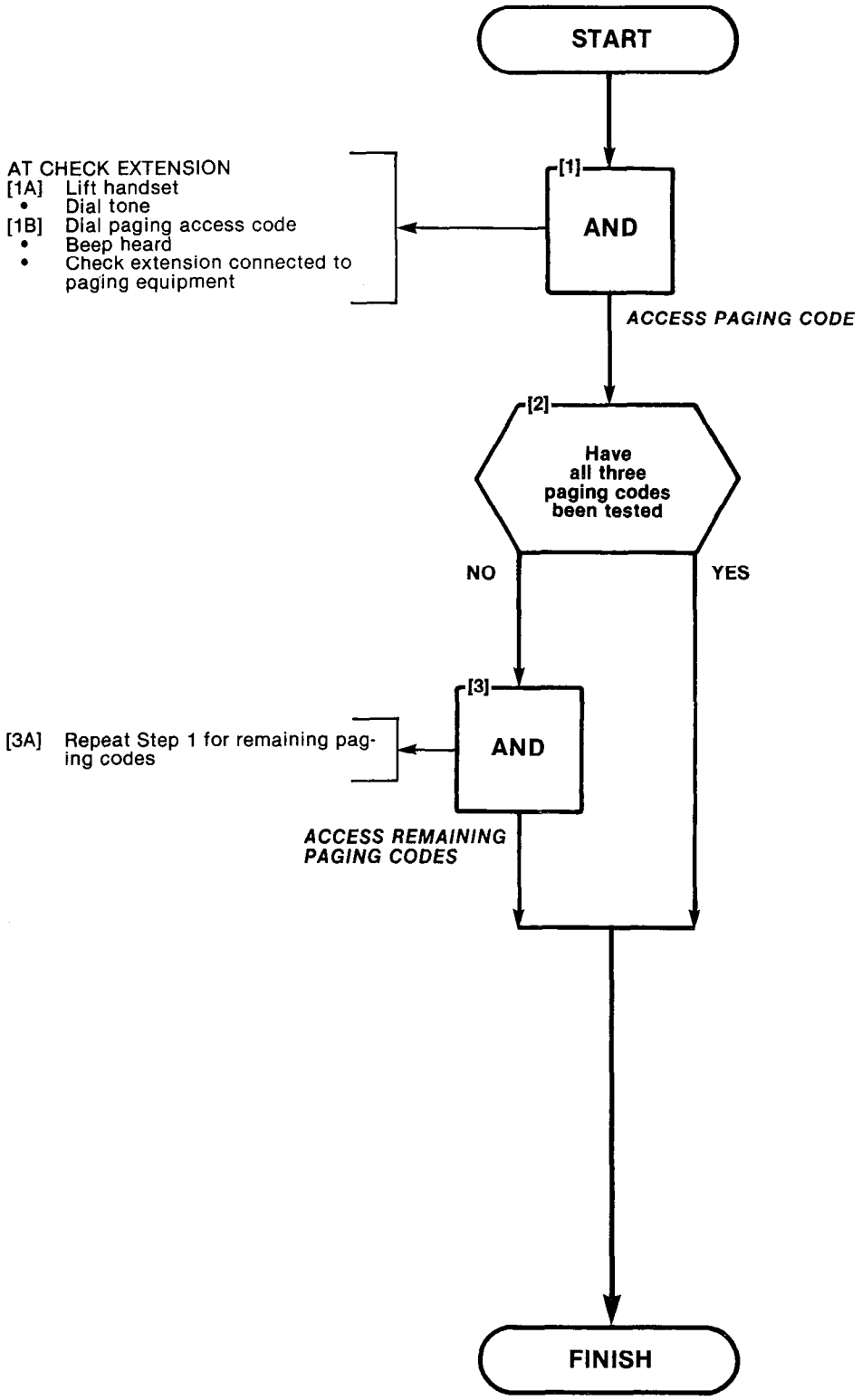

ANSWER INCOMING CALL
MAP215-217
Issue 2, July 80
Sheet 1 of 4

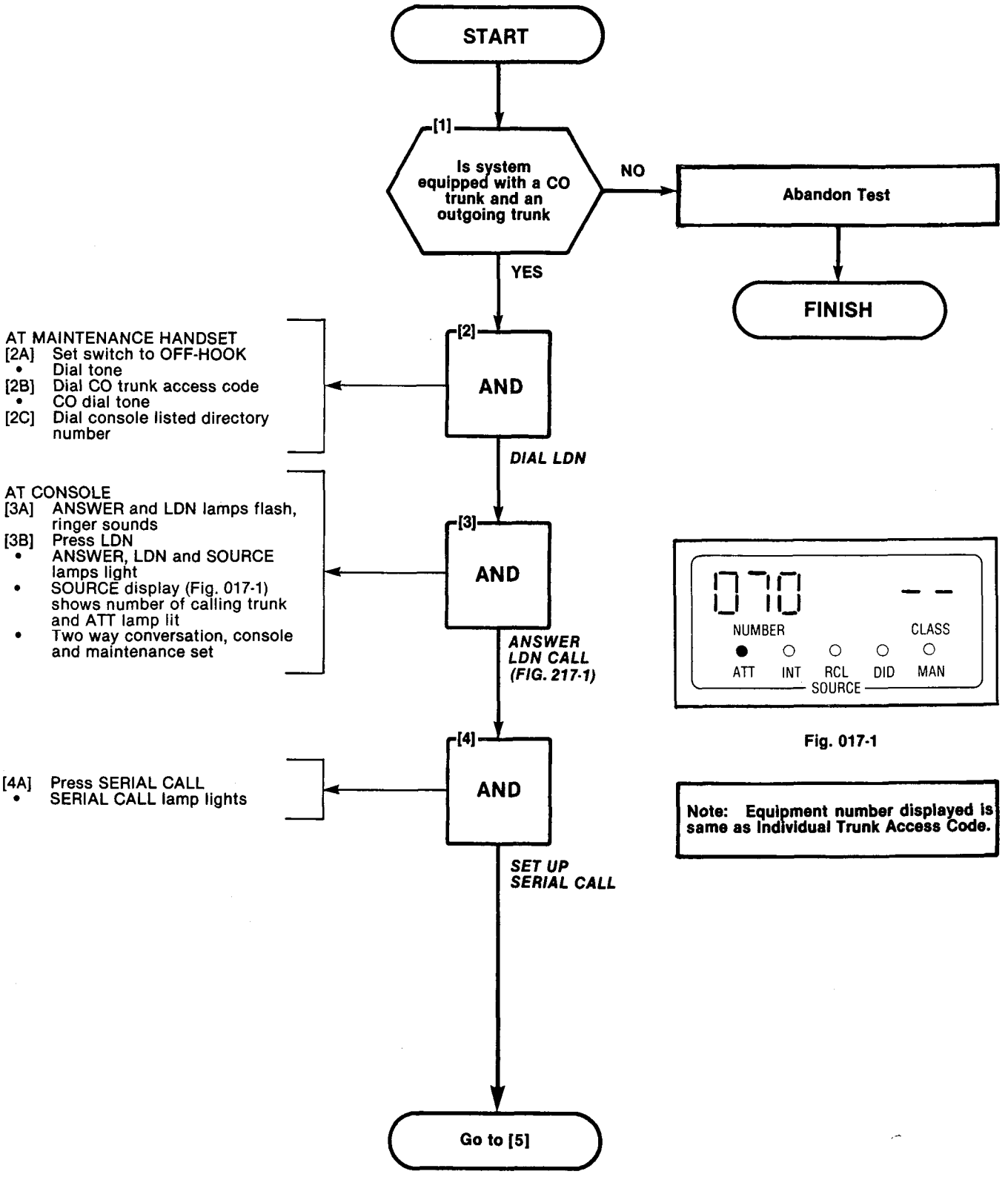

Fig. 017-1

Note: Equipment number displayed is same as Individual Trunk Access Code.

ANSWER INCOMING CALL
MAP215-217
Issue 2, July 80
Sheet 2 of 4

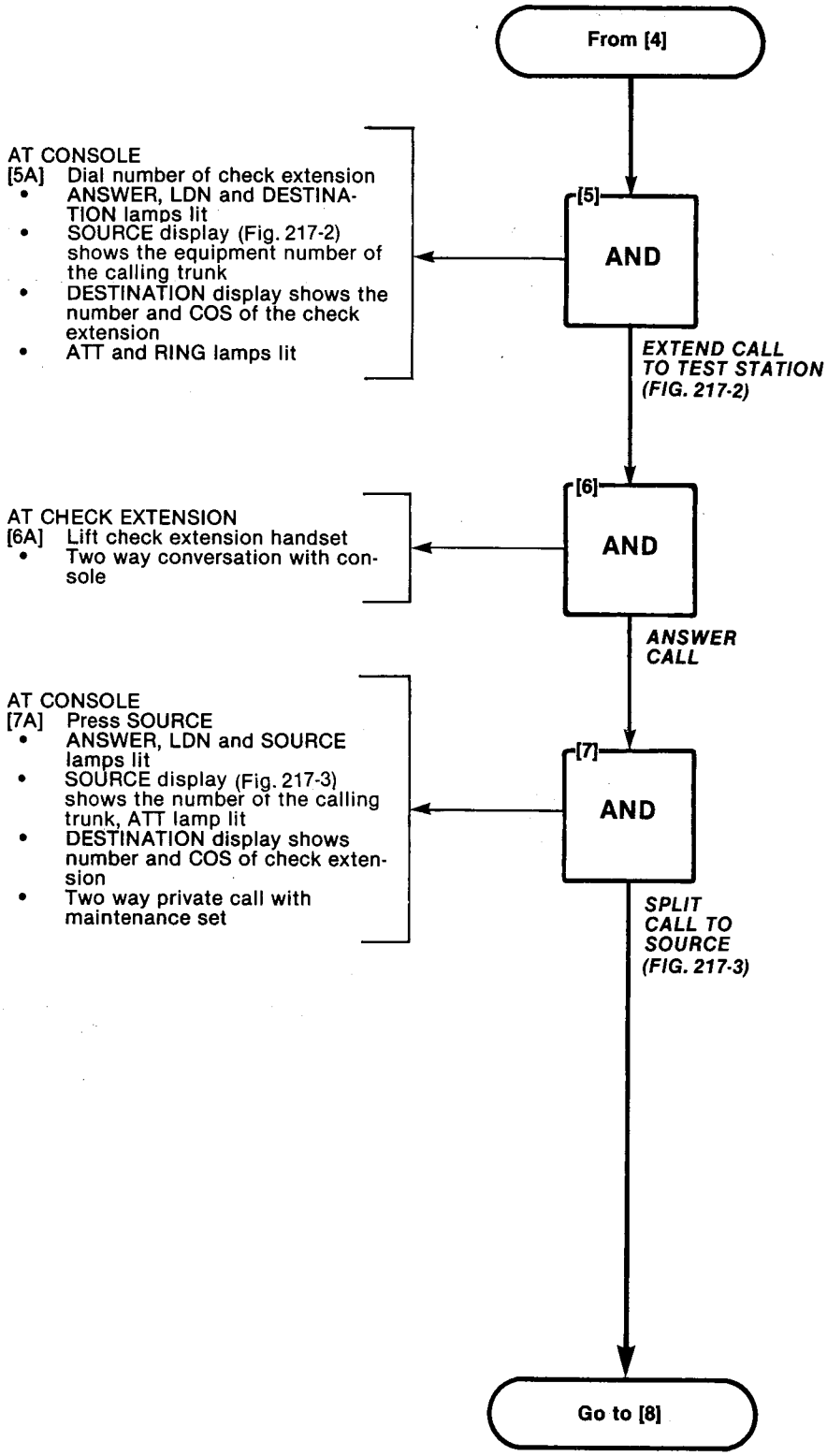

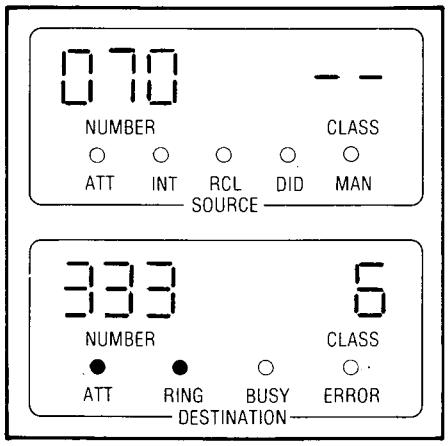

Fig. 217-2

Note: Equipment number displayed is same as Individual Trunk Access Code.

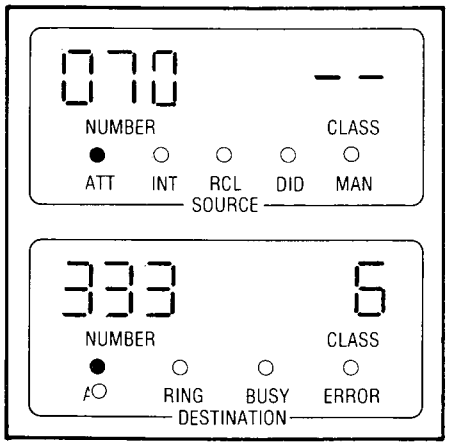

Fig. 217-3

Note: Equipment number displayed is same as Individual Trunk Access Code.

ANSWER INCOMING CALL
MAP215-217
Issue 2, July 80
Sheet 3 of 4

From [7]

AT CONSOLE
[8A] Press DEST
- ANSWER, LDN and DEST lamps lit
- SOURCE display (Fig. 217-4) shows the equipment number of the calling trunk)
- DESTINATION display shows the number and COS of the check extension
- ATT lamp lit
- Two way private call with check extension

[8] AND

SPLIT CALL TO DESTINATION (FIG. 217-4)

AT CONSOLE
[9A] Press BOTH
- ANSWER, LDN and BOTH lamps lit
- SOURCE display (Fig. 217-5) shows equipment number of calling trunk
- ATT lamp lit
- DESTINATION display shows number and COS of check extension
- ATT lamp lit
- Three way call check extension, maintenance set and console

[9] AND

SPLIT CALL TO BOTH (FIG. 217-5)

[10A] Press console RELEASE
- Console idle
- Two way conversation, check extension and maintenance set

[10] AND

RELEASE CONSOLE

[11A] Replace check extension handset
- Console ringer sounds
- ANSWER, LDN, RCL lamps flash

[11B] Press console RCL
- SERIAL CALL, SOURCE
- ANSWER, LDN and RCL lamps light
- SOURCE display (Fig. 217-6) shows the equipment number of the calling trunk
- ATT, RCL lamps lit
- Two way conversation console and maintenance set

[11] AND

RETURN CALL TO CONSOLE (FIG. 217-6)

Go to [12]

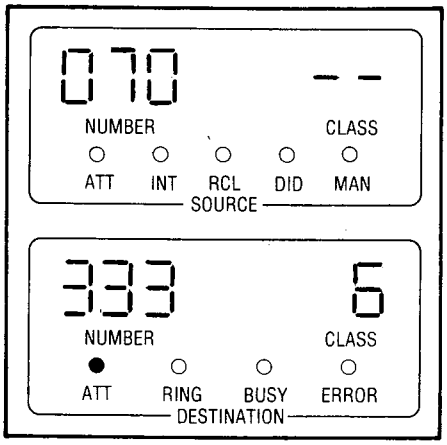

Fig. 217-4

Note: Equipment number displayed is same as Individual Trunk Access Code.

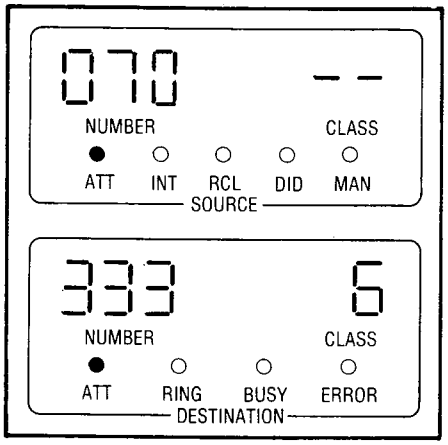

Fig. 217-5

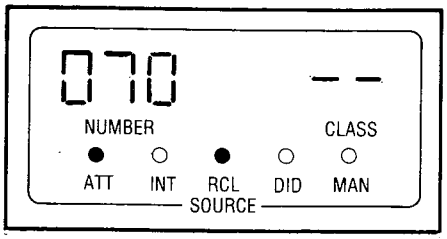

Fig. 217-6

ANSWER INCOMING CALL
MAP215-217
Issue 2, July 80
Sheet 4 of 4

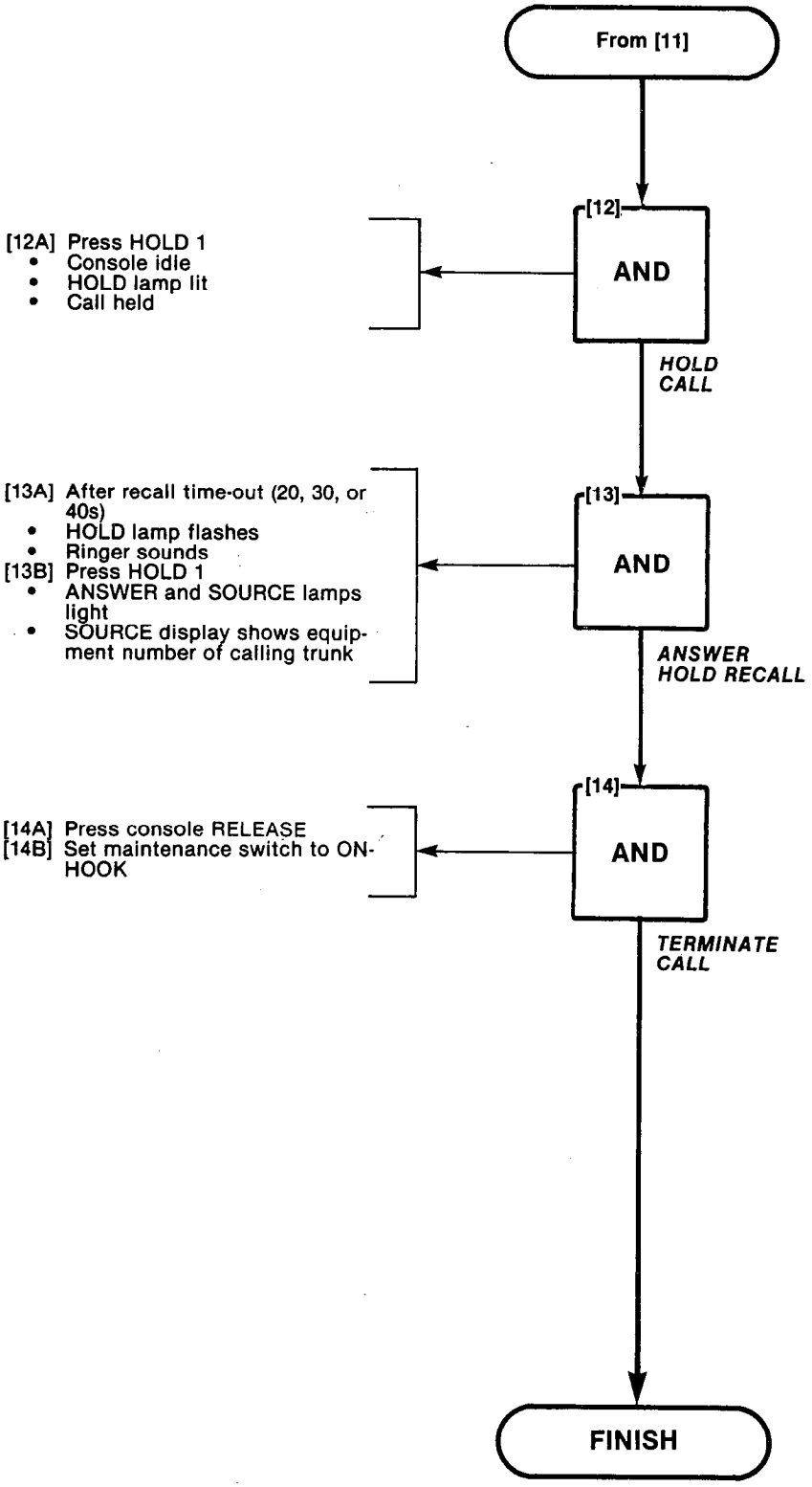

AUTOMATIC CALLBACK
MAP215-218
Issue 2, July 80
Sheet 1 of 1

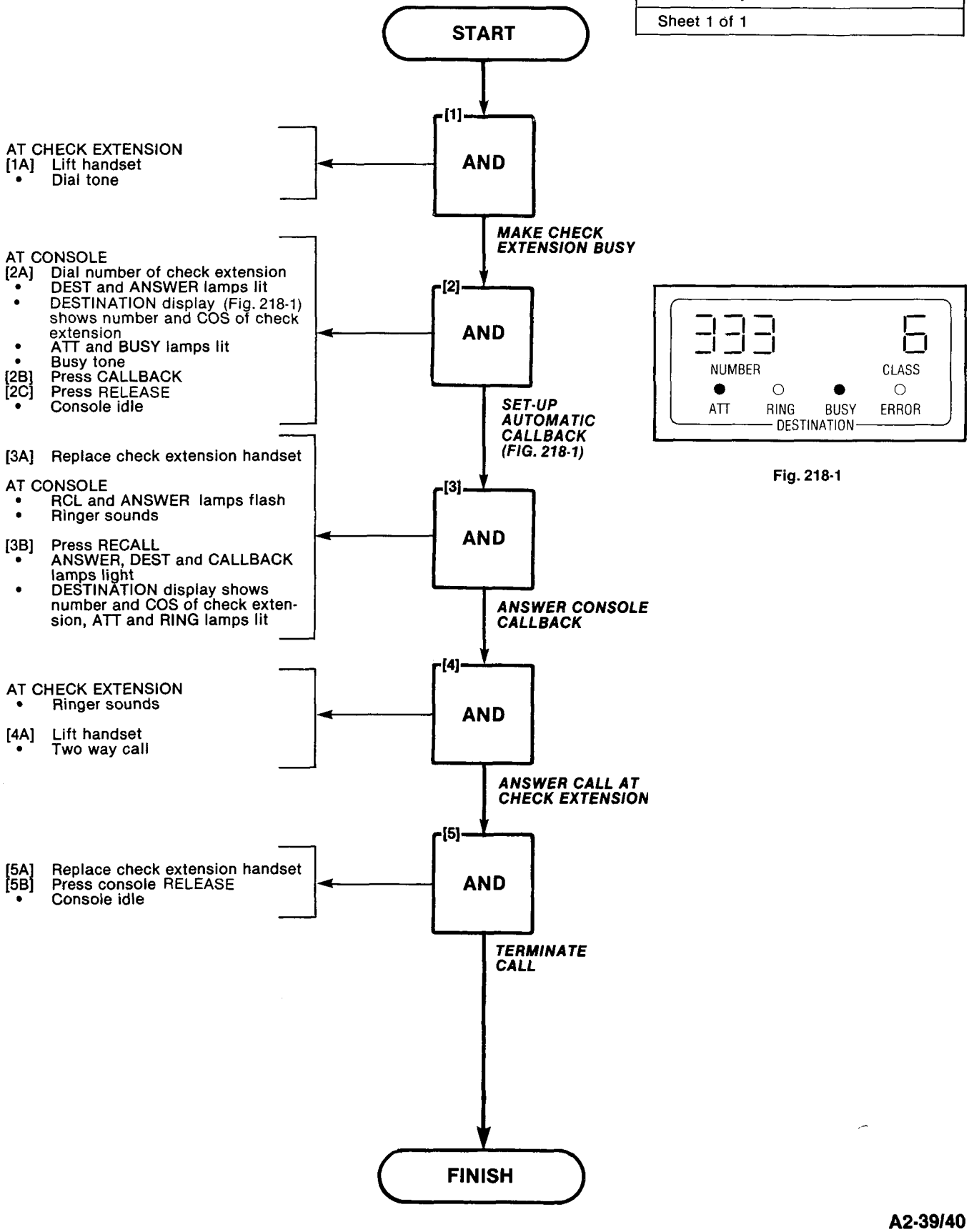

Fig. 218-1

EXTENDING INTERNAL CALLS
MAP215-219
Issue 2, July 80
Sheet 1 of 1

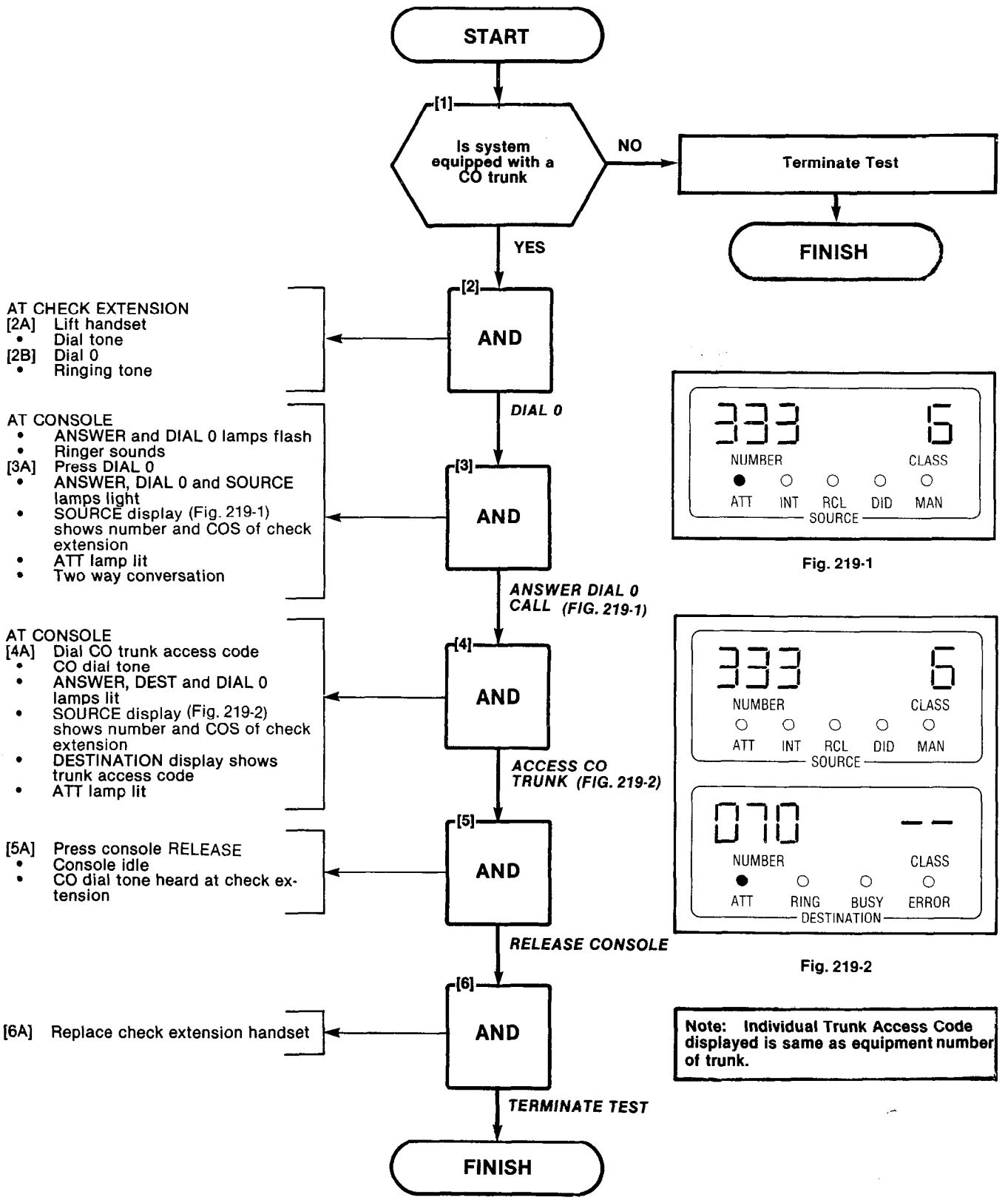

Fig. 219-1

Fig. 219-2

Note: Individual Trunk Access Code displayed is same as equipment number of trunk.

ANSWERING RECALL
MAP215-220
Issue 2, July 80
Sheet 1 of 2

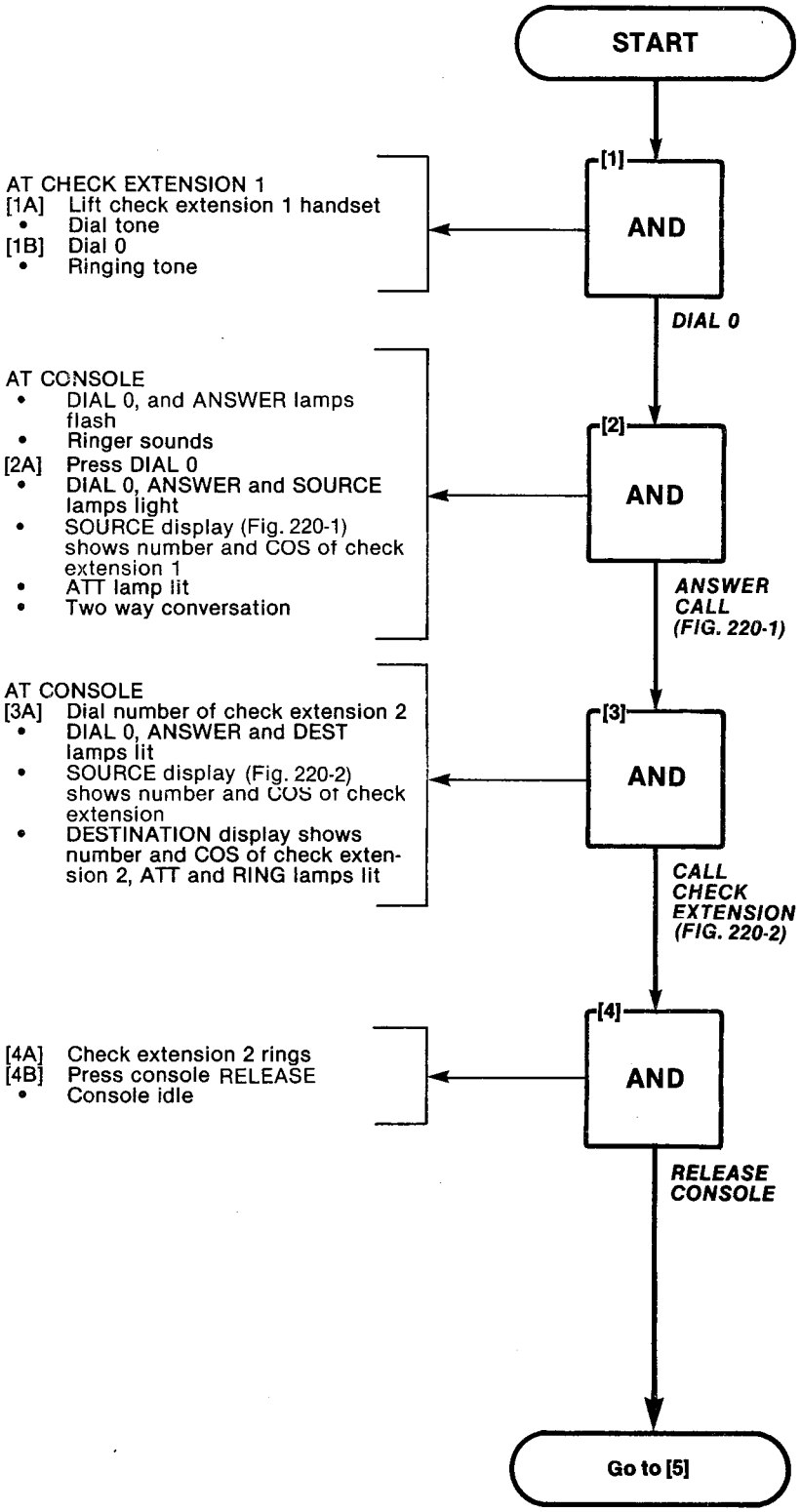

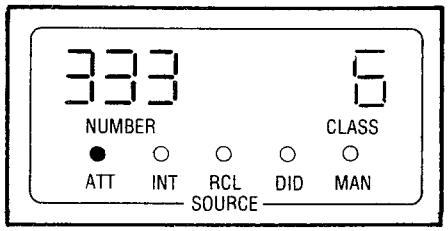

Fig. 220-1

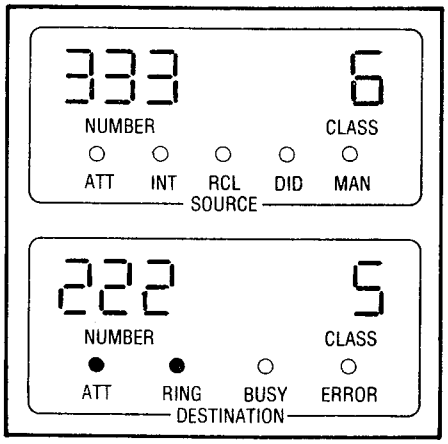

Fig. 220-2

ANSWERING RECALL
MAP215-220
Issue 2, July 80
Sheet 2 of 2

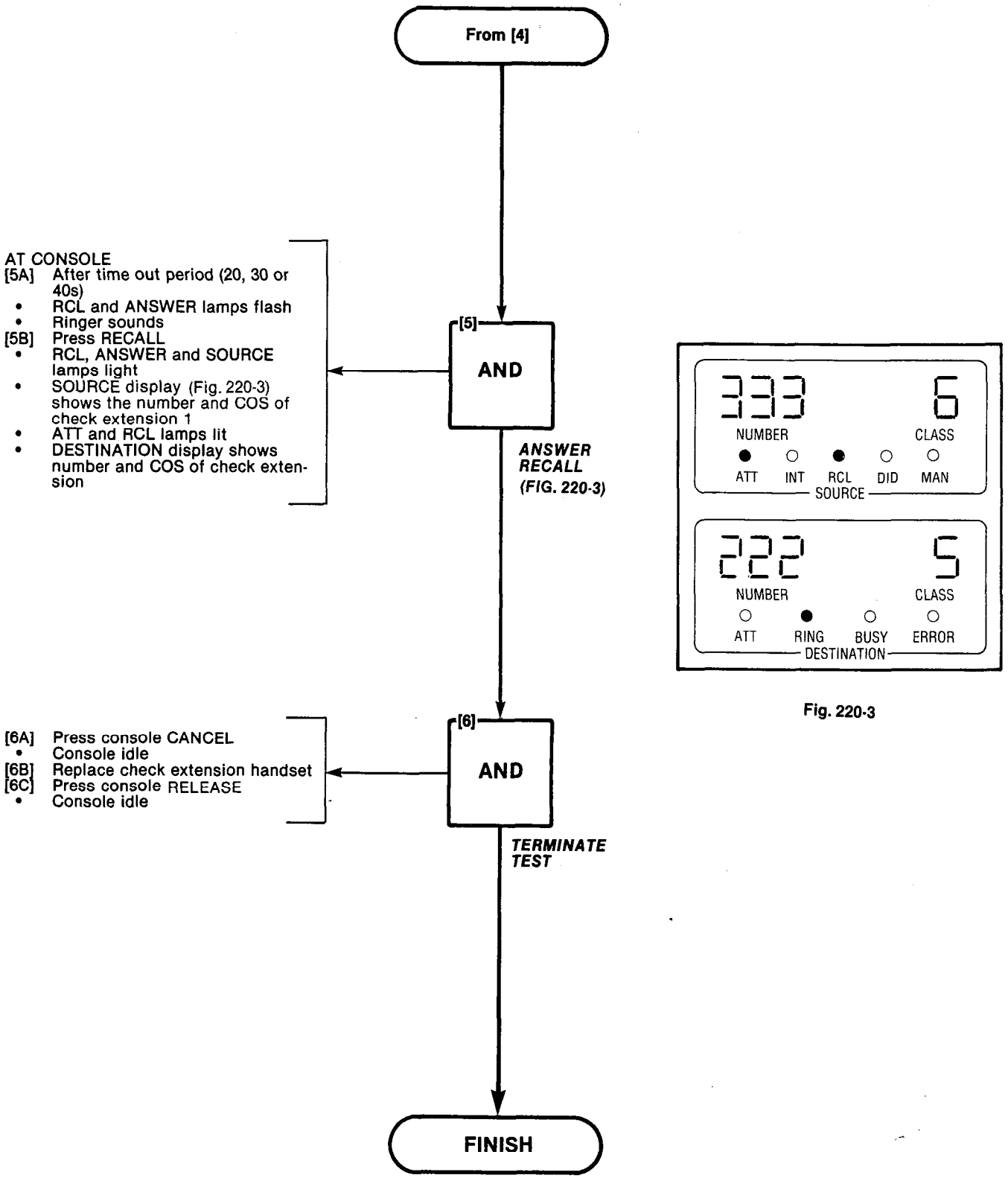

Fig. 220-3

OVERRIDE
MAP215-221
Issue 2, July 80
Sheet 1 of 1

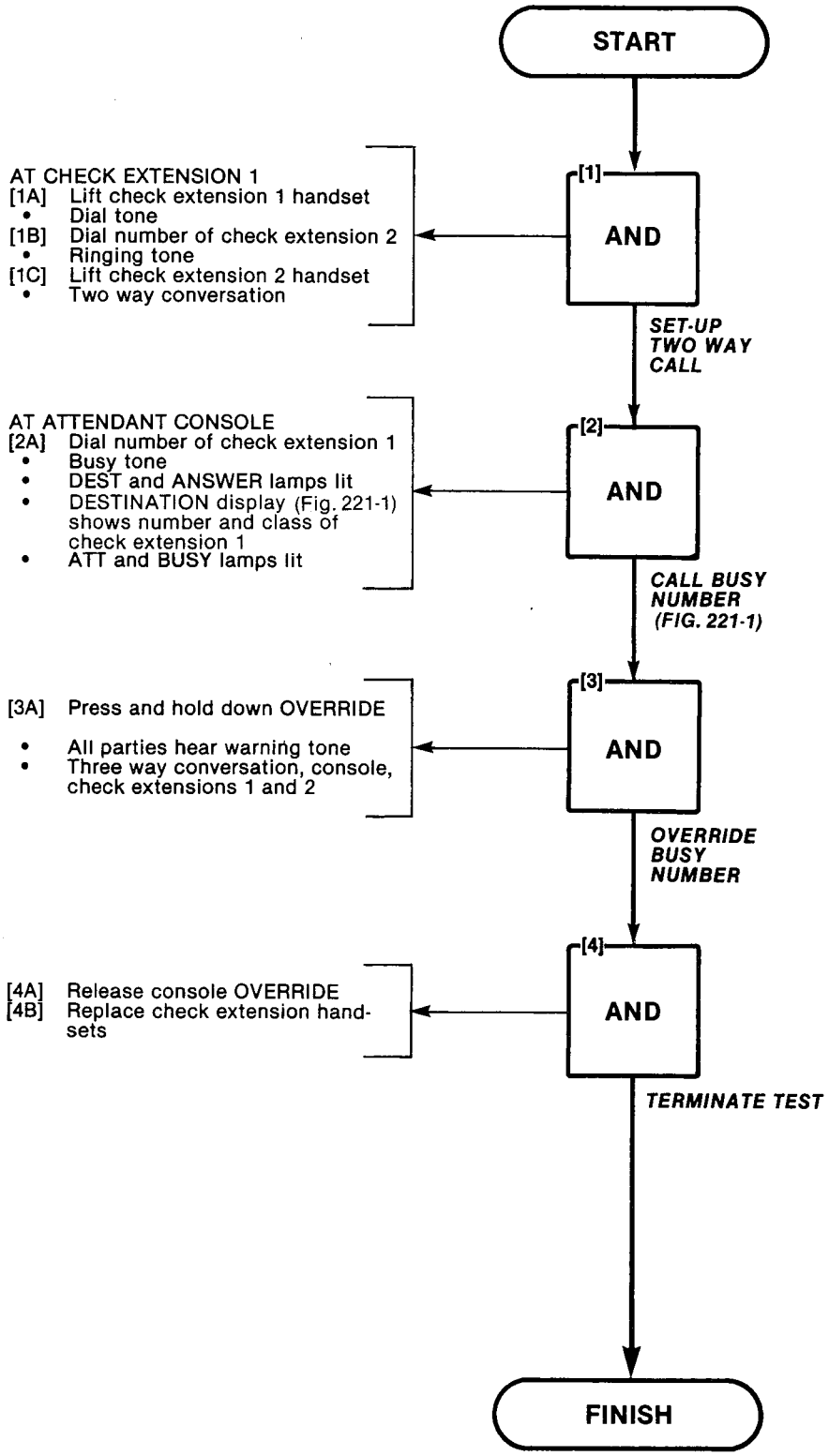

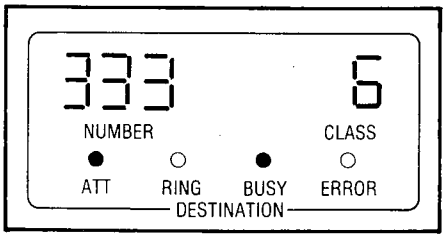

Fig. 221-1

FLEXIBLE NIGHT SERVICE
MAP215-222
Issue 2, July 80
Sheet 1 of 1

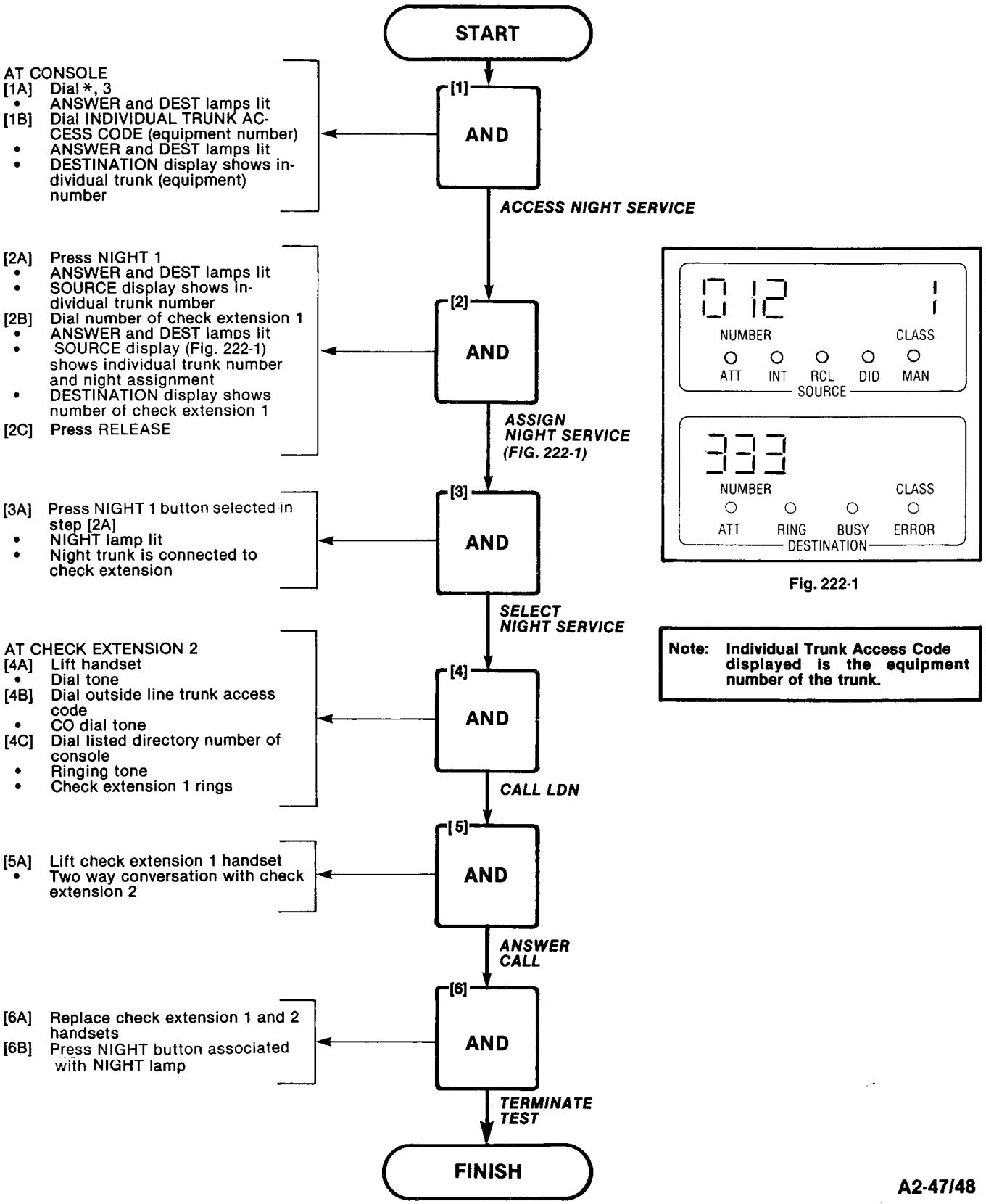

Fig. 222-1

Note: **Individual Trunk Access Code displayed is the equipment number of the trunk.**

TRUNK BUSY OPERATION
MAP215-022
Issue 2, July 80
Sheet 1 of 1

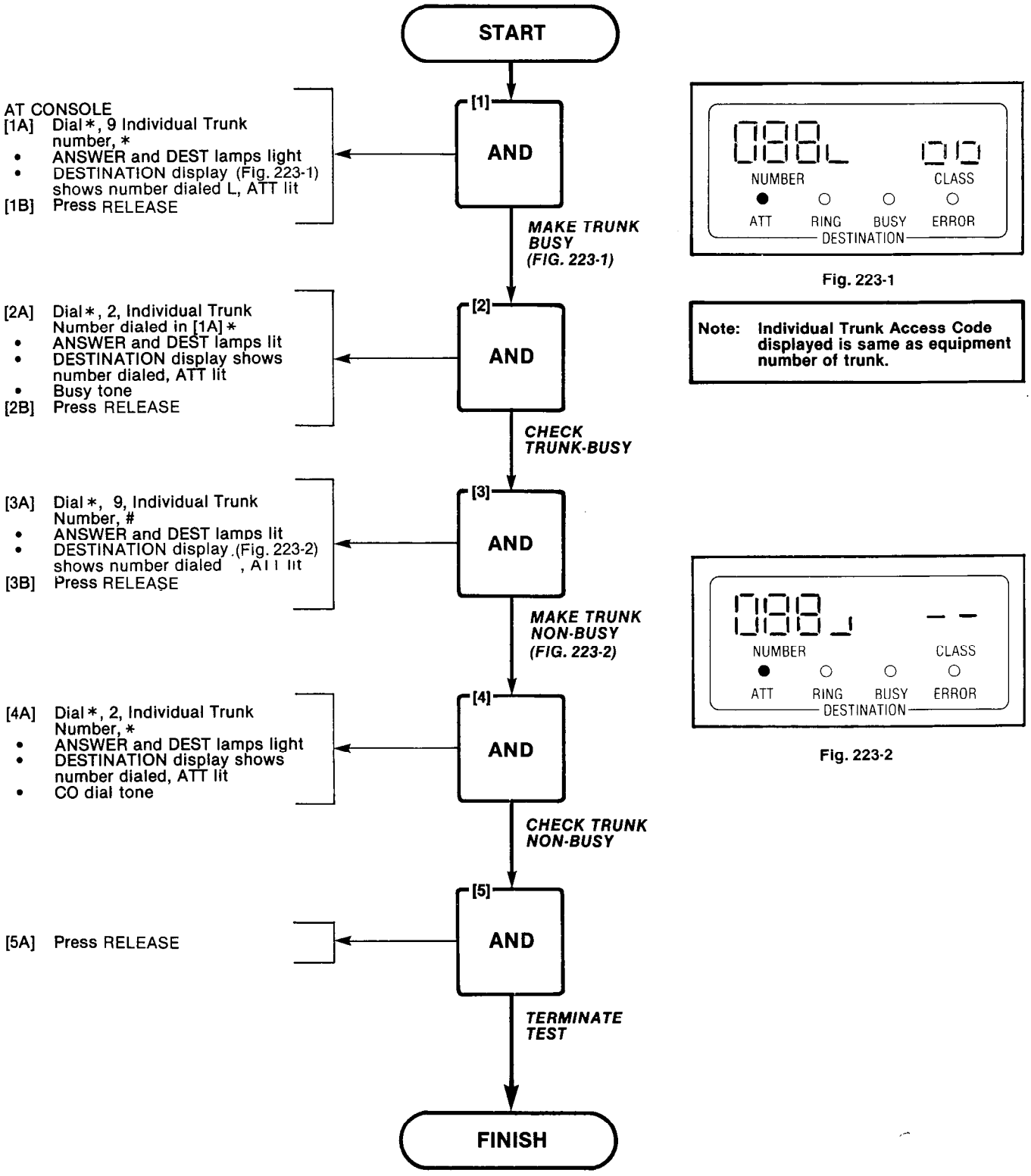

Fig. 223-1

Note: Individual Trunk Access Code displayed is same as equipment number of trunk.

Fig. 223-2

TRUNK GROUP ATTENDANT ACCESS
MAP215-224
Issue 2, July 80
Sheet 1 of 1

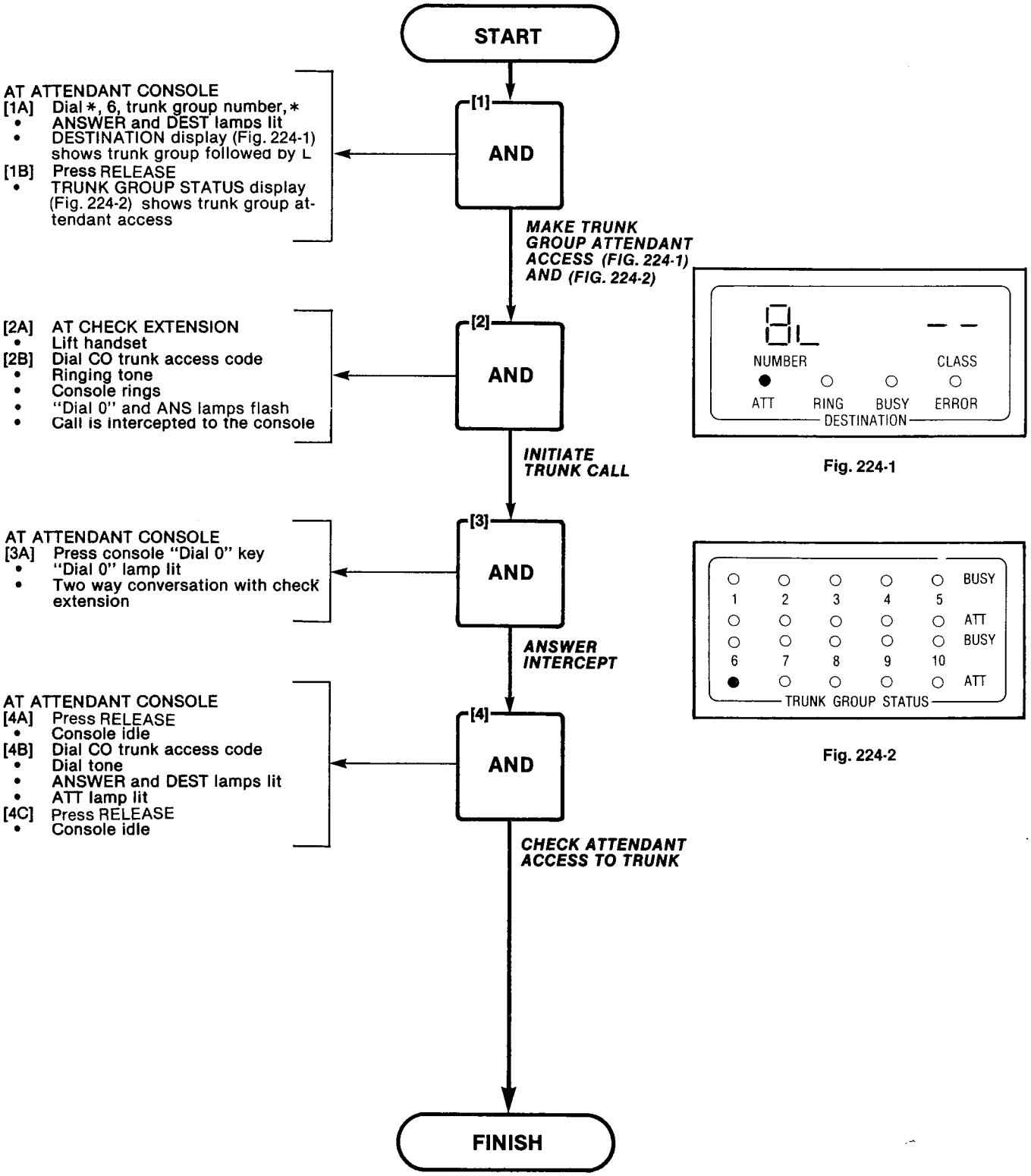

Fig. 224-1

Fig. 224-2

TRUNK GROUP DIAL ACCESS
MAP215-225
Issue 2, July 80
Sheet 1 of 5

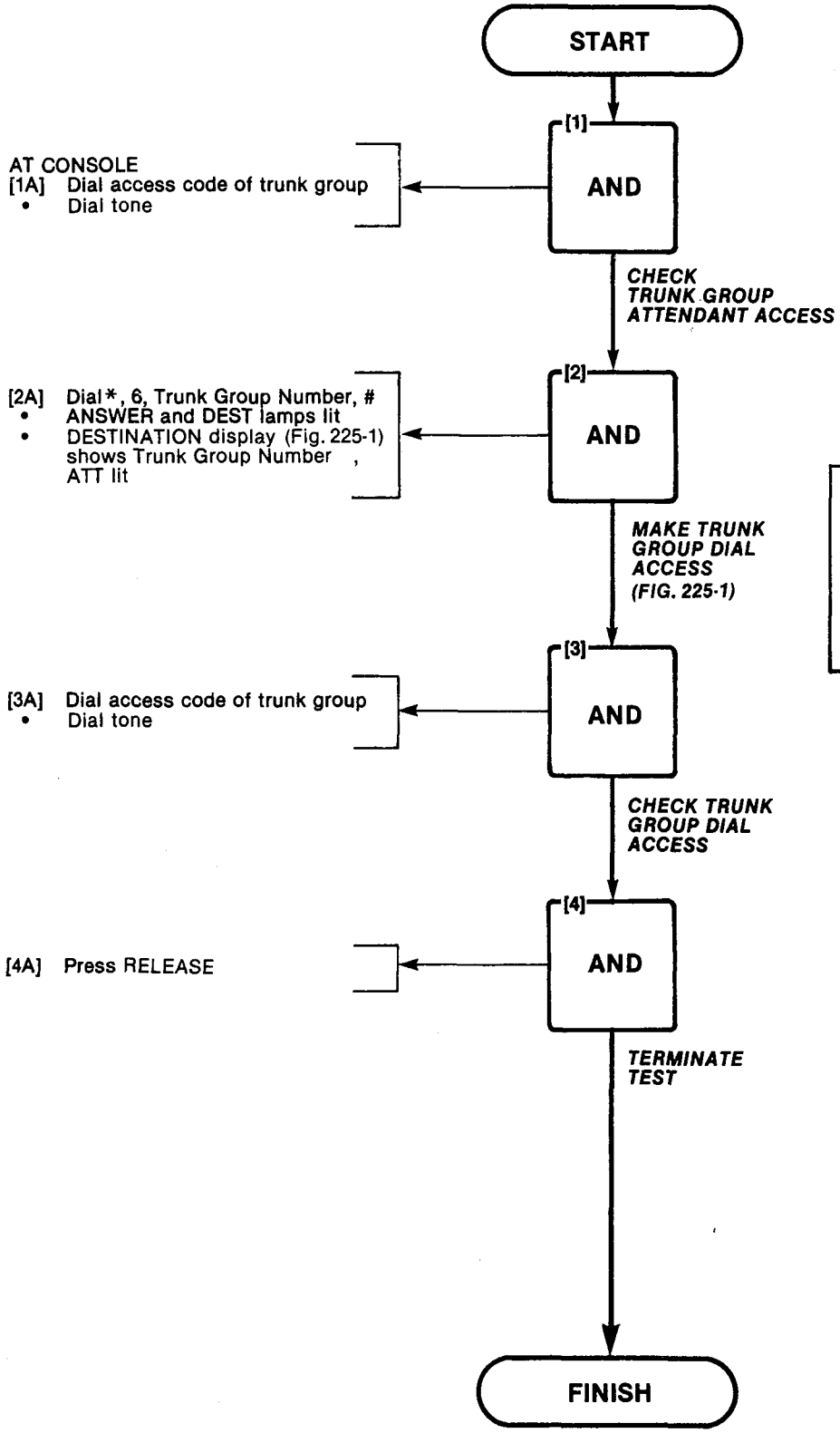

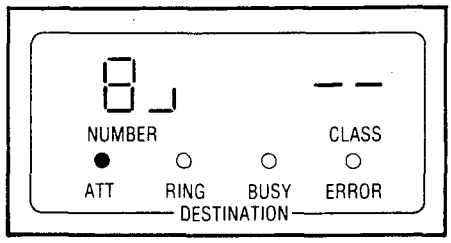

Fig. 225-1

TEST TERMINATION
MAP215-226
Issue 2, July 80
Sheet 1 of 5

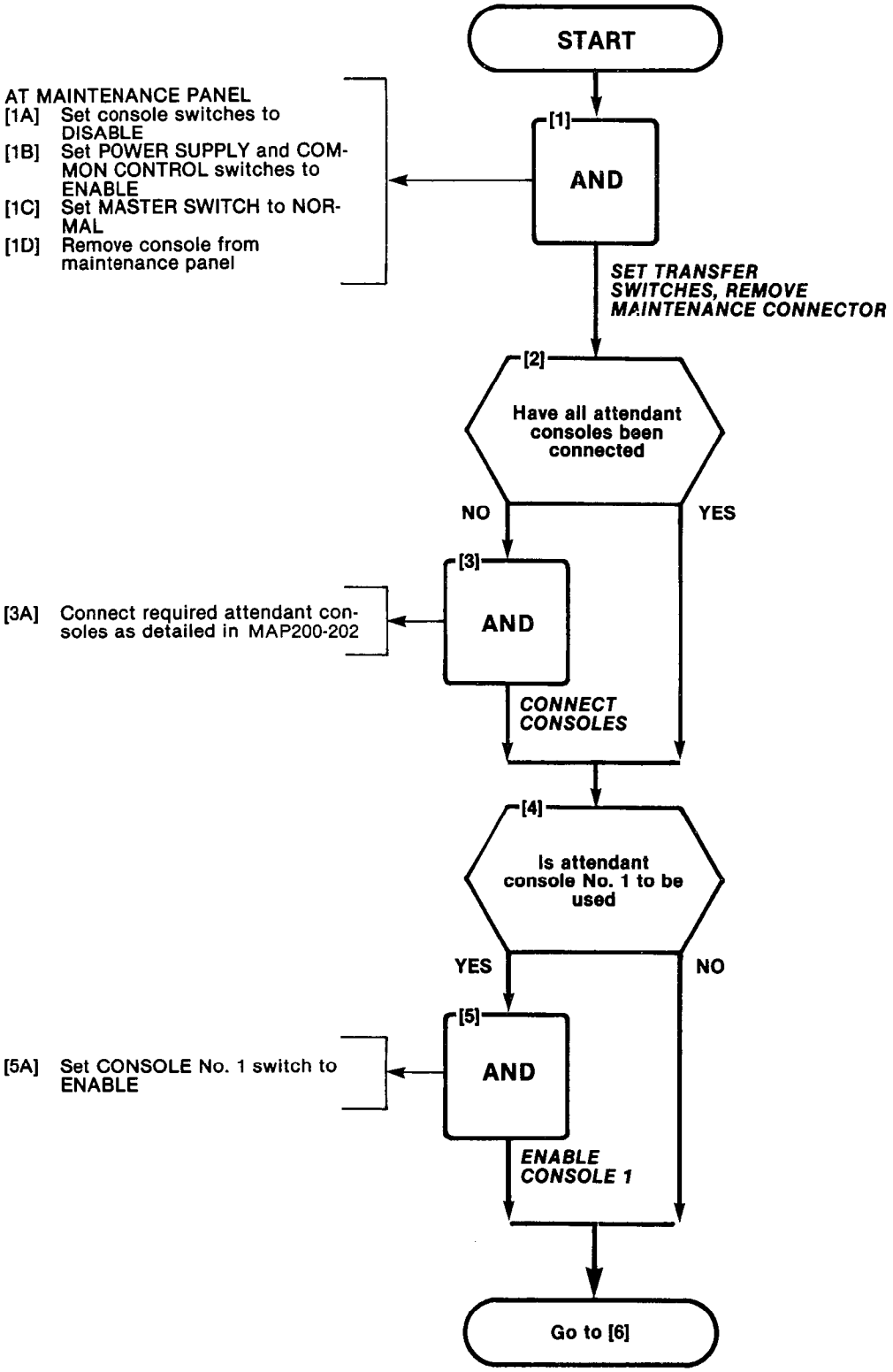

TEST TERMINATION
MAP215-226
Issue 2, July 80
Sheet 2 of 5

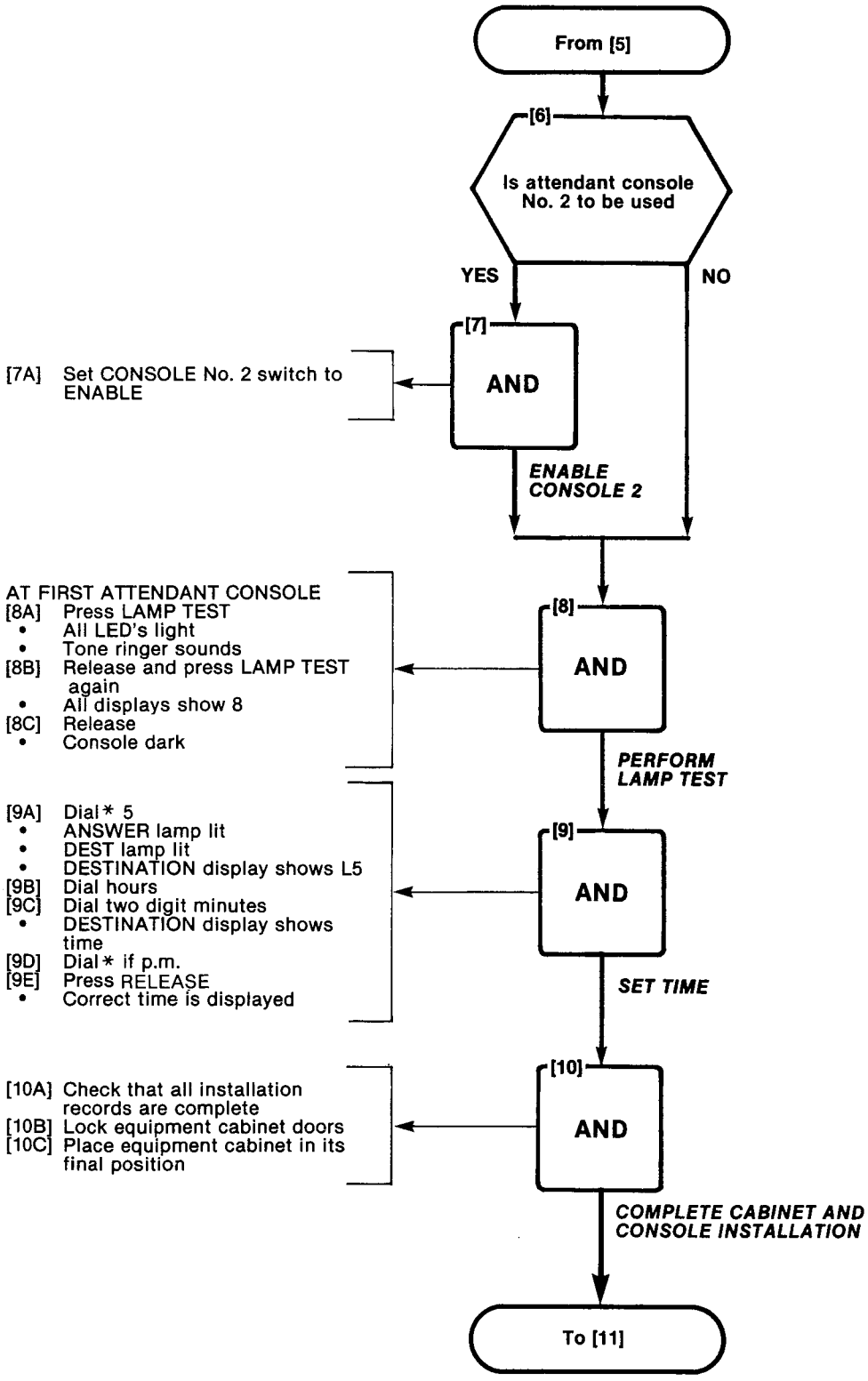

TEST TERMINATION
MAP215-226
Issue 2, July 80
Sheet 3 of 5

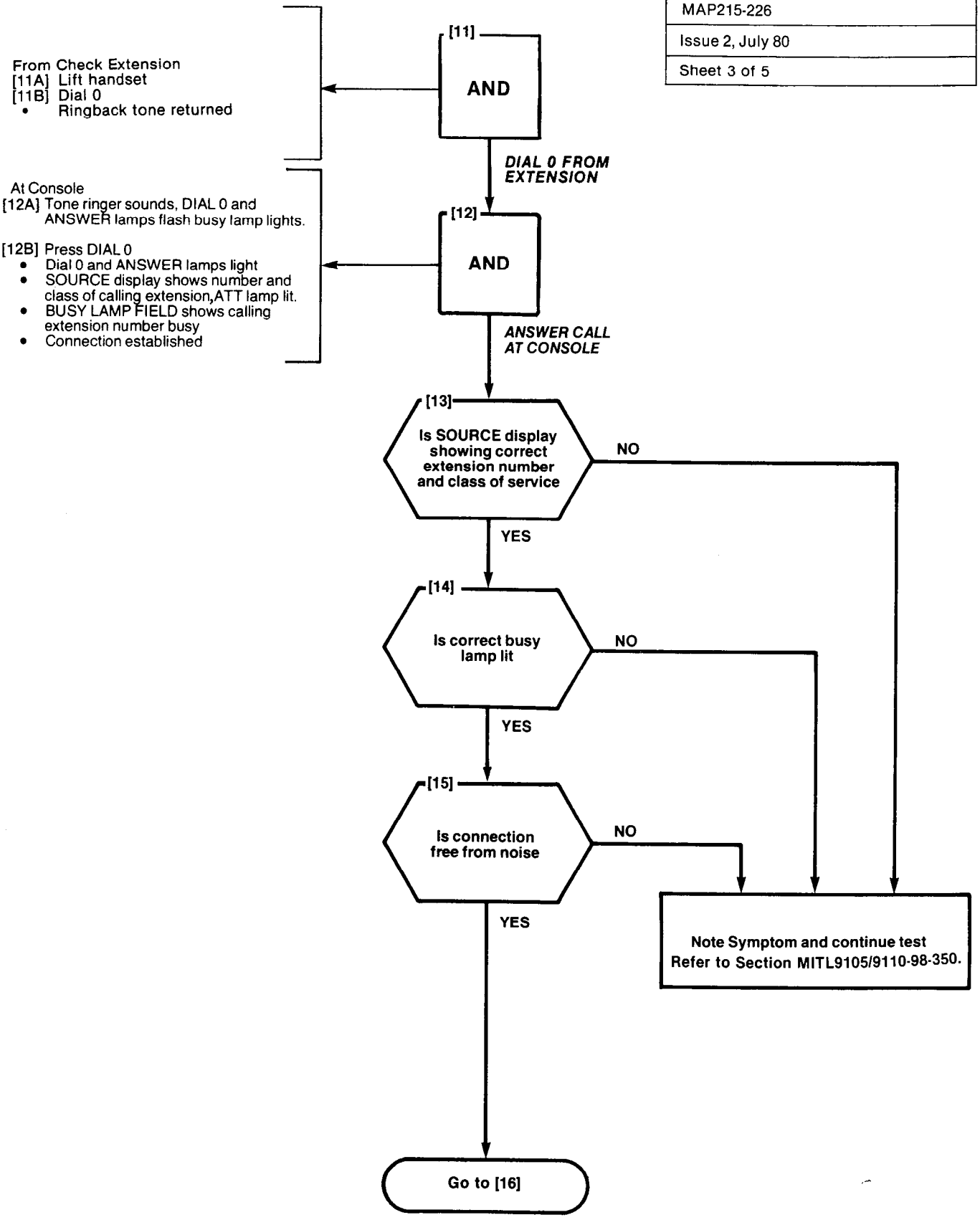

TEST TERMINATION
MAP215-226
Issue 2, July 80
Sheet 4 of 5

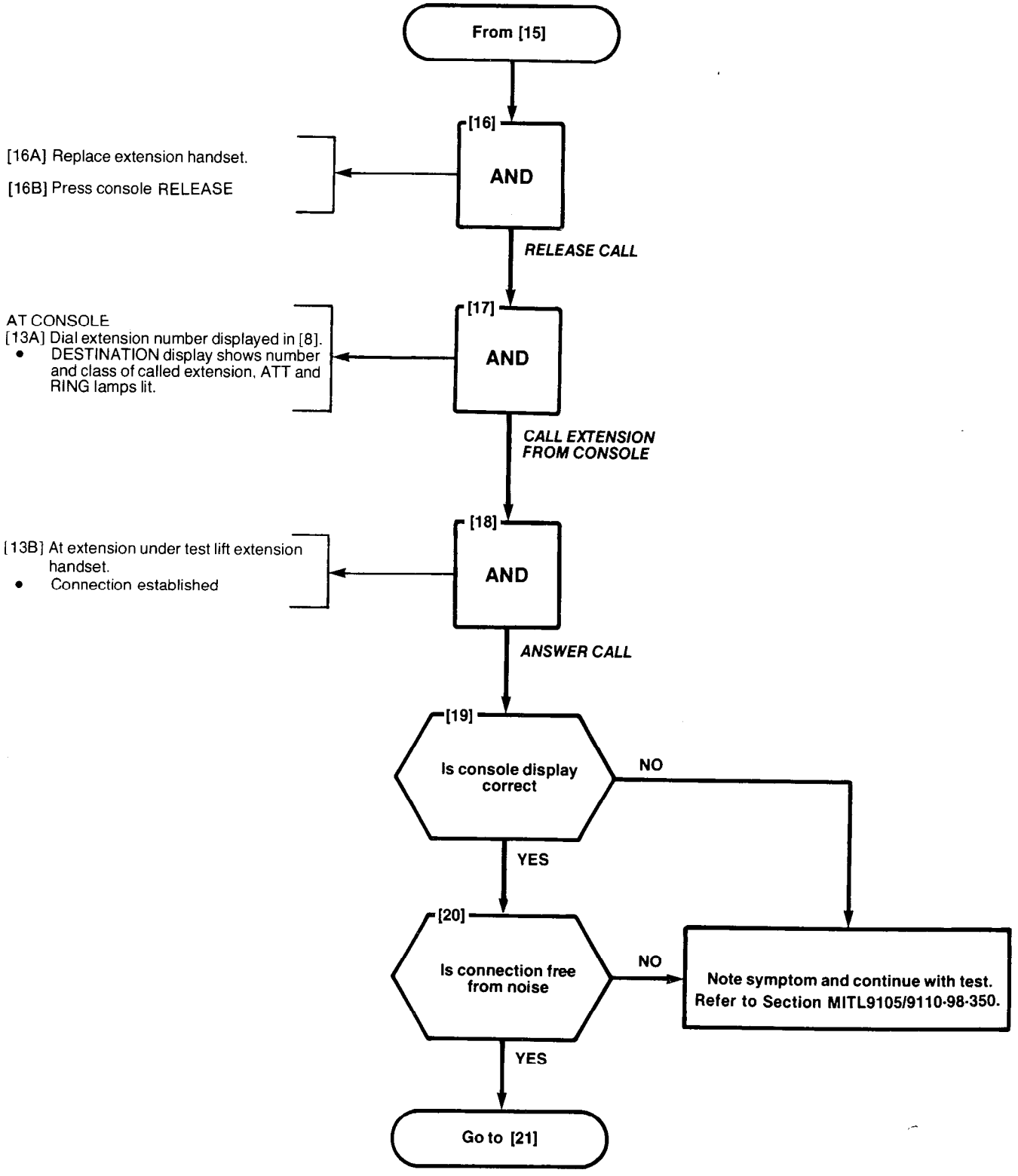

TEST TERMINATION
MAP215-226
Issue 2, July 80
Sheet 5 of 5

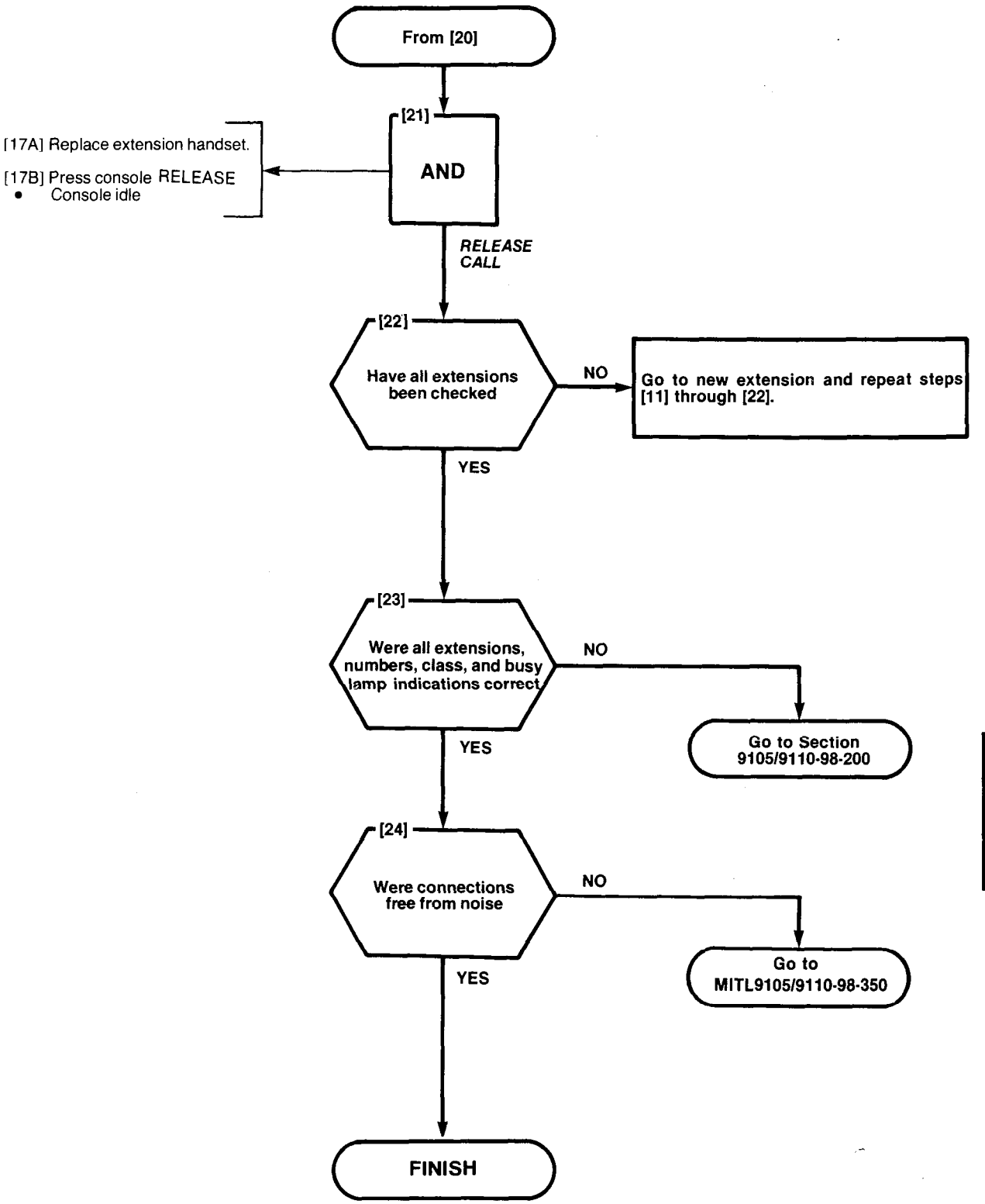

APPENDIX 3

GENERIC 203 SYSTEM TESTS

General

A3.1 The SX-100 or SX-200 programmed with Generic 203 is tested in the order shown in the following Tables, using the MAPs shown which appear in Appendix 3.

TABLE A3-1 EXTENSION OPTIONS

Order	Option	MAP No.
1	Set Up Test Equipment	MAP215-201
2	Test Extension Options	MAP215-200
3	Broker's Call	MAP215-204
4	Call Forwarding - Busy	MAP215-205
5	Call Forwarding - Don't Answer	MAP215-206
6	Call Forwarding - Follow Me	MAP215-207
7	Call Park	MAP215-208
8	Call Pick-Up	MAP215-209
9	Camp-On	MAP215-210
10	Consultation Hold/Transfer/Add-On	MAP215-212
11	Automatic Callback - Don't Answer	MAP215-213
12	Automatic Callback - Busy	MAP215-214
13	Meet Me Conference	MAP215-215
14	Executive Busy Override	MAP215-216
15	Do Not Disturb	MAP215-301
16	Call Block	MAP215-302
17	Call Hold	MAP215-303
18	Single Digit Dialing	MAP215-304
19	Transfer Into Busy	MAP215-305
20	Common Alerting Devices	MAP215-306

TABLE A3-2 CONSOLE OPTIONS

OPTION	MAP NO.	ORDER	
		NON-H/M	H/M
Test Console Features	MAP215-350	1	
Test Console Features	MAP215-300		1
Answer CO Trunk Call	MAP215-351	2	2
Answer DID Trunk Call	MAP215-352	3	
Attendant Do Not Disturb	MAP215-353	4	3
Message Waiting	MAP215-354	5	4
Call Forwarding - Busy	MAP215-355	6	5
Call Forwarding - Don't Answer	MAP215-356	7	6
Call Forwarding - Follow Me	MAP215-357	8	7
Attendant Controlled Conference	MAP215-358	9	8
Attendant Station Busy-Out	MAP215-359	10	9
Attendant Do Not Disturb	MAP215-301		10
Message Waiting	MAP215-302		11
Message Registration	MAP215-303		12
Controlled Outgoing Restriction	MAP215-304		13
Room Status	MAP215-305		14
Automatic Callback	MAP215-318	11	15
Extending Internal Calls	MAP215-319	12	16
Answering a Recall	MAP215-320	13	17
Override	MAP215-321	14	18
Flexible Night Service	MAP215-322	15	19
Trunk Busy Operation	MAP215-323	16	20
Trunk Group Attendant Access	MAP215-324	17	21
Trunk Group Dial Access	MAP215-325	18	22
Test Termination	MAP215-326	19	23

TEST EXTENSION OPTIONS
MAP215-300
Issue 1, January 80
Sheet 1 of 1

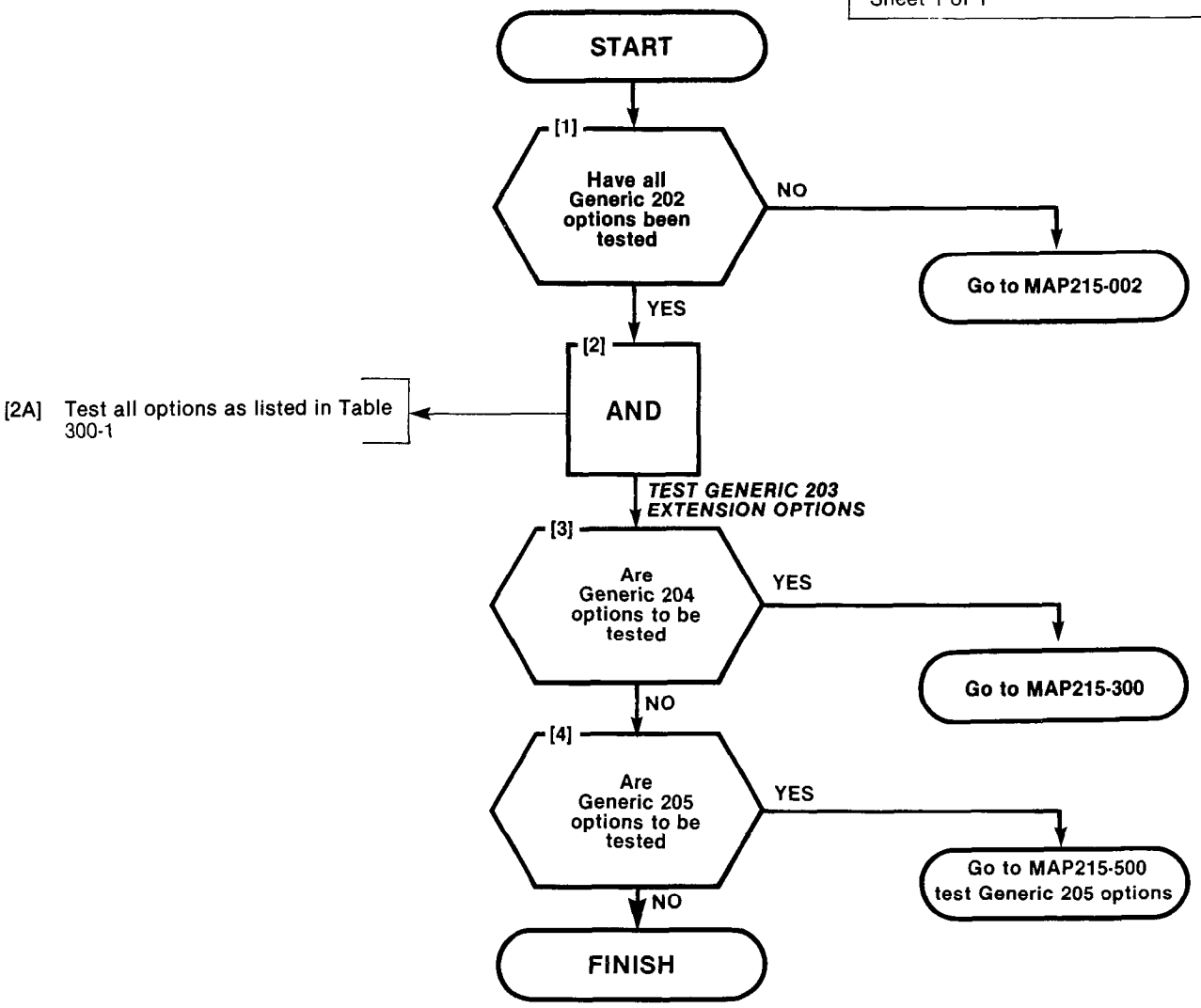

TABLE 300-1

Order	Option Name	MAP No.
1	Broker's Call	215-204
2	Call Forwarding - Busy	215-205
3	Call Forwarding - Don't Answer	215-206
4	Call Forwarding - Follow Me	215-207
5	Call Park	215-208
6	Call Pick-up	215-209
7	Camp-On	215-210
8	Consultation Hold/Transfer/Add-On	215-211
9	Automatic Callback - Don't Answer	215-212
10	Automatic Callback - Busy	215-213
11	Meet-Me Conference	215-214
12	Executive Busy Override	215-215
13	Do Not Disturb	215-301
14	Call Block	215-302
15	Call Hold	215-303
16	Single Digit Dialing	215-304
17	Transfer into Busy	215-305
18	Common Alerting Devices	215-306

DO NOT DISTURB
MAP215-301
Issue 2, July 80
Sheet 1 of 1

START

[1] AND

AT CHECK EXTENSION 1
[1A] Lift handset
• Dial tone
[1B] Dial Do Not Disturb access code followed by digit 1
[1C] Replace handset

ENABLE FEATURE FROM EXTENSION

[2] AND

AT CONSOLE
• Check extension 1 lamp in Busy Lamp Field lit

AT CHECK EXTENSION 2
[2A] Lift handset
• Dial tone
[2B] Dial number of Check Extension 1
• Ringing tone (NOTE 1)
• Console rings

AT CONSOLE
• ANSWER and DIAL 0 lamps flash

[2C] Press ANSWER
• SOURCE display shows number of Check Extension 2 and class
• ATT and INT lamps lit (Fig. 101-1)
[2D] Two way conversation, Check Extension 2 and console
[2E] Press console RELEASE
[2F] Replace handset at Check Extension 2

Note 1: **Ring is given in sub-step [2B] if System Option 174 is selected. Otherwise reorder tone is given and remainder of [2] sub-steps are omitted.**

VERIFY ENABLED FEATURE

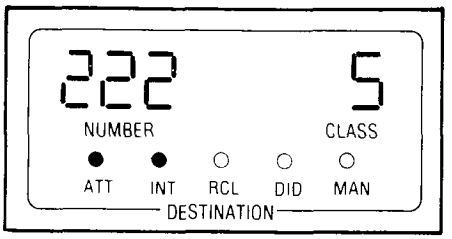

Fig. 301-1

[3] AND

AT CHECK EXTENSION 1
[3A] Lift handset
• Dial tone
[3B] Dial Do Not Disturb access code followed by digit 2
[3C] Replace handset

AT CONSOLE
• Check Extension 1 lamp in Busy Lamp Field goes off

CANCEL DO NOT DISTURB FEATURE

[4] AND

AT CHECK EXTENSION 2
[4A] Lift handset
• Dial tone
[4B] Dial number of Check Extension 1
• Ringing tone

AT CHECK EXTENSION 1
• Bell rings
[4C] Lift handset
• Two way conversation, Check Extension 1 and 2
[4D] Replace Check Extension handsets

AT CONSOLE
[4E] Press DO NOT DSTB key
• Check Extension 1 lamp in Busy Lamp Field is not lit
[4F] Release DO NOT DSTB key
• Console idle

VERIFY CANCELLED FEATURE

FINISH

CALL BLOCK
MAP215-302
Issue 2, July 80
Sheet 1 of 2

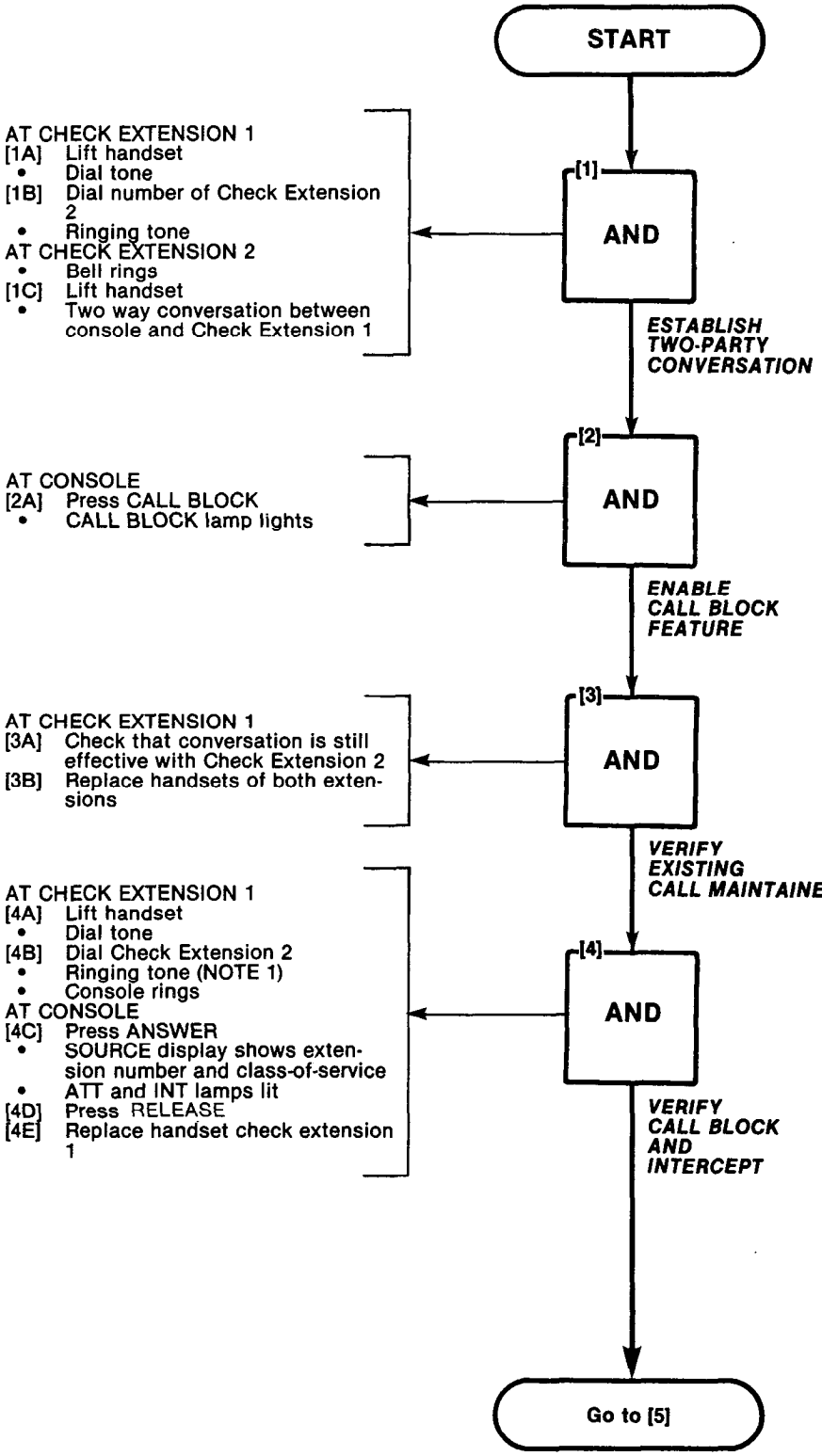

Note 1: **Procedure applies if System Option 116 is in effect. If System Option 116 is not enabled then reorder tone is obtained at Step [4B], and Steps [4C] and [4D] do not apply.**

CALL BLOCK
MAP215-302
Issue 2, July 80
Sheet 2 of 2

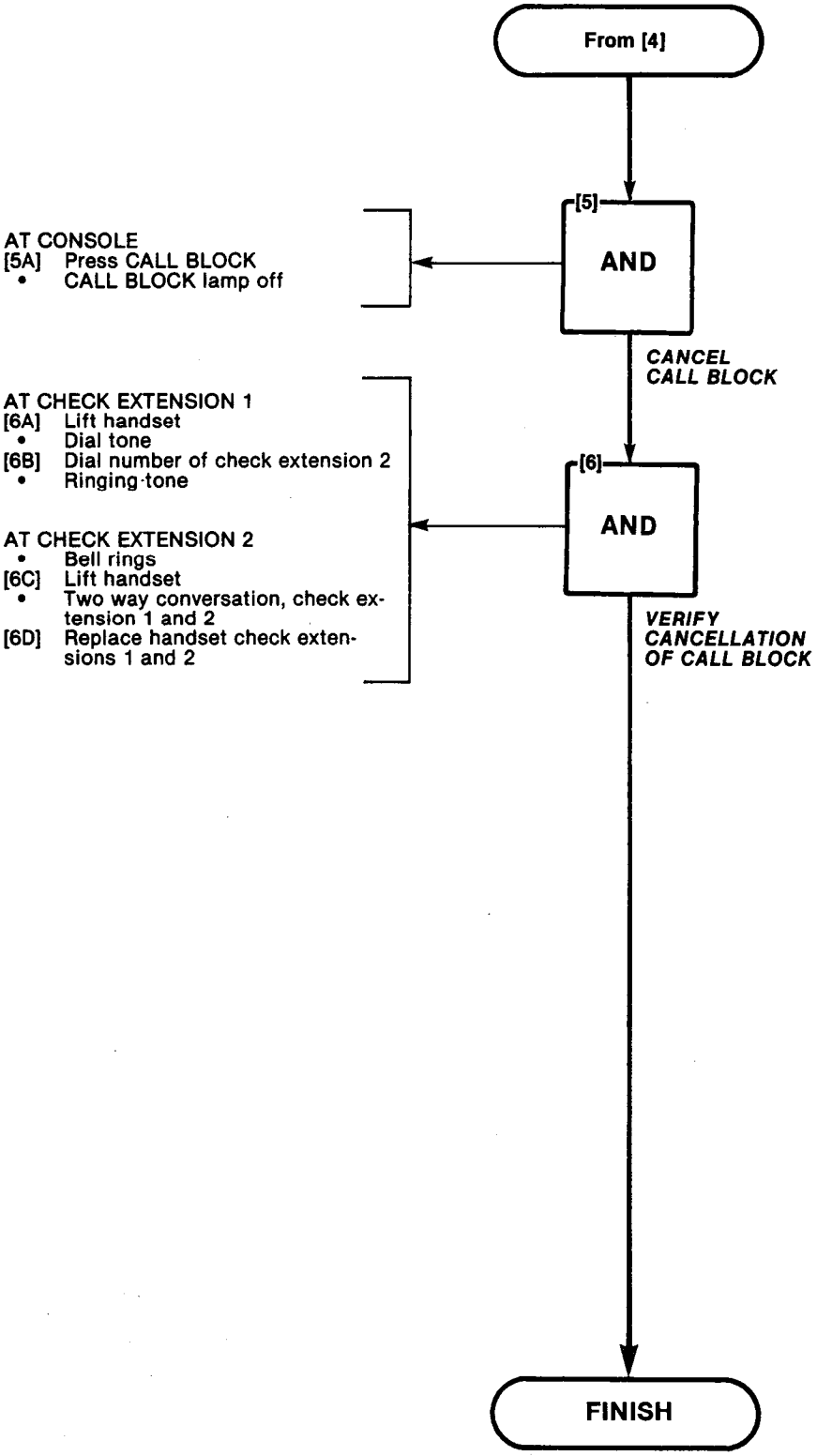

CALL HOLD
MAP215-303
Issue 2, July 80
Sheet 1 of 3

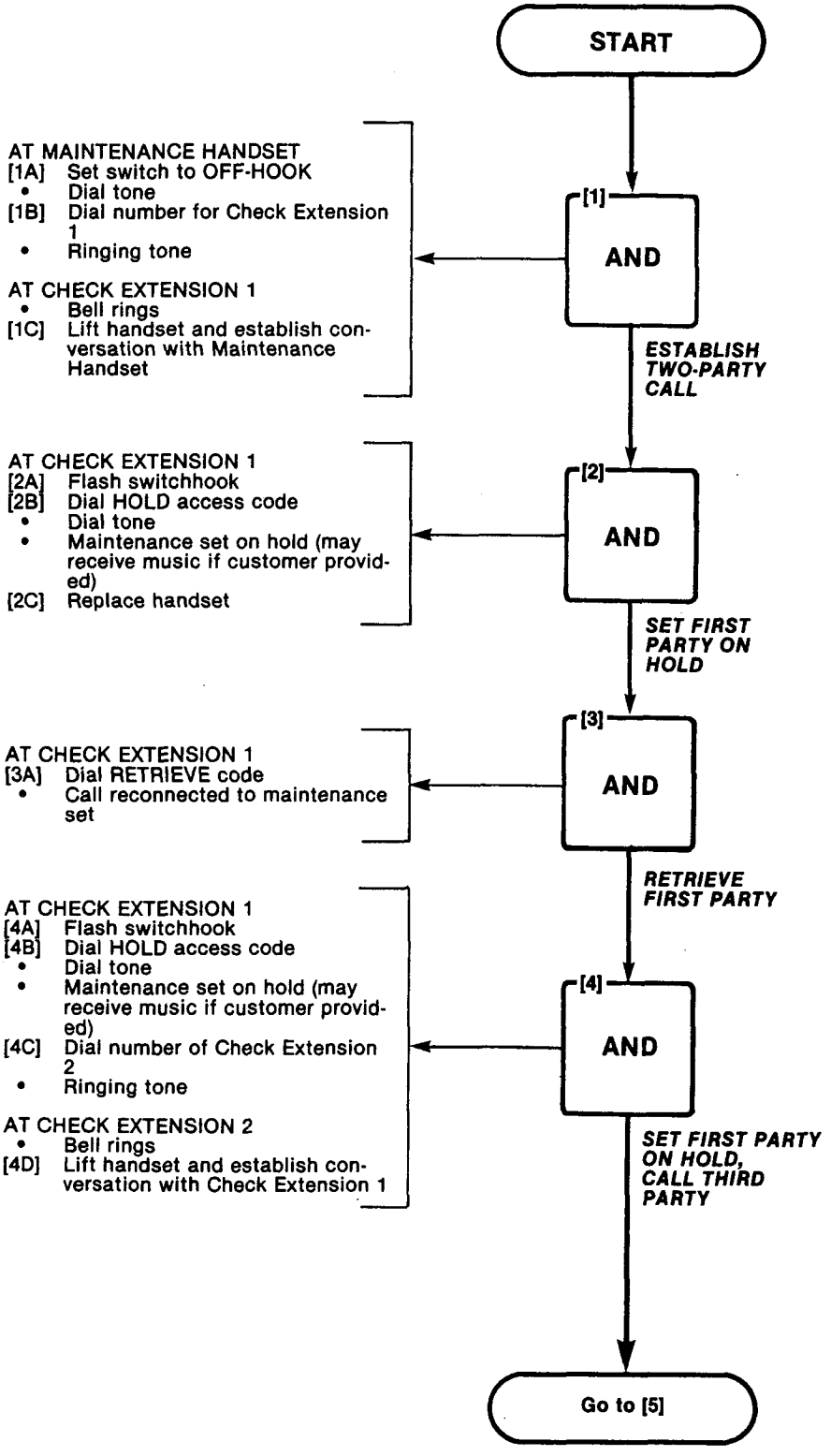

CALL HOLD
MAP215-303
Issue 2, July 80
Sheet 2 of 3

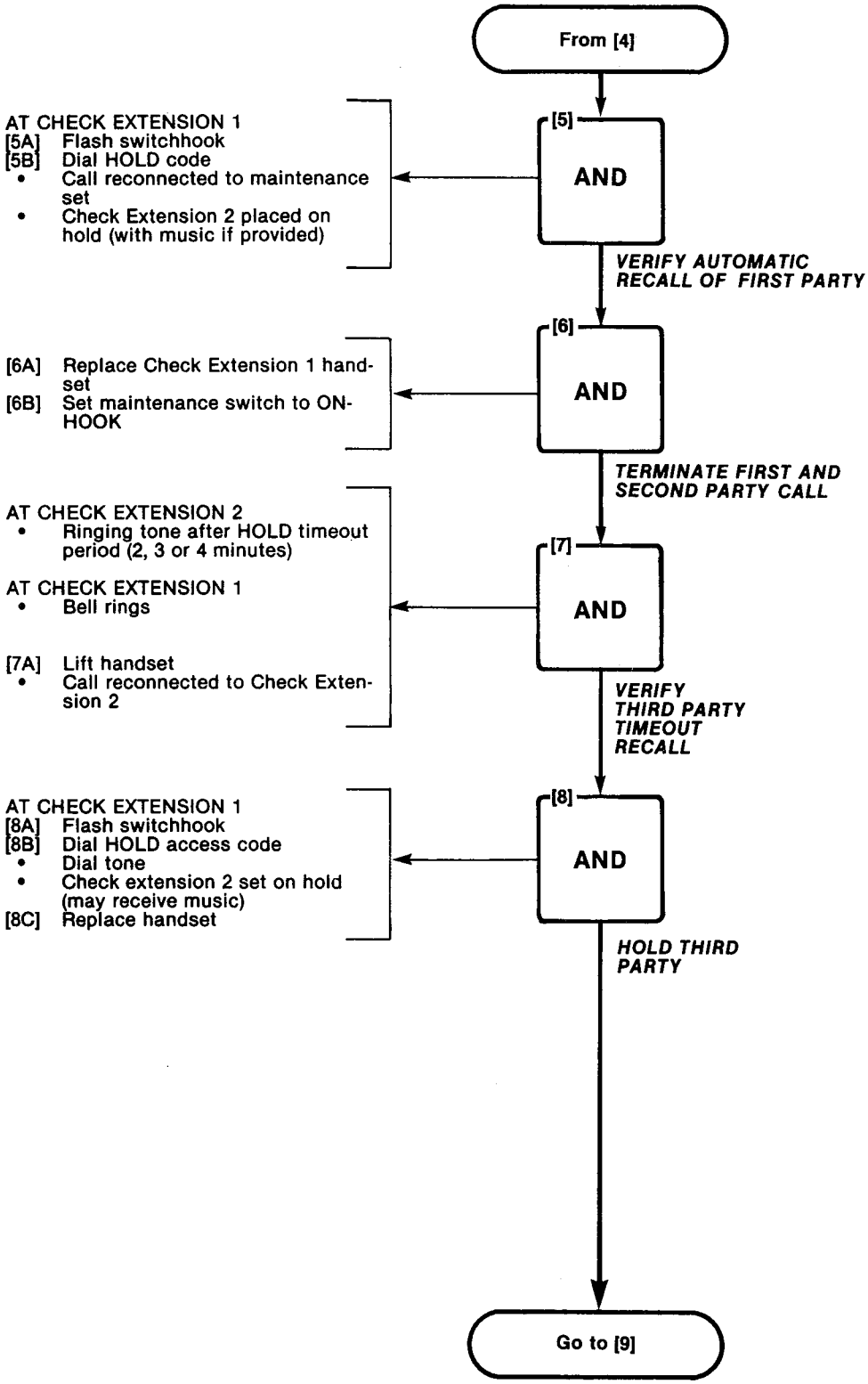

CALL HOLD
MAP215-303
Issue 2, July 80
Sheet 3 of 3

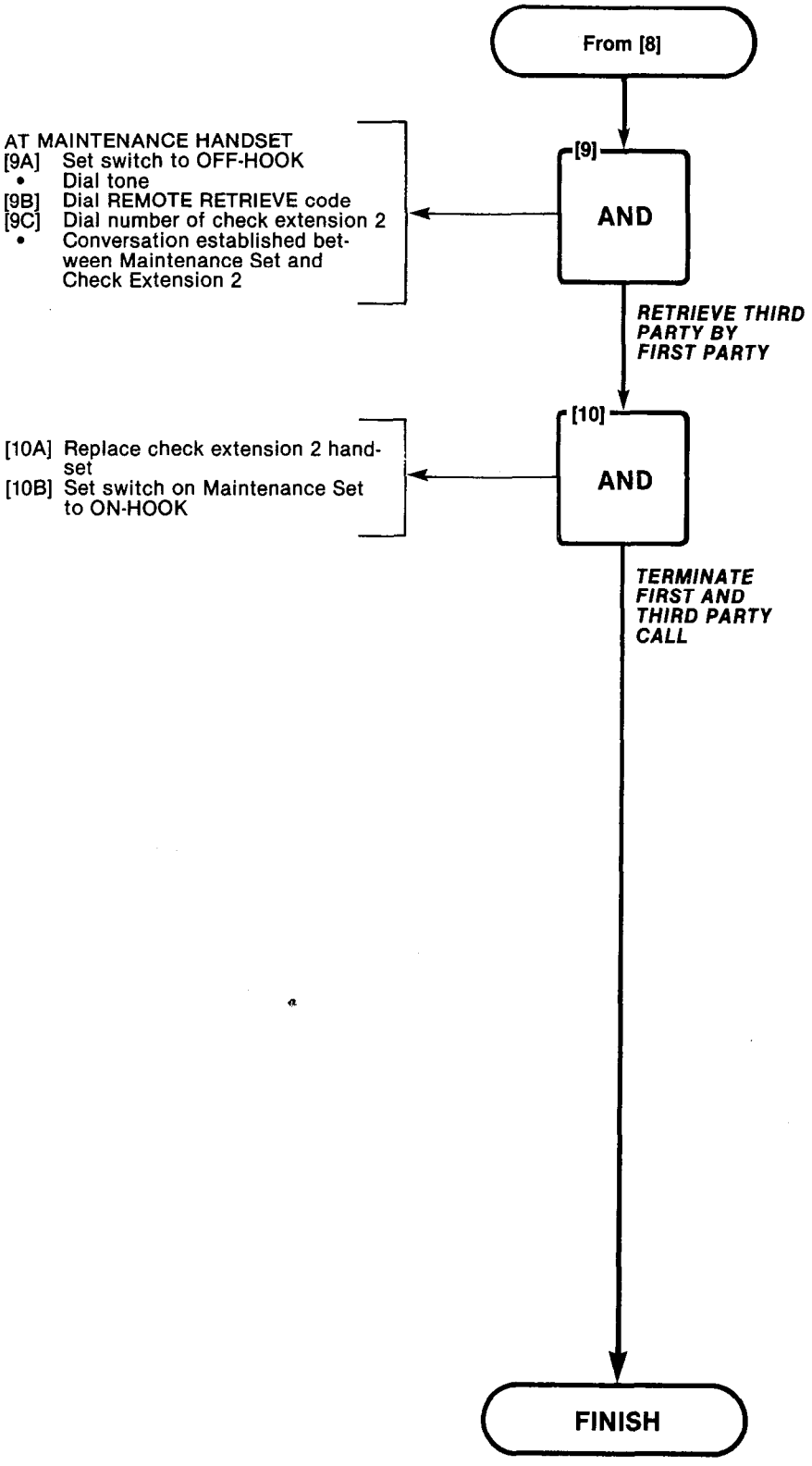

SINGLE DIGIT DIALING
MAP215-304
Issue 2, July 80
Sheet 1 of 2

Note: **To conduct the following system tests, check extension 1 must be programmed as a "SERVICE" extension with code "n" (a single digit code). Alternatively check extension 1 may be temporarily connected in parallel on the cross-connect field to an extension which has a "SERVICE" code, for the test duration.**

START

[1] Has extension a DTMF or Rotary Dial type

ROTARY DIAL → Go to [3]

DTMF

AT CHECK EXTENSION 2
[2A] Lift handset
- Dial tone

[2B] Dial "n" (see above note) followed immediately by "#"
- Ringing tone
- Check extension 1 bell rings

[2C] Lift handset at check extension 1
- Two way conversation, check extensions 1 and 2

[2D] Replace handsets on check extensions 1 and 2

[2] AND

DIAL SERVICE NUMBER (n#)

Note: **Step [2] is for DTMF telephones and gives immediate ring. Step [3] is for DTMF or rotary dial telephones and tests programmed timeout interval (3, 4 or 5s).**

AT CHECK EXTENSION 2
[3A] Lift handset
- Dial tone

[3B] Dial "n" (see above note)
- Ringing tone
- Check extension 1 bell rings

[3C] Lift handset at check extension 1
- Two way conversation, check extensions 1 and 2

[3D] Replace handsets on check extensions 1 and 2

[3] AND

DIAL SERVICE NUMBER (n - pause)

AT CONSOLE
[4A] Dial keypad digit "n"
- DESTINATION display shows digit "n" (in Fig. 304-1 "n" is "5")
- No ringing tone heard
- ATT lamp lit

[4B] Wait at least 10 seconds
- No ringing tone heard

[4C] Press RELEASE

[4] AND

CHECK CONSOLE SINGLE DIGIT DIALING

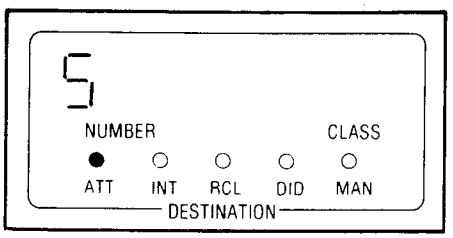

Fig. 304-1

Go to [5]

SINGLE DIGIT DIALING
MAP215-304
Issue 2, July 80
Sheet 2 of 2

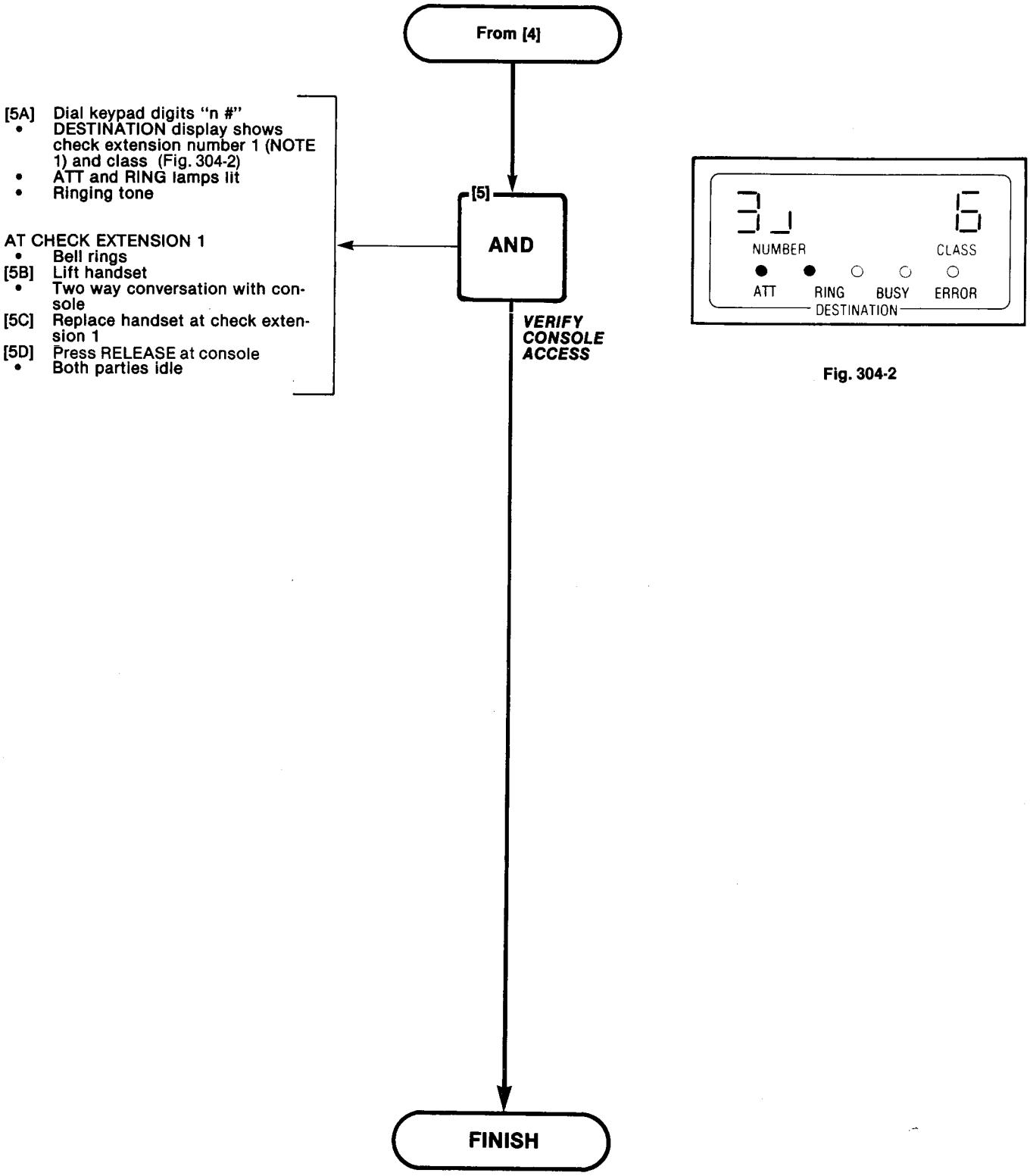

Fig. 304-2

TRANSFER INTO BUSY
MAP215-305
Issue 2, July 80
Sheet 1 of 1

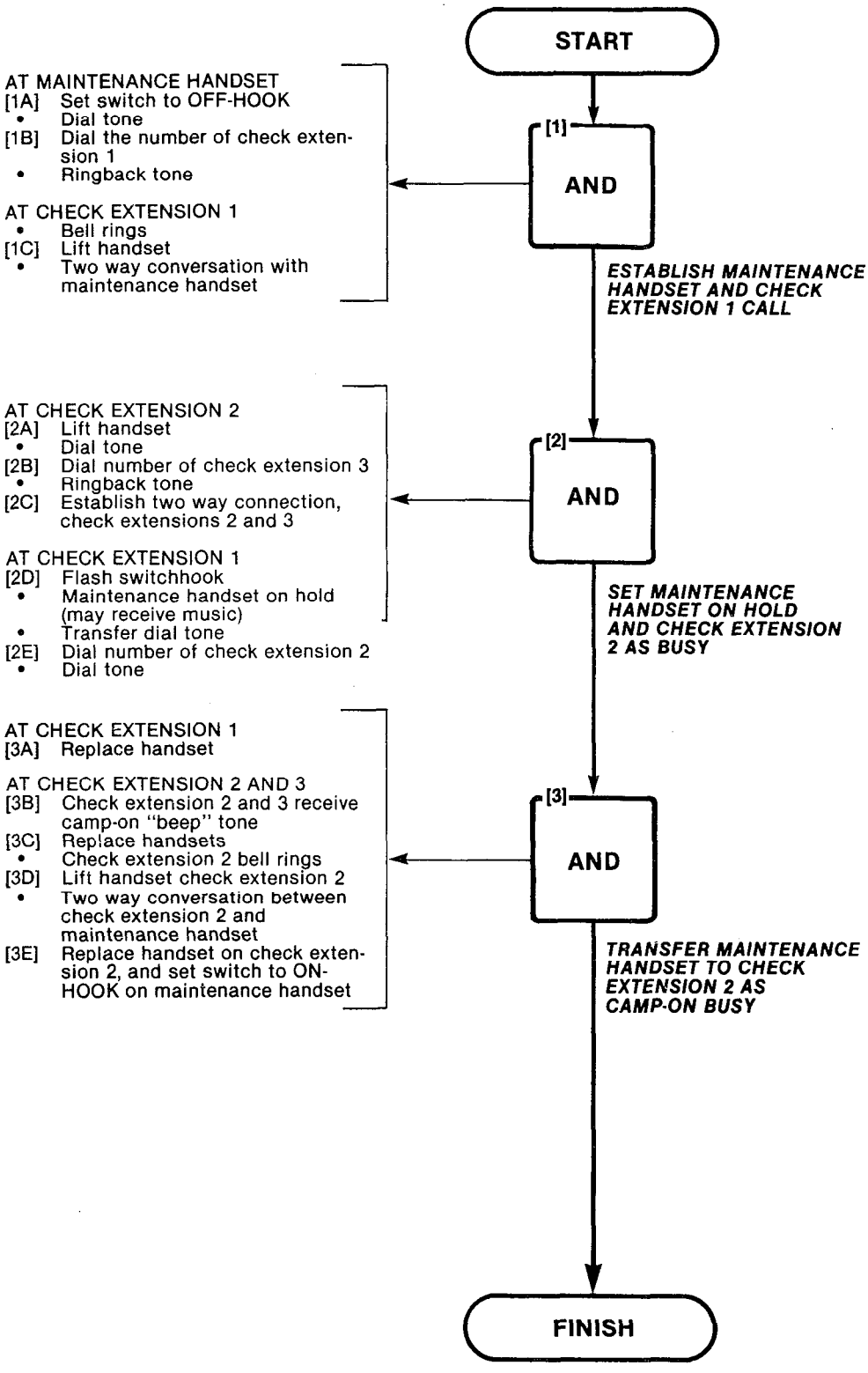

COMMON ALERTING DEVICES
MAP215-306
Issue 2, July 80
Sheet 1 of 1

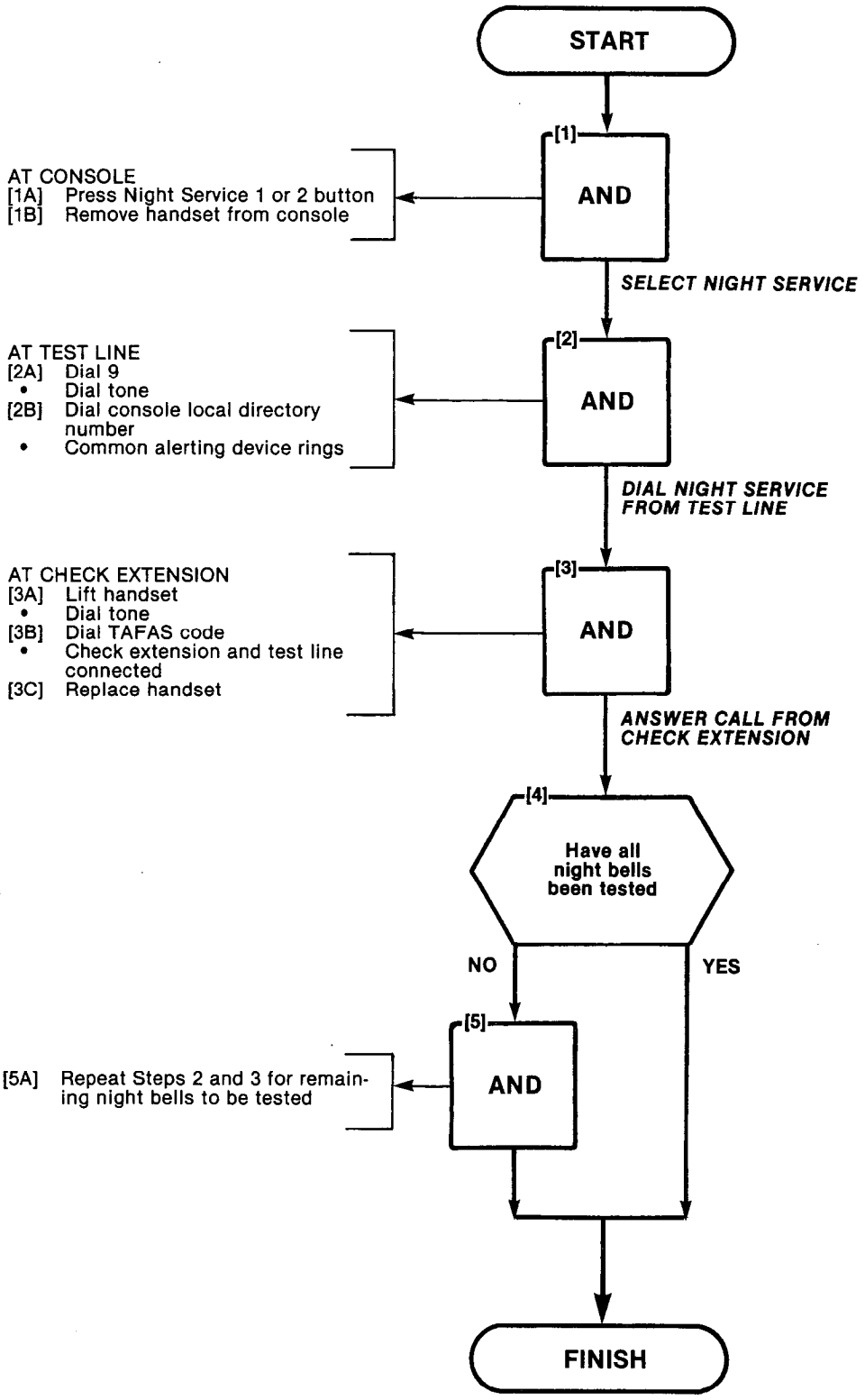

TEST CONSOLE FEATURES
MAP215-350
Issue 2, July 80
Sheet 1 of 2

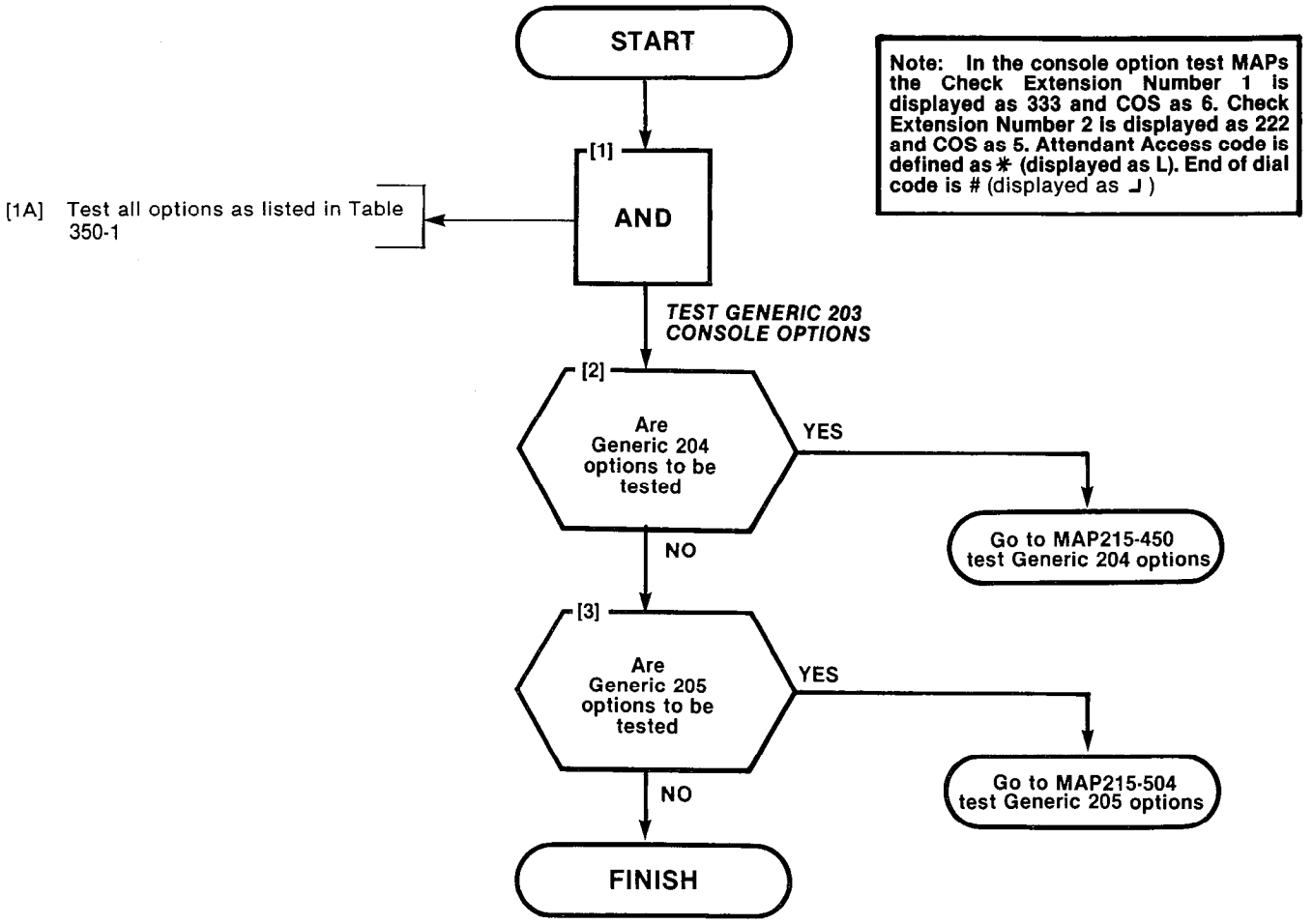

TABLE 350-1

CONSOLE OPTIONS - TEST ORDER

Order	Option Name	MAP No.
1	Answering Incoming CO Call	215-351
2	Answering DID Call	215-352
3	Do Not Disturb	215-353
4	Message Waiting	215-354
5	Call Forward Busy	215-355
6	Call Forward Don't Answer	215-356
7	Call Forward Follow Me	215-357
8	Attendant Controlled Conference	215-258
9	Attendant Station Busy Out	215-259
10	Automatic Callback	215-218
11	Extending Internal Calls	215-219
12	Answering A Recall	215-220
13	Override	215-221
14	Flexible Night Service	215-222
15	Trunk Busy Operation	215-223
16	Trunk Group Attendant Access	215-224
17	Trunk Group Dial Access	215-225
18	Test Termination	215-226

TEST CONSOLE FEATURES (H/M)
MAP215-300
Issue 2, July 80
Sheet 2 of 2

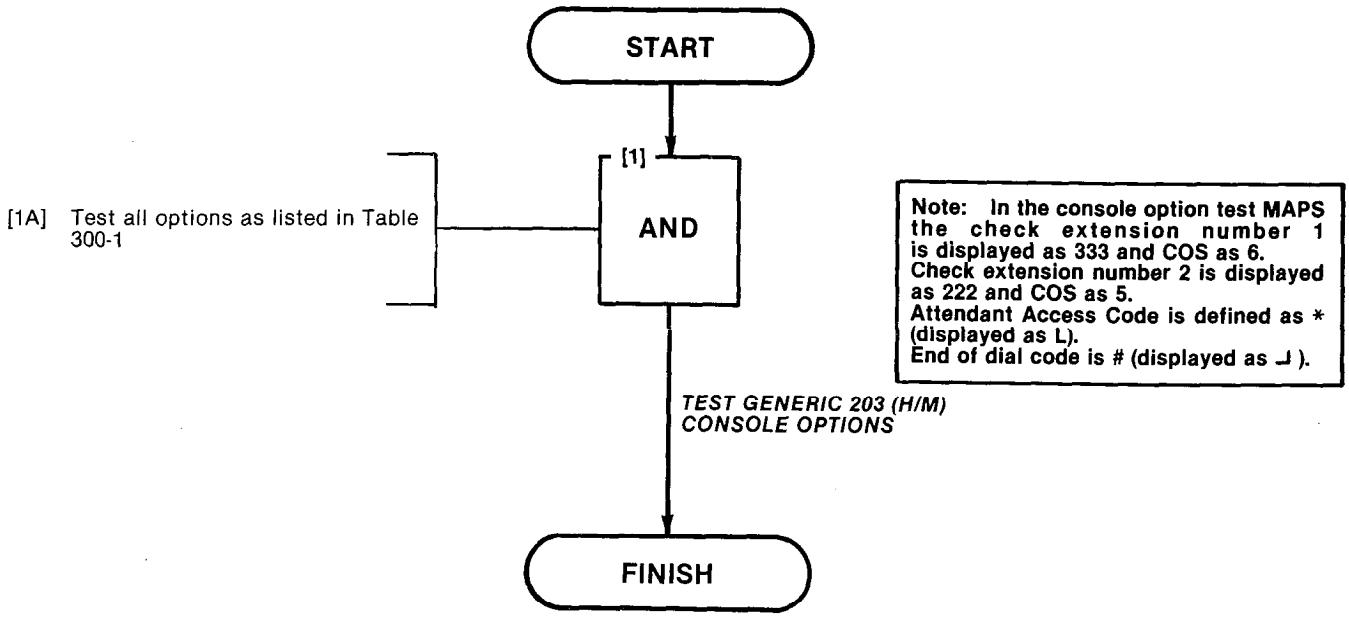

TABLE 300-1
CONSOLE OPTIONS - TEST ORDER

Order	Option	MAP No.
1	Answer CO Trunk Call	215-251
2	Attendant Do Not Disturb	215-253
3	Message Waiting	215-254
4	Call Forwarding Busy	215-255
5	Call Forwarding Don't Answer	215-256
6	Call Forwarding Follow Me	215-257
7	Attendant Controlled Conference	215-258
8	Attendant Station Busy Out	215-259
9	Attendant Do Not Disturb	215-360
10	Message Waiting	215-361
11	Message Registration	215-362
12	Controlled Outgoing Restriction	215-363
13	Room Status	215-364
14	Automatic Callback	215-218
15	Extending Internal Calls	215-219
16	Answering A Recall	215-220
17	Override	215-221
18	Flexible Night Service	215-222
19	Trunk Busy Operation	215-223
20	Trunk Group Attendant Access	215-224
21	Trunk Group Dial Access	215-225
22	Test Termination	215-226

ANSWER INCOMING CO TRUNK CALL
MAP215-351
Issue 2, July 80
Sheet 1 of 4

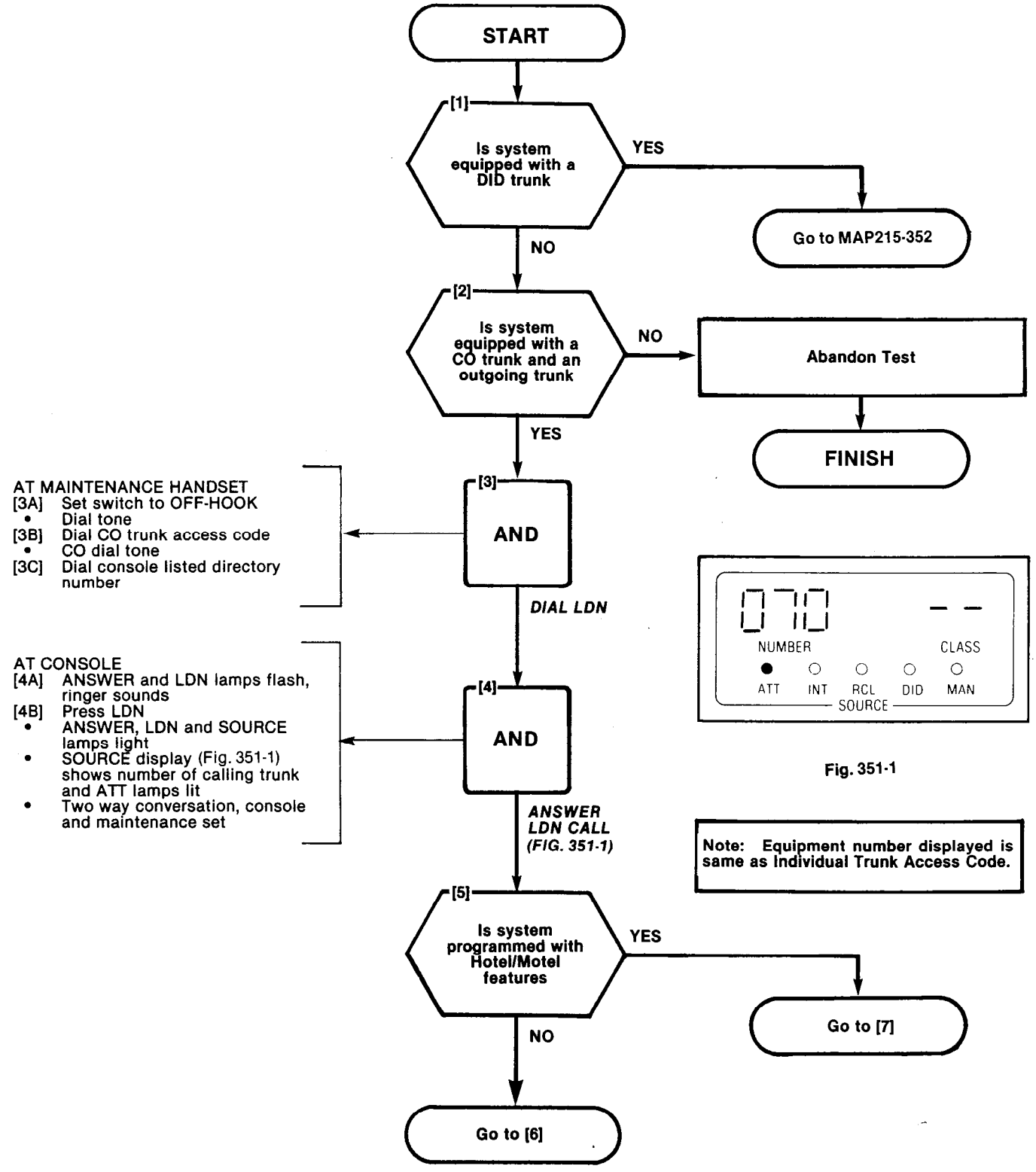

Fig. 351-1

ANSWER INCOMING CO TRUNK CALL
MAP215-351
Issue 2, July 80
Sheet 2 of 4

From [5]

[6] AND

[6A] Press SERIAL
- SERIAL lamp lights

SET UP SERIAL CALL

[7] AND

AT CONSOLE
[7A] Dial number of check extension
- ANSWER, LDN, and DESTINATION lamps lit
- SOURCE display (Fig. 351-2) shows the equipment number of the calling trunk
- DESTINATION display shows the number and COS of the check extension
- ATT and RING lamps lit

EXTEND CALL TO TEST STATION (FIG. 351-2)

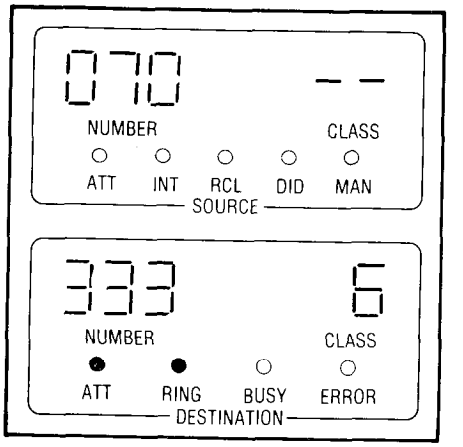

Fig. 351-2

Note: Equipment number displayed is same as Individual Trunk Access Code.

[8] AND

AT CHECK EXTENSION
[8A] Lift check extension handset
- Two way conversation with console

ANSWER CALL

[9] AND

AT CONSOLE
[9A] Press SOURCE
- ANSWER, LDN and SOURCE lamps lit
- SOURCE display (Fig. 351-3) shows the number of the calling trunk ATT lamp lit
- DESTINATION display shows number and COS of check extension
- Two way private call with maintenance set

SPLIT CALL TO SOURCE (FIG. 351-3)

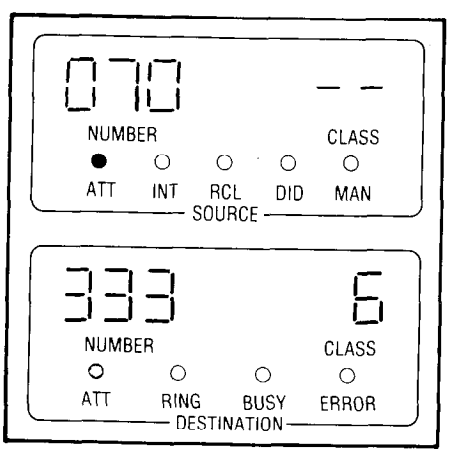

Fig. 351-3

Note: Equipment number displayed is same as Individual Trunk Access Code.

Go to [10]

ANSWER INCOMING CO TRUNK CALL
MAP215-351
Issue 2, July 80
Sheet 3 of 4

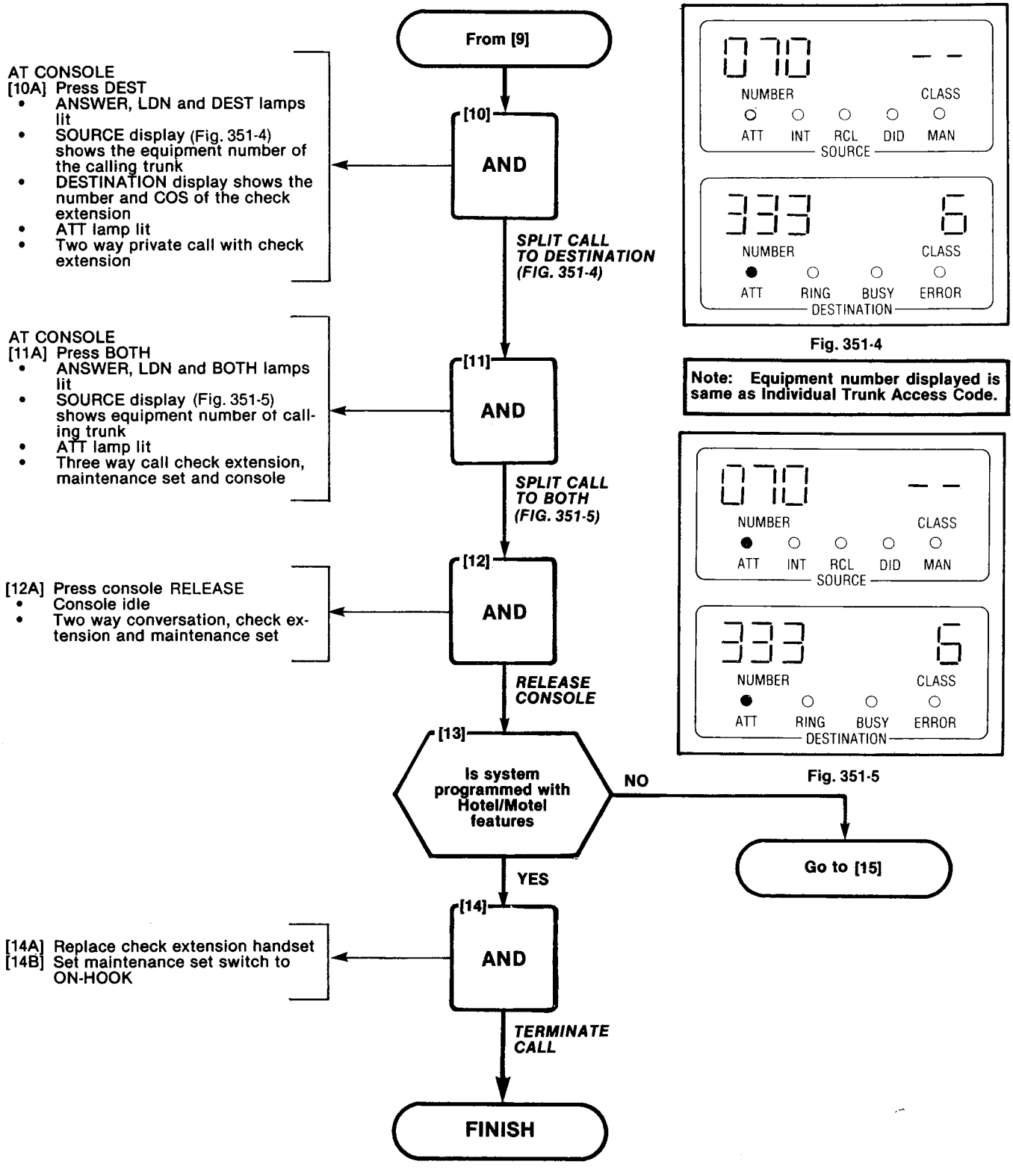

Fig. 351-4

Note: Equipment number displayed is same as Individual Trunk Access Code.

Fig. 351-5

ANSWER INCOMING CO TRUNK CALL
MAP215-351
Issue 2, July 80
Sheet 4 of 4

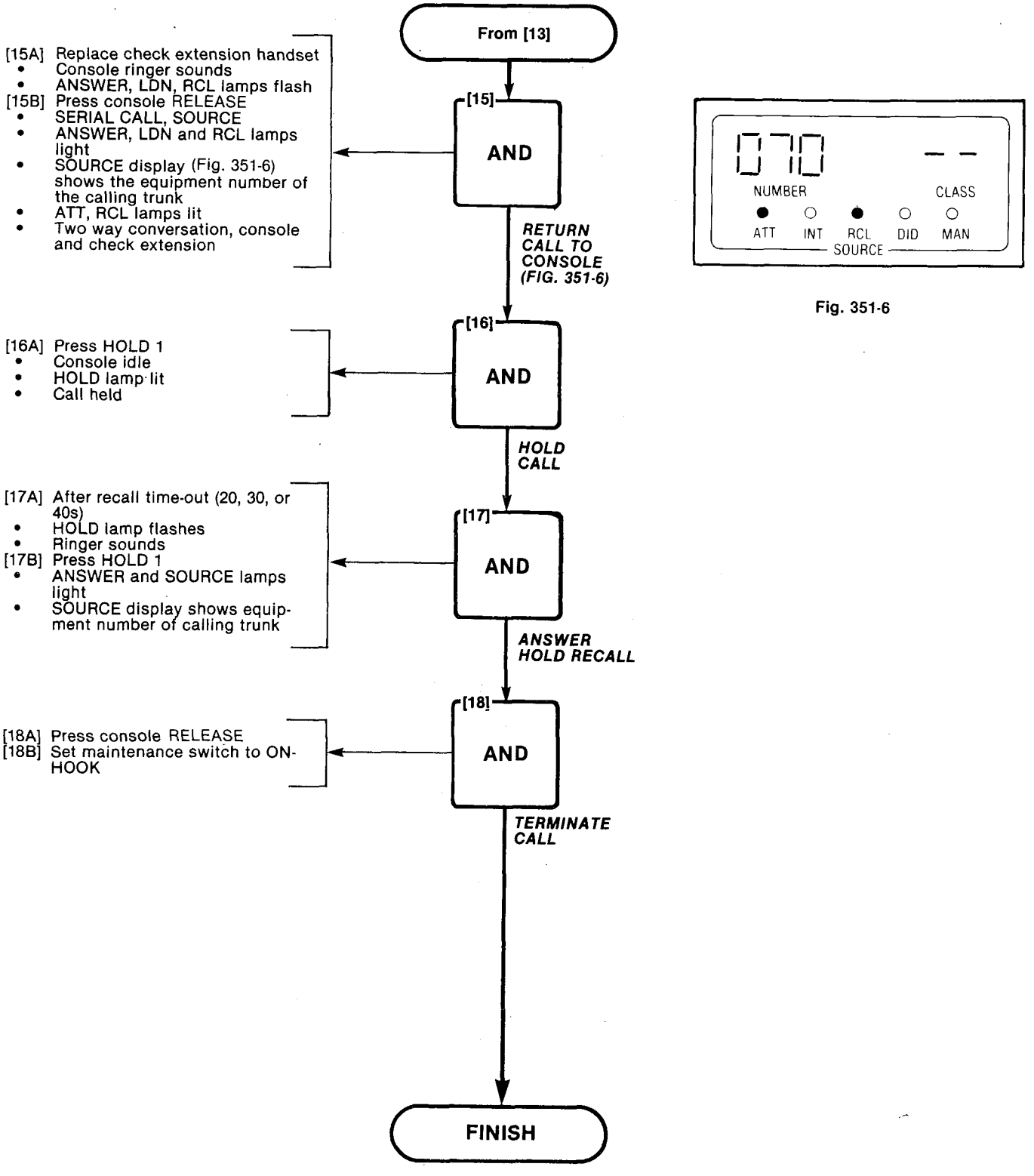

Fig. 351-6

ANSWER DID TRUNK CALL
MAP215-352
Issue 2, July 80
Sheet 1 of 2

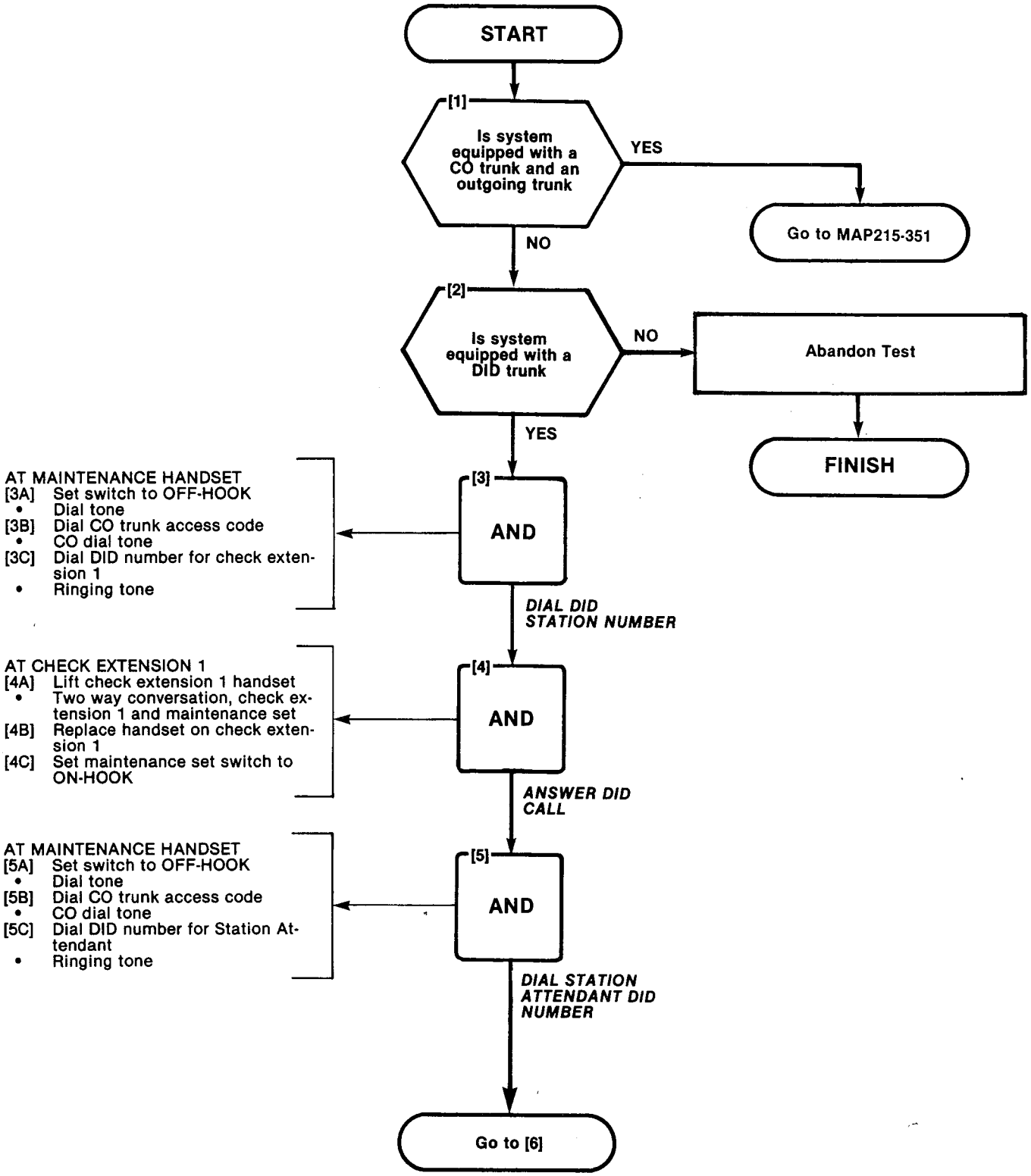

ANSWER DID TRUNK CALL
MAP215-352
Issue 2, July 80
Sheet 2 of 2

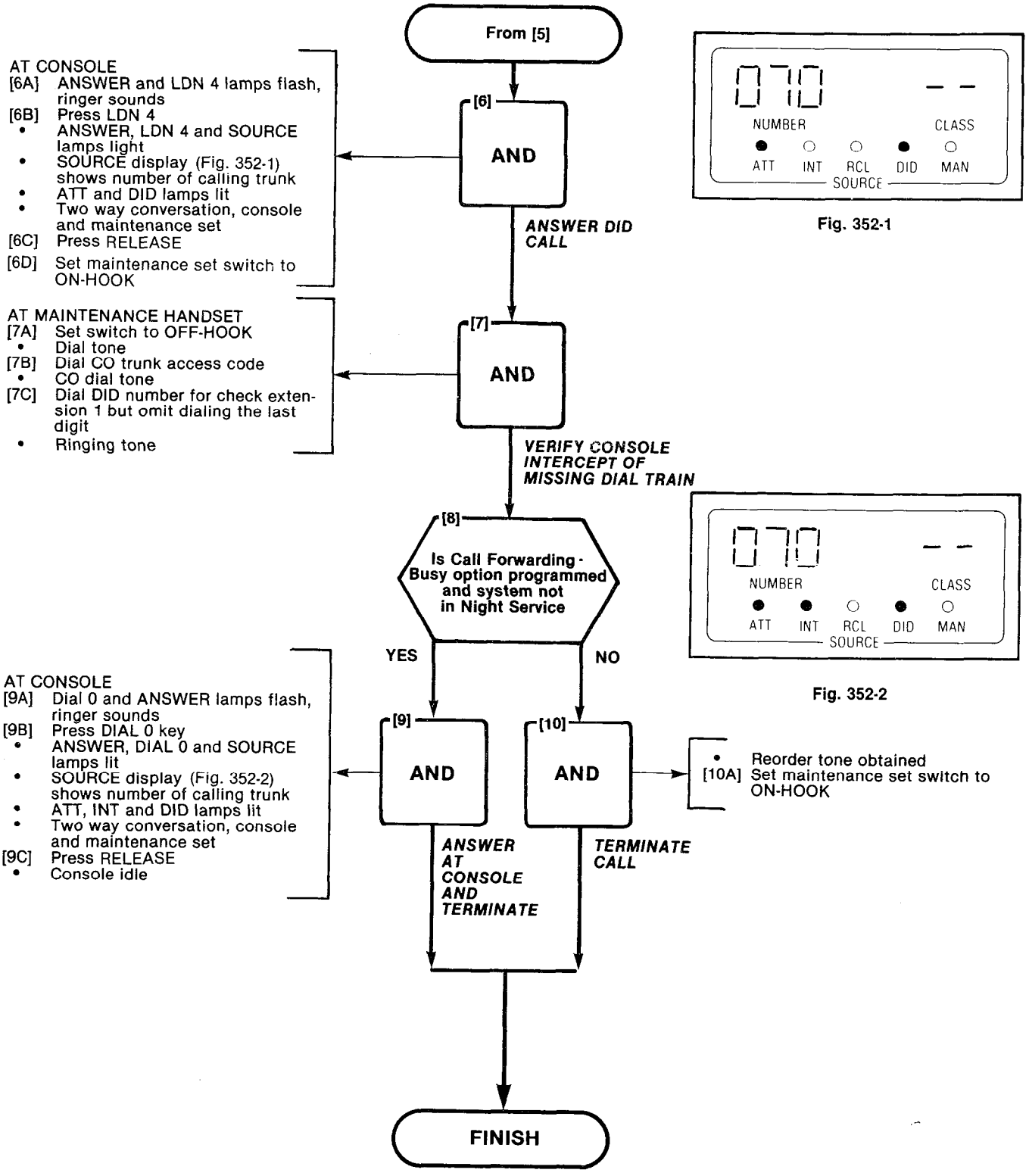

ATTENDANT DO NOT DISTURB
MAP215-353
Issue 2, July 80
Sheet 1 of 2

WARNING: Pressing DO NOT DISTURB when console is active with an extension may activate or remove the feature at the extension.

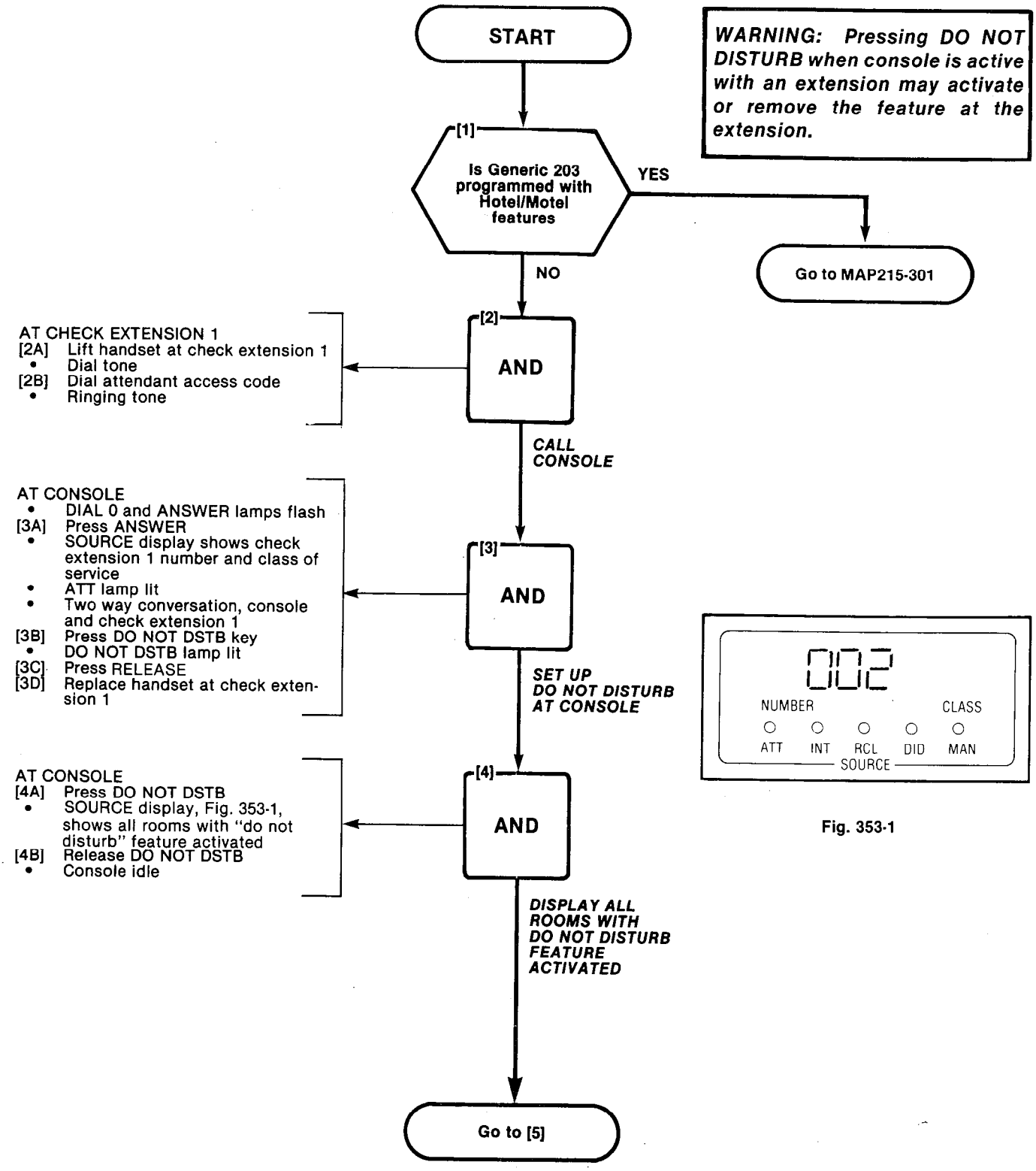

Fig. 353-1

ATTENDANT DO NOT DISTURB
MAP215-353
Issue 2, July 80
Sheet 2 of 2

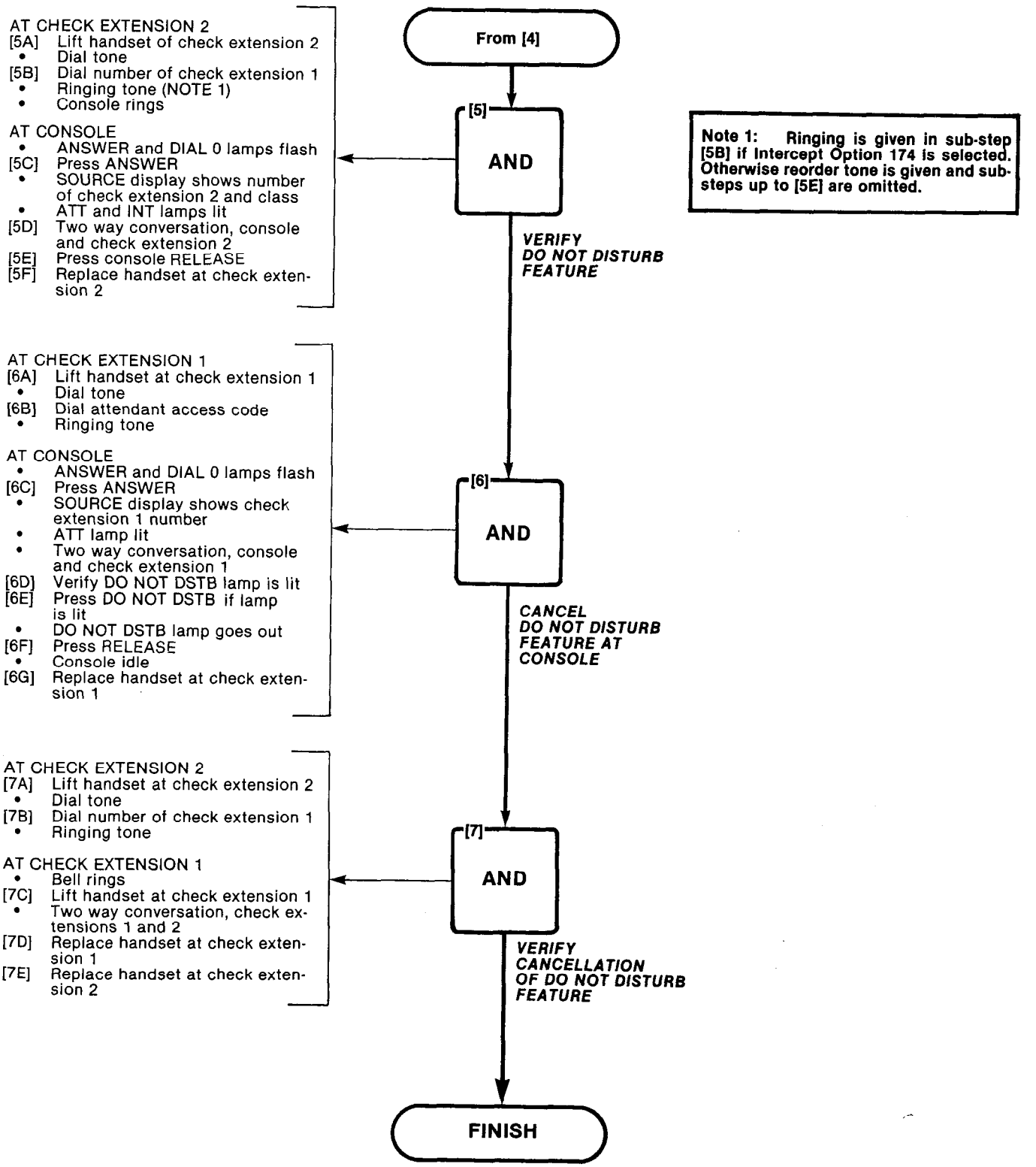

MESSAGE WAITING
MAP215-354
Issue 2, July 80
Sheet 1 of 2

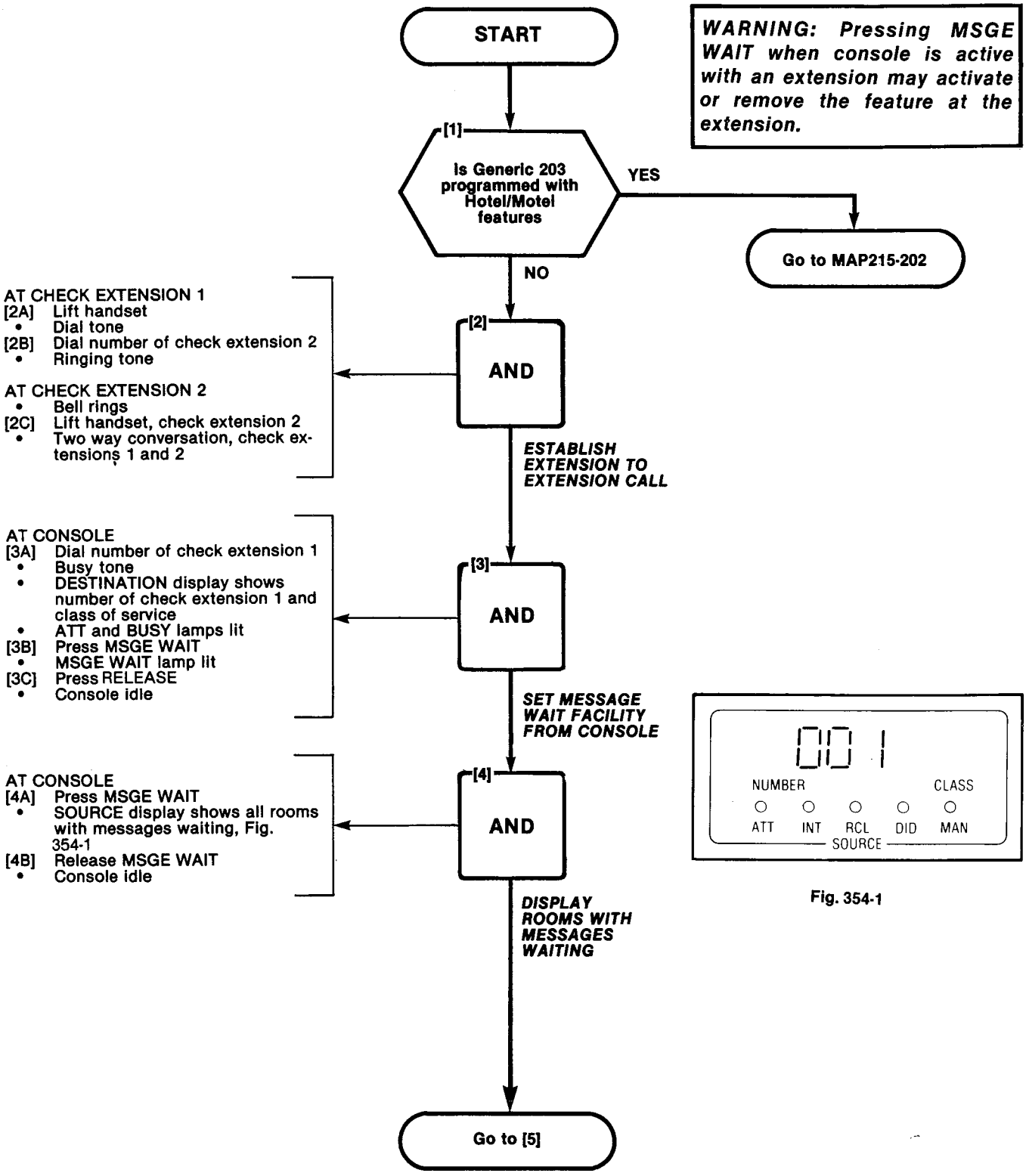

WARNING: Pressing MSGE WAIT when console is active with an extension may activate or remove the feature at the extension.

Fig. 354-1

MESSAGE WAITING
MAP215-354
Issue 2, July 80
Sheet 2 of 2

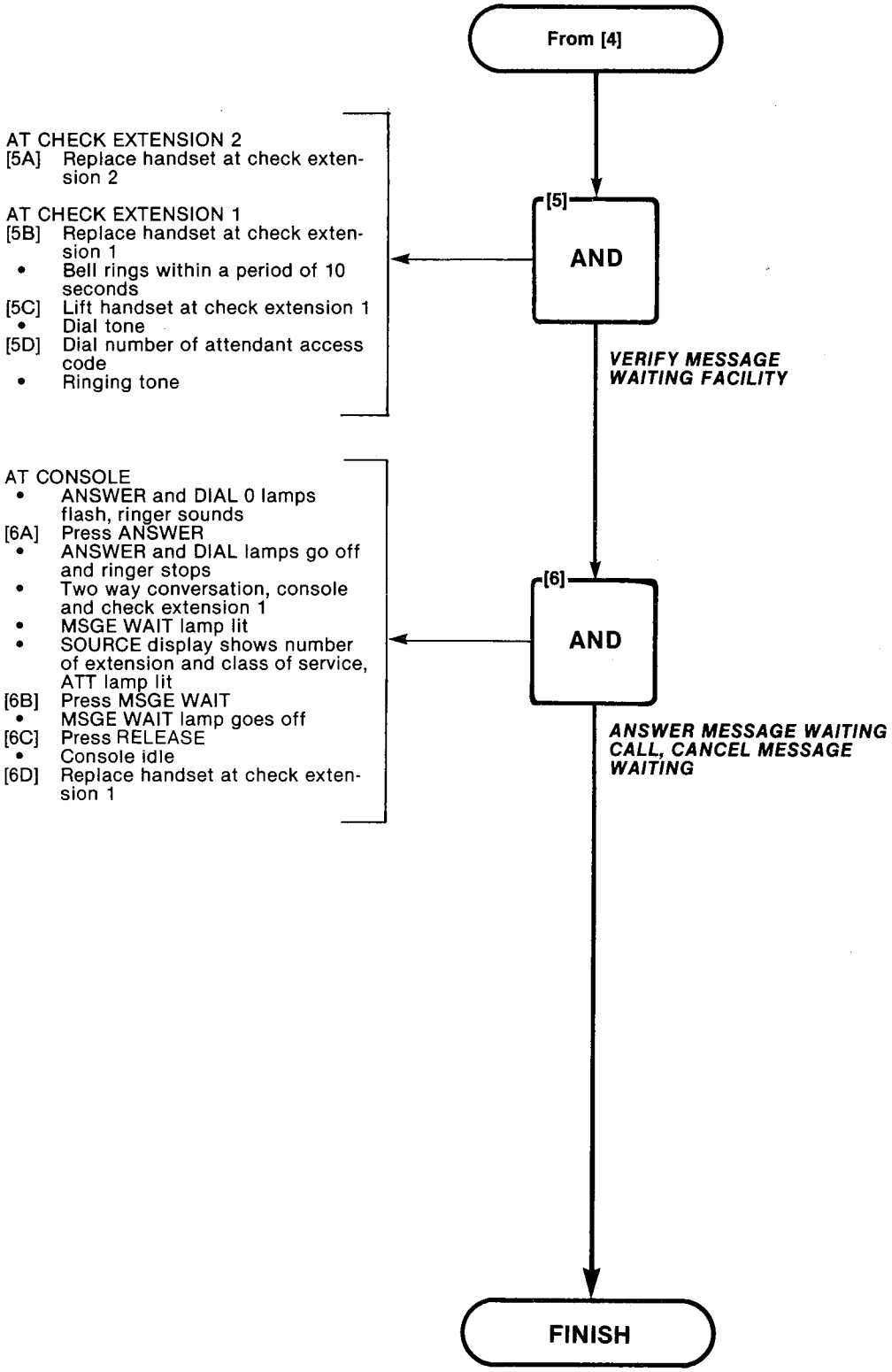

ATTENDANT CALL FORWARDING - BUSY
MAP215-355
Issue 2, July 80
Sheet 1 of 2

Note: **This feature also appears as an extension set-up and test option. See MAP215-202 for details..**

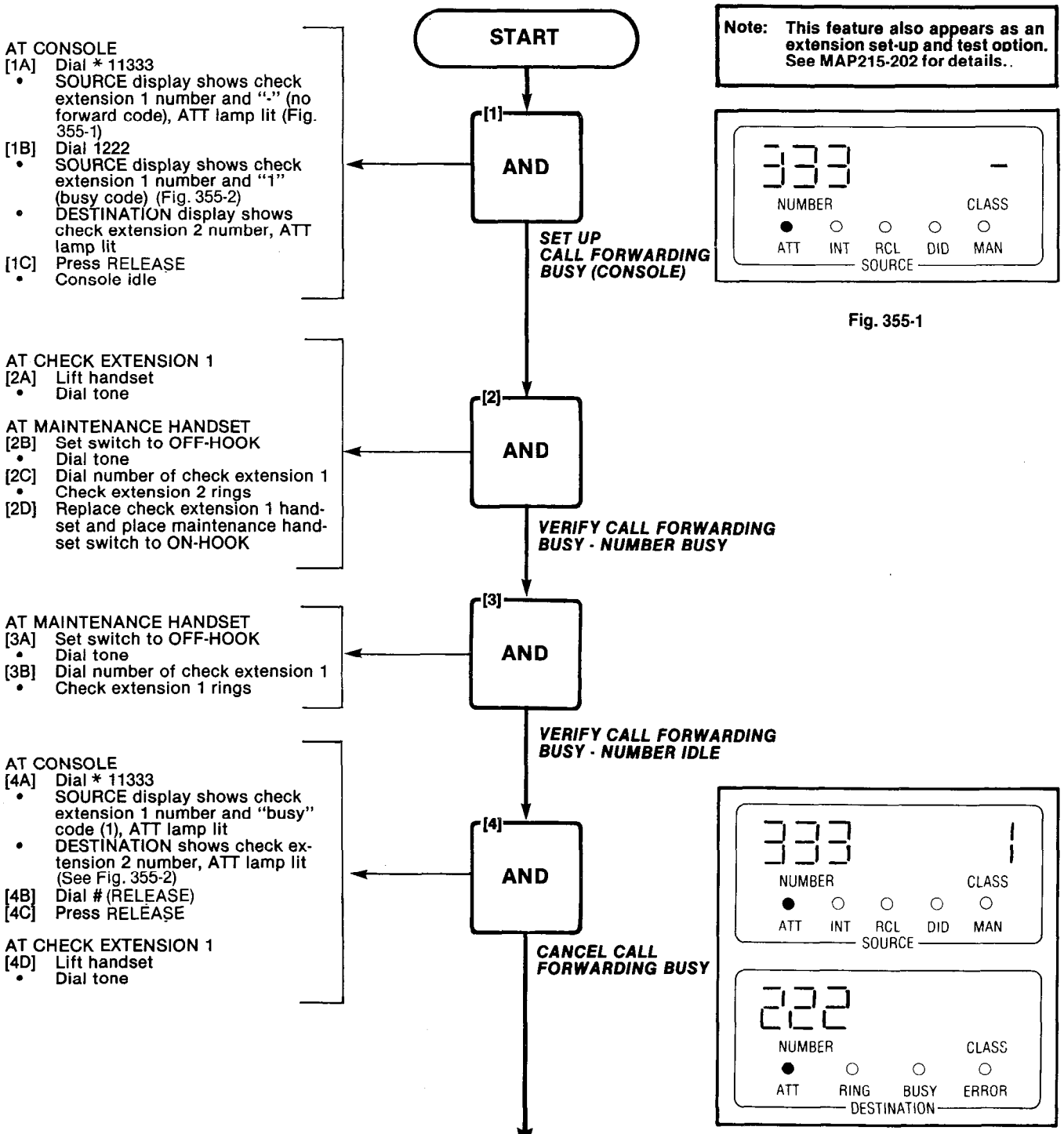

Fig. 355-1

Fig. 355-2

ATTENDANT CALL FORWARDING - BUSY
MAP215-355
Issue 2, July 80
Sheet 2 of 2

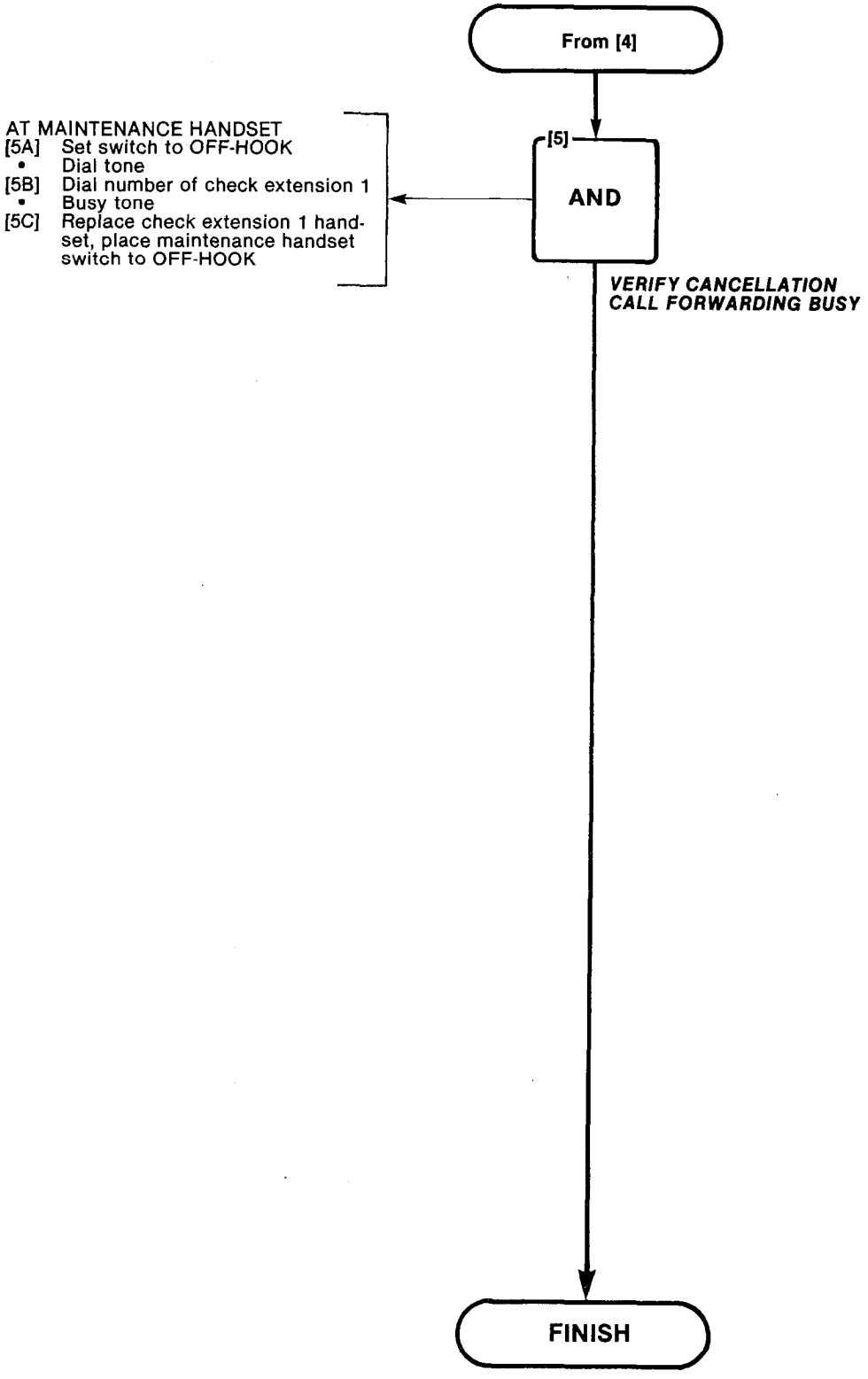

ATTENDANT CALL FORWARDING - DON'T ANSWER
MAP215-356
Issue 2, July 80
Sheet 1 of 1

Note: **This feature also appears as an extension set-up and test option. See MAP215-303 for details.**

AT CONSOLE
[1A] Dial * 11333
- SOURCE display shows number of check extension 1 and "-" (no forward code) (See Fig. 356-1), ATT lamp lit

[1B] Dial 2 222
- SOURCE display shows number of check extension 1 and digit 2 (Don't Answer code) (Fig. 356-2)
- DESTINATION display shows number of check extension 2, ATT lamp lit

[1C] Press RELEASE
- Console idle

START

[1] AND

SET UP CALL FORWARDING DON'T ANSWER (CONSOLE)

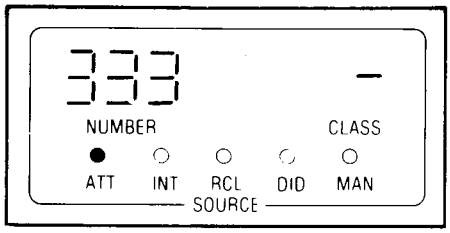

Fig. 356-1

AT MAINTENANCE HANDSET
[2A] Set switch to OFF-HOOK
- Dial tone

[2B] Dial number of check extension 1
- Ringing tone

[2C] After timeout (20s, 30s or 40s)
- Check extension 2 rings
- BUSY LAMP FIELD shows check extension 1 lamp idle, check extension 2 lamp busy

[2D] Set switch to ON-HOOK

[2] AND

VERIFY CALL FORWARDING DON'T ANSWER

AT CONSOLE
[3A] Dial * 11333
- SOURCE display shows number of check extension 1 and "Don't Answer code "2" (Fig. 356-2))
- DESTINATION display shows number of check extension 2. (Fig. 156-2)

[3B] Press # (REL) key
[3C] Press REL key

[3] AND

CANCEL CALL FORWARDING DON'T ANSWER

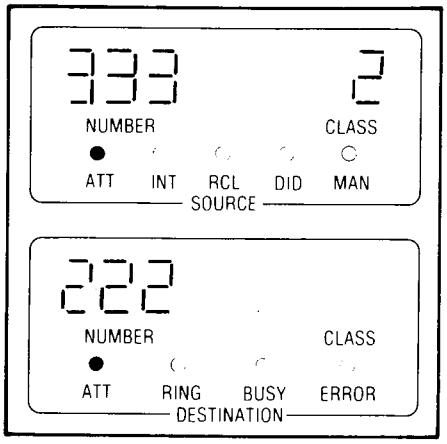

Fig. 356-2

AT MAINTENANCE HANDSET
[4A] Set switch to OFF-HOOK
- Dial tone

[4B] Dial number of check extension 1
- Ringing tone

[4C] Check extension 1 rings for at least 1 minute without forwarding to check extension 2

[4D] Set switch to ON-HOOK
[4E] Check extension 1 stops ringing

[4] AND

VERIFY CANCELLATION CALL FORWARDING DON'T ANSWER

FINISH

ATTENDANT CALL FORWARDING
MAP215-357
Issue 2, July 80
Sheet 1 of 1

Note: **This feature also appears as an extension set-up and test option. See MAP215-304 for details.**

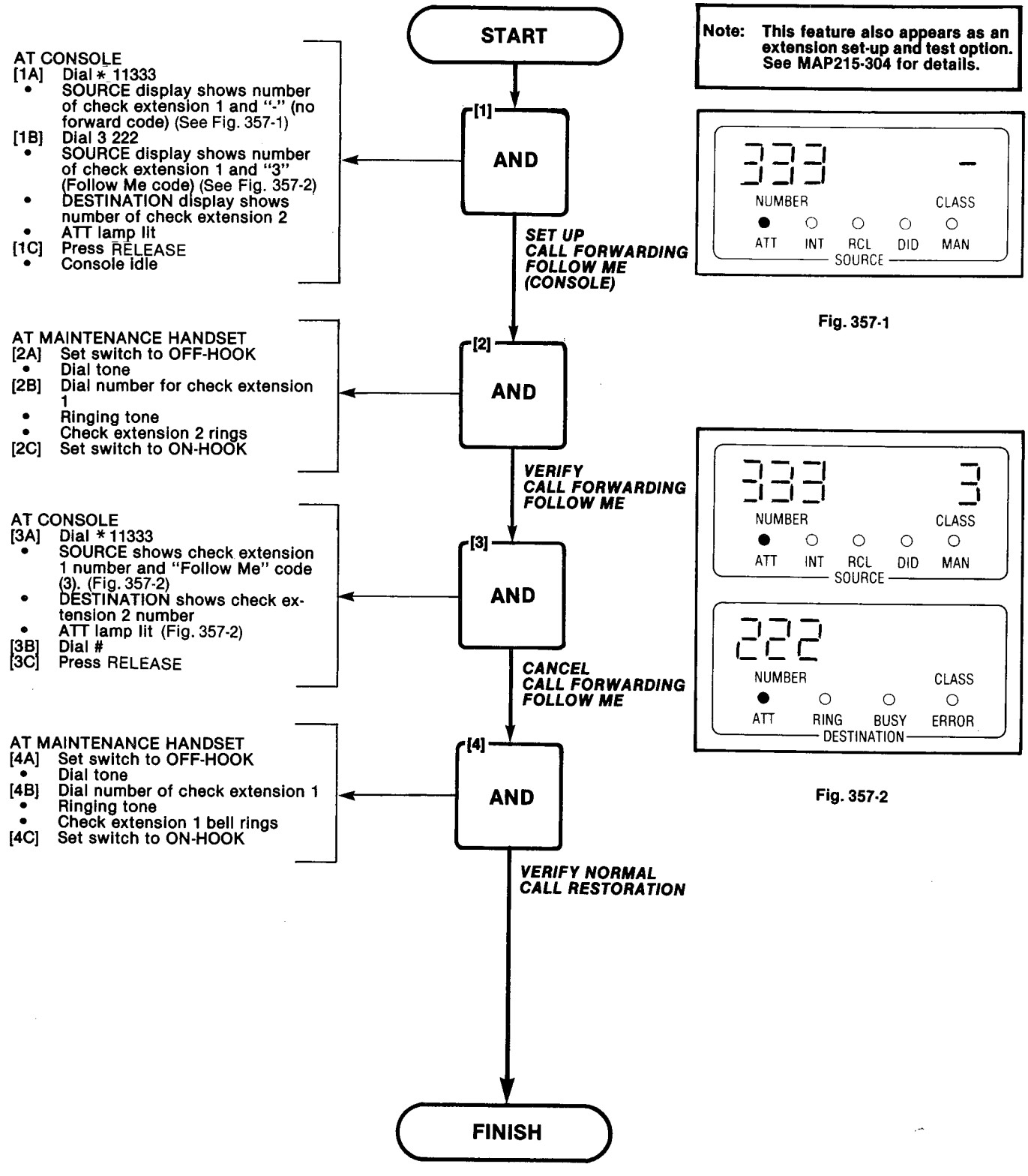

Fig. 357-1

Fig. 357-2

ATTENDANT CONTROLLED CONFERENCE
MAP215-358
Issue 2, July 80
Sheet 1 of 2

AT CHECK EXTENSION 1
[1A] Lift handset
- Dial tone

[1B] Dial digit "0"
- Ringing tone
- Console rings

AT CONSOLE
[1C] Press ANSWER
- SOURCE display shows number and class of service of check extension 1
- ATT lamp lit (See Fig. 358-1)

[1D] Press CONF
- CONF lamp lit
- SOURCE display cleared
- DESTINATION display shows letter C (Fig. 358-2)

START

[1] AND

SET UP CONFERENCE FEATURE

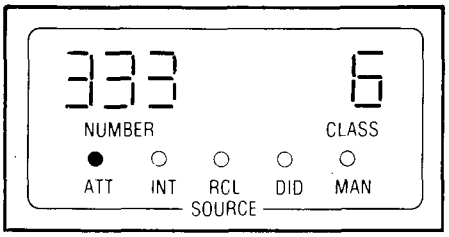

Fig. 358-1

AT CONSOLE
[2A] Press RELEASE
- CONF lamp remains lit
- Console idle
- Check extension 1 receives music-on-hold if customer-provided

[2] AND

CONSOLE WITHDRAWS FROM CONFERENCE

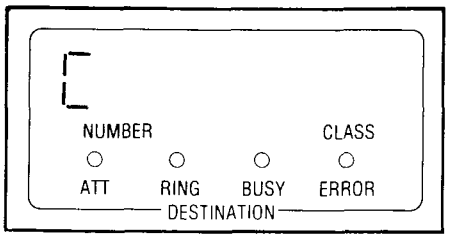

Fig. 358-2

AT CONSOLE
[3A] Dial number of check extension 2
- Ringing tone
- DESTINATION display shows number of check extension 2 and class
- ATT and RING lamps lit

[3B] Check extension 2 lifts handset

[3C] Press CONF
- One second beep tone heard by check extension 1
- Console and check extension 2 hear shorter burst of beep tone

[3D] Verify console and two extensions can speak to each other

[3E] Press RELEASE
- Console idle
- CONF lamp lit

[3] AND

NEW EXTENSION TO CONFERENCE

Go to [4]

ATTENDANT CONTROLLED CONFERENCE
MAP215-358
Issue 2, July 80
Sheet 2 of 2

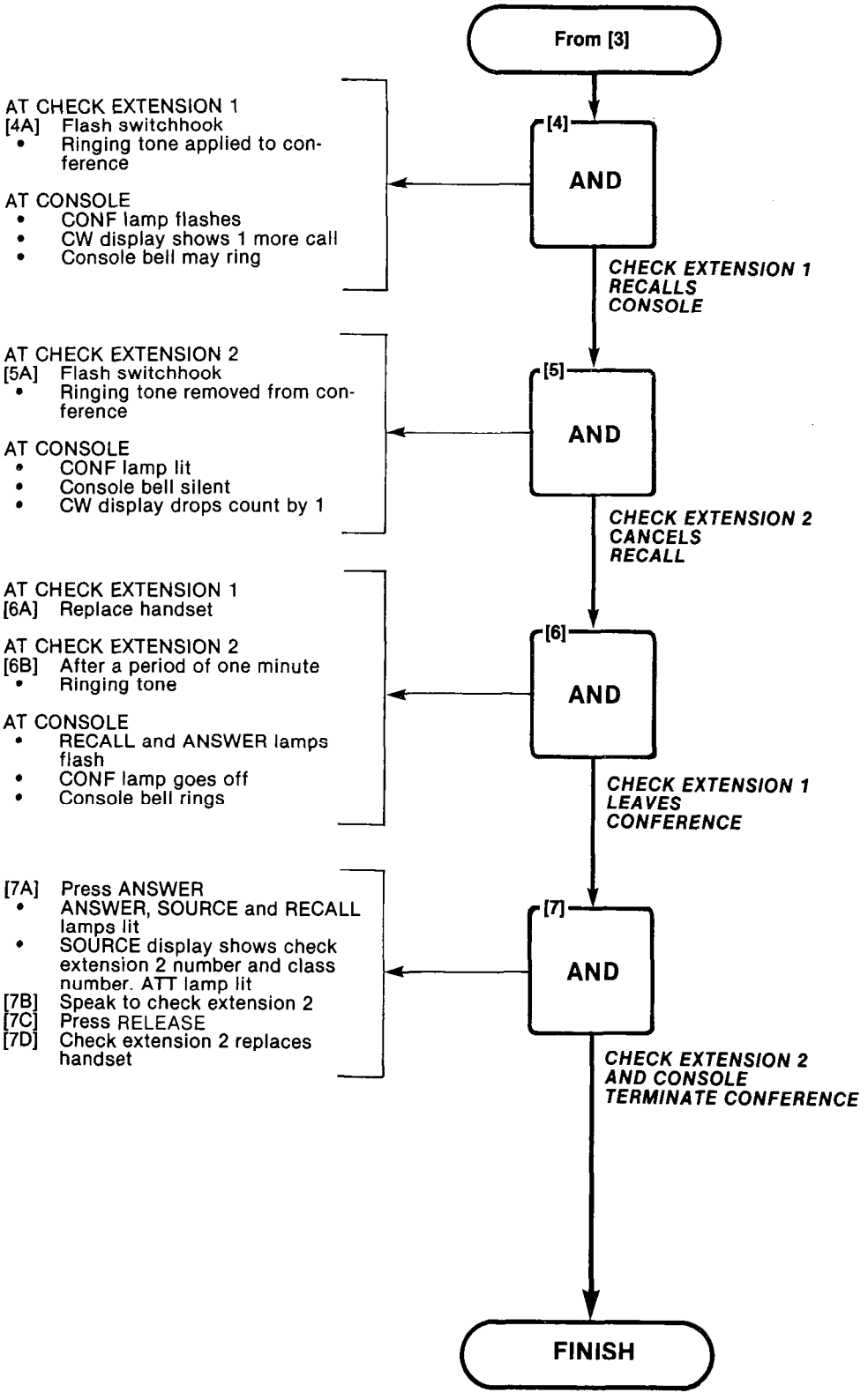

ATTENDANT STATION BUSY-OUT
MAP215-359
Issue 2, July 80
Sheet 1 of 1

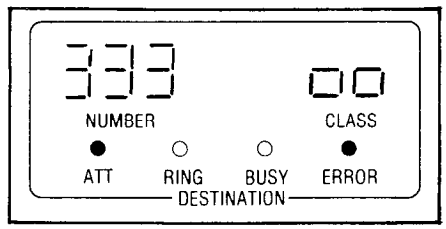

Fig. 359-1

START

[1] AND

AT CONSOLE
[1A] Dial * 12 333 *
[1B] Press RELEASE
• Check extension 1 lamp lit in BUSY LAMP FIELD

SET UP BUSY OUT ON CHECK EXTENSION 1

[2] AND

AT CONSOLE
[2A] Dial number of check extension 1
• DESTINATION display shows "00" in CLASS, ATT and ERROR lamp lit (Fig. 359-1)
[2B] Check extension 1 does not ring
[2C] Press ALARM RESET
• Check extension 1 lamp remains lit
[2D] Press RELEASE

VERIFY FEATURE FROM CONSOLE

[3] AND

AT CHECK EXTENSION 2
[3A] Lift handset
• Dial tone
[3B] Dial number of check extension 1
• Reorder tone
[3C] Replace handset

VERIFY BUSY OUT CONDITIONS FROM CHECK EXTENSION 2

[4] AND

AT CONSOLE
[4A] Dial * 12 333 #
[4B] Press RELEASE
• Check extension 1 lamp in BUSY LAMP FIELD goes off

CANCEL FEATURE FROM CONSOLE

[5] AND

AT CHECK EXTENSION 2
[5A] Lift handset
• Dial tone
[5B] Dial number of check extension 1
• Ringing tone
• Check extension 1 bell rings
• Two way conversation between check extensions 1 and 2
[5C] Replace handsets on check extensions 1 and 2

VERIFY CANCELLATION FROM CHECK EXTENSION 2

FINISH

ATTENDANT DO NOT DISTURB (H/M)
MAP215-360
Issue 2, July 80
Sheet 1 of 3

WARNING: Pressing DO NOT DISTURB key when console is active with an extension may activate or remove the feature at the extension.

START

[1] Is Generic 203 programmed with Hotel/Motel features

NO → Go to MAP215-300

YES

AT CONSOLE
[2A] Press GUEST ROOM
- GUEST ROOM lamp lit

[2B] Dial number of check extension 1
- SOURCE display shows check extension number and message register, ATT lamp lit
- DESTINATION display shows room status code (Fig. 360-1)

[2C] Press DO NOT DSTB
- DO NOT DSTB lamp lit
- Check extension 1 lamp lit in Busy Lamp Field

[2D] Press RELEASE
- Console idle

[2] AND

DISPLAY GUEST ROOM STATUS AT CONSOLE

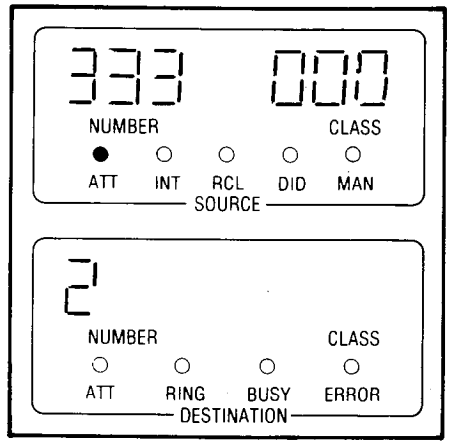

Fig. 360-1

AT CHECK EXTENSION 2
[3A] Lift handset
- Dial tone

[3B] Dial number of check extension 1
- Ringing tone (NOTE 1)
- Console rings
- DIAL 0 and ANSWER lamps flash

AT CONSOLE
[3C] Press ANSWER
- SOURCE display shows number of check extension 2 and class of service
- ATT and INT lamps lit

[3D] Two way conversation, console and check extension 2

[3E] Press RELEASE

[3F] Replace check extension 2 handset

[3] AND

VERIFY FEATURE FROM SECOND PARTY

Go to [4]

Note 1: Ringing is given in sub-step [3B] if System Option 174 is selected. Otherwise, reorder tone is given and remainder of step [3] is omitted.

ATTENDANT DO NOT DISTURB (H/M)
MAP215-360
Issue 2, July 80
Sheet 2 of 3

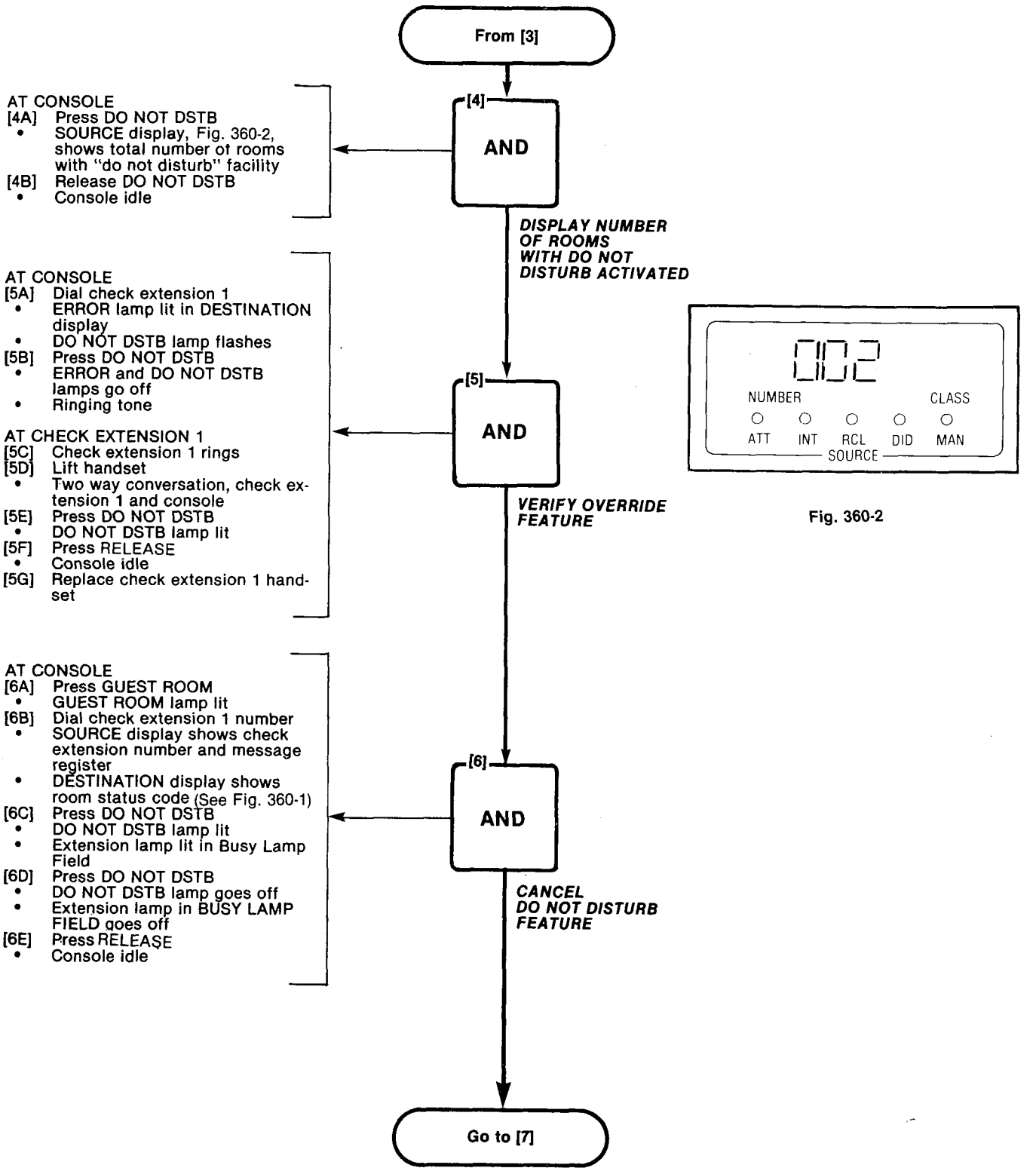

Fig. 360-2

ATTENDANT DO NOT DISTURB (H/M)
MAP215-360
Issue 2, July 80
Sheet 3 of 3

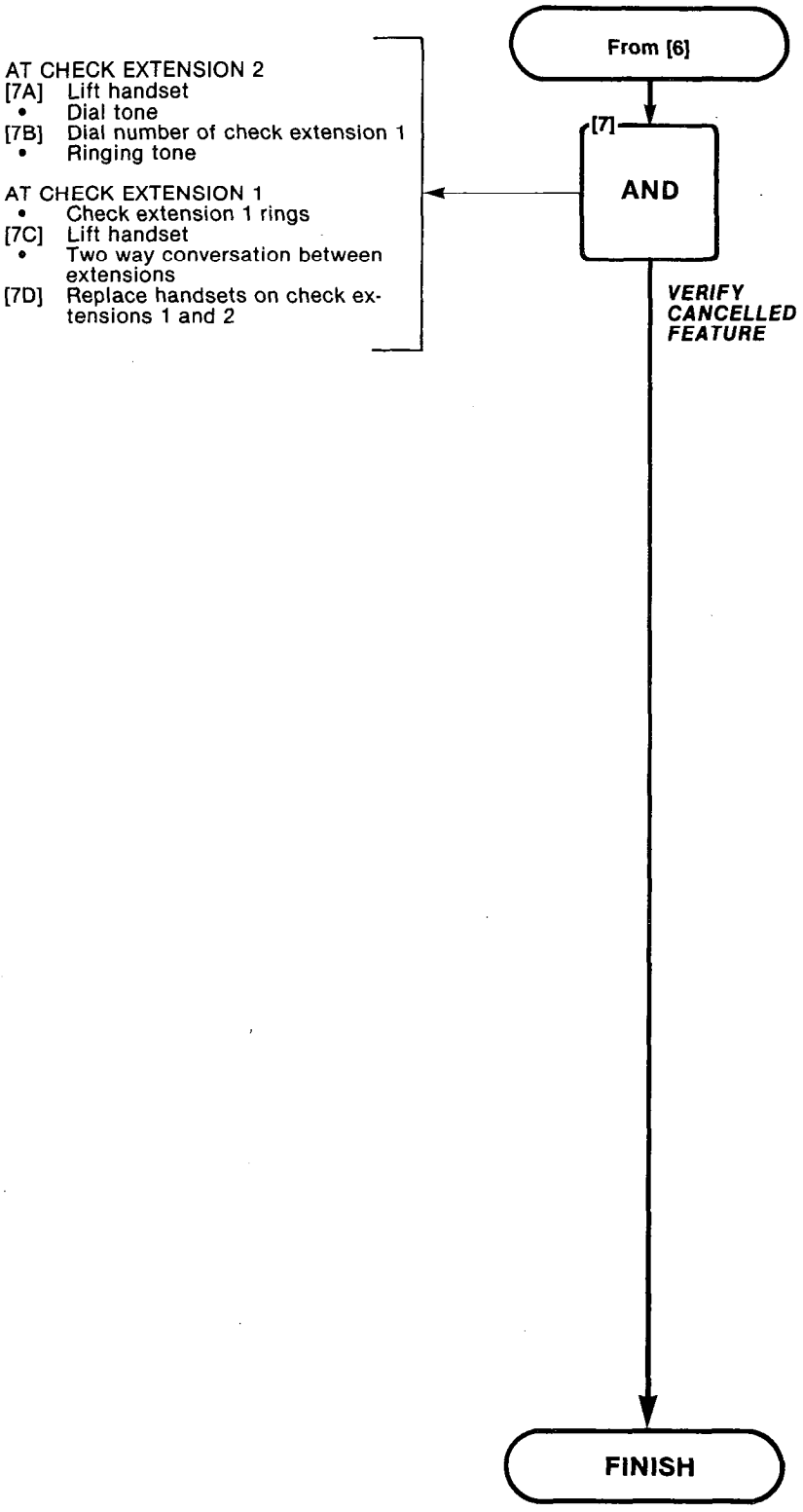

MESSAGE WAITING (H/M)
MAP215-361
Issue 2, July 80
Sheet 1 of 1

WARNING: Pressing MSGE WAIT key when console is active with an extension may activate or remove the feature at the extension.

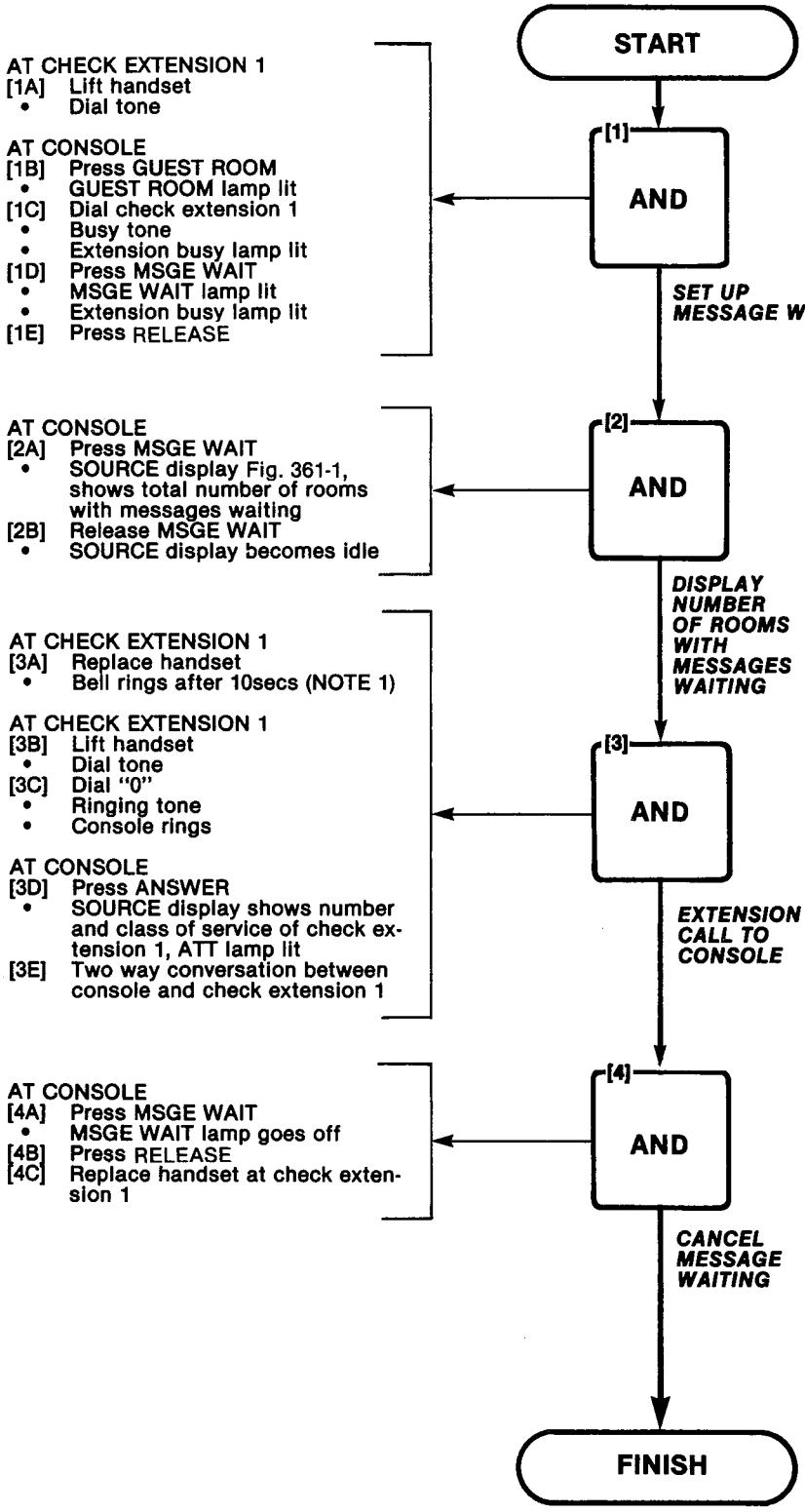

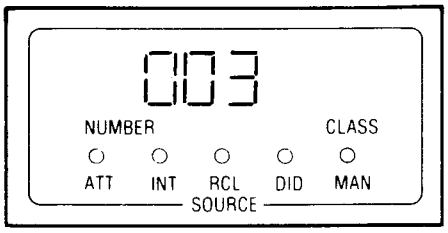

Fig. 361-1

Note 1: The lamp flash facility to flash telephone fitted with lamp is available on PABX line cards bearing part number 9110-010. Either option 137 for lamp flash or option 138 for bell ring may be programmed, but not both.

MESSAGE REGISTRATION (H/M)
MAP215-362
Issue 2, July 80
Sheet 1 of 1

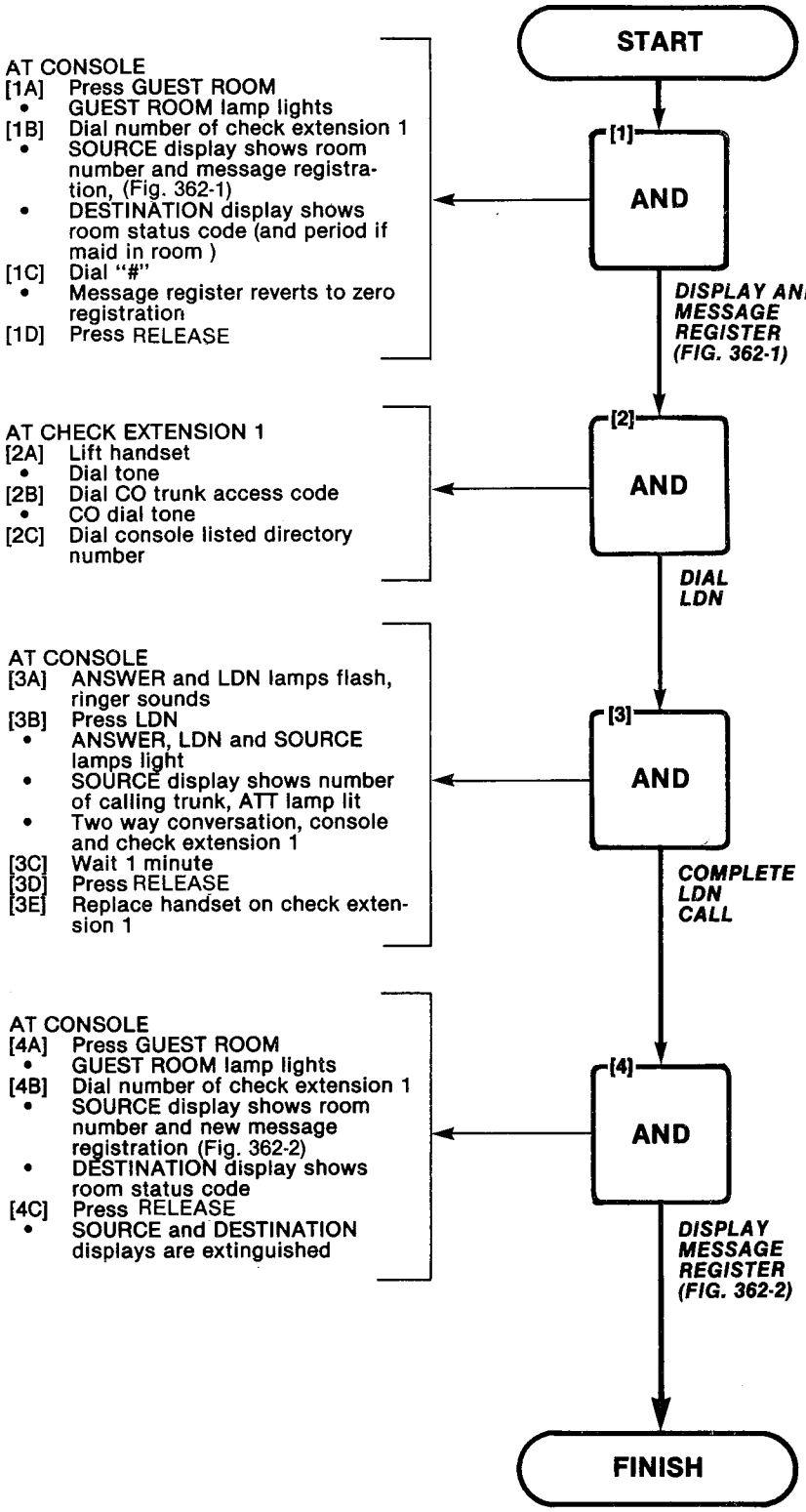

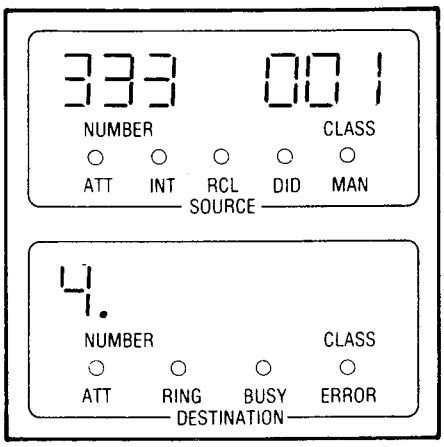

Fig. 362-1

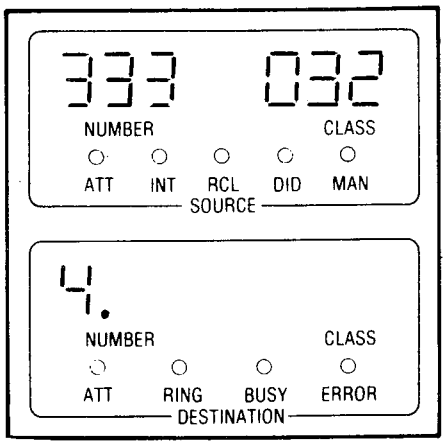

Fig. 362-2

CONTROLLED OUTGOING CALL RESTRICTION (H/M)
MAP215-363
Issue 2, July 80
Sheet 1 of 2

Note: This MAP applies when console has ROOM RESTR. If ROOM STATUS see MAP215-364.

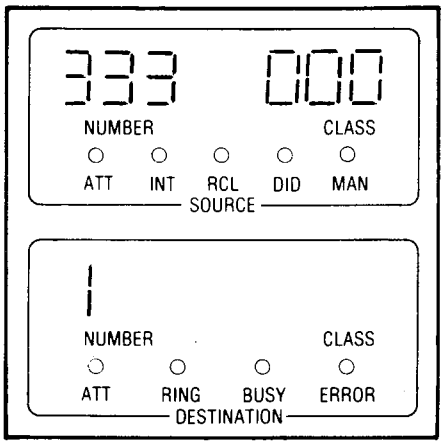

Fig. 363-1

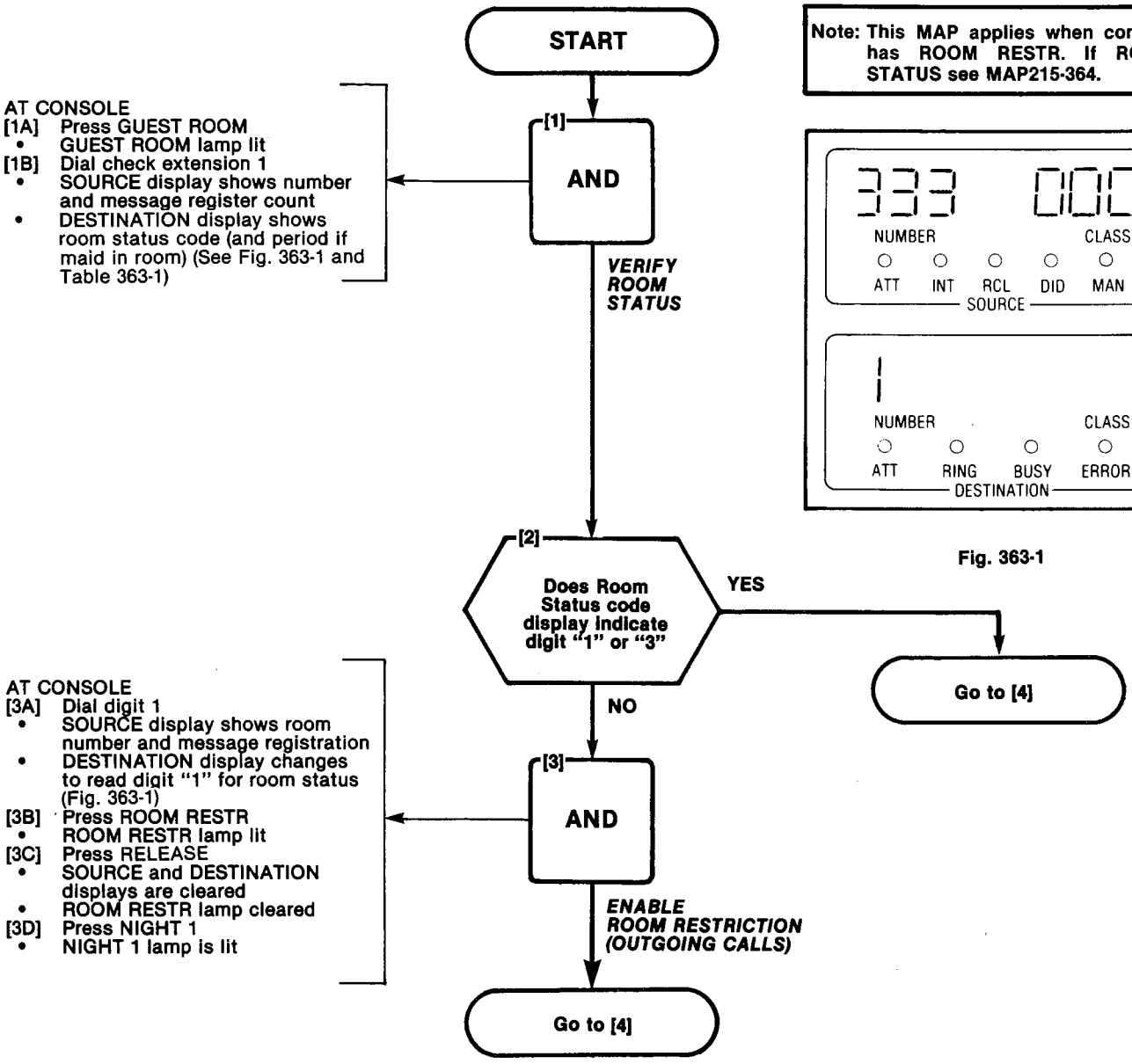

TABLE 363-1 ROOM STATUS CODES

CODE	STATUS
0	Maid is in room
1	Room is vacant and ready
2	Room is occupied and clean
3	Room is vacant but requires cleaning
4	Room is occupied but requires cleaning

CONTROLLED OUTGOING CALL RESTRICTION (H/M)
MAP215-363
Issue 2, July 80
Sheet 2 of 2

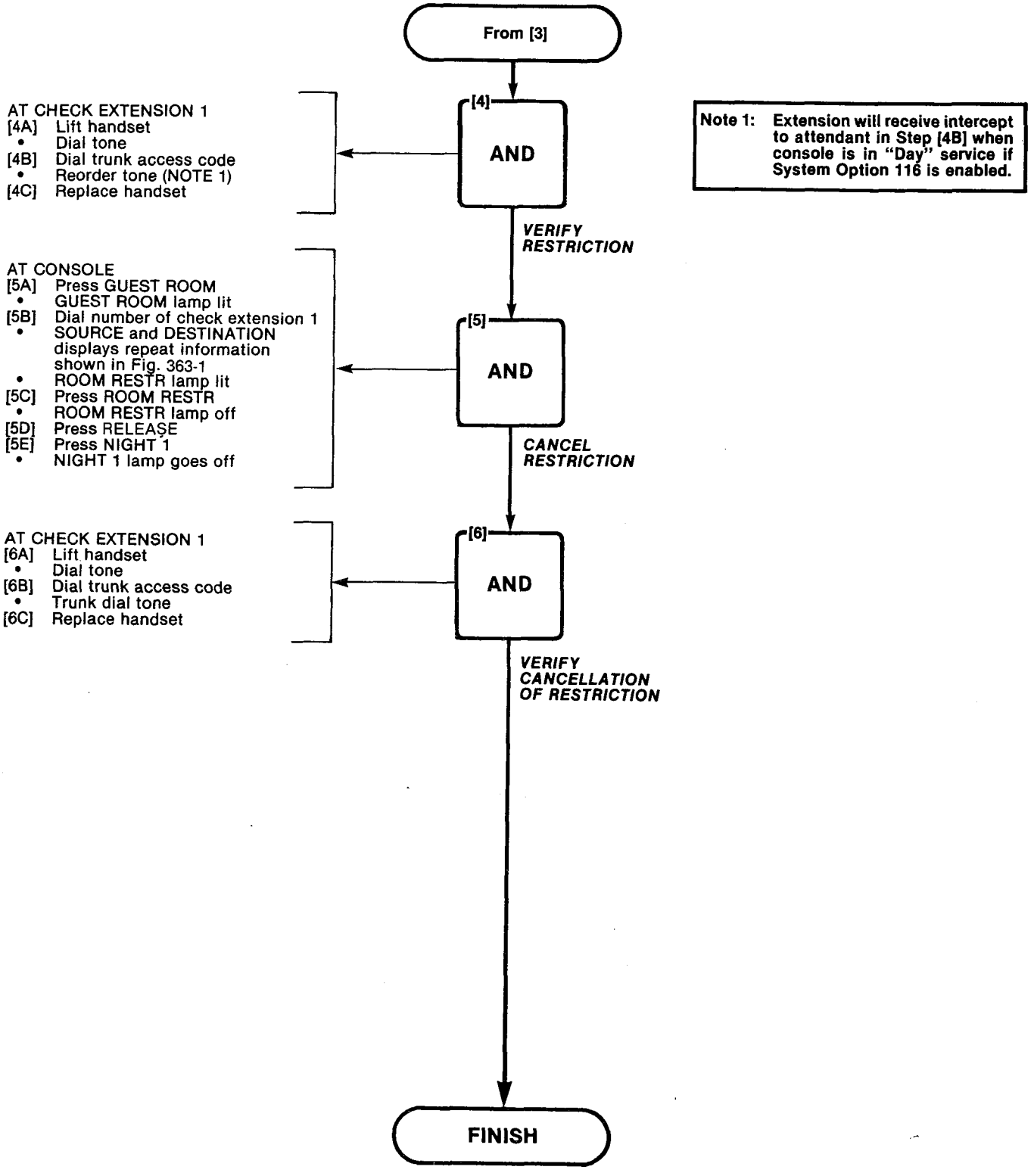

Note 1: **Extension will receive intercept to attendant in Step [4B] when console is in "Day" service if System Option 116 is enabled.**

ROOM STATUS (H/M)
MAP215-364
Issue 2, July 80
Sheet 1 of 4

NOTES

(1) The single-digit codes in the following procedures have meanings shown in Tables 364-1 and 364-2.
(2) Maid codes are dialed from room only, after the "Maid Access" code has been dialed (Table 364-2).

TABLE 364-1
ROOM STATUS CODES

STATUS CODE	STATUS
0	Maid in room
1	Room vacant and ready
2	Room occupied and clean
3	Room vacant, requires cleaning
4	Room occupied, requires cleaning

TABLE 364-2
MAID-DIALED CODES

MAID CODE	INDICATION (NOTE 2)
1	Maid in room, requires cleaning
2	Maid left room, status unchanged
3	Maid left room, room ready

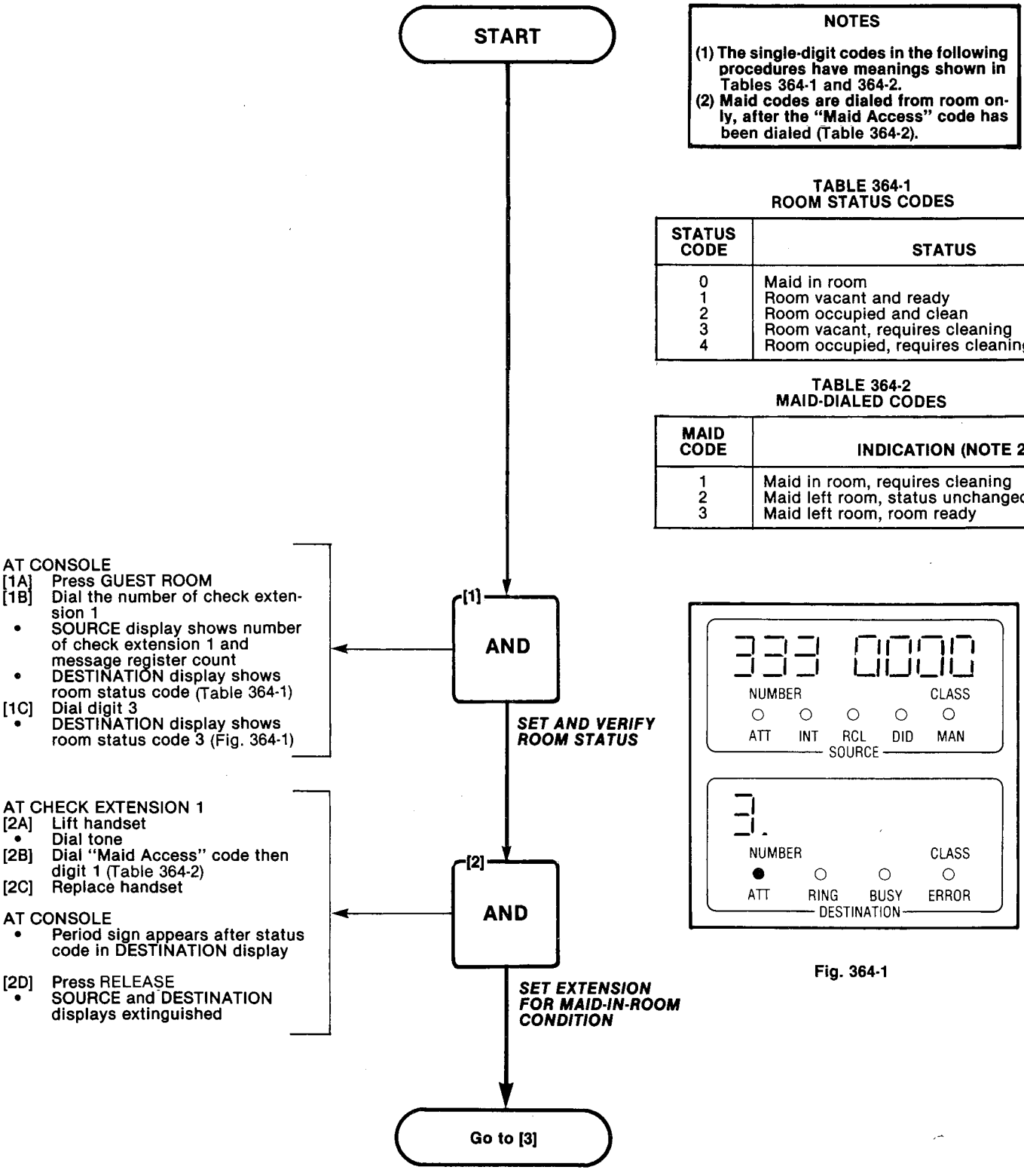

Fig. 364-1

ROOM STATUS (H/M)
MAP215-364
Issue 2, July 80
Sheet 2 of 4

From [2]

AT CONSOLE
[3A] Press ROOM STATUS
[3B] Press and hold digit 0
- Check extension 1 lamp lit in BUSY LAMP FIELD
- SOURCE display shows total number of rooms with maids present Fig. 364-2

[3C] Release key pad digit 0
[3D] Press ROOM STATUS
[3E] Press and hold digit 3
- Check extension 1 lamp lit in BUSY LAMP FIELD
- SOURCE display, Fig. 364-2, changes to reflect total number of vacant rooms which require cleaning

[3F] Release key pad digit 3
- BUSY LAMP FIELD resumes normal indications

[3G] Press RELEASE

[3] AND

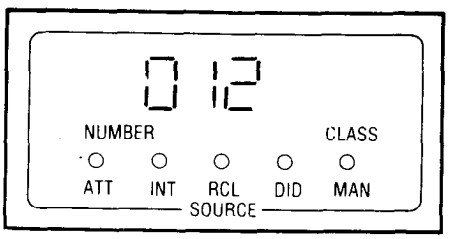

Fig. 364-2

VERIFY ROOM STATUS ON BUSY LAMP FIELD

AT CHECK EXTENSION 1
[4A] Lift handset
- Dial tone

[4B] Dial "Maid Access" code then digit 3
[4C] Replace handset

[4] AND

SET EXTENSION FOR ROOM READY AND NO MAID-IN-ROOM

AT CONSOLE
[5A] Press GUEST ROOM
[5B] Dial the number of check extension 1
- SOURCE display shows number of check extension 1, and message register count
- DESTINATION display shows room status code "1" (Fig. 364-3)

[5C] Press RELEASE
- SOURCE and DESTINATION displays extinguished

[5] AND

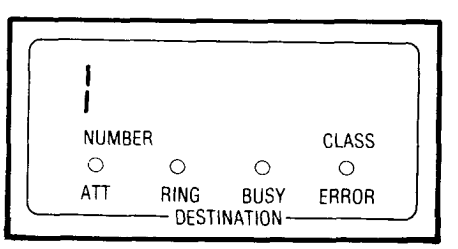

Fig. 364-3

SET AND VERIFY ROOM STATUS ON DESTINATION DISPLAY (VACANT/READY)

[6A] Press ROOM STATUS
[6B] Press and hold key pad digit 0
- Check extension 1 lamp not lit in BUSY LAMP FIELD
- Repeat same entry per top right previous page

[6C] Release key pad digit 0
- BUSY LAMP FIELD resumes normal indications

[6D] Press ROOM STATUS
[6E] Press and hold key pad digit 1
- Check extension 1 lamp lit in BUSY LAMP FIELD
- SOURCE display, Fig. 364-2, changes to reflect total number of rooms which are ready for occupancy

[6F] Release key pad digit 1
- BUSY LAMP FIELD resumes normal lamp indication

[6G] Press RELEASE

[6] AND

VERIFY ROOM STATUS ON BUSY LAMP FIELD

Go to [7]

ROOM STATUS (H/M)
MAP215-364
Issue 2, July 80
Sheet 3 of 4

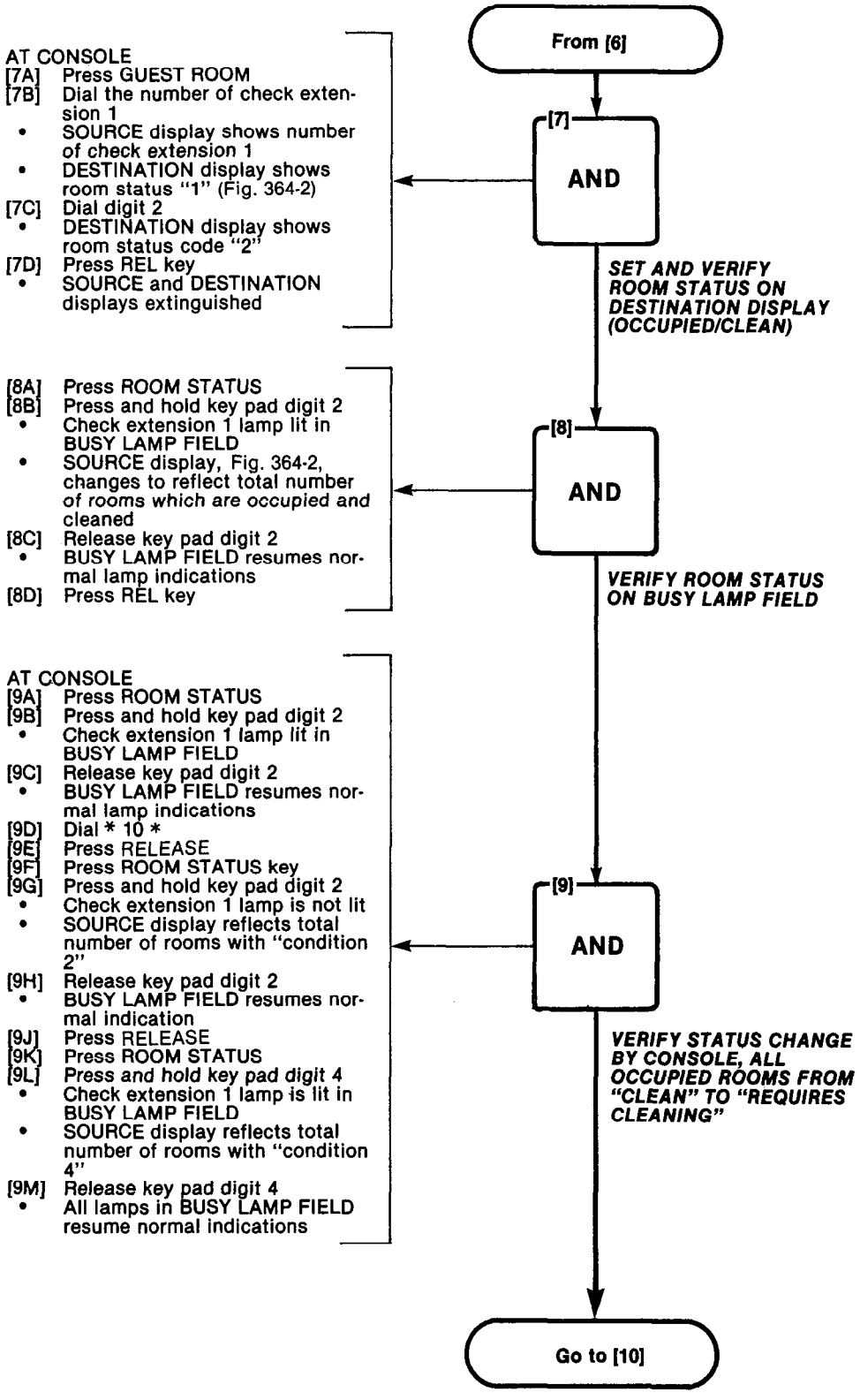

ROOM STATUS (H/M)
MAP215-364
Issue 2, July 80
Sheet 4 of 4

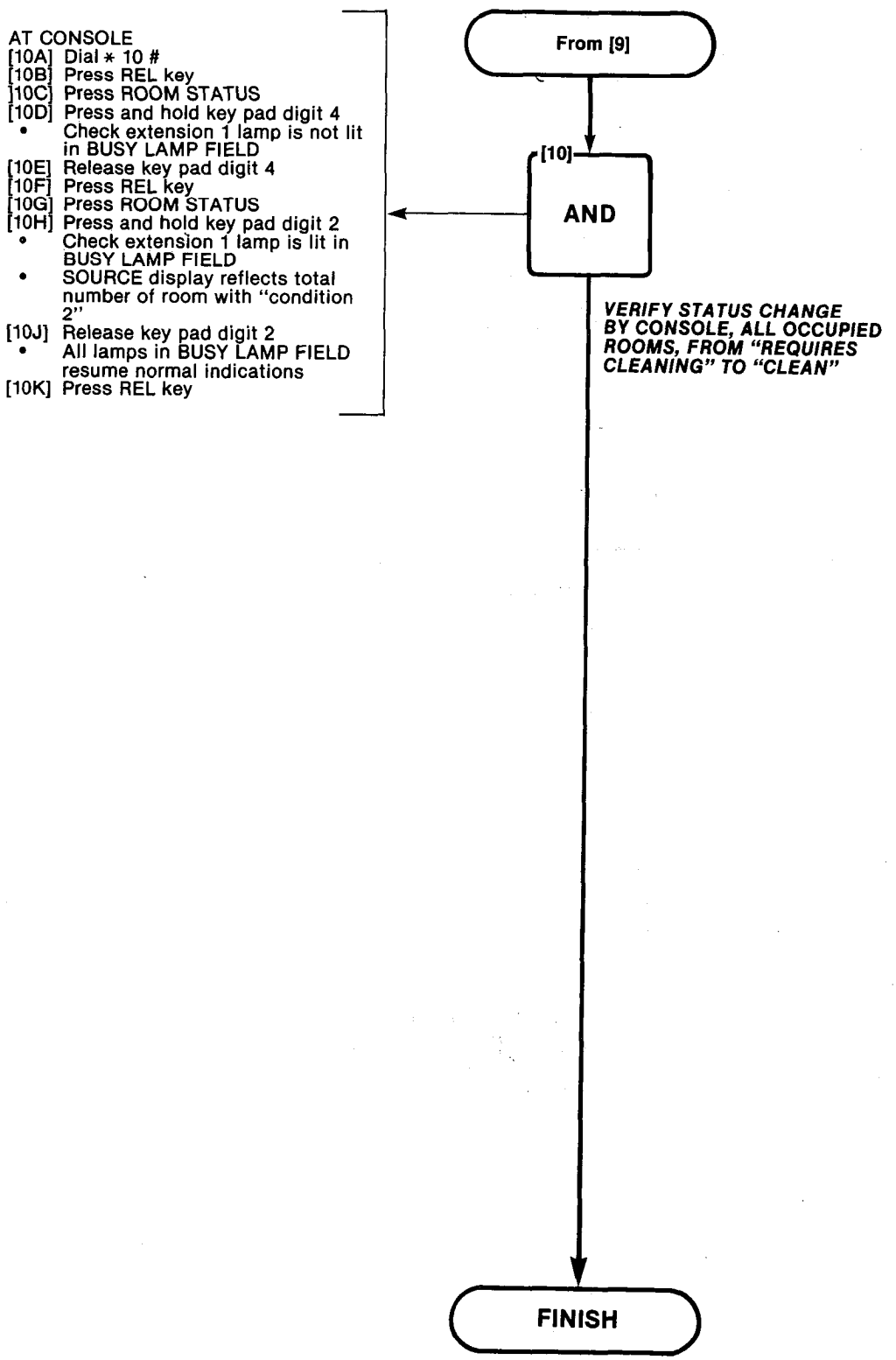

APPENDIX 4

GENERIC 204 SYSTEM TESTS

General

A4.1 The SX-100 or SX-200 programmed with Generic 204 is tested in the order shown in the following Tables, using the MAPs shown which appear in Appendix 4. These tests should be done after completing all required tests for Generic 202 and 203 options in 204 (see table 2-9).

TABLE A4-1 EXTENSION OPTIONS

ORDER	OPTION	MAP NO.
1	Set Up Test Equipment	MAP215-001
2	Test Extension Options	MAP215-400
3	Automatic Wake-Up (Alarm Call)	MAP215-401
4	Enable Non-CO Trunk to Trunk Connect	MAP215-402

TABLE A4-2 CONSOLE OPTIONS

OPTION	MAP NO.	ORDER	
		NON H/M	H/M
Test Console Options	MAP215-450	1	1
Console Date Display and Date Utility	MAP215-451	1	1
Customer Program Dump/Load	MAP215-452	2	2
Message Register Print	MAP215-453		3
Room Audit	MAP215-454		4
Automatic Wake-Up (Alarm Call)	MAP215-455		5
System I.D.	MAP215-456	3	6
Test Termination	MAP215-226	4	7

TEST EXTENSION OPTIONS
MAP215-400
Issue 1, January 80
Sheet 1 of 1

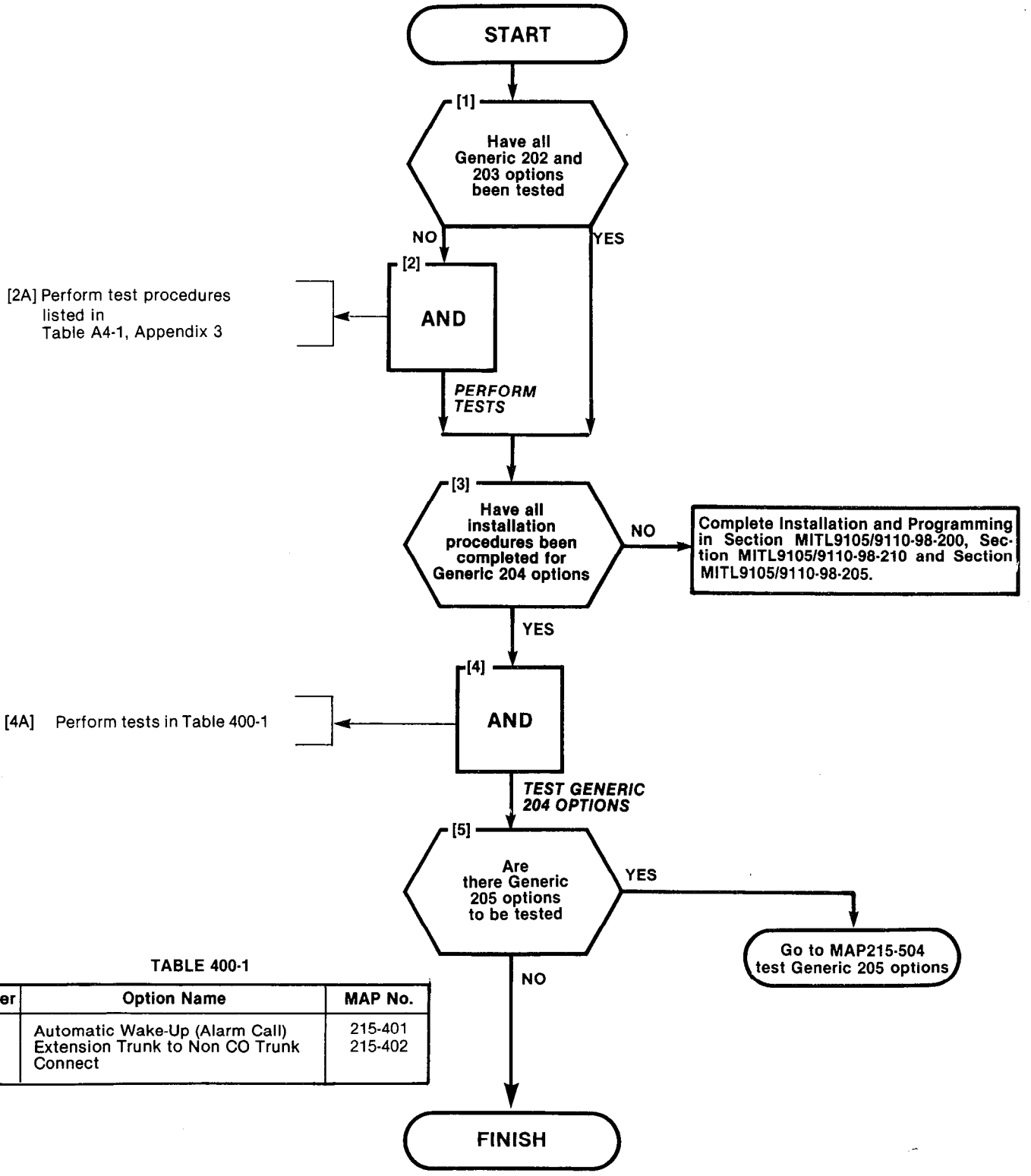

TABLE 400-1

Order	Option Name	MAP No.
1	Automatic Wake-Up (Alarm Call)	215-401
2	Extension Trunk to Non CO Trunk Connect	215-402

AUTOMATIC WAKE-UP
MAP215-401
Issue 2, July 80
Sheet 1 of 1

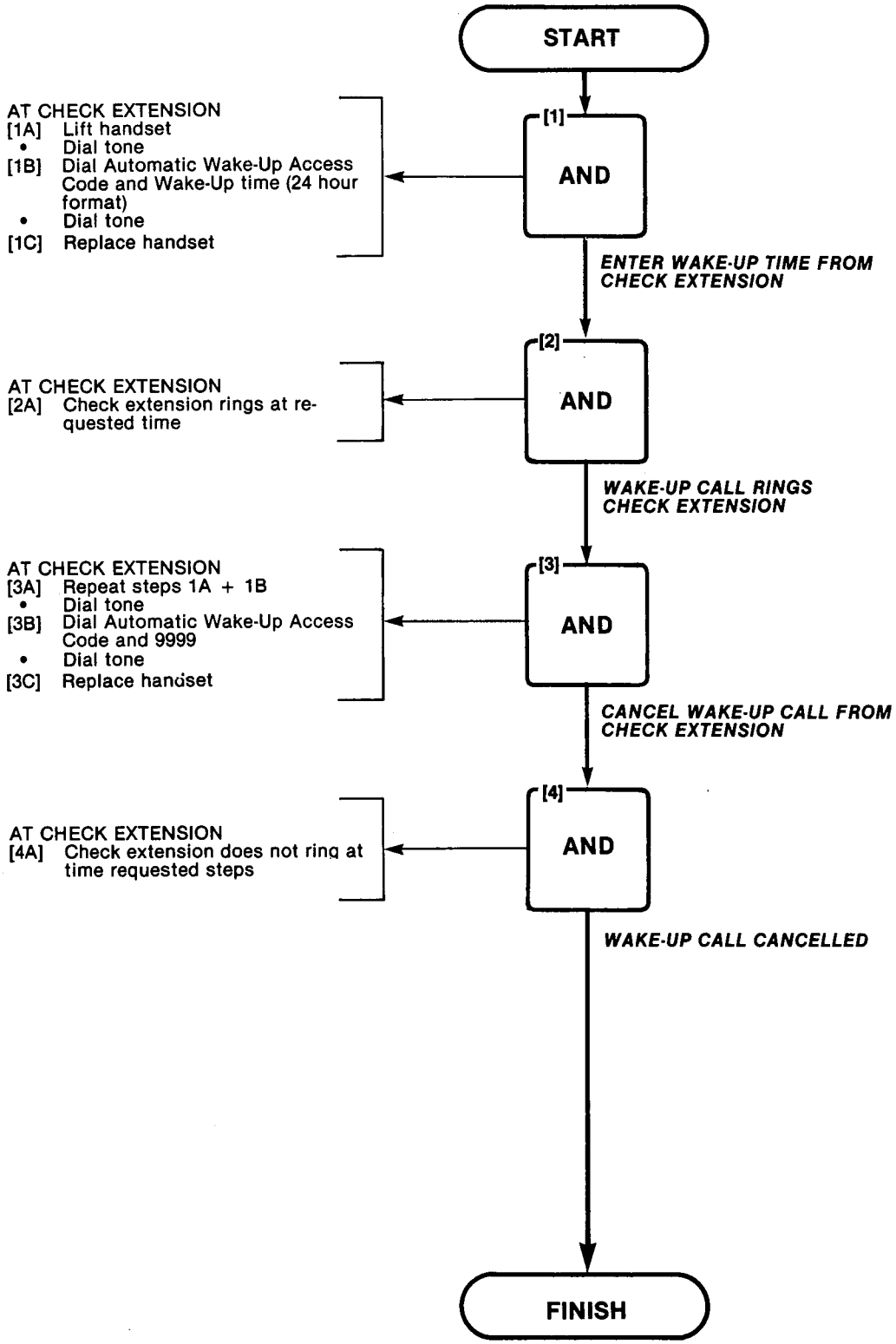

ENABLE NON-CO TRUNK TO TRUNK CONNECT
MAP215-402
Issue 2, July 80
Sheet 1 of 1

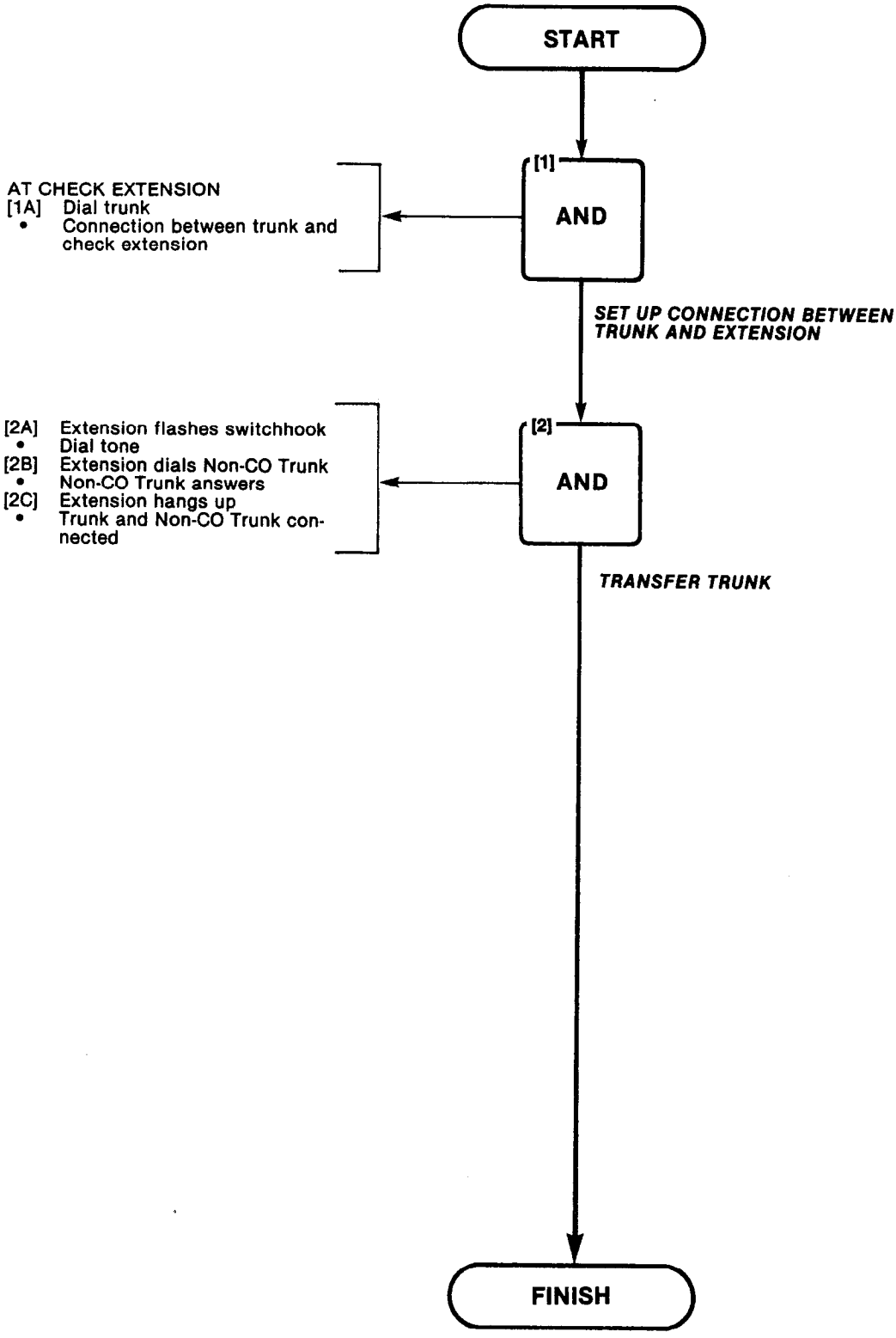

TEST CONSOLE OPTIONS
MAP215-450
Issue 2, July 80
Sheet 1 of 1

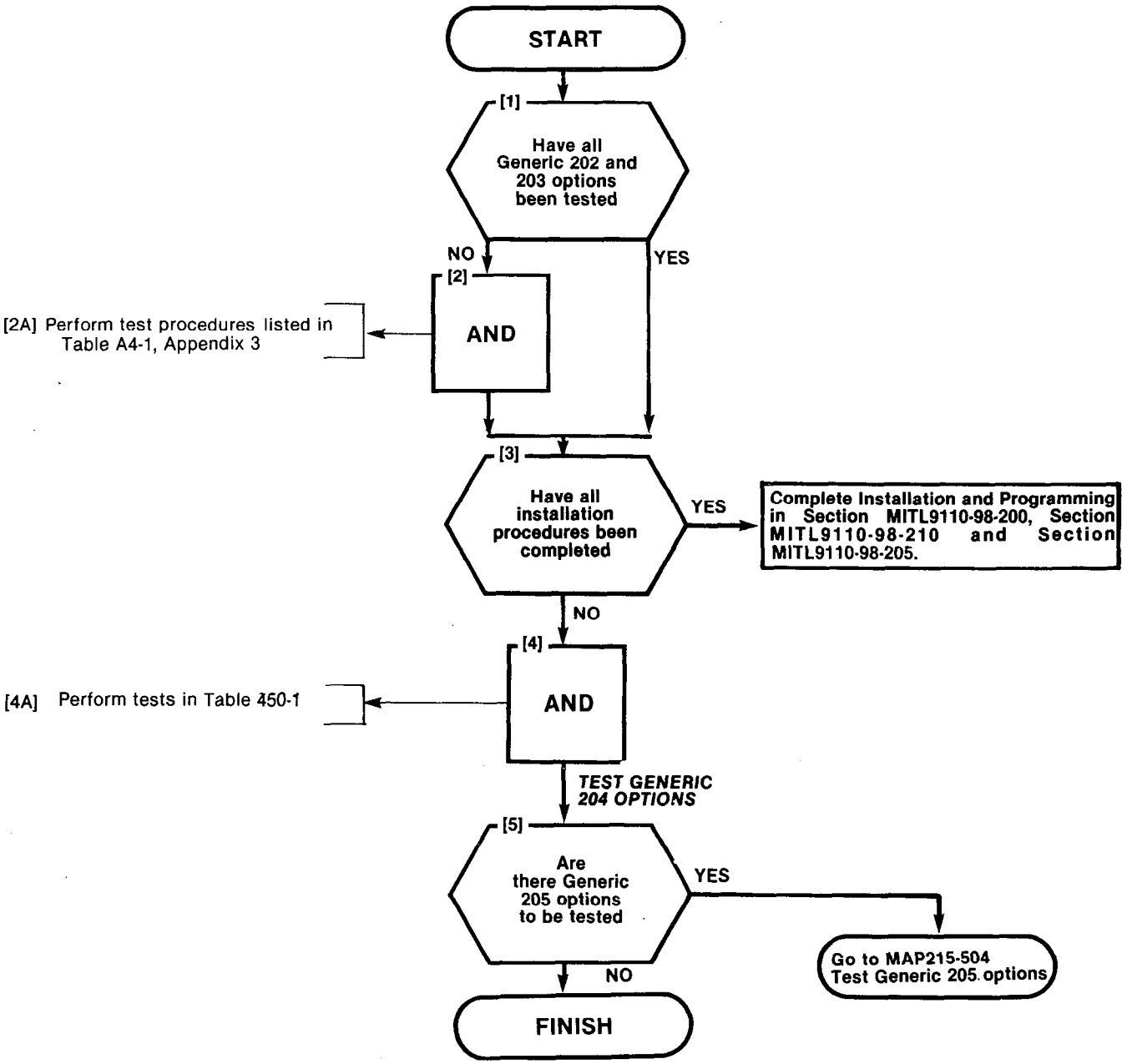

TABLE 450-1

OPTION	MAP NO.	REMARKS
Console Date Display and Date Utility	MAP215-451	
Customer Program Dump/Load	MAP215-452	
Room Audit	MAP215-454	H/M ONLY
Automatic Wake-Up (Alarm Call)	MAP215-455	H/M ONLY
System I.D.	MAP215-456	

CONSOLE DATE DISPLAY AND DATE UTILITY
MAP215-451
Issue 2, July 80
Sheet 1 of 1

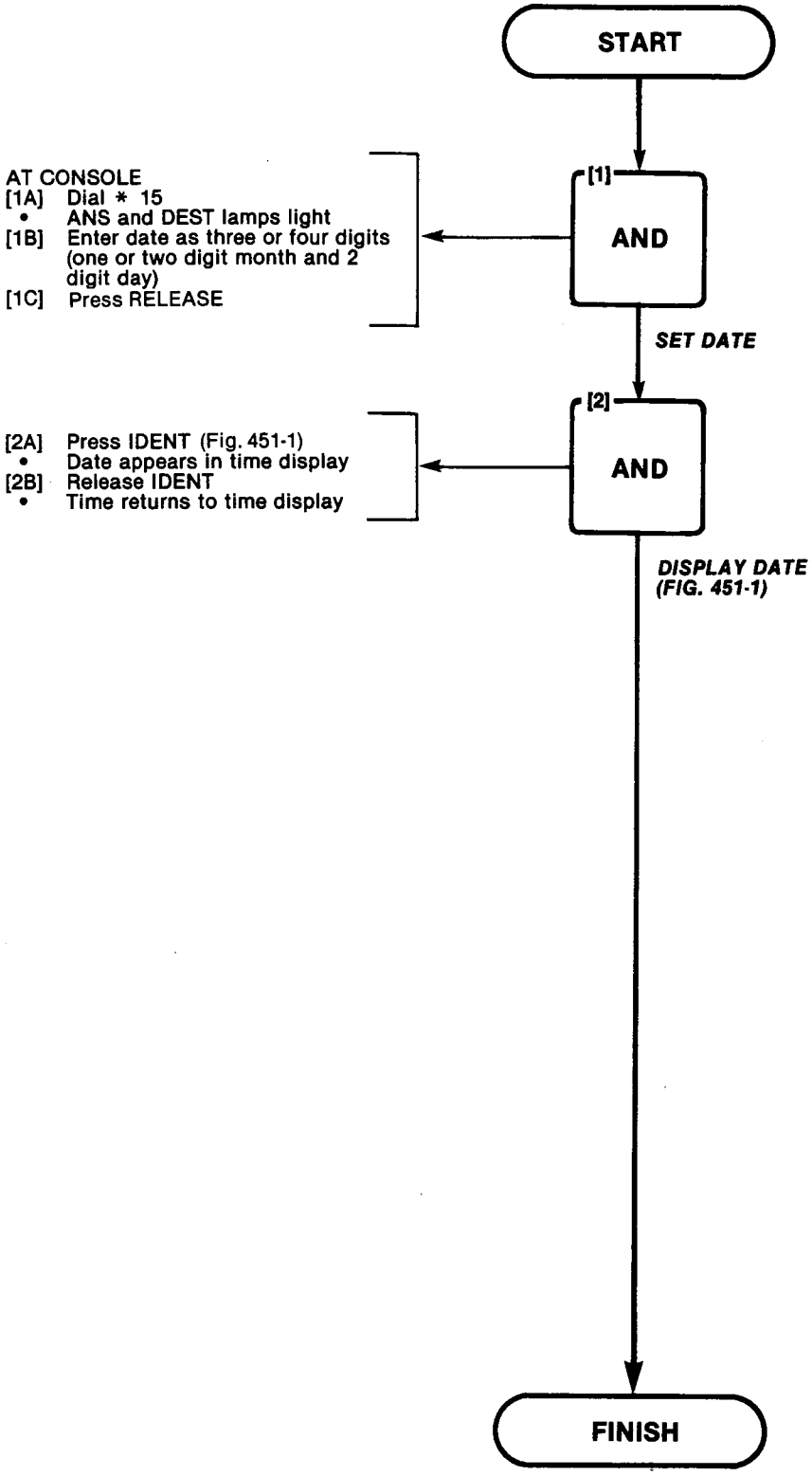

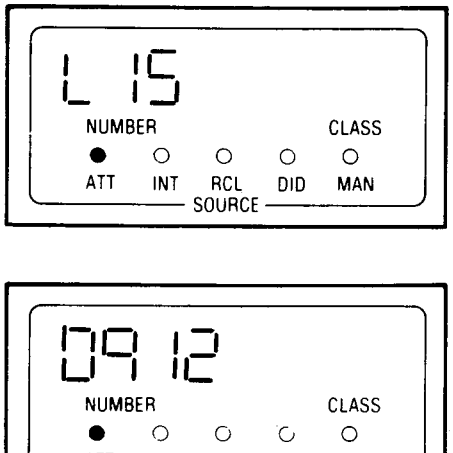

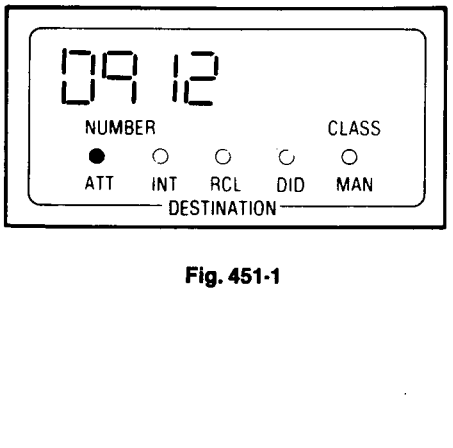

Fig. 451-1

CUSTOMER PROGRAM DUMP/LOAD
MAP215-452
Issue 2, July 80
Sheet 1 of 2

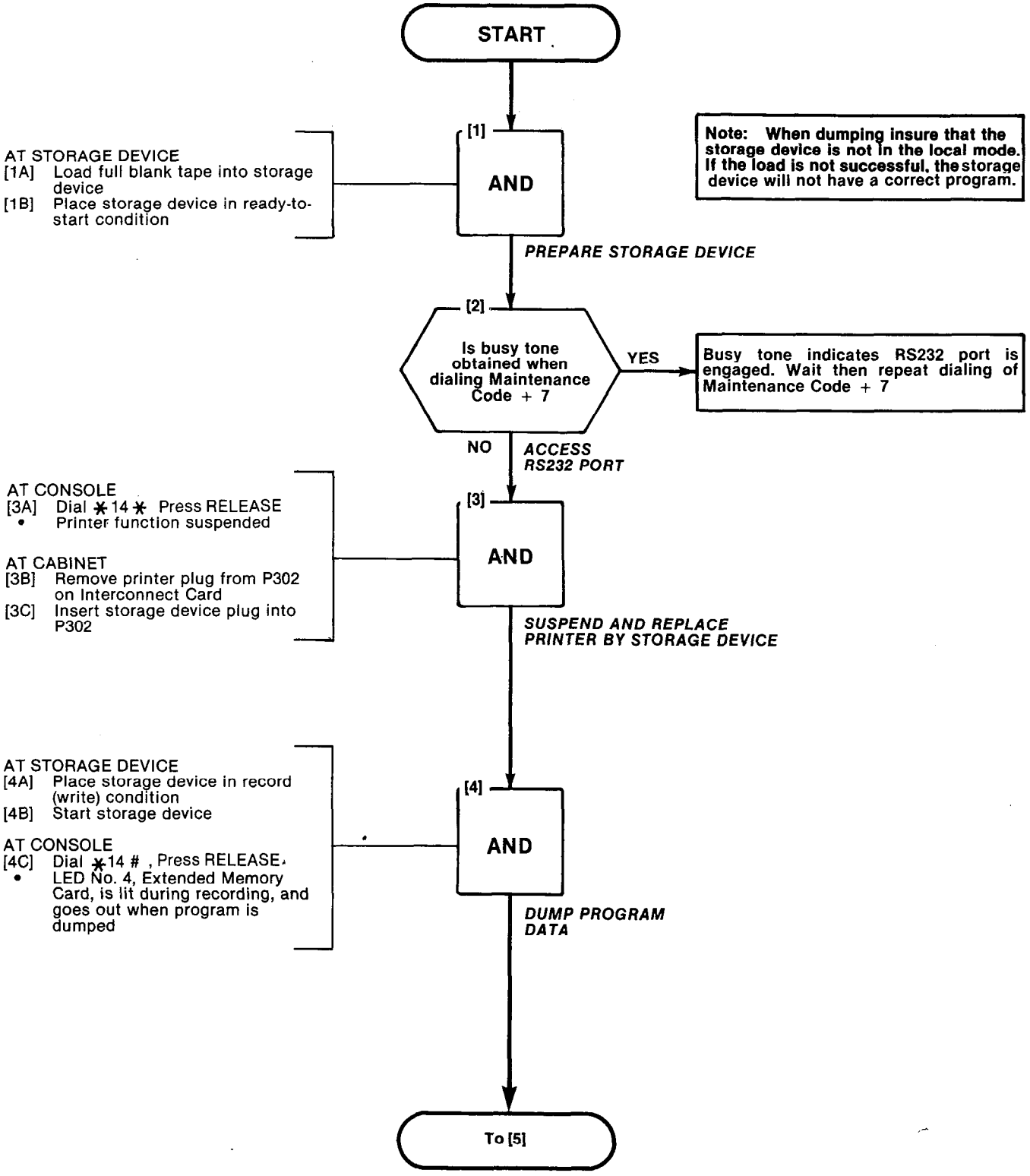

CUSTOMER PROGRAM DUMP/LOAD
MAP215-452
Issue 2, July 80
Sheet 2 of 2

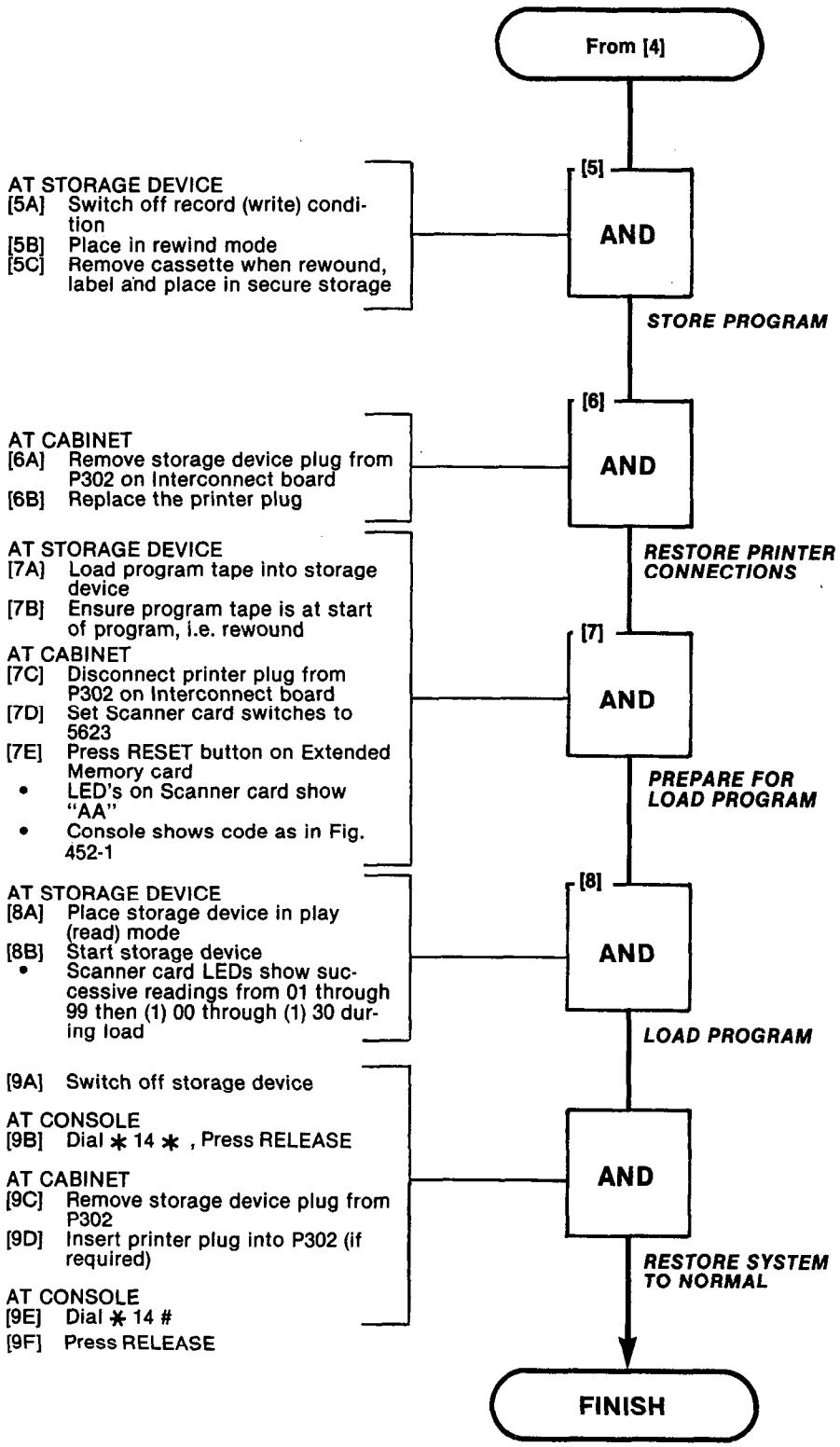

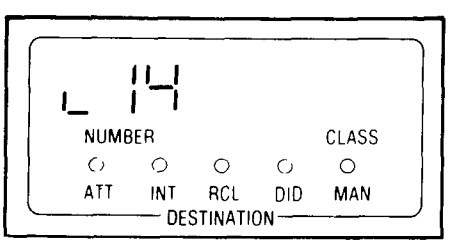

Fig. 452-1

ROOM AUDIT
MAP215-453
Issue 2, July 80
Sheet 1 of 1

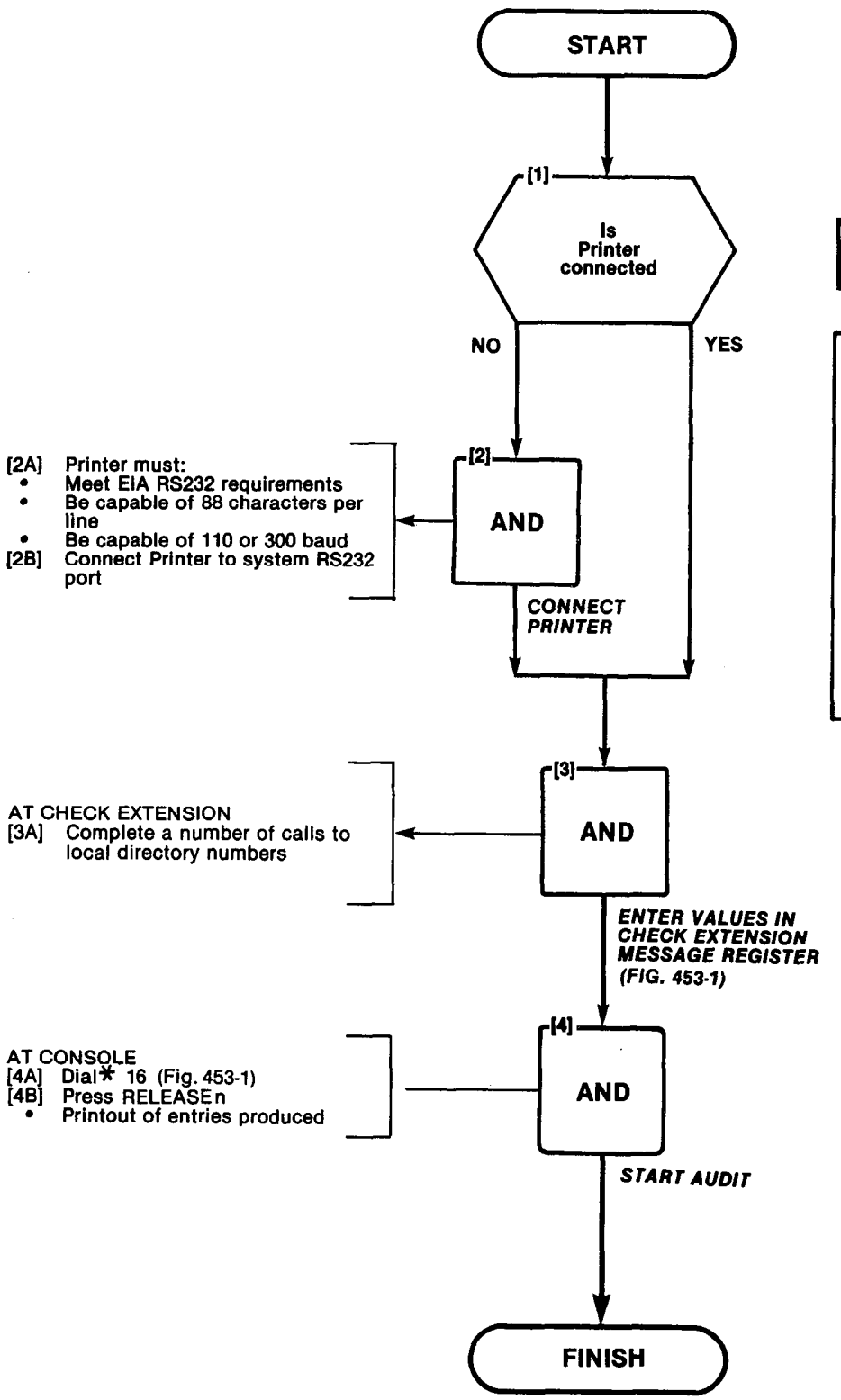

Note: Ensure Printer is not in local mode.

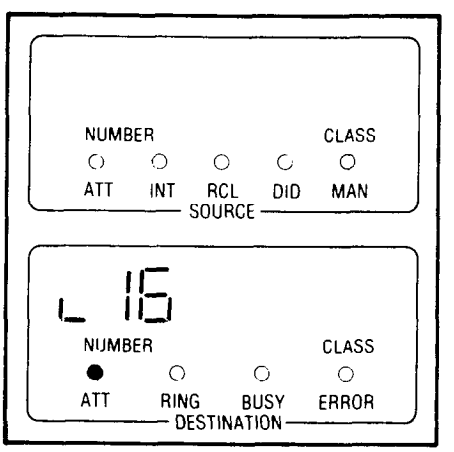

Fig. 453-1

AUTOMATIC WAKE-UP
MAP215-454
Issue 2, July 80
Sheet 1 of 2

START

AT CONSOLE
[1A] Press Guest Room button
• Guest Room lamp lights
[1B] Dial check extension number
• Destination display shows wake-up time if one has been requested. Display blank if no wake-up requested (Fig. 454-1)

[1] AND

TO SET AUTOMATIC WAKEUP FROM CONSOLE

[2] AND

[2A] Dial *, wake-up time, then # (or * if p.m., 12 hour format)
• Destination display shows wake-up time (Fig. 455-2)
[2B] Press RELEASE

TO SET AUTOMATIC WAKE-UP FROM CONSOLE (FIG. 454-2)

[3] AND

AT CHECK EXTENSION
[3A] Check extension rings at desired wake-up time

CHECK EXTENSION RINGS

[4] AND

AT CONSOLE
[4A] Repeat steps [1A] and [1B]
[4B] Dial * #
• Wake-up time clears from Destination display
[4C] Press RELEASE

CANCEL WAKE-UP TIME FROM CONSOLE

Note: If a printout is requested it will occur at steps 2B, 4C, 5C.

Go to [5]

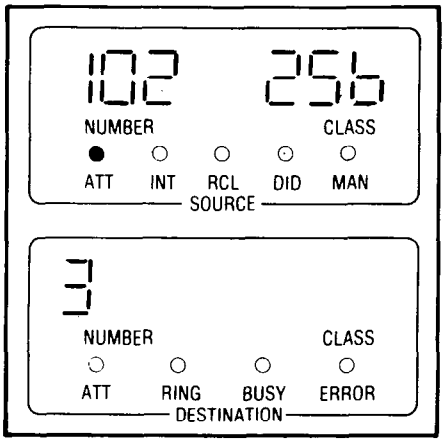

Fig. 454-1

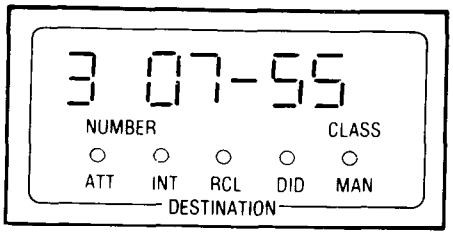

Fig. 454-2

AUTOMATIC WAKE-UP
MAP215-454
Issue 2, July 80
Sheet 2 of 2

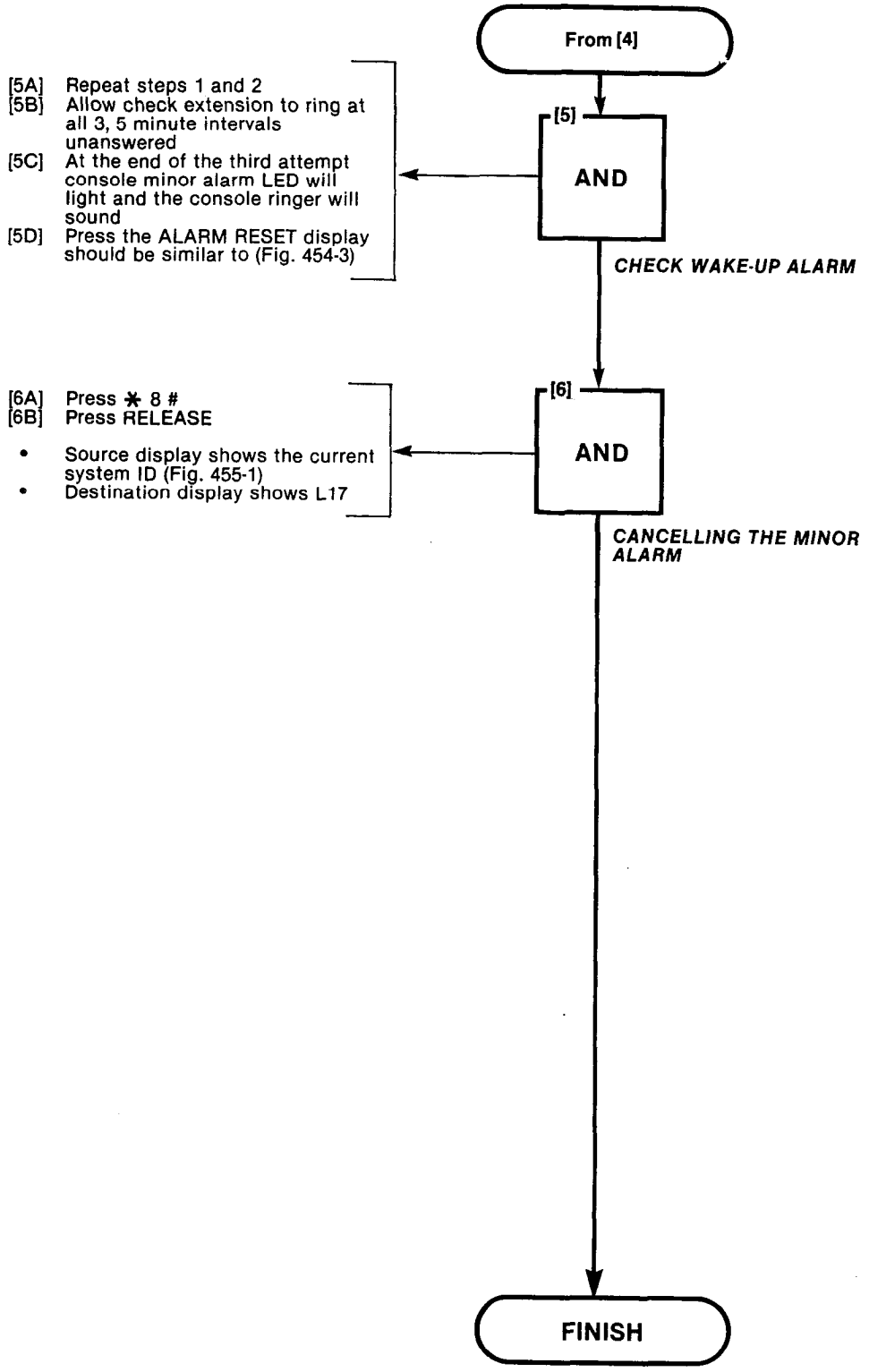

SYSTEM IDENTIFIER
MAP215-455
Issue 2, July 80
Sheet 1 of 1

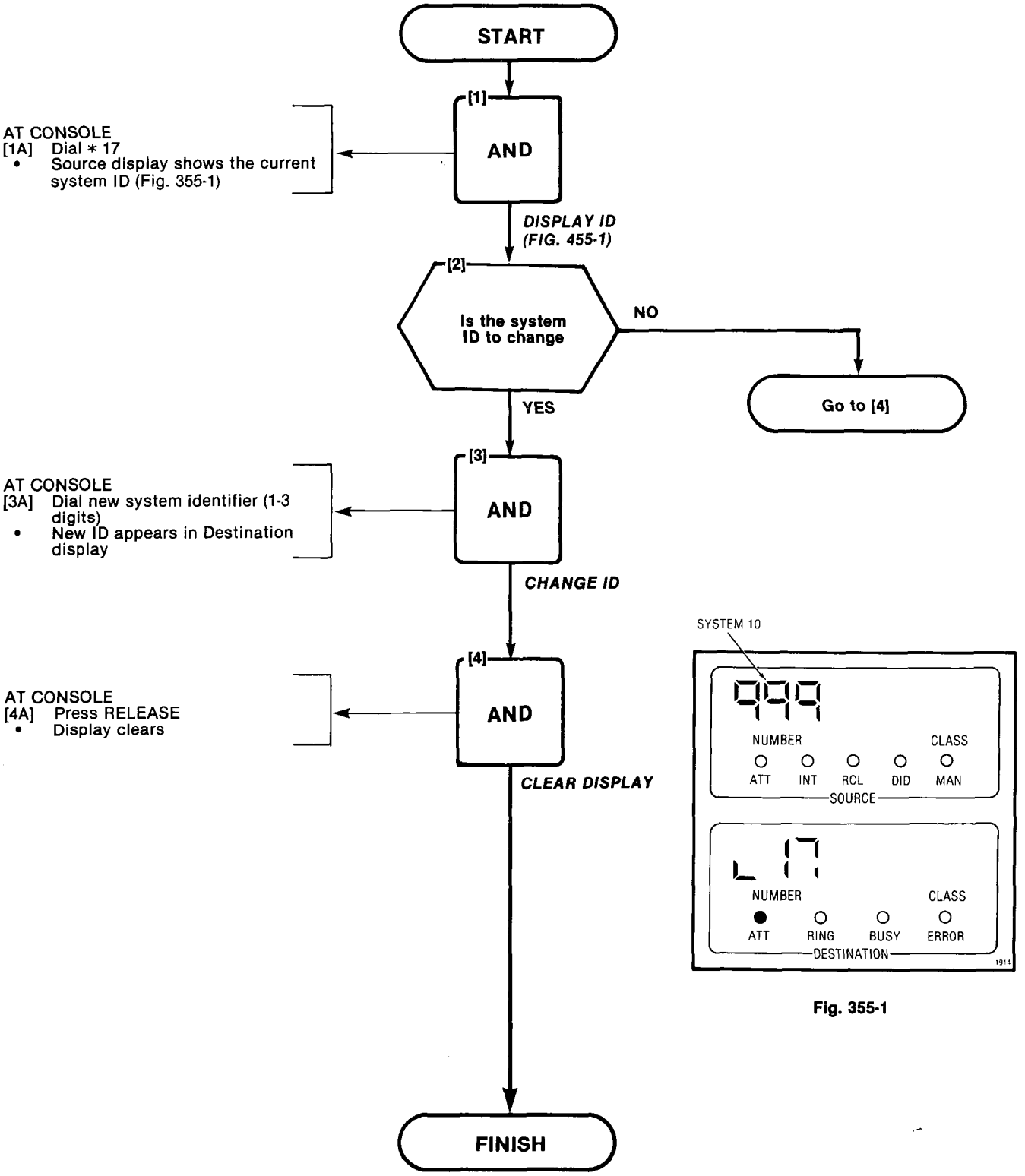

Fig. 355-1

APPENDIX 5

GENERIC 205 SYSTEM TESTS

General

A5.1 The SX-100 or SX-200 programmed with Generic 205 is tested in the order shown in the following Tables, using MAPs shown which appear in Appendix 5. These tests should be done after completing all required tests for Generics 202, 203 and 204 option tests that are used in 205 (see Table A5-1 and A5-2).

TABLE A5-1
GENERIC 205 EQUIPMENT - EXTENSION OPTIONS
TEST ORDER

Order	Option	MAP No.
1	Set Up Test Equipment	MAP215-001
2	Test Extension Options	MAP215-500
3	Broker's Call	MAP215-204
4	Call Forwarding - Busy	MAP215-205
5	Call Forwarding - Don't Answer	MAP215-206
6	Call Forwarding - Follow Me	MAP215-207
7	Call Park	MAP215-208
8	Call Pick-Up	MAP215-209
9	Camp-On	MAP215-210
10	Consultation Hold/Transfer/Add-On	MAP215-211
11	Automatic Callback - Don't Answer	MAP215-212
12	Automatic Callback - Busy	MAP215-213
13	Meet Me Conference	MAP215-214
14	Executive Busy Override	MAP215-215
15	Paging	MAP215-216
16	Do Not Disturb	MAP215-301
17	Call Block	MAP215-302
18	Call Hold	MAP215-303
19	Single Digit Dialing	MAP215-304
20	Transfer Into Busy	MAP215-305
21	Common Alerting Devices	MAP215-306
22	Enable Non-CO Trunk to Trunk Connect	MAP215-402
23	Use a Personnel Speed Call	MAP215-501
24	Use a Common Use Speed Call	MAP215-502

TABLE A5-2
GENERIC 205 EQUIPMENT - CONSOLE OPTIONS
TEST ORDER

OPTION	MAP NO.	ORDER	NOTES
Test Console Features	MAP215-504	1	
Answer CO Trunk Call	MAP215-351	2	
Answer DID Trunk Call	MAP215-352	3	
Attendant Do Not Disturb	MAP215-353	4	
Message Waiting	MAP215-354	5	
Call Forwarding - Busy	MAP215-355	6	
Call Forwarding - Don't Answer	MAP215-356	7	
Call Forwarding - Follow Me	MAP215-357	8	
Attendant Controlled Conference	MAP215-358	9	
Attendant Station Busy-Out	MAP215-359	10	
Attendant Do Not Disturb	MAP215-360	11	
Answer Incoming Call	MAP215-217	12	1
Automatic Callback	MAP215-218	13	
Extending Internal Calls	MAP215-219	14	
Answering a Recall	MAP215-220	15	
Override	MAP215-221	16	
Flexible Night Service	MAP215-222	17	
Trunk Busy Operation	MAP215-223	18	
Trunk Group Attendant Access	MAP215-224	19	
Trunk Group Dial Access	MAP215-225	20	
Test Termination	MAP215-226	21	
Console Date Display and Date Utility	MAP215-451	22	
Customer Program Dump/Load	MAP215-452	23	2, 3
System I.D.	MAP215-455	24	
Speed Call	MAP215-505	25	

Notes 1. MAP 215-216 tests are performed on Generic 202/up equipment. Generic 202/up equipment tests are listed in Table 2-4 starting at MAP212-351 incorporating the use of the Serial/Guest Room key.
2. A printer may be used.
3. A storage device may be used.

TEST EXTENSION OPTIONS
MAP215-500
Issue 1, July 80
Sheet 1 of 1

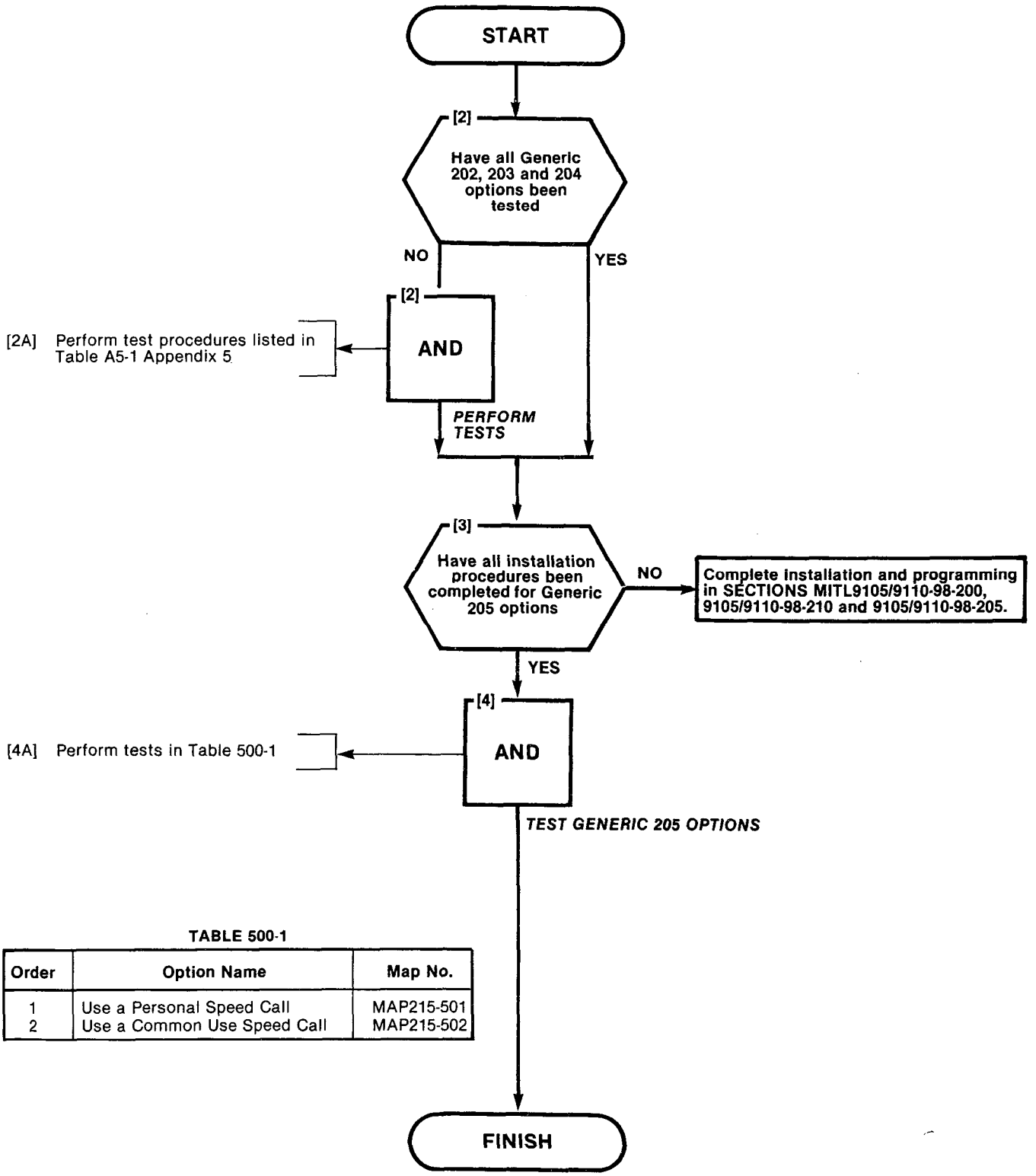

TABLE 500-1

Order	Option Name	Map No.
1	Use a Personal Speed Call	MAP215-501
2	Use a Common Use Speed Call	MAP215-502

USE A PERSONAL SPEED CALL
MAP215-501
Issue 1, July 80
Sheet 1 of 1

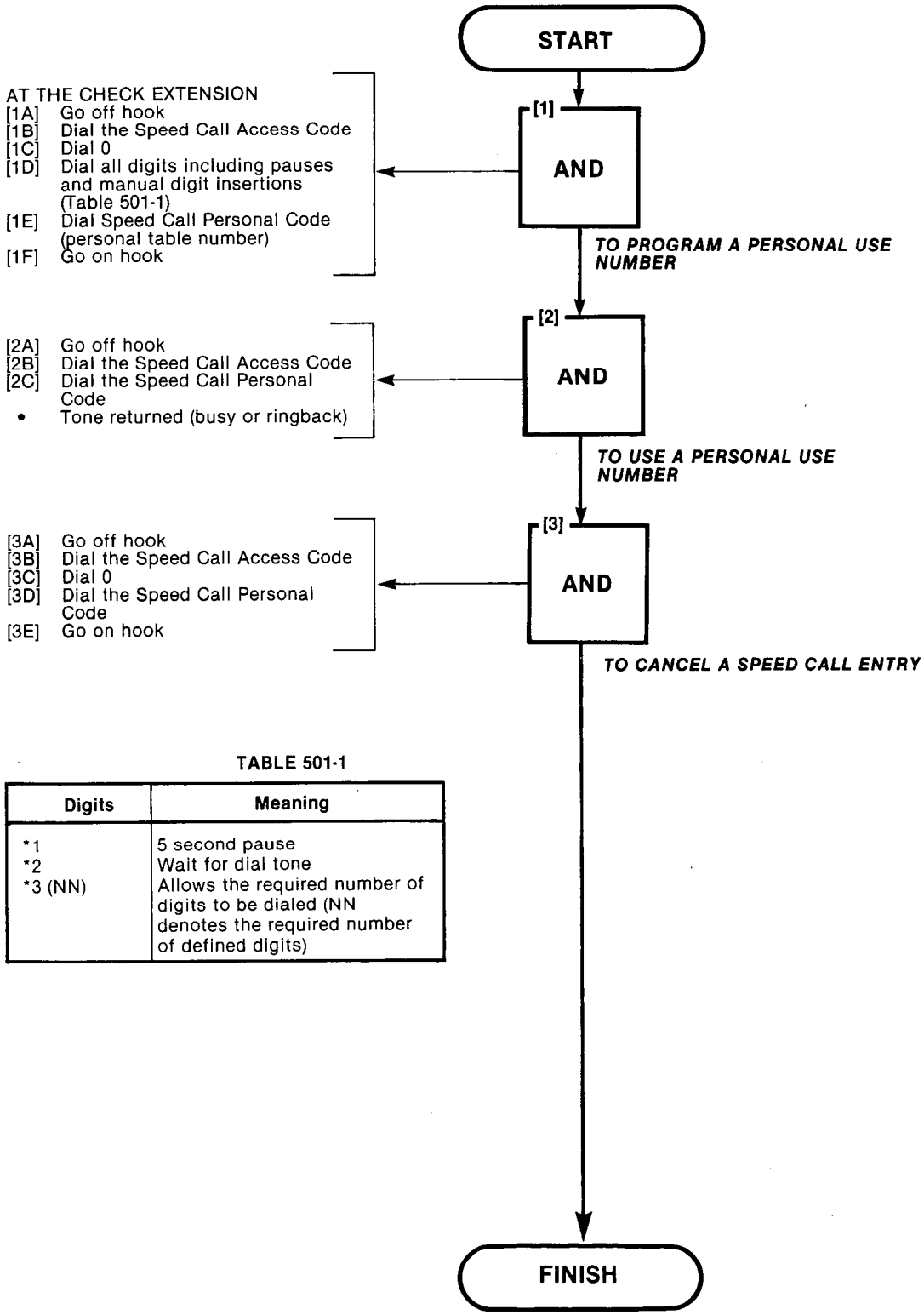

TABLE 501-1

Digits	Meaning
*1	5 second pause
*2	Wait for dial tone
*3 (NN)	Allows the required number of digits to be dialed (NN denotes the required number of defined digits)

USE A COMMON USE SPEED CALL
MAP215-502
Issue 1, July 80
Sheet 1 of 1

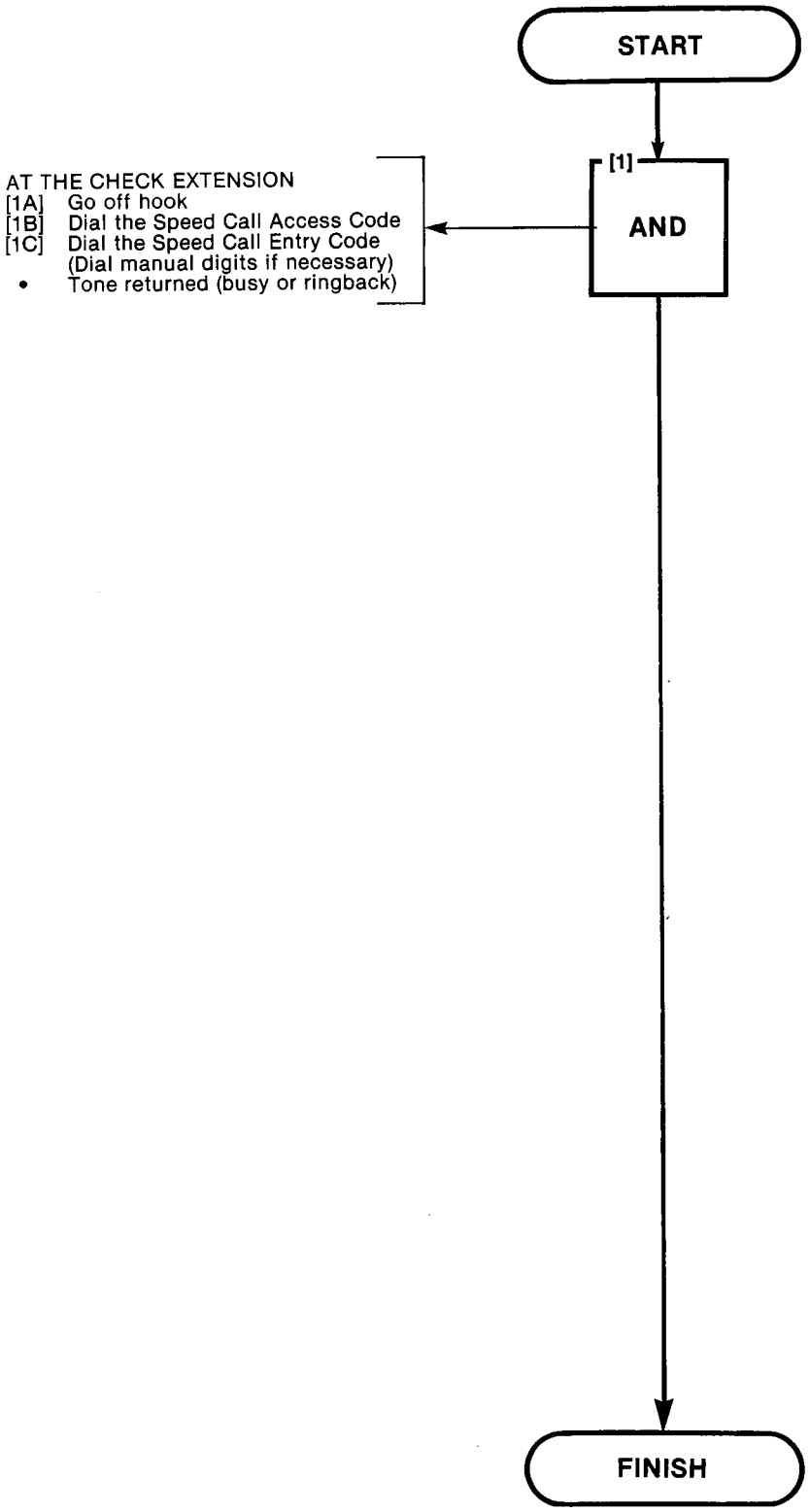

TEST CONSOLE OPTIONS
MAP215-504
Issue 1, July 80
Sheet 1 of 1

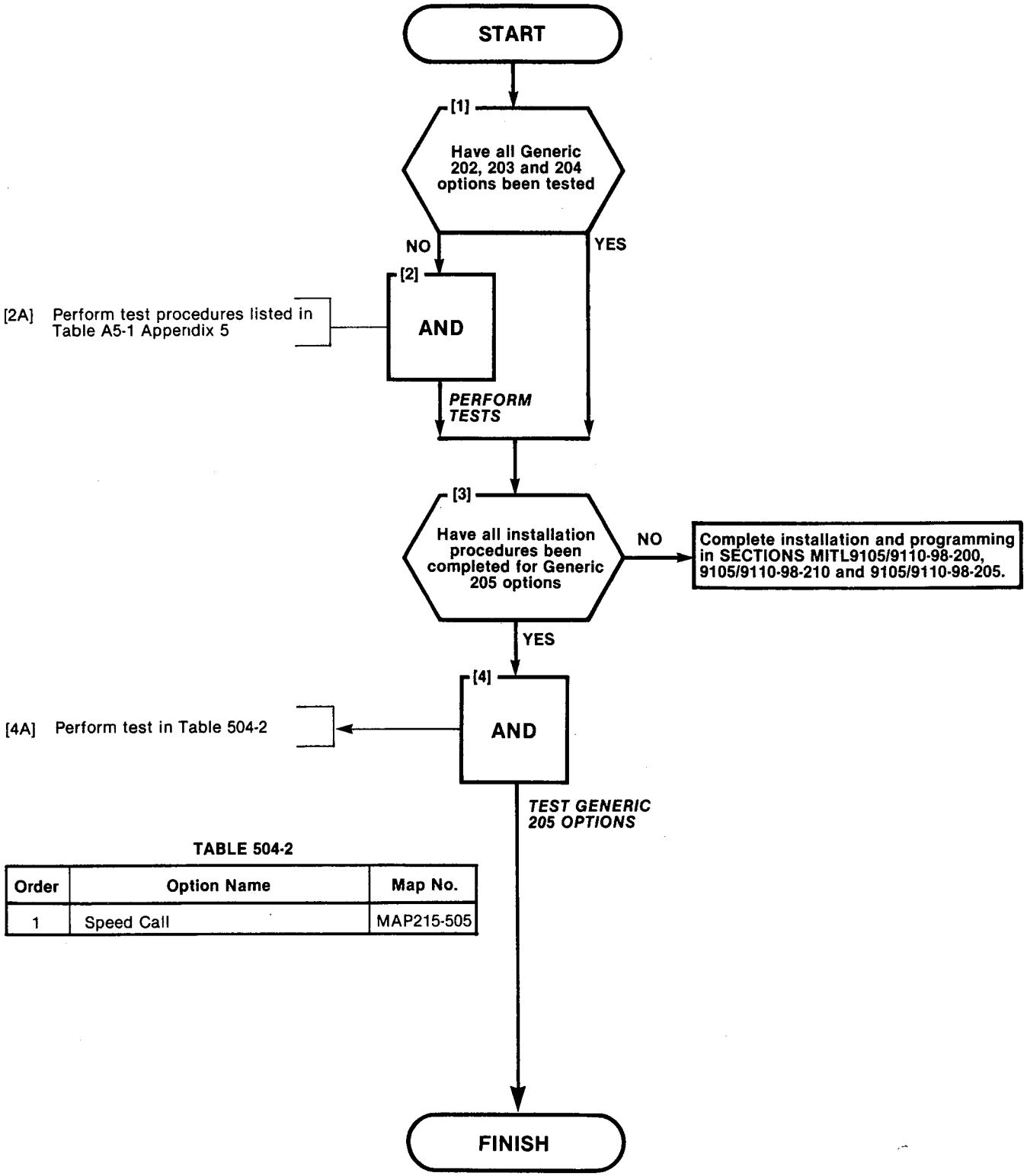

TABLE 504-2

Order	Option Name	Map No.
1	Speed Call	MAP215-505

SPEED CALL
MAP215-505
Issue 1, July 80
Sheet 1 of 1

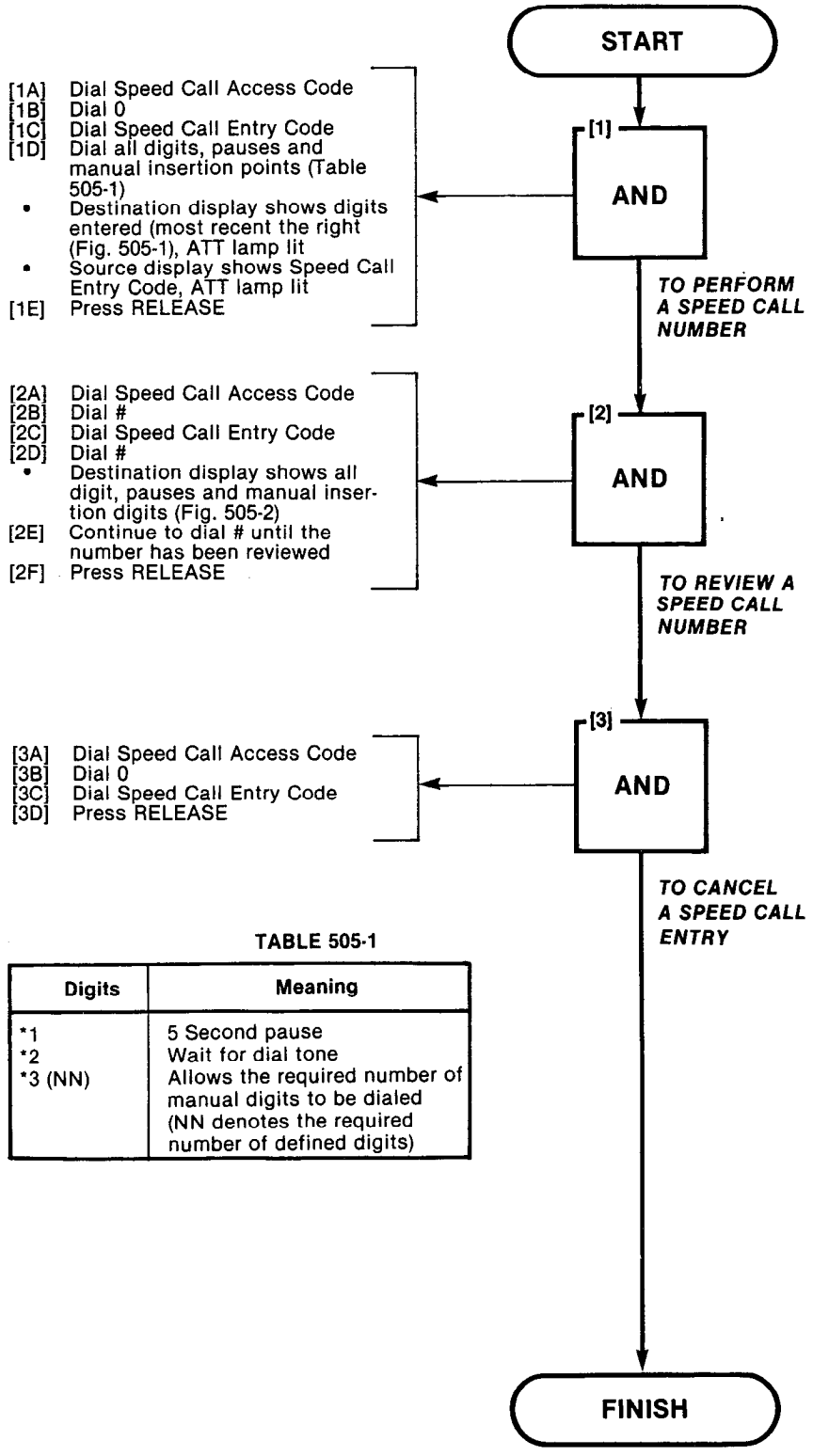

TABLE 505-1

Digits	Meaning
*1	5 Second pause
*2	Wait for dial tone
*3 (NN)	Allows the required number of manual digits to be dialed (NN denotes the required number of defined digits)

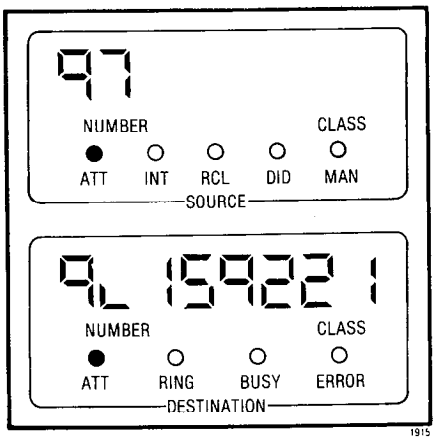

Fig. 505-1
Setup Speed Call Number

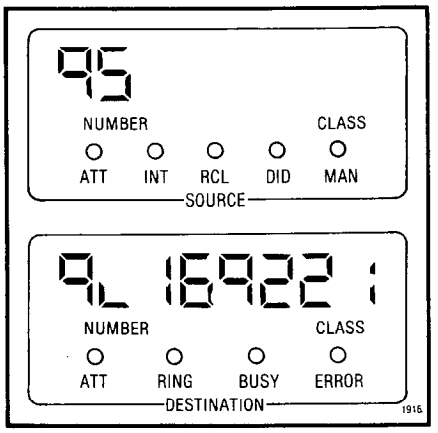

Fig. 505-2
Review Speed Call Number

SX-100*/SX-200*
SUPERSWITCH*
ELECTRONIC PRIVATE AUTOMATIC BRANCH EXCHANGE
EXTENSION TEST PROCEDURES

CONTENTS PAGE

1. GENERAL 1
Reason for Issue 1

2. TEST AND OPERATIONAL PROCEDURES . 1
General 1
Operating Procedures 1

Chart 2-1 Station-to-Station Call 2
Chart 2-2 Hunt Group 3
Chart 2-3 Broker's Call 4
Chart 2-4 Call Hold 5
Chart 2-5 Call Forwarding - Busy 7
Chart 2-6 Call Forwarding - Don't Answer 8
Chart 2-7 Call Forwarding - Follow Me 9
Chart 2-8 Override 10
Chart 2-9 Dial Call Pick-Up 11
Chart 2-10 Camp-On 12
Chart 2-11 Automatic Callback - Busy 13
Chart 2-12 Do Not Disturb 14
Chart 2-13 Call Park/Pick-Up 15
Chart 2-14 Paging 16
Chart 2-15 Trunk Answer From Any Station 17
Chart 2-16 Consultation Hold/Transfer/Add-On 18
Chart 2-17 Automatic Wake-Up (Alarm) Call 20
Chart 2-18 Meet-Me Conference 21
Chart 2-19 Automatic Call back - Don't Answer 22
Chart 2-20 Directed Call Pick-Up 23
Chart 2-21 Station Conference 24
Chart 2-22 Speed Call 25
Chart 2-23 Saved Number Redial 26

1. GENERAL

1.01 This section describes the extension test operating instructions for the SX-100/SX-200 PABX's. These procedures should be performed as operational tests upon installation of extensions after the initial system installation. See SECTION MITL9105/9110-98-200 for system installation instructions.

Reason for Issue

1.02 This has been reissued to include all Generic 205 information requiring an extension test procedure.

2. TEST AND OPERATIONAL PROCEDURES

General

2.01 Satisfactory completion of the operating procedures tests confirms that the apparatus has been installed and programmed correctly.

2.02 If any operating procedure cannot be completed as described, verify that:

- the procedure is applicable to the extension (ie. the feature being tested is assigned to the extension)
- the apparatus which provides the feature (eg. music on hold) is correctly installed

Operating Procedures

2.03 Chart 2-1 should be performed on each extension. Charts 2-2 through 2-26 should be performed once per system.

© MITEL Corporation 1980

* Registered Trademark of MITEL Corporation

CHART 2-1
STATION - TO - STATION CALL

STEP	ACTION	VERIFICATION
Called Station Idle		
1	Lift handset	Dial tone returned
2	Dial any extension number	Dial tone removed after first digit; ring-back tone heard after completion of dialing
3	Called extension answers	Ring-back tone removed; two-way conversation
4	Called and calling extensions replace handsets	
Called Station Busy (Enable Callback Busy)		
5	Lift handset	Dial tone returned
6	Dial originating extensions number	Busy tone returned
7	Dial Callback code	Dial tone returned
8	Replace handset	
9	Busy extension goes on-hook	Original extension rings
10	Original extension answers	Ringback tone returned. Called extension rings
11	Called extension answers	Two way conversation
Called Station Busy (Member of a Hunt Group)		
12	Lift handset	Dial tone returned
13	Dial Hunt Group Access Code	Dial tone removed after first digit; ring back tone heard; next free extension of group is rung
14	Free extension answers	Ring back tone removed; two way conversation
15	Extensions replace handset	

CHART 2-2
HUNT GROUP

STEP	ACTION	VERIFICATION
First Station Idle		
1	Lift handset	Dial tone returned
2	Dial Hunt Group access code	Dial tone removed after first digit; ring-back tone heard upon completion of dialing. First extension in group hears ringing
3	First extension answers	Ring-back tone removed; two-way conversation
First Station Busy (Terminal)		
4	Repeat 1 and 2 above	Next idle extension in group hears ringing
5	Next idle extension answers	Ring-back tone removed, 2 way conversation
Hunt Groups (Circular)		
6	Repeat steps 1 and 2	Hunting starts at the extension after the last extension rung in the group. System will ring first idle extension in the hunt group, if no idle extension is found, busy tone is returned

CHART 2-3
BROKER'S CALL

STEP	ACTION	VERIFICATION
Extension in conversation wishes a private alternative conversation after flashing switchhook.		
1	Flash switchhook	Transfer dial tone returned
2	Extension dials number of third party	Third party phone rings
3	Third party answers	Extension and third party may now converse in private
4	Extension flashes switchhook	Extension returns to original (1st) party
5	Third party is on hold. Extension may alternate between conversa tions by flashing switchhook	The three parties can NOT be joined together in one conversation

CHART 2-4
CALL HOLD

STEP	ACTION	VERIFICATION
To set up a CALL HOLD:		
1	Extension in conversation wishes to put call on hold, flashes switchhook	No tones or sound heard by extension on hold unless MOH is provided. Flashing extension receives transfer dial tone
2	Extension dials CALL HOLD code	Dial tone returned
3	Extension replaces handset	Extension is now free to make or receive calls
To retrieve the call at the original extension:		
4	Extension lifts handset	Dial tone returned
5	Extension dials CALL HOLD local retrieve code	Extension connected to call on hold
To retrieve a call at another extension:		
6	Extension lifts handset	Dial tone returned
7	Extension dials CALL HOLD Remote Retrieve code	No tones or sound heard
8	Extension dials Call Holding extension's number	Extension connected to call on hold
To use CALL HOLD as a Broker feature:		
9	Perform steps 1, 2 and 3 under "To set up a CALL HOLD"	
10	Extension lifts handset	Dial tone returned
11	Extension dials third party	Ring-back tone heard, third extension's phone is ringing
12	Third party answers	Conversation takes place
13	Extension flashes switchhook	Transfer dial tone is returned
14	Extension dials CALL HOLD code	Third party is placed on hold, second party is retrieved

CHART 2-4 (Cont'd)
CALL HOLD*

STEP	ACTION	VERIFICATION
15	Controlling extension may repeat steps 13 and 14 as often as required	Each repetition exchanges the party on hold with the one in the conversation
To join all three parties into one conversation:		
16	Extension flashes switchhook on second extension	Transfer dial tone returned
17	Extension dials CALL HOLD RETRIEVE code	Extension connected to third party
18	Extension flashes switchhook	Three parties in conversation

Note: A conference can NOT be put on CALL HOLD.

* Generic 203/up

CHART 2-5
CALL FORWARDING - BUSY

STEP	ACTION	VERIFICATION
To set up CALL FORWARDING - BUSY:		
1	Forwarding extension lifts handset	Dial tone returned
2	Extension dials CALL FORWARDING - BUSY code, and number of extension to which calls are to be forwarded (calls may also be forwarded to the attendant)	Dial tone heard; forwarding successful
3	Extension replaces handset	
To cancel a CALL FORWARDING - BUSY:		
4	Extension lifts handset	Dial tone returned
5	Extension dials CALL FORWARDING - BUSY code	No tones or sound heard
6	Extension replaces handset	Cancellation complete

CHART 2-6
CALL FORWARDING - DON'T ANSWER

STEP	ACTION	VERIFICATION
To set up CALL FORWARDING - DON'T ANSWER:		
1	Extension lifts handset	Dial tone returned
2	Extension dials CALL FORWARDING - DON'T ANSWER code and number of extension to which calls are to be forwarded (calls may also be forwarded to the attendant)	Dial tone returned; forwarding successful
3	Extension replaces handset	
To cancel CALL FORWARDING - DON'T ANSWER:		
4	Extension lifts handset	Dial tone returned
5	Extension dials CALL FORWARDING - DON'T ANSWER code	No tones or sound heard. Cancellation complete
6	Extension replaces handset	

CHART 2-7
CALL FORWARDING - FOLLOW ME

STEP	ACTION	VERIFICATION
To set up CALL FORWARDING - FOLLOW ME:		
1	Extension lifts handset	Dial tone returned
2	Extension dials CALL FORWARDING - FOLLOW ME code and number of extension to which calls are to be forwarded (calls may also be forwarded to the attendant)	Dial tone heard; forwarding successful
3	Extension replaces handset	
To cancel CALL FORWARDING - FOLLOW ME:		
4	Originating extension lifts handset	Dial tone returned
5	Originating extension dials CALL FORWARDING - FOLLOW ME code	No tones or sound heard. Cancellation complete
6	Extension replaces handset	

CHART 2-8
OVERRIDE

STEP	ACTION	VERIFICATION
1	Establish a two party call	Talking connection
2	Extension lifts handset	Dial tone returned
3	Dial busy extension	Busy tone returned
4	Calling extension dials OVERRIDE code	Parties in conversation hear a one second warning tone unless the COS of one or more of them prevents being over-ridden. After beep, calling extension is in conversation. All extensions will hear a short warning tone every six seconds

CHART 2-9
DIAL CALL PICK-UP

STEP	ACTION	VERIFICATION
Any extension in the Pick-Up group is ringing.		
1	Idle extension lifts handset	Dial tone returned
2	Extension dials DIAL CALL PICK-UP code	Extension is connected to calling party

CHART 2-10
CAMP-ON

STEP	ACTION	VERIFICATION
1	Establish a two party call	
2	Extension lifts handset	Dial tone returned
3	Dial busy extension	Busy tone returned
4	Calling extension remains off-hook for more than ten seconds	a) Calling extension after ten seconds receives a change in busy tone b) The dialed extension receives a short warning tone
5	Busy extensions hang up	Dialed extension is rung

CHART 2-11
AUTOMATIC CALLBACK - BUSY

STEP	ACTION	VERIFICATION
1	Extension lifts handset	Dial tone returned
2	Dial busy extension	Busy tone returned
3	Calling extension dials AUTOMATIC CALLBACK - BUSY code	Dial tone returned
4	Calling extension replaces handset	
5	Called extension replaces handset	a) Calling extension rings b) Called extension rings when calling extension answers c) Calling extension hears ringback tone d) Conversation - 2-way

CHART 2-12
DO NOT DISTURB

STEP	ACTION	VERIFICATION
Extension sets up DO NOT DISTURB:		
1	Extension lifts handset	Dial tone returned
2	Extension dials DO NOT DISTURB code followed by 1	Dial tone returned
3	Extension replaces handset	
4	Extension is not called while in the DO NOT DISTURB mode	A calling extension receives reorder tone or attendant intercept
Extension cancels DO NOT DISTURB:		
5	Extension lifts handset	Dial tone returned
6	Extension dials DO NOT DISTURB code followed by 2	No tone or sound, DO NOT DISTURB is cancelled
7	Extension replaces handset	Calling extensions can ring the original extension

CHART 2-13
CALL PARK/PICK-UP

STEP	ACTION	VERIFICATION
To park an established call:		
1	Flash switchhook	Transfer dial tone returned
2	Extension dials CALL PARK code	Dial tone returned to parking extension. No tones or sound heard unless music provided to parked extension
3	Extension replaces handset	
To Pick-Up a parked call from the parking extension:		
4	Extension lifts handset	Extension connected to parked call
To Pick-Up a parked call using an alternate extension:		
5	Lift handset of alternate extension	Dial tone returned
6	Alternate extension dials CALL PARK/DIRECTED CALL PICK-UP code and number of parking extension	Alternate extension connected to parked call

CHART 2-14
PAGING

STEP	ACTION	VERIFICATION
1	Extension lifts handset	Dial tone returned
2	Extension dials paging zone code	Extension receives a short warning tone. Extension may now page
3	Extension replaces handset	
Repeat for each of three codes if assigned.		

CHART 2-15
TRUNK ANSWER FROM ANY STATION

STEP	ACTION	VERIFICATION
To answer a TAFAS call		
1	Extension user hears night bell	
2	Extension lifts handset	Dial tone returned
3	Extension dials TAFAS night code	Extension is connected to trunk call

CHART 2-16
CONSULTATION HOLD/TRANSFER/ADD-ON

STEP	ACTION	VERIFICATION
CONSULTATION HOLD: Established Call		
1	Extension flashes switchhook	a) Flashing extension receives transfer dial tone b) Second extension in conversation put on HOLD, and hears music if provided
2	Extension which flashed, dials third extension	Third extension rings
3	Third extension answers	Effecting extension and third extension connected. Second extension remains on HOLD
TRANSFER: To idle extension:		
4	Perform steps 1 and 2 in CONSULTATION	Third extension rings
5	Extension effecting transfer replaces handset	Extension on HOLD receives ringing tone, and is connected to third extension when it is answered
To busy extension:		
6	Perform steps 1 and 2 in CONSULTATION HOLD	Third extension busy, effecting extension receives busy tone
7	Extension effecting transfer replaces handset	Extension on HOLD receives busy tone and is CAMPED-ON busy line after 10 seconds
During Consultation:		
8	Perform steps 1 to 3 in CONSULTATION HOLD	Effecting extension and third extension converse
9	Effecting extension hangs up	Extension on hold and third extension connected

CHART 2-16 (Cont'd)
CONSULTATION HOLD/TRANSFER/ADD ON

STEP	ACTION	VERIFICATION
ADD ON:		
10	Perform steps 1 to 3 in CONSULTATION HOLD	Effecting extension and third extension connected. Second extension remains on HOLD
11	Effecting extension flashes switchhook	All three extensions connected
After three way consultation:		
12	Perform steps 1 to 3 in CONSULTATION HOLD	Effecting extension and third extension converse
13	Effecting extension flashes switchhook	All extensions connected
14	Effecting extension replaces handset	Remaining extensions remain connected

CHART 2-17
AUTOMATIC WAKE-UP (ALARM CALL) *

STEP	ACTION	VERIFICATION
Extension sets AUTOMATIC WAKE-UP (ALARM CALL)		
1	Extension lifts handset	Dial tone returned
2	Extension dials Automatic Wake-Up access code and Wake-Up time as a four digit number (24 hour clock)	Dial tone returned
3	Extension replaces handset	
4	At selected time	Extension is rung a) Extension receives a tone or receives MOH if provided
Extension cancels AUTOMATIC WAKE-UP (ALARM CALL)		
5	Extension lifts handset	Dial tone returned
6	Extension dials Automatic Wakeup access code and 9999	Dial tone returned
7	Extension replaces handset	Wake-Up call is cancelled

* Available in Generic 204 only.

CHART 2-18
MEET-ME CONFERENCE

STEP	ACTION	VERIFICATION
To set up a MEET-ME CONFERENCE:		
1	At a prearranged time dial Meet-Me Conference Access Code from up to seven extensions	First extension on hold. First extension hears warning tone as second extension is connected. Extensions in conference hear warning tone as succeeding extensions are connected

CHART 2-19
AUTOMATIC CALLBACK - DON'T ANSWER

STEP	ACTION	VERIFICATION
To set up AUTOMATIC CALLBACK - DON'T ANSWER:		
1	Extension lifts handset	Dial tone returned
2	Extension dials destination	Destination extension rings
3	Extension receives no answer, flashes switchhook	Dial tone returned
4	Extension dials AUTOMATIC CALLBACK - DON'T ANSWER code and number of extension called	Dial tone returned
5	Extension replaces handset	
6	Called extension uses extension	Extension goes busy for duration of call
7	Called extension replaces handset	Calling extension rings
8	Calling extension lifts handset	Called extension rings; calling extension hears ring-back tone
9	Called extension answers	Conversation takes place

CHART 2-20
DIRECTED CALL PICK-UP

STEP	ACTION	VERIFICATION
Any extension is ringing		
1	Extension lifts handset	Dial tone returned
2	Extension dials DIRECTED CALL PICK-UP code, and the number of the extension being rung	Extension is connected to call

CHART 2-21
STATION CONFERENCE

STEP	ACTION	VERIFICATION
1	Extension lifts handset	Dial tone returned
2	Extension dials first conferee extension for STATION CONFERENCE	Called party extension rings
3	Called extension answers. Calling extension informs of conference, flashes switchhook and dials second conferee extension	a) Calling extension and called extension connected b) Called extension goes on hold. Calling extension receives transfer dial tone c) Second conferee extension rings
4	Second conferee answers	
5	Calling extension flashes switchhook	All extensions connected
6	Any extension may add up to a total of 7 extensions to the STATION CONFERENCE by repeating steps 3 b) & c)	

CHART 2-22
SPEED CALL*

STEP	ACTION	VERIFICATION
Extension programs a Speed Call:		
1	Extension lifts handset	Dial tone returned
2	Extension dials Speed Call Access Code	
3	Extension dials 0	
4	Extension dials Speed Call Entry Access Code	
5	Extension dials Trunk Group Access Code	Note 1
6	Extension dials digits to be used as Speed Call Number	Note 1
7	Extension replaces handset	
To verify programmed number:		
8	Extension dials Speed Call Access Code	
9	Extension dials Entry Access Number and manual digits if required	If the call is successful ring back tone will be returned from the CO and the correct number will be rung

Note 1: * 1 for 5 second pause or * 2 for wait for dial tone or * 3nn for user dialed digits may be entered at any time.

* Generic 205 only

CHART 2-23
SAVED NUMBER REDIAL

STEP	ACTION	VERIFICATION
Extension programs a last number redial:		
1	After completion of dialing an outside number the extension has 10 seconds to dial an * . This will store the dialed number in the last number redial.	
To use saved number redial:		
2	Extension goes off-hook	Dial tone returned
3	Extension dials Speed Call Feature Access Code	
4	Extension dials Entry Access Number	Last number dialed rings

AtoZ KELLATRONICS, INC.
tel 800 766 3425 fax 800 720 1172
818 773 8888 818 773 8899
www.kellatronics.com info@kellatronics.com

PRINTED IN CANADA

SX-100* AND SX-200* SUPERSWITCH* ELECTRONIC PRIVATE AUTOMATIC BRANCH EXCHANGE TROUBLESHOOTING

CONTENTS PAGE

1. GENERAL 1

Introduction 2

Basic Troubleshooting Philosophy 3

2. CIRCUIT CARD AND MAINTENANCE PANEL AIDS 3

Card Shelf 3
RAM/COS Card (Basic) 3
Memory Expander Card 3
PROM CPU Card (Basic) 3
Scanner Card (Basic) 7
Tone Control Card 7
Tone Control Thumbwheel Switches 7
Maintenance Functions 7
Load Functions 8
Console Control Card (Basic) 8
Console Control Line and Data LEDs 8
Remote Control RMAT 8
Receiver Card 8
Trunk Card 8
Trunk Busy/Idle LEDs 8
Trunk Incoming and Outgoing Busy Switches 9
Line Card 9
Maintenance Panel 9
Maintenance Console Connector 9
Power Fail Transfer Control Switches 9
Test Line Terminals 9
The System Power Switch Cards External to the Shelf 10
The SX-200 Interconnect Card 11
The SX-200 Power Fail Transfer Card 11
The Console Interface Card 11
Shelf Backplane 13

3. CONSOLE AND TEST LINE MAINTENANCE FUNCTIONS 16

Console Maintenance Functions 16
Console Alarm LEDs and Maintenance Aids 16
Minor Alarm LED 16
Console Alarm LED 16
Major Alarm LED 16
Alarm Reset Button 17
IDENT Button 17
Error Codes 17
Power Fail Transfer Switch 17
Test Line Functions
General 18
Direct Trunk Access 18
To Set and Clear Busy Out of Receivers 18
Clear All Errors 18
Select a Speech Path and or Receiver 18
Slot Initialization Activate 19
Forced Trunk Release 19

4. CONSOLE FUNCTIONS AND ERROR CODES 19

Current Speech Path Display 20
Line and Trunk Status Display 20
Table 4-1 Access Codes 22
Table 4-2 Maintenance Function Access Codes 24
Table 4-3 Traffic Measurement Function Codes 25
Table 4-4 Error Codes 26
Table 4-5 Standard Programming Error Codes 29
Table 4-6 Extended Programming Error Codes 30

5. SYSTEM OPERATION 32

General 32
Extension Operation 32

© MITEL Corporation 1980

* Trademark MITEL Corporation

CONTENTS PAGE

Console 33
Dialing a Trunk (Console) 33
Hook Flash 34
Incoming Calls (GS/LS Trunks) 35
TABLES 35
Table 5-2 Error Code Procedures 40
Table 5-3 Extension Fault Report Procedures 42
Table 5-4 Console Faults 44
Table 5-5 Trunk Fault Report Procedures 45
Table 5-6 System Faults 46

6. SX-100/SX-200 POWER SUPPLY 47

AC/DC Convertor 47
DC/DC Convertor 47
Ringing Generator 47
Out of Tolerance 47
Reserve Battery Backup and Charger 47

7. REMOTE MAINTENANCE ADMINISTRATION AND TEST SYSTEM 57

APPENDIX 1 MITEL ACTION PROCEDURES . A1-1

APPENDIX 2 SYSTEM PARAMETERS A2-1

APPENDIX 3 SYSTEM CABLING A3-1

APPENDIX 4 SX-100 MECHANICAL INFORMATION A4-1

APPENDIX 5 SX-200 MECHANICAL INFORMATION A5-1

APPENDIX 6 POWER CHECKS A6-1

APPENDIX 7 TROUBLESHOOTING MAPs ... A7-1

1. GENERAL

Introduction

1.01 This section contains information to be used when troubleshooting the SX-100/SX-200 PABX's. The practice is divided into six parts and seven appendices:

- **Part 1 General** - gives a brief outline of the practice and a general introduction to the troubleshooting philosophy.
- **Part 2 Maintenance Aids** - describes the maintenance aids provided by the system and gives a description of each indicator, switch and display.
- **Part 3 Console and Test Line Functions** -contains a description of the maintenance functions which can be dialed from the console or the test line.
- **Part 4 Error Code Troubleshooting** - describes the troubleshooting procedures to be used in conjunction with the system error code displays.
- **Part 5 Fault Report Troubleshooting** - this part details troubleshooting procedures to be used when no error code is reported.
- **Part 6 SX-100/SX-200 Power Supply Specifications** - defines the electrical and operational specifications for the SX-100/200 PABX power supplies.
- **Appendix one** - Mitel Action Procedures (MAPs).
- **Appendix two** - provides a series of tables of all system parameters.
- **Appendix three** - provides installation and cabling information for the SX-100/200 PABX's.
- **Appendix four** - contains the mechanical information pertaining to the SX-100 in the form of MAPs (MITEL ACTION PROCEDURES) and Tables.
- **Appendix five** - contains the mechanical information pertaining to the SX-200 in the form of MAPs and Tables.
- **Appendix six** - contains all power checks pertaining to the SX-100/200 in the form of MAPs and Tables.
- **Appendix seven** - details, in the form of MAPs, the procedures required to locate and fix malfunctions in the PABX's.

1.02 It should be noted that certain sections and appendices must be used as interlocking information for complete troubleshooting.

1.03 Basic Troubleshooting Philosophy: The SX-100/200 PABX's employ automatic diagnostics which, in most cases, can pinpoint faults to a specific printed circuit card. A system malfunction is generally corrected by the replacement of an indicated faulty circuit card with a known (good) spare. Should the need arise, the actual shelf backplane or power supply may be easily replaced by a new unit. The tables, MAPs and explanations in this practice should be sufficient in most cases to cover any problems which may arise in the field.
Actual field repair of components on cards, shelves or power supplies is never done.
All defective units should be returned to MITEL as per Section MITL9105/9110-98-200.

2. CIRCUIT CARD AND MAINTENANCE PANEL AIDS

2.01 The SX-100/200 PABX's are equipped with various maintenance aids that will be of assistance to the repair person troubleshooting the system. This part is a card by card description with specific reference to all indicators, switches and fuses on the cards. In addition the connectors and switches on the maintenance panel are also described.

2.02 Card Shelf: Fig. 2-1 illustrates the card locations in the equipment shelf or shelves. A visual display of all cards is shown in Fig. 2-2 and Fig. 2-3. Fuses on the backplane of the shelf are described in paragraph 2.22.

2.03 Both the SX-100 and SX-200 employ only nine basic and four optional types of cards in the card shelf (Fig 2-2 and Fig. 2-3). These may be used in either system, minimizing stocking and control problems for field maintenance.

2.04 RAM/COS Card (basic): This printed circuit card contains the system 8K byte scratch pad (volatile) Random Access Memory, together with 2K bytes of CMOS (non-volatile) Random Access Memory which is used for the storage of customer configuration data (Class of Service options, numbering plan etc.). No functions other than memory read/write functions are performed on this card. (See Fig. 2.2). This card also contains a RAM battery pack with an LED that will be lit to indicate that the pack is seated correctly and is charging.

2.05 Memory Expander Card: This card has the capability of carrying 28K bytes of Programmable Read Only Memory (PROM) containing generic programs. The Memory Expander card holds four diagnostic LEDs:

- the top LED, when flashing indicates that the automatic diagnostics are running. This LED will not flash (the diagnostics do not run) when the system is in programming mode, or when less than 4 speech paths are idle. Under these circumstances, the LED may be either on or off, its state has no special meaning.
- the second LED, when lit, indicates that the system is in the programming mode.
- the third LED, when lit, indicates that the RS232 port is in use (Generic 204 and up).
- the fourth LED, when lit, indicates that a Data Dump or Load is in progress (Generic 204 and up).

2.06 The PROM/RAM (optional) Expander card can be used in place of the Memory Expander. It contains an additional 2K of CMOS RAM. A fifth LED on the battery pack indicating that the battery pack is seated correctly and is charging.

2.07 PROM/CPU Card (basic): The PROM/CPU card contains system generic programs in Programmable Read Only Memory (PROM), and also contains the microprocessor, which together with the generic program constitutes the intelligence of the PABX. The basic system clock is also located on this card (See Fig. 2-2).

2.08 Scanner Card (basic): The scanner card (Fig. 2-2) contains a two digit display which is used to display faulty card positions. It may be used in conjunction with the test line to display the status of selected circuits and to support the customer data Load and Dump. The two digit display is read from top to bottom. If a card is malfunctioning, the display will show the position number of the faulty card (01-22 for equipment shelf 1 and 31-42 for SX-200 equipment shelf 2).

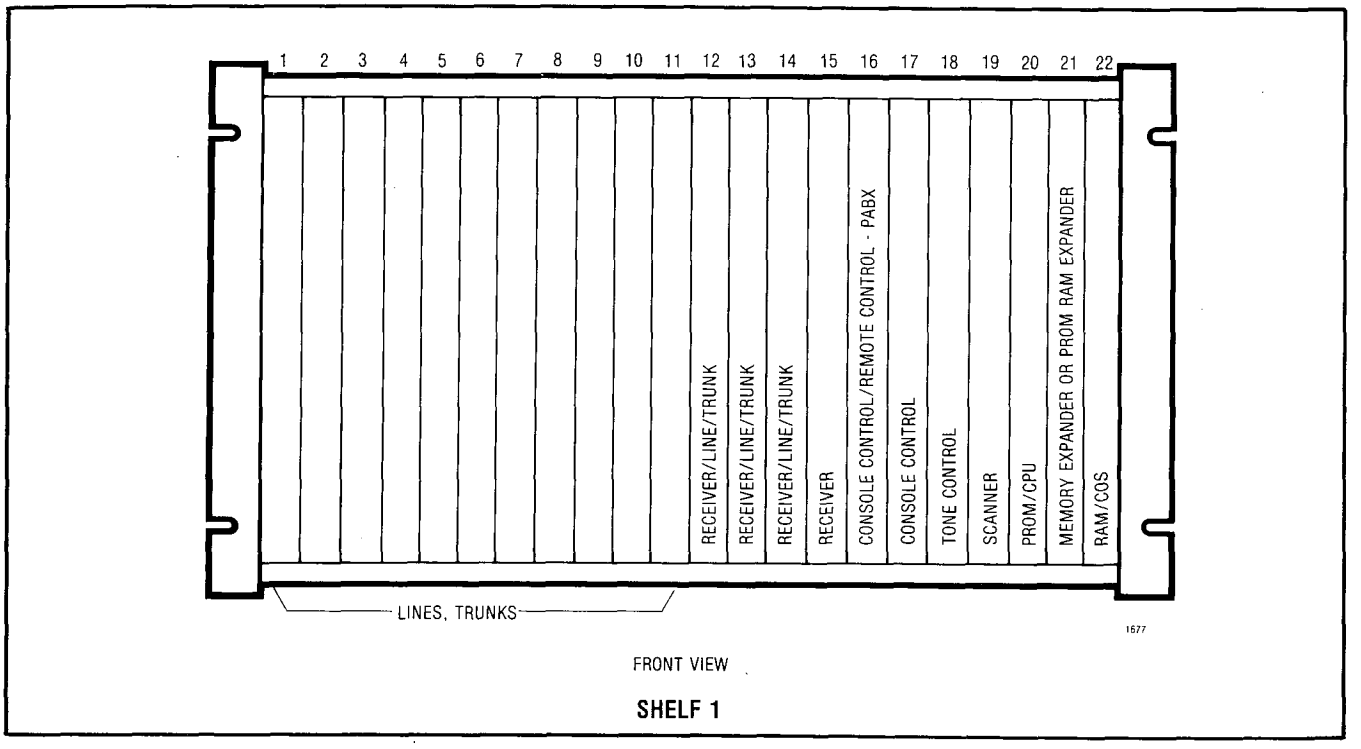

Fig. 2-1 Equipment Shelf

When used in conjunction with the test line, the display shows the status of the receiver and/or the speech path which has been selected. The top display shows the receiver status and the bottom display shows the speech path status. The customer data can be dumped or loaded in blocks as the data port is divided into blocks (Table 2-2). The displays used are shown in Table 2-1. This card also contains the night bells and night service relays.

The Master Reset button is used in the initial programming process as part of the RAM clearing procedure and may also be used to reset the system. When the Master Reset button is pressed, the processor is momentarily turned off, all existing calls are dropped, and all system crosspoints are released. The processor then starts, and the diagnostics begin operating, in the same manner as when the PABX power is first turned on.

The Baud Rate switch selects the RS232 port baud rate as either 110 or 300 baud (later versions 300 or 1200 baud).

TABLE 2-1
SCANNER DISPLAYS

DISPLAY	MEANING
A	Available — not in use.
C	Conversation — in use.
E	Error — found faulty by diagnostics.
F	Found — in use by test line.
O	Optional — no specific circuit selected.

TABLE 2-2

AA	Beginning of Data Load
01-99	Data Block 1-99
00-30	Data Block 100-130
EE	Checksum error on Data Load

1839

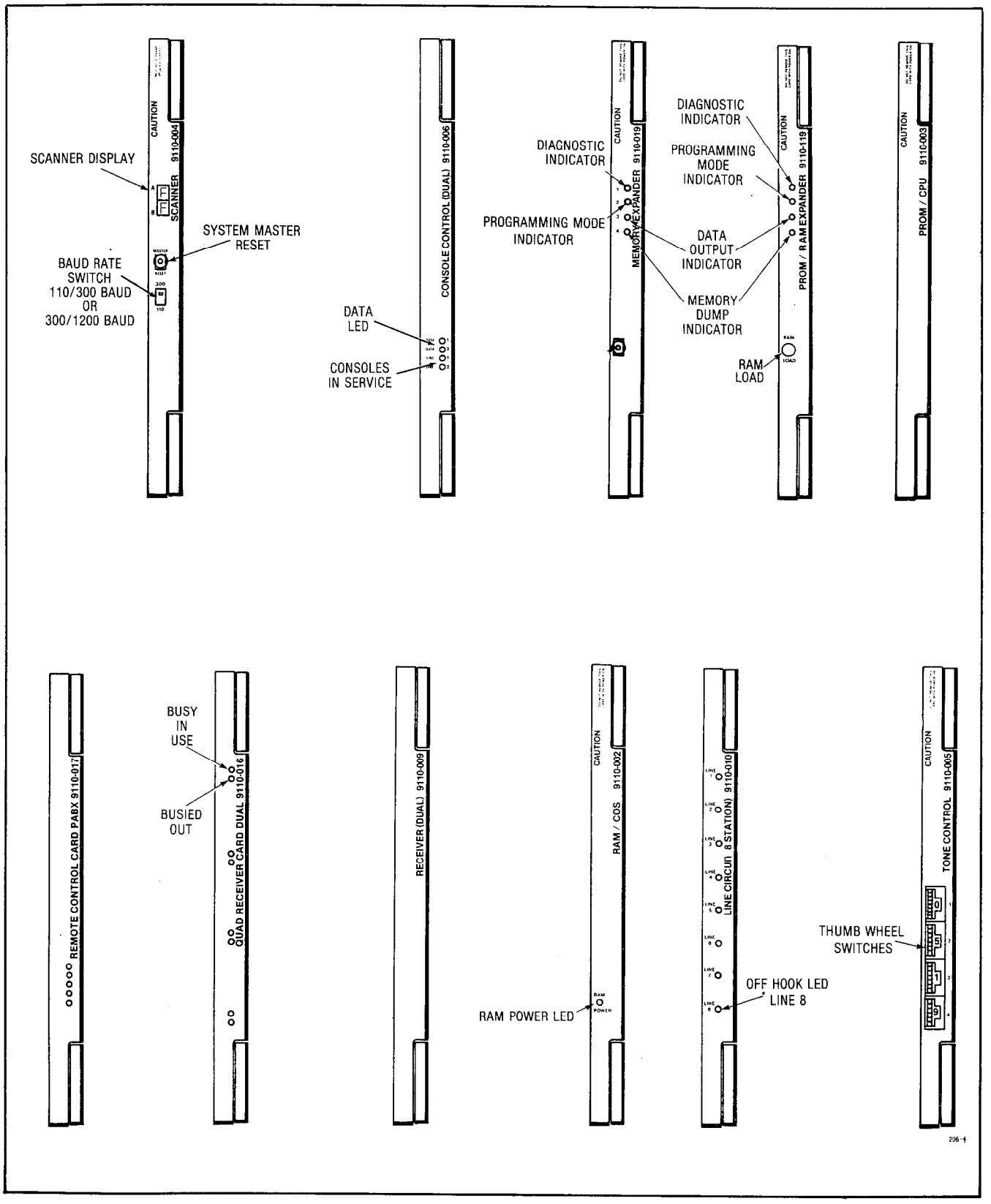

Fig. 2-2 Equipment Cards

TWO VERSIONS OF CO TRUNK CIRCUIT CARD 9110-011 DO EXIST

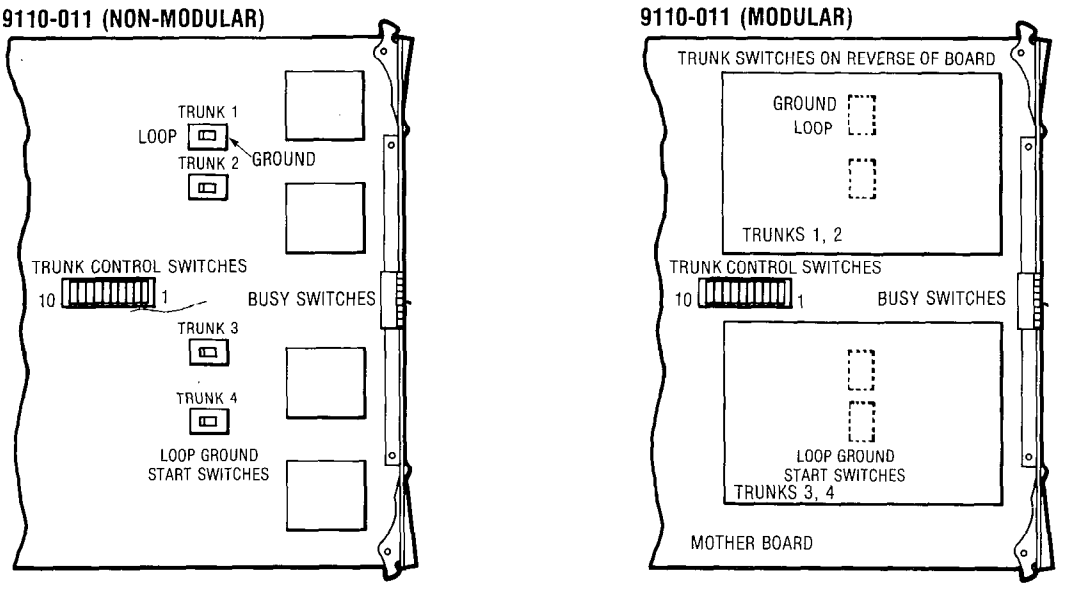

THIS IS A NON MODULAR CO TRUNK CARD. IT HAS THE ABILITY TO MAKE FOUR INDIVIDUAL TRUNKS EITHER LOOP OR GROUND START.

THIS IS THE MODULAR CO TRUNK CARD. FOUR INDIVIDUAL TRUNKS MAY BE SET FOR EITHER LOOP OR GROUND START.

TWO VERSIONS OF E&M TRUNK CIRCUIT 9110-013 DO EXIST

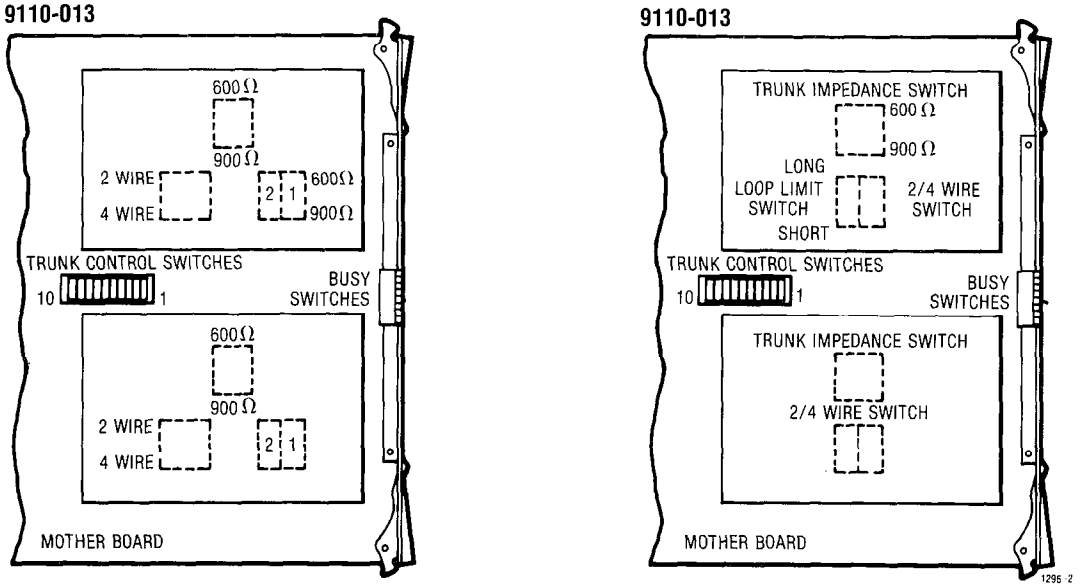

THIS IS A MODULAR E&M TRUNK CARD. TWO E&M TRUNK CIRCUITS ARE ACCOMODATED. THE TRUNKS MAY BE SET FOR WINK START, STOP DIAL, 2 OR 4 WIRE OPERATION, SPECIAL GAIN AND 600Ω OR 900Ω IMPEDANCE.

Fig. 2-3 Circuit Cards

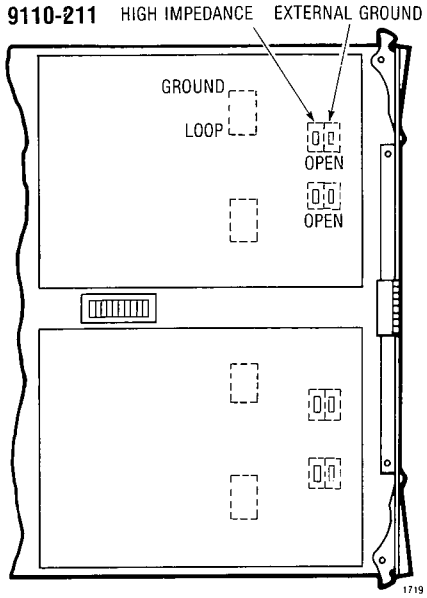

THE 9110-211 IS A CO TRUNK CARD ACCOMODATING 4 CO TRUNKS

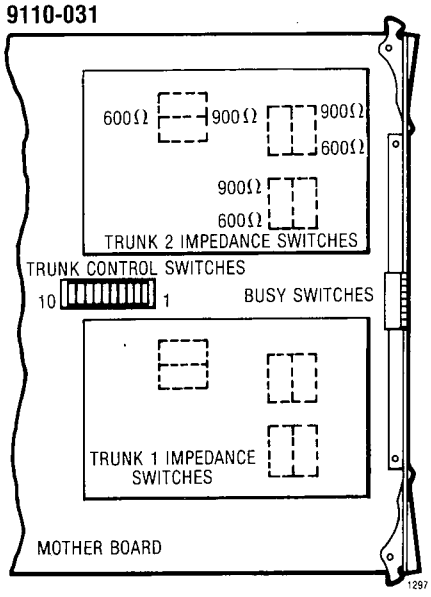

THIS IS A MODULAR DID/TIE TRUNK CARD. TWO DID OR TIE TRUNKS ARE ACCOMODATED. TRUNKS CAN BE SET FOR WINK START, INCOMING DIAL - OUTGOING AUTO AND DELAY DIAL.

Fig. 2-3 Circuit Cards Cont'd

2.09 Tone Control Card: This card provides dial tone, busy tone, ringback tone and miscellaneous tone, along with two DTMF generators and two rotary dial generators which are used for diagnostic tests. The DTMF generators are also used when dialling from the console. The four thumbwheel switches used with the test line and programming are also located on the tone control card. In addition, the circuits for Page 1 and Page 2 outputs, and the music on hold inputs are located on this card. (See Fig. 2-2)

Tone Control Thumbwheel Switches: The four thumbwheel switches on the Tone Control card are used in conjunction with programming, maintenance, and load functions. The number settings read from top to bottom. Programming functions are shown in Table 2-3.

(a) **Maintenance Functions:** The thumbwheel switches may be used in conjunction with the test line to select receivers and speech paths. The top two switches are used to select a receiver by setting the switches to the last digits of the required receiver equipment number (even numbers only, 90-20). If set to 99, any free receiver will be selected. The bottom two switches are used to select a speech path (01-31 for speech paths, or 32 for the music on hold speech path). If set to 99, any free speech path will be selected. When not using the test line for maintenance purposes, the switches should be set to 7780.

TABLE 2-3
SWITCH SETTINGS

SWITCH SETTINGS	FUNCTION
7770	Enter Maintenance Console into programming mode
7771	Enter Attendant Console 1 into programming mode
7772	Enter Attendant Console 2 into programming mode
7776	Initialize System Configuration (Clear RAM)
XXXn	Take any console out of programming mode (one of the X = any digit except 7, n = 0-9)
777n	Enables reset from test line (n = 0-9)
5623	Load Function

1494

(b) **Load Functions (Generic 204/up):** The Customer Program Dump/Load Function requires the switches to be set to 5623 to initiate a load from, or dump to, an external storage device.

2.10 Console Control Card (basic): The console control card provides the interface between the PABX and two consoles. Console control card number 1 (position 17) is allocated to the maintenance console connector and the attendant console number 1 connector. Console control card number 2 (position 16) is allocated to the attendant console number 2 connector. The card provides both voice and data signals to and from each console. (See Fig. 2-2). To identify the console, the operator may press the IDENT button. The last segment in the DESTINATION Display identifies the console as; 0 for maintenance, 1 for console 1, or 2 for console 2.

2.11 Console Control Line and Data LEDs: LINE 1 and LINE 2 LEDs,when lit, indicate that the associated console is active, i.e. the handset or headset is plugged in. The designations 1 and 2 refer to the two consoles handled by the card. The maintenance console will appear in slot 17, line 2. Console 1 will appear in slot 17, line 1. Console 2 will appear in slot 16, line 1. Line 2 in slot 16 is not used. The data LEDs indicate voice pair continuity to the console(s). The LEDs labelled DATA 1 and DATA 2 flicker whenever data is transmitted from the corresponding console to the console control card (Data is transmitted when any console button is pressed.)

2.12 Remote Control RMAT: The Remote Control PABX (RCP) card, can be fitted in slot 16 of the PABX shelf to provide the PABX console button functions remotely, under the control of the RMAT Controller (see MITL9105/9110-98-101). The main components of the RCP card are as follows:

- The Micro Processor Unit (MPU), which acts on commands received from the RMAT Controller via the modem.
- MEMORY PROM/RAM, which contains programmed memory and scratch pad memory for storage and execution of commands.
- MODEM, which provides the necessary tone transmitter and receiver, and contains the handshaking circuitry required to interface the MPU with the external 2-wire line.

  TRUNK INTERFACE, to provide the proper termination to the line with regard to impedance, ringing and supervisory condition.

  MASTER/SLAVE INTERFACE, to enable the MPU to access the PABX data bus and control lines.

2.13 Receiver Card: The receiver card contains two rotary dial and two DTMF receivers. Having received each dialed digit, the receiver informs the processor and prepares for the next digit. The dual receiver card contains no LEDs or switches. The quad receiver card contains four rotary dial, four DTMF receivers, four dial tone detectors, and 4 sets (two each) of LEDs labelled A1 B1, A2 B2, A3 B3, A4 B4. In each case the A LED indicates a busy condition. The B LED indicates a busied out condition.

2.14 Trunk Card: The Trunk Card contains either two or four trunks depending upon the trunk type. (Fig. 2-3; 4 CO Trunks, 2 E&M Tie Trunks, or 2 DID Trunks per card). These circuits provide the interface between the PABX and the Central Office, other PABX's, or other equipment. Each trunk circuit repeats dial pulse signals from the speech path to the Tip and Ring and passes DTMF signals directly from the speech path to the Trunk for outgoing calls. The busy switches on the trunk card may be used to make a trunk continuously busy. If the trunk is in use when the switch is set, the existing call is not disturbed. For exact details of the trunk busy switches see Table 2-4.

- **Trunk Busy/Idle LEDs:** Each trunk circuit has associated with it an LED which shows the busy/idle status of the trunk as follows:

• Trunk circuit idle	• LED OFF
• Trunk circuit seized	• LED ON
• Trunk circuit busied out (by switch on card or from the console)	• LED FLASHING

Trunk Incoming and Outgoing Busy Switches: Associated with each trunk circuit are two busy switches, one for making the trunk busy outgoing and one for making the trunk busy incoming. Table 2-4 lists the switch settings and describes their effect.

2.15 Line Card: The line card contains 8 separate line circuits. The line circuit detects on and off-hook conditions, which are recognized by the scanner, and reported to the processor for appropriate action. Dial signals (rotary dial or DTMF) are passed over the speech path selected for the conversation. (See Fig. 2-2). The LED on each line circuit provides an indication that the line circuit has detected an off-hook condition. The LED is driven directly from the off-hook detect circuit in the line circuit. It turns ON when an off-hook condition is detected and will flash when dial pulses are sent.

2.16 Maintenance Panel: At the top of the equipment cabinet is the maintenance panel (Fig. 2-4). This panel provides the service personnel with access to the system through the maintenance console connector and test line terminals. Also housed on the maintenance panel are the six Power Fail Transfer Control Switches, a system Power ON/OFF switch and a POWER ON LED.

- **Maintenance Console Connector:** This connector is provided to allow the installer/repair person to plug in a console for administration and test purposes, i.e. to program changes in system data.

- **Power Fail Transfer Control Switches:** These switches are used to control the source of a power fail transfer. A Power Fail Transfer (PFT) may be caused by a common control failure, a power failure, by the operation of a failure transfer switch on one of the consoles, or by operating the Master Transfer Switch on the maintenance panel. The switches have two positions, ENABLE and DISABLE. When set to ENABLE, the system allows power fail transfer to be initiated from the designated source. When set to DISABLE,the designated source cannot initiate power fail transfer, e.g. with the COMMON CONTROL power fail transfer control switch set to ENABLE, a common control failure will cause a power fail transfer. The MASTER power fail transfer switch will set the PABX to power fail transfer when operated to the TRANSFER position. The switches associated with each console must be set to disable when that console is not in use. If the transfer switch on a console will never be used, the transfer enable switch may be left in the disable position at all times.

- **Test Line Terminals:** The test line TIP and RING terminals may be used in conjunction with a test set (butt-in) and the thumbwheel switches on the tone control card, to access individual speech paths, receivers, trunks, and lines for test purposes. The test line also has the capability of resetting system errors, initializing card slots, busying out and de-busying receivers and speech paths and controlling the printer port. See section 3 for a full description of the use of the Test Line.

- **The System Power:** This switch has the ability to turn the shelf power on or off. Note that this does not turn the power supply off, but the system will go into a Power Fail Transfer. The system power should be disconnected from the commercial AC source (or DC if –48Vdc fed) before any power supply maintenance is attempted.

Cards External to the Shelf

2.17 There are a number of cards that are external to the equipment shelf (shelves). These cards, and the PABX they are part of, are listed in Table 2-5.

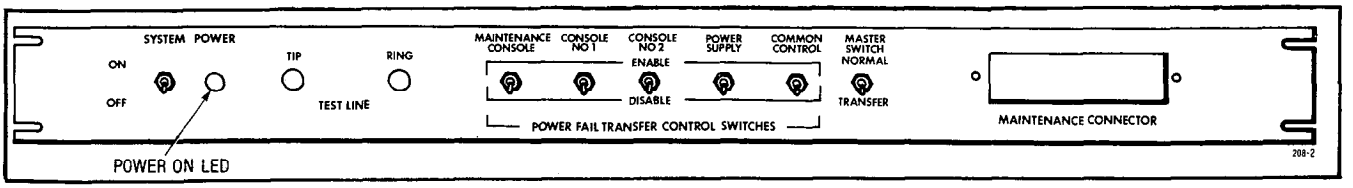

Fig. 2-4 Maintenance Panel

TABLE 2-4
OUTGOING/INCOMING SWITCH SETTINGS

Trunk Busy Switches

1. Outgoing busy switches (1 per trunk) can be set for either of the following conditions:

   Idle Setting - Normal trunk operation

   Busy Setting - Trunk cannot be seized for outgoing call

   If the switches are not set in this manner, "Ring Don't Answer", may occur.

2. The "Outgoing Busy" condition may be set either by the outgoing busy switch, or by the console "Trunk Busy Out" function. When this condition is in effect the incoming busy switch affects the trunk condition as follows:

   Idle Setting - No answer will be given to incoming CO calls

   Busy Setting - A permanent seizure condition is given towards the CO

For further information see Sections MITL9105/9110 98-200 and MITL9105/9110-98-205

TABLE 2-5
EXTERNAL SYSTEM CARDS

Card	SX-200	Fig.	SX-100	Fig.
Interconnect Power Fail Transfer Console Interface	1 card 1 card 1 card (or 2, 5 × 200)	2-5 2-6 2-7	1 card combined	2-8

1496

2.18 The SX-200 Interconnect Card (Fig. 2-5) provides a direct connection between the consoles (J13, J14 and J15) and the shelf backplane (P16 and P17). This board also contains the console fuse for protection of the console. Directly opposite the fuse is the RS232 printer port P302. For a complete description of this port see MITL9105/9110-98-450 and Table 2-6. Plugs P301 and P303 are the maintenance panel connector and the power supply out of tolerance monitor respectively. All power for the Interconnect card is supplied through the power supply terminal block TB301 on the board. Plugs J13, J14, and J15 are the console plugs. Plugs P16 and P17 provide interconnection between the Interconnect card and the shelf backplane. Plugs P18 and P19 provide a connection between the Interconnect card and the Cross Connect Field. P18 carries Night Bell Contacts, Music on Hold, and Paging access circuitry. P19 carries Tips and Rings for the card shelf slots 13 and 14. Thus the Interconnect card does as its name implies, by providing an interconnection between the PABX and external equipment, as shown in Appendix 3. Each component that terminates on the Interconnect card is listed in Table 2-7.

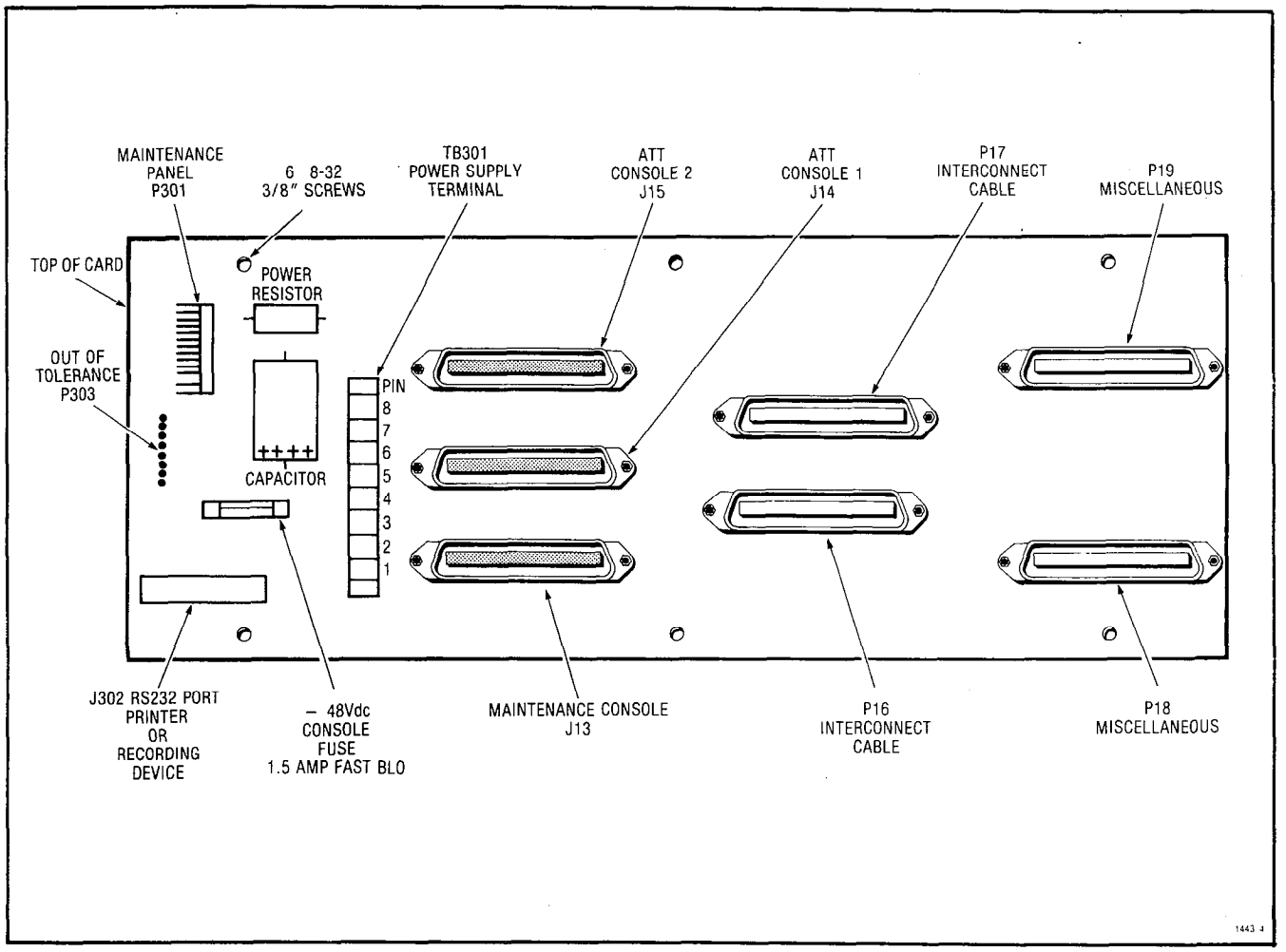

Fig. 2-5 SX-200 Interconnect Card

2.19 The SX-200 Power Fail Transfer Card (Fig. 2-6) provides for the possibility of twelve CO trunks to be connected to twelve extensions in the event of a commercial power or equipment failure. Two amphenol connectors (P20 and P21, Table 2-7) are hard wired directly to the cross connect field (Appendix 3) to provide for power fail transfer. All power for this card is provided through the cable harness to the power terminal block (TB1) at the top of the board. The power fail transfer LED on this card when not lit indicates dicates that the system is in a power fail transfer condition.

2.20 The Console Interface Card (Fig. 2-7) provides static protection for the SX-200 system against discharges to the console and console cable. This protection is achieved by placing a series of transient voltage suppressors between the console connections and a chassis ground. Any transient voltages will be routed to the ground.

TABLE 2-6 CONNECTORS P302, P303

PIN NO.	SIGNAL NAMES
Connector P301	
1	OV
2	ALARM A
3	KEY
4	ALARM B
5	MAINT. CONS. SWA
6	CONS. 2 SWA
7	CONS. 2 SWB
8	C/O
9	PWR LED A
10	PWR LED B
11	PWR SW B
12	PWR SW A
13	MAINT. TIP
14	MAINT. RING
Connector P302	
1	OV
2	RECEIVE DATA
3	TRANSMIT DATA
4	
5	CLEAR TO SEND
6	DATA SET READY
7	SIGNAL GROUND
8	CARRIER DETECT
9	
10	
11	
12	
13	
14	
15	
16	
17	
18	
19	
20	DATA TERM READY
21	
22	
23	
24	
25	
Connector P303	
1	KEY
2	O/T
3	– 10V
4	PWR SWB
5	PWR SWA
6	SPARE

1497

2.21 The SX-100 combines the Console Interface, Power Fail Transfer, and Console Interconnect on one card (Fig. 2-8). All plugs on this card perform the same functions as listed in Table 2-7. All power for the board is provided by the two terminal blocks (TB301 and TB302) fed by a cable from the power supply. In the event of a commercial power or equipment failure, up to six CO trunks can be automatically connected to six extensions. In addition, the board has a Transfer LED which will go out when a transfer occurs. There are three fuses for user ringing, user – 48Vdc, and – 48Vdc for the console (F1, F2, F3).

Shelf Backplane

2.22 The same backplane and equipment shelf are used in both the SX-100 and SX-200. Field replacement of only the backplane is not recommended; rather the whole equipment shelf should be replaced (Fig. 2-10). The backplane essentially provides an interface between all printed circuit cards (paragraphs 2.01 - 2.14) and extensions, trunks and miscellaneous equipment. Physically the backplane has six 25 pair amphenol type connectors for equipment, extensions and trunks. It may have four fuses (Fig. 2-9). Each fuse is rated at 2 amps, – 48Vdc (UL approved) and has a LED which will light if the fuse blows and there is a card in one of the associated slots. All power for the backplane is provided by terminal blocks TB1/2 and TB3/4. All PCB cards are held in position by PCB edge connectors on the backplane, and plastic guides on the shelf. In both the SX-100 and SX-200 the backplane power is fed by a cable from the output of the power supply.

TABLE 2-7
INTERCONNECT CARD EQUIPMENT TERMINATIONS

Component	Interconnect Card Plug Number
Consoles	J13, J14, J15
Shelf Backplane	P16, P17
Printer/Recording Device	J302
Maintenance Panel	P301
Power Out of Tolerance	P302
Cross Connect	P18, P19
Power Fail Transfer	P20, P21
Power Terminal	TB301

1840

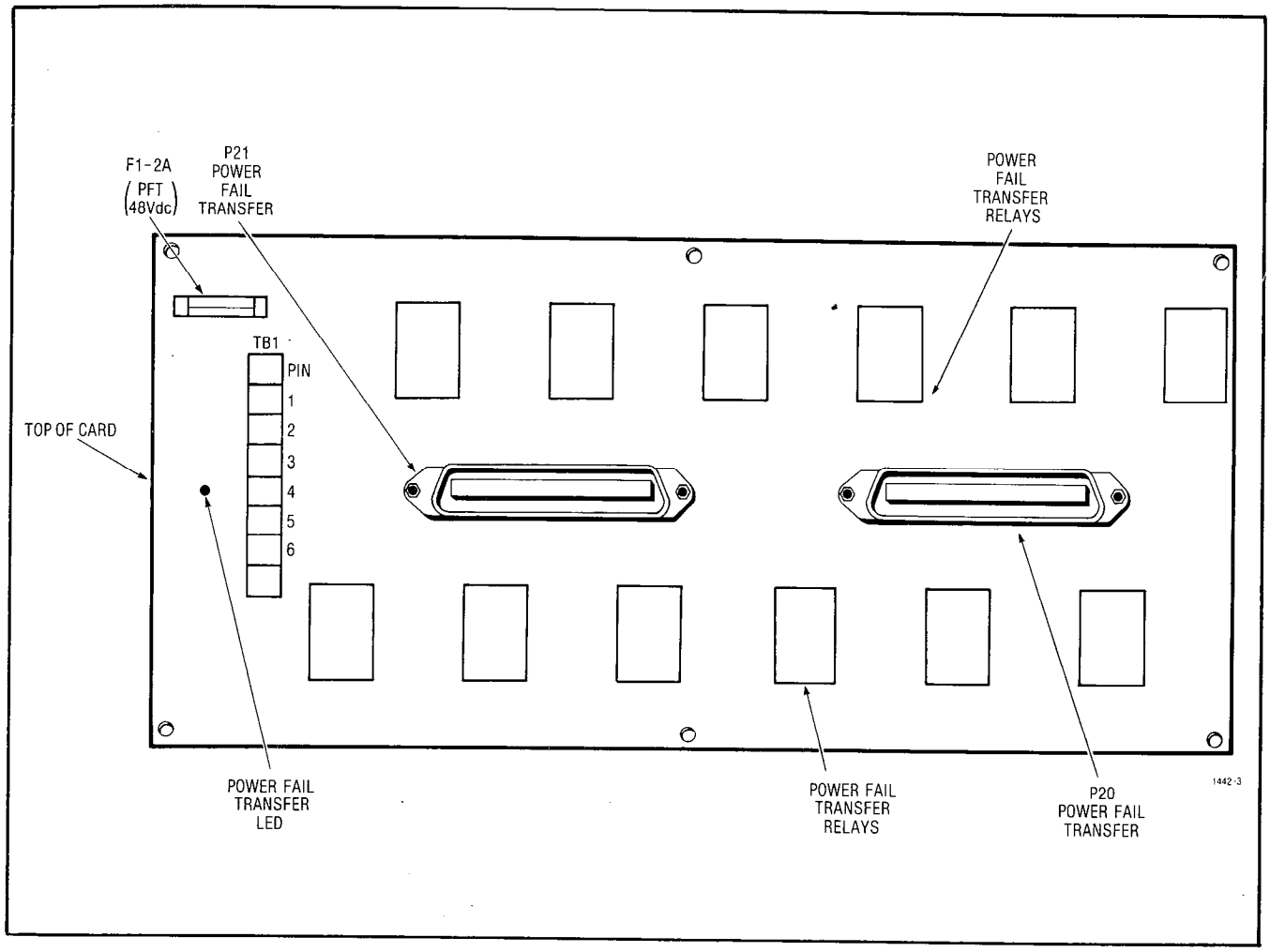

Fig. 2-6 SX-200 Power Fail Transfer Board

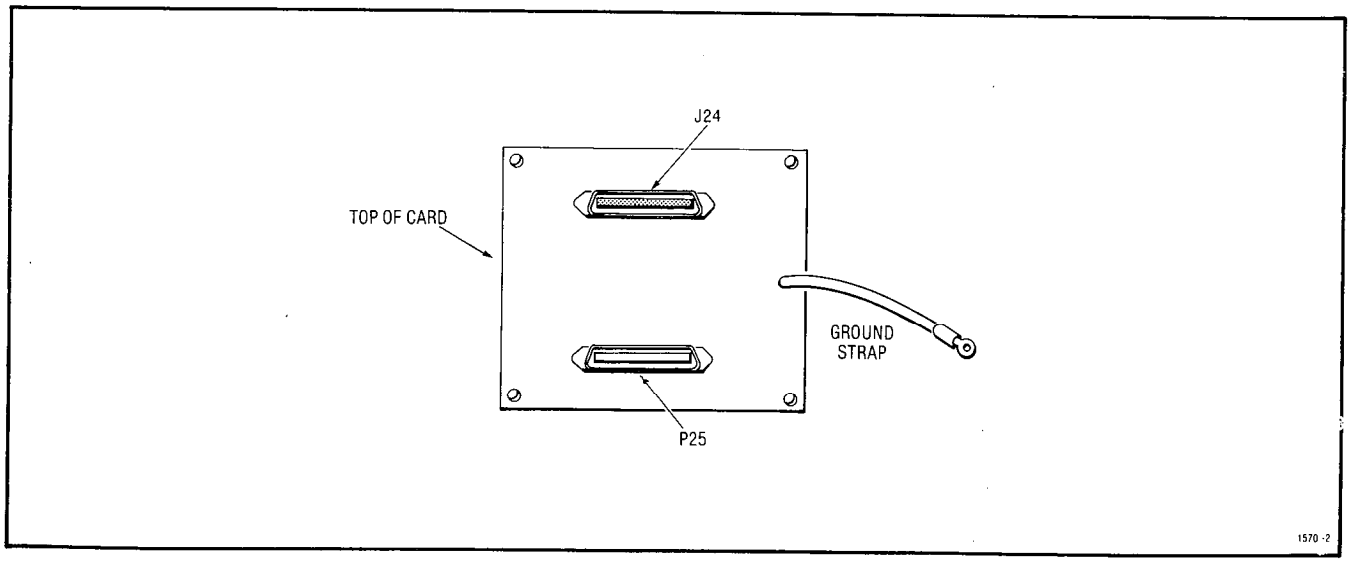

Fig. 2-7 SX-200 Console Interface Card

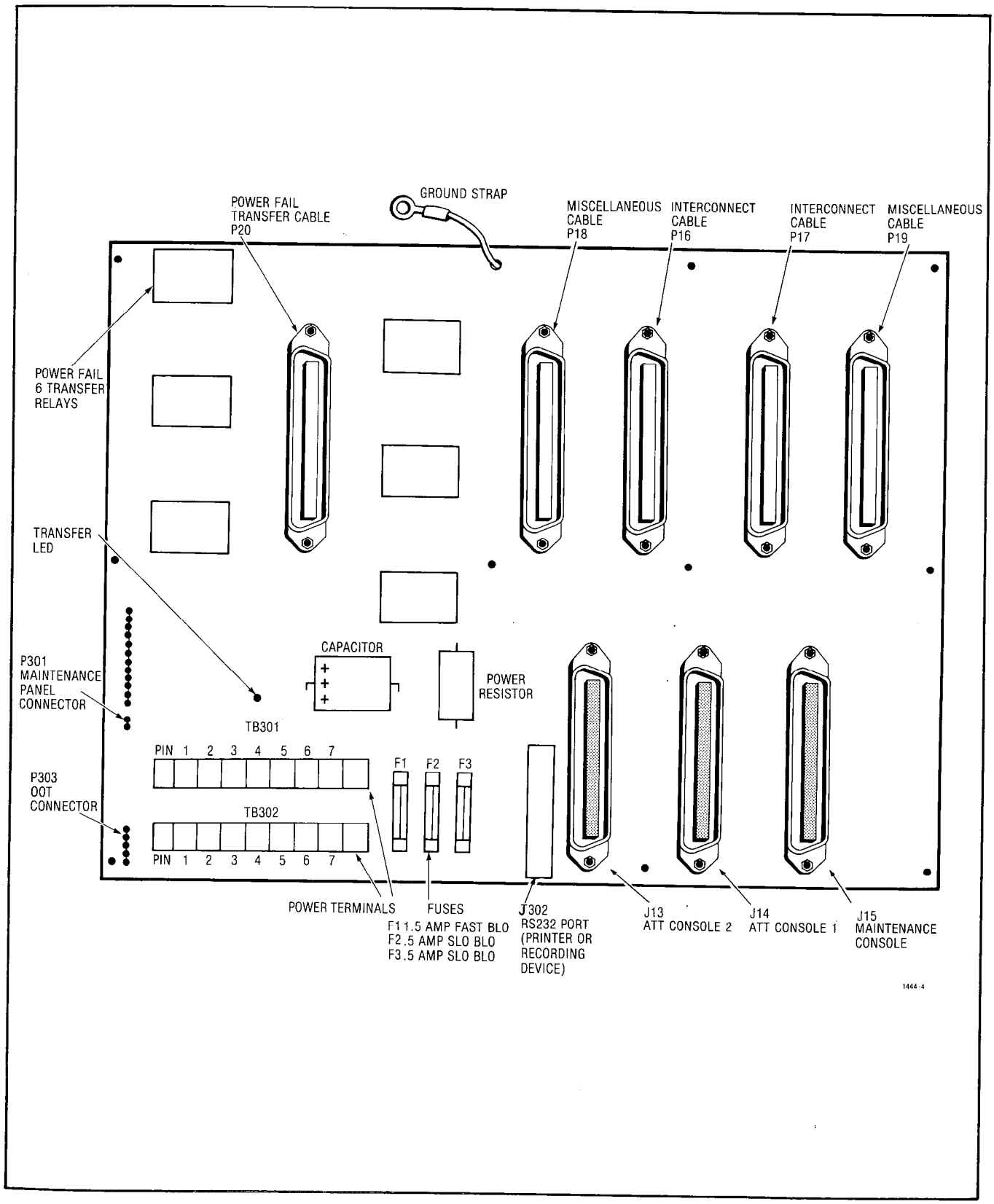

Fig. 2-8 SX-100 Interconnect, Console Interface, Power Fail Transfer Card

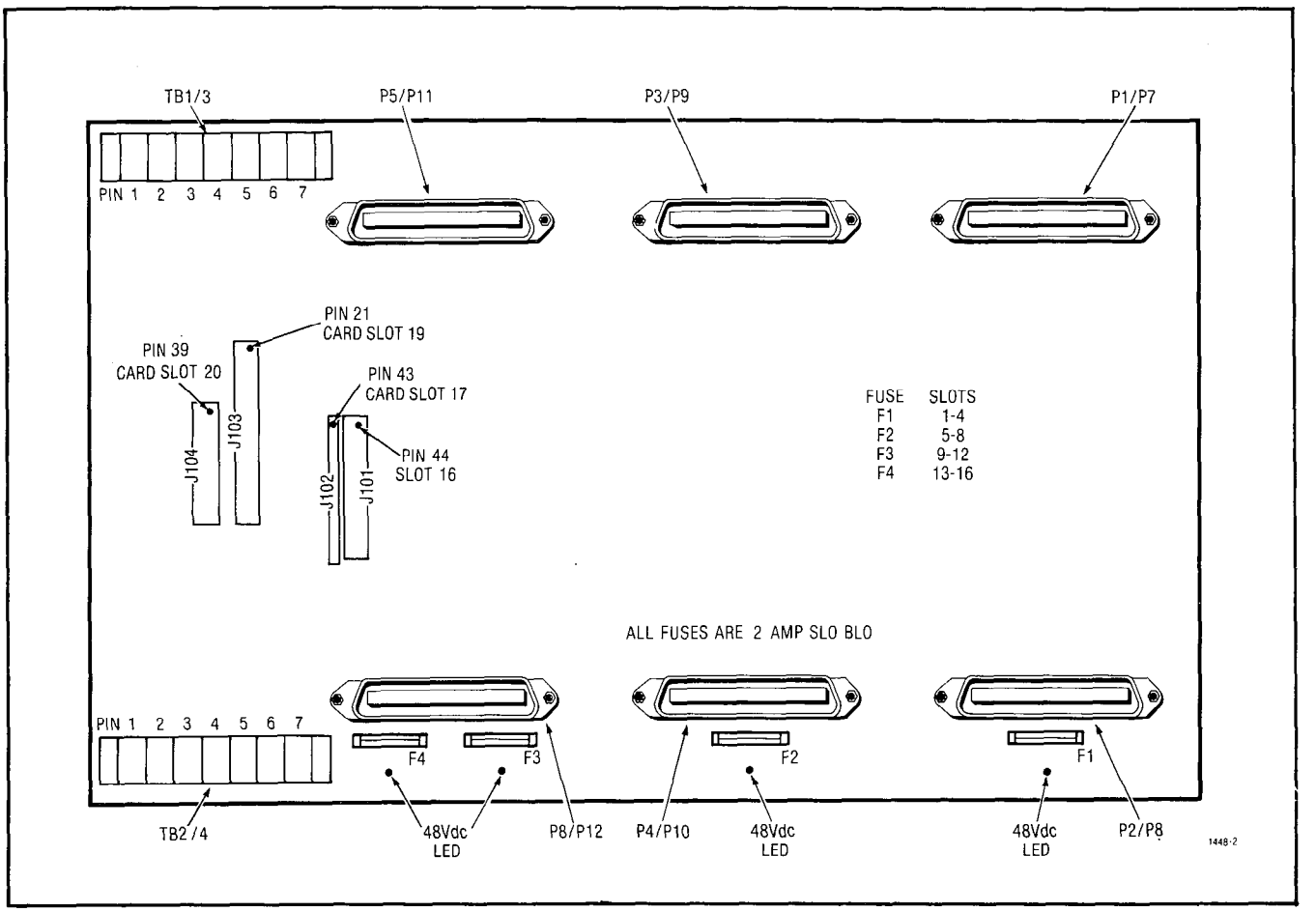

Fig. 2-9 Backplane

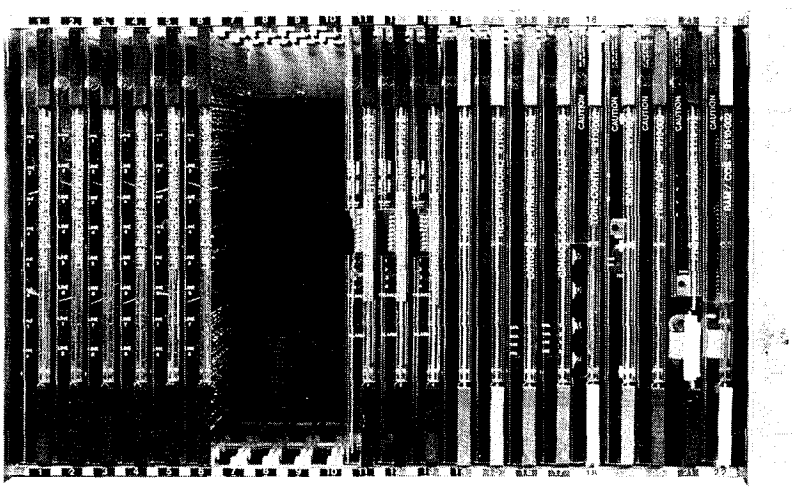

Fig. 2-10 Equipment Shelf

3. CONSOLE AND TEST LINE MAINTENANCE FUNCTIONS

3.01 The console and test line are of great importance when detecting and locating a fault. Each may be used individually or they may be used together in troubleshooting the system. This part will discuss first the Console Alarm LEDs and Maintenance Aids, and then the Test Line Functions. The Console Alarm LEDs and Maintenance Aids will include all ERROR, Attendant Access and Maintenance Function Access codes in the form of tables. The Test Line Function description will include an explanation of all features available to the test line.

Console Maintenance Functions

3.02 Console Alarm LEDs and Maintenance Aids: Each attendant console (Fig. 3-1) is equipped with a number of maintenance aids and keys which are associated with maintenance functions. The following paragraphs describe the function of each maintenance associated LED and key.

- **Minor Alarm LED:** This LED will flash whenever the automatic diagnostics detect a malfunction which is not sufficiently serious to cause a complete system failure. Typical examples would include receiver malfunction, speech path malfunction or crosspoint malfunction.
- **Console Alarm LED:** The Console Alarm LED flashes to indicate a console malfunction. The LED will go off when the alarm has been cleared or cancelled.
- **Major Alarm LED:** The LED turns ON to indicate that a malfunction has occurred which has caused the power fail transfer relays to operate:
  - (a) When the MAJOR ALARM LED is ON the PABX is automatically in power fail transfer mode.
  - (b) Typical examples of major alarms include Scanner failure or CPU malfunction, Power Supply voltages out of tolerance.
  - (c) The MAJOR ALARM LED, unlike the other console LEDs, is hardwired from the PABX cabinet to the console.
  - (d) A colon in the time display indicates that the console is receiving power and the handset is plugged in.
  - (e) A time display indicates that the PABX and console processors are running. It also indicates that the link from the console control card to the console is correct.

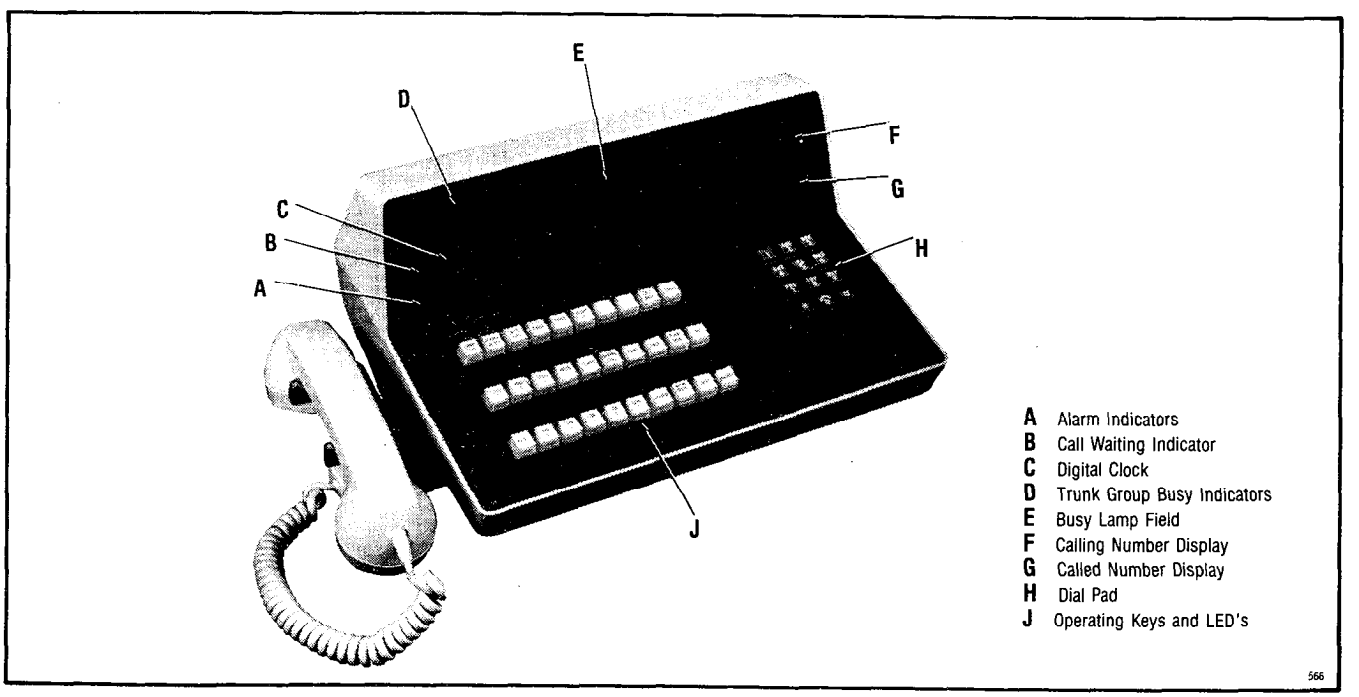

Fig. 3-1 Attendant Console

3.03 ALARM RESET BUTTON: This button is used to reset the flashing Minor Alarm LED and the audible signal associated with the alarm indication.

When the button is pressed it:

- resets the flashing LED to steady and extinguishes the audible alarm signal associated with the alarm condition
- displays in the SOURCE and DESTINATION fields details of the alarm condition, including the location of the printed circuit card that has malfunctioned.

3.04 A typical alarm readout in the SOURCE display is shown in Fig. 3-2.

- In addition, with Generic 203 or higher, if the Alarm Reset button is pressed, the Busy Lamp Field changes to display lines and trunks which are locked out or have been busied out. This display remains for as long as the Alarm Reset button is held down.

3.05 IDENT BUTTON: If the IDENT button is pressed when the console is idle, the SOURCE display will show the installed firmware generic number, and its revision. The DESTINATION display shows an internal firmware code and the number of the console at which the key was pressed. See Fig 3-3.

If the IDENT button is pressed when the attendant is connected to either a source or destination party, the SOURCE and DESTINATION displays will change to show the equipment numbers and speech path number being used. The date will appear in the time display in Generic 204/UP.

3.06 ERROR CODES: Table 4-4 is a list of error codes displayed on the console, indicating the card causing the malfunction and the type of malfunction. Fig. 3-2 shows a typical error display and it's interpretation.

3.07 POWER FAIL TRANSFER SWITCH: This switch (on the underside of the console), when in the TRANSFER position, manually switches the PABX into power fail transfer (unless the appropriate power fail transfer enable switch on the maintenance panel is in the DISABLE position). Operation of the switch from the NORMAL to the TRANSFER position will cause all existing

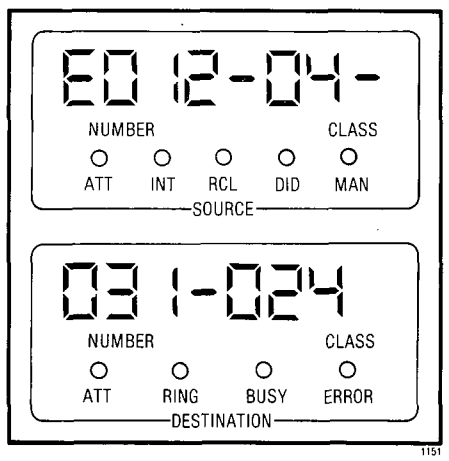

E012 - UNABLE TO CONNECT A SPEECH PATH TO LINE CARD IN
04 - CARD POSITION 04 SHELF 1
031 - EQUIPMENT NUMBER 31 (SHELF 1 CARD 04, UNIT 7)
024 - SPEECH PATH IN USE 024

Fig. 3-2 Typical Readout

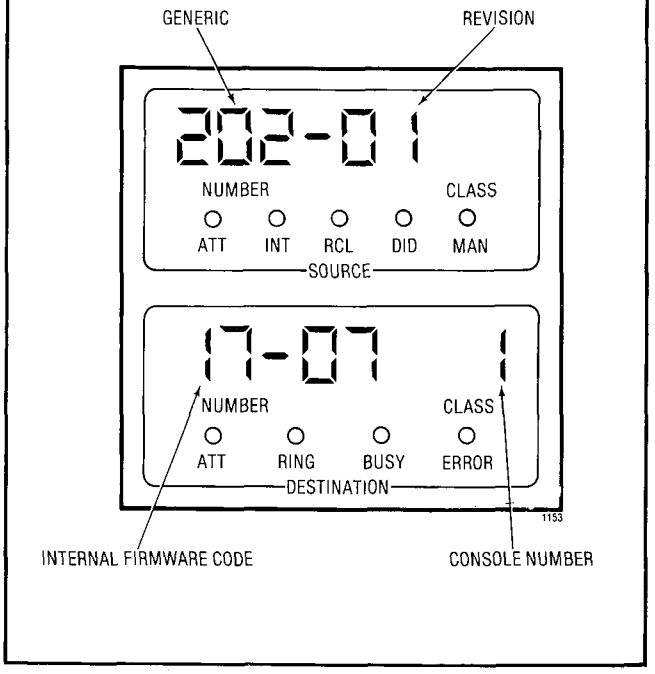

Fig. 3-3 Typical Identification Display

calls on the transferred trunks to be released, and the MAJOR alarm LED will light. The switch should only be operated in emergency situations. For normal operation, the switch should be in the NORMAL position.

Test Line Functions

3.08 General The test line is on equipment number 001, and appears both on connector P1 and on terminal posts on the maintenance panel. It must be programmed to be an extension, and should have full trunk access for use by maintenance personnel.

3.09 As well as its normal facilities as an extension, certain additional features exist exclusively for the test line. These are the ability to; directly access a trunk, set and clear the busy-out conditions of speech paths and receivers, clear all errors and busy-out conditions in the system (except for trunks), select a specific speech path and receiver for use and display their status on the Scanner card.

3.10 Most of these features require a special access code (the Maintenance Function code), which will normally be "555", but may be different if necessary to avoid number plan conflicts. This document assumes the use of the code 555.

NOTE:

The rotary switches on the tone control card (slot 18) should be set to 7780 when the test line is not being used for maintenance purposes.

3.11 Direct Trunk Access: The test line (or console) dials 555 + 2 + nnn where "nnn" is the 3 digit equipment number of the trunk including leading zeros. Reorder tone indicates that the equipment number is not that of a trunk. Busy tone indicates that the trunk is busy, otherwise the line is connected to the trunk. If the trunk is a member of a group programmed "wait for dial tone", the connection is not made until dial tone is received.

3.12 To Set and Clear Busy-Out of Receivers and Speech Paths

- The test line (or console) dials 555 + 3 + nnn (set) or 555 + 4 + nnn (clear) where "nnn" is either the 3 digit equipment number of a receiver, or is 3 + the 2 digit speech path number (i.e. 301-331)

- Reorder tone indicates that the number is invalid and dial tone indicates that the operation is completed.

3.13 Clear All Errors: The test line (or console)dials 555 + 1. Dial tone is returned. All outstanding minor alarms are cleared. All busied out receivers, generators, and speech paths are set back to normal and the diagnostic tests are re-started.

3.14 Select A Speech Path and or a Receiver: This procedure is used to select a speech path and/or a receiver when the test line goes off-hook.

3.15 The top 2 switches on the tone card select the receiver to be used, set up as the last two digits of the receiver equipment number (even numbers, 90-20). If set to 99, any free receiver is used. (Fig. 3-4)

3.16 The bottom two switches select the speech path to be used, set up as the speech path number (01-31), or the music-on-hold speech path may be selected as 32 (in which case no receiver will be connected). If set to 99, any free speech path is used. When the switches are set and the test line goes off-hook, the system waits for the selected speech path to become free and seizes it. It then waits for the selected receiver to become free. A busied out speech path or receiver may be selected; the speech path may be accessed, but the receiver will not respond to dialing. If an illegal number is set up, no device will be selected.

3.17 The two seven-segment displays on the scanner card show the status of the receiver and/or speech path when a specific one has been selected. The top display is for the receiver and the bottom display is for the speech path. The readouts are:

A - Available - not in use

C - Conversation - in use

E - Error - found faulty by diagnostics

F - Found - in use by test line

O - Optional - no specific circuit selected

3.18 Once the test line has obtained a speech path and a receiver, it does not change its selection until it originates a new call (changing the switch settings meanwhile will cause the display to change to reflect the status of the receiver and speech path whose numbers are on the switches). If a valid speech path is selected, but an invalid receiver is selected (e.g. 91), then the line is connected to the speech path, no receiver is selected, and no dial tone is introduced. This provides the ability to listen to a speech path for the presence of noise. The test line, since it has not been assigned a receiver, will not time out and revert to reorder tone. It is then possible to listen to any unused speech path by remaining off-hook and selecting the speech path number with the bottom two switches.

3.19 Slot Initialization Activate: Occasionally, when circuit cards are plugged into the system, the logic circuits on the card may not reset completely. In order to guarantee complete reset of all card logic, a slot initialization procedure has been provided. This procedure allows the service personnel, after inserting a card into a shelf, to initialize the card slot from the test line. To intialize the card slot dial 555 + 5 + nn, where nn is the card slot number (1-17 shelf 1, 31-42 shelf 2). Since inserting a card may cause diagnostic errors, this procedure is normally followed by dialing 555 + 1 to clear all system errors.

Hardware Position Number				Dual Receiver	Quad Receiver
089	097	105	113		
090	098	106	114	X	X
091	099	107	115		
092	100	108	116	X	X
093	101	109	117		
094	102	110	118		X
095	103	111	119		
096	104	112	120		X
12	13	14	15	Card Position	

Fig. 3-4 Receiver Equipment Numbers

3.20 Forced Trunk Release: This feature allows service personnel to force a busy trunk into the idle state. The test line (or console) dial *2+nnn+*# where nnn is the individual trunk equipment number; press the RELEASE key. Care should be taken when force releasing a trunk, as the trunk will be forced into the idle state even if the trunk is legitimately in use.

4. CONSOLE FUNCTIONS AND ERROR CODES

4.01 Generic 204/up systems may be assigned a system identifier (1-3 digits) which will be unique to that system. To display the system ID; dial * 17; the system ID appears in the SOURCE display. Press RELEASE to clear the display. To change or enter the system ID; dial * 17, enter the 1-3 digit system ID, press the RELEASE button and the display will clear.

4.02 Current Speech Path Display: This procedure is used to display the speech path number being used by a source or destination party. If the console has a destination party, pressing the console IDENT key causes the number of the speech path in use to be displayed in positions 7 and 8 of the DESTINATION display. Similarily, if the console has a source party, pressing the IDENT key causes the speech path number to be displayed in positions 7 and 8 of the SOURCE display.

4.03 Line and Trunk Status Display: This function allows the attendant to display certain information regarding the status of selected lines or trunks. This feature aids MITEL Field Engineers to diagnose malfunctions from a remote location. To display the line or trunk status dial #nnn#, where nnn is the equipment number of the line or trunk. Care should be taken when recording the status display. The record must include any blanks, dashes, or symbols exactly as shown in the SOURCE and DESTINATION displays.

4.04 Tables 4-1 through 4-2 are a listing of all system access codes. Table 4-3 is the Traffic Measurement Function Codes. For a further description see Sections MITL9105/9110-98-300, 9105/9110-98-305, 9105/9110-98-310 and 9105/9110-98-450.

4.05 Table 4-4 is a list of error codes that may appear on the console during operation of the system. Table 4-5 is a list of programming error codes that may occur during standard programming of the system. Table 4-6 is a list of Standard programming confirm codes. Table 4-7 is a list of programming error codes that may occur during extended programming of the system. Fig. 4-1 illustrates the three console overlays available for system programming.

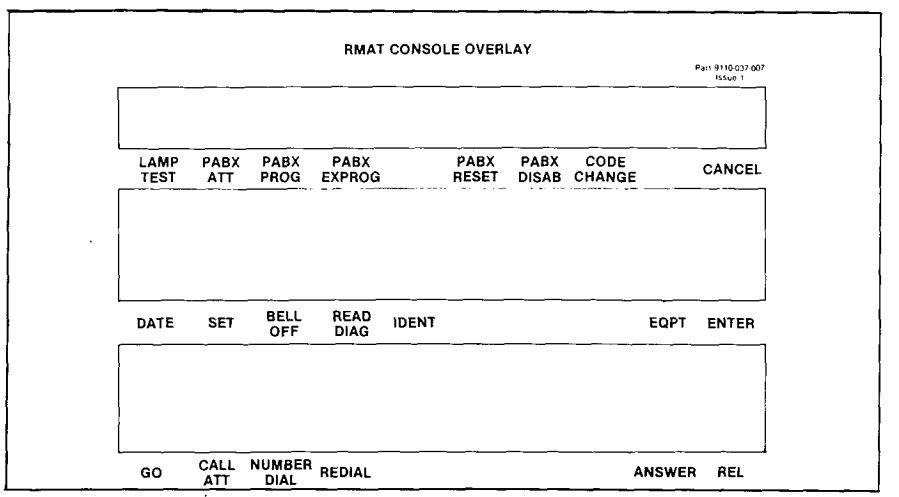

Fig. 4-1 Programming Overlay

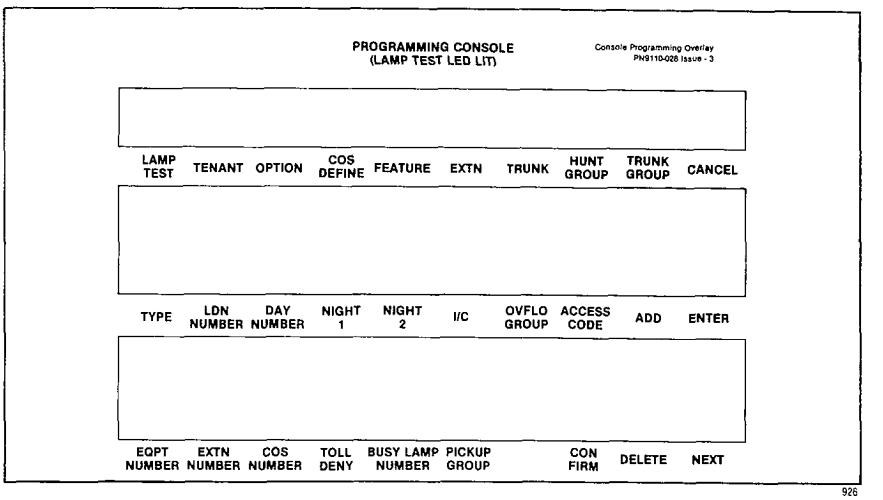

(a) BASIC PROGRAMMING

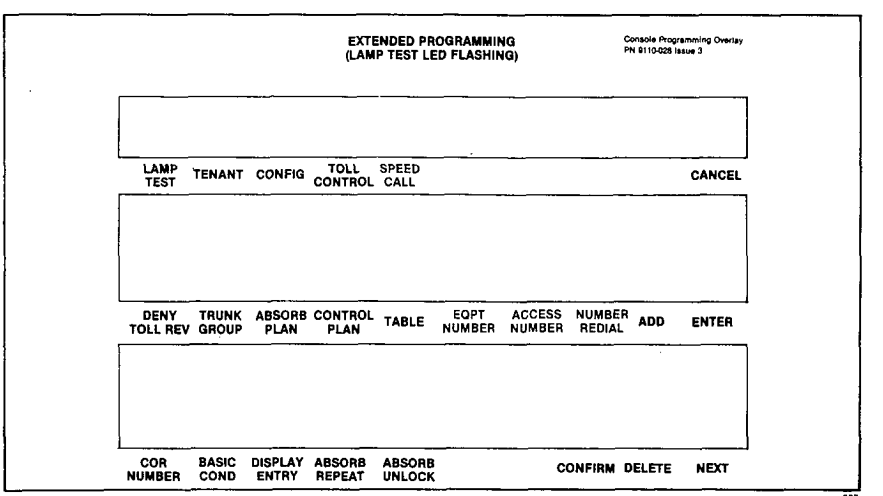

(b) EXTENDED PROGRAMMING

Fig. 4-1 Programming Overlay (Cont'd)

TABLE 4-1
ACCESS CODES

These codes assume the use of * as the Attendant Function code (Feature number 18).

To cancel all call forwarding:

a) Dial * 1 (or * 11)
b) Dial #
c) Press RELEASE

To access an individual trunk:

a) Dial * 2
b) Dial individual trunk access number (equipment number)
c) Dial #

To make flexible night service assignments:

a) Dial * 3
b) Dial individual trunk access number (equipment number)
c) Press Night 1 or Night 2
d) Dial extension number
e) Press RELEASE

To cancel all system callbacks:

a) Dial * 4
b) Dial #
c) Press RELEASE

To set the clock time:

a) Dial * 5
b) Dial time (hour plus minutes)
c) Dial * for p.m., otherwise a.m.
d) Press RELEASE

To make trunk group dial access:

a) Dial * 6
b) Dial trunk group number (1 through 12)
c) Dial #
d) Press RELEASE

To make trunk group attendant access:

a) Dial * 6
b) Dial trunk group number (1 through 12)
c) Dial *
d) Press RELEASE

To change the Direct Inward System Access Code:

a) Dial * 7
b) Dial DISA code
c) Press RELEASE

To cancel a minor alarm: (Note 1)

a) Dial * 8
b) Dial #
c) Press RELEASE

† To busy out an individual trunk:

a) Dial * 9
b) Dial individual trunk access number (equipment number)
c) Dial *
d) Press RELEASE

† To de-busy an individual trunk:

a) Dial * 9
b) Dial individual trunk access number (equipment number)
c) Dial #
d) Press RELEASE

To change the status of all occupied clean rooms to occupied and needs cleaning:

a) Dial * 10
b) Dial *
c) Press RELEASE

To change the status of all occupied rooms in need of cleaning to occupied clean:

a) Dial * 10
b) Dial #
c) Press RELEASE

To set up call forwarding: (Note 2)

a) Dial * 11nnn, where nnn is the extension number of the forwarding extension
b) Dial call forwarding code (1-3)
c) Dial mmm, where mmm is the number to which the calls are to be forwarded
d) Press RELEASE

TABLE 4-1 (CONT'D)
ACCESS CODES

To cancel call forwarding for an extension: (Note 2)

a) Dial * 11nnn, where nnn is the extension number of the forwarding extension
b) Dial #
c) Press RELEASE

To display call forwarding set for an extension:

a) Dial * 11nnn, where nnn is the extension number of the forwarding extension
b) Press RELEASE

† To busy out an extension: (Note 2)

a) Dial * 12nnn, where nnn is the number of the extension to be busied out
b) Dial *
c) Press RELEASE

† To de-busy an extension: (Note 2)

a) Dial * 12nnn, where nnn is the number of the extension to be de-busied
b) Dial #
c) Press RELEASE

† To suspend the printer: (Note 3)

a) Dial * 14 *
b) Press RELEASE

† To purge and ignore the printer: (Note 3)

a) Dial * 14 00
b) Press RELEASE

† To enable the printer: (Note 3)

a) Dial * 14 #
b) Press RELEASE

To change the date: (Note 3)

a) Dial * 15 and 3 or 4 digit date (one or two digit month, two digit day)
b) Press RELEASE

† To print the room register audit: (Note 3)

a) Dial * 16
b) Press RELEASE

† To change the system identity: (Note 3)

a) Dial * 17 n(nn) (1 to 3 digit ID, 0-999)
b) Press RELEASE

To display current system identity: (Note 3)

a) Dial * 17
b) Press RELEASE

To print the individual "room status" audit: (Note 3)

a) Dial * 18
b) Press RELEASE

Note 1 Errors will be sequentially stacked in the memory and may be recalled sequentially (most recent first) by repeating the above procedure.

Note 2 Applies to Generic 203/up
Note 3 Applies to Generic 204/up
† Requires system option programming

TABLE 4-2
MAINTENANCE FUNCTION ACCESS CODES

To select any of the functions the access code assigned for the maintenance function must be dialed (Feature Number 19). The code 555 is used in the following part, for the maintenance code and may be dialed from the test line or console (Generic 203/up).

Clear all errors:

a) Dial 5551

Direct trunk or station access:

a) Dial 5552
b) Dial individual equipment number

Busy out of a receiver:

a) Dial 5553
b) Dial equipment number of receiver

Busy out of a speech path:

a) Dial 55533
b) Dial speech path number (01-31)

De-busy a receiver:

a) Dial 5554
b) Dial equipment number of receiver

De-busy a speech path:

a) Dial 55543
b) Dial speech path number (01-31)

Initialize card slot:

a) Dial 5555
b) Dial card slot number (01-17, 31-42)

†*System reset:

a) Dial 5556

**To initiate system dump from the console:

a) Dial 555 + 7
b) Dial * 14 # (console only)

**To initiate system dump from the test line:

a) Dial 555 + 7 hang up
b) Go off-hook dial 555 + 8 # or 82

†**To suspend printer:

a) Dial 555 + 8 + * or 1 or
Dial * 14 * (console only)

†**To enable printer:

a) Dial 555 + 8 + # or 2 or
Dial * 14 # (console only)

†**To purge and ignore printer:

a) Dial 555 + 8 + 00 or
Dial * 1400 (console only)

TABLE 4-3
TRAFFIC MEASUREMENT FUNCTION CODES

Function Code	Description
*130	**Select start time.** The start time for a Traffic Measurement run may be displayed and/or set by the console attendant as follows: • Enter *130 from keypad • SOURCE display shows: hhmmx (existing time) where: hh = hours mm = minutes x = P if p.m. x = space if a.m. or 24 hour clock • Enter new start time hhmmy (new time) where: y = * if p.m. y is not required if a.m. or 24 hour clock • Press RELEASE
131	**Select Length of Run.** The run length (in multiples of 1 hour) may be displayed and/or set by the console attendant as follows: • Enter *131 from keypad • SOURCE display shows: tt (number of hours) • Enter new run time tt (01 to 24) • Press RELEASE A run length of 24 means that Traffic Measurement will run continuously.
*132	**Print Traffic Data.** Traffic data may be output by the console attendant as follows: • Enter *132 from keypad • Press RELEASE The current count held in the storage registers are output to printer or tape.
*133	**Cancel Traffic Measurement.** The traffic measurement run, if in progress, may be cancelled by the attendant as follows: • Enter *133 from keypad • Press RELEASE **This function results in resetting the start time to 0:00, the run length to 0, and zeroing the traffic registers. To restart traffic measurement new start and run times must be entered. Warning: If a new time is entered part or all of the Traffic Measurement may be missed.** **For further codes see Table 4-1 and Table 4-2.**

TABLE 4-4
ERROR CODES

Code	Major Minor	Slot	Reason	First 3 digits of Destination Display	Last 3 digits of Destination Display	See Note
E001	major*/ minor	22	Error in RAM	Hi byte of address	bits found in error	7.
E002	major*/ minor	20 or 21	PROM checksum error	0 if slot 20 1-7 if slot 21 (PROM page number)		7.
E003	major	19	Clock/scanner	1 = 1st interrupt missing 2 = 2nd interrupt missing		
E004	minor	18	Speech path check circuit no "hi" when disconnected			1.
E005	minor	18	Bias circuit not connected to Speech path	Speech path number		2.
E006	minor	99 (slot not known)	Speech path short	Speech path that has bias applied	other speech path number on which bias was seen	2.
E007	minor	18	Dial tone circuit not connected to speech path	Speech path number		2.
E008	minor	Receiver Card	Receiver not receiving tone digits	Receiver equipment number		3.
E009	minor	Receiver Card	Receiver not receiving pulse digits	Receiver equipment number		3.
E010	minor	18	Generator error	Generator number (1 and 2 are tone, 3 and 4 are pulse)		4.

* During Power-Up sequence only

TABLE 4-4
ERROR CODES (CONT'D)

Code	Major Minor	Slot	Reason	First 3 digits of Destination Display	Last 3 digits of Destination Display	See Note
E011	minor	Receiver Card	Generator/ Receiver error isolated to a speech path NOTE-error could be on receiver card or on tone control card (slot 18)	Speech path number		2.
E012	minor	Line Card or Trunk Card	Unable to connect the speech path to the line programmed as a "station" or "trunk"	Equipment number	Speech Path number	5.
E013	minor	18	Supervisory tone missing			6.
E014	minor	Receiver Card	Receiver dial-tone detector not working	Receiver equipment number		3.
E015	minor	Receiver Card	Probable receiver error			
E018	minor	99 (slot not known)	Speech path shorted out (not known)	Speech path number		2.
E019	minor	18	16 speech paths have been found in error, probably a fault in the checking circuit			1.
E020	minor	16 or 17	Excessive errors in console data circuits	Console number 0 - maintenance console 1 and 2 - attendant consoles		

TABLE 4-4
ERROR CODES (CONT'D)

Code	Major Minor	Slot	Reason	First 3 digits of Destination Display	Last 3 digits of Destination Display	See Note
E021 (21)	minor	21	Check sum error in RAM Generic 204			8.
E021 (22)	minor	22	Non-Volatile RAM check sum error			8.
E022	minor	22	Generic 204 Software conflict			

NOTES

1. No more tests using the check circuit will be performed.
2. The speech path shown in the first two digits of DESTINATION display is busied out, a maximum of 16 speech paths may be busied out.
3. The receiver is busied out, maximum one receiver on a Dual Receiver card and two receivers on a Quad Receiver card.
4. The generator is busied out, maximum 1. No further generator tests are performed.
5. No further tests on this slot are performed at this time. This error will occur if a card is not installed for a programmed time.
6. No further test for supervisory tone presence are performed.
7. No further tests are performed.
8. E021 will not reappear if the system is reset or the power is turned off, in Generic 202, revisions 04 or lower; and in Generic 203, revisions 02 and lower may be cleared by initializing the RAM and reprogramming the system.

TABLE 4-5
STANDARD PROGRAMMING ERROR CODES

Error code	Cause	Key affected	Key flashing	Meaning	Action Required
E0	Invalid key pressed.	ALL	None	The last key pressed is invalid at this time.	Check procedure and press correct key.
E1	Invalid number.	ALL	None	The number entered is out of range or contains corrupted data.	Press key associated with entry and re-enter number.
E2	Key other than ENTER or CANCEL pressed.	LAMP TEST, TENANT, OPTION COS DEFINE, FEATURE EXTN NUMBER, TRUNK HUNT GROUP, TRUNK GROUP, NEXT, EQPT NUMBER	ENTER, CANCEL	An attempt was made to leave the current mode after some parameters were changed but before ENTER or CANCEL was pressed. ENTER may be used to write the new programming information back to the non-volatile RAM or use CANCEL to ignore all programming changes made ssince the last time ENTER was pressed.	Press ENTER to transfer the data to permanent store or CANCEL to remove the data from the temporary store.
E3	Access code has not been entered.	HUNT GROUP TRUNK GROUP	ACCESS CODE	Attempting to enter members into a Hunt or Trunk group before an access code has been assigned to the group.	Press ACCESS CODE key and enter required access code.
E4	The extension number or access code entered is already assigned.	EXTN, ACCESS CODE	None	The extension number or access code entered is already assigned to an extension, feature, hunt group or trunk group. In Trunk mode an attempt is made to delete a member of a trunk group. Equipment Numbers desired must be entered. In Trunk Group mode an attempt is made to place a trunk into a trunk group while that trunk is currently programmed into another trunk group. . Callback and Executive Override conflict, i.e. trying to enter a Callback code while same code assigned to Executive Busy Override and vice-versa.	Check code entered. 1 If code is correct, terminate entry, remove other appearance of code and re-enter all new data. 2 If code is incorrect, press key associated with entry and re-enter extension number or access code.
E5	Number entered contains incorrect number of digits or conflicting option enabled in this COS.	EXTN NUMBER ACCESS CODE	None	The extension number or access code is in conflict with the existing numbering plan. Attempting to add an option to a COS in which a conflicting option is enabled. Attempting to add a System Option when a conflicting option exists.	Check entry. Press key associated with entry and re-enter number.
E6	Incorrect equipment number entered.	EQPT NUMBER	None	Attempting to assign an equipment number that is: • undefined • defined as a trunk to an extension hunt group or extension • defined as an extension to a trunk group or a trunk • an extension with message registration to hunt group or pickup group An equipment number assigned to an extension must be deleted as an extension before being programmed as a trunk. An equipment number assigned to a trunk must be deleted as a trunk before being programmed as an extension (Generic 204/up).	Remove conflicting option (a) Assign equipment number correctly (b) Enter new equipment number

TABLE 4-6
STANDARD PROGRAMMING (CONFIRM) CODES

Confirm Code	Cause	Key Affected	Flashing Lamp	Action
CO	Attempting to assign an equipment number for an extension to a slot containing a trunk card	EQPT NUMBER	CONFIRM	Check assignment— • if correct press CONFIRM key. Equipment number entered is accepted as the number for the equipment type being programmed. All data associated with the original appearance of the equipment number is removed • if incorrect press EQPT NUMBER and re-enter new equipment number
CO	Attempting to assign an equipment number for a trunk to an empty slot or a slot containing an extension card.	EQPT NUMBER	CONFIRM	
C1	Attempting to assign an extension that already exists	EXTN NUMBER	CONFIRM	Check assignment— • if correct press CONFIRM key. The extension number entered is accepted as the extension number for the equipment being defined. All data associated with the original appearance of the extension number is removed. • if incorrect press EXTN NUMBER and re-enter extension number.
C2	The busy lamp assignment already exists	BUSY LAMP	CONFIRM	Check assignment— • if correct press CONFIRM key. Busy lamp assignment is accepted for this equipment. All data associated with original assignment is removed. • if incorrect press BUSY LAMP and re-enter busy lamp assignment

TABLE 4-7
EXTENDED PROGRAMMING ERROR CODES (MULTI DIGIT TOLL CONTROL)

Error	Applies to:	Meaning
E0	All modes	Invalid key pressed. Consult 9105/9110-98-212 for correct procedure.
E1	Absorb Plan mode Trunk Group mode Control Plan mode	Number is not within the range of the parameter being defined. Press parameter key defined, and enter new correct number.
E2	All modes	An attempt was made to leave the current mode after some parameters were changed but before ENTER or CANCEL was pressed. ENTER may be used to write the new programming information back to the non-volatile RAM or use CANCEL to ignore all programming changes made since the last time ENTER was pressed.
E3	Control Plan mode Table mode	The table number entered is not valid for the current configuration. Re-enter a number which exists for the configuration of the extended non-volatile customer RAM.

TABLE 4-7 (CONT'D)
EXTENDED PROGRAMMING ERROR CODES

Error	Applies to:	Meaning
E4	Table mode	The table entry code is invalid for the table programmed. This occurs in the following situation: 1. A code of more than 3 digits in length for an 800-entry or 20-range table. 2. A code not in the range of 200-999 for an 800-entry table. 3. A code which already exists or a code which would be ambiguous in conjunction with the existing table entries, for a 4-entry table.
E5	Table mode	The table is full and cannot hold the entry.
E7	Configuration mode	Configuration is not allowed because the Tone Control card switches are not 7776 or the system is not idle.
E9	Configuration mode	A hardware failure was detected while clearing the extended customer non-volatile RAM.

TABLE 4-8
CONFIRM CODES

Error	Applies to:	Meaning
C5	Control Plan mode Table mode	An attempt was made to assign a table which is currently assigned elsewhere. Pressing the confirm key will de-assign the table from wherever it was previously assigned to assign it to the specified place.
C6	Table mode	A request has been made to delete all entries in a table. If CONFIRM is pressed all entries will be de-assigned. The old data in the non-volatile RAM will not be destroyed until the ENTER key is pressed, and the table itself can be reprogrammed as desired before the ENTER key is used.

TABLE 4-9 SPEED CALL ERROR CODES

Error	Applies To:	Meaning
E1	EQPT NUMBER	The equipment number entered is outside the range of valid numbers
E1	NUMBER REDIAL	An invalid number redial value was entered
E3	TABLE	The table number entered is not consistent with that allowed for the current Configuration of the extended NV RAM
E4	ACCESS NUMBER	An attempt was made to enter an access number for common-use table
E4	NUMBER REDIAL	An attempt was made to enter a number redial digit for a common-use table
E5	ACCESS NUMBER	The access number entered already exists for another table assigned to the same equipment number
E5	NUMBER REDIAL	Number redial already exists for another table assigned to the same equipment number, (only 1 number redial attribute per user is allowed)
E6	SPEED CALL	The Configuration of the extended NV RAM does not include the speed call feature

1841

SYSTEM OPERATION

5. General

This part will discuss events which occur within a SX-100/200 PABX during the operation of extensions, trunks and consoles. From this part the repair person should be able to discern a basic working knowledge of the PABX. Also in this part is a series of tables which list error codes and problems that may occur. These tables will provide a solution to each problem, or reference a MAP in the appendices for the appropriate remedial action.

Extension Operation

5.01 Each extension is assigned to a specific equipment number on a specific Line card (Fig. 5-1). When an extension goes off hook, it will complete a circuit and draw loop current. This loop current will cause the LED (on the line card) associated with that equipment number to light. At this time there are up to 31 speech paths available for assignment to the off hook extension. Each line card has an 8 × 32 switching matrix, providing access to 31 speech paths and 1 Music on Hold (MOH) path (Fig. 5-2). The Scanner card will detect the off-hook condition on the Line card and report the equipment number to the Central Processor Unit (CPU). The CPU (through its Random Access Memory or RAM) will find a free speech path and test it, using circuits on the tone control card. After the speech path is tested, the CPU connects it to the line circuit and a free receiver is located. The selected receiver, and dial tone from the tone control card, are then connected to the free speech path (Fig. 5-2).

5.02 When the first digit is dialed, it is detected by the receiver card. (The Scanner card reports to the CPU that the receiver card has a digit. The DTMF or DP information is decoded by the receiver card.) The digit is read by the CPU. Upon reception of the first digit, the CPU will inform the Tone Control card to drop the dial tone. The Receiver card will continue to monitor and decode digits until the CPU recognizes a digit sequence or determines an invalid sequence. This digit sequence may access a feature, trunk, the attendant, or another extension. If the option selected is busy, the extension will receive busy tone from the Tone Control card.

5.03 When an extension dials a sequence that requires the use of a feature the CPU must first check that extension's COS. If the extension's COS does not allow access to that feature it will be assigned (by the CPU) reorder tone from the Tone Control card. If feature access is permitted, the CPU will act according to the memory stored in the PROM RAM. All information will be stored in the system's COS/RAM or PROM RAM EXPANDER by the CPU. It should be noted that the Scanner card informs the CPU that the Receiver card has a digit decoded for each digit the extension dials. The CPU controls all tones (i.e. supervisory tones that the extension may receive) switching them on/off at the correct rates.

5.04 If the call is an inside call (within the PBX), the extension must access a speech path as per paragraph 5.01. The receiver will decode the first digit dialed. The Scanner card will inform the CPU the Receiver has a decoded digit for it. The CPU will consult the RAM as per paragraph 5.02 to determine the validity of the digit and the action required. Until the CPU is able to confirm an action to be performed with the digits received, all digits will be stored in the RAM. Should the first digit or digit sequence be considered invalid by the CPU, reorder tone, from the tone control card, is connected to the speech path. A valid extension number causes the tone control card to provide either ringback or busy tone (all tones are controlled by the CPU) to the calling extension. Before actually ringing the called extension the CPU consults its RAM to check for any form of call forwarding, Do Not Disturb or extension restriction i.e. originate only. In these cases the calling extension will be forwarded or it will receive reorder tone (from the tone control card).

5.05 If the call is an outside call with no dialing restriction, the extension must be assigned a speech path (paragraph 5.02). The CPU will locate a free trunk corresponding to the access code dialed (see SECTION MITL9105/9110-98-205). If there is not a free trunk the CPU will connect busy tone (from the Tone Control card) to the speech path which the extension is assigned to. After recognition of a legitimate access code, the receiver will be dropped if tone to pulse conversion is not required. If tone to pulse conversion is required the receiver will decode the tones. The CPU will cause the trunk card to outpulse the equivalent in pulses on the trunk.

5.06 If the call is an outside call (Fig. 5-4) with digits, 0, 1, #, or * dialing restriction the extension must be assigned a speech path (paragraph 5.02). The CPU will then locate a free trunk corresponding to the access code dialed (see Section MITL9105/9110-98-205). If there is not a free trunk the CPU will connect busy tone (from the Tone Control card) to the speech path. The receiver will decode the first and second digit dialed into the trunk if System Option 155 (First Digit Toll Deny) is selected only the first digit is monitored on the trunk. The CPU will then decide if the digit that has been decoded is a 0, 1, #, or * . If it is, then reorder tone (from the Tone Control card) will be supplied to the speech path that the extension is assigned to and the trunk will be released. If the second digit is something other than a 0, 1, # or * the call will be allowed. The receiver will be dropped at this point if tone to pulse conversion is not required (see 5.03).

5.07 For an Outside call, with SMDR or Multi Digit Toll Control in effect (Fig. 5-5) the extension must be assigned a speech path (paragraph 5.02) The CPU will then locate a free trunk according to the access code dialed (see Section MITL9105/9110-98-205). If there is not a free trunk, the CPU will connect busy tone (from the Tone Control card) to the speech path. The receiver will decode all digits for the CPU until the last digit or a maximum of 26 digits is dialed (Generic 203/down 20 digits). In the case of SMDR (Section MITL9105/9110-98-451) all digits dialed will be stored in a special trunk buffer until they may be output to a printer or similar device. In the case of Multi Digit Toll Control (Section MITL9105/9110-98-212) the CPU will consult its memory (PROM/RAM expander) to see if the digits dialed are permitted. If they are, the call will go through. If not, reorder tone (from the Tone Control card) will be returned to the extension, and the trunk will be released.

5.08 The circuit operations described above are similar to those required for Tie-Trunk circuits; with the following exception. For DP extensions to DP tie-trunk circuits the requirement exists to inhibit dial train distortion arising as a result of tandem operation through one or more tie trunks. For this reason, when the trunk processor receives the input data it causes the output to the tie-trunk to be a regenerated train of dial pulses. The trunk processor will isolate the speech path to prevent dial pulses from feeding back to the extension.

Console

5.09 The console does not have a switchhook, rather the console is off-hook whenever the console handset is plugged in. To originate a call it is only necessary to press the button of the figure number or feature. The console communicates through the Interconnect card to the system via the Console Control card. The Scanner card will then inform the CPU that the Console Control card has information for it. Note that a Receiver card is not used for dialing from the console. As in the case of an extension the console must be assigned a free speech path. This is done after the first button (1-9, #, * or feature) is pressed. If an invalid digit or digit sequence is entered the console will receive reorder tone from the Tone Control card. If all speech paths are occupied the console will receive no tones or audio from the system. The Tone Control card will also provide ringback or busy tone for the console.

5.10 The dialing of a valid extension number prompts the CPU to select a particular extension on a particular line card (as determined by the programming in the non-volatile RAM). The CPU sends a command to turn ringing current on, and off to the extension. When the extension is answered, the line circuit detects an off-hook and disconnects ringing. The CPU then connects the called extension to the speech path of the console.

Dialing a Trunk (From Console)

5.11 The console dial pad produces digital signals which are stored by the CPU. After the trunk access code has been dialed the subsequently keyed signals are forwarded to the CPU, where, after decoding, they are forwarded to the trunk card and outpulsed to the trunk line. Note that a receiver card is not required for this configuration. If the circuit is programmed as a DTMF trunk circuit a tone generator will be inserted. This results in the signals being translated into DTMF tone pulses which are then placed on the speech path (not into the trunk card) and forwarded to the trunk circuit for outward transmission. The audio path is isolated back to the console when the DTMF transmission takes place.

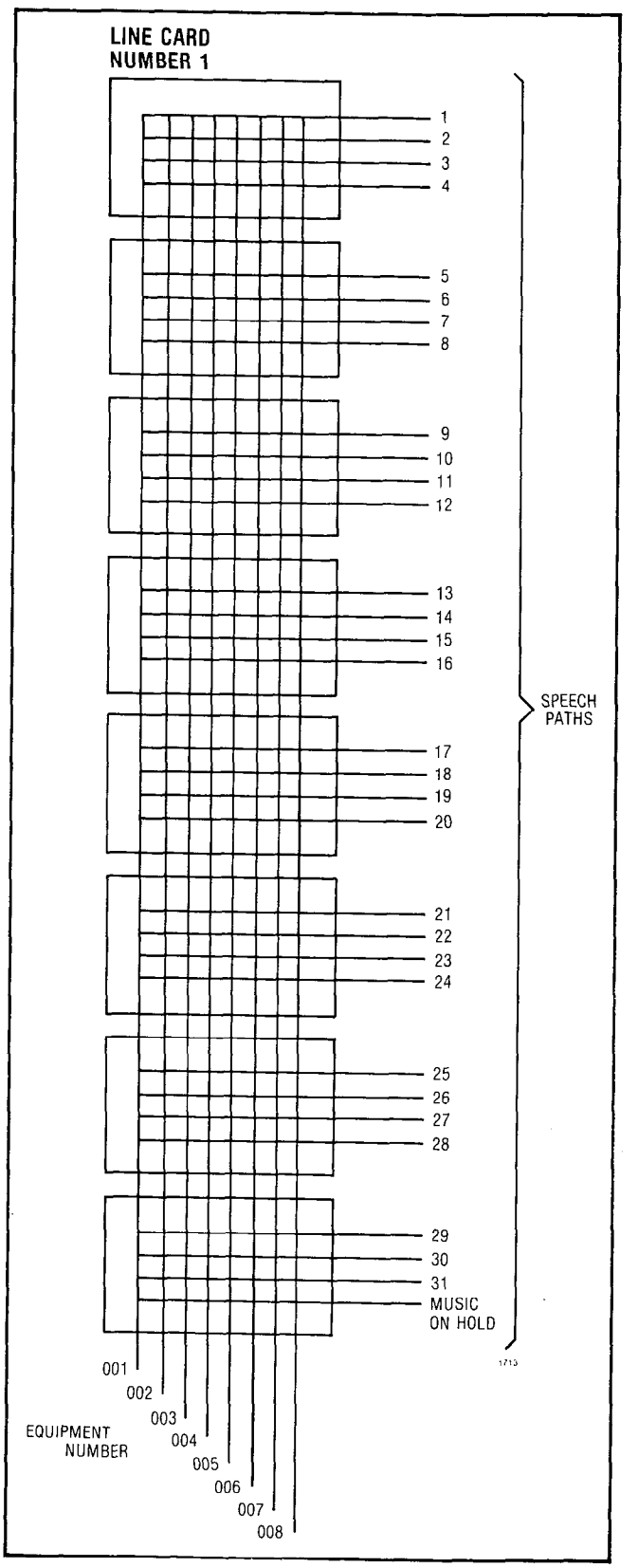

Fig. 5-1 Speech Paths

5.12 The console indicators are refreshed and/or updated continuously every 100 milliseconds by the CPU. These indicators include the seven segment displays for the time-of-day clock, the source and destination readouts and the calls-waiting display as well as over two hundred LEDs. The status of each of these indicators is maintained in the volatile RAM on the RAM/COS card. Every 100 ms, the processor addresses the RAM on the console control card and sends it information for each of the two consoles. This data is then sent along a pair of wires to the console. In the console, the information is stored in a RAM. At this point, the console's CPU takes control and sorts this input "file" into the form required to turn the LEDs and the console ringer on/off.

Hook-Flash

5.13 A hook-flash is defined for the PABX as an on-hook condition of between 200ms and 1500ms (700, 900 or 1100ms may be used in some Generics as a system option). A flash may occur in an off-hook condition where a speech path has been established between an extension and a trunk or between two extensions. When an extension goes on-hook, the Scanner informs the CPU which first checks its memory to determine whether a flash is legal at that point. If not, the extension is disconnected from the speech path and a subsequent off-hook is interpreted as the beginning of a new call. However, when a flash is determined to be a legal operation, the CPU starts a timer. If the extension goes back off-hook within the specified time period, it is considered to be flashing. An on-hook of less than 200ms is considered to be a noise glitch while an on-hook greater than 1500ms (700, 900 or 1100ms alternatively) is considered as a call termination (hang-up).

5.14 When a flash is detected, the processor disconnects the flashing extension from its speech path, finds a free speech path which it tests, and connects the extenson to it. It then provides transfer dial tone (from the Tone Control Card) and connects a receiver to the speech path allowing the extension to dial and converse privately with a third party. If the extension had flashed out of a conference, the conference is unaffected. However, if the other party was not in conference, it is disconnected from its speech path and connected instead to HOLD.

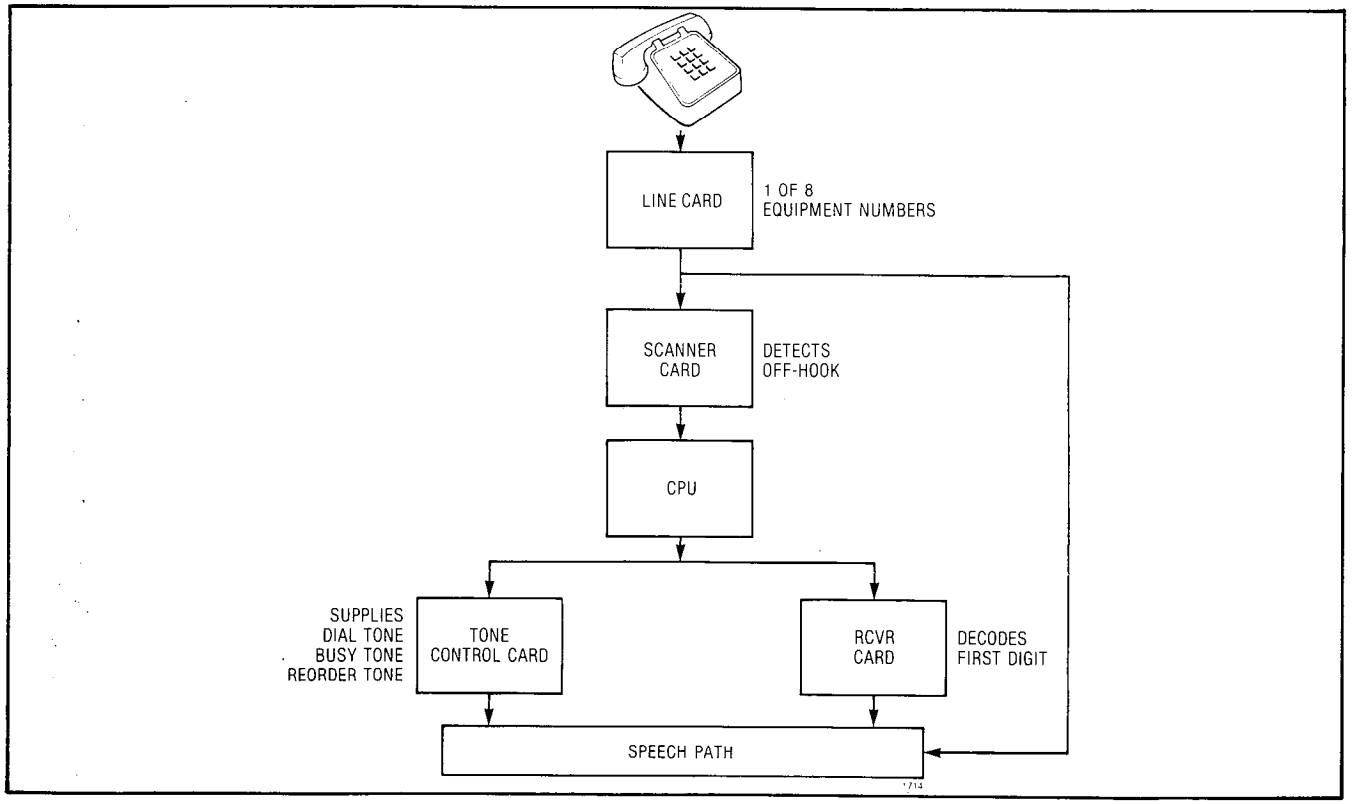

Fig. 5-2 Select a Speech Path

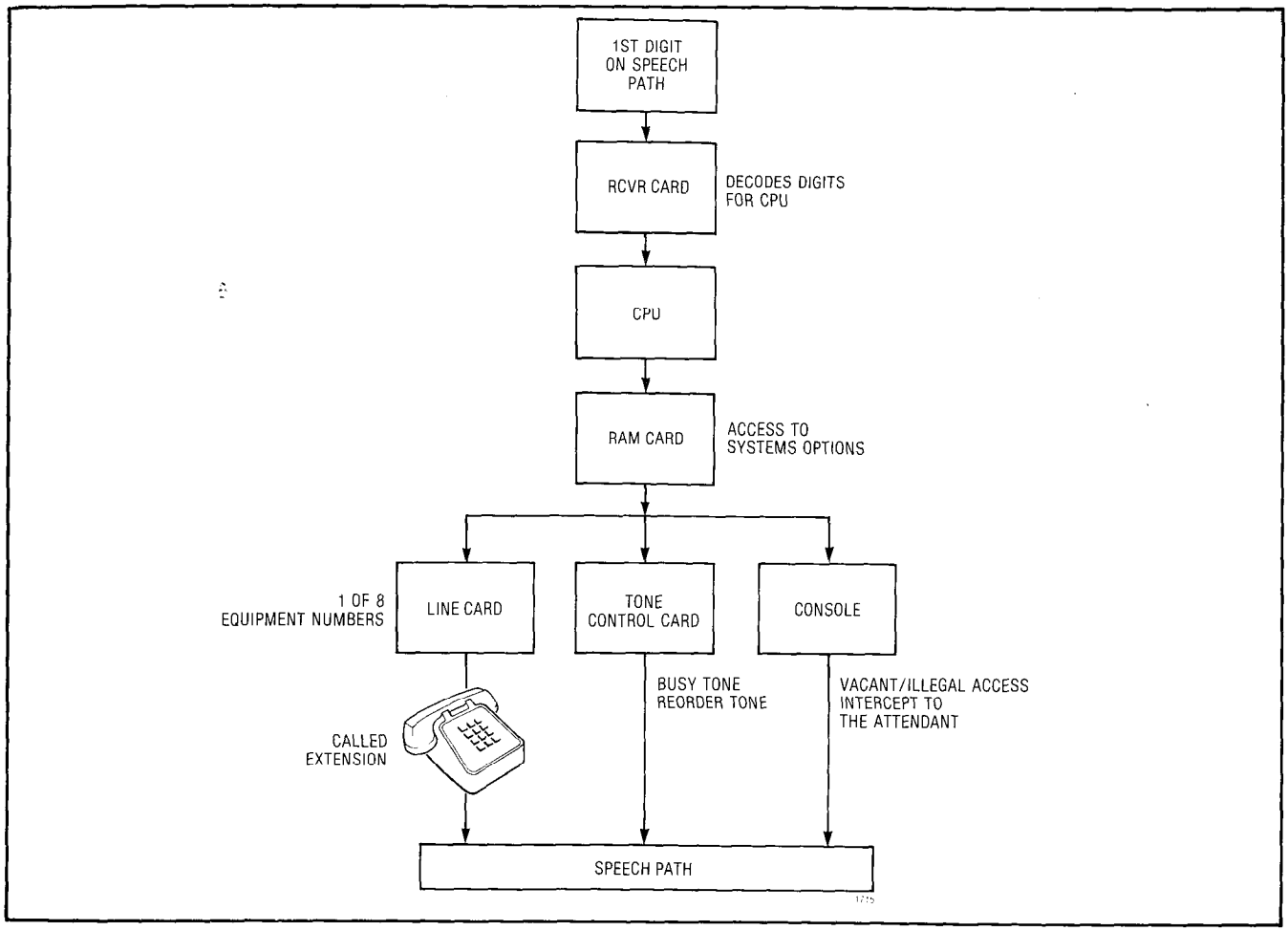

Fig. 5-3 Inside Call

Incoming Calls (GS/LS Trunks)

5.15 When the trunk circuit detects ringing voltage, forward or reverse current or a tip ground (ground start trunks), the trunk's microprocessor informs the CPU. The LED on the trunk card will light and the CPU reads a status report from the trunk. The CPU finds and tests a speech path and notifies the programmed equipment. The CPU then connects it, and the trunk to the speech path, and sends a command to the trunk card. The trunk card then terminates the trunk circuit and enables the audio. If the trunk has been programmed for DISA the system processor waits 10 seconds before answering and then connects a receiver and a dial-tone generator. This allows the trunk to appear as though it were an extension. A DISA card enables to dial internal stations and features.

5.16 Fig. 5-6 identifies all equipment numbers that may be assigned in a SX-100 or SX-200. This figure will aid the repair person in the association of equipment numbers to specific slots and thereby specific cards. There are 8 extensions per line card slot. Two E/M or tie trunks per trunk card slot or four CO trunks per trunk card. All trunk equipment numbers will appear as even numbers i.e. 50. For the explanation of the error codes and their meaning see part four of this practice.

TABLE 5-1

TABLE	TITLE
5-2	Error Code Procedures
5-3	Extension Fault Report Procedures
5-4	Console Faults
5-5	Trunk Fault Report Procedures
5-6	System Faults

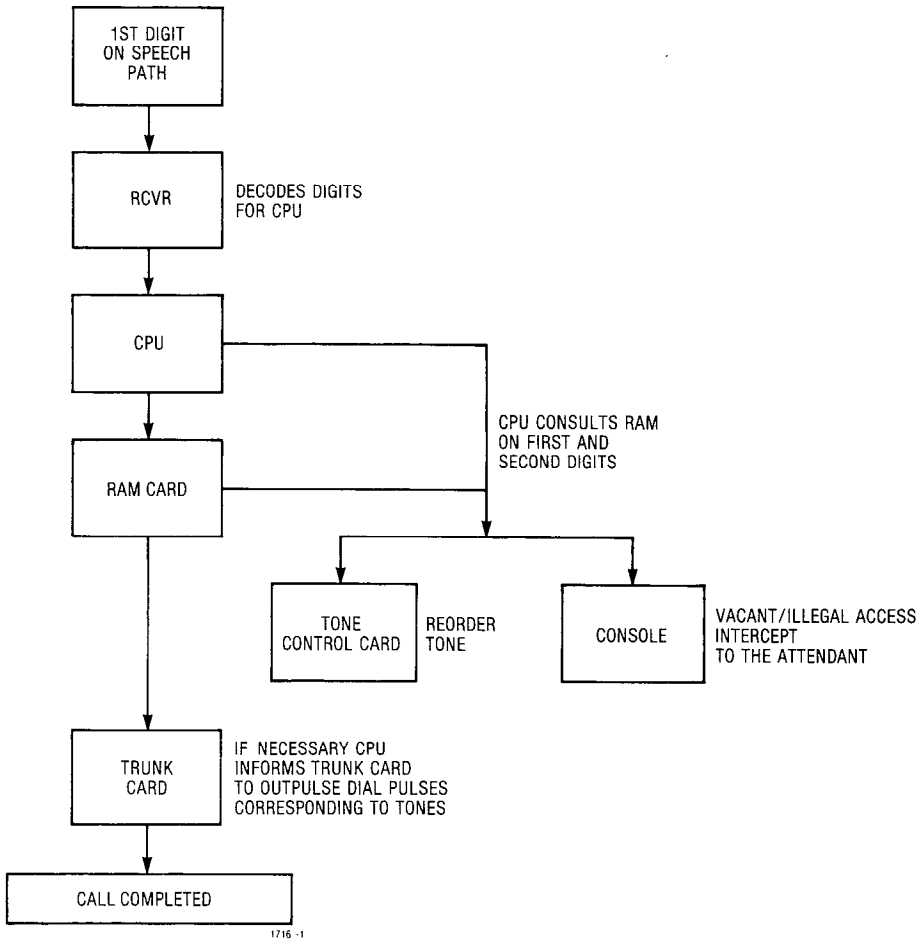

Fig. 5-4 Outside Call 0 and 1 Dialling Restriction

TABLES

5.17 Table 5-1 is a list of all tables to be used in the actual troubleshooting of the SX-100/ SX-200 PABX's. Table 5-2 is a list of the error codes that may appear on the console during regular operation, Table 5-3 is a list of extension faults, Table 5-4 is a list of console faults, Table 5-5 is a list of trunk faults and Table 5-6 is a list of system faults. All tables suggest immediate remedial action or provide a direct reference to a MAP that will incorporate the proper actions.

5.18 In the following tables (5-2 - 5-6) a STOP indication should be taken as: STOP, contact your nearest authorized MITEL Service representative.

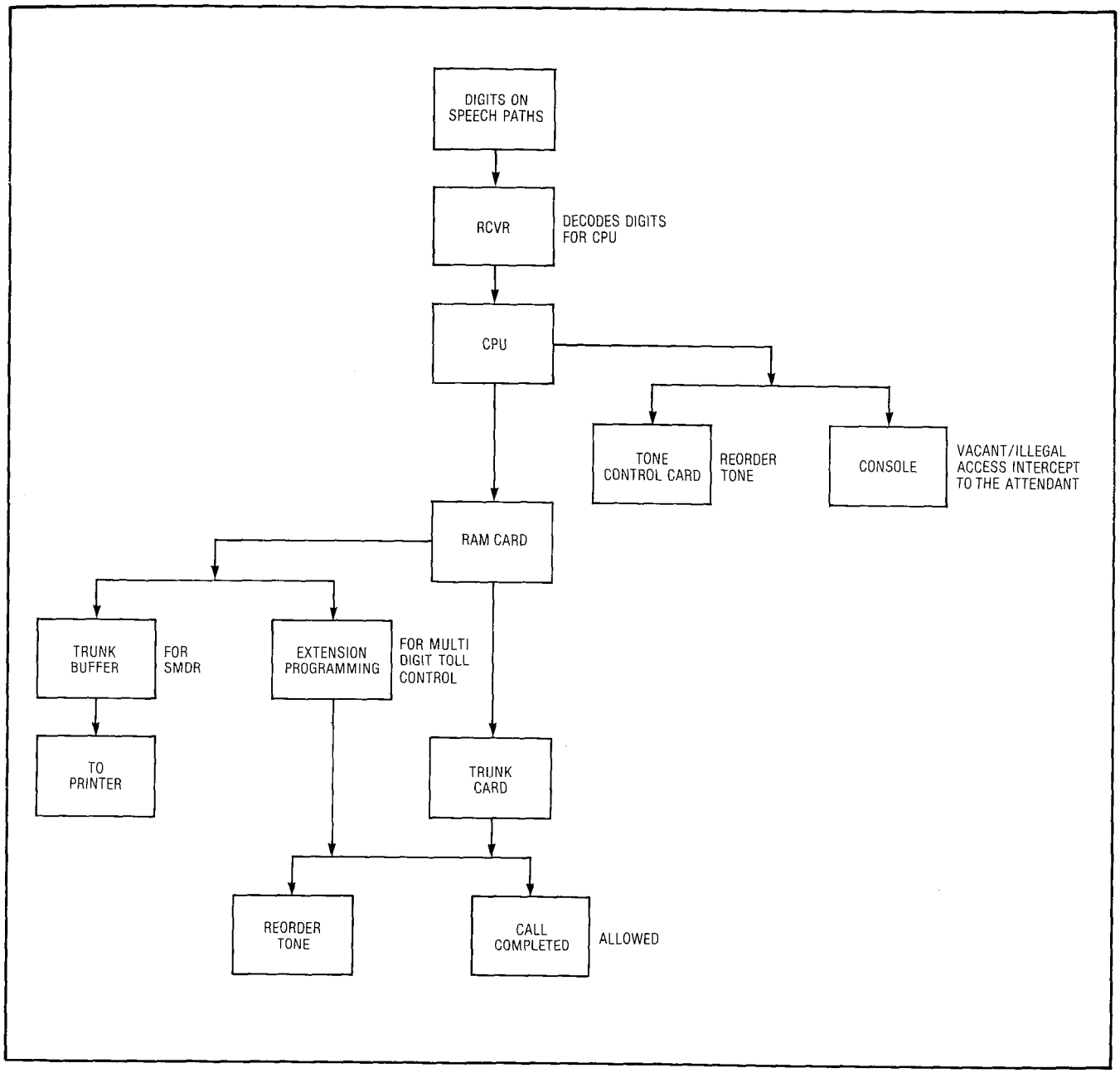

Fig. 5-5 Outside Call Multi Digit Toll Control or SMDR in Effect

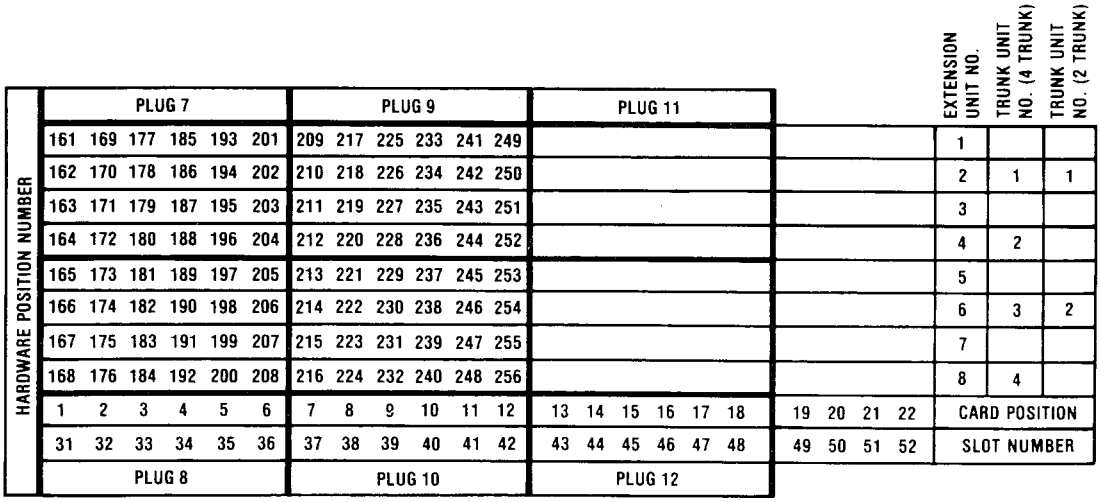

SHELF 2 (SX-200 ONLY)

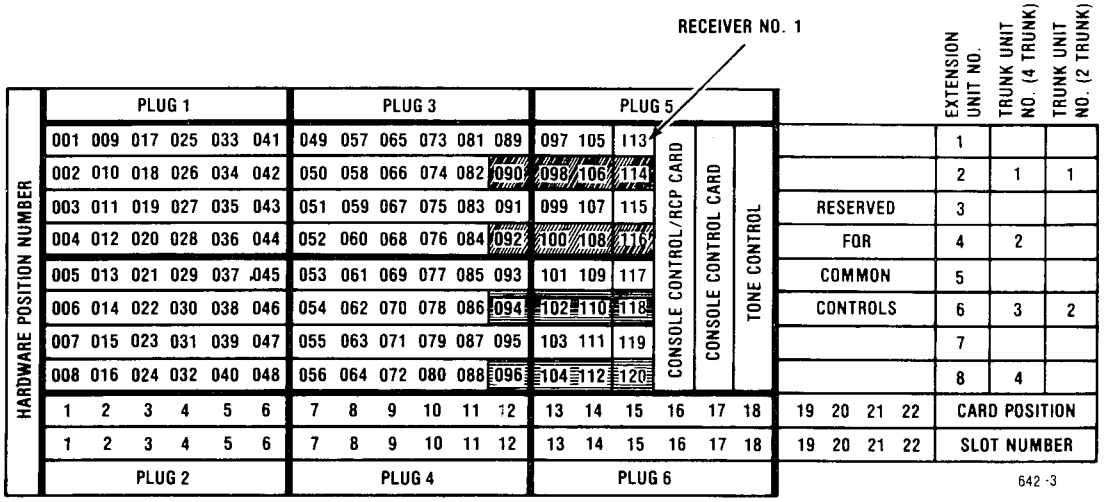

SHELF 1

DUAL AND OR QUAD RECEIVER EQUIPMENT NUMBERS

QUAD RECEIVER EQUIPMENT NUMBERS

NOTES: 1. EQUIPMENT POSITION 001 IS RESERVED FOR THE TEST LINE AND MUST THEREFORE BE EQUIPPED WITH A LINE CARD.
2. TRUNK EQUIPMENT NUMBER IS SAME AS INDIVIDUAL TRUNK ACCESS CODE.

Fig. 5-6 Equipment Numbering

TABLE 5-2
ERROR CODE PROCEDURES

Source Display	Alarm	Reason	Step 1	Step 2	Step 3
E001-22	major*/ minor	Error in RAM	Change RAM/COS card (slot 22) and reprogram	Perform Common Control Test MAP350-701	STOP
E002-20 (21)	major*/ minor	PROM checksum error	Change PROM/CPU card (slot 20) or Memory Expander (slot 21)	Perform Common Control Test MAP350-701	STOP
E003-19	major	Clock/scanner error	Change Scanner card (slot 19)	Perform Common Control Test MAP350-701	STOP
E004-18	minor	Speech path check circuit not "hi" when disconnected	Change Tone Control card (slot 18)	Perform Common Control Test MAP350-701	STOP
E005-18	minor	Bias circuit not connected to Speech path	Change Tone Control card (slot 18)	Perform Common Control Test MAP350-701	STOP
E006-99	minor	Speech path short	Change Tone Control card (slot 18)	Perform Speech Path test MAP350-702	STOP
E007-18	minor	Supervisory tone circuit not connected to speech path	Change Tone Control card (slot 18)	Change Receiver Cards one at a time	Perform Speech Path test MAP350-702
E008-Receiver Number	minor	Receiver not receiving tone digits	Replace Receiver card specified in SOURCE display	Replace Tone Control card (slot 18)	STOP
E009-Receiver Number	minor	Receiver not receiving pulse digits	Replace Receiver card specified in SOURCE display	Replace Tone Control card (slot 18)	STOP
E010	minor	Generator error	Replace Tone control card (slot 18)	Change Receiver card	Perform Common Control Test MAP350-701 STOP
E011	minor	Generator/Receiver error isolated to a speech path NOTE - error could be on receiver card or on tone control card (slot 18)	Replace Receiver specified in SOURCE display	Change Tone Control card (slot 18)	Perform Speech Path MAP350-702 STOP
E012	minor	Unable to connect the speech path to the line programmed as a "station" or "trunk"	Ensure that there is a card in the slot and it is programmed correctly	Change the card specified in the SOURCE display	Perform Common Control test MAP350-701 STOP
E013	minor	Supervisory tone missing	Replace Tone card	Replace Receiver cards one at a time	Perform Speech Path test MAP350-702
E014	minor	Receiver dial-tone detector not working	Replace Receiver card specified in the SOURCE display	Change Tone Control card (slot 18)	STOP

TABLE 5-2
ERROR CODE PROCEDURES (CONT'D)

Source Display	Alarm	Reason	Step 1	Step 2	Step 3
E015	minor	Probable receiver error	Replace Receiver card specified in the SOURCE display	Replace the Tone Control card (slot 18)	Perform Speech Path test MAP350-702 STOP
E018	minor	Speech path shorted out	Perform Speech Path test MAP350-701	Perform Common Control test MAP350-701	
E019	minor	16 speech paths have been found in error, probably a fault in the checking circuit	Dial maintenance code followed by 1 Wait to see if error returns	Replace tone control card Perform Common Control Test MAP350-701	Perform Speech Path test MAP350-702 STOP
E020	minor	Excessive errors in console data circuits	Change console Control card specified in the DESTINATION display	Change console specified in MAP350-501	Check voltages on interconnect card MAP350-601 STOP
E021-21 or 22	minor	Check Sum Error in the RAM	If the system presented error during normal operation change RAM/ COS card (slot 22) or PROM/RAM Expander (slot 21) and Initialize Memory as per MAP SECTION MITL9105/9110-98-210. This error will occur on a (new) unprogrammed RAM card	Replace RAM/COS card and reprogram the system STOP	
E022	minor	Generic software conflict	Initialize and program RAM	STOP	

* During Power-Up sequence only

Note: E021 will be lost if the system is reset or the power is turned off, if the following Generics of the following revision levels are installed:

Generic 202 Rev. 04 and lower
Generic 203 Rev. 02 and lower

1757

TABLE 5-3
EXTENSION FAULT REPORT PROCEDURES

Fault Reported As	Step 1	Step 2	Step 3
Extension dead no battery (side tone)	Check the equipment number locate the line card. See if the line LED is lit If it is check with a butt-in at the frame to verify set and house wiring. Buzz the pair. If the system is Generic 203/up ensure the console has not busied out the extension	At the console check that the extension programming is correct	Change the line card STOP
No dial tone at the extension, battery (side tone) present	Check the equipment number LED on the line card. If it is lit check the extension wiring by dialing with a butt-in at the frame. Buzz the pair	Check other extensions on the same card for dial tone. If dial tone is missing on all card extensions replace the line card. If dial tone is absent system wide replace the tone control card Note: Dial tone delays will occur if all receivers are busy	STOP
Busy lamp on line card stays on permanently	Check extension for locked out	Buzz extension for cable short	STOP
Extension cannot break PABX dial tone	Check extension with a butt-in at the cross PABX dial tone the cross connect field From the test line use the thumbwheel switches on the Scanner card to select each receiver and verify dial tone can be broken	Replace the line card	STOP
Extension can receive calls but cannot make calls	At the console check the extension's COS to ensure it is not receive only Check the extension with a butt-in at the cross connect field	Replace the line card	STOP

TABLE 5-3
EXTENSION FAULT REPORT PROCEDURES

Fault Reported As	Step 1	Step 2	Step 3
Extension can make internal calls but can not access a Trunk (busy or intercept tone returned)	Check for all trunks busy condition At the console check the extension's COS	In systems Generic 203/up check that the Controlled Outgoing Restriction is not in effect (see MITL9105/9110-98-105) Ensure that the trunks are available and working by accessing them directly from the the test line or console	Check that the Trunk Group is not Attendant Access only STOP
Extension cannot access a feature	At the console check the extension's COS, check the feature access code		STOP
Extension cannot break CO dial tone	At the cross connect field check that the trunk is returning CO dial tone and can be broken. If the extension is DTMF, check that the CO trunks are capable of DTMF or that the trunk group is programmed for DTMF to DP conversion	Check that the 3rd wire trunk switch settings are closed. If open ensure that there is no ground on the XT lead	Replace trunk card STOP
Wrong numbers after accessing a trunk	If CO trunk can accept DTMF ensure that the DTMF to DP conversion is not programmed in the trunk group	Replace trunk card	STOP
Wrong numbers local	Do Receiver card test from the test line	STOP	
Crosstalk on most extensions and trunks	–48Vdc bad, replace power supply		
			1760

Note: Some problems that line card replacement may cure; no ring, noisy battery, noisy lines.

TABLE 5-4
CONSOLE FAULTS

Fault Reported As	Step 1	Step 2	Step 3
Console dead except for for colon in time display and minor alarm or	Try that the handset is properly inserted in the jack Try the other jack	Replace Console Control card	Check interconnect card voltages SX-100 MAP350-605 SX-200 MAP350-601 STOP
Console dead no displays	Check that the console cable is plugged firmly into the console and interconnect card Check that the console cable is plugged into the correct position on Interconnect card	Check interconnect card voltages SX-100 MAP350-605 SX-200 MAP350-601 Replace console MAP350-501	STOP
Dial or feature button inoperative	At the console check that this feature button is programmed	Press a console button and observe the console control card to see if the Data LED flickers If it doesn't there may be a console problem MAP350-501	Replace the Console Control card Replace the console MAP350-501 STOP
Console noisy or no audio	Change the handset/headset Change the handset to the other jack	Replace console control card Replace console	STOP
Console displays garbage	Unplug console control card and plug it back in. If the console returns to normal, it has been affected by static discharge. Ensure the system has a console interface card (SX-200 only)	Perform the Common Control Test MAP350-701	STOP
Incoming trunk calls not coming to the console	Check console for Night Service	Check that the console handset is plugged into the console and the console power fail transfer switch is set to normal	Check programming to ensure trunk is not a direct in line STOP

1761

TABLE 5-5
TRUNK FAULT REPORT PROCEDURES

Fault Reported As	Step 1	Step 2	Step 3
Wrong numbers trunk card	Check the trunk at the cross connect field with DTMF and DP. Ensure that the system is not programmed to out-pulse both DTMF and DP to a DTMF trunk Check that DTMF pulses are not going into a DP Trunk	Check for reverse or open tip Check the PABX ground Check trunk and trunk group type	Replace the trunk card Replace the receiver card if there is DTMF to DP conversion STOP
Always receives busy tone after dialing a trunk access code	Check for correct trunk access code Check for Call Blocking Check Trunk Group for Attendant Access only Check for full trunk buffers Automatic Wakeup and SMDR	Check for reverse or open tip and ring on trunk Check PABX ground Check for two loop start trunks connected together Check for ground start open	Replace suspect trunk card STOP
Cannot break CO dial tone	Check the trunks at the cross connect field for DTMF and DP switches, check trunk card, SECTION MITL9105/9110-98-200. If there is tone to pulse conversion replace the receiver card	If the trunk tests good replace the line card Check the dial dictation	STOP
Trunks dropped by the system	Check for intermittent extension switchhook At the cross connect field check the trunk with a butt-in, ensure this is not a CO problem	On the trunk card check that the 50ms switch is not in position Program for longer switchhook flash (System Options) 114, 180, 181, 182)	Replace the trunk card STOP
Trunks being hung on the system	Check trunk type and trunk group programming i.e. tie trunk to CO trunk connections or loop starts trunks together Ensure there is a good ground for ground start trunks	Check the trunks provide release supervision Replace the trunk card	STOP

Note 1: These are other trunk card problems that may occur:

- Calls ring in, but don't show up on the console
- One way transmission
- Noisy trunks (eliminate CO trunk with a butt-in at the cross connect field first)
- Trunk card alarm LED lit
- Dropped calls from the CO (eliminate CO trunk with a butt-in at the cross connect field first)
- Station conference oscillations with 2 or more trunks
- Collisions due to 1 loop start trunk being seized at the same time i.e. incoming and outgoing
- AC induction on trunks
- Trunks out by one pair when punched down
- Low ringing current (from the CO) at the cross connect

1762

TABLE 5-6
SYSTEM FAULTS

Fault Reported As	Step 1	Step 2	Step 3
System completely dead no power	Check power at commercial AC outlet	Check that the system power switches are on	Go to Appendix 6 A6.03 STOP
Shelf 2 dead no power	Check Shelf 2 power MAP350-603		
Calls can not be made within the system power on		Perform Common Control Test MAP350-701	STOP
Meaningless diagnostics or system resets	Perform Common Control Test MAP350-701		
Error E012 speech path 26	Intermittent shelf cables	STOP	
Error E008	Change tone control card dial tone or if the problem is intermittent change shelf	STOP	
Double connections	Replace Scanner card		
Lockout shown on console while station conversing	Replace Scanner card		
Shelf power will not come up	P301 interconnect		
Apparent CPU problem, recent software change	Software rev levels not compatible	STOP	
Calls with no one there (at console)	Replace Console	STOP	
Low console volume	Replace Console	STOP	
Station Conference oscillates	Trunk limitations	STOP	
System powered down requires new programming	RAM battery dead	STOP	
Console goes to night 1 no reason	Bad handset	STOP	
1/8A ringing fuse blows	Short on external ringing leads		
Extension can not page	Check programming Check extension COS Check access codes	Go to MAP350-704 STOP	
Night bells don't ring	Check user 48Vdc and 90Vdc fuses	Check trunk programming	Go to MAP350-705 STOP
Music on Hold is not audible	Check input at cross connect field by clipping a butt-in on incoming pair	Change tone control card STOP	

1763

SX-100/SX-200 POWER SUPPLY

6. The SX-100/SX-200 power supplies form an integral part of the equipment cabinets. The SX-100 power supply is housed immediately to the right hand side (front view) of the equipment shelf (Fig. 6-1). In the SX-200 the power supply is housed in a metal cabinet forming the lower rear door of the system (Fig. 6-2). Both supplies are fully R.F. filtered and may be operated from either AC or DC inputs to produce multiple DC output rails as well as ringing voltage. This part will discuss the power supplies in 4 parts. There is also a section on the Reserve Battery Back-Up.

- AC - DC Converter
- Control Voltage Supply and DC/DC converter
- Ringing Generator
- Out of Tolerance Circuit
- **AC/DC Converter** The SX-100/SX-200 AC/DC Converters are designed to operate with a AC power source in the range of 100 -130Vac or 200 - 250Vac with an internal modification for the SX-200 and a converter for the SX-100, (see MITL9105/9110-98-200). The SX-200 converter has an output of −60 to −64Vdc while the SX-100 converter has an output of −50Vdc to −56Vdc.
- **DC/DC Converter** The converter output is fed to the main DC/DC converter and Control Voltage Supply. The DC/DC converter may also be fed by a 48Vdc reserve power supply. The battery supply may be connected permanently and will allow instantaneous cut over should the AC power fail. The control voltage section provides the following voltages:
- +8Vdc
- −5Vdc
- 0Vdc
- −10Vdc
- −48Vdc
- **Ringing Generator** The ringing generator uses a −48Vdc output from the main converter to produce a 90Vac, 20Hz (optional 17Hz, 25Hz) supply for the system ringing.
- **Out of Tolerance** All voltage levels are regulated ±5% except for the −48Vdc which may vary ±10%. An Out-Of-Tolerance (OOT) circuit monitors all levels continuously (white/green wire of P303). Should a deviation occur, an OOT signal will activate the power fail transfer circuit through the Interconnect card. It should be noted that if a −48Vdc reserve power supply is used, the power fail transfer will not be activated in the event of a power failure. In the SX-100 and SX-200 there are provisions to program a port as a Contact Monitor (MITL9105/9110-98-105) This monitor may be used to alert the attendant that the system is on battery power (Wiring Appendix 3) by wiring it to a contact monitor port (at the cross connect field).

6.02 Reserve Battery Backup and Charger. The SX-100 and SX-200 both accept a −48Vdc source fed to the terminals indicated on the terminal blocks shown in Figs. 6-2, 6-3. The installation of the reserve supply in the systems is described in MITL9105/9110-98-200. A pictorial view of the power supply is shown in Figs. 6-2 and 6-4. The MITEL reserve battery and charger (MITL part number 9110-014) has an OOT circuit which may be used to alert the attendant that the system is on reserve battery power. The indicator is a dry relay contact that may be used to ring an external alarm or it may be wired to a system port as a Contact Monitor.

6.03 Fusing

- The SX-200 is protected by fuses which are located on the back door of the cabinet (Fig. 6-5). The back door has imprinted upon it a circuit description defining each fuse and the circuit breaker. In addition to these fuses there are a series of LEDs which also are defined by the circuit on the back door. These LEDs will be lit if there is power in the area that they designate, or in the case of the reserve battery backup, if the battery is connected. In addition to the cabinet door fuses, there are fuses located on the backplane, interconnect card and power fail transfer card. The fuses on the backplane are for −48Vdc and have an LED which will be lit if the fuse blows and there is a card in one of the associated slots. The

fuse on the interconnect card protects the console's −48Vdc and the fuse on the power fail transfer card protects the power fail transfer −48Vdc.

- The SX-100 has the same backplane as the SX-200 hence, the same fusing appears on the backplane. There are three fuses on the interconnect card for; user 90Vac, user −48Vdc and the console −48Vdc (Fig. 6-3). The front panel of the power supply has two circuit breakers; one is for the DC battery supply, the other is for the AC supply (Fig. 6-1).

Note: ***Some early versions of the SX-100/200 do not have all the fusing of later models. This point should be taken into account when troubleshooting the system.***

- If the system is equipped with a reserve battery backup (MITL9110-014 SX-200 or 9105-014 SX-100) separate fusing is included in the charger unit itself, Fig. 6-6 There are three fuses; a one amp charging fuse, a five amp output fuse and a two amp AC fuse. In addition there are two 20 amp circuit breaker (one on the battery pack, one on the charger unit) for the battery protection. All reserve battery and charger connections are shown in (Fig. 6-2 and Fig. 6-3). Installation of the reserve battery back-up is described in MITL9105/9110-98-200.

6.04 When troubleshooting the systems for power failures the Power Supply Block Diagram (Fig. 6-7), and Charts 6-1 through 6-10 should be consulted. The Charts outlined cover the trouble and it's effect on the System. In most cases the repair person will be directed to a specific MAP for remedial action. Under the heading "Check" a yes answer to the question asked, is an indication to go on to the next question in the "Check" column. If a no answer is encountered the repair person should go to the "Action" column and follow the instructions listed there. There is also a column indicating by a X to which system the action applies. Above all it must be remembered that fuse replacement is not a remedy. The cause of a power failure should be determined before the system is powered up. Utilizing the information provided in this section and the MAPs referred to in Charts 6-1 through 6-10, the repair person should be able to pin point faults and take proper replacement action. At all times the repair person should follow all safety precautions suggested in the MAPs to ensure maximum personal and equipment safety.

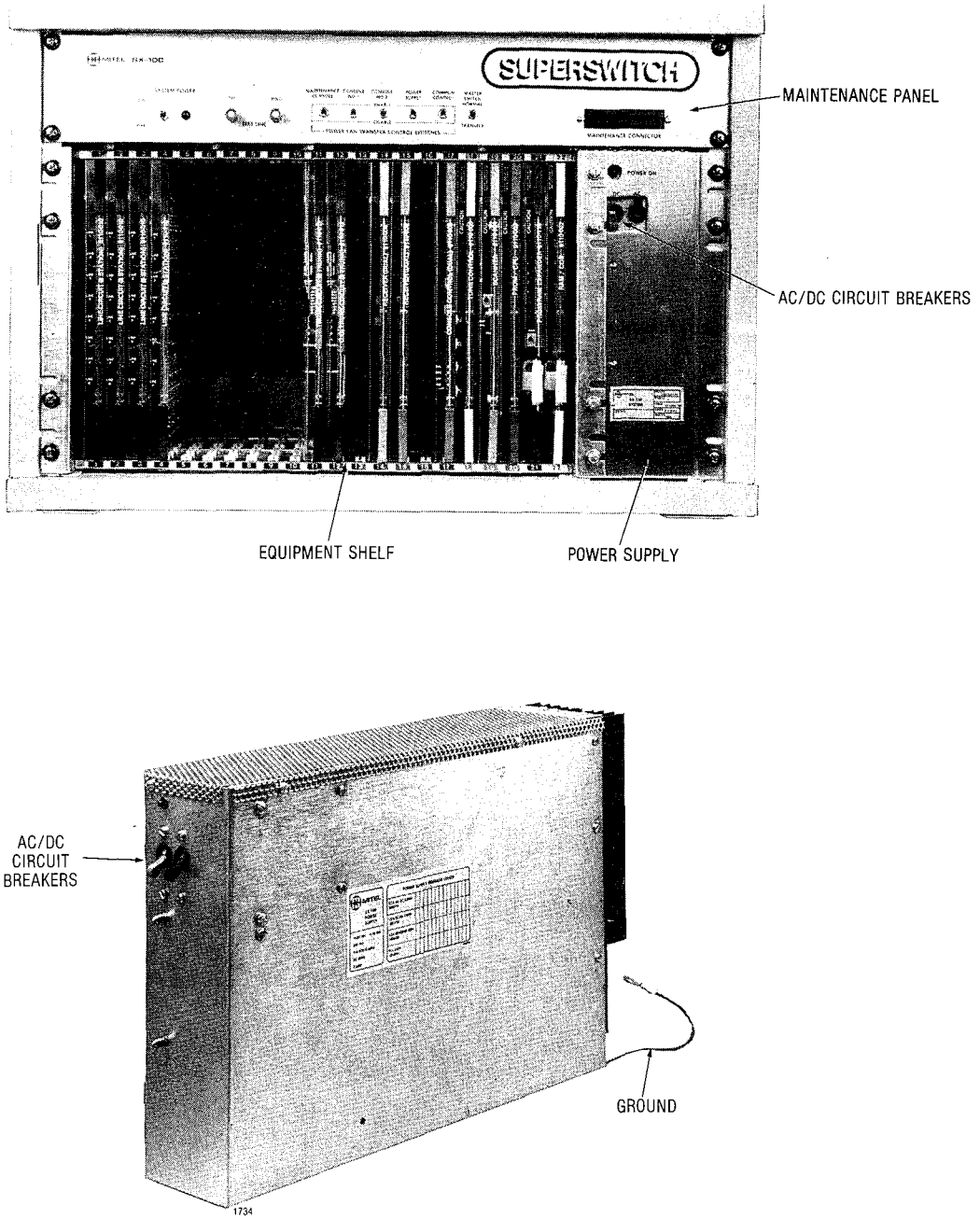

Fig. 6-1 SX-100 Equipment Cabinet and Power Supply

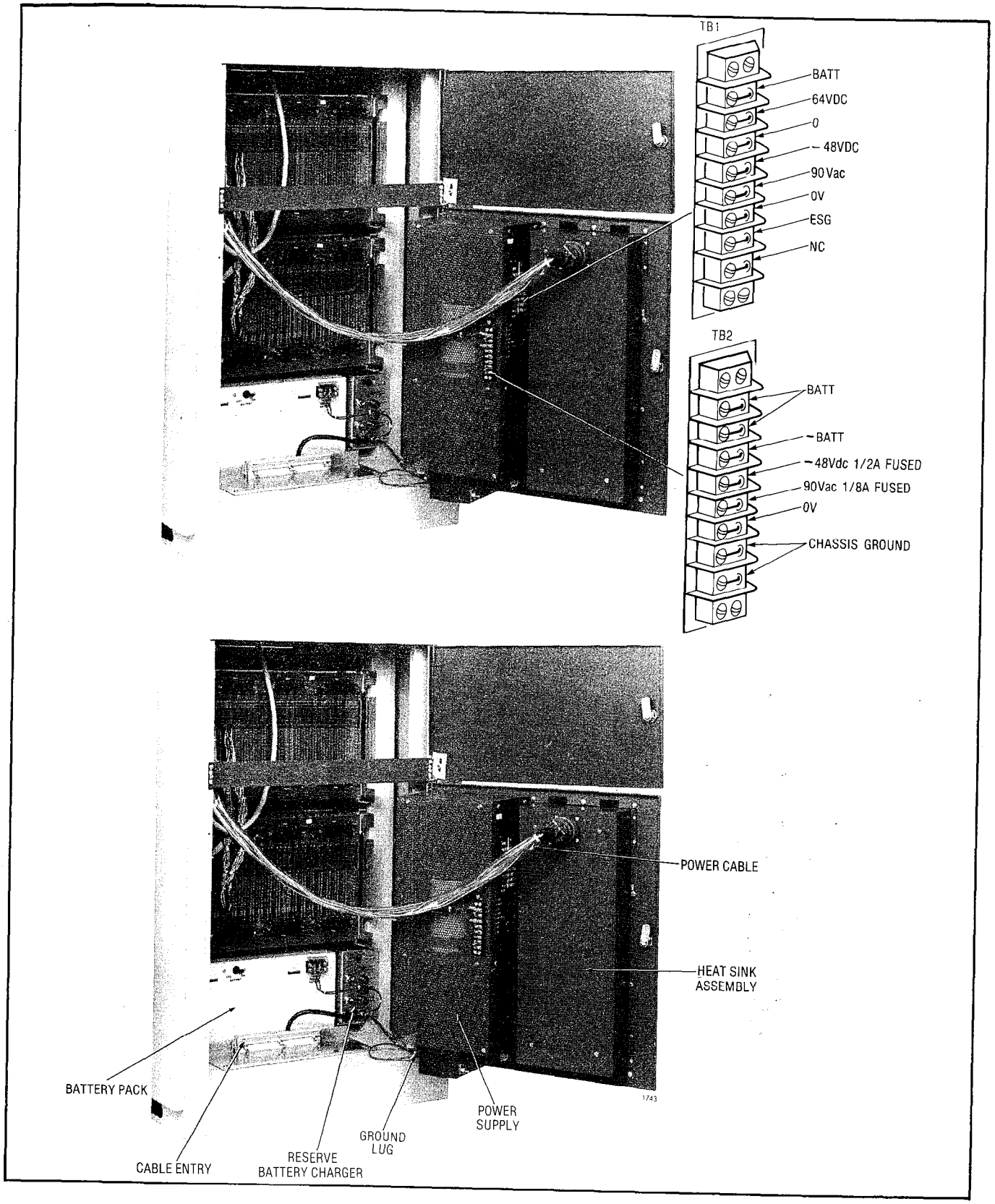

Fig. 6-2 SX-200 Power Supply

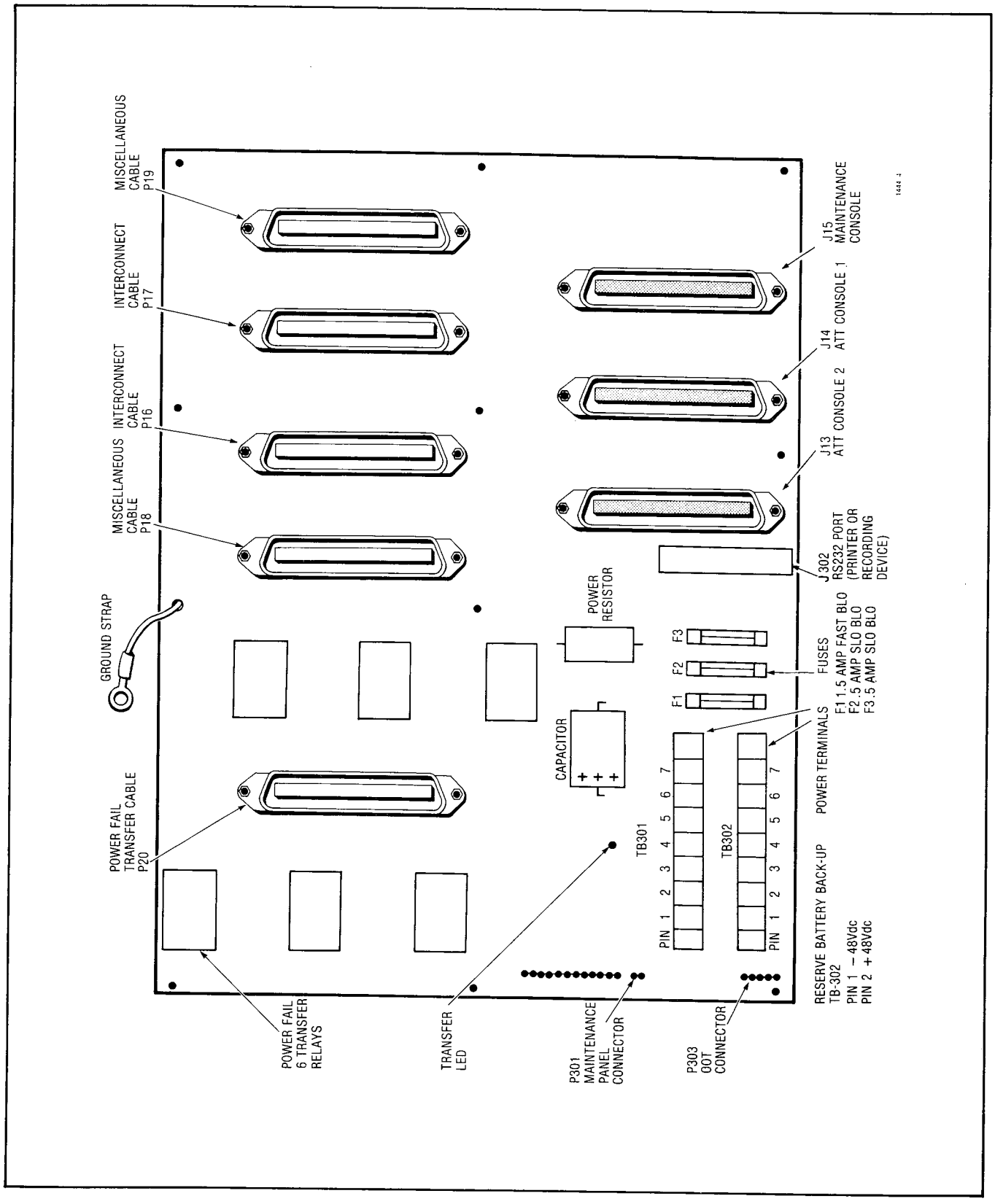

Fig. 6-3 SX-100 Interconnect Card

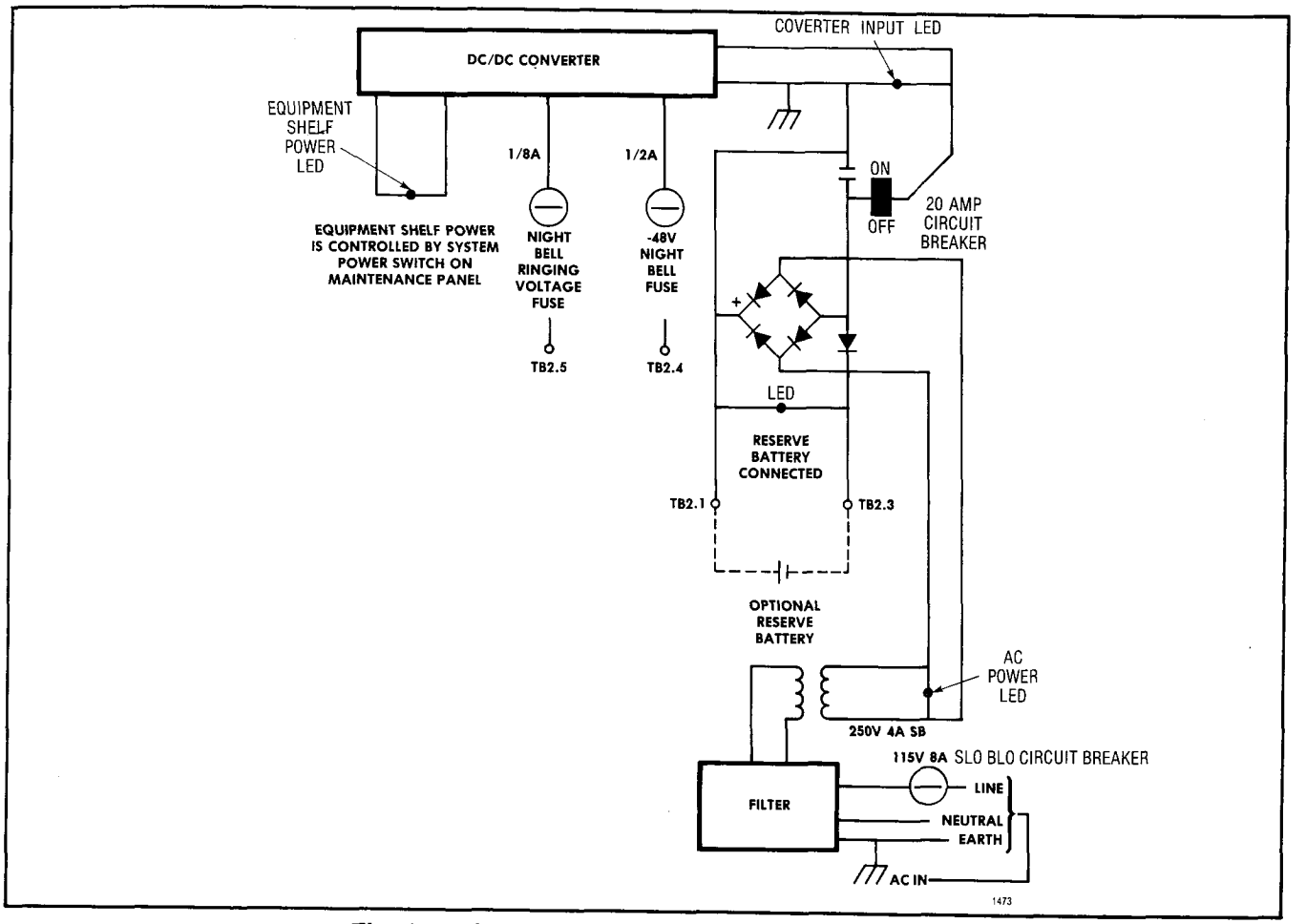

Fig. 6-4 SX-200 Back Door Electrical Schematic

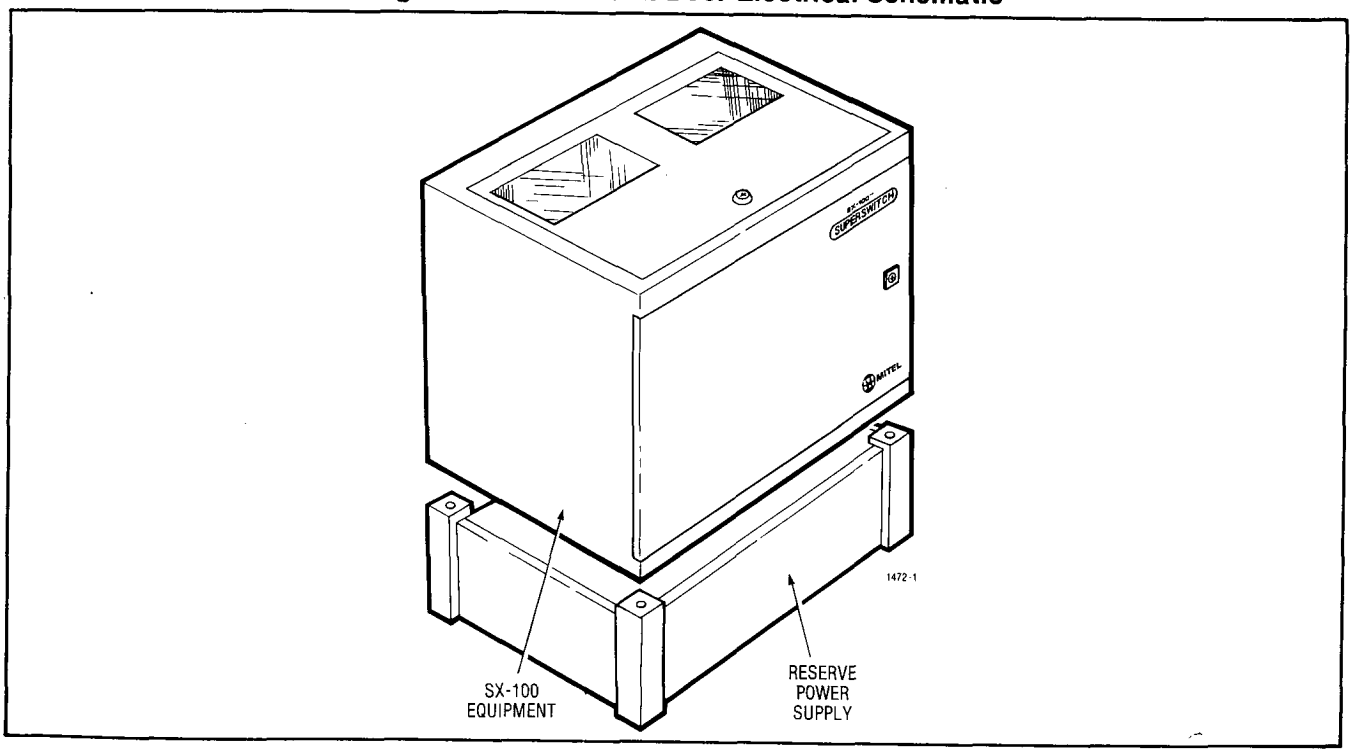

Fig. 6-5 SX-100 Reserve Battery Back-Up

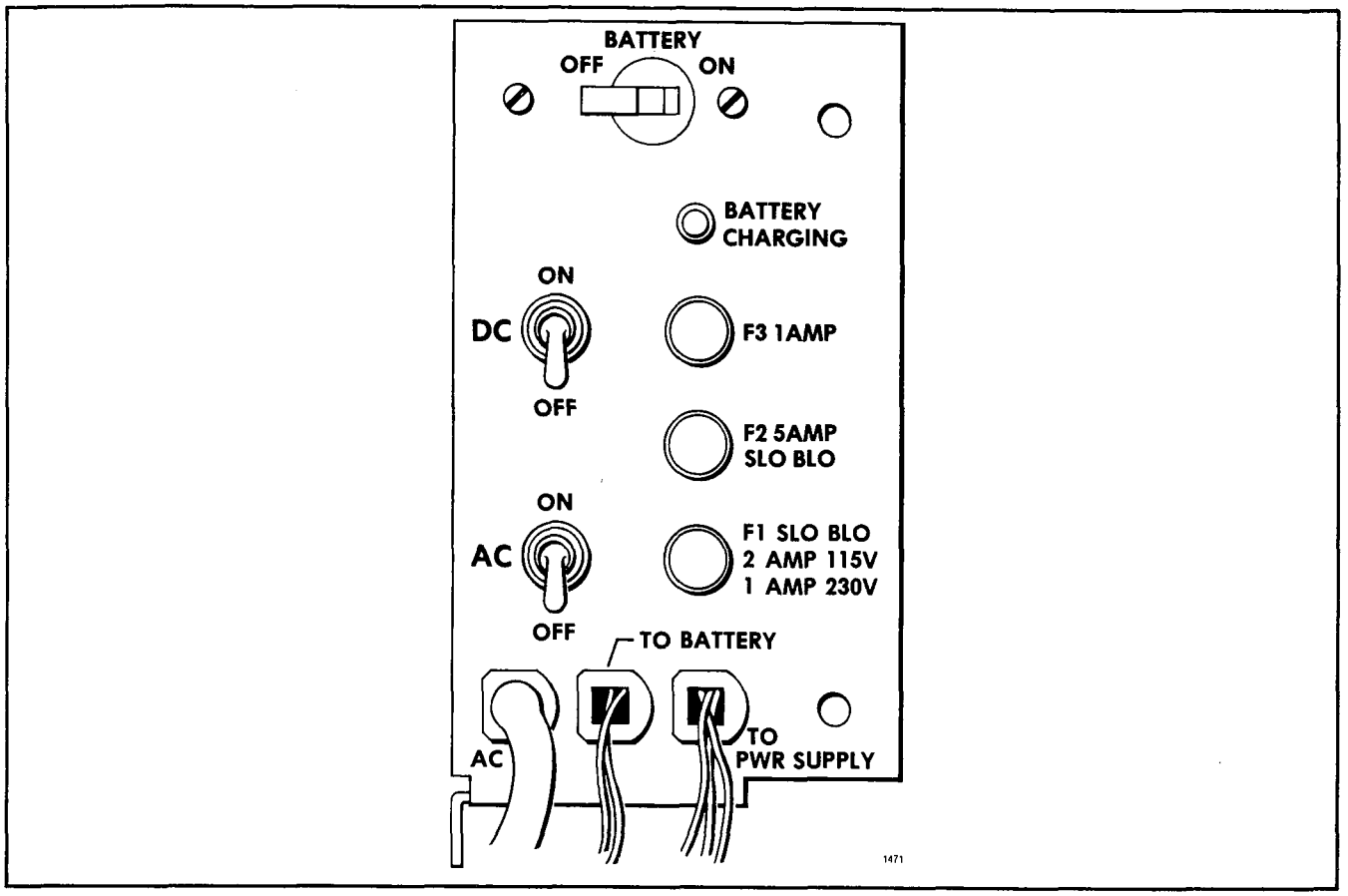

Fig. 6-6 Reserve Battery Charger

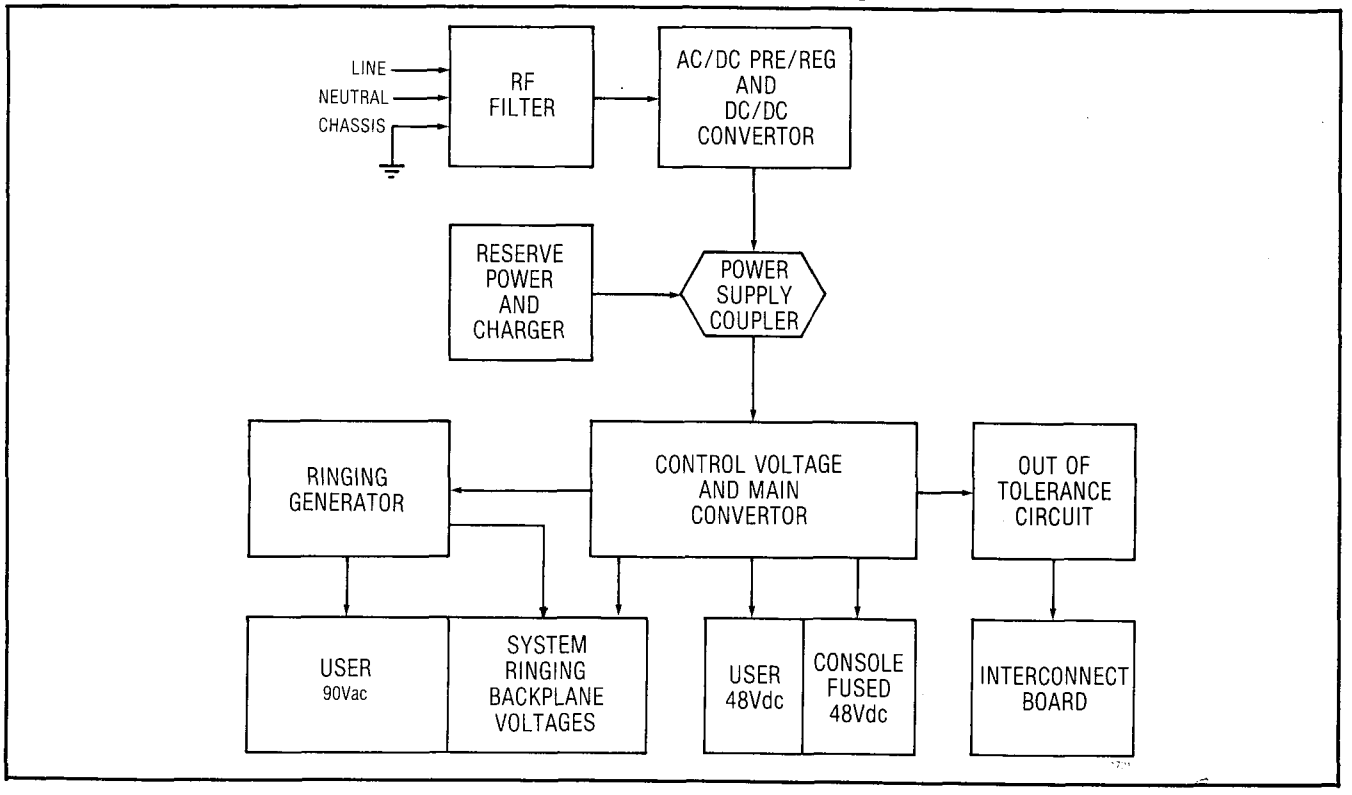

Fig. 6-7 Power Supply Block Diagram

CHART 6-1
CAUTION DANGEROUS OR LETHAL VOLTAGES

Trouble	Check	SX-100	SX-200	Action
System completely dead. Suspect primary power failure. No reserve battery backup	1. Is the AC power LED lit?		X	On the SX-200 check the rear door, bottom right hand corner for the AC power LED
			X	Check that the system is plugged in
			X	Check the AC power fuse on the back of the system
			X	Check the AC power at the commercial source with a suitable AC meter or by plugging another device into the outlet
	2. Is the converter LED lit?	X		There is a 5.5 AMP converter LED circuit breaker on the front of the SX-100 power supply. If it is in the on position the LED beside it should be lit
			X	There is a 20 AMP circuit breaker on the back door of the SX-200. If it is in the on position the LED beside it will be lit.
		X	X	If the circuit breaker is off, reset it. If the breaker trips again, replace power supply MAP350-403 SX-100, MAP350-507 SX-200
	3. Is the maintenance panel LED (power on) lit?	X	X	Check that the maintenance panel power on switch is on
		X	X	Ensure that the maintenance panel cable is connected correctly to the interconnect card
		X	X	Check backplane voltages as per MAP350-603
	4. Replace SX-100 power supply MAP350-403	X		
	5. Replace Heat Sink assembly MAP350-506		X	
	Replace SX-200 power supply MAP350-507		X	

CHART 6-2

Trouble	Check	SX-100	SX-200	Action
System power on but no LEDs lit on console. Appears to be no power to the console	1. Is handset plugged into the console?	X	X	Plug in handset
	2. Is the console cable secure?	X	X	Secure console cable
	3. Is the fuse on the interconnect card good?	X	X	Check the fuses on the interconnect cards and replace if blown. Power system up. Replace cable if the fuse blows. Try again.
	4. Is the interconnect card passing −48Vdc to the console	X	X	MAP350-605 SX-100 MAP350-601 SX-200

CHART 6-3

Major Alarm on console, System appears to operate normally, ie. calls can be processed.	1. Check the master transfer switch on the maintenance panel are in operating position	X	X	Set all switches as per paragraph 2.13
	2. Check the power Fail Transfer LED on the PFT board. Is it not lit?	X X		Change card as per MAP350-401
	3. Disable all console switches did the system remove itself from Power Fail Transfer	X X X X X	X X X X X	OOT condition may exist refer to Appendix 6 Ensure that the console is in the correct plug Change the console as per MAP350-501 Change the console cable as per MAP350-501 Change the maintenance panel MAP350-511 SX-200 MAP350-405 SX-100
	4. Replace the maintenance panel as per MAP350-511 SX-200 MAP350-405 SX-100	X	X	
	5. Replace the power supply harness as per MAP350-512 SX-200 MAP350-403 SX-100	X	X	

CHART 6-4

Trouble	Check	SX-100	SX-200	Action
No telephones ring, but there is dial tone	1. Ensure that the PFT LED is not on	X	X	Set all switches as per paragraph 2.13
	2. Check that all PFT switches are in normal position	X	X	Paragraph 2.13
		X	X	Go to Appendix 6

CHART 6-5

Trouble	Check	SX-100	SX-200	Action
Ringing on all telephones low or intermittent	Check 90Vac			Go to MAP350-603

CHART 6-6

Trouble	Check	SX-100	SX-200	Action
Calls can not be made within the system	Is the system in PFT?	X	X	Go to System Power test Appendix 6

CHART 6-7

Trouble	Check	SX-100	SX-200	Action
Shelf 2 dead	Is all power on shelf 2 present?		X	Go to MAP350-603

CHART 6-8

Trouble	Check	SX-100	SX-200	Action
Apparent radical power fluctuations	Under heavy (or light) traffic conditions system power remains unstable	X	X	Go to Appendix 6

CHART 6-9

Trouble	Check	SX-100	SX-200	Action
System can not be released from PFT	Reset the PFT switches. Is the system returned to normal?	X	X	Check fuse on interconnect card as per MAP350-605 SX-100 MAP350-601 SX-200
		X		Go to Chart 6-2

CHART 6-10

Trouble	Check	SX-100	SX-200	Action
Reserve battery backup not holding the system up?	1. Are all reserve battery backup connections as per Figs. 6-2 and 6-3?	X	X	Make connections as shown in Fig. 6-2 and 6-1. Give batteries time to charge (24 hours)
	2. Is the battery circuit breaker in the on position?	X	X	Reset breaker
	3. Is the battery charging LED lit?	X	X	Go to MAP350-604 SX-200 MAP350-606 SX-100
	4. Are fuses F1, F2 and F3 good?	X	X	Go to MAP350-604 SX-200 MAP350-606 SX-100
	5. Are the batteries less than 4 years old	X	X	Replace batteries as per MITL9105/9110-98-200
	6. Unplug the system AC power cord. Is there an audible click from the charger unit or does the system indicate an "on battery condition" (i.e. CONTACT MONITOR MITL9105/9110-98-105)	X	X	OOT not properly hooked up OOT not functioning replace charger unit

7. Remote Maintenance, Administration and Test System

RMAT System

7.01 The RMAT System was designed to be used by personnel at Maintenance Centers to remotely access systems installed at a customers premises. Those personnel may obtain maintenance information or cause programming changes. The System provides a means of rapidly identifying potential PABX problem areas and allows programming changes to be done without the necessity of visiting the users premises.

7.02 The facility is provided by:

(a) A Remote Maintenance Administration and Test (RMAT) System Controller installed at the Maintenance Center. It consists of SX-100 or SX-200 hardware with a Generic 290 RMAT PROM, and includes a Remote Control - Central (RCC) Card and a standard operating console.

(b) A Remote Control - PABX (RCP) Card installed in slot 16 of Shelf Unit 1 of each SX-100 or SX-200 PABX.

(c) The interconnecting facilities between the RMAT Controller and the RCP - installed PABX's. This communication link is in most cases provided by the public switched network, with the RMAT Controller dialing up the required PABX. Access to each PABX may be provided by dialing a dedicated number (trunk), or by dialing the listed directory number for the PABX. A user defined security code within each PABX provides protection against unauthorized access.

Note: ***The RCP Card occupies slot 16, which might otherwise have been used for a second console control card. The PABX then has a single attendant console. If, however, a second attendant console is required together with the RMAT facility, then the second console is connected to the maintenance port. Under these conditions certain limitations are imposed such as:***

- shared HOLD positions between the two consoles
- shared conference call setting capability
- no timeout to night service on the second console
- audio connection between attendant consoles when both are idle
- separate console configuration in a tenant installation is not possible

7.03 Once the RCP Card has been accessed the RMAT Controller can perform the following functions at the PABX:

(a) Duplication by the RMAT Console operator of the PABX normal attendant console functions and displays. (NOTE: No speech path is available to the RMAT console operator once the RCP is accessed.)

(b) Programming functions for the remote PABX including extended programming for Multi-Digit Toll Control purposes.

(c) Detection of alarm conditions at the PABX and the ability to clear alarms, to busy-out lines and trunks and perform reset and PABX disable conditions.

(d) If the RCP is connected as a PABX extension the PABX attendant, or any other PABX extension, has the facility of originating a RMAT call to the RMAT Controller. In addition, if the RCP extension has the COS option "Flash for Attendant" enabled, the RMAT operator can re-enter into speech mode with the PABX attendant after being in the Remote Administration Mode.

(e) The RMAT Controller can access the RCP card by dialing the RCP access code, and has the capability to change the access code when required.

(f) The RMAT Controller's receiver and trunk cards may be programmed by its console for the type of operation required to access the remote PABX equipments; local features such as time or date display can also be programmed from the console.

(g) The RMAT Controller equipment includes the capability of displaying and clearing diagnostics registers for its own or for the remote PABX RCP Card.

7.04 For further information see SECTION MITL-9105/9110-98-101 and 9105/9110-98-301.

APPENDIX 1

MITEL ACTION PROCEDURES

GENERAL

A1.01 Task oriented functions in this section are implemented using MITEL ACTION PROCEDURES (MAP's). Also there is a brief discussion of tools and safety practices.

A1.02 A MAP is a step by step procedure using a flow chart principle, written and illustrated where necessary to a level of detail that allows both experienced and inexperienced personnel to carry out the tasks detailed. A MAP contains two levels of information as follows:

(a) For experienced personnel, a series of steps (level one) each numbered [n] and annotated with minimal information.

(b) For inexperienced personnel, each step referred to in (a) above is amplified by a connected series of numbered substeps [nA] (level two).

A1.03 A typical example of a MAP is shown in Fig. A1, with the two levels detailed.

MAP SYMBOLS

A1.04 There are four basic symbol shapes which may be used in a MAP, and are defined as follows.

A1.05 AND Block: Used to indicate a level one step that must be performed. Consists of a square with the word AND centred in the block.

A1.06 OR Block: Used to indicate a choice of level one steps, one of which must be performed. Consists of a rectangle, with the text centred in the block, and with the word OR appearing between the alternative operations.

A1.07 The rectangle is also used to border instructions which imply that the operator must perform a task outside the scope of the MAP. The text is centred in the rectangle.

A1.08 DECISION Block: Used to indicate a decision within the level one steps which must be made. The symbol is based on a hexagon with the top and bottom sides extended. Decision text is centred in the symbol.

A1.09 START/FINISH/JUMP TO Block: Used to indicate the start and finish of a MAP. Also used to indicate 'jump to' points within the MAP, for example "go to [n]" or "from [n]" or "return to [n]". The symbol is a rectangle with semi circular ends. Text is centred in the symbol.

THE OPERATORS USE OF MAP'S

Experienced Operator

A1.10 For the experienced operator to complete a task using a MAP, reference to the sequential short form level one steps is usually all that is necessary. Using Fig. A1-1 as an example, the experienced operator would proceed as follows.

A1.11 At [1] makes a decision based on the information within the block. If the answer is YES the operator must proceed to a different MAP. If the answer is NO the operator is faced with another decision at block [2].

A1.12 At [2] if the decision is NO there is no requirement to proceed further and the test is abandoned. This naturally results in a FINISH block. If the decision is YES the operator proceeds to [3] and [4] in succession, i.e. dials the DID station number and completes the call to the check extension.

A1.13 The description of the instructions carried out in A1.05 and A1.06 have assumed that the level of competence of the operator is such that short form level one steps contain sufficient information, and therefore the operator reads only the centre column of the MAP, top to bottom of the page.

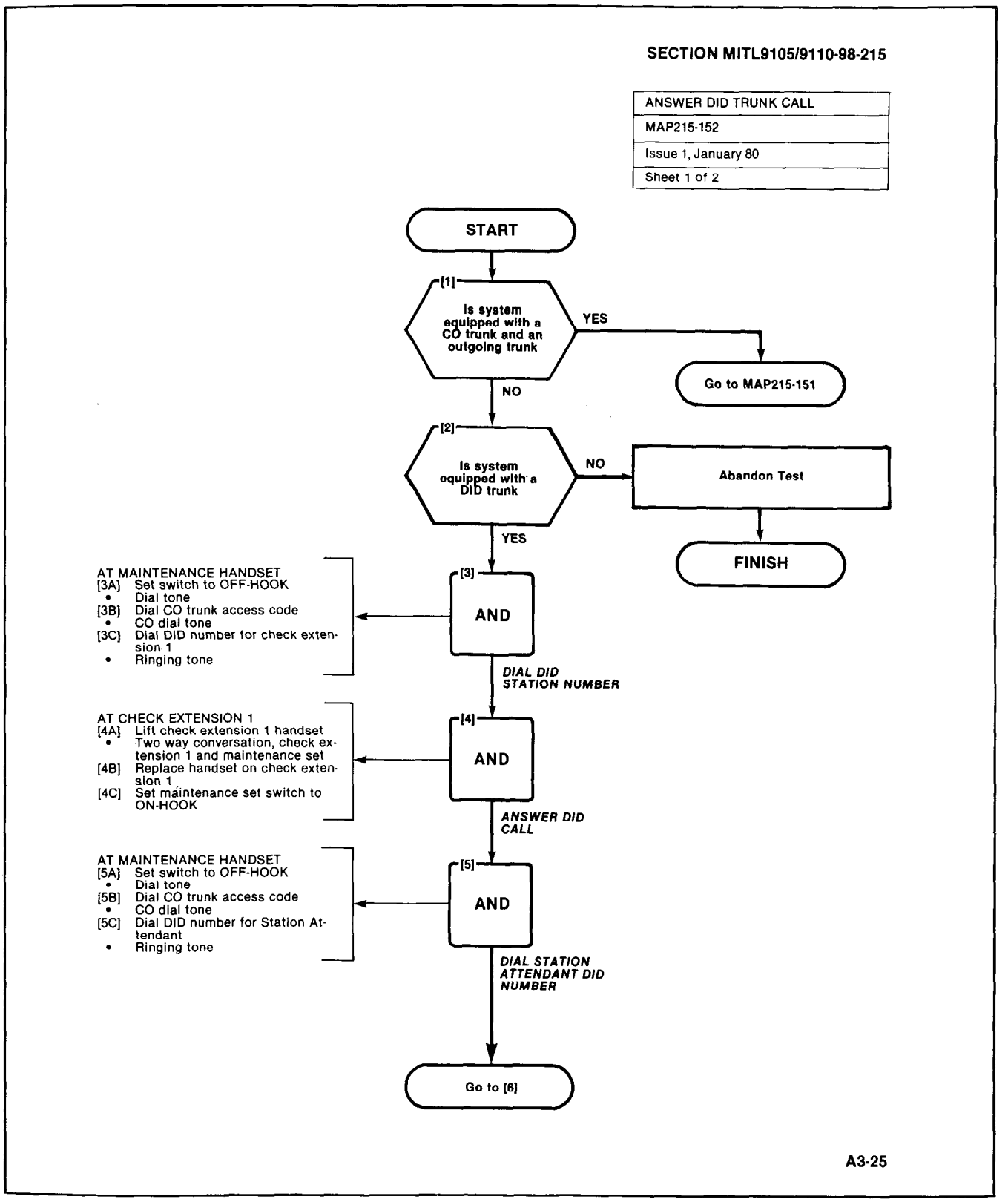

Fig. A1-1 Typical MAP Page

Inexperienced Operator

A1.14 If the operator's experience is such that the level one instructions do not contain sufficient information, the level two substeps should be referred to as follows.

A1.15 Using Fig. A1-1 as an example the path followed should be:

(a) At [1] and [2] make the decisions called for at these steps as before.

(b) At step [3] dial the DID station number by performing substeps [3A], [3B] and [3C].

In terms of steps and substeps, the operator follows a decision, decision then step and-substep paths in the example shown.

TOOLS, TEST EQUIPMENT AND SPECIAL INSTRUCTIONS

A1.16 Any tools, test equipment or special instructions that the operator requires or needs to know are stated on the first page of each MAP. If the MAP is long, and contains a number of sub procedures, these are listed in synopsis form on the first page.

A1.17 ***Caution: is necessary, during installation and maintenance of the PABX to avoid possible damage to the system electronics by static discharge. A simple means of avoiding the possibility of such damage, is the use of a "Static Protection Wrist Strap" attached to the system Ground, as shown below (Fig. A1-2).***

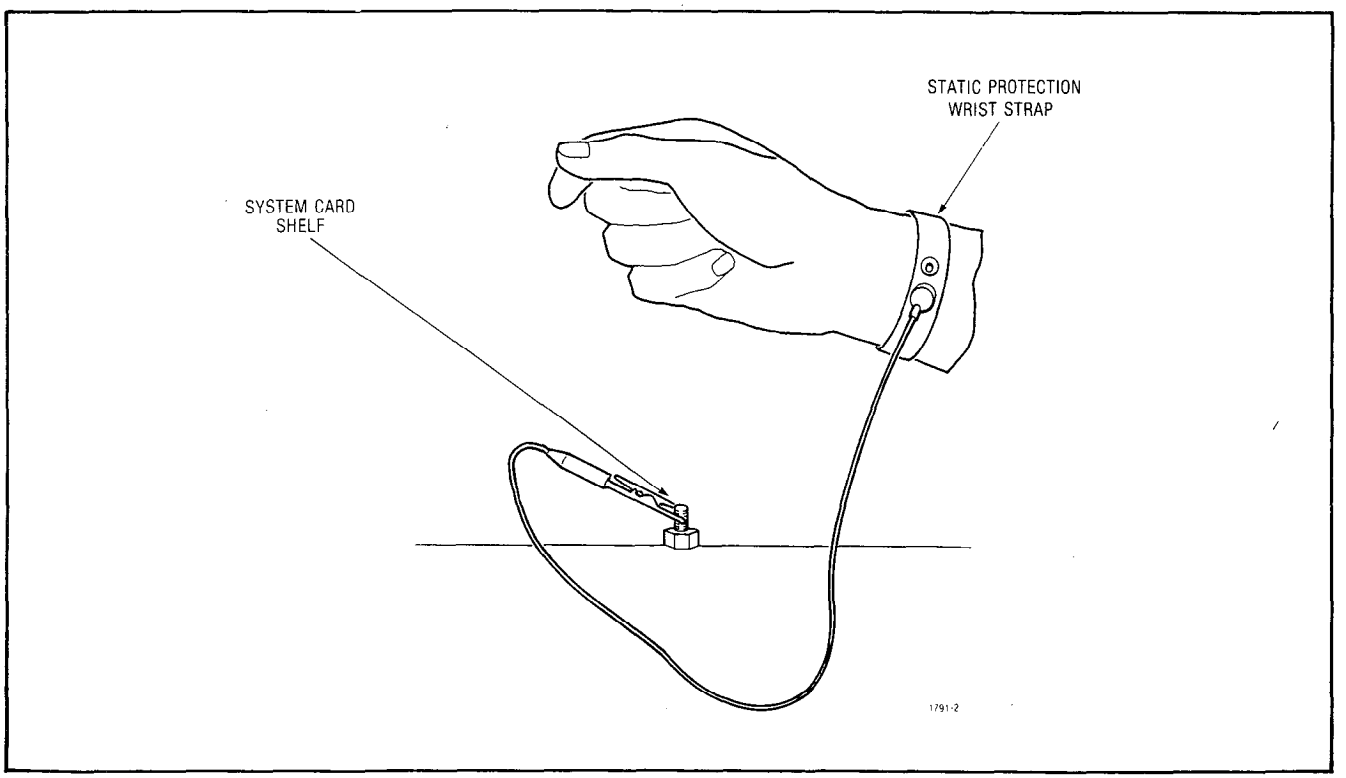

Fig. A1-2 Static Protection

APPENDIX 2
SYSTEM OVERVIEW

General

A2.01 The SX-100 and SX-200 are advanced electronic PABX's employing digitally controlled solid-state, space-division switching with stored program control. The capacities of the PABX's are as follows:

- SX-100. 112 ports are available for assignment to lines, trunks and additional receivers.
- SX-200. 208 ports are available for assignment to lines, trunks and additional receivers.
- Each line requires 1 port, each CO trunk requires 2 ports and additional receivers require 4 ports each. E&M Tie Trunk Cards and Transformer Trunk Cards require four ports.
- The maximum possible combination of trunks and lines which can be accomodated is dependant upon the number of receivers installed and is illustrated in Fig. A2-1.

Compatibility

A2.02 The systems are compatible with:

- Line cards of 1A1/2 telephone key system.
- Standard Dial Pulse and DTMF telephone sets equipped with or without message waiting lamps.
- Commonly used step by step, crossbar and electronic central office equipment.

PHYSICAL OVERVIEW

A2.03 SX-100 Cabinet (Basic Version) is of metal construction and has the following dimensions: Height 16.62in. (422mm), width 25in. (635mm), and depth 18.5in. (470mm). The weight of a fully equipped PABX is approximately 70lbs (31.8kg).

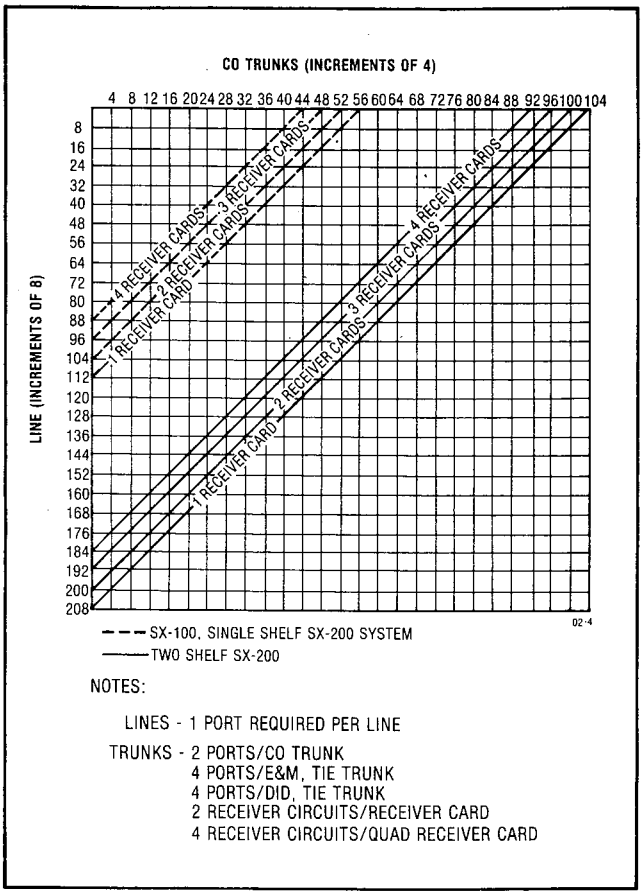

Fig. A2-1 Maximum Line and Trunk Configuration

A2.04 The SX-100 Primary Power Supply is mounted to the right of the equipment shelf (total weight 15lbs, 35kg) and provides all system power from a 115Vac, (or a 220V adapter), 48Hz to 64Hz commercial supply OR from −44 to −56V DC supply.

A2.05 The SX-200 Equipment Cabinet is of metal construction and has the following dimensions: Height 38in. (965mm), width 23.5in. (600mm), and depth 27.5in. (700mm). The weight of a fully equipped PABX is approximately 290lbs (131.7kg).

A2.06 The SX-200 Primary Power Supply is mounted directly on the cabinet back panel, (total weight 70lb 31.8kg) and provides all

system power from either a 115Vac, or a 220Vac, 44Hz - 64Hz commercial supply, OR a −44 to −56Vdc supply.

A2.07 The SX-100/SX-200 Equipment Shelf holds up to 22 printed circuit cards which plug into the shelf backplane. On the rear of the backplane are a number of Amphenol type plugs providing interconnections between the shelves and external equipment. In addition to the plugs are a number of screw down terminals, allowing shelf connections to the primary power supply unit. The equipment shelves measure 10.75in. (273mm) high, 19in. (480mm) wide, 15.375in. (415mm) deep and weigh approximately 27lbs (12.3kg) fully equipped. Equipment Shelf 2 (SX-200 only) is identical in construction to equipment shelf 1 and holds up to 12 additional line or trunk cards.

A2.08 The Reserve Power Supply in the PABX's provides a −48Vdc source. The supply consists of a shelf unit containing 8 Globe Gel Gc 6200A batteries providing −48.3Vdc nominal at 20 C. A separate temperature-compensated charging unit maintains the correct battery voltage level. The SX-200 reserve battery power supply measures 7in. (178mm) high, 19in. (483mm) wide, 15in. (381mm) deep and weighs 110lbs (43kg). The SX-100 reserve battery power supply measures 8.2in. (200.9mm) high, 25.0in. (635mm) wide, 18.5in. (40mm) deep, and weighs 125lbs. The SX-100/SX-200 charging unit measures 5in. (127mm) wide, 7in. (178mm) high, 14in. (355mm) deep and weighs 14lbs (6.4kg).

A2.09 The Attendant Console weighs approximately 13lbs (5.9kg) and its dimensions are: 13.75in. (350mm) wide, 6.8in. (176mm) high, 9.25in. (236mm) deep.

A2.10 Table A2-1 lists all the tables that comprise the remainder of this appendix.

TABLE A2-1
TABLES

TABLE NUMBER	TABLE NAME	DESCRIPTION
A2-2	Generic Features	System feature availability as per Generic level
A2-3	SX-100/SX-200 Electrical Characteristics	Lists general electrical characteristics of the SX-100/SX-200
A2-4	System Limitations	Describes the SX-100/SX-200 general limitations i.e. number of callbacks, etc.
A2-5	Timeout Information	Lists the timeout information of various system features
A2-6	Dial Pulse limits	Lists all dial pulse information
A2-7	PABX Tones	Lists all the PABX tones
A2-8	DTMF Tones	Lists DTMF information
A2-9	System Power	Lists general power supply information
A2-10	Environmental Condition	Outlines environmental conditions for the SX-100/SX-200
A2-11	Supervisory Data	Provides general supervisory data on the PABX
A2-12	Electrical Characteristics SX-100/SX-200 RMAT Controller	Lists all the electrical characteristics of the SX-100/SX-200 RMAT Controller
A2-13	Electrical Characteristics Remote Control - PABX (RCP) Card	Lists all the electrical characteristics of the RCP card

1598

TABLE A2-2
GENERIC FEATURES

	202	203	204	205
Alphanumeric Display for Attendant Position	•	•	•	•
Attendant Camp-On	•	•	•	•
Attendant CCSA Access		•	•	•
Attendant Console (Maximum 2)	•	•	•	•
Attendant Control of Trunk Group Access	•	•	•	•
Attendant Controlled Conference		•	•	•
Attendant Flash Over Trunks	•	•	•	•
Attendant Lockout	•	•	•	•
Attendant Position (2 Max.)	•	•	•	•
Attendant Transfer - All Calls	•	•	•	•
Automatic Callback Busy/Don't Answer (Station to Station Calls)	•	•	•	•
Automatic Callback - Busy (Station to Trunk)	•	•	•	•
Automatic Night Service Switching	•	•	•	•
Automatic Queuing to Attendant Position	•	•	•	•
Broker's Call	•	•	•	•
Busy Lamp Field	•	•	•	•
Busy Verification of Station Lines	•	•	•	•
Call Forwarding - All Calls	•	•	•	•
Call Forwarding - Busy And Don't Answer	•	•	•	•
Call Forwarding - Busy Line (DID)		•	•	•
Call Forwarding - Don't Answer (DID)		•	•	•
Call Hold		•	•	•
Call Pick-Up	•	•	•	•
Call Waiting Service				
Attendant Call Waiting	•	•	•	•
Terminating Call Waiting	•	•	•	•
Distinctive Tone Signals	•	•	•	•
Calling Number Display to Attendant	•	•	•	•
Calls Waiting Indication at Attendant Position	•	•	•	•
CCSA Access		•	•	•
Class of Service Display to Attendant	•	•	•	•
Code Calling Access	•	•	•	•
Code Restriction			•	•
Conference Calling	•	•	•	•
Contact Monitor†	•	•	•	•
Controlled Outward Restriction		•	•	•
Controlled Station-To-Station Restriction		•	•	•
Controlled Termination Restriction		•	•	•
Controlled Total Restriction		•	•	•
Data Restriction	•	•	•	•
Date Display on Console(s)			•	•
Diagnostics - Automatic	•	•	•	•
Dial Access to Attendant	•	•	•	•
Digital Clock on Attendant Position	•	•	•	•
Direct Department Calling (DDC)	•	•	•	•
Direct Inward Dialing (DID)		•	•	•
Direct Outward Dialing (DOD)	•	•	•	•
Direct Termination of Miscellaneous Circuits On Attendant Position (Paging)†	•	•	•	•
Direct Trunk Group Selection (DTGS)	•	•	•	•
Directed Call Pick-Up	•	•	•	•
Hold-For-Pick-Up Option	•	•	•	•
Distinctive Ringing	•	•	•	•
DTMF And/Or DCKP On Attendant Position	•	•	•	•
DTMF Calling	•	•	•	•
DTMF To Dial Pulse Conversion	•	•	•	•
Dump and Load of Customer Data			•	•
Executive Override	•	•	•	•
Flash for Attendant	•	•	•	•
Flexible Numbering of Stations	•	•	•	•
Foreign Exchange (FX) Access	•	•	•	•

	202	203	204	205
Fully Restricted Station	•	•	•	•
Identified Trunk Group			•	•
Immediate Audible Ring on Attendant Handled Calls	•	•	•	•
Immediate Ring	•	•	•	•
Incoming Call Identification (ICI)	•	•	•	•
Indication of Camp-On	•	•	•	•
Intercept Treatment				
Attendant Intercept	•	•	•	•
Intercept Tone	•	•	•	•
Interposition Calling	•	•	•	•
Interposition Transfer	•	•	•	•
Inward Restriction		•	•	•
Line Lockout With Warning	•	•	•	•
Listed Directory Number (LDN) Service	•	•	•	•
Loudspeaker Paging†				
Direct Access by Attendant	•	•	•	•
Dial Access	•	•	•	•
Multizone	•	•	•	•
Priority Paging	•	•	•	•
Main/Satellite Service		•	•	•
Manual Originating Line Service	•	•	•	•
Manual Terminating Line Service		•	•	•
Meet Me Conference	•	•	•	•
Message Waiting (Audible)		•	•	•
Message Waiting (Lamp)		•	•	•
Miscellaneous Trunk Restriction	•	•	•	•
Multiple Listed Directory Numbers (LDN)	•	•	•	•
Multiple Access Codes for a single trunk group (10 max.)			•	•
Music On Hold†	•	•	•	•
Music on Attendant Position Hold†	•	•	•	•
Night Console Position	•	•	•	•
Night Service				
Fixed	•	•	•	•
Flexible	•	•	•	•
Night Station Service - Fixed Service	•	•	•	•
Night Station Service - Full Service	•	•	•	•
Origination Restriction	•	•	•	•
Outgoing Trunk Call Back	•	•	•	•
Outgoing Trunk Camp-On	•	•	•	•
Outgoing Trunk Queueing	•	•	•	•
Outward Restriction	•	•	•	•
Power Failure Transfer - Station	•	•	•	•
Priority Queue	•	•	•	•
Privacy and Lockout	•	•	•	•
Radio Paging Access†	•	•	•	•
Recall Dial Tone	•	•	•	•
Recorded Telephone Dictation Access†	•	•	•	•
Remote Access to PBX Services	•	•	•	•
Remote Administration and Maintenance (hardware option)	•	•	•	•
Rering From Toll (on Toll Terminal)	•	•	•	•
Reserve Power (hardware option)	•	•	•	•
Room Audit			•	
Room Status		•	•	•
Rotary Dial Calling	•	•	•	•
Route Advance	•	•	•	•
Serial Call	•	•	•	•
Sharing (4 Tenant)		•	•	•
Shared Attendant Service		•	•	•
Single Digit Dialing (Non-conflicting)	•	•	•	•

† Requires external customer provided equipment

/309-3

TABLE A2-2 (CONT'D)
GENERIC FEATURES

	202	203	204	205
Single Digit Dialing (Conflicting)		•	•	•
Speed Call				•
Splitting				
One-Way Manual Splitting	•	•	•	•
Two-Way Manual Splitting	•	•	•	•
One-Way Automatic Splitting	•	•	•	•
Two-Way Automatic Splitting	•	•	•	•
Station Hunting				
Terminal Hunting	•	•	•	•
Circular Hunting	•	•	•	•
Secretarial Hunting	•	•	•	•
Station Message Detail Recording				•
Station Message Register Service		•	•	•
Electronic Storage and Display		•	•	•
Internal Charging		•	•	•
Station Override Security	•	•	•	•
Station-to-Station Calling	•	•	•	•
Straightforward Outward Completion	•	•	•	•
Switched Loop Operation	•	•	•	•
Tandem Tie Trunk Switching		•	•	•
Termination Restriction	•	•	•	•
Threeway Conference Transfer	•	•	•	•
Through Dialing	•	•	•	•
Tie Trunk Access	•	•	•	•

	202	203	204	205
Timed Reminders	•	•	•	•
Toll Restriction				
Battery Reversal	•	•	•	•
0/1 Access	•	•	•	•
Multi Digit			•	•
Toll Terminal Access	•	•	•	•
Total "Do Not Disturb" Display		•	•	•
Total "Message Waiting" Display		•	•	•
Total "Room Status" Display		•	•	•
Traffic Data Collection†			•	
Traffic Display to Customer			•	
Transfer into Busy		•	•	•
Trunk Answer From Any Station	•	•	•	•
Trunk Group Busy (TGB) Indicators on Attendant Position	•	•	•	•
Trunk Status Field	•	•	•	•
Trunk-To-Trunk Connections	•	•	•	•
Trunk Verification by Customer (TVC)	•	•	•	•
Trunk Verification by Station (TVS)	•	•	•	•
Uniform Call Distribution (UCD)	•	•	•	•
Wake-Up Service			•	
WATS Access	•	•	•	•
Wideband Data Switching	•	•	•	•
Wide Frequency Tolerant Power Plant	•	•	•	•

1309-3

† Requires external customer provided equipment

TABLE A2-3
SX-100/SX-200 ELECTRICAL CHARACTERISTICS

Station Loop Limit	1200 ohms including set
Maximum Number of	
Ringers per Line	7
Ringing	90V, 20Hz - immediate ringing
Standard	1s on, 3s off
Special	0.5s on, −0.5s off, 0.5s on, −2.5s off
Ring Trip	During silent or ringing period
Dial Tone	350/440Hz, continuous
Transfer Dial Tone	350/440Hz, 3 bursts of 100ms, then continuous
Busy Tone	480/620Hz, interrupted at 60ipm
Special Busy Tone	350/440Hz interrupted at 60ips
Standard Ringback Tone	440/480Hz, 1s on, 3s off
Special Ringback Tone	440/480Hz, 0.5s on, 0.5s off, 0.5s on, 2.5s off
Callback	6 rings of standard ringing
Reorder Tone	480/620Hz, interrupted at 120ipm
Conference Tone	440Hz, 1 burst of 1s
Camp-On Tone	440Hz, one or two burst of 200ms
Override Tone	440Hz, one burst of 800ms followed by a 200ms burst every 6s
Crosstalk	75dB minimum
Insertion Loss,	
Station-to-Station	5dB ± 0.5dB at 1004Hz
Station-to-Trunk	0.5dB ± 0.3dB at 1004Hz
Trunk-to-Trunk	0.5dB ± 0.3dB at 1004Hz
Longitudinal Balance	54dB minimum, 200-3000Hz
Return Loss	14dB minimum
Idle Circuit Noise	16dBrnC maximum
Impulse Noise	No counts over 46dBrnC
Envelope Delay	150 us maximum
System Impedance	600 ohms nominal for lines 600 or 900 ohms nominal for trunks
Traffic Capacity	7.5ccs/line minimum at 100 lines at P = 0.01
Primary Power	100-125V, 47-63Hz, 4A maximum
Central Office	
Trunk Loop Limit	1600 ohms
Maximum Distance of	
Console from Equipment	1000ft. (300m) of 26AWG cable
Operating Environment	0°C to 40°C, 10% to 90% Relative Humidity

1554 -1

TABLE A2-4
SYSTEM FEATURE LIMITATIONS

Maximum number of simultaneous calls =31.
Maximum number of speech paths used by any call = 2
Maximum number of simultaneous consultations = 15
Maximum number of simultaneous add-on (3 way) calls = 30
Maximum number of simultaneous station controlled conference calls = 30
Maximum number of calls that can simultaneously be camped on to an extension, trunk group or hunt group = 30
Maximum number of simultaneous callbacks that can be enabled = 32.
Maximum number of simultaneous call forwards that can be enabled = 208 (SX-200); 112 (SX-100)
Maximum number of simultaneous "dial 0" calls = 31
Maximum number of hunting groups = 12.
Maximum number of calls that can be simultaneously connected to music on hold = 31.
Maximum number of stations in a station hunting group = 208 (SX-200); 112 (SX-100)
Maximum number of stations in a call pick up group = 208 (SX-200); 112 (SX-100)
Maximum number of dial call pickup groups = 50.
Maximum number of trunks assignable to night stations = 100 (SX-200); 52 (SX-100).
Maximum number of trunks in a trunk group = 104 (SX-200); 56 (SX-100).
Maximum number of trunk groups = 12.
Maximum number of calls that can override a given extension =1
Maximum number of calls that can be simultaneously parked = 31
Maximum number of simultaneous meet-me conferences = 1
Maximum number of simultaneous attendant controlled conferences = 1 (Two if tenanting with separate consoles)
Maximum number of calls that can be simultaneously held by one attendant = 4.
Maximum number of simultaneous incoming calls that can be separately identified by the attendant = 6. (Recall, Dial 0, LDN 1 through LDN 4)
Maximum number of LDNs that can be identified at the attendant's console = 4.
Maximum number of simultaneously ringing Wake-Ups = 10
Maximum number of tenants = 4; 2 with consoles
PABX numbering schemes may be 1, 2, 3, or 4 digit or a combination of 1, 2, 3 and 4 digit, as long as there are no conflicts in the first digits.

1582-7

TABLE A2-5
TIMEOUT INFORMATION

Attendant Timed Recall (Don't Answer)	20s, 30s, or 40s
Attendant Timed Recall (Camp-On)	20s, 30s, or 40s
Attendant TImed Recall (Hold)	20s, 30s, or 40s
Automatic Night Switching	20s, 30s, or 40s
Automatic Wake-Up Ringing	6 rings
Dial Tone Timeout	15s
Interdigit Timeout	15s lines, 10s trunks
Lockout Timeout	45s
Callback Clear Timeout	8 hours
Callback Don't Answer Reset	6 rings
Call Park Recall	2, 3, or 4 minutes
Call Hold Recall	2, 3, or 4 minutes
Call Forwarding Don't Answer Timeout	20s, 30s, or 40s
Switchhook Flash	minimum 200ms, 700ms, 900ms, 1100ms or maximum 1500ms
Ringing Timeout	5 minutes

1600-1

TABLE A2-6
DIAL PULSE LIMITS

PARAMETER	MIN.	MAX.
(Accept)		
Pulse Rate (pps)	8.0	12.0
Break Duration (percent)	50.0	80.0
Break Interval (ms)	52.7	80.0
Make Interval (ms)	32.7	52.5
Interdigit Time (ms)	300.0	
(Generate)		
• Pulse Rate (pps)	9	11
• Break Interval (percent)	58	62
• Interdigit Time (ms)	800	

1603-1

TABLE A2-7
PABX TONES

Dial Tone	350/440Hz, continuous, – 13dBm
Transfer Dial Tone	350/440Hz, 3 bursts 100ms on - 100ms off followed by continuous 350/440Hz, – 13dBm
Busy Tone	480/620Hz, interrupted at 60ipm, – 24dBm
Camp-On Busy Tone	350/440Hz at 60ips, – 13dBm
Ringback Tone	440/480Hz, 1s on, 3s off, – 19dBm
Reorder Tone	480/620Hz, interrupted at 120ipm, – 24dBm
Camp-On Tone	440Hz, one burst of 200ms, – 16dBm
Over-ride Tone	440Hz, one burst of 800ms followed by a 200ms burst every 6s, – 16dBm
Attendant Error Tone	440Hz at 10ips for 400ms, – 16dBm
Conferencing Tone	440Hz, one burst of 1s, – 16dBm
Miscellaneous Tone	440Hz, – 16dBm
DTMF Dialing Conditions	
• Frequency Deviation	± 1 percent
• On Time	Greater than 40ms
• Interdigit Time	Greater than 40ms
• Level, Low Group	Greater than – 10dBm
• Level, High Group	Greater than – 8dBm
• Level, DTMF Signal	Greater than + 2dBm
• Level, Third Frequency	Less than – 40dB
• Twist	Less than 4dB

1604-1

TABLE A2-8
DTMF TONE LIMITS

Low Frequency (Hz)	High Frequency (Hz)		
	1209	1336	1477
697	1	2	3
770	4	5	6
852	7	8	9
941	*	0	#

Frequency deviation: ± 1%
Signal interval (2 frequency): 40ms (minimum)
Per frequency, minimum level: – 17dBm on line circuit
Twist, maximum (at – 10dBm): + 4 to – 8dBm
(High f relative to low f)

Notes: 1. Tolerance of call progress tone levels is ± 1.5dBm.

2. Individual tones of any compound tone are within 1dB of each other.

3. Tolerance of individual tones are ± 1% of the frequency stated.

1605-2

TABLE A2-9
SYSTEM POWER

Characteristic	SX-100	SX-200
AC Power Supplies		
Input Voltage	115Vac or 230Vac, −20% to +10%	115Vac or 230Vac, −20% to +10%
Frequency	44Hz to 64Hz	44Hz to 64Hz
Hold-over Time	Momentary interruptions in commercial power up to 250ms duration	Momentary interruptions in commercial power up to 250ms duration
Input Current	2.5A maximum at 115Vac	4A maximum at 115Vac
Talk Battery Noise	Does not exceed 28dBrnc	Does not exceed 28dBrnc
Reserve Battery Supply		
Voltage Range Holdover Time Battery Life Time	48.3V to 52V 2 hours minimum 4 to 6 yrs	48.3V to 52V 2 hours minimum 4 to 6 yrs
RAM/COS Battery Pack		
Holdover Time Battery Life Time	4 weeks 4 years	4 weeks 4 years
Ringing Supply		
Output Voltage Frequency	90Vac ±10% 20Hz ±1Hz	90Vac ±10% 20Hz ±1Hz

1606 1

TABLE A2-10
ENVIRONMENTAL CONDITIONS

Storage Conditions	
• Temperature Range:	– 50 °C to + 71 °C
• Relative Humidity:	Up to 100% RH at 18 °C (i.e. 15mm Hg water vapour pressure)
• Shock:	Up to 30 inch drop
• Low Pressure:	87mm Hg (50,000 feet)
• Temperature Shock:	– 50 °C to + 25 °C in 5 minutes
Environmental Conditions	
• Acoustic Noise:	The systems do not radiate acoustic noise greater than 45dB SPL, "A" Weighted, measured 47.2in. (1200mm) from the center of the cabinet.
• Vibration:	The systems operate satisfactorily when subjected to a continuous vibration of 5-200Hz with an acceleration of 0.5g.
• Electrostatic Discharge:	The systems meet the following electrostatic discharge test. With the common equipment grounded, a voltage of 15kV placed to various parts of the equipment such as faceplates, switches, etc, has no noticeable effect on the operation of the system. With all the exposed metal of the peripheral equipment grounded, a voltage of 15kV applied to various parts of the peripheral equipment, has no noticeable effect on the operation of the system. Note: The high voltage DC is derived from an induction type generator with an output capacity of 250pF and a series resistance of 3.9ohms.
• Electromagnetic Susceptibility	The systems are able to work in an electric field of 5V/m without major degradation of service.

1607I

TABLE A2-11
SUPERVISORY DATA

- The PABX responds to hookswitch flashes with a duration of between 200ms and a programmable maximum time (0.7, 0.9, 1.1 units or 1.5s) in order to activate the Transfer/Consultation/Hold/Add-On features

- An open tip lead conditon of 500ms (optional 50ms) or more duration on a CO trunk will release the PABX connection

- Momentary open loop conditions of up to 350ms (optional 40ms) generated by the Central Office on outgoing PABX calls, will not release PABX calls

- PABX station hookswitch flashes will not be repeated towards the Central Office

- PABX station on-hook conditions will release a trunk connection after the selected flash time

- Station Loop. The station loop range, including the station apparatus can be up to a maximum of 1200ohms

- Attendant Console Range. The attendant console can be remoted from the cabinet up to a maximum of (300m) 1000 ft with 26AWG cable

- CO Trunk Group. The PABX will operate with CO trunks up to a maximum of 1600ohms loop resistance

- CO Trunk Seizure. The PABX nominal seizure resistance is 270ohms at 30mA

- CO Trunk Resistance. In the idle state the resistance towards the PABX from the trunk circuit is 20Kohms tip to ground and 20kohms ring to ground for ground starts, and not less than 10Mohms for loop start trunks

- Tie Trunk Resistance. The maximum resistance towards the tie trunk is:

  2Kohm for Loop

  3Kohm for E&M

1608 1

TABLE A2-12
ELECTRICAL CHARACTERISTICS
SX-100/SX-200 RMAT CONTROLLER

Modem Signaling Parameters:	
Operation Mode	Full or half duplex over 2 wire public switched network, originate mode
Data Rate	300 baud asynchronous
Transmit Tones	Mark 1270Hz; Space 1070Hz
Transmit Level	Nominal −10dBm with automatic gain to −3dBm, 0dBm, or +0.4dBm for loop attenuation compensation
Receive Tones	Mark 2225Hz; Space 2025Hz
Receive Sensitivity	−4 to −45dBm
Line Interface:	CO Trunk, loop/ground start (rotary dial or DTMF signaling) (NOTE 1)
NOTE 1: See Section MITL9105/9110-98-210 for CO Trunk Card full capabilities.	
Primary Power Supply:	
SX-100 Cabinet	90 to 125Vac (optionally 200 to 250Vac); 44 to 64Hz; 2A
SX-200 Cabinet	90 to 125Vac or 185 to 250Vac; 44 to 64Hz, 4A

1736

TABLE A2-13
ELECTRICAL CHARACTERISTICS
REMOTE CONTROL - PABX (RCP) CARD

Modem Signaling Parameters:	
Operation Mode	Full or half duplex over 2 wire public switched network with automatic answer feature
Data Rate	300 baud asynchronous
Transmit Tones	Mark 2225Hz; Space 2025Hz
Transmit Level	Nominal −10dBm with automatic gain to −3dBm, 0dBm or +0.4dBm for loop attenuation compensation
Receive Tones	Mark 1270Hz; Space 1070Hz
Receive Sensitivity	−4 to −45dBm
Line Interface Parameters:	
On-hook DC Resistance	Minimum 10 megohm
On-hook Impedance	10kohms in series with 1μF
Ringing	Minimum 30Vrms at 20Hz
Off-hook DC Resistance	260ohms at 20mA (line reversal ignored)
Off-hook Impedance	600ohms in series with 2μF
Return Loss	Minimum 14dB at 200Hz 25dB at 1kHz 35dB at 3kHz
Common Mode Rejection	60Vrms maximum at 60Hz
Longitudinal Balance	Minimum 63dB at 1kHz 56dB at 3kHz
Transient Protection	Withstands 1000V of 10/1000us and 22ohm source resistance between Tip and ground or Ring and ground
Power Supply and Digital Interface Parameters:	
	Compatible with Console Control Card (Mitel P/N 9110-006)

1736

APPENDIX 3
SYSTEM CABLING

Cabling and Cross-Connections

General

A3.01 This part details the cabling and cross-connections required when installing the SX-100 or SX-200 PABX's.

Telephone Set and Trunk Cabling

A3.02 Telephone set and trunk cabling terminates on the building cross-connection terminal in the normal manner. The cabling requirements and limits for stations and consoles are shown in Fig. A3-1(a) and (b).

Cable Terminations, SX-100

A3.03 All interconnecting cables must be terminated in accordance with Tables A3-1, A3-2 and Fig. A3-2.

Cable Terminations, SX-200

A3.04 All interconnecting cables must be terminated in accordance with Fig. A3-3 and Tables A3-1, A3-2, A3-3, and A3-5. In addition if Shelf 2 is installed the interconnecting cables listed in Table A3-4 must be terminated.

Cross-Connections

A3.05 Jumpers should be run using Z type 24AWG cross-connecting cables or equivalent.

A3.06 Connection between the equipment cabinet, cross connect field, stations, trunks and consoles should be made using 26AWG connector ended cable in accordance with Tables A3-1 through A3-5.

A3.07 Cabling connections between Shelf 1, the interconnect board, and cross connect field are shown in Figs A3-7 and A3-3.

A3.08 Figs A3-4 and A3-5 illustrate typical block and wiring diagrams for a power fail transfer circuit. Fig. A3-6 illustrates typical night bell wiring connections and Fig. A3-7 shows the connections for music and PA requirements.

A3.09 When backplane translator boards are used with the lines and trunk circuits different terminal connections result. In this case the cabling arrangements must conform to the termination connections shown in Fig. A3-8 and Table A3-6 of this Appendix.

A3.10 Figures A3-9, A3-10 and A3-11 are in depth wiring explanations. These figures outline the card position in relation to a specific Amphenol type connector to the cross connect frame.

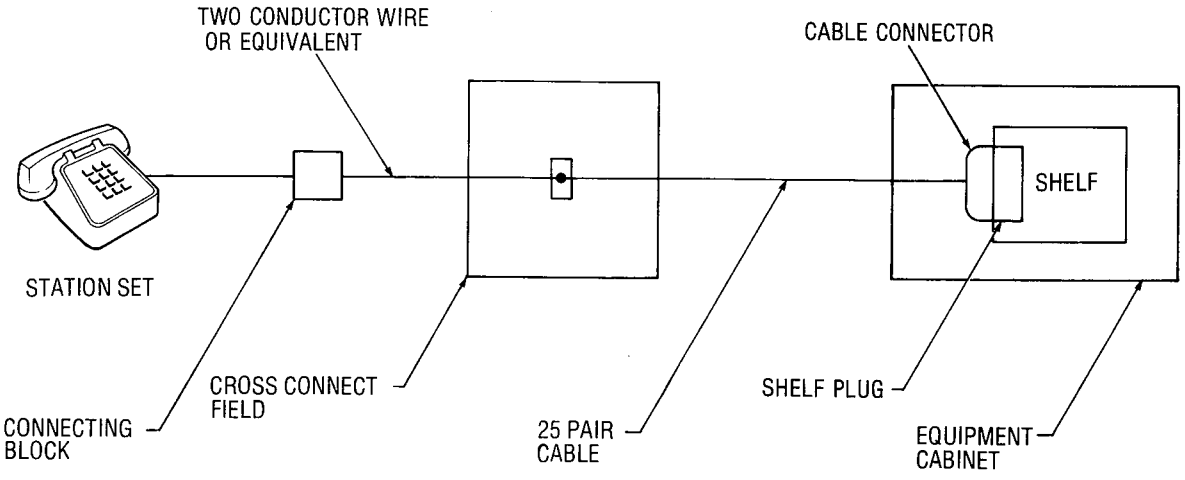

NOTE: STATION LOOP LIMIT 1200 OHMS (INCLUDING STATION SET)

(a) STATION CABLING & LIMITS

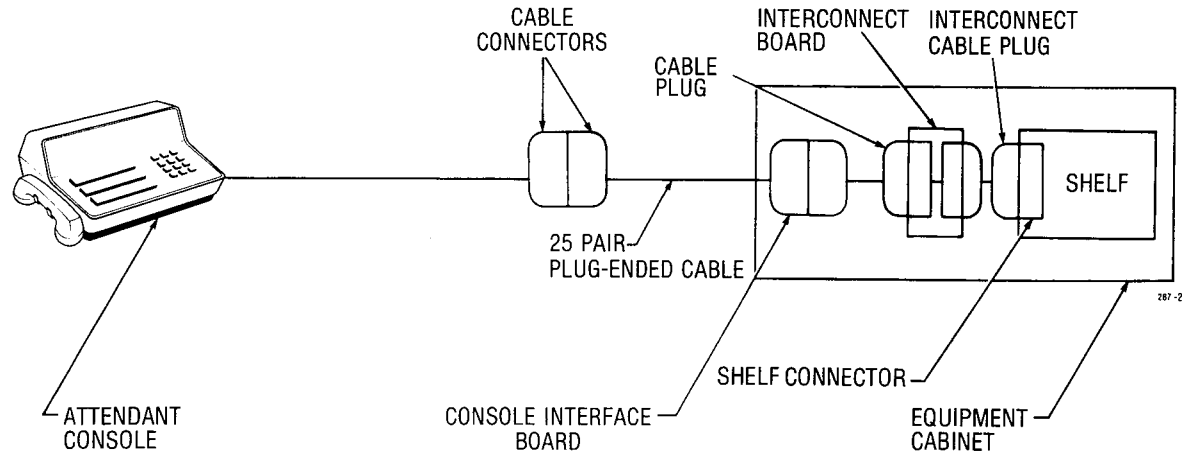

NOTE: CABLING LIMIT 1000FT. (305m) - 26 AWG MINIMUM
CABLE CONSOLE TO EQUIPMENT CABINET.

(b) ATTENDANT CONSOLE CABLING & LIMITS

Fig. A3-1 Station and Console Cabling Requirements

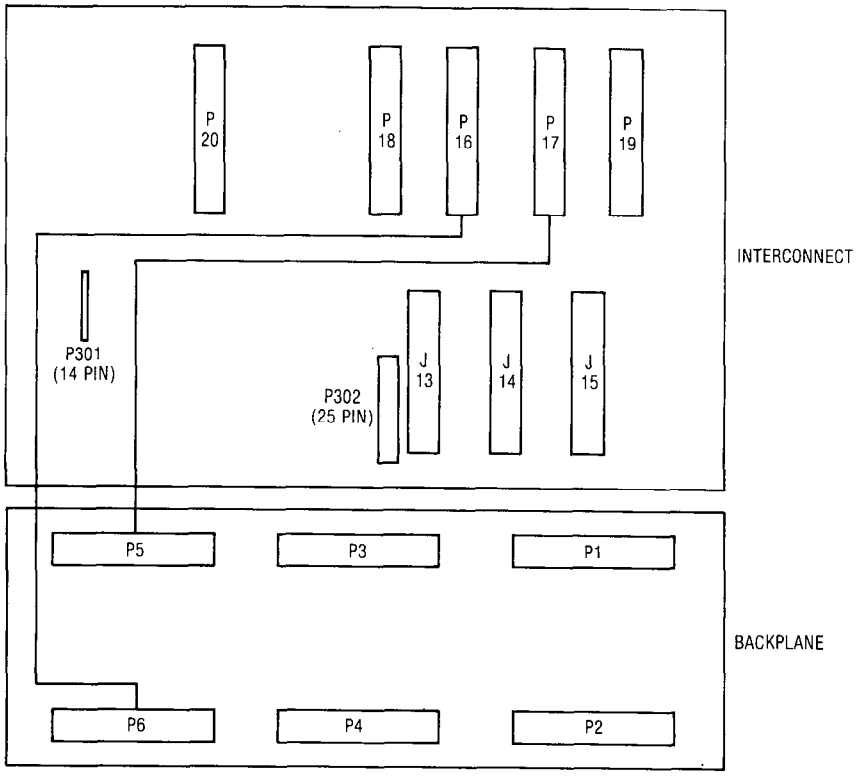

BOARD	CONNECTOR NO.	DESTINATION
SHELF BACKPLANE	P1	X - CONNECT
	P2	X - CONNECT
	P3	X - CONNECT
	P4	X - CONNECT
	P5	P17
	P6	P16

NOTE: ALL PLUGS AND CONNECTORS EXCEPT AS NOTED ARE STANDARD 25 PAIR (AMPHENOL TYPE). THE MALE AND FEMALE DESIGNATORS REFER TO THE CONNECTORS MOUNTED ON THE EQUIPMENT. NOT TO THE CABLE CONNECTORS.

BOARD	CONNECTOR NO.	DESTINATION
INTERCONNECT	J13	MAINTENANCE CONSOLE
	J14	ATTENDANT CONSOLE 2
	J15	ATTENDANT CONSOLE 1
	P16	P6
	P17	P5
	P18	X - CONNECT
	P19	X - CONNECT
	P20	X - CONNECT
	P302	PRINTER OR RECORDING DEVICE
	P301	MAINTENANCE PANEL

1315.1

Fig. A3-2 SX-100 Connector Locations

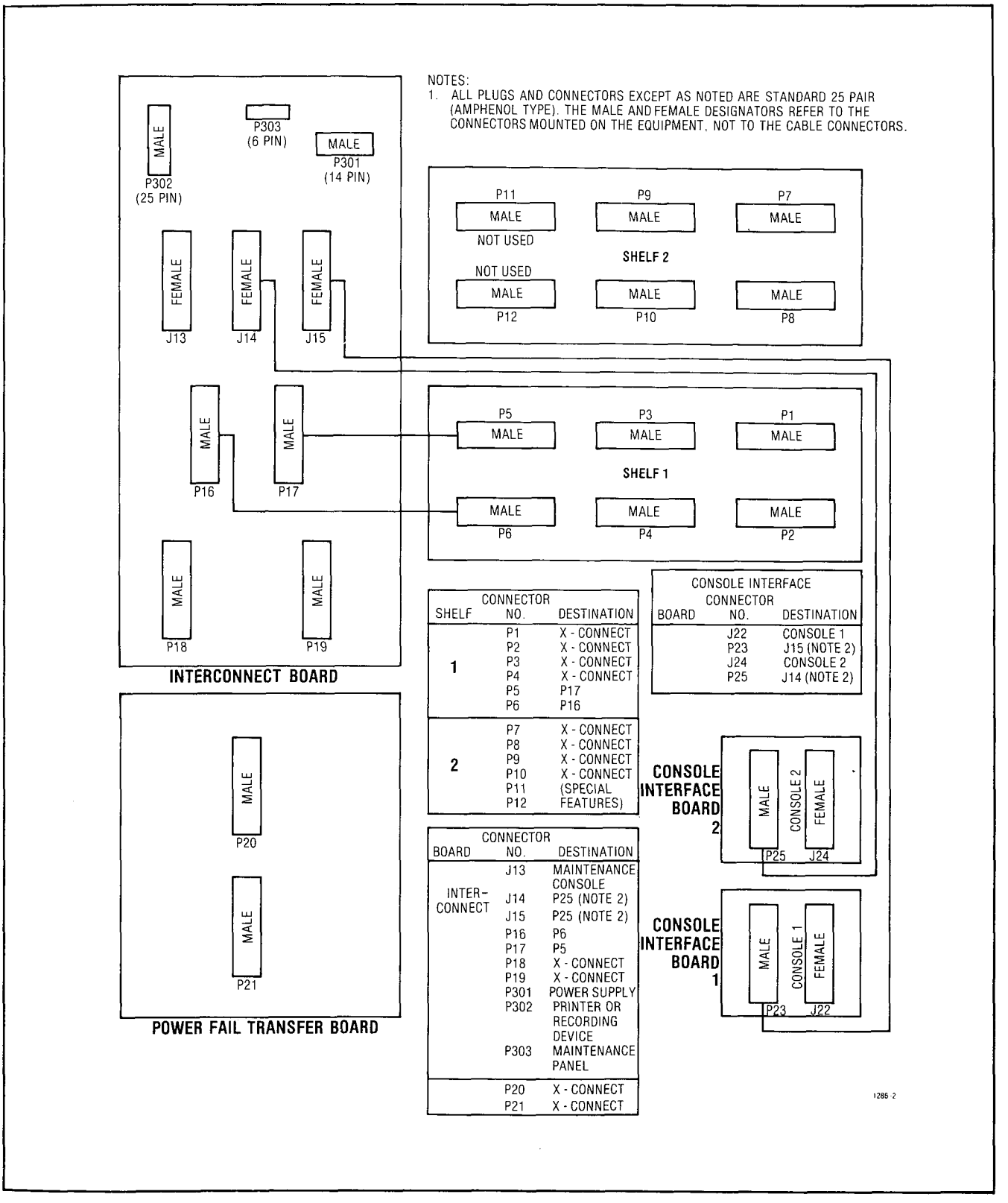

Fig. A3-3 SX-200 Connector Locations

TABLE A3-1 SHELF 1 EXTERNAL PLUG AND JACK CONNECTIONS

PLUG P1 (Connects to Cross Connect Field)

Pin	Pair Color	Equipment Numbers Lines	Lead Designation Line	Equipment Numbers Trunks	Lead Designation Trunks CO	DID/TIE	E&M†	Card Positions
26	W-BL	001	T1 reserved for	002 *	T1	T1	T1	
1	BL-W		R1 test line		R1	R1	R1	
27	W-O	002	T2		XT2		TR1	
2	O-W		R2		XT1		RR1	1
28	W-G	003	T3	004	T2		E1	
3	G-W		R3		R2		M1	
29	W-BR	004	T4					
4	BR-W		R4					
30	W-S	009	T1	010 *	T1	T1	T1	
5	S-W		R1		R1	R1	R1	
31	R-BL	010	T2		XT2		TR1	
6	BL-R		R2		XT1		RR1	2
32	R-O	011	T3	012	T2		E1	
7	O-R		R3		R2		M1	
33	R-G	012	T4					
8	G-R		R4					
34	R-BR	017	T1	018*	T1	T1	T1	
9	BR-R		R1		R1	R1	R1	
35	R-S	018	T2		XT2		TR1	
10	S-R		R2		XT1		RR1	
36	BK-BL	019	T3	020	T2		E1	3
11	BL-BK		R3		R2		M1	
37	BK-O	020	T4					
12	O-BK		R4					
38	BK-G	025	T1	026 *	T1	T1	T1	
13	G-BK		R1		R1	R1	R1	
39	BK-BR	026	T2		XT2		TR1	
14	BR-BK		R2		XT1		RR1	
40	BK-S	027	T3	028	T2		E1	4
15	S-BK		R3		R2		M1	
41	Y-BL	028	T4					
16	BL-Y		R4					
42	Y-O	033	T1	034*	T1	T1	T1	
17	O-Y		R1		R1	R1	R1	
43	Y-G	034	T2		XT2		TR1	
18	G-Y		R2		XT1		RR1	
44	Y-BR	035	T3	036	T2		E1	5
19	BR-Y		R3		R2		M1	
45	Y-S	036	T4					
20	S-Y		R4					
46	V-BL	041	T1	042*	T1	T1	T1	
21	BL-V		R1		R1	R1	R1	
47	V-O	042	T2		XT2		TR1	
22	O-V		R2		XT1		RR1	
48	V-G	043	T3	044	T2		E1	6
23	G-V		R3		R2		M1	
49	V-BR	044	T4					
24	BR-V		R4					
50	V-S		SPARE		SPARE			
25	S-V		SPARE		SPARE			

1723

† For 2-Wire E&M Trunk operation DO NOT connect RR and TR leads

* Trunk Equipment Number for 2 Trunk Card

TABLE A3-1 SHELF 1 EXTERNAL PLUG AND JACK CONNECTIONS (CONT'D)

PLUG P2 (Connects to Cross Connect Field)

Pin	Pair Color	Equipment Numbers Lines	Lead Designation Line	Equipment Numbers Trunks	Lead Designation Trunks CO	DID/TIE	E&M†	Card Positions
26	W-BL	005	T5	006 *	T3	T2	T2	
1	BL-W		R5		R3	R2	R2	
27	W-O	006	T6		XT4		TR2	
2	O-W		R6		XT3		RR2	1
28	W-G	007	T7	008	T4		E2	
3	G-W		R7		R4		M2	
29	W-BR	008	T8					
4	BR-W		R8					
30	W-S	013	T5	014 *	T3	T2	T2	
5	S-W		R5		R3	R2	R2	
31	R-BL	014	T6		XT4		TR2	
6	BL-R		R6		XT3		RR2	2
32	R-O	015	T7	016	T4		E2	
7	O-R		R7		R4		M2	
33	R-G	016	T8					
8	G-R		R8					
34	R-BR	021	T5	022 *	T3	T2	T2	
9	BR-R		R5		R3	R2	R2	
35	R-S	022	T6		XT4		TR2	
10	S-R		R6		XT3		RR2	
36	BK-BL	023	T7	024	T4		E2	3
11	BL-BK		R7		R4		M2	
37	BK-O	024	T8					
12	O-BK		R8					
38	BK-G	029	T5	030 *	T3	T2	T2	
13	G-BK		R5		R3	R2	R2	
39	BK-BR	030	T6		XT4		TR2	
14	BR-BK		R6		XT3		RR2	
40	BK-S	031	T7	032	T4		E2	4
15	S-BK		R7		R4		M2	
41	Y-BL	032	T8					
16	BL-Y		R8					
42	Y-O	037	T5	038 *	T3	T2	T2	
17	O-Y		R5		R3	R2	R2	
43	Y-G	038	T6		XT4		TR2	
18	G-Y		R6		XT3		RR2	
44	Y-BR	039	T7	040	T4		E2	5
19	BR-Y		R7		R4		M2	
45	Y-S	040	T8					
20	S-Y		R8					
46	V-BL	045	T5	046 *	T3	T2	T2	
21	BL-V		R5		R3	R2	R2	
47	V-O	046	T6		XT4		TR2	
22	O-V		R6		XT3		RR2	
48	V-G	047	T7	048	T4		E2	6
23	G-V		R7		R4		M2	
49	V-BR	048	T8					
24	BR-V		R8					
50	V-S		SPARE		SPARE			
25	S-V		SPARE		SPARE			

† For 2-Wire E&M Trunk operation DO NOT connect RR and TR leads

* Trunk Equipment Number for 2 Trunk Card

1724

TABLE A3-1 SHELF 1 EXTERNAL PLUG AND JACK CONNECTIONS (CONT'D)

PLUG P3 (Connects to Cross Connect Field)

Pin	Pair Color	Equipment Numbers Lines	Lead Designation Line	Equipment Numbers Trunks	Lead Designation Trunks CO	DID/TIE	E&M†	Card Positions
26	W-BL	049	T1	050*	T1	T1	T1	
1	BL-W		R1		R1	R1	R1	
27	W-O	050	T2		XT2		TR1	
2	O-W		R2		XT1		RR1	7
28	W-G	051	T3	052	T2		E1	
3	G-W		R3		R2		M1	
29	W-BR	052	T4					
4	BR-W		R4					
30	W-S	057	T1	058*	T1	T1	T1	
5	S-W		R1		R1	R1	R1	
31	R-BL	058	T2		XT2		TR1	
6	BL-R		R2		XT1		RR1	8
32	R-O	059	T3	060	T2		E1	
7	O-R		R3		R2		M1	
33	R-G	060	T4					
8	G-R		R4					SX-
34	R-BR	065	T1	066*	T1	T1	T1	
9	BR-R		R1		R1	R1	R1	
35	R-S	066	T2		XT2		TR1	
10	S-R		R2		XT1		RR1	
36	BK-BL	067	T3	068	T2		E1	9
11	BL-BK		R3		R2		M1	
37	BK-O	068	T4					
12	O-BK		R4					
38	BK-G	073	T1	074*	T1	T1	T1	
13	G-BK		R1		R1	R1	R1	
39	BK-BR	074	T2		XT2		TR1	
14	BR-BK		R2		XT1		RR1	
40	BK-S	075	T3	076	T2		E1	10
15	S-BK		R3		R2		M1	
41	Y-BL	076	T4					
16	BL-Y		R4					
42	Y-O	081	T1	082*	T1	T1	T1	
17	O-Y		R1		R1	R1	R1	
43	Y-G	082	T2		XT2		TR1	
18	G-Y		R2		XT1		RR1	
44	Y-BR	083	T3	084	T2		E1	11
19	BR-Y		R3		R2		M1	
45	Y-S	084	T4					
20	S-Y		R4					
46	V-BL	089	T1	090*	T1	T1	T1	
21	BL-V		R1		R1	R1	R1	
47	V-O	090	T2		XT2		TR1	
22	O-V		R2		XT1		RR1	
48	V-G	091	T3	092	T2		E1	12
23	G-V		R3		R2		M1	
49	V-BR	092	T4					See Note
24	BR-V		R4					
50	V-S		SPARE		SPARE			
25	S-V		SPARE		SPARE			

Note: Position 12 can be used for lines, trunks, or receiver #4 card.
† For 2-Wire E&M Trunk operation DO NOT connect RR and TR leads
* Trunk Equipment Number for 2 Trunk Card

TABLE A3-1 SHELF 1 EXTERNAL PLUG AND JACK CONNECTIONS (CONT'D)

PLUG P4 (Connects to Cross Connect Field)

Pin	Pair Color	Equipment Numbers Lines	Lead Designation Line	Equipment Numbers Trunks	Lead Designation Trunks CO	DID/TIE	E&M†	Card Positions
26	W-BL	053	T5	054*	T3	T2	T2	
1	BL-W		R5		R3	R2	R2	
27	W-O	054	T6		XT4		TR2	
2	O-W		R6		XT3		RR2	7
28	W-G	055	T7	056	T4		E2	
3	G-W		R7		R4		M2	
29	W-BR	056	T8					
4	BR-W		R8					
30	W-S	061	T5	062*	T3	T2	T2	
5	S-W		R5		R3	R2	R2	
31	R-BL	062	T6		XT4		TR2	
6	BL-R		R6		XT3		RR2	8
32	R-O	063	T7	064	T4		E2	
7	O-R		R7		R4		M2	
33	R-G	064	T8					
8	G-R		R8					
34	R-BR	069	T5	070*	T3	T2	T2	
9	BR-R		R5		R3	R2	R2	
35	R-S	070	T6		XT4		TR2	
10	S-R		R6		XT3		RR2	
36	BK-BL	071	T7	072	T4		E2	9
11	BL-BK		R7		R4		M2	
37	BK-O	072	T8					
12	O-BK		R8					
38	BK-G	077	T5	078*	T3	T2	T2	
13	G-BK		R5		R3	R2	R2	
39	BK-BR	078	T6		XT4		TR2	
14	BR-BK		R6		XT3		RR2	
40	BK-S	079	T7	080	T4		E2	10
15	S-BK		R7		R4		M2	
41	Y-BL	080	T8					
16	BL-Y		R8					
42	Y-O	085	T5	086*	T3	T2	T2	
17	O-Y		R5		R3	R2	R2	
43	Y-G	086	T6		XT4		TR2	
18	G-Y		R6		XT3		RR2	
44	Y-BR	087	T7	088	T4		E2	11
19	BR-Y		R7		R4		M2	
45	Y-S	088	T8					
20	S-Y		R8					
46	V-BL	093	T5	094*	T3	T2	T2	
21	BL-V		R5		R3	R2	R2	
47	V-O	094	T6		XT4		TR2	
22	O-V		R6		XT3		RR2	
48	V-G	095	T7	096	T4		E2	12
23	G-V		R7		R4		M2	See Note
49	V-BR	096	T8					
24	BR-V		R8					
50	V-S		SPARE		SPARE			
25	S-V		SPARE		SPARE			

Note: Position 12 can be used for lines, trunks or receiver card #4.
† For 2-Wire E&M Trunk operation DO NOT connect RR and TR leads
* Trunk Equipment Number for 2 Trunk Card

1726

TABLE A3-1 SHELF 1 EXTERNAL PLUG AND JACK CONNECTIONS (CONT'D)

PLUG P5 (Connects to Plug P17)

Pin	Pair Color	Equipment Numbers Lines	Lead Designation Line	Equipment Numbers Trunks	Lead Designation Trunks CO	DID/TIE	E&M†	Card Positions
26	W-BL	097	T1	098 *	T1	T1		
1	BL-W		R1		R1	R1	R1	
27	W-O	098	T2		XT2		TR1	
2	O-W		R2		XT1		RR1	
28	W-G	099	T3	100	T2		E1	13
3	G-W		R3		R2		M1	See Note
29	W-BR	100	T4					
4	BR-W		R4					
30	W-S	105	T1	106 *	T1	T1	T1	
5	S-W		R1		R1	R1	R1	
31	R-BL	106	T2		XT2		TR1	
6	BL-R		R2		XT1		RR1	
32	R-O	107	T3	108	T2		E1	14
7	O-R		R3		R2		M1	See Note
33	R-G	108	T4					
8	G-R		R4					
34	R-BR							
9	BR-R							
35	R-S							
10	S-R		RECEIVER No. 1					15
36	BK-BL							
11	BL-BK							
37	BK-O							
12	O-BK							
38	BK-G		T (A)					
13	G-BK		R (A)					
39	BK-BR		S DATA OUT T (A)		ATTENDANT CONSOLE			
14	BR-BK		S DATA OUT R (A)		No. 2			16
40	BK-S		S DATA IN T (A)					
15	S-BK		S DATA IN R (A)					
41	Y-BL		PA2 Control B					
16	BL-Y		PA2 Control A					
42	Y-O		T (A)					
17	O-Y		R (A)					
43	Y-G		S DATA OUT T (A)		ATTENDANT CONSOLE			
18	G-Y		S DATA OUT R (A)		No. 1			17
44	Y-BR		S DATA IN T (A)					
19	BR-Y		S DATA IN R (A)					
45	Y-S		PA1 Control B					
20	S-Y		PA1 Control A					
46	V-BL		MUSIC IN B					
21	BL-V		MUSIC IN A					
47	V-O		TEST LINE					
22	O-V		TEST LINE		MUSIC ON HOLD			18
48	V-G		PA1 OUT B					
23	G-V		PA1 OUT A					
49	V-BR		PA2 OUT B					
24	BR-V		PA2 OUT A					
50	V-S		SPARE		SPARE			
25	S-V		SPARE		SPARE			

Note: Positions 14 and 13 can be used for lines or trunks, or for receiver cards #2 and #3 respectively.
† For 2-Wire E&M Trunk operation DO NOT connect RR and TR leads

1727

TABLE A3-1 SHELF 1 EXTERNAL PLUG AND JACK CONNECTIONS (CONT'D)

PLUG P6 (Connects to Plug P16)

Pin	Pair Color	Equipment Numbers Lines	Lead Designation Line	Equipment Numbers Trunks	Lead Designation Trunks CO	DID/TIE	E&M†	Card Positions
26	W-BL	101	T5	102*	T1	T1	T1	
1	BL-W		R5		R1	R1	R1	
27	W-O	102	T6		XT2		TR1	13
2	O-W		R6 Lines		XT1		RR1	See Note
28	W-G	103	T7	108	T2		E1	
3	G-W		R7		R2		M1	
29	W-BR	104	T8					
4	BR-W		R8					
30	W-S	109	T5	110*	T1	T1	T1	
5	S-W		R5		R1	R1	R1	
31	R-BL	110	T6		XT2		TR1	
6	BL-R		R6 Lines		XT1		RR1	14
32	R-O	111	T7	112	T2		E1	See Note
7	O-R		R3		R7		M1	
33	R-G	112	T8					
8	G-R		R8					
34	R-BR							
9	BR-R							
35	R-S							
10	S-R		RECEIVER No. 1					15
36	BK-BL							
11	BL-BK							
37	BK-O							
12	O-BK							
38	BK-G		T (A)					
13	G-BK		R (A)					
39	BK-BR		S DATA OUT T (B)		ATTENDANT CONSOLE			
14	BR-BK		S DATA OUT R (B)		SPARE			
40	BK-S		S DATA IN T (B)					16
15	S-BK		S DATA IN R (B)		NOT USED			
41	Y-BL		R (K1)					
16	BL-Y		K1		NIGHT BELL 1			
42	Y-O		T (A)					
17	O-Y		R (A)					
43	Y-G		S DATA OUT T (B)		MAINTENANCE			
18	G-Y		S DATA OUT R (B)		CONSOLE			17
44	Y-BR		S DATA IN T (B)					
19	BR-Y		S DATA IN R (B)					
45	Y-S		UART IN					
20	S-Y		UART OUT					
46	V-BL		R (K5)		NIGHT BELL 1			
21	BL-V		K5					
47	V-O		R (K4)		NIGHT SERVICE			18
22	O-V		K4					
48	V-G		R (K3)		NIGHT BELL 3			
23	G-V		K3					
49	V-BR		R (K2)		NIGHT BELL 2			
24	BR-V		K2					
50	V-S		SPARE		SPARE			
25	S-V		SPARE		SPARE			

Note: Positions 14 and 13 can be used for lines or trunks, or for receiver cards #2 and #3 respectively.
† For 2-Wire E&M Trunk operation DO NOT connect RR and TR leads
* Trunk Equipment Number for 2 Trunk Card

1728

TABLE A3-2 INTERCONNECT BOARD PLUG AND JACK CONNECTIONS

CONNECTOR J13 MAINTENANCE CONSOLE (Connected To Maintenance Panel)

Pin	Pair Color	Lead Designation
26	W-BL	ELECTROSTATIC GROUND
1	BL-W	ELECTROSTATIC GROUND
27	W-O	ELECTROSTATIC GROUND
2	O-W	ELECTROSTATIC GROUND
28	W-G	ELECTROSTATIC GROUND
3	G-W	ELECTROSTATIC GROUND
29	W-BR	ELECTROSTATIC GROUND
4	BR-W	ELECTROSTATIC GROUND
30	W-S	DATA IN COMMON
5	S-W	DATA IN
31	R-BL	ELECTROSTATIC GROUND
6	BL-R	ELECTROSTATIC GROUND
32	R-O	DATA OUT COMMON
7	O-R	DATA OUT
33	R-G	ELECTROSTATIC GROUND
8	G-R	ELECTROSTATIC GROUND
34	R-BR	ELECTROSTATIC GROUND
9	BR-R	ELECTROSTATIC GROUND
35	R-S	CUTOVER SWB
10	S-R	CUTOVER SWA
36	BK-BL	ELECTROSTATIC GROUND
11	BL-BK	ELECTROSTATIC GROUND
37	BK-O	MAJOR ALARM
12	O-BK	MAJOR ALARM
38	BK-G	TIP
13	G-BK	RING
39	BK-BR	ELECTROSTATIC GROUND
14	BR-BK	ELECTROSTATIC GROUND
40	BK-S	ELECTROSTATIC GROUND
15	S-BK	ELECTROSTATIC GROUND
41	Y-BL	ELECTROSTATIC GROUND
16	BL-Y	ELECTROSTATIC GROUND
42	Y-O	ELECTROSTATIC GROUND
17	O-Y	ELECTROSTATIC GROUND
43	Y-G	0V
18	G-Y	−48V
44	Y-BR	0V
19	BR-Y	−48V
45	Y-S	0V
20	S-Y	−48V
46	V-BL	0V
21	BL-V	−48V
47	V-O	0V
22	O-V	−48V
48	V-G	0V
23	G-V	−48V
49	V-BR	0V
24	BR-V	−48V
50	V-S	0V
25	S-V	−48V

CONNECTOR J14 ATTENDANT CONSOLE NO 2

Pin	Pair Color	Lead Designation
26	W-BL	ELECTROSTATIC GROUND
1	BL-W	ELECTROSTATIC GROUND
27	W-O	ELECTROSTATIC GROUND
2	O-W	ELECTROSTATIC GROUND
28	W-G	ELECTROSTATIC GROUND
3	G-W	ELECTROSTATIC GROUND
29	W-BR	ELECTROSTATIC GROUND
4	BR-W	ELECTROSTATIC GROUND
30	W-S	DATA IN COMMON
5	S-W	DATA IN
31	R-BL	ELECTROSTATIC GROUND
6	BL-R	ELECTROSTATIC GROUND
32	R-O	DATA OUT COMMON
7	O-R	DATA OUT
33	R-G	ELECTROSTATIC GROUND
8	G-R	ELECTROSTATIC GROUND
34	R-BR	ELECTROSTATIC GROUND
9	BR-R	ELECTROSTATIC GROUND
35	R-S	CUTOVER SWB
10	S-R	CUTOVER SWA
36	BK-BL	ELECTROSTATIC GROUND
11	BL-BK	ELECTROSTATIC GROUND
37	BK-O	MAJOR ALARM
12	O-BK	MAJOR ALARM
38	BK-G	TIP
13	G-BK	RING
39	BK-BR	ELECTROSTATIC GROUND
14	BR-BK	ELECTROSTATIC GROUND
40	BK-S	ELECTROSTATIC GROUND
15	S-BK	ELECTROSTATIC GROUND
41	Y-BL	ELECTROSTATIC GROUND
16	BL-Y	ELECTROSTATIC GROUND
42	Y-O	ELECTROSTATIC GROUND
17	O-Y	ELECTROSTATIC GROUND
43	Y-G	0V
18	G-Y	−48V
44	Y-BR	0V
19	BR-Y	−48V
45	Y-S	0V
20	S-Y	−48V
46	V-BL	0V
21	BL-V	−48V
47	V-O	0V
22	O-V	−48V
48	V-G	0V
23	G-V	−48V
49	V-BR	0V
24	BR-V	−48V
50	V-S	0V
25	S-V	−48V

TABLE A3-2 INTERCONNECT BOARD PLUG AND JACK CONNECTIONS (CONT'D)
CONNECTOR J15 ATTENDANT CONSOLE NO 1

Pin	Pair Color	Lead Designation
26	W-BL	ELECTROSTATIC GROUND
1	BL-W	ELECTROSTATIC GROUND
27	W-O	ELECTROSTATIC GROUND
2	O-W	ELECTROSTATIC GROUND
28	W-G	ELECTROSTATIC GROUND
3	G-W	ELECTROSTATIC GROUND
29	W-BR	ELECTROSTATIC GROUND
4	BR-W	ELECTROSTATIC GROUND
30	W-S	DATA IN COMMON
5	S-W	DATA IN
31	R-BL	ELECTROSTATIC GROUND
6	BL-R	ELECTROSTATIC GROUND
32	R-O	DATA OUT COMMON
7	O-R	DATA OUT
33	R-G	ELECTROSTATIC GROUND
8	G-R	ELECTROSTATIC GROUND
34	R-BR	ELECTROSTATIC GROUND
9	BR-R	ELECTROSTATIC GROUND
35	R-S	CUTOVER SWB
10	S-R	CUTOVER SWA
36	BK-BL	ELECTROSTATIC GROUND
11	BL-BK	ELECTROSTATIC GROUND
37	BK-O	MAJOR ALARM
12	O-BK	MAJOR ALARM
38	BK-G	TIP
13	G-BK	RING
39	BK-BR	ELECTROSTATIC GROUND
14	BR-BK	ELECTROSTATIC GROUND
40	BK-S	ELECTROSTATIC GROUND
15	S-BK	ELECTROSTATIC GROUND
41	Y-BL	ELECTROSTATIC GROUND
16	BL-Y	ELECTROSTATIC GROUND
42	Y-O	ELECTROSTATIC GROUND
17	O-Y	ELECTROSTATIC GROUND
43	Y-G	0V
18	G-Y	−48V
44	Y-BR	0V
19	BR-Y	−48V
45	Y-S	0V
20	S-Y	−48V
46	V-BL	0V
21	BL-V	−48V
47	V-O	0V
22	O-V	−48V
48	V-G	0V
23	G-V	−48V
49	V-BR	0V
24	BR-V	−48V
50	V-S	0V
25	S-V	−48V

TABLE A3-2 SHELF 2 (SX-200 ONLY) EXTERNAL PLUG AND JACK CONNECTIONS

PLUG P7 (Connects to Cross Connect Field)

Pin	Pair Color	Equipment Numbers Lines	Lead Designation Line	Equipment Numbers Trunks	Lead Designation Trunks CO	DID/TIE	E&M†	Card Positions
26	W-BL	161	T1	162*	T1	T1	T1	
1	BL-W		R1		R1	R1	R1	
27	W-O	162	T2		XT2		TR1	
2	O-W		R2		XT1		RR1	1
28	W-G	163	T3	164	T2		E1	
3	G-W		R3		R2		M1	
29	W-BR	164	T4					
4	BR-W		R4					
30	W-S	169	T1	170*	T1	T1	T1	
5	S-W		R1		R1	R1	R1	
31	R-BL	170	T2		XT2		TR1	
6	BL-R		R2		XT1		RR1	2
32	R-O	171	T3	172	T2		E1	
7	O-R		R3		R2		M1	
33	R-G	172	T4					
8	G-R		R4					
34	R-BR	177	T1	178*	T1	T1	T1	
9	BR-R		R1		R1	R1	R1	
35	R-S	178	T2		XT2		TR1	
10	S-R		R2		XT1		RR1	
36	BK-BL	179	T3	180	T2		E1	3
11	BL-BK		R3		R2		M1	
37	BK-O	180	T4					
12	O-BK		R4					
38	BK-G	185	T1	186*	T1	T1	T1	
13	G-BK		R1		R1	R1	R1	
39	BK-BR	186	T2		XT2		TR1	
14	BR-BK		R2		XT1		RR1	
40	BK-S	187	T3	188	T2		E1	4
15	S-BK		R3		R2		M1	
41	Y-BL	188	T4					
16	BL-Y		R4					
42	Y-O	193	T1	194*	T1	T1	T1	
17	O-Y		R1		R1	R1	R1	
43	Y-G	194	T2		XT2		TR1	
18	G-Y		R2		XT1		RR1	
44	Y-BR	195	T3	196	T2		E1	5
19	BR-Y		R3		R2		M1	
45	Y-S	196	T4					
20	S-Y		R4					
46	V-BL	201	T1	202*	T1	T1	T1	
21	BL-V		R1		R1	R1	R1	
47	V-O	202	T2		XT2		TR1	
22	O-V		R2		XT1		RR1	
48	V-G	203	T3	204	T2		E1	6
23	G-V		R3		R2		M1	
49	V-BR	204	T4					
24	BR-V		R4					
50	V-S		SPARE		SPARE			
25	S-V		SPARE		SPARE			

1729

† For 2-Wire E&M Trunk operation DO NOT connect RR and TR leads
* Trunk Equipment Number for 2 Trunk Card

TABLE A3-2 SHELF 2 (SX-200 ONLY) EXTERNAL PLUG AND JACK CONNECTIONS (CONT'D)

PLUG P8 (Connects to Cross Connect Field)

Pin	Pair Color	Equipment Numbers Lines	Lead Designation Line	Equipment Numbers Trunks	Lead Designation Trunks CO	DID/TIE	E&M†	Card Positions
26	W-BL	165	T5	166*	T3	T2	T2	
1	BL-W		R5		R3	R2	R2	
27	W-O	166	T6		XT4		TR2	
2	O-W		R6		XT3		RR2	1
28	W-G	167	T7	168	T4		E2	
3	G-W		R7		R4		M2	
29	W-BR	168	T8					
4	BR-W		R8					
30	W-S	173	T5	174*	T3	T2	T2	
5	S-W		R5		R3	R2	R2	
31	R-BL	174	T6		XT4		TR2	
6	BL-R		R6		XT3		RR2	2
32	R-O	175	T7	176	T4		E2	
7	O-R		R7		R4		M2	
33	R-G	176	T8					
8	G-R		R8					
34	R-BR	181	T5	182*	T3	T2	T2	
9	BR-R		R5		R3	R2	R2	
35	R-S	182	T6		XT4		TR2	
10	S-R		R6		XT3		RR2	
36	BK-BL	183	T7	184	T4		E2	3
11	BL-BK		R7		R4		M2	
37	BK-O	184	T8					
12	O-BK		R8					
38	BK-G	189	T5	190*	T3	T2	T2	
13	G-BK		R5		R3	R2	R2	
39	BK-BR	190	T6		XT4		TR2	
14	BR-BK		R6		XT3		RR2	
40	BK-S	191	T7	192	T4		E2	4
15	S-BK		R7		R4		M2	
41	Y-BL	192	T8					
16	BL-Y		R8					
42	Y-O	197	T5	198*	T3	T2	T2	
17	O-Y		R5		R3	R2	R2	
43	Y-G	198	T6		XT4		TR2	
18	G-Y		R6		XT3		RR2	
44	Y-BR	199	T7	200	T4		E2	5
19	BR-Y		R7		R4		M2	
45	Y-S	200	T8					
20	S-Y		R8					
46	V-BL	205	T5	206*	T3	T2	T2	
21	BL-V		R5		R3	R2	R2	
47	V-O	206	T6		XT4		TR2	
22	O-V		R6		XT3		RR2	
48	V-G	207	T7	208	T4		E2	6
23	G-V		R7		R4		M2	
49	V-BR	208	T8					
24	BR-V		R8					
50	V-S		SPARE		SPARE			
25	S-V		SPARE		SPARE			

† For 2-Wire E&M Trunk operation DO NOT connect RR and TR leads

* Trunk Equipment Number for 2 Trunk Card

1730

TABLE A3-2 SHELF 2 (SX-200 ONLY) EXTERNAL PLUG AND JACK CONNECTIONS

PLUG P9 (Connects to Cross Connect Field)

Pin	Pair Color	Equipment Numbers Lines	Lead Designation Line	Equipment Numbers Trunks	Lead Designation Trunks CO	DID/TIE	E&M†	Card Positions
26	W-BL	209	T1	210*	T1	T1	T1	
1	BL-W		R1		R1	R1	R1	
27	W-O	210	T2		XT2		TR1	
2	O-W		R2		XT1		RR1	7
28	W-G	211	T3	212	T2		E1	
3	G-W		R3		R2		M1	
29	W-BR	212	T4					
4	BR-W		R4					
30	W-S	217	T1	218*	T1	T1	T1	
5	S-W		R1		R1	R1	R1	
31	R-BL	218	T2		XT2		TR1	
6	BL-R		R2		XT1		RR1	8
32	R-O	219	T3	220	T2		E1	
7	O-R		R3		R2		M1	
33	R-G	220	T4					
8	G-R		R4					
34	R-BR	225	T1	226*	T1	T1	T1	
9	BR-R		R1		R1	R1	R1	
35	R-S	226	T2		XT2		TR1	
10	S-R		R2		XT1		RR1	
36	BK-BL	227	T3	228	T2		E1	9
11	BL-BK		R3		R2		M1	
37	BK-O	228	T4					
12	O-BK		R4					
38	BK-G	233	T1	234*	T1	T1	T1	
13	G-BK		R1		R1	R1	R1	
39	BK-BR	234	T2		XT2		TR1	
14	BR-BK		R2		XT1		RR1	
40	BK-S	235	T3	236	T2		E1	10
15	S-BK		R3		R2		M1	
41	Y-BL	236	T4					
16	BL-Y		R4					
42	Y-O	241	T1	242*	T1	T1	T1	
17	O-Y		R1		R1	R1	R1	
43	Y-G	242	T2		XT2		TR1	
18	G-Y		R2		XT1		RR1	
44	Y-BR	243	T3	244	T2		E1	11
19	BR-Y		R3		R2		M1	
45	Y-S	244	T4					
20	S-Y		R4					
46	V-BL	249	T1	250*	T1	T1	T1	
21	BL-V		R1		R1	R1	R1	
47	V-O	250	T2		XT2		TR1	
22	O-V		R2		XT1		RR1	
48	V-G	251	T3	252	T2		E1	12
23	G-V		R3		R2		M1	
49	V-BR	252	T4					
24	BR-V		R4					
50	V-S		SPARE		SPARE			
25	S-V		SPARE		SPARE			

† For 2-Wire E&M Trunk operation DO NOT connect RR and TR leads
* Trunk Equipment Number for 2 Trunk Card

TABLE A3-2 SHELF 2 (SX-200 ONLY) EXTERNAL PLUG AND JACK CONNECTIONS (CONT'D)

PLUG P10 (Connects to Cross Connect Field)

Pin	Pair Color	Equipment Numbers Lines	Lead Designation Line	Equipment Numbers Trunks	Lead Designation Trunks CO	DID/TIE	E&M†	Card Positions
26	W-BL	213	T5	214*	T3	T2	T2	
1	BL-W		R5		R3	R2	R2	
27	W-O	214	T6		XT4		TR2	
2	O-W		R6		XT3		RR2	7
28	W-G	215	T7	216	T4		E2	
3	G-W		R7		R4		M2	
29	W-BR	216	T8					
4	BR-W		R8					
30	W-S	221	T5	222*	T3	T2	T2	
5	S-W		R5		R3	R2	R2	
31	R-BL	222	T6		XT4		TR2	
6	BL-R		R6		XT3		RR2	8
32	R-O	223	T7	224	T4		E2	
7	O-R		R7		R4		M2	
33	R-G	224	T8					
8	G-R		R8					
34	R-BR	229	T5	230*	T3	T2	T2	
9	BR-R		R5		R3	R2	R2	
35	R-S	230	T6		XT4		TR2	
10	S-R		R6		XT3		RR2	
36	BK-BL	231	T7	232	T4		E2	9
11	BL-BK		R7		R4		M2	
37	BK-O	232	T8					
12	O-BK		R8					
38	BK-G	237	T5	238*	T3	T2	T2	
13	G-BK		R5		R3	R2	R2	
39	BK-BR	238	T6		XT4		TR2	
14	BR-BK		R6		XT3		RR2	
40	BK-S	239	T7	240	T4		E2	10
15	S-BK		R7		R4		M2	
41	Y-BL	240	T8					
16	BL-Y		R8					
42	Y-O	245	T5	246*	T3	T2	T2	
17	O-Y		R5		R3	R2	R2	
43	Y-G	246	T6		XT4		TR2	
18	G-Y		R6		XT3		RR2	
44	Y-BR	247	T7	248	T4		E2	11
19	BR-Y		R7		R4		M2	
45	Y-S	248	T8					
20	S-Y		R8					
46	V-BL	253	T5	254*	T3	T2	T2	
21	BL-V		R5		R3	R2	R2	
47	V-O	254	T6		XT4		TR2	
22	O-V		R6		XT3		RR2	
48	V-G	255	T7	256	T4		E2	12
23	G-V		R7		R4		M2	
49	V-BR	256	T8					
24	BR-V		R8					
50	V-S		SPARE		SPARE			
25	S-V		SPARE		SPARE			

† For 2-Wire E&M Trunk operation DO NOT connect RR and TR leads
* Trunk Equipment Number for 2 Trunk Card

11/32

TABLE A3-2 INTERCONNECT BOARD PLUG AND JACK CONNECTIONS (CONT'D)

PLUG P18 (Miscellaneous Connections to Cross Connect Field)

Pin	Pair Color	Lead Designation
26	W-BL	SPARE
1	BL-W	SPARE
27	W-O	SPARE
2	O-W	SPARE
28	W-G	SPARE
3	G-W	SPARE
29	W-BR	SPARE
4	BR-W	
30	W-S	SPARE
5	S-W	SPARE
31	R-BL	SPARE
6	BL-R	SPARE
32	R-O	SPARE
7	O-R	SPARE
33	R-GR	SPARE
8	GR-R	
34	R-BR	SPARE
9	BR-R	SPARE
35	R-S	SPARE
10	S-R	SPARE
36	BK-BL	SPARE
11	BL-BK	SPARE
37	BK-O	SPARE
12	O-BK	
38	BK-G	SPARE
13	G-BK	SPARE
39	BK-BR	SPARE
14	BR-BK	SPARE
40	BK-S	SPARE
15	S-BK	SPARE
41	Y-BL	SPARE
16	BL-Y	SPARE
42	Y-O	MUSIC IN B
17	O-Y	MUSIC IN A
43	Y-G	PA2 OUT B
18	G-Y	PA2 OUT A
44	Y-BR	NIGHT BELL 2B
19	BR-Y	NIGHT BELL 2A
45	Y-S	PA1 OUT B
20	S-Y	PA1 OUT A
46	V-BL	NIGHT BELL 1B
21	BL-V	NIGHT BELL 1A
47	V-O	PA 1 CONTROL B
22	O-V	PA 1 CONTROL A
48	V-G	PA 2 CONTROL B
23	G-V	PA 2 CONTROL A
49	V-BR	NIGHT SERVICE B
24	BR-V	NIGHT SERVICE A
50	V-S	NIGHT BELL 3B
25	S-V	NIGHT BELL 3A

Note:
(1) Night service relay operates permanently when in night service.
Night Bell continuous rating:
Open circuit voltage 120Vrms
Closed circuit current 75mArms

(2) Music in 100mV
Impedance 600 Ohms

(3) PA Output Level 100mV
Impedance 600 Ohms

TABLE A3-2 PLUG AND JACK CONNECTIONS TO INTERCONNECT BOARD (CONT'D)
PLUG P19 ON INTERCONNECT CARD PN9110-02A
(Miscellaneous Connections to Cross Connect Field)

Pin	Pair Color	Lead Line Designation	Lead Designation Trunk CO	DID/TIE	E&M†	CARD POSITIONS
26	W-BL	SPARE				
1	BL-W	SPARE				
27	W-O					
2	O-W					
28	W-G					
3	G-W	RECEIVER 1				15
29	W-BR					
4	BR-W					
30	W-S					
5	S-W					
31	R-BL	T8				
6	BL-R	R8				
32	R-O	T7	T4		E2	
7	O-R	R7	R4		M2	14
33	R-G	T6	XT3		TR2	
8	G-R	R6	XT4		RR2	
34	R-BR	T5	T3	T2	T2	
9	BR-R	R5	R3	R2	R2	
35	R-S	T8				
10	S-R	R8				
36	BK-BL	T7	T4		E2	
11	BL-BK	R7	R4		M2	13
37	BK-O	T6	XT3		TR2	
12	O-BK	R6	XT4		RR2	
38	BK-G	T5	T3	T2	T2	
13	G-BK	R5	R3	R2	R2	
39	BK-BR					
14	BR-BK					
40	BK-S					
15	S-BK	RECEIVER 1				15
41	Y-BL					
16	BL-Y					
42	Y-O					
17	O-Y					
43	Y-G	T4				
18	G-Y	R4				
44	Y-BR	T3	T2		E1	
19	BR-Y	R3	R2		M1	14
45	Y-S	T2	XT1		TR1	
20	S-Y	R2	XT2		RR1	
46	V-BL	T1	T1	T1	T1	
21	BL-V	R1	R1	R1	R1	
47	V-O	T4				
22	O-V	R4				
48	V-G	T3	T2		E1	
23	G-V	R3	R2		M1	
49	V-BR	T2	XT1		TR1	13
24	BR-V	R2	XT2		RR1	
50	V-S	T1	T1	T1	T1	
25	S-V	R1	R1	R1	R1	

†For 2-Wire E&M Trunk operation DO NOT connect RR and TR leads

TABLE A3-2 INTERCONNECT BOARD PLUG AND JACK CONNECTIONS (CONT'D)

CONNECTOR J302
DATA PORT (SEE NOTES)

Pin	Lead Designation
1	0V
2	TRANSMIT DATA
3	RECEIVE DATA
4	
5	CLEAR TO SEND
6	DATA SET READY
7	SIGNAL GROUND
8	CARRIER DETECT
9	
10	
11	
12	
13	
14	
15	
16	
17	
18	
19	
20	DATA TERM READY
21	
22	
23	
24	
25	

P303 SX-100	P303 SX-200
PIN	PIN
1. Key	1. – 10Vdc
2. OOT	2. Power A
3. – 10Vdc	3. Power B
4. Power B	4. OOT
5. Power A	5. Key
6. Spare	6. Spare

Note 1. Connector J302 is common to the SX-100 and SX-200 PABX.
2. See Section MITL9105/9110-98-450, Traffic Measurement, for applications of the connector.

TABLE A3-3 POWER FAIL TRANSFER BOARD PLUG AND JACK CONNECTIONS

PLUG P20
(Power Fail Transfer Connections to Cross Connect Field)

Pin	Pair Color	Lead Designation
26	W-BL	STATION T1
1	BL-W	STATION R1
27	W-O	LINE CARD T1
2	O-W	LINE CARD R1
28	W-GR	TRUNK T1
3	GR-W	TRUNK R1
29	W-BR	TRUNK CARD T1
4	BR-W	TRUNK CARD R1
30	W-S	STATION T2
5	S-W	STATION R2
31	R-BL	LINE CARD T2
6	BL-R	LINE CARD R2
32	R-O	TRUNK T2
7	O-R	TRUNK R2
33	R-G	TRUNK CARD T2
8	G-R	TRUNK CARD R2
34	R-BR	STATION T3
9	BR-R	STATION R3
35	R-S	LINE CARD T3
10	S-R	LINE CARD R3
36	BK-BL	TRUNK T3
11	BL-BK	TRUNK R3
37	BK-O	TRUNK CARD T3
12	O-BK	TRUNK CARD R3
38	BK-G	STATION T4
13	G-BK	STATION R4
39	BK-BR	LINE CARD T4
14	BR-BK	LINE CARD R4
40	BK-S	TRUNK T4
15	S-BK	TRUNK R4
41	Y-BL	TRUNK CARD T4
16	BL-Y	TRUNK CARD R4
42	Y-O	STATION T5
17	O-Y	STATION R5
43	Y-G	LINE CARD T5
18	G-Y	LINE CARD R5
44	Y-BR	TRUNK T5
19	BR-Y	TRUNK R5
45	Y-S	TRUNK CARD T5
20	S-Y	TRUNK CARD R5
46	V-BL	STATION T6
21	BL-V	STATION R6
47	V-O	LINE CARD T6
22	O-V	LINE CARD R6
48	V-G	TRUNK T6
23	G-V	TRUNK R6
49	V-BR	TRUNK CARD T6
24	BR-V	TRUNK CARD R6
50	V-S	SPARE
25	S-V	SPARE

PLUG P21
(Power Fail Transfer Connections to Cross Connect Field)

Pin	Pair Color	Lead Designation
26	W-BL	STATION T7
1	BL-W	STATION R7
27	W-O	LINE CARD T7
2	O-W	LINE CARD R7
28	W-G	TRUNK T7
3	G-W	TRUNK R7
29	W-BR	TRUNK CARD T7
4	BR-W	TRUNK CARD R7
30	W-S	STATION T8
5	S-W	STATION R8
31	R-BL	LINE CARD T8
6	BL-R	LINE CARD R8
32	R-O	TRUNK T8
7	O-R	TRUNK R8
33	R-G	TRUNK CARD T8
8	G-R	TRUNK CARD R8
34	R-BR	STATION T9
9	BR-R	STATION R9
35	R-S	LINE CARD T9
10	S-R	LINE CARD R9
36	BK-BL	TRUNK T9
11	BL-BK	TRUNK R9
37	BK-O	TRUNK CARD T9
12	O-BK	TRUNK CARD R9
38	BK-G	STATION T10
13	G-BK	STATION R10
39	BK-BR	LINE CARD T10
14	BR-BK	LINE CARD R10
40	BK-S	TRUNK T10
15	S-BK	TRUNK R10
41	Y-BL	TRUNK CARD T10
16	BL-Y	TRUNK CARD R10
42	Y-O	STATION T11
17	O-Y	STATION R11
43	Y-G	LINE CARD T11
18	G-Y	LINE CARD R11
44	Y-BR	TRUNK T11
19	BR-Y	TRUNK R11
45	Y-S	TRUNK CARD T11
20	S-Y	TRUNK CARD R11
46	V-BL	STATION T12
21	BL-V	STATION R12
47	V-O	LINE CARD T12
22	O-V	LINE CARD R12
48	V-G	TRUNK T12
23	G-V	TRUNK R12
49	V-BR	TRUNK CARD T12
24	BR-V	TRUNK CARD R12
50	V-S	SPARE
25	S-V	SPARE

Note: Plug 21 is not installed on SX-100 equipment.

TABLE A3-4 SHELF 2 EXTERNAL PLUG AND JACK CONNECTIONS

PLUG P7 (Connects to Cross Connect Field)

Pin	Pair Color	Lead Designation Line	Lead Designation Trunks CO	DID/TIE	E&M†	Card Positions
26	W-BL	TI	T1	T1	T1	
1	BL-W	R1	R1	R1	R1	
27	W-O	T2	XT2		TR1	
2	O-W	R2	XT1		RR1	1
28	W-G	T3	T2		E1	
3	G-W	R3	R2		M1	
29	W-BR	T4				
4	BR-W	R4				
30	W-S	T1	T1	T1	T1	
5	S-W	R1	R1	R1	R1	
31	R-BL	T2	XT2		TR1	
6	BL-R	R2	XT1		RR1	2
32	R-O	T3	T2		E1	
7	O-R	R3	R2		M1	
33	R-G	T4				
8	G-R	R4				
34	R-BR	T1	T1	T1	T1	
9	BR-R	R1	R1	R1	R1	
35	R-S	T2	XT2		TR1	
10	S-R	R2	XT1		RR1	
36	BK-BL	T3	T2		E1	3
11	BL-BK	R3	R2		M1	
37	BK-O	T4				
12	O-BK	R4				
38	BK-G	T1	T1	T1	T1	
13	G-BK	R1	R1	R1	R1	
39	BK-BR	T2	XT2		TR1	
14	BR-BK	R2	XT1		RR1	
40	BK-S	T3	T2		E1	4
15	S-BK	R3	R2		M1	
41	Y-BL	T4				
16	BL-Y	R4				
42	Y-O	T1	T1	T1	T1	
17	O-Y	R1	R1	R1	R1	
43	Y-G	T2	XT2		TR1	
18	G-Y	R2	XT1		RR1	
44	Y-BR	T3	T2		E1	5
19	BR-Y	R3	R2		M1	
45	Y-S	T4				
20	S-Y	R4				
46	V-BL	T1	T1	T1	T1	
21	BL-V	R1	R1	R1	R1	
47	V-O	T2	XT2		TR1	
22	O-V	R2	XT1		RR1	
48	V-G	T3	T2		E1	6
23	G-V	R3	R2		M1	
49	V-BR	T4				
24	BR-V	R4				
50	V-S	SPARE	SPARE			
25	S-V	SPARE	SPARE			

†For 2-Wire E&M Trunk operation DO NOT connect RR and TR leads

TABLE A3-4 SHELF 2 EXTERNAL PLUG AND JACK CONNECTIONS (CONT'D)

PLUG P8 (Connects to Cross Connect Field)

Pin	Pair Color	Lead Designation Lines	Lead Designation Trunks CO	DID/TIE	E&M†	Card Positions
26	W-BL	T5	T3	T2	T2	
1	BL-W	R5	R3	R2	R2	
27	W-O	T6	XT4		TR2	
2	O-W	R6	XT3		RR2	1
28	W-G	T7	T4		E2	
3	G-W	R7	R4		M2	
29	W-BR	T8				
4	BR-W	R8				
30	W-S	T5	T3	T2	T2	
5	S-W	R5	R3	R2	R2	
31	R-BL	T6	XT4		TR2	
6	BL-R	R6	XT3		RR2	
32	R-O	T7	T4		E2	2
7	O-R	R7	R4		M2	
33	R-G	T8				
8	G-R	R8				
34	R-BR	T5	T3	T2	T2	
9	BR-R	R5	R3	R2	R2	
35	R-S	T6	XT4		TR2	
10	S-R	R6	XT3		RR2	
36	BK-BL	T7	T4		E2	3
11	BL-BK	R7	R4		M2	
37	BK-O	T8				
12	O-BK	R8				
38	BK-G	T5	T3	T2	T2	
13	G-BK	R5	R3	R2	R2	
39	BK-BR	T6	XT4		TR2	
14	BR-BK	R6	XT3		RR2	4
40	BK-S	T7	T4		E2	
15	S-BK	R7	R4		M2	
41	Y-BL	T8				
16	BL-Y	R8				
42	Y-O	T5	T3	T2	T2	
17	O-Y	R5	R3	R2	R2	
43	Y-G	T6	XT4		TR2	
18	G-Y	R6	XT3		RR2	
44	Y-BR	T7	T4		E2	5
19	BR-Y	R7	R4		M2	
45	Y-S	T8				
20	S-Y	R8				
46	V-BL	T5	T3	T2	T2	
21	BL-V	R5	R3	R2	R2	
47	V-O	T6	XT4		TR2	
22	O-V	R6	XT3		RR2	
48	V-G	T7	T4		E2	6
23	G-V	R7	R4		M2	
49	V-BR	T8				
24	BR-V	R8				
50	V-S	SPARE	SPARE			
25	S-V	SPARE	SPARE			

†For 2-Wire E&M Trunk operation DO NOT connect RR and TR leads

TABLE A3-4 SHELF 2 EXTERNAL PLUG AND JACK CONNECTIONS (CONT'D)

PLUG P9 (Connects to Cross Connect Field)

Pin	Pair Color	Lead Designation Line	Lead Designation Trunks CO	DID/TIE	E&M†	Card Positions
26	W-BL	TI	T1	T1	T1	
1	BL-W	R1	R1	R1	R1	
27	W-O	T2	XT2		TR1	
2	O-W	R2	XT1		RR1	7
28	W-G	T3	T2		E1	
3	G-W	R3	R2		M1	
29	W-BR	T4				
4	BR-W	R4				
30	W-S	T1	T1	T1	T1	
5	S-W	R1	R1	R1	R1	
31	R-BL	T2	XT2		TR1	
6	BL-R	R2	XT1		RR1	8
32	R-O	T3	T2		E1	
7	O-R	R3	R2		M1	
33	R-G	T4				
8	G-R	R4				
34	R-BR	T1	T1	T1	T1	
9	BR-R	R1	R1	R1	R1	
35	R-S	T2	XT2		TR1	
10	S-R	R2	XT1		RR1	
36	BK-BL	T3	T2		E1	9
11	BL-BK	R3	R2		M1	
37	BK-O	T4				
12	O-BK	R4				
38	BK-G	T1	T1	T1	T1	
13	G-BK	R1	R1	R1	R1	
39	BK-BR	T2	XT2		TR1	
14	BR-BK	R2	XT1		RR1	
40	BK-S	T3	T2		E1	10
15	S-BK	R3	R2		M1	
41	Y-BL	T4				
16	BL-Y	R4				
42	Y-O	T1	T1	T1	T1	
17	O-Y	R1	R1	R1	R1	
43	Y-G	T2	XT2		TR1	
18	G-Y	R2	XT1		RR1	
44	Y-BR	T3	T2		E1	11
19	BR-Y	R3	R2		M1	
45	Y-S	T4				
20	S-Y	R4				
46	V-BL	T1	T1	T1	T1	
21	BL-V	R1	R1	R1	R1	
47	V-O	T2	XT2		TR1	
22	O-V	R2	XT1		RR1	
48	V-G	T3	T2		E1	12
23	G-V	R3	R2		M1	
49	V-BR	T4				
24	BR-V	R4				
50	V-S	SPARE	SPARE			
25	S-V	SPARE	SPARE			

†For 2-Wire E&M Trunk operation DO NOT connect RR and TR leads

TABLE A3-4 SHELF 2 EXTERNAL PLUG AND JACK CONNECTIONS (CONT'D)

PLUG P10 (Connects to Cross Connect Field)

Pin	Pair Color	Lead Designation Lines	Lead Designation Trunks CO	DID/TIE	E&M†	Card Positions
26	W-BL	T5	T3	T2	T2	
1	BL-W	R5	R3	R2	R2	
27	W-O	T6	XT4		TR2	
2	O-W	R6	XT3		RR2	7
28	W-G	T7	T4		E2	
3	G-W	R7	R4		M2	
29	W-BR	T8				
4	BR-W	R8				
30	W-S	T5	T3	T2	T2	
5	S-W	R5	R3	R2	R2	
31	R-BL	T6	XT4		TR2	
6	BL-R	R6	XT3		RR2	
32	R-O	T7	T4		E2	8
7	O-R	R7	R4		M2	
33	R-G	T8				
8	G-R	R8				
34	R-BR	T5	T3	T2	T2	
9	BR-R	R5	R3	R2	R2	
35	R-S	T6	XT4		TR2	
10	S-R	R6	XT3		RR2	
36	BK-BL	T7	T4		E2	9
11	BL-BK	R7	R4		M2	
37	BK-O	T8				
12	O-BK	R8				
38	BK-G	T5	T3	T2	T2	
13	G-BK	R5	R3	R2	R2	
39	BK-BR	T6	XT4		TR2	
14	BR-BK	R6	XT3		RR2	10
40	BK-S	T7	T4		E2	
15	S-BK	R7	R4		M2	
41	Y-BL	T8				
16	BL-Y	R8				
42	Y-O	T5	T3	T2	T2	
17	O-Y	R5	R3	R2	R2	
43	Y-G	T6	XT4		TR2	
18	G-Y	R6	XT3		RR2	
44	Y-BR	T7	T4		E2	11
19	BR-Y	R7	R4		M2	
45	Y-S	T8				
20	S-Y	R8				
46	V-BL	T5	T3	T2	T2	
21	BL-V	R5	R3	R2	R2	
47	V-O	T6	XT4		TR2	
22	O-V	R6	XT3		RR2	
48	V-G	T7	T4		E2	12
23	G-V	R7	R4		M2	
49	V-BR	T8				
24	BR-V	R8				
50	V-S	SPARE	SPARE			
25	S-V	SPARE	SPARE			

†For 2-Wire E&M Trunk operation DO NOT connect RR and TR leads

TABLE A3-5 CONSOLE INTERFACE BOARD PLUG AND JACK CONNECTIONS (SX-200 ONLY)

JACK J22
(Connects to Attendant Console 1)

Pin	Pair Color	Lead Designation
26	W-BL	ELECTROSTATIC GROUND
1	BL-W	ELECTROSTATIC GROUND
27	W-O	ELECTROSTATIC GROUND
2	O-W	ELECTROSTATIC GROUND
28	W-G	ELECTROSTATIC GROUND
3	G-W	ELECTROSTATIC GROUND
29	W-BR	ELECTROSTATIC GROUND
4	BR-W	ELECTROSTATIC GROUND
30	W-S	DATA IN COMMON
5	S-W	DATA IN
31	R-BL	ELECTROSTATIC GROUND
6	BL-R	ELECTROSTATIC GROUND
32	R-O	DATA OUT COMMON
7	O-R	DATA OUT
33	R-G	ELECTROSTATIC GROUND
8	G-R	ELECTROSTATIC GROUND
34	R-BR	ELECTROSTATIC GROUND
9	BR-R	ELECTROSTATIC GROUND
35	R-S	CUTOVER SWB
10	S-R	CUTOVER SWA
36	BK-BL	ELECTROSTATIC GROUND
11	BL-BK	ELECTROSTATIC GROUND
37	BK-O	MAJOR ALARM
12	O-BK	MAJOR ALARM
38	BK-G	TIP
13	G-BK	RING
39	BK-BR	ELECTROSTATIC GROUND
14	BR-BK	ELECTROSTATIC GROUND
40	BK-S	ELECTROSTATIC GROUND
15	S-BK	ELECTROSTATIC GROUND
41	Y-BL	ELECTROSTATIC GROUND
16	BL-Y	ELECTROSTATIC GROUND
42	Y-O	ELECTROSTATIC GROUND
17	O-Y	ELECTROSTATIC GROUND
43	Y-G	0V
18	G-Y	−48V
44	Y-BR	0V
19	BR-Y	−48V
45	Y-S	0V
20	S-Y	−48V
46	V-BL	0V
21	BL-V	−48V
47	V-O	0V
22	O-V	−48V
48	V-G	0V
23	G-V	−48V
49	V-BR	0V
24	BR-V	−48V
50	V-S	0V
25	S-V	−48V

PLUG P23
(Connects to Jack J15)

Pin	Pair Color	Lead Designation
26	W-BL	ELECTROSTATIC GROUND
1	BL-W	ELECTROSTATIC GROUND
27	W-O	ELECTROSTATIC GROUND
2	O-W	ELECTROSTATIC GROUND
28	W-G	ELECTROSTATIC GROUND
3	G-W	ELECTROSTATIC GROUND
29	W-BR	ELECTROSTATIC GROUND
4	BR-W	ELECTROSTATIC GROUND
30	W-S	DATA IN COMMON
5	S-W	DATA IN
31	R-BL	ELECTROSTATIC GROUND
6	BL-R	ELECTROSTATIC GROUND
32	R-O	DATA OUT COMMON
7	O-R	DATA OUT
33	R-G	ELECTROSTATIC GROUND
8	G-R	ELECTROSTATIC GROUND
34	R-BR	ELECTROSTATIC GROUND
9	BR-R	ELECTROSTATIC GROUND
35	R-S	CUTOVER SWB
10	S-R	CUTOVER SWA
36	BK-BL	ELECTROSTATIC GROUND
11	BL-BK	ELECTROSTATIC GROUND
37	BK-O	MAJOR ALARM
12	O-BK	MAJOR ALARM
38	BK-G	TIP
13	G-BK	RING
39	BK-BR	ELECTROSTATIC GROUND
14	BR-BK	ELECTROSTATIC GROUND
40	BK-S	ELECTROSTATIC GROUND
15	S-BK	ELECTROSTATIC GROUND
41	Y-BL	ELECTROSTATIC GROUND
16	BL-Y	ELECTROSTATIC GROUND
42	Y-O	ELECTROSTATIC GROUND
17	O-Y	ELECTROSTATIC GROUND
43	Y-G	0V
18	G-Y	−48V
44	Y-BR	0V
19	BR-Y	−48V
45	Y-S	0V
20	S-Y	−48V
46	V-BL	0V
21	BL-V	−48V
47	V-O	0V
22	O-V	−48V
48	V-G	0V
23	G-V	−48V
49	V-BR	0V
24	BR-V	−48V
50	V-S	0V
25	S-V	−48V

TABLE A3-5 CONSOLE INTERFACE BOARD PLUG AND JACK CONNECTIONS (SX-200 ONLY) (CONT'D)

JACK J24
(Connects to Attendant Console 2)

Pin	Pair Color	Lead Designation
26	W-BL	ELECTROSTATIC GROUND
1	BL-W	ELECTROSTATIC GROUND
27	W-O	ELECTROSTATIC GROUND
2	O-W	ELECTROSTATIC GROUND
28	W-G	ELECTROSTATIC GROUND
3	G-W	ELECTROSTATIC GROUND
29	W-BR	ELECTROSTATIC GROUND
4	BR-W	ELECTROSTATIC GROUND
30	W-S	DATA IN COMMON
5	S-W	DATA IN
31	R-BL	ELECTROSTATIC GROUND
6	BL-R	ELECTROSTATIC GROUND
32	R-O	DATA OUT COMMON
7	O-R	DATA OUT
33	R-G	ELECTROSTATIC GROUND
8	G-R	ELECTROSTATIC GROUND
34	R-BR	ELECTROSTATIC GROUND
9	BR-R	ELECTROSTATIC GROUND
35	R-S	CUTOVER SWB
10	S-R	CUTOVER SWA
36	BK-BL	ELECTROSTATIC GROUND
11	BL-BK	ELECTROSTATIC GROUND
37	BK-O	MAJOR ALARM
12	O-BK	MAJOR ALARM
38	BK-G	TIP
13	G-BK	RING
39	BK-BR	ELECTROSTATIC GROUND
14	BR-BK	ELECTROSTATIC GROUND
40	BK-S	ELECTROSTATIC GROUND
15	S-BK	ELECTROSTATIC GROUND
41	Y-BL	ELECTROSTATIC GROUND
16	BL-Y	ELECTROSTATIC GROUND
42	Y-O	ELECTROSTATIC GROUND
17	O-Y	ELECTROSTATIC GROUND
43	Y-G	0V
18	G-Y	−48V
44	Y-BR	0V
19	BR-Y	−48V
45	Y-S	0V
20	S-Y	−48V
46	V-BL	0V
21	BL-V	−48V
47	V-O	0V
22	O-V	−48V
48	V-G	0V
23	G-V	−48V
49	V-BR	0V
24	BR-V	−48V
50	V-S	0V
25	S-V	−48V

PLUG P25
(Connects to Jack J14)

Pin	Pair Color	Lead Designation
26	W-BL	ELECTROSTATIC GROUND
1	BL-W	ELECTROSTATIC GROUND
27	W-O	ELECTROSTATIC GROUND
2	O-W	ELECTROSTATIC GROUND
28	W-G	ELECTROSTATIC GROUND
3	G-W	ELECTROSTATIC GROUND
29	W-BR	ELECTROSTATIC GROUND
4	BR-W	ELECTROSTATIC GROUND
30	W-S	DATA IN COMMON
5	S-W	DATA IN
31	R-BL	ELECTROSTATIC GROUND
6	BL-R	ELECTROSTATIC GROUND
32	R-O	DATA OUT COMMON
7	O-R	DATA OUT
33	R-G	ELECTROSTATIC GROUND
8	G-R	ELECTROSTATIC GROUND
34	R-BR	ELECTROSTATIC GROUND
9	BR-R	ELECTROSTATIC GROUND
35	R-S	CUTOVER SWB
10	S-R	CUTOVER SWA
36	BK-BL	ELECTROSTATIC GROUND
11	BL-BK	ELECTROSTATIC GROUND
37	BK-O	MAJOR ALARM
12	O-BK	MAJOR ALARM
38	BK-G	TIP
13	G-BK	RING
39	BK-BR	ELECTROSTATIC GROUND
14	BR-BK	ELECTROSTATIC GROUND
40	BK-S	ELECTROSTATIC GROUND
15	S-BK	ELECTROSTATIC GROUND
41	Y-BL	ELECTROSTATIC GROUND
16	BL-Y	ELECTROSTATIC GROUND
42	Y-O	ELECTROSTATIC GROUND
17	O-Y	ELECTROSTATIC GROUND
43	Y-G	0V
18	G-Y	−48V
44	Y-BR	0V
19	BR-Y	−48V
45	Y-S	0V
20	S-Y	−48V
46	V-BL	0V
21	BL-V	−48V
47	V-O	0V
22	O-V	−48V
48	V-G	0V
23	G-V	−48V
49	V-BR	0V
24	BR-V	−48V
50	V-S	0V
25	S-V	−48V

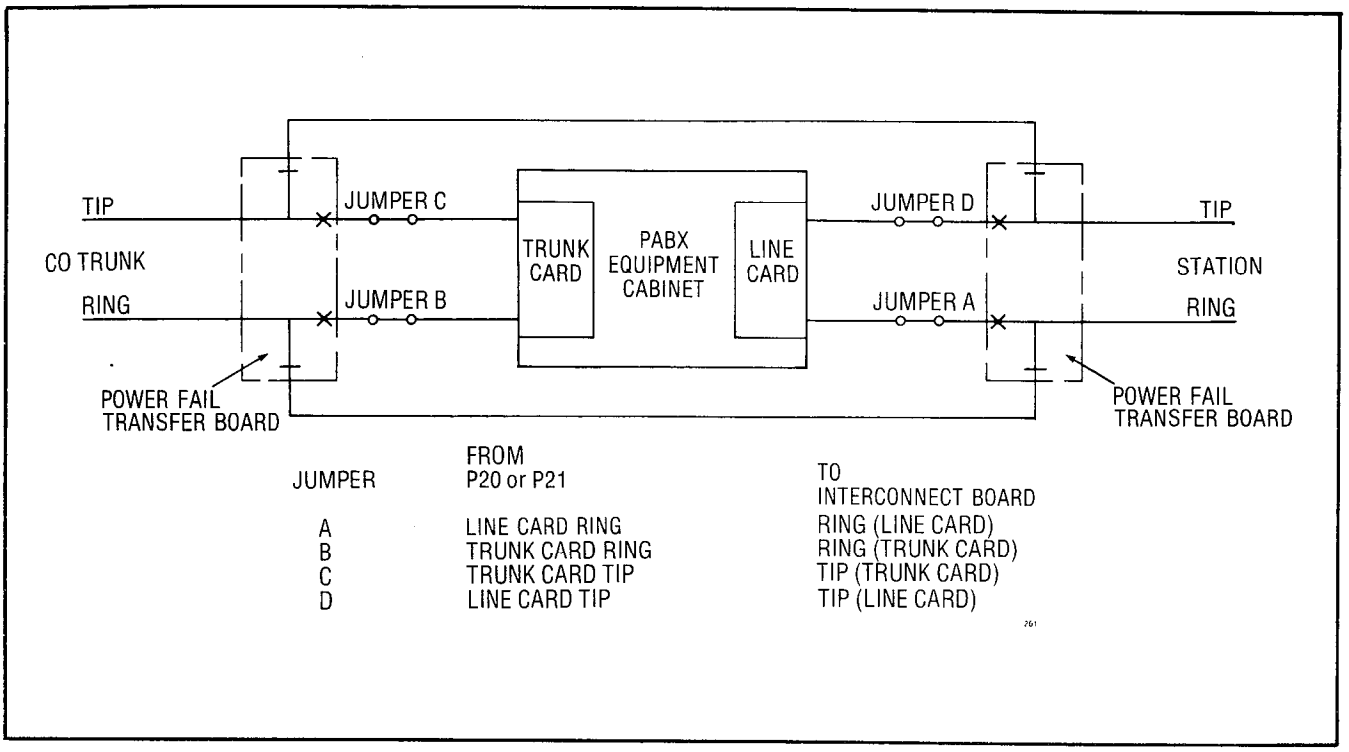

Fig. A3-4 Power Fail Transfer Block Diagram

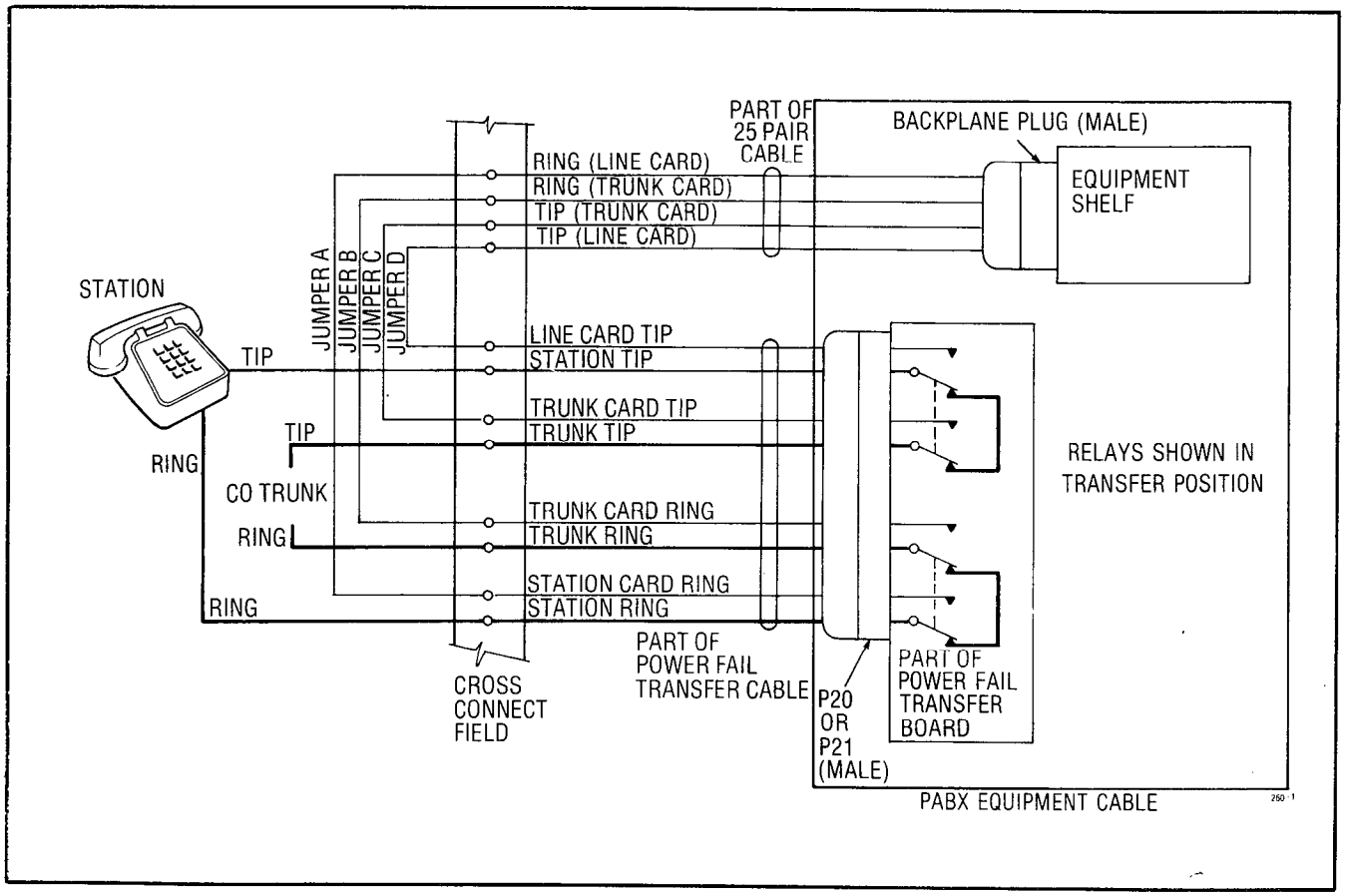

Fig. A3-5 Power Fail Transfer Wiring Diagram

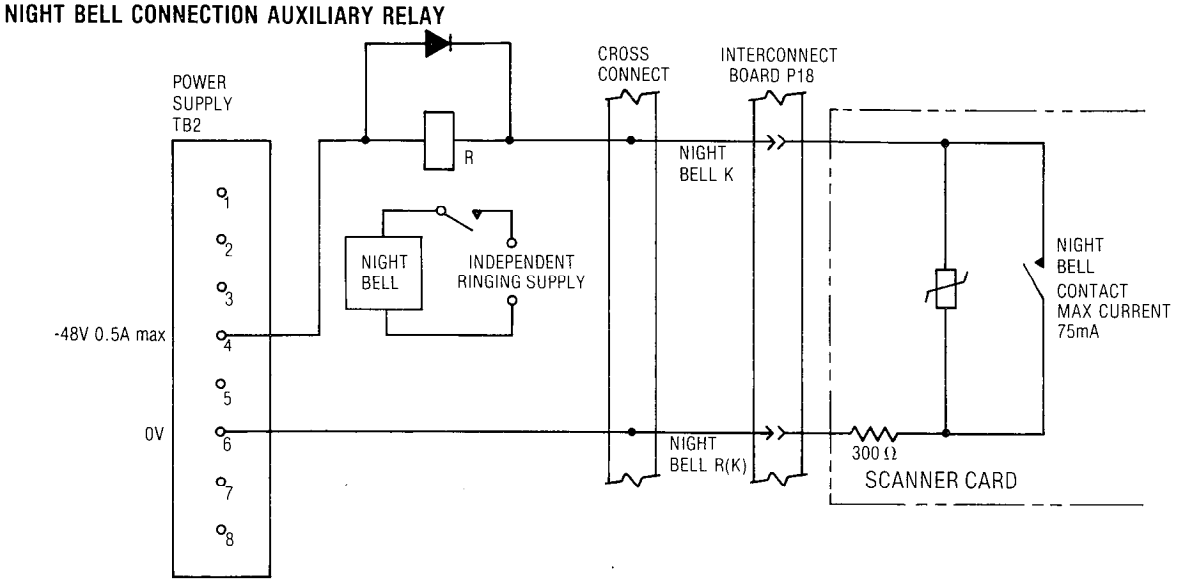

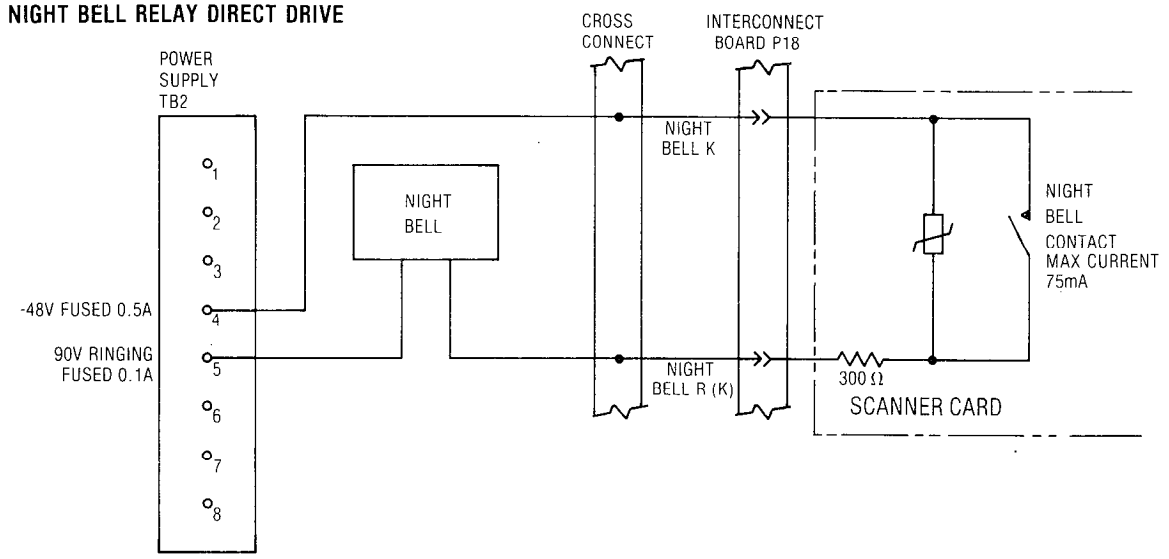

INTERCONNECT BOARD PLUG P18					
PIN	DESTINATION	PIN	DESTINATION	PIN	DESTINATION
46	NIGHT BELL 1 K1	44	NIGHT BELL 2 K2	50	NIGHT BELL 3 K3
21	NIGHT BELL 1 R(K1)	19	NIGHT BELL 2 R (K2)	25	NIGHT BELL 3 R(K3)

Fig. A3-6 Night Bell Connections

TABLE A3-6 BACKPLANE TRANSLATOR BOARD CONNECTIONS (SHELF 1) TO CROSS-CONNECT FIELD

Pin	Pair Color	Line and Trunk Connections				Shelf 1 Translator Board Plug Numbers			
		Extn	CO	DID/Tie	E & M†	P1	P2	P3	P4
26	W-BL	T1	T1	T1	T1	001	025	049	073
1	BL-W	R1	R1	R1	R1				
27	W-O	T2	XT2		TR1	002	026	050	074
2	O-W	R2	XT1		RR1				
28	W-G	T3	T2		E1	003	027	051	075
3	G-W	R3	R2		M1				
29	W-BR	T4				004	028	052	076
4	BR-W	R4							
30	W-S	T5	T3	T2	T2	005	029	053	077
5	S-W	R5	R3	R2	R2				
31	R-BL	T6	XT4		TR2	006	030	054	078
6	BL-R	R6	XT3		RR2				
32	R-O	T7	T4		E2	007	031	055	079
7	O-R	R7	R4		M2				
33	R-G	T8				008	032	056	080
8	G-R	R8							
34	R-BR	T1	T1	T1	T1	009	033	057	081
9	BR-R	R1	R1	R1	R1				
35	R-S	T2	XT2		TR1	010	034	058	082
10	S-R	R2	XT1		RR1				
36	BK-BL	T3	T2		E1	011	035	059	083
11	BL-BK	R3	R2		M1				
37	BK-O	T4				012	036	060	084
12	O-BK	R4							
38	BK-G	T5	T3	T2	T2	013	037	061	085
13	G-BK	R5	R3	R2	R2				
39	BK-BR	T6	XT4		TR2	014	038	062	086
14	BR-BK	R6	XT3		RR2				
40	BK-S	T7	T4		E2	015	039	063	087
15	S-BK	R7	R4		M2				
41	Y-BL	T8				016	040	064	088
16	BL-Y	R8							
42	Y-O	T1	T1	T1	T1	017	041	065	089
17	O-Y	R1	R1	R1	R1				
43	Y-G	T2	XT2		TR1	018	042	066	090
18	G-Y	R2	XT1		RR1				
44	Y-BR	T3	T2		E1	019	043	067	091
19	BR-Y	R3	R2		M1				
45	Y-S	T4				020	044	068	092
20	S-Y	R4							
46	V-BL	T5	T3	T2	T2	021	045	069	093
21	BL-V	R5	R3	R2	R2				
47	V-O	T6	XT4		TR2	022	046	070	094
22	O-V	R6	XT3		RR2				
48	V-G	T7	T4		E2	023	047	071	095
23	G-V	R7	R4		M2				
49	V-BR	T8				024	048	072	096
24	BR-V	R8							
50	V-S	SPARE							
25	S-V	SPARE							

Equipment Numbers Card Position 1
Equipment Numbers Card Position 2
Equipment Numbers Card Position 3
Equipment Numbers Card Position 4
Equipment Numbers Card Position 5
Equipment Numbers Card Position 6
Equipment Numbers Card Position 7
Equipment Numbers Card Position 8
Equipment Numbers Card Position 9
Equipment Numbers Card Position 10
Equipment Numbers Card Position 11
Equipment Numbers Card Position 12 (See Note)

Note: Position 12 can be used for lines, trunks or receiver #4 card.
† For 2-Wire E&M Trunk operation DO NOT connect RR and TR leads.

TABLE A3-6 BACKPLANE TRANSLATOR BOARD CONNECTIONS (SHELF 1) TO CROSS-CONNECT FIELD

Pin	Pair Color	Line and Trunk Connections				Shelf 2 Translator Board Plug Numbers			
		Extn	CO	DID/Tie	E & M†	P7	P8	P9	P10
26	W-BL	T1	T1	T1	T1	161	185	209	233
1	BL-W	R1	R1	R1	R1				
27	W-O	T2	XT2		TR1	162	186	210	234
2	O-W	R2	XT1		RR1				
28	W-G	T3	T2		E1	163	187	211	235
3	G-W	R3	R2		M1				
29	W-BR	T4				164	188	212	236
4	BR-W	R4							
30	W-S	T5	T3	T2	T2	165	189	213	237
5	S-W	R5	R3	R2	R2				
31	R-BL	T6	XT4		TR2	166	190	214	238
6	BL-R	R6	XT3		RR2				
32	R-O	T7	T4		E2	167	191	215	239
7	O-R	R7	R4		M2				
33	R-G	T8				168	192	216	240
8	G-R	R8				Equipment Numbers Card Position 1	Equipment Numbers Card Position 4	Equipment Numbers Card Position 7	Equipment Numbers Card Position 10
34	R-BR	T1	T1	T1	T1	169	193	217	241
9	BR-R	R1	R1	R1	R1				
35	R-S	T2	XT2		TR1	170	194	218	242
10	S-R	R2	XT1		RR1				
36	BK-BL	T3	T2		E1	171	195	219	243
11	BL-BK	R3	R2		M1				
37	BK-O	T4				172	196	220	244
12	O-BK	R4							
38	BK-G	T5	T3	T2	T2	173	197	221	245
13	G-BK	R5	R3	R2	R2				
39	BK-BR	T6	XT4		TR2	174	198	222	246
14	BR-BK	R6	XT3		RR2				
40	BK-S	T7	T4		E2	175	199	223	247
15	S-BK	R7	R4		M2				
41	Y-BL	T8				176	200	224	248
16	BL-Y	R8				Equipment Numbers Card Position 2	Equipment Numbers Card Position 5	Equipment Numbers Card Position 8	Equipment Numbers Card Position 11
42	Y-O	T1	T1	T1	T1	177	201	225	249
17	O-Y	R1	R1	R1	R1				
43	Y-G	T2	XT2		TR1	178	202	226	250
18	G-Y	R2	XT1		RR1				
44	Y-BR	T3	T2		E1	179	203	227	251
19	BR-Y	R3	R2		M1				
45	Y-S	T4				180	204	228	252
20	S-Y	R4							
46	V-BL	T5	T3	T2	T2	181	205	229	253
21	BL-V	R5	R3	R2	R2				
47	V-O	T6	XT4		TR2	182	206	230	254
22	O-V	R6	XT3		RR2				
48	V-G	T7	T4		E2	183	207	231	255
23	G-V	R7	R4		M2				
49	V-BR	T8				184	208	232	256
24	BR-V	R8				Equipment Numbers Card Position 3	Equipment Numbers Card Position 6	Equipment Numbers Card Position 9	Equipment Numbers Card Position 12
50	V-S	SPARE							
25	S-V	SPARE							

Note: Position 12 can be used for lines, trunks or receiver #4 card.
† For 2-Wire E&M Trunk operation DO NOT connect RR and TR leads.

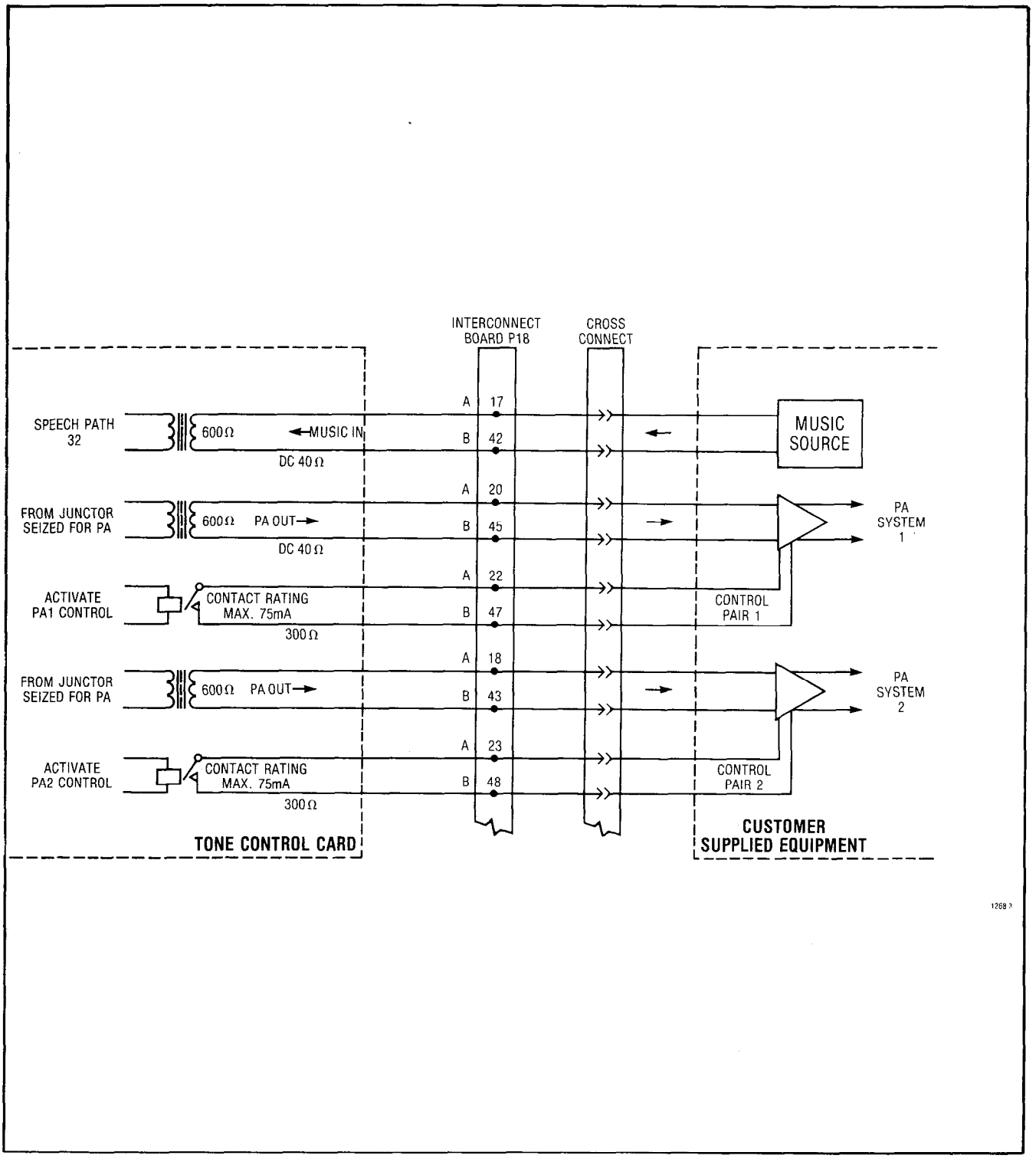

Fig. A3-7 Music and PA Connections

HARDWARE/EQUIPMENT NUMBERING

HARDWARE POSITION NUMBER	PLUG 7			PLUG 8			PLUG 9			PLUG 10		
	161	169	177	185	193	201	209	217	225	233	241	249
	162	170	178	186	194	202	210	218	226	234	242	250
	163	171	179	187	195	203	211	219	227	235	243	251
	164	172	180	188	196	204	212	220	228	236	244	252
	165	173	181	189	197	205	213	221	229	237	245	253
	166	174	182	190	198	206	214	222	230	238	246	254
	167	175	183	191	199	207	215	223	231	239	247	255
	168	176	184	192	200	208	216	224	232	240	248	256
	1	2	3	4	5	6	7	8	9	10	11	12

SHELF 2 (SX-200)

HARDWARE POSITION NUMBER	PLUG P1			PLUG P2			PLUG P3			PLUG P4		
	001	009	017	025	033	041	049	057	065	073	081	089
	002	010	018	026	034	042	050	058	066	074	082	090
	003	011	019	027	035	043	051	059	067	075	083	091
	004	012	020	028	036	044	052	060	068	076	084	092
	005	013	021	029	037	045	053	061	069	077	085	093
	006	014	022	030	038	046	054	062	070	078	086	094
	007	015	023	031	039	047	055	063	071	079	087	095
	008	016	024	032	040	048	056	064	072	080	088	096
	1	2	3	4	5	6	7	8	9	10	11	12

1318

SHELF 1 SX-100/SX-200

NOTE: EQUIPMENT POSITION 001 IS RESERVED FOR THE TEST LINE AND MUST THEREFORE BE EQUIPPED WITH A LINE CARD. TRUNK EQUIPMENT NUMBER IS SAME AS INDIVIDUAL TRUNK ACCESS CODE.

Fig. A3-8 Backplane Translator Board Plug Appearances

CARD POSITION	LEAD DESIGNATION	P5	P17	J14	J15	P18	P19	P25	P24	P23	P22	DESTINATION
13	LINE / TRUNKS: CO, DID/TIE, E&M T1 T1 T1 T1 R1 R1 R1 R1 T2 XT2 TR1 R2 XT1 RR1 T3 T2 E1 R3 R2 M1 T4 R4	26 1 27 2 28 3 29 4	26 1 27 2 28 3 29 4				50 25 49 24 48 23 47 22					X-CONNECT
14	LINE / TRUNKS: CO, DID/TIE, E&M T1 T1 T1 T1 R1 R1 R1 R1 T2 XT2 TR1 R2 XT1 RR1 T3 T2 E1 R3 R2 M1 T4 R4	30 5 31 6 32 7 33 8	30 5 31 6 32 7 33 8				46 21 45 20 44 19 43 18					X-CONNECT
15	RECEIVER 1 NOT CONNECTED TO CABLE	34 9 35 10 36 11 37 12	34 9 35 10 36 11 37 12				42 17 41 16 40 15 39 14					X-CONNECT
16	CONSOLE 2 T(A) R(A) DATA OUT T(A) DATA OUT R(A) DATA IN T(A) DATA IN R(A) PA2 CONTROL B PA2 CONTROL A	38 13 39 14 40 15 41 16	38 13 39 14 40 15 41 16	38 13 30 5 32 7		48 23		38 13 30 5 32 7	38 13 30 5 32 7			X-CONNECT
17	CONSOLE 1 T(A) R(A) DATA OUT T(A) DATA OUT R(A) DATA IN T(A) DATA IN R(A) PA1 CONTROL B PA1 CONTROL A	42 17 43 18 44 19 45 20	42 17 43 18 44 19 45 20		38 13 30 5 32 7	47 22				38 13 30 5 32 7	38 13 30 5 32 7	X-CONNECT
18	MISCELLANEOUS MUSIC IN B MUSIC IN A PA1 OUT B PA1 OUT A PA2 OUT B PA2 OUT A	46 21 48 23 49 24 47 22	46 21 48 23 49 24			42 17 45 20 43 18 47 22						X-CONNECT TEST LINE TIP TEST LINE RING

258 3

NOTE: CONSOLE 1 CONNECTED TO J22 , THROUGH P23
CONSOLE 2 CONNECTED TO J24 , THROUGH P25

Fig. A3-9 Interconnect Board Cabling

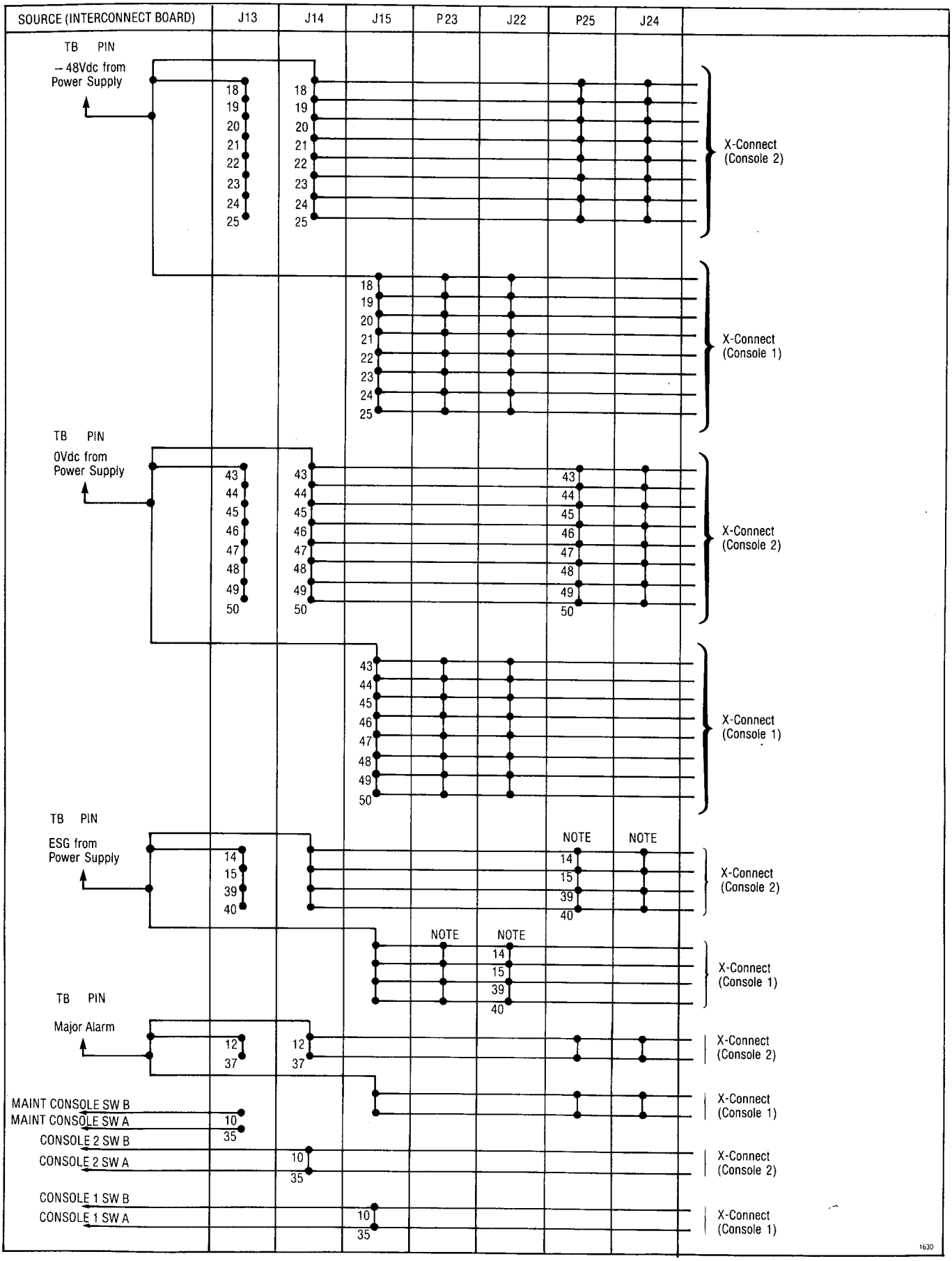

Fig. A3-10 Interconnect Board Cabling (Cont'd)

CARD POSTION	LEAD DESIGNATION	P6	P16	J13	P18	P19	DESTINATION
13	LINE / TRUNK: CO, DID/TIE, E&M T5 T3 T2 T2 R5 R3 R2 R2 T6 XT4 TR2 R6 XT3 RR2 T7 T4 E2 R7 R4 M2 T8 R8 LAMP 2	26 1 27 2 28 3 29 4	26 1 27 2 28 3 29 4			38 13 37 12 36 11 35 10	X-CONNECT
14	LINE / TRUNK: CO, DID/TIE, E&M T5 T3 T2 T2 R5 R3 R2 R2 T6 XT4 TR2 R6 XT3 RR2 T7 T4 E2 R7 R4 M2 T8 R8 LAMP 2	30 5 31 6 32 7 33 8	30 5 31 6 32 7 33 8			34 9 33 8 32 7 31 6	X-CONNECT
15	RECEIVER 1 NOT CONNECTED TO CABLE	34 9 35 10 36 11 37 12	34 9 35 10 36 11 37 12			30 5 29 4 28 3 27 2	X-CONNECT
16	CONSOLE SPARE T(B) R(B) S DATA OUT T(B) S DATA OUT R(B) S DATA IN T(B) S DATA IN R(B) NIGHT BELL 1 R(K1) NIGHT BELL 1 K1	38 13 39 14 40 15 41 16	38 13 39 14 40 15 41 16		21 46		X-CONNECT
17	MAINTENANCE CONSOLE T(B) R(B) S DATA OUT T(B) S DATA OUT R(B) S DATA IN T(B) S DATA IN R(B) UART IN UART OUT	42 17 43 18 44 19 45 20	42 17 43 18 44 19 45 20	38 13 30 5 32 7			MAINTENANCE CONSOLE PLUG P302 - PIN 2 PLUG P302 - PIN 3
18	MISCELLANEOUS ALARM R(K5) ALARM K5 NIGHT SERVICE R(K4) NIGHT SERVICE K4 NIGHT BELL 3 R(K3) NIGHT BELL 3 K3 NIGHT BELL 2 R(K2) NIGHT BELL 2 K2 WIRE WRAP FROM P19	46 21 47 22 48 23 49 24	46 21 47 22 48 23 49 24		24 49 25 50 19 44		X-CONNECT

Fig. A3-11 Interconnect Board Cabling (Cont'd)

APPENDIX 4
SX-100 MECHANICAL INFORMATION

1. GENERAL

A4.01 The MAPs contained in this Appendix detail the procedures to be performed in all mechanical work on the SX-100. These MAPs are used in conjunction with the MAPs outlined in other sections of this practice.

A4.02 Due to the similarity of the SX-100 to the SX-200, MAPs 350-501, 350-510, 350-511 are common for both systems.

A4.03 There are three versions of the SX-100; rack mounted, wall mounted and cabinet mounted. MAP350-400 deals with exposing each of the three versions of the system for mechanical work.

A4.04 The basic synopsis of these MAPs is: a component has been found to be defective, replace it. MAPs in this appendix describe how to replace a part which is known to be defective. Location of the defective components is the topic of Appendices 6 and 7, Parts 5 and 6.

TABLE A4-1
SX-100 MECHANICAL PROCEDURE

Title	Reference
Expose System	MAP350-400
Replace Interconnect, Power Fail Transfer and Console Interface Card	MAP350-401
Replace Equipment Shelf	MAP350-402
Replace Power Supply	MAP350-403
Replace Reserve Battery Back-Up Supply	MAP350-404
Replace Maintenance Panel	MAP350-405
Replace 220V Adapter	MAP350-406
Replace Console or Console Cable	MAP350-501
Replace Translator Board	MAP350-510
Replace Cards in Shelf	MAP350-511

EXPOSE THE SYSTEM SX-100
MAP350-400
Issue 1, March 1980
Sheet 1 of 7

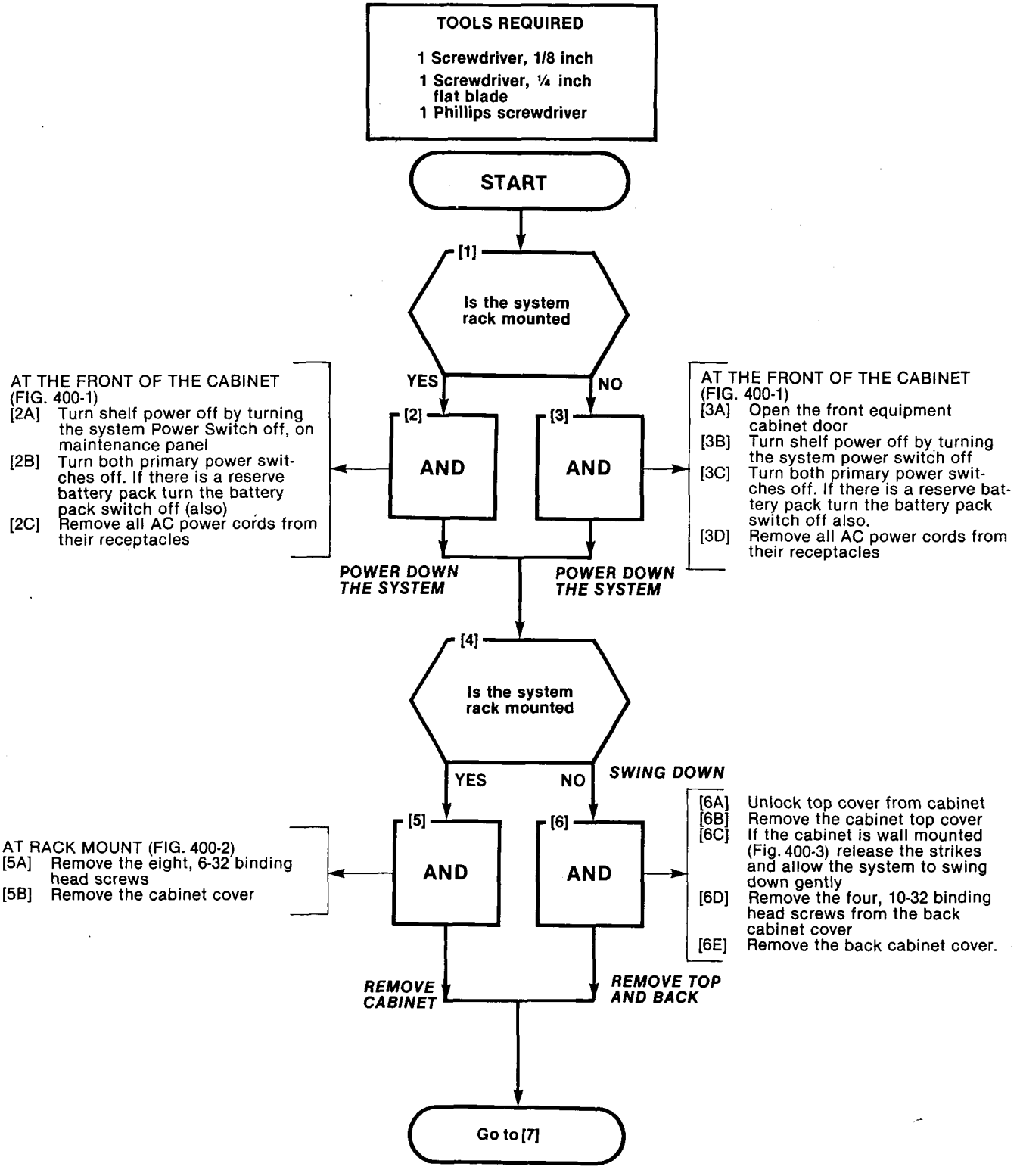

SECTION MITL9105/9110-98-350

EXPOSE THE SYSTEM SX-100
MAP350-400
Issue 1, March 1980
Sheet 2 of 7

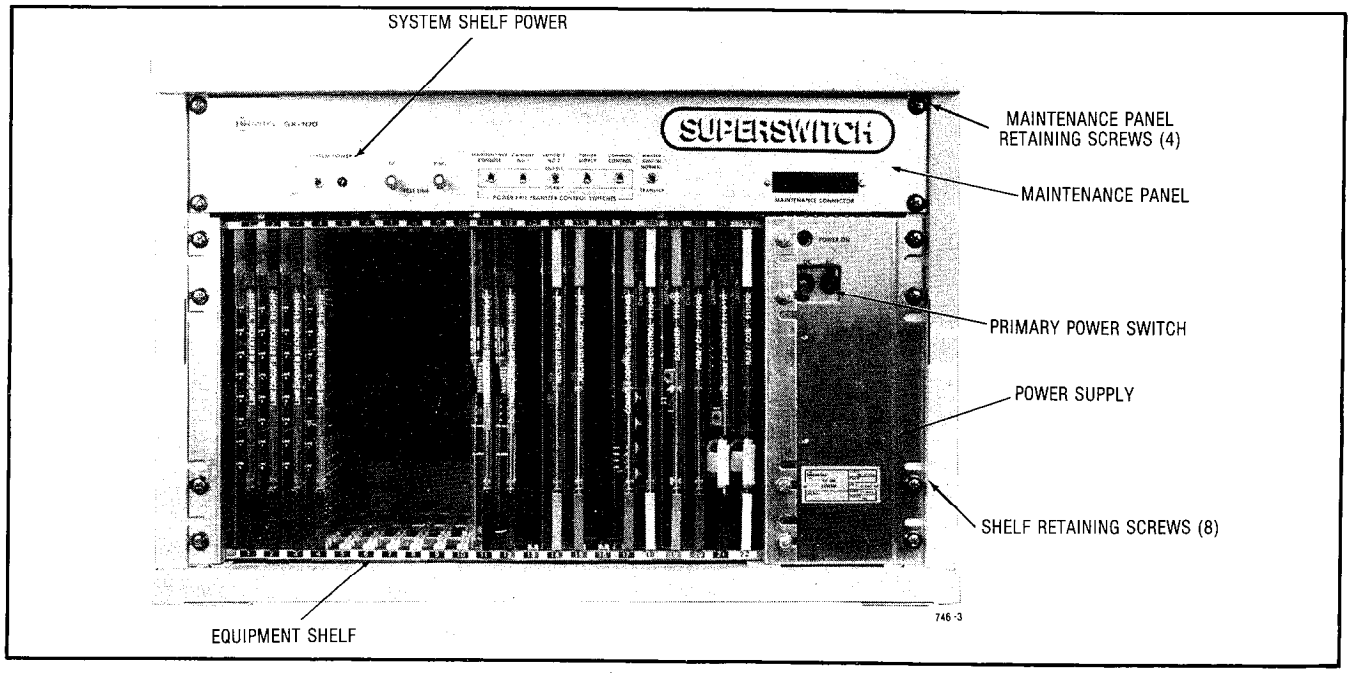

Fig. 400-1 SX-100 Cabinet Mount

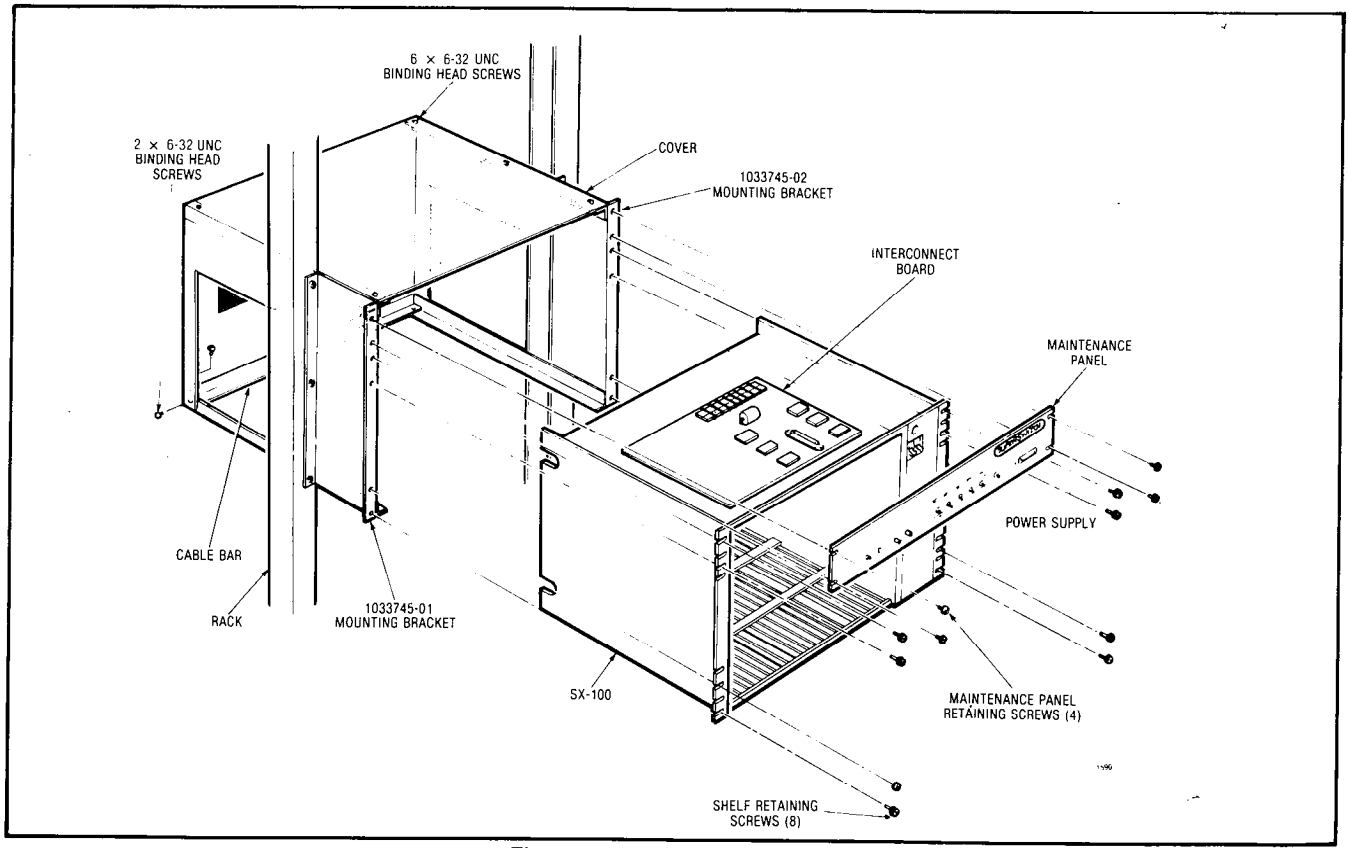

Fig. 400-2 SX-100 Rack Mount

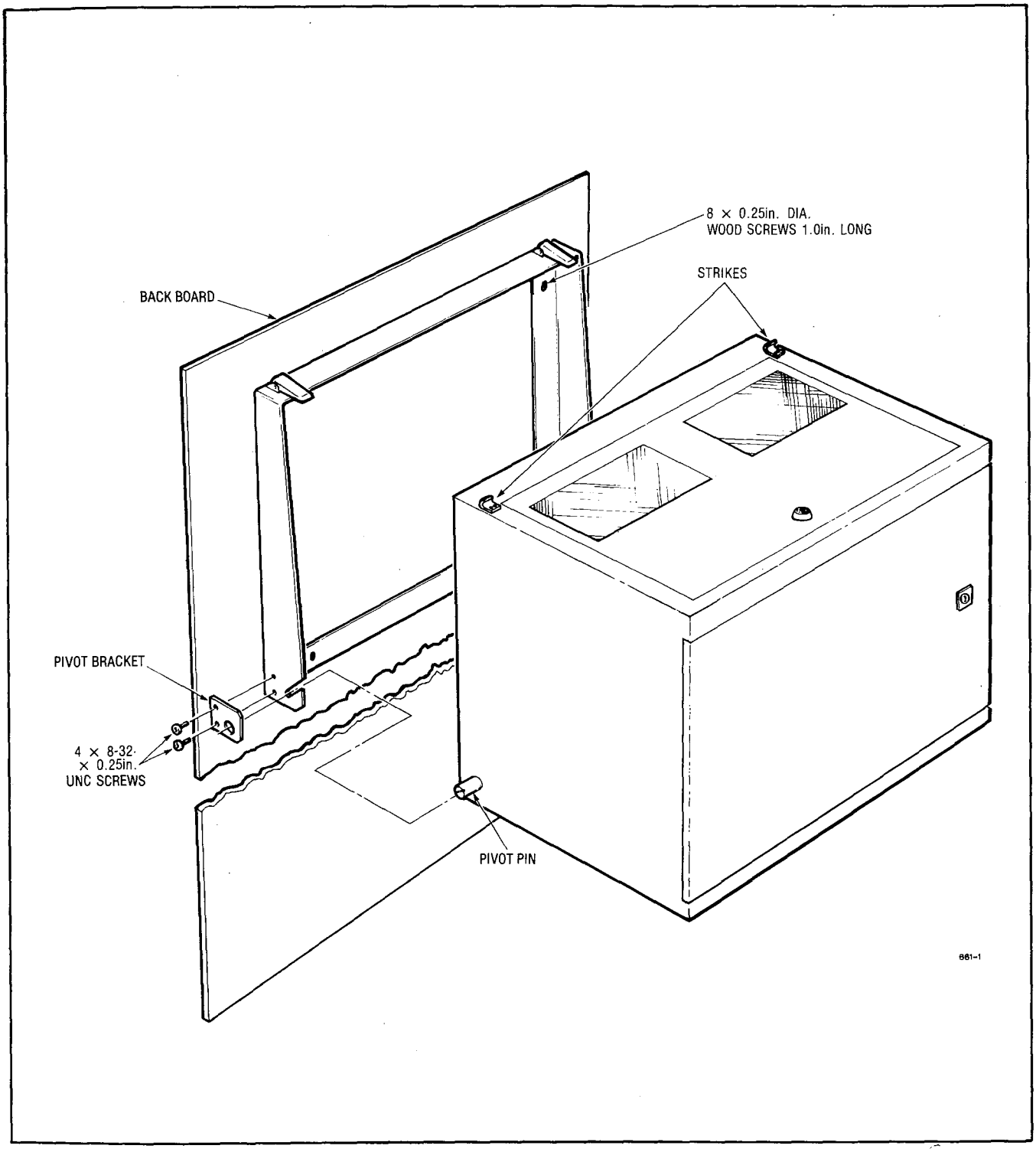

Fig. 400-3 Wall Mounting

EXPOSE THE SYSTEM SX-100
MAP350-400
Issue 1, March 1980
Sheet 4 of 7

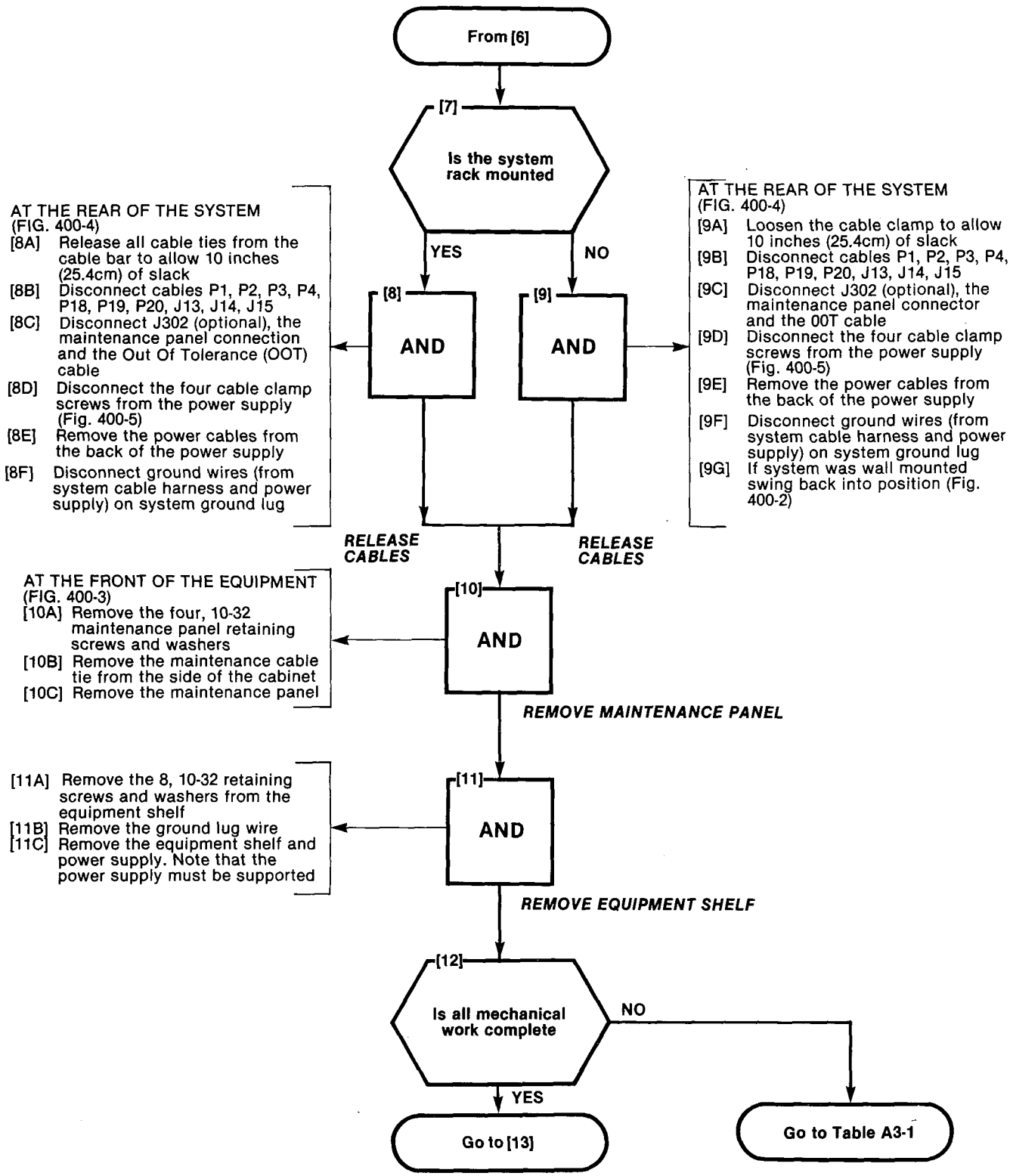

EXPOSE THE SYSTEM SX-100
MAP350-400
Issue 1, March 1980
Sheet 5 of 7

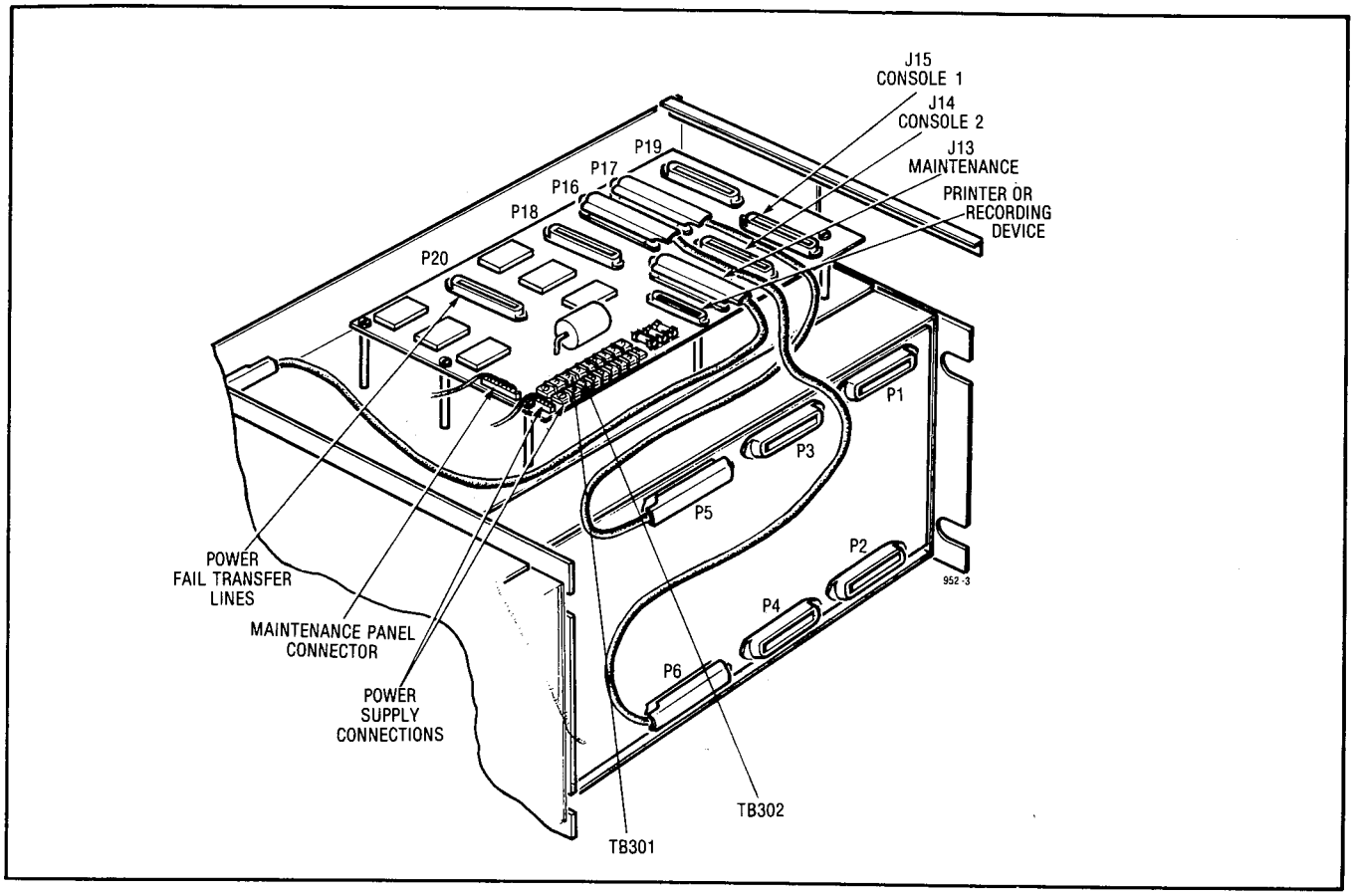

Fig. 400-4 Rear Cable View

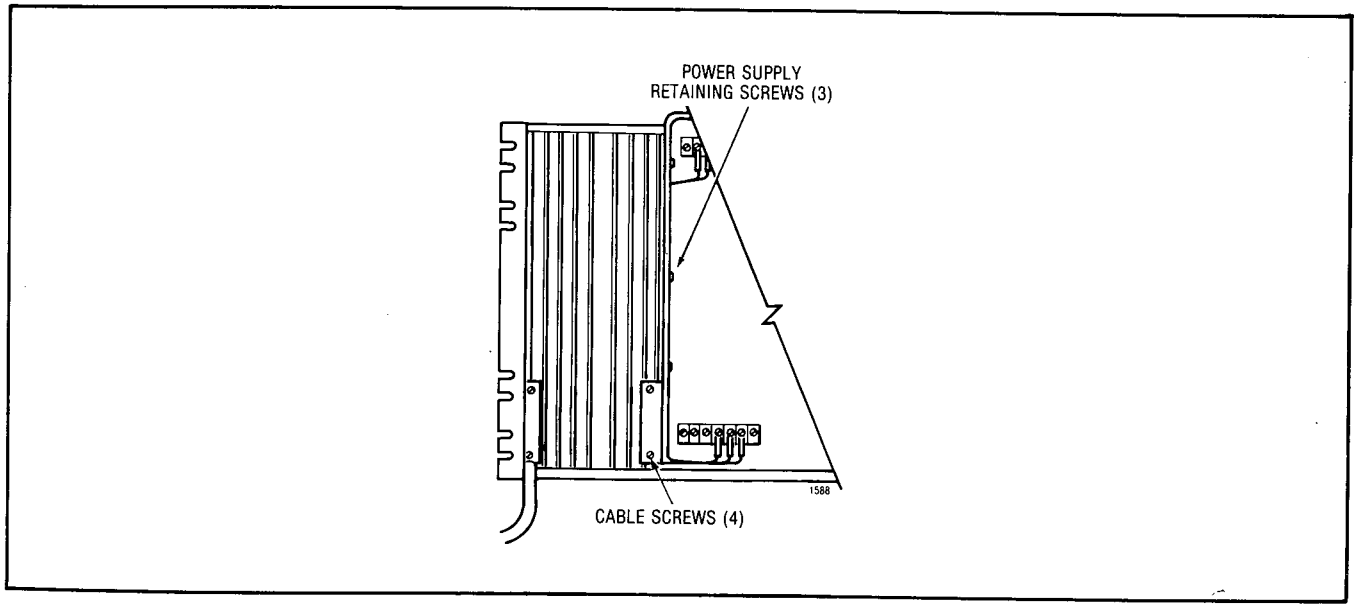

Fig. 400-5 Power Supply Cable Harness

EXPOSE THE SYSTEM SX-100
MAP350-400
Issue 1, March 1980
Sheet 6 of 7

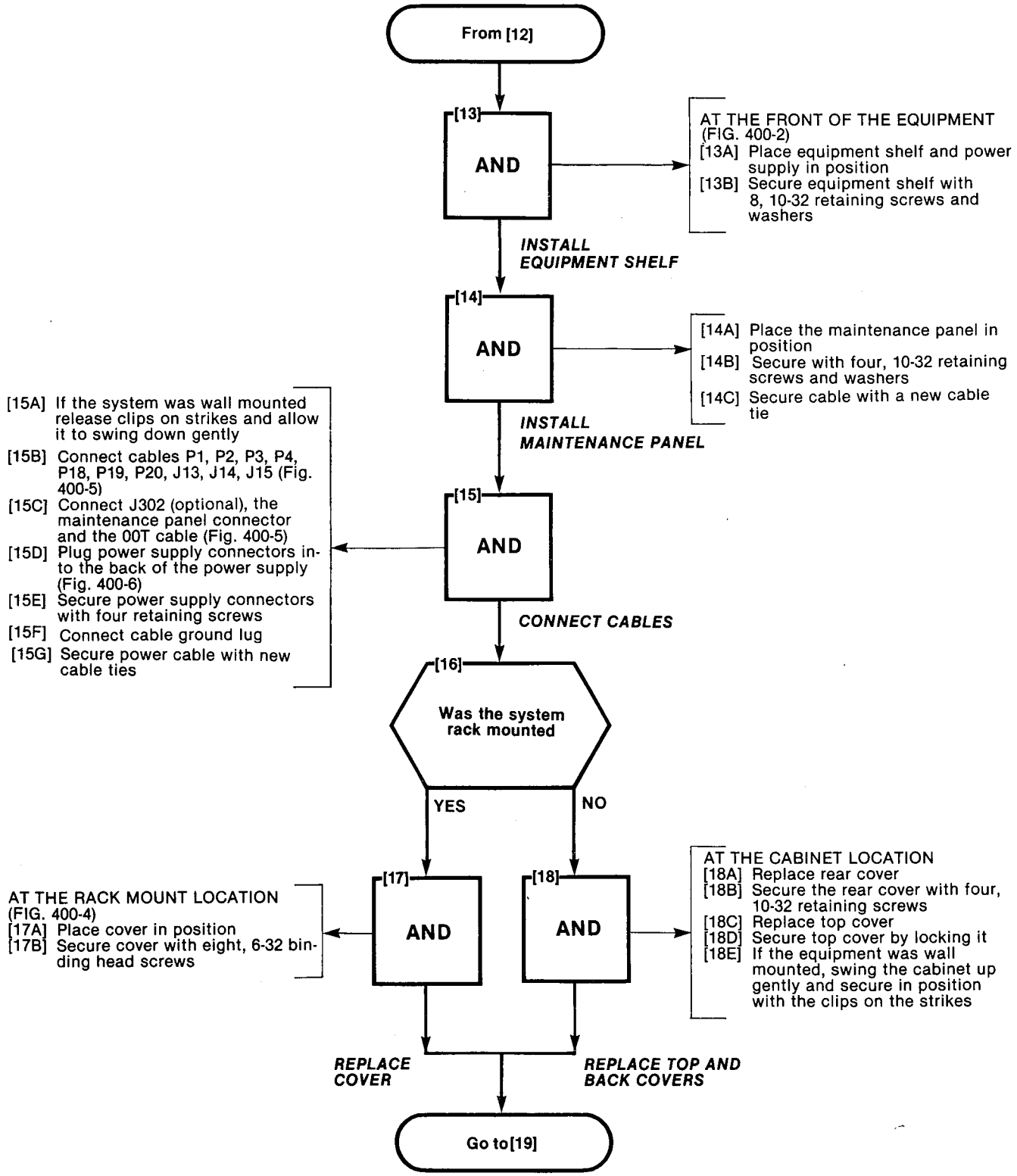

EXPOSE THE SYSTEM SX-100
MAP350-400
Issue 1, March 1980
Sheet 7 of 7

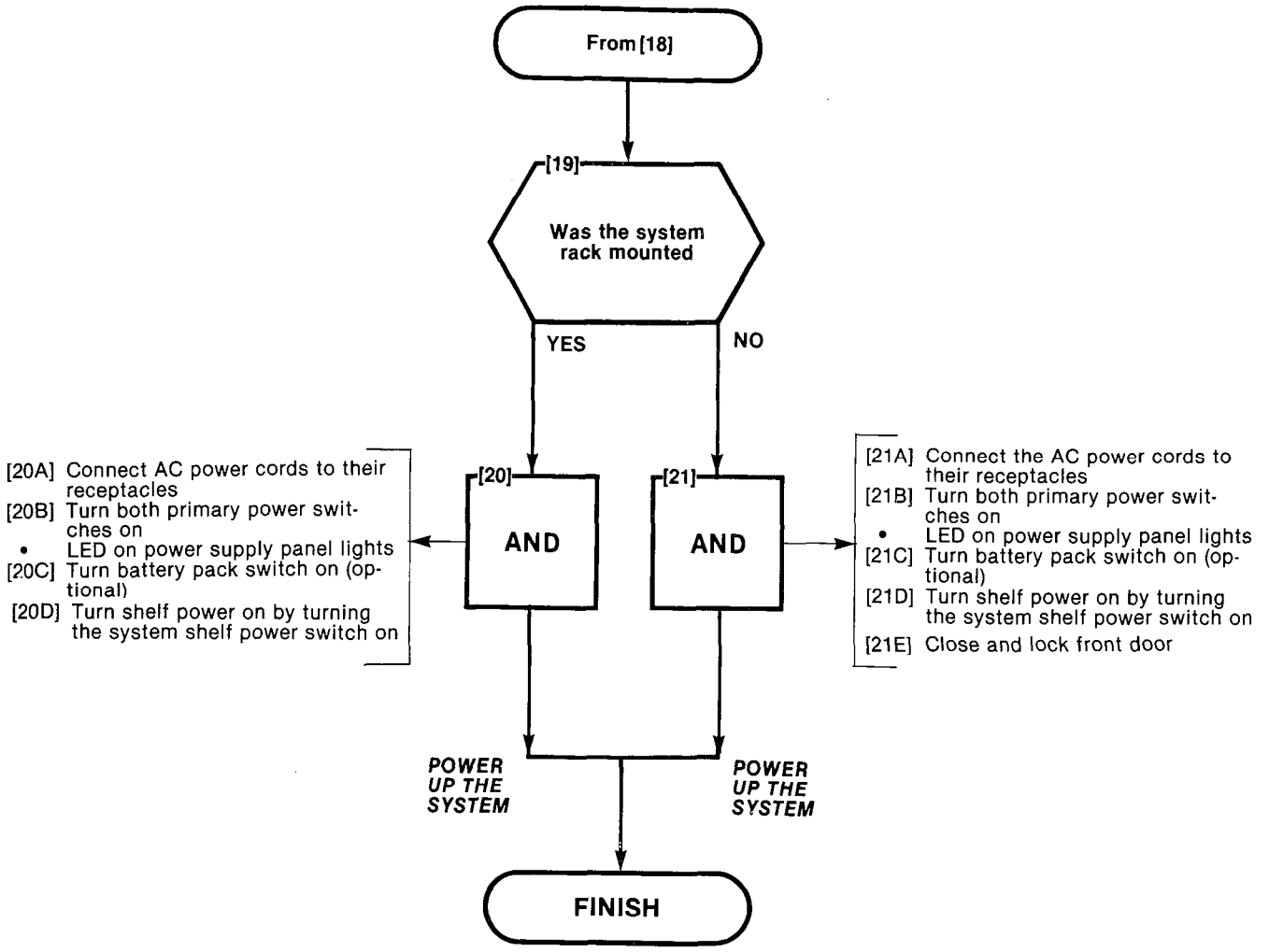

REPLACE INTERCONNECT, POWER FAIL TRANSFER AND CONSOLE INTERFACE CARD SX-100
MAP350-401
Issue 1, March 1980
Sheet 1 of 3

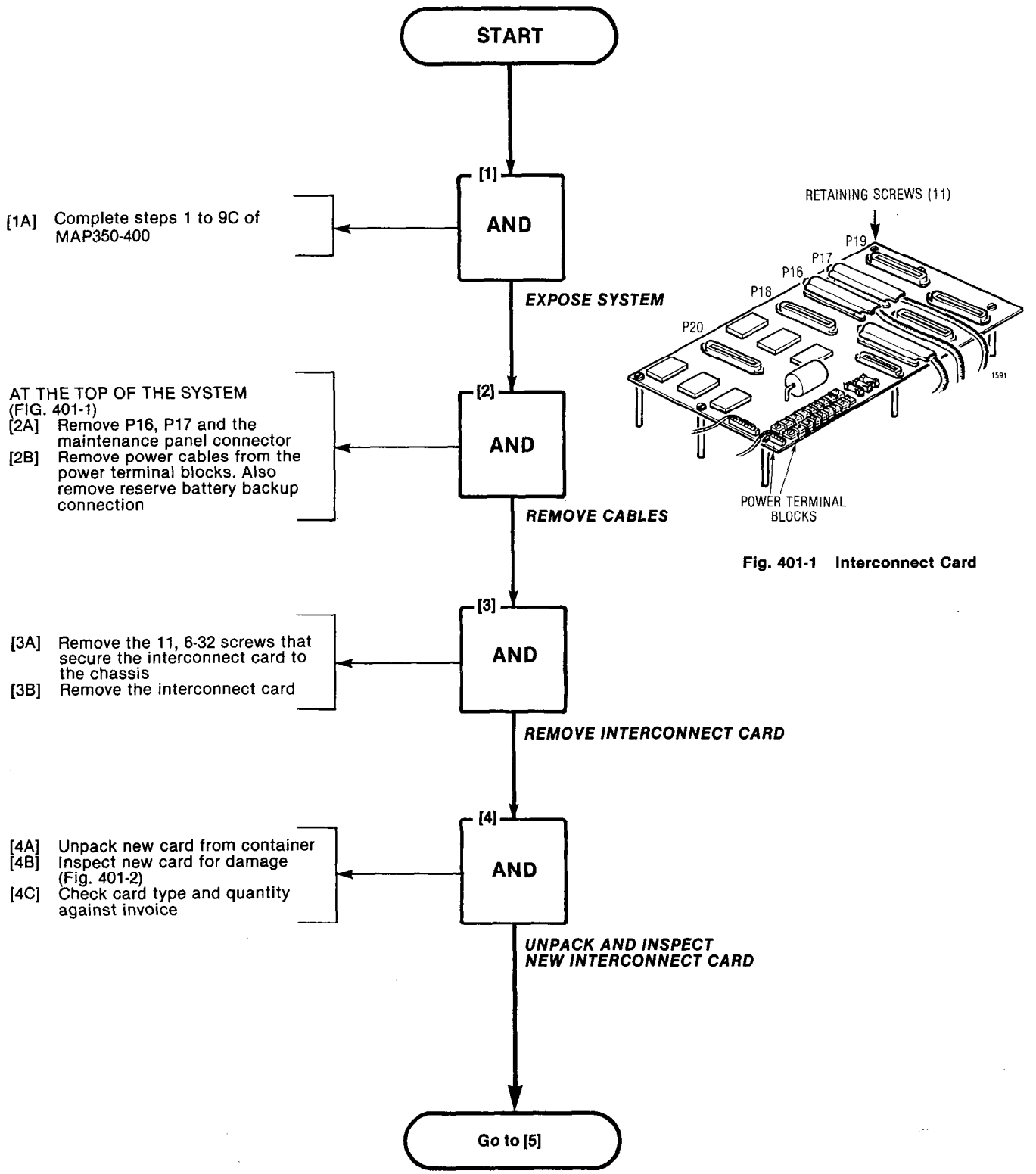

Fig. 401-1 Interconnect Card

REPLACE INTERCONNECT, POWER FAIL TRANSFER AND CONSOLE INTERFACE CARD SX-100
MAP350-401
Issue 1, March 1980
Sheet 2 of 3

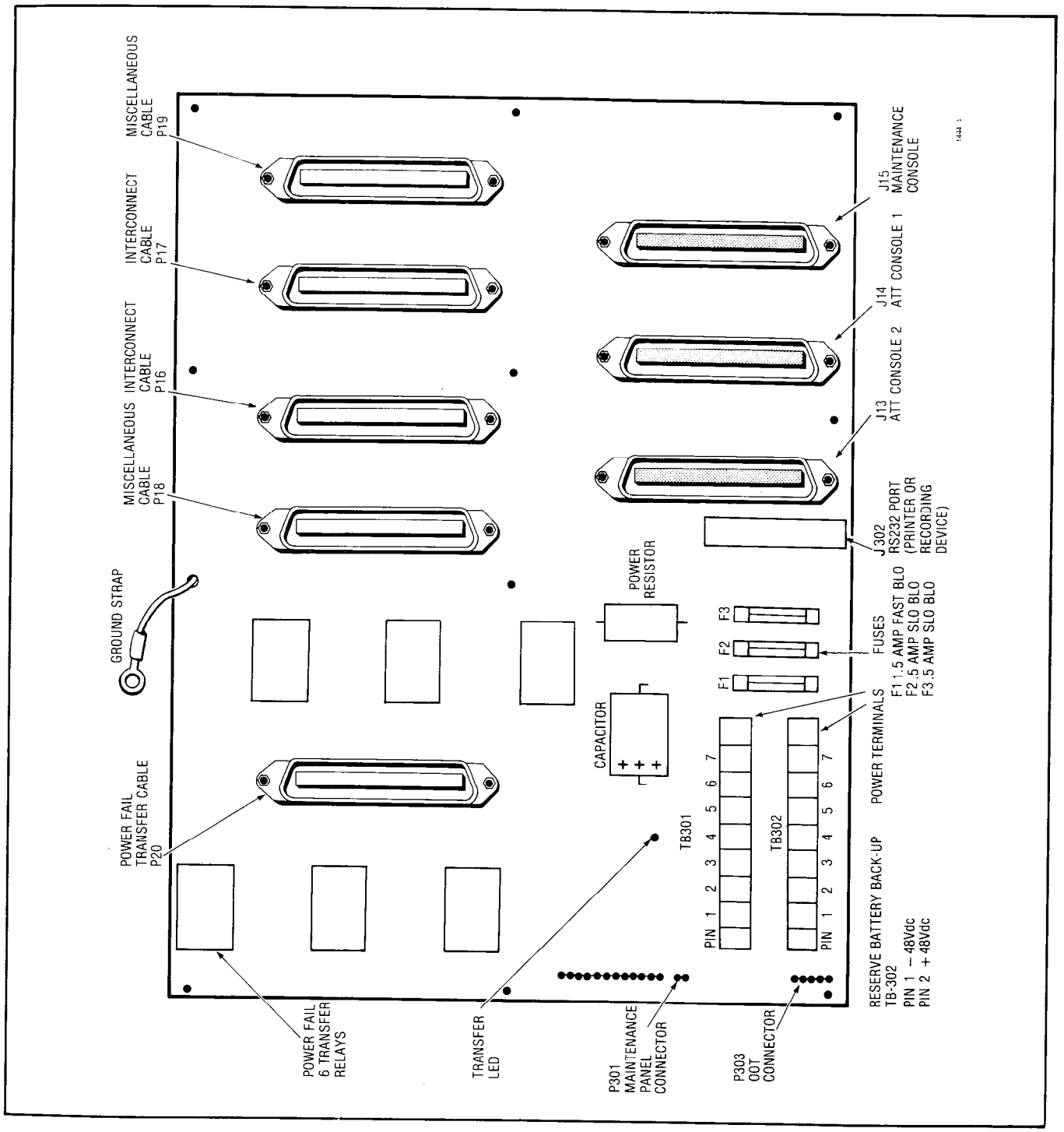

Fig. 401-2 Interconnect Card

REPLACE INTERCONNECT, POWER FAIL TRANSFER AND CONSOLE INTERFACE CARD SX-100
MAP350-401
Issue 1, March 1980
Sheet 3 of 3

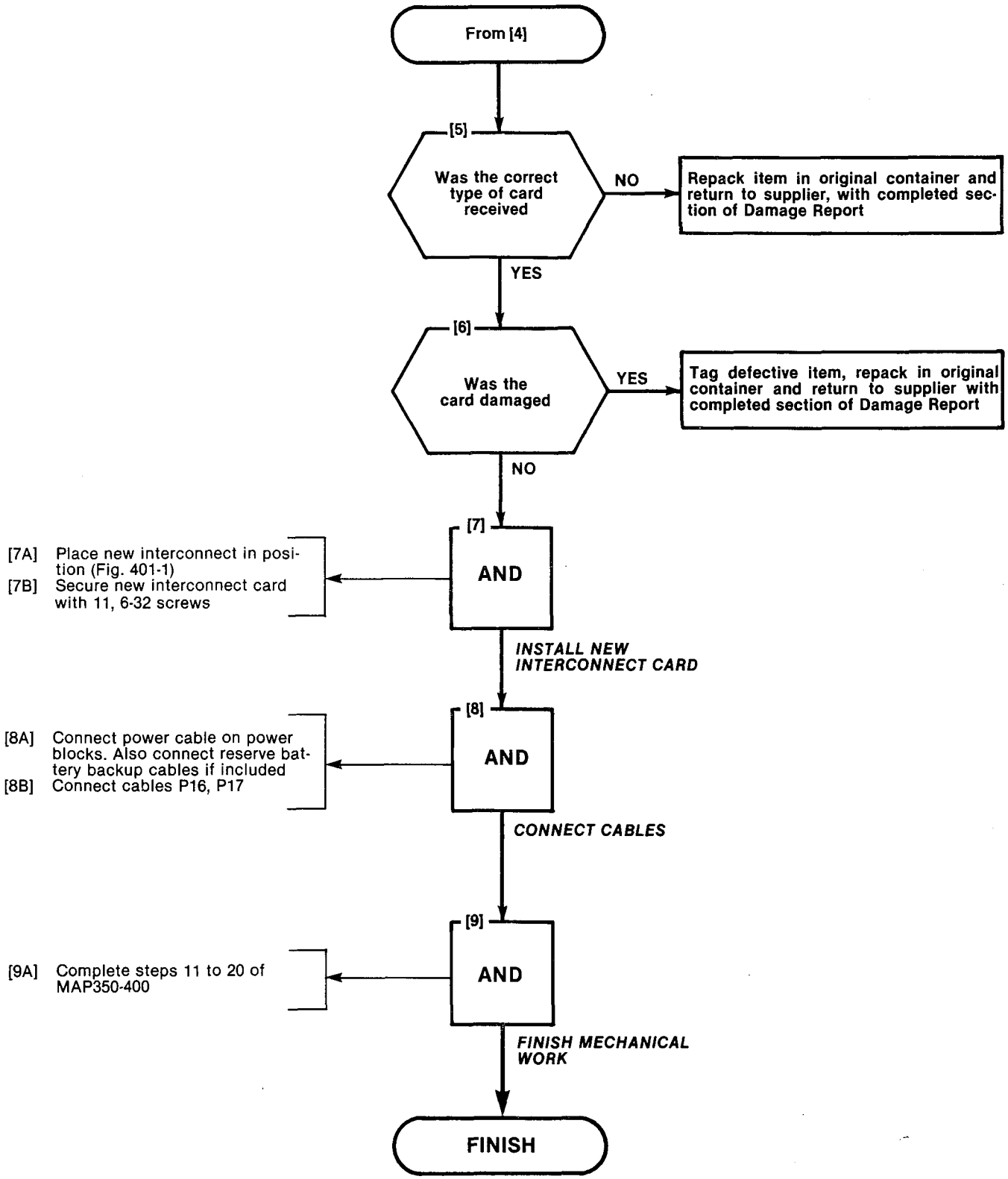

REPLACE EQUIPMENT SHELF SX-100
MAP350-402
Issue 1, March 1980
Sheet 1 of 3

TOOLS REQUIRED
1 Screwdriver, ¼ inch flat blade
1 Screwdriver, #10 Phillips

START

[1] AND

[1A] Complete steps 1 to 9F of MAP350-400

EXPOSE THE SYSTEM

[2] AND

AT THE REAR OF THE SYSTEM (FIG. 402-1)
[2A] Remove the three screws that hold the power supply to the equipment shelf
[2B] Remove the power supply

REMOVE POWER SUPPLY

[3] AND

AT THE FRONT OF THE EQUIPMENT
[3A] Remove the eight, 10-32 retaining screws and finishing washers
[3B] Remove the equipment shelf carefully sliding it forward

REMOVE THE EQUIPMENT SHELF

[4] AND

[4A] Unpack new shelf from container
[4B] Inspect new shelf for damage
[4C] Check shelf type and quantity against invoice

UNPACK AND INSPECT NEW EQUIPMENT

Go to [5]

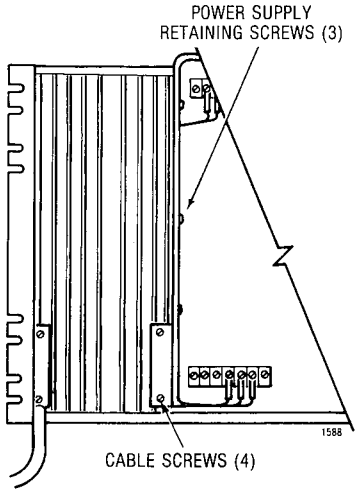

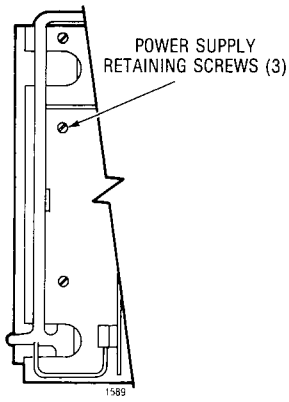

Fig. 402-1 Power Supply Mounting

REPLACE EQUIPMENT SHELF SX-100
MAP350-402
Issue 1, March 1980
Sheet 2 of 3

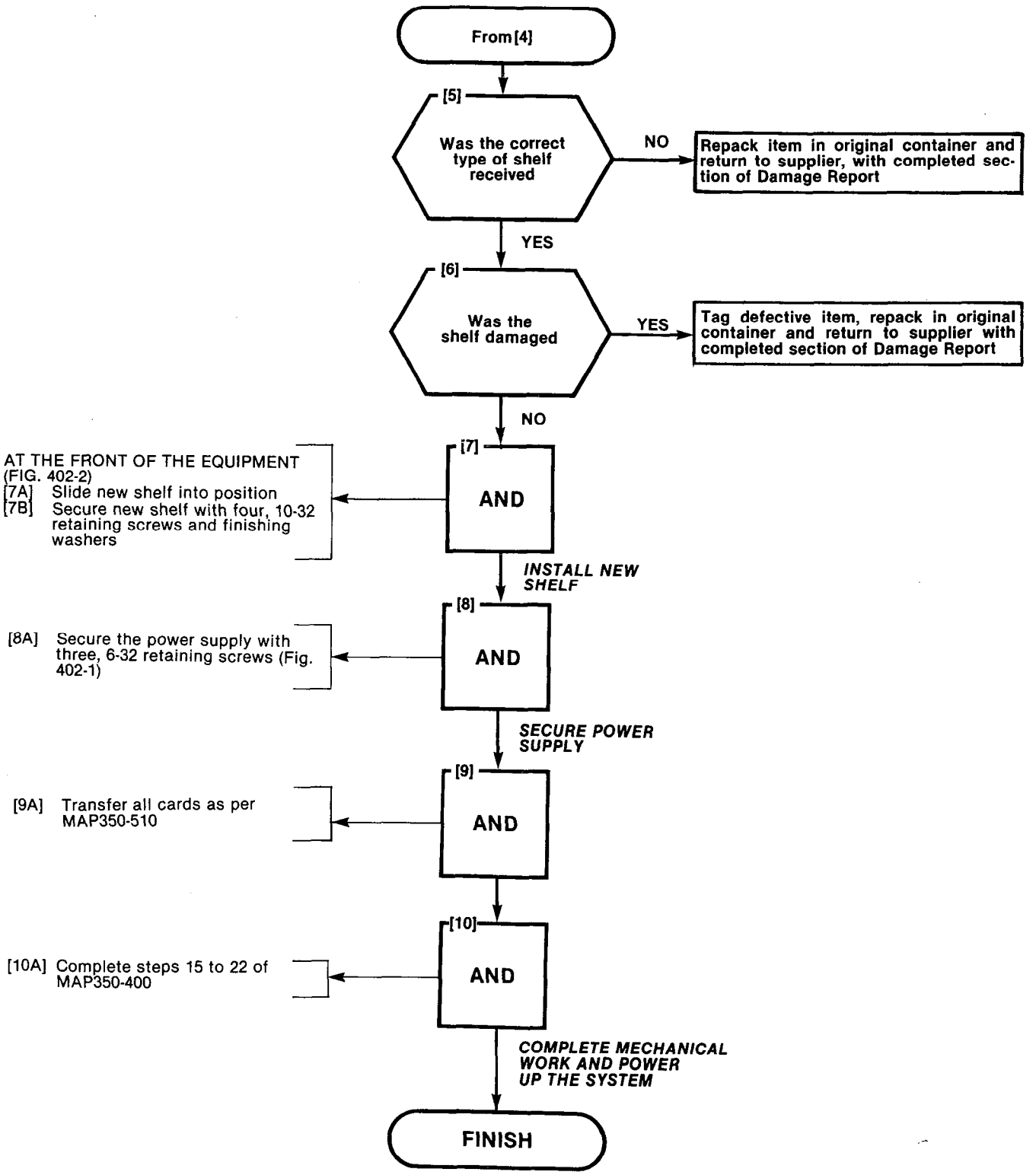

REPLACE EQUIPMENT SHELF SX-100
MAP350-402
Issue 1, March 1980
Sheet 3 of 3

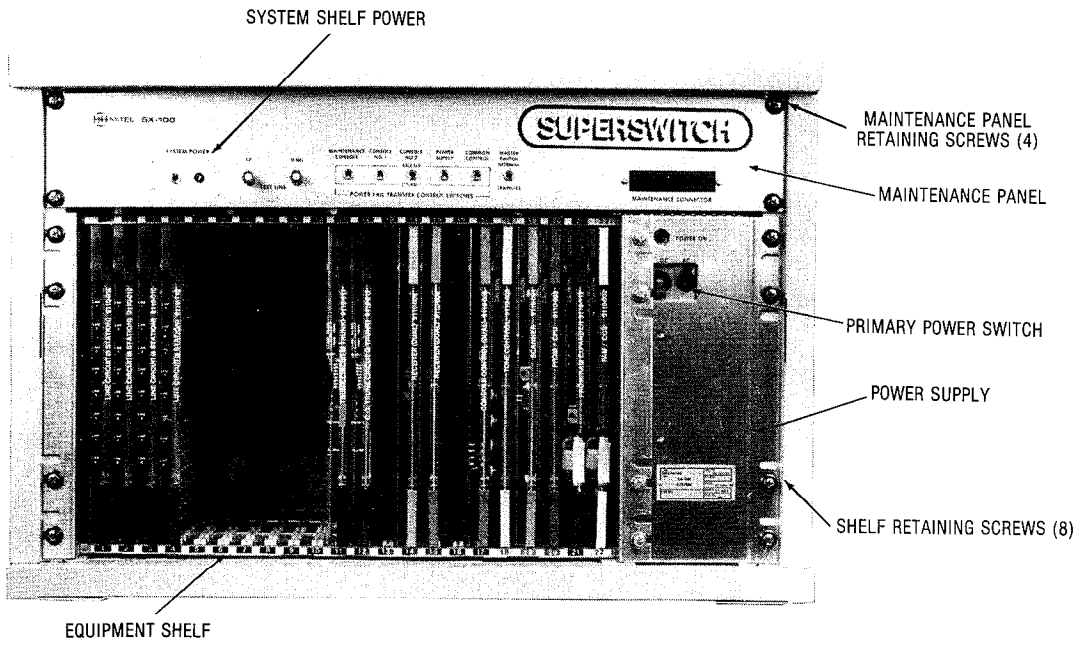

Fig. 402-2 Shelf Mounting Position

REPLACE POWER SUPPLY SX-100
MAP350-403
Issue 1, March 1980
Sheet 1 of 2

TOOLS REQUIRED

1 Screwdriver, 1/8 inch slotted

START

[1] AND

[1A] Complete steps 1 to 9F of MAP350-400

EXPOSE THE SYSTEM

[2] AND

AT THE REAR OF THE SYSTEM (FIG. 403-1)
[2A] Remove four, 10-32 retaining screws that secure the power supply cables

REMOVE POWER SUPPLY CABLES

[3] AND

[3A] Remove the three, 6-32 power supply retaining screws
[3B] Remove the power supply to the rear of the system

REMOVE POWER SUPPLY

[4] AND

[4A] Unpack new power supply from container
[4B] Inspect new power supply for damage
[4C] Check power supply type and quantity against invoice

UNPACK AND INSPECT NEW POWER SUPPLY

Go to [5]

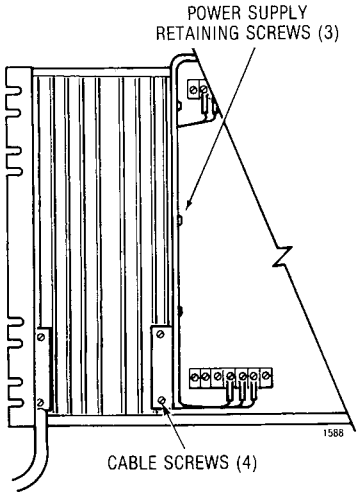

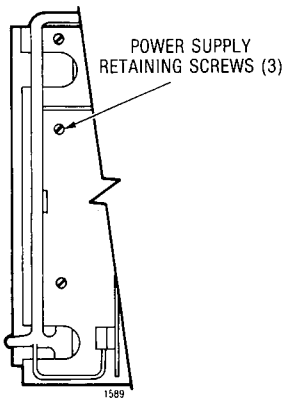

Fig. 403-1 Power Supply Mounting

REPLACE POWER SUPPLY SX-100
MAP350-403
Issue 1, March 1980
Sheet 2 of 2

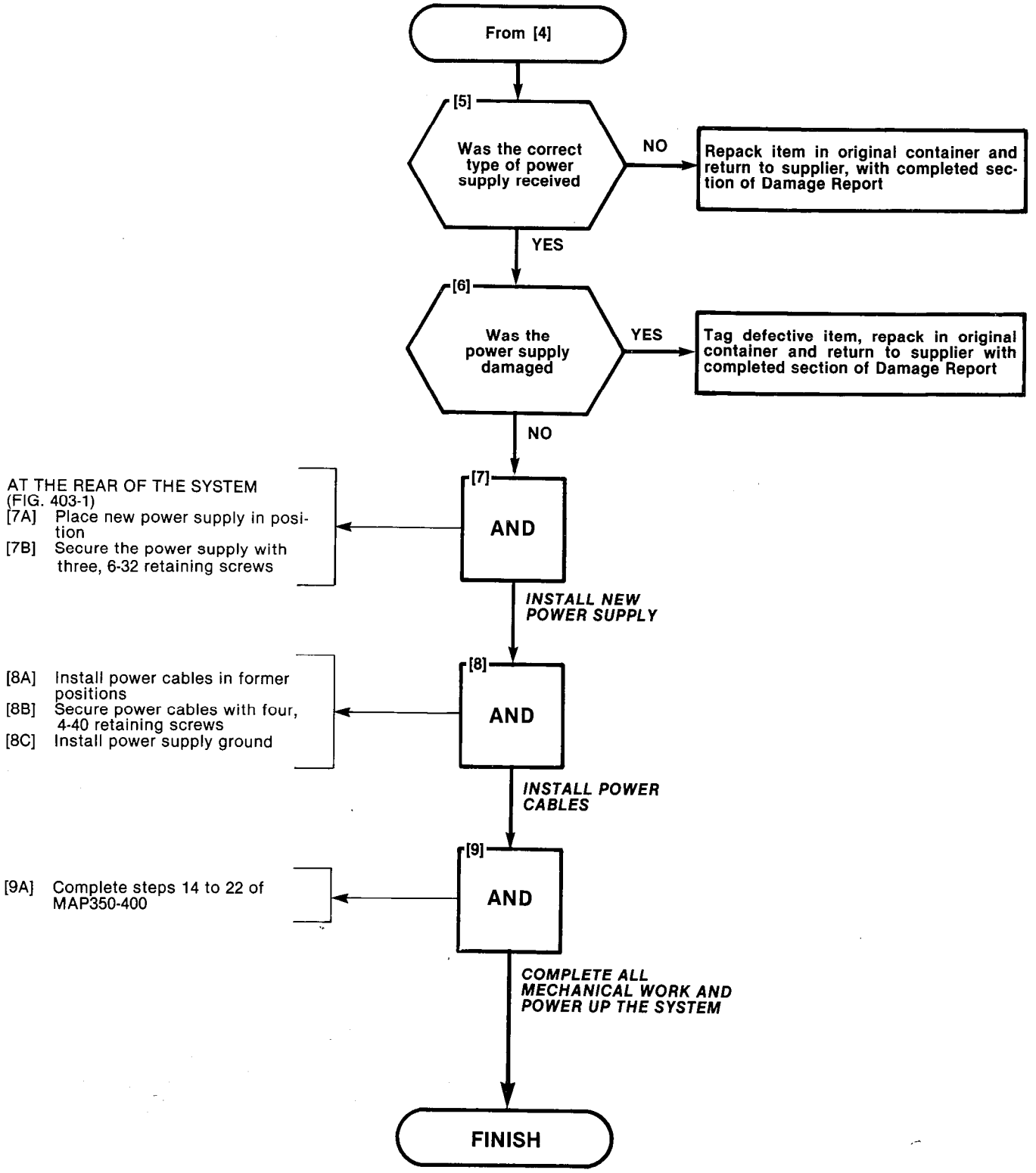

REPLACE RESERVE BATTERY BACK-UP UNIT SX-100
MAP350-404
Issue 1, March 1980
Sheet 1 of 4

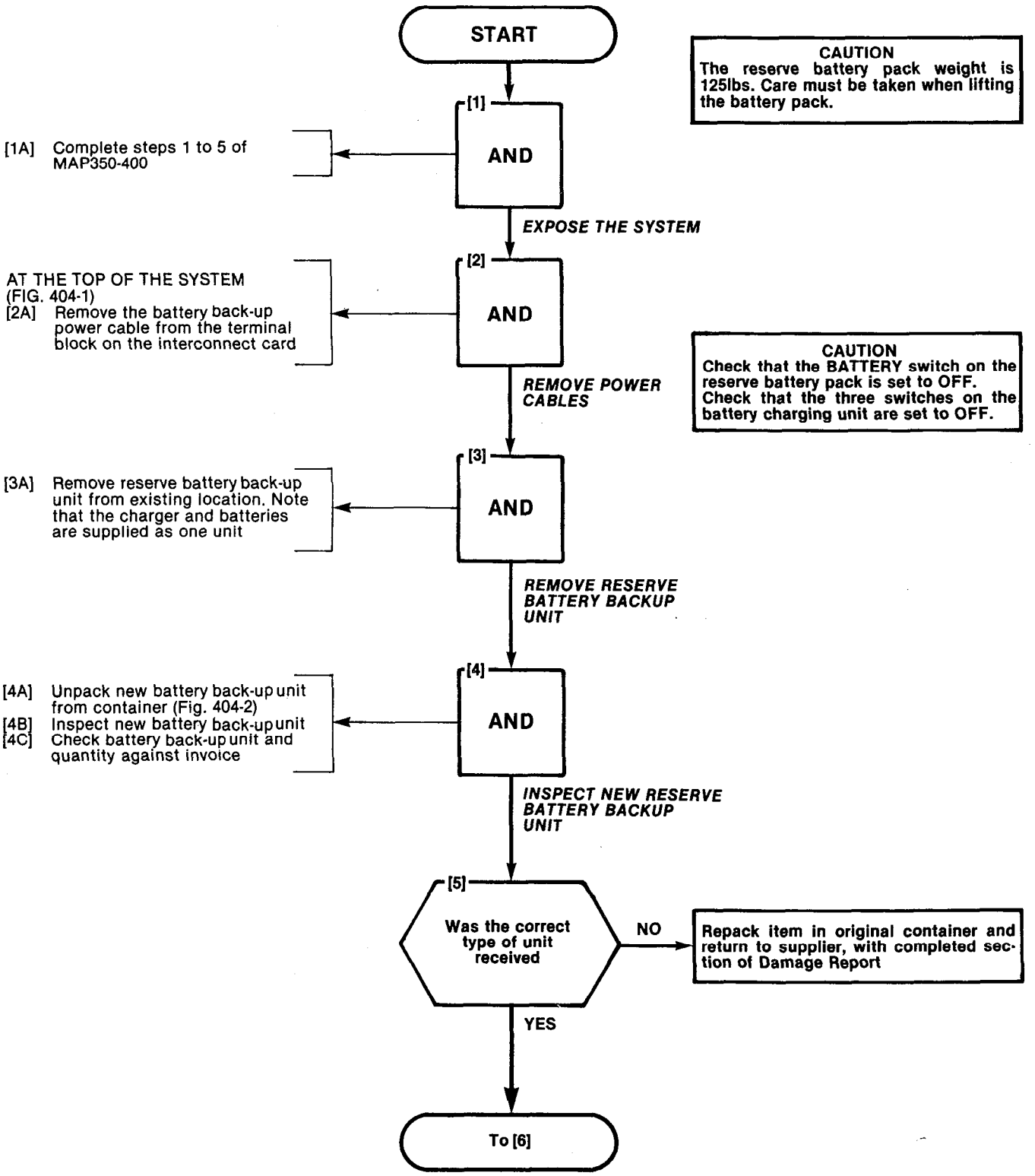

REPLACE RESERVE BATTERY BACK-UP UNIT SX-100
MAP350-404
Issue 1, March 1980
Sheet 2 of 4

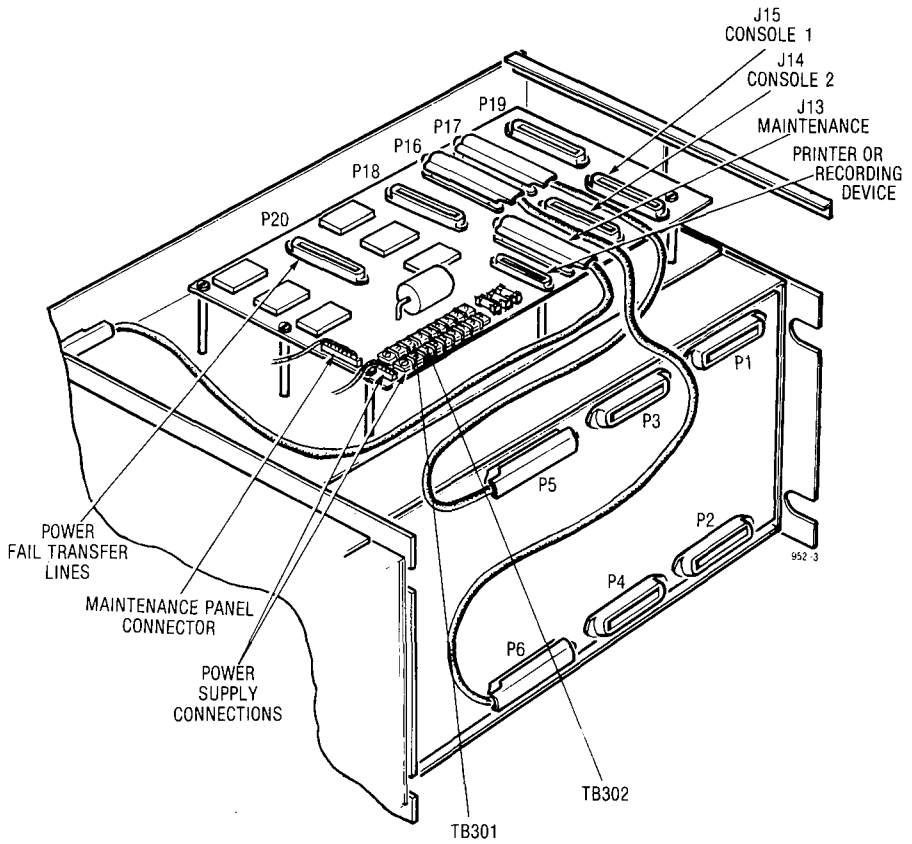

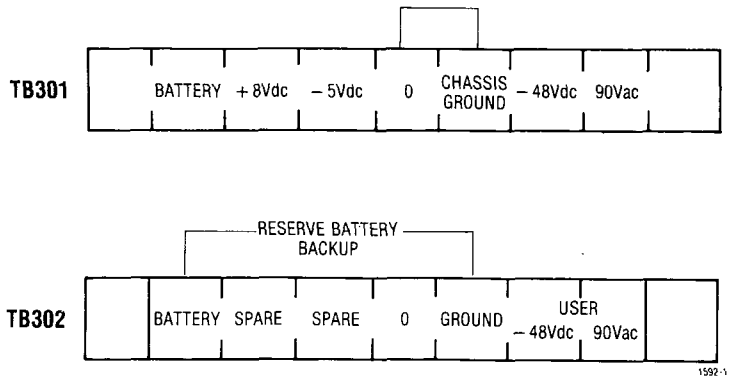

Fig. 404-1 SX-100 Power Terminal Blocks (Interconnect Board)

REPLACE RESERVE BATTERY BACK-UP UNIT SX-100
MAP350-404
Issue 1, March 1980
Sheet 3 of 4

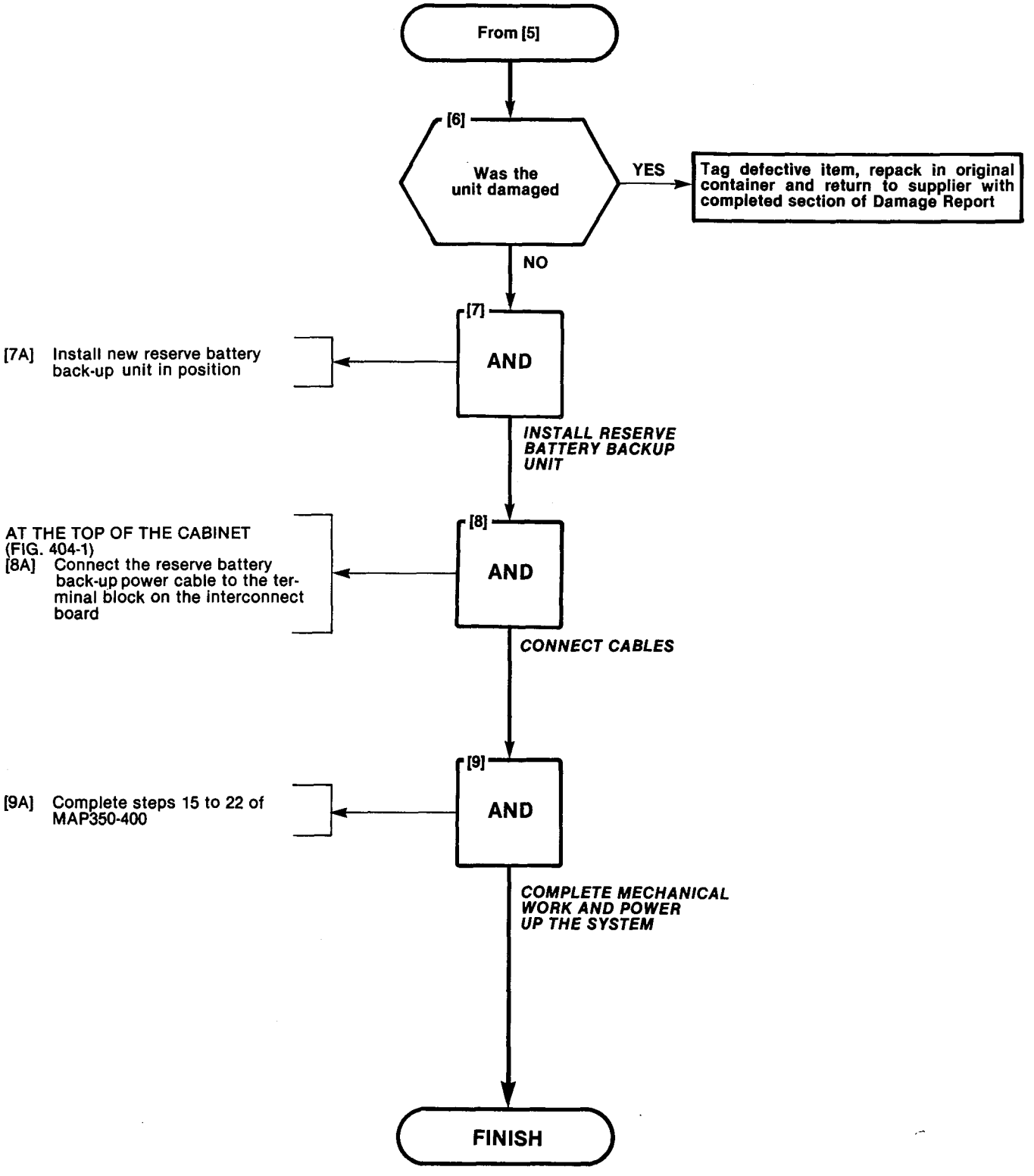

REPLACE RESERVE BATTERY BACK-UP UNIT SX-100
MAP350-404
Issue 1, March 1980
Sheet 4 of 4

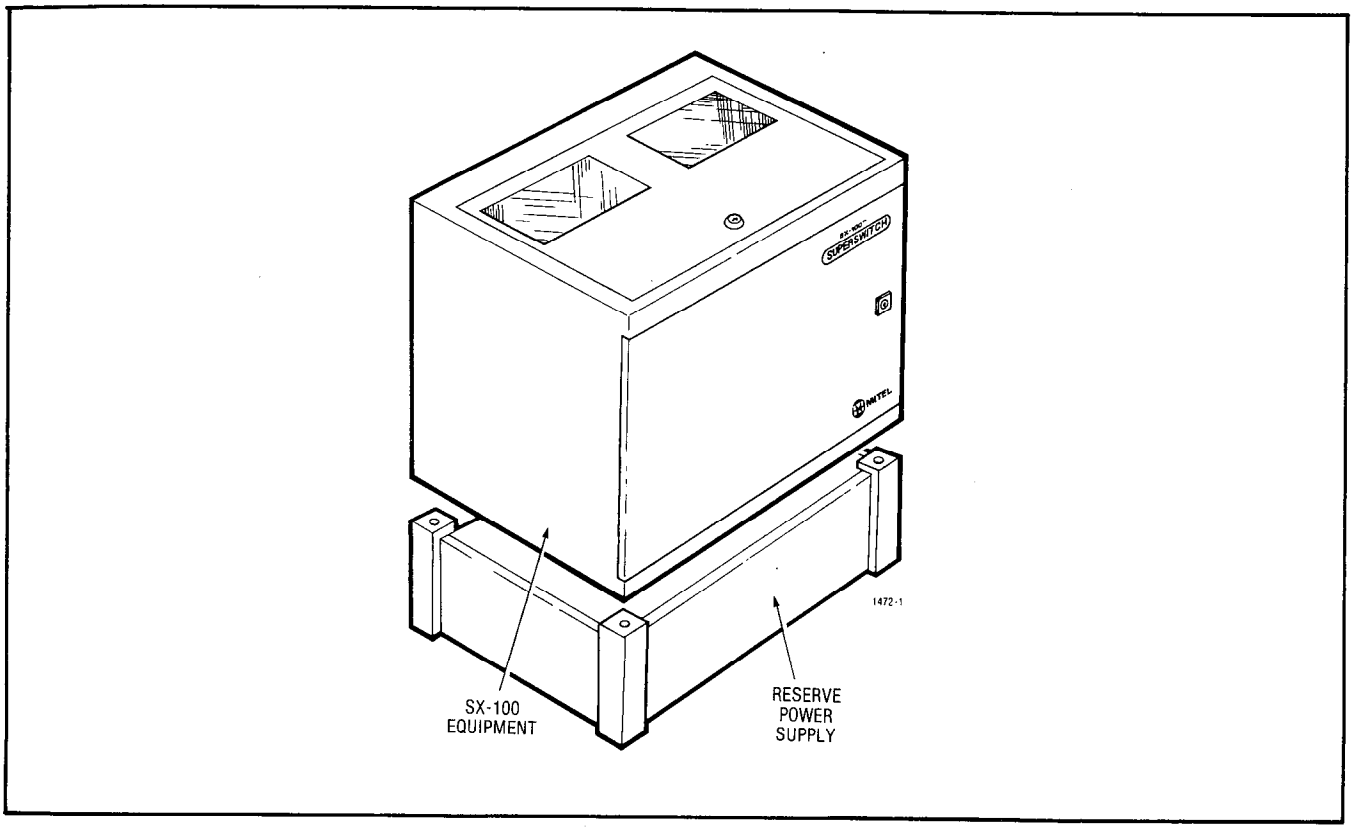

Fig. 404-2 Example of Reserve Battery Back-up Unit

REPLACE MAINTENANCE PANEL SX-100
MAP350-405
Issue 1, March 1980
Sheet 1 of 3

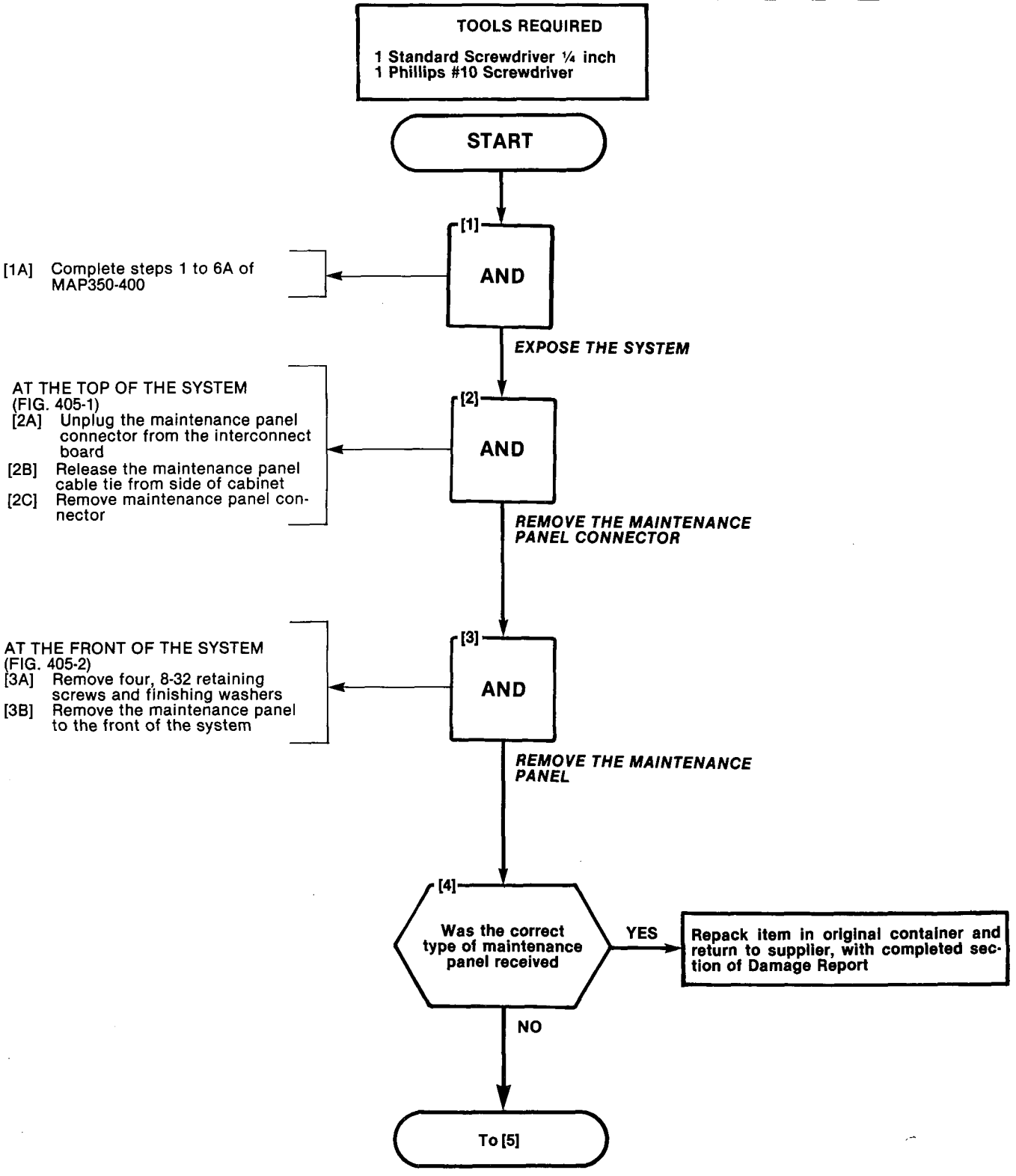

REPLACE MAINTENANCE PANEL SX-100
MAP350-405
Issue 1, March 1980
Sheet 2 of 3

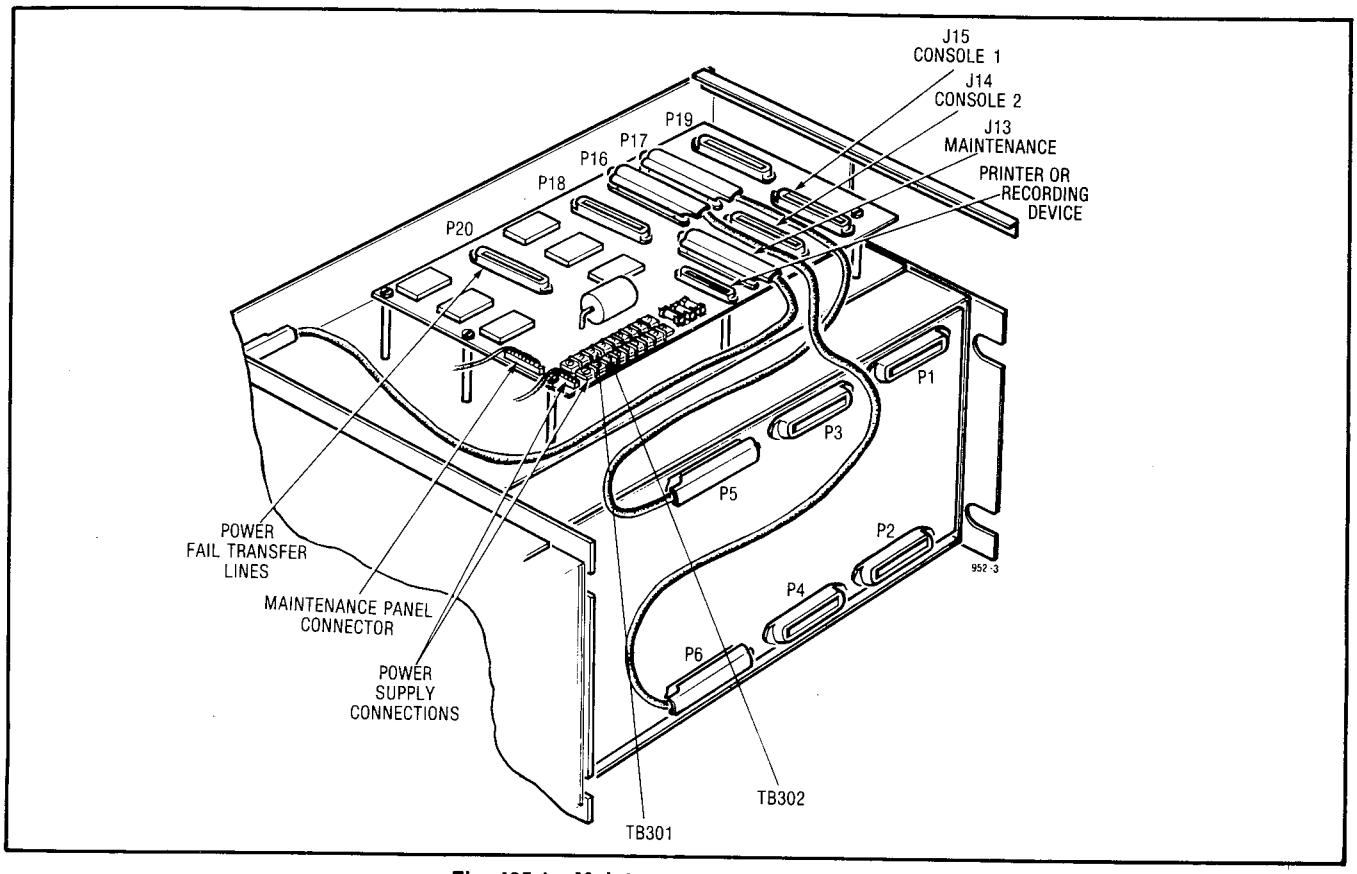

Fig. 405-1 Maintenance Panel Connector

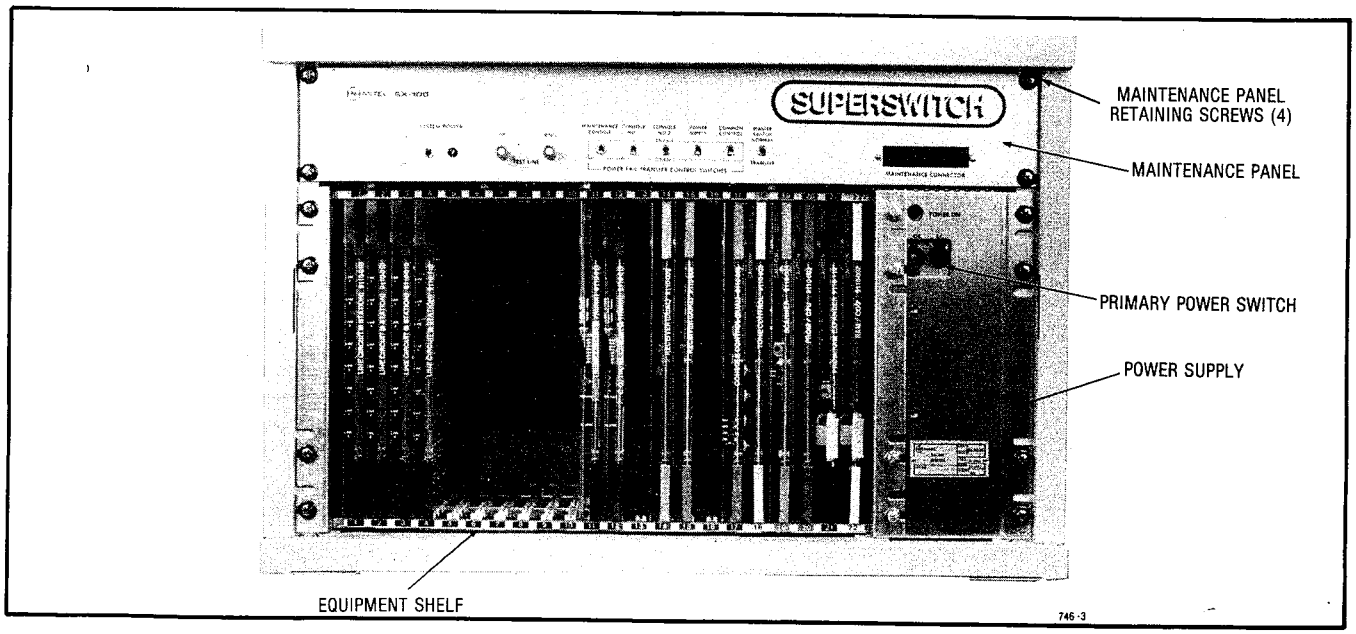

Fig. 405-2 Maintenance Panel

REPLACE MAINTENANCE PANEL SX-100
MAP350-405
Issue 1, March 1980
Sheet 3 of 3

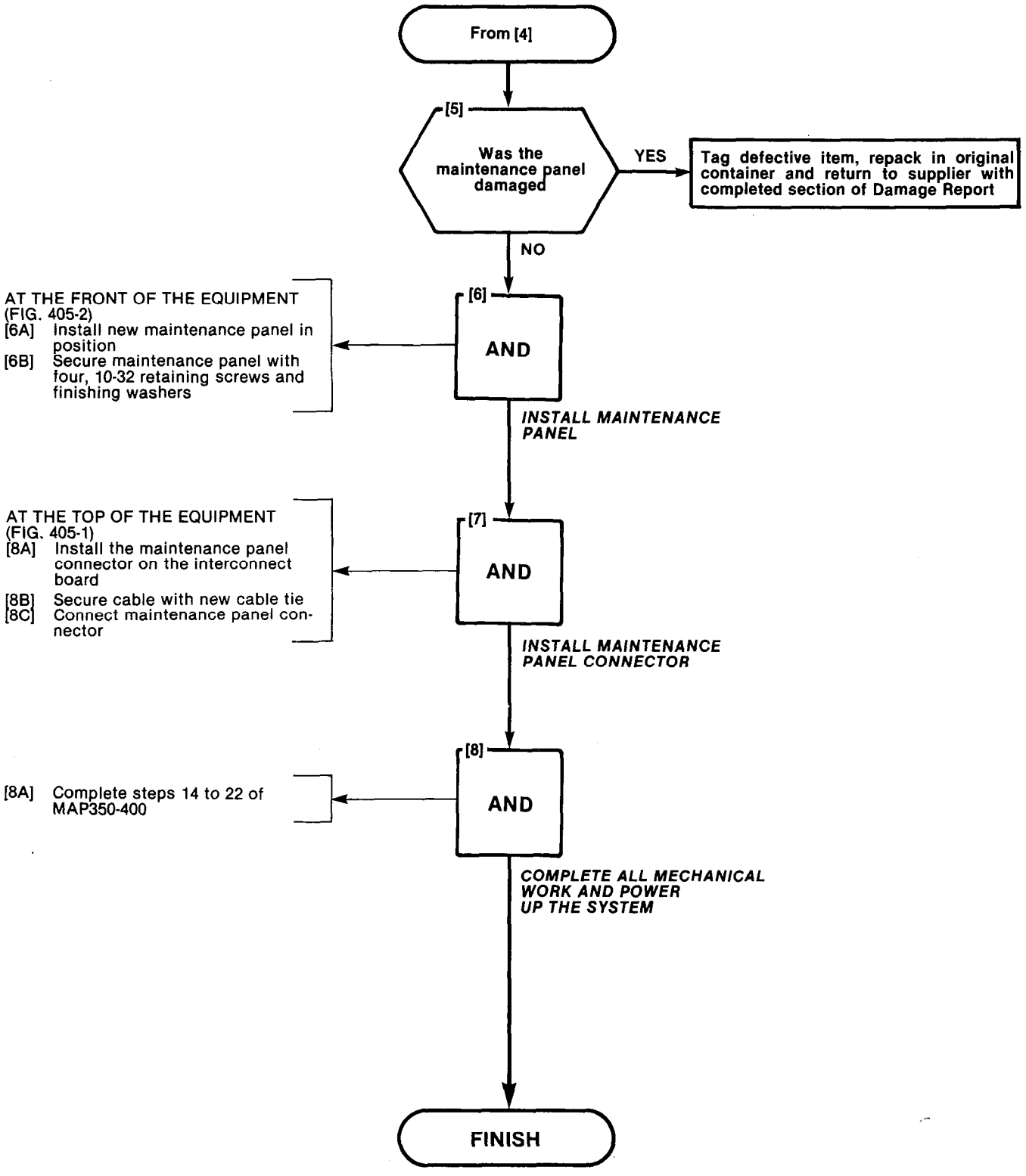

REPLACE 220V ADAPTER SX-100
MAP350-406
Issue 1, March 1980
Sheet 1 of 3

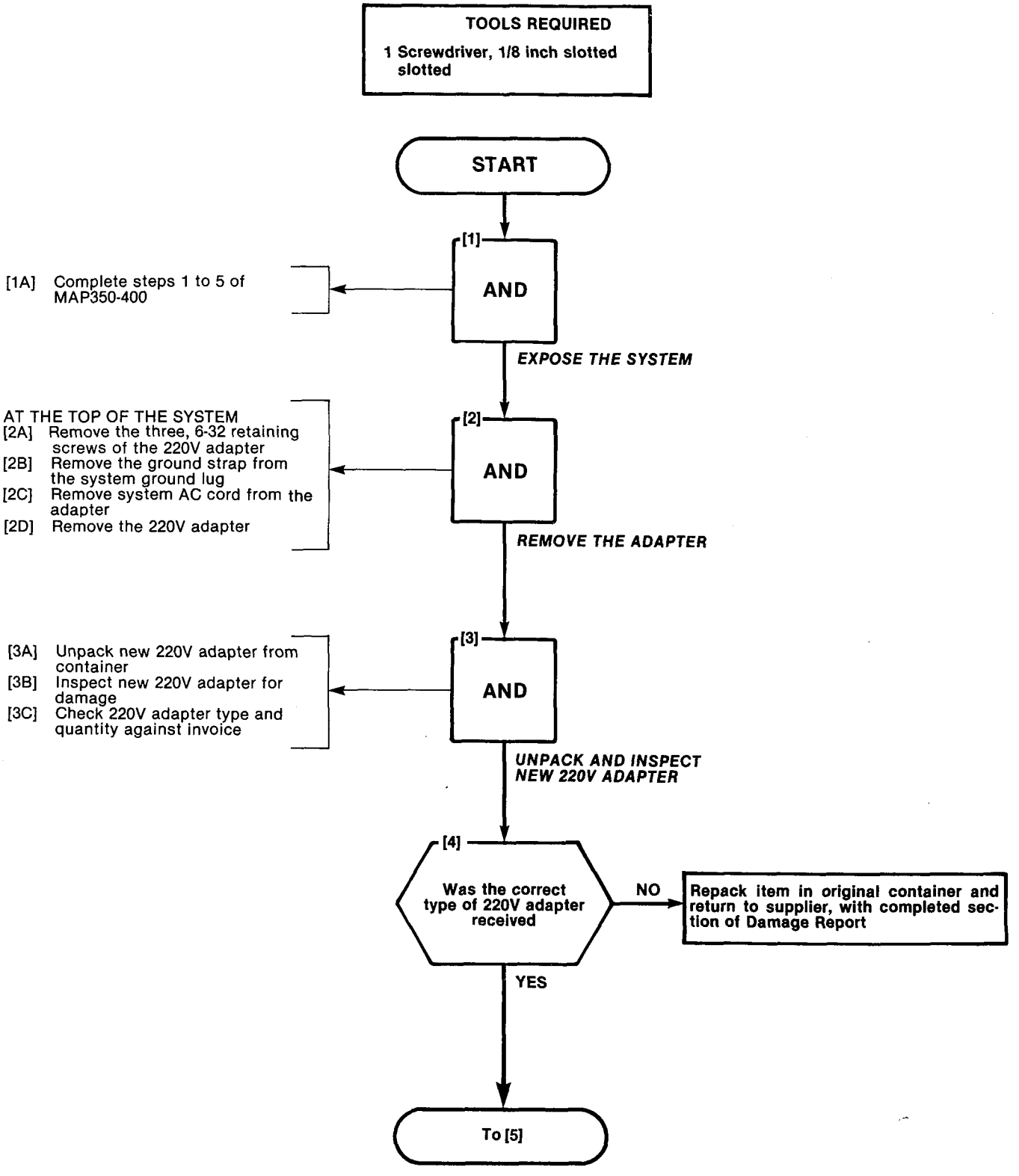

REPLACE 220V ADAPTER SX-100
MAP350-406
Issue 1, March 1980
Sheet 2 of 3

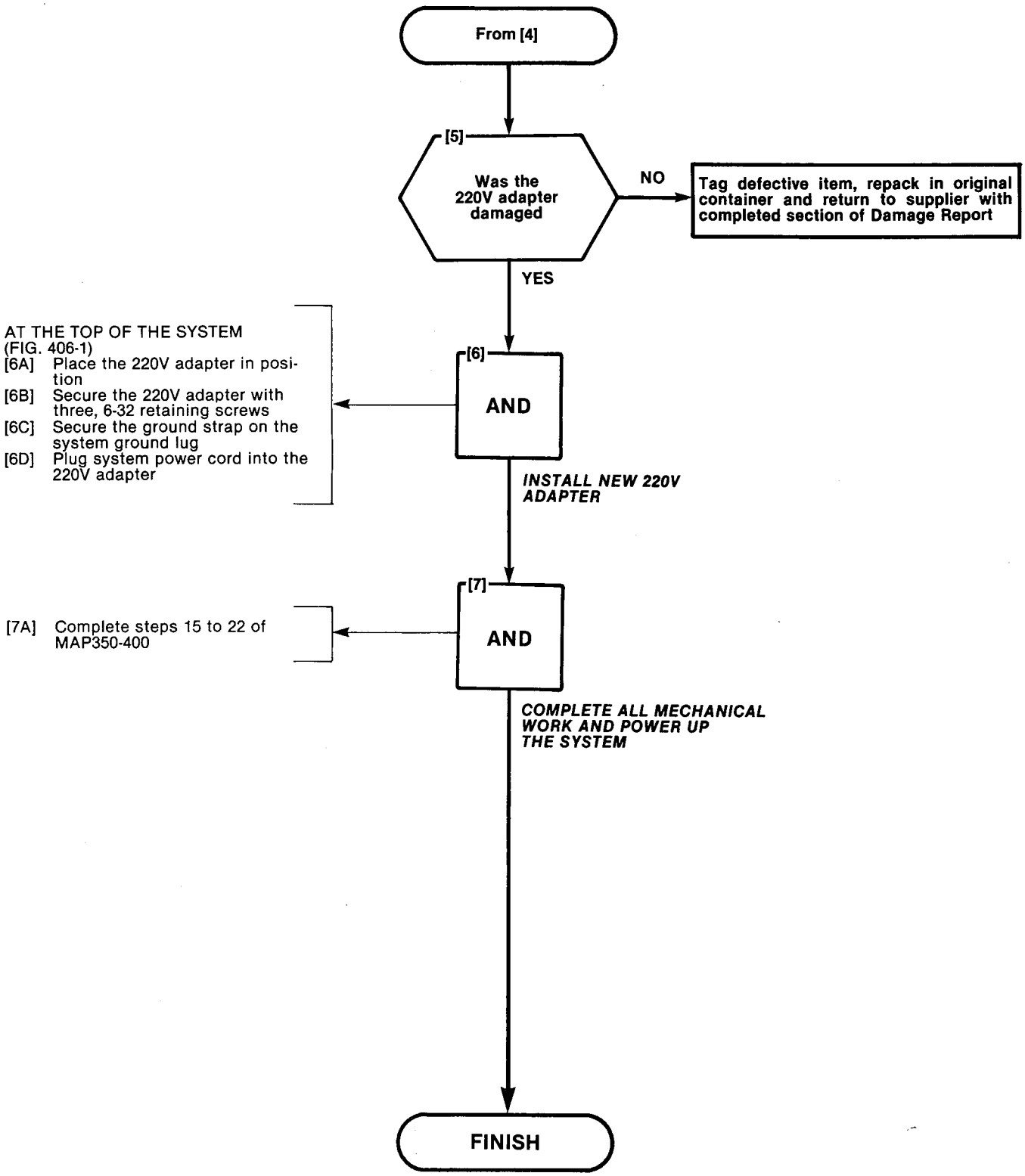

REPLACE 220V ADAPTER SX-100
MAP350-406
Issue 1, March 1980
Sheet 3 of 3

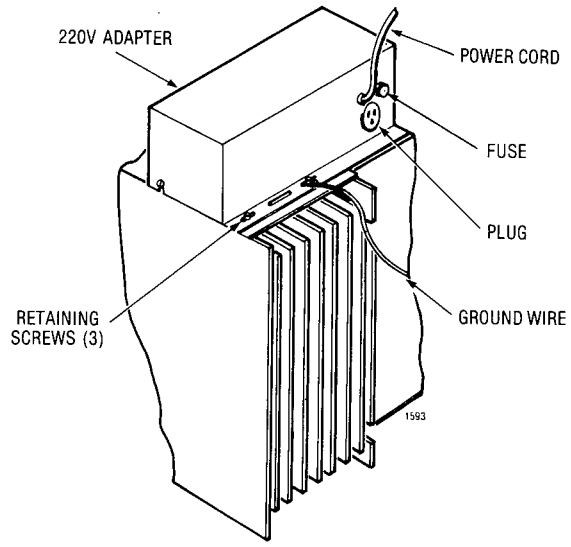

Fig. 406-1 220V Adapter

APPENDIX 5
SX-200 MECHANICAL PROCEDURES

1. GENERAL

A5.01 The MAPs contained in this Appendix detail the procedures to be performed in all mechanical work on the SX-200. These MAPs are used in conjunction with the MAPs outlined in other sections of this practice. They will facilatate ease of replacement of component parts.

A5.02 The basic synopsis of this part; a component part has been judged to be defective by the use of the MAPs, replace it.

TABLE A5-1
SX-200 MECHANICAL PROCEDURE

Title	Reference
Replace Console or Console Cable	MAP350-501
Replace Interconnect Card	MAP350-502
Replace Power Fail Transfer Card	MAP350-503
Replace Console Interface Card	MAP350-504
Replace First or Second Shelf	MAP350-505
Replace Heat Sink Assembly	MAP350-506
Replace Power Supply Assembly	MAP350-507
Replace Reserve Battery Back-Up Supply	MAP350-508
Replace Translator Board	MAP350-509
Replace Cards in Shelf	MAP350-510
Replace Maintenance Panel	MAP350-511
Replace Wiring Harness	MAP350-512

REPLACE CONSOLE AND OR CONSOLE CABLE SX-200
MAP350-501
Issue 1, March 1980
Sheet 1 of 4

TOOLS REQUIRED

1 Screwdriver
0.25 inch blade

START

[1] **Is the console to be replaced**

NO → **Go to [5]**

YES

[2] **AND**

AT NEW CONSOLE
- [2A] Remove fiberglass tape from top of packing case
- [2B] Open packing case and remove foam sheet
- [2C] Remove foam inserts from ends of console (if installed)
- [2D] Remove console accessory bag from insert
- [2E] Remove console from packing case
- [2F] Remove polyethylene sheet from console
- [2G] Place all packing materials in packing case for use in reshipment

UNPACK NEW CONSOLE

[3] **AND**

AT NEW CONSOLE
- [3A] Remove the two cradle hooks and four panhead screws from accessory bag
- [3B] Place console face down on desk top
- [3C] Position one cradle hook as shown in Fig. 501-1. (Cradle hook may be placed at other end of console if preferred)
- [3D] Attach cradle hook to console using two panhead screws
- [3E] Position remaining cradle hook (Fig. 501-1)
- [3F] Attach cradle hook to console with two panhead screws

INSTALL NEW CRADLE HOOKS (FIG. 501-1)

Go to [4]

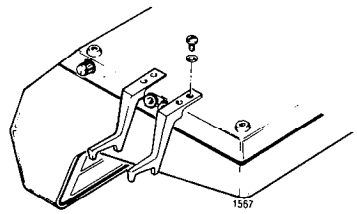

Fig. 501-1

REPLACE CONSOLE AND OR CONSOLE CABLE SX-200
MAP350-501
Issue 1, March 1980
Sheet 2 of 4

From [3]

[4] AND

AT NEW CONSOLE
[4A] Remove the four screws securing the connector cover plate (Fig. 501-2)
[4B] Remove connector cover plate

REMOVE NEW CONSOLE CONNECTOR COVER PLATE (FIG. 502-2)

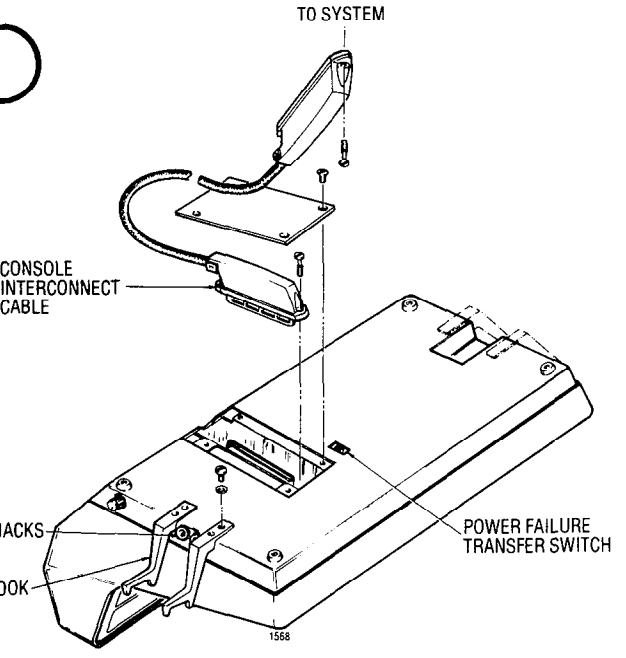

Fig. 501-2

[5] AND

[5A] Remove the four screws securing the connector cover plate (Fig. 501-2)
[5B] Remove connector cover plate

REMOVE OLD CONSOLE CONNECTOR COVER PLATE (FIG. 501-2)

[6] **Is a new console cable to be used**

NO → **Go to [8]**

YES

[7] AND

[7A] Construct and run a new console cable as per Appendix 2

CONSTRUCT A NEW CABLE

Go to [8]

REPLACE CONSOLE AND OR CONSOLE CABLE SX-200
MAP350-501
Issue 1, March 1980
Sheet 3 of 4

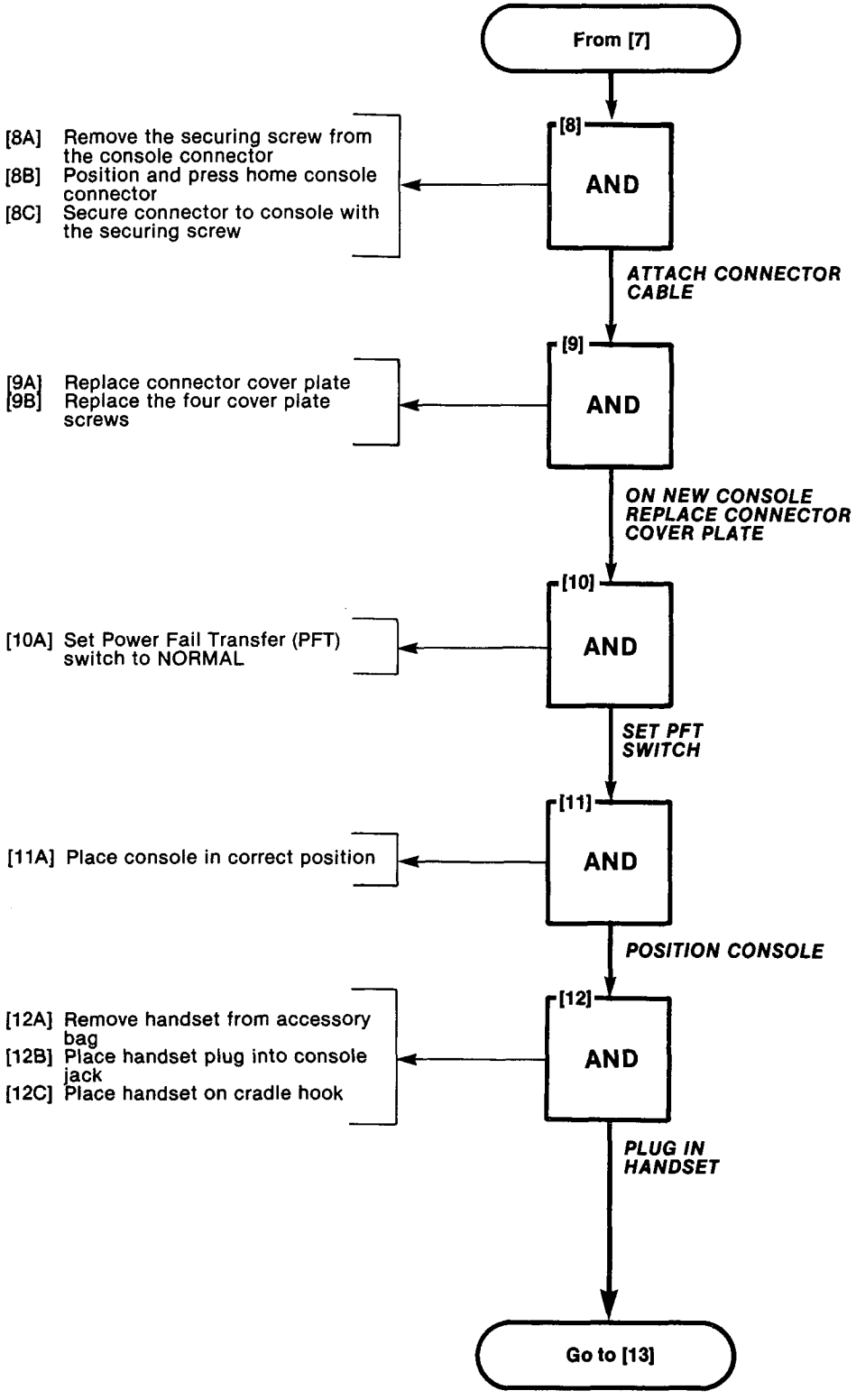

REPLACE CONSOLE AND OR CONSOLE CABLE SX-200
MAP350-501
Issue 1, March 1980
Sheet 4 of 4

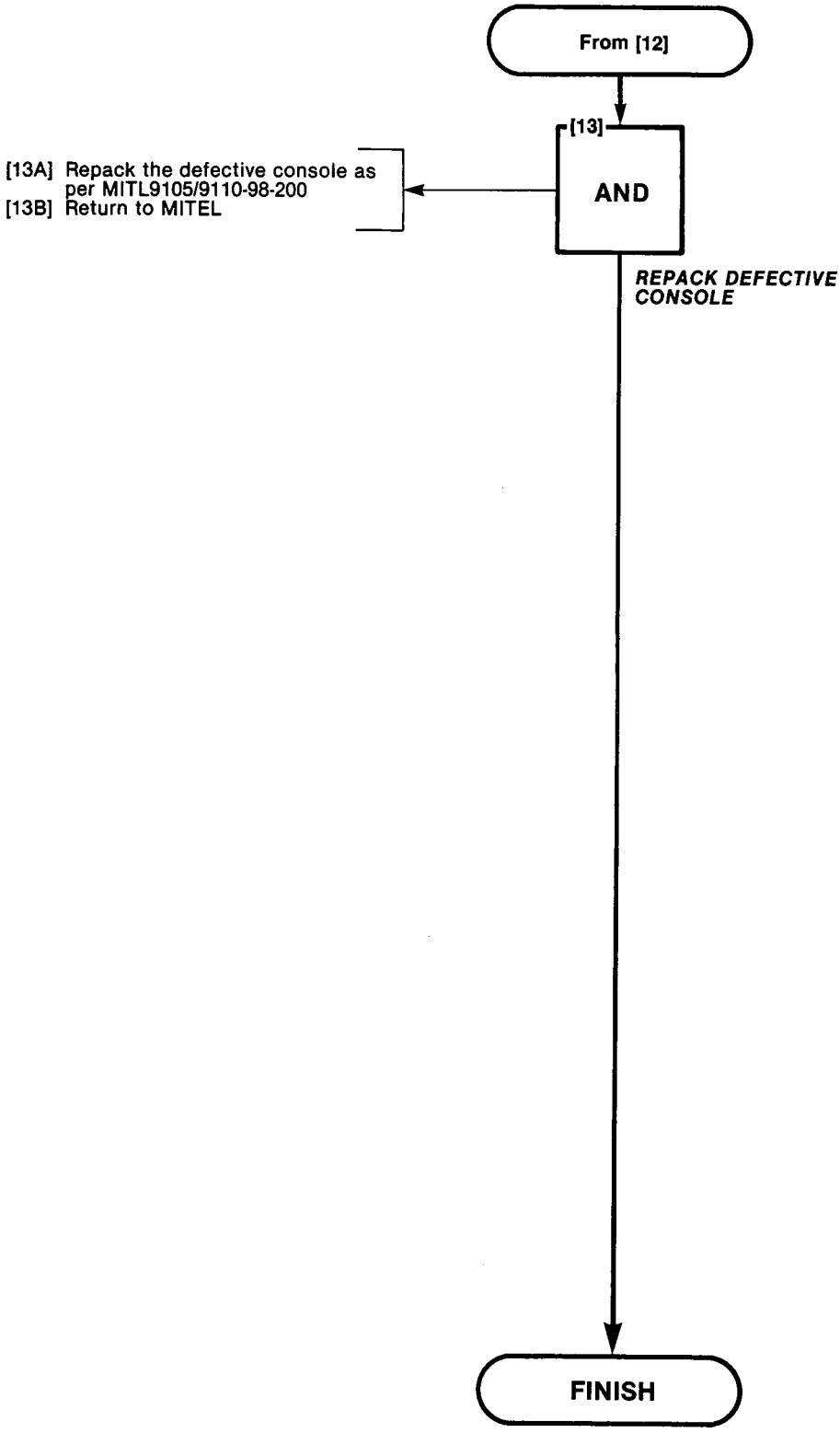

REPLACE INTERCONNECT CARD SX-200
MAP350-502
Issue 1, March 1980
Sheet 1 of 5

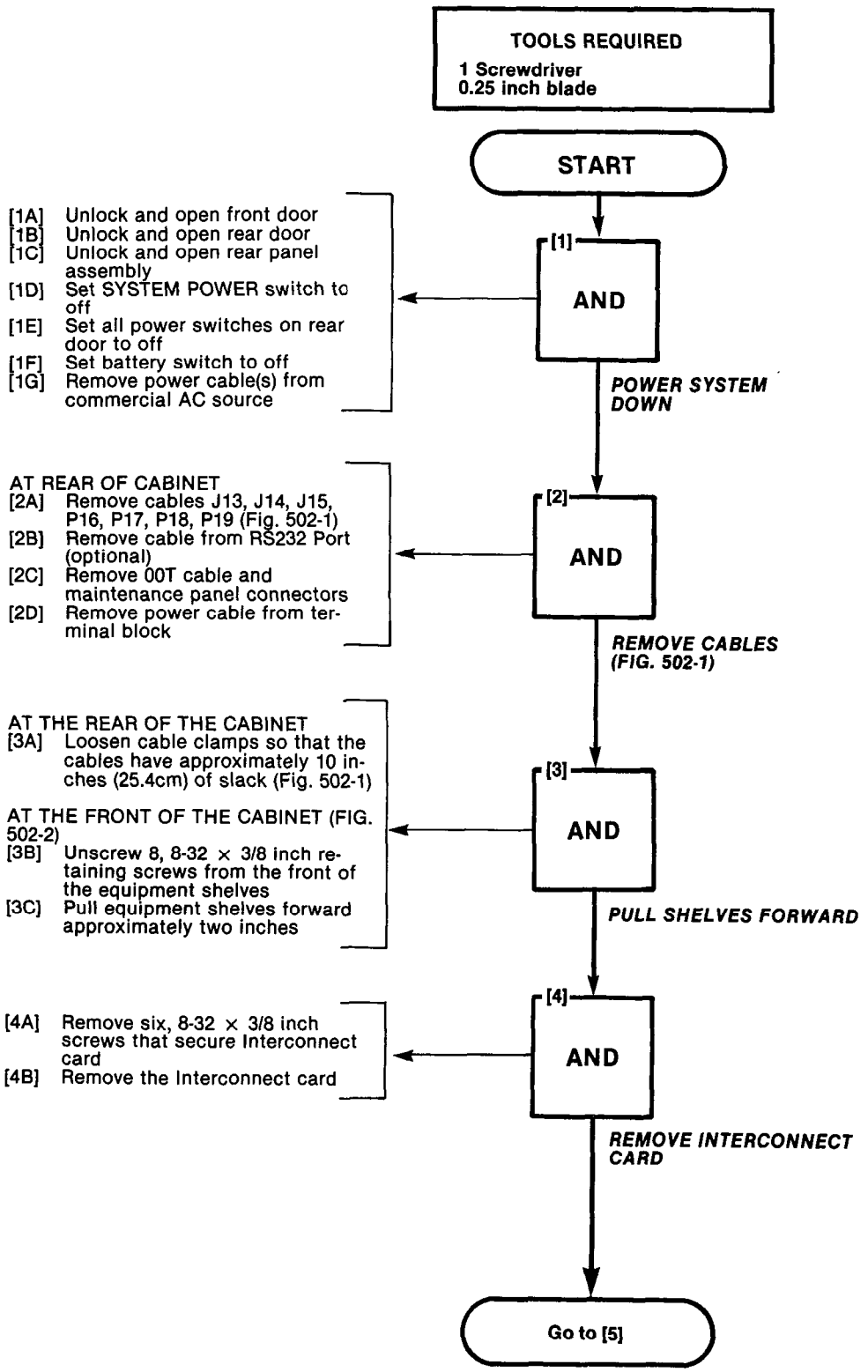

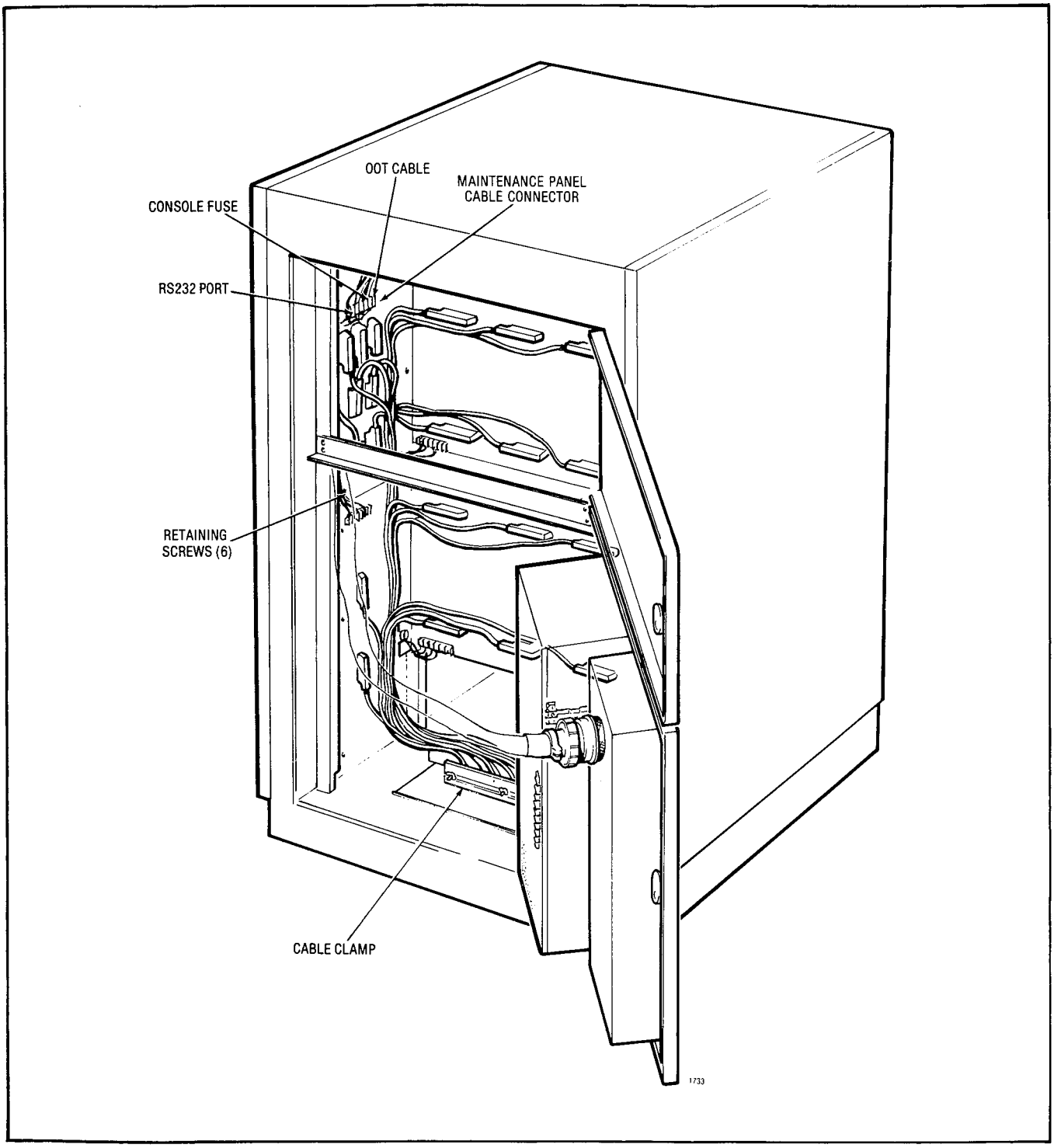

Fig. 502-1 Rear Door Cable Locations

REPLACE INTERCONNECT CARD SX-200
MAP350-502
Issue 1, March 1980
Sheet 3 of 5

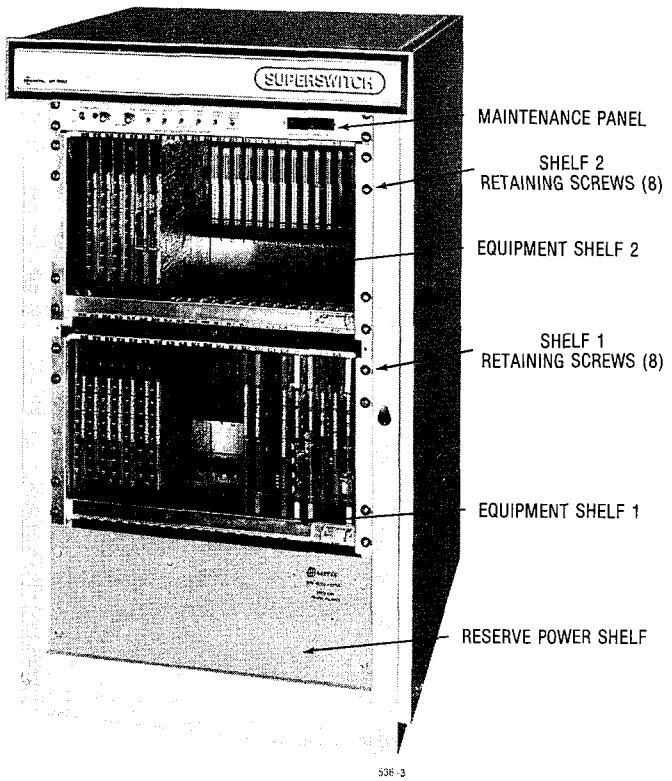

Fig. 502-2 Equipment Shelf

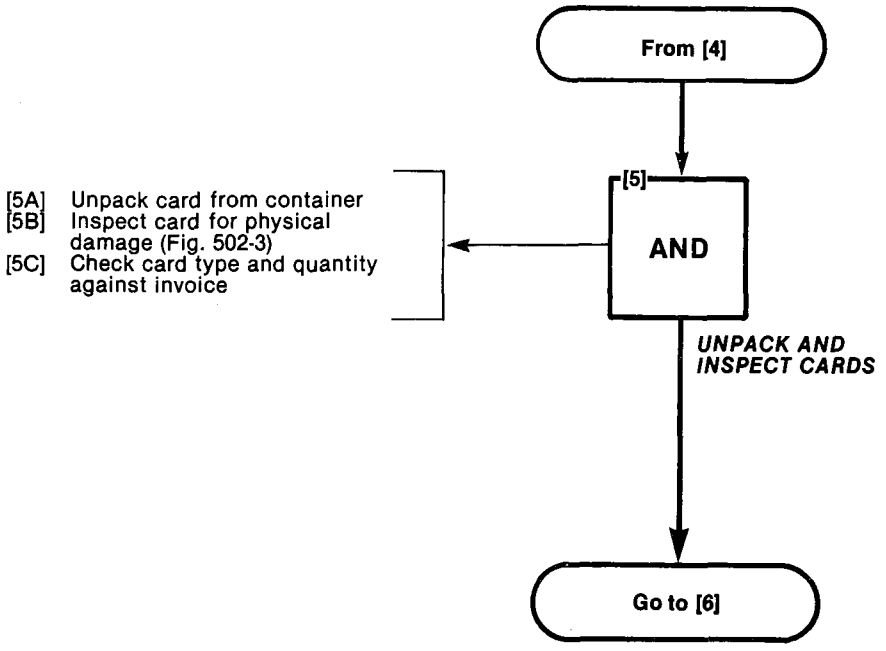

REPLACE INTERCONNECT CARD SX-200
MAP350-502
Issue 1, March 1980
Sheet 4 of 5

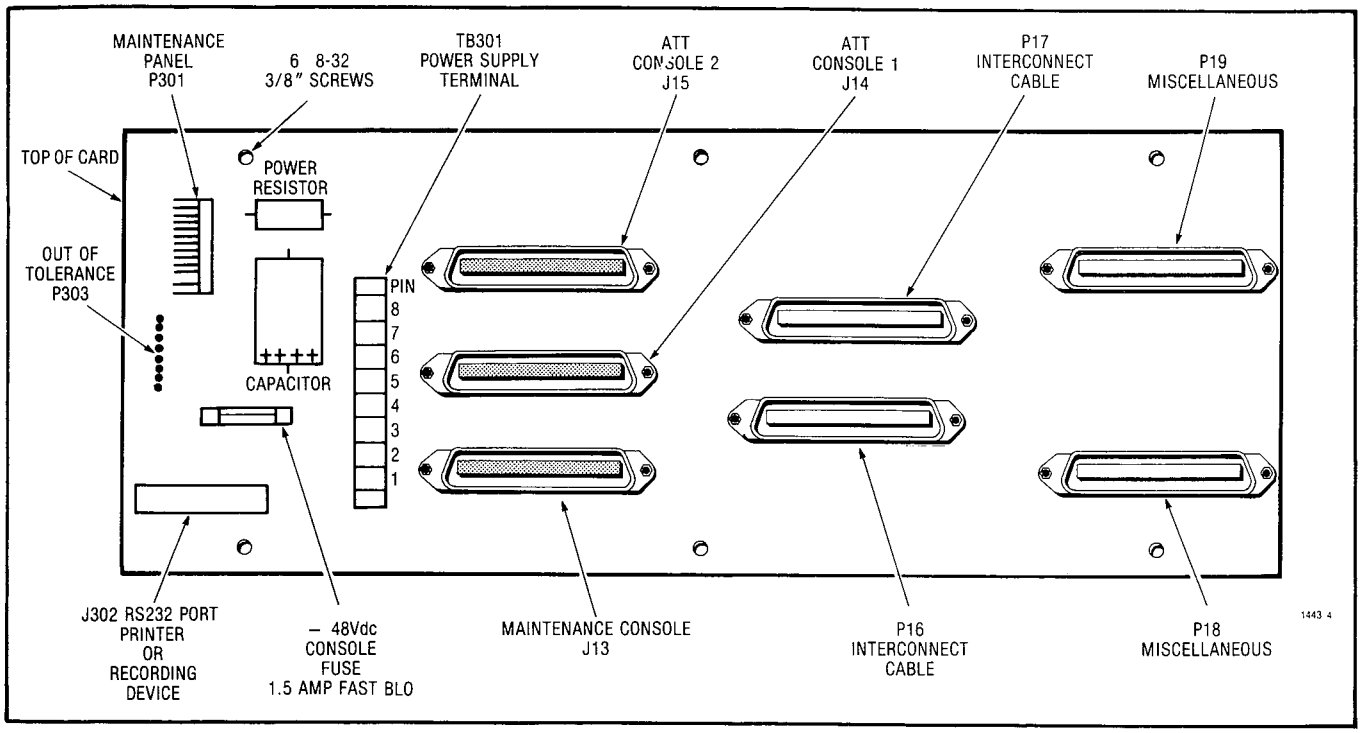

Fig. 502-3 Interconnect Card

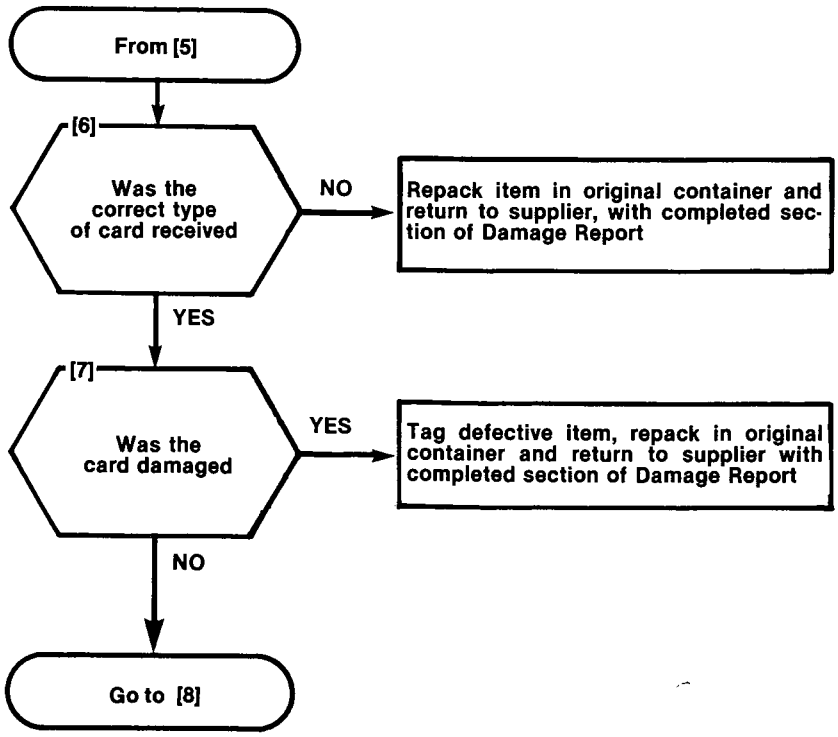

REPLACE INTERCONNECT CARD SX-200
MAP350-502
Issue 1, March 1980
Sheet 5 of 5

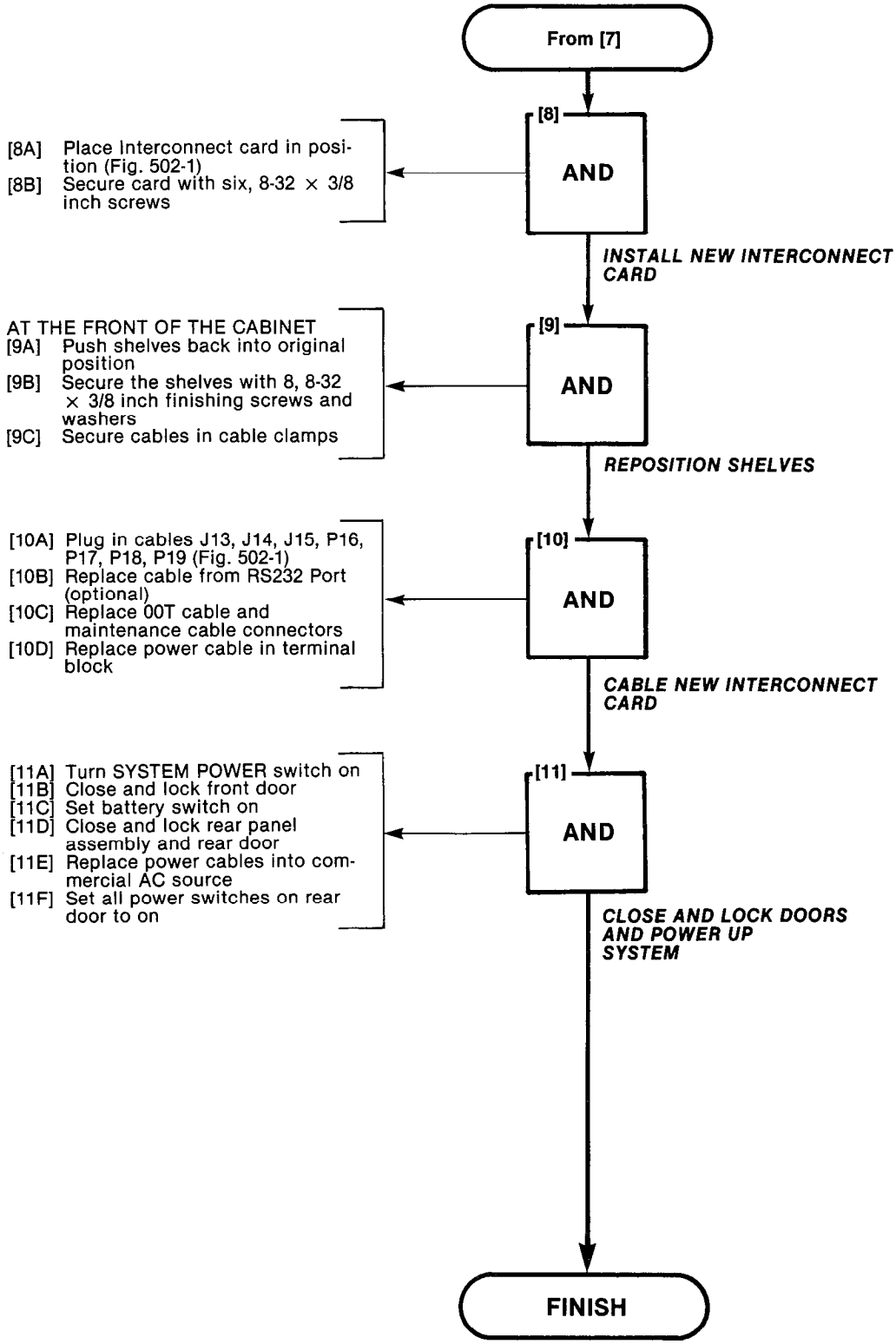

REPLACE POWER FAIL TRANSFER CARD SX-200
MAP350-503
Issue 1, March 1980
Sheet 1 of 5

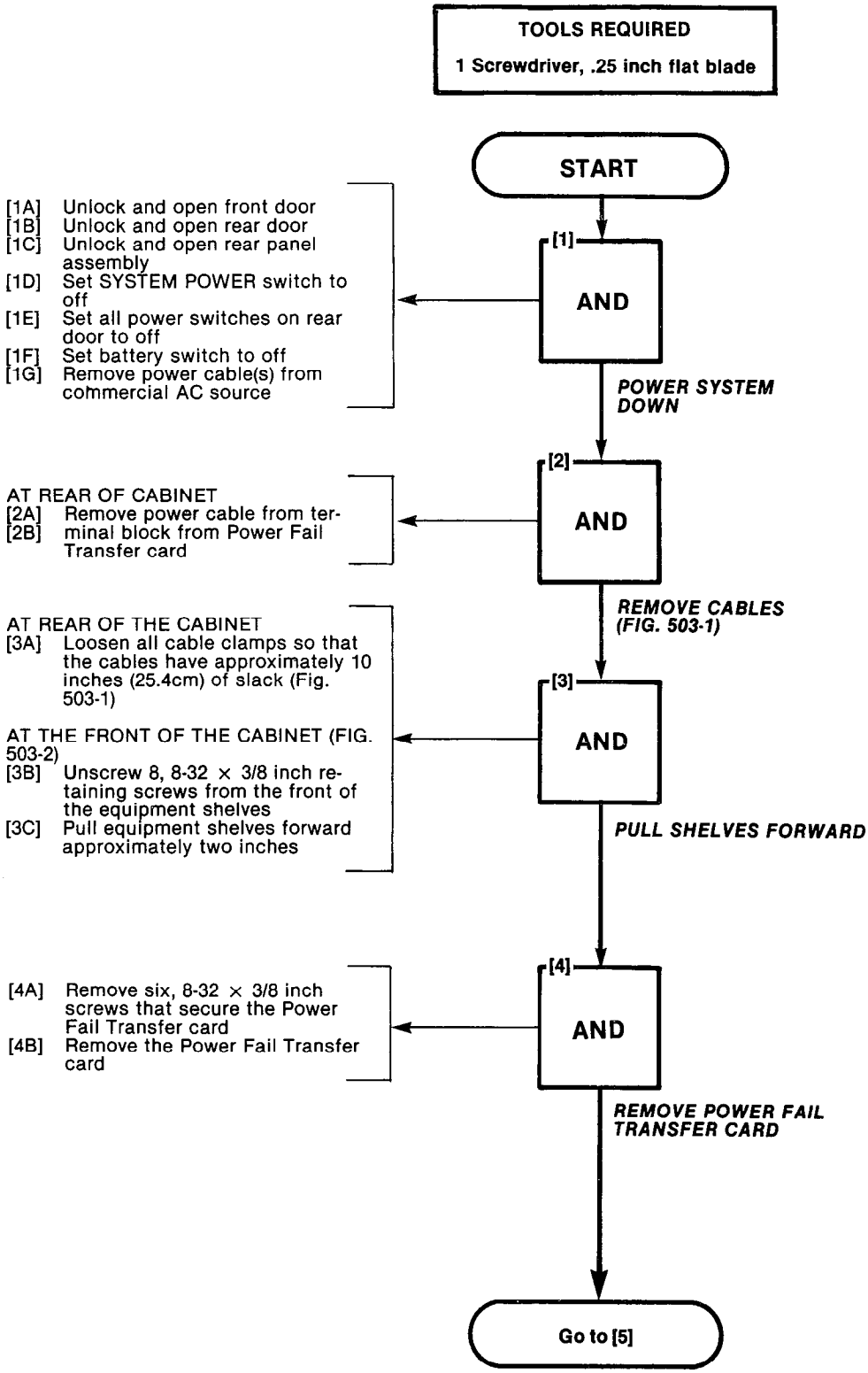

REPLACE POWER FAIL TRANSFER CARD SX-200
MAP350-503
Issue 1, March 1980
Sheet 2 of 5

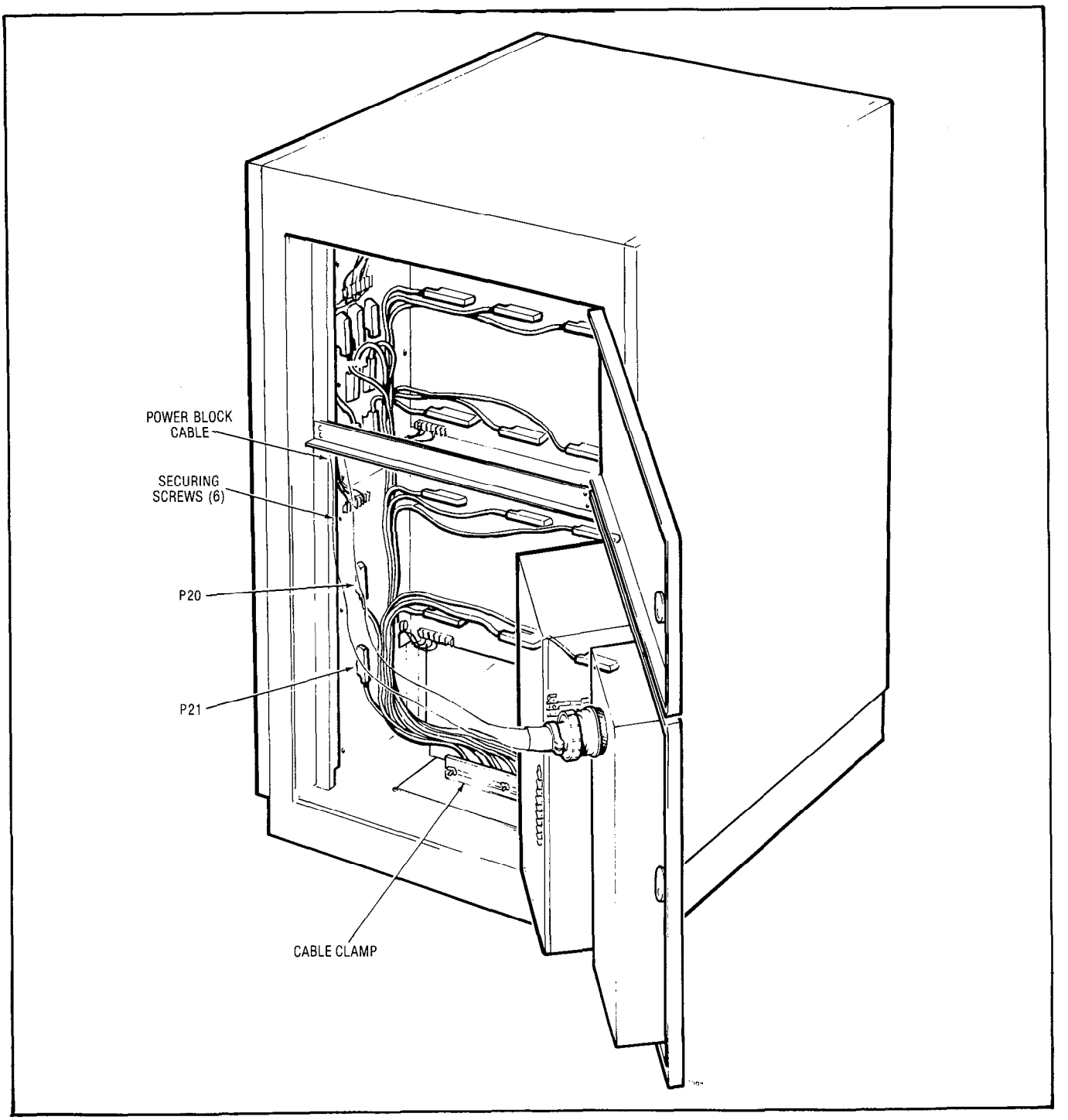

Fig. 503-1

REPLACE POWER FAIL TRANSFER CARD SX-200
MAP350-503
Issue 1, March 1980
Sheet 3 of 5

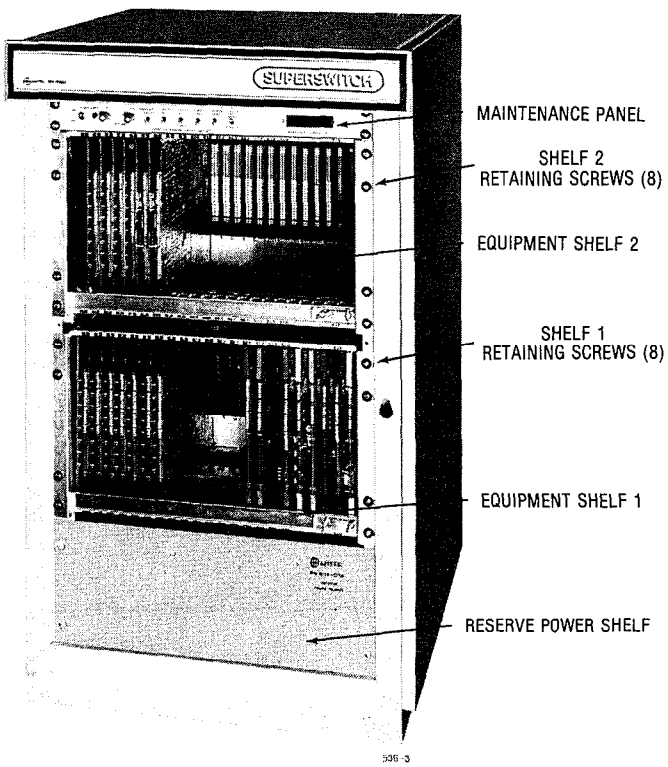

Fig. 503-2 Equipment Shelf

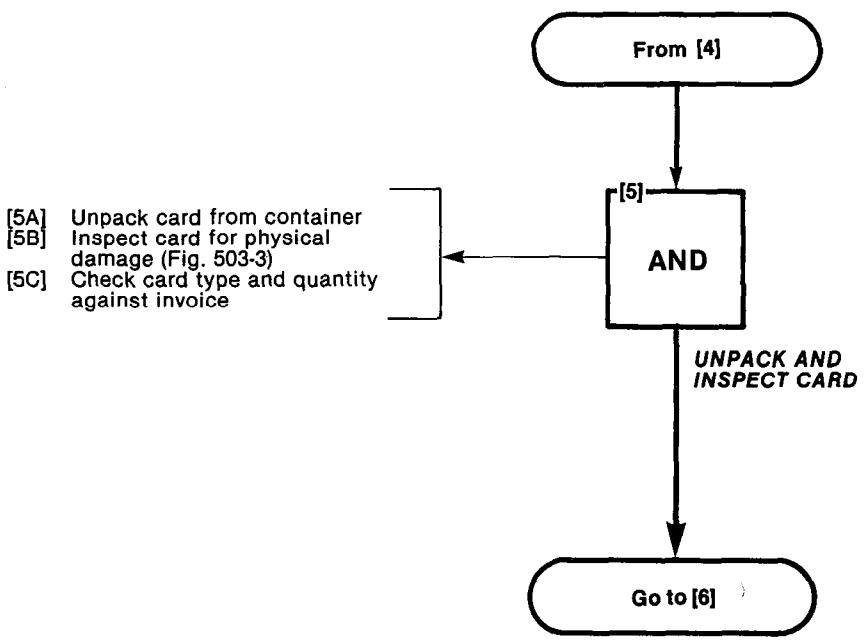

SECTION MITL9105/9110-98-350

REPLACE POWER FAIL TRANSFER CARD SX-200
MAP350-503
Issue 1, March 1980
Sheet 4 of 5

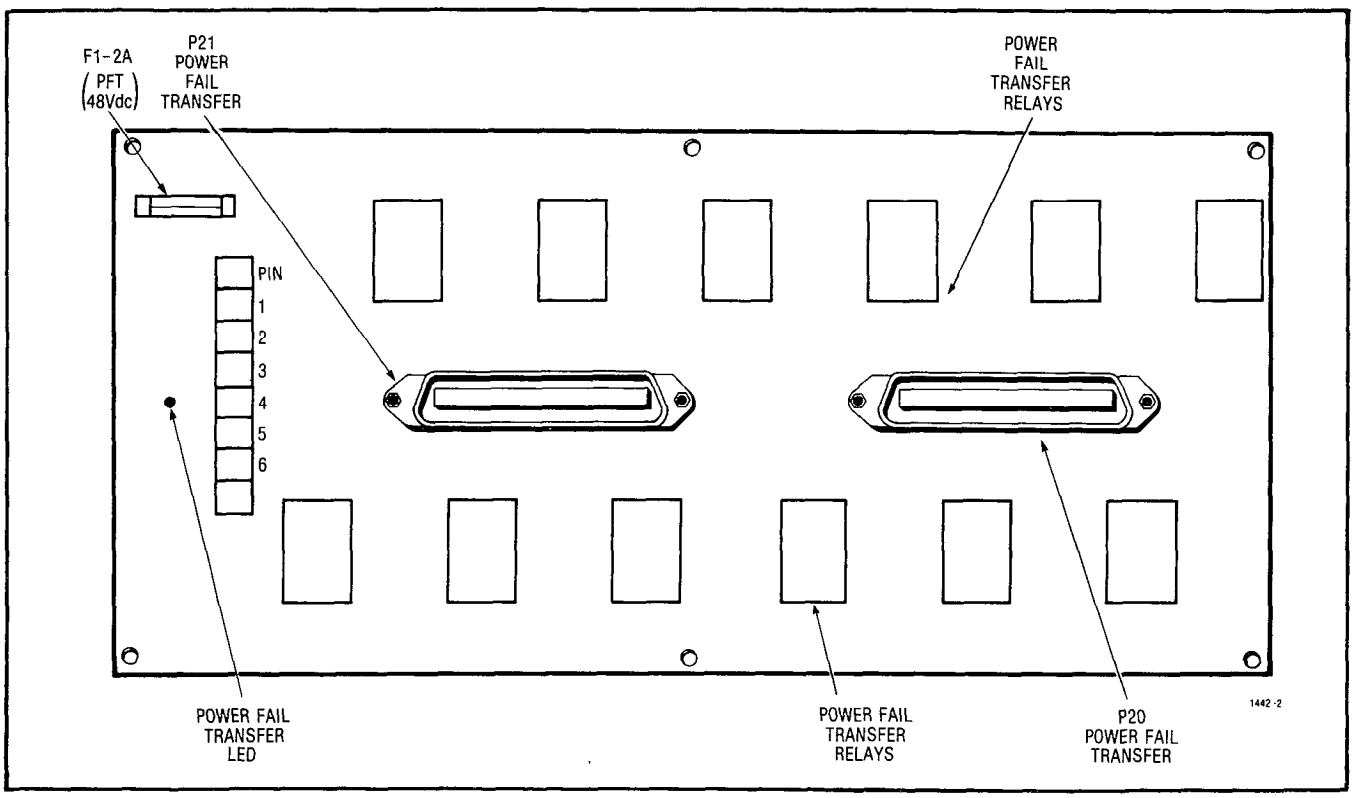

Fig. 503-3

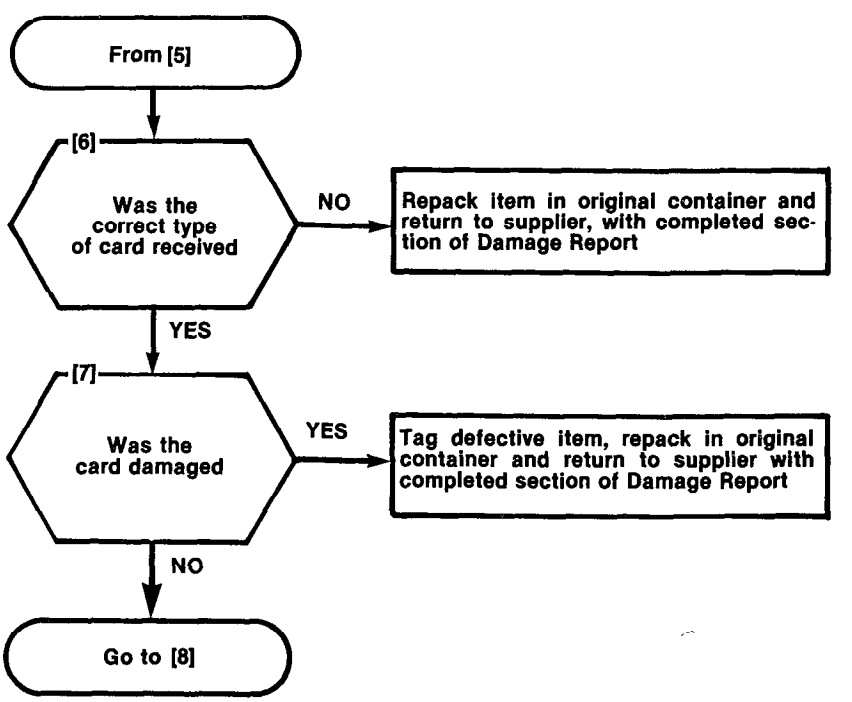

REPLACE POWER FAIL TRANSFER CARD SX-200
MAP350-503
Issue 1, March 1980
Sheet 5 of 5

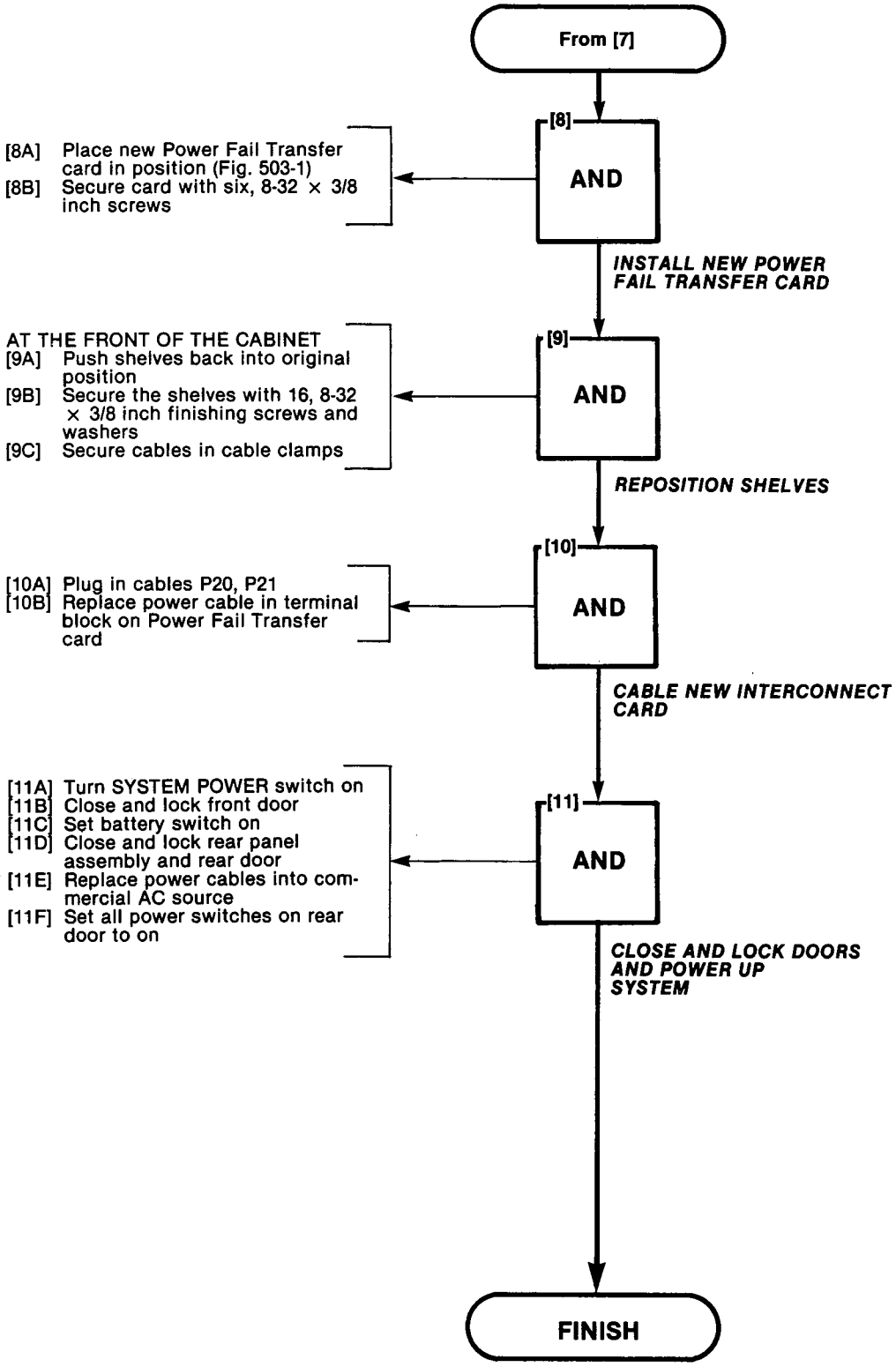

REPLACE CONSOLE INTERFACE CARD SX-200
MAP350-504
Issue 1, March 1980
Sheet 1 of 4

TOOLS REQUIRED
1 Screwdriver
0.25 inch blade
1 Wrench 7/16 inch

START

[1A] Unlock and open front door
[1B] Unlock and open rear door
[1C] Unlock and open rear panel assembly
[1D] Set SYSTEM POWER switch to off
[1E] Set all power switches on rear door to off
[1F] Set battery switch to off
[1G] Remove power cable(s) from commercial AC source

[1] AND

POWER SYSTEM DOWN

[2] AND

[2A] Remove cables P22, P23, P24, P25

REMOVE CABLES (FIG. 504-1)

AT REAR OF THE CABINET
[3A] Loosen all cable clamps so that the cables have approximately 10 inches (25.4cm) of slack (Fig. 504-1)

AT THE FRONT OF THE CABINET (FIG. 504-2)
[3B] Unscrew 8, 8-32 × 3/8 inch retaining screws from the front of the equipment shelves
[3C] Pull equipment shelves forward approximately two inches

[3] AND

PULL SHELVES FORWARD

Go to [4]

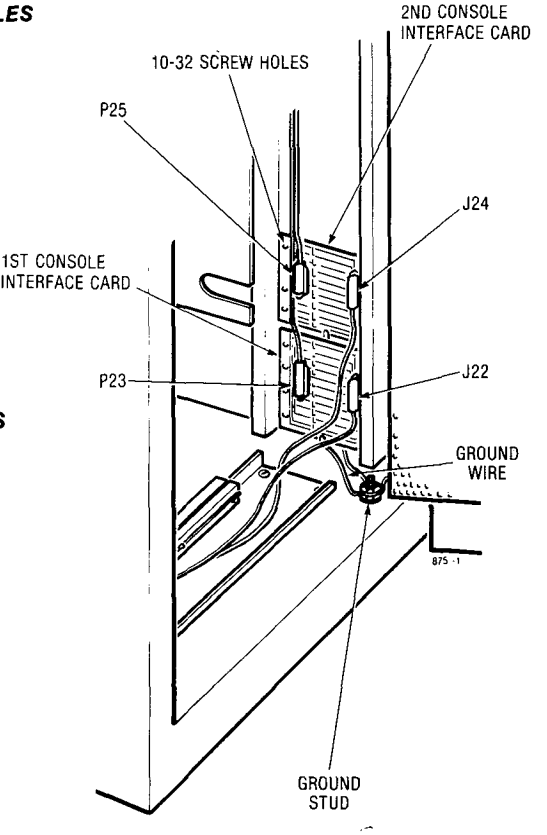

Fig. 504-1 Console Interface Card Position

REPLACE CONSOLE INTERFACE CARD SX-200
MAP350-504
Issue 1, March 1980
Sheet 2 of 4

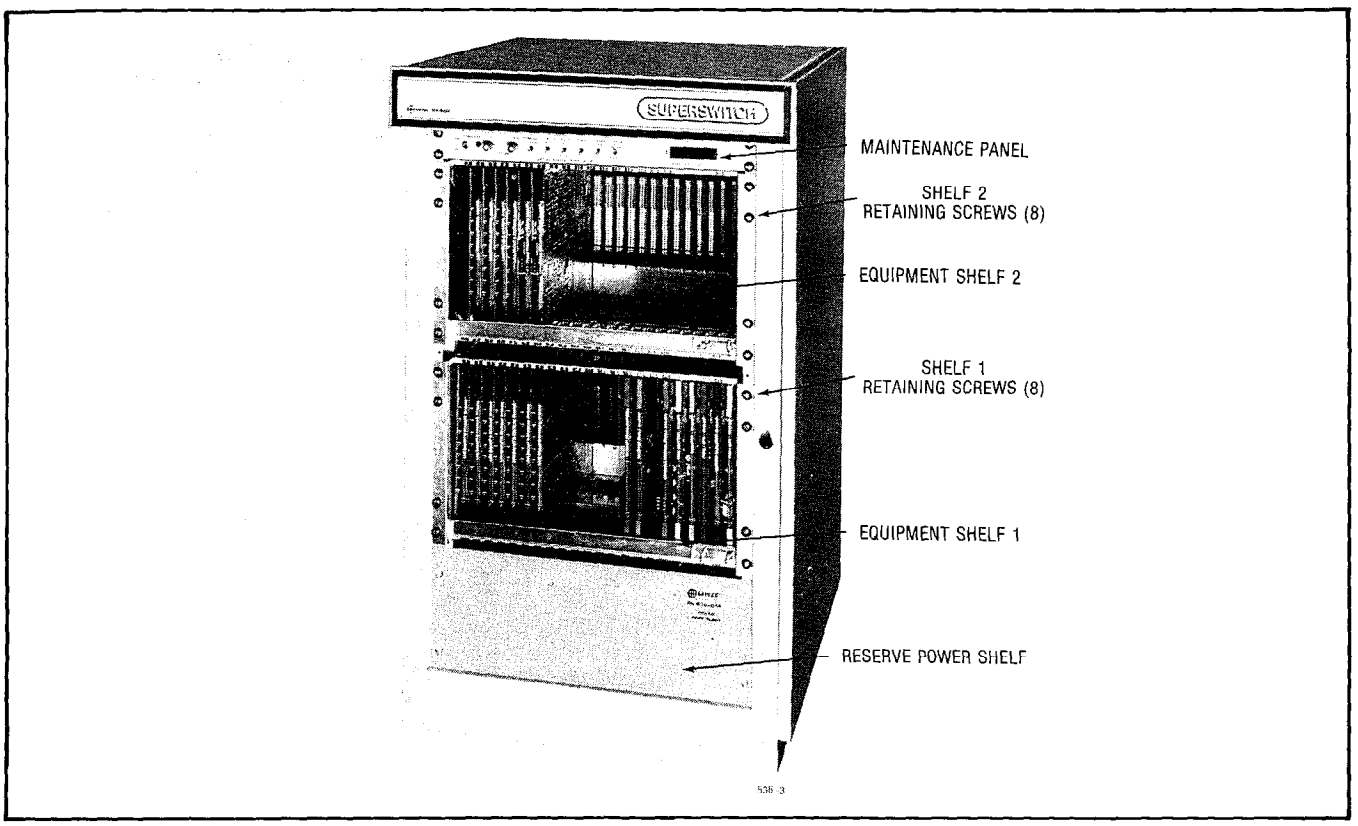

Fig. 504-2 Equipment Shelf

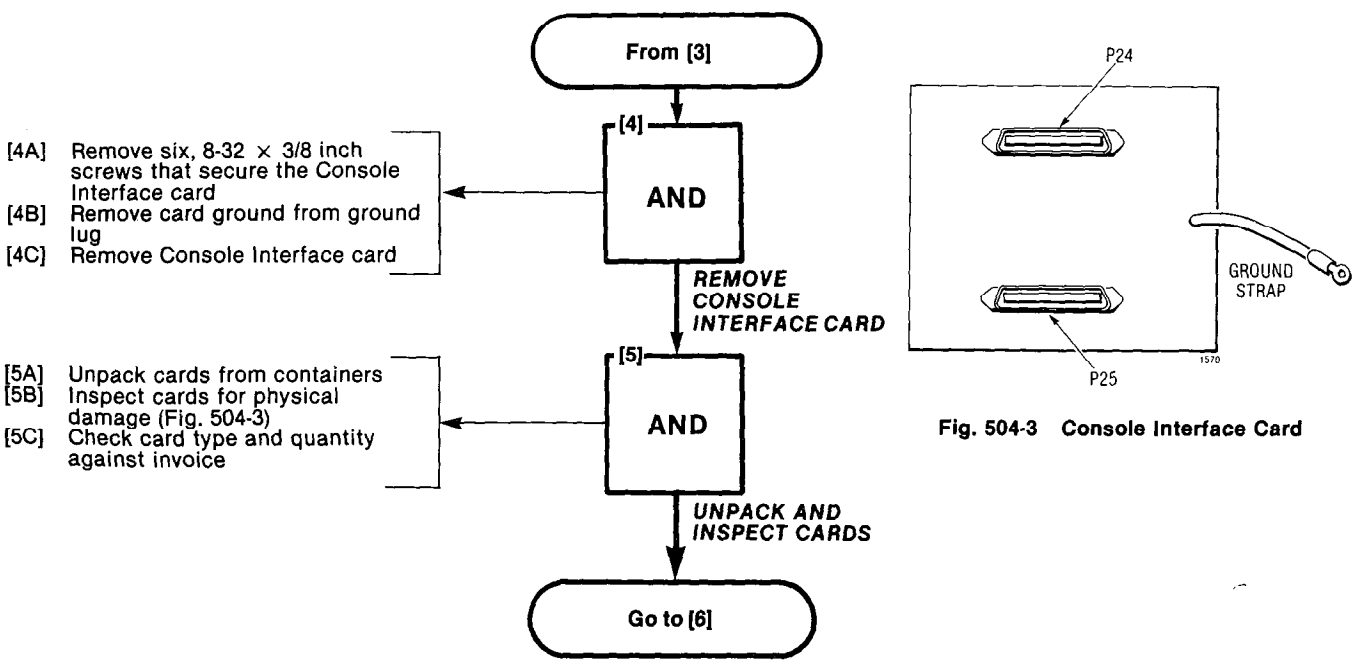

Fig. 504-3 Console Interface Card

REPLACE CONSOLE INTERFACE CARD SX-200
MAP350-504
Issue 1, March 1980
Sheet 3 of 4

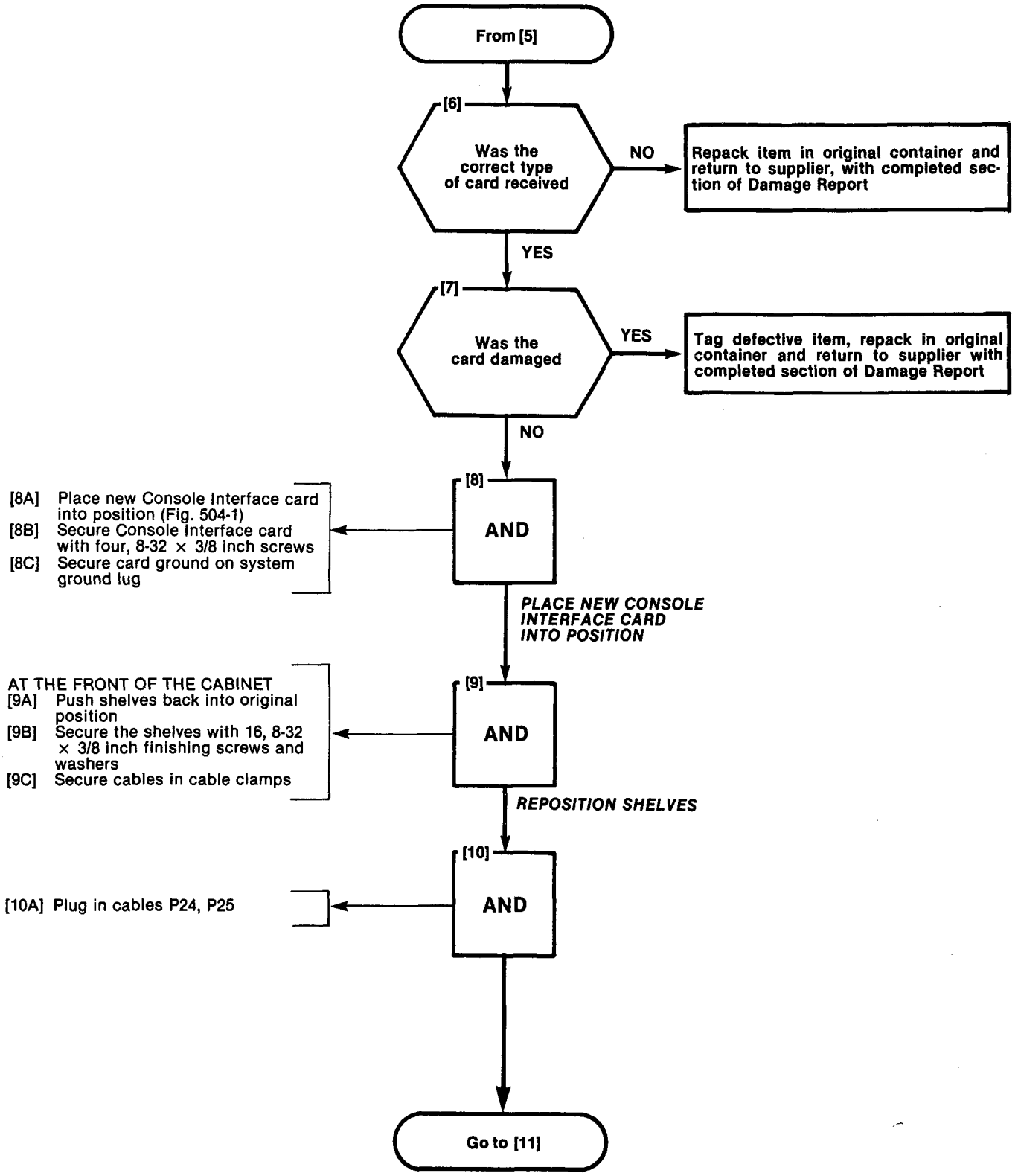

REPLACE CONSOLE INTERFACE CARD SX-200
MAP350-504
Issue 1, March 1980
Sheet 4 of 4

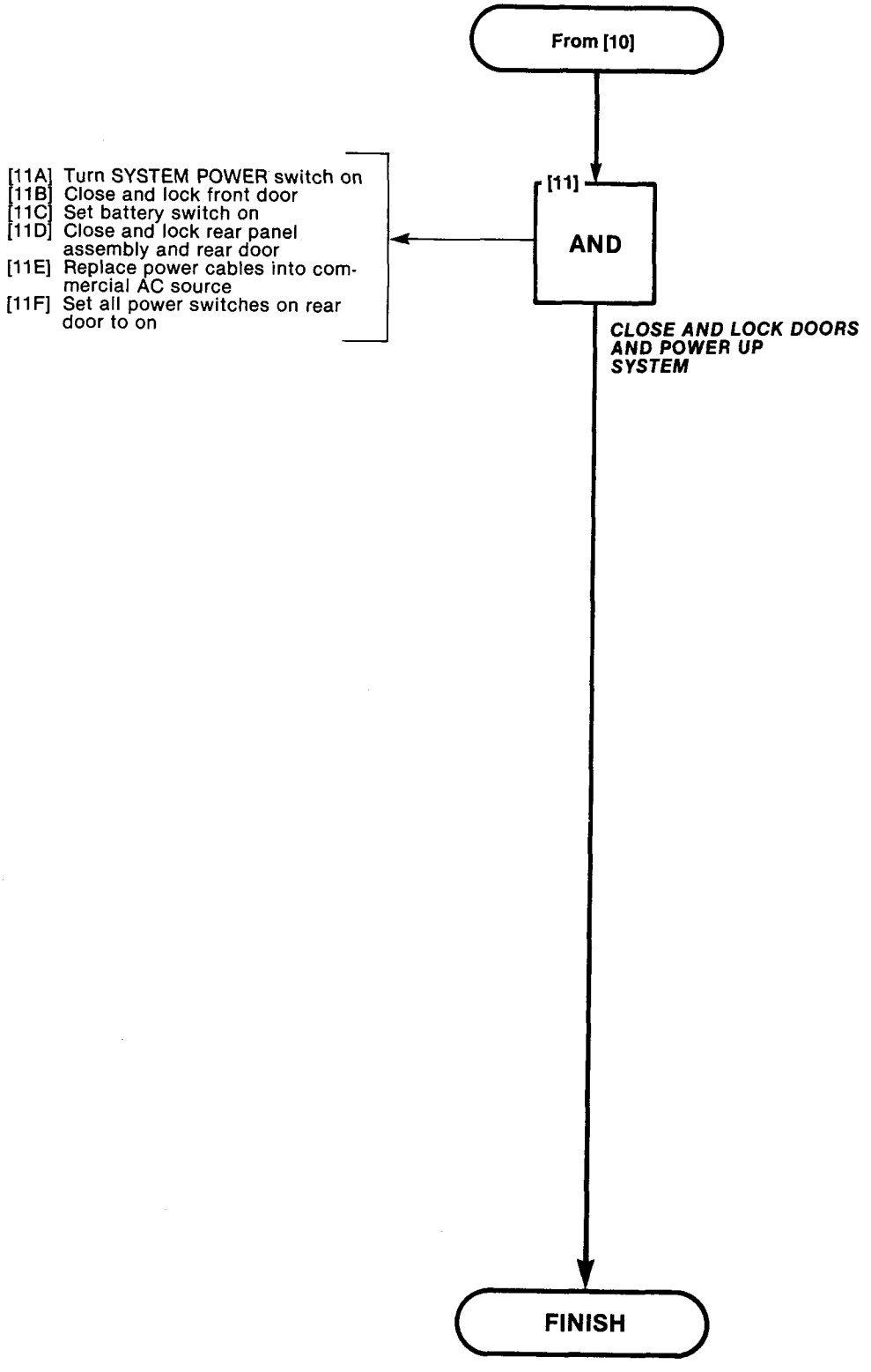

REPLACE FIRST OR SECOND SHELF SX-200
MAP350-505
Issue 1, March 1980
Sheet 1 of 5

TOOLS REQUIRED

1 - Screwdriver ¼ blade
1 - Screwdriver No. 10 Phillips

Note

The second shelf applies only to SX-200 equipment.

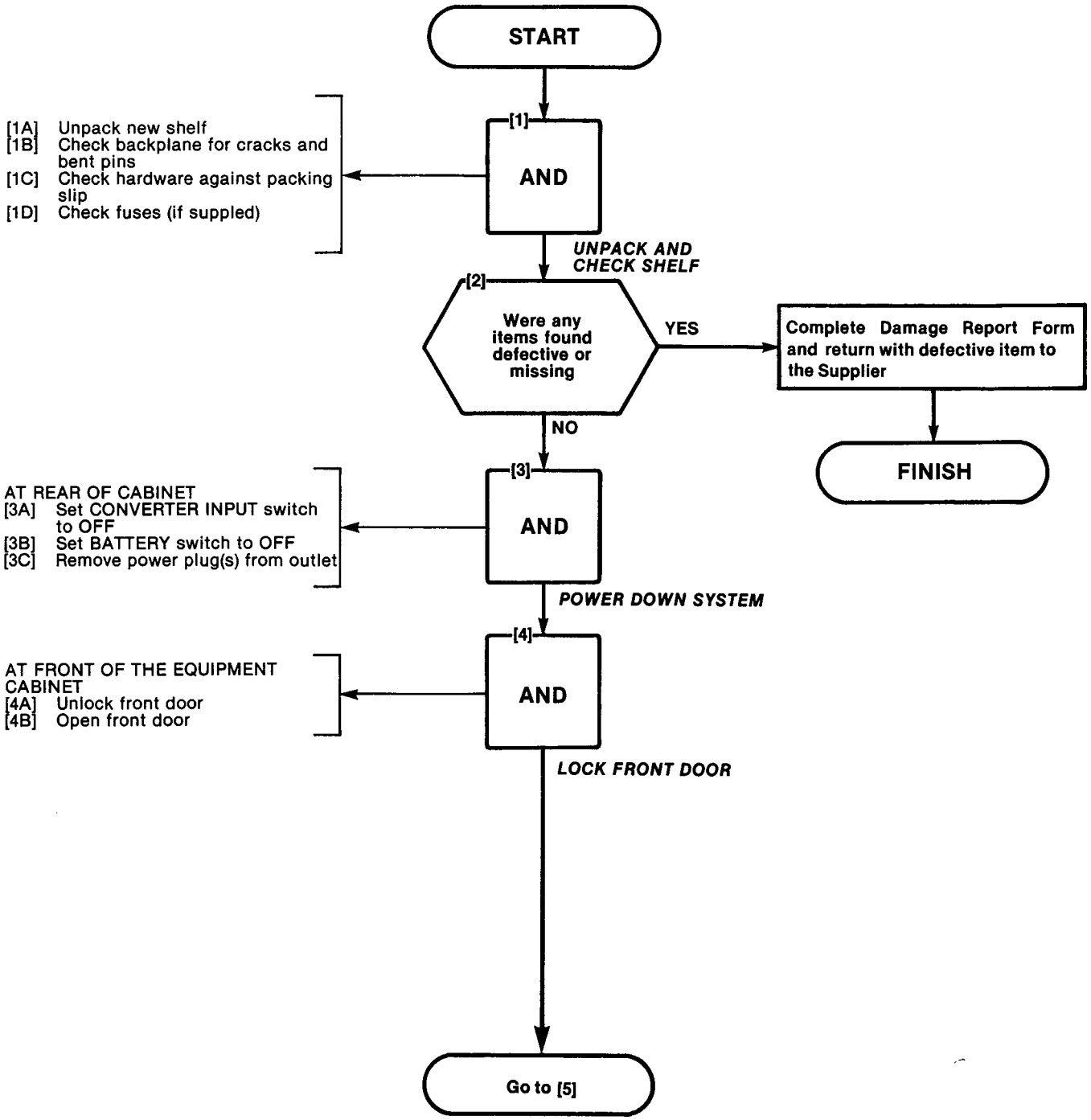

REPLACE FIRST OR SECOND SHELF SX-200
MAP350-505
Issue 1, March 1980
Sheet 2 of 5

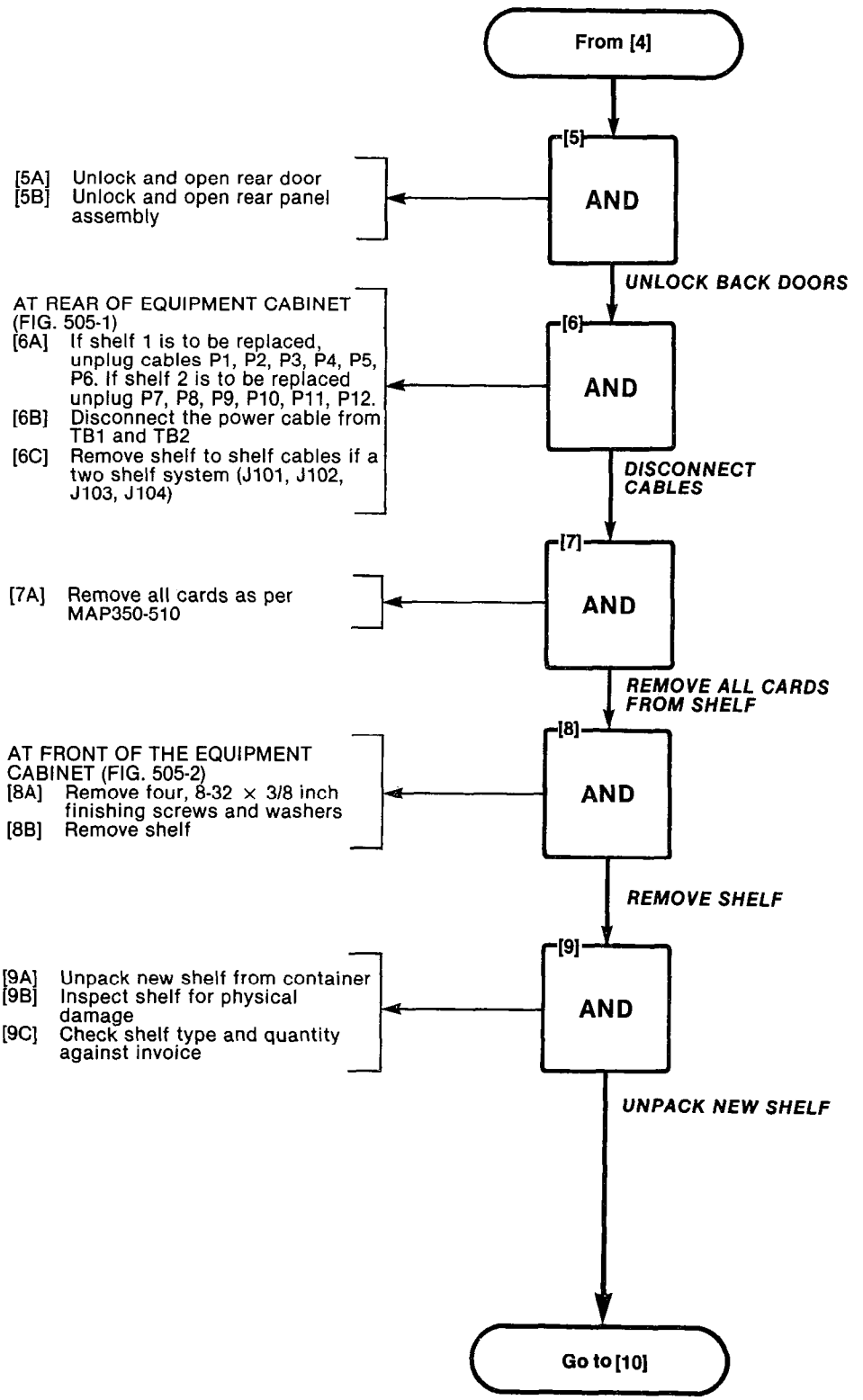

REPLACE FIRST OR SECOND SHELF SX-200
MAP350-505
Issue 1, March 1980
Sheet 3 of 5

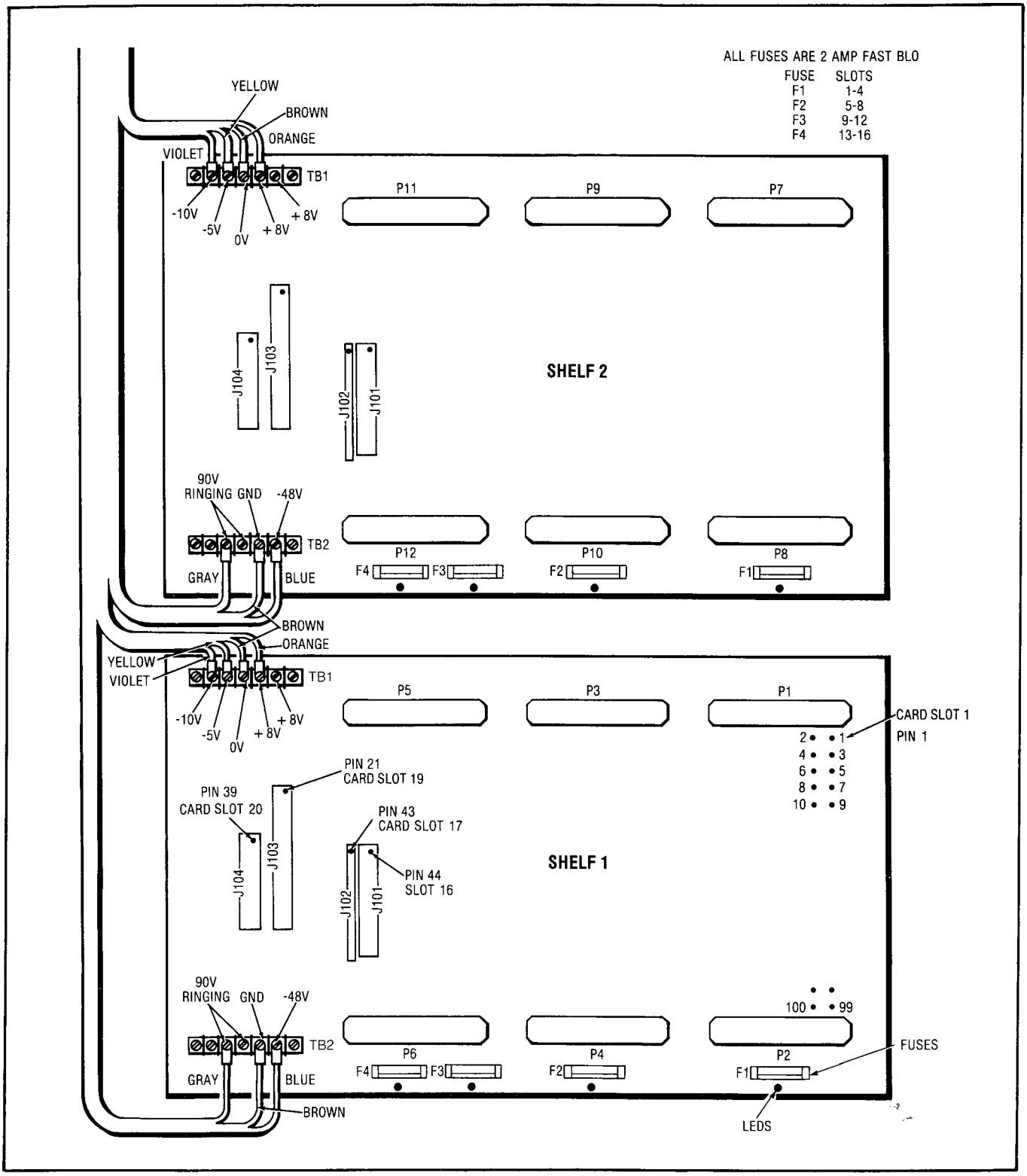

Fig. 505-1

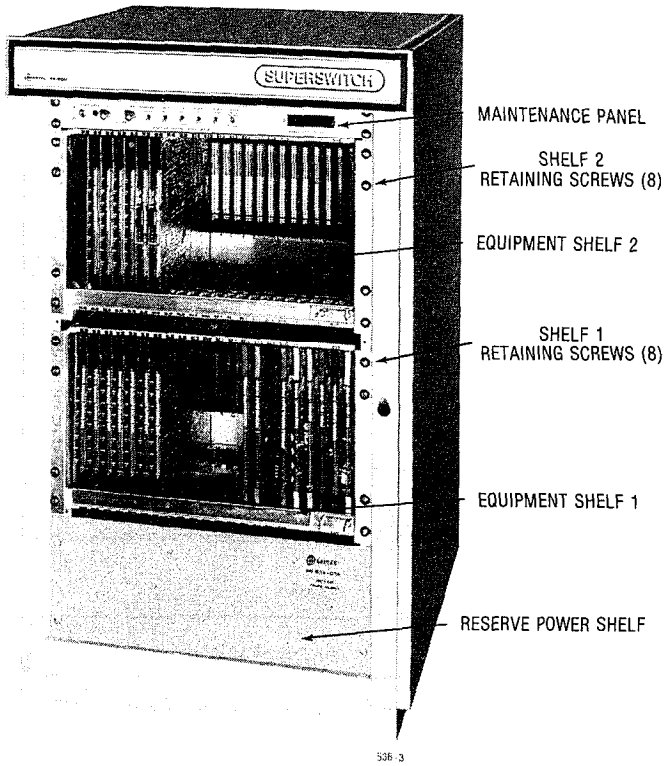
SUPERSWITCH
MAINTENANCE PANEL
SHELF 2
RETAINING SCREWS (8)
EQUIPMENT SHELF 2
SHELF 1
RETAINING SCREWS (8)
EQUIPMENT SHELF 1
RESERVE POWER SHELF
536-3

Fig. 505-2

REPLACE FIRST OR SECOND SHELF SX-200
MAP350-505
Issue 1, March 1980
Sheet 5 of 5

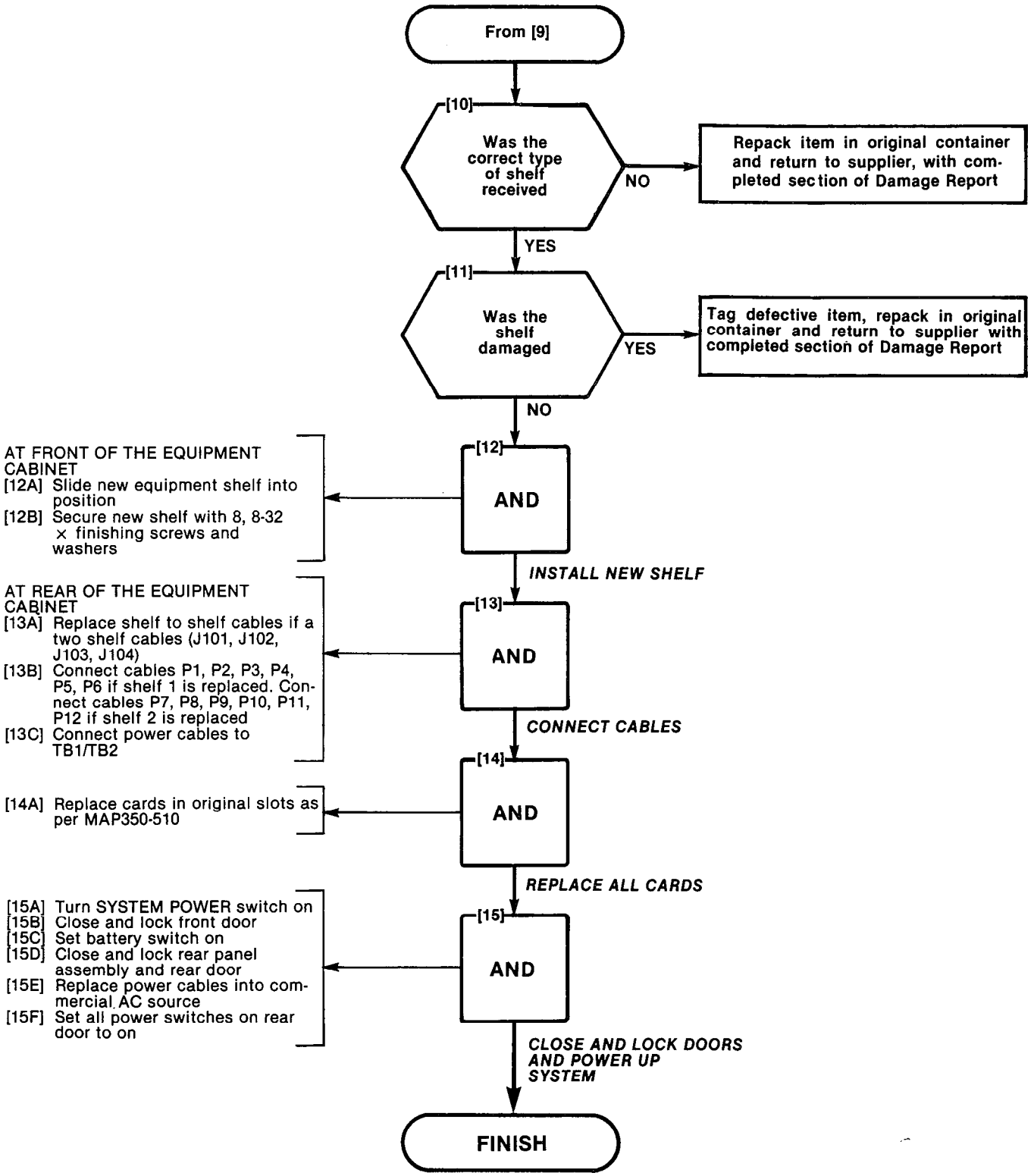

REPLACE HEATSINK ASSEMBLY SX-200
MAP350-506
Issue 1, March 1980
Sheet 1 of 3

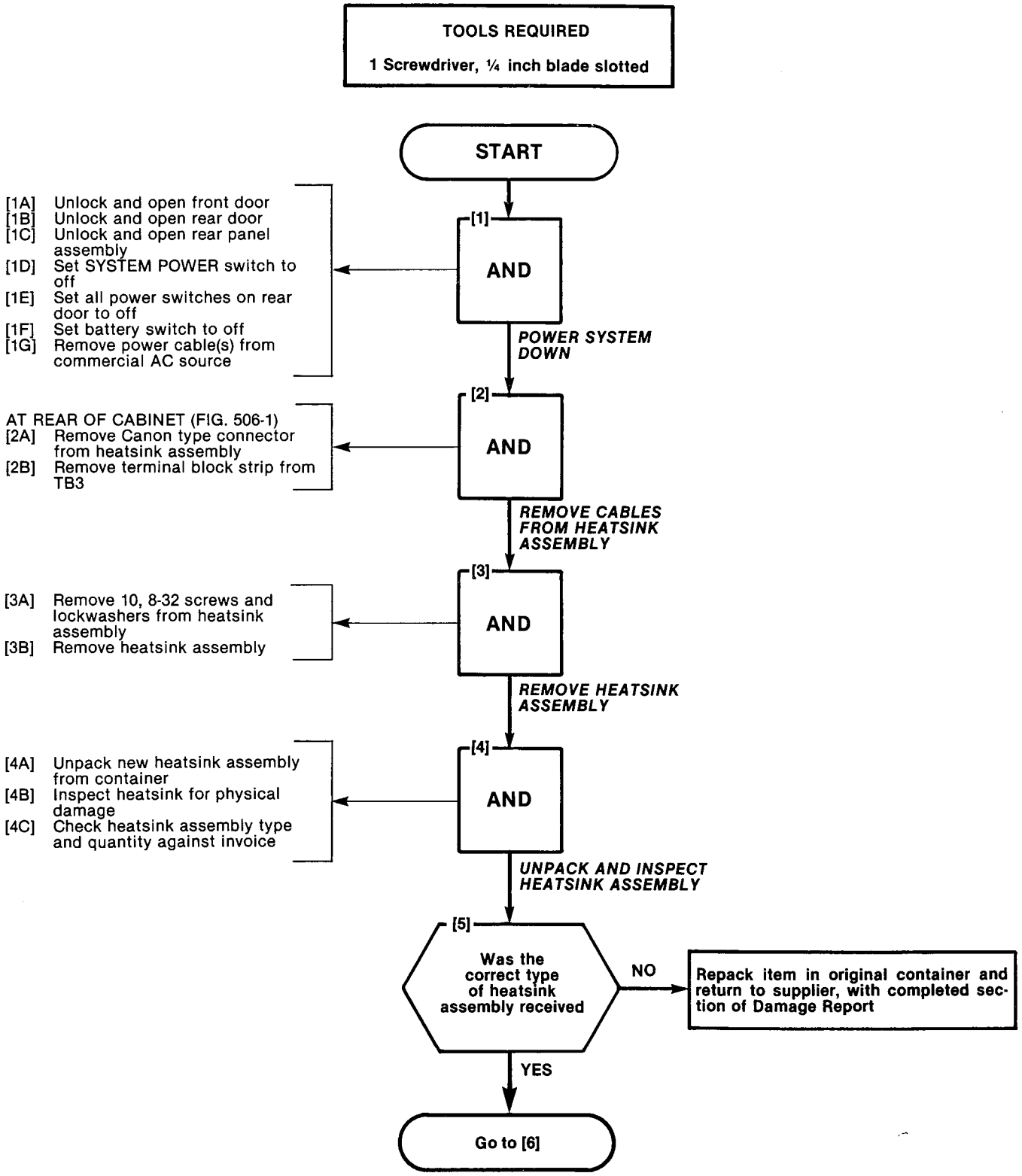

REPLACE HEATSINK ASSEMBLY SX-200
MAP350-506
Issue 1, March 1980
Sheet 2 of 3

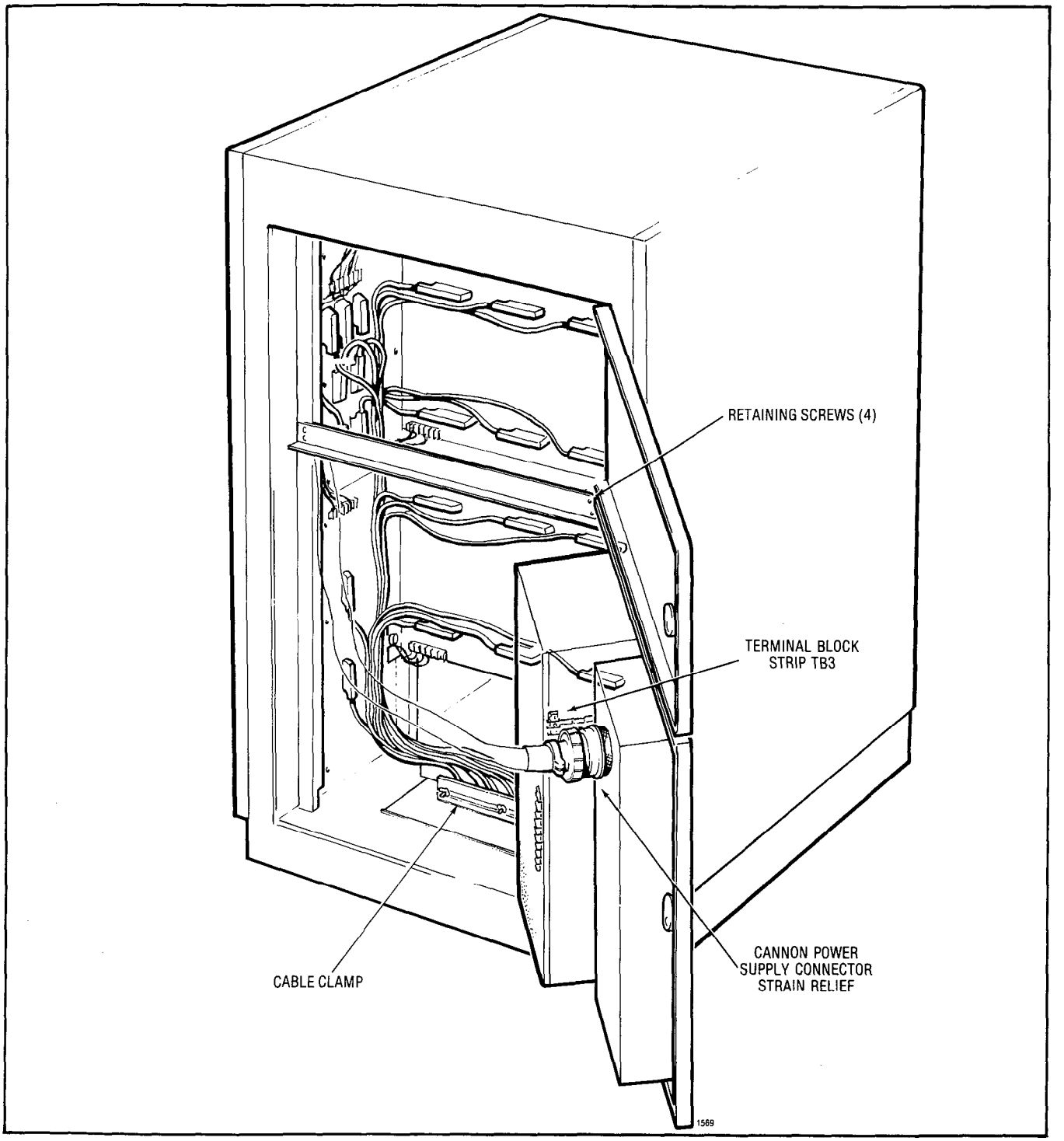

Fig. 506-1

REPLACE HEATSINK ASSEMBLY SX-200
MAP350-506
Issue 1, March 1980
Sheet 3 of 3

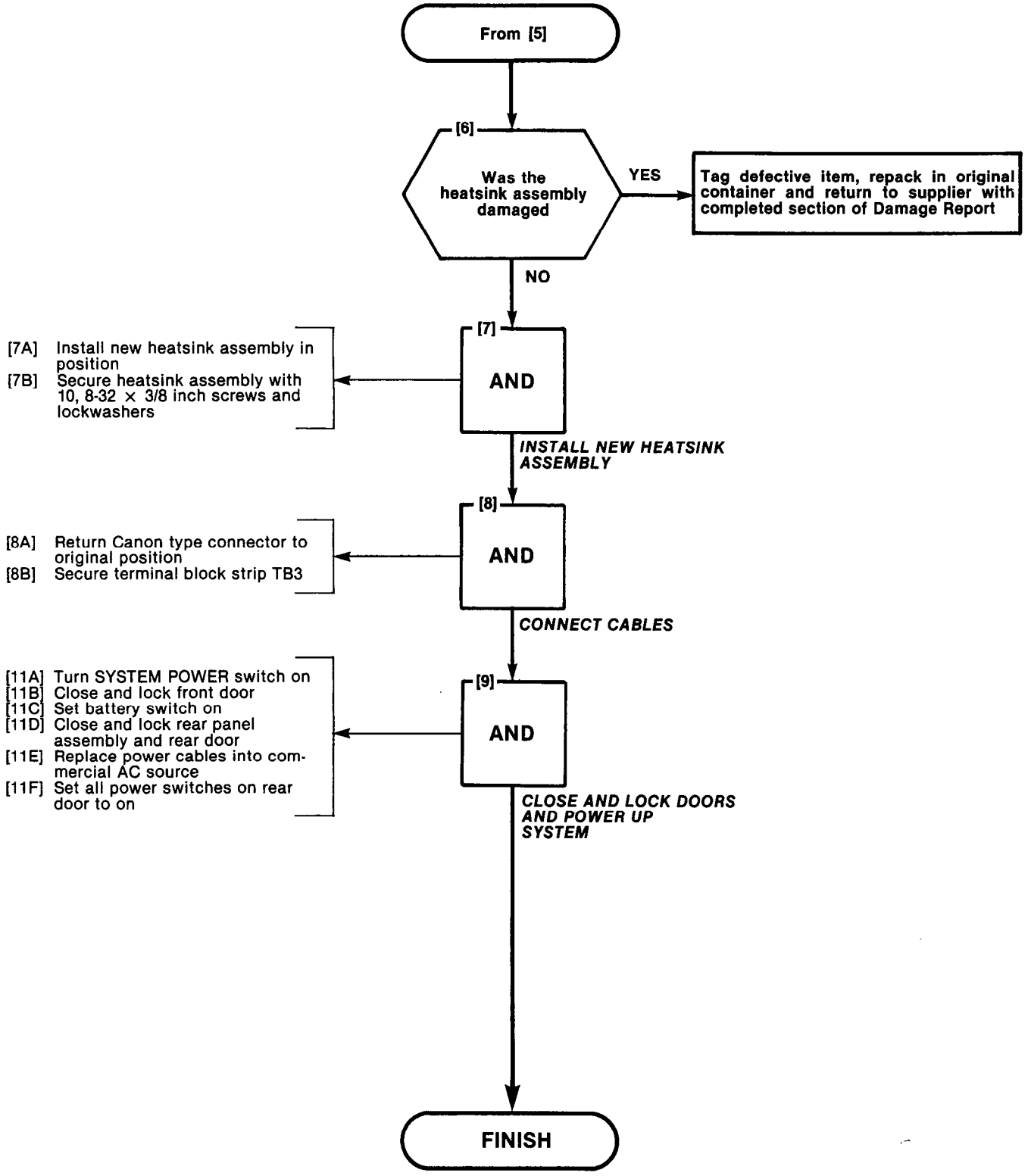

REPLACE POWER SUPPLY ASSEMBLY SX-200
MAP350-507
Issue 1, March 1980
Sheet 1 of 4

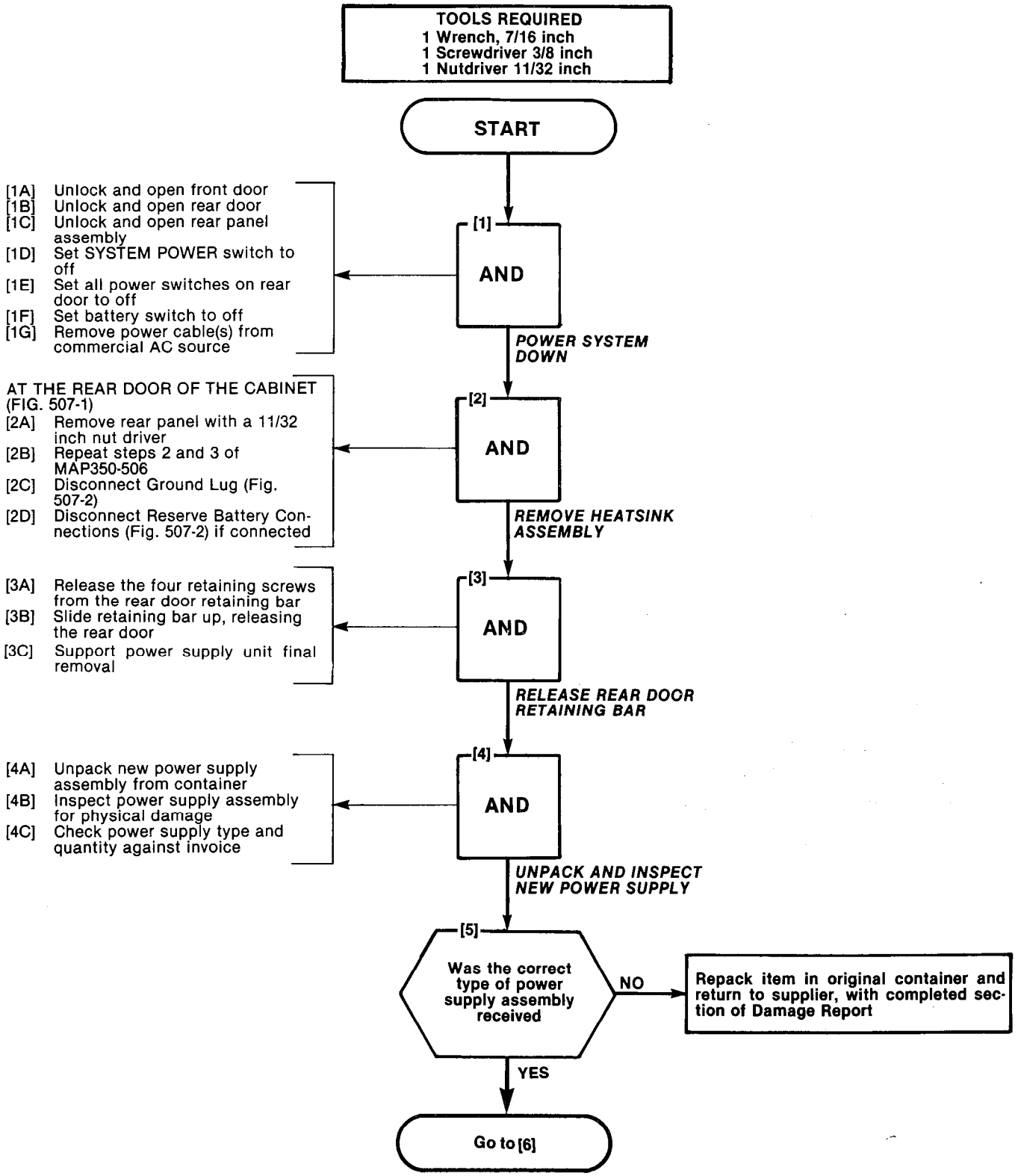

REPLACE POWER SUPPLY ASSEMBLY SX-200
MAP350-507
Issue 1, March 1980
Sheet 2 of 4

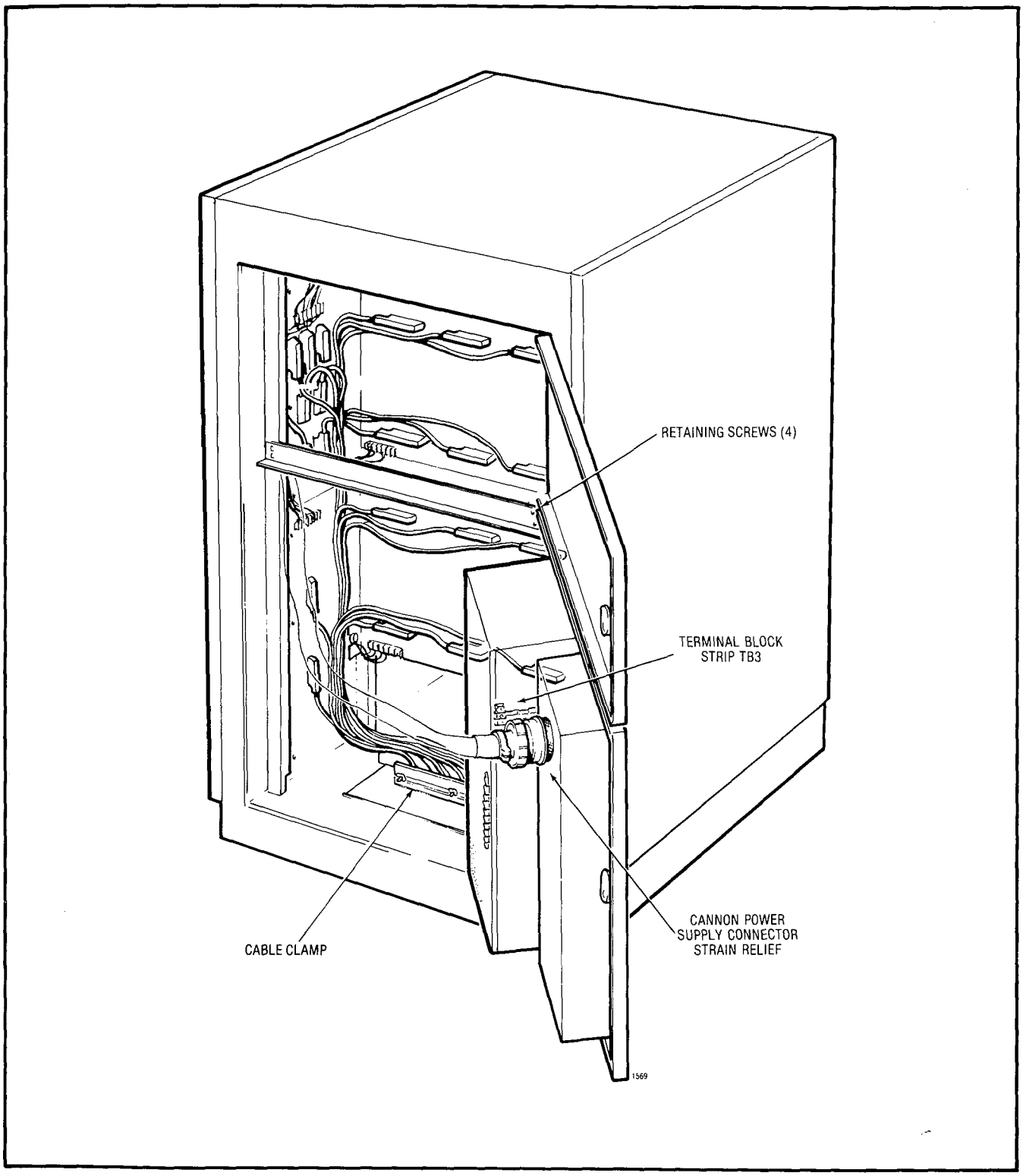

Fig. 507-1

REPLACE POWER SUPPLY ASSEMBLY SX-200
MAP350-507
Issue 1, March 1980
Sheet 3 of 4

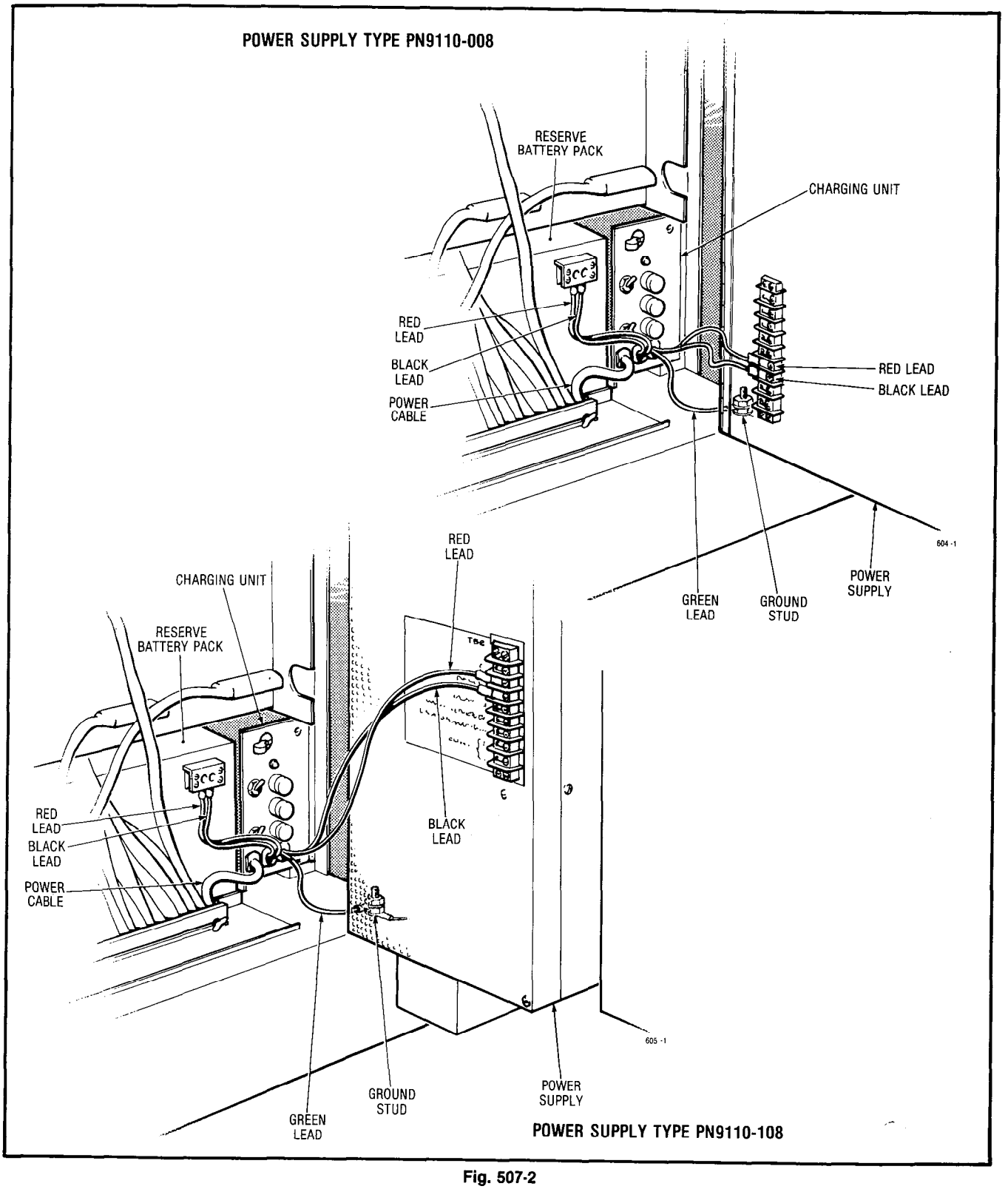

Fig. 507-2

REPLACE POWER SUPPLY ASSEMBLY SX-200
MAP350-507
Issue 1, March 1980
Sheet 4 of 4

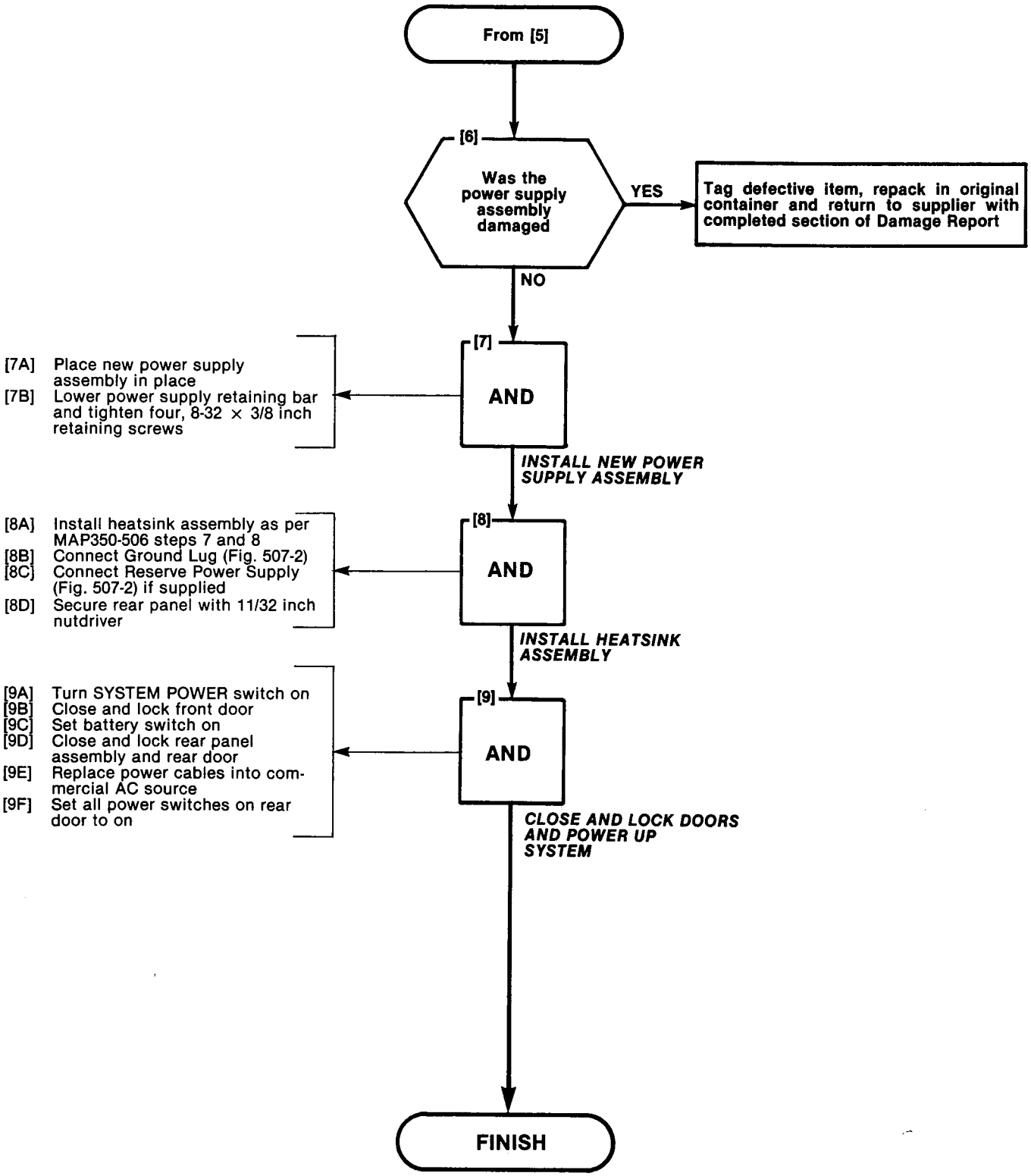

REPLACE RESERVE BATTERY BACK-UP SUPPLY SX-200
MAP350-508
Issue 1, March 1980
Sheet 1 of 5

TOOLS REQUIRED

1 Wrench, ½ inch
1 Screwdriver, 3/8 inch

START

CAUTION
Check that the BATTERY switch on the reserve battery pack is set to OFF. Check that the three switches on the battery charging unit are set to OFF.

CAUTION
The reserve battery pack weight is 125lbs. Care must be taken when lifting the battery pack.

[1]
AND

[1A] Unlock and open front door
[1B] Unlock and open rear door
[1C] Unlock and open rear panel assembly
[1D] Set SYSTEM POWER switch to off
[1E] Set all power switches on rear door to off
[1F] Set battery switch to off
[1G] Remove power cable(s) from commercial AC source

POWER SYSTEM DOWN

[2]
AND

AT THE REAR OF THE EQUIPMENT CABINET (FIG. 508-1)
[2A] Turn battery pack circuit breaker off
[2B] Disconnect reserve power supply ground lug
[2C] Disconnect all reserve power supply connections
[2D] Loosen the cable clamp and remove the AC power cord

DISCONNECT CABLES (FIG. 508-1)

[3]
AND

AT THE FRONT OF THE EQUIPMENT (FIG. 508-2)
[3A] Remove the four, 8-32 × 3/8 inch finishing screws and washers from the front panel of the battery pack
[3B] Remove the reserve battery back-up supply by sliding it forward carefully

REMOVE BATTERY PACK

[4]
AND

AT THE REAR OF THE EQUIPMENT CABINET (FIG. 508-3)
[4A] Remove the two reserve charger retaining screws
[4B] Remove the charger to the rear of the system

REMOVE THE CHARGER (FIG. 508-3)

Go to [5]

REPLACE RESERVE BATTERY BACK-UP SUPPLY SX-200
MAP350-508
Issue 1, March 1980
Sheet 2 of 5

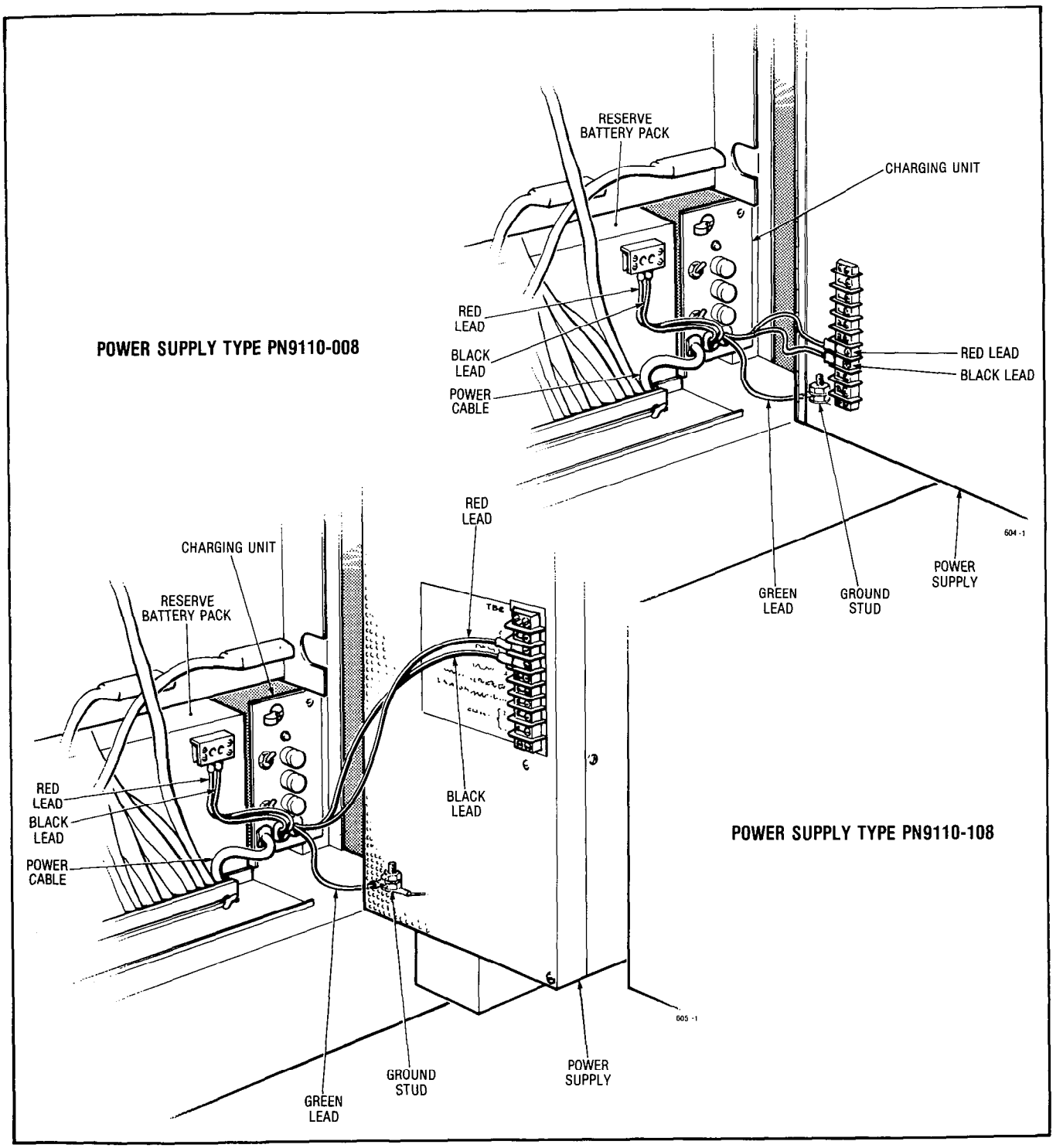

Fig. 508-1

REPLACE RESERVE BATTERY BACK-UP SUPPLY SX-200
MAP350-508
Issue 1, March 1980
Sheet 3 of 5

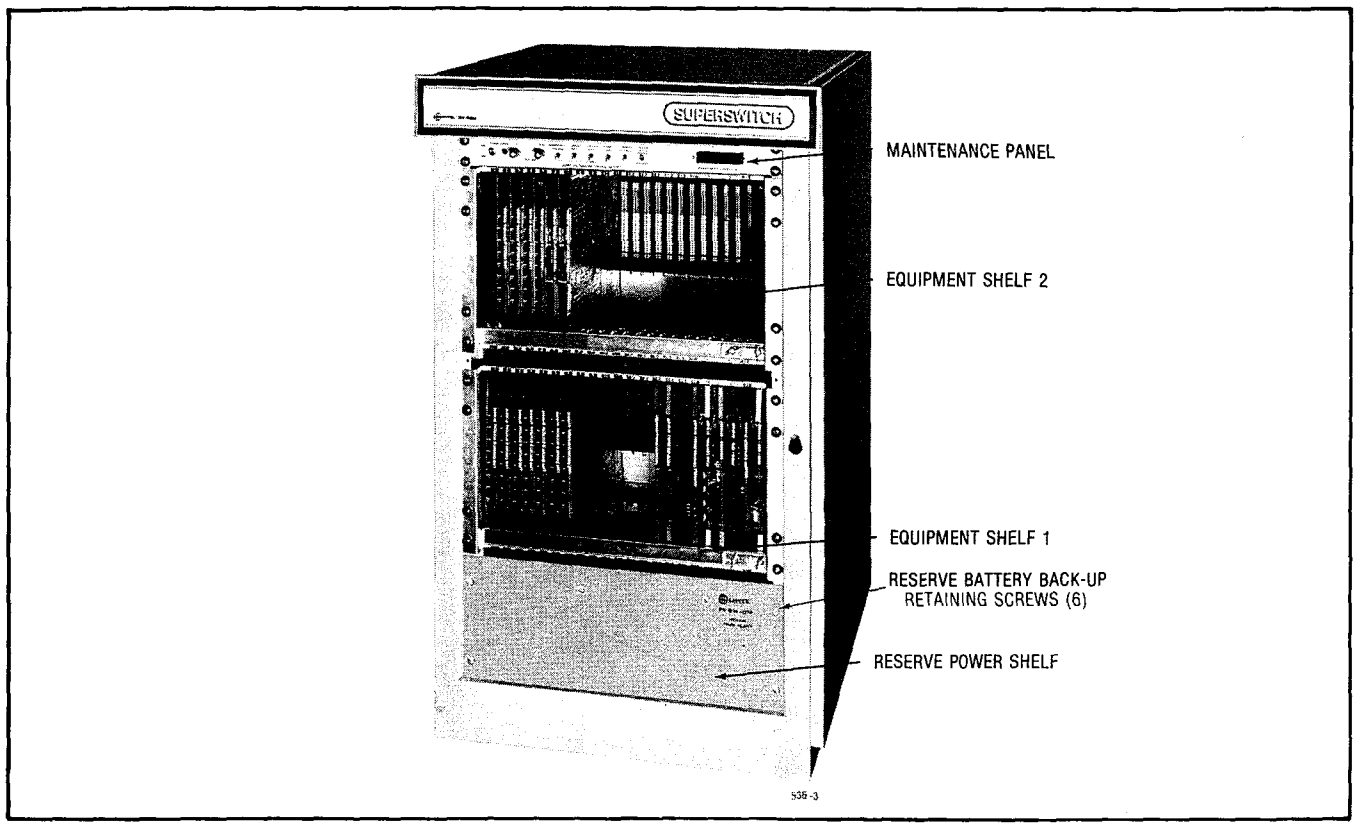

Fig. 508-2

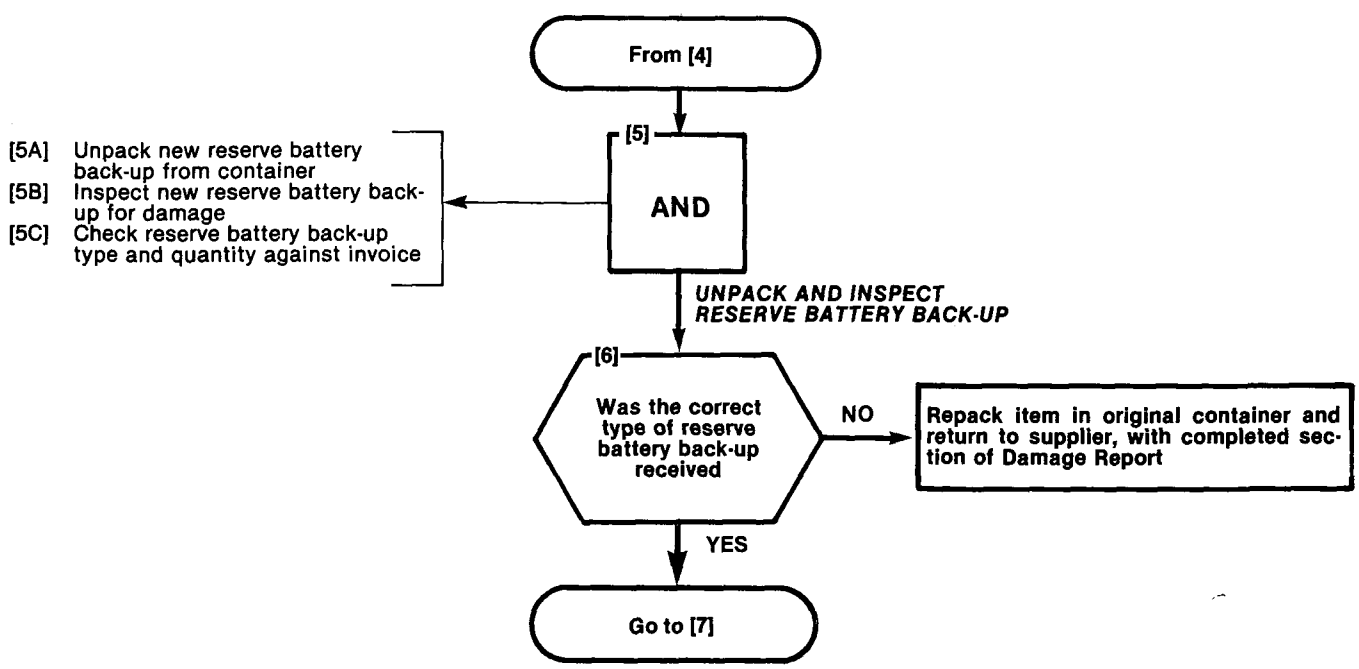

REPLACE RESERVE BATTERY BACK-UP SUPPLY SX-200
MAP350-508
Issue 1, March 1980
Sheet 4 of 5

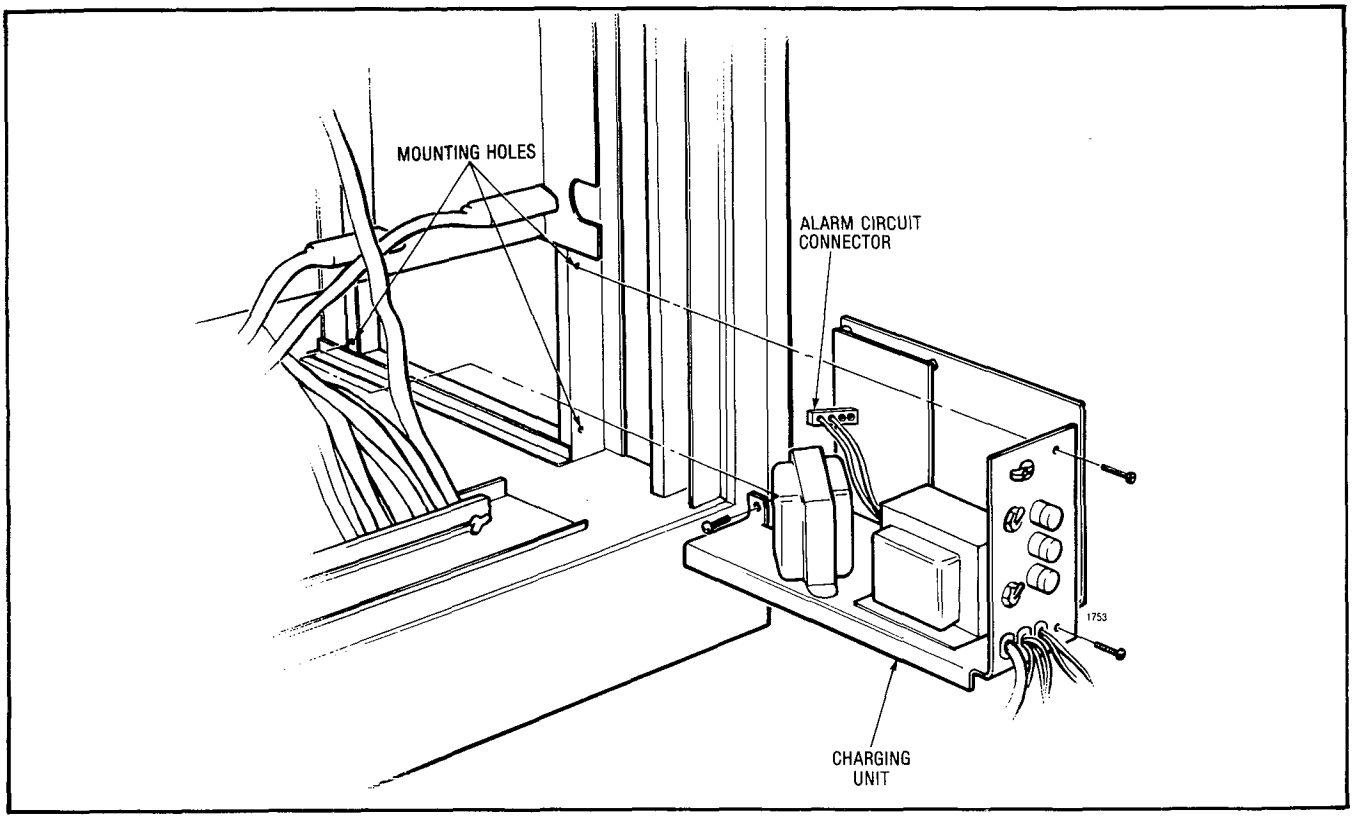

Fig. 508-3

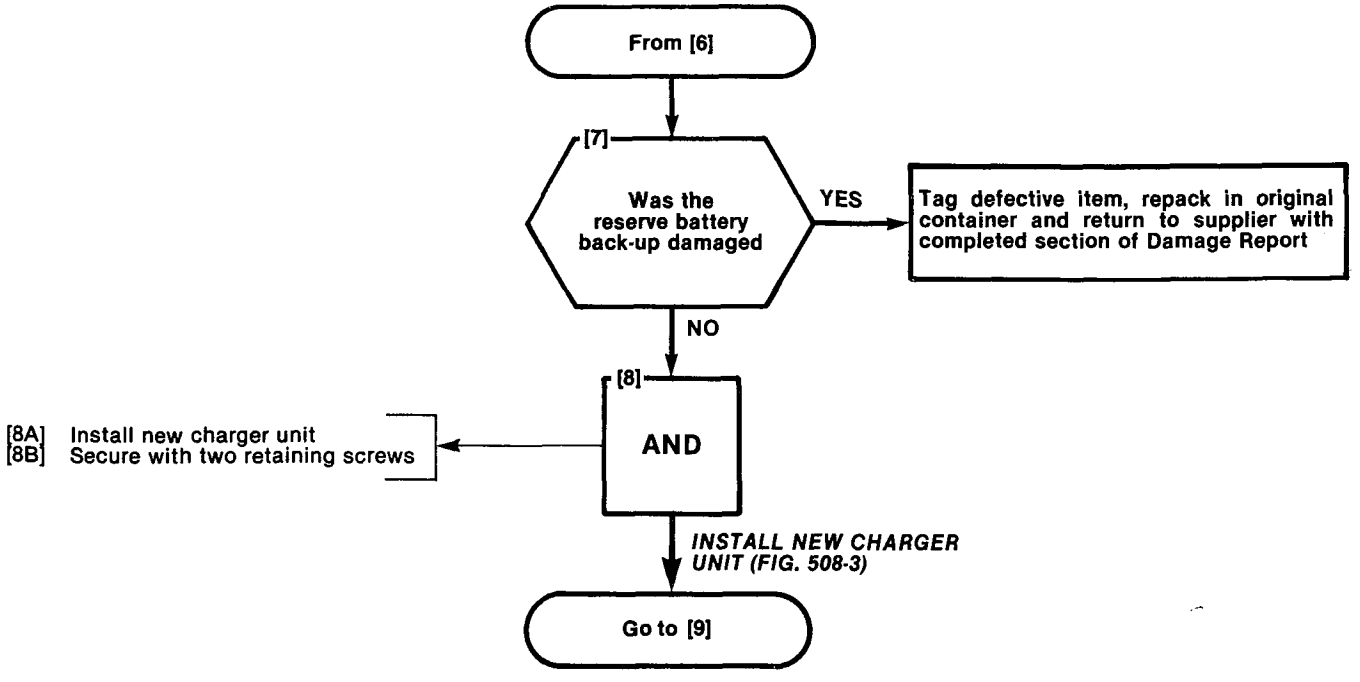

REPLACE RESERVE BATTERY BACK-UP SUPPLY SX-200
MAP350-508
Issue 1, March 1980
Sheet 5 of 5

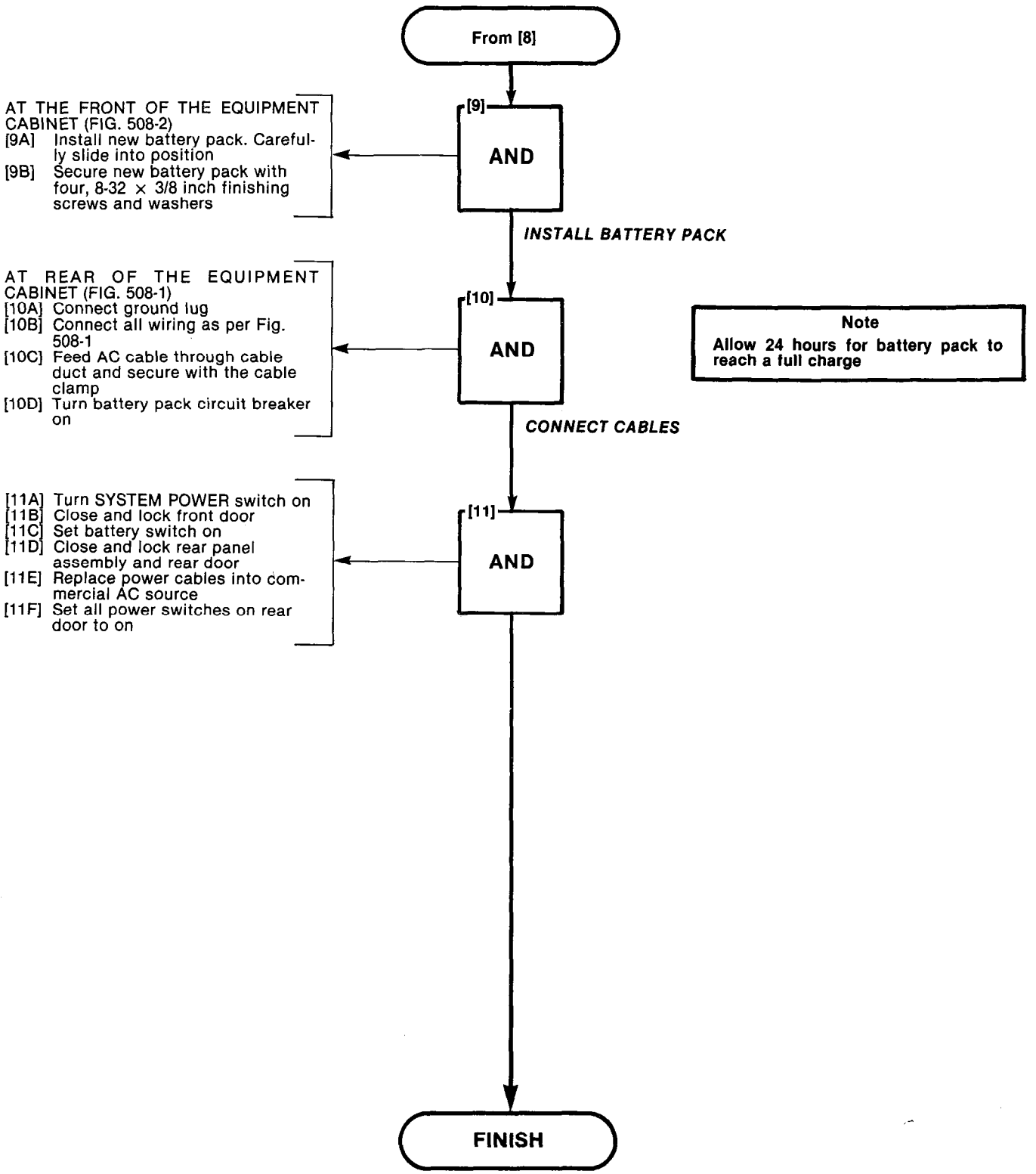

REPLACE BACKPLANE TRANSLATOR BOARD SX-200
MAP350-509
Issue 1, March 1980
Sheet 1 of 3

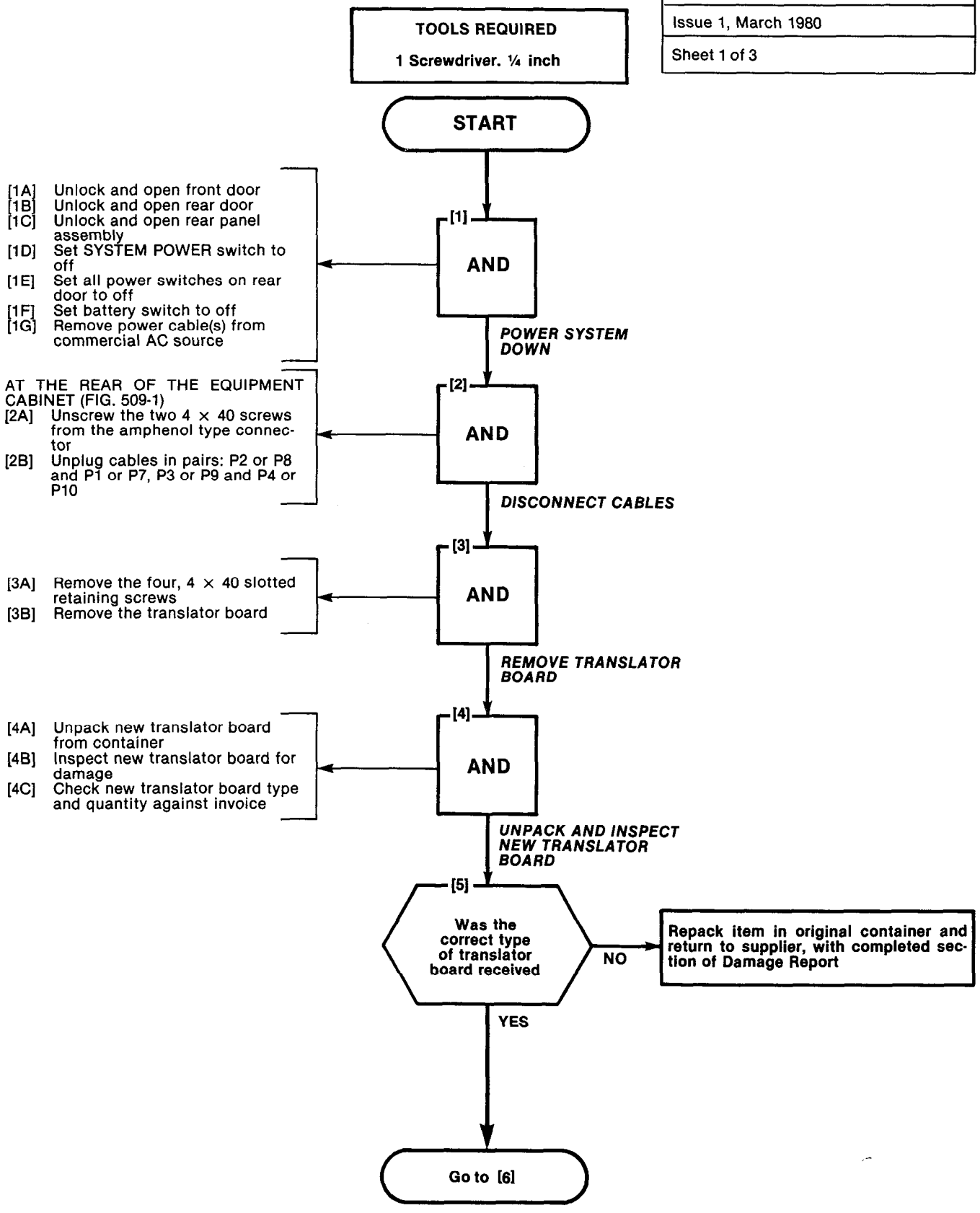

REPLACE BACKPLANE TRANSLATOR BOARD SX-200
MAP350-509
Issue 1, March 1980
Sheet 2 of 3

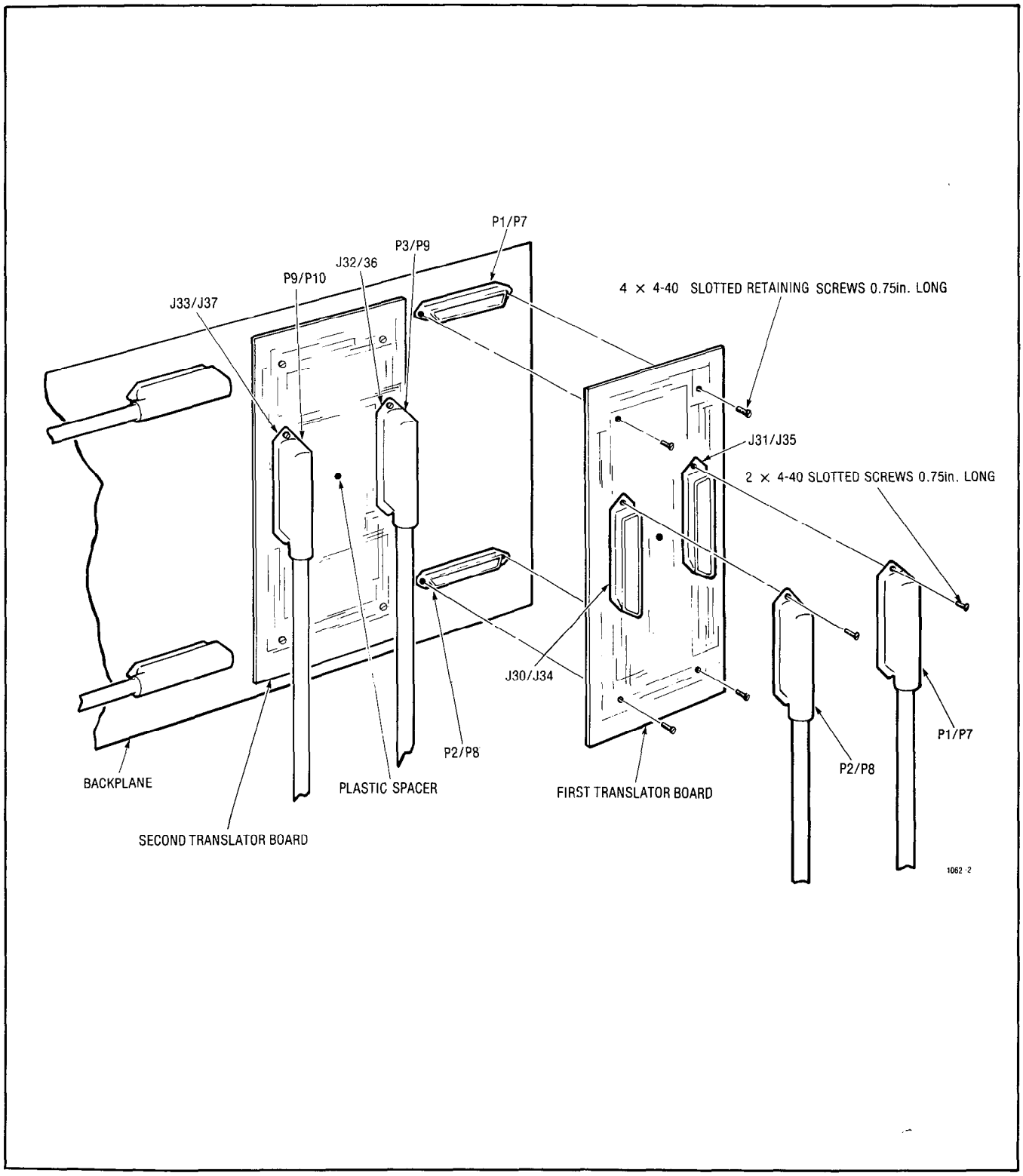

Fig. 509-1

REPLACE BACKPLANE TRANSLATOR BOARD SX-200
MAP350-509
Issue 1, March 1980
Sheet 3 of 3

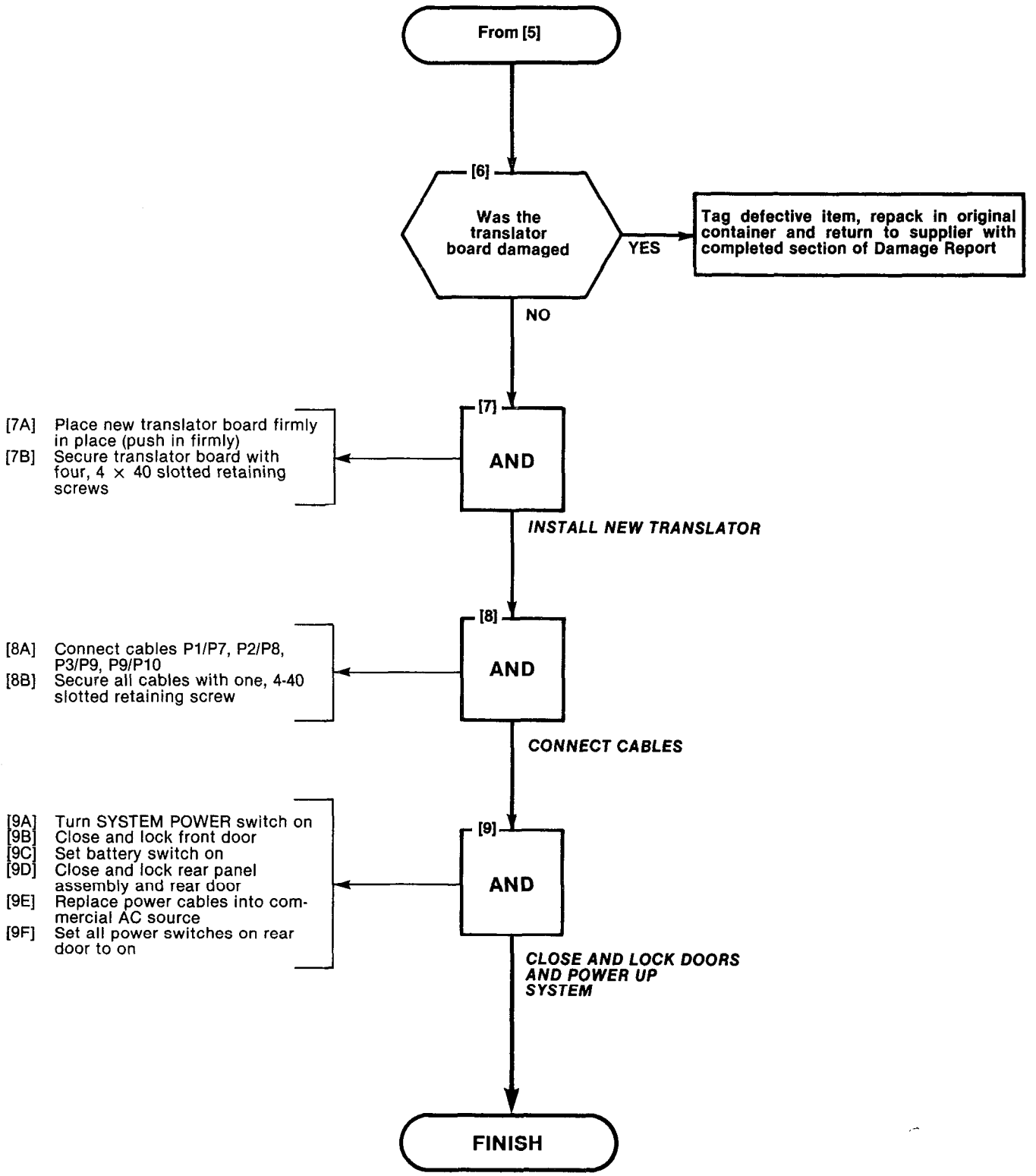

REPLACE CARDS IN SHELF SX-200
MAP350-510
Issue 1, March 1980
Sheet 1 of 3

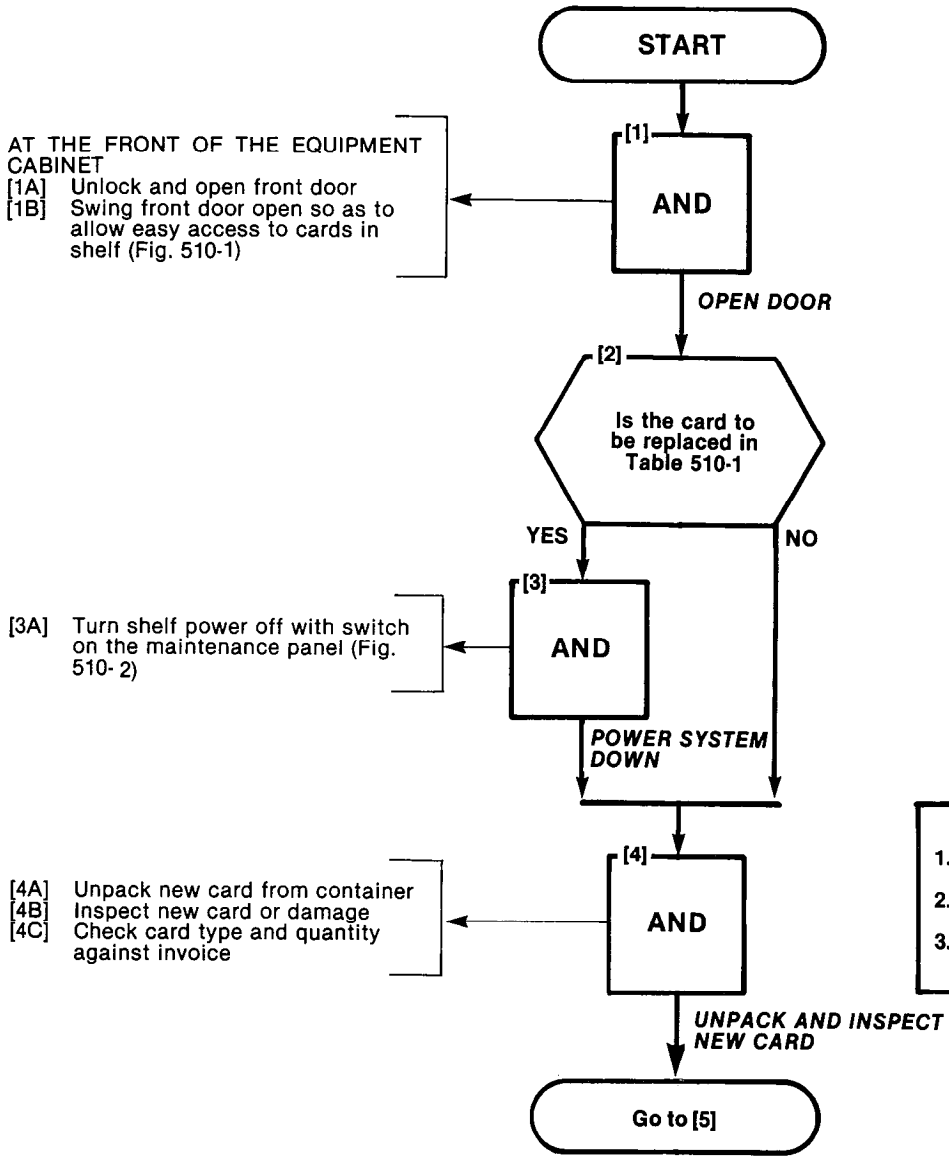

Note

1. **Do not handle card by gold inlay contacts**
2. **Beware of static, service person should wear ground strap**
3. **Do not store batteries for cards,in place,on cards,while in storage**

TABLE 510-1
COMMON CONTROL CARDS

Type	Part Number	Card Extractor Color Code
RAM/COS Card	9110-002	White
Memory Expander	9110-018	Brown
PROM/RAM Expander	9110-119	Brown
PROM/CPU Card	9110-003	Red
Scanner Card	9110-004	Orange
Tone Control Card	9110-005	Yellow

1587

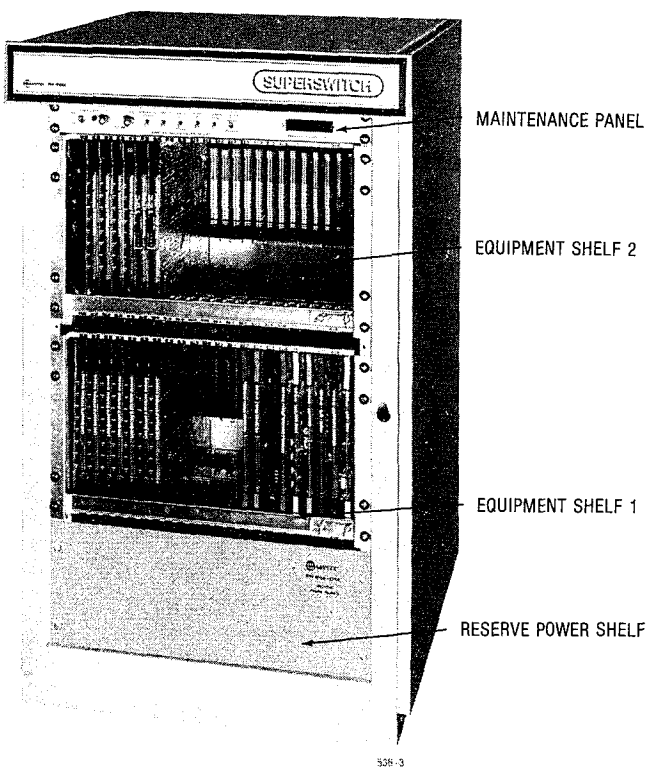

Fig. 510-1

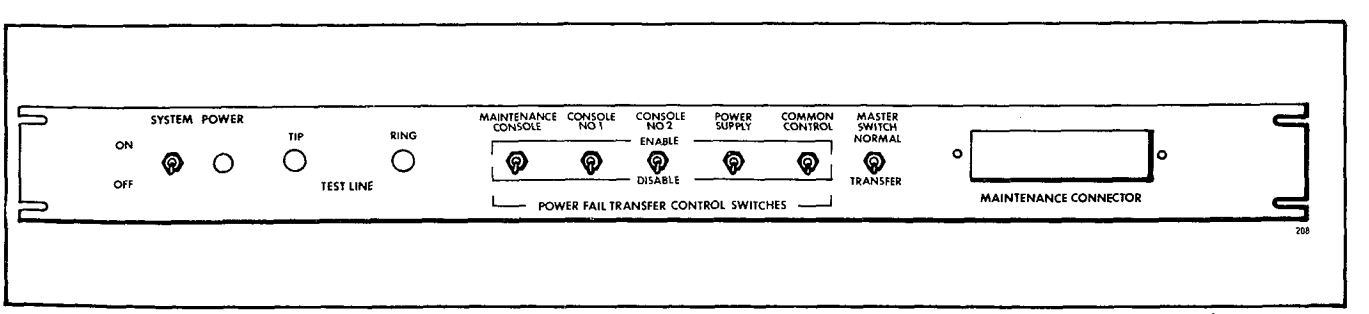

Fig. 510-2 Maintenance Panel

REPLACE CARDS IN SHELF SX-200
MAP350-510
Issue 1, March 1980
Sheet 3 of 3

From [4]

[5] Was the correct type of card received

NO → Repack item in original container and return to supplier, with completed section of Damage Report

YES

[6] Was the card damaged

YES → Tag defective item, repack in original container and return to supplier with completed section of Damage Report

NO

[7] AND

[7A] Remove card by prying back card extractors and gently remove card

REMOVE CARD

[8] AND

[8A] Insert new card gently and push card extractors flat

INSERT NEW CARD

[9] AND

[9A] Turn shelf power back on
[9B] Close and lock front door

POWER UP SYSTEM

FINISH

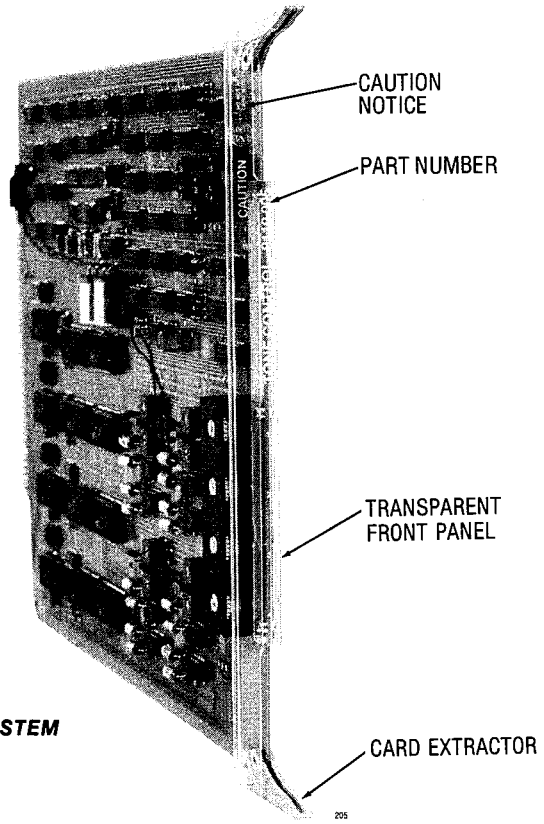

Fig. 510-3 Typical Circuit Card

REPLACE MAINTENANCE PANEL SX-200
MAP350-511
Issue 1, March 1980
Sheet 1 of 2

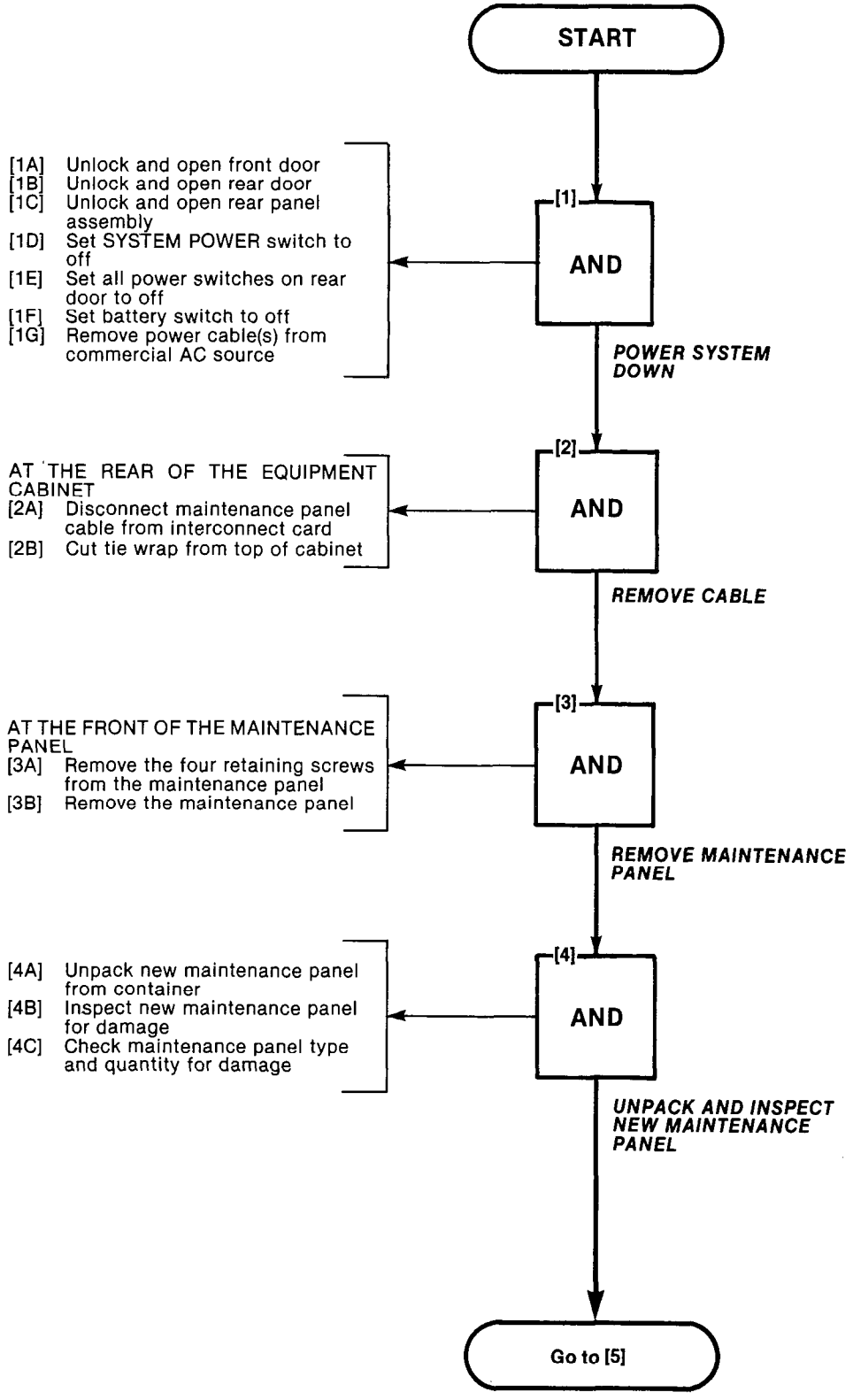

REPLACE MAINTENANCE PANEL SX-200
MAP350-511
Issue 1, March 1980
Sheet 2 of 2

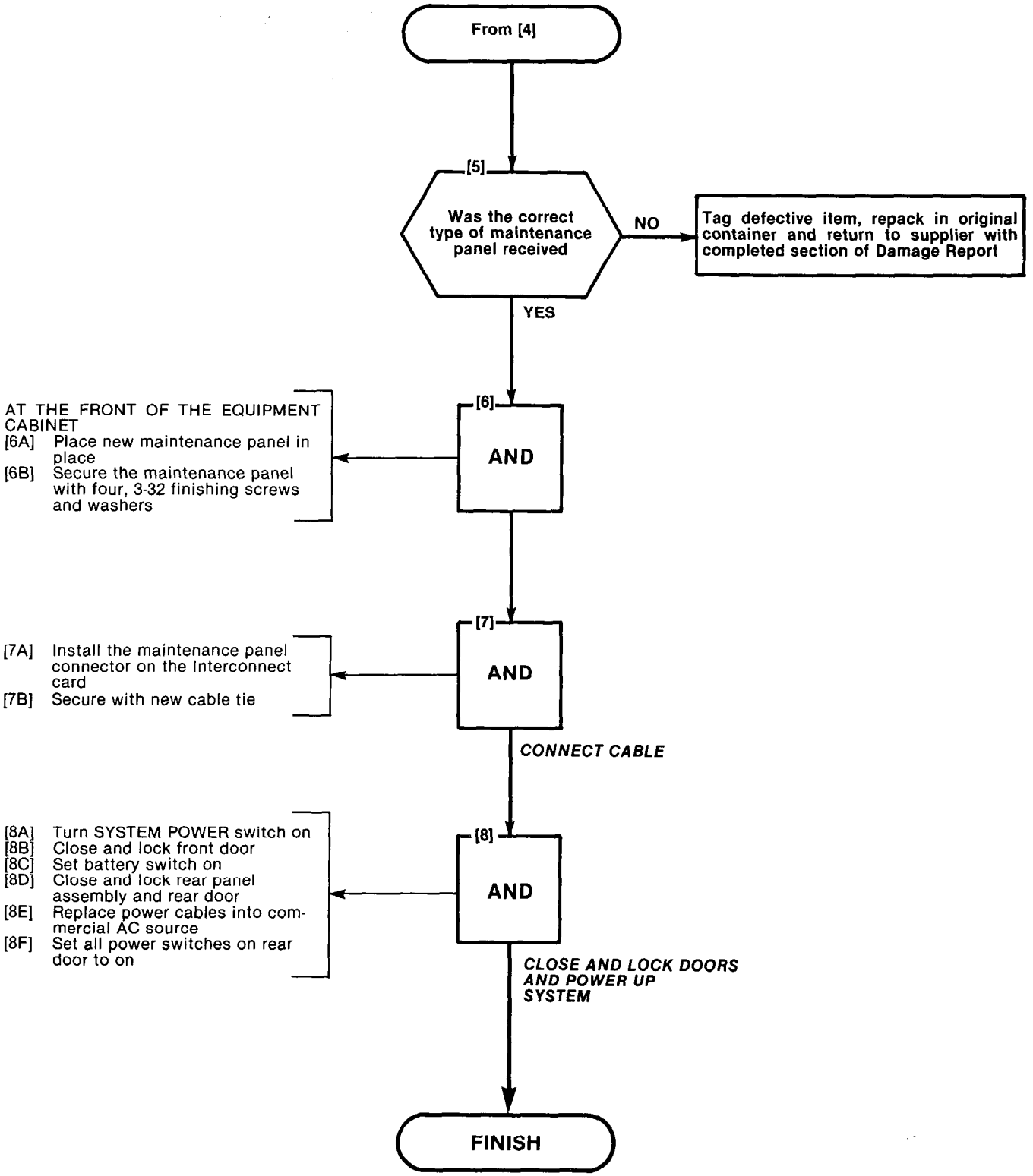

REPLACE WIRING HARNESS SX-200
MAP350-512
Issue 1, March 1980
Sheet 1 of 4

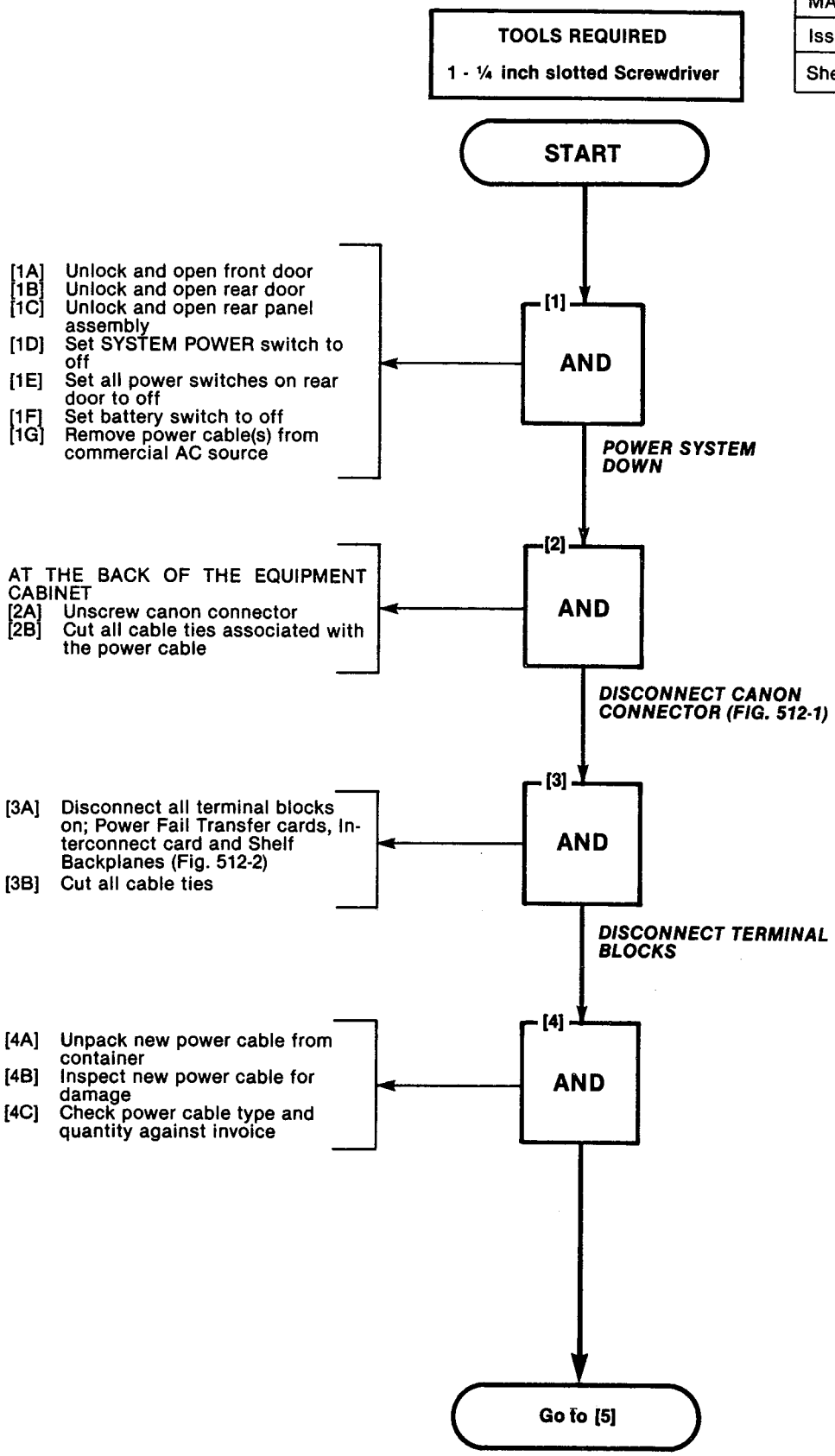

REPLACE WIRING HARNESS SX-200
MAP350-512
Issue 1, March 1980
Sheet 2 of 4

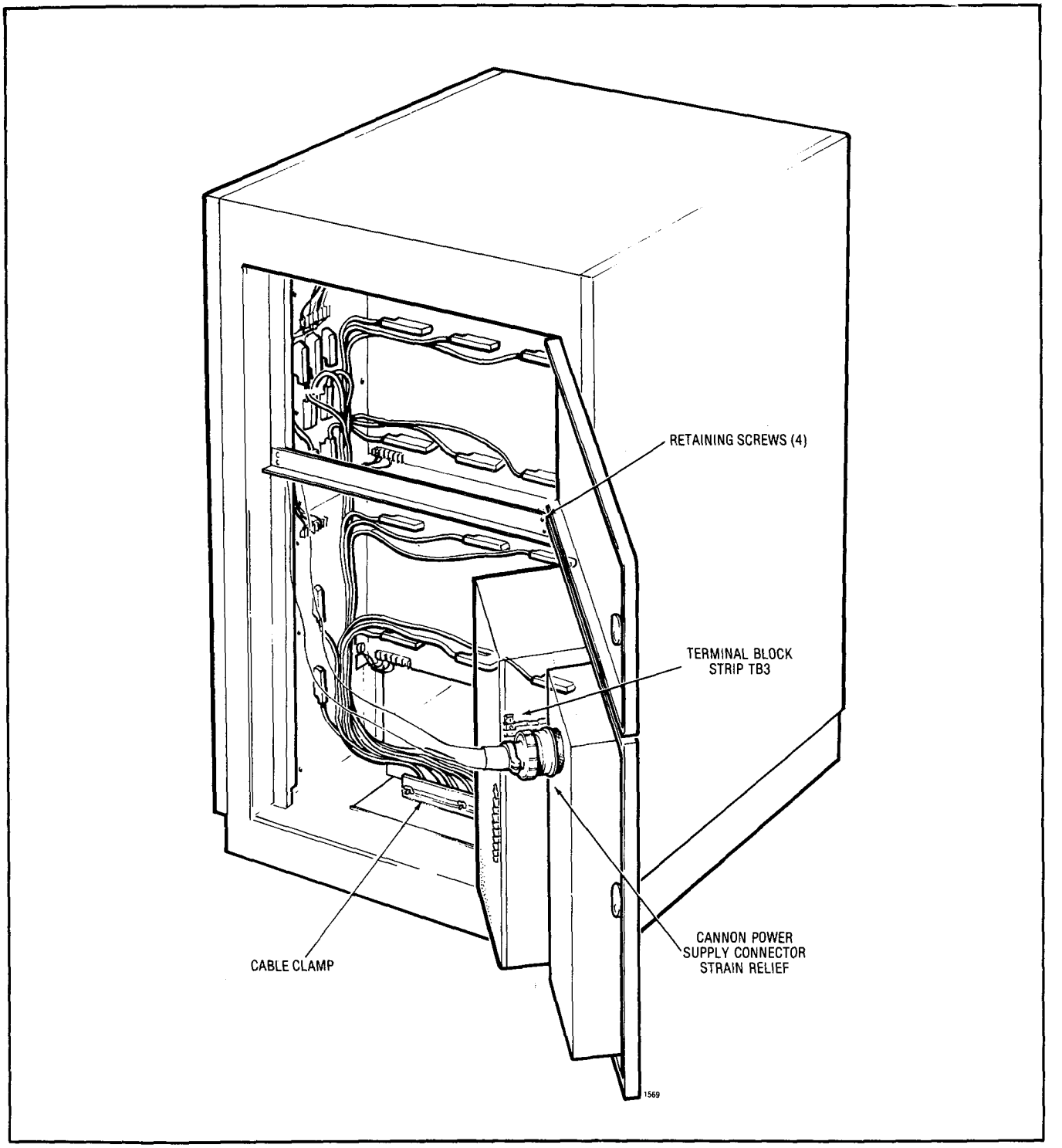

Fig. 512-1

REPLACE WIRING HARNESS SX-200
MAP350-512
Issue 1, March 1980
Sheet 3 of 4

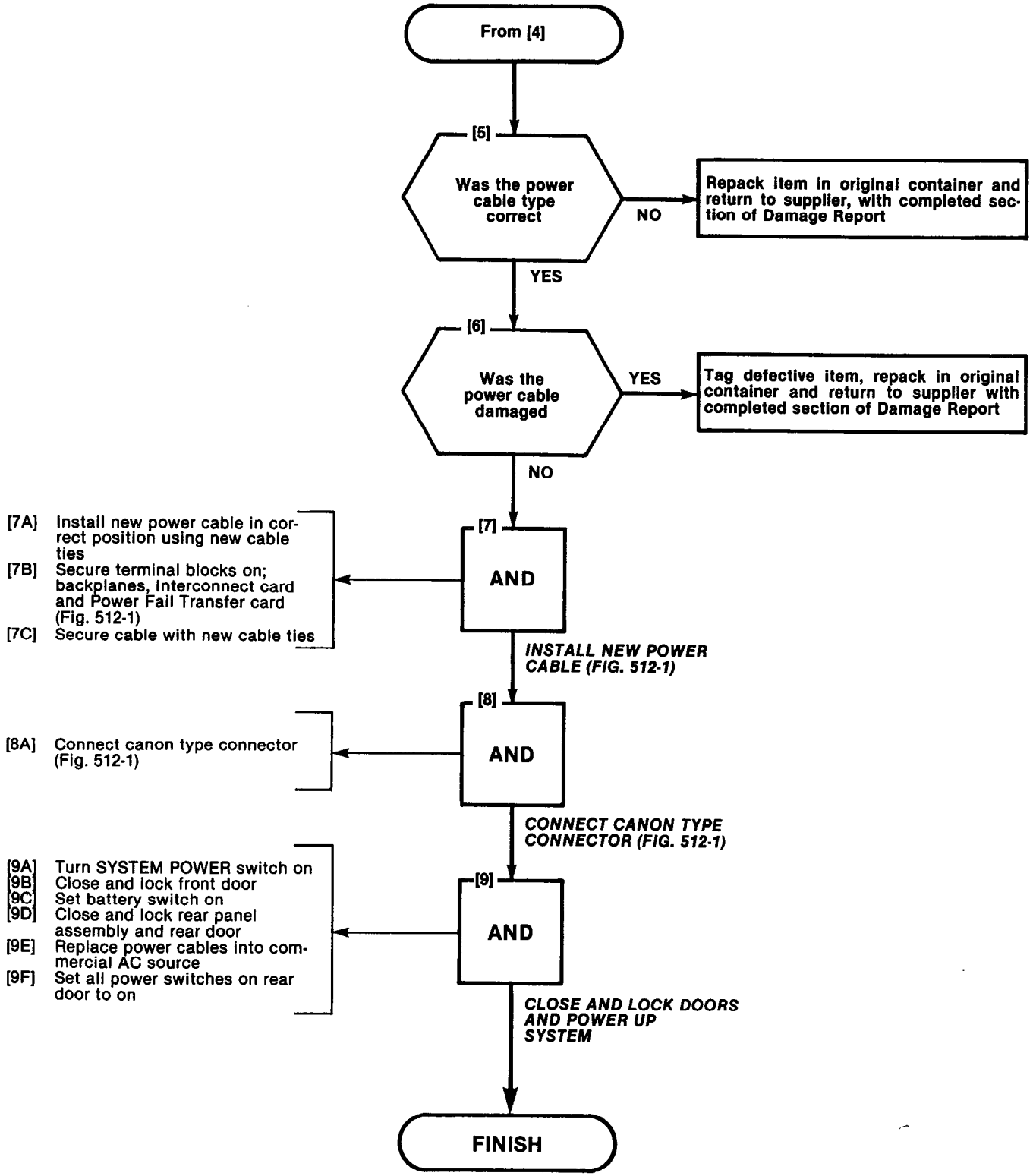

REPLACE WIRING HARNESS SX-200
MAP350-512
Issue 1, March 1980
Sheet 4 of 4

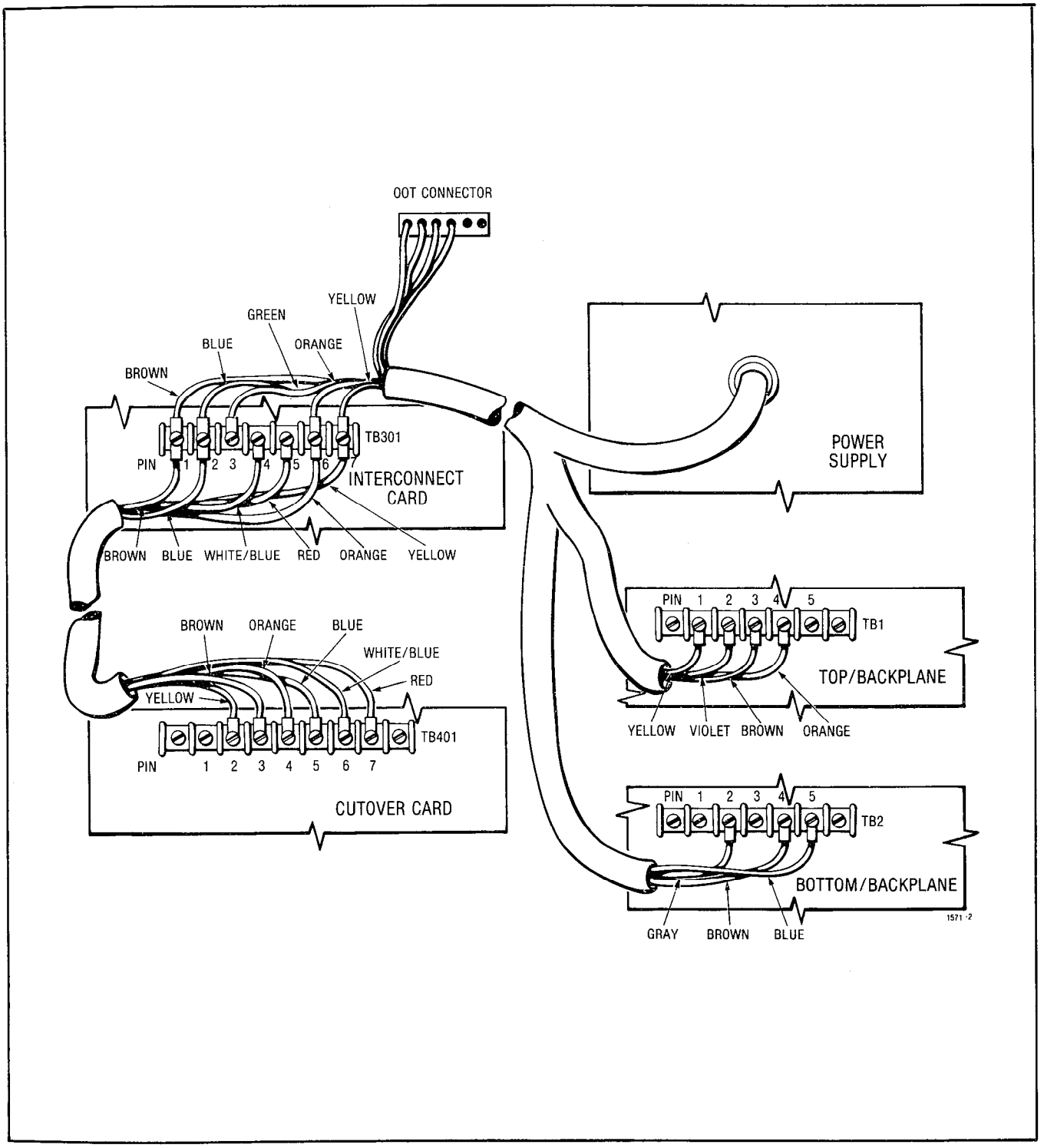

Fig. 512-2 Wiring Diagram

APPENDIX 6
POWER CHECKS

General

A6.01 This appendix consists of a series of MAPs which will be directly referenced by the charts of part six, SX-100/SX-200 Power Supply. The appendix is also referenced directly by the tables of part five, Fault Report Troubleshooting and Cross Reference.

A6.02 These MAPs describe how to measure the electrical voltages in key areas of the SX-100 or SX-200. The measurements will aid the repair person in the location of a specific fault. At all times the repair person should follow the safety precautions suggested in the MAPs to ensure personal and equipment safety.

A6.03 Table A6-1 is a listing of all power checks that may be performed when troubleshooting an SX-100 or SX-200.

- MAP350-600, Power Supply Check deals with the SX-200 power supply only. This map deals primarily with the system not running or a major power failure
- MAP350-601 deals with a suspected power failure on or at the interconnect card of the SX-200
- MAP350-602 deals with a suspected power failure on the Power Fail Transfer card where the system may or may not be in a transfer condition
- MAP350-603 deals with the voltages that appear on the terminal blocks of the backplanes in an SX-100 or SX-200
- MAP350-604 outlines the procedure for checking the voltage on the SX-200 Reserve Battery Back-up
- MAP350-605 outlines the procedure for checking the voltages to the combined console interface, power fail transfer and interconnect card of the SX-100
- MAP350-606 outlines the procedure for checking the voltage on the SX-100 Reserve Battery Back-up

TABLE A6-1
POWER CHECKS

SX-200	MAP	SX-100	MAP
Power Supply Check	350-600	Interconnect Card	350-605
Interconnect Card	350-601	Backplane	350-603
Power Fail Transfer Card	350-602	Reserve Battery Back-up	350-606
Backplane(s)	350-603		
Reserve Battery Back-Up	350-604		

POWER SUPPLY CHECK SX-200
MAP350-600
Issue 1, April 80
Sheet 1 of 5

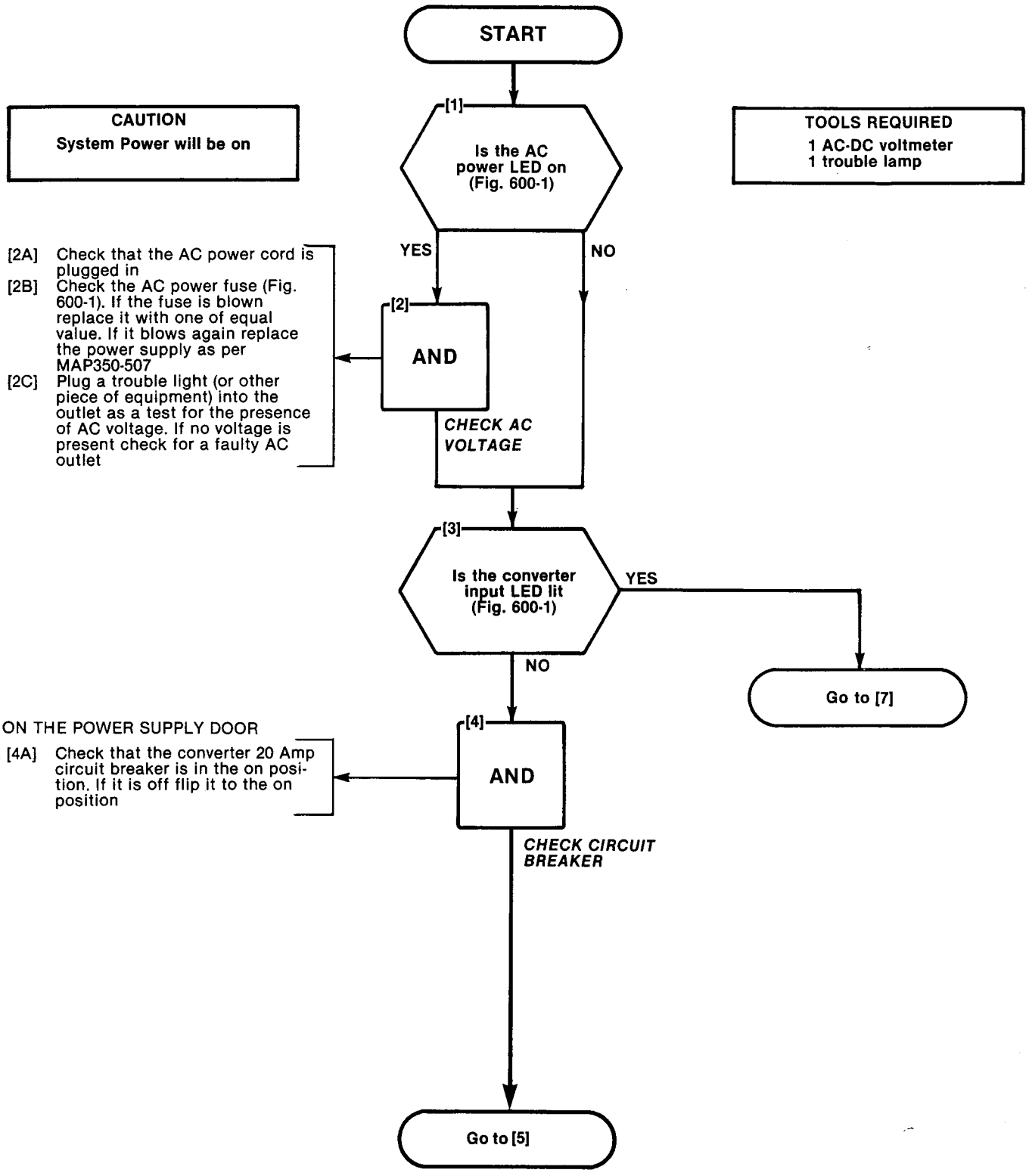

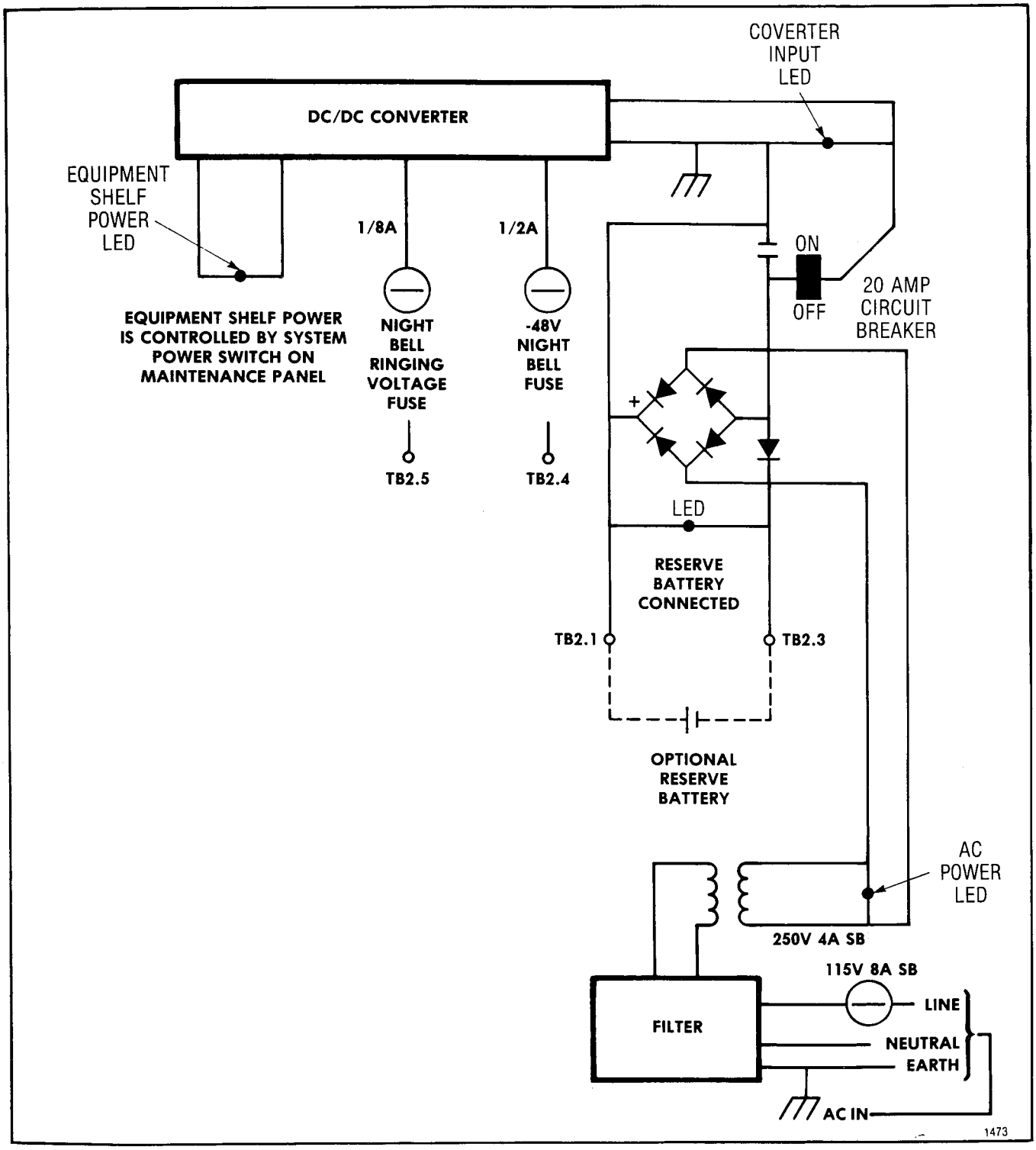

Fig. 600-1 SX-200 Back door Electrical Schematic

POWER SUPPLY CHECK SX-200
MAP350-600
Issue 1, April 80
Sheet 3 of 5

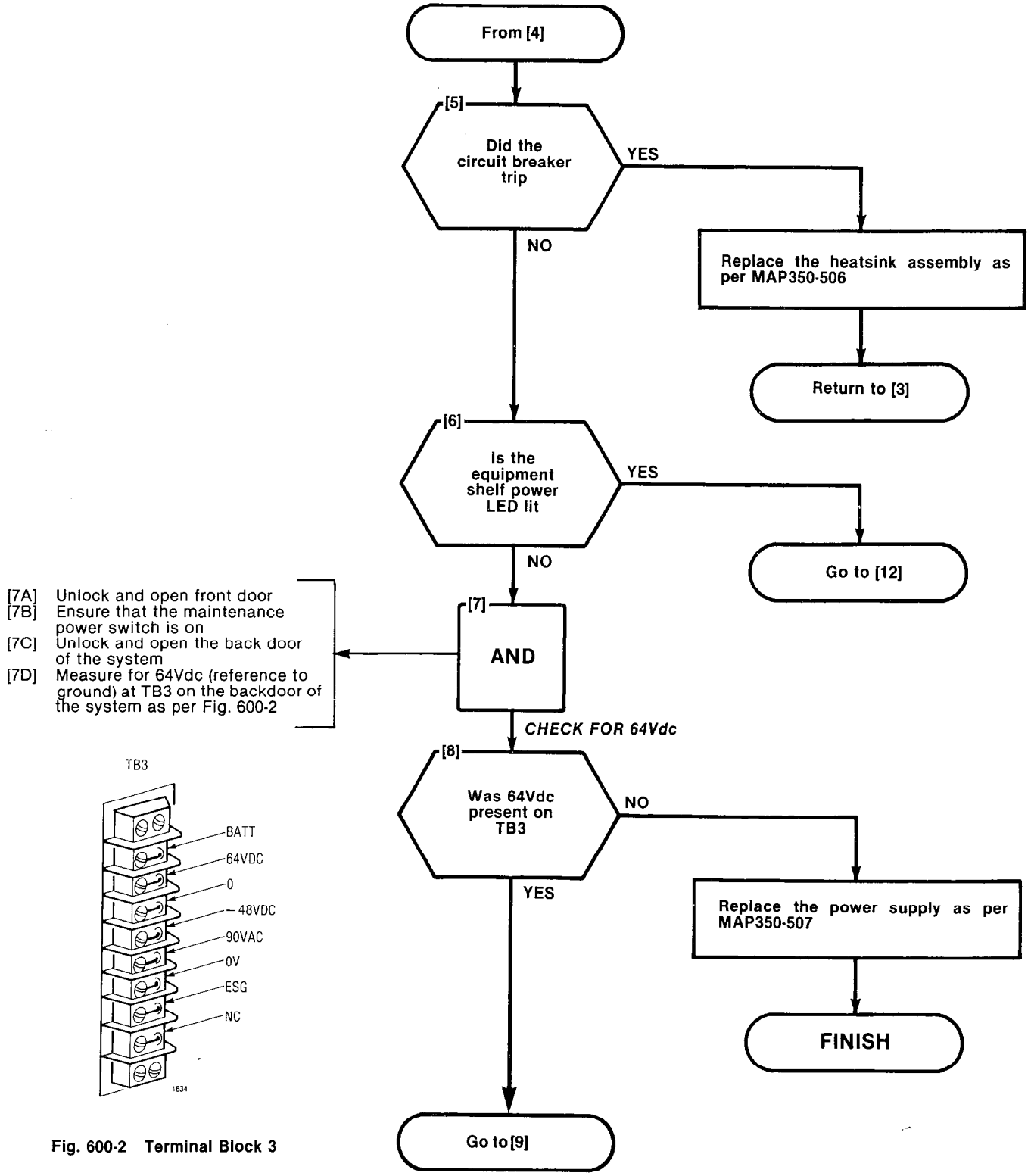

Fig. 600-2 Terminal Block 3

SECTION MITL9105/9110-98-350

POWER SUPPLY CHECK SX-200
MAP350-600
Issue 1, April 80
Sheet 4 of 5

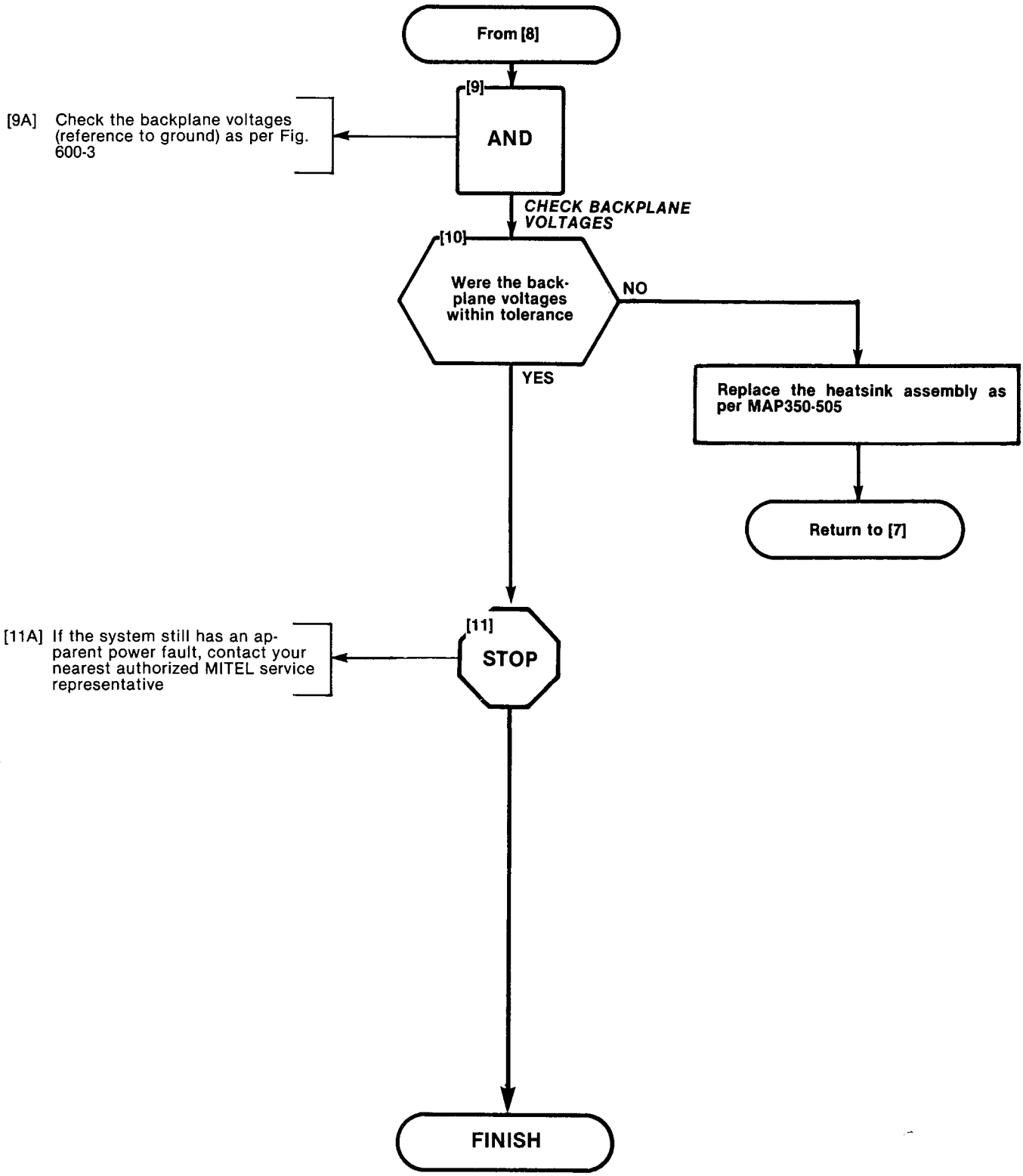

POWER SUPPLY CHECK SX-200
MAP350-600
Issue 1, April 80
Sheet 5 of 5

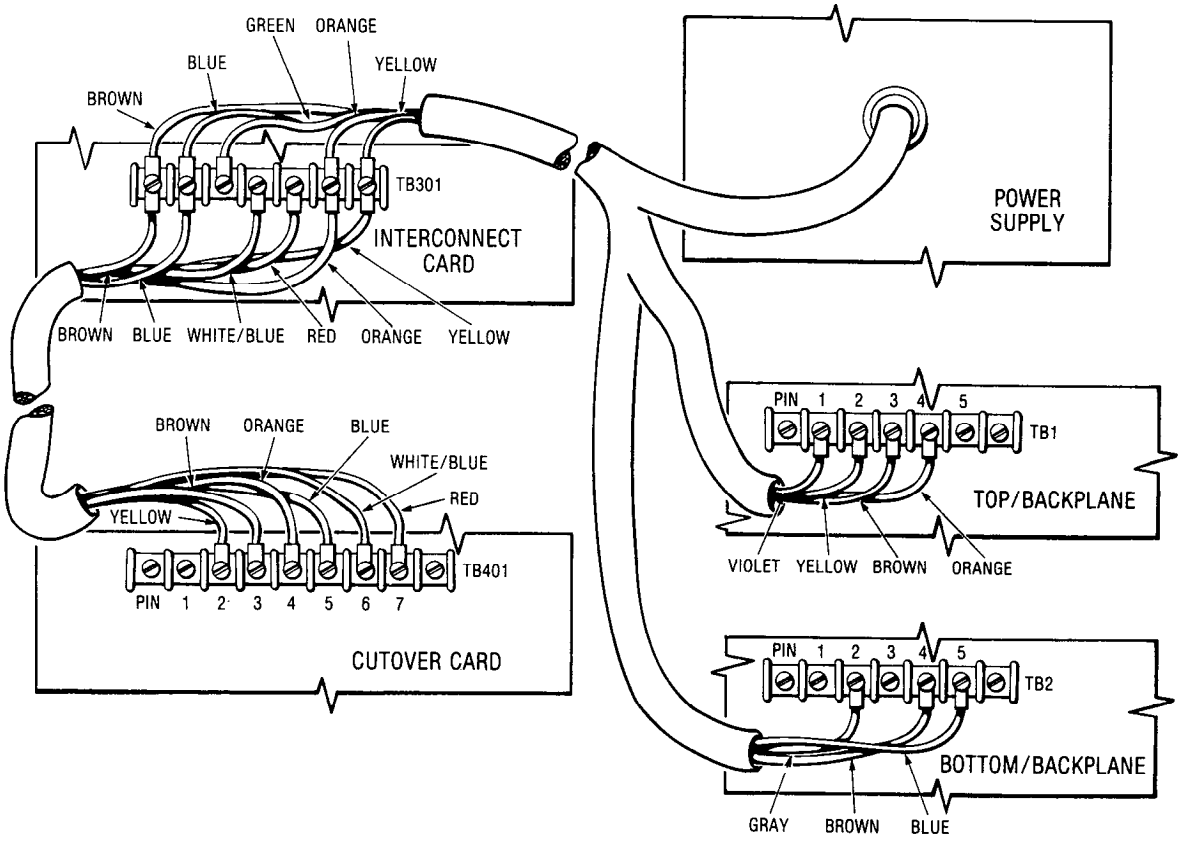

TB	PIN	WIRE COLOR	SIGNAL NAME	MINIMUM ACCEPTABLE	MAXIMUM ACCEPTABLE
TB1	4	ORANGE	8VDC	7.6VDC	8.4VDC
TB1	3	BROWN	0V	—	—
TB1	2	YELLOW	– 5VDC	– 4.7VDC	– 5.3VDC
TB1	1	VIOLET	– 10VDC	– 9.5VDC	– 10.5VDC
TB2	5	BLUE	– 48VDC	– 45.0VDC	– 52.0VDC
TB2	4	BROWN	GND OR 0V	—	—
TB2	2	GREY	90VAC	85VAC	95VAC

1633-1

Fig. 600-3 Backplane Voltages SX-200

INTERCONNECT CARD
MAP350-601
Issue 1, April 80
Sheet 1 of 6

CAUTION
System Power will be on

TOOLS REQUIRED
1 AC-DC Voltmeter

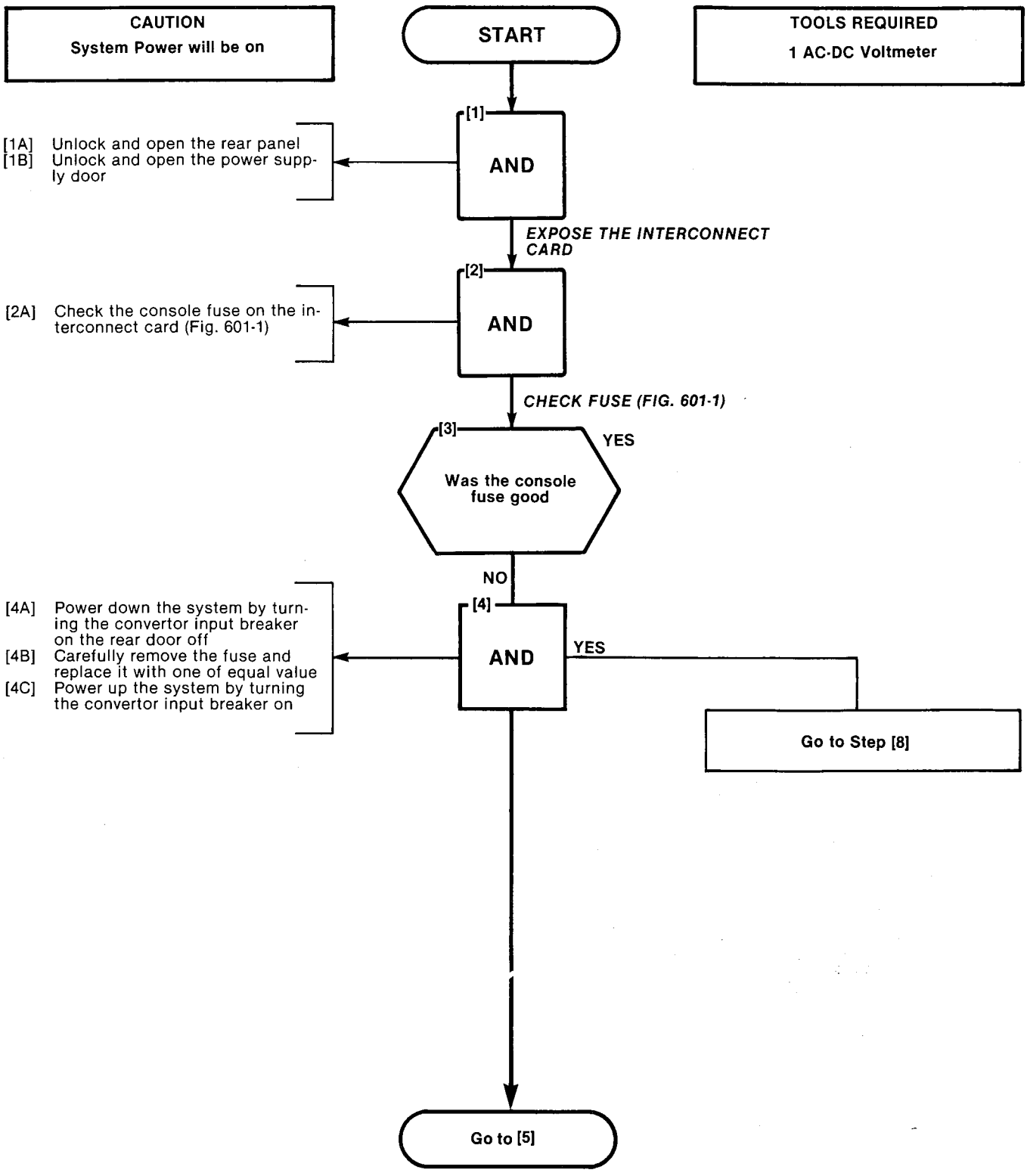

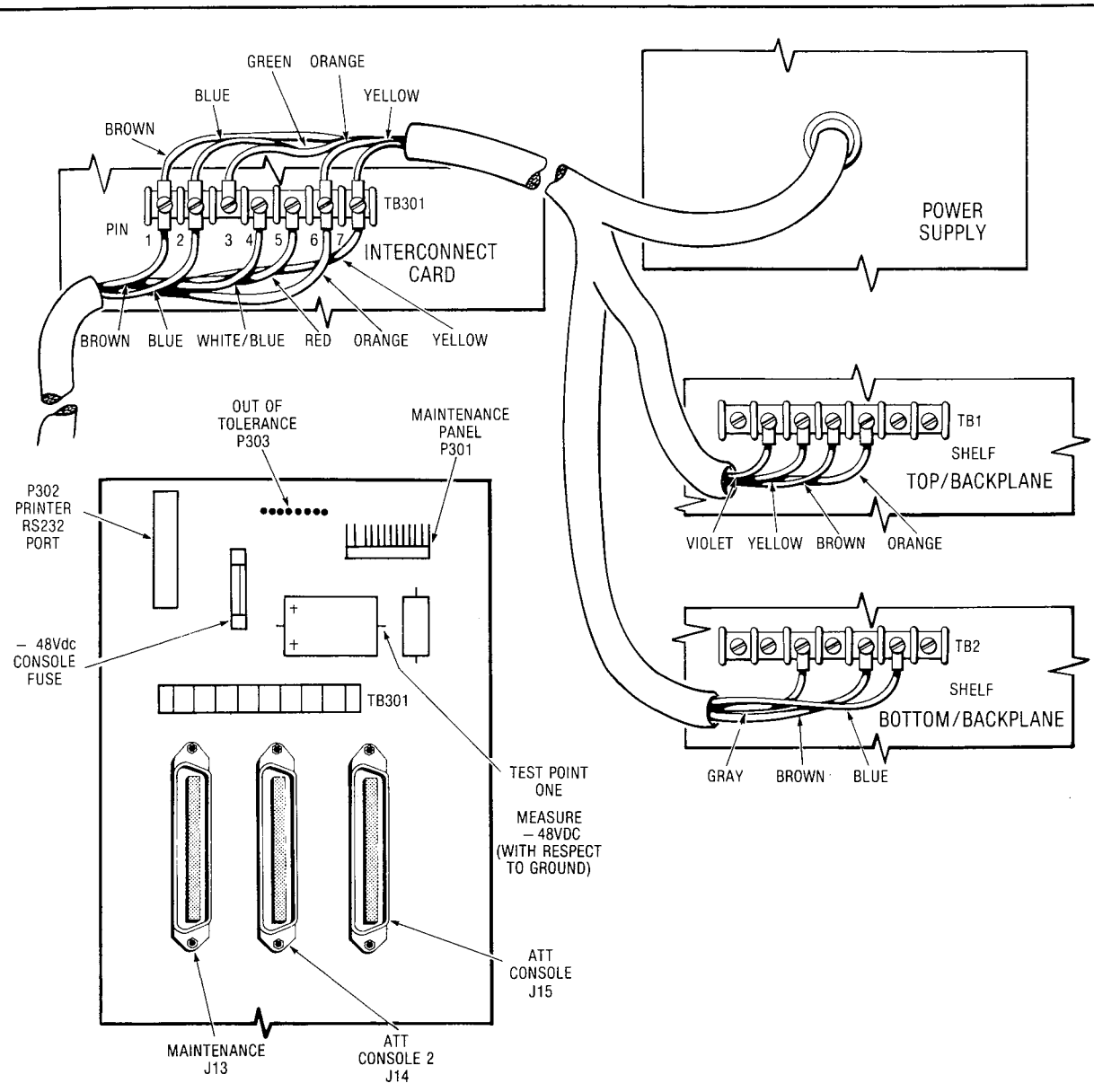

TB	PIN	WIRE COLOR	SIGNAL NAME	MINIMUM ACCEPTABLE	MAXIMUM ACCEPTABLE
TB301	1	BROWN	0V	—	—
TB301	2	BLUE	– 48VDC	– 45VDC	– 52VDC
TB301	6	ORANGE	+ 8VDC	+ 7.6VDC	+ 8.4VDC
TB301	7	YELLOW	– 5VDC	– 4.7VDC	– 5.3VDC

ALSO MEASURE – 48VDC (– 45VDC TO – 52VDC) AT TEST POINT 1.

1631-1

Fig. 601-1 Interconnect Card

INTERCONNECT CARD
MAP350-601
Issue 1, April 80
Sheet 3 of 6

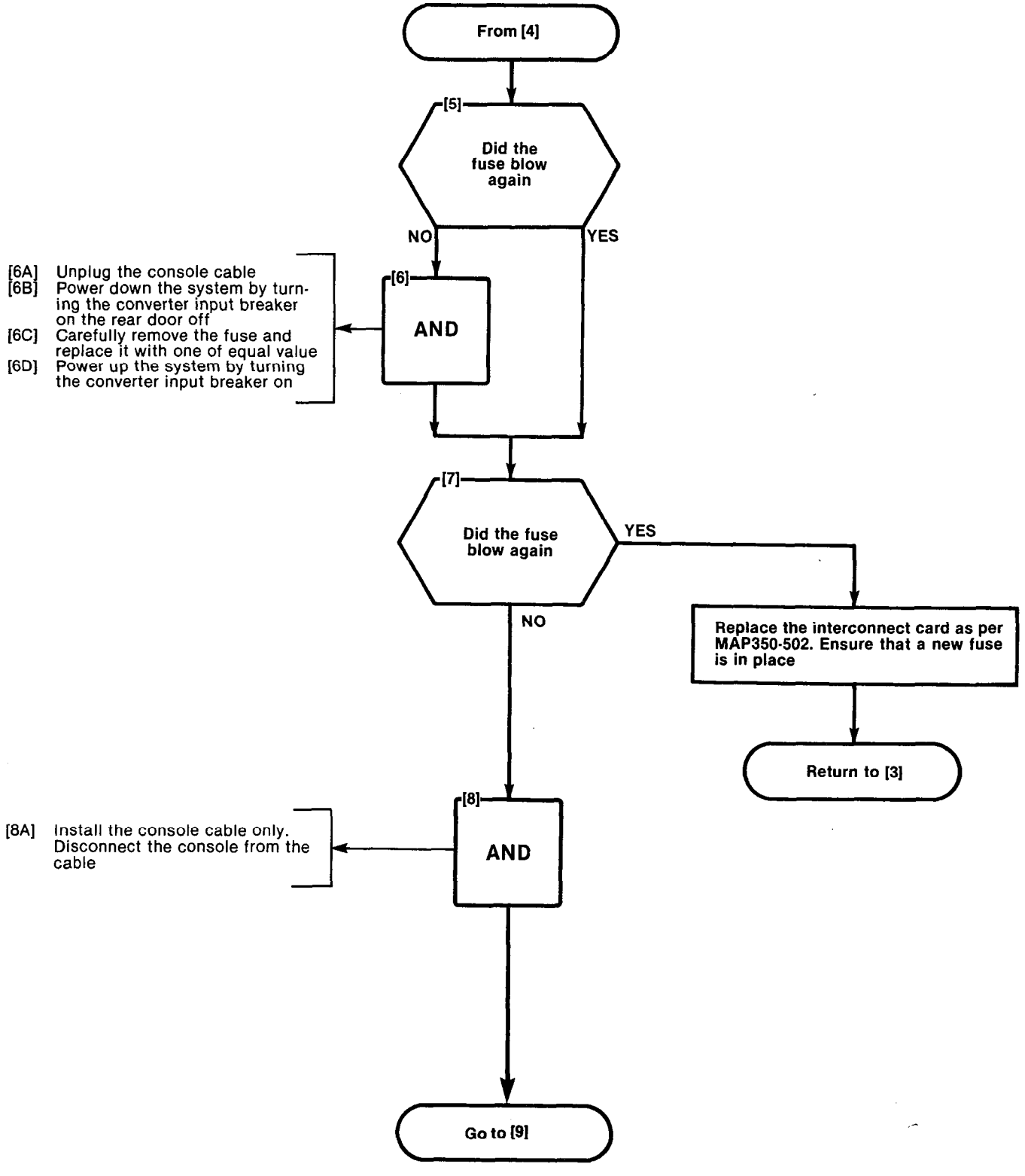

INTERCONNECT CARD
MAP350-601
Issue 1, April 80
Sheet 4 of 6

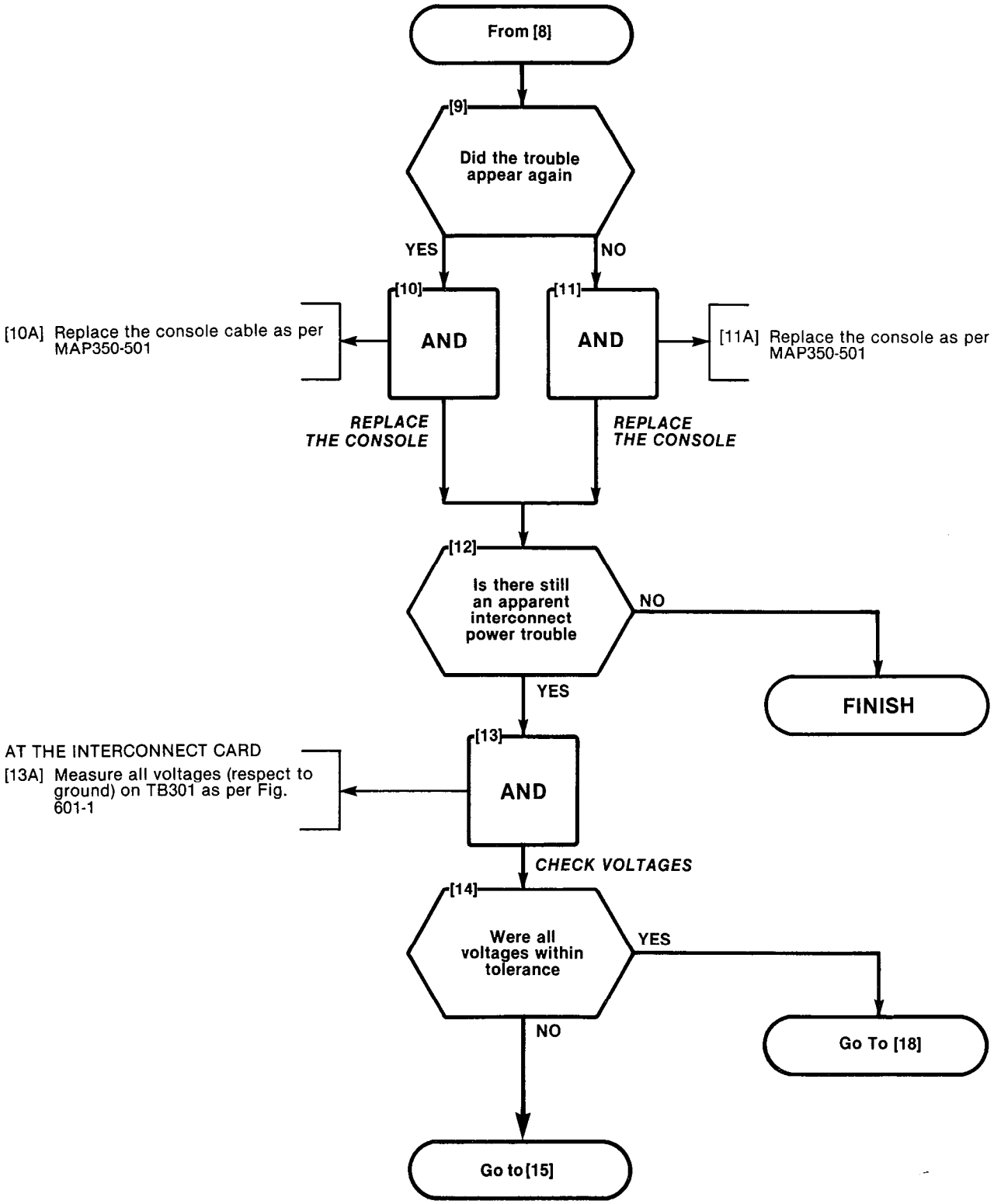

INTERCONNECT CARD
MAP350-601
Issue 1, April 80
Sheet 5 of 6

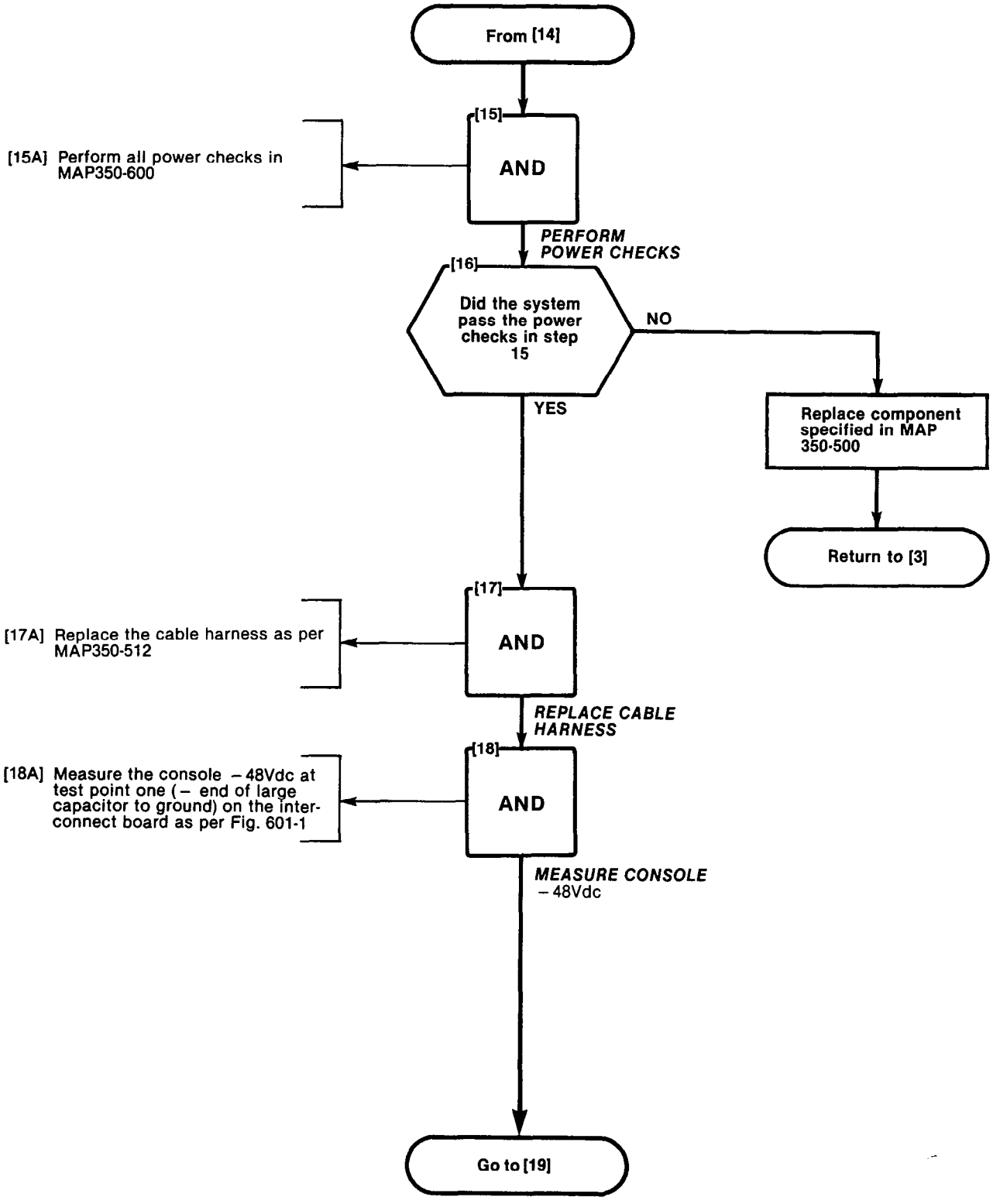

INTERCONNECT CARD
MAP350-601
Issue 1, April 80
Sheet 6 of 6

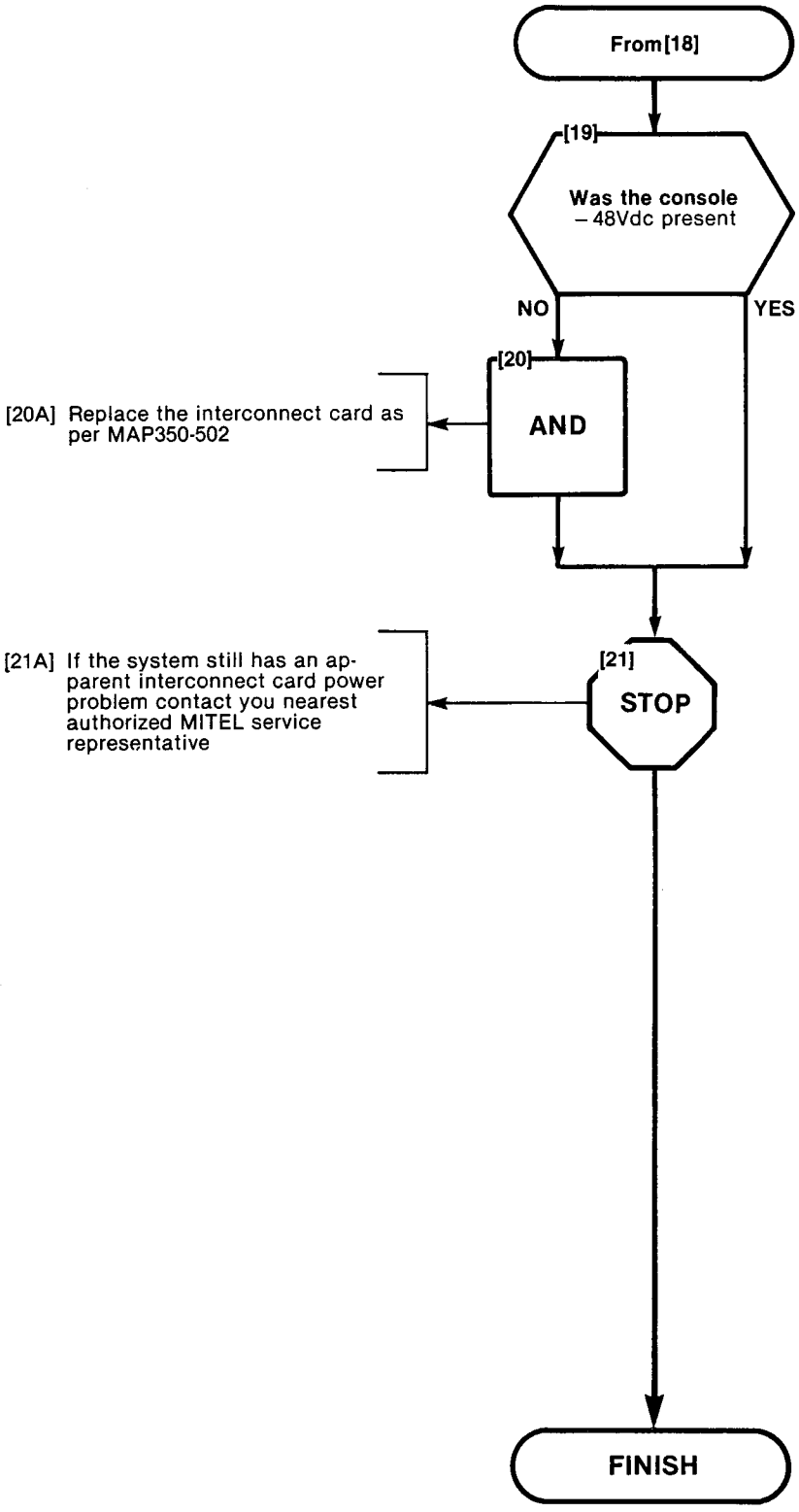

POWER FAIL TRANSFER
MAP350-602
Issue 1, April 80
Sheet 1 of 4

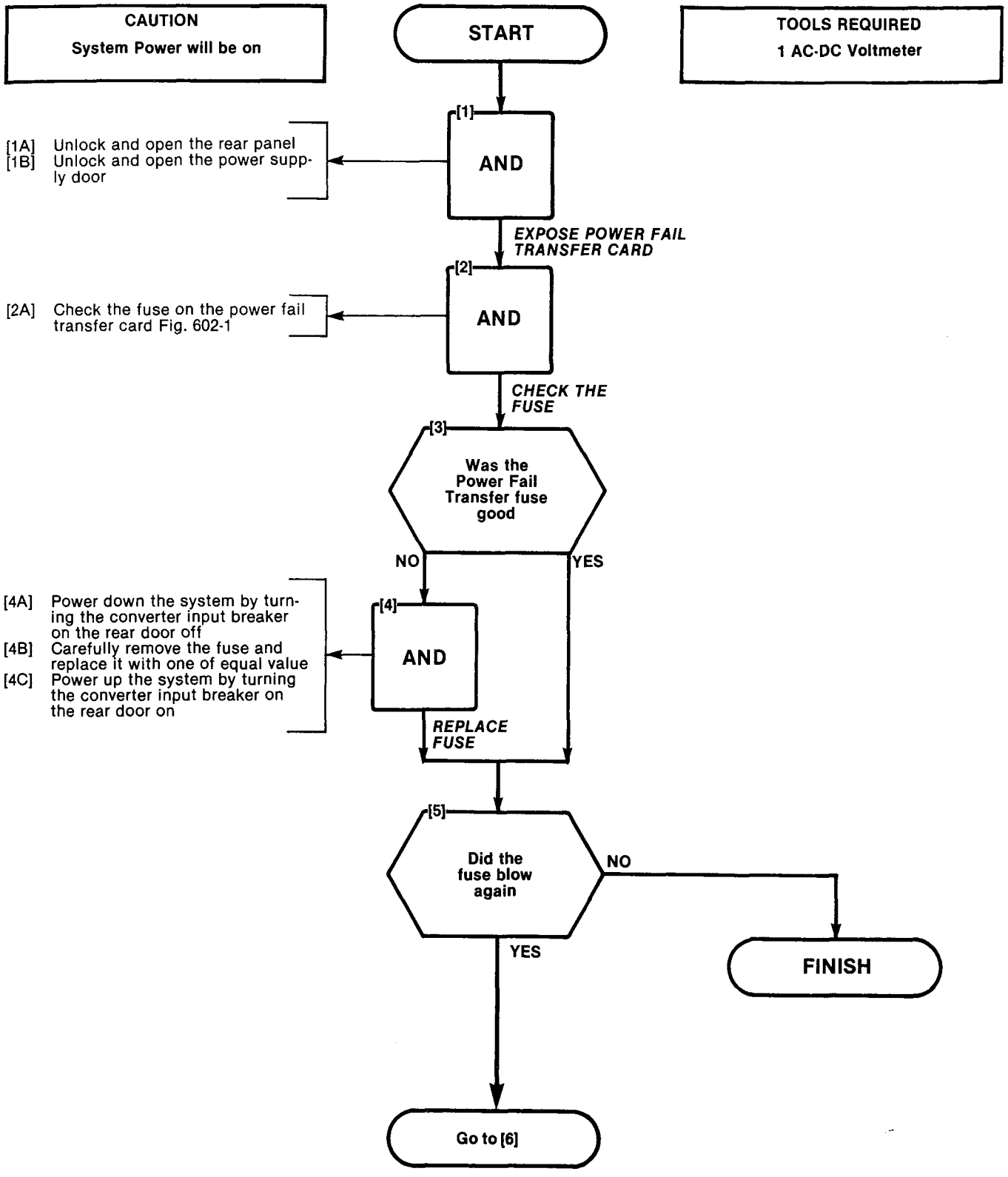

POWER FAIL TRANSFER
MAP350-602
Issue 1, April 80
Sheet 2 of 4

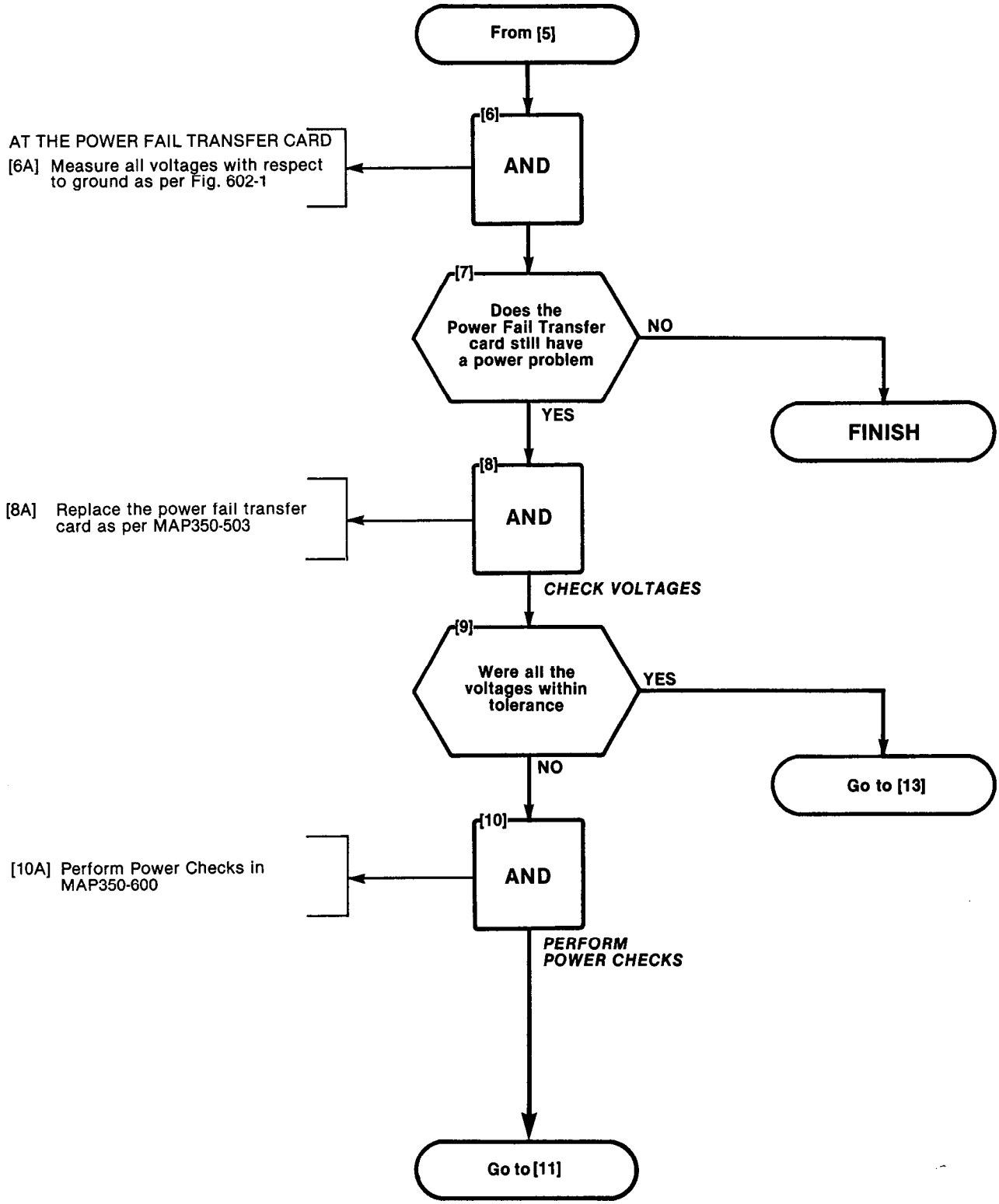

POWER FAIL TRANSFER
MAP350-602
Issue 1, April 80
Sheet 3 of 4

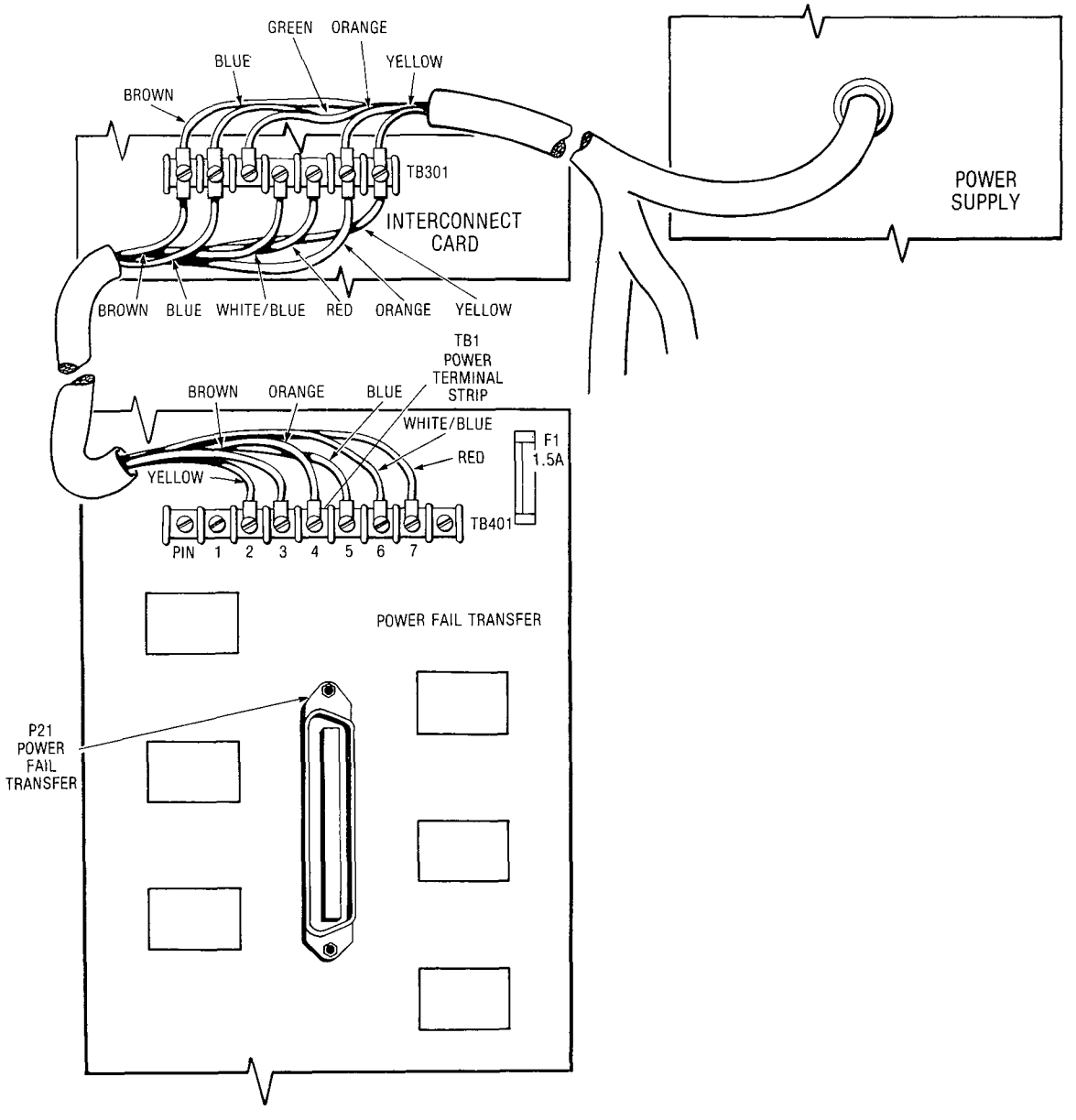

TB	PIN	WIRE COLOR	SIGNAL NAME	MINIMUM ACCEPTABLE	MAXIMUM ACCEPTABLE
TB1	2	YELLOW	−5VDC	−4.7VDC	−5.3VDC
TB1	3	BROWN	0V	—	—
TB1	4	ORANGE	+8VDC	+7.6VDC	+8.4VDC
TB1	5	BLUE	−48VDC	−45VDC	−52VDC

1632-1

Fig. 602-1 Power Fail Transfer Card

POWER FAIL TRANSFER
MAP350-602
Issue 1, April 80
Sheet 4 of 4

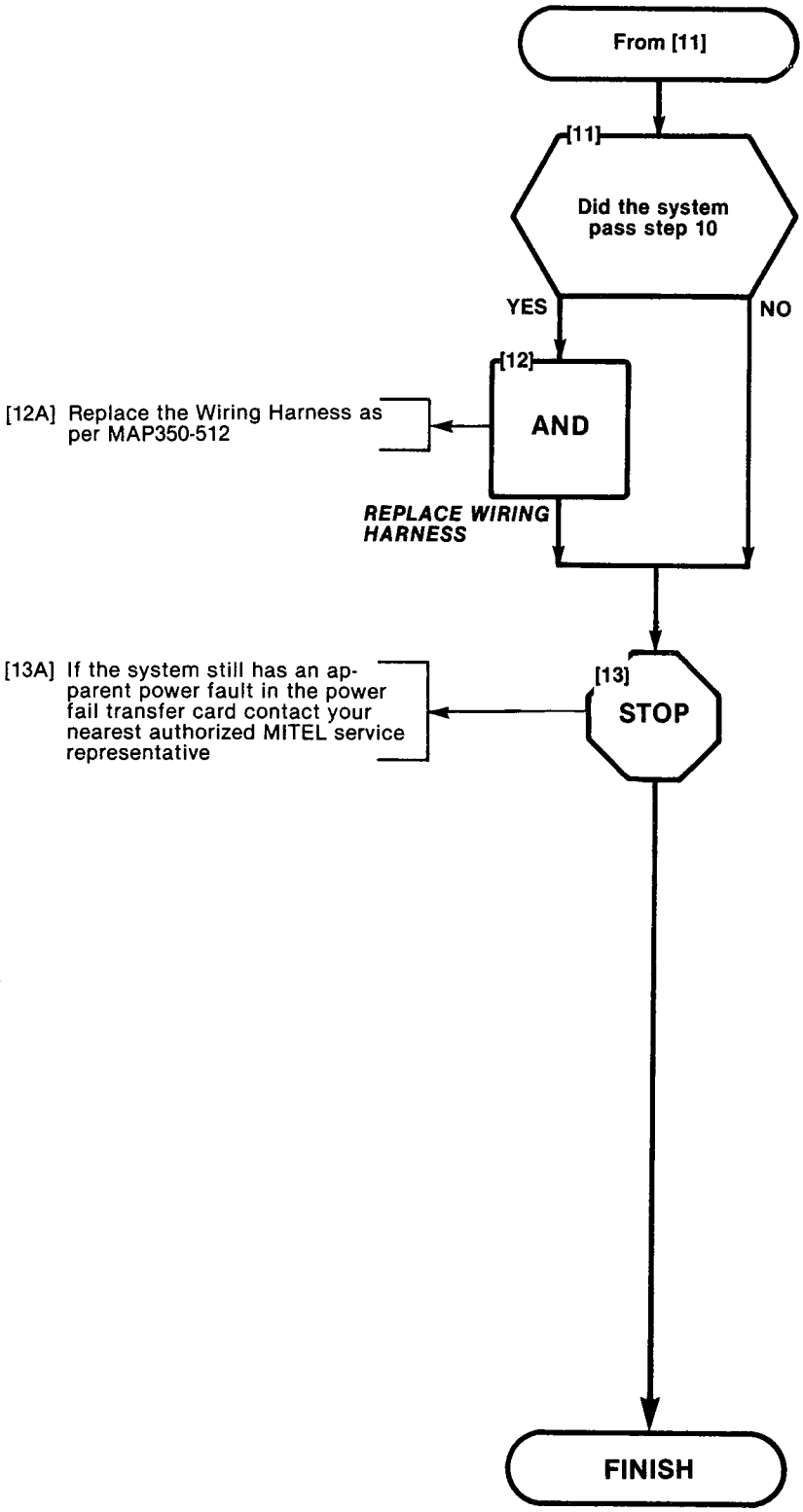

BACKPLANE(S)
MAP350-603
Issue 1, April 80
Sheet 1 of 3

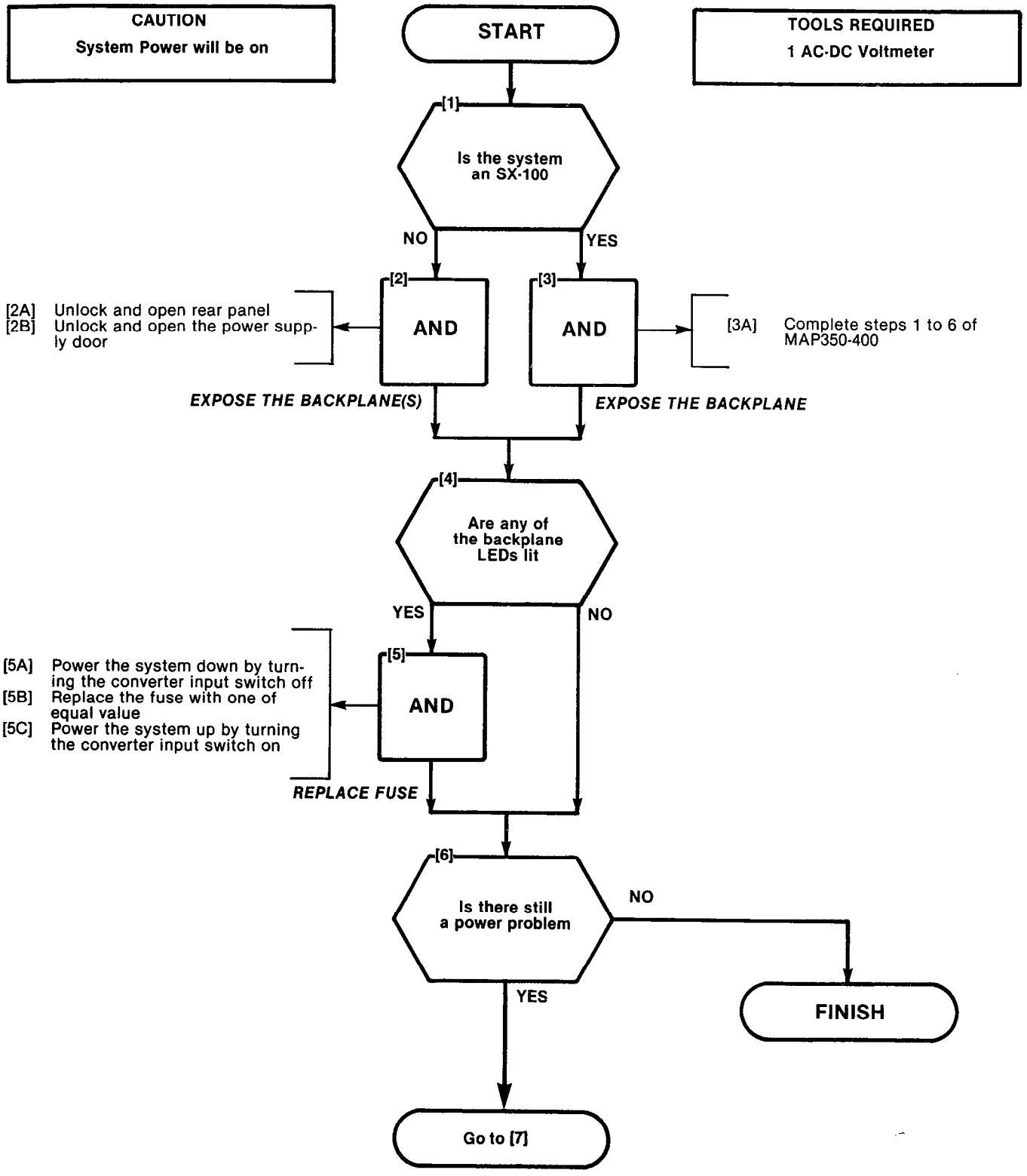

BACKPLANE(S)
MAP350-603
Issue 1, April 80
Sheet 2 of 3

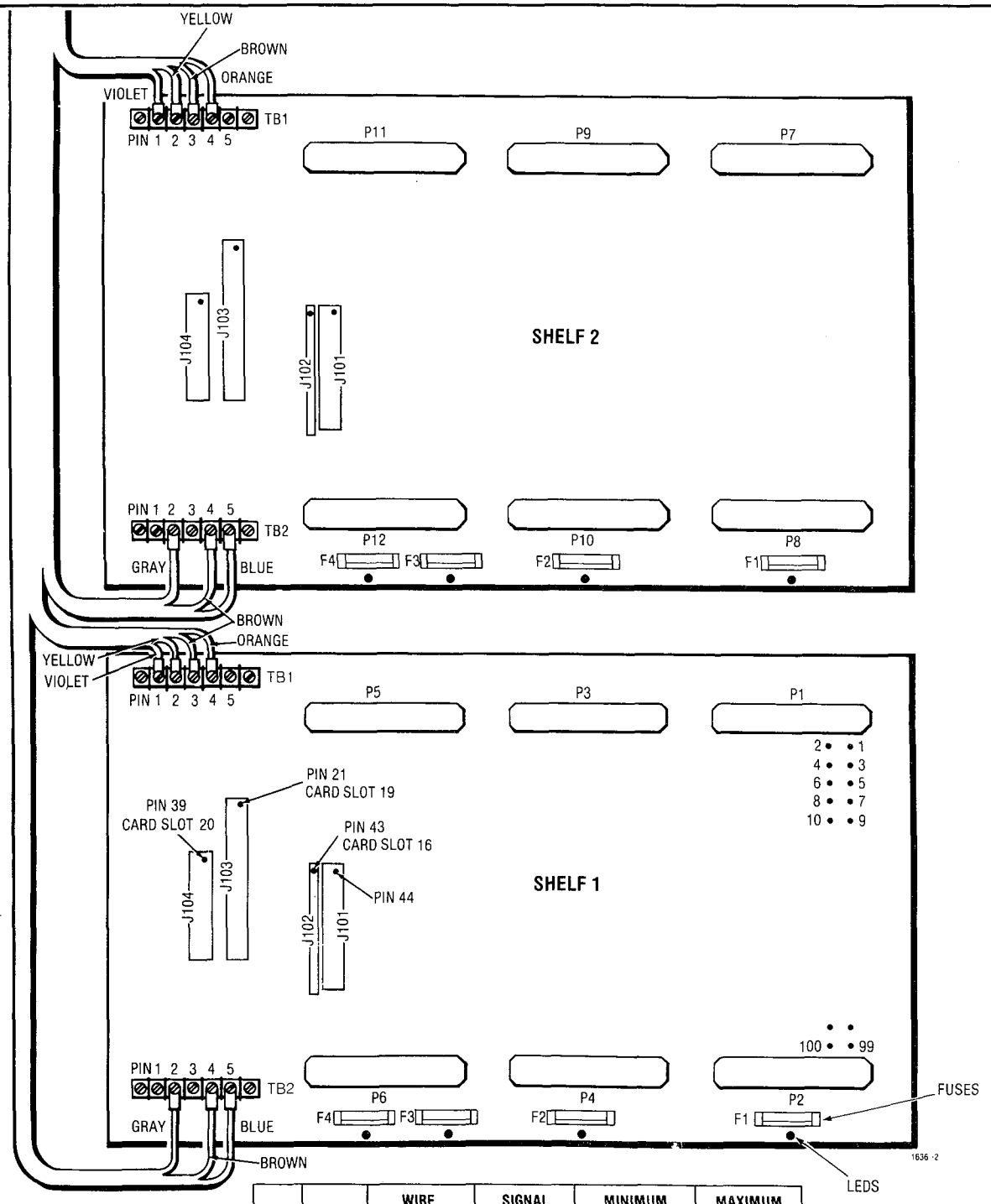

ALL FUSES ARE 2 AMP FAST BLO

FUSE	SLOTS
F1	1-4
F2	5-8
F3	9-12
F4	13-16

TB	PIN	WIRE COLOR	SIGNAL NAME	MINIMUM ACCEPTABLE	MAXIMUM ACCEPTABLE
TB1	1	VIOLET	−10VDC	−9.5VDC	−10.5VDC
TB1	2	YELLOW	−5VDC	−4.7VDC	−5.3VDC
TB1	3	BROWN	0V	—	—
TB1	4	ORANGE	+8VDC	+7.6VDC	+8.4VDC
TB2	2	GREY	90VAC	81VAC	99VAC
TB2	4	BROWN	0V	—	—
TB2	5	BLUE	−48VDC	−45VDC	−52VDC

Fig. 603-1 Backplane Voltages

BACKPLANE(S)
MAP350-603
Issue 1, April 80
Sheet 3 of 3

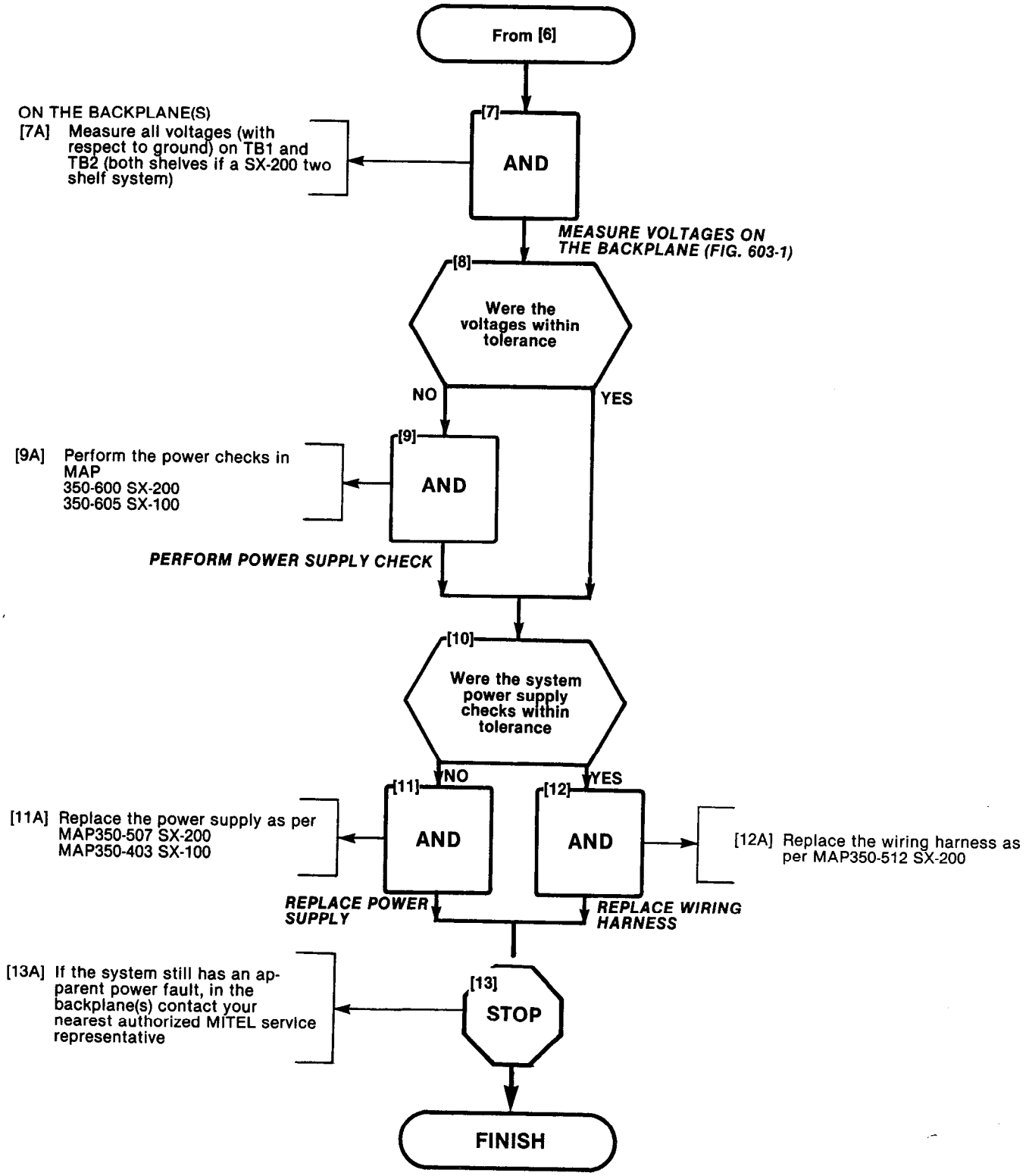

RESERVE BATTERY BACK-UP SX-200
MAP350-604
Issue 1, April 80
Sheet 1 of 2

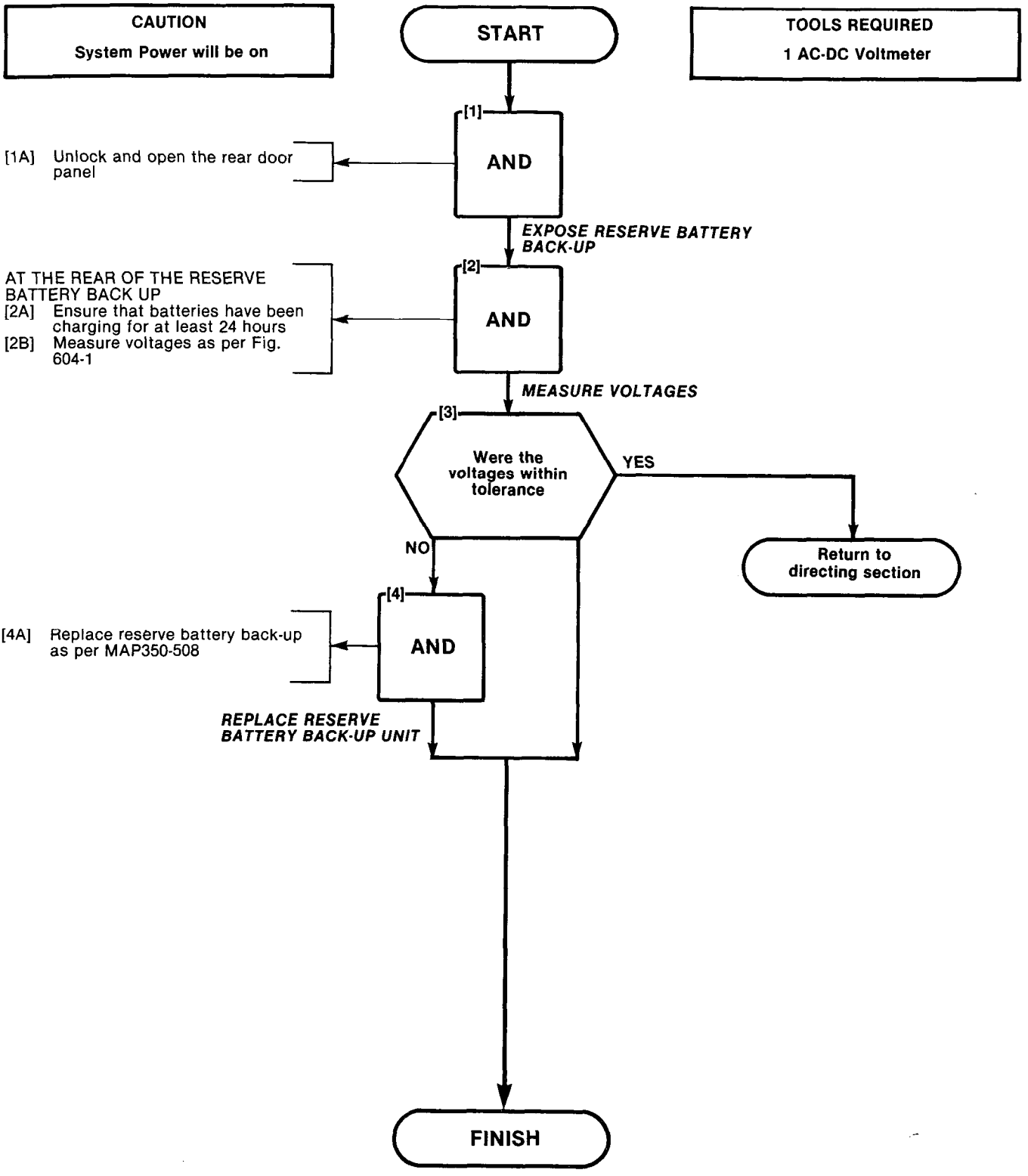

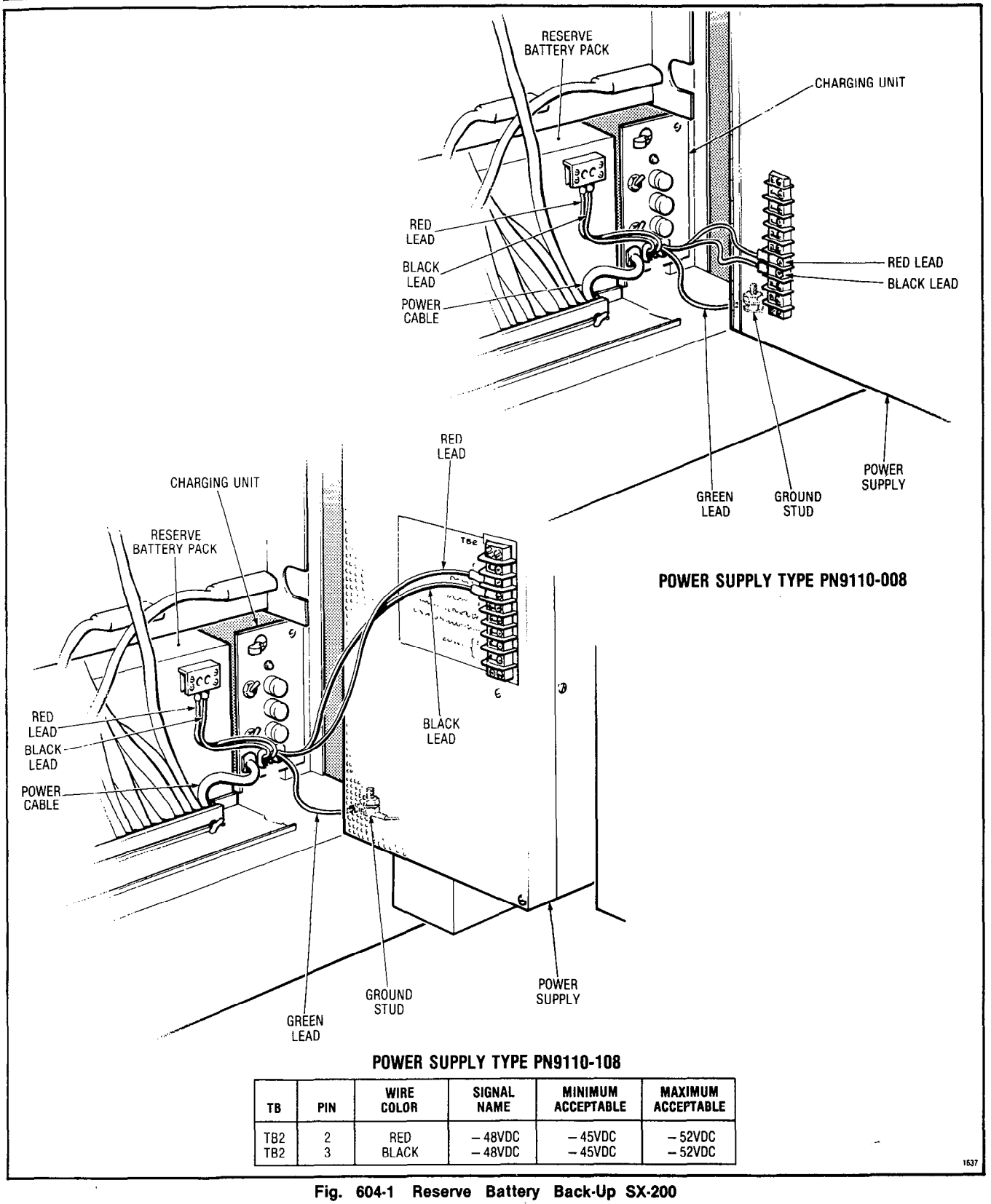

TB	PIN	WIRE COLOR	SIGNAL NAME	MINIMUM ACCEPTABLE	MAXIMUM ACCEPTABLE
TB2	2	RED	– 48VDC	– 45VDC	– 52VDC
TB2	3	BLACK	– 48VDC	– 45VDC	– 52VDC

1537

Fig. 604-1 Reserve Battery Back-Up SX-200

INTERCONNECT CARD SX-100
MAP350-605
Issue 1, April 80
Sheet 1 of 7

CAUTION

System Power will be on

TOOLS REQUIRED

1 AC-DC Voltmeter

START

[1] **Is the AC power LED on Fig. 605-1**

NO

YES

[2] **AND**

[2A] Check that the AC power cord is plugged in
[2B] Check that the AC circuit breaker is in the on position
[2C] Plug a trouble light (or other piece of equipment) into the outlet as a test for the presence of AC voltage. If no voltage is present check for faulty AC power outlet

CHECK AC VOLTAGE

[3] **AND**

[3A] Complete steps 1 to 6 of MAP350-400

EXPOSE THE SYSTEM

[4] **AND**

AT THE TOP OF THE EQUIPMENT
[4A] Check all fuses as shown in Fig. 605-2
[4B] Replace any fuse that is blown with one of equal value by;
- Powering down the system by turning of the maintenance panel system power switch
- Carefully replace the fuse
- Power up the system by turning the system power switch on

CHECK ALL FUSES (FIG. 605-2)

[5] **Were any of the user fuses blown**

NO → **Go to [14]**

YES → **Go to [6]**

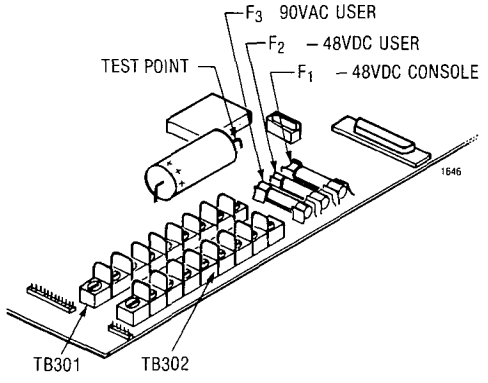

Fig. 605-2 Fuses

INTERCONNECT CARD SX-100
MAP350-605
Issue 1, April 80
Sheet 2 of 7

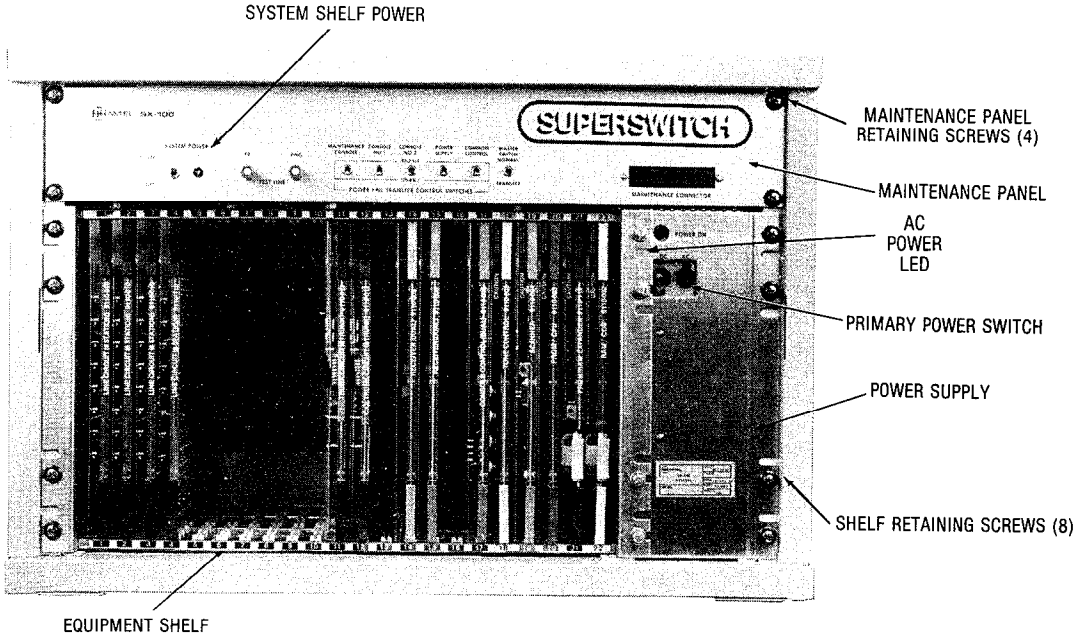

FRONT VIEW

745-3

Fig. 605-1 SX-100

INTERCONNECT CARD SX-100
MAP350-605
Issue 1, April 80
Sheet 3 of 7

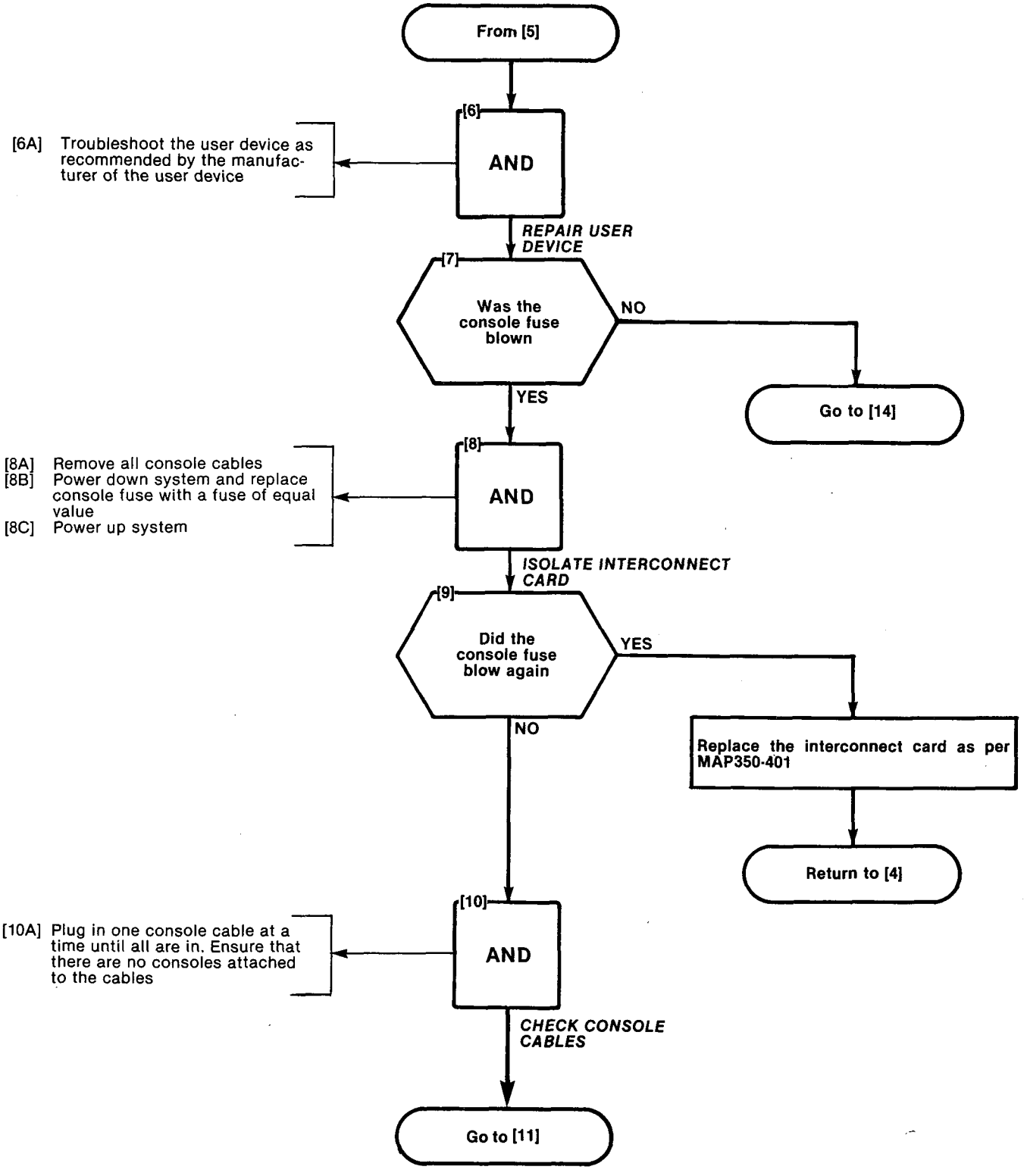

INTERCONNECT CARD SX-100
MAP350-605
Issue 1, April 80
Sheet 4 of 7

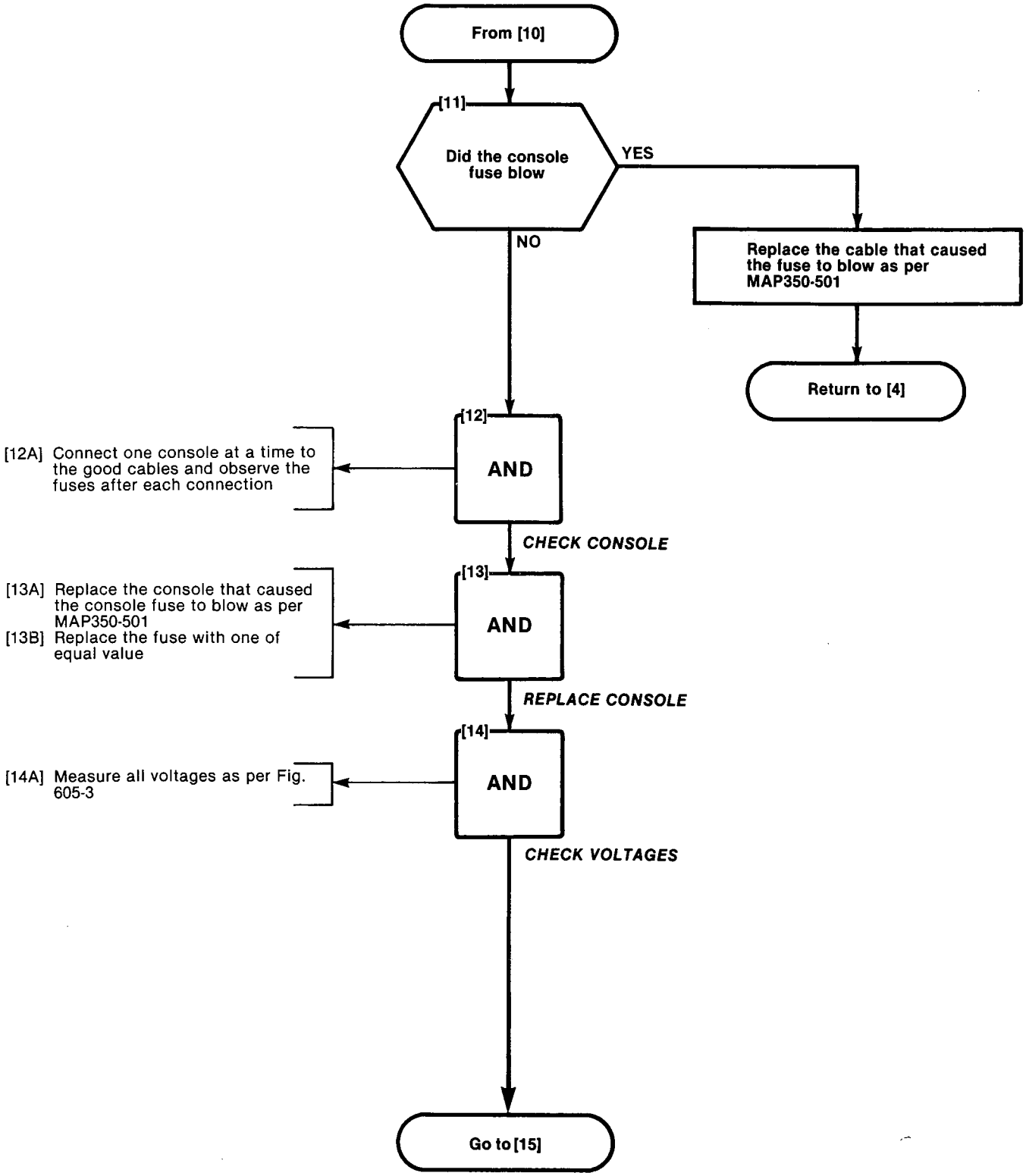

INTERCONNECT CARD SX-100
MAP350-605
Issue 1, April 80
Sheet 5 of 7

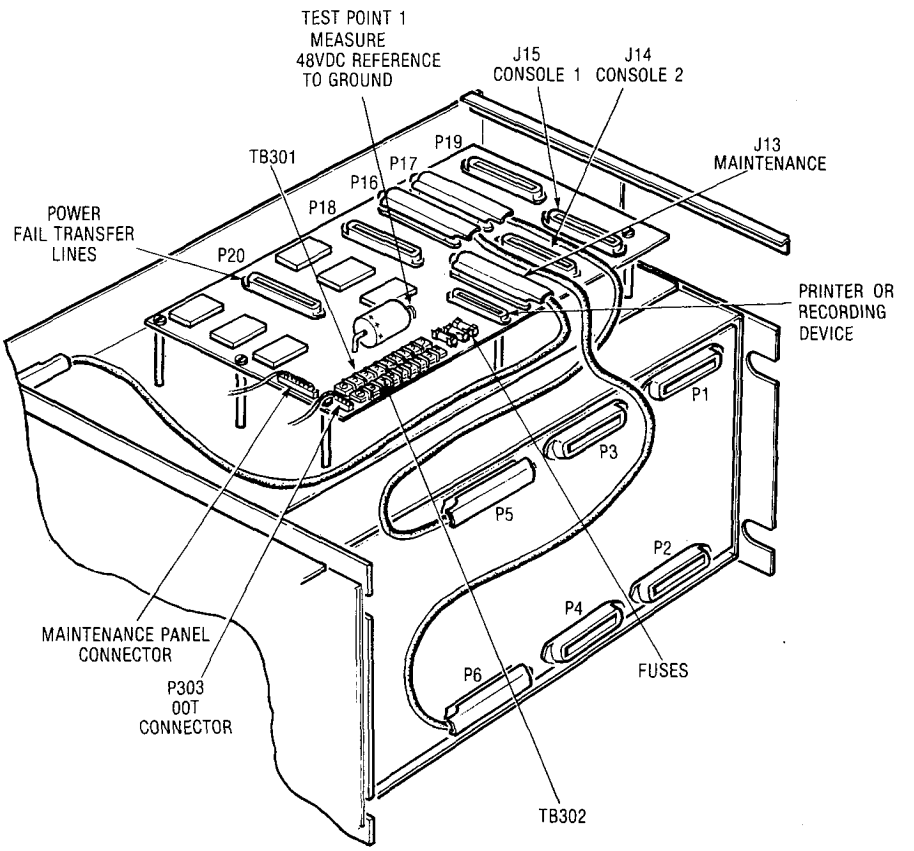

TB	PIN	WIRE COLOR	SIGNAL NAME	MINIMUM ACCEPTABLE	MAXIMUM ACCEPTABLE
TB301	1	WHITE	BATT		
TB301	2	ORANGE	+8VDC	+7.6VDC	+8.4VDC
TB301	3	YELLOW	−5VDC	−4.7VDC	−5.3VDC
TB301	4	BROWN	0V		
TB301	5	GREEN	0V		
TB301	6	BLUE	−48VDC	−45.0VDC	−52.0VDC
TB301	7	GREY	90VAC	80VAC	99VAC
TB302	1		BATT	−45.0VDC	−52VDC
TB302	2	BLUE/WHITE	00T 8VDC	+7.6VDC	−8.4VDC
TB302	3				
TB302	4		0V		
TB302	5		0V		
TB302	6		USER −48VDC	−45.0VDC	−52.0VDC
TB302	7		USER 90VAC	80VAC	99VAC
TB303	3		00T 8VDC	+7.6VDC	+8.4VDC

1638-1

Fig. 605-3 Interconnect Card

INTERCONNECT CARD SX-100
MAP350-605
Issue 1, April 80
Sheet 6 of 7

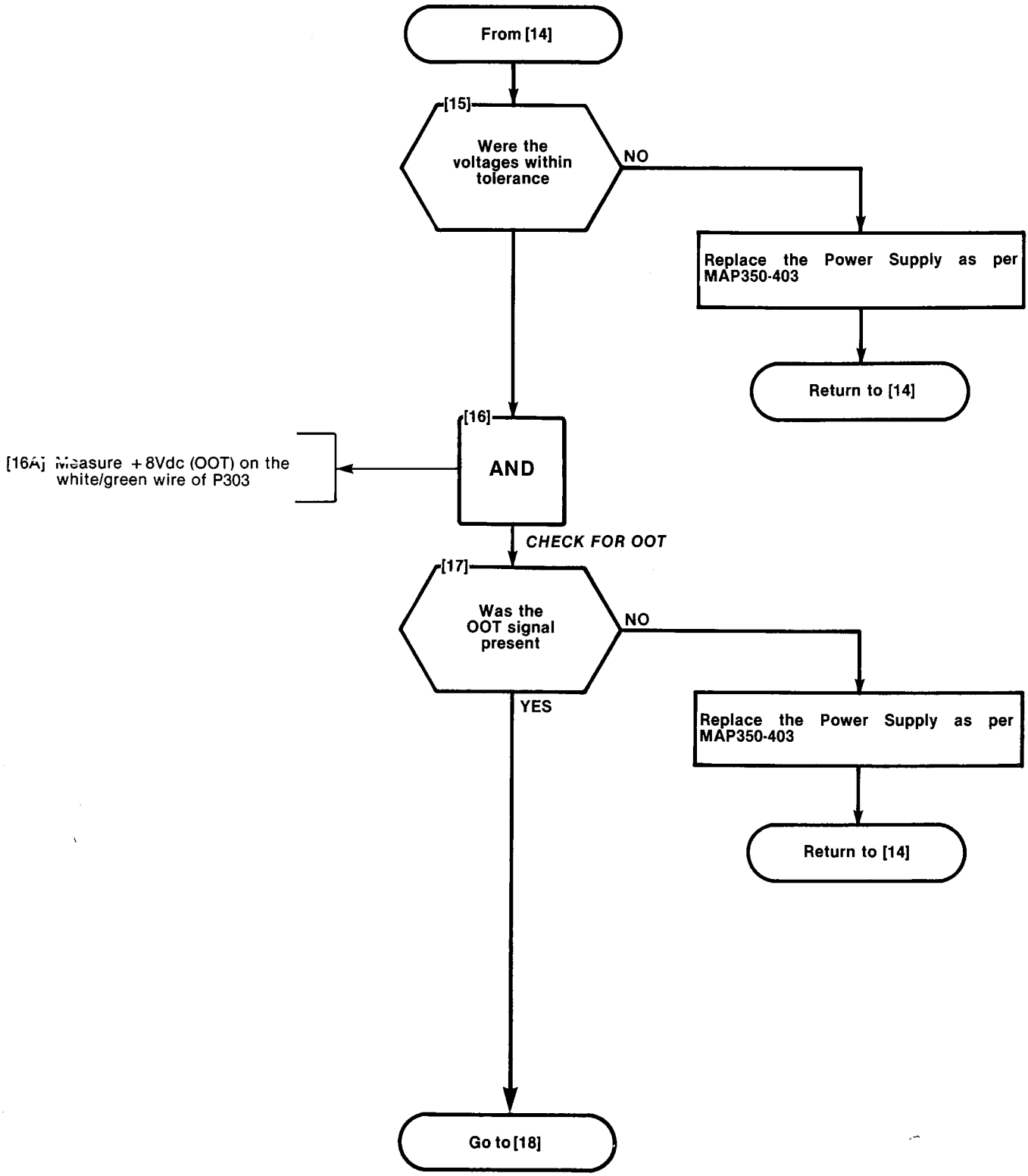

INTERCONNECT CARD SX-100
MAP350-605
Issue 1, April 80
Sheet 7 of 7

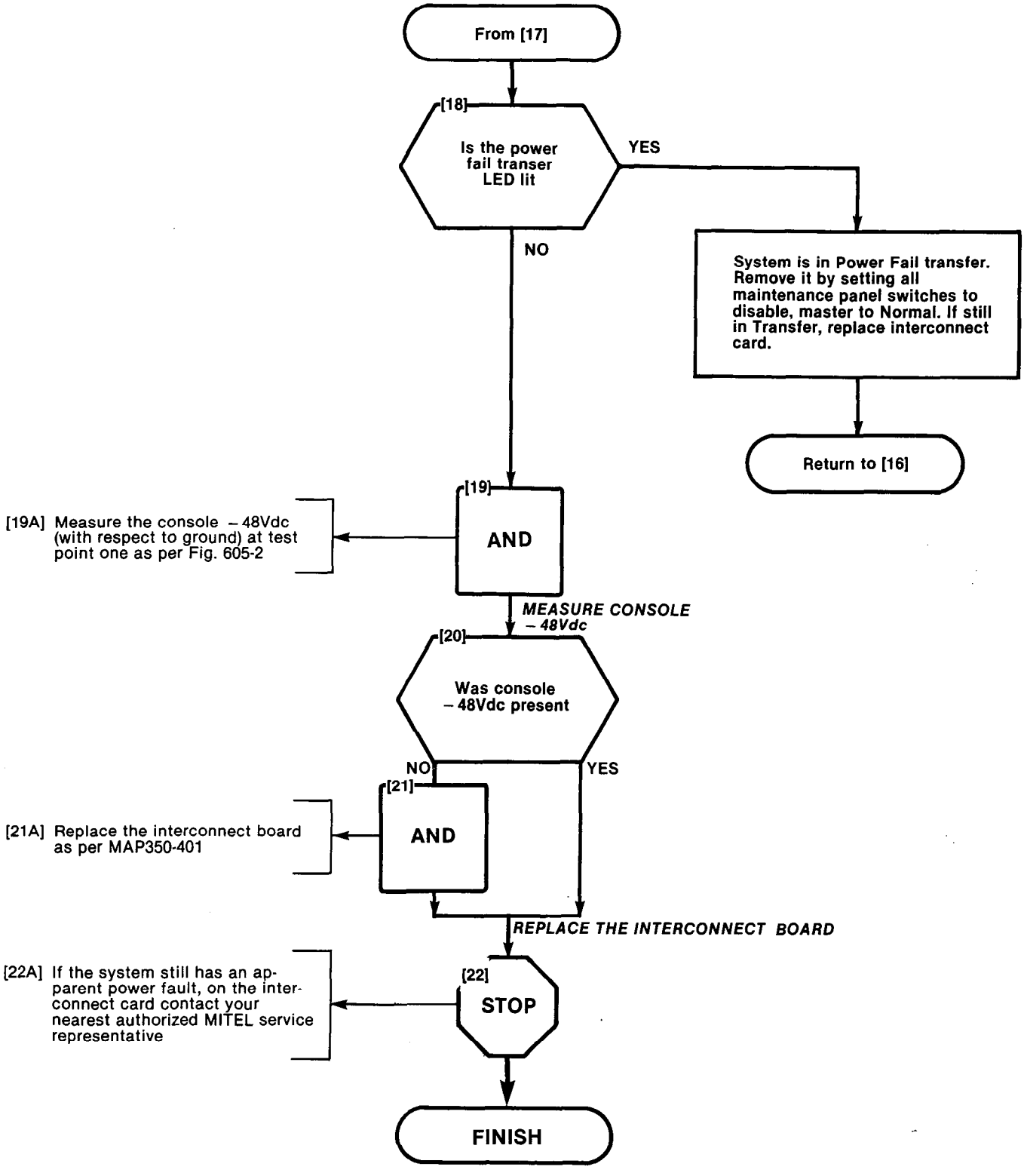

RESERVE BATTERY BACK-UP SX-100
MAP350-606
Issue 1, April 80
Sheet 1 of 2

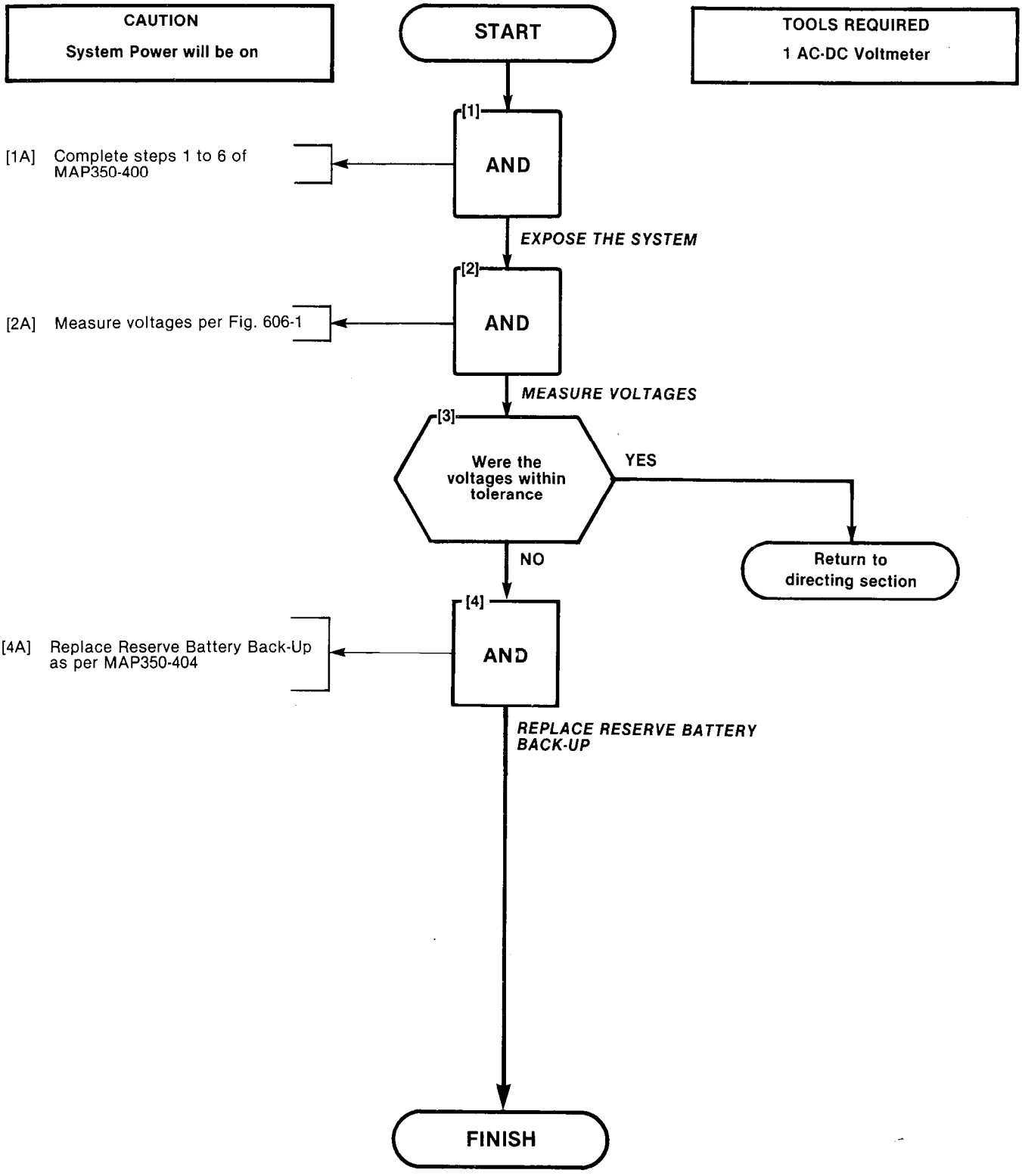

RESERVE BATTERY BACK-UP SX-100
MAP350-606
Issue 1, April 80
Sheet 2 of 2

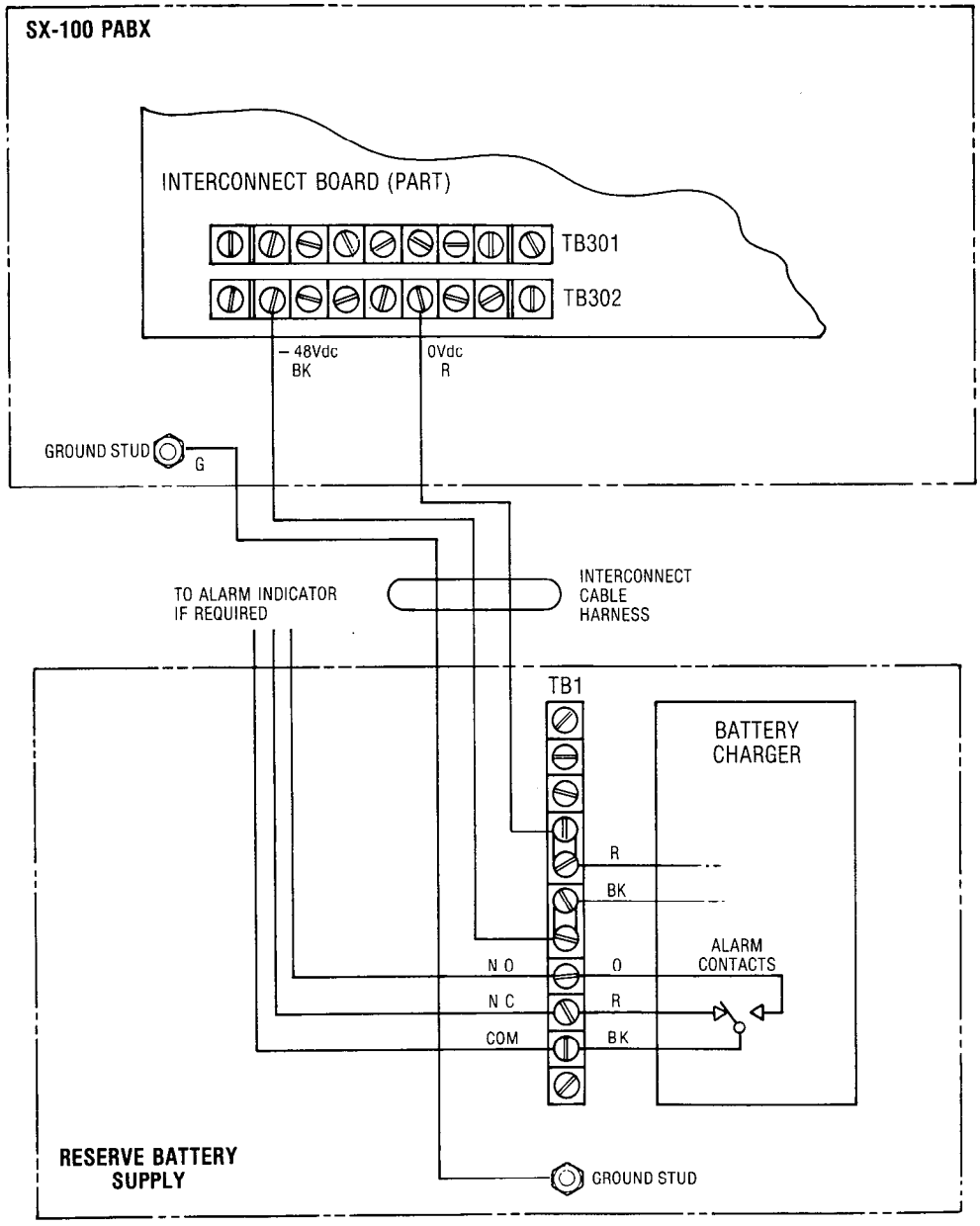

TB	PIN	WIRE COLOR	SIGNAL NAME	MINIMUM ACCEPTABLE	MAXIMUM ACCEPTABLE
TB302	1	BLACK	– 48VDC	– 45VDC	– 52VDC

1641-1

Fig. 606-1 Reserve Battery Back-Up

APPENDIX 7
TROUBLESHOOTING MAPS

1. GENERAL

A7.01 The MAPs contained in this Appendix detail the procedures to be performed in all actual card troubleshooting on the system. These MAPs are used in conjunction with the MAPs outlined in other sections of this practice. Due to the similarity of the SX-100/SX-200 PABX's all the MAPs of this appendix are common to each system.

A7.02 Table A7-1 is a listing of all MAPs contained in this section.

TABLE A7-1
TROUBLESHOOTING

Title	Reference
Common Control Test	MAP350-701
Speech Path Test	MAP350-702
Cabling Test	MAP350-703
Paging Test	MAP350-704
Night Bell Test	MAP350-705
Music On Hold Test	MAP350-706

COMMON CONTROL TEST
MAP350-701
Issue 1, June 1980
Sheet 1 of 3

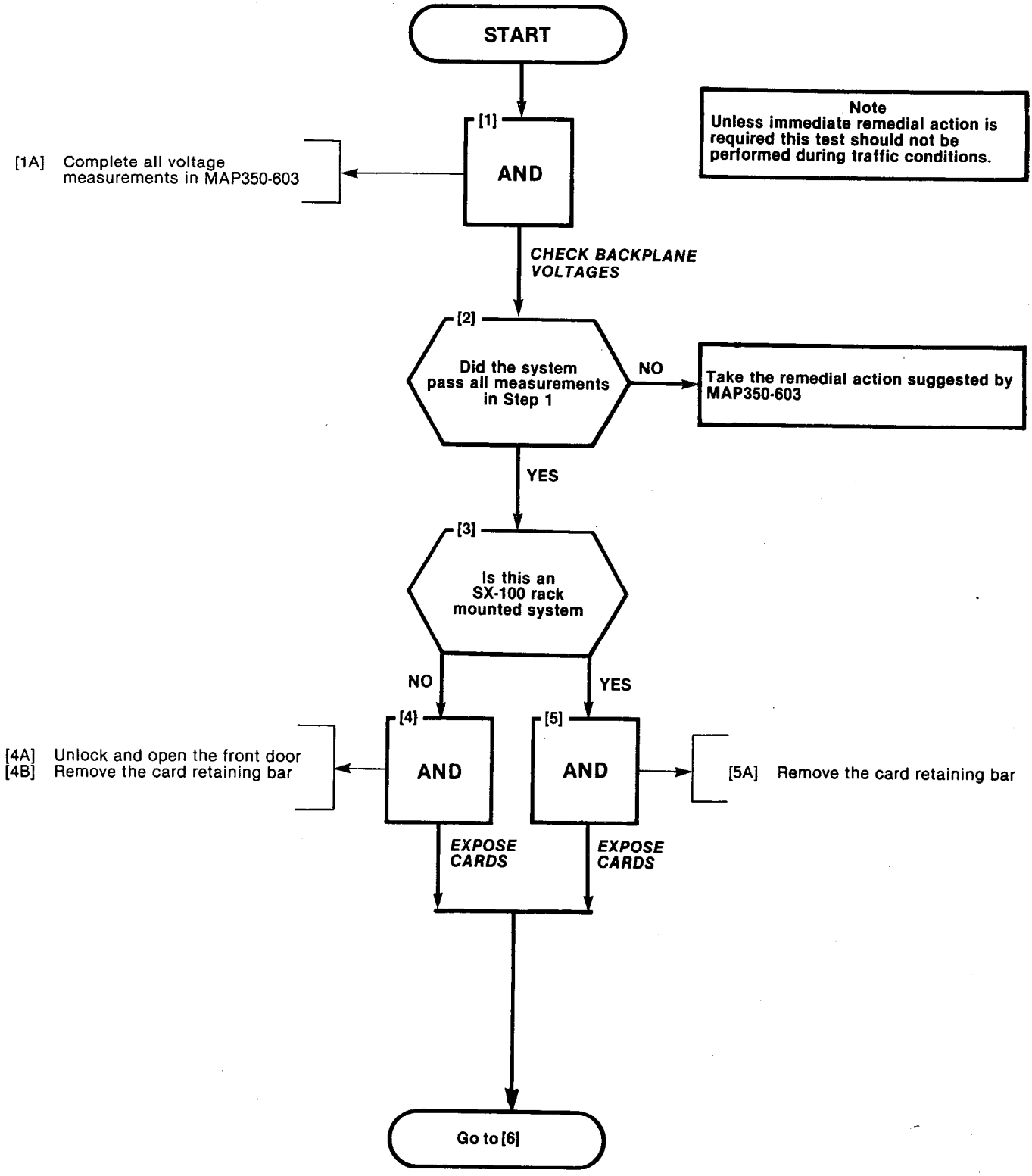

COMMON CONTROL TEST
MAP350-701
Issue 1, June 1980
Sheet 2 of 3

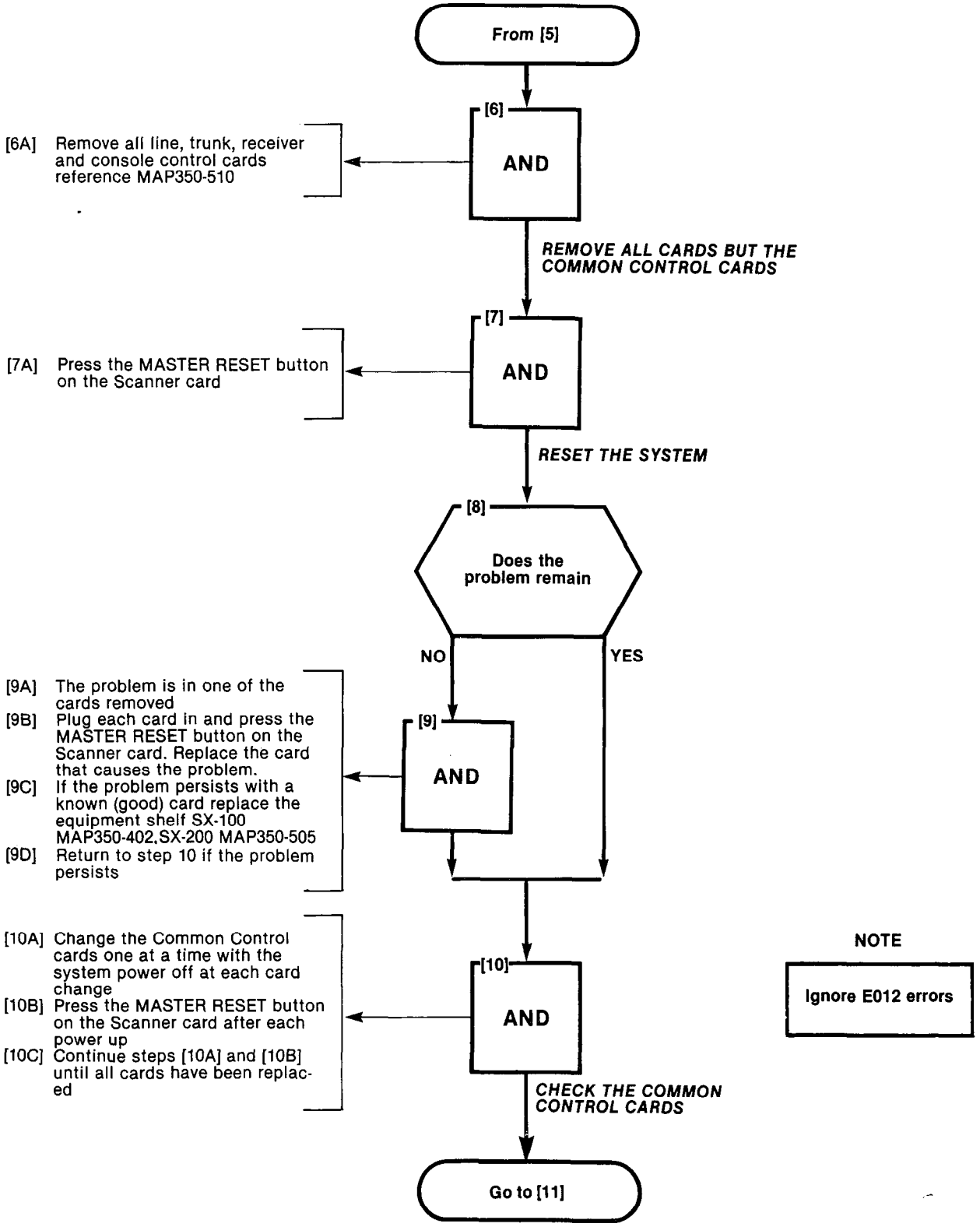

COMMON CONTROL TEST
MAP350-701
Issue 1, June 1980
Sheet 3 of 3

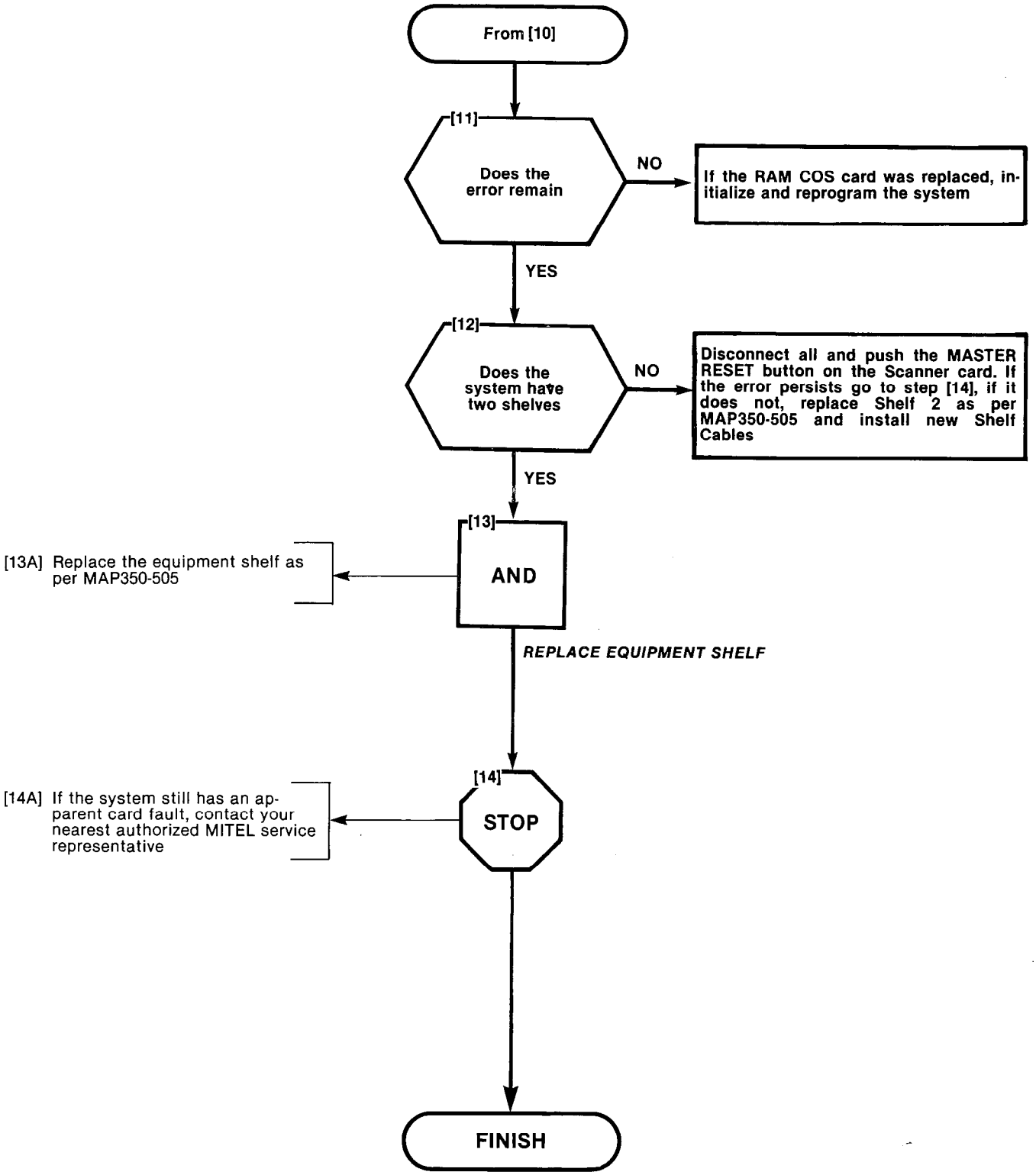

SPEECH PATH TEST
MAP350-702
Issue 1, June 1980
Sheet 1 of 3

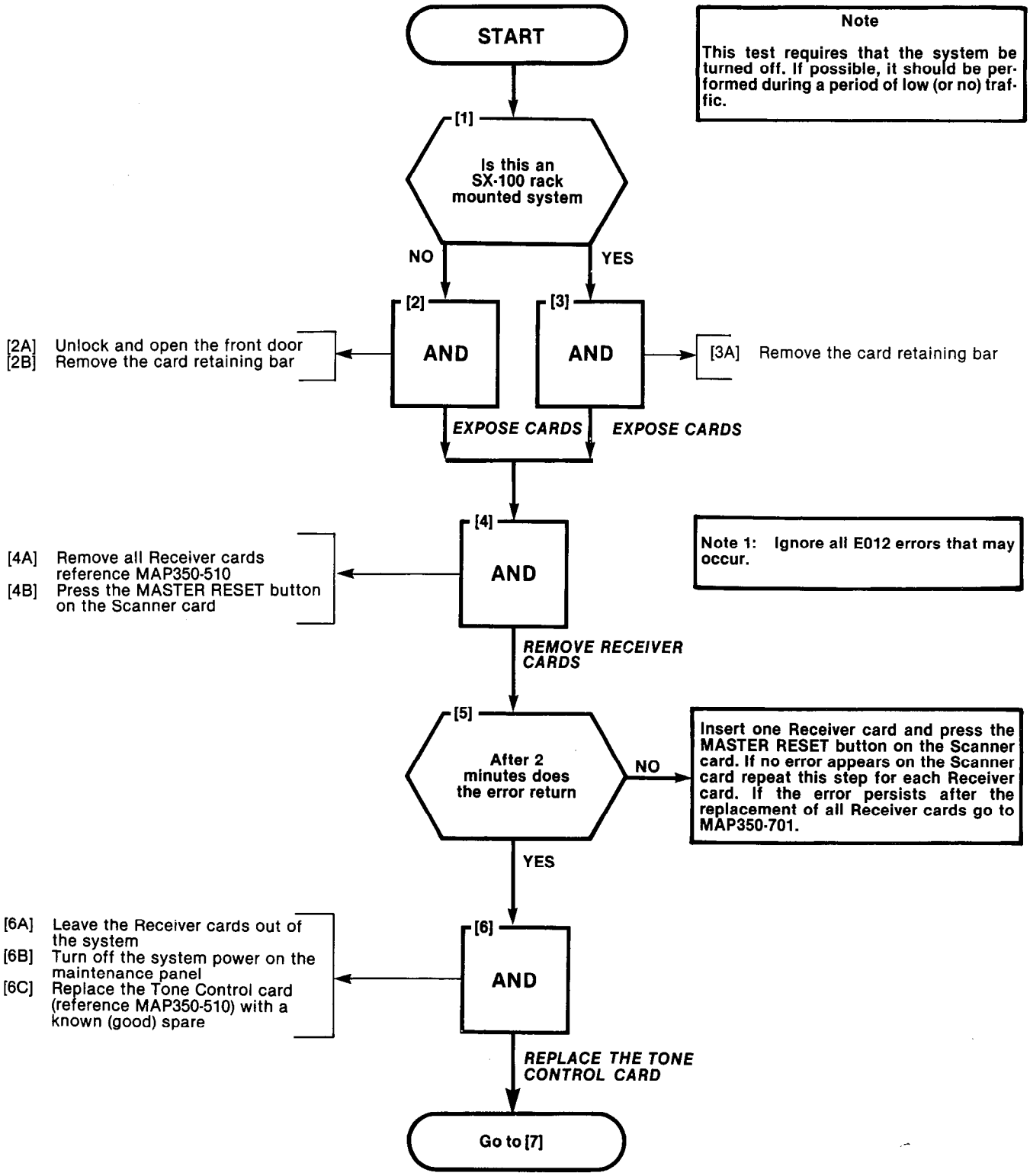

Note

This test requires that the system be turned off. If possible, it should be performed during a period of low (or no) traffic.

Note 1: Ignore all E012 errors that may occur.

Insert one Receiver card and press the MASTER RESET button on the Scanner card. If no error appears on the Scanner card repeat this step for each Receiver card. If the error persists after the replacement of all Receiver cards go to MAP350-701.

SPEECH PATH TEST
MAP350-702
Issue 1, June 1980
Sheet 2 of 3

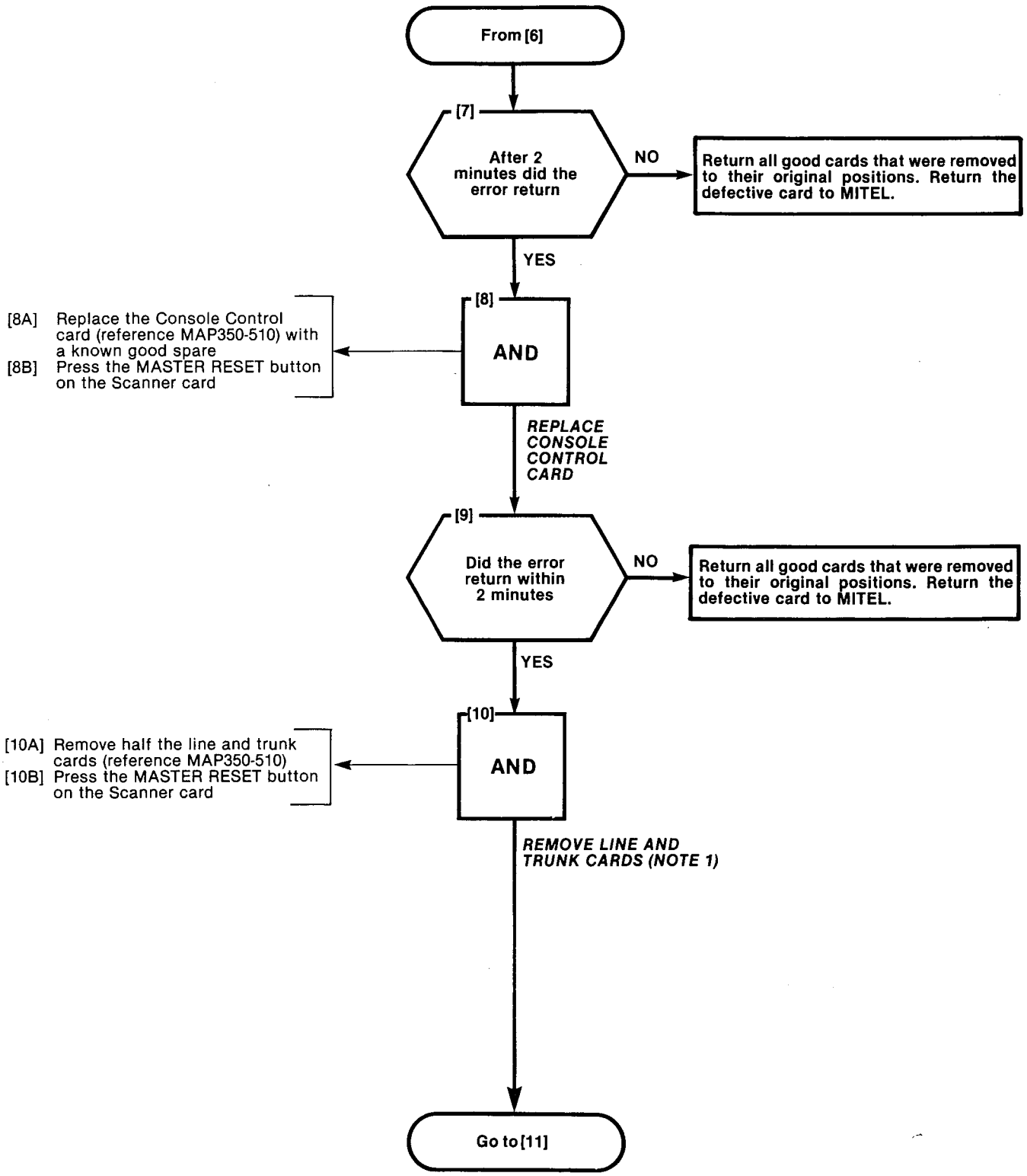

SPEECH PATH TEST
MAP350-702
Issue 1, June 1980
Sheet 3 of 3

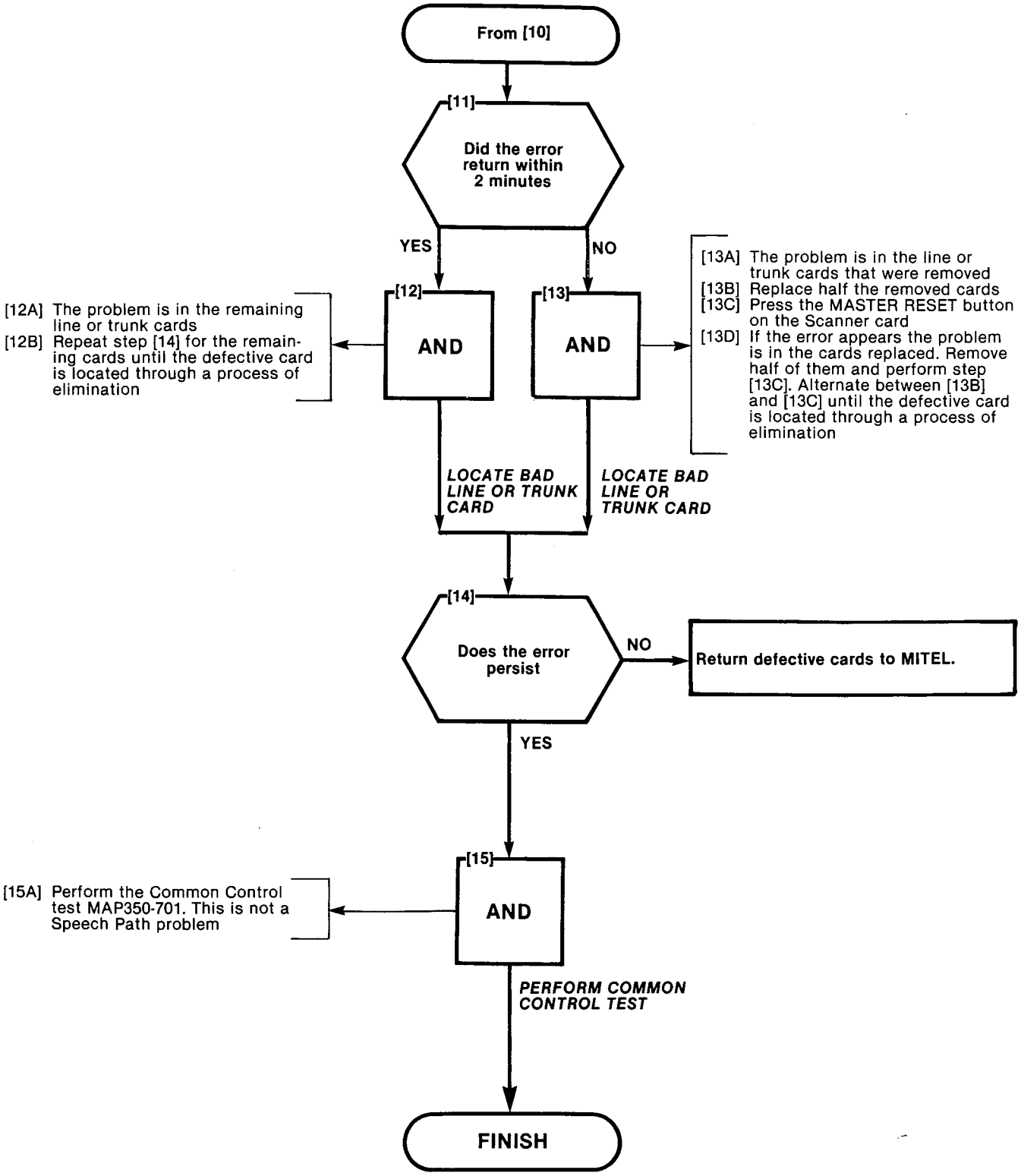

CABLING TEST
MAP350-703
Issue 1, June 1980
Sheet 1 of 1

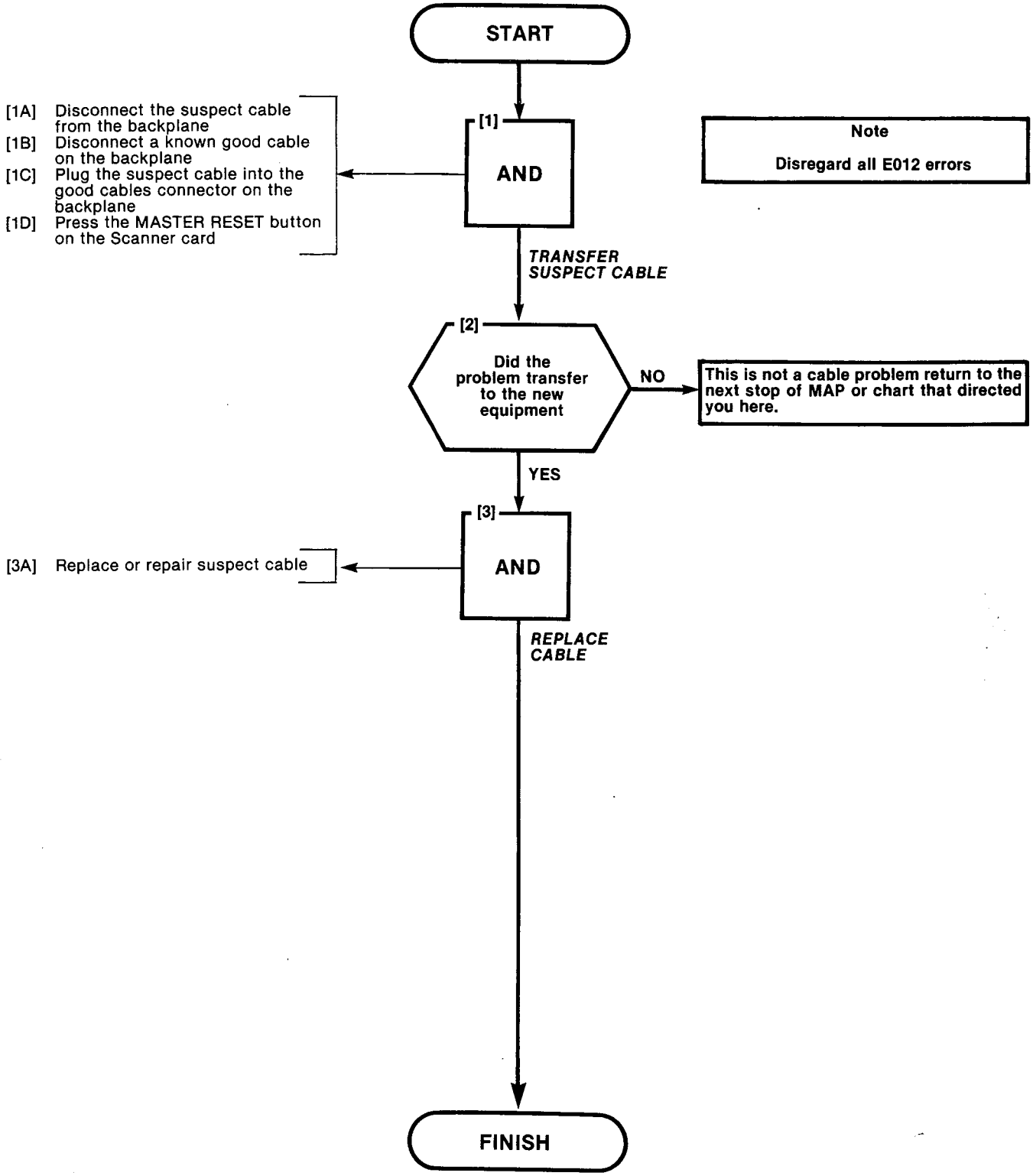

PAGING TEST
MAP350-704
Issue 1, June 1980
Sheet 1 of 3

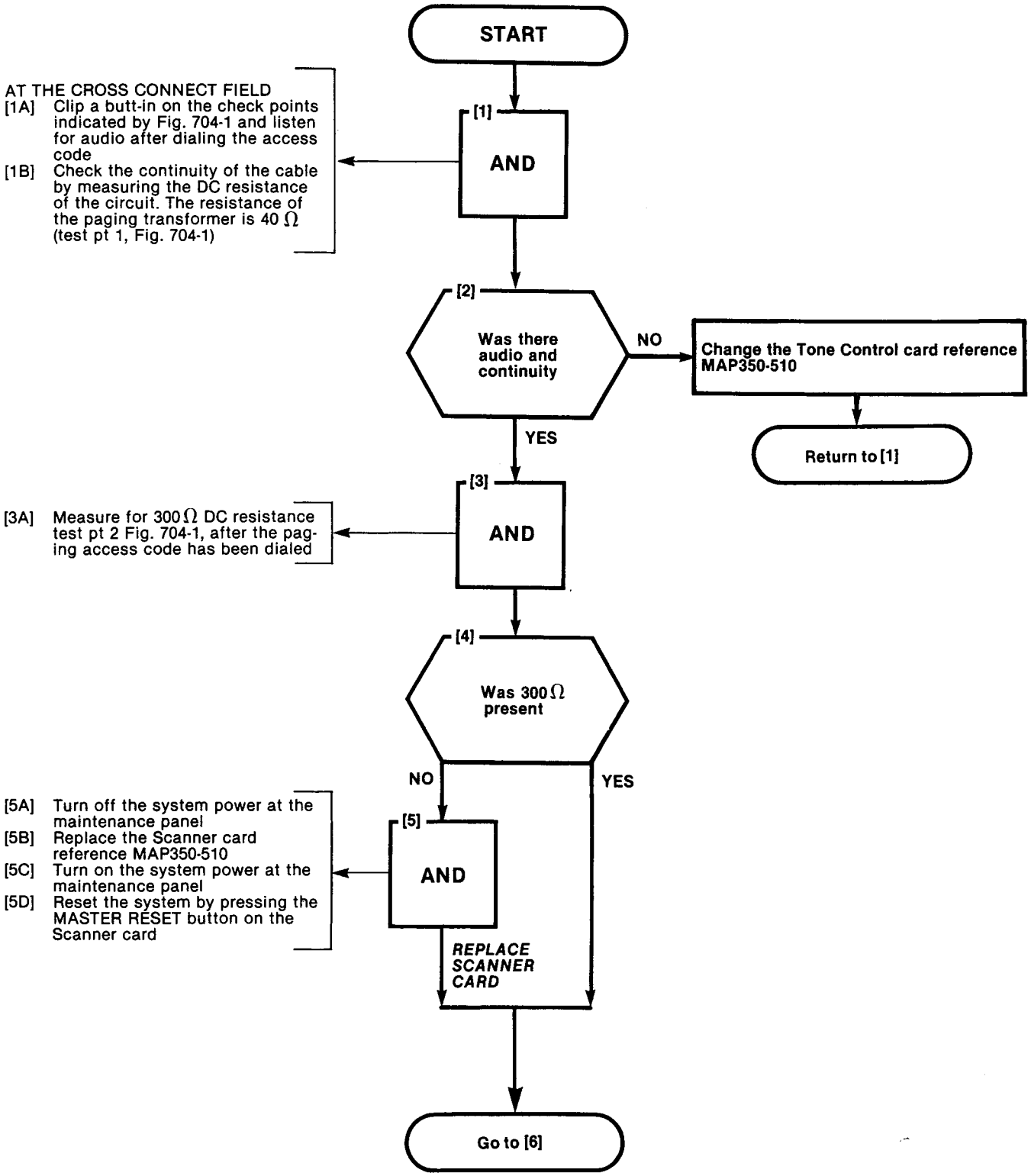

PAGING TEST
MAP350-704
Issue 1, June 1980
Sheet 2 of 3

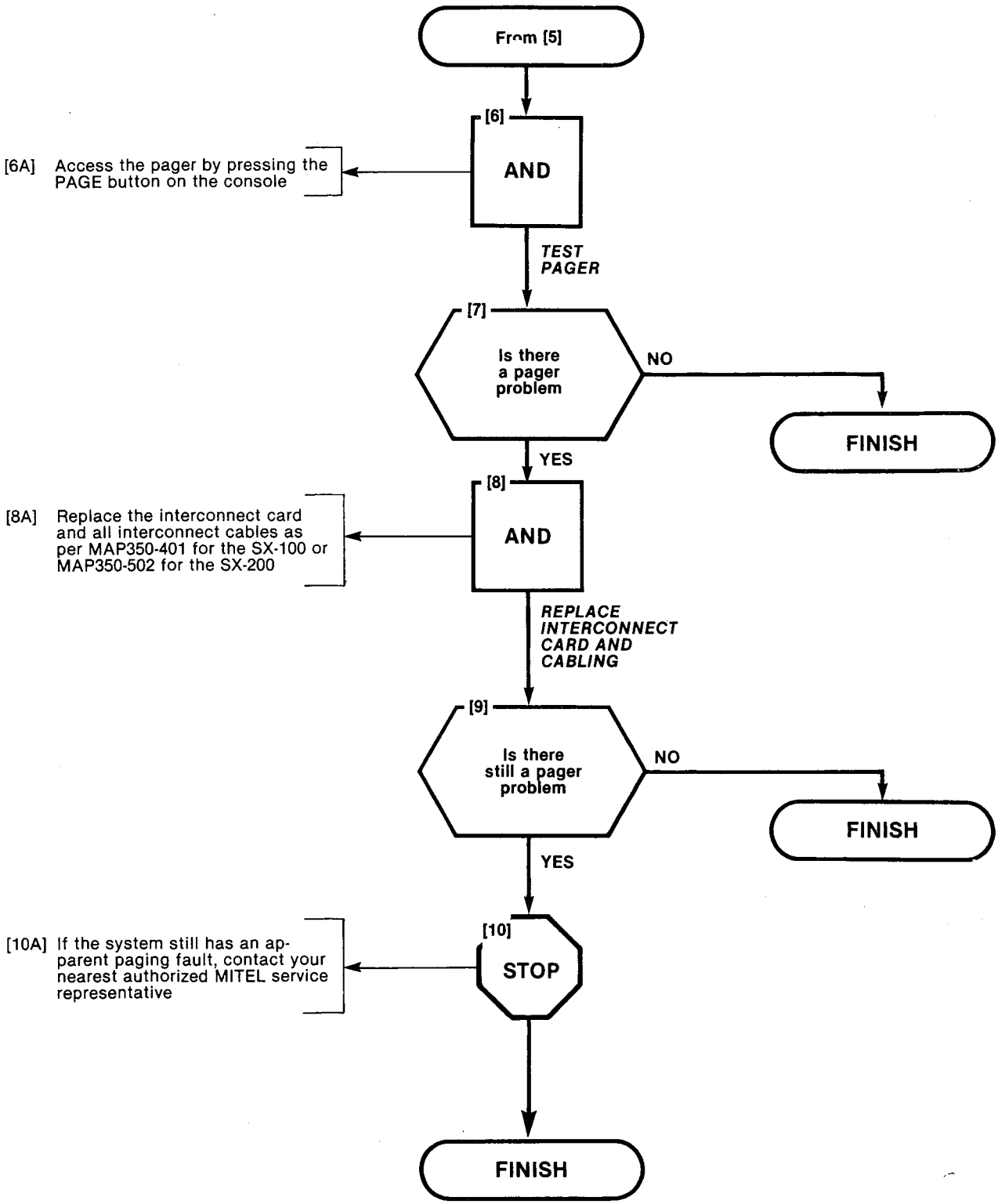

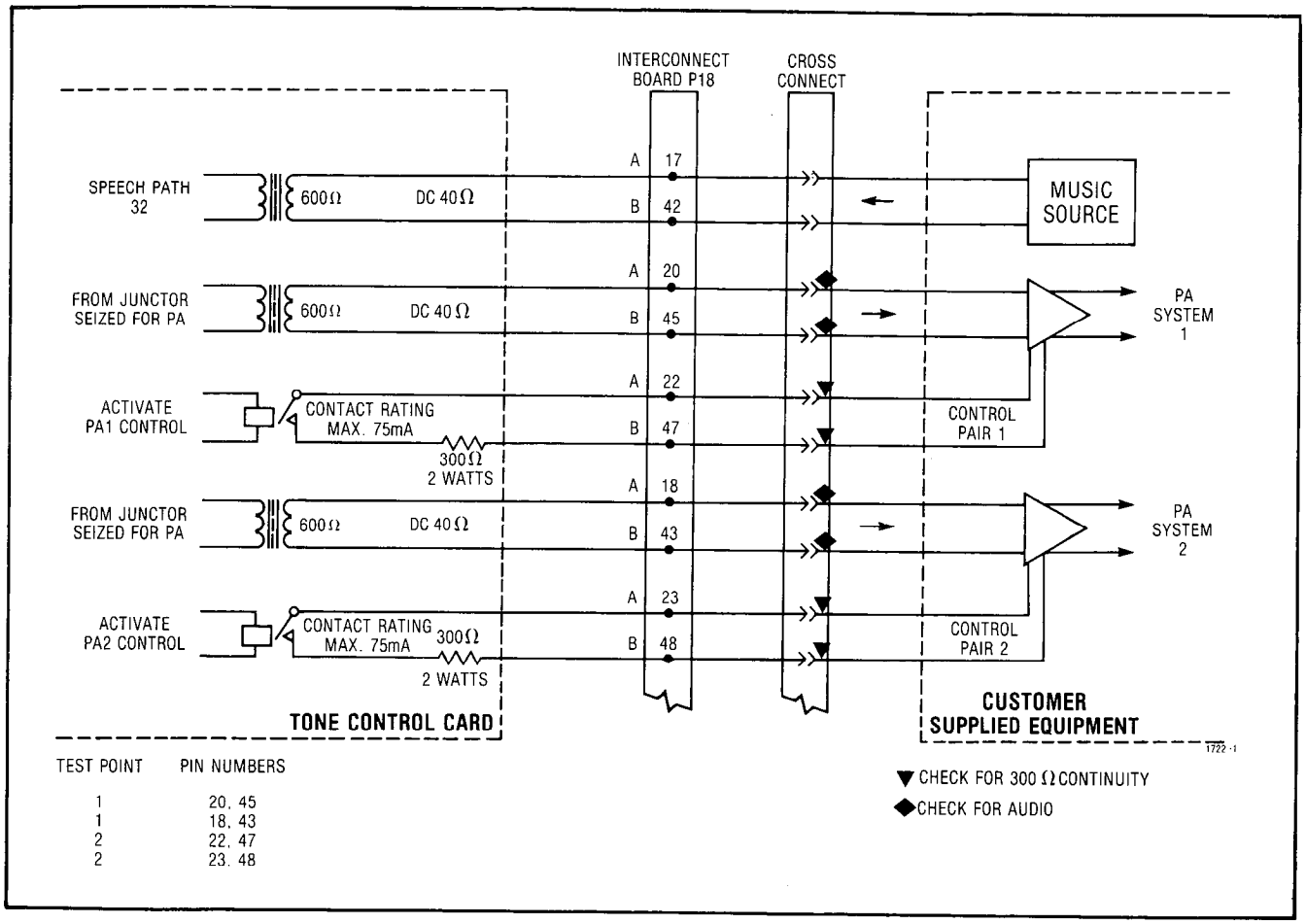

Fig. 704-1 Music and PA Connections

NIGHTBELL TEST
MAP350-705
Issue 1, June 1980
Sheet 1 of 3

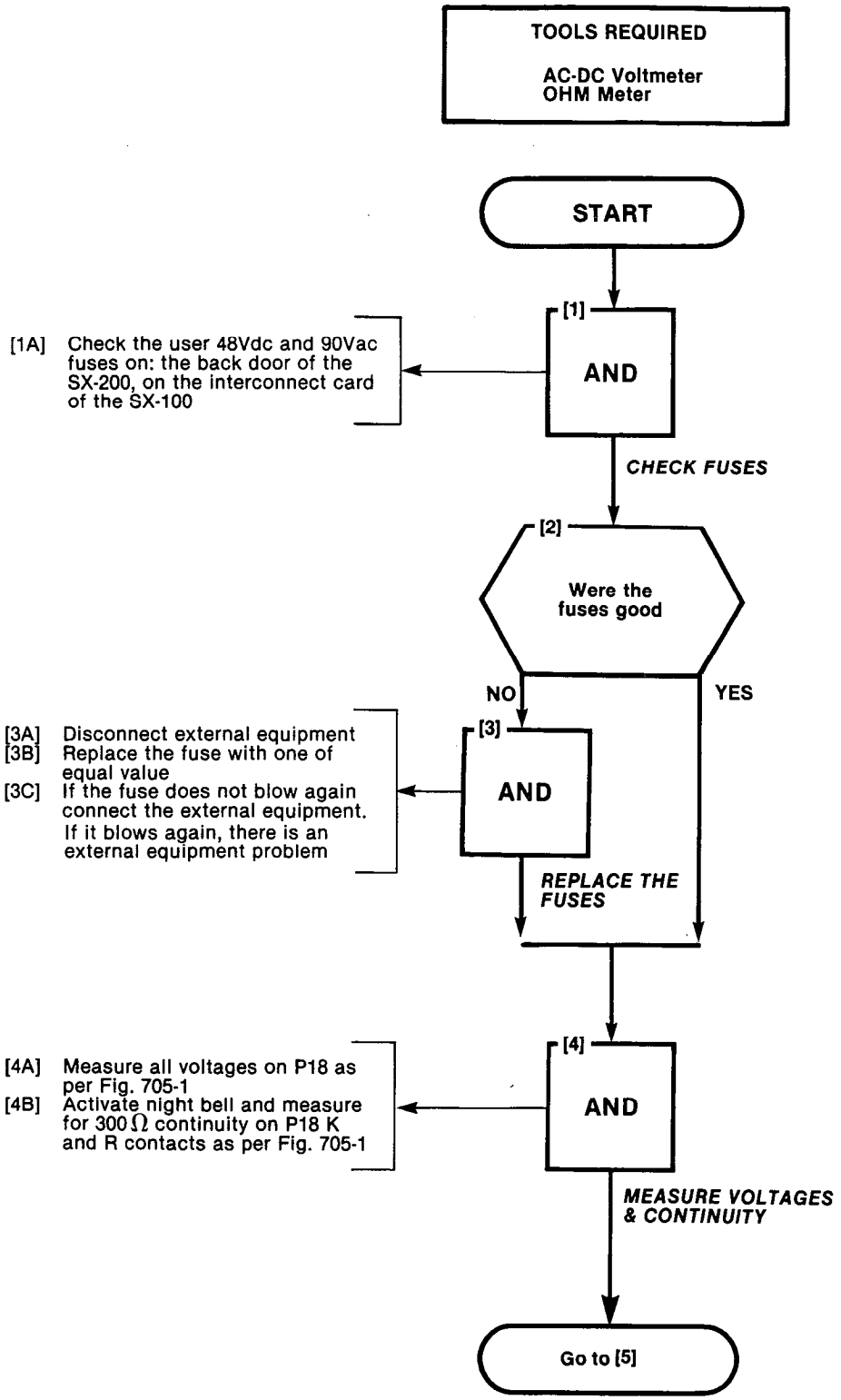

NIGHTBELL TEST
MAP350-705
Issue 1, June 1980
Sheet 2 of 3

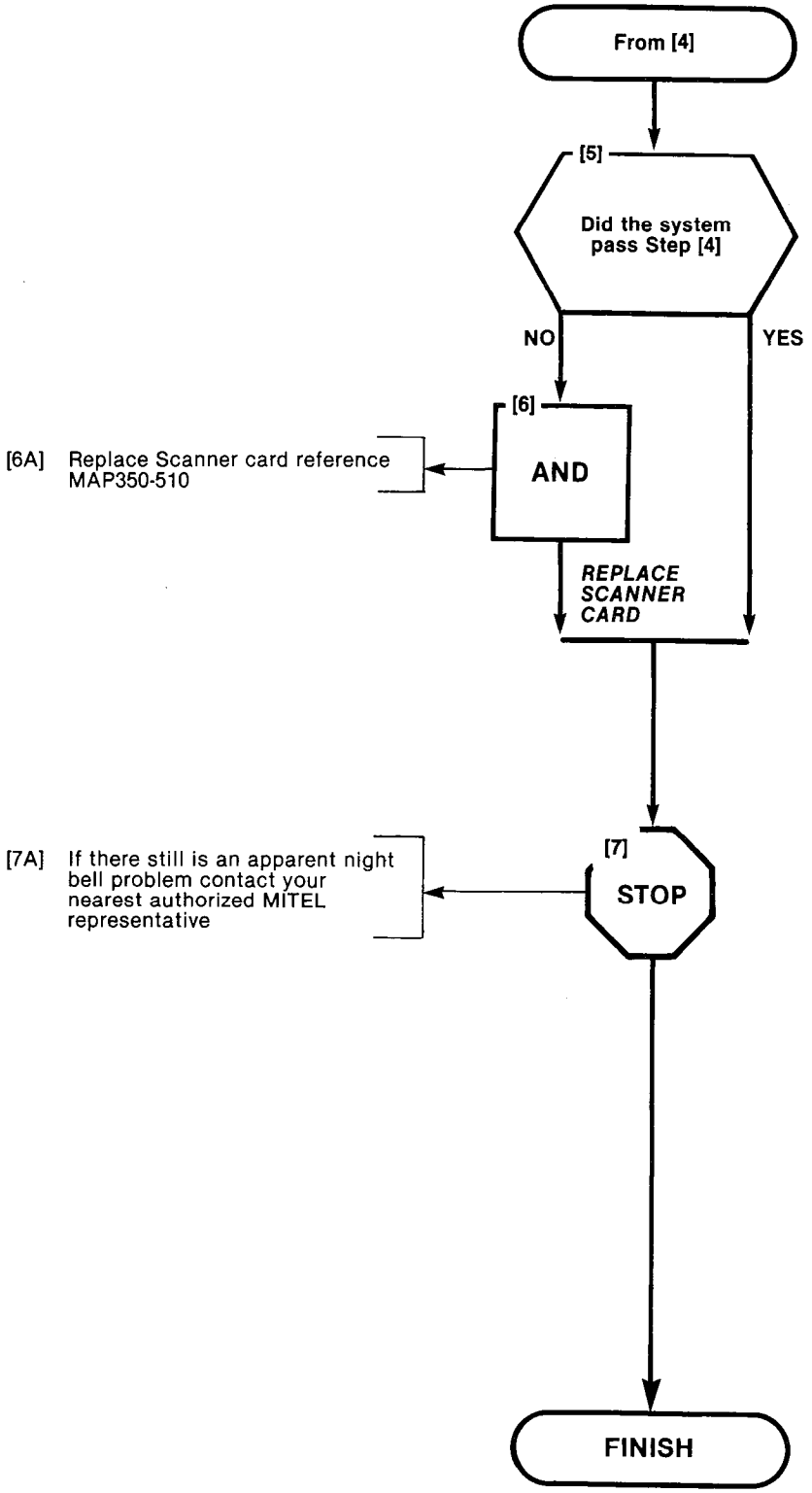

NIGHT BELL CONNECTION AUXILIARY RELAY

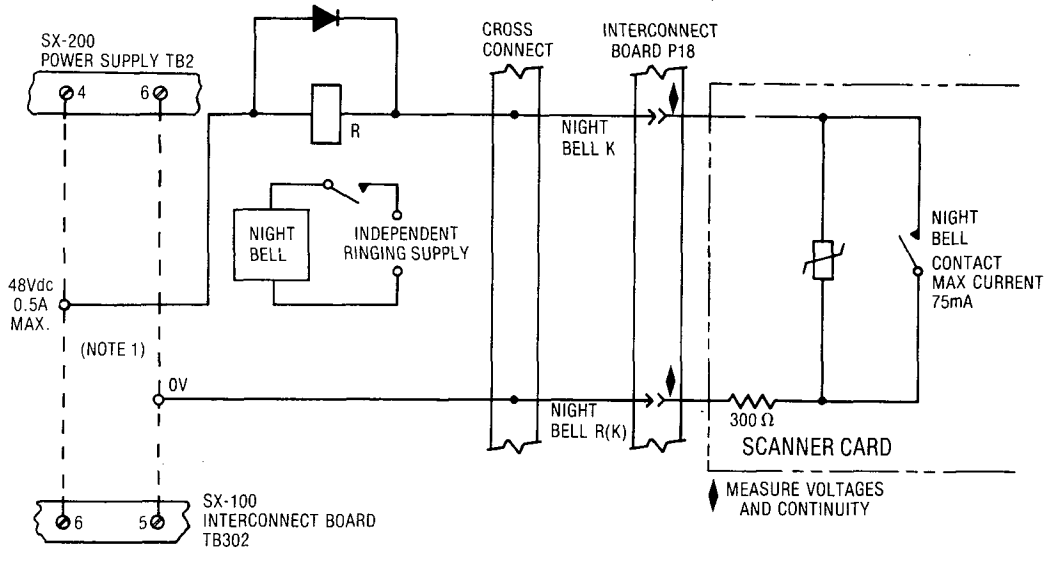

NIGHT BELL RELAY DIRECT DRIVE

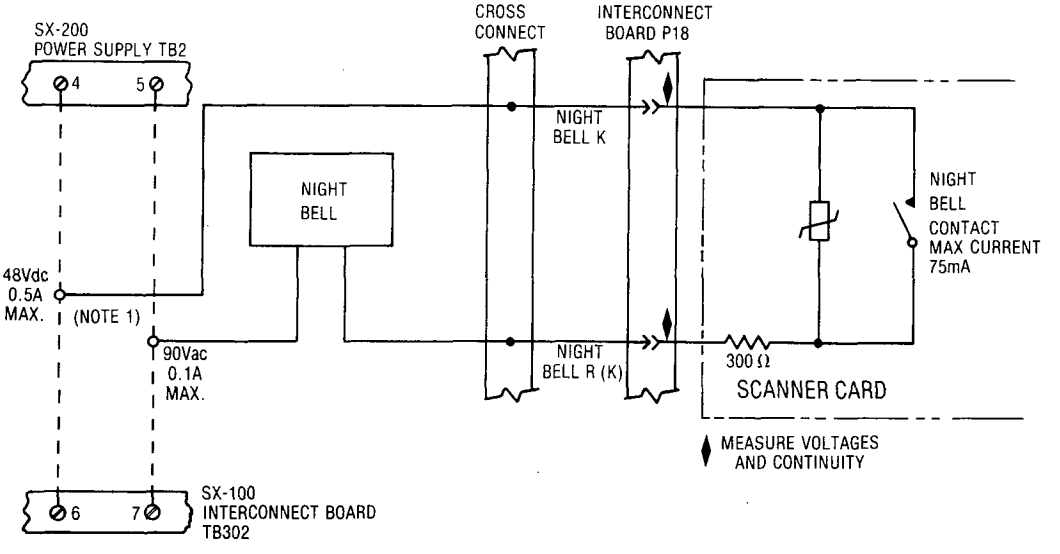

INTERCONNECT BOARD PLUG P18					
PIN	DESTINATION	PIN	DESTINATION	PIN	DESTINATION
46	NIGHT BELL 1 K1	44	NIGHT BELL 2 K2	50	NIGHT BELL 3 K3
21	NIGHT BELL 1 R(K1)	19	NIGHT BELL 2 R (K2)	25	NIGHT BELL 3 R(K3)

1720

NOTE 1: THE FACILITY IS WIRED TO EITHER THE SX-100 OR THE SX-200 TERMINAL BLOCKS, AS INDICATED BY THE DASHED LINES.

MITEL DOES NOT RECOMMEND A DIRECT GROUND ON PIN 4 OF THE NIGHT BELL RELAY DIRECT DRIVE

Fig. 705-1 Night Bell Connections

MUSIC ON HOLD TEST
MAP350-706
Issue 1, June 1980
Sheet 1 of 3

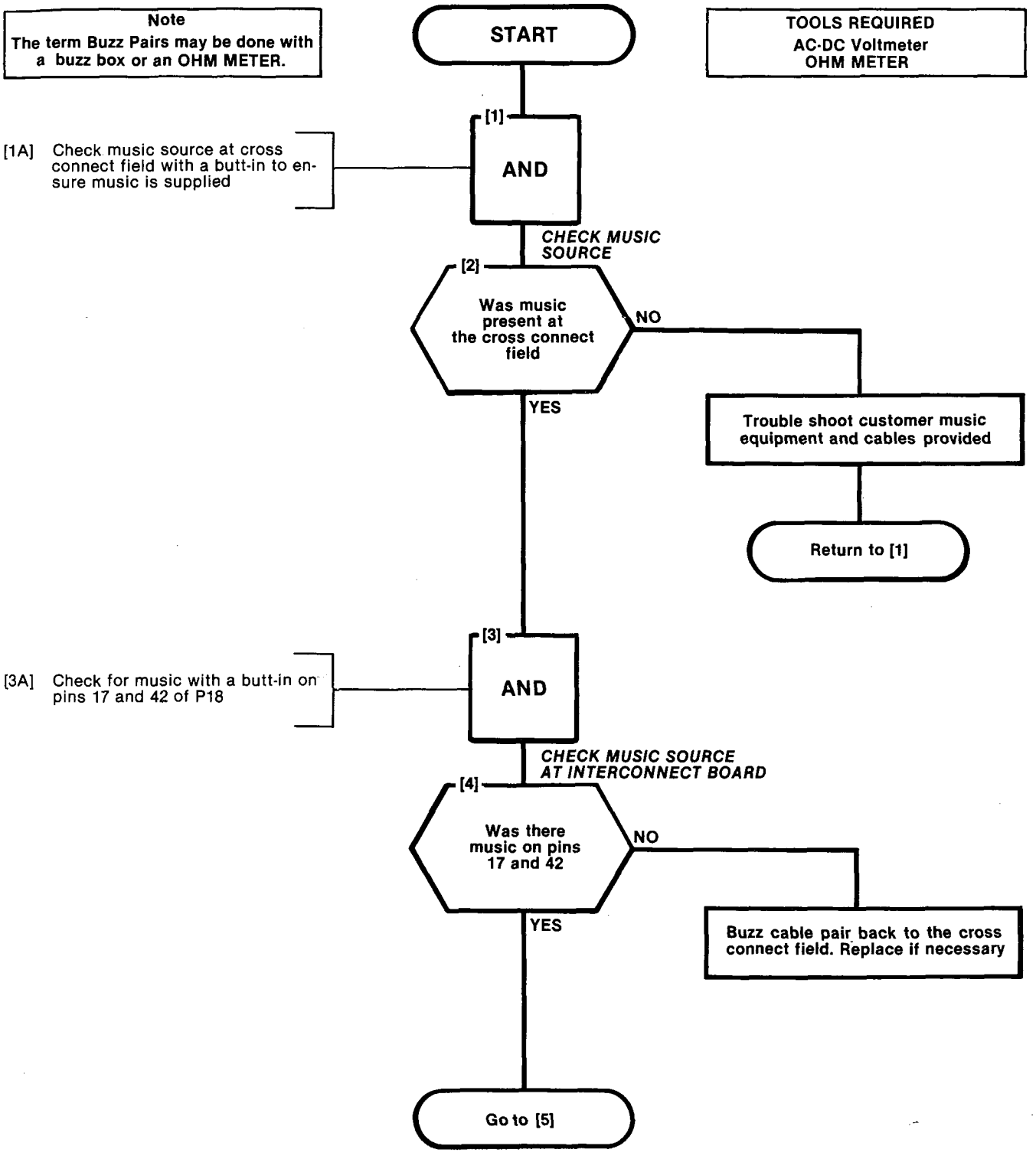

MUSIC ON HOLD TEST
MAP350-706
Issue 1, June 1980
Sheet 2 of 3

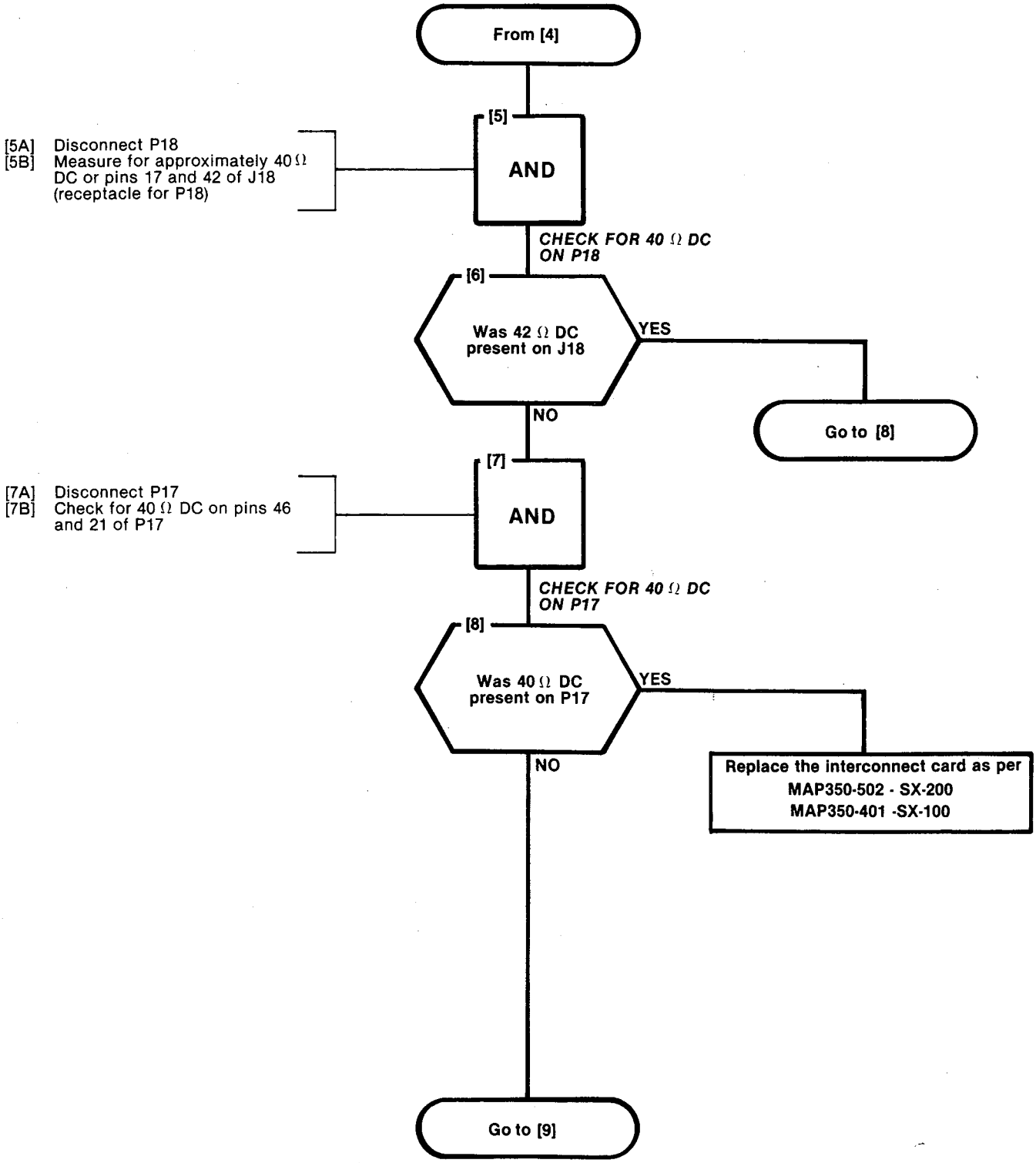
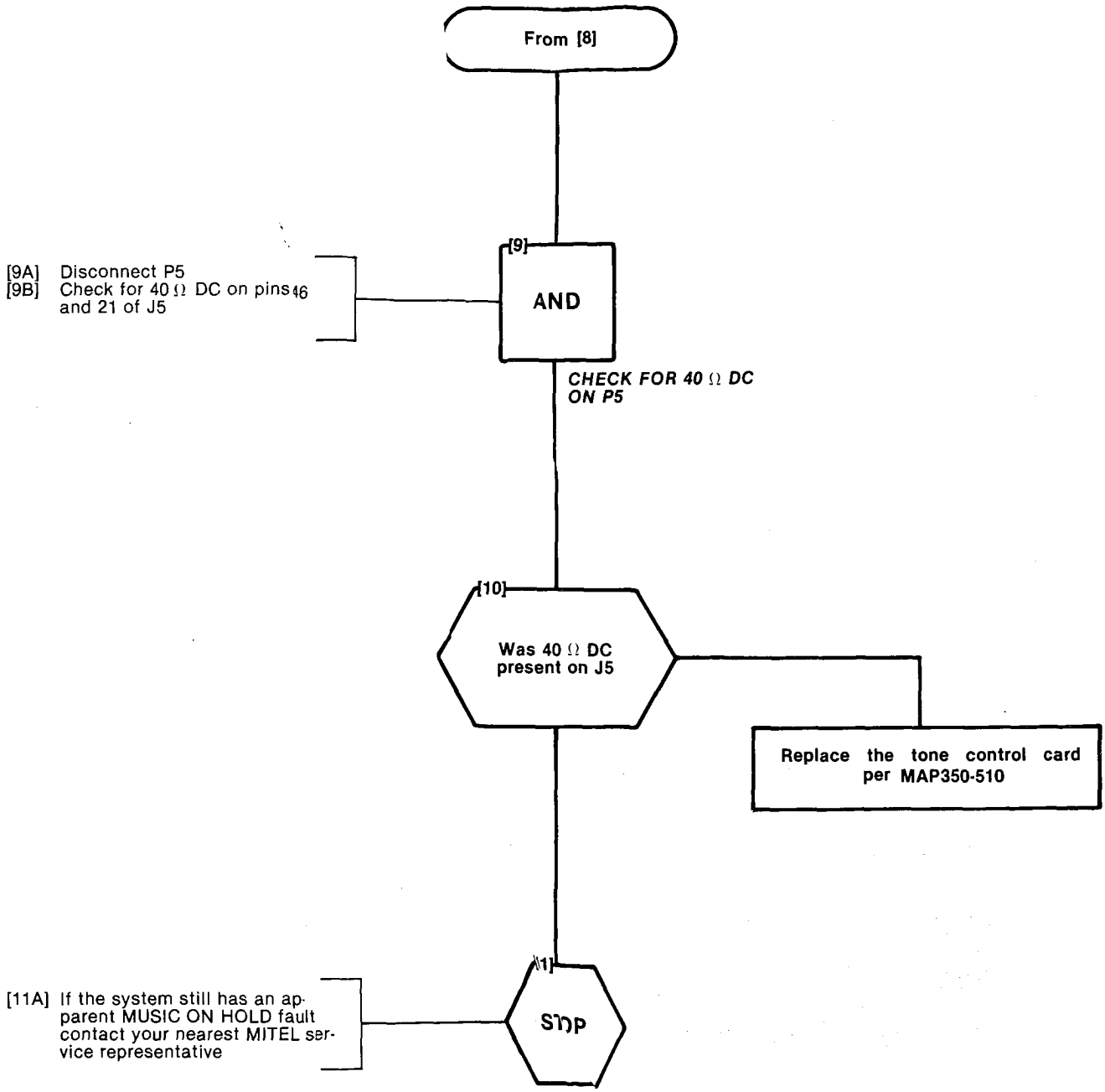
MUSIC ON HOLD TEST
MAP350-706
Issue 1, June 1980
Sheet 3 of 3