SERVICE MANUAL

Multimedia Projector

SANYO

FILE NO.

Production change notice : *(Combination of fan and filter-net has changed.)*

	Combination before change.		Combination after change.	
■ Attachment direction of fan(FN902). (Page 11, 17 and 62.)	Direction of inhalation of air.		Direction of exhaust.	
	Part No.	Description	Part No.	Description
■ Filter-net-B (Page-63 NO. 19)	610 292 3179	Filter-net-B	Delete.	
■ Owner's manual for PLC-XF30 only. (009MY6A).	610 297 5383	O/M-MY6A-A	610 299 6487	O/M-MY6A-B
	610 293 5073	O/M-MY6A-D	610 299 6494	O/M-MY6A-D-A
	610 293 5080	O/M-MY6A-F	610 299 6500	O/M-MY6A-F-A
	610 293 5097	O/M-MY6A-I	610 299 6517	O/M-MY6A-I-A
	610 293 5103	O/M-MY6A-E	610 299 6524	O/M-MY6A-E-A
Owner's manual for PLC-XF30N only. (009MY6AA).	610 297 8032	O/M-MY6AA	610 299 6692	O/M-MY6AA-A
	610 297 8049	O/M-MY6AA-D	610 299 6708	O/M-MY6AA-D-A
	610 297 8056	O/M-MY6AA-F	610 299 6715	O/M-MY6AA-F-A
	610 297 8063	O/M-MY6AA-I	610 299 6722	O/M-MY6AA-I-A
	610 297 8070	O/M-MY6AA-E	610 299 6739	O/M-MY6AA-E-A
Owner's manual for PLC-XF30NL only. (009MY6AL).	610 297 5383	O/M-MY6A-A	610 299 6487	O/M-MY6A-B
■ Serial No.				
PLC-XF30 .	G1601001~G2101420		After left lots.	
PLC-XF30N .	G1X01001~G1Z01130		After left lots.	
PLC-XF30N L .	G1X01061~G1Y01120		After left lots.	

***Note* : About the model before change.**
Surely change the attachment direction of fan(FN902) to direction of exhaust, when the filter-net-B deletes.

MODEL NO.

PLC-XF30 (Projection lens is optional.)
Canada, Europe, Asia, Africa, M.E., U.K.

PLC-XF30N
U.S.A., Canada

PLC-XF30L (Projection lens is optional.)
U.S.A.

Chassis No. MY6-XF3000
MY6-XF30N00
MY6-XF30NL00

NOTE: Match the Chassis No. on the rating sheet on the cabinet with the Chassis No. in the Service Manual.

If the Original Version Service Manual Chassis No. does not match the unit's, additional Service Literature is required. You must refer to "Notices" to the Original Service Manual prior to servicing the unit.

Give complete "CHASSIS NO." for parts order or servicing, it is shown on the rating sheet on the cabinet of the Projector.

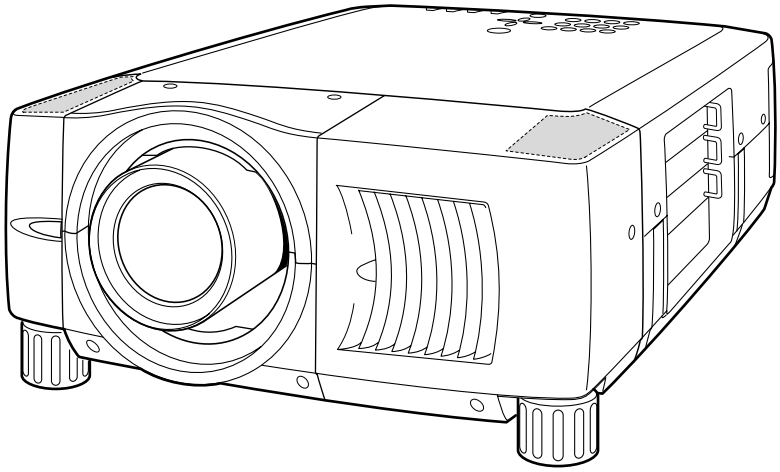

CONTENTS ;

Service Instructions & Parts List

Schematic Diagrams

Printed Wiring Board Diagrams

This Service Manual is provided with the above sections. Click the sections you wish.

***PRODUCT CODE* :**

PLC-XF30	MY6A	1 122 105 00	U.S.A. , Canada
PLC-XF30	PY6A	1 122 106 00	Continental Europe, Asia, Africa, M.E.
PLC-XF30	PY6C	1 122 106 02	U.K.
PLC-XF30N	MY6AA	1 122 105 20	U.S.A. , Canada
PLC-XF30NL	MY6AL	1 122 105 30	U.S.A. , Canada

REFERENCE NO. **SM5110295**

SERVICE MANUAL Multimedia Projector

SANYO

FILE NO.

Production change notice : (*Combination of fan and filter-net has changed.*)

	Combination before change.		Combination after change.	
■ Attachment direction of fan(FN902). (Page 11, 17 and 62.)	Direction of inhalation of air.		Direction of exhaust.	
	Part No.	Description	Part No.	Description
■ Filter-net-B (Page-63 NO. 19)	610 292 3179	Filter-net-B	Delete.	
■ Owner's manual for PLC-XF30 only. (009MY6A).	610 297 5383	O/M-MY6A-A	610 299 6487	O/M-MY6A-B
	610 293 5073	O/M-MY6A-D	610 299 6494	O/M-MY6A-D-A
	610 293 5080	O/M-MY6A-F	610 299 6500	O/M-MY6A-F-A
	610 293 5097	O/M-MY6A-I	610 299 6517	O/M-MY6A-I-A
	610 293 5103	O/M-MY6A-E	610 299 6524	O/M-MY6A-E-A
Owner's manual for PLC-XF30N only. (009MY6AA).	610 297 8032	O/M-MY6AA	610 299 6692	O/M-MY6AA-A
	610 297 8049	O/M-MY6AA-D	610 299 6708	O/M-MY6AA-D-A
	610 297 8056	O/M-MY6AA-F	610 299 6715	O/M-MY6AA-F-A
	610 297 8063	O/M-MY6AA-I	610 299 6722	O/M-MY6AA-I-A
	610 297 8070	O/M-MY6AA-E	610 299 6739	O/M-MY6AA-E-A
Owner's manual for PLC-XF30NL only. (009MY6AL).	610 297 5383	O/M-MY6A-A	610 299 6487	O/M-MY6A-B
■ Serial No.				
PLC-XF30 .	G1601001~G2101420		After left lots.	
PLC-XF30N .	G1X01001~G1Z01130		After left lots.	
PLC-XF30N L .	G1X01061~G1Y01120		After left lots.	

Note : About the model before change.
Surely change the attachment direction of fan(FN902) to direction of exhaust, when the filter-net-B deletes.

MODEL NO.

PLC-XF30 (Projection lens is optional.)
Canada, Europe, Asia, Africa, M.E., U.K.

PLC-XF30N
U.S.A., Canada

PLC-XF30L (Projection lens is optional.)
U.S.A.

Chassis No. MY6-XF3000
MY6-XF30N00
MY6-XF30NL00

NOTE: Match the Chassis No. on the rating sheet on the cabinet with the Chassis No. in the Service Manual.

If the Original Version Service Manual Chassis No. does not match the unit's, additional Service Literature is required. You must refer to "Notices" to the Original Service Manual prior to servicing the unit.

Give complete "CHASSIS NO." for parts order or servicing, it is shown on the rating sheet on the cabinet of the Projector.

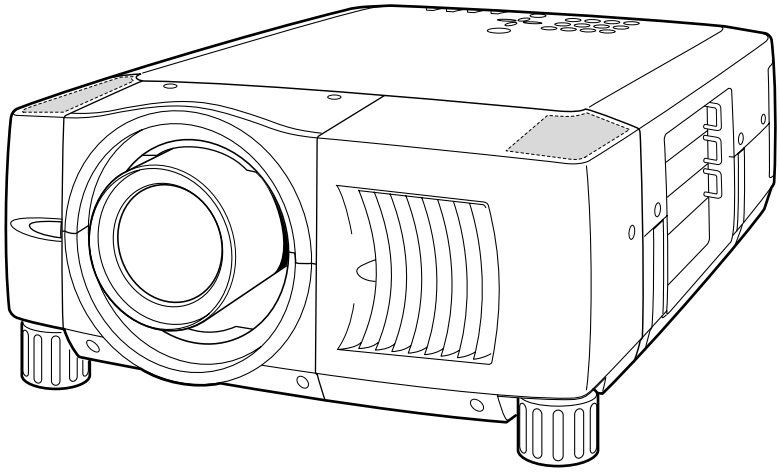

CONTENTS ;

PRODUCT CODE :

PLC-XF30	MY6A	1 122 105 00	U.S.A. , Canada
PLC-XF30	PY6A	1 122 106 00	Continental Europe, Asia, Africa, M.E.
PLC-XF30	PY6C	1 122 106 02	U.K.
PLC-XF30N	MY6AA	1 122 105 20	U.S.A. , Canada
PLC-XF30NL	MY6AL	1 122 105 30	U.S.A. , Canada

REFERENCE NO. **SM5110295**

TECHNICAL SPECIFICATIONS

Projector Type	Multi-media Projector
Dimensions (W x H x D)	17.3" x 9.1" x 23.8" (439 mm x 230 mm x 605.6 mm)
LCD Panel System	1.8" TFT Active Matrix type, 3 panels
Panel Resolution	1024 x 768 dots
Number of Pixels	2,359,296 (1024 x 768 x 3 panels)
Color System	PAL, SECAM, NTSC, NTSC4.43, PAL-M and PAL-N
High Definition TV Signal	480i, 480p, 575i, 575p, 720p, 1035i, 1080i-50 and 1080i-60
Motorized Lens Shift	Up and Down
Scanning Frequency	H-sync. 15 ~ 120 KHz, V-sync. 50 ~ 120 Hz
Horizontal Resolution	800 TV lines
Projection Lamp	200 watt type x 2
Input 1 Jacks	DVI-I Terminal (Digital/Analog), RCA Type (Audio R and L) and DIN 8-pin (Control port)
Input 2 Jacks	BNC Type x 5 (R/Pr, G/Y, B/Pb, H/HV and V), RCA Type (Audio R and L) and DIN 8-pin (Control port)
Input 3 Jacks	BNC Type x 2 (VIDEO/Y, C), RCA Type (Audio R and L) and DIN 4-pin (S-Video)
Other Jacks	Serial port in (DB 9), Serial port out (DB 9), USB port, Audio Monitor out (RCA Type R and L) and Wired Remote Jack
Built-in Speakers	INT. SP. Stereo (R and L), 3 watt RMS (T.H.D. 10%)
Feet Adjustment	0˚ to 6.9˚
Voltage and Power Consumption	AC 100 ~ 120 V (7.8 A Max. Ampere), 50 / 60 Hz AC 200 ~ 240 V (3.3 A Max. Ampere), 50 / 60 Hz
Operating Temperature	41 ˚F ~ 95 ˚F (5 ˚C ~ 35 ˚C)
Storage Temperature	14 ˚F ~ 140 ˚F (-10 ˚C ~ 60 ˚C)
Remote Control Transmitter	Power Source : AA, UM3 or R06 Type x 2 Operating Range : 16.4' (5m) / ±30˚ Dimensions : 2.2" x 1.3" x 7.6" (55mm x 34mm x 192mm) Net Weight : 0.36 lbs (165 g) (including batteries) Laser Pointer : Class II Laser (Max. Output : 1mW / Wave length : 650±20nm)
Accessories	Owner's Manual AC Power Cord Wireless/Wired Remote Control Transmitter and Batteries Remote Control Cable VGA Cable and DVI Cable MAC/VGA Adapter and DVI/VGA Adapter 3 Types Control Cable (For PS/2, Serial and ADB port) 3 Types Light-Block Sheet (For option lens) Lens Mounting Adapter Protective Dust Cover

● Specifications are subject to change without notice.

Safety Instructions

SAFETY PRECAUTIONS

WARNING:
The chassis of this projector is isolated (COLD) from AC line by using the converter transformer. Primary side of the converter and lamp power supply unit circuit is connected to the AC line and it is hot, which hot circuit is identified with the line (⅄⅄) in the schematic diagram. For continued product safety and protection of personnel injury, servicing should be made with qualified personnel.

The following precautions must be observed.

1: An isolation transformer should be connected in the power line between the projector and the AC line before any service is performed on the projector.

2: Comply with all caution and safety-related notes provided on the cabinet back, cabinet bottom, inside the cabinet or on the chassis.

3: When replacing a chassis in the cabinet, always be certain that all the protective devices are installed properly, such as, control knobs, adjustment covers or shields, barriers, etc.

DO NOT OPERATE THIS PROJECTOR WITHOUT THE PROTECTIVE SHIELD IN POSITION AND PROPERLY SECURED.

4: Before replacing the cabinet cover, thoroughly inspect the inside of the cabinet to see that no stray parts or tools have been left inside.

Before returning any projector to the customer, the service personnel must be sure it is completely safe to operate without danger of electric shock.

PRODUCT SAFETY NOTICE

Product safety should be considered when a component replacement is made in any area of the projector. Components indicated by mark ⚠ in the parts list and the schematic diagram designate components in which safety can be of special significance. It is, therefore, particularly recommended that the replacement of the parts must be made by exactly the same parts.

SERVICE PERSONNEL WARNING

Eye damage may result from directly viewing the light produced by the Lamp used in this equipment. Always turn off Lamp before opening cover. The Ultraviolet radiation eye protection is required during this servicing.
Never turn the power on without the lamp to avoid electric-shock or damage of the devices since the stabilizer generates high voltages (20~25kV) at its starts.
Since the lamp is very high temperature during units operation. Replacement of the lamp should be done at least 45 minutes after the power has been turned off, to allow the lamp cool-off.

DO NOT ATTEMPT TO SERVICING THE REMOTE CONTROL UNIT.

Laser Beam may be leaked out when in disassemble the Unit. As the Laser Beam used in this Remote control unit is harmful to the eyes.

CAUTION

LASER RADIATION
DO NOT STARE INTO BEAM

MAX. OUTPUT: 1mW
WAVE LENGTH: 650±20nm
CLASS II LASER PRODUCT

This product is complied with 21 CFR part 1040.10

LASER RADIATION
DO NOT STARE INTO BEAM
CLASS 2 LASER PRODUCT
LASER-STRAHLING
NICHT IN DEN STRAHL BLICKEN
LASER KLASSE 2
レーザ放射クラス2レーザ製品
ビームをのぞき込まないこと
IEC60825-1, Am. 1 1997
MAX OUTPUT (最大出力) : 1 mW
WAVE LENGTH (波長) : 650±20nm

Protections

This projector is equipped with the following protections to operate in safety.

❑ Fuse for circuit protection

The fuse is located in the rear inside a projector. (Refer to figure.) When either the LAMP indicator or the READY indicator is not illuminated, fuse may be opened. Check the fuse as following steps.

1. Remove the Cabinet-top following to “Mechanical Disassemblies”.
2. Remove the fuse from fuse holder.
3. Check the resistance of fuse using a tester.

To install the fuse, take reversed step in the above.

It should be used the specified fuse as follows;

Fuse Part No.: 423 027 2602
TYPE T10AH250V FUSE
LITTLEFUSE INC. TYPE 215010

MY6A

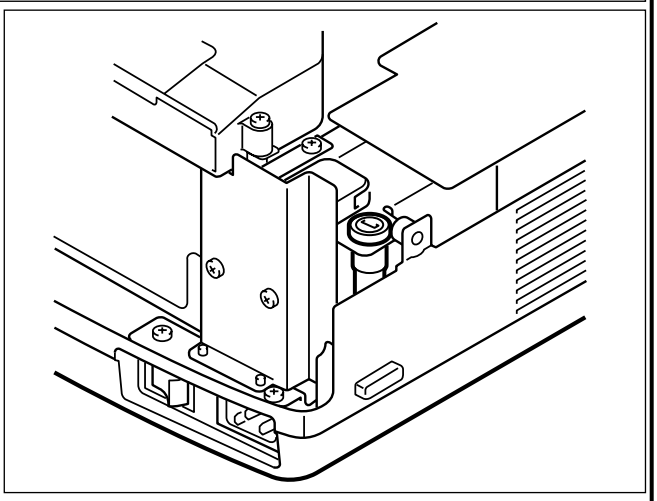

ATTENTION: POUR MAINTENIR LA PROTECTION CONTRE LES RISQUES D'INCENDIE. N'UTILISER QUE DES FUSIBLES DE RECHANGE CALIBRES A T10AH250V. (LITTLEFUSE INC TYPE 215010)

MY6A

❑ Protection equipment for users

Electric shock protection. (Interlock switch)

■ The Lamp circuit **(**the lamp and the electrode of the lamp socket**)** of this projector is **not insulated** from AC line, and it is "***HOT***." Therefore, when replacing lamp assembly, an electric shock may be received. However, the interlock switch (SW902) is designed so that it may protect from the accident.

■ This switch(SW902) insulates a lamp circuit from AC line, when a lamp cover is removed. (The lamp circuit changes to "***COLD***.")

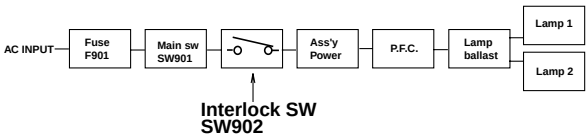

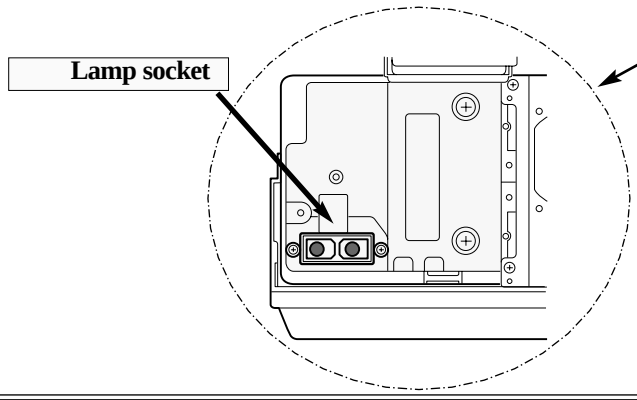

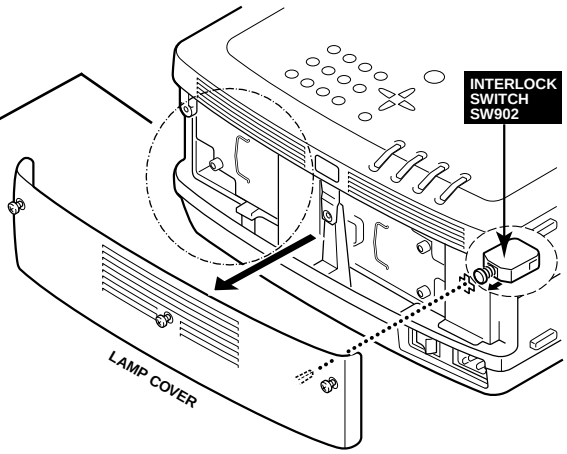

❑ Overheating Protection -- The temperature monitor system --

The temperature monitor system is provided to prevents damage of optical components (the LCD panel and polarization film etc.) inside a projector from overheat. Two protection systems are provided.
Each system operation as follows ;

----- The temperature monitor -1: -----

■ To control the driving power of the cooling fans.

The CPU checks the temperature and atmospheric pressure inside a projector. It checks a temperature using temperature sensor-IC5801 and it checks an atmospheric pressure using pressure sensor-IC886.
The CPU controls the driving power of the cooling fans so the temperature inside the projector is maintained to normal temperature.

■ To shut down the projector.

The CPU checks temperature of Red-LCD panel periphery (IC2541) and inhalation air(IC5801). If each part temperature reaches to abnormal temperature(IC2541 ; 47degrees / IC5801 ; 42degrees), the CPU will turn off a projector, and will blink TEMPERATURE WARNING indicator at intervals of 0.6 seconds. Cooling fans operate until temperature returns to normal. Indicator will stop blink, if temperature returns to normal.

Y/V

--- The temperature monitor -2 : ---

(Temperature check of lamps.)
Temperature switches (SW 903~904) are arranged near the two lamps. Temperature switches will operate, if temperature reaches 90~100 degrees.

SW904 (Lamp-1)----- It operates at 90 degrees.
SW903 (Lamp-2)----- It operates at 100 degrees.

When temperature switches have operated, lamp ballast units will be shut down, then a projector will be turned off.

Note.
CPU does not check operation of temperature switches. Therefore, when temperature switches have operated and a projector has shut down, TEMPERATURE-WARNING indicator does not blink.

Y/V

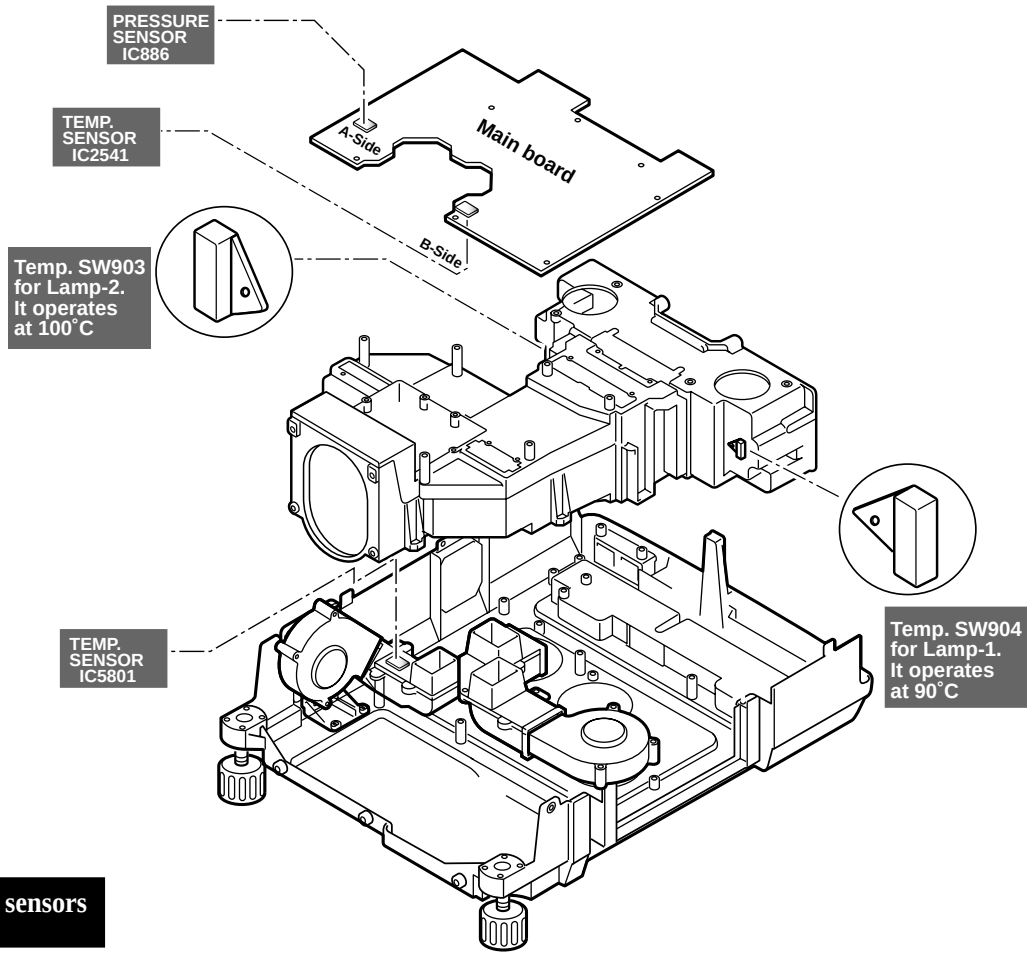

Temperature sensors location

LAMP REPLACEMENT

Before Replacement

This Projector is equipped with 2 Projection Lamps to ensure brighter image and those lamps are controlled by Lamp Management Function. Lamp Management Function detects status of two lamps and shows status on screen or on LAMP REPLACE indicator. This function also automatically controls Lamp Mode when any of lamps is out for end of life or malfunctions.

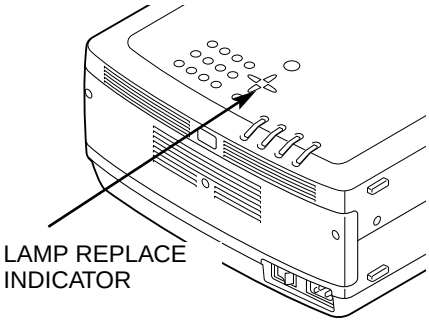

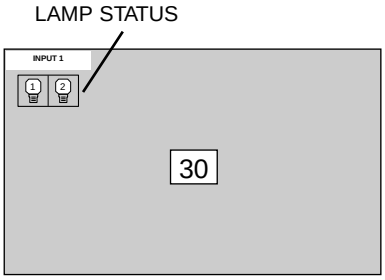

Lamp Replace Indicator

This LAMP REPLACE indicator lights yellow when any of Projection Lamps is nearing its end, and flashes when any of them becomes out. Check number of lamp on Lamp Status Display and replace lamp.

Lamp Status Display

Lamp Status Display appears on screen when power switch is on or changed input position (input 1, input 2 or input 3). This shows status of each lamp as; ON, OFF, NEAR END, or OUT. Refer to following for each status.

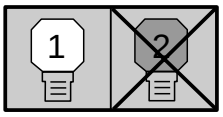

LAMP STATUS DISPLAY

Yellow Lamp ---------- Projection Lamp lights normally.

Dim Lamp ---------- Projection Lamp is turned off.

Red Lamp ---------- Projection Lamp is nearing its end. When image becomes darker or color becomes unnatural, replace lamp. (LAMP REPLACE indicator lights yellow.)

X Mark on Lamp ------- (LAMP REPLACE indicator flashes yellow.) Projection lamp is defective or fails to be turned on. Restart a projector on, and make sure lamp is on. If this mark still appears, replace lamp corresponding with number marked X.

Lamp Mode Changeover

Lamp Management Function automatically changes combination of lighting lamp (Lamp Mode) by detecting status of lamp. When any of 2 lamps becomes out, Lamp Mode is changed over from 2 lamps to 1 lamp. Lamp Mode can be switched to 2 lamps or 1 lamp manually. Refer to SETTING section on page 39, 40 of Owner's manual.

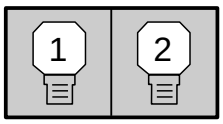

2 LAMP MODE

1 LAMP MODE
(Example)

Lamp Replacement

CAUTION
For continued safety, replace with a lamp assembly of same type.
Allow a projector to cool for at least 45 minutes before you open Lamp Cover. Inside of a projector can become very hot.

CAUTION
Do not drop a lamp assembly or touch a glass bulb! Glass can shatter and may cause injury.

Follow these steps to replace lamp assembly.

1. Check number of lamp to be replaced on Lamp Status Display.
2. Turn off a projector and disconnect AC Power Cord. Allow a projector to cool for at least 45 minutes.
3. Loosen 3 screws on Lamp Cover and remove Lamp Cover. (See right figure.)
4. Loosen 2 screws and pull out Lamp Assembly to be replaced by grasping handle.
5. Replace Lamp Assembly with a new one and tighten 2 screws. Make sure that Lamp Assembly is set properly
6. Replace Lamp Cover and tighten 3 screws.
7. Connect AC Power Cord to a projector and turn projector on.
8. Reset Lamp Replacement Counter. (Refer to section "Lamp Counter Reset".)

NOTE : Do not reset LAMP REPLACEMENT COUNTER when lamp is not replaced.

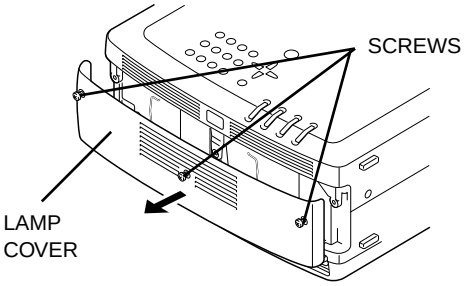

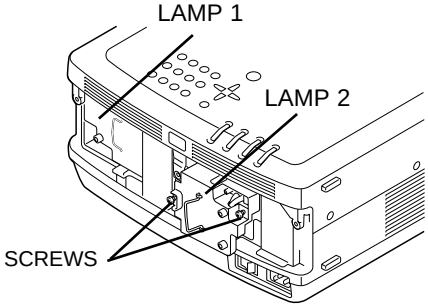

Make sure which number of lamp needs to be replaced on Lamp Status Display.
Figure shows case of replacing LAMP 2.

CAUTION : DO NOT OPERATE A PROJECTOR WHILE ANY OF LAMPS IS REMOVED. IT MAY RESULT IN MALFUNCTIONS, FIRE HAZARD, OR OTHER ACCIDENTS.

NOTES ON LAMP REPLACEMENT

To maintain quality of picture (better balance of color and brightness in entire screen), we recommend replacing all 2 lamps at a time.

ORDER REPLACEMENT LAMP

● Replacement *Lamp Type No.* ***: POA-LMP39***

Lamp Service Parts No. ***: 610 292 4848***

Lamp counter reset

Be sure to reset Lamp Counter when Lamp Assembly is replaced. When Lamp Replace Counter is reset, LAMP REPLACE indicator stops lighting.

1 Turn projector on, press MENU button and ON-SCREEN MENU will appear. Press POINT LEFT/RIGHT button(s) to move a red frame pointer to SETTING Menu icon.

2 Press POINT DOWN button to move a red frame pointer to “Lamp counter reset” and then press SELECT button.

3 Move arrow to replaced lamp number (Lamp 1 or Lamp 2) and then press SELECT button. Message "Lamp replace counter Reset?" is displayed. Move pointer to [Yes] and then press SELECT button.

NOTE: Be sure to reset correct lamp number otherwise LAMP REPLACE indicator continues lighting.

4 Another confirmation dialog box appears and select [Yes] to reset Lamp Replace Counter.

Do not reset Lamp Replace Counter except after Projection lamp is replaced.

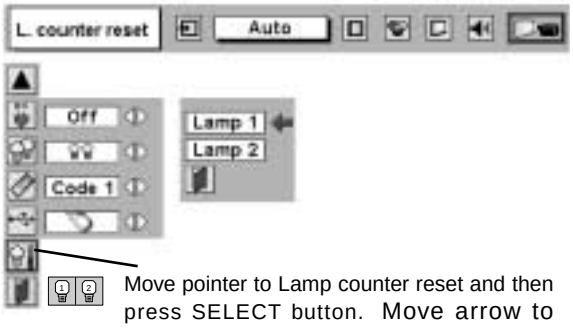

Move pointer to Lamp counter reset and then press SELECT button. Move arrow to replaced lamp number (Lamp 1 or Lamp 2) and then press SELECT button.

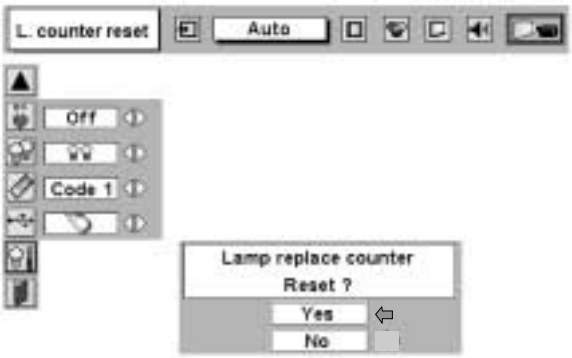

Message "Lamp replace counter Reset?" is displayed. Move pointer to [Yes] and then press SELECT button.

MY6A

Mechanical disassemblies

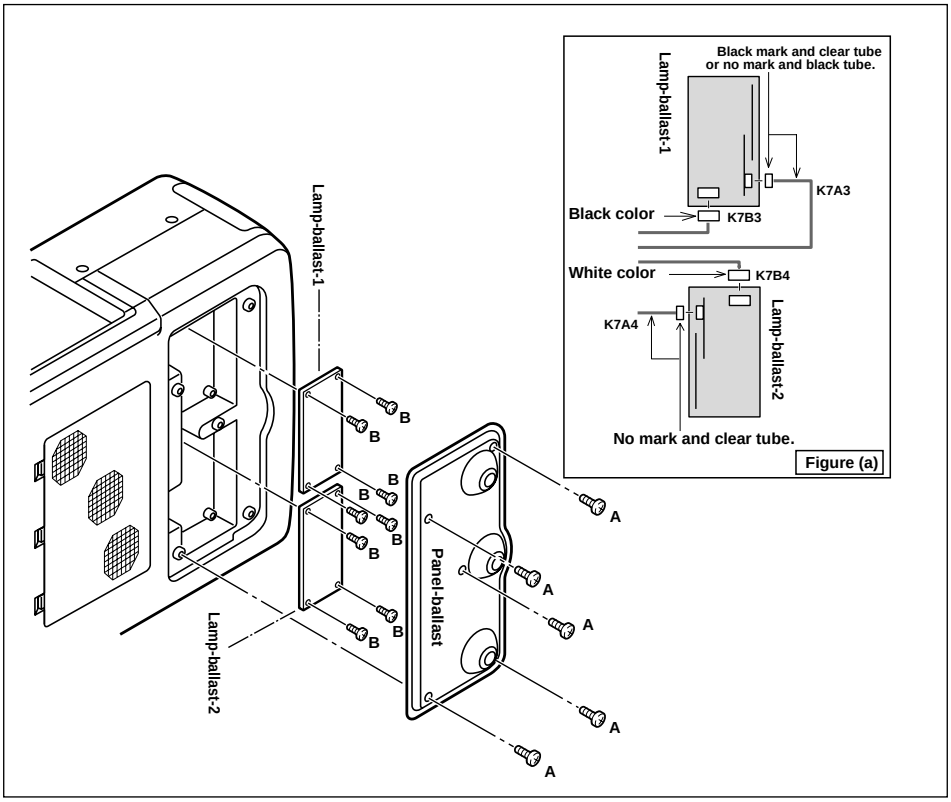

1. *Panel ballast and Lamp ballast Assemblies removal.*

1. Remove 5 screws A and remove the Panel ballast.
2. Remove the connectors. Remove 8 screws B and remove the 2 Lamp ballast assemblies.

Note : To connect the connector.
Be careful to connecting the connectors of the Lamp ballast assemblies. Refer to the figure-(a).

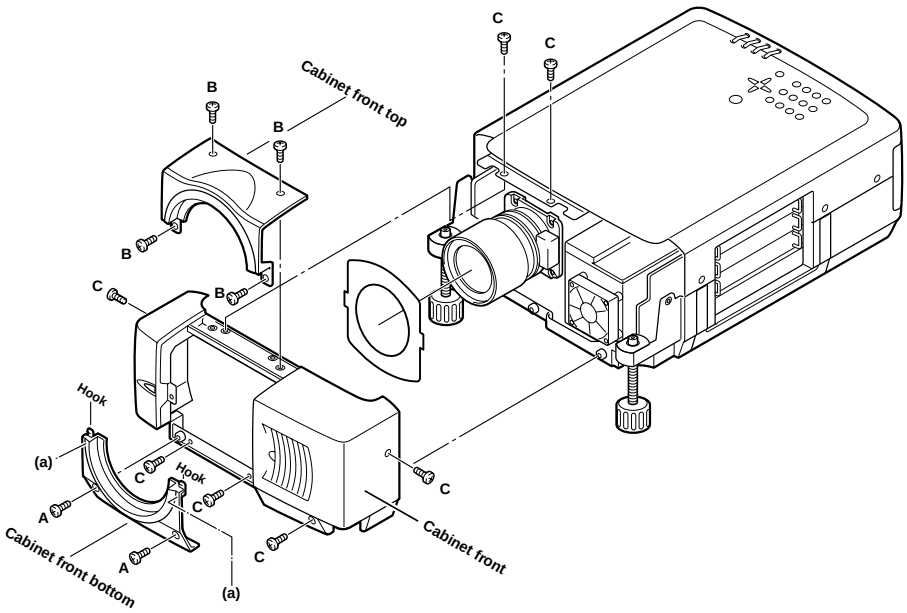

2. *Cabinet front bottom, Cabinet front top and Cabinet front removal.*

Note :
Be careful not to damage Hook. The cabinet-front-bottom is being fixed with cabinet-front-top by hook.

1. **Remove 2 screws-A. Push part(a) and pull the Cabinet-front-bottom down.**
2. **Remove 4 screws B and remove the Cabinet front top.**
3. **Remove 7 screws C and remove the Cabinet front.**

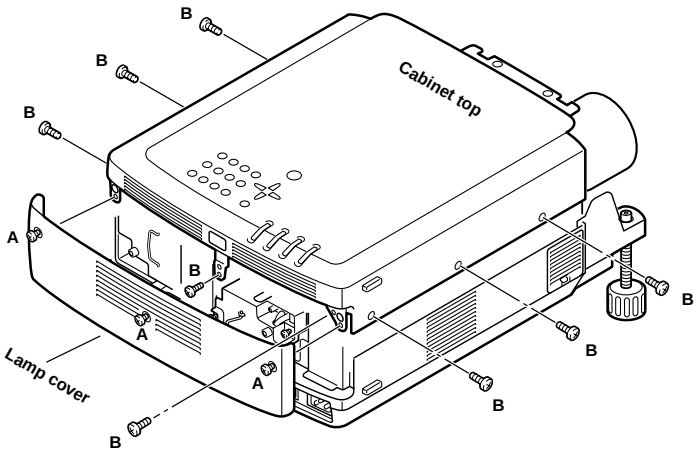

3. *Lamp cover and cabinet top removal.*

1. Remove 3 screws A and remove the Lamp cover.

2. Remove 8 screws B and remove the Cabinet top.

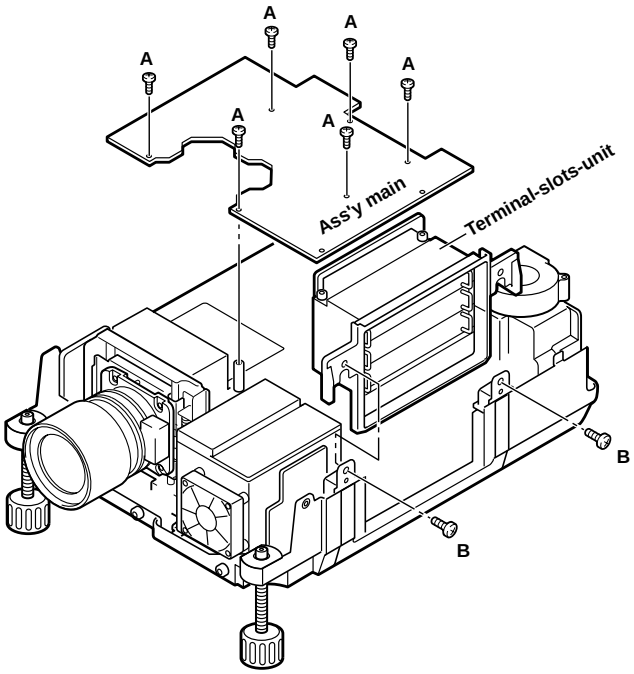

4. *Assembly main and Terminal slots unit removal.*

1. Remove the connectors and the flexible cables of the LCD panels from the assembly Main. (*Never touch the electrode of flexible cables.)* Remove 6 screws A and remove the Assembly main.

2. Remove 2 screws B and pull the Terminal slots unit upward and remove.

Note **:**
Two screws B are not used in some particular models.

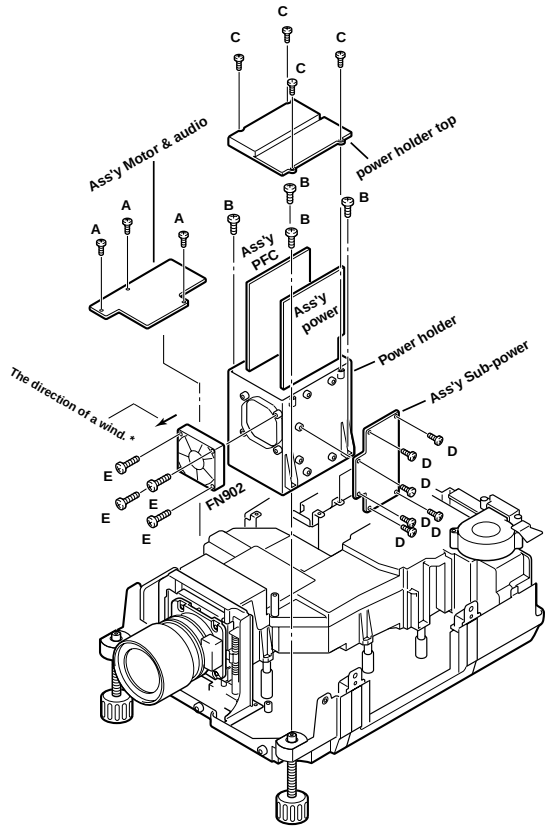

5. *Assembly Motor & audio, assembly Power, assembly PFC, assembly Sub power and Fan(FN902) Removal.*

NOTE :
Be careful of the attachment direction of Fan.
FN902 is Fan for an exhaust. *

FN902 :
See the **Production change notice** of the cover. (Page-1)

1. Remove 3 screws A and remove the assembly motor & audio
2. Remove 4 screws B and remove the power holder.
3. Remove 4 screws C and remove the power holder top.
4. Remove 6 screws D and remove the assembly sub power.
5. Remove 4 screws E and remove the Fan (FN902).
6. Pull the assembly power upward and remove.
7. Pull the assembly PFC upward and remove.

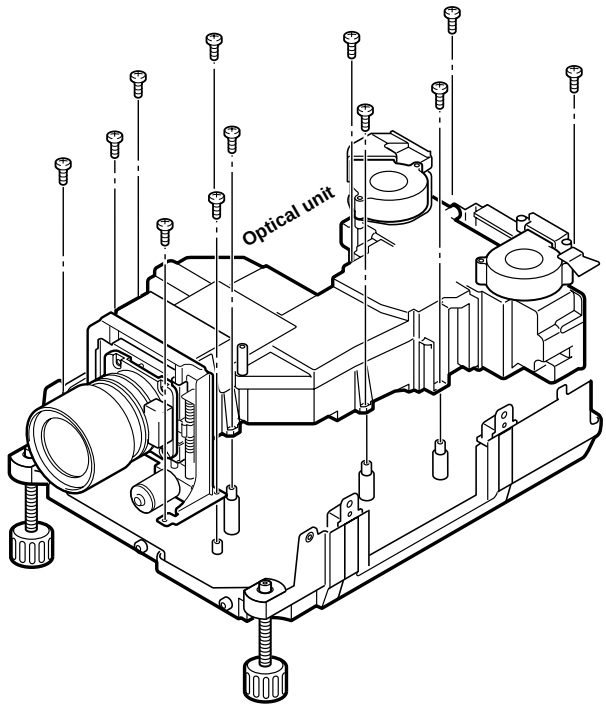

6. *Optical unit removal.*

Remove 12 screws and then pull the optical unit upward and remove.

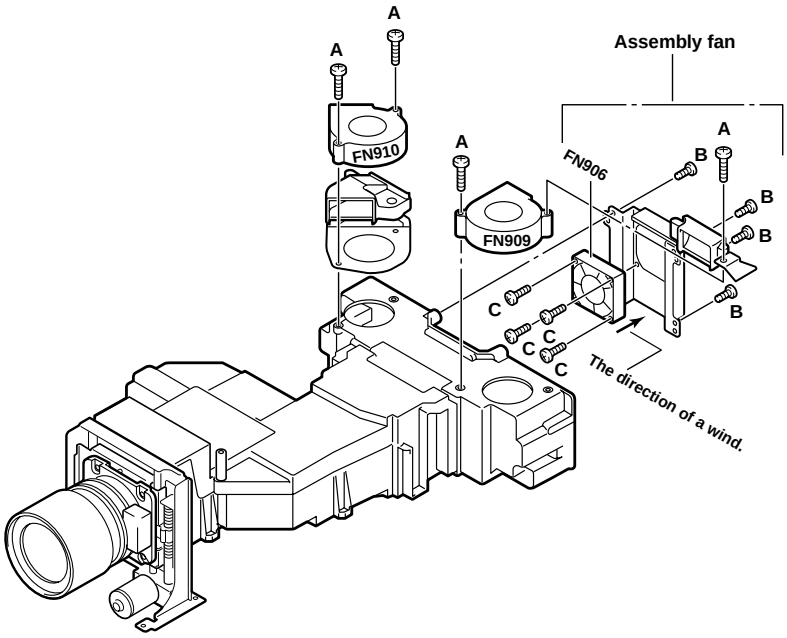

7. *Fans(FN906, FN909 and FN910) removal.*

NOTE :
Be careful of the attachment direction of Fan.
FN906 is Fan for an exhaust.

1. Remove 4 screws A and remove the fan FN909 and remove the fan FN910.
2. Remove 4 screws B and remove the assembly fan.
3. Remove 4 screws C and remove the fan FN906.

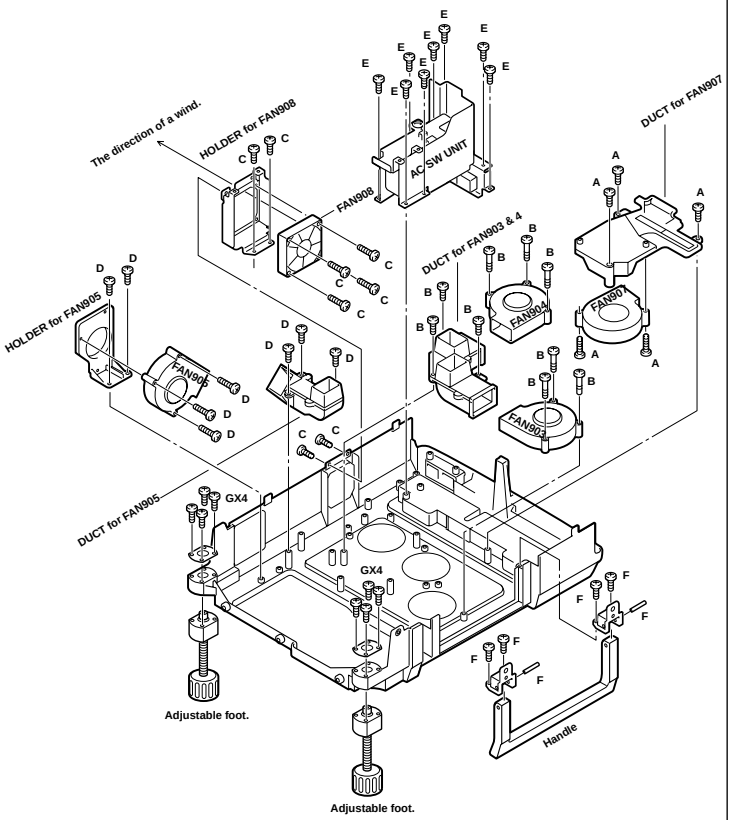

8. *Fans(FN903, FN904, FN905, FN907 and FN908), AC SW unit, Handle and Adjustable feet removal.*

NOTE :
Be careful of the attachment direction of Fan.
FN908 is Fan for an exhaust.

Mark the Fans as they are removed from the cabinet bottom so that they may be reassembled in the same location from which they were removed.

1. Remove 5 screws A and remove the duct for FN907 and remove the Fan (FN907).
2. Remove 9 screws B and remove the Fans (FN903 and FN904) and remove the duct for FN903/4.
3. Remove 8 screws C and remove the holder for FN908 and remove the Fan (FN908).
4. Remove 8 screws D and remove the holder for FN905 and remove the Fan (FN905) and remove the duct for FN905.
5. Remove 8 screws E and remove the AC switch unit.
6. Remove 4 screws F and remove 2 pins F and remove the handle.
7. Remove 8 screws G and remove the adjustable feet.

Optical unit disassemblies

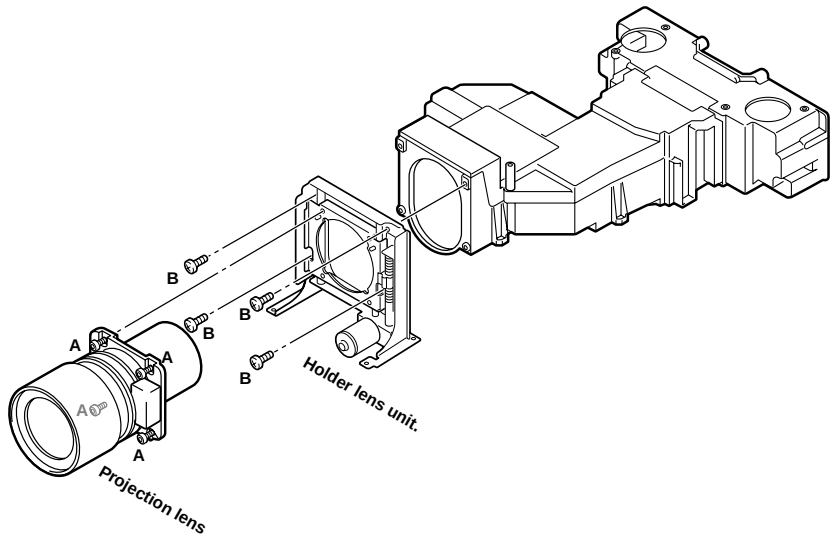

1. *Projection lens and Holder lens unit removal.*

1. Remove 4 screws A and remove the Projection lens.
2. Remove 4 screws B and remove the Holder lens unit.

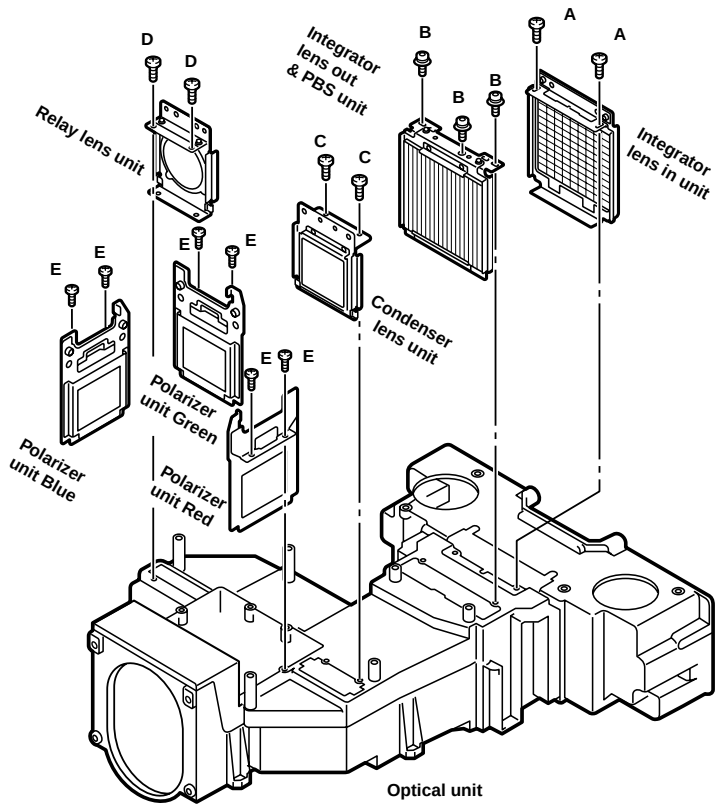

2. *Integrator lens in unit, Integrator lens out & PBS unit, Condenser lens unit, Relay lens unit and Polarizer units removal.*

Note :

Each polarizer unit uses different characteristic polarization glasses. Mark the Polarizer units as they are removed from the optical unit so that they may be reassembled in the same location from which they were removed.

1. Remove 2 screws A and remove the Integrator lens in unit.
2. Remove 3 screws B and remove the Integrator lens out & PBS unit.
3. Remove 2 screws C and remove the Condenser lens unit.
4. Remove 2 screws D and remove the Relay lens unit.
5. Remove 6 screws E and remove the 3 Polarizer units.

3. *Lamp assemblies and Assembly mirror removal.*

Note :

The characteristics and ages of lamps are managed by CPU. Mark the lamp assemblies as they are removed from the optical unit so that they may be reassembled in the same location from which they were removed.

1. Remove 4 screws A and remove the 2 Lamp assemblies.
2. Remove 4 screws B and remove the assembly mirror.

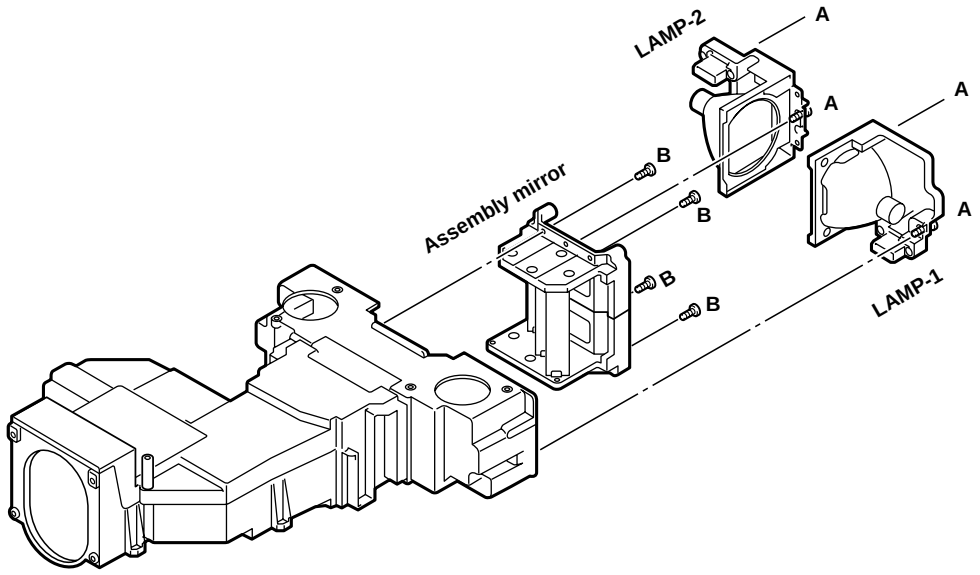

4. *Prism / LCD panel assembly removal.*

Note :
Prism / LCD panel assembly is a precision part. be sure to handle this part with special attention. Do not drop it or give it excessive force. It may damage the parts and alignment.

Remove 4 screws and remove the prism / LCD panel assembly.
At the time, be careful not to damage the prism / LCD panel assembly with the driver.

Caution :
(1). Never touch the LCD panel and prism part directly with hand. Otherwise the optical parts may get dirty.
(2). Since the LCD panel is equipped with CMOS-LSI, pay attention to static electricity.
And never touch the electrode of flexible cables.
(3). Don't disassemble prism / LCD panel assembly, otherwise it can be damaged.

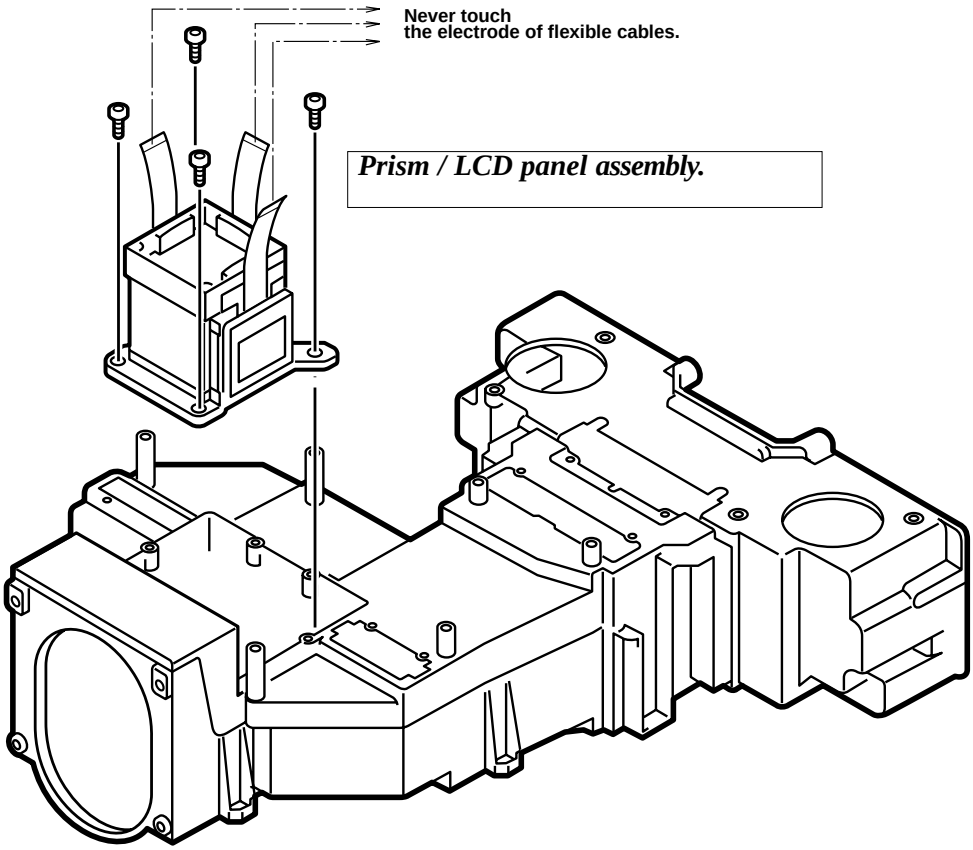

Optical parts location --- The optical parts name(description) can see it on parts list(page65).

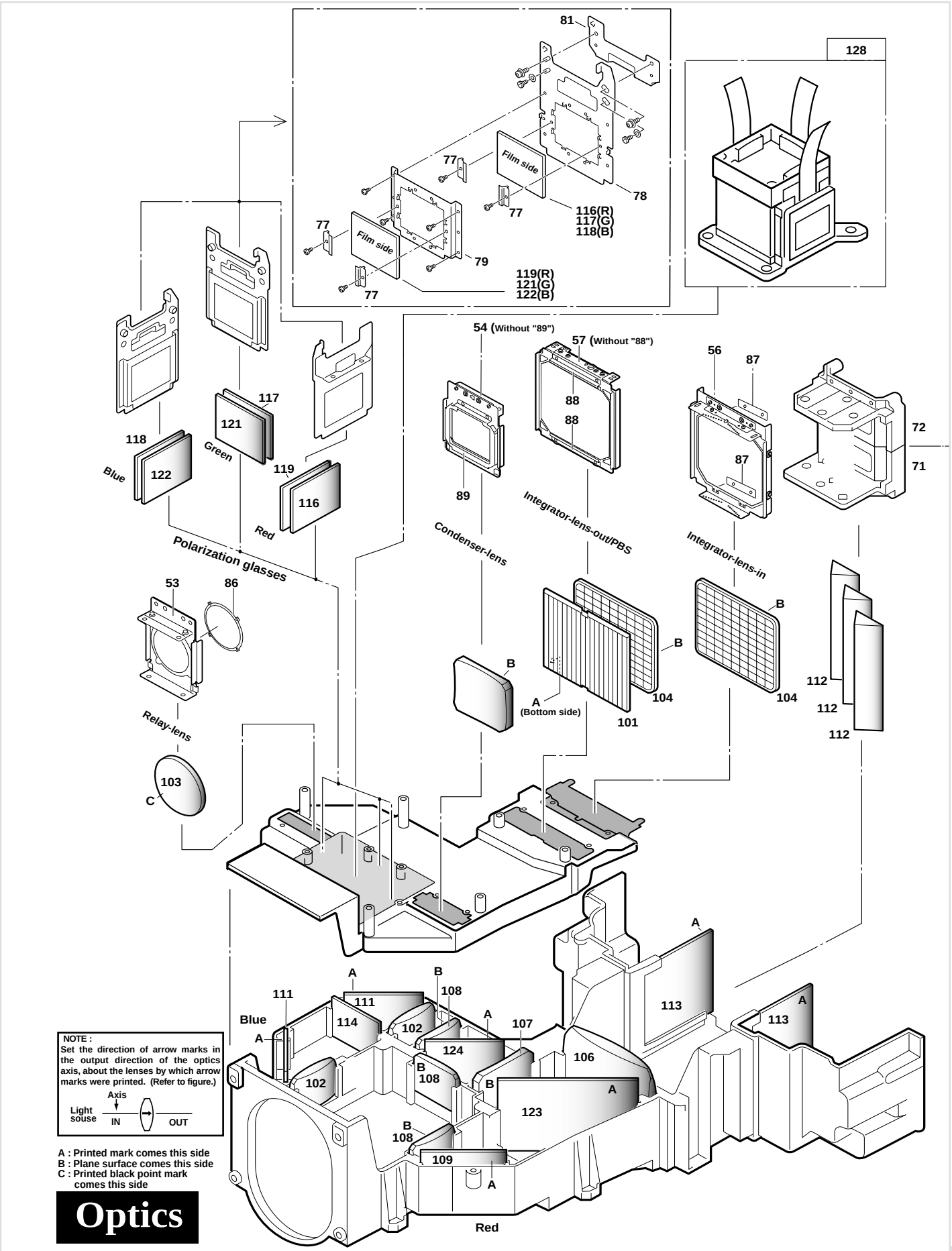

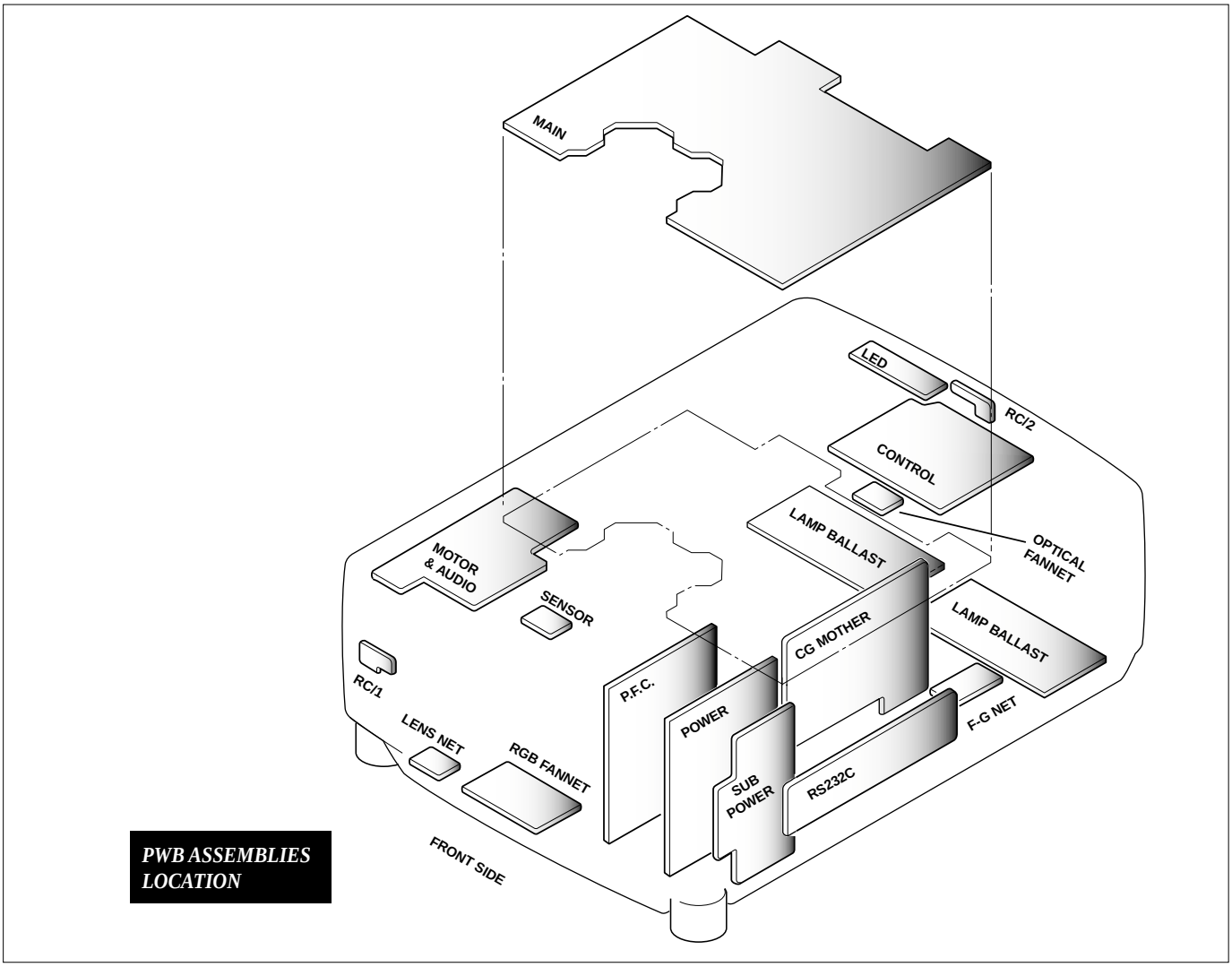
MAIN
LED
RC/2
CONTROL
OPTICAL FANNET
LAMP BALLAST
MOTOR & AUDIO
SENSOR
CG MOTHER
LAMP BALLAST
RC/1
P.F.C.
POWER
F-G NET
LENS NET
RGB FANNET
SUB POWER
RS232C
FRONT SIDE
PWB ASSEMBLIES LOCATION

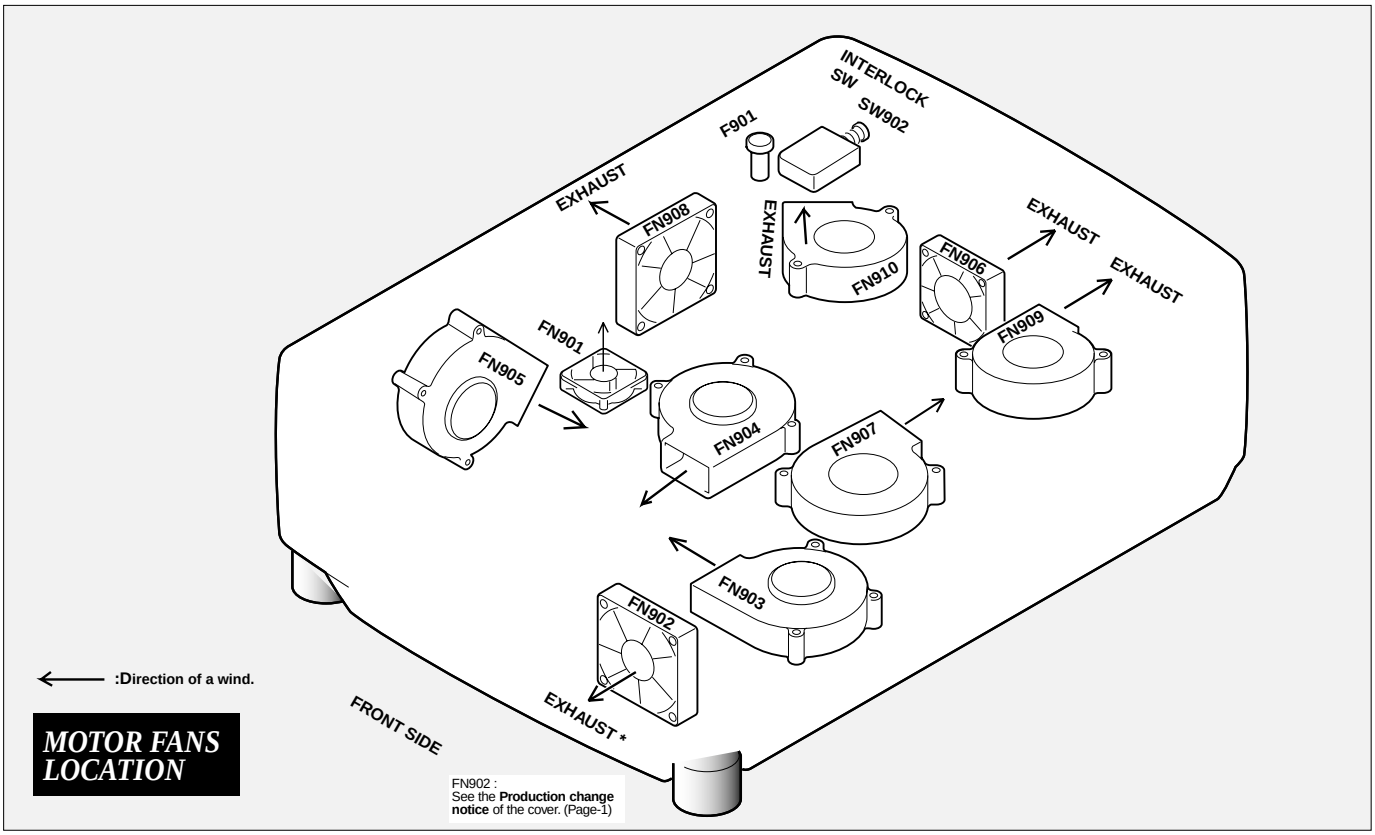
INTERLOCK SW
SW902
F901
EXHAUST
FN908
EXHAUST
FN910
EXHAUST
FN906
EXHAUST
FN909
FN901
FN905
FN904
FN907
FN903
FN902
EXHAUST *
:Direction of a wind.
FRONT SIDE
MOTOR FANS LOCATION
FN902 :
See the Production change notice of the cover. (Page-1)

Troubleshooting

NO PICTURE -1

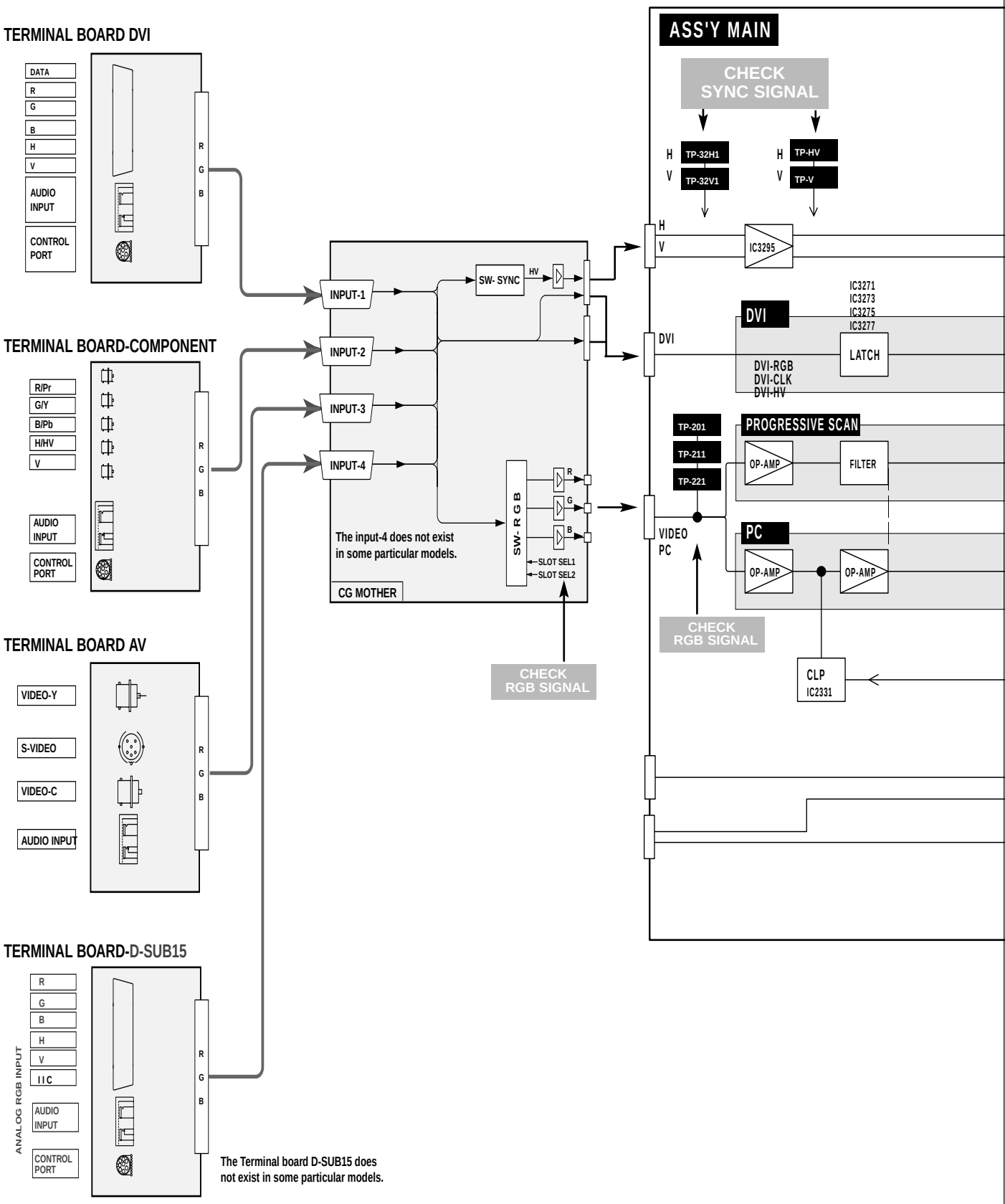

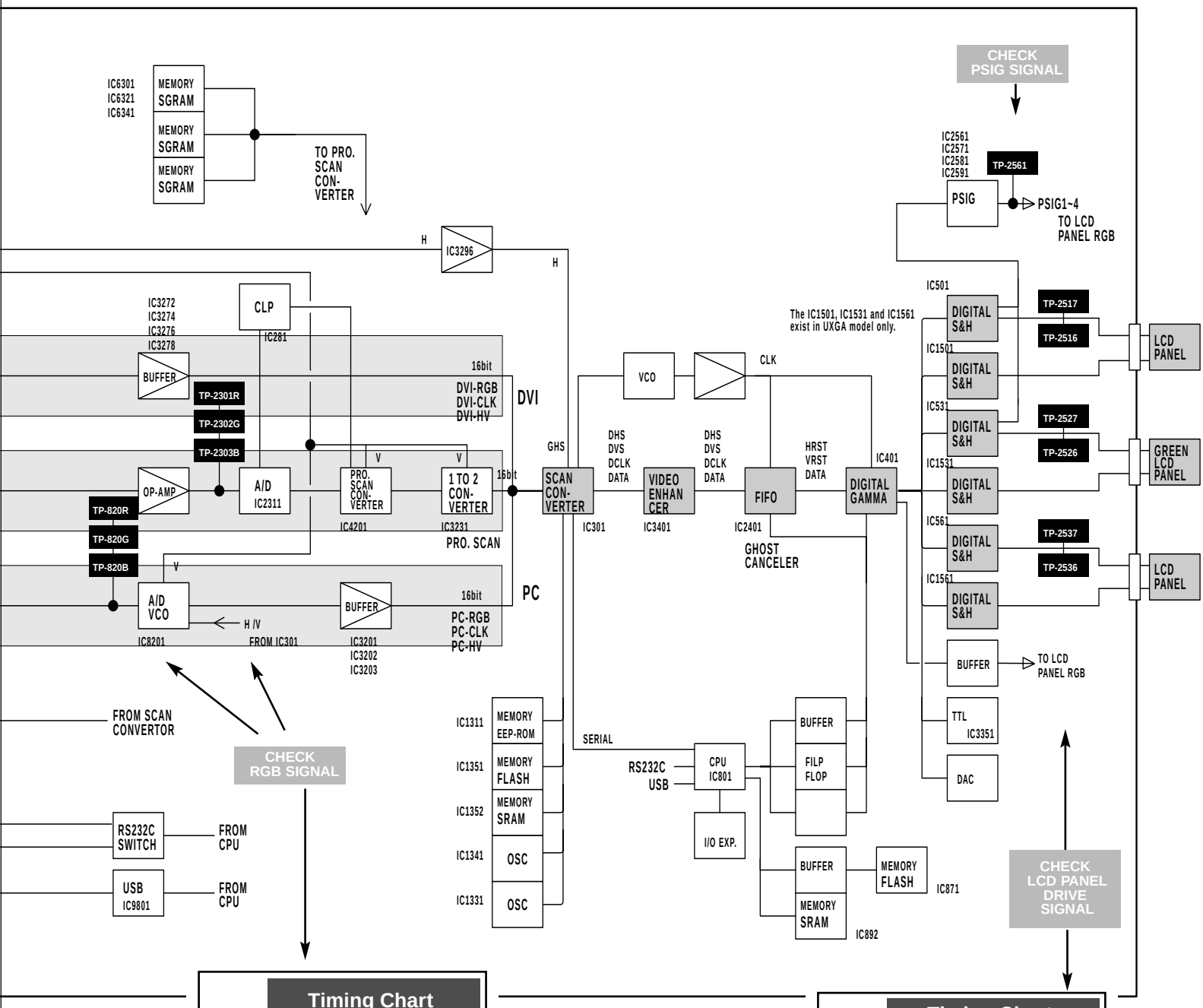
IC6301
IC6321
IC6341
MEMORY SGRAM
MEMORY SGRAM
MEMORY SGRAM
TO PRO. SCAN CON-VERTER
H
IC3296
H
CHECK PSIG SIGNAL
IC2561
IC2571
IC2581
IC2591
TP-2561
PSIG
PSIG1~4
TO LCD PANEL RGB
IC3272
IC3274
IC3276
IC3278
CLP
IC281
BUFFER
16bit
DVI-RGB
DVI-CLK
DVI-HV
DVI
TP-2301R
TP-2302G
TP-2303B
OP-AMP
A/D
IC2311
PRO. SCAN CON-VERTER
1 TO 2 CON-VERTER
16bit
IC4201
IC3231
PRO. SCAN
TP-820R
TP-820G
TP-820B
A/D VCO
H /V
FROM IC301
IC8201
BUFFER
16bit
PC-RGB
PC-CLK
PC-HV
PC
IC3201
IC3202
IC3203
FROM SCAN CONVERTOR
CHECK RGB SIGNAL
RS232C SWITCH
FROM CPU
USB
IC9801
FROM CPU
GHS
SCAN CON-VERTER
IC301
DHS
DVS
DCLK
DATA
VIDEO ENHAN CER
IC3401
DHS
DVS
DCLK
DATA
FIFO
IC2401
GHOST CANCELER
VCO
CLK
HRST
VRST
DATA
DIGITAL GAMMA
IC401
The IC1501, IC1531 and IC1561 exist in UXGA model only.
IC501
DIGITAL S&H
IC1501
DIGITAL S&H
IC531
DIGITAL S&H
IC1531
DIGITAL S&H
IC561
DIGITAL S&H
IC1561
DIGITAL S&H
TP-2517
TP-2516
TP-2527
TP-2526
TP-2537
TP-2536
LCD PANEL
GREEN LCD PANEL
LCD PANEL
BUFFER
TO LCD PANEL RGB
TTL
IC3351
DAC
IC1311
MEMORY EEP-ROM
IC1351
MEMORY FLASH
IC1352
MEMORY SRAM
IC1341
OSC
IC1331
OSC
SERIAL
RS232C
USB
CPU IC801
I/O EXP.
BUFFER
FILP FLOP
BUFFER
MEMORY SRAM
IC892
MEMORY FLASH
IC871
CHECK LCD PANEL DRIVE SIGNAL

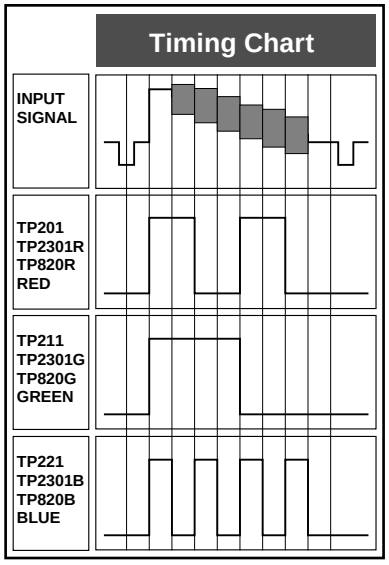
Timing Chart
INPUT SIGNAL
TP201
TP2301R
TP820R
RED
TP211
TP2301G
TP820G
GREEN
TP221
TP2301B
TP820B
BLUE

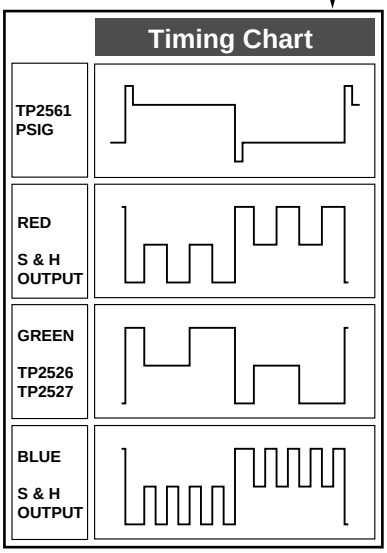
Timing Chart
TP2561
PSIG
RED
S & H
OUTPUT
GREEN
TP2526
TP2527
BLUE
S & H
OUTPUT

NO PICTURE -2

Troubleshooting

Check the terminal board-*DVI.*

Check the Vcc voltages.
S9V / -5V / S6V (Always)
9V / 5VB (Switched)
Check the test points.

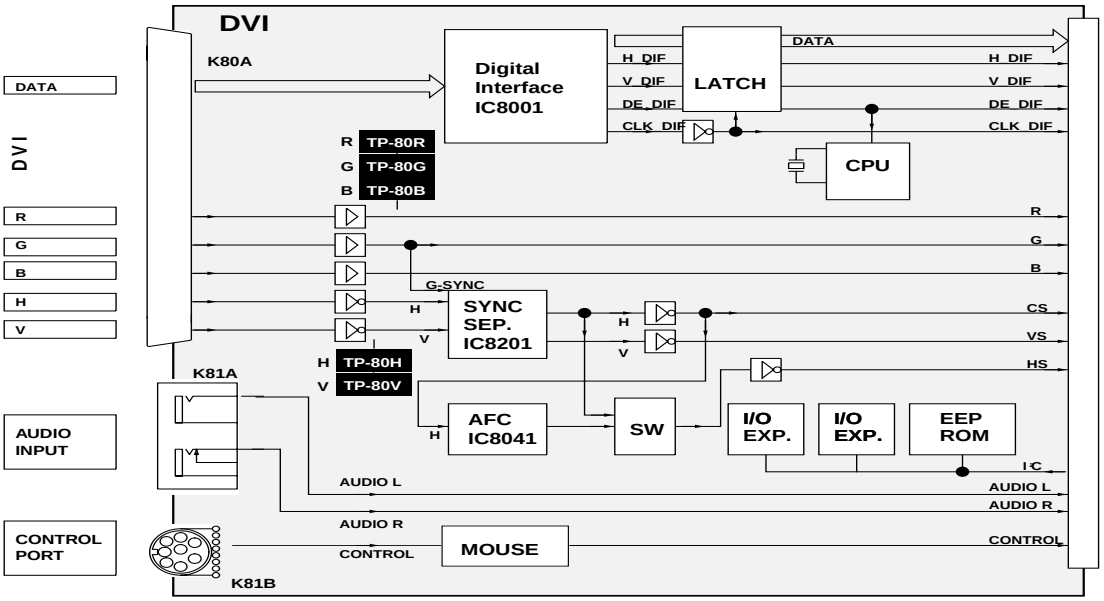

Check the terminal board-*COMPONENT.*

Check the Vcc voltages.
S9V / -5V / S6V (Always)
9V / 5VB (Switched)
Check the test points.

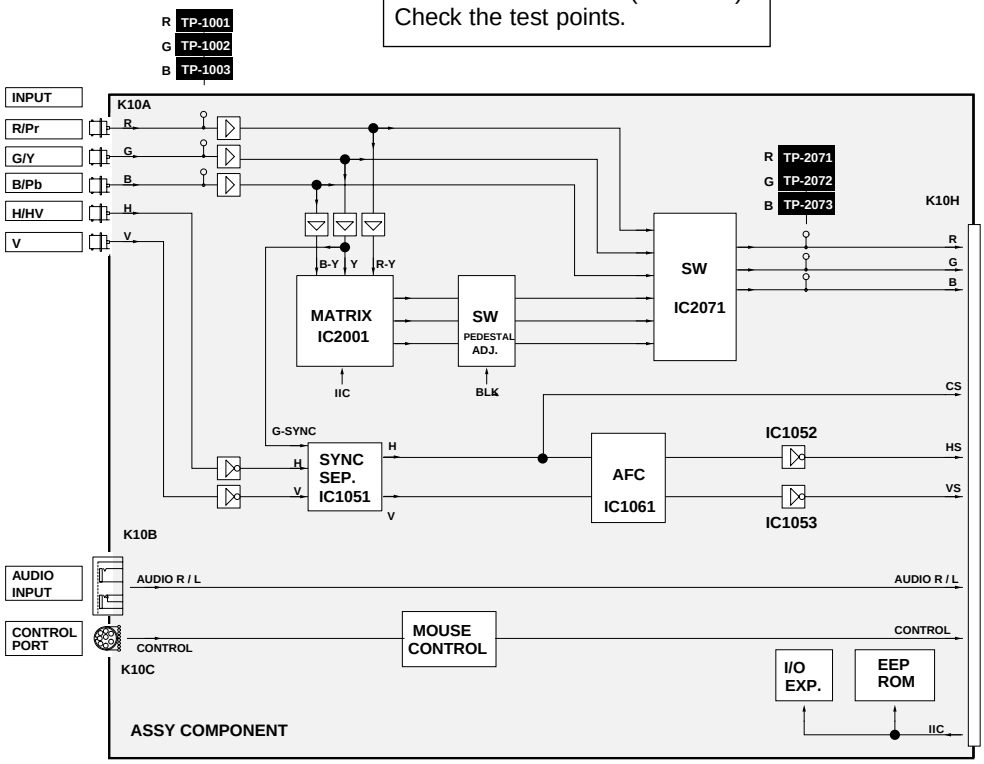

Check the terminal board-*AV.*

Check the Vcc voltages.
S9V / -5V / S6V (Always)
9V / 5VB (Switched)
Check the test points.

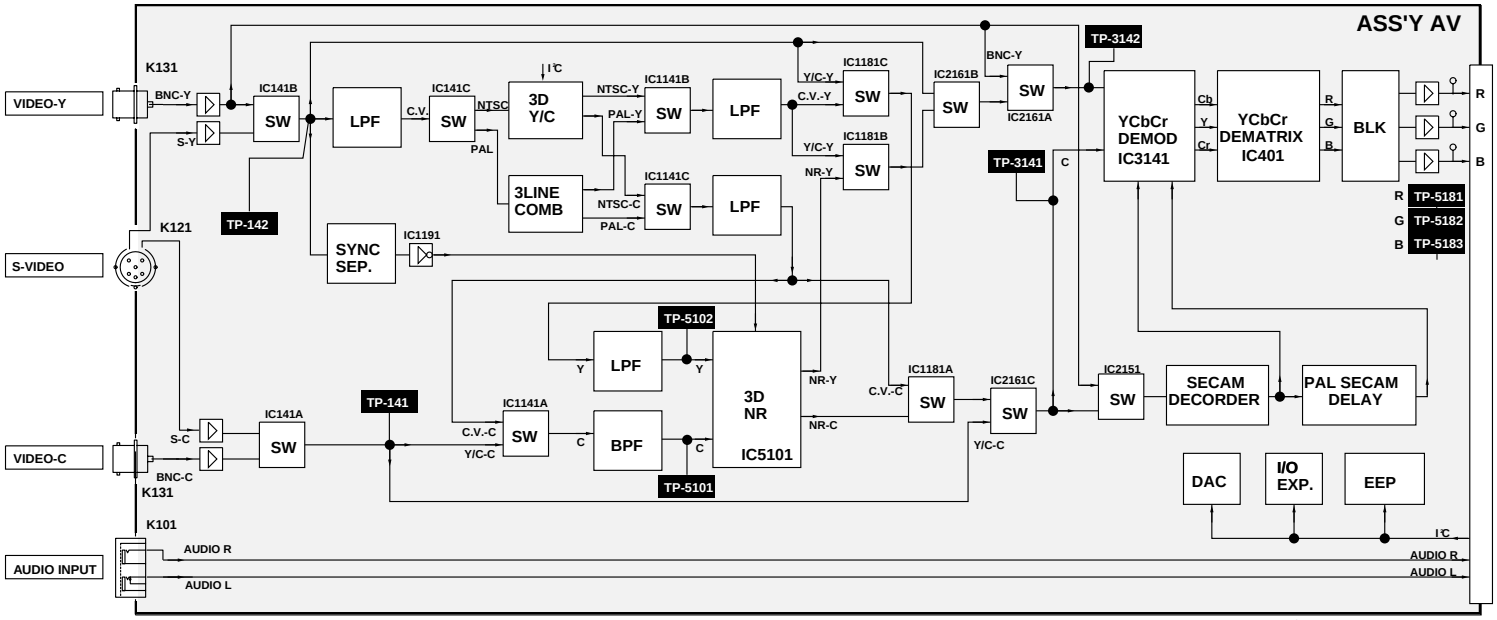

Check the terminal board-*DSUB15.*

Check the Vcc voltages.
S9V / -5V / S6V (Always)
9V / 5VB (Switched)
Terminal board DSUB15 does not exist in some particular models.

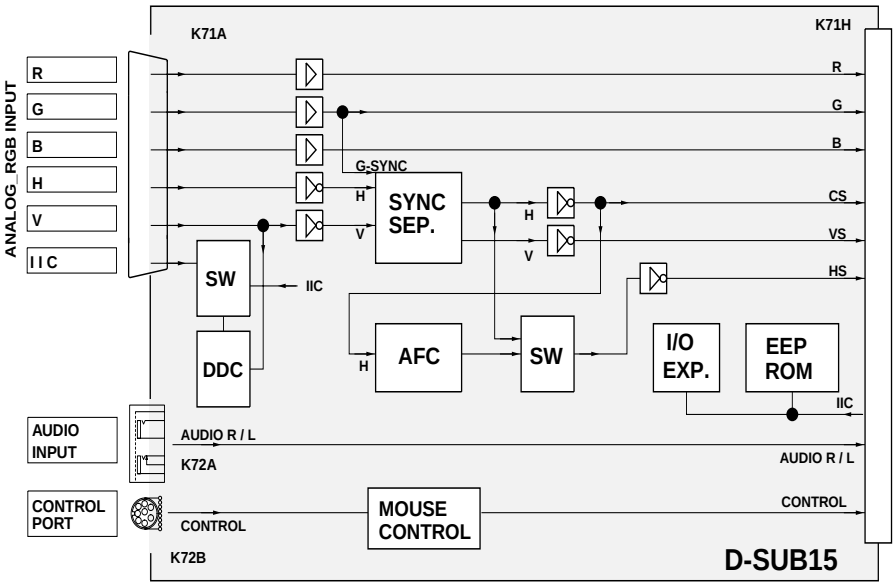

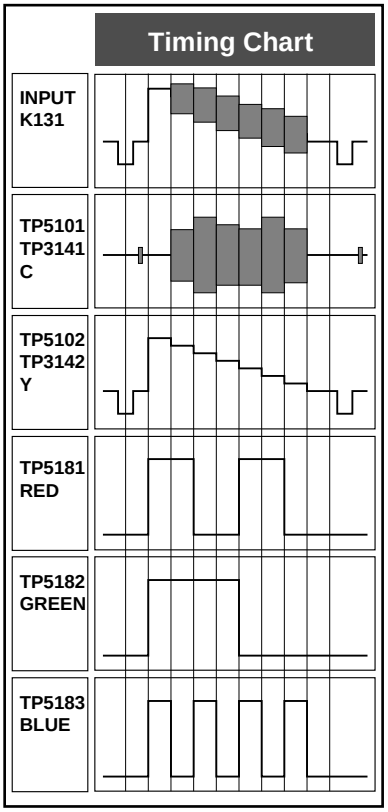

* NO POWER -1

Troubleshooting

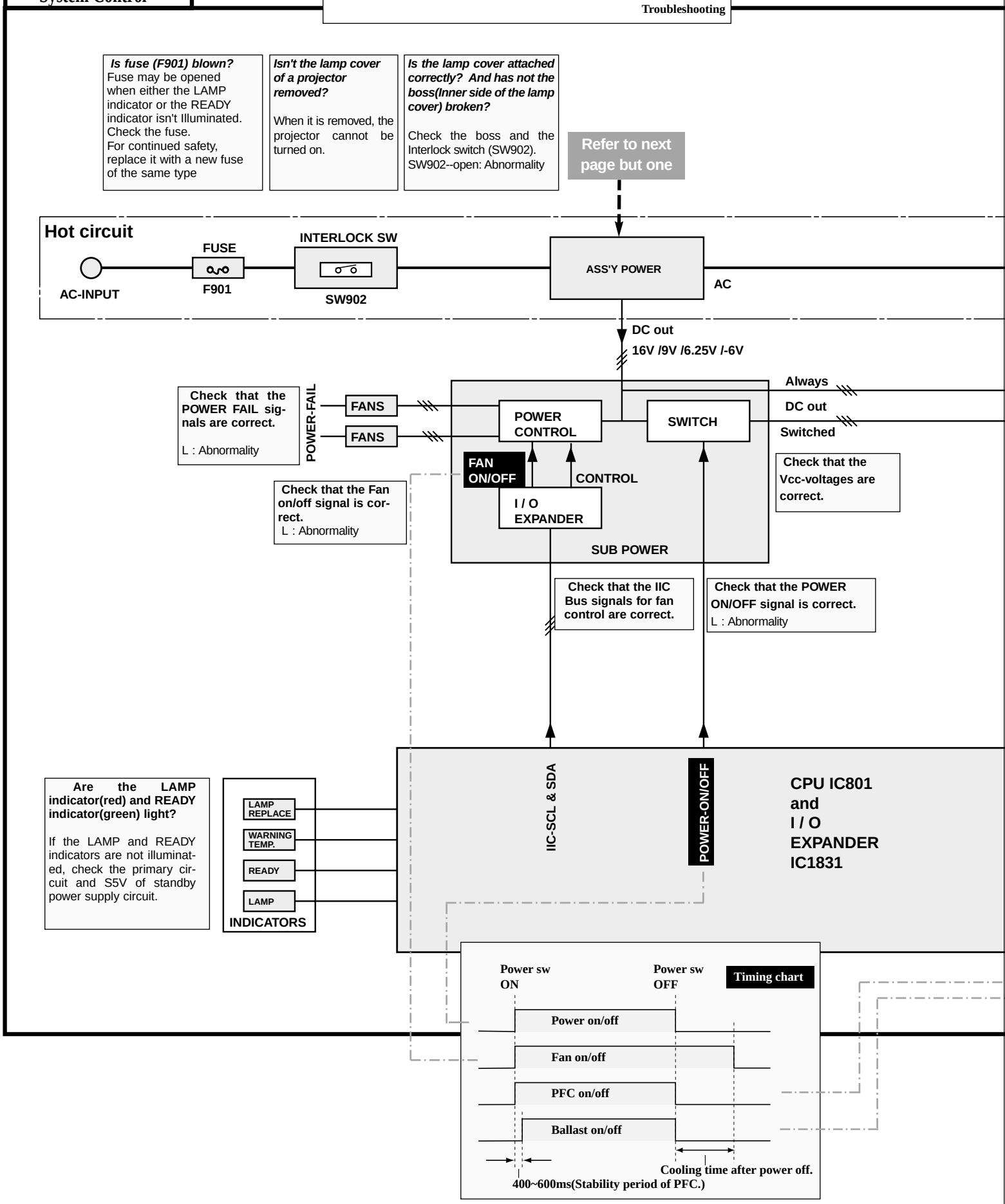

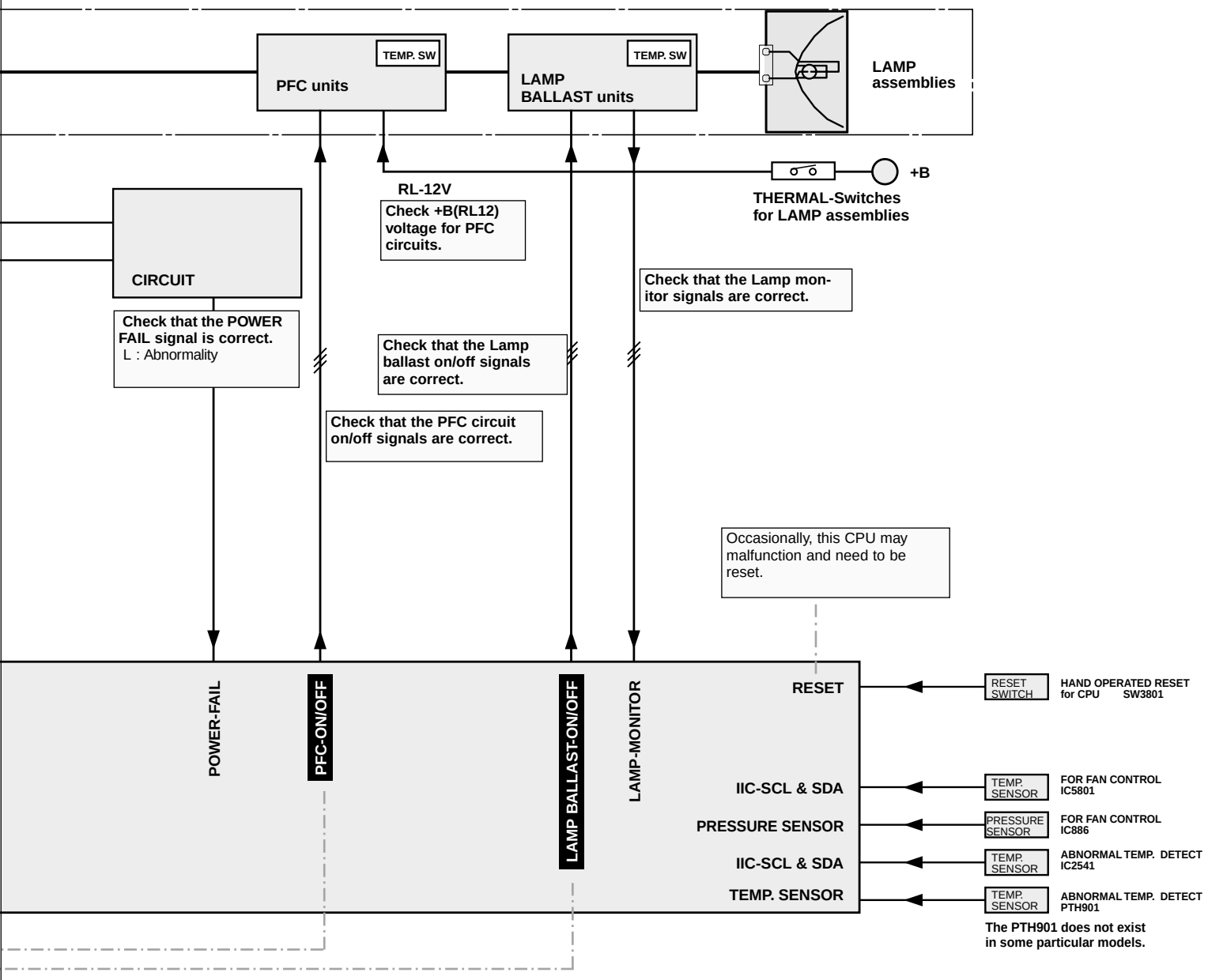
TEMP. SW
PFC units
TEMP. SW
LAMP
BALLAST units
LAMP
assemblies
+B
THERMAL-Switches
for LAMP assemblies
RL-12V
Check +B(RL12)
voltage for PFC
circuits.
CIRCUIT
Check that the Lamp mon-
itor signals are correct.
Check that the POWER
FAIL signal is correct.
L : Abnormality
Check that the Lamp
ballast on/off signals
are correct.
Check that the PFC circuit
on/off signals are correct.
Occasionally, this CPU may
malfunction and need to be
reset.
POWER-FAIL
PFC-ON/OFF
LAMP BALLAST-ON/OFF
LAMP-MONITOR
RESET
IIC-SCL & SDA
PRESSURE SENSOR
IIC-SCL & SDA
TEMP. SENSOR
RESET
SWITCH
HAND OPERATED RESET
for CPU SW3801
TEMP.
SENSOR
FOR FAN CONTROL
IC5801
PRESSURE
SENSOR
FOR FAN CONTROL
IC886
TEMP.
SENSOR
ABNORMAL TEMP. DETECT
IC2541
TEMP.
SENSOR
ABNORMAL TEMP. DETECT
PTH901
The PTH901 does not exist
in some particular models.

Check the switching regulator.

STR-Z2156
Switching regulator

Caution : "HOT" Circuit !

If this Vcc voltage reaches to abnormal voltage (exceeds 22V), the IC632 will be shut down.

If a temperature of this frame reaches to 150˚C, the IC632 will be shut down.

Check the signal at pin 5 of T621. (Switching power IC output signal.)

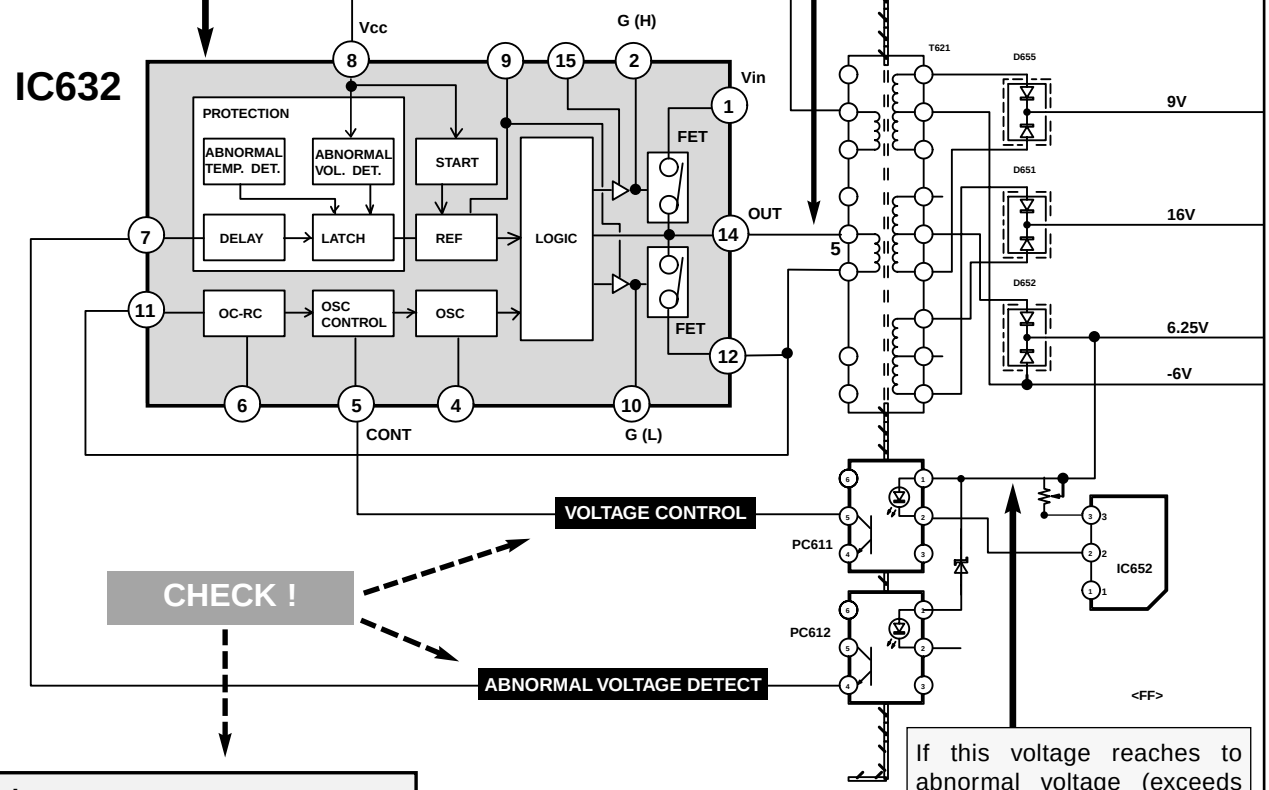

VOLTAGE CONTROL

CHECK !

ABNORMAL VOLTAGE DETECT

If this voltage reaches to abnormal voltage (exceeds 6.8V), the IC632 will be shut down.

Timing chart

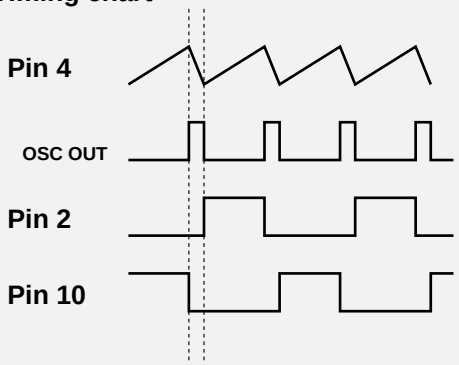

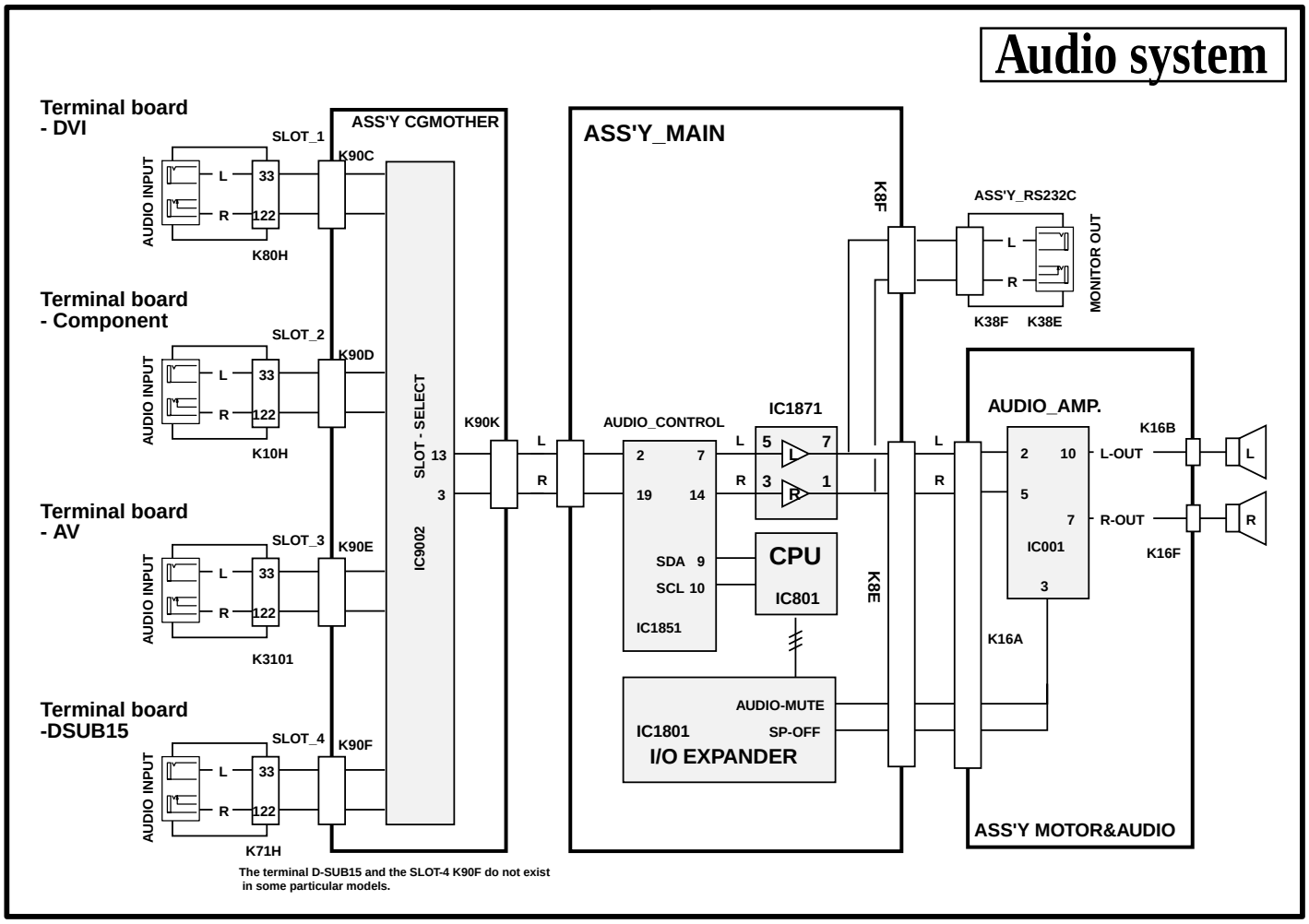

Terminal board DVI, Component, AV and D-SUB15.

1. Check that the R and L signals are correct.
   Pins122(R) and 33(L).
   K80H, K10H, K3101 and K71H.

Terminal board DSUB15 does not exist in some particular models.

assembly CG-Mother

1. Check that the R and L signals are correct.
   Pins 3(R) and 13(L) of IC9002.

Assembly Main

1. Check that the Vcc-voltages are correct.
2. Check that the R and L input signals are correct.
   Pins 2 and 19 of IC1851
3. Check that the IC1851 output signals are correct.
   Pins 7(L) and 14(R).
4. Check that the audio output signals are correct.
   Pins 7(L) and 1(R) of IC1871.
5. Check that the AUDIO MUTE signal is correct.
6. Check that the SP-OFF signal is correct.
7. Check that the SDA-signal is correct. Pin 9 of IC1851.
8. Check that the SCL-signal is correct. Pin10 of IC1851.

Assembly Motor audio

1. Check that the Vcc-voltages are correct.
2. Check that the R and L input signals are correct.
   Pins 2(R) and 5(L) of IC001
3. Check that the AUDIO MUTE signal is correct.
4. Check that the SP-OFF signal is correct.
5. Check that the IC001 output signals are correct.
   Pins 10(L) and 7(R).

LAMP ABNORMALITY -1

NOTE :

- ***The lamp emits light through arc discharge. To initiate arc discharge, dielectric breakdown must occur between the lamp electrodes. The high-voltage pulse generator generates and applies high-voltage pulses with peak values of about 20kV between the lamp electrodes in order to generate glow discharge. This in turn results in dielectric breakdown between the electrodes, causing a shift from glow discharge to arc discharge.***
- ***After projector turned on, 30 seconds are required until the light output stabilizes. After the projector is turned off, the cooling fan operates for 90 seconds to cool down the lamp and reduce gas pressure inside the lamp. During this "cooling down" period, the projector cannot be turned on.***

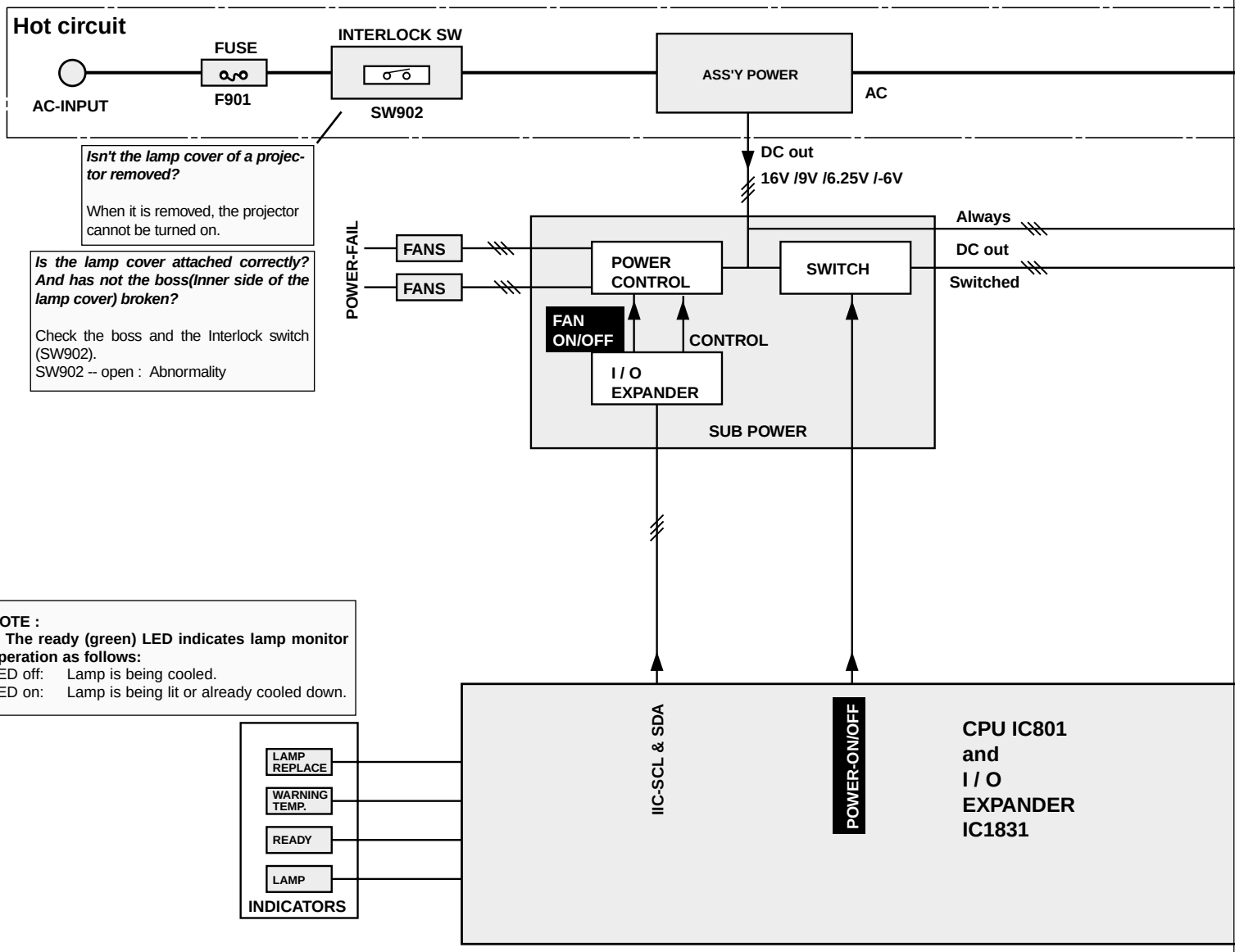

Isn't the lamp cover of a projector removed?

When it is removed, the projector cannot be turned on.

Is the lamp cover attached correctly? And has not the boss(Inner side of the lamp cover) broken?

Check the boss and the Interlock switch (SW902).
SW902 -- open : Abnormality

NOTE :
- **The ready (green) LED indicates lamp monitor operation as follows:**

LED off: Lamp is being cooled.
LED on: Lamp is being lit or already cooled down.

CPU : ---- Lamp monitor operation.----

- CPU performs an input check by the lamp monitor pin.
- When the "H" signal continues 1 second or more continuously, CPU judges the state to be abnormal.
- When it has detected abnormal condition, CPU turns off a projector compulsorily. And CPU sets up the cooling time for 90 seconds.
- The projector cannot be turned on during a cooling time.

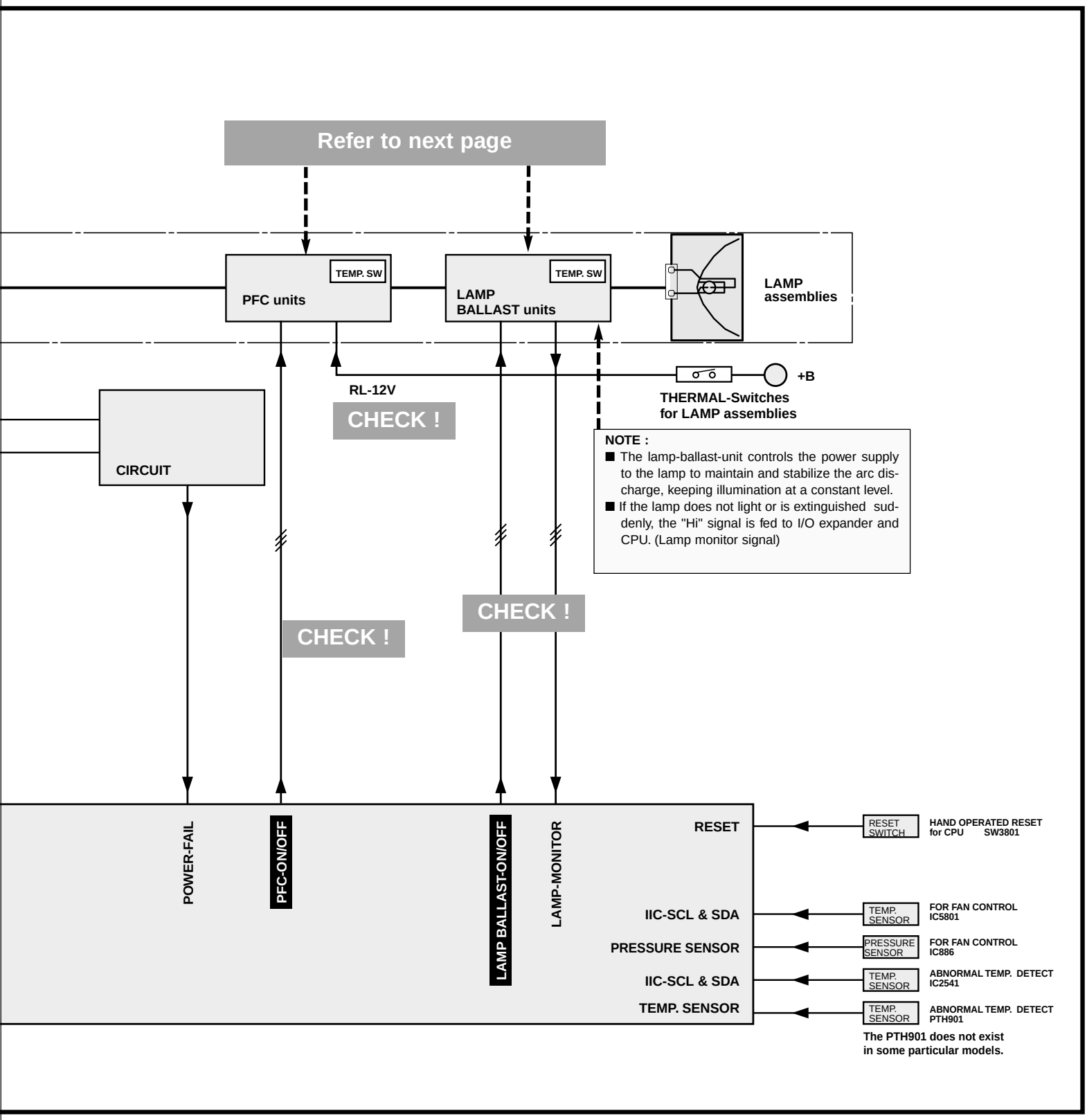
Refer to next page
TEMP. SW
PFC units
TEMP. SW
LAMP
BALLAST units
LAMP
assemblies
+B
RL-12V
THERMAL-Switches
for LAMP assemblies
CHECK !
CIRCUIT
NOTE :
■ The lamp-ballast-unit controls the power supply to the lamp to maintain and stabilize the arc discharge, keeping illumination at a constant level.
■ If the lamp does not light or is extinguished suddenly, the "Hi" signal is fed to I/O expander and CPU. (Lamp monitor signal)
CHECK !
CHECK !
POWER-FAIL
PFC-ON/OFF
LAMP BALLAST-ON/OFF
LAMP-MONITOR
RESET
IIC-SCL & SDA
PRESSURE SENSOR
IIC-SCL & SDA
TEMP. SENSOR
RESET SWITCH
HAND OPERATED RESET for CPU SW3801
TEMP. SENSOR
FOR FAN CONTROL IC5801
PRESSURE SENSOR
FOR FAN CONTROL IC886
TEMP. SENSOR
ABNORMAL TEMP. DETECT IC2541
TEMP. SENSOR
ABNORMAL TEMP. DETECT PTH901
The PTH901 does not exist in some particular models.

LAMP ABNORMALITY -2

Troubleshooting

Check the unit P.F.C..

Caution : "HOT" Circuit !

Has not the temperature switch operated?

If the temperature around FET reaches 85 degrees, the PFC circuit will be shut down.

Check!

OUTPUT
DC 380V~400V

Check!

AC-INPUT
AC 90V~264V

UNIT PFC U20B34600

CN1B

PFC-1

CN3B

CONTROL

FET

TEMP. SW

85˚C

LAMP BALLAST-1

BALLAST-1 ON/OFF
LAMP-1 MONITOR

PFC-2

CN4B

CONTROL

FET

TEMP. SW

85˚C

LAMP BALLAST-2

BALLAST-2 ON/OFF
LAMP-2 MONITOR

TEMP. SW
12V (+B)

IC1801
I /O EXP.

RL12

PFC-2 ON/OFF
H: ON

PFC-1 ON/OFF
H: ON

CN2B

Check!

Check!

Check the unit lamp Ballast.

Caution : "HOT" Circuit !

When the temperature around a lamp driver reaches 85 degrees, unit lamp ballast will be shut down and a lamp monitor signal changes to H from L.

Check!

UNIT LAMP BALLAST U20B39500/39800

K7B

K7C

LAMP ASS'Y

UNIT P.F.C.

STABILISER
(CHOPPER)

LAMP
DRIVER

IGNITER

TEMP.
SENSOR

85˚C

DC INPUT
DC380~400V

Check!

Check!

K7A

Output voltage.
At the time of a start : 20KVp-p
At the time of stability : AC 85V typ. (70~100V)
Output Frequency : 88 Hz typ.

IC1801
I/O EXP.

LAMP MONITOR
H : Abnormality

LAMP ON/OFF
H : ON

CONTROL

MAINS ISOLATION

Check!

When this output voltage reaches abnormal voltage (exceeds AC-130V), unit lamp ballast will be shut down and a lamp monitor signal changes from L to H.

Check!

Motor-driven lens system. (Zoom, Focus and lens shift.)

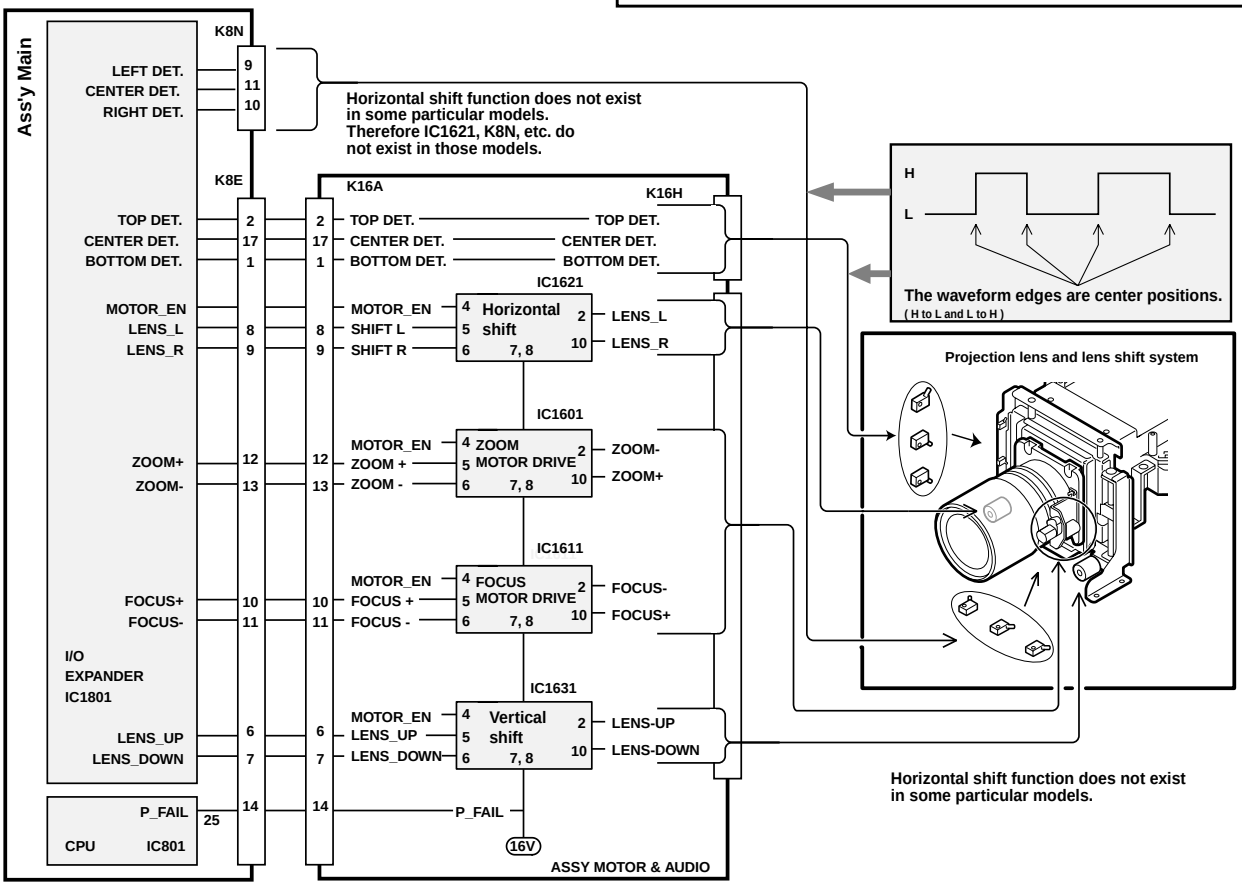

Assembly Main

1. Check that the Vcc-voltages are correct.
2. Check that the POWER FAIL signal is correct.
   Pin125 of IC801 H: Normal
3. Check that the LENS SHIFT up and down signals are correct.
   Pins 6 and 7 of K8E
4. Check that the LENS SHIFT left and right signals are correct.
   Pins 8 and 9 of K8E
5. Check that the FOCUS up and down signals are correct.
   Pins 10 and 11 of K8E
6. Check that the ZOOM up and down signals are correct.
   Pins 12 and 13 of K8E
7. Check that the TOP DET. signal is correct.
   Pin 2 of K8E L : TOP
8. Check that the BOTTOM DET. signal is correct.
   Pin 1 of K8E L : BOTTOM
9. Check that the CENTER DET. signal is correct.
   Pin 17 of K8E Center position=The edge of "H to L" or "L to H."
10. Check that the LEFT DET. signal is correct.
    Pin 9 of K8N L : LEFT
11. Check that the RIGHT DET. signal is correct.
    Pin 10 of K8N L : RIGHT
12. Check that the CENTER DET. signal is correct.
    Pin 11 of K8N Center position=The edge of "H to L" or "L to H."

Assembly Motor audio

1. Check that the Vcc-voltages are correct.
2. Check that the POWER FAIL signal is correct.
   Pin14 of K16A. H: Normal
3. Check that the LENS SHIFT up and down signals are correct.
   Pins 5 and 6 of IC1631.
4. Check that the LENS SHIFT left and right signals are correct.
   Pins 5 and 6 of IC1621.
5. Check that the FOCUS up and down signals are correct.
   Pins 5 and 6 of IC1611.
6. Check that the ZOOM up and down signals are correct.
   Pins 5 and 6 of IC1601.
7. Check that the LENS SHIFT motor drive signals are correct.
   Pins 10 and 2 of IC1631 and IC1621.
8. Check that the FOCUS motor drive signals are correct.
   Pins 10 and 2 of IC1611.
9. Check that the ZOOM motor drive signals are correct.
   Pins 10 and 2 of IC1601.

---- Horizontal shift function does not exist in some particular models. -----

Motor drive IC block diagram

LB1641/1645N

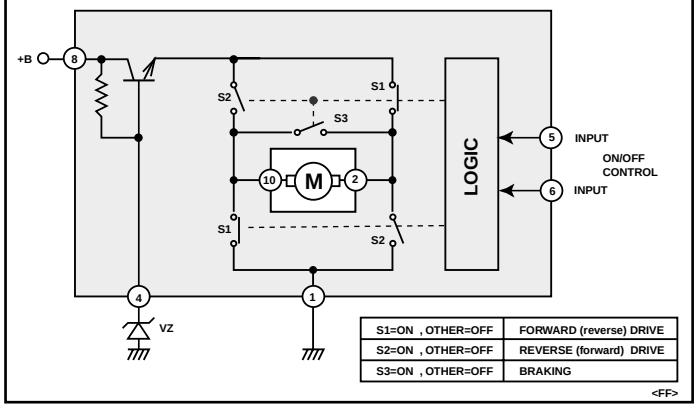

Truth table IC1601/IC1611/IC1621/IC1631

Input		Output		Operation
5	6	2	10	
H	L	H	L	Forward(reverse) drive
L	H	L	H	Reverse(forward) drive
L	L	L	L	Braking

TEMPERATURE ABNORMALITY -1

Troubleshooting

NOTE : Temperature monitor operation.

■ The temperature monitor system is provided to prevents damage of optical components (the LCD panel and polarization film etc.) inside a projector from overheat. Two protection systems are provided. Each system operation as follows ;

■ ***Temperature monitor -1.***

--- To control the driving power of the cooling fans. ----

CPU checks the temperature and atmospheric pressure inside a projector. And CPU controls the drive power of the cooling fans so the temperature inside the projector is maintained to normal temperature.

---- To shut down the projector. ---

CPU checks temperature of LCD panel periphery and inhalation air(IC5801). If each part temperature reaches to abnormal temperature, CPU will turn off a projector, and will blink TEMPERATURE WARNING indicator at intervals of 0.6 seconds. Cooling fans operate until temperature returns to normal. Indicator will stop blink, if temperature returns to normal.

■ ***Temperature monitor -2.*** --- (Temperature check of lamps) . ----

Temperature switches are arranged near each lamp. Temperature switches will operate, if temperature reaches 90 - 100 degrees.

When temperature switches have operated, lamp ballast units will be shut down, then a projector will be turned off.

Note. CPU does not check operation of temperature switches. Therefore, when temperature switches have operated and a projector has shut down, TEMPERATURE-WARNING indicator does not blink.

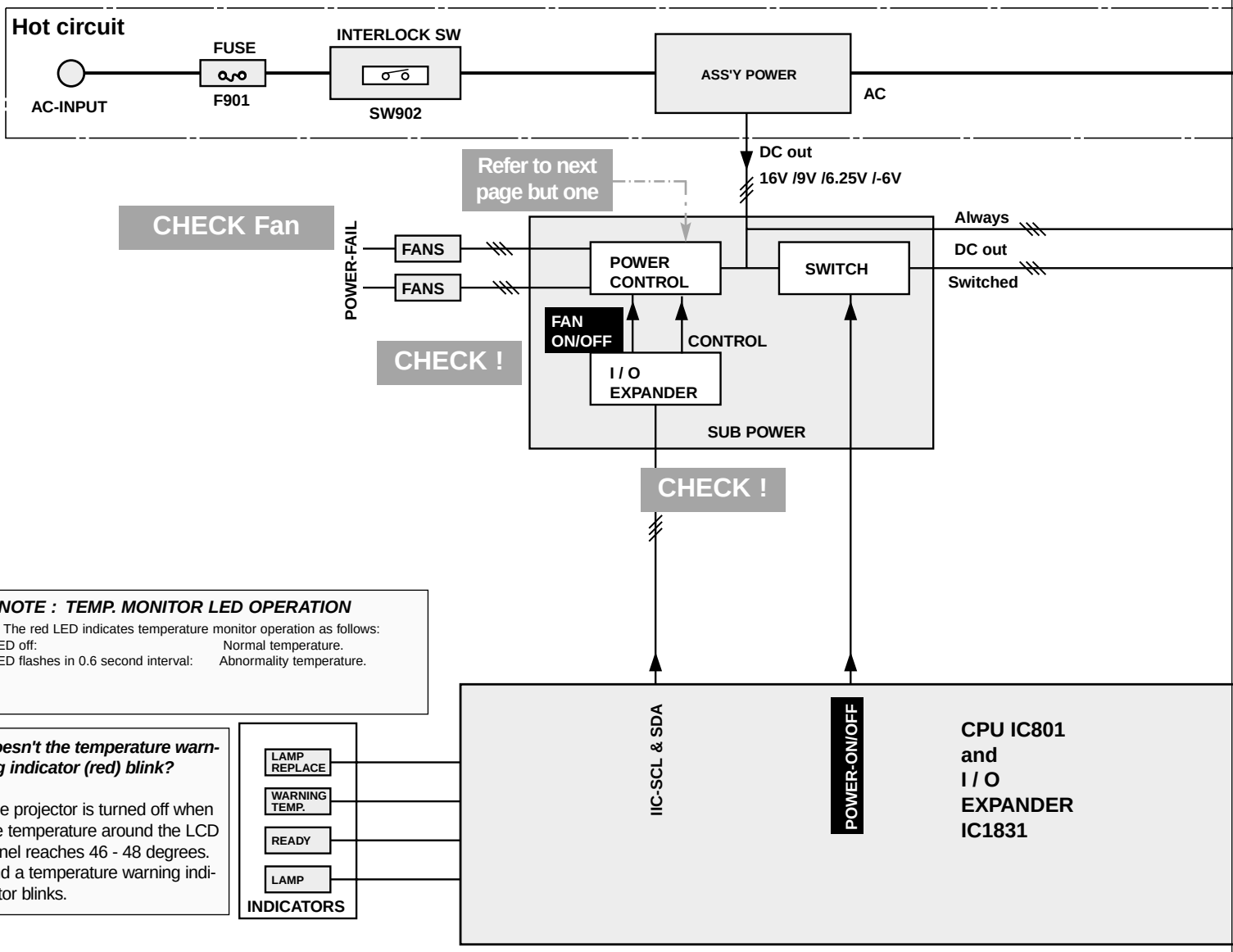

****NOTE : TEMP. MONITOR LED OPERATION***

■ The red LED indicates temperature monitor operation as follows:

LED off: Normal temperature.

LED flashes in 0.6 second interval: Abnormality temperature.

Doesn't the temperature warning indicator (red) blink?

The projector is turned off when the temperature around the LCD panel reaches 46 - 48 degrees. And a temperature warning indicator blinks.

NOTE : CPU OPERATION

■ CPU (IC801) performs an input check by the IIC-SDA signal pin.

■ When it has detected abnormal condition, CPU turns off the projector compulsorily. Cooling fans operate until temperature returns to normal. Moreover, a projector cannot be turned on during this period.

Temperature sensors location can see it on "protections"(page-5).

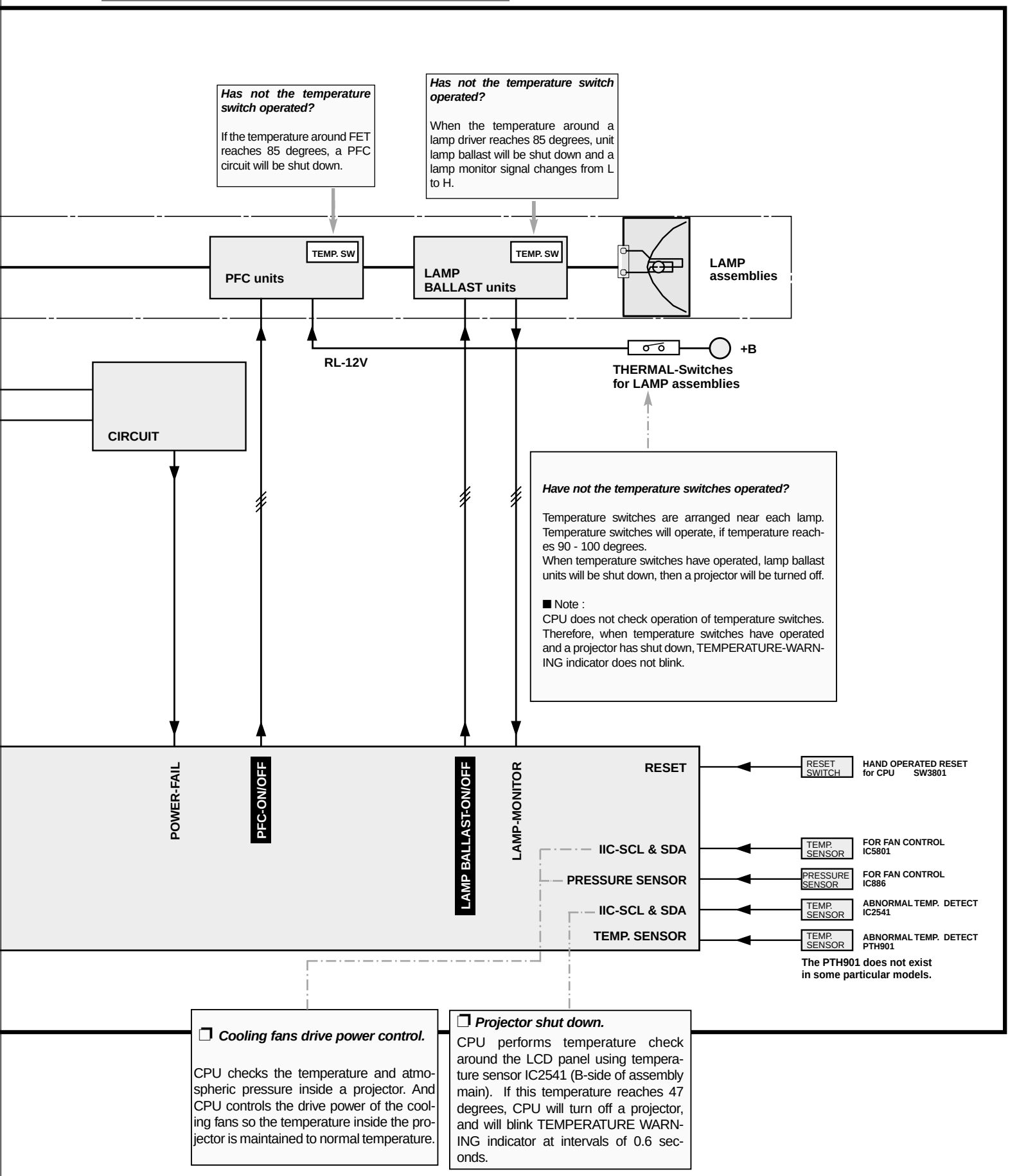

TEMPERATURE ABNORMALITY -2

Troubleshooting

Check the fan control circuit

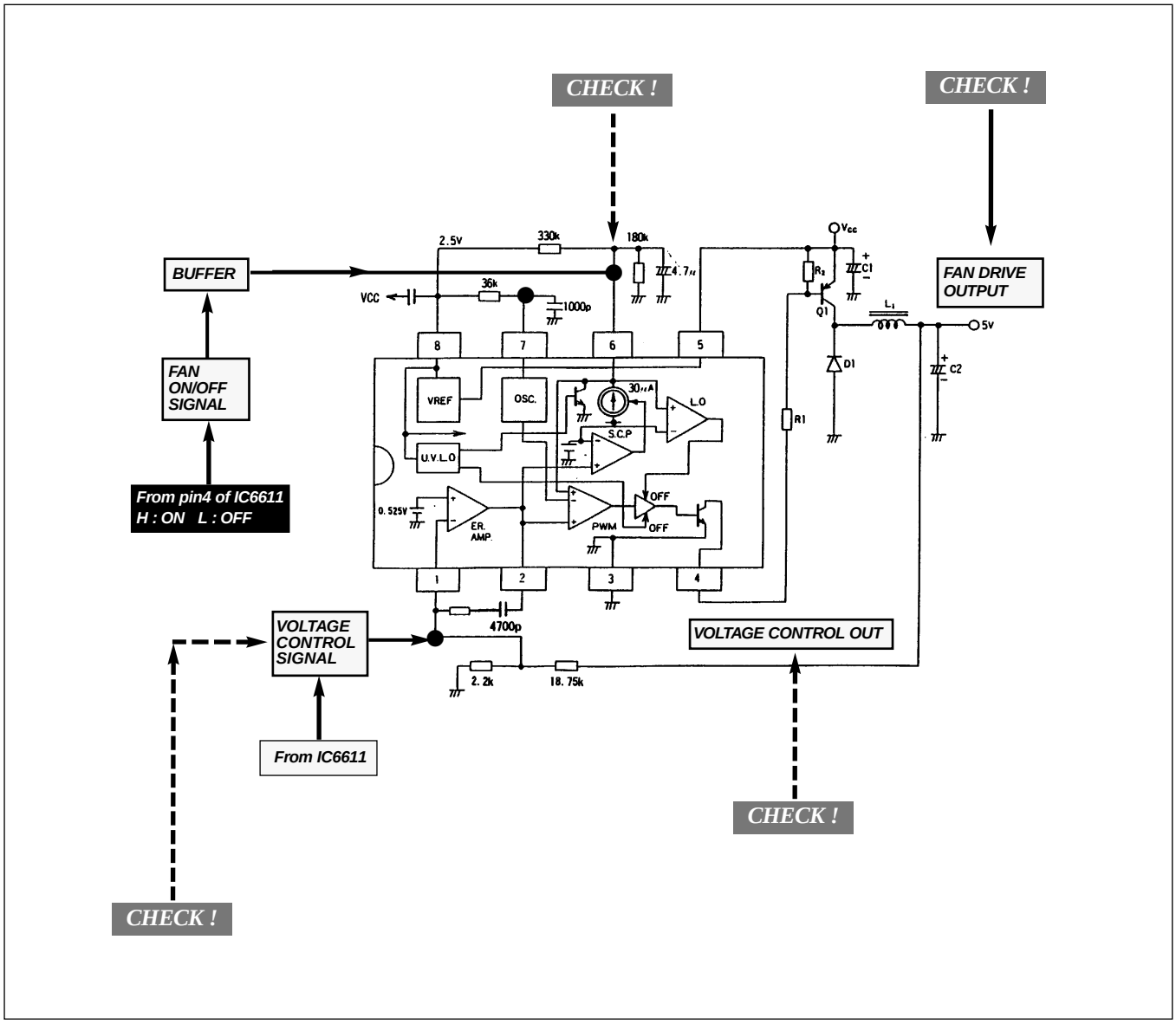

Waveforms

Timing chart

10us/Div

Terminal board-AV Video-in

NTSC 0.5V/Div	
TP_32H1 H_sync 2V/Div	
TP_5101 C 0.5V/Div	
TP_5102 Y 0.5V/Div	
TP_3141 C 0.5V/Div	
TP_3142 Y 0.5V/Div	
TP_5181 Red 0.5V/Div	TP_2301R 0.5V/p_p
TP_201 0.5V/Div	TP_820R 0.5V/Div
TP_5182 Green 0.5V/Div	TP_2301G 0.5V/p_p
TP_211 0.5V/Div	TP_820G 0.5V/Div
TP_5183 Blue 0.5V/Div	TP_2301B 0.5V/p_p
TP_221 0.5V/Div	TP_820B 0.5V/Div

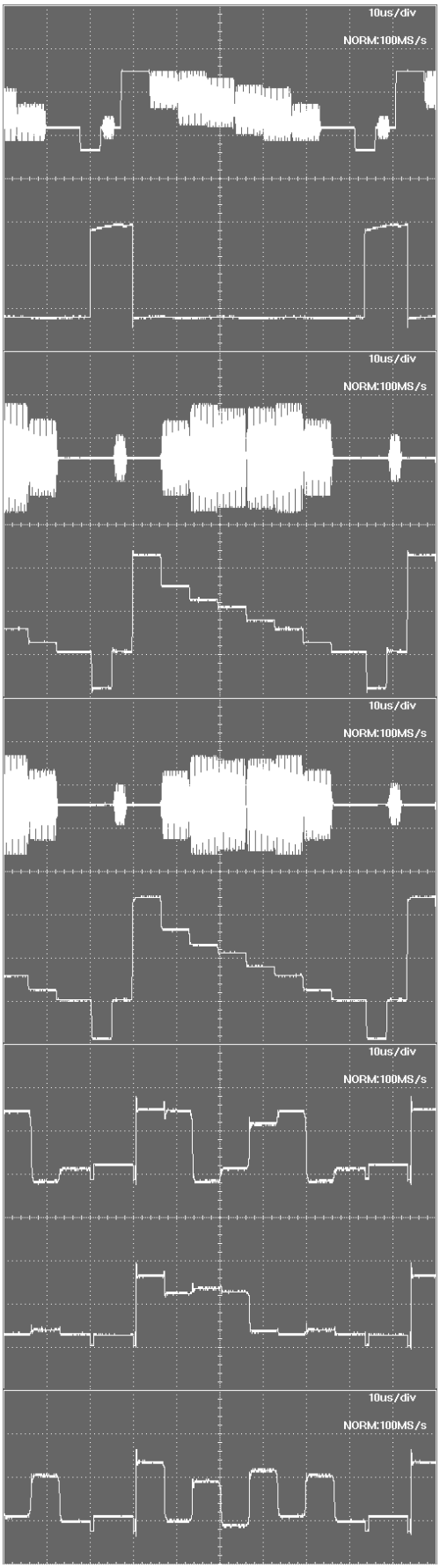

Timing chart

5us/Div

TP_2561
TP_2571
PSIG

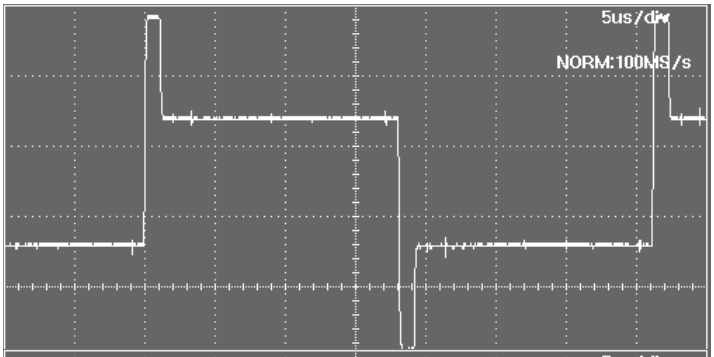

Red LCD panel drive signal

5V/Div

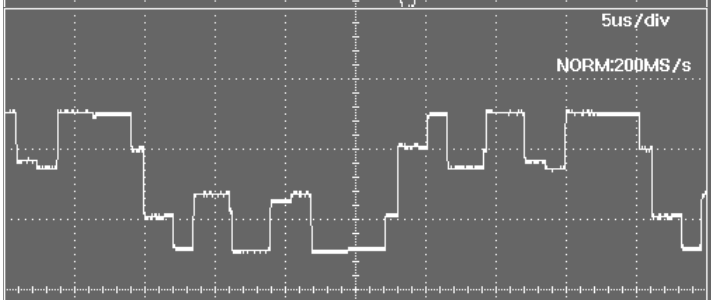

Green LCD panel drive signal

TP_2527
G 5V/Div

TP_2526
G 5V/Div

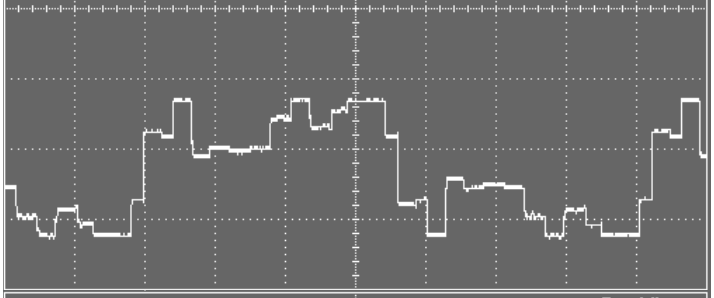

Blue LCD panel drive signal

5V/Div

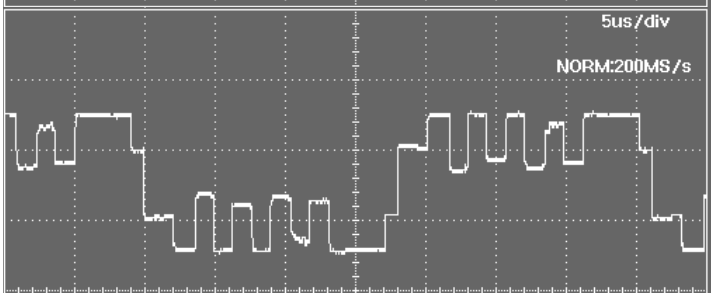

2ms/Div

Input_signal
NTSC 0.5V/Div

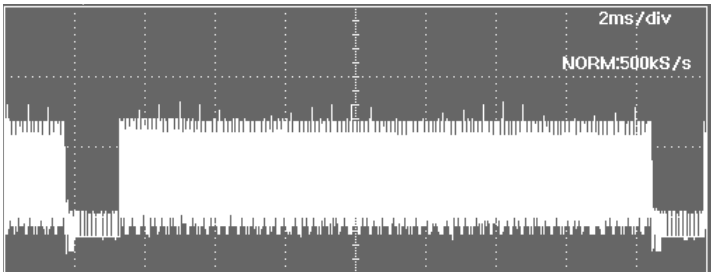

TP_32V1
V_sync 5V/Div

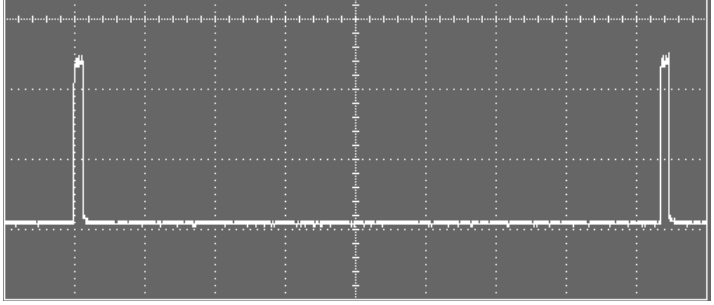

Alignment procedures

Service adjustment menu operation

■ ***To enter the "service mode."***

To enter the service mode, press the "MENU" and "IMAGE" buttons on the projector simultaneously and hold for 2 seconds. As shown in a figure, a service mode display appears on a screen.

■ ***Adjustment.***

Adjust service data using the following control buttons.

1. "*POINT RIGHT*" -- A group number increases.
2. "*POINT LEFT*" ---- A group number decreases.
3. "*POINT UP*" ------- An item number increases.
4. "*POINT DOWN*" -- An item number decreases.
5. "*VOLUME+*" ------ An adjustment value increases.
6. "*VOLUME -* " ----- An adjustment value decreases.

■ ***To exit the "service mode."***

Press the "*POWER* on/off" button only once on the projector or remote control unit to quit the service mode.

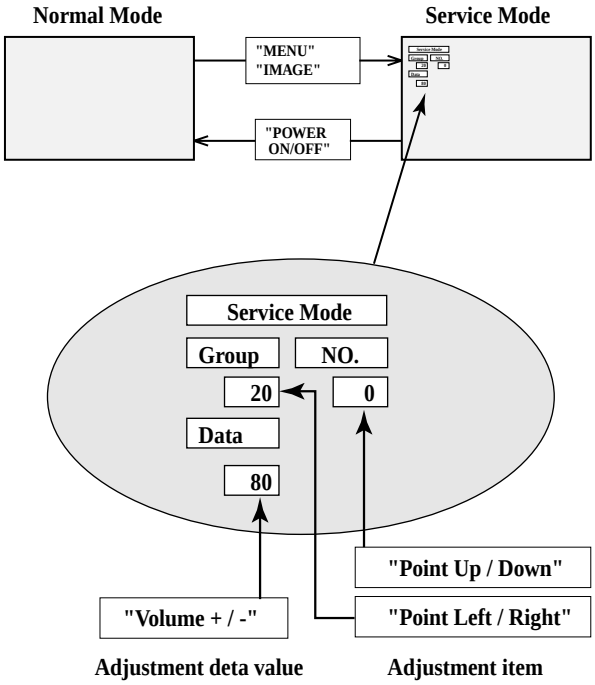

■ *Readjustments after Parts Replacement*

After replacing electric parts and optical parts, electric readjustment and optical readjustment are required. Refer to the section of "parts list" for the required readjustment items after parts replacement.

(Refer to page 60.)

■ *Service mode adjustment Menu*

Group-no.	Adjustment Item	Adjustment Mode			
		Not designated	*PC*	*AV*	*Component*
140-0	Fans-A driving voltage adjustment	●			
140-1	Fans-A driving voltage adjustment	●			
140-2	Fans-C driving voltage adjustment	●			
140-3	Fans-C driving voltage adjustment	●			
140-4	Fans-B driving voltage adjustment	●			
140-5	Fans-B driving voltage adjustment	●			
200-0	G-Video center DC adjustment		●		
200-1	R-Video center DC adjustment		●		
200-2	B-Video center DC adjustment		●		
200-3	PSIG signal adjustment		●		
200-4	PSIG signal adjustment		●		
200-5	Green pedestal level adjustment -PC		●		
200-6	Red pedestal level adjustment -PC		●		
200-7	Blue pedestal level adjustment -PC		●		
200-8	Green Contrast adjustment-PC		●		
200-9	Red Contrast adjustment-PC		●		
200-10	Blue Contrast adjustment-PC		●		
200-11	Green panel driving signal adjustment -PC		●		
200-12	Green panel driving signal adjustment -PC		●		
200-13	Red panel driving signal adjustment -PC		●		
200-14	Red panel driving signal adjustment -PC		●		
200-15	Blue panel driving signal adjustment -PC		●		
200-16	Blue panel driving signal adjustment -PC		●		
200-17	Flicker reduction--Green		●		
200-18	Flicker reduction--Red		●		
200-19	Flicker reduction--Blue		●		
210-5	Green pedestal level adjustment -AV			●	
210-6	Red pedestal level adjustment -AV			●	
210-7	Blue pedestal level adjustment -AV			●	
210-8	Green Contrast adjustment-AV			●	
210-9	Red Contrast adjustment-AV			●	
210-10	Blue Contrast adjustment-AV			●	
210-11	Green panel driving signal adjustment -AV			●	
210-12	Green panel driving signal adjustment -AV			●	
210-13	Red panel driving signal adjustment -AV			●	
210-14	Red panel driving signal adjustment -AV			●	
210-15	Blue panel driving signal adjustment -AV			●	
210-16	Blue panel driving signal adjustment -AV			●	

Group-no.	Adjustment Item	Adjustment Mode			
		Not designated	PC	AV	Component
210-14 & 16	AV White balance adjustment. 2 lamp mode			●	
200-14 & 16	PC White balance adjustment. 2 lamp mode		●		
211-14 & 16	AV White balance adjustment. Lamp-1 of 1 lamp mode			●	
212-14 & 16	AV White balance adjustment. Lamp-2 of 1 lamp mode			●	
1000-25	AV Color and Tint adjustment			●	
1000-24	AV Color and Tint adjustment			●	
1010-0	AV Green Video signal adjustment			●	
1010-1	AV Green Video signal adjustment			●	
1010-2	AV Red Video signal adjustment			●	
1010-3	AV Red Video signal adjustment			●	
1010-4	AV Blue Video signal adjustment			●	
1010-5	AV Blue Video signal adjustment			●	
5010-0	Component G Video signal adjustment				●
5010-1	Component G Video signal adjustment				●
5010-2	Component R Video signal adjustment				●
5010-3	Component R Video signal adjustment				●
5010-4	Component B Video signal adjustment				●
5010-5	Component B Video signal adjustment				●
0-0	Temperature monitor IC5801 Read only	●			
0-1	Temperature monitor IC2541 Read only	●			
1-0	Atmospheric Pressure monitor IC886 Read only	●			
10-0	RS232C Baud rate (0:9600 / 1:19200)	●			
10-0	RS232C RTS/CTS Flow Control (0:Disable / 1:Enable)	●			
111-0	Lamp-1 Lamp illumination time Read only	●			
111-1	Lamp-2 Lamp illumination time Read only	●			
930-0	Lamp mode 2 Lamp Mode (See Note.)	●			
930-1	Lamp mode Lamp-1 of 1 Lamp Mode (See Note.)	●			
930-2	Lamp mode Lamp-2 of 1 Lamp Mode (See Note.)	●			
998-0	Grid Test Pattern Display	●			

Note : Group-no. 930

- If the data value appears "11" on the screen, the lamp mode is selected.
- If the data value appears "0" on the screen, the lamp mode is not selected. Set the data value to "10."
- If the data value appears "99" on the screen, it is period for cooling of the lamp. Wait until it is changed to "0." Then set the data value to "10."

Caution :

Other adjustment items are not related to service and a maintenance. Don't change the data values of those adjustment items. Otherwise it may cause loss of product safety.

■ Electrical adjustments

Note :

■ The following adjustment is the adjustment item for Assembly power. The test point exists on **the Assembly power**.

1. ***Voltage adjustment.***

■ The following adjustments are the adjustment item for Terminal board-AV. The adjustment data is stored to Terminal board-AV (IC2143). The test points exist on **the Terminal board-AV and the Assembly main**.

2. ***AV Video signal adjustments.***
3. ***3DNR-PLL Lock check.***
4. ***AV Color and Tint adjustments.***

■ The following adjustment is the adjustment item for Terminal board component. The adjustment data is stored to Terminal board-component (IC2082). The test points exist on **the Terminal board component and the Assembly main**.

5. ***Component Video signal adjustments.***

■ The following adjustment is the adjustment item for Assembly sub power. But the adjustment data is stored to Assembly main (IC1811 and IC871). The test points exist on **the Assembly optical fan-net and the Assembly sub-power**.

6. ***Fans driving voltage adjustments.***

■ The following adjustments are the adjustment item for Assembly main. The adjustment data is stored to Assembly main (IC1811 and IC871). The test points exist on **the Assembly main**.

7. ***Video center DC adjustments.***
8. ***PSIG signal adjustments.***
9. ***PC pedestal level adjustments.***
10. ***PC contrast adjustments.***
11. ***AV pedestal level adjustment.***
12. ***AV contrast adjustments.***
13. ***Panel driving signal adjustments -AV.***
14. ***Panel driving signal adjustments -PC.***
15. ***Flicker reduction.***
16. ***White balance adjustments.***

Location of test points can see it on "PWB location diagrams."

1. Voltage adjustment

Equipment	Digital voltmeter
Connections	+ K6D(2)
	- chassis ground

Adjustment:
Adjust the voltage of K6D to **6.35± 0.05V DC** with the VR652.

2. AV Video signal adjustments

Equipment	Oscilloscope
Input mode	AV
Input signal	16 step gray scale signal
Picture condition	Normal

Set the image to "Service mode."

2-1. AV Green Video adjustment

Connections : + TP211 or TP5182 / - chassis ground.
Adjust each item for below values with the Volume + and - buttons.

Group	No.	Adjustment part.	Adjustment or adjustment value.
1010-	**0**	Amplitude-A in a figure.	**0.7± 0.05Vp-p**
1010-	**1**	Pedestal level and black level.	Make it the same level.

2-2. AV Red Video adjustment

Connections : + TP201 or TP5181 / - chassis ground.
Adjust each item for below values with the Volume + and - buttons.

Group	No.	Adjustment part.	Adjustment or adjustment value.
1010-	**2**	Amplitude-A in a figure.	**0.7± 0.05Vp-p**
1010-	**3**	Pedestal level and black level.	Make it the same level.

2-3. AV Blue Video adjustment

Connections : + TP221 or TP5183 / - chassis ground.
Adjust each item for below values with the Volume + and - buttons.

Group	No.	Adjustment part.	Adjustment or adjustment value.
1010-	**4**	Amplitude-A in a figure.	**0.7± 0.05Vp-p**
1010-	**5**	Pedestal level and black level.	Make it the same level.

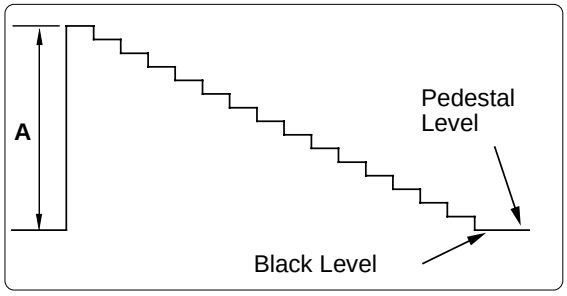

3. The voltage check of the 3D-Noise-reduction-PLL circuit.

Equipment	Digital voltmeter
Connections :	+ TP5103/ - chassis ground.
Input mode	AV
Input signal	Color bar signal(PAL)
Picture condition	Normal

Check that the voltage of TP5103 is **2.9± 0.5VDC**.

If it is not 2.9± 0.5VDC, check the periphery of the 3D-Noise-reduction-PLL circuit and repair it.

4. AV Color and Tint adjustments

Equipment	Oscilloscope.
Input mode	AV.
Input signal	Color bar signal(NTSC)
Picture condition	Normal.
Connections	+ TP221 or TP5183 - chassis ground.

Set the image to "Service mode."

Adjust each item for below values with the Volume + and - buttons.

Group	No.	Adjustment part.	Adjustment or adjustment value.
1000-	**25**	Amplitude-A in a figure.	**0.45± 0.02Vp-p**
1000-	**24**	Part-B, C and D in a figure.	Make those the same width.

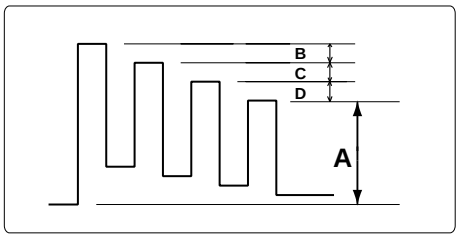

5. Component Video signal adjustments

Equipment	Oscilloscope.
Input mode	Y, Cb, Cr.
Input signal	16 step gray scale signal
Picture condition	Normal.

Set the image to "Service mode."

3-1. Component G Video adjustment

Connections + TP211 or TP2072 / - chassis ground.

Adjust each item for below values with the Volume + and - buttons.

Group	No.	Adjustment part.	Adjustment or adjustment value.
5010-	**0**	Amplitude-A in a figure.	**0.66± 0.05Vp-p**
5010-	**1**	Pedestal level and black level.	Make it the same level.

3-2. Component R Video adjustment

Connections + TP201 or TP2071 / - chassis ground.

Adjust each item for below values with the Volume + and - buttons.

Group	No.	Adjustment part.	Adjustment or adjustment value.
5010-	**2**	Amplitude-A in a figure.	**0.66± 0.05Vp-p**
5010-	**3**	Pedestal level and black level.	Make it the same level.

3-3. Component B Video adjustment

Connections + TP221 or TP2073 / - chassis ground.

Adjust each item for below values with the Volume + and - buttons.

Group	No.	Adjustment part.	Adjustment or adjustment value.
5010-	**4**	Amplitude-A in a figure.	**0.66± 0.05Vp-p**
5010-	**5**	Pedestal level and black level.	Make it the same level.

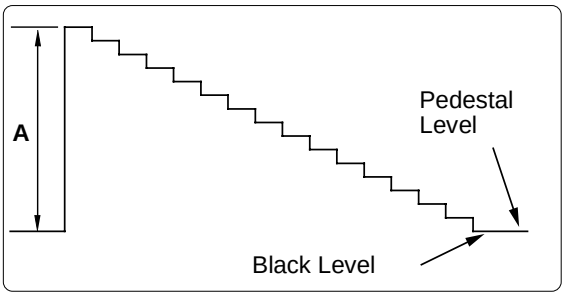

6. Fan driving voltage adjustments

Equipment Digital voltmeter.

Set the image to "Service mode."
Adjust each item for below values with the Volume + and - buttons.

Group	No.	Connection	Adjustment or adjustment value.
140-	**0**	TP7611 (Fan-A)	**9.0± 0.1VDC**
140-	**1**	TP7611 (Fan-A)	**13.5± 0.1VDC**
140-	**2**	TP2641 (Fan-C)	**9.0± 0.1VDC**
140-	**3**	TP2641 (Fan-C)	**13.5± 0.1VDC**
140-	**4**	TP7613 (Fan-B)	**9.0± 0.1VDC**
140-	**5**	TP7613 (Fan-B)	**13.5± 0.1VDC**

7. Video center DC adjustments

Equipment Digital voltmeter.
Input mode Computer.
Input signal 16 step gray scale signal.

Set the image to "Service mode."
Adjust each item for below values with the Volume + and - buttons.

Group	No.	Connection	Adjustment or adjustment value.
200-	**0**	TP2526 (G-DC)	**7.4 ± 0.1VDC**
200-	**1**	TP2536 (R-DC)	**7.4 ± 0.1VDC**
200-	**2**	TP2516 (B-DC)	**7.4 ± 0.1VDC**

8. PSIG signal adjustments

Equipment Oscilloscope.
Input mode Computer.
Input signal 16 step gray scale signal

Set the image to "Service mode."

Adjust each item for below values with the Volume + and - buttons.

Group	No.	Connection	Adjustment part.	Adjustment or adjustment value.
200-	**3**	TP2561	Amplitude-A in a figure.	**10.0 ± 0.1Vp-p**
200-	**4**	TP2571	Amplitude-A in a figure	**3.8 ± 0.1Vp-p**

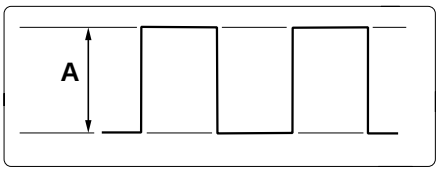

9. Pedestal level adjustments -PC

Equipment Oscilloscope.
Input mode Computer.
Input signal 16 step gray scale signal
Set the image to "Service mode."

Adjust the pedestal level and black level in same level with the Volume + and - buttons.
However, the amplitude-A in a figure must not shrink.

Group	No.	Connection
200-	**5**	TP2526 (Green pedestal level adjustment)
200-	**6**	TP2536 (Red pedestal level adjustment)
200-	**7**	TP2516 (Blue pedestal level adjustment)

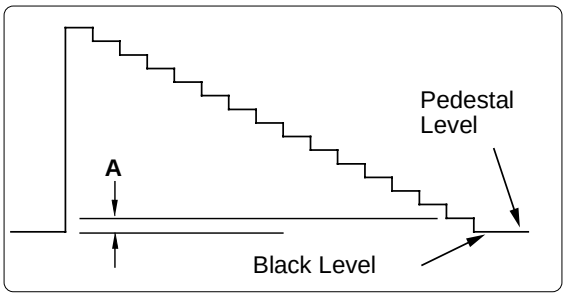

10. Contrast adjustments-PC

Equipment Oscilloscope.
Input mode Computer.
Input signal 16 step gray scale signal
Set the image to "Service mode."

Adjust each test point value part-A in a figure minimum amplitude with the Volume + and - buttons.

Group	No.	Connection
200-	**8**	TP2526 (Green contrast adjustment)
200-	**9**	TP2536 (Red contrast adjustment)
200-	**10**	TP2516 (Blue contrast adjustment)

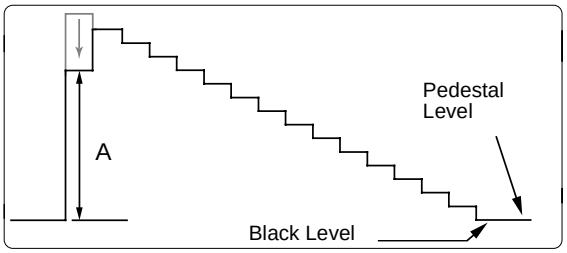

11. Pedestal level adjustments AV

Equipment Oscilloscope.
Input mode AV
Input signal 16 step gray scale signal
Set the image to "Service mode."

Adjust the pedestal level and black level in same level with the Volume + and - buttons.
However, the amplitude-A in a figure must not shrink.

Group	No.	Connection
210-	**5**	TP2526 (Green pedestal level adjustment)
210-	**6**	TP2536 (Red pedestal level adjustment)
210-	**7**	TP2516 (Blue pedestal level adjustment)

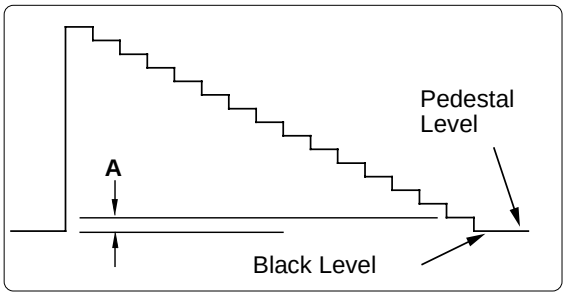

12. Contrast adjustments-AV

Equipment Oscilloscope.
Input mode AV.
Input signal 16 step gray scale signal
Set the image to "Service mode."

Adjust each test point value part-A in a figure minimum amplitude with the Volume + and - buttons.

Group	No.	Connection
210-	**8**	TP2526 (Green contrast adjustment)
210-	**9**	TP2536 (Red contrast adjustment)
210-	**10**	TP2516 (Blue contrast adjustment)

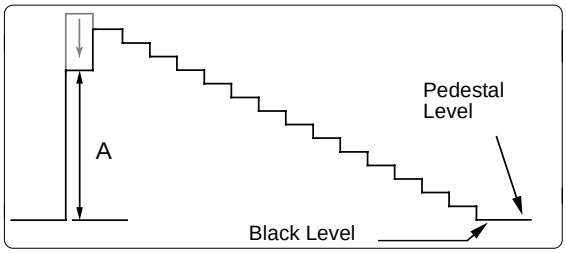

13. Panel driving signal adjustments -AV

Equipment Oscilloscope.
Input mode AV.
Input signal 16 step gray scale signal
Picture condition Normal.

Set the image to "Service mode."

Adjust each item for below values with the Volume + and - buttons.

Group	No.	Connection	Adjustment part.	Adjustment or adjustment value.
210-	**11**	TP2526(Green)	Amplitude-A in a figure.	**4.1 ± 0.05Vp-p**
210-	**12**	TP2526(Green)	Amplitude-B in a figure.	**1.6 ± 0.05Vp-p**
210-	**13**	TP2536(Red)	Amplitude-A in a figure.	**4.1 ± 0.05Vp-p**
210-	**14**	TP2536(Red)	Amplitude-B in a figure.	**1.6 ± 0.05Vp-p**
210-	**15**	TP2516(Blue)	Amplitude-A in a figure.	**4.1 ± 0.05Vp-p**
210-	**16**	TP2516(Blue)	Amplitude-B in a figure.	**1.6 ± 0.05Vp-p**

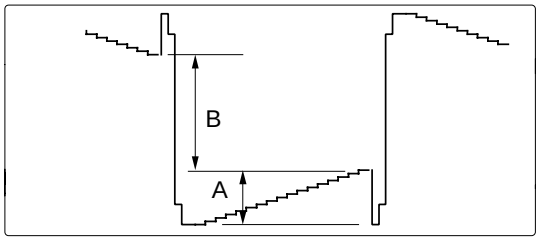

14. Panel driving signal adjustments -PC

Equipment Oscilloscope.
Input mode Computer
Input signal 16 step gray scale signal

Set the image to "Service mode."

Adjust each item for below values with the Volume + and - buttons.

Group	No.	Connection	Adjustment part.	Adjustment or adjustment value.
200-	**11**	TP2526(Green)	Amplitude-A in a figure.	**4.1 ± 0.05Vp-p**
200-	**12**	TP2526(Green)	Amplitude-B in a figure.	**1.5 ± 0.05Vp-p**
200-	**13**	TP2536(Red)	Amplitude-A in a figure.	**4.1 ± 0.05Vp-p**
200-	**14**	TP2536(Red)	Amplitude-B in a figure.	**1.5 ± 0.05Vp-p**
200-	**15**	TP2516(Blue)	Amplitude-A in a figure.	**4.1 ± 0.05Vp-p**
200-	**16**	TP2516(Blue)	Amplitude-B in a figure.	**1.5 ± 0.05Vp-p**

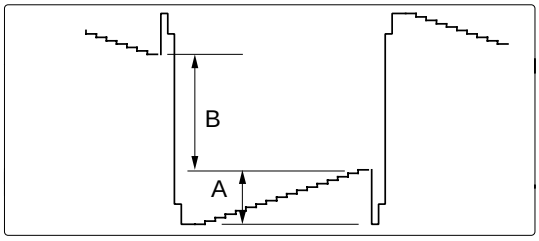

15. Flicker reduction

Input mode Computer.
Input signal 1 dot line computer signal

Set the image to "Service mode."

Adjust each color for minimum flickers with the Volume + - buttons.

Group	No.	Screen
200-	**17**	Display only green light.
200-	**18**	Display only red light.
200-	**19**	Display only blue light.

16. White balance adjustments

Input signal 16 step gray scale signal

Set the image to "Service mode."

Adjust each item value with the Volume + and - buttons and to obtain better white balance.

Group	No.	Lamp mode	Input mode	Adjustment value.
930-	**0**			See note.
210-	**14 and 16**	2 lamp mode	AV	Better white balance.
200-	**14 and 16**	2 lamp mode	Computer	Better white balance.
930-	**1**			See note.
211-	**14 and 16**	Lamp-1 of 1 lamp mode	AV	Better white balance.
930-	**2**			See note.
212-	**14 and 16**	Lamp-2 of 1 lamp mode	AV	Better white balance.

Note :

- ***. If the data value appears "11" on the screen, go to next item.***
- ***. If the data value appears "0" on the screen, set the data value to "10" and go to next item.***
- ***. If the data value appears "99" on the screen, wait until it is changed to "0". Then set the data value to "10" and go to next item.***

Optical components adjustments

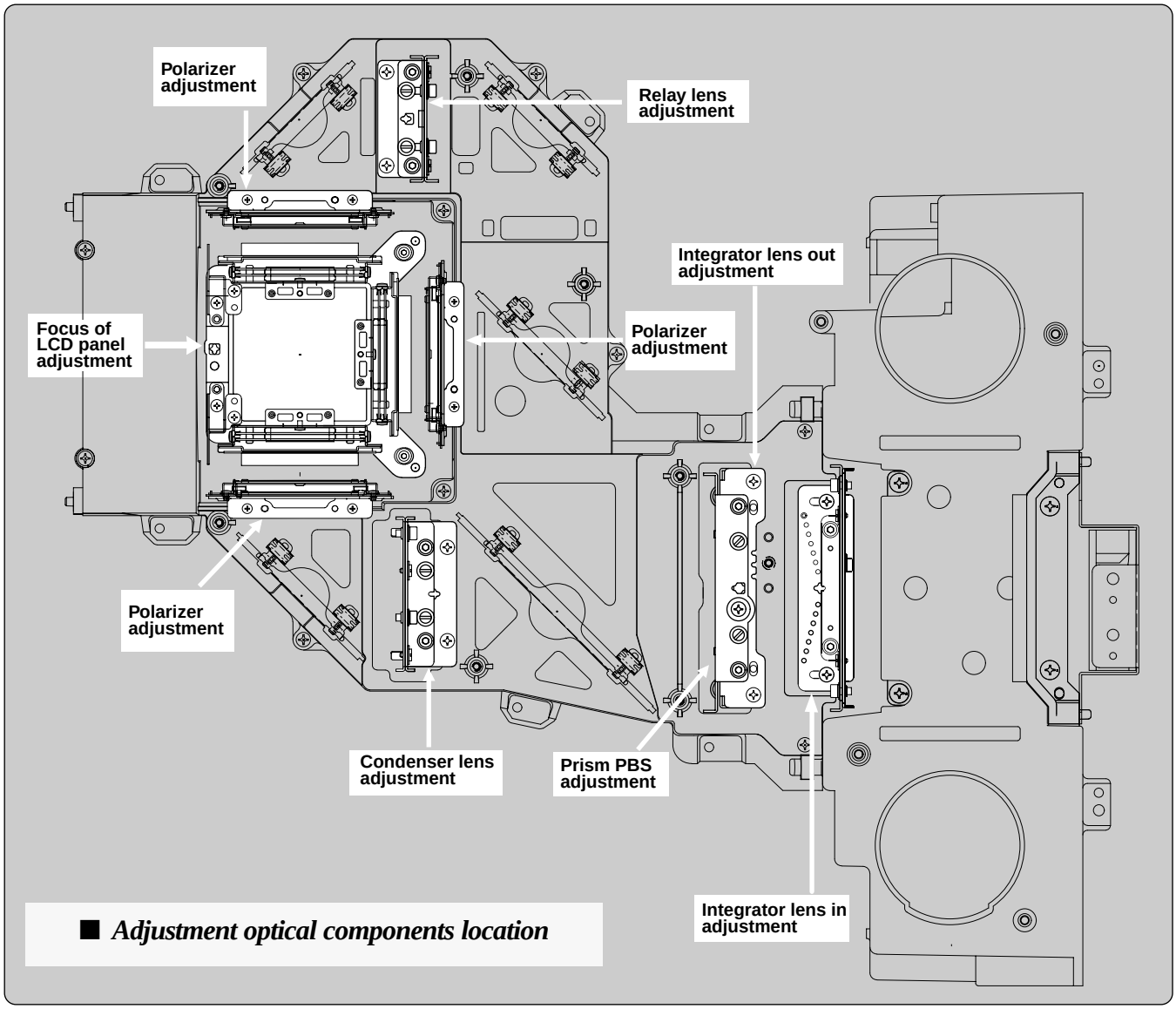

■ *Adjustment optical components location*

■ *Before Adjustment*

1. Each adjustment requires ball allen wrenches set and slot screwdrivers set.
2. Set the position of motorized lens shift to the center position.
   (The position where an arrow becomes red on a screen is a center position.)
3. The test pattern display exists in service mode. Use it at the time of Panel's Focus adjustment.
   (a) Set the image to "service mode."
   (b) Select Group no. 998-0.
   (c) Press the Volume+ - buttons, and each color grid pattern is displayed.
   (d) Press menu button to quit the service mode.
4. When adjusting lenses of the Relay and Condenser, follow the following procedure.
   (a) Remove the connector K8E, connector K8V and the flexible cables of the LCD panels from the assembly Main. (*Never touch the electrode of flexible cables.)*
   (b) As shown in a figure, Set the assembly-Main to the upright position.
   (c) At this time, the assembly main must not short-circuit with the chassis. Protect assembly-Main using an insulator.

Y/V

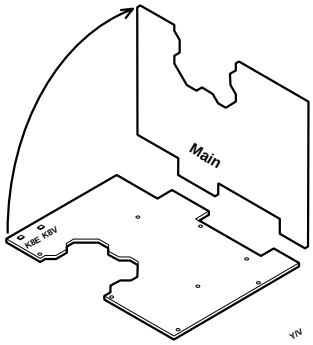

■ *Focus of LCD Panel Adjustment*

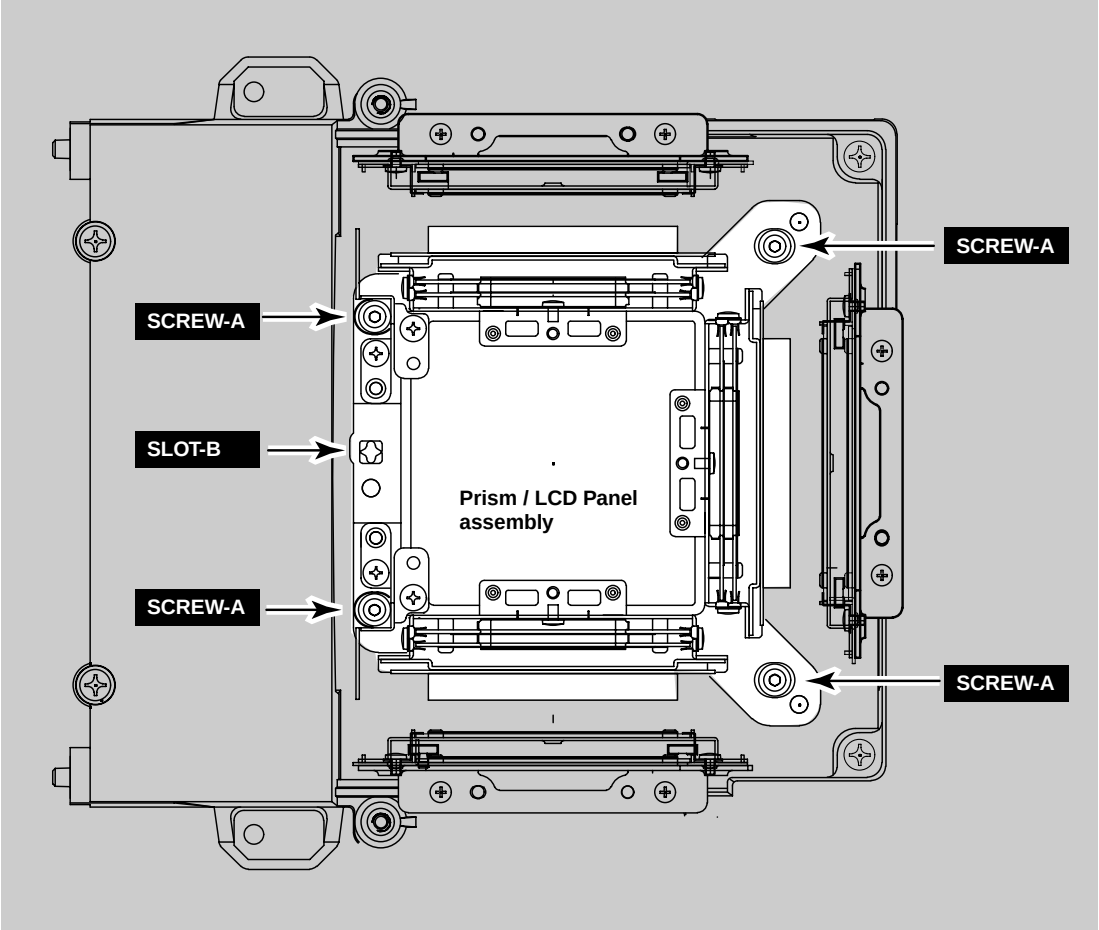

Before Adjustment :

1. Turn on a projector.
2. Set the image to "service mode" and project a green grid pattern on a screen. And adjust green grid pattern to sharp focus, pressing Focus(▲)(▼) buttons on the projector or remote control unit.
3. Press Zoom(▲)(▼) buttons on the projector or remote control unit. And if the focus shifts by the ZOOM position moves between TELE and WIDE, adjust in the following procedure.

Adjustment :

1. Loosen four screws-A using ball allen wrench.
2. Set image size to the maximum, pressing Zoom(▲) button on the projector or remote control unit.
3. Adjust center part of green grid pattern to sharp focus, pressing Focus(▲)(▼) buttons on the projector or remote control unit.
4. Set image size to the minimum, pressing Zoom(▼) button on the projector or remote control unit.
5. Insert a slot screwdriver into slot-B, turn it and adjust center part and four corners on the green grid pattern to sharp focus.
6. Repeat steps 2 to 5. If the focus does not shift by the ZOOM position moves between TELE and WIDE, it will be the completion of adjustment.
7. Tighten four screws-A to fix the assembly LCD panel / prism using ball allen wrench.

■ Integrator-lens-in adjustment-1

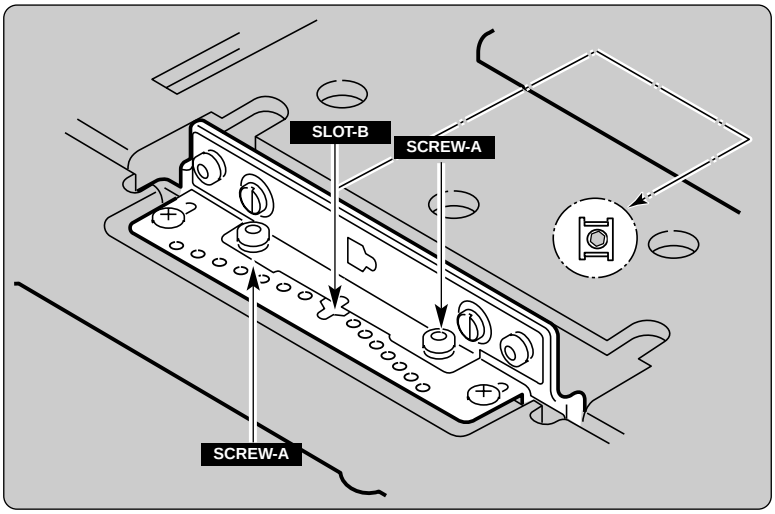

Before Adjustment :

* Remove the flexible cables of LCD panels from the assembly Main. And turn on the projector.
* Shift the adjustment position of Integrator-lens-out temporarily until shade appears the right or the left on the screen. After the Integrator-lens-in-1 adjustment, readjust the Integrator-lens-out.
* Refer to "Integrator-lens-out adjustment" of next step for the adjustment method.

Adjustment :

1. Insert light block sheets in front of the Red and Blue panels to block the red and blue lights so that green light is projected.
2. loosen 2 screws A.
3. Insert slot screwdriver into slot B, turn it until the shade edge is sharp focus.
4. Tighten the 2 screws A to fix the integrator-lens-in unit.

■ Integrator-lens-out adjustment

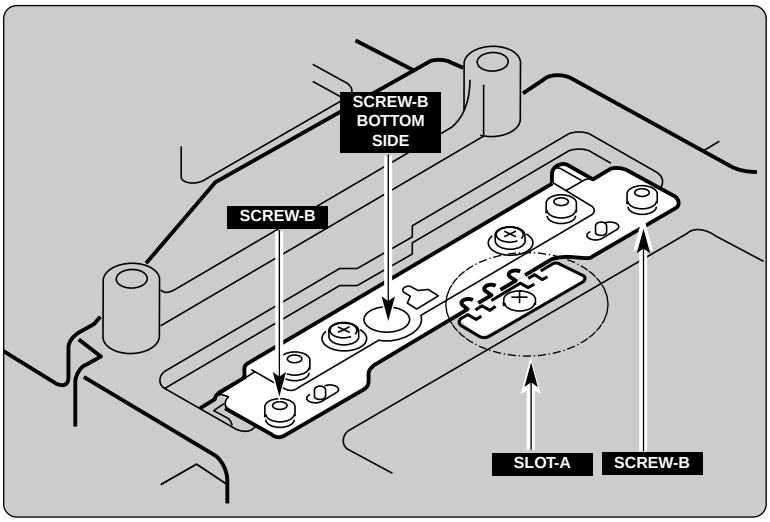

Before Adjustment :

1. Remove the flexible cables of LCD panels from the assembly Main. And turn on the projector.
2. Insert light block sheets in front of the Red and Blue panels to block the red and blue lights so that green light is projected.
3. If the shade appears on the left or right of the screen, adjust in the following procedure.

Adjustment :

1. Loosen three screws-B.
2. Insert a slot screwdriver into slot-A, turn it and erase shade.
3. Tighten the three screws B to fix the integrator lens-out unit.

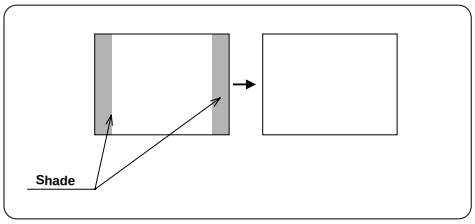

■ Integrator-lens-in adjustment-2

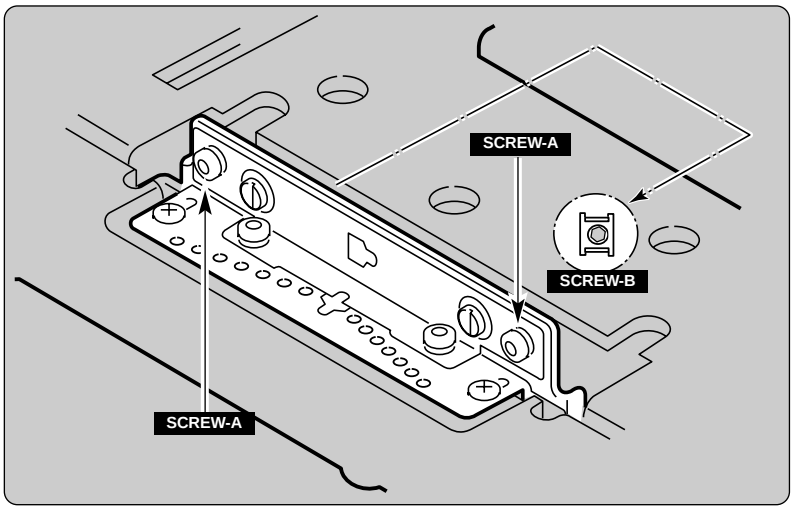

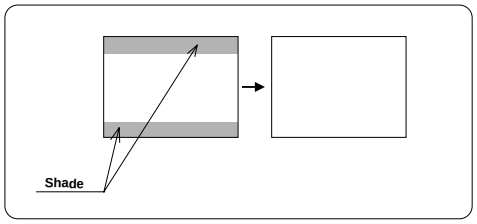

Before Adjustment :

1. Remove the flexible cables of LCD panels from the assembly Main. And turn on the projector.
2. Insert light block sheets in front of the Red and Blue panels to block the red and blue lights so that green light is projected.
3. If the shade appears on the top or bottom of the screen, adjust in the following procedure.

Adjustment :

1. Loosen two screws-A.
2. Insert a ball allen wrench into screw-B, turn it and erase shade.
3. Tighten the two screws A to fix the integrator lens-in unit.

■ Condenser-lens adjustment

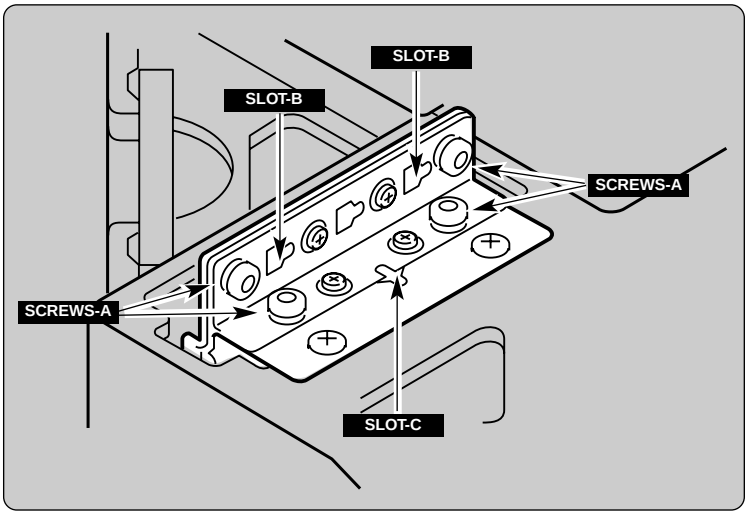

Before Adjustment :

1. Remove the connector K8E and connector K8V, and remove the flexible cables of LCD panels from the assembly Main. And turn on the projector.
2. Insert light block sheet in front of the blue panel to block the blue light so that yellow(Green and Red lights) light is projected.
3. If the shade appears on the screen, adjust in the following procedure.

Adjustment :

1. Set the assembly-Main to the upright position.
2. Loosen four screws-A.
3. If it appears on the top or bottom.---> Use two slots-B.
   If it appears on the left or right. -----> Use slot-C.
   -- Insert slot screwdriver into each slot, turn it and erase shade. --
4. Tighten the four screws-A to fix the condenser-lens unit.

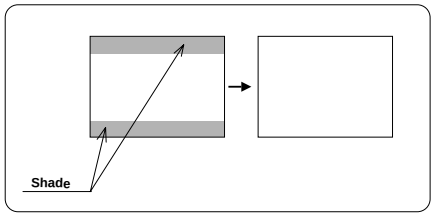

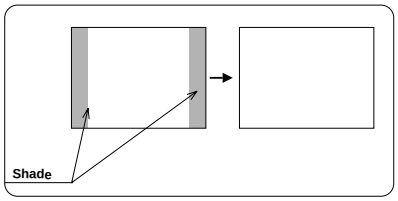

■ Relay-lens adjustment

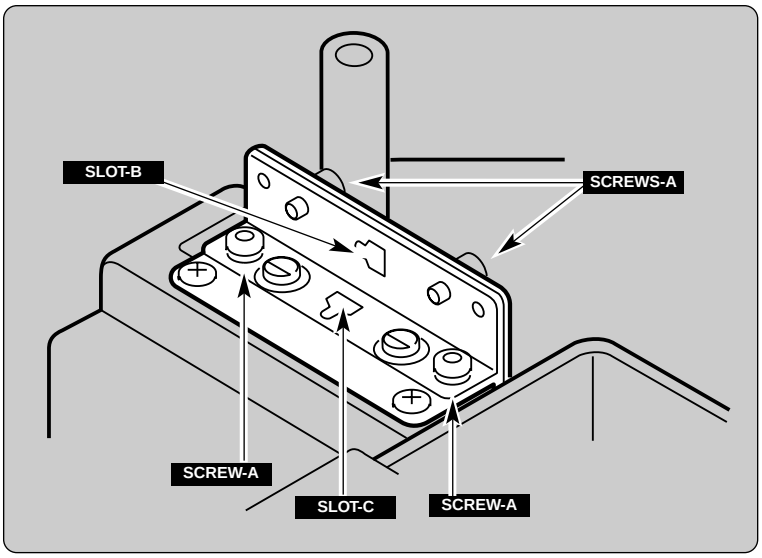

Before Adjustment :

1. Remove the connector K8E and connector K8V, and remove the flexible cables of LCD panels from the assembly Main. And turn on the projector.
2. Insert light block sheet in front of the red panel to block the red light so that cyan(Green and Blue lights) light is projected.
3. If the shade appears on the screen, adjust in the following procedure.

Adjustment :

1. Set the assembly-Main to the upright position.
2. Loosen four screws-A.
3. If it appears on the top or bottom.---> Use slot-B.
   If it appears on the left or right. -----> Use slot-C.
   -- Insert slot screwdriver into each slot, turn it and erase shade. --
4. Tighten the four screws-A to fix the Relay-lens unit.

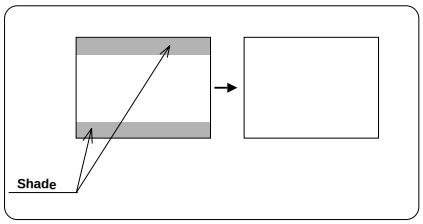

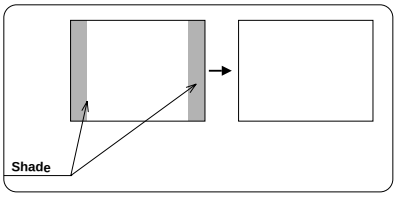

■ Prism P.B.S. adjustment

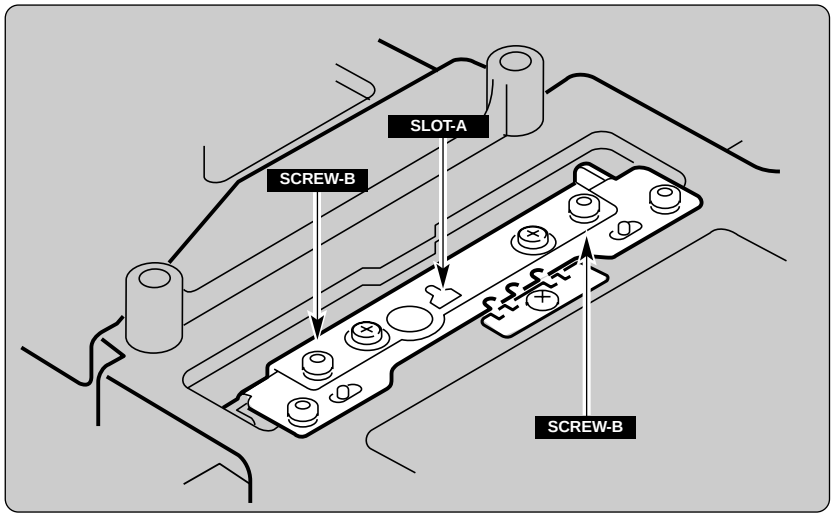

Adjustment :

1. Remove the flexible cables of LCD panels from the assembly Main. And turn on the projector.
2. Loosen two screws-B.
3. Insert a slot screwdriver into slot-A, turn it and adjust the center position of screen to maximum brightness.
4. Tighten the two screws-B to fix the prism PBS unit.

■ Polarizer adjustment

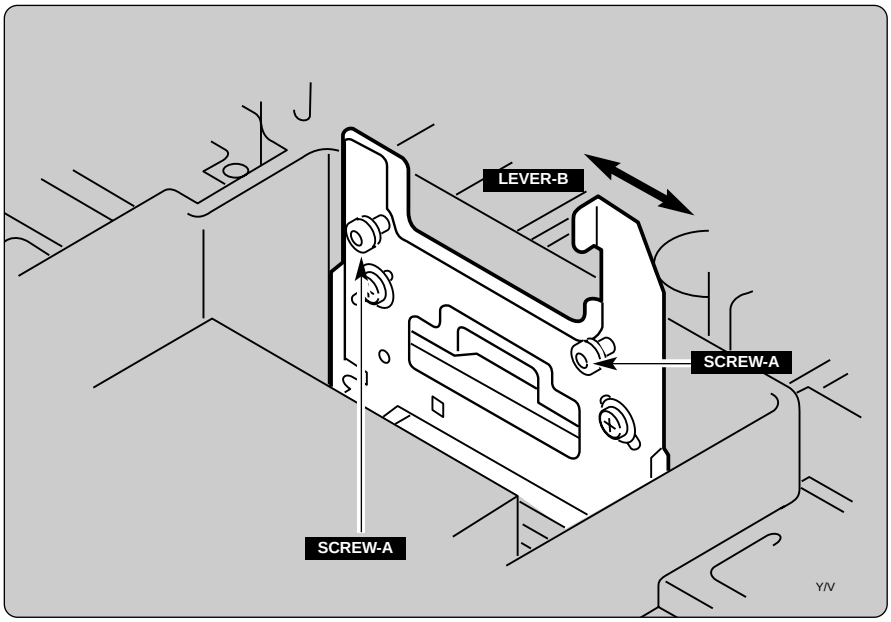

R, G and B polarizer adjustment :

1. Turn on a projector. And input the black raster signal(0% of white raster signal.)
2. Loosen two screws-A on the polarizer unit which you intend to adjust using ball allen wrench.
3. Block the lights of the color which do not adjust using light block sheets.
4. Move the lever-B in the direction of an arrow and adjust the brightness on the screen to the lowest level of black.
5. Tighten the two screws-A to fix the polarizer unit.
6. Adjust the polarizer of other colors.

Y/V

CPU and I/O-Expander Control port functions

CPU (IC801 144 pin) Control port functions

Pin No.	Name	Function Name	Function	Polarity	I/O
1	PA23/WRHH	USB RESET	USB Reset signal	Active L	O
2	PE14/TIOC4C/DACK0/AH				O
3	PA22/WRHL				
4	PA21/CASHH	RS232C_SW	RS232C Output select signal		O
5	PE15/TIOC4D/DACK1/IRQOUT	POWER SW	"L":Power OFF "H":Power ON		O
6	VSS	GND			
7	PC0/A0	ADDRESS0	Address Bus 0		O
8	PC1/A1	ADDRESS1	Address Bus 1		O
9	PC2/A2	ADDRESS2	Address Bus 2		O
10	PC3/A3	ADDRESS3	Address Bus 3		O
11	PC4/A4	ADDRESS4	Address Bus 4		O
12	VCC	5V			
13	PC5/A5	ADDRESS5	Address Bus 5		O
14	VSS	GND			
15	PC6/A6	ADDRESS6	Address Bus 6		O
16	PC7/A7	ADDRESS7	Address Bus 7		O
17	PC8/A8	ADDRESS8	Address Bus 8		O
18	PC9/A9	ADDRESS9	Address Bus 9		O
19	PC10/A10	ADDRESS10	Address Bus 10		O
20	PC11/A11	ADDRESS11	Address Bus 11		O
21	PC12/A12	ADDRESS12	Address Bus 12		O
22	PC13/A13	ADDRESS13	Address Bus 13		O
23	PC14/A14	ADDRESS14	Address Bus 14		O
24	PC15/A15	ADDRESS15	Address Bus 15		O
25	PB0/A16	ADDRESS16	Address Bus 16		O
26	VCC	5V			
27	PB1/A17	ADDRESS17	Address Bus 17		O
28	VSS	GND			
29	PA20/CASHL	SCL 1	IIC Bus 1 Clock		I/O
30	PA19/BACK/DRAK1	SDA 1	IIC Bus 1 Data		I/O
31	PB2/IRQ0/POE0/RAS				
32	PB3/IRQ1/POE1/CASL				
33	PA18/BREQ/DRAK0	SYS SW	IC on/off Switch (ON="L", OFF="H")		O
34	PB4/IRQ2/POE2/CASH	AFT-V	V SYNC Input (LCD Panel Drive)	Active L	I
35	VSS	GND			
36	PB5/IRQ3/POE3/RDWR				I
37	PB6/IRQ4/A18/BACK	ADDRESS18	Address Bus 18		O
38	PB7/IRQ5/A19/BREQ	ADDRESS19	Address Bus 19		O
39	PB8/IRQ6/A20/WAIT	ADDRESS20	Address Bus 20		O
40	VCC	5V			
41	PB9/IRQ7/A21/ADTRG	ADDRESS21	Address Bus 21		O
42	VSS	GND			
43	PA14/RD	READ	Read Signal	Active L	O
44	WDTOVF				
45	PD31/D31/ADTRG	RTS	RS232C RTS (Request To Send)		O
46	PD30/D30/IRQOUT	CTS	RS232C CTS (Clear To Send)		I
47	PA13/WRH				
48	PA12/WRL	WRL	Write Signal (L-8Bit)	Active L	O
49	PA11/CS1				
50	PA10/CS0	CS0	Flash Memory Chip Select	Active L	O
51	PA9/TCLKD/IRQ3	SCL 2	IIC Bus 2 Clock		I/O
52	PA8/TCLKC/IRQ2	SDA 2	IIC Bus 2 Data		I/O
53	PA7/TCLKB/CS3	CS3	USB/IP/IO EXP/SRAM/FIFO Chip Select	Active L	O
54	PA6/TCLKA/CS2	CS2	CXD3511Q Chip Select	Active L	O
55	VSS	GND			
56	PD29/D29/CS3				
57	PD28/D28/CS2	PW_SEL	PW365 232C Select(SH="H",PIXEL="L")		O
58	PD27/D27/DACK1	PW_INTR	PW365 Interrupt Signal		O
59	PD26/D26/DACK0	PW_OUT1	PW365 Data Outout		O
60	PD25/D25/DREQ1	PW_OUT0	PW365 Data Output		O
61	VSS	GND			
62	PD24/D24/DREQ0				
63	VCC	5V			
64	PD23/D23/IRQ7				
65	PD22/D22/IRQ6				
66	PD21/D21/IRQ5				
67	PD20/D20/IRQ4	SCONF_DONE	Single to Dual converter Enhancer Done Signal		I/O
68	PD19/D19/IRQ3	SSTATUSq	Single to Dual converter Enhancer Status Signal		I/O
69	PD18/D18/IRQ2	PW_IN1	PW365 Data Input		I
70	PD17/D17/IRQ1	PW_IN0	PW365 Data Input		I
71	VSS	GND			

CPU and I/O-Expander Control port functions

Pin No.	Name	Function Name	Function	Polarity	I/O
72	PD16/D16/IRQ0	PW_PG_SEL	PW365 232C Write SW(SH="H",PIXEL="L")		I
73	PD15/D15	DATA15	Data Bus 15		I/O
74	PD14/D14	DATA14	Data Bus 14		I/O
75	PD13/D13	DATA13	Data Bus 13		I/O
76	PD12/D12	DATA12	Data Bus 12		I/O
77	VCC	5V			
78	PD11/D11	DATA11	Data Bus 11		I/O
79	VSS	GND			
80	PD10/D10	DATA10	Data Bus 10		I/O
81	PD9/D9	DATA9	Data Bus 9		I/O
82	PD8/D8	DATA8	Data Bus 8		I/O
83	PD7/D7	DATA7	Data Bus 7		I/O
84	PD6/D6	DATA6	Data Bus 6		I/O
85	VCC	5V			
86	PD5/D5	DATA5	Data Bus 5		I/O
87	VSS	GND			
88	PD4/D4	DATA4	Data Bus 4		I/O
89	PD3/D3	DATA3	Data Bus 3		I/O
90	PD2/D2	DATA2	Data Bus 2		I/O
91	PD1/D1	DATA1	Data Bus 1		I/O
92	PD0/D0	DATA0	Data Bus 0		I/O
93	VSS	GND			
94	XTAL	XTAL	OSC Signal Input		I
95	MD3	Mode-3	Mode-3		I
96	EXTAL	EXTAL	OSC Signal Output		O
97	MD2	Mode-2	Mode-2		I
98	NMI	NONMASK	NONMASK		I
99	VCC (FWP)	FWP	Flash Memory Write Mode		I
100	PA16/AH	FLASH MODE	FWP Control		O
101	PA17/WAIT				O
102	MD1	Mode-1	Mode-1		I
103	MD0	Mode-0	Mode-0		I
104	PLLVCC	PLLVCC	PLL Vcc		
105	PLLCAP	PLLCAP	PLL Filter		
106	PLLVSS	PLLGND	PLL Gnd		
107	PA15/CK	M-CLK	CPU Clock Output (Auto Image FPGA)		O
108	RES	Reset	Reset	Active L	I
109	PE0/TIOC0A/DREQ0	PCTL	CXD3511Q		O
110	PE1/TIOC0B/DRAK0	SCL 6	IIC Bus 6 Clock		I/O
111	PE2/TIOC0C/DREQ1	SDA 6	IIC Bus 6 Data		I/O
112	VCC	5V			
113	PE3/TIOC0D/DRAK1	SDA 3	IIC Bus 3 Data		I/O
114	PE4/TIOC1A	SCL 3	IIC Bus 3 Clock		I/O
115	PE5/TIOC1B	SDA 4	IIC Bus 4 Data		I/O
116	PE6/TIOC2A	SCL 4	IIC Bus 4 Clock		I/O
117	VSS	GND			
118	PF0/AN0	KEY1	Top Control Keys-1 (A/D Input)		I
119	PF1/AN1	KEY2	Top Control Keys-2 (A/D Input)		I
120	PF2/AN2	KEY3	Top Control Keys-3 (A/D Input)		I
121	PF3/AN3	OPT1	Logo Mark		I
122	PF4/AN4	Press Sensor	Atmospheric Pressure Sensor		I
123	PF5/AN5	Temp Sensor	Thermistor		I
124	AVSS	GND	A / D Gnd		
125	PF6/AN6	POWER FAIL	Power Fail (L : Abnormality)		I
126	PF7/AN7	SDATA IN	SDATA IN		I
127	AVREF	5V	5V A / D REF.		
128	AVCC	5V	5V A / D Vcc		
129	VSS	Gnd			
130	PA0/RXD0	SH_RX	PW365 Rx		I
131	PA1/TXD0	SH_TX	PW365 Tx		O
132	PA2/SCK0/DREQ0/IRQ0				
133	PA3/RXD1	Rx	RS232C Rx		I
134	PA4/TXD1	Tx	RS232C Tx		O
135	VCC	5V			
136	PA5/SCK1/DREQ1/IRQ1	USB INTR	USB Interrupt Signal Input	Active L	I
137	PE7/TIOC2B	SDA 5	IIC Bus 5 Data		I/O
138	PE8/TIOC3A	SCL 5	IIC Bus 5 Clock		I/O
139	PE9/TIOC3B	SDATA OUT	Single to Dual converter Enhancer Data Output Signal		O
140	PE10/TIOC3C	SCLK	Single to Dual converter Enhancer Clock Output Signal		O
141	VSS	Gnd			
142	PE11/TIOC3D	EXP RESET	I/ O Expander	Active H	O
143	PE12/TIOC4A	R/C	R / C Input	Active L	I
144	PE13/TIOC4B/MRES	PW RESET	PW365 Reset Signal	Active L	O

CPU and I/O-Expander Control port functions

I/O Expander Control port functions (IC1801 64 pin)

Y / V

Pin No.	Name	Function Name	Function	Polarity	I/O
1	PF6	BLAST_SW3	Lamp Ballast **1** On/Off SW *	ON = H	O
2	PF7	BLAST_SW4	Lamp Ballast **2** On/Off SW *	ON = H	O
3	Vcc	Vcc	5V ±10%		-
4	PE0	LENS_UP	Lens Up		O
5	PE1	LENS_DOWN	Lens Down		O
6	PE2	LENS_RIGHT	Not used Lens Right *		O
7	PE3	LENS_LEFT	Not used Lens Left *		O
8	PE4	FOCUS+	Focus +		O
9	PE5	FOCUS-	Focus -		O
10	PE6	ZOOM+	Zoom +		O
11	PE7	ZOOM-	Zoom -		O
12	GND3	GND			-
13	PB0	LENS_TOP	Lens Top Detection	Top= " L "	I
14	PB1	LENS_VC	Lens U/D Center Detection	Center= Edge	I
15	PB2	LENS_BOT	Lens Bottom Detection	Bottom= "L"	I
16	PB3	LENS_RE	Not used Lens Right Detection *	Right= "L"	I
17	PB4	LENS_HC	Not used Lens R/L Detection *	Center= Edge	I
18	PB5	LENS_LE	Not used Lens Left Detection *	Left= "L"	I
19	PB6	SEL_CTIN1	SEL_CTIN1	INIT	I
20	PB7	SEL_CTIN2	SEL_CTIN2	DONE_SEL	I
21	PA7				O
22	PA6				O
23	PA5				O
24	PA4	RESET	FPGA Reset	Low->High Reset	O
25	PA3				O
26	PA2	50_60_SW	50/60Hz Select SW	50Hz= "L"	O
27	PA1	CG_SW	CG Select SW	CG= "H"	O
28	PA0	COMP_SW	COMPONENT Select SW	COMPO= "L"	O
29	Vcc	Vcc	5V ±10%		-
30	RD	READ_CPU	Read Select	Active "L"	I
31	WR	WRITE_CPU	Write Select	Active "L"	I
32	CS	CS_EXP	Chip Select	Active "L"	I
33	RESET	EXP_RST	Reset	Active "H"	I
34	GND1	GND			-
35	A2	A2CPU	Port Select 2		I
36	A1	A1CPU	Port Select 1		I
37	A0	A0CPU	Port Select 0		I
38	D0	D0CPU	Data Bus 0		I/O
39	D1	D1CPU	Data Bus 1		I/O
40	D2	D2CPU	Data Bus 2		I/O
41	D3	D3CPU	Data Bus 3		I/O
42	D4	D4CPU	Data Bus 4		I/O
43	D5	D5CPU	Data Bus 5		I/O
44	D6	D6CPU	Data Bus 6		I/O
45	D7	D7CPU	Data Bus 7		I/O
46	PC7	SLOT_SEL1	Slot select 1		O
47	PC6	SLOT_SEL2	Slot select 2		O
48	PC5				O
49	PC4	AUDIO_MUTE	Mute Output		O
50	PC0	LAMP1	Not used PFC On/Off SW *	ON = H	O
51	PC1	LAMP2	Not used PFC On/Off SW *	ON = H	O
52	PC2	LAMP3	PFC **1** On/Off SW *	ON = H	O
53	PC3	LAMP4	PFC **2** On/Off SW *	ON = H	O
54	PG0	LAMP1_ERR	Not used Lamp monitor *	Abnormality "H"	I
55	PG1	LAMP_ERR	Not used Lamp monitor *	Abnormality "H"	I
56	PG2	LAMP3_ERR	Lamp monitor **1** *	Abnormality "H"	I
57	PG3	LAMP4_ERR	Lamp monitor **2** *	Abnormality "H"	I
58	GND2	GND			-
59	PF0	TEMP_LED	Temp Warning LED Drive	LED ON = "L"	O
60	PF1	LAMP_LED	Lamp Replacement LED Drive	LED ON = "L"	O
61	PF2	READY_LED	Ready LED Drive	LED ON = "L"	O
62	PF3	SP_SW	Speaker on/off Switch	"L":ON "H":OFF	O
63	PF4	BLAST_SW1	Not used Lamp Ballast On/Off SW *	ON = H	O
64	PF5	BLAST_SW2	Not used Lamp Ballast On/Off SW *	ON = H	O

CPU and I/O-Expander Control port functions

Output Expander Control port functions (IC1822 20 pin)

Pin No.	Name	Function Name	Function	Polarity	I/O
1	OE	EXP_RST			
2	O0	SCONFIG	Single to Dual converter Enhancer CONFIG Signal		O
3	D0		Data Bus 0		
4	D1		Data Bus 1		
5	O1	IP_RESET	IP_RESET		O
6	O2	PROGRAM	PROGRAM		O
7	D2	Data Bus 2			
8	D3	Data Bus 3			
9	O3	USB_BRST	USB on-off		O
10	GND		GND		
11	CP				
12	O4	BUS_SW1	BUS Select SW1		O
13	D4		Data Bus 4		
14	D5		Data Bus 5		
15	O5	BUS_SW2	BUS Select SW2		O
16	O6	BUS_SW3	BUS Select SW3		O
17	D6		Data Bus 6		
18	Çc7		Data Bus 7		
19	O7	SSTB	Single to Dual converter Enhancer STB Signal		O
20	Vcc		+5V		

I/O Expander Control port functions (IC9021 16 pin)

Pin No.	Name	Function Name	Function	Polarity	I/O
1	SO	S0	Serial Data Output		O
2	SCL	IIC BUS SCL			I
3	SDA	IIC BUS SDA			I/O
4	D0	M-IDA1	Slot 1 Type Detection 1		I
5	D1	M-IDA2	Slot 2 Type Detection 1		I
6	D2	M-IDA3	Slot 3 Type Detection 1		I
7	D3	M-IDA4	Slot 4 Type Detection 1		I
8	Vss	GND			-
9	D4	M-IDB1	Slot 1 Type Detection 2		I
10	D5	M-IDB2	Slot 2 Type Detection 2		I
11	D6	M-IDB3	Slot 3 Type Detection 2		I
12	D7	M-IDB4	Slot 4 Type Detection 2		I
13	Vdd		5V ±10%		-
14	CS2	CS2			I
15	CS1	CS1			I
16	CS0	CS0			I

I/O Expander Control port functions (IC9022 16 pin)

Pin No.	Name	Function Name	Function	Polarity	I/O
1	SO	S0	Serial Data Output		O
2	SCL	IIC BUS SCL			I
3	SDA	IIC BUS SDA			I/O
4	D0	M-IDC1	Slot 1 Type Detection 3		I
5	D1	M-IDC2	Slot 2 Type Detection 3		I
6	D2	M-IDC3	Slot 3 Type Detection 3		I
7	D3	M-IDC4	Slot 4 Type Detection 3		I
8	Vss	GNDÅ			-
9	D4	SLOT1 ID	SLOT1 ID		I
10	D5	SLOT2 ID	SLOT2 ID		I
11	D6	SLOT3 ID	SLOT3 ID		I
12	D7	SLOT4 ID	SLOT4 ID		I
13	VDD		5V ±10%		-
14	CS2	CS2			I
15	CS1	CS1			I
16	CS0	CS0			I

The cautions in schematic diagrams

■ **1. *PRODUCT SAFETY NOTICE***

THE COMPONENTS DESIGNATED BY A MARK (⚠) IN THIS SCHEMATIC DIAGRAM DESIGNATE COMPONENTS WHOSE VALUES ARE OF SPECIAL SIGNIFICANCE TO PRODUCT SAFETY. SHOULD ANY COMPONENT DESIGNATED BY A MARK NEED TO BE REPLACED, USE ONLY THE PART DESIGNATED IN THE PARTS LIST. DO NOT DEVIATE FROM THE RESISTANCE, WATTAGE AND VOLTAGE RATINGS SHOWN.

■ ***2. The cautions in collation of parts.***

Specification of capacitor and resistors will be shown with coded symbols, reading code symbols following the chart and notes. Some capacitor and resistors will be shown directly with values and no other information. Detailed information on each capacitor and resistor will be shown in the list.

NOTE; *DO NOT REPLACE OR ORDER RESISTOR AND CAPACITOR PARTS FOLLOWING THE SPECIFICATIONS SHOWN IN THE SCHEMATIC DIAGRAMS. ALWAYS CHECK FOR THE CORRECT SPECIFICATIONS IN THE PARTS LIST. ESPECIALLY FOR CRITICAL COMPONENT MARKED ⚠ . SPECIAL ATTENTION MUST BE GIVEN TO CRITICAL COMPONENTS.*

■ ***3. Reading of parts.***

Read resistor codes as follows:

1. All resistance values are indicated in ohms: K=1,000. M=1,000,000.
2. Resistor which is indicated with resistance value only are 1/6W carbon resistor. Resistor which is indicated with material tolerance and value are 1/4W rated wattage.

Read capacitor codes as follows:

1. For capacitors identified with ⊣⊢ , values less than 1 are expressed in uF, values more than 1 are in pF.
2. For capacitors (electrolytic) identified with ⧓, values are expressed in uF.

Voltage and waveforms were taken using a video color bar signal (1V p-p at 75 ohms terminated) and controls to normal.
Voltages were taken with a high-impedance voltmeter.

Read description in the Capacitor and Resister as follows:

CAPACITOR

16 K K 0.47 BA

- BA — Characteristic
- 0.47 — Rated value
- K — Tolerance Symbols
- K — Material :
- 16 — Rated Voltage

C	CERAMIC	Temperature compensating ceramic
K	CERAMIC	High dielectric rate ceramic
B	CERAMIC	Semiconductor ceramic
Z	MT-PAPER	Metallized paper
F	POLYESTER	Polyester
G	MT-POLYEST	Metallized polyester
N	POLYPRO	Polypropylene
M	MT-POLYPRO	Metallized polypropylene
Y	COMPO FILM	Composite film
H	MT-COMPO	Metallized composite film
S	STYRENE	Styrol
T	TA-SOLID	Tantalum oxide solid electrolytic
A	AL-SOLID	Aluminum solid electrolytic
E	ELECT	Aluminum foil electrolytic
P	NP-ELECT	Non-polarized electrolytic
U	OS-SOLID	Aluminum solid capacitors with organic semiconductive electrolyte
V	POS-SOLID	Polymerized organic semiconductor
D	DL-ELECT	Electric double layer electrolytic
J	AL-SOLID	Aluminum manganese wind solid
L	PPS-FILM	Polyphenylene sulfide film
Q	MT-PPS-FILM	Metallized Polyphenylene sulfide film
R	MT-PEN-FILM	Metallized polyethylenenaphthalate film
W	EP-ELECT	Electric Conductor Polymerized Aluminum foil electrolytic
X	CAPACITOR	Other

Tolerance Symbols

Static capacitance of 10PF or less

A:	Nondesignated
B:	±0.1PF
C:	±0.25PF
D:	±0.5PF
F:	±1PF
G:	±2PF
H:	+0.1 ~ -0PF
L:	+0 ~ -0.1PF
R:	+0.25 ~ -0PF
S:	+0 ~ -0.25PF
E:	+0 ~ -1PF
J:	±5%
K:	±10%
M:	±20%

Note: J. K. and M are used only for tubular Ceramic Capacitors

Static capacitance of more than 10PF

A:	Nondesignated
B:	±0.1%
C:	±0.25%
D:	±0.5%
F:	±1%
G:	±2%
E:	±2.5%
H:	±3%
J :	±5%
K:	±10%
L :	±15%
M:	±20%
N:	±30%
P:	+100 ~ -0%
Q:	+30 ~ -10%
R:	+20 ~ -0%
T:	+50 ~ -10%
U:	+75 ~ -10%
V:	+20 ~ -10%
W:	+100 ~ -10%
X:	+40 ~ -20%
Y:	+150 ~ -10%
Z:	+80 ~ -20%

FIXED RESISTER

1/10 G J 100K

- 100K — Rated value, ohms : K: x1,000 ohms. M: x1,000,000 ohms
- J — Tolerance Symbols:
- G — Material :
- 1/10 — Rated Wattage

A:	±0.05%
B:	±0.1%
C:	±0.25%
D:	±0.5%
F:	±1%
G:	±2%
J:	±5%
K:	±10%
M:	±20%
P:	+5 ~-15%
Z:	Use when 0 ohm

D	CARBON	Carbon film fixed
N	MT-FILM	Metal film fixed
S	OXIDE-MT	Metal oxide film fixed
C	SOLID	Solid
G	MT-GLAZE	Metal glaze type fixed
W	WIRE WOUND	Power type covered wiring fixed
H	CERAMIC RES	Ceramic fixed
F	FUSIBLE RES	Fusible
X	RESISTER	Used for "others"

Chip transistor (list of replaceable)

Mark	**AJ**
	2SA1179-M6
	2SA1179-M7
	2SA1037K-R
	2SA1037K-S
	2SA1037AK-R
	2SA1037AK-S

Mark	**AH**
	2SC2812-L6
	2SC2812-L7
	2SC2412K-R
	2SC2412K-S

UNIT P.F.C.

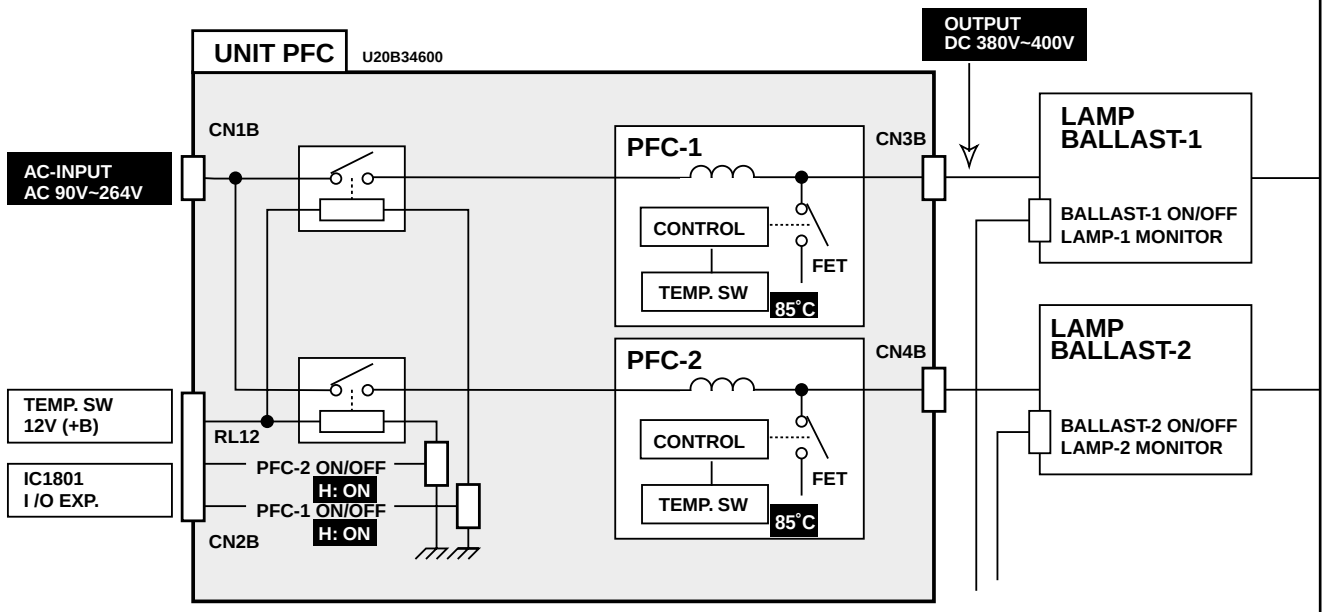

UNIT LAMP BALLAST

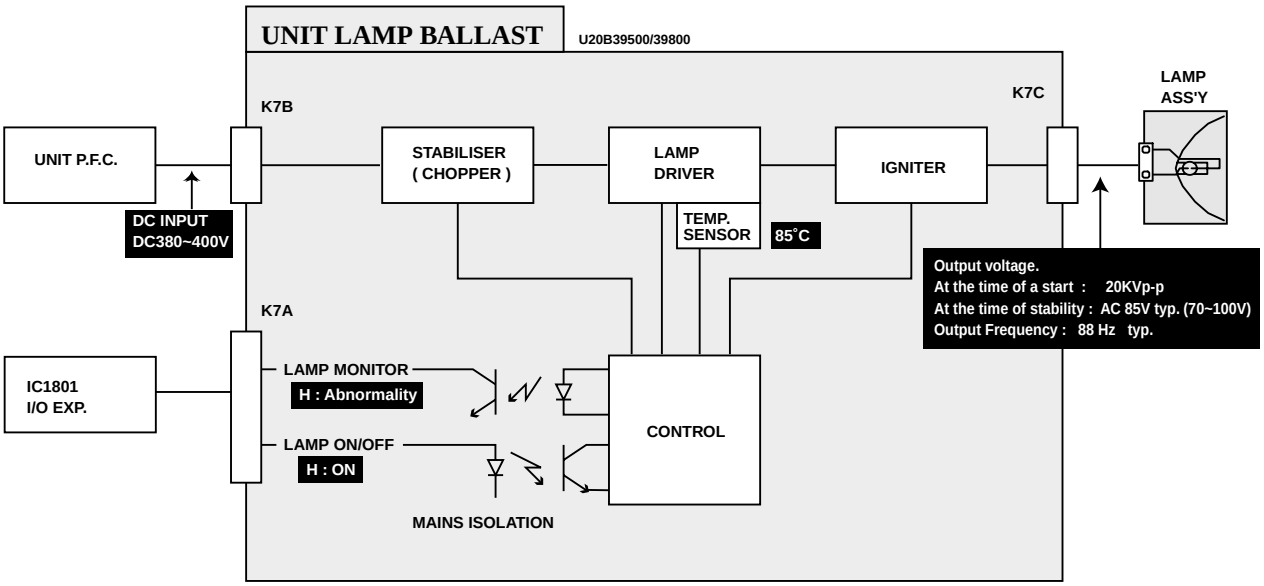

STR-Z2156
Switching regulator

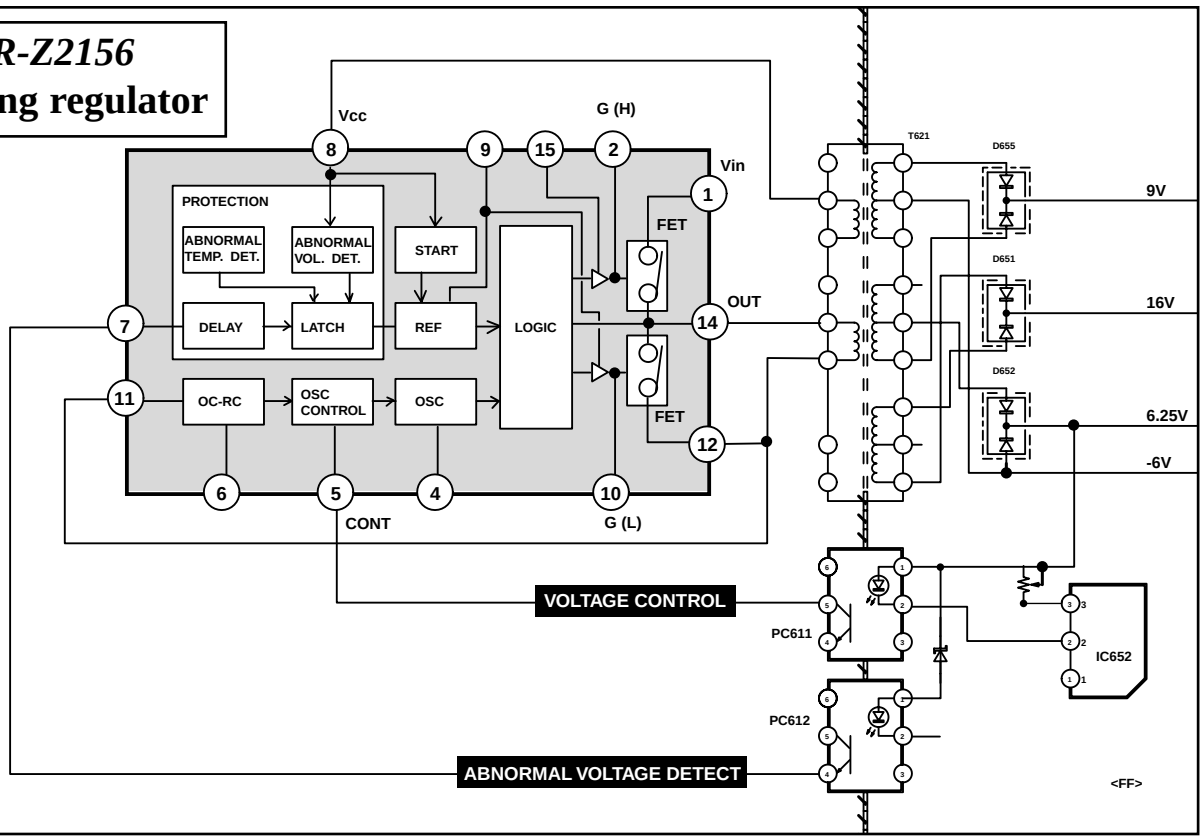

FA7612CN PWM POWER CONTROL

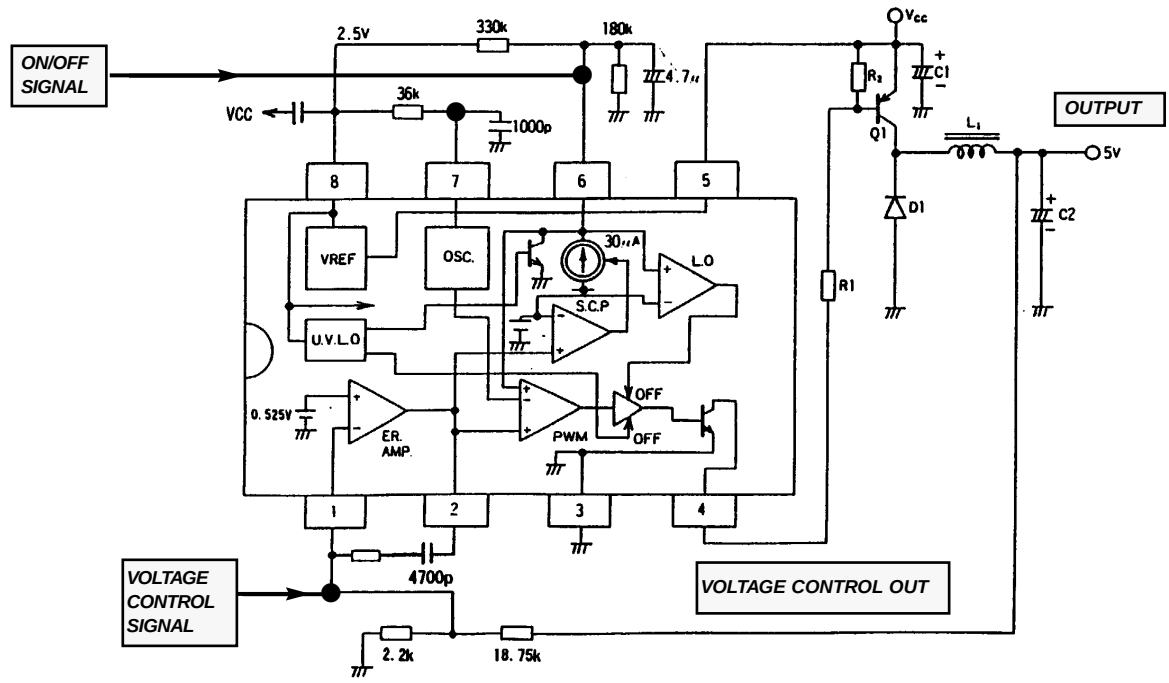

LB1641/1645N
MOTOR DRIVER

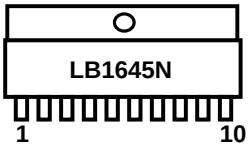

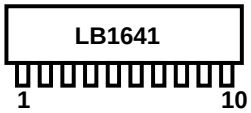

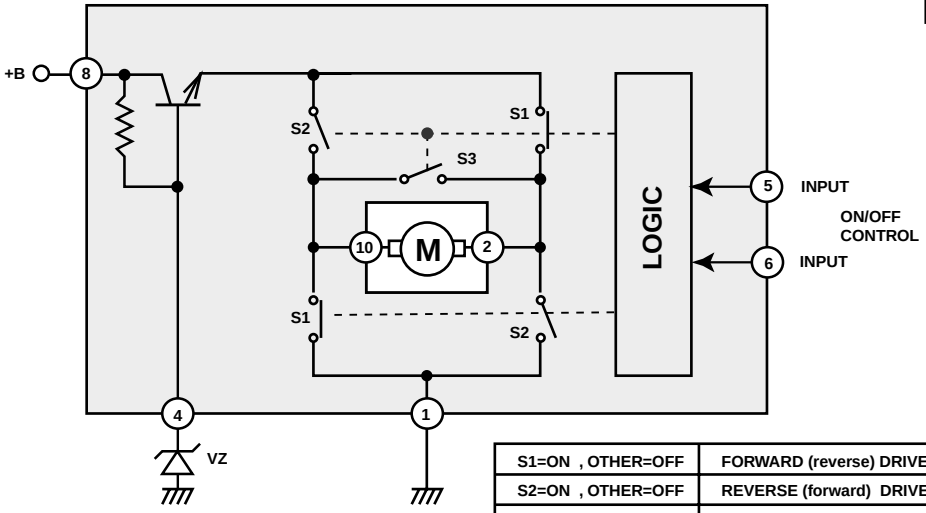

S1=ON , OTHER=OFF	FORWARD (reverse) DRIVE
S2=ON , OTHER=OFF	REVERSE (forward) DRIVE
S3=ON , OTHER=OFF	BRAKING

<FF>

MPXA4115A
Pressure sensor for altimeter

SMALL OUTLINE PACKAGE

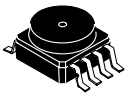

PPXA4115A
CASE 482–01

<FF>

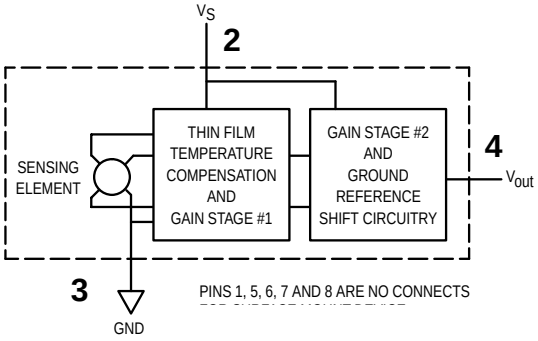

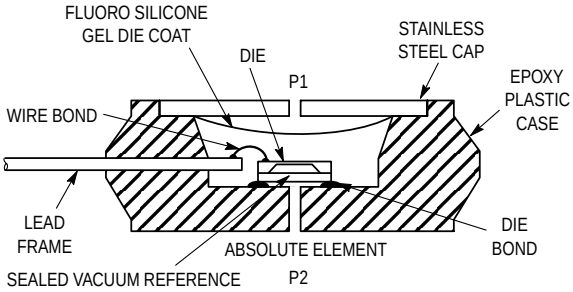

Cross Sectional Diagram

CXD3511Q DIGITAL SIGNAL DRIVER

240 pin QFP (Plastic)

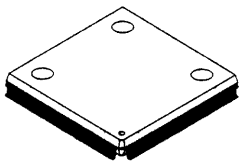

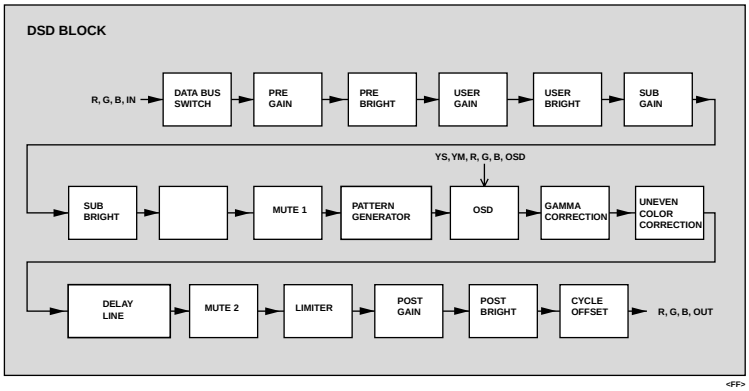

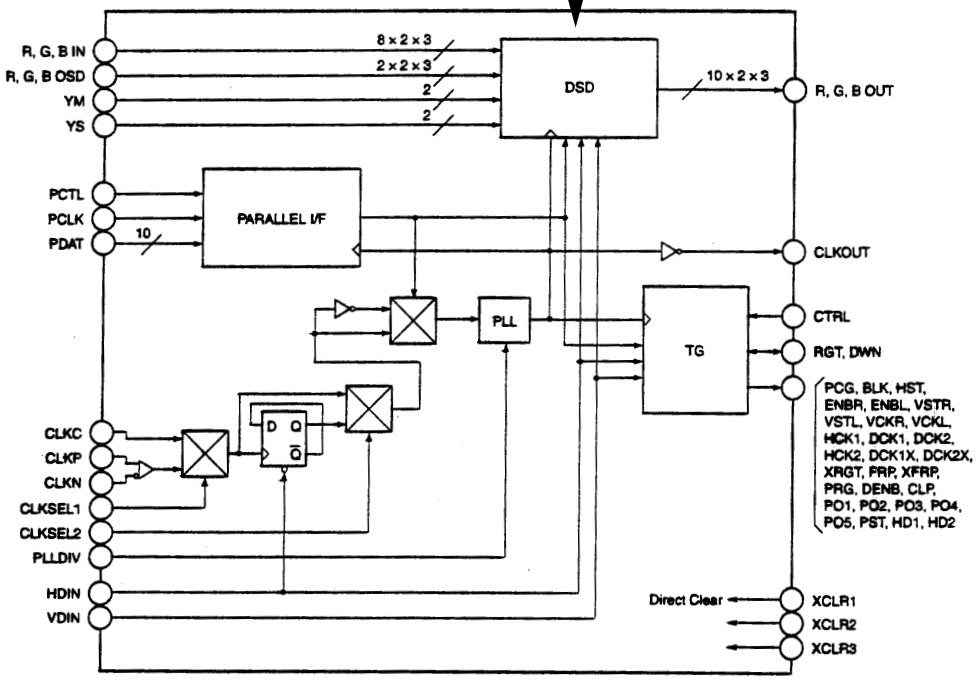

CXA3562R
LCD DRIVER

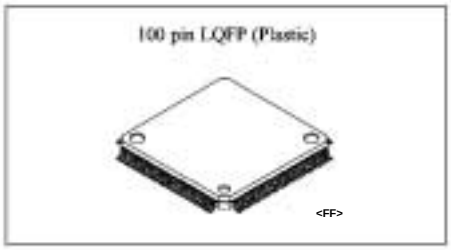

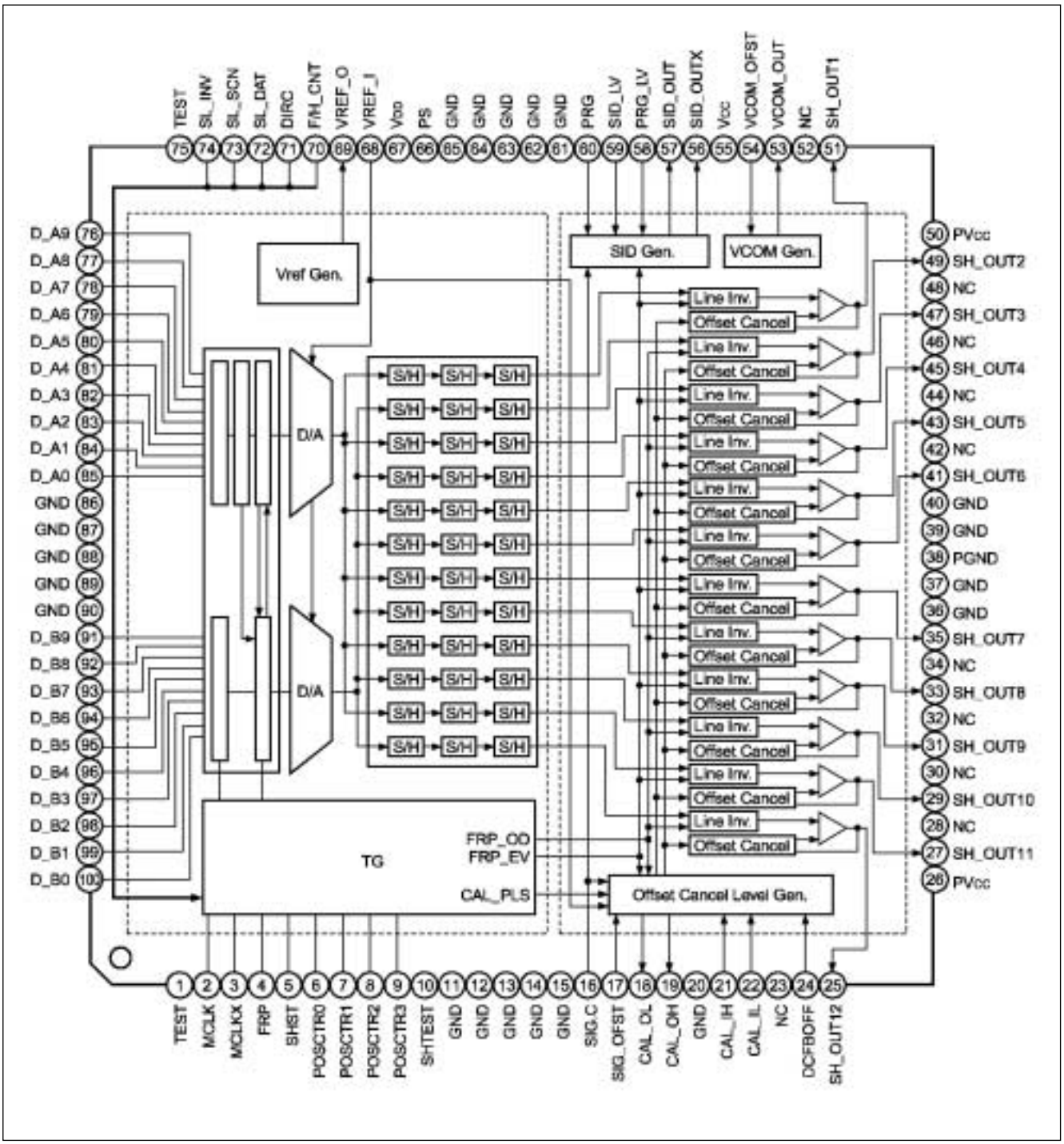

Parts list

■ PRODUCT SAFETY NOTICE

Product safety should be considered when a component replacement is made in any area of a Projector. Components indicated by a ⚠ mark in this parts list and the schematic diagram show components whose value have special significance to product safety. It is particularly recommended that only parts specified on the following parts list be used for components replacement pointed out by the mark.

Note:
Part order must contain Chassis No., Part No., and descriptions.

■ Readjustments after parts replacement.

Y/V

-- Assembly Power --

■ When it is replaced to the new assembly power.
* Factory adjustment of the new assembly power has completed. Readjustment is unnecessary.

■ When the component parts of assembly-power are replaced.
* Readjust the following adjustment item.

1. DC voltage adjustment.

-- Terminal board AV --

■ When it is replaced to the new terminal-board-AV.
* Factory adjustments of the new terminal-board-AV have completed. Readjustments are unnecessary.
■ When the component parts of terminal-board-AV are replaced.
* Readjust the following adjustment items.

2. AV Video signal adjustments
3. 3DNR-PLL Lock check
4. AV Color and Tint adjustments

-- Terminal board component --

■ When it is replaced to the new terminal-board-component.
* Factory adjustment of the new terminal-board-component has completed. Readjustment is unnecessary.
■ When the component parts of terminal-board-component are replaced.
* Readjust the following adjustment item.

5. Component Video signal adjustments

-- Unit-lamp-ballast --

■ In case this unit is fault, replace the unit completely, do not replace the individual component. Readjustment is unnecessary.

-- Unit-PFC. --

■ In case this unit is fault, replace the unit completely, do not replace the individual component. Readjustment is unnecessary.

-- Assembly Sub power --

■ When it is replaced to the new assembly-sub-power or when component parts are replaced. * Readjust the following adjustment item.

6. Fans driving voltage adjustments

Assembly-main.

■ Replace memory ICs in the following procedure.

1. Remove IC871 and IC1811 from an old (damaged) assembly-main.
2. Attach IC removed to new assembly-main. The data recorded is all taken over to a new assembly-main, readjustment is unnecessary.

■ ***When ICs are not replaced.***
(1). The life data of a lamp starts from an initial value compulsorily. Manually, this life data cannot be set up.
(2). Readjust the following adjustment items.

6. Fans driving voltage adjustments
7. Video center DC adjustments
8. PSIG signal adjustments
9. PC pedestal level adjustments
10. PC contrast adjustments-1
11. AV pedestal level adjustment
12. AV contrast adjustments-2
13. Panel driving signal adjustments -AV
14. Panel driving signal adjustments -PC
15. Flicker reduction.
16. White balance adjustments

-- The component parts inside the optical unit --

(Part no. 102, 106~111, 114, and 123~124.)

■ When the optical component parts inside the optical unit are replaced.
* Check the following adjustment items.

Integrator-lens-in adjustment-1
Integrator-lens-out adjustment
Integrator-lens-in adjustment-2
Condenser-lens adjustment
Relay-lens adjustment
Prism-P.B.S. adjustment
Polarizer. adjustment

Y/V

-- Integrator-lens-in --

■ When the integrator-lens-in is replaced.
* Readjust the following adjustment items.

Integrator-lens-in adjustment-1
Integrator-lens-in adjustment-2

-- Relay-lens --

■ When the relay-lens is replaced.
* Readjust the following adjustment item.

Relay-lens adjustment

-- Condenser-lens --

■ When the Condenser-lens is replaced.
* Readjust the following adjustment item.

Condenser-lens adjustment

-- Prism / LCD panel Assembly ---

■ When the Assembly LCD-panel/prism is replaced.
* Readjust the following adjustment items.

Focus of LCD Panel adjustment
15. Flicker reduction
16. White balance adjustments

-- Integrator-lens-out and prism-PBS --

■ When the integrator-lens-out and prism-PBS are replaced.
* Readjust the following adjustment item.

Integrator-lens-out adjustment
Prism-P.B.S. adjustment

-- Polarization-glasses--

■ When the Polarization-glasses are replaced.
* Readjust the following adjustment item.

Polarizer adjustment

Read description in the Capacitor and Resister as follows:

CAPACITOR
CERAMIC 100P K 50V

Rated Voltage

Rated value: P=Pico farad, U=Micro farad

Material :

CERAMIC	Temperature compensating ceramic High dielectric rate ceramic Semiconductor ceramic
MT-PAPER	Metallized paper
POLYESTER	Polyester
MT-POLYEST	Metallized polyester
POLYPRO	Polypropylene
MT-POLYPRO	Metallized polypropylene
COMPO FILM	Composite film
MT-COMPO	Metallized composite film
STYRENE	Styrol
TA-SOLID	Tantalum oxide solid electrolytic
AL-SOLID	Aluminum solid electrolytic
ELECT	Aluminum foil electrolytic
NP-ELECT	Non-polarized electrolytic
OS-SOLID	Aluminum solid capacitors with organic semiconductive electrolyte
POS-SOLID	Polymerized organic semiconductor
DL-ELECT	Electric double layer electrolytic
AL-SOLID	Aluminum manganese wind solid
PPS-FILM	Polyphenylene sulfide film
MT-PPS-FILM	Metallized Polyphenylene sulfide film
MT-PEN-FILM	Metallized polyethylenenaphthalate film
EP-ELECT	Electric Conductor Polymerized Aluminum foil electrolytic
CAPACITOR	Other

Tolerance Symbols

Static capacitance of 10PF or less

A:	Nondesignated
B:	±0.1PF
C:	±0.25PF
D:	±0.5PF
F:	±1PF
G:	±2PF
H:	+0.1 ~ -0PF
L:	+0 ~ -0.1PF
R:	+0.25 ~ -0PF
S:	+0 ~ -0.25PF
E:	+0 ~ -1PF
J:	±5%
K:	±10%
M:	±20%

Note: J. K. and M are used only for tubular Ceramic Capacitors

Static capacitance of more than 10PF

A:	Nondesignated
B:	±0.1%
C:	±0.25%
D:	±0.5%
F:	±1%
G:	±2%
E:	±2.5%
H:	±3%
J :	±5%
K:	±10%
L :	±15%
M:	±20%
N:	±30%
P:	+100 ~ -0%
Q:	+30 ~ -10%
R:	+20 ~ -0%
T:	+50 ~ -10%
U:	+75 ~ -10%
V:	+20 ~ -10%
W:	+100 ~ -10%
X:	+40 ~ -20%
Y:	+150 ~ -10%
Z:	+80 ~ -20%

FIXED RESISTER
CARBON 4.7K J A 1/4W

Rated Wattage

Performance Symbols:

A:	General
B:	Flame retardance (including noncombustible)
Z:	Low noise (Less than 100Kohms : 0.3uV/V, 100Kohms to 1Mohm : 0.5uV/V, More than 1Mohm : 1.0uV/V)
C~Y :	Temperature characteristics
T:	±10ppm/˚C
U:	±25ppm/˚C
C:	±50ppm/˚C
D:	±100ppm/˚C
E:	±200ppm/˚C
F:	±250ppm/˚C
G:	±350ppm/˚C
H:	±1000ppm/˚C±10%
W:	±1200ppm/˚C±10%
Y:	±1400ppm/˚C±10%
J:	±2000ppm/˚C±10%
K:	±2400ppm/˚C±10%
L:	±2700ppm/˚C±10%
M:	±3000ppm/˚C±10%
N:	±3300ppm/˚C±10%
P:	±3600ppm/˚C±10%
Q:	±3900ppm/˚C±10%
R:	±4200ppm/˚C±10%
S:	±4300ppm/˚C±10%
V:	±4500ppm/˚C±10%
X:	±800ppm/˚C±150ppm/˚C
O:	+500ppm/˚C ~ -250ppm/˚C

Tolerance Symbols:

A:	±0.05%
B:	±0.1%
C:	±0.25%
D:	±0.5%
F:	±1%
G:	±2%
J:	±5%
K:	±10%
M:	±20%
P:	+5 ~-15%
Z:	Use when 0 ohm

Rated value, ohms : K: X1,000 ohms. M: X1,000,000 ohms

Material :

CARBON	Carbon film fixed
MT-FILM	Metal film fixed
OXIDE-MT	Metal oxide film fixed
SOLID	Solid
MT-GLAZE	Metal glaze type fixed
WIRE WOUND	power type covered wiring fixed
CERAMIC RES	Ceramic fixed
FUSIBLE RES	Fusible
RESISTER	Used for "others"

Note :
1. "General" (symbol A) means properties for which there are some differences among manufacturers but which can be used when within the range given in the catalogs.
2. Parts for which temperature characteristics are especially designated (required) due to design are indicated by "temperature characteristic classifications" (symbol C to Y). Others are indicated by "General" (symbol A).
3. What are called "cement resistors" are noncombustible, so are indicated as "General"(symbol A), not "Flame retardant (including noncombustible)"(symbol B)

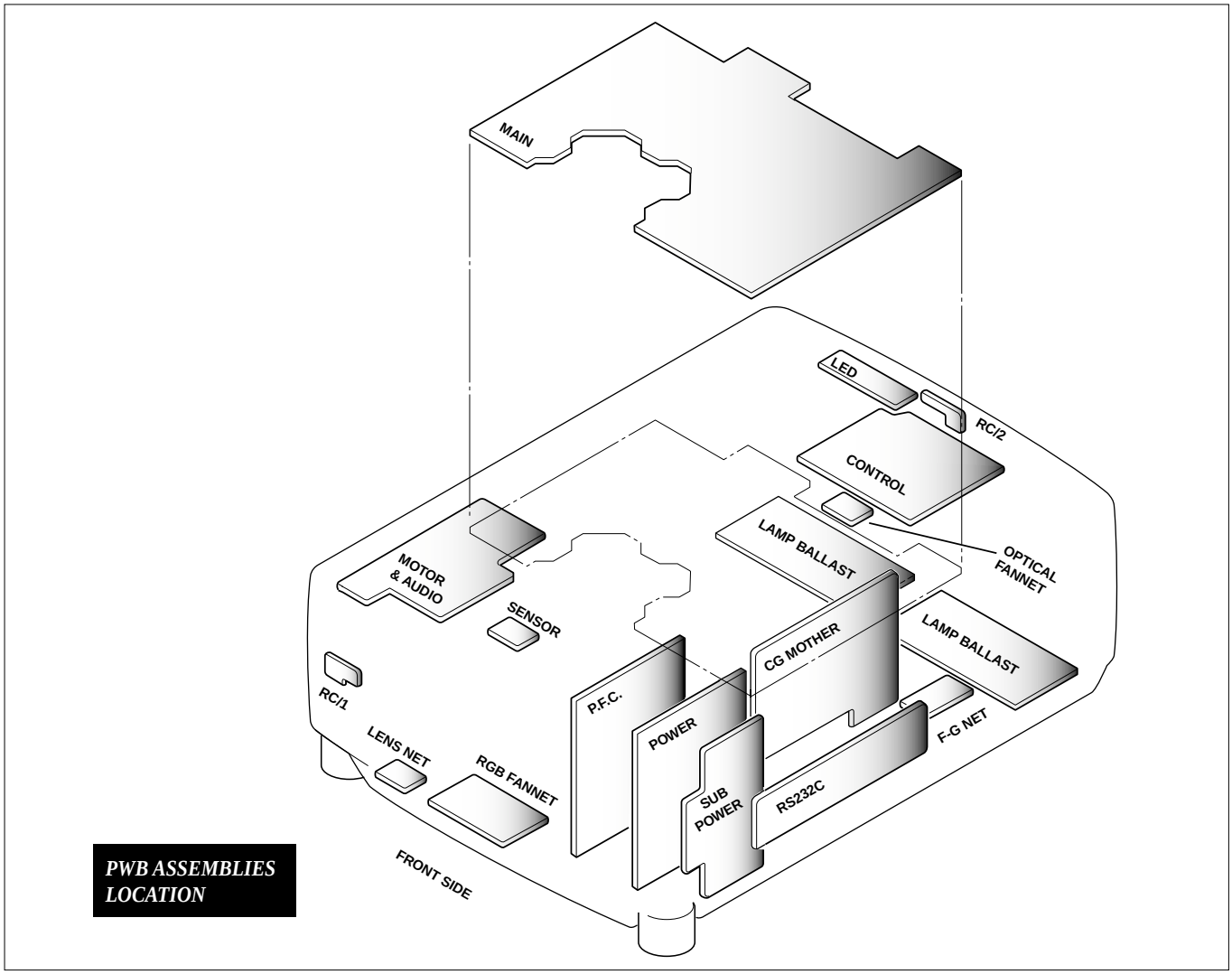

PWB ASSEMBLIES LOCATION

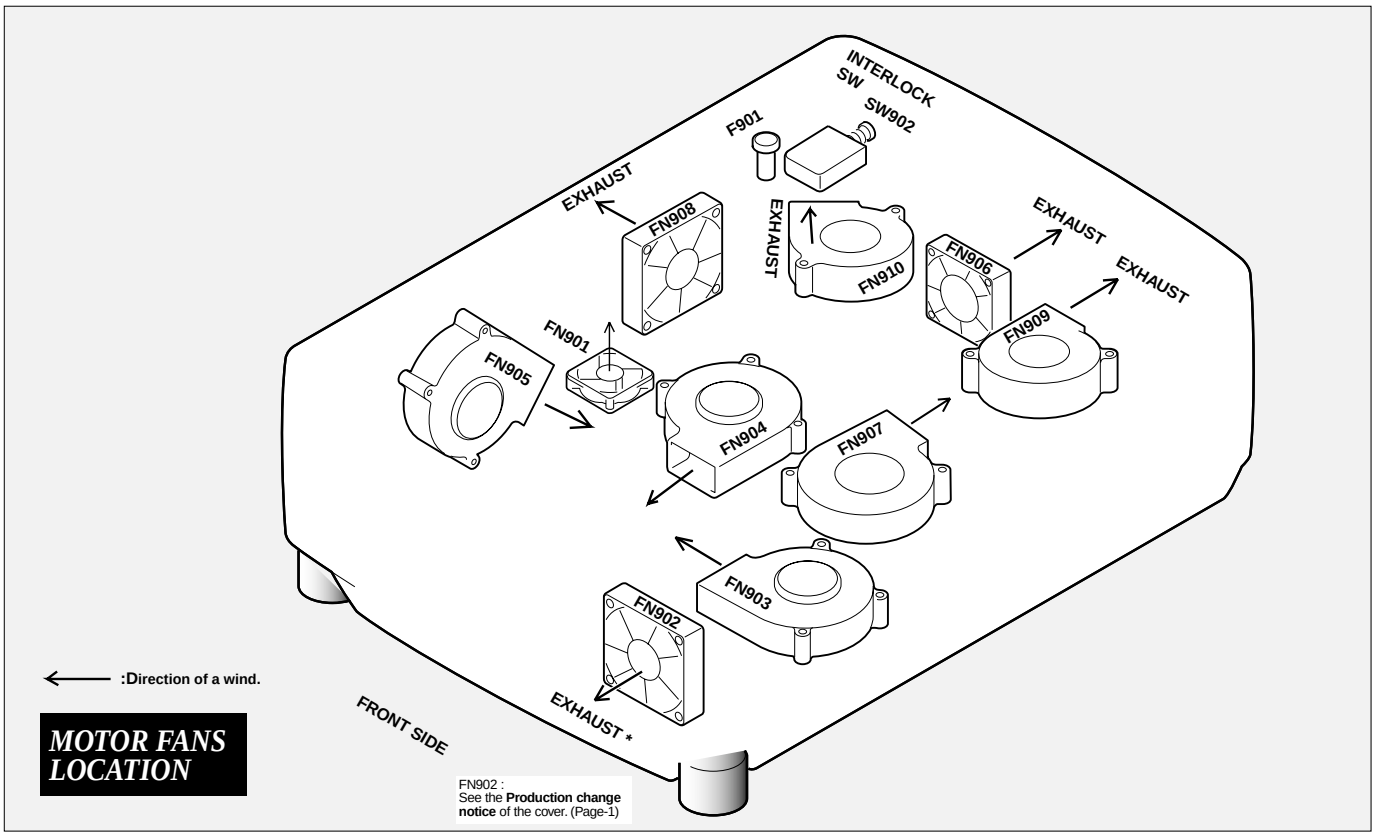

MOTOR FANS LOCATION

FN902 :
See the **Production change notice** of the cover. (Page-1)

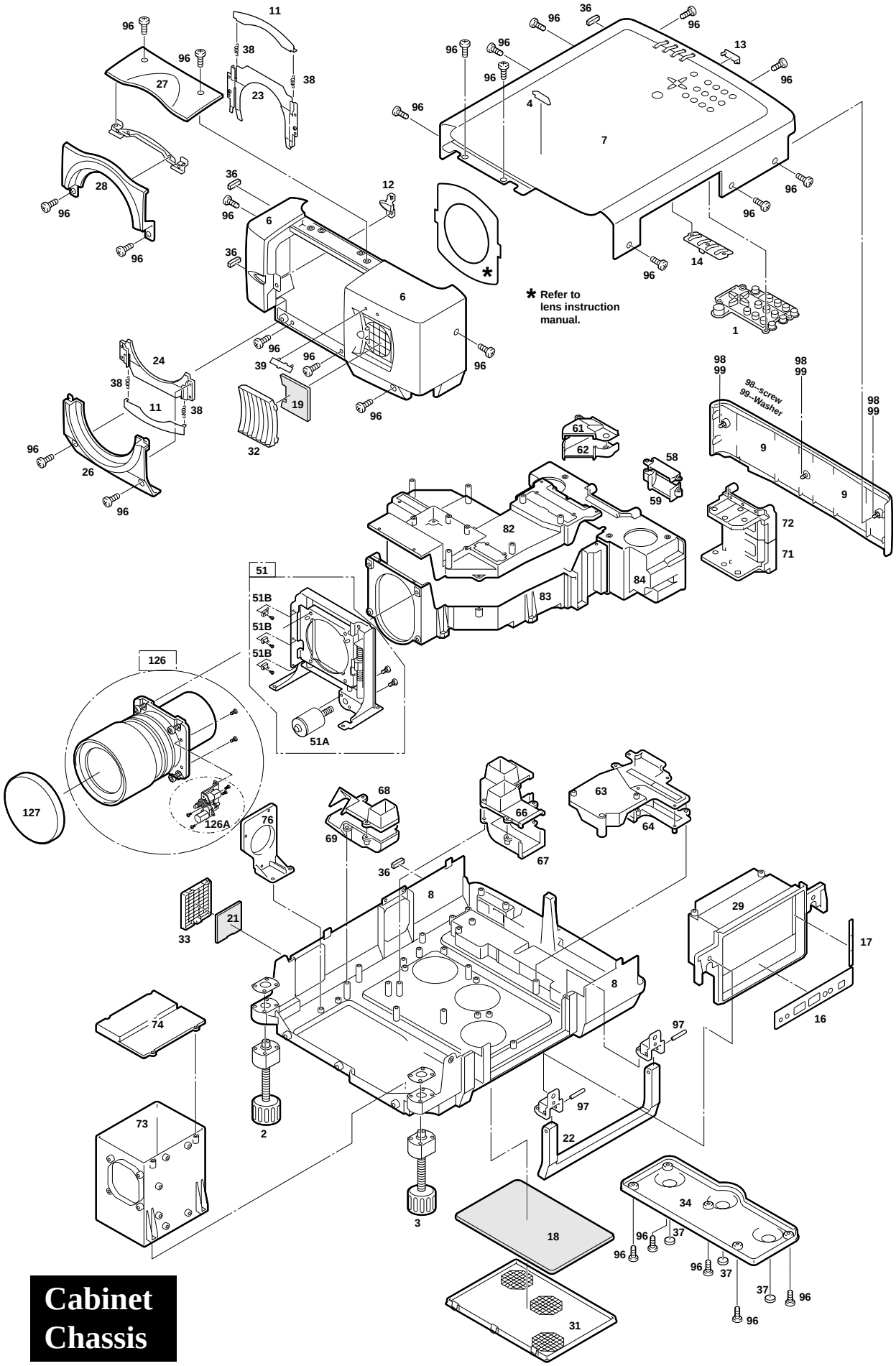

Cabinet Chassis

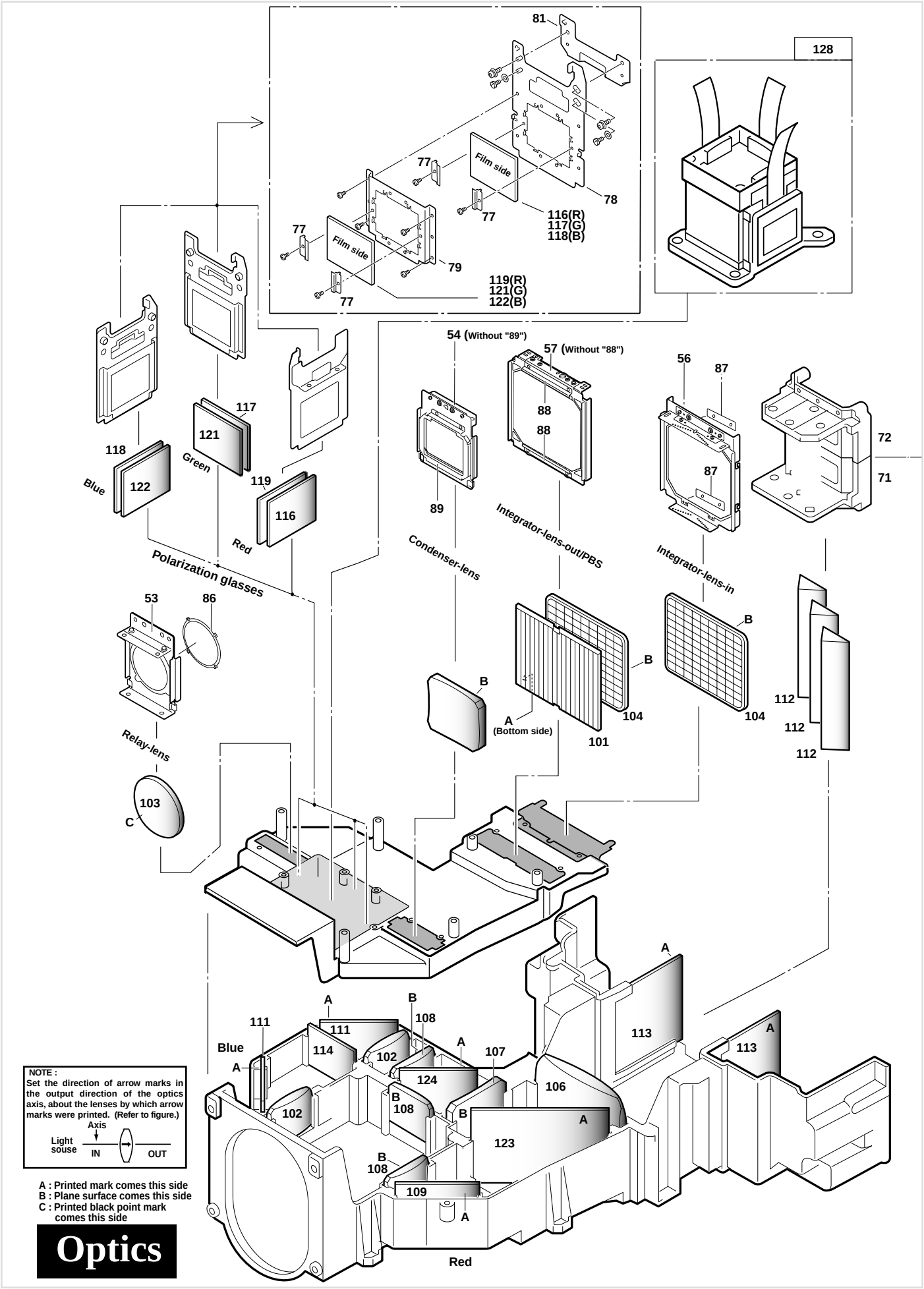
81
128
77
Film side
78
116(R)
117(G)
118(B)
79
119(R)
121(G)
122(B)
54 (Without "89")
57 (Without "88")
56
87
88
88
87
72
71
117
121
118
122
Blue
Green
119
116
Red
89
Condenser-lens
Integrator-lens-out/PBS
Integrator-lens-in
Polarization glasses
53
86
B
A
(Bottom side)
104
101
112
Relay-lens
103
C
A
B
108
111
114
102
107
124
106
113
123
109
Red
NOTE :
Set the direction of arrow marks in the output direction of the optics axis, about the lenses by which arrow marks were printed. (Refer to figure.)
Axis
Light souse
IN
OUT
A : Printed mark comes this side
B : Plane surface comes this side
C : Printed black point mark comes this side

Optics

Ref. No.	Part No.	Description
		**********
		CABINET PARTS *005MY6A*
1.	610 290 9180	ASSY,BUTTON-MV6A
2.	610 290 5366	ASSY,STAND LEG A-MV6A
3.	610 291 9431	ASSY,STAND LEG B-MV6A
4.	610 289 1829	BADGE V MARK L-ML6A
6.	610 290 4062	CABINET FRONT-MV6A
7.	610 292 9379	CABINET TOP-MY6A
8.	610 290 4086	CABINET BOTTOM-MV6A
9.	610 290 4093	COVER,LMP-MV6A
11.	610 290 9241	COVER LNS A-MV6A
12.	610 290 9265	DEC INLAY R/C-MV6A
13.	610 290 9272	DEC INLAY A-MV6A
14.	610 293 2409	DEC INLAY REAR-MV6A
16.	610 290 9296	DEC COMP SHEET A-MV6A
17.	610 290 9302	DEC COMP SHEET B-MV6A
18.	610 292 3162	FILTER NET A-MV6A
19.	See the **Production change notice** of the cover. (Page-1)	
21.	610 292 3186	FILTER NET C-MV6A
22.	610 290 9326	HANDLE-MV6A
23.	610 290 9364	MOUNTING COVER LNS A-MV6A
24.	610 290 9371	MOUNTING COVER LNS B-MV6A
26.	610 290 4116	PANEL FRONT BTM-MV6A
27.	610 290 4123	PANEL FRONT TOP-MV6A
28.	610 290 4130	PANEL FRONT MID-MV6A
29.	610 290 4147	PANEL COMP A-MV6A
31.	610 290 9388	PANEL FILTER A-MV6A
32.	610 290 9395	PANEL FILTER B-MV6A
33.	610 290 9401	PANEL FILTER C-MV6A
34.	610 291 8762	PANEL BLST A-MV6A
36.	610 290 9456	SPACER CT-MV6A
37.	610 289 1263	STAND LEG CT-MJ6A
38.	610 272 9238	SPRING COIL-M6MA
39.	645 032 6400	BADGE,SANYO*43.5X10L43.5
		**********
		CHASSIS PARTS *006MY6A*
51.	610 290 1887	COMPL,HOLDER LNS-MV6A
51-A	645 048 3929	MOTOR,SHIFT LNS
51-B	645 012 2422	SWITCH,LEVER
53.	610 290 5328	COMPL,HOLDER REL A-MV6A
54.	610 297 4430	COMPL,HOLDER COND C-MY6A
56.	610 293 8111	COMPL,HOLDER INT A-MY6A
57.	610 293 8135	COMPL,HOLDER PBS A-MY6A
58.	610 292 4350	COVER DUCT TOP A-MV6A
59.	610 292 4367	COVER DUCT BTM A-MV6A
61.	610 292 4374	COVER DUCT TOP B-MV6A
62.	610 292 4381	COVER DUCT BTM B-MV6A
63.	610 292 4398	COVER DUCT TOP C-MV6A
64.	610 292 4404	COVER DUCT BTM C-MV6A
66.	610 292 4411	COVER DUCT TOP D-MV6A
67.	610 292 4428	COVER DUCT BTM D-MV6A
68.	610 292 4435	COVER DUCT TOP E-MV6A
69.	610 292 4442	COVER DUCT BTM E-MV6A
71.	610 290 9098	HOLDER,PRM BTM-MV6A
72.	610 290 9104	HOLDER,PRM TOP-MV6A
73.	610 292 4459	HOLDER POWER PWB BTM-MV6A
74.	610 292 4466	HOLDER POWER PWB TOP-MV6A
76.	610 293 4335	HOLDER FN C-MV6A
77.	610 282 7996	MOUNTING PLT A-MJ6A
78.	610 290 5526	MOUNTING POL IN A MV6A
79.	610 290 5533	MOUNTING POL IN B MV6A
81.	610 290 5540	MOUNTING POL IN C MV6A
82.	610 294 2255	OPTICAL BASE TOP-MY6A
83.	610 290 2235	OPTICAL BASE BTM A-MV6A
84.	610 290 2242	OPTICAL BASE BTM B-MV6A
86.	610 290 5373	HOLDER REL D-MV6A
87.	610 290 5380	HOLDER INT D-MV6A
88.	610 290 5397	HOLDER PBS D-MV6A
89.	610 293 9088	HOLDER COND D-MY6A
		**********
		SCREWS
96.	411 102 2203	SCR BIN 4X8
97.	411 182 6207	PIN PARALLEL 5X35
98.	412 063 3209	SPECIAL SCREW
99.	411 109 2107	WASHER Y 3.6X6X0.5
		**********

Ref. No.	Part No.	Description
		**********
		OPTICAL PARTS *014MY6A*
101.	645 046 1323	ASSY,PRISM(PBS)
or	645 046 1330	ASSY,PRISM(PBS)
102.	645 046 9459	LENS,RELAY(IN)
103.	645 046 9466	LENS,RELAY(OUT)
104.	645 046 9411	LENS,INTEGRATOR
106.	645 047 9731	LENS,CONDENSER 1
107.	645 047 9748	LENS,CONDENSER 2
108.	645 051 1431	LENS,CONDENSER
109.	645 046 1361	MIRROR(RH)
111.	645 046 1378	MIRROR(B-COLD)
112.	645 046 9428	MIRROR(COLD)
113.	645 046 1392	OPTICAL FILTER(UV/IR)
114.	645 046 1408	OPTICAL FILTER(UV CUT)
116.	645 041 2837	POLARIZATION GLASS(HIN/R)
117.	645 041 2882	POLARIZATION GLASS(HIN/G)
118.	645 041 2899	POLARIZATION GLASS(HIN/B)
119.	645 041 2905	POLARIZATION GLASS(IN/R)
121.	645 041 2912	POLARIZATION GLASS(IN/G)
122.	645 041 2929	POLARIZATION GLASS(IN/B)
123.	645 046 1446	DICHROIC MIRROR (C)
124.	645 046 1453	DICHROIC MIRROR (Y)
128.	610 296 8224	ASSY,LCD PNL/PRISM-MY6A
		**********
		For model PLC-XF30N Only
126.	645 044 0977	ASSY,LENS,PROJECTION
126-A	645 034 8327	MOTOR,LENS(Z,F) DC 0.3W
127.	610 277 8755	CAP LENS A-M6VA
		**********

SANYO--

Ref. No.	Part No.	Description
**********		
		Out of PWB Assembly
COIL		
⚠ LF901	645 040 7628	UNIT,NOISE FILTER
L901	645 050 8417	CORE,CLAMP
	645 044 3817	CORE,CLAMP
L902	645 050 8417	CORE,CLAMP
	645 044 3817	CORE,CLAMP
L903	645 050 8417	CORE,CLAMP
	645 044 3817	CORE,CLAMP
L904	645 050 8417	CORE,CLAMP
	645 044 3817	CORE,CLAMP
L905	645 050 8417	CORE,CLAMP
	645 044 3817	CORE,CLAMP
MISCELLANEOUS		
⚠ FN901	645 047 9120	MOTOR,FAN DC 1.68W
⚠ FN902	645 041 7542	MOTOR,FAN DC 1.68W
⚠ FN903	645 047 9700	MOTOR,FAN DC 11W
⚠ FN904	645 047 9700	MOTOR,FAN DC 11W
⚠ FN905	645 047 3333	MOTOR,FAN DC 11W
⚠ FN906	645 049 5274	MOTOR,FAN DC 1.68W
⚠ FN907	645 043 3115	MOTOR,FAN DC 5.3W
⚠ FN908	645 042 7787	MOTOR,FAN DC 1.68W
⚠ FN909	645 047 7416	MOTOR,FAN DC 3.8W
⚠ FN910	645 047 7416	MOTOR,FAN DC 3.8W
⚠ F901	423 027 2602	*FUSE 250V 10A*
⚠ F901A	645 023 3777	HOLDER,FUSE
⚠ K901	645 040 7598	SOCKET,INLET AC 3P
⚠ LP901	610 292 4848	*COMPL OPTICAL LAMP-MY6A*
⚠ LP902	610 292 4848	*COMPL OPTICAL LAMP-MY6A*
SP901	610 055 5471	SPEAKER
SP902	610 055 5471	SPEAKER
⚠ SW901	645 047 0400	SWITCH,POWER 2P-2TX2
⚠ SW902	645 031 7743	SWITCH,PUSH 2P-2TX2
SW903	645 043 5966	SWITCH,REED
SW904	645 043 7335	SWITCH,REED
WK2B-K90	610 287 1005	CORD,SHIELD 1P
WK2G-K90	610 287 0992	CORD,SHIELD 1P
WK2R-K90	610 287 0985	CORD,SHIELD 1P
W901	610 293 0719	CORD, 32P
W902	610 295 2810	CORD,SHIELD 40P(BLACK)
W903	610 295 2827	CORD,SHIELD 40P(GRAY)
W904	610 294 5072	CABLE,LANP
W905	610 294 5072	CABLE,LANP
**********		
⚠ ***BALAST1***	***645 047 1346***	***UNIT,BALLAST LAMP***
⚠ ***BALAST2***	***645 047 1346***	***UNIT,BALLAST LAMP***
**********		
⚠ ***PFC1***	***645 042 2928***	***UNIT,PFC***
**********		
		610 286 8791 ASSY PWB AV ML6A
TRANSISTOR		
Q101	405 014 4509	TR 2SC2412K T146 R
	405 014 4608	TR 2SC2412K T146 S
	405 015 8704	TR 2SC2812-L6-TB
	405 015 8902	TR 2SC2812-L7-TB
	405 163 1602	TR 2SC2812N-L6-TB0
	405 163 1701	TR 2SC2812N-L7-TB0
Q102	405 014 4509	TR 2SC2412K T146 R
	405 014 4608	TR 2SC2412K T146 S
	405 015 8704	TR 2SC2812-L6-TB
	405 015 8902	TR 2SC2812-L7-TB
	405 163 1602	TR 2SC2812N-L6-TB0
	405 163 1701	TR 2SC2812N-L7-TB0
Q1101	405 014 4509	TR 2SC2412K T146 R
	405 014 4608	TR 2SC2412K T146 S
	405 015 8704	TR 2SC2812-L6-TB
	405 015 8902	TR 2SC2812-L7-TB
	405 163 1602	TR 2SC2812N-L6-TB0
	405 163 1701	TR 2SC2812N-L7-TB0
Q1151	405 134 5905	TR 2SA1037AK-T146-R
	405 147 2205	TR 2SA1037AK-S-T146
	405 002 0308	TR 2SA1037K T146 R
	405 002 0407	TR 2SA1037K T146 S
	405 002 6706	TR 2SA1179-M6-TB
	405 002 6904	TR 2SA1179-M7-TB
	405 163 1503	TR 2SA1179N-M6-TB
	405 163 2708	TR 2SA1179N-M7-TB
Q1152	405 014 4509	TR 2SC2412K T146 R
	405 014 4608	TR 2SC2412K T146 S
	405 015 8704	TR 2SC2812-L6-TB
	405 015 8902	TR 2SC2812-L7-TB
	405 163 1602	TR 2SC2812N-L6-TB0
	405 163 1701	TR 2SC2812N-L7-TB0
Q1153	405 134 5905	TR 2SA1037AK-T146-R
	405 147 2205	TR 2SA1037AK-S-T146
	405 002 0308	TR 2SA1037K T146 R
	405 002 0407	TR 2SA1037K T146 S
	405 002 6706	TR 2SA1179-M6-TB
	405 002 6904	TR 2SA1179-M7-TB
	405 163 1503	TR 2SA1179N-M6-TB
	405 163 2708	TR 2SA1179N-M7-TB
Q1156	405 134 5905	TR 2SA1037AK-T146-R
	405 147 2205	TR 2SA1037AK-S-T146
	405 002 0308	TR 2SA1037K T146 R
	405 002 0407	TR 2SA1037K T146 S
	405 002 6706	TR 2SA1179-M6-TB
	405 002 6904	TR 2SA1179-M7-TB
	405 163 1503	TR 2SA1179N-M6-TB
	405 163 2708	TR 2SA1179N-M7-TB
Q1161	405 134 5905	TR 2SA1037AK-T146-R
	405 147 2205	TR 2SA1037AK-S-T146
	405 002 0308	TR 2SA1037K T146 R
	405 002 0407	TR 2SA1037K T146 S
	405 002 6706	TR 2SA1179-M6-TB
	405 002 6904	TR 2SA1179-M7-TB
	405 163 1503	TR 2SA1179N-M6-TB
	405 163 2708	TR 2SA1179N-M7-TB
Q1162	405 014 4509	TR 2SC2412K T146 R
	405 014 4608	TR 2SC2412K T146 S
	405 015 8704	TR 2SC2812-L6-TB
	405 015 8902	TR 2SC2812-L7-TB
	405 163 1602	TR 2SC2812N-L6-TB0
	405 163 1701	TR 2SC2812N-L7-TB0
Q1163	405 134 5905	TR 2SA1037AK-T146-R
	405 147 2205	TR 2SA1037AK-S-T146
	405 002 0308	TR 2SA1037K T146 R
	405 002 0407	TR 2SA1037K T146 S
	405 002 6706	TR 2SA1179-M6-TB
	405 002 6904	TR 2SA1179-M7-TB
	405 163 1503	TR 2SA1179N-M6-TB
	405 163 2708	TR 2SA1179N-M7-TB
Q1164	405 134 5905	TR 2SA1037AK-T146-R
	405 147 2205	TR 2SA1037AK-S-T146
	405 002 0308	TR 2SA1037K T146 R
	405 002 0407	TR 2SA1037K T146 S
	405 002 6706	TR 2SA1179-M6-TB
	405 002 6904	TR 2SA1179-M7-TB
	405 163 1503	TR 2SA1179N-M6-TB
	405 163 2708	TR 2SA1179N-M7-TB
Q161	405 014 4509	TR 2SC2412K T146 R
	405 014 4608	TR 2SC2412K T146 S
	405 015 8704	TR 2SC2812-L6-TB
	405 015 8902	TR 2SC2812-L7-TB
	405 163 1602	TR 2SC2812N-L6-TB0
	405 163 1701	TR 2SC2812N-L7-TB0
Q162	405 014 4509	TR 2SC2412K T146 R
	405 014 4608	TR 2SC2412K T146 S
	405 015 8704	TR 2SC2812-L6-TB
	405 015 8902	TR 2SC2812-L7-TB
	405 163 1602	TR 2SC2812N-L6-TB0
	405 163 1701	TR 2SC2812N-L7-TB0
Q163	405 014 4509	TR 2SC2412K T146 R
	405 014 4608	TR 2SC2412K T146 S
	405 015 8704	TR 2SC2812-L6-TB
	405 015 8902	TR 2SC2812-L7-TB
	405 163 1602	TR 2SC2812N-L6-TB0
	405 163 1701	TR 2SC2812N-L7-TB0
Q164	405 134 5905	TR 2SA1037AK-T146-R
	405 147 2205	TR 2SA1037AK-S-T146
	405 002 0308	TR 2SA1037K T146 R
	405 002 0407	TR 2SA1037K T146 S
	405 002 6706	TR 2SA1179-M6-TB
	405 002 6904	TR 2SA1179-M7-TB
	405 163 1503	TR 2SA1179N-M6-TB
	405 163 2708	TR 2SA1179N-M7-TB
Q165	405 014 4509	TR 2SC2412K T146 R
	405 014 4608	TR 2SC2412K T146 S
	405 015 8704	TR 2SC2812-L6-TB
	405 015 8902	TR 2SC2812-L7-TB
	405 163 1602	TR 2SC2812N-L6-TB0
	405 163 1701	TR 2SC2812N-L7-TB0
Q166	405 134 5905	TR 2SA1037AK-T146-R
	405 147 2205	TR 2SA1037AK-S-T146
	405 002 0308	TR 2SA1037K T146 R
	405 002 0407	TR 2SA1037K T146 S
	405 002 6706	TR 2SA1179-M6-TB
	405 002 6904	TR 2SA1179-M7-TB
	405 163 1503	TR 2SA1179N-M6-TB
	405 163 2708	TR 2SA1179N-M7-TB
Q167	405 014 4509	TR 2SC2412K T146 R
	405 014 4608	TR 2SC2412K T146 S
	405 015 8704	TR 2SC2812-L6-TB
	405 015 8902	TR 2SC2812-L7-TB
	405 163 1602	TR 2SC2812N-L6-TB0
	405 163 1701	TR 2SC2812N-L7-TB0
Q168	405 014 4509	TR 2SC2412K T146 R
	405 014 4608	TR 2SC2412K T146 S
	405 015 8704	TR 2SC2812-L6-TB
	405 015 8902	TR 2SC2812-L7-TB
	405 163 1602	TR 2SC2812N-L6-TB0
	405 163 1701	TR 2SC2812N-L7-TB0
Q2101	405 134 5905	TR 2SA1037AK-T146-R
	405 147 2205	TR 2SA1037AK-S-T146

Ref. No.	Part No.	Description
	405 002 0308	TR 2SA1037K T146 R
	405 002 0407	TR 2SA1037K T146 S
	405 002 6706	TR 2SA1179-M6-TB
	405 002 6904	TR 2SA1179-M7-TB
	405 163 1503	TR 2SA1179N-M6-TB
	405 163 2708	TR 2SA1179N-M7-TB
Q2151	405 014 4509	TR 2SC2412K T146 R
	405 014 4608	TR 2SC2412K T146 S
	405 015 8704	TR 2SC2812-L6-TB
	405 015 8902	TR 2SC2812-L7-TB
	405 163 1602	TR 2SC2812N-L6-TB0
	405 163 1701	TR 2SC2812N-L7-TB0
Q2191	405 134 5905	TR 2SA1037AK-T146-R
	405 147 2205	TR 2SA1037AK-S-T146
	405 002 0308	TR 2SA1037K T146 R
	405 002 0407	TR 2SA1037K T146 S
	405 002 6706	TR 2SA1179-M6-TB
	405 002 6904	TR 2SA1179-M7-TB
	405 163 1503	TR 2SA1179N-M6-TB
	405 163 2708	TR 2SA1179N-M7-TB
Q3100	405 014 4509	TR 2SC2412K T146 R
	405 014 4608	TR 2SC2412K T146 S
	405 015 8704	TR 2SC2812-L6-TB
	405 015 8902	TR 2SC2812-L7-TB
	405 163 1602	TR 2SC2812N-L6-TB0
	405 163 1701	TR 2SC2812N-L7-TB0
Q3101	405 014 4509	TR 2SC2412K T146 R
	405 014 4608	TR 2SC2412K T146 S
	405 015 8704	TR 2SC2812-L6-TB
	405 015 8902	TR 2SC2812-L7-TB
	405 163 1602	TR 2SC2812N-L6-TB0
	405 163 1701	TR 2SC2812N-L7-TB0
Q3102	405 014 4509	TR 2SC2412K T146 R
	405 014 4608	TR 2SC2412K T146 S
	405 015 8704	TR 2SC2812-L6-TB
	405 015 8902	TR 2SC2812-L7-TB
	405 163 1602	TR 2SC2812N-L6-TB0
	405 163 1701	TR 2SC2812N-L7-TB0
Q3141	405 134 5905	TR 2SA1037AK-T146-R
	405 147 2205	TR 2SA1037AK-S-T146
	405 002 0308	TR 2SA1037K T146 R
	405 002 0407	TR 2SA1037K T146 S
	405 002 6706	TR 2SA1179-M6-TB
	405 002 6904	TR 2SA1179-M7-TB
	405 163 1503	TR 2SA1179N-M6-TB
	405 163 2708	TR 2SA1179N-M7-TB
Q3143	405 014 4509	TR 2SC2412K T146 R
	405 014 4608	TR 2SC2412K T146 S
	405 015 8704	TR 2SC2812-L6-TB
	405 015 8902	TR 2SC2812-L7-TB
	405 163 1602	TR 2SC2812N-L6-TB0
	405 163 1701	TR 2SC2812N-L7-TB0
Q3144	405 014 4509	TR 2SC2412K T146 R
	405 014 4608	TR 2SC2412K T146 S
	405 015 8704	TR 2SC2812-L6-TB
	405 015 8902	TR 2SC2812-L7-TB
	405 163 1602	TR 2SC2812N-L6-TB0
	405 163 1701	TR 2SC2812N-L7-TB0
Q3145	405 134 5905	TR 2SA1037AK-T146-R
	405 147 2205	TR 2SA1037AK-S-T146
	405 002 0308	TR 2SA1037K T146 R
	405 002 0407	TR 2SA1037K T146 S
	405 002 6706	TR 2SA1179-M6-TB
	405 002 6904	TR 2SA1179-M7-TB
	405 163 1503	TR 2SA1179N-M6-TB
	405 163 2708	TR 2SA1179N-M7-TB
Q3160	405 014 4509	TR 2SC2412K T146 R
	405 014 4608	TR 2SC2412K T146 S
	405 015 8704	TR 2SC2812-L6-TB
	405 015 8902	TR 2SC2812-L7-TB
	405 163 1602	TR 2SC2812N-L6-TB0
	405 163 1701	TR 2SC2812N-L7-TB0
Q3181	405 014 4509	TR 2SC2412K T146 R
	405 014 4608	TR 2SC2412K T146 S
	405 015 8704	TR 2SC2812-L6-TB
	405 015 8902	TR 2SC2812-L7-TB
	405 163 1602	TR 2SC2812N-L6-TB0
	405 163 1701	TR 2SC2812N-L7-TB0
Q3182	405 014 4509	TR 2SC2412K T146 R
	405 014 4608	TR 2SC2412K T146 S
	405 015 8704	TR 2SC2812-L6-TB
	405 015 8902	TR 2SC2812-L7-TB
	405 163 1602	TR 2SC2812N-L6-TB0
	405 163 1701	TR 2SC2812N-L7-TB0
Q3183	405 014 4509	TR 2SC2412K T146 R
	405 014 4608	TR 2SC2412K T146 S
	405 015 8704	TR 2SC2812-L6-TB
	405 015 8902	TR 2SC2812-L7-TB
	405 163 1602	TR 2SC2812N-L6-TB0
	405 163 1701	TR 2SC2812N-L7-TB0
Q4101	405 014 4509	TR 2SC2412K T146 R
	405 014 4608	TR 2SC2412K T146 S
	405 015 8704	TR 2SC2812-L6-TB
	405 015 8902	TR 2SC2812-L7-TB
	405 163 1602	TR 2SC2812N-L6-TB0
	405 163 1701	TR 2SC2812N-L7-TB0
Q4182	405 014 4509	TR 2SC2412K T146 R
	405 014 4608	TR 2SC2412K T146 S
	405 015 8704	TR 2SC2812-L6-TB
	405 015 8902	TR 2SC2812-L7-TB
	405 163 1602	TR 2SC2812N-L6-TB0
	405 163 1701	TR 2SC2812N-L7-TB0
Q4185	405 134 5905	TR 2SA1037AK-T146-R
	405 147 2205	TR 2SA1037AK-S-T146
	405 002 0308	TR 2SA1037K T146 R
	405 002 0407	TR 2SA1037K T146 S
	405 002 6706	TR 2SA1179-M6-TB
	405 002 6904	TR 2SA1179-M7-TB
	405 163 1503	TR 2SA1179N-M6-TB
	405 163 2708	TR 2SA1179N-M7-TB
Q5101	405 014 4509	TR 2SC2412K T146 R
	405 014 4608	TR 2SC2412K T146 S
	405 015 8704	TR 2SC2812-L6-TB
	405 015 8902	TR 2SC2812-L7-TB
	405 163 1602	TR 2SC2812N-L6-TB0
	405 163 1701	TR 2SC2812N-L7-TB0
Q5103	405 134 5905	TR 2SA1037AK-T146-R
	405 147 2205	TR 2SA1037AK-S-T146
	405 002 0308	TR 2SA1037K T146 R
	405 002 0407	TR 2SA1037K T146 S
	405 002 6706	TR 2SA1179-M6-TB
	405 002 6904	TR 2SA1179-M7-TB
	405 163 1503	TR 2SA1179N-M6-TB
	405 163 2708	TR 2SA1179N-M7-TB
Q5104	405 014 4509	TR 2SC2412K T146 R
	405 014 4608	TR 2SC2412K T146 S
	405 015 8704	TR 2SC2812-L6-TB
	405 015 8902	TR 2SC2812-L7-TB
	405 163 1602	TR 2SC2812N-L6-TB0
	405 163 1701	TR 2SC2812N-L7-TB0
Q5105	405 014 4509	TR 2SC2412K T146 R
	405 014 4608	TR 2SC2412K T146 S
	405 015 8704	TR 2SC2812-L6-TB
	405 015 8902	TR 2SC2812-L7-TB
	405 163 1602	TR 2SC2812N-L6-TB0
	405 163 1701	TR 2SC2812N-L7-TB0
Q5106	405 014 4509	TR 2SC2412K T146 R
	405 014 4608	TR 2SC2412K T146 S
	405 015 8704	TR 2SC2812-L6-TB
	405 015 8902	TR 2SC2812-L7-TB
	405 163 1602	TR 2SC2812N-L6-TB0
	405 163 1701	TR 2SC2812N-L7-TB0
Q5107	405 014 4509	TR 2SC2412K T146 R
	405 014 4608	TR 2SC2412K T146 S
	405 015 8704	TR 2SC2812-L6-TB
	405 015 8902	TR 2SC2812-L7-TB
	405 163 1602	TR 2SC2812N-L6-TB0
	405 163 1701	TR 2SC2812N-L7-TB0
INTEGRATED CIRCUIT		
IC1101	409 453 9309	IC UPD64082GF-3BA
IC1121	409 416 6406	IC BA033FP-E2
IC1131	410 342 8808	IC MSM54V16258BSL-40TS-K
IC1141	409 051 2900	IC TC4053BF(EL)
IC1181	409 051 2900	IC TC4053BF(EL)
IC1191	409 397 3005	IC TC7SET04FU-(TE85L)
IC141	409 051 2900	IC TC4053BF(EL)
IC181	409 461 7304	IC AD8057ART
IC182	409 429 6400	IC AD8055ART
IC183	409 461 7304	IC AD8057ART
IC184	409 461 7304	IC AD8057ART
IC2101	409 442 1307	IC CXD2064Q
IC2141	409 422 5806	IC M62398FP
IC2142	409 404 6302	IC M62320FP
IC2143	409 392 7503	IC 24LC08BT/SN
IC2151	409 250 9809	IC TC4W53F-TE12L
IC2161	409 051 2900	IC TC4053BF(EL)
IC3121	409 408 4205	IC TDA8395T/N3
IC3131	409 435 3806	IC TDA4665T/V5T
IC3141	409 449 2901	IC CXA2019AQ
IC3151	409 461 7304	IC AD8057ART
IC3161	409 493 2902	IC SI-3012LU-TL
IC4101	409 474 0002	IC CXA2101AQ
IC4111	409 397 3005	IC TC7SET04FU-(TE85L)
IC4112	409 397 3005	IC TC7SET04FU-(TE85L)
IC4181	409 051 2900	IC TC4053BF(EL)
IC5101	409 422 6605	IC TC90A11F
IC5111	409 325 4203	IC PST600DMT
IC5150	410 365 2005	IC MSM518221A-25GS-K
IC5181	409 461 7304	IC AD8057ART
IC5182	409 461 7304	IC AD8057ART
IC5183	409 461 7304	IC AD8057ART
CAPACITOR		
C101	403 162 4709	ELECT 10U M 16V
C102	403 162 4709	ELECT 10U M 16V
C103	403 164 0204	CERAMIC 0.1U Z 25V
C104	403 280 1604	ELECT 220U M 16V
C1101	403 145 9905	CERAMIC 22P J 50V
C1102	403 145 9905	CERAMIC 22P J 50V
C1103	403 164 0204	CERAMIC 0.1U Z 25V
C1104	403 164 0204	CERAMIC 0.1U Z 25V

Ref. No.	Part No.	Description			
C1105	403 215 0900	CERAMIC	390P	J	50V
C1106	403 164 0204	CERAMIC	0.1U	Z	25V
C1107	403 164 0204	CERAMIC	0.1U	Z	25V
C1108	403 164 0204	CERAMIC	0.1U	Z	25V
C1109	403 283 6309	CERAMIC	1U	Z	10V
C1110	403 283 6309	CERAMIC	1U	Z	10V
C1112	403 283 6309	CERAMIC	1U	Z	10V
C1113	403 164 0204	CERAMIC	0.1U	Z	25V
C1114	403 164 0204	CERAMIC	0.1U	Z	25V
C1115	403 164 0204	CERAMIC	0.1U	Z	25V
C1116	403 164 0204	CERAMIC	0.1U	Z	25V
C1117	403 266 8108	NP-ELECT	1U	M	50V
C1119	403 162 4709	ELECT	10U	M	16V
C1121	403 164 0204	CERAMIC	0.1U	Z	25V
C1122	403 164 0204	CERAMIC	0.1U	Z	25V
C1123	403 164 0204	CERAMIC	0.1U	Z	25V
C1124	403 164 0204	CERAMIC	0.1U	Z	25V
C1125	403 164 0204	CERAMIC	0.1U	Z	25V
C1126	403 164 0204	CERAMIC	0.1U	Z	25V
C1127	403 175 4505	ELECT	47U	M	6.3V
C1128	403 164 0204	CERAMIC	0.1U	Z	25V
C1129	403 175 4505	ELECT	47U	M	6.3V
C1132	403 280 0805	ELECT	330U	M	6.3V
C1133	403 164 0204	CERAMIC	0.1U	Z	25V
C1134	403 283 6309	CERAMIC	1U	Z	10V
C1135	403 280 0805	ELECT	330U	M	6.3V
C1136	403 283 6309	CERAMIC	1U	Z	10V
C1137	403 283 6309	CERAMIC	1U	Z	10V
C1141	403 175 4505	ELECT	47U	M	6.3V
C1146	403 164 0204	CERAMIC	0.1U	Z	25V
C1147	403 283 6309	CERAMIC	1U	Z	10V
C1148	403 164 0204	CERAMIC	0.1U	Z	25V
C1151	403 283 6309	CERAMIC	1U	Z	10V
C1152	403 283 6309	CERAMIC	1U	Z	10V
C1161	403 283 6309	CERAMIC	1U	Z	10V
C1162	403 145 9905	CERAMIC	22P	J	50V
C1187	403 283 6309	CERAMIC	1U	Z	10V
C1188	403 164 0204	CERAMIC	0.1U	Z	25V
C123	403 164 0204	CERAMIC	0.1U	Z	25V
C146	403 283 6309	CERAMIC	1U	Z	10V
C147	403 164 0204	CERAMIC	0.1U	Z	25V
C161	403 266 8108	NP-ELECT	1U	M	50V
C162	403 323 8805	CERAMIC	2.2U	Z	16V
	403 255 7907	CERAMIC	2.2U	Z	16V
C163	403 164 0204	CERAMIC	0.1U	Z	25V
C164	403 283 6309	CERAMIC	1U	Z	10V
C165	403 113 3805	CERAMIC	1000P	K	50V
C166	403 162 6208	ELECT	1U	M	50V
C167	403 164 0204	CERAMIC	0.1U	Z	25V
C168	403 283 6309	CERAMIC	1U	Z	10V
C2101	403 175 4802	NP-ELECT	10U	M	10V
C2102	403 164 0204	CERAMIC	0.1U	Z	25V
C2103	403 283 6309	CERAMIC	1U	Z	10V
C2104	403 164 0204	CERAMIC	0.1U	Z	25V
C2105	403 164 0204	CERAMIC	0.1U	Z	25V
C2106	403 164 0204	CERAMIC	0.1U	Z	25V
C2107	403 283 6309	CERAMIC	1U	Z	10V
C2108	403 164 0204	CERAMIC	0.1U	Z	25V
C2109	403 164 0204	CERAMIC	0.1U	Z	25V
C2111	403 164 0204	CERAMIC	0.1U	Z	25V
C2112	403 164 0204	CERAMIC	0.1U	Z	25V
C2113	403 215 2201	CERAMIC	0.01U	K	50V
C2114	403 283 6309	CERAMIC	1U	Z	10V
C2116	403 283 6309	CERAMIC	1U	Z	10V
C2117	403 164 0204	CERAMIC	0.1U	Z	25V
C2118	401 105 0405	MT-GLAZE	100	JA	1/16W
C2119	403 215 2201	CERAMIC	0.01U	K	50V
C2121	403 283 6309	CERAMIC	1U	Z	10V
C2122	403 164 0204	CERAMIC	0.1U	Z	25V
C2123	403 280 0805	ELECT	330U	M	6.3V
C2124	403 215 2201	CERAMIC	0.01U	K	50V
C2125	403 215 2201	CERAMIC	0.01U	K	50V
C2126	403 215 2904	CERAMIC	0.022U	K	25V
C2127	403 164 0204	CERAMIC	0.1U	Z	25V
C2128	403 283 6309	CERAMIC	1U	Z	10V
C2129	403 283 6309	CERAMIC	1U	Z	10V
C2131	403 215 2201	CERAMIC	0.01U	K	50V
C2133	401 219 1107	MT-GLAZE	1.8K	FA	1/16W
C2134	403 215 2201	CERAMIC	0.01U	K	50V
C2135	403 215 2201	CERAMIC	0.01U	K	50V
C2136	403 215 2201	CERAMIC	0.01U	K	50V
C2137	403 280 0805	ELECT	330U	M	6.3V
C2138	403 280 0805	ELECT	330U	M	6.3V
C2141	403 164 0204	CERAMIC	0.1U	Z	25V
C2143	403 283 6309	CERAMIC	1U	Z	10V
C2144	403 175 4505	ELECT	47U	M	6.3V
C2145	403 164 0204	CERAMIC	0.1U	Z	25V
C2146	403 164 0204	CERAMIC	0.1U	Z	25V
C2147	403 164 0204	CERAMIC	0.1U	Z	25V
C2148	403 164 0204	CERAMIC	0.1U	Z	25V
C2149	403 164 0204	CERAMIC	0.1U	Z	25V
C2150	403 164 0204	CERAMIC	0.1U	Z	25V
C2151	403 164 0204	CERAMIC	0.1U	Z	25V
C2152	403 164 0204	CERAMIC	0.1U	Z	25V
C2153	403 164 0204	CERAMIC	0.1U	Z	25V
C2154	403 164 0204	CERAMIC	0.1U	Z	25V
C2155	403 164 0204	CERAMIC	0.1U	Z	25V
C2156	403 164 0204	CERAMIC	0.1U	Z	25V
C2157	403 164 0204	CERAMIC	0.1U	Z	25V
C2158	403 164 0204	CERAMIC	0.1U	Z	25V
C2159	403 164 0204	CERAMIC	0.1U	Z	25V
C2160	403 164 0204	CERAMIC	0.1U	Z	25V
C2167	403 283 6309	CERAMIC	1U	Z	10V
C2168	403 164 0204	CERAMIC	0.1U	Z	25V
C2170	403 164 0204	CERAMIC	0.1U	Z	25V
C2171	403 164 0204	CERAMIC	0.1U	Z	25V
C2172	403 164 0204	CERAMIC	0.1U	Z	25V
C2173	403 164 0204	CERAMIC	0.1U	Z	25V
C2174	403 164 0204	CERAMIC	0.1U	Z	25V
C2182	403 175 4109	ELECT	22U	M	16V
C2184	403 175 4109	ELECT	22U	M	16V
C2186	403 164 0204	CERAMIC	0.1U	Z	25V
C2188	403 164 0204	CERAMIC	0.1U	Z	25V
C2191	401 105 0603	MT-GLAZE	10K	JA	1/16W
C2192	403 145 9905	CERAMIC	22P	J	50V
C2193	403 145 9905	CERAMIC	22P	J	50V
C3016	403 280 1604	ELECT	220U	M	16V
C3018	403 164 0204	CERAMIC	0.1U	Z	25V
C3105	403 164 0204	CERAMIC	0.1U	Z	25V
C3106	403 215 2201	CERAMIC	0.01U	K	50V
C3121	403 162 4709	ELECT	10U	M	16V
C3122	403 164 0204	CERAMIC	0.1U	Z	25V
C3123	403 298 9609	CERAMIC	0.1U	K	16V
C3124	403 298 9609	CERAMIC	0.1U	K	16V
C3125	403 298 9609	CERAMIC	0.1U	K	16V
C3131	403 215 2201	CERAMIC	0.01U	K	50V
C3132	403 283 6309	CERAMIC	1U	Z	10V
C3134	403 175 4109	ELECT	22U	M	16V
C3135	403 164 0204	CERAMIC	0.1U	Z	25V
C3136	403 164 0204	CERAMIC	0.1U	Z	25V
C3137	403 164 0204	CERAMIC	0.1U	Z	25V
C3140	403 283 6309	CERAMIC	1U	Z	10V
C3141	403 215 2201	CERAMIC	0.01U	K	50V
C3142	403 283 6309	CERAMIC	1U	Z	10V
C3143	403 164 0204	CERAMIC	0.1U	Z	25V
C3144	403 162 6604	ELECT	2.2U	M	50V
C3146	403 164 0204	CERAMIC	0.1U	Z	25V
C3147	403 266 8108	NP-ELECT	1U	M	50V
C3148	403 266 8108	NP-ELECT	1U	M	50V
C3149	403 266 8108	NP-ELECT	1U	M	50V
C3150	403 286 8508	ELECT	330U	M	16V
C3151	403 348 5803	CERAMIC	0.47U	K	10V
C3152	403 348 5803	CERAMIC	0.47U	K	10V
C3153	403 139 7108	CERAMIC	12P	J	50V
C3154	403 139 7108	CERAMIC	12P	J	50V
C3155	403 139 7108	CERAMIC	12P	J	50V
C3157	403 157 2109	CERAMIC	13P	J	50V
C3159	403 155 1500	CERAMIC	180P	J	50V
C3160	403 215 2201	CERAMIC	0.01U	K	50V
C3163	403 162 5300	ELECT	4.7U	M	25V
C3164	403 343 8809	CERAMIC	0.47U	Z	16V
C3165	403 153 9102	CERAMIC	5P	C	50V
C3166	403 266 8108	NP-ELECT	1U	M	50V
C3167	403 215 2102	CERAMIC	8200P	K	50V
C3168	403 162 6000	ELECT	0.47U	M	50V
C3169	403 153 9102	CERAMIC	5P	C	50V
C3172	403 157 3601	CERAMIC	100P	J	50V
C3175	403 164 0204	CERAMIC	0.1U	Z	25V
C3176	403 175 4109	ELECT	22U	M	16V
C3177	403 162 6000	ELECT	0.47U	M	50V
C4119	403 164 0204	CERAMIC	0.1U	Z	25V
C4126	403 215 2201	CERAMIC	0.01U	K	50V
C4129	403 164 0204	CERAMIC	0.1U	Z	25V
C4132	403 164 0204	CERAMIC	0.1U	Z	25V
C4133	403 164 0204	CERAMIC	0.1U	Z	25V
C4134	403 164 0204	CERAMIC	0.1U	Z	25V
C4135	403 162 4709	ELECT	10U	M	16V
C4137	403 348 5803	CERAMIC	0.47U	K	10V
C4138	403 162 4709	ELECT	10U	M	16V
C4139	403 298 9609	CERAMIC	0.1U	K	16V
C4140	403 215 2201	CERAMIC	0.01U	K	50V
C4141	403 215 2201	CERAMIC	0.01U	K	50V
C4142	403 215 2201	CERAMIC	0.01U	K	50V
C4143	403 215 2201	CERAMIC	0.01U	K	50V
C4144	403 215 2201	CERAMIC	0.01U	K	50V
C4145	403 215 2201	CERAMIC	0.01U	K	50V
C4146	403 215 2201	CERAMIC	0.01U	K	50V
C4147	403 215 2201	CERAMIC	0.01U	K	50V
C4148	403 215 2201	CERAMIC	0.01U	K	50V
C4157	403 162 4709	ELECT	10U	M	16V
C4158	403 348 5803	CERAMIC	0.47U	K	10V
C4160	403 343 8809	CERAMIC	0.47U	Z	16V
C4164	403 164 0204	CERAMIC	0.1U	Z	25V
C4165	403 164 0204	CERAMIC	0.1U	Z	25V
C4166	403 164 0204	CERAMIC	0.1U	Z	25V
C4169	403 215 2201	CERAMIC	0.01U	K	50V
C4171	403 215 2201	CERAMIC	0.01U	K	50V
C4172	403 215 2201	CERAMIC	0.01U	K	50V
C4181	403 164 0204	CERAMIC	0.1U	Z	25V
C4182	403 283 6309	CERAMIC	1U	Z	10V

Ref. No.	Part No.	Description
C4183	403 283 6309	CERAMIC 1U Z 10V
C4184	403 283 6309	CERAMIC 1U Z 10V
C4185	403 224 7006	CERAMIC 0.047U Z 50V
C4186	403 224 7006	CERAMIC 0.047U Z 50V
C4187	403 283 6309	CERAMIC 1U Z 10V
C4188	403 164 0204	CERAMIC 0.1U Z 25V
C5100	403 164 0204	CERAMIC 0.1U Z 25V
C5101	403 164 0204	CERAMIC 0.1U Z 25V
C5102	403 164 0204	CERAMIC 0.1U Z 25V
C5103	403 215 1006	CERAMIC 470P J 50V
C5104	403 298 9609	CERAMIC 0.1U K 16V
C5105	403 155 1302	CERAMIC 150P J 50V
C5106	403 139 7108	CERAMIC 12P J 50V
C5107	403 164 0204	CERAMIC 0.1U Z 25V
C5108	403 164 0204	CERAMIC 0.1U Z 25V
C5109	403 164 0204	CERAMIC 0.1U Z 25V
C5110	403 162 4709	ELECT 10U M 16V
C5111	403 280 0805	ELECT 330U M 6.3V
C5112	403 164 0204	CERAMIC 0.1U Z 25V
C5113	403 215 2201	CERAMIC 0.01U K 50V
C5114	403 155 1500	CERAMIC 180P J 50V
C5115	403 215 2201	CERAMIC 0.01U K 50V
C5116	403 164 0204	CERAMIC 0.1U Z 25V
C5117	403 164 0204	CERAMIC 0.1U Z 25V
C5118	403 164 0204	CERAMIC 0.1U Z 25V
C5119	403 164 0204	CERAMIC 0.1U Z 25V
C5120	403 153 9102	CERAMIC 5P C 50V
C5121	403 164 0204	CERAMIC 0.1U Z 25V
C5122	403 164 0204	CERAMIC 0.1U Z 25V
C5123	403 164 0204	CERAMIC 0.1U Z 25V
C5124	403 164 0204	CERAMIC 0.1U Z 25V
C5125	403 164 0204	CERAMIC 0.1U Z 25V
C5126	403 164 0204	CERAMIC 0.1U Z 25V
C5128	403 155 4204	CERAMIC 15P J 50V
C5129	403 155 1609	CERAMIC 33P J 50V
C5130	403 157 1706	CERAMIC 8P D 50V
C5132	403 162 6208	ELECT 1U M 50V
C5133	403 139 7306	CERAMIC 18P J 50V
C5134	403 215 2201	CERAMIC 0.01U K 50V
C5135	403 139 7306	CERAMIC 18P J 50V
C5136	403 157 1508	CERAMIC 3P C 50V
C5137	403 157 1706	CERAMIC 8P D 50V
C5138	403 164 0204	CERAMIC 0.1U Z 25V
C5139	403 153 9102	CERAMIC 5P C 50V
C5141	403 145 9905	CERAMIC 22P J 50V
C5142	403 157 1706	CERAMIC 8P D 50V
C5143	403 164 0204	CERAMIC 0.1U Z 25V
C5144	403 283 6309	CERAMIC 1U Z 10V
C5145	403 164 0204	CERAMIC 0.1U Z 25V
C5146	403 164 0204	CERAMIC 0.1U Z 25V
C5147	403 164 0204	CERAMIC 0.1U Z 25V
C5148	403 164 0204	CERAMIC 0.1U Z 25V
C5149	403 280 0805	ELECT 330U M 6.3V
C5151	403 283 6309	CERAMIC 1U Z 10V
C5152	403 164 0204	CERAMIC 0.1U Z 25V
C5181	403 280 1604	ELECT 220U M 16V
C5182	403 164 0204	CERAMIC 0.1U Z 25V
C5183	403 153 9102	CERAMIC 5P C 50V
C5184	403 153 9102	CERAMIC 5P C 50V
C5185	403 153 9102	CERAMIC 5P C 50V
RESISTOR		
R100	401 105 3000	MT-GLAZE 220K JA 1/16W
R101	401 105 5509	MT-GLAZE 470K JA 1/16W
R102	401 105 5509	MT-GLAZE 470K JA 1/16W
R103	401 105 0405	MT-GLAZE 100 JA 1/16W
R104	401 105 3000	MT-GLAZE 220K JA 1/16W
R105	401 105 7909	MT-GLAZE 0.000 ZA 1/16W
R106	401 105 2805	MT-GLAZE 2.2K JA 1/16W
R107	401 105 0405	MT-GLAZE 100 JA 1/16W
R108	401 105 3000	MT-GLAZE 220K JA 1/16W
R109	401 105 7909	MT-GLAZE 0.000 ZA 1/16W
R110	401 105 3000	MT-GLAZE 220K JA 1/16W
R1101	401 105 5202	MT-GLAZE 470 JA 1/16W
R1102	401 105 7909	MT-GLAZE 0.000 ZA 1/16W
R1103	401 105 7909	MT-GLAZE 0.000 ZA 1/16W
R1104	401 105 7909	MT-GLAZE 0.000 ZA 1/16W
R1105	401 105 7909	MT-GLAZE 0.000 ZA 1/16W
R1106	401 105 5202	MT-GLAZE 470 JA 1/16W
R1107	401 105 5202	MT-GLAZE 470 JA 1/16W
R1108	401 105 7909	MT-GLAZE 0.000 ZA 1/16W
R1109	401 105 5301	MT-GLAZE 4.7K JA 1/16W
R111	401 105 2805	MT-GLAZE 2.2K JA 1/16W
R1111	401 105 0405	MT-GLAZE 100 JA 1/16W
R1112	401 105 0405	MT-GLAZE 100 JA 1/16W
R1113	401 105 0405	MT-GLAZE 100 JA 1/16W
R1128	401 105 0405	MT-GLAZE 100 JA 1/16W
R1129	401 105 0405	MT-GLAZE 100 JA 1/16W
R1131	401 105 0405	MT-GLAZE 100 JA 1/16W
R1132	401 105 7909	MT-GLAZE 0.000 ZA 1/16W
R1133	401 105 7909	MT-GLAZE 0.000 ZA 1/16W
R1141	401 105 1105	MT-GLAZE 12K JA 1/16W
R1142	401 105 8104	MT-GLAZE 56K JA 1/16W
R1149	401 105 0405	MT-GLAZE 100 JA 1/16W
R1151	401 105 0405	MT-GLAZE 100 JA 1/16W
R1152	401 105 0405	MT-GLAZE 100 JA 1/16W

Ref. No.	Part No.	Description
R1155	401 105 7503	MT-GLAZE 82K JA 1/16W
R1156	401 105 2102	MT-GLAZE 18K JA 1/16W
R1157	401 105 0504	MT-GLAZE 1K JA 1/16W
R1158	401 105 5301	MT-GLAZE 4.7K JA 1/16W
R1159	401 105 5905	MT-GLAZE 560 JA 1/16W
R1161	401 105 6001	MT-GLAZE 5.6K JA 1/16W
R1162	401 105 0504	MT-GLAZE 1K JA 1/16W
R1163	401 105 2706	MT-GLAZE 220 JA 1/16W
R1165	401 105 4502	MT-GLAZE 390 JA 1/16W
R1166	401 105 5103	MT-GLAZE 47 JA 1/16W
R1167	401 105 0504	MT-GLAZE 1K JA 1/16W
R1168	401 105 0504	MT-GLAZE 1K JA 1/16W
R1169	401 105 5301	MT-GLAZE 4.7K JA 1/16W
R1171	401 105 5905	MT-GLAZE 560 JA 1/16W
R1172	401 105 6001	MT-GLAZE 5.6K JA 1/16W
R1173	401 105 0504	MT-GLAZE 1K JA 1/16W
R1174	401 105 2706	MT-GLAZE 220 JA 1/16W
R1175	401 105 2706	MT-GLAZE 220 JA 1/16W
R1176	401 105 5905	MT-GLAZE 560 JA 1/16W
R1177	401 105 5103	MT-GLAZE 47 JA 1/16W
R1178	401 105 0504	MT-GLAZE 1K JA 1/16W
R1183	401 105 2706	MT-GLAZE 220 JA 1/16W
R1184	401 105 4106	MT-GLAZE 3.3K JA 1/16W
R1187	401 105 0405	MT-GLAZE 100 JA 1/16W
R1188	401 105 0405	MT-GLAZE 100 JA 1/16W
R1189	401 105 0405	MT-GLAZE 100 JA 1/16W
R121	401 226 1206	MT-GLAZE 150 FA 1/16W
R122	401 226 1206	MT-GLAZE 150 FA 1/16W
R123	401 226 1206	MT-GLAZE 150 FA 1/16W
R124	401 226 1206	MT-GLAZE 150 FA 1/16W
R125	401 105 0405	MT-GLAZE 100 JA 1/16W
R126	401 105 4106	MT-GLAZE 3.3K JA 1/16W
R131	401 226 1206	MT-GLAZE 150 FA 1/16W
R132	401 226 1206	MT-GLAZE 150 FA 1/16W
R133	401 226 1206	MT-GLAZE 150 FA 1/16W
R134	401 226 1206	MT-GLAZE 150 FA 1/16W
R147	401 105 0405	MT-GLAZE 100 JA 1/16W
R148	401 105 0405	MT-GLAZE 100 JA 1/16W
R149	401 105 0405	MT-GLAZE 100 JA 1/16W
R161	401 105 4809	MT-GLAZE 390K JA 1/16W
R162	401 105 4106	MT-GLAZE 3.3K JA 1/16W
R163	401 105 6001	MT-GLAZE 5.6K JA 1/16W
R164	401 105 0405	MT-GLAZE 100 JA 1/16W
R165	401 105 2805	MT-GLAZE 2.2K JA 1/16W
R166	401 105 0405	MT-GLAZE 100 JA 1/16W
R167	401 105 2805	MT-GLAZE 2.2K JA 1/16W
R168	401 105 7305	MT-GLAZE 820 JA 1/16W
R169	401 105 4106	MT-GLAZE 3.3K JA 1/16W
R171	401 105 1501	MT-GLAZE 1.5K JA 1/16W
R172	401 105 2706	MT-GLAZE 220 JA 1/16W
R173	401 105 3000	MT-GLAZE 220K JA 1/16W
R174	401 105 2805	MT-GLAZE 2.2K JA 1/16W
R175	401 105 5202	MT-GLAZE 470 JA 1/16W
R176	401 105 5400	MT-GLAZE 47K JA 1/16W
R177	401 105 0504	MT-GLAZE 1K JA 1/16W
R178	401 105 5301	MT-GLAZE 4.7K JA 1/16W
R179	401 105 2805	MT-GLAZE 2.2K JA 1/16W
R180	401 218 4505	MT-GLAZE 2.2K FA 1/16W
R182	401 219 1107	MT-GLAZE 1.8K FA 1/16W
R183	401 105 2904	MT-GLAZE 22K JA 1/16W
R184	401 105 7404	MT-GLAZE 8.2K JA 1/16W
R185	401 218 4505	MT-GLAZE 2.2K FA 1/16W
R187	401 219 1107	MT-GLAZE 1.8K FA 1/16W
R188	401 105 2904	MT-GLAZE 22K JA 1/16W
R189	401 105 7404	MT-GLAZE 8.2K JA 1/16W
R190	401 105 2805	MT-GLAZE 2.2K JA 1/16W
R192	401 105 1501	MT-GLAZE 1.5K JA 1/16W
R193	401 105 4700	MT-GLAZE 39K JA 1/16W
R194	401 105 7404	MT-GLAZE 8.2K JA 1/16W
R195	401 105 2805	MT-GLAZE 2.2K JA 1/16W
R197	401 105 1501	MT-GLAZE 1.5K JA 1/16W
R198	401 105 4700	MT-GLAZE 39K JA 1/16W
R199	401 105 7404	MT-GLAZE 8.2K JA 1/16W
R2101	401 105 7909	MT-GLAZE 0.000 ZA 1/16W
R2102	401 105 7909	MT-GLAZE 0.000 ZA 1/16W
R2103	401 105 1402	MT-GLAZE 150 JA 1/16W
R2104	401 235 4106	MT-GLAZE 120 FA 1/16W
R2105	401 105 4106	MT-GLAZE 3.3K JA 1/16W
R2106	401 105 2805	MT-GLAZE 2.2K JA 1/16W
R2107	401 105 4106	MT-GLAZE 3.3K JA 1/16W
R2108	401 105 4106	MT-GLAZE 3.3K JA 1/16W
R2109	401 105 7909	MT-GLAZE 0.000 ZA 1/16W
R2110	401 105 7909	MT-GLAZE 0.000 ZA 1/16W
R2111	401 105 7909	MT-GLAZE 0.000 ZA 1/16W
R2112	401 105 7909	MT-GLAZE 0.000 ZA 1/16W
R2113	401 105 0405	MT-GLAZE 100 JA 1/16W
R2114	401 105 0405	MT-GLAZE 100 JA 1/16W
R2116	401 105 5301	MT-GLAZE 4.7K JA 1/16W
R2117	401 105 8104	MT-GLAZE 56K JA 1/16W
R2118	401 105 5905	MT-GLAZE 560 JA 1/16W
R2119	401 105 0504	MT-GLAZE 1K JA 1/16W
R2120	401 105 1501	MT-GLAZE 1.5K JA 1/16W
R2121	401 105 0603	MT-GLAZE 10K JA 1/16W
R2122	401 105 0900	MT-GLAZE 120 JA 1/16W
R2123	401 226 1206	MT-GLAZE 150 FA 1/16W

Ref. No.	Part No.	Description
R2124	401 105 7909	MT-GLAZE 0.000 ZA 1/16W
R2125	401 105 7909	MT-GLAZE 0.000 ZA 1/16W
R2126	401 105 0405	MT-GLAZE 100 JA 1/16W
R2127	401 105 0405	MT-GLAZE 100 JA 1/16W
R2128	401 105 0405	MT-GLAZE 100 JA 1/16W
R2129	401 105 7909	MT-GLAZE 0.000 ZA 1/16W
R2130	401 105 4601	MT-GLAZE 3.9K JA 1/16W
R2131	401 105 7909	MT-GLAZE 0.000 ZA 1/16W
R2132	401 105 7909	MT-GLAZE 0.000 ZA 1/16W
R2140	401 038 2002	MT-GLAZE 270 JA 1/10W
R2141	401 105 0405	MT-GLAZE 100 JA 1/16W
R2142	401 105 0405	MT-GLAZE 100 JA 1/16W
R2144	401 105 7909	MT-GLAZE 0.000 ZA 1/16W
R2145	401 105 0405	MT-GLAZE 100 JA 1/16W
R2146	401 105 0405	MT-GLAZE 100 JA 1/16W
R2147	401 105 0405	MT-GLAZE 100 JA 1/16W
R2148	401 105 0405	MT-GLAZE 100 JA 1/16W
R2149	401 105 0603	MT-GLAZE 10K JA 1/16W
R2150	401 038 2002	MT-GLAZE 270 JA 1/10W
R2151	401 037 5004	MT-GLAZE 0.000 ZA 1/10W
R2153	401 105 0603	MT-GLAZE 10K JA 1/16W
R2155	401 105 0405	MT-GLAZE 100 JA 1/16W
R2156	401 105 0405	MT-GLAZE 100 JA 1/16W
R2157	401 105 0504	MT-GLAZE 1K JA 1/16W
R2160	401 105 2805	MT-GLAZE 2.2K JA 1/16W
R2161	401 105 7404	MT-GLAZE 8.2K JA 1/16W
R2162	401 105 0603	MT-GLAZE 10K JA 1/16W
R2163	401 105 2706	MT-GLAZE 220 JA 1/16W
R2164	401 105 4106	MT-GLAZE 3.3K JA 1/16W
R2165	401 105 7909	MT-GLAZE 0.000 ZA 1/16W
R2167	401 105 0405	MT-GLAZE 100 JA 1/16W
R2168	401 105 0405	MT-GLAZE 100 JA 1/16W
R2169	401 105 0405	MT-GLAZE 100 JA 1/16W
R2170	401 105 4007	MT-GLAZE 330 JA 1/16W
R2191	401 105 0504	MT-GLAZE 1K JA 1/16W
R2192	401 105 0504	MT-GLAZE 1K JA 1/16W
R2193	401 105 2805	MT-GLAZE 2.2K JA 1/16W
R3105	401 105 0504	MT-GLAZE 1K JA 1/16W
R3106	401 105 1006	MT-GLAZE 1.2K JA 1/16W
R3107	401 105 5202	MT-GLAZE 470 JA 1/16W
R3108	401 105 2904	MT-GLAZE 22K JA 1/16W
R3109	401 105 7404	MT-GLAZE 8.2K JA 1/16W
R3110	401 105 0405	MT-GLAZE 100 JA 1/16W
R3120	401 105 0504	MT-GLAZE 1K JA 1/16W
R3121	401 037 9101	MT-GLAZE 180 JA 1/10W
R3122	401 037 9101	MT-GLAZE 180 JA 1/10W
R3130	401 105 6506	MT-GLAZE 680 JA 1/16W
R3131	401 105 0504	MT-GLAZE 1K JA 1/16W
R3132	401 105 0306	MT-GLAZE 10 JA 1/16W
R3140	401 105 0504	MT-GLAZE 1K JA 1/16W
R3142	401 105 4007	MT-GLAZE 330 JA 1/16W
R3143	401 105 0603	MT-GLAZE 10K JA 1/16W
R3144	401 105 4106	MT-GLAZE 3.3K JA 1/16W
R3145	401 105 0504	MT-GLAZE 1K JA 1/16W
R3147	401 105 0504	MT-GLAZE 1K JA 1/16W
R3148	401 105 4106	MT-GLAZE 3.3K JA 1/16W
R3151	401 105 1501	MT-GLAZE 1.5K JA 1/16W
R3152	401 105 6506	MT-GLAZE 680 JA 1/16W
R3153	401 105 5202	MT-GLAZE 470 JA 1/16W
R3154	401 105 8104	MT-GLAZE 56K JA 1/16W
R3155	401 105 8104	MT-GLAZE 56K JA 1/16W
R3156	401 105 8104	MT-GLAZE 56K JA 1/16W
R3157	401 105 8104	MT-GLAZE 56K JA 1/16W
R3158	401 105 8104	MT-GLAZE 56K JA 1/16W
R3159	401 105 0504	MT-GLAZE 1K JA 1/16W
R3160	401 105 1204	MT-GLAZE 120K JA 1/16W
R3162	401 105 2706	MT-GLAZE 220 JA 1/16W
R3163	401 105 2706	MT-GLAZE 220 JA 1/16W
R3165	401 105 0405	MT-GLAZE 100 JA 1/16W
R3166	401 105 0405	MT-GLAZE 100 JA 1/16W
R3167	401 105 3307	MT-GLAZE 2.7K JA 1/16W
R3168	401 105 4304	MT-GLAZE 330K JA 1/16W
R3169	401 105 0504	MT-GLAZE 1K JA 1/16W
R3170	401 105 3000	MT-GLAZE 220K JA 1/16W
R3171	401 105 2805	MT-GLAZE 2.2K JA 1/16W
R3173	401 105 4106	MT-GLAZE 3.3K JA 1/16W
R3174	401 113 9506	MT-GLAZE 620K JA 1/16W
R3175	401 218 4505	MT-GLAZE 2.2K FA 1/16W
R3176	401 219 1602	MT-GLAZE 100K FA 1/16W
R3177	401 105 5301	MT-GLAZE 4.7K JA 1/16W
R3178	401 105 6001	MT-GLAZE 5.6K JA 1/16W
R3179	401 286 3400	MT-GLAZE 10 FA 1/16W
R3180	401 105 0603	MT-GLAZE 10K JA 1/16W
R3181	401 105 0504	MT-GLAZE 1K JA 1/16W
R3182	401 105 0504	MT-GLAZE 1K JA 1/16W
R3183	401 105 5202	MT-GLAZE 470 JA 1/16W
R3184	401 105 0504	MT-GLAZE 1K JA 1/16W
R3185	401 105 0504	MT-GLAZE 1K JA 1/16W
R3186	401 105 5202	MT-GLAZE 470 JA 1/16W
R3187	401 105 0504	MT-GLAZE 1K JA 1/16W
R3188	401 105 0504	MT-GLAZE 1K JA 1/16W
R3189	401 105 4007	MT-GLAZE 330 JA 1/16W
R3190	401 105 4007	MT-GLAZE 330 JA 1/16W
R3191	401 105 0405	MT-GLAZE 100 JA 1/16W
R3192	401 105 8104	MT-GLAZE 56K JA 1/16W
R3193	401 105 0702	MT-GLAZE 100K JA 1/16W
R4101	401 217 5404	MT-GLAZE 47K FA 1/16W
R4102	401 105 0504	MT-GLAZE 1K JA 1/16W
R4103	401 105 0504	MT-GLAZE 1K JA 1/16W
R4104	401 105 0405	MT-GLAZE 100 JA 1/16W
R4105	401 105 0405	MT-GLAZE 100 JA 1/16W
R4106	401 105 0405	MT-GLAZE 100 JA 1/16W
R4108	401 105 0603	MT-GLAZE 10K JA 1/16W
R4109	401 105 0603	MT-GLAZE 10K JA 1/16W
R4110	401 105 0603	MT-GLAZE 10K JA 1/16W
R4111	401 105 0603	MT-GLAZE 10K JA 1/16W
R4112	401 114 0502	MT-GLAZE 2.2M JA 1/16W
R4113	401 105 0603	MT-GLAZE 10K JA 1/16W
R4116	401 105 0405	MT-GLAZE 100 JA 1/16W
R4117	401 105 0405	MT-GLAZE 100 JA 1/16W
R4118	401 105 0405	MT-GLAZE 100 JA 1/16W
R4119	401 105 0900	MT-GLAZE 120 JA 1/16W
R4122	401 105 0405	MT-GLAZE 100 JA 1/16W
R4124	401 105 0405	MT-GLAZE 100 JA 1/16W
R4125	401 105 0405	MT-GLAZE 100 JA 1/16W
R4126	401 217 4100	MT-GLAZE 22K FA 1/16W
R4127	401 105 1501	MT-GLAZE 1.5K JA 1/16W
R4128	401 105 6001	MT-GLAZE 5.6K JA 1/16W
R4181	401 105 6605	MT-GLAZE 6.8K JA 1/16W
R4182	401 105 7305	MT-GLAZE 820 JA 1/16W
R4183	401 105 0504	MT-GLAZE 1K JA 1/16W
R4184	401 105 6001	MT-GLAZE 5.6K JA 1/16W
R4186	401 158 4108	MT-GLAZE 4.7 JA 1/16W
R4187	401 105 1907	MT-GLAZE 180 JA 1/16W
R4188	401 112 8005	MT-GLAZE 5.6 JA 1/16W
R4189	401 105 6605	MT-GLAZE 6.8K JA 1/16W
R4190	401 105 2904	MT-GLAZE 22K JA 1/16W
R4191	401 105 7305	MT-GLAZE 820 JA 1/16W
R5100	401 105 2904	MT-GLAZE 22K JA 1/16W
R5101	401 105 1709	MT-GLAZE 150K JA 1/16W
R5102	401 105 0504	MT-GLAZE 1K JA 1/16W
R5103	401 105 0702	MT-GLAZE 100K JA 1/16W
R5104	401 105 4205	MT-GLAZE 33K JA 1/16W
R5105	401 105 0702	MT-GLAZE 100K JA 1/16W
R5106	401 105 8005	MT-GLAZE 1M JA 1/16W
R5107	401 105 5905	MT-GLAZE 560 JA 1/16W
R5108	401 105 7305	MT-GLAZE 820 JA 1/16W
R5109	401 217 3905	MT-GLAZE 3.3K FA 1/16W
R5110	401 105 8203	MT-GLAZE 68K JA 1/16W
R5111	401 217 3905	MT-GLAZE 3.3K FA 1/16W
R5113	401 105 1006	MT-GLAZE 1.2K JA 1/16W
R5116	401 105 7305	MT-GLAZE 820 JA 1/16W
R5117	401 105 7404	MT-GLAZE 8.2K JA 1/16W
R5118	401 105 0504	MT-GLAZE 1K JA 1/16W
R5119	401 105 0603	MT-GLAZE 10K JA 1/16W
R5120	401 105 4700	MT-GLAZE 39K JA 1/16W
R5121	401 105 0603	MT-GLAZE 10K JA 1/16W
R5122	401 105 7404	MT-GLAZE 8.2K JA 1/16W
R5123	401 105 0504	MT-GLAZE 1K JA 1/16W
R5124	401 105 0405	MT-GLAZE 100 JA 1/16W
R5125	401 105 0504	MT-GLAZE 1K JA 1/16W
R5126	401 105 0603	MT-GLAZE 10K JA 1/16W
R5127	401 105 6506	MT-GLAZE 680 JA 1/16W
R5128	401 105 0504	MT-GLAZE 1K JA 1/16W
R5129	401 105 0603	MT-GLAZE 10K JA 1/16W
R5130	401 105 2904	MT-GLAZE 22K JA 1/16W
R5131	401 105 0504	MT-GLAZE 1K JA 1/16W
R5132	401 105 0603	MT-GLAZE 10K JA 1/16W
R5133	401 105 0405	MT-GLAZE 100 JA 1/16W
R5134	401 105 0405	MT-GLAZE 100 JA 1/16W
R5135	401 105 0405	MT-GLAZE 100 JA 1/16W
R5136	401 105 0405	MT-GLAZE 100 JA 1/16W
R5137	401 105 7909	MT-GLAZE 0.000 ZA 1/16W
R5138	401 105 7909	MT-GLAZE 0.000 ZA 1/16W
R5139	401 105 7909	MT-GLAZE 0.000 ZA 1/16W
R5140	401 105 7909	MT-GLAZE 0.000 ZA 1/16W
R5141	401 105 7909	MT-GLAZE 0.000 ZA 1/16W
R5142	401 105 0504	MT-GLAZE 1K JA 1/16W
R5143	401 105 5202	MT-GLAZE 470 JA 1/16W
R5150	401 105 4700	MT-GLAZE 39K JA 1/16W
R5160	401 105 0504	MT-GLAZE 1K JA 1/16W
R5170	401 105 0504	MT-GLAZE 1K JA 1/16W
R5180	401 203 9904	MT-GLAZE 4.7K FA 1/16W
R5181	401 105 0405	MT-GLAZE 100 JA 1/16W
R5182	401 105 0405	MT-GLAZE 100 JA 1/16W
R5183	401 105 0405	MT-GLAZE 100 JA 1/16W
R5184	401 113 4402	MT-GLAZE 75 JA 1/16W
R5185	401 105 0504	MT-GLAZE 1K JA 1/16W
R5187	401 113 4402	MT-GLAZE 75 JA 1/16W
R5188	401 105 0504	MT-GLAZE 1K JA 1/16W
R5191	401 113 4402	MT-GLAZE 75 JA 1/16W
R5192	401 105 0504	MT-GLAZE 1K JA 1/16W
COIL		
L101	645 014 2659	FILTER,EMI 10MHZ
L102	645 014 2659	FILTER,EMI 10MHZ
L1101	645 004 1587	INDUCTOR,4.7U J
L1104	645 026 1008	INDUCTOR,3.3U M
L1131	645 026 1008	INDUCTOR,3.3U M
L1151	645 044 3626	FILTER,LP 7MHZ
L1161	645 044 3626	FILTER,LP 7MHZ

Ref. No.	Part No.	Description
L1162	645 021 1607	INDUCTOR,10U J
L121	401 037 5004	MT-GLAZE 0.000 ZA 1/10W
L122	401 037 5004	MT-GLAZE 0.000 ZA 1/10W
L123	645 002 3910	FILTER,EMI 100MHZ
L124	645 002 3910	FILTER,EMI 100MHZ
L125	645 014 2659	FILTER,EMI 10MHZ
L131	401 037 5004	MT-GLAZE 0.000 ZA 1/10W
L132	645 002 3910	FILTER,EMI 100MHZ
L133	401 037 5004	MT-GLAZE 0.000 ZA 1/10W
L134	645 002 3910	FILTER,EMI 100MHZ
L161	645 044 3626	FILTER,LP 7MHZ
L2101	645 026 1008	INDUCTOR,3.3U M
L2102	645 026 1008	INDUCTOR,3.3U M
L2191	645 021 1614	INDUCTOR,12U J
L5101	645 026 1008	INDUCTOR,3.3U M
L5102	645 021 1713	INDUCTOR,39U J
L5103	645 021 1706	INDUCTOR,33U J
L5104	645 021 1737	INDUCTOR,47U J
L5121	645 021 1713	INDUCTOR,39U J
DIODE		
D101	407 187 8209	ZENER DIODE UDZ12B-TE-17
D102	407 187 8209	ZENER DIODE UDZ12B-TE-17
D103	407 187 8209	ZENER DIODE UDZ12B-TE-17
D104	407 187 8209	ZENER DIODE UDZ12B-TE-17
D1101	407 149 0807	DIODE 1SS355-TE-17
D1121	407 149 0807	DIODE 1SS355-TE-17
D121	407 209 1201	ZD UDZS-TE-176.2B
D122	407 209 1201	ZD UDZS-TE-176.2B
D123	407 209 1201	ZD UDZS-TE-176.2B
D124	407 209 1201	ZD UDZS-TE-176.2B
D125	407 187 8209	ZENER DIODE UDZ12B-TE-17
D131	407 209 1201	ZD UDZS-TE-176.2B
D132	407 209 1201	ZD UDZS-TE-176.2B
D133	407 209 1201	ZD UDZS-TE-176.2B
D134	407 209 1201	ZD UDZS-TE-176.2B
D2140	407 206 6308	ZD UDZS-TE-175.1B
D3121	407 149 0807	DIODE 1SS355-TE-17
D3131	407 206 6308	ZD UDZS-TE-175.1B
D4181	407 149 0807	DIODE 1SS355-TE-17
D4182	407 149 0807	DIODE 1SS355-TE-17
D5101	407 216 7609	VARACTOR DI HVU17
MISCELLANEOUS		
TP141	645 036 5010	TERMINAL
TP142	645 036 5010	TERMINAL
TP3141	645 036 5010	TERMINAL
TP3142	645 036 5010	TERMINAL
TP5101	645 036 5010	TERMINAL
TP5102	645 036 5010	TERMINAL
TP5103	645 036 5010	TERMINAL
TP5181	645 036 5010	TERMINAL
TP5182	645 036 5010	TERMINAL
TP5183	645 036 5010	TERMINAL
K101	645 040 9974	JACK,RCA-2
K121	645 040 9967	SOCKET,DIN 4P
K131	645 031 6067	SOCKET,BNC 2P
K3101	645 041 6071	SOCKET,I/O 176P
K3101A	610 289 9795	JOINT GUIDE BUSH ML6A
K3101B	610 289 9795	JOINT GUIDE BUSH ML6A
X1101	645 028 5622	OSC,CRYSTAL 20.000MHZ
	645 028 5646	OSC,CRYSTAL 20.000MHZ
X3141	610 012 0532	OSC,CERAMIC 500.0KHZ
X3142	645 024 8788	OSC,CRYSTAL 3.579545MHZ
	645 025 1108	OSC,CRYSTAL 3.579545MHZ
X3143	645 024 8801	OSC,CRYSTAL 4.433619MHZ
	645 025 1122	OSC,CRYSTAL 4.433619MHZ
X3145	645 028 1372	OSC,CRYSTAL 3.575611MHZ
X3146	645 028 1365	OSC,CRYSTAL 3.582056MHZ
X5101	645 040 7819	OSC,CRYSTAL 17.734475MHZ

****

610 295 5170 ASSY,PWB,POWER MV6A

INTEGRATED CIRCUIT		
IC601	409 179 4503	IC STR81145A
IC632	409 421 4701	IC STR-Z2156
IC652	409 308 8600	IC SE005N
CAPACITOR		
C602	403 222 1303	CERAMIC 1000P K 1K
C603	403 222 1303	CERAMIC 1000P K 1K
C604	403 146 5500	ELECT 2.2U M 450V
C605	403 070 0909	CERAMIC 0.1U K 50V
C606	403 180 4101	MT-POLYEST 0.1U K 630V
C607	403 126 4608	ELECT 100U M 25V
C608	404 085 7501	ELECT 820U M 250V
C609	404 085 7501	ELECT 820U M 250V
C611	403 332 7806	ELECT 2.2U M 200V
C612	403 237 7901	MT-COMPO 0.22U J 50V
C613	403 113 3805	CERAMIC 1000P K 50V
C614	403 164 0204	CERAMIC 0.1U Z 25V
C615	403 245 4404	CERAMIC 470P K 2K
C616	403 167 8603	CERAMIC 220P K 2K
C617	403 083 6806	POLYPRO 0.056U J 400V
C618	403 164 0204	CERAMIC 0.1U Z 25V
C619	403 164 0204	CERAMIC 0.1U Z 25V
C621	403 148 1807	ELECT 220U M 35V
C622	403 156 8805	ELECT 1U M 50V
C623	403 157 6800	CERAMIC 680P K 50V
C625	403 147 9606	ELECT 1000U M 10V
	403 301 2306	ELECT 1000U M 10V
C626	403 147 9606	ELECT 1000U M 10V
	403 301 2306	ELECT 1000U M 10V
C650	403 134 6403	ELECT 2200U M 16V
C651	403 134 6403	ELECT 2200U M 16V
C652	403 164 0204	CERAMIC 0.1U Z 25V
C653	403 155 1203	ELECT 3300U M 25V
C654	403 155 1203	ELECT 3300U M 25V
C655	403 164 0204	CERAMIC 0.1U Z 25V
C656	403 164 0204	CERAMIC 0.1U Z 25V
C657	403 126 4806	ELECT 3300U M 10V
	403 313 6408	ELECT 3300U M 10V
C658	403 155 5607	ELECT 220U M 10V
C659	403 126 4806	ELECT 3300U M 10V
	403 313 6408	ELECT 3300U M 10V
C661	403 126 4806	ELECT 3300U M 10V
	403 313 6408	ELECT 3300U M 10V
C662	403 156 9208	ELECT 4.7U M 50V
RESISTOR		
R600	401 008 8607	CARBON 220K JA 1/2W
R601	402 078 5701	WIRE WOUND 3.9 JA 7W
R605	401 068 1501	OXIDE-MT 4.7 JA 2W
R606	401 263 0101	MT-GLAZE 100K JA 1W
R607	401 263 0101	MT-GLAZE 100K JA 1W
R608	401 263 0101	MT-GLAZE 100K JA 1W
R609	401 263 0101	MT-GLAZE 100K JA 1W
R611	401 069 4402	OXIDE-MT 68K JA 2W
R612	401 069 4402	OXIDE-MT 68K JA 2W
R614	401 240 7208	MT-GLAZE 33 JA 1/3W
R615	401 105 5905	MT-GLAZE 560 JA 1/16W
R616	401 258 8303	MT-GLAZE 150 JA 1/3W
R617	401 105 0504	MT-GLAZE 1K JA 1/16W
R618	401 105 0603	MT-GLAZE 10K JA 1/16W
R619	402 079 7803	FUSIBLE RES 22 JH 1/4W
R621	401 166 0802	MT-GLAZE 330 JA 1/2W
R622	402 080 7809	MT-GLAZE 150 KA 1W
R623	402 080 7908	MT-GLAZE 180 KA 1W
R653	401 105 5905	MT-GLAZE 560 JA 1/16W
R654	401 105 0306	MT-GLAZE 10 JA 1/16W
R655	401 105 0504	MT-GLAZE 1K JA 1/16W
R656	402 079 7704	FUSIBLE RES 1.0 JH 1/4W
R657	401 105 5103	MT-GLAZE 47 JA 1/16W
VARIABLE RESISTOR		
VA601	407 130 2902	VARISTOR ENC471D-14A
VR652	645 002 3521	VR,SEMI,470 S
TRANSFORMER		
⚠ T621	645 043 3832	TRANS,POWER,PULSE
COIL		
⚠ L611	645 047 0493	INDUCTOR,4M
DIODE		
⚠ DB601	407 141 1000	DIODE RBV-408
DB601A	610 292 3193	HEAT SINK-A MV6A
DB601B	411 047 0104	SCR PAN+SW+W 3X8
DS601	407 175 2400	THYRISTOR CR12AM-12
DS601B	411 047 0104	SCR PAN+SW+W 3X8
DZ611	407 175 2806	ZD 02CZ12Y(TE85R)
DZ655	407 198 6607	ZD 02CZ6.8Z(TE85R)
D601	407 009 6901	DIODE RM11C
D602	407 009 6901	DIODE RM11C
D603	407 009 6901	DIODE RM11C
D611	407 190 4106	DIODE SFPL-52V
D612	407 124 6800	DIODE AG01A
D613	407 190 4106	DIODE SFPL-52V
D651	407 202 9808	DIODE FMB-26L
D651A	610 292 3223	HEAT SINK-D MV6A
D651B	411 047 0104	SCR PAN+SW+W 3X8
D652	407 164 2206	DIODE FMB-24L
D652B	411 047 0104	SCR PAN+SW+W 3X8
D653	407 190 4106	DIODE SFPL-52V
D655	407 164 2206	DIODE FMB-24L
D655B	411 047 0104	SCR PAN+SW+W 3X8
MISCELLANEOUS		
IC601A	610 292 3209	HEAT SINK-B MV6A
IC601B	411 046 8507	SCR PAN+SW+W 3X10
IC632A	610 292 3216	HEAT SINK-C MV6A
IC632B	411 047 0104	SCR PAN+SW+W 3X8
IC632D	411 047 0104	SCR PAN+SW+W 3X8
K6D	645 008 4485	PLUG,10P
⚠ PC611	408 014 9703	PC CNY17F-3OPT1+6
	408 016 8803	PC PC113 (VDE0884)
⚠ PC612	408 014 9703	PC CNY17F-3OPT1+6
	408 016 8803	PC PC113 (VDE0884)

****

610 295 5187 ASSY,PWB,SUBPOWER MV6A

TRANSISTOR		
Q6601	405 014 4509	TR 2SC2412K T146 R
	405 014 4608	TR 2SC2412K T146 S
	405 015 8704	TR 2SC2812-L6-TB
	405 015 8902	TR 2SC2812-L7-TB
	405 163 1602	TR 2SC2812N-L6-TB0

Ref. No.	Part No.	Description
	405 163 1701	TR 2SC2812N-L7-TB0
Q6602	405 047 9007	TR 2SB1204-S-TL
	405 047 9106	TR 2SB1204-T-TL
Q6603	405 014 4509	TR 2SC2412K T146 R
	405 014 4608	TR 2SC2412K T146 S
	405 015 8704	TR 2SC2812-L6-TB
	405 015 8902	TR 2SC2812-L7-TB
	405 163 1602	TR 2SC2812N-L6-TB0
	405 163 1701	TR 2SC2812N-L7-TB0
Q6607	405 014 4509	TR 2SC2412K T146 R
	405 014 4608	TR 2SC2412K T146 S
	405 015 8704	TR 2SC2812-L6-TB
	405 015 8902	TR 2SC2812-L7-TB
	405 163 1602	TR 2SC2812N-L6-TB0
	405 163 1701	TR 2SC2812N-L7-TB0
Q6608	405 014 4509	TR 2SC2412K T146 R
	405 014 4608	TR 2SC2412K T146 S
	405 015 8704	TR 2SC2812-L6-TB
	405 015 8902	TR 2SC2812-L7-TB
	405 163 1602	TR 2SC2812N-L6-TB0
	405 163 1701	TR 2SC2812N-L7-TB0
Q6609	405 144 6503	TR 2SK2312
Q6611	405 144 6503	TR 2SK2312
Q6616	405 047 9007	TR 2SB1204-S-TL
	405 047 9106	TR 2SB1204-T-TL
Q6617	405 014 4509	TR 2SC2412K T146 R
	405 014 4608	TR 2SC2412K T146 S
	405 015 8704	TR 2SC2812-L6-TB
	405 015 8902	TR 2SC2812-L7-TB
	405 163 1602	TR 2SC2812N-L6-TB0
	405 163 1701	TR 2SC2812N-L7-TB0
Q6618	405 014 4509	TR 2SC2412K T146 R
	405 014 4608	TR 2SC2412K T146 S
	405 015 8704	TR 2SC2812-L6-TB
	405 015 8902	TR 2SC2812-L7-TB
	405 163 1602	TR 2SC2812N-L6-TB0
	405 163 1701	TR 2SC2812N-L7-TB0
Q6621	405 047 9007	TR 2SB1204-S-TL
	405 047 9106	TR 2SB1204-T-TL
Q6622	405 014 4509	TR 2SC2412K T146 R
	405 014 4608	TR 2SC2412K T146 S
	405 015 8704	TR 2SC2812-L6-TB
	405 015 8902	TR 2SC2812-L7-TB
	405 163 1602	TR 2SC2812N-L6-TB0
	405 163 1701	TR 2SC2812N-L7-TB0
Q6623	405 014 4509	TR 2SC2412K T146 R
	405 014 4608	TR 2SC2412K T146 S
	405 015 8704	TR 2SC2812-L6-TB
	405 015 8902	TR 2SC2812-L7-TB
	405 163 1602	TR 2SC2812N-L6-TB0
	405 163 1701	TR 2SC2812N-L7-TB0
Q6631	405 014 4509	TR 2SC2412K T146 R
	405 014 4608	TR 2SC2412K T146 S
	405 015 8704	TR 2SC2812-L6-TB
	405 015 8902	TR 2SC2812-L7-TB
	405 163 1602	TR 2SC2812N-L6-TB0
	405 163 1701	TR 2SC2812N-L7-TB0
Q6632	405 014 4509	TR 2SC2412K T146 R
	405 014 4608	TR 2SC2412K T146 S
	405 015 8704	TR 2SC2812-L6-TB
	405 015 8902	TR 2SC2812-L7-TB
	405 163 1602	TR 2SC2812N-L6-TB0
	405 163 1701	TR 2SC2812N-L7-TB0
Q6633	405 014 4509	TR 2SC2412K T146 R
	405 014 4608	TR 2SC2412K T146 S
	405 015 8704	TR 2SC2812-L6-TB
	405 015 8902	TR 2SC2812-L7-TB
	405 163 1602	TR 2SC2812N-L6-TB0
	405 163 1701	TR 2SC2812N-L7-TB0
Q7602	405 047 9007	TR 2SB1204-S-TL
	405 047 9106	TR 2SB1204-T-TL
Q7603	405 014 4509	TR 2SC2412K T146 R
	405 014 4608	TR 2SC2412K T146 S
	405 015 8704	TR 2SC2812-L6-TB
	405 015 8902	TR 2SC2812-L7-TB
	405 163 1602	TR 2SC2812N-L6-TB0
	405 163 1701	TR 2SC2812N-L7-TB0
Q7604	405 014 4509	TR 2SC2412K T146 R
	405 014 4608	TR 2SC2412K T146 S
	405 015 8704	TR 2SC2812-L6-TB
	405 015 8902	TR 2SC2812-L7-TB
	405 163 1602	TR 2SC2812N-L6-TB0
	405 163 1701	TR 2SC2812N-L7-TB0
Q7611	405 014 4509	TR 2SC2412K T146 R
	405 014 4608	TR 2SC2412K T146 S
	405 015 8704	TR 2SC2812-L6-TB
	405 015 8902	TR 2SC2812-L7-TB
	405 163 1602	TR 2SC2812N-L6-TB0
	405 163 1701	TR 2SC2812N-L7-TB0
INTEGRATED CIRCUIT		
IC6601	409 459 5404	IC FA7612CN
IC6602	409 459 5404	IC FA7612CN
IC6607	409 459 5404	IC FA7612CN
IC6611	409 428 9600	IC M62399FP
IC6612	409 505 6102	IC MD1222N

Ref. No.	Part No.	Description
CAPACITOR		
C6601	403 358 1307	ELECT 330U M 25V
C6602	403 358 1307	ELECT 330U M 25V
C6603	403 358 1307	ELECT 330U M 25V
C6611	403 164 0204	CERAMIC 0.1U Z 25V
C6612	403 350 5006	ELECT 1000U M 25V
C6613	403 350 5006	ELECT 1000U M 25V
C6614	403 164 0204	CERAMIC 0.1U Z 25V
C6615	403 148 0701	ELECT 2200U M 25V
	403 313 6002	ELECT 2200U M 25V
C6617	403 149 9208	CERAMIC 0.01U Z 50V
C6618	403 134 6403	ELECT 2200U M 16V
C6621	403 119 7609	ELECT 2200U M 10V
	403 313 5906	ELECT 2200U M 10V
C6622	403 119 7609	ELECT 2200U M 10V
	403 313 5906	ELECT 2200U M 10V
C6623	403 149 9208	CERAMIC 0.01U Z 50V
C6629	403 148 0305	ELECT 470U M 16V
C6630	403 156 9208	ELECT 4.7U M 50V
C6636	403 358 1307	ELECT 330U M 25V
C6637	403 350 5006	ELECT 1000U M 25V
C6638	403 358 1307	ELECT 330U M 25V
C6639	403 350 5006	ELECT 1000U M 25V
C6641	403 113 3805	CERAMIC 1000P K 50V
C6642	403 149 1400	ELECT 33U M 25V
C6643	403 164 0204	CERAMIC 0.1U Z 25V
C6646	403 113 3805	CERAMIC 1000P K 50V
C6647	403 149 1400	ELECT 33U M 25V
C6648	403 164 0204	CERAMIC 0.1U Z 25V
C6649	403 149 1400	ELECT 33U M 25V
C6651	403 164 0204	CERAMIC 0.1U Z 25V
C6655	403 164 0204	CERAMIC 0.1U Z 25V
C6656	403 164 0204	CERAMIC 0.1U Z 25V
C6660	403 369 2904	ELECT 680U M 25V
C6661	403 358 1307	ELECT 330U M 25V
C6662	403 358 1307	ELECT 330U M 25V
C6663	403 369 2904	ELECT 680U M 25V
C6664	403 164 0204	CERAMIC 0.1U Z 25V
C6665	403 113 3805	CERAMIC 1000P K 50V
C6666	403 205 2808	CERAMIC 0.047U K 25V
C6667	403 149 9208	CERAMIC 0.01U Z 50V
C6668	403 369 2904	ELECT 680U M 25V
C6669	403 369 2904	ELECT 680U M 25V
C6672	403 149 9208	CERAMIC 0.01U Z 50V
C6675	403 164 0204	CERAMIC 0.1U Z 25V
C6676	403 164 0204	CERAMIC 0.1U Z 25V
C6677	403 164 0204	CERAMIC 0.1U Z 25V
C7601	403 113 3805	CERAMIC 1000P K 50V
C7602	403 358 1307	ELECT 330U M 25V
C7603	403 164 0204	CERAMIC 0.1U Z 25V
C7604	403 149 1400	ELECT 33U M 25V
C7605	403 350 5006	ELECT 1000U M 25V
C7607	403 358 1307	ELECT 330U M 25V
C7608	403 164 0204	CERAMIC 0.1U Z 25V
C7614	403 358 1307	ELECT 330U M 25V
C7626	403 164 0204	CERAMIC 0.1U Z 25V
C7627	403 164 0204	CERAMIC 0.1U Z 25V
C7631	403 358 1109	ELECT 100U M 25V
RESISTOR		
R6601	401 105 8203	MT-GLAZE 68K JA 1/16W
R6602	401 105 4304	MT-GLAZE 330K JA 1/16W
R6603	401 105 5103	MT-GLAZE 47 JA 1/16W
R6604	401 105 2201	MT-GLAZE 180K JA 1/16W
R6605	401 105 5301	MT-GLAZE 4.7K JA 1/16W
R6607	401 105 0603	MT-GLAZE 10K JA 1/16W
R6608	401 212 0206	MT-GLAZE 33K FA 1/16W
R6609	401 162 6303	MT-GLAZE 330 JA 1W
R6611	401 105 4502	MT-GLAZE 390 JA 1/16W
R6613	401 105 0603	MT-GLAZE 10K JA 1/16W
R6614	401 105 4007	MT-GLAZE 330 JA 1/16W
R6615	401 105 4007	MT-GLAZE 330 JA 1/16W
R6617	401 276 4707	MT-GLAZE 0.000 ZA 1/3W
R6621	401 105 8203	MT-GLAZE 68K JA 1/16W
R6622	401 105 4304	MT-GLAZE 330K JA 1/16W
R6623	401 105 5103	MT-GLAZE 47 JA 1/16W
R6624	401 105 2201	MT-GLAZE 180K JA 1/16W
R6625	401 105 5301	MT-GLAZE 4.7K JA 1/16W
R6627	401 105 0603	MT-GLAZE 10K JA 1/16W
R6628	401 212 0206	MT-GLAZE 33K FA 1/16W
R6629	401 162 6303	MT-GLAZE 330 JA 1W
R6633	401 105 0603	MT-GLAZE 10K JA 1/16W
R6634	401 105 5806	MT-GLAZE 56 JA 1/16W
R6637	401 276 4707	MT-GLAZE 0.000 ZA 1/3W
R6641	401 105 0603	MT-GLAZE 10K JA 1/16W
R6642	401 105 5301	MT-GLAZE 4.7K JA 1/16W
R6643	401 238 4400	MT-GLAZE 2.7K JA 1/3W
R6644	401 238 4202	MT-GLAZE 1.5K JA 1/3W
R6648	401 105 0603	MT-GLAZE 10K JA 1/16W
R6649	401 105 5301	MT-GLAZE 4.7K JA 1/16W
R6650	401 105 0603	MT-GLAZE 10K JA 1/16W
R6651	401 105 0603	MT-GLAZE 10K JA 1/16W
R6652	401 105 1600	MT-GLAZE 15K JA 1/16W
R6653	401 219 1602	MT-GLAZE 100K FA 1/16W
R6655	401 105 1600	MT-GLAZE 15K JA 1/16W
R6656	401 105 0702	MT-GLAZE 100K JA 1/16W

Ref. No.	Part No.	Description
R6661	402 079 4208	FUSIBLE RES 1.5 JH 1/10W
R6665	401 105 0504	MT-GLAZE 1K JA 1/16W
R6681	401 203 1106	MT-GLAZE 8.2 JA 1W
R6682	401 203 1106	MT-GLAZE 8.2 JA 1W
R6685	401 105 0603	MT-GLAZE 10K JA 1/16W
R6687	401 105 0603	MT-GLAZE 10K JA 1/16W
R6688	401 105 0603	MT-GLAZE 10K JA 1/16W
R6691	401 105 0702	MT-GLAZE 100K JA 1/16W
R6692	401 105 8005	MT-GLAZE 1M JA 1/16W
R6693	401 105 0603	MT-GLAZE 10K JA 1/16W
R6695	401 218 4505	MT-GLAZE 2.2K FA 1/16W
R6696	401 257 7000	MT-GLAZE 820 FA 1/16W
R6697	401 299 2803	MT-GLAZE 0.068 JA 1W
R6698	401 299 2803	MT-GLAZE 0.068 JA 1W
R7601	401 105 8203	MT-GLAZE 68K JA 1/16W
R7602	401 105 4304	MT-GLAZE 330K JA 1/16W
R7603	401 105 5103	MT-GLAZE 47 JA 1/16W
R7604	401 276 4707	MT-GLAZE 0.000 ZA 1/3W
R7607	401 105 4205	MT-GLAZE 33K JA 1/16W
R7611	401 162 6303	MT-GLAZE 330 JA 1W
R7614	401 105 2201	MT-GLAZE 180K JA 1/16W
R7615	401 105 5301	MT-GLAZE 4.7K JA 1/16W
R7617	401 105 0603	MT-GLAZE 10K JA 1/16W
R7618	401 105 0603	MT-GLAZE 10K JA 1/16W
R7625	401 105 2904	MT-GLAZE 22K JA 1/16W
R7626	401 105 2904	MT-GLAZE 22K JA 1/16W
R7627	401 105 0702	MT-GLAZE 100K JA 1/16W
R7628	401 105 0504	MT-GLAZE 1K JA 1/16W
R7629	401 105 2904	MT-GLAZE 22K JA 1/16W
R7631	401 105 8203	MT-GLAZE 68K JA 1/16W
R7632	401 105 1006	MT-GLAZE 1.2K JA 1/16W
R7633	401 105 7909	MT-GLAZE 0.000 ZA 1/16W
R7635	401 105 2904	MT-GLAZE 22K JA 1/16W
R7636	401 105 2904	MT-GLAZE 22K JA 1/16W
R7637	401 105 0702	MT-GLAZE 100K JA 1/16W
R7638	401 105 0504	MT-GLAZE 1K JA 1/16W
R7639	401 105 2904	MT-GLAZE 22K JA 1/16W
R7641	401 105 8203	MT-GLAZE 68K JA 1/16W
R7642	401 105 1006	MT-GLAZE 1.2K JA 1/16W
R7643	401 105 7909	MT-GLAZE 0.000 ZA 1/16W
R7645	401 105 2904	MT-GLAZE 22K JA 1/16W
R7646	401 105 2904	MT-GLAZE 22K JA 1/16W
R7647	401 105 0702	MT-GLAZE 100K JA 1/16W
R7648	401 105 0504	MT-GLAZE 1K JA 1/16W
R7649	401 105 2904	MT-GLAZE 22K JA 1/16W
R7651	401 105 8203	MT-GLAZE 68K JA 1/16W
R7652	401 105 1006	MT-GLAZE 1.2K JA 1/16W
R7653	401 105 7909	MT-GLAZE 0.000 ZA 1/16W
R7661	401 105 7909	MT-GLAZE 0.000 ZA 1/16W
R7662	401 105 5400	MT-GLAZE 47K JA 1/16W
R7663	401 105 5400	MT-GLAZE 47K JA 1/16W
R7664	401 105 7909	MT-GLAZE 0.000 ZA 1/16W
COIL		
L6601	645 007 8118	INDUCTOR,390U K
L6603	645 007 8118	INDUCTOR,390U K
L6604	645 007 7968	INDUCTOR,10U M
L6605	645 007 7968	INDUCTOR,10U M
L6611	645 007 7968	INDUCTOR,10U M
L6612	645 007 7968	INDUCTOR,10U M
L6613	645 047 6570	INDUCTOR,6.8U M
L7601	645 007 7968	INDUCTOR,10U M
DIODE		
DL6601	407 042 7309	LED TLR144
DZ6609	407 223 1003	ZENER DIODE 02DZ5.1Y(TPH3
DZ6617	407 223 0501	ZENER DIODE 02DZ12Y(TPH3)
DZ6623	407 223 1003	ZENER DIODE 02DZ5.1Y(TPH3
DZ6627	407 223 1003	ZENER DIODE 02DZ5.1Y(TPH3
D6601	407 149 0807	DIODE 1SS355-TE-17
D6602	407 004 0706	DIODE DCB015-TB
D6603	407 149 0807	DIODE 1SS355-TE-17
D6604	407 004 0706	DIODE DCB015-TB
D6605	407 004 0706	DIODE DCB015-TB
D6606	407 213 8500	DIODE SPB-G56SVR
D6607	407 149 0807	DIODE 1SS355-TE-17
D6608	407 213 8500	DIODE SPB-G56SVR
D6611	407 004 0706	DIODE DCB015-TB
D6613	407 004 0706	DIODE DCB015-TB
D6622	407 149 0807	DIODE 1SS355-TE-17
D6623	407 223 5001	DIODE D1FM3
D7601	407 213 8500	DIODE SPB-G56SVR
D7602	407 004 0706	DIODE DCB015-TB
MISCELLANEOUS		
TP7611	610 012 3991	JUNPER LEAD
TP7613	610 220 7101	PIN
K66A	645 008 4485	PLUG,10P
K66D	645 030 6358	PLUG,32P
K66E	645 004 2911	PLUG,5P
K66F	645 004 2928	PLUG,6P
K66H	645 005 7373	PLUG,3P
K66J	645 005 7373	PLUG,3P
K66K	645 005 7373	PLUG,3P

****

610 295 5194 ASSY,PWB,RGB FANNET MV6A

Ref. No.	Part No.	Description
CAPACITOR		
C2691	403 358 1307	ELECT 330U M 25V
C2692	403 164 0204	CERAMIC 0.1U Z 25V
C2693	403 358 1307	ELECT 330U M 25V
C2694	403 164 0204	CERAMIC 0.1U Z 25V
C2696	403 358 1307	ELECT 330U M 25V
C2697	403 164 0204	CERAMIC 0.1U Z 25V
C2698	403 358 1307	ELECT 330U M 25V
C2699	403 358 1307	ELECT 330U M 25V
RESISTOR		
R2691	401 105 0603	MT-GLAZE 10K JA 1/16W
R2692	401 105 0603	MT-GLAZE 10K JA 1/16W
R2693	401 105 0603	MT-GLAZE 10K JA 1/16W
R2694	401 105 0603	MT-GLAZE 10K JA 1/16W
R2695	401 105 0603	MT-GLAZE 10K JA 1/16W
DIODE		
D2691	407 149 0807	DIODE 1SS355-TE-17
D2692	407 149 0807	DIODE 1SS355-TE-17
D2693	407 149 0807	DIODE 1SS355-TE-17
D2694	407 149 0807	DIODE 1SS355-TE-17
D2695	407 149 0807	DIODE 1SS355-TE-17
MISCELLANEOUS		
K56C	645 004 2928	PLUG,6P
K56E	645 005 7373	PLUG,3P
K56F	645 005 7373	PLUG,3P
K56G	645 005 7373	PLUG,3P
K56H	645 004 2898	PLUG,3P
K56J	645 004 2898	PLUG,3P

****

610 295 5200 ASSY,PWB,LENS NET MV6A

MISCELLANEOUS		
K56X	645 004 2706	PLUG,4P
K56Y	645 004 2706	PLUG,4P

****

610 295 5217 ASSY,PWB, F-G NET MV6A

MISCELLANEOUS		
K56V	645 036 1326	TERMINAL
K56W	645 036 1326	TERMINAL

****

610 295 5224 ASSY,PWB,OPTICAL FANNET

CAPACITOR		
C2641	403 358 1109	ELECT 100U M 25V
RESISTOR		
R2641	401 105 0603	MT-GLAZE 10K JA 1/16W
R2642	401 105 0603	MT-GLAZE 10K JA 1/16W
R2643	401 190 1707	MT-GLAZE 0.000 ZA 1W
R2644	401 105 0603	MT-GLAZE 10K JA 1/16W
R2645	401 190 1707	MT-GLAZE 0.000 ZA 1W
R2646	401 105 0603	MT-GLAZE 10K JA 1/16W
DIODE		
D2641	407 149 0807	DIODE 1SS355-TE-17
D2642	407 149 0807	DIODE 1SS355-TE-17
D2643	407 149 0807	DIODE 1SS355-TE-17
D2644	407 149 0807	DIODE 1SS355-TE-17
MISCELLANEOUS		
TP2641	610 012 3991	JUNPER LEAD
K56K	645 004 2911	PLUG,5P
K56L	645 004 2904	PLUG,4P
K56M	645 004 2904	PLUG,4P
K56N	645 005 7373	PLUG,3P
K56P	645 004 2898	PLUG,3P
K56Q	645 004 2898	PLUG,3P
K56R	645 004 2898	PLUG,3P
K56S	645 004 2898	PLUG,3P

****

610 292 1373 ASSY,PWB,CGMOTHER MV6A

TRANSISTOR		
Q9001	405 014 4509	TR 2SC2412K T146 R
	405 014 4608	TR 2SC2412K T146 S
	405 015 8704	TR 2SC2812-L6-TB
	405 015 8902	TR 2SC2812-L7-TB
	405 163 1602	TR 2SC2812N-L6-TB0
	405 163 1701	TR 2SC2812N-L7-TB0
Q9002	405 134 5905	TR 2SA1037AK-T146-R
	405 147 2205	TR 2SA1037AK-S-T146
	405 002 0308	TR 2SA1037K T146 R
	405 002 0407	TR 2SA1037K T146 S
	405 002 6706	TR 2SA1179-M6-TB
	405 002 6904	TR 2SA1179-M7-TB
	405 163 1503	TR 2SA1179N-M6-TB
	405 163 2708	TR 2SA1179N-M7-TB
Q9003	405 014 4509	TR 2SC2412K T146 R
	405 014 4608	TR 2SC2412K T146 S
	405 015 8704	TR 2SC2812-L6-TB
	405 015 8902	TR 2SC2812-L7-TB
	405 163 1602	TR 2SC2812N-L6-TB0
	405 163 1701	TR 2SC2812N-L7-TB0

Ref. No.	Part No.	Description
Q9004	405 134 5905	TR 2SA1037AK-T146-R
	405 147 2205	TR 2SA1037AK-S-T146
	405 002 0308	TR 2SA1037K T146 R
	405 002 0407	TR 2SA1037K T146 S
	405 002 6706	TR 2SA1179-M6-TB
	405 002 6904	TR 2SA1179-M7-TB
	405 163 1503	TR 2SA1179N-M6-TB
	405 163 2708	TR 2SA1179N-M7-TB
Q9012	405 047 9007	TR 2SB1204-S-TL
Q9013	405 014 4509	TR 2SC2412K T146 R
	405 014 4608	TR 2SC2412K T146 S
	405 015 8704	TR 2SC2812-L6-TB
	405 015 8902	TR 2SC2812-L7-TB
	405 163 1602	TR 2SC2812N-L6-TB0
	405 163 1701	TR 2SC2812N-L7-TB0
Q9016	405 047 9007	TR 2SB1204-S-TL
Q9017	405 014 4509	TR 2SC2412K T146 R
	405 014 4608	TR 2SC2412K T146 S
	405 015 8704	TR 2SC2812-L6-TB
	405 015 8902	TR 2SC2812-L7-TB
	405 163 1602	TR 2SC2812N-L6-TB0
	405 163 1701	TR 2SC2812N-L7-TB0
Q9021	405 047 9007	TR 2SB1204-S-TL
Q9022	405 014 4509	TR 2SC2412K T146 R
	405 014 4608	TR 2SC2412K T146 S
	405 015 8704	TR 2SC2812-L6-TB
	405 015 8902	TR 2SC2812-L7-TB
	405 163 1602	TR 2SC2812N-L6-TB0
	405 163 1701	TR 2SC2812N-L7-TB0
Q9027	405 014 4509	TR 2SC2412K T146 R
	405 014 4608	TR 2SC2412K T146 S
	405 015 8704	TR 2SC2812-L6-TB
	405 015 8902	TR 2SC2812-L7-TB
	405 163 1602	TR 2SC2812N-L6-TB0
	405 163 1701	TR 2SC2812N-L7-TB0
Q9028	405 014 4509	TR 2SC2412K T146 R
	405 014 4608	TR 2SC2412K T146 S
	405 015 8704	TR 2SC2812-L6-TB
	405 015 8902	TR 2SC2812-L7-TB
	405 163 1602	TR 2SC2812N-L6-TB0
	405 163 1701	TR 2SC2812N-L7-TB0
INTEGRATED CIRCUIT		
IC9001	409 438 5500	IC TC4052BFT
IC9002	409 438 5500	IC TC4052BFT
IC9005	409 153 5601	IC MC74F244M
	409 451 4108	IC SN74F244NSR
IC9006	409 476 0208	IC AD8184AR
IC9007	409 476 0208	IC AD8184AR
IC9008	409 476 0208	IC AD8184AR
IC9009	409 461 7304	IC AD8057ART
IC9011	409 461 7304	IC AD8057ART
IC9012	409 461 7304	IC AD8057ART
IC9013	409 438 5500	IC TC4052BFT
IC9014	409 445 7306	IC QS3125QX
IC9021	409 404 6302	IC M62320FP
IC9022	409 404 6302	IC M62320FP
IC9091	409 416 6505	IC BA05FP-E2
IC9092	409 416 6505	IC BA05FP-E2
IC9093	409 416 6505	IC BA05FP-E2
CAPACITOR		
C9001	403 175 4505	ELECT 47U M 6.3V
C9002	403 164 0204	CERAMIC 0.1U Z 25V
C9003	403 229 3508	ELECT 100U M 16V
C9004	403 164 0204	CERAMIC 0.1U Z 25V
C9005	403 205 7803	TA-SOLID 2.2U M 16V
C9006	403 205 7803	TA-SOLID 2.2U M 16V
C9008	403 205 7803	TA-SOLID 2.2U M 16V
C9009	403 205 7803	TA-SOLID 2.2U M 16V
C9011	403 205 7803	TA-SOLID 2.2U M 16V
C9012	403 205 7803	TA-SOLID 2.2U M 16V
C9014	403 175 4505	ELECT 47U M 6.3V
C9015	403 164 0204	CERAMIC 0.1U Z 25V
C9016	403 175 4505	ELECT 47U M 6.3V
C9017	403 164 0204	CERAMIC 0.1U Z 25V
C9018	403 175 4505	ELECT 47U M 6.3V
C9019	403 164 0204	CERAMIC 0.1U Z 25V
C9021	403 164 0204	CERAMIC 0.1U Z 25V
C9022	403 175 4505	ELECT 47U M 6.3V
C9023	403 164 0204	CERAMIC 0.1U Z 25V
C9024	403 175 4505	ELECT 47U M 6.3V
C9025	403 164 0204	CERAMIC 0.1U Z 25V
C9026	403 175 4505	ELECT 47U M 6.3V
C9027	403 164 0204	CERAMIC 0.1U Z 25V
C9028	403 175 4505	ELECT 47U M 6.3V
C9029	403 164 0204	CERAMIC 0.1U Z 25V
C9031	403 175 4505	ELECT 47U M 6.3V
C9032	403 164 0204	CERAMIC 0.1U Z 25V
C9033	403 175 4505	ELECT 47U M 6.3V
C9034	403 164 0204	CERAMIC 0.1U Z 25V
C9035	403 175 4505	ELECT 47U M 6.3V
C9037	403 157 1904	CERAMIC 10P D 50V
C9038	401 105 7909	MT-GLAZE 0.000 ZA 1/16W
C9039	403 164 0204	CERAMIC 0.1U Z 25V
C9041	403 175 4505	ELECT 47U M 6.3V
C9042	403 164 0204	CERAMIC 0.1U Z 25V
C9043	403 175 4505	ELECT 47U M 6.3V
C9045	403 157 1904	CERAMIC 10P D 50V
C9046	401 105 7909	MT-GLAZE 0.000 ZA 1/16W
C9047	403 164 0204	CERAMIC 0.1U Z 25V
C9048	403 175 4505	ELECT 47U M 6.3V
C9049	403 164 0204	CERAMIC 0.1U Z 25V
C9051	403 175 4505	ELECT 47U M 6.3V
C9053	403 157 1904	CERAMIC 10P D 50V
C9054	401 105 7909	MT-GLAZE 0.000 ZA 1/16W
C9055	403 164 0204	CERAMIC 0.1U Z 25V
C9056	403 175 4505	ELECT 47U M 6.3V
C9057	403 280 1604	ELECT 220U M 16V
C9058	403 280 1604	ELECT 220U M 16V
C9059	403 280 0805	ELECT 330U M 6.3V
C9061	403 280 0805	ELECT 330U M 6.3V
C9062	403 280 1604	ELECT 220U M 16V
C9063	403 280 1604	ELECT 220U M 16V
C9064	403 280 0805	ELECT 330U M 6.3V
C9065	403 280 0805	ELECT 330U M 6.3V
C9066	403 175 4505	ELECT 47U M 6.3V
C9067	403 164 0204	CERAMIC 0.1U Z 25V
C9068	403 175 4505	ELECT 47U M 6.3V
C9069	403 164 0204	CERAMIC 0.1U Z 25V
C9070	403 229 3508	ELECT 100U M 16V
C9071	403 164 0204	CERAMIC 0.1U Z 25V
C9072	403 175 4505	ELECT 47U M 6.3V
C9073	403 164 0204	CERAMIC 0.1U Z 25V
C9074	403 229 3508	ELECT 100U M 16V
C9075	403 164 0204	CERAMIC 0.1U Z 25V
C9076	403 175 4505	ELECT 47U M 6.3V
C9077	403 164 0204	CERAMIC 0.1U Z 25V
C9078	403 229 3508	ELECT 100U M 16V
C9079	403 164 0204	CERAMIC 0.1U Z 25V
C9084	403 164 0204	CERAMIC 0.1U Z 25V
C9091	403 366 6202	CERAMIC 22U Z 10V
C9092	403 164 0204	CERAMIC 0.1U Z 25V
C9093	403 162 4006	ELECT 22U M 6.3V
C9094	403 164 0204	CERAMIC 0.1U Z 25V
C9095	403 162 4006	ELECT 22U M 6.3V
C9096	403 164 0204	CERAMIC 0.1U Z 25V
RESISTOR		
R9001	401 105 0405	MT-GLAZE 100 JA 1/16W
R9002	401 105 0405	MT-GLAZE 100 JA 1/16W
R9003	401 105 0603	MT-GLAZE 10K JA 1/16W
R9004	401 105 0405	MT-GLAZE 100 JA 1/16W
R9005	401 105 0405	MT-GLAZE 100 JA 1/16W
R9006	401 105 0405	MT-GLAZE 100 JA 1/16W
R9007	401 105 0405	MT-GLAZE 100 JA 1/16W
R9008	401 105 0603	MT-GLAZE 10K JA 1/16W
R9009	401 105 0405	MT-GLAZE 100 JA 1/16W
R9010	401 105 0306	MT-GLAZE 10 JA 1/16W
R9011	401 105 0405	MT-GLAZE 100 JA 1/16W
R9012	401 105 0603	MT-GLAZE 10K JA 1/16W
R9013	401 105 0603	MT-GLAZE 10K JA 1/16W
R9015	401 105 0603	MT-GLAZE 10K JA 1/16W
R9017	401 105 0603	MT-GLAZE 10K JA 1/16W
R9018	401 105 0603	MT-GLAZE 10K JA 1/16W
R9019	401 105 0603	MT-GLAZE 10K JA 1/16W
R9020	401 105 0603	MT-GLAZE 10K JA 1/16W
R9021	401 105 0603	MT-GLAZE 10K JA 1/16W
R9022	401 105 2805	MT-GLAZE 2.2K JA 1/16W
R9023	401 105 2805	MT-GLAZE 2.2K JA 1/16W
R9024	401 105 0603	MT-GLAZE 10K JA 1/16W
R9025	401 105 2805	MT-GLAZE 2.2K JA 1/16W
R9026	401 105 2805	MT-GLAZE 2.2K JA 1/16W
R9027	401 105 0405	MT-GLAZE 100 JA 1/16W
R9028	401 105 0702	MT-GLAZE 100K JA 1/16W
R9029	401 105 0405	MT-GLAZE 100 JA 1/16W
R9030	401 105 0603	MT-GLAZE 10K JA 1/16W
R9031	401 105 0702	MT-GLAZE 100K JA 1/16W
R9033	401 105 0702	MT-GLAZE 100K JA 1/16W
R9034	401 105 0405	MT-GLAZE 100 JA 1/16W
R9035	401 105 0702	MT-GLAZE 100K JA 1/16W
R9036	401 105 0702	MT-GLAZE 100K JA 1/16W
R9037	401 105 0405	MT-GLAZE 100 JA 1/16W
R9038	401 105 0702	MT-GLAZE 100K JA 1/16W
R9039	401 105 0405	MT-GLAZE 100 JA 1/16W
R9040	401 105 0603	MT-GLAZE 10K JA 1/16W
R9041	401 105 0702	MT-GLAZE 100K JA 1/16W
R9042	401 105 0405	MT-GLAZE 100 JA 1/16W
R9043	401 105 0702	MT-GLAZE 100K JA 1/16W
R9047	401 105 0603	MT-GLAZE 10K JA 1/16W
R9048	401 105 0603	MT-GLAZE 10K JA 1/16W
R9049	401 105 0603	MT-GLAZE 10K JA 1/16W
R9050	401 105 0603	MT-GLAZE 10K JA 1/16W
R9051	401 105 0603	MT-GLAZE 10K JA 1/16W
R9052	401 105 0702	MT-GLAZE 100K JA 1/16W
R9053	401 105 0405	MT-GLAZE 100 JA 1/16W
R9054	401 105 0702	MT-GLAZE 100K JA 1/16W
R9055	401 105 0405	MT-GLAZE 100 JA 1/16W
R9056	401 105 0702	MT-GLAZE 100K JA 1/16W
R9057	401 105 0405	MT-GLAZE 100 JA 1/16W
R9058	401 105 0702	MT-GLAZE 100K JA 1/16W
R9063	401 105 7909	MT-GLAZE 0.000 ZA 1/16W
R9064	401 105 0405	MT-GLAZE 100 JA 1/16W

Ref. No.	Part No.	Description
R9065	401 105 0405	MT-GLAZE 100 JA 1/16W
R9066	401 105 0603	MT-GLAZE 10K JA 1/16W
R9067	401 105 0603	MT-GLAZE 10K JA 1/16W
R9068	401 105 0603	MT-GLAZE 10K JA 1/16W
R9069	401 105 0603	MT-GLAZE 10K JA 1/16W
R9071	401 105 0603	MT-GLAZE 10K JA 1/16W
R9072	401 105 0603	MT-GLAZE 10K JA 1/16W
R9073	401 105 3307	MT-GLAZE 2.7K JA 1/16W
R9074	401 105 1501	MT-GLAZE 1.5K JA 1/16W
R9075	401 105 5301	MT-GLAZE 4.7K JA 1/16W
R9076	401 105 0603	MT-GLAZE 10K JA 1/16W
R9081	401 226 1206	MT-GLAZE 150 FA 1/16W
R9082	401 226 1206	MT-GLAZE 150 FA 1/16W
R9083	401 105 0405	MT-GLAZE 100 JA 1/16W
R9084	401 226 1206	MT-GLAZE 150 FA 1/16W
R9085	401 226 1206	MT-GLAZE 150 FA 1/16W
R9086	401 105 0405	MT-GLAZE 100 JA 1/16W
R9087	401 226 1206	MT-GLAZE 150 FA 1/16W
R9088	401 226 1206	MT-GLAZE 150 FA 1/16W
R9089	401 105 0405	MT-GLAZE 100 JA 1/16W
R9093	401 105 0603	MT-GLAZE 10K JA 1/16W
R9094	401 105 0306	MT-GLAZE 10 JA 1/16W
R9095	401 105 0405	MT-GLAZE 100 JA 1/16W
R9096	401 105 0405	MT-GLAZE 100 JA 1/16W
R9097	401 105 0306	MT-GLAZE 10 JA 1/16W
R9098	401 226 1206	MT-GLAZE 150 FA 1/16W
R9099	401 226 1206	MT-GLAZE 150 FA 1/16W
R9100	401 105 3307	MT-GLAZE 2.7K JA 1/16W
R9101	401 105 0405	MT-GLAZE 100 JA 1/16W
R9102	401 226 1206	MT-GLAZE 150 FA 1/16W
R9103	401 226 1206	MT-GLAZE 150 FA 1/16W
R9104	401 105 0405	MT-GLAZE 100 JA 1/16W
R9105	401 226 1206	MT-GLAZE 150 FA 1/16W
R9106	401 226 1206	MT-GLAZE 150 FA 1/16W
R9107	401 105 0405	MT-GLAZE 100 JA 1/16W
R9110	401 105 1501	MT-GLAZE 1.5K JA 1/16W
R9111	401 105 0603	MT-GLAZE 10K JA 1/16W
R9112	401 105 0306	MT-GLAZE 10 JA 1/16W
R9113	401 105 0405	MT-GLAZE 100 JA 1/16W
R9114	401 105 0405	MT-GLAZE 100 JA 1/16W
R9115	401 105 0306	MT-GLAZE 10 JA 1/16W
R9116	401 226 1206	MT-GLAZE 150 FA 1/16W
R9117	401 226 1206	MT-GLAZE 150 FA 1/16W
R9118	401 105 0405	MT-GLAZE 100 JA 1/16W
R9119	401 226 1206	MT-GLAZE 150 FA 1/16W
R9120	401 105 5301	MT-GLAZE 4.7K JA 1/16W
R9121	401 226 1206	MT-GLAZE 150 FA 1/16W
R9122	401 105 0405	MT-GLAZE 100 JA 1/16W
R9123	401 226 1206	MT-GLAZE 150 FA 1/16W
R9124	401 226 1206	MT-GLAZE 150 FA 1/16W
R9125	401 105 0405	MT-GLAZE 100 JA 1/16W
R9128	401 105 0603	MT-GLAZE 10K JA 1/16W
R9129	401 105 0306	MT-GLAZE 10 JA 1/16W
R9130	401 105 0603	MT-GLAZE 10K JA 1/16W
R9131	401 105 0405	MT-GLAZE 100 JA 1/16W
R9132	401 105 0405	MT-GLAZE 100 JA 1/16W
R9133	401 105 0306	MT-GLAZE 10 JA 1/16W
R9134	401 105 0405	MT-GLAZE 100 JA 1/16W
R9135	401 257 7000	MT-GLAZE 820 FA 1/16W
R9136	401 257 7000	MT-GLAZE 820 FA 1/16W
R9137	401 105 0405	MT-GLAZE 100 JA 1/16W
R9138	401 257 7000	MT-GLAZE 820 FA 1/16W
R9139	401 257 7000	MT-GLAZE 820 FA 1/16W
R9141	401 105 0405	MT-GLAZE 100 JA 1/16W
R9142	401 257 7000	MT-GLAZE 820 FA 1/16W
R9143	401 257 7000	MT-GLAZE 820 FA 1/16W
R9144	401 113 4402	MT-GLAZE 75 JA 1/16W
R9145	401 113 4402	MT-GLAZE 75 JA 1/16W
R9146	401 113 4402	MT-GLAZE 75 JA 1/16W
R9158	401 105 3307	MT-GLAZE 2.7K JA 1/16W
R9159	401 105 1501	MT-GLAZE 1.5K JA 1/16W
R9160	401 105 5301	MT-GLAZE 4.7K JA 1/16W
R9161	401 105 0603	MT-GLAZE 10K JA 1/16W
R9171	401 105 0405	MT-GLAZE 100 JA 1/16W
R9172	401 105 0405	MT-GLAZE 100 JA 1/16W
R9174	401 105 0405	MT-GLAZE 100 JA 1/16W
R9175	401 105 0405	MT-GLAZE 100 JA 1/16W
R9176	401 105 0405	MT-GLAZE 100 JA 1/16W
R9177	401 105 0405	MT-GLAZE 100 JA 1/16W
R9183	401 105 0603	MT-GLAZE 10K JA 1/16W
R9184	401 105 0603	MT-GLAZE 10K JA 1/16W
R9185	401 105 0603	MT-GLAZE 10K JA 1/16W
R9186	401 105 0603	MT-GLAZE 10K JA 1/16W
R9187	401 105 0603	MT-GLAZE 10K JA 1/16W
R9188	401 105 0603	MT-GLAZE 10K JA 1/16W
R9189	401 105 0603	MT-GLAZE 10K JA 1/16W
R9191	401 105 0603	MT-GLAZE 10K JA 1/16W
R9501	401 105 0603	MT-GLAZE 10K JA 1/16W
R9502	401 105 5301	MT-GLAZE 4.7K JA 1/16W
R9503	401 105 5301	MT-GLAZE 4.7K JA 1/16W
R9504	401 105 0603	MT-GLAZE 10K JA 1/16W
R9505	401 105 5301	MT-GLAZE 4.7K JA 1/16W
R9506	401 105 5301	MT-GLAZE 4.7K JA 1/16W
R9507	401 105 0405	MT-GLAZE 100 JA 1/16W
R9508	401 105 5301	MT-GLAZE 4.7K JA 1/16W
R9509	401 105 5301	MT-GLAZE 4.7K JA 1/16W
R9511	401 105 0603	MT-GLAZE 10K JA 1/16W
R9512	401 105 0603	MT-GLAZE 10K JA 1/16W
R9513	401 105 0603	MT-GLAZE 10K JA 1/16W
R9515	401 105 0405	MT-GLAZE 100 JA 1/16W
R9516	401 105 0405	MT-GLAZE 100 JA 1/16W
R9517	401 105 0405	MT-GLAZE 100 JA 1/16W
R9518	401 105 0405	MT-GLAZE 100 JA 1/16W
R9519	401 105 0405	MT-GLAZE 100 JA 1/16W
R9521	401 105 0405	MT-GLAZE 100 JA 1/16W
R9522	401 105 0405	MT-GLAZE 100 JA 1/16W
COIL		
L9001	645 026 1008	INDUCTOR,3.3U M
L9002	645 026 1008	INDUCTOR,3.3U M
L9003	645 026 1008	INDUCTOR,3.3U M
L9004	645 026 1008	INDUCTOR,3.3U M
L9005	645 026 1008	INDUCTOR,3.3U M
L9006	645 026 1008	INDUCTOR,3.3U M
DIODE		
D9001	407 149 0807	DIODE 1SS355-TE-17
D9002	407 149 0807	DIODE 1SS355-TE-17
D9003	407 149 0807	DIODE 1SS355-TE-17
D9011	407 206 5608	ZENER DIODE UDZS-TE-1710B
D9012	407 206 5608	ZENER DIODE UDZS-TE-1710B
D9013	407 223 1102	ZENER DIODE 02DZ6.2Y(TPH3
D9014	407 223 1102	ZENER DIODE 02DZ6.2Y(TPH3
D9021	407 190 4106	DIODE SFPL-52V
MISCELLANEOUS		
K90A	645 049 9708	SOCKET,PWB 40P
K90B	645 049 9708	SOCKET,PWB 40P
K90C	645 041 6064	PLUG,I/O 176P
K90C1	610 289 9788	JOINT GUIDE PIN ML6A
K90C2	610 289 9788	JOINT GUIDE PIN ML6A
K90D	645 041 6064	PLUG,I/O 176P
K90D1	610 289 9788	JOINT GUIDE PIN ML6A
K90D2	610 289 9788	JOINT GUIDE PIN ML6A
K90E	645 041 6064	PLUG,I/O 176P
K90E1	610 289 9788	JOINT GUIDE PIN ML6A
K90E2	610 289 9788	JOINT GUIDE PIN ML6A
K90G	645 032 6523	PLUG,13P
K90K	645 009 8390	PLUG,ANT 2P
K90L	645 009 8390	PLUG,ANT 2P
K90M	645 009 8390	PLUG,ANT 2P
K90N	645 036 1326	TERMINAL
K90P	645 036 1326	TERMINAL
K90Q	645 041 8136	PLUG,40P

****

610 292 1380 ASSY,PWB,MOTOR&AUDIO MV6A

TRANSISTOR		
Q001	405 014 4509	TR 2SC2412K T146 R
	405 014 4608	TR 2SC2412K T146 S
	405 015 8704	TR 2SC2812-L6-TB
	405 015 8902	TR 2SC2812-L7-TB
	405 163 1602	TR 2SC2812N-L6-TB0
	405 163 1701	TR 2SC2812N-L7-TB0
Q003	405 014 4509	TR 2SC2412K T146 R
	405 014 4608	TR 2SC2412K T146 S
	405 015 8704	TR 2SC2812-L6-TB
	405 015 8902	TR 2SC2812-L7-TB
	405 163 1602	TR 2SC2812N-L6-TB0
	405 163 1701	TR 2SC2812N-L7-TB0
Q004	405 014 4509	TR 2SC2412K T146 R
	405 014 4608	TR 2SC2412K T146 S
	405 015 8704	TR 2SC2812-L6-TB
	405 015 8902	TR 2SC2812-L7-TB
	405 163 1602	TR 2SC2812N-L6-TB0
	405 163 1701	TR 2SC2812N-L7-TB0
Q005	405 014 4509	TR 2SC2412K T146 R
	405 014 4608	TR 2SC2412K T146 S
	405 015 8704	TR 2SC2812-L6-TB
	405 015 8902	TR 2SC2812-L7-TB
	405 163 1602	TR 2SC2812N-L6-TB0
	405 163 1701	TR 2SC2812N-L7-TB0
INTEGRATED CIRCUIT		
IC001	409 017 7208	IC LA4261
IC1601	409 114 4803	IC LB1641
IC1611	409 114 4803	IC LB1641
IC1631	409 085 1900	IC LB1645N
CAPACITOR		
C001	403 280 1802	ELECT 100U M 25V
C003	403 215 2201	CERAMIC 0.01U K 50V
C004	403 280 1802	ELECT 100U M 25V
C006	403 215 2201	CERAMIC 0.01U K 50V
C007	403 280 1802	ELECT 100U M 25V
C008	403 162 6604	ELECT 2.2U M 50V
C009	403 298 9609	CERAMIC 0.1U K 16V
C010	403 298 9609	CERAMIC 0.1U K 16V
C011	403 343 4900	ELECT 470U M 25V
C012	403 298 9609	CERAMIC 0.1U K 16V
C013	403 343 4900	ELECT 470U M 25V
C014	403 343 4900	ELECT 470U M 25V
C015	403 266 8801	NP-ELECT 2.2U M 50V
C016	403 266 8801	NP-ELECT 2.2U M 50V

Ref. No.	Part No.	Description
C017	403 280 1802	ELECT 100U M 25V
C018	403 343 4900	ELECT 470U M 25V
C019	403 343 4900	ELECT 470U M 25V
C021	403 343 4900	ELECT 470U M 25V
C026	403 343 4900	ELECT 470U M 25V
C1602	403 215 2201	CERAMIC 0.01U K 50V
C1603	403 215 2201	CERAMIC 0.01U K 50V
C1612	403 215 2201	CERAMIC 0.01U K 50V
C1613	403 215 2201	CERAMIC 0.01U K 50V
C1631	403 343 4900	ELECT 470U M 25V
C1632	403 215 2201	CERAMIC 0.01U K 50V
C1633	403 343 4900	ELECT 470U M 25V
C1642	403 215 2201	CERAMIC 0.01U K 50V
C1643	403 281 5205	CERAMIC 0.22U Z 16V
C1653	403 343 4900	ELECT 470U M 25V
C1654	403 215 2201	CERAMIC 0.01U K 50V
C1656	403 343 4900	ELECT 470U M 25V
C1893	403 164 0204	CERAMIC 0.1U Z 25V
C1894	403 164 0204	CERAMIC 0.1U Z 25V
C1895	403 164 0204	CERAMIC 0.1U Z 25V
RESISTOR		
R001	401 105 3208	MT-GLAZE 270 JA 1/16W
R002	401 105 5301	MT-GLAZE 4.7K JA 1/16W
R003	401 105 2102	MT-GLAZE 18K JA 1/16W
R004	401 105 5301	MT-GLAZE 4.7K JA 1/16W
R005	401 105 2102	MT-GLAZE 18K JA 1/16W
R006	401 105 3208	MT-GLAZE 270 JA 1/16W
R007	401 105 2706	MT-GLAZE 220 JA 1/16W
R008	401 105 0603	MT-GLAZE 10K JA 1/16W
R009	401 105 4205	MT-GLAZE 33K JA 1/16W
R011	401 148 6006	MT-GLAZE 2.2 JA 1/16W
R012	401 105 5905	MT-GLAZE 560 JA 1/16W
R013	401 148 6006	MT-GLAZE 2.2 JA 1/16W
R014	401 105 5905	MT-GLAZE 560 JA 1/16W
R016	401 105 0504	MT-GLAZE 1K JA 1/16W
R017	401 105 6001	MT-GLAZE 5.6K JA 1/16W
R018	401 105 0603	MT-GLAZE 10K JA 1/16W
R021	401 105 7909	MT-GLAZE 0.000 ZA 1/16W
R022	401 105 6001	MT-GLAZE 5.6K JA 1/16W
R023	401 105 7909	MT-GLAZE 0.000 ZA 1/16W
R024	401 105 6001	MT-GLAZE 5.6K JA 1/16W
R028	401 105 7909	MT-GLAZE 0.000 ZA 1/16W
R031	401 105 7909	MT-GLAZE 0.000 ZA 1/16W
R035	401 105 7909	MT-GLAZE 0.000 ZA 1/16W
R036	401 105 7909	MT-GLAZE 0.000 ZA 1/16W
R1601	401 105 4106	MT-GLAZE 3.3K JA 1/16W
R1602	401 105 4106	MT-GLAZE 3.3K JA 1/16W
R1603	401 105 0504	MT-GLAZE 1K JA 1/16W
R1604	401 105 7909	MT-GLAZE 0.000 ZA 1/16W
R1611	401 105 4106	MT-GLAZE 3.3K JA 1/16W
R1612	401 105 4106	MT-GLAZE 3.3K JA 1/16W
R1613	401 105 0504	MT-GLAZE 1K JA 1/16W
R1614	401 105 7909	MT-GLAZE 0.000 ZA 1/16W
R1631	401 105 4106	MT-GLAZE 3.3K JA 1/16W
R1632	401 105 4106	MT-GLAZE 3.3K JA 1/16W
R1633	401 105 0504	MT-GLAZE 1K JA 1/16W
R1634	401 105 7909	MT-GLAZE 0.000 ZA 1/16W
COIL		
L002	645 026 1008	INDUCTOR,3.3U M
DIODE		
D001	407 149 0807	DIODE 1SS355-TE-17
D002	407 223 1003	ZENER DIODE 02DZ5.1Y(TPH3
D1601	407 223 1003	ZENER DIODE 02DZ5.1Y(TPH3
D1602	407 149 0807	DIODE 1SS355-TE-17
D1603	407 149 0807	DIODE 1SS355-TE-17
D1611	407 223 1003	ZENER DIODE 02DZ5.1Y(TPH3
D1612	407 149 0807	DIODE 1SS355-TE-17
D1613	407 149 0807	DIODE 1SS355-TE-17
D1631	407 223 0501	ZENER DIODE 02DZ12Y(TPH3)
D1632	407 149 0807	DIODE 1SS355-TE-17
D1633	407 149 0807	DIODE 1SS355-TE-17
MISCELLANEOUS		
IC001A	610 295 1271	ASSY,HEAT SINK MV6A
IC001B	411 003 8908	SCR PAN+SW 3X6
IC001D	411 004 4404	NUT HEX 3
	411 054 7509	NUT HEX 3
04	610 295 1370	HEAT SINK E-MV6A
04	610 230 8341	RADIATER MTG BRKT-S6KH
K16A	645 041 8136	PLUG,40P
K16B	645 029 6314	PULG,3P
K16C	645 004 2904	PLUG,4P
K16D	645 004 2898	PLUG,3P
K16E	645 029 6321	PULG,4P
K16F	645 043 3719	PLUG,3P
K16H	645 029 6345	PULG,6P

****

610 292 1397 ASSY,PWB,CONTROL MV6A

CAPACITOR		
C6801	403 298 9609	CERAMIC 0.1U K 16V
C6802	403 298 9609	CERAMIC 0.1U K 16V
C6803	403 298 9609	CERAMIC 0.1U K 16V
RESISTOR		
R6801	401 105 2904	MT-GLAZE 22K JA 1/16W
R6802	401 105 1600	MT-GLAZE 15K JA 1/16W
R6803	401 105 6001	MT-GLAZE 5.6K JA 1/16W
R6804	401 105 5301	MT-GLAZE 4.7K JA 1/16W
R6806	401 105 3307	MT-GLAZE 2.7K JA 1/16W
R6807	401 105 2003	MT-GLAZE 1.8K JA 1/16W
R6808	401 105 1501	MT-GLAZE 1.5K JA 1/16W
R6809	401 105 5202	MT-GLAZE 470 JA 1/16W
R6812	401 105 2904	MT-GLAZE 22K JA 1/16W
R6813	401 105 1600	MT-GLAZE 15K JA 1/16W
R6814	401 105 6001	MT-GLAZE 5.6K JA 1/16W
R6816	401 105 5301	MT-GLAZE 4.7K JA 1/16W
R6817	401 105 3307	MT-GLAZE 2.7K JA 1/16W
R6818	401 105 2003	MT-GLAZE 1.8K JA 1/16W
R6819	401 105 1501	MT-GLAZE 1.5K JA 1/16W
R6821	401 105 5202	MT-GLAZE 470 JA 1/16W
R6823	401 105 2904	MT-GLAZE 22K JA 1/16W
R6824	401 105 1600	MT-GLAZE 15K JA 1/16W
R6826	401 105 6001	MT-GLAZE 5.6K JA 1/16W
R6827	401 105 5301	MT-GLAZE 4.7K JA 1/16W
R6828	401 105 3307	MT-GLAZE 2.7K JA 1/16W
R6829	401 105 2003	MT-GLAZE 1.8K JA 1/16W
R6831	401 105 1501	MT-GLAZE 1.5K JA 1/16W
R6832	401 105 5202	MT-GLAZE 470 JA 1/16W
DIODE		
D6801	407 223 1102	ZENER DIODE 02DZ6.2Y(TPH3
D6802	407 223 1102	ZENER DIODE 02DZ6.2Y(TPH3
D6803	407 223 1102	ZENER DIODE 02DZ6.2Y(TPH3
D6804	407 223 1102	ZENER DIODE 02DZ6.2Y(TPH3
MISCELLANEOUS		
K96A	645 046 8254	PLUG,30P
K96B	645 005 8387	PLUG,6P
K96U	645 012 2248	PLUG,4P
SW6801	645 025 3478	SWITCH,PUSH 1P-2TX1
SW6802	645 025 3478	SWITCH,PUSH 1P-2TX1
SW6803	645 025 3478	SWITCH,PUSH 1P-2TX1
SW6804	645 025 3478	SWITCH,PUSH 1P-2TX1
SW6806	645 025 3478	SWITCH,PUSH 1P-2TX1
SW6807	645 025 3478	SWITCH,PUSH 1P-2TX1
SW6809	645 025 3478	SWITCH,PUSH 1P-2TX1
SW6811	645 025 3478	SWITCH,PUSH 1P-2TX1
SW6812	645 025 3478	SWITCH,PUSH 1P-2TX1
SW6813	645 025 3478	SWITCH,PUSH 1P-2TX1
SW6814	645 025 3478	SWITCH,PUSH 1P-2TX1
SW6816	645 025 3478	SWITCH,PUSH 1P-2TX1
SW6817	645 025 3478	SWITCH,PUSH 1P-2TX1
SW6819	645 025 3478	SWITCH,PUSH 1P-2TX1
SW6821	645 025 3478	SWITCH,PUSH 1P-2TX1
SW6822	645 025 3478	SWITCH,PUSH 1P-2TX1
SW6824	645 025 3478	SWITCH,PUSH 1P-2TX1
SW6825	645 025 3478	SWITCH,PUSH 1P-2TX1

****

610 292 1403 ASSY,PWB,RS232C MV6A

INTEGRATED CIRCUIT		
IC3801	409 380 6303	IC HIN232CB
	409 273 3501	IC SP232ACT
IC3803	409 380 6303	IC HIN232CB
	409 273 3501	IC SP232ACT
IC3804	409 438 5609	IC TC74ACT08FT
CAPACITOR		
C3851	403 162 6208	ELECT 1U M 50V
C3852	403 162 6208	ELECT 1U M 50V
C3853	403 162 6208	ELECT 1U M 50V
C3854	403 162 6208	ELECT 1U M 50V
C3855	403 283 6309	CERAMIC 1U Z 10V
C3856	403 175 4505	ELECT 47U M 6.3V
C3857	403 162 4709	ELECT 10U M 16V
C3858	403 162 4709	ELECT 10U M 16V
C3859	403 162 6208	ELECT 1U M 50V
C3861	403 162 6208	ELECT 1U M 50V
C3862	403 162 6208	ELECT 1U M 50V
C3863	403 162 6208	ELECT 1U M 50V
C3864	403 175 4505	ELECT 47U M 6.3V
C3865	403 283 6309	CERAMIC 1U Z 10V
C3866	403 175 4505	ELECT 47U M 6.3V
C3867	403 283 6309	CERAMIC 1U Z 10V
RESISTOR		
R3851	401 105 0405	MT-GLAZE 100 JA 1/16W
R3852	401 105 0405	MT-GLAZE 100 JA 1/16W
R3855	401 105 0405	MT-GLAZE 100 JA 1/16W
R3856	401 105 0603	MT-GLAZE 10K JA 1/16W
R3857	401 105 4007	MT-GLAZE 330 JA 1/16W
R3858	401 105 0405	MT-GLAZE 100 JA 1/16W
R3859	401 105 0405	MT-GLAZE 100 JA 1/16W
R3861	401 105 5509	MT-GLAZE 470K JA 1/16W
R3862	401 105 5509	MT-GLAZE 470K JA 1/16W
R3863	401 105 0405	MT-GLAZE 100 JA 1/16W
R3864	401 105 0405	MT-GLAZE 100 JA 1/16W
R3865	401 105 0405	MT-GLAZE 100 JA 1/16W
R3866	401 105 0405	MT-GLAZE 100 JA 1/16W
R3868	401 105 7909	MT-GLAZE 0.000 ZA 1/16W
R3869	401 105 7909	MT-GLAZE 0.000 ZA 1/16W
R3871	401 105 7909	MT-GLAZE 0.000 ZA 1/16W
R3872	401 105 7909	MT-GLAZE 0.000 ZA 1/16W

Ref. No.	Part No.	Description
R3873	401 105 7909	MT-GLAZE 0.000 ZA 1/16W
R3874	401 105 7909	MT-GLAZE 0.000 ZA 1/16W
R3877	401 105 0405	MT-GLAZE 100 JA 1/16W
R3878	401 105 0405	MT-GLAZE 100 JA 1/16W
R3882	401 105 7909	MT-GLAZE 0.000 ZA 1/16W
R3883	401 105 7909	MT-GLAZE 0.000 ZA 1/16W
R3884	401 105 0405	MT-GLAZE 100 JA 1/16W
R3885	401 105 0405	MT-GLAZE 100 JA 1/16W
COIL		
L3851	645 014 2659	FILTER,EMI 10MHZ
L3852	645 014 2659	FILTER,EMI 10MHZ
L3853	645 014 2659	FILTER,EMI 10MHZ
L3854	645 014 2659	FILTER,EMI 10MHZ
L3855	645 014 2659	FILTER,EMI 10MHZ
L3856	645 014 2659	FILTER,EMI 10MHZ
L3857	645 026 1008	INDUCTOR,3.3U M
L3858	645 014 2659	FILTER,EMI 10MHZ
L3859	645 014 2659	FILTER,EMI 10MHZ
DIODE		
D3851	407 223 0501	ZENER DIODE 02DZ12Y(TPH3)
D3852	407 223 0501	ZENER DIODE 02DZ12Y(TPH3)
D3853	407 223 0501	ZENER DIODE 02DZ12Y(TPH3)
D3854	407 223 0501	ZENER DIODE 02DZ12Y(TPH3)
D3855	407 223 0501	ZENER DIODE 02DZ12Y(TPH3)
D3856	407 223 0501	ZENER DIODE 02DZ12Y(TPH3)
D3857	407 223 0501	ZENER DIODE 02DZ12Y(TPH3)
D3858	407 223 0501	ZENER DIODE 02DZ12Y(TPH3)
D3859	407 223 0501	ZENER DIODE 02DZ12Y(TPH3)
D3861	407 223 0501	ZENER DIODE 02DZ12Y(TPH3)
D3862	407 223 0501	ZENER DIODE 02DZ12Y(TPH3)
D3863	407 223 0501	ZENER DIODE 02DZ12Y(TPH3)
D3866	407 223 1102	ZENER DIODE 02DZ6.2Y(TPH3
D3867	407 223 1102	ZENER DIODE 02DZ6.2Y(TPH3
D3868	407 223 1102	ZENER DIODE 02DZ6.2Y(TPH3
D3869	407 223 0501	ZENER DIODE 02DZ12Y(TPH3)
D3871	407 223 0501	ZENER DIODE 02DZ12Y(TPH3)
D3872	407 223 0501	ZENER DIODE 02DZ12Y(TPH3)
D3873	407 223 0501	ZENER DIODE 02DZ12Y(TPH3)
D3874	407 223 1102	ZENER DIODE 02DZ6.2Y(TPH3
D3875	407 223 1102	ZENER DIODE 02DZ6.2Y(TPH3
D3876	407 223 0501	ZENER DIODE 02DZ12Y(TPH3)
D3877	407 223 0501	ZENER DIODE 02DZ12Y(TPH3)
D3878	407 223 0501	ZENER DIODE 02DZ12Y(TPH3)
D3879	407 223 0501	ZENER DIODE 02DZ12Y(TPH3)
D3881	407 223 0501	ZENER DIODE 02DZ12Y(TPH3)
D3882	407 223 0501	ZENER DIODE 02DZ12Y(TPH3)
D3883	407 223 0501	ZENER DIODE 02DZ12Y(TPH3)
D3884	407 223 0501	ZENER DIODE 02DZ12Y(TPH3)
MISCELLANEOUS		
IC3802	408 016 8803	PC PC113 (VDE0884)
K38A	645 027 8778	PLUG,D-SUB 9P
K38B	645 027 8778	PLUG,D-SUB 9P
K38C	645 028 0382	SOCKET,USB 4P
K38D	645 000 2571	JACK,PHONE D8.0
K38DA	610 266 0715	EARTH BRKT MIC-M6FA
K38E	645 044 8263	JACK,RCA-2
K38F	645 032 6523	PLUG,13P
K38G	645 036 1326	TERMINAL
SW3801	645 042 8197	SWITCH,PUSH 1P-1TX1

****

610 292 1410 ASSY,PWB,LED MV6A

TRANSISTOR		
Q6851	405 134 5905	TR 2SA1037AK-T146-R
	405 147 2205	TR 2SA1037AK-S-T146
	405 002 0308	TR 2SA1037K T146 R
	405 002 0407	TR 2SA1037K T146 S
	405 002 6706	TR 2SA1179-M6-TB
	405 002 6904	TR 2SA1179-M7-TB
	405 163 1503	TR 2SA1179N-M6-TB
	405 163 2708	TR 2SA1179N-M7-TB
Q6852	405 134 5905	TR 2SA1037AK-T146-R
	405 147 2205	TR 2SA1037AK-S-T146
	405 002 0308	TR 2SA1037K T146 R
	405 002 0407	TR 2SA1037K T146 S
	405 002 6706	TR 2SA1179-M6-TB
	405 002 6904	TR 2SA1179-M7-TB
	405 163 1503	TR 2SA1179N-M6-TB
	405 163 2708	TR 2SA1179N-M7-TB
Q6853	405 134 5905	TR 2SA1037AK-T146-R
	405 147 2205	TR 2SA1037AK-S-T146
	405 002 0308	TR 2SA1037K T146 R
	405 002 0407	TR 2SA1037K T146 S
	405 002 6706	TR 2SA1179-M6-TB
	405 002 6904	TR 2SA1179-M7-TB
	405 163 1503	TR 2SA1179N-M6-TB
	405 163 2708	TR 2SA1179N-M7-TB
Q6854	405 134 5905	TR 2SA1037AK-T146-R
	405 147 2205	TR 2SA1037AK-S-T146
	405 002 0308	TR 2SA1037K T146 R
	405 002 0407	TR 2SA1037K T146 S
	405 002 6706	TR 2SA1179-M6-TB
	405 002 6904	TR 2SA1179-M7-TB
	405 163 1503	TR 2SA1179N-M6-TB
	405 163 2708	TR 2SA1179N-M7-TB
RESISTOR		
R6851	401 105 5202	MT-GLAZE 470 JA 1/16W
R6852	401 105 5202	MT-GLAZE 470 JA 1/16W
R6853	401 105 5202	MT-GLAZE 470 JA 1/16W
R6854	401 105 5202	MT-GLAZE 470 JA 1/16W
R6855	401 105 5202	MT-GLAZE 470 JA 1/16W
R6856	401 105 5202	MT-GLAZE 470 JA 1/16W
R6857	401 105 5202	MT-GLAZE 470 JA 1/16W
R6858	401 105 5202	MT-GLAZE 470 JA 1/16W
R6861	401 105 0405	MT-GLAZE 100 JA 1/16W
R6862	401 105 2805	MT-GLAZE 2.2K JA 1/16W
R6863	401 105 0405	MT-GLAZE 100 JA 1/16W
R6864	401 105 2805	MT-GLAZE 2.2K JA 1/16W
R6865	401 105 0405	MT-GLAZE 100 JA 1/16W
R6866	401 105 2805	MT-GLAZE 2.2K JA 1/16W
R6867	401 105 0405	MT-GLAZE 100 JA 1/16W
R6868	401 105 2805	MT-GLAZE 2.2K JA 1/16W
DIODE		
D6851	407 196 9907	LED SEL4828A
D6851A	610 290 9340	HOLDER LED A-MV6A
D6852	407 196 9709	LED SEL4228C
D6853	407 196 9808	LED SEL4428E
D6854	407 196 9709	LED SEL4228C
D6855	407 223 1102	ZENER DIODE 02DZ6.2Y(TPH3
D6856	407 223 1102	ZENER DIODE 02DZ6.2Y(TPH3
D6857	407 223 1102	ZENER DIODE 02DZ6.2Y(TPH3
D6858	407 223 1102	ZENER DIODE 02DZ6.2Y(TPH3
D6859	407 223 1102	ZENER DIODE 02DZ6.2Y(TPH3
MISCELLANEOUS		
K68B	645 005 8387	PLUG,6P

****

610 292 1427 ASSY,PWB,R/C1 MV6A

CAPACITOR		
C6841	403 348 5803	CERAMIC 0.47U K 10V
C6842	403 348 5803	CERAMIC 0.47U K 10V
RESISTOR		
R6841	401 105 0405	MT-GLAZE 100 JA 1/16W
R6842	401 105 0405	MT-GLAZE 100 JA 1/16W
DIODE		
D6841	407 223 0501	ZENER DIODE 02DZ12Y(TPH3)
MISCELLANEOUS		
A6841	645 034 5029	UNIT,REMOCON RECEIVER
K68E	645 012 2248	PLUG,4P

****

610 292 1434 ASSY,PWB,R/C2 MV6A

CAPACITOR		
C6846	403 348 5803	CERAMIC 0.47U K 10V
C6847	403 348 5803	CERAMIC 0.47U K 10V
RESISTOR		
R6846	401 105 0405	MT-GLAZE 100 JA 1/16W
R6847	401 105 0405	MT-GLAZE 100 JA 1/16W
DIODE		
D6846	407 223 0501	ZENER DIODE 02DZ12Y(TPH3)
MISCELLANEOUS		
A6846	645 034 5029	UNIT,REMOCON RECEIVER
K68D	645 012 2248	PLUG,4P

****

610 292 1441 ASSY,PWB,SENSOR MV6A

INTEGRATED CIRCUIT		
IC5801	409 481 8602	IC LM76CHMX-5
CAPACITOR		
C5801	403 164 0204	CERAMIC 0.1U Z 25V
C5802	403 162 4709	ELECT 10U M 16V
RESISTOR		
R5802	401 105 7909	MT-GLAZE 0.000 ZA 1/16W
R5803	401 105 0603	MT-GLAZE 10K JA 1/16W
R5805	401 105 0603	MT-GLAZE 10K JA 1/16W
R5807	401 105 0405	MT-GLAZE 100 JA 1/16W
R5808	401 105 0405	MT-GLAZE 100 JA 1/16W
MISCELLANEOUS		
K58A	645 012 2248	PLUG,4P

****

610 290 6059 ASSY PWB DVI MV6A

TRANSISTOR		
Q8041	405 014 4509	TR 2SC2412K T146 R
	405 014 4608	TR 2SC2412K T146 S
	405 015 8704	TR 2SC2812-L6-TB
	405 015 8902	TR 2SC2812-L7-TB
	405 163 1602	TR 2SC2812N-L6-TB0
	405 163 1701	TR 2SC2812N-L7-TB0
Q8051	405 014 4509	TR 2SC2412K T146 R
Q8061	405 014 4509	TR 2SC2412K T146 R
	405 014 4608	TR 2SC2412K T146 S
	405 015 8704	TR 2SC2812-L6-TB
	405 015 8902	TR 2SC2812-L7-TB
	405 163 1602	TR 2SC2812N-L6-TB0
	405 163 1701	TR 2SC2812N-L7-TB0

Ref. No.	Part No.	Description
Q8071	405 014 4509	TR 2SC2412K T146 R
	405 014 4608	TR 2SC2412K T146 S
	405 015 8704	TR 2SC2812-L6-TB
	405 015 8902	TR 2SC2812-L7-TB
	405 163 1602	TR 2SC2812N-L6-TB0
	405 163 1701	TR 2SC2812N-L7-TB0
Q8081	405 014 4509	TR 2SC2412K T146 R
	405 014 4608	TR 2SC2412K T146 S
	405 015 8704	TR 2SC2812-L6-TB
	405 015 8902	TR 2SC2812-L7-TB
	405 163 1602	TR 2SC2812N-L6-TB0
	405 163 1701	TR 2SC2812N-L7-TB0
Q8091	405 014 4509	TR 2SC2412K T146 R
	405 014 4608	TR 2SC2412K T146 S
	405 015 8704	TR 2SC2812-L6-TB
	405 015 8902	TR 2SC2812-L7-TB
	405 163 1602	TR 2SC2812N-L6-TB0
	405 163 1701	TR 2SC2812N-L7-TB0
Q8101	405 014 4509	TR 2SC2412K T146 R
	405 014 4608	TR 2SC2412K T146 S
	405 015 8704	TR 2SC2812-L6-TB
	405 015 8902	TR 2SC2812-L7-TB
	405 163 1602	TR 2SC2812N-L6-TB0
	405 163 1701	TR 2SC2812N-L7-TB0
Q8102	405 014 4509	TR 2SC2412K T146 R
	405 014 4608	TR 2SC2412K T146 S
	405 015 8704	TR 2SC2812-L6-TB
	405 015 8902	TR 2SC2812-L7-TB
	405 163 1602	TR 2SC2812N-L6-TB0
	405 163 1701	TR 2SC2812N-L7-TB0
INTEGRATED CIRCUIT		
IC8001	410 365 2203	IC SII161ACT100
IC8015	409 462 2308	IC TC7SZ04FU-TE852
IC8016	409 462 2308	IC TC7SZ04FU-TE852
IC8017	409 462 2308	IC TC7SZ04FU-TE852
IC8020	410 391 2109	IC TC74VCX374FT(EL)
IC8021	409 484 2003	IC BA7078AF-E2
IC8031	410 343 7008	IC SN74AHCT1G14DBVR
IC8032	410 343 7008	IC SN74AHCT1G14DBVR
IC8033	410 343 7008	IC SN74AHCT1G14DBVR
IC8041	409 441 8406	IC LA7217M-T-TRM
IC8051	409 445 7306	IC QS3125QX
IC8061	409 429 6400	IC AD8055ART
IC8062	409 429 6400	IC AD8055ART
IC8063	409 429 6400	IC AD8055ART
IC8064	410 343 7008	IC SN74AHCT1G14DBVR
IC8065	410 343 7008	IC SN74AHCT1G14DBVR
IC8071	410 401 7506	IC TC74VCX16374FT
IC8072	410 401 7506	IC TC74VCX16374FT
IC8073	410 401 7506	IC TC74VCX16374FT
IC8141	409 380 6303	IC HIN232CB
	409 273 3501	IC SP232ACT
IC8151	410 296 5700	IC TWM7000-151020
IC8152	410 275 5707	IC TWM7000-162020
	410 275 5806	IC TWM7000-162020
IC8171	409 395 5902	IC TC7SH00FU-(TE85L)
IC8172	409 416 6505	IC BA05FP-E2
IC8181	409 404 6302	IC M62320FP
IC8182	409 404 6302	IC M62320FP
IC8191	409 505 6102	IC MD1222N
IC8193	409 487 5803	IC 24C01CT/SN
IC8194	409 434 8109	IC TC4053BFT-(EL)
CAPACITOR		
C8002	403 164 0204	CERAMIC 0.1U Z 25V
C8003	403 280 0508	ELECT 470U M 4V
C8004	403 164 0204	CERAMIC 0.1U Z 25V
C8005	403 157 3601	CERAMIC 100P J 50V
C8006	403 157 3601	CERAMIC 100P J 50V
C8007	403 157 3601	CERAMIC 100P J 50V
C8008	403 157 3601	CERAMIC 100P J 50V
C8009	403 164 0204	CERAMIC 0.1U Z 25V
C8010	403 164 0204	CERAMIC 0.1U Z 25V
C8012	403 157 3601	CERAMIC 100P J 50V
C8013	403 280 0508	ELECT 470U M 4V
C8014	403 164 0204	CERAMIC 0.1U Z 25V
C8015	403 155 1500	CERAMIC 180P J 50V
C8016	403 169 2807	CERAMIC 330P J 50V
C8017	403 169 2807	CERAMIC 330P J 50V
C8018	403 155 1500	CERAMIC 180P J 50V
C8019	403 169 2807	CERAMIC 330P J 50V
C8021	403 169 2807	CERAMIC 330P J 50V
C8022	403 155 1500	CERAMIC 180P J 50V
C8023	403 164 0204	CERAMIC 0.1U Z 25V
C8024	403 280 0508	ELECT 470U M 4V
C8025	403 169 2807	CERAMIC 330P J 50V
C8026	403 267 0606	NP-ELECT 4.7U M 16V
C8028	403 266 6807	NP-ELECT 0.1U M 50V
C8029	403 162 6208	ELECT 1U M 50V
C8030	403 164 0204	CERAMIC 0.1U Z 25V
C8032	403 266 8108	NP-ELECT 1U M 50V
C8033	403 162 6604	ELECT 2.2U M 50V
C8034	403 162 6208	ELECT 1U M 50V
C8035	403 157 3601	CERAMIC 100P J 50V
C8036	403 164 0204	CERAMIC 0.1U Z 25V
C8037	403 280 0805	ELECT 330U M 6.3V
C8038	403 164 0204	CERAMIC 0.1U Z 25V
C8043	403 164 0204	CERAMIC 0.1U Z 25V
C8044	403 266 8108	NP-ELECT 1U M 50V
C8045	403 308 2101	CERAMIC 0.056U K 16V
C8046	403 215 2904	CERAMIC 0.022U K 25V
C8047	403 157 6909	CERAMIC 820P K 50V
C8048	403 215 2201	CERAMIC 0.01U K 50V
C8049	403 162 6208	ELECT 1U M 50V
C8050	403 164 0204	CERAMIC 0.1U Z 25V
C8052	403 164 0204	CERAMIC 0.1U Z 25V
C8053	403 164 0204	CERAMIC 0.1U Z 25V
C8061	403 164 0204	CERAMIC 0.1U Z 25V
C8063	403 164 0204	CERAMIC 0.1U Z 25V
C8064	403 157 1904	CERAMIC 10P D 50V
C8065	403 157 3106	CERAMIC 56P J 50V
C8070	403 280 0508	ELECT 470U M 4V
C8072	403 157 1904	CERAMIC 10P D 50V
C8073	403 164 0204	CERAMIC 0.1U Z 25V
C8075	403 157 3106	CERAMIC 56P J 50V
C8076	403 164 0204	CERAMIC 0.1U Z 25V
C8077	403 164 0204	CERAMIC 0.1U Z 25V
C8079	403 164 0204	CERAMIC 0.1U Z 25V
C8082	403 157 1904	CERAMIC 10P D 50V
C8085	403 157 3106	CERAMIC 56P J 50V
C8086	403 164 0204	CERAMIC 0.1U Z 25V
C8088	403 164 0204	CERAMIC 0.1U Z 25V
C8090	403 347 5507	POS-SOLID 470U M 4V
C8091	403 162 4709	ELECT 10U M 16V
C8092	403 162 4709	ELECT 10U M 16V
C8093	403 155 1500	CERAMIC 180P J 50V
C8094	403 146 0505	CERAMIC 1200P K 50V
C8096	403 347 5507	POS-SOLID 470U M 4V
C8101	403 162 4709	ELECT 10U M 16V
C8102	403 162 4709	ELECT 10U M 16V
C8132	403 283 6309	CERAMIC 1U Z 10V
C8133	403 164 0204	CERAMIC 0.1U Z 25V
C8141	403 175 4505	ELECT 47U M 6.3V
C8142	403 162 6208	ELECT 1U M 50V
C8143	403 162 6208	ELECT 1U M 50V
C8144	403 162 6208	ELECT 1U M 50V
C8145	403 162 6208	ELECT 1U M 50V
C8151	403 162 6208	ELECT 1U M 50V
C8152	403 164 0204	CERAMIC 0.1U Z 25V
C8153	403 280 0805	ELECT 330U M 6.3V
C8154	403 164 0204	CERAMIC 0.1U Z 25V
C8156	403 164 0204	CERAMIC 0.1U Z 25V
C8157	403 175 4505	ELECT 47U M 6.3V
C8158	403 164 0204	CERAMIC 0.1U Z 25V
C8171	403 280 0805	ELECT 330U M 6.3V
C8172	403 164 0204	CERAMIC 0.1U Z 25V
C8175	403 164 0204	CERAMIC 0.1U Z 25V
C8176	403 280 0805	ELECT 330U M 6.3V
C8177	403 164 0204	CERAMIC 0.1U Z 25V
C8178	403 280 0805	ELECT 330U M 6.3V
C8181	403 164 0204	CERAMIC 0.1U Z 25V
C8182	403 164 0204	CERAMIC 0.1U Z 25V
C8190	403 164 0204	CERAMIC 0.1U Z 25V
C8191	403 205 2808	CERAMIC 0.047U K 25V
C8192	403 113 3805	CERAMIC 1000P K 50V
C8193	403 358 1307	ELECT 330U M 25V
C8194	403 215 2201	CERAMIC 0.01U K 50V
C8195	403 358 1307	ELECT 330U M 25V
C8196	403 164 0204	CERAMIC 0.1U Z 25V
C8197	403 164 0204	CERAMIC 0.1U Z 25V
C8198	403 113 3805	CERAMIC 1000P K 50V
RESISTOR		
RB8001	645 028 0696	R-NETWORK 100X4 1/32W
RB8002	645 028 0696	R-NETWORK 100X4 1/32W
RB8003	645 028 0696	R-NETWORK 100X4 1/32W
RB8004	645 028 0696	R-NETWORK 100X4 1/32W
RB8005	645 028 0696	R-NETWORK 100X4 1/32W
RB8006	645 028 0696	R-NETWORK 100X4 1/32W
RB8007	645 028 0696	R-NETWORK 100X4 1/32W
RB8008	645 028 0696	R-NETWORK 100X4 1/32W
RB8009	645 028 0696	R-NETWORK 100X4 1/32W
RB8010	645 028 0696	R-NETWORK 100X4 1/32W
RB8011	645 028 0696	R-NETWORK 100X4 1/32W
RB8012	645 028 0696	R-NETWORK 100X4 1/32W
RB8013	645 028 0696	R-NETWORK 100X4 1/32W
RB8014	645 028 0696	R-NETWORK 100X4 1/32W
RB8015	645 028 0696	R-NETWORK 100X4 1/32W
RB8016	645 028 0696	R-NETWORK 100X4 1/32W
RB8021	645 028 0696	R-NETWORK 100X4 1/32W
RB8022	645 028 0696	R-NETWORK 100X4 1/32W
RB8023	645 028 0696	R-NETWORK 100X4 1/32W
RB8024	645 028 0696	R-NETWORK 100X4 1/32W
RB8031	645 028 0696	R-NETWORK 100X4 1/32W
RB8032	645 028 0696	R-NETWORK 100X4 1/32W
RB8033	645 028 0696	R-NETWORK 100X4 1/32W
RB8034	645 028 0696	R-NETWORK 100X4 1/32W
RB8131	645 026 8014	R-NETWORK 10KX4 1/16W
R8001	401 105 5905	MT-GLAZE 560 JA 1/16W
R8002	401 105 7909	MT-GLAZE 0.000 ZA 1/16W
R8003	401 105 4205	MT-GLAZE 33K JA 1/16W
R8004	401 105 4205	MT-GLAZE 33K JA 1/16W

Ref. No.	Part No.	Description
R8005	401 105 4205	MT-GLAZE 33K JA 1/16W
R8006	401 105 4205	MT-GLAZE 33K JA 1/16W
R8007	401 105 4205	MT-GLAZE 33K JA 1/16W
R8008	401 105 4205	MT-GLAZE 33K JA 1/16W
R8009	401 105 4205	MT-GLAZE 33K JA 1/16W
R8010	401 105 7909	MT-GLAZE 0.000 ZA 1/16W
R8011	401 105 0405	MT-GLAZE 100 JA 1/16W
R8012	401 113 6406	MT-GLAZE 5.1K JA 1/16W
R8013	401 105 7909	MT-GLAZE 0.000 ZA 1/16W
R8014	401 105 5103	MT-GLAZE 47 JA 1/16W
R8015	401 105 5103	MT-GLAZE 47 JA 1/16W
R8017	401 105 5103	MT-GLAZE 47 JA 1/16W
R8018	401 105 5103	MT-GLAZE 47 JA 1/16W
R8019	401 105 7909	MT-GLAZE 0.000 ZA 1/16W
R8021	401 105 7909	MT-GLAZE 0.000 ZA 1/16W
R8025	401 105 7909	MT-GLAZE 0.000 ZA 1/16W
R8028	401 105 0405	MT-GLAZE 100 JA 1/16W
R8029	401 105 8005	MT-GLAZE 1M JA 1/16W
R8030	401 105 7909	MT-GLAZE 0.000 ZA 1/16W
R8031	401 105 4601	MT-GLAZE 3.9K JA 1/16W
R8032	401 105 0405	MT-GLAZE 100 JA 1/16W
R8033	401 105 0405	MT-GLAZE 100 JA 1/16W
R8034	401 105 0405	MT-GLAZE 100 JA 1/16W
R8035	401 105 0405	MT-GLAZE 100 JA 1/16W
R8036	401 105 0405	MT-GLAZE 100 JA 1/16W
R8037	401 105 0405	MT-GLAZE 100 JA 1/16W
R8039	401 105 8005	MT-GLAZE 1M JA 1/16W
R8040	401 105 2805	MT-GLAZE 2.2K JA 1/16W
R8042	401 105 7909	MT-GLAZE 0.000 ZA 1/16W
R8043	401 105 0504	MT-GLAZE 1K JA 1/16W
R8044	401 105 0504	MT-GLAZE 1K JA 1/16W
R8045	401 105 1709	MT-GLAZE 150K JA 1/16W
R8046	401 105 0405	MT-GLAZE 100 JA 1/16W
R8048	401 105 7909	MT-GLAZE 0.000 ZA 1/16W
R8049	401 105 5905	MT-GLAZE 560 JA 1/16W
R8050	401 105 4601	MT-GLAZE 3.9K JA 1/16W
R8051	401 105 7909	MT-GLAZE 0.000 ZA 1/16W
R8052	401 105 5103	MT-GLAZE 47 JA 1/16W
R8053	401 105 7909	MT-GLAZE 0.000 ZA 1/16W
R8054	401 105 7909	MT-GLAZE 0.000 ZA 1/16W
R8056	401 105 7909	MT-GLAZE 0.000 ZA 1/16W
R8057	401 105 0603	MT-GLAZE 10K JA 1/16W
R8058	401 105 4205	MT-GLAZE 33K JA 1/16W
R8059	401 105 0603	MT-GLAZE 10K JA 1/16W
R8060	401 105 0603	MT-GLAZE 10K JA 1/16W
R8061	401 113 4402	MT-GLAZE 75 JA 1/16W
R8063	401 105 4502	MT-GLAZE 390 JA 1/16W
R8064	401 105 0504	MT-GLAZE 1K JA 1/16W
R8066	401 105 7909	MT-GLAZE 0.000 ZA 1/16W
R8067	401 105 0603	MT-GLAZE 10K JA 1/16W
R8071	401 113 4402	MT-GLAZE 75 JA 1/16W
R8073	401 105 4502	MT-GLAZE 390 JA 1/16W
R8075	401 105 0504	MT-GLAZE 1K JA 1/16W
R8076	401 105 7909	MT-GLAZE 0.000 ZA 1/16W
R8077	401 105 0603	MT-GLAZE 10K JA 1/16W
R8078	401 105 0702	MT-GLAZE 100K JA 1/16W
R8079	401 105 0702	MT-GLAZE 100K JA 1/16W
R8081	401 113 4402	MT-GLAZE 75 JA 1/16W
R8083	401 105 4502	MT-GLAZE 390 JA 1/16W
R8085	401 105 0504	MT-GLAZE 1K JA 1/16W
R8086	401 105 7909	MT-GLAZE 0.000 ZA 1/16W
R8087	401 105 0603	MT-GLAZE 10K JA 1/16W
R8088	645 048 4711	PROTECTOR,IC 0.75A 6V
R8090	401 105 7909	MT-GLAZE 0.000 ZA 1/16W
R8091	401 105 7909	MT-GLAZE 0.000 ZA 1/16W
R8092	401 105 7909	MT-GLAZE 0.000 ZA 1/16W
R8093	401 105 0504	MT-GLAZE 1K JA 1/16W
R8094	401 105 0603	MT-GLAZE 10K JA 1/16W
R8095	401 105 5103	MT-GLAZE 47 JA 1/16W
R8096	401 105 5103	MT-GLAZE 47 JA 1/16W
R8097	401 105 5103	MT-GLAZE 47 JA 1/16W
R8098	401 105 7909	MT-GLAZE 0.000 ZA 1/16W
R8101	401 105 5509	MT-GLAZE 470K JA 1/16W
R8102	401 105 5509	MT-GLAZE 470K JA 1/16W
R8103	401 105 0405	MT-GLAZE 100 JA 1/16W
R8104	401 105 0405	MT-GLAZE 100 JA 1/16W
R8105	401 105 3000	MT-GLAZE 220K JA 1/16W
R8106	401 105 3000	MT-GLAZE 220K JA 1/16W
R8107	401 105 3000	MT-GLAZE 220K JA 1/16W
R8108	401 105 3000	MT-GLAZE 220K JA 1/16W
R8109	401 105 0405	MT-GLAZE 100 JA 1/16W
R8111	401 105 2805	MT-GLAZE 2.2K JA 1/16W
R8112	401 105 0405	MT-GLAZE 100 JA 1/16W
R8113	401 105 2805	MT-GLAZE 2.2K JA 1/16W
R8114	401 105 0405	MT-GLAZE 100 JA 1/16W
R8115	401 105 0405	MT-GLAZE 100 JA 1/16W
R8121	401 105 0603	MT-GLAZE 10K JA 1/16W
R8122	401 105 4205	MT-GLAZE 33K JA 1/16W
R8131	401 105 7909	MT-GLAZE 0.000 ZA 1/16W
R8132	401 105 7909	MT-GLAZE 0.000 ZA 1/16W
R8133	401 105 7909	MT-GLAZE 0.000 ZA 1/16W
R8134	401 105 0603	MT-GLAZE 10K JA 1/16W
R8135	401 105 0603	MT-GLAZE 10K JA 1/16W
R8136	401 105 0603	MT-GLAZE 10K JA 1/16W
R8145	401 105 7909	MT-GLAZE 0.000 ZA 1/16W
R8151	401 105 0603	MT-GLAZE 10K JA 1/16W
R8152	401 105 0603	MT-GLAZE 10K JA 1/16W
R8153	401 105 7909	MT-GLAZE 0.000 ZA 1/16W
R8154	401 105 7909	MT-GLAZE 0.000 ZA 1/16W
R8155	401 105 7909	MT-GLAZE 0.000 ZA 1/16W
R8156	401 105 0603	MT-GLAZE 10K JA 1/16W
R8157	401 105 0603	MT-GLAZE 10K JA 1/16W
R8158	401 105 0405	MT-GLAZE 100 JA 1/16W
R8159	401 105 0603	MT-GLAZE 10K JA 1/16W
R8161	401 105 0603	MT-GLAZE 10K JA 1/16W
R8162	401 035 4108	MT-GLAZE 0.000 ZA 1/8W
R8171	401 105 7909	MT-GLAZE 0.000 ZA 1/16W
R8172	401 105 7909	MT-GLAZE 0.000 ZA 1/16W
R8173	401 105 7909	MT-GLAZE 0.000 ZA 1/16W
R8177	401 105 0405	MT-GLAZE 100 JA 1/16W
R8179	401 105 0603	MT-GLAZE 10K JA 1/16W
R8180	401 113 6406	MT-GLAZE 5.1K JA 1/16W
R8183	401 105 0603	MT-GLAZE 10K JA 1/16W
R8184	401 105 0603	MT-GLAZE 10K JA 1/16W
R8185	401 105 7909	MT-GLAZE 0.000 ZA 1/16W
R8187	401 257 7000	MT-GLAZE 820 FA 1/16W
R8188	401 218 4505	MT-GLAZE 2.2K FA 1/16W
R8189	401 105 0603	MT-GLAZE 10K JA 1/16W
R8190	401 105 0405	MT-GLAZE 100 JA 1/16W
R8191	401 105 0405	MT-GLAZE 100 JA 1/16W
R8192	401 105 0603	MT-GLAZE 10K JA 1/16W
R8193	401 105 0603	MT-GLAZE 10K JA 1/16W
R8194	401 290 1508	MT-GLAZE 0.1 JE 1/2W
R8195	401 105 0405	MT-GLAZE 100 JA 1/16W
R8196	401 105 0405	MT-GLAZE 100 JA 1/16W
R8197	401 105 8005	MT-GLAZE 1M JA 1/16W
R8198	401 105 0702	MT-GLAZE 100K JA 1/16W
R8199	401 105 0603	MT-GLAZE 10K JA 1/16W
TRANSFORMER		
TE8001	645 036 5010	TERMINAL
TE8101	645 036 5010	TERMINAL
COIL		
L8001	645 026 1008	INDUCTOR,3.3U M
L8002	645 026 1008	INDUCTOR,3.3U M
L8003	645 026 1008	INDUCTOR,3.3U M
L8088	645 014 2659	FILTER,EMI 10MHZ
L8089	645 026 1008	INDUCTOR,3.3U M
L8101	645 014 2659	FILTER,EMI 10MHZ
L8102	645 014 2659	FILTER,EMI 10MHZ
L8121	645 014 2659	FILTER,EMI 10MHZ
L8122	645 014 2659	FILTER,EMI 10MHZ
L8123	645 014 2659	FILTER,EMI 10MHZ
L8124	645 014 2659	FILTER,EMI 10MHZ
L8125	645 014 2659	FILTER,EMI 10MHZ
L8126	645 014 2659	FILTER,EMI 10MHZ
L8141	645 014 2659	FILTER,EMI 10MHZ
L8191	645 037 7396	INDUCTOR,22U M
DIODE		
D8061	407 209 1201	ZD UDZS-TE-176.2B
D8062	407 209 1201	ZD UDZS-TE-176.2B
D8071	407 209 1201	ZD UDZS-TE-176.2B
D8072	407 209 1201	ZD UDZS-TE-176.2B
D8081	407 209 1201	ZD UDZS-TE-176.2B
D8082	407 209 1201	ZD UDZS-TE-176.2B
D8088	407 223 1102	ZENER DIODE 02DZ6.2Y(TPH3
D8091	407 223 1102	ZENER DIODE 02DZ6.2Y(TPH3
D8092	407 223 1102	ZENER DIODE 02DZ6.2Y(TPH3
D8093	407 223 1102	ZENER DIODE 02DZ6.2Y(TPH3
D8094	407 223 1102	ZENER DIODE 02DZ6.2Y(TPH3
D8095	407 149 0807	DIODE 1SS355-TE-17
D8096	407 149 0807	DIODE 1SS355-TE-17
D8101	407 223 0501	ZENER DIODE 02DZ12Y(TPH3)
D8102	407 223 0501	ZENER DIODE 02DZ12Y(TPH3)
D8103	407 223 0501	ZENER DIODE 02DZ12Y(TPH3)
D8104	407 223 0501	ZENER DIODE 02DZ12Y(TPH3)
D8121	407 223 0501	ZENER DIODE 02DZ12Y(TPH3)
D8122	407 223 0501	ZENER DIODE 02DZ12Y(TPH3)
D8123	407 223 0501	ZENER DIODE 02DZ12Y(TPH3)
D8124	407 223 0501	ZENER DIODE 02DZ12Y(TPH3)
D8125	407 223 0501	ZENER DIODE 02DZ12Y(TPH3)
D8126	407 223 0501	ZENER DIODE 02DZ12Y(TPH3)
D8127	407 223 0501	ZENER DIODE 02DZ12Y(TPH3)
D8128	407 223 1102	ZENER DIODE 02DZ6.2Y(TPH3
D8141	407 223 0501	ZENER DIODE 02DZ12Y(TPH3)
D8142	407 223 0501	ZENER DIODE 02DZ12Y(TPH3)
D8175	407 149 0807	DIODE 1SS355-TE-17
D8176	407 149 0807	DIODE 1SS355-TE-17
D8191	407 201 2701	DIODE RB051L-40-TE25
D8192	407 201 2701	DIODE RB051L-40-TE25
D8193	407 149 0807	DIODE 1SS355-TE-17
D8194	407 201 2701	DIODE RB051L-40-TE25
D8195	407 223 1102	ZENER DIODE 02DZ6.2Y(TPH3
D8196	407 223 1102	ZENER DIODE 02DZ6.2Y(TPH3
D8197	407 223 1102	ZENER DIODE 02DZ6.2Y(TPH3
D8198	407 223 1102	ZENER DIODE 02DZ6.2Y(TPH3
MISCELLANEOUS		
TP80B	645 036 5010	TERMINAL
TP80G	645 036 5010	TERMINAL
TP80H	645 036 5010	TERMINAL
TP80R	645 036 5010	TERMINAL

Ref. No.	Part No.	Description
TP80V	645 036 5010	TERMINAL
K80A	645 048 4643	SOCKET,DVI 29P
K80A1	412 062 1909	SPECIAL SCREW
K80A2	412 062 1909	SPECIAL SCREW
K80H	645 041 6071	SOCKET,I/O 176P
K80H1	610 289 9795	JOINT GUIDE BUSH ML6A
K80H2	610 289 9795	JOINT GUIDE BUSH ML6A
K81A	645 040 9974	JACK,RCA-2
K81B	645 041 1076	SOCKET,DIN 8P
X8041	645 006 3459	OSC,CERAMIC 500.0KHZ
X8151	645 021 1218	OSC,CERAMIC 8.00MHZ
	645 037 5187	OSC,CERAMIC 8.00MHZ
X8152	645 021 1218	OSC,CERAMIC 8.00MHZ
	645 037 5187	OSC,CERAMIC 8.00MHZ
**********		
610 292 1618		*ASSY,PWB,CONPONENT MV6A*
TRANSISTOR		
Q1011	405 014 4509	TR 2SC2412K T146 R
	405 014 4608	TR 2SC2412K T146 S
	405 015 8704	TR 2SC2812-L6-TB
	405 015 8902	TR 2SC2812-L7-TB
	405 163 1602	TR 2SC2812N-L6-TB0
	405 163 1701	TR 2SC2812N-L7-TB0
Q1015	405 014 4509	TR 2SC2412K T146 R
	405 014 4608	TR 2SC2412K T146 S
	405 015 8704	TR 2SC2812-L6-TB
	405 015 8902	TR 2SC2812-L7-TB
	405 163 1602	TR 2SC2812N-L6-TB0
	405 163 1701	TR 2SC2812N-L7-TB0
Q1061	405 014 4509	TR 2SC2412K T146 R
	405 014 4608	TR 2SC2412K T146 S
	405 015 8704	TR 2SC2812-L6-TB
	405 015 8902	TR 2SC2812-L7-TB
	405 163 1602	TR 2SC2812N-L6-TB0
	405 163 1701	TR 2SC2812N-L7-TB0
Q1091	405 014 4509	TR 2SC2412K T146 R
	405 014 4608	TR 2SC2412K T146 S
	405 015 8704	TR 2SC2812-L6-TB
	405 015 8902	TR 2SC2812-L7-TB
	405 163 1602	TR 2SC2812N-L6-TB0
	405 163 1701	TR 2SC2812N-L7-TB0
Q2061	405 014 4509	TR 2SC2412K T146 R
	405 014 4608	TR 2SC2412K T146 S
	405 015 8704	TR 2SC2812-L6-TB
	405 015 8902	TR 2SC2812-L7-TB
	405 163 1602	TR 2SC2812N-L6-TB0
	405 163 1701	TR 2SC2812N-L7-TB0
Q2062	405 134 5905	TR 2SA1037AK-T146-R
	405 147 2205	TR 2SA1037AK-S-T146
	405 002 0308	TR 2SA1037K T146 R
	405 002 0407	TR 2SA1037K T146 S
	405 002 6706	TR 2SA1179-M6-TB
	405 002 6904	TR 2SA1179-M7-TB
	405 163 1503	TR 2SA1179N-M6-TB
	405 163 2708	TR 2SA1179N-M7-TB
Q2063	405 014 4509	TR 2SC2412K T146 R
	405 014 4608	TR 2SC2412K T146 S
	405 015 8704	TR 2SC2812-L6-TB
	405 015 8902	TR 2SC2812-L7-TB
	405 163 1602	TR 2SC2812N-L6-TB0
	405 163 1701	TR 2SC2812N-L7-TB0
Q2071	405 014 4509	TR 2SC2412K T146 R
	405 014 4608	TR 2SC2412K T146 S
	405 015 8704	TR 2SC2812-L6-TB
	405 015 8902	TR 2SC2812-L7-TB
	405 163 1602	TR 2SC2812N-L6-TB0
	405 163 1701	TR 2SC2812N-L7-TB0
Q2072	405 014 4509	TR 2SC2412K T146 R
	405 014 4608	TR 2SC2412K T146 S
	405 015 8704	TR 2SC2812-L6-TB
	405 015 8902	TR 2SC2812-L7-TB
	405 163 1602	TR 2SC2812N-L6-TB0
	405 163 1701	TR 2SC2812N-L7-TB0
Q2073	405 014 4509	TR 2SC2412K T146 R
	405 014 4608	TR 2SC2412K T146 S
	405 015 8704	TR 2SC2812-L6-TB
	405 015 8902	TR 2SC2812-L7-TB
	405 163 1602	TR 2SC2812N-L6-TB0
	405 163 1701	TR 2SC2812N-L7-TB0
Q2081	405 014 4509	TR 2SC2412K T146 R
	405 014 4608	TR 2SC2412K T146 S
	405 015 8704	TR 2SC2812-L6-TB
	405 015 8902	TR 2SC2812-L7-TB
	405 163 1602	TR 2SC2812N-L6-TB0
	405 163 1701	TR 2SC2812N-L7-TB0
Q3011	405 014 4509	TR 2SC2412K T146 R
	405 014 4608	TR 2SC2412K T146 S
	405 015 8704	TR 2SC2812-L6-TB
	405 015 8902	TR 2SC2812-L7-TB
	405 163 1602	TR 2SC2812N-L6-TB0
	405 163 1701	TR 2SC2812N-L7-TB0
Q3015	405 014 4509	TR 2SC2412K T146 R
	405 014 4608	TR 2SC2412K T146 S
	405 015 8704	TR 2SC2812-L6-TB
	405 015 8902	TR 2SC2812-L7-TB
	405 163 1602	TR 2SC2812N-L6-TB0
	405 163 1701	TR 2SC2812N-L7-TB0
INTEGRATED CIRCUIT		
IC1001	409 461 7304	IC AD8057ART
IC1002	409 461 7304	IC AD8057ART
IC1003	409 461 7304	IC AD8057ART
IC1004	410 343 7008	IC SN74AHCT1G14DBVR
IC1005	410 343 7008	IC SN74AHCT1G14DBVR
IC1051	409 484 2003	IC BA7078AF-E2
IC1052	410 343 7008	IC SN74AHCT1G14DBVR
IC1053	410 343 7008	IC SN74AHCT1G14DBVR
IC1061	409 502 8703	IC TA1318N
IC2001	409 449 2802	IC AN5393FBQ
IC2041	409 461 7809	IC PQ20WZ11
IC2061	409 051 2900	IC TC4053BF(EL)
IC2071	409 470 2604	IC AD8183ARU
IC2081	409 404 6302	IC M62320FP
IC2082	409 463 7500	IC 24LC02BT/SN-T
	409 417 5507	IC 24LC04BT/SN
IC3031	409 380 6303	IC HIN232CB
	409 273 3501	IC SP232ACT
IC3051	410 296 5700	IC TWM7000-151020
IC3061	410 275 5707	IC TWM7000-162020
	410 275 5806	IC TWM7000-162020
IC3071	409 416 6505	IC BA05FP-E2
IC3081	409 461 7304	IC AD8057ART
IC3082	409 461 7304	IC AD8057ART
IC3083	409 461 7304	IC AD8057ART
IC3091	409 395 5902	IC TC7SH00FU-(TE85L)
CAPACITOR		
C1001	403 267 0606	NP-ELECT 4.7U M 16V
C1002	403 267 0606	NP-ELECT 4.7U M 16V
C1003	403 155 1500	CERAMIC 180P J 50V
C1004	403 146 0505	CERAMIC 1200P K 50V
C1005	403 157 1508	CERAMIC 3P C 50V
C1006	403 157 1904	CERAMIC 10P D 50V
C1007	403 157 1508	CERAMIC 3P C 50V
C1008	403 157 1904	CERAMIC 10P D 50V
C1009	403 157 1508	CERAMIC 3P C 50V
C1010	403 351 1106	POS-SOLID 47U M 16V
C1011	403 157 1904	CERAMIC 10P D 50V
C1012	403 280 0805	ELECT 330U M 6.3V
C1013	403 164 0204	CERAMIC 0.1U Z 25V
C1014	403 280 0805	ELECT 330U M 6.3V
C1015	403 164 0204	CERAMIC 0.1U Z 25V
C1041	403 164 0204	CERAMIC 0.1U Z 25V
C1051	403 267 0606	NP-ELECT 4.7U M 16V
C1052	403 266 6807	NP-ELECT 0.1U M 50V
C1053	403 162 6208	ELECT 1U M 50V
C1054	403 266 8108	NP-ELECT 1U M 50V
C1055	403 162 6604	ELECT 2.2U M 50V
C1056	403 162 6208	ELECT 1U M 50V
C1057	403 157 3601	CERAMIC 100P J 50V
C1058	403 164 0204	CERAMIC 0.1U Z 25V
C1059	403 280 0805	ELECT 330U M 6.3V
C1063	403 162 6604	ELECT 2.2U M 50V
C1064	403 215 2201	CERAMIC 0.01U K 50V
C1065	403 229 3508	ELECT 100U M 16V
C1066	403 149 9208	CERAMIC 0.01U Z 50V
C1069	403 162 6208	ELECT 1U M 50V
C1071	403 162 6208	ELECT 1U M 50V
C1072	403 280 1604	ELECT 220U M 16V
C2004	403 283 6309	CERAMIC 1U Z 10V
C2005	403 149 9208	CERAMIC 0.01U Z 50V
C2006	403 149 9208	CERAMIC 0.01U Z 50V
C2007	403 283 6309	CERAMIC 1U Z 10V
C2008	403 149 9208	CERAMIC 0.01U Z 50V
C2009	403 283 6309	CERAMIC 1U Z 10V
C2011	403 157 1904	CERAMIC 10P D 50V
C2012	403 164 0204	CERAMIC 0.1U Z 25V
C2014	403 157 1904	CERAMIC 10P D 50V
C2015	403 164 0204	CERAMIC 0.1U Z 25V
C2017	403 157 1904	CERAMIC 10P D 50V
C2018	403 164 0204	CERAMIC 0.1U Z 25V
C2019	403 280 1604	ELECT 220U M 16V
C2021	403 162 4709	ELECT 10U M 16V
C2022	403 164 0204	CERAMIC 0.1U Z 25V
C2023	401 105 7909	MT-GLAZE 0.000 ZA 1/16W
C2024	401 105 7909	MT-GLAZE 0.000 ZA 1/16W
C2025	403 215 2201	CERAMIC 0.01U K 50V
C2026	403 215 2201	CERAMIC 0.01U K 50V
C2027	403 215 2201	CERAMIC 0.01U K 50V
C2028	403 283 6309	CERAMIC 1U Z 10V
C2029	403 283 6309	CERAMIC 1U Z 10V
C2030	403 280 1604	ELECT 220U M 16V
C2031	403 283 6309	CERAMIC 1U Z 10V
C2032	403 162 4709	ELECT 10U M 16V
C2033	403 175 4109	ELECT 22U M 16V
C2034	403 162 5300	ELECT 4.7U M 25V
C2037	403 164 0204	CERAMIC 0.1U Z 25V
C2038	403 280 1604	ELECT 220U M 16V
C2039	403 215 2201	CERAMIC 0.01U K 50V
C2040	403 280 1604	ELECT 220U M 16V

Ref. No.	Part No.	Description
C2041	403 215 2201	CERAMIC 0.01U K 50V
C2042	403 215 2201	CERAMIC 0.01U K 50V
C2043	403 215 2201	CERAMIC 0.01U K 50V
C2044	403 280 0805	ELECT 330U M 6.3V
C2045	403 164 0204	CERAMIC 0.1U Z 25V
C2046	403 266 8108	NP-ELECT 1U M 50V
C2047	403 266 8108	NP-ELECT 1U M 50V
C2048	403 266 8108	NP-ELECT 1U M 50V
C2049	403 215 2201	CERAMIC 0.01U K 50V
C2051	403 215 2201	CERAMIC 0.01U K 50V
C2052	403 215 2201	CERAMIC 0.01U K 50V
C2053	403 164 0204	CERAMIC 0.1U Z 25V
C2054	403 215 2201	CERAMIC 0.01U K 50V
C2055	403 215 2201	CERAMIC 0.01U K 50V
C2056	403 215 2201	CERAMIC 0.01U K 50V
C2057	403 157 6602	CERAMIC 470P K 50V
C2058	403 175 4505	ELECT 47U M 6.3V
C2061	403 283 6309	CERAMIC 1U Z 10V
C2062	403 283 6309	CERAMIC 1U Z 10V
C2063	403 205 2808	CERAMIC 0.047U K 25V
C2064	403 205 2808	CERAMIC 0.047U K 25V
C2065	403 283 6309	CERAMIC 1U Z 10V
C2066	403 280 1604	ELECT 220U M 16V
C2067	403 149 9208	CERAMIC 0.01U Z 50V
C2072	403 164 0204	CERAMIC 0.1U Z 25V
C2073	403 164 0204	CERAMIC 0.1U Z 25V
C2074	403 149 9208	CERAMIC 0.01U Z 50V
C2075	403 149 9208	CERAMIC 0.01U Z 50V
C2076	403 149 9208	CERAMIC 0.01U Z 50V
C2078	403 164 0204	CERAMIC 0.1U Z 25V
C2079	403 164 0204	CERAMIC 0.1U Z 25V
C2081	403 280 0607	ELECT 220U M 6.3V
C2082	403 149 9208	CERAMIC 0.01U Z 50V
C2083	403 149 9208	CERAMIC 0.01U Z 50V
C2085	403 149 9208	CERAMIC 0.01U Z 50V
C2086	403 280 0607	ELECT 220U M 6.3V
C2087	403 164 0204	CERAMIC 0.1U Z 25V
C2088	403 164 0204	CERAMIC 0.1U Z 25V
C2089	403 164 0204	CERAMIC 0.1U Z 25V
C2091	403 175 3300	ELECT 47U M 16V
C2092	403 175 3300	ELECT 47U M 16V
C2093	403 175 3300	ELECT 47U M 16V
C3001	403 162 4709	ELECT 10U M 16V
C3002	403 162 4709	ELECT 10U M 16V
C3021	403 283 6309	CERAMIC 1U Z 10V
C3031	403 283 6309	CERAMIC 1U Z 10V
C3032	403 162 6208	ELECT 1U M 50V
C3033	403 162 6208	ELECT 1U M 50V
C3034	403 162 6208	ELECT 1U M 50V
C3035	403 162 6208	ELECT 1U M 50V
C3041	403 283 6309	CERAMIC 1U Z 10V
C3051	403 175 4505	ELECT 47U M 6.3V
C3052	403 283 6309	CERAMIC 1U Z 10V
C3053	403 162 6208	ELECT 1U M 50V
C3054	403 283 6309	CERAMIC 1U Z 10V
C3061	403 283 6309	CERAMIC 1U Z 10V
C3062	403 283 6309	CERAMIC 1U Z 10V
C3071	403 164 0204	CERAMIC 0.1U Z 25V
C3072	403 280 0805	ELECT 330U M 6.3V
C3081	403 157 1508	CERAMIC 3P C 50V
C3082	403 157 1904	CERAMIC 10P D 50V
C3083	403 157 1508	CERAMIC 3P C 50V
C3084	403 157 1904	CERAMIC 10P D 50V
C3085	403 157 1508	CERAMIC 3P C 50V
C3086	403 157 1904	CERAMIC 10P D 50V
RESISTOR		
RB3041	645 025 5380	R-NETWORK 10KX4 1/16W
	645 026 8014	R-NETWORK 10KX4 1/16W
R1001	401 226 1206	MT-GLAZE 150 FA 1/16W
R1002	401 226 1206	MT-GLAZE 150 FA 1/16W
R1003	401 105 7909	MT-GLAZE 0.000 ZA 1/16W
R1004	401 226 1206	MT-GLAZE 150 FA 1/16W
R1005	401 226 1206	MT-GLAZE 150 FA 1/16W
R1006	401 105 7909	MT-GLAZE 0.000 ZA 1/16W
R1007	401 226 1206	MT-GLAZE 150 FA 1/16W
R1008	401 226 1206	MT-GLAZE 150 FA 1/16W
R1009	401 105 7909	MT-GLAZE 0.000 ZA 1/16W
R1010	401 113 4709	MT-GLAZE 130 JA 1/16W
R1011	401 113 4709	MT-GLAZE 130 JA 1/16W
R1012	401 105 7909	MT-GLAZE 0.000 ZA 1/16W
R1014	401 105 0405	MT-GLAZE 100 JA 1/16W
R1015	401 113 4709	MT-GLAZE 130 JA 1/16W
R1016	401 105 7909	MT-GLAZE 0.000 ZA 1/16W
R1018	401 105 0405	MT-GLAZE 100 JA 1/16W
R1019	401 113 4709	MT-GLAZE 130 JA 1/16W
R1022	401 105 4502	MT-GLAZE 390 JA 1/16W
R1024	401 105 0504	MT-GLAZE 1K JA 1/16W
R1026	401 105 4502	MT-GLAZE 390 JA 1/16W
R1028	401 105 0504	MT-GLAZE 1K JA 1/16W
R1031	401 105 4502	MT-GLAZE 390 JA 1/16W
R1033	401 105 0504	MT-GLAZE 1K JA 1/16W
R1034	401 105 7909	MT-GLAZE 0.000 ZA 1/16W
R1035	401 105 7909	MT-GLAZE 0.000 ZA 1/16W
R1036	401 105 7909	MT-GLAZE 0.000 ZA 1/16W
R1037	401 105 0702	MT-GLAZE 100K JA 1/16W
R1038	401 105 0702	MT-GLAZE 100K JA 1/16W
R1046	401 105 0405	MT-GLAZE 100 JA 1/16W
R1051	401 105 7909	MT-GLAZE 0.000 ZA 1/16W
R1053	401 105 8005	MT-GLAZE 1M JA 1/16W
R1054	401 105 4601	MT-GLAZE 3.9K JA 1/16W
R1055	401 105 0405	MT-GLAZE 100 JA 1/16W
R1056	401 105 0405	MT-GLAZE 100 JA 1/16W
R1058	401 105 0603	MT-GLAZE 10K JA 1/16W
R1059	401 105 0405	MT-GLAZE 100 JA 1/16W
R1061	401 105 0405	MT-GLAZE 100 JA 1/16W
R1062	401 105 0405	MT-GLAZE 100 JA 1/16W
R1063	401 113 6604	MT-GLAZE 7.5K JA 1/16W
R1064	401 113 5201	MT-GLAZE 360 JA 1/16W
R1065	401 105 0405	MT-GLAZE 100 JA 1/16W
R1066	401 105 0405	MT-GLAZE 100 JA 1/16W
R1067	401 105 0405	MT-GLAZE 100 JA 1/16W
R1068	401 105 0603	MT-GLAZE 10K JA 1/16W
R1069	401 105 0405	MT-GLAZE 100 JA 1/16W
R1070	401 105 3000	MT-GLAZE 220K JA 1/16W
R1071	401 105 0405	MT-GLAZE 100 JA 1/16W
R1072	401 105 3000	MT-GLAZE 220K JA 1/16W
R1073	401 105 0405	MT-GLAZE 100 JA 1/16W
R1075	401 105 0603	MT-GLAZE 10K JA 1/16W
R1076	401 105 0405	MT-GLAZE 100 JA 1/16W
R1077	401 105 0405	MT-GLAZE 100 JA 1/16W
R1078	401 105 0405	MT-GLAZE 100 JA 1/16W
R1091	401 105 0603	MT-GLAZE 10K JA 1/16W
R1092	401 105 0603	MT-GLAZE 10K JA 1/16W
R1093	401 105 0603	MT-GLAZE 10K JA 1/16W
R1094	401 105 0603	MT-GLAZE 10K JA 1/16W
R2001	401 105 0405	MT-GLAZE 100 JA 1/16W
R2002	401 105 0603	MT-GLAZE 10K JA 1/16W
R2003	401 105 0504	MT-GLAZE 1K JA 1/16W
R2004	401 105 0405	MT-GLAZE 100 JA 1/16W
R2005	401 105 0405	MT-GLAZE 100 JA 1/16W
R2007	403 164 0204	CERAMIC 0.1U Z 25V
R2008	401 105 0504	MT-GLAZE 1K JA 1/16W
R2009	401 105 0504	MT-GLAZE 1K JA 1/16W
R2011	401 105 0405	MT-GLAZE 100 JA 1/16W
R2012	401 105 7909	MT-GLAZE 0.000 ZA 1/16W
R2013	401 105 1907	MT-GLAZE 180 JA 1/16W
R2014	401 105 0405	MT-GLAZE 100 JA 1/16W
R2015	401 105 7909	MT-GLAZE 0.000 ZA 1/16W
R2016	401 105 1907	MT-GLAZE 180 JA 1/16W
R2017	401 105 0405	MT-GLAZE 100 JA 1/16W
R2018	401 105 7909	MT-GLAZE 0.000 ZA 1/16W
R2019	401 105 1907	MT-GLAZE 180 JA 1/16W
R2021	401 105 7404	MT-GLAZE 8.2K JA 1/16W
R2022	401 105 4601	MT-GLAZE 3.9K JA 1/16W
R2023	401 105 2102	MT-GLAZE 18K JA 1/16W
R2025	401 105 7503	MT-GLAZE 82K JA 1/16W
R2026	401 105 2805	MT-GLAZE 2.2K JA 1/16W
R2027	401 105 5301	MT-GLAZE 4.7K JA 1/16W
R2028	401 105 3406	MT-GLAZE 27K JA 1/16W
R2031	401 105 0603	MT-GLAZE 10K JA 1/16W
R2032	401 105 7909	MT-GLAZE 0.000 ZA 1/16W
R2033	401 105 7909	MT-GLAZE 0.000 ZA 1/16W
R2034	401 105 7909	MT-GLAZE 0.000 ZA 1/16W
R2035	401 105 7909	MT-GLAZE 0.000 ZA 1/16W
R2042	401 113 5201	MT-GLAZE 360 JA 1/16W
R2043	401 105 5301	MT-GLAZE 4.7K JA 1/16W
R2044	401 105 2805	MT-GLAZE 2.2K JA 1/16W
R2045	401 035 4108	MT-GLAZE 0.000 ZA 1/8W
R2046	401 035 4108	MT-GLAZE 0.000 ZA 1/8W
R2047	401 036 8907	MT-GLAZE 5.6 JA 1/8W
R2050	401 105 0504	MT-GLAZE 1K JA 1/16W
R2060	401 105 0504	MT-GLAZE 1K JA 1/16W
R2061	401 105 0603	MT-GLAZE 10K JA 1/16W
R2062	401 105 4700	MT-GLAZE 39K JA 1/16W
R2063	401 105 0603	MT-GLAZE 10K JA 1/16W
R2064	401 105 4700	MT-GLAZE 39K JA 1/16W
R2065	401 158 4108	MT-GLAZE 4.7 JA 1/16W
R2066	401 105 0405	MT-GLAZE 100 JA 1/16W
R2067	401 158 4108	MT-GLAZE 4.7 JA 1/16W
R2068	401 105 4700	MT-GLAZE 39K JA 1/16W
R2069	401 105 0603	MT-GLAZE 10K JA 1/16W
R2070	401 105 0603	MT-GLAZE 10K JA 1/16W
R2071	401 105 0603	MT-GLAZE 10K JA 1/16W
R2072	401 105 0603	MT-GLAZE 10K JA 1/16W
R2073	401 105 0603	MT-GLAZE 10K JA 1/16W
R2074	401 105 0405	MT-GLAZE 100 JA 1/16W
R2075	401 105 0405	MT-GLAZE 100 JA 1/16W
R2076	401 105 0405	MT-GLAZE 100 JA 1/16W
R2077	401 105 7909	MT-GLAZE 0.000 ZA 1/16W
R2078	401 105 7909	MT-GLAZE 0.000 ZA 1/16W
R2079	401 105 7909	MT-GLAZE 0.000 ZA 1/16W
R2081	401 105 2805	MT-GLAZE 2.2K JA 1/16W
R2082	401 105 7909	MT-GLAZE 0.000 ZA 1/16W
R2084	401 105 0405	MT-GLAZE 100 JA 1/16W
R2085	401 105 0405	MT-GLAZE 100 JA 1/16W
R2086	401 105 0405	MT-GLAZE 100 JA 1/16W
R2087	401 105 0405	MT-GLAZE 100 JA 1/16W
R2088	401 105 0603	MT-GLAZE 10K JA 1/16W
R2089	401 105 0603	MT-GLAZE 10K JA 1/16W
R2094	401 105 0603	MT-GLAZE 10K JA 1/16W

Ref. No.	Part No.	Description
R2095	401 105 0603	MT-GLAZE 10K JA 1/16W
R2096	401 105 0603	MT-GLAZE 10K JA 1/16W
R2097	401 105 7909	MT-GLAZE 0.000 ZA 1/16W
R2098	401 105 7909	MT-GLAZE 0.000 ZA 1/16W
R2099	401 105 7909	MT-GLAZE 0.000 ZA 1/16W
R3001	401 105 5509	MT-GLAZE 470K JA 1/16W
R3002	401 105 5509	MT-GLAZE 470K JA 1/16W
R3003	401 105 0405	MT-GLAZE 100 JA 1/16W
R3004	401 105 0405	MT-GLAZE 100 JA 1/16W
R3006	401 105 2805	MT-GLAZE 2.2K JA 1/16W
R3007	401 113 6604	MT-GLAZE 7.5K JA 1/16W
R3008	401 105 3000	MT-GLAZE 220K JA 1/16W
R3009	401 105 3000	MT-GLAZE 220K JA 1/16W
R3011	401 105 3000	MT-GLAZE 220K JA 1/16W
R3012	401 105 0405	MT-GLAZE 100 JA 1/16W
R3013	401 105 2805	MT-GLAZE 2.2K JA 1/16W
R3014	401 105 0405	MT-GLAZE 100 JA 1/16W
R3015	401 105 3000	MT-GLAZE 220K JA 1/16W
R3016	401 105 0405	MT-GLAZE 100 JA 1/16W
R3017	401 105 2805	MT-GLAZE 2.2K JA 1/16W
R3018	401 105 0405	MT-GLAZE 100 JA 1/16W
R3021	401 105 7909	MT-GLAZE 0.000 ZA 1/16W
R3022	401 105 7909	MT-GLAZE 0.000 ZA 1/16W
R3031	401 105 7909	MT-GLAZE 0.000 ZA 1/16W
R3045	401 105 0603	MT-GLAZE 10K JA 1/16W
R3046	401 105 0603	MT-GLAZE 10K JA 1/16W
R3047	401 105 0603	MT-GLAZE 10K JA 1/16W
R3048	401 105 7909	MT-GLAZE 0.000 ZA 1/16W
R3051	401 105 0603	MT-GLAZE 10K JA 1/16W
R3052	401 105 0603	MT-GLAZE 10K JA 1/16W
R3053	401 105 7909	MT-GLAZE 0.000 ZA 1/16W
R3054	401 105 7909	MT-GLAZE 0.000 ZA 1/16W
R3061	401 105 0603	MT-GLAZE 10K JA 1/16W
R3062	401 105 0603	MT-GLAZE 10K JA 1/16W
R3063	401 105 0405	MT-GLAZE 100 JA 1/16W
R3064	401 105 0603	MT-GLAZE 10K JA 1/16W
R3065	401 105 0603	MT-GLAZE 10K JA 1/16W
R3066	401 105 7909	MT-GLAZE 0.000 ZA 1/16W
R3072	401 035 4108	MT-GLAZE 0.000 ZA 1/8W
R3081	401 105 4502	MT-GLAZE 390 JA 1/16W
R3083	401 105 0504	MT-GLAZE 1K JA 1/16W
R3084	401 105 4502	MT-GLAZE 390 JA 1/16W
R3086	401 105 0504	MT-GLAZE 1K JA 1/16W
R3087	401 105 4502	MT-GLAZE 390 JA 1/16W
R3089	401 105 0504	MT-GLAZE 1K JA 1/16W
R3091	401 105 7909	MT-GLAZE 0.000 ZA 1/16W
R3092	401 105 7909	MT-GLAZE 0.000 ZA 1/16W
R3093	401 105 7909	MT-GLAZE 0.000 ZA 1/16W
COIL		
L1004	645 025 0637	FILTER,EMI 190PF
L1005	645 025 0637	FILTER,EMI 190PF
L1061	645 036 3894	INDUCTOR,220 OHM
L2001	645 036 3894	INDUCTOR,220 OHM
L2004	645 036 3894	INDUCTOR,220 OHM
L2007	645 036 3894	INDUCTOR,220 OHM
L2071	645 036 3894	INDUCTOR,220 OHM
L2072	645 036 3894	INDUCTOR,220 OHM
L3001	645 014 2659	FILTER,EMI 10MHZ
L3002	645 014 2659	FILTER,EMI 10MHZ
L3003	645 014 2659	FILTER,EMI 10MHZ
L3004	645 014 2659	FILTER,EMI 10MHZ
L3005	645 014 2659	FILTER,EMI 10MHZ
L3006	645 014 2659	FILTER,EMI 10MHZ
L3007	645 014 2659	FILTER,EMI 10MHZ
L3008	645 014 2659	FILTER,EMI 10MHZ
L3009	645 014 2659	FILTER,EMI 10MHZ
DIODE		
D1001	407 209 1201	ZD UDZS-TE-176.2B
D1002	407 209 1201	ZD UDZS-TE-176.2B
D1003	407 209 1201	ZD UDZS-TE-176.2B
D1004	407 209 1201	ZD UDZS-TE-176.2B
D1005	407 209 1201	ZD UDZS-TE-176.2B
D1006	407 209 1201	ZD UDZS-TE-176.2B
D1007	407 223 1102	ZENER DIODE 02DZ6.2Y(TPH3
D1008	407 223 1102	ZENER DIODE 02DZ6.2Y(TPH3
D1009	407 223 1102	ZENER DIODE 02DZ6.2Y(TPH3
D1011	407 223 1102	ZENER DIODE 02DZ6.2Y(TPH3
D1012	407 149 0807	DIODE 1SS355-TE-17
D1013	407 149 0807	DIODE 1SS355-TE-17
D2001	407 149 0807	DIODE 1SS355-TE-17
D2061	407 149 0807	DIODE 1SS355-TE-17
D2062	407 149 0807	DIODE 1SS355-TE-17
D2081	407 149 0807	DIODE 1SS355-TE-17
D2082	407 149 0807	DIODE 1SS355-TE-17
D3001	407 223 0501	ZENER DIODE 02DZ12Y(TPH3)
D3002	407 223 0501	ZENER DIODE 02DZ12Y(TPH3)
D3003	407 223 0501	ZENER DIODE 02DZ12Y(TPH3)
D3004	407 223 0501	ZENER DIODE 02DZ12Y(TPH3)
D3005	407 223 0501	ZENER DIODE 02DZ12Y(TPH3)
D3006	407 223 0501	ZENER DIODE 02DZ12Y(TPH3)
D3007	407 223 0501	ZENER DIODE 02DZ12Y(TPH3)
D3008	407 223 0501	ZENER DIODE 02DZ12Y(TPH3)
D3009	407 223 0501	ZENER DIODE 02DZ12Y(TPH3)
D3011	407 223 0501	ZENER DIODE 02DZ12Y(TPH3)
D3012	407 223 0501	ZENER DIODE 02DZ12Y(TPH3)
D3013	407 223 0501	ZENER DIODE 02DZ12Y(TPH3)
D3014	407 223 0501	ZENER DIODE 02DZ12Y(TPH3)
D3015	407 223 1102	ZENER DIODE 02DZ6.2Y(TPH3
MISCELLANEOUS		
TP1001	645 036 5010	TERMINAL
TP1002	645 036 5010	TERMINAL
TP1003	645 036 5010	TERMINAL
TP2071	645 036 5010	TERMINAL
TP2072	645 036 5010	TERMINAL
TP2073	645 036 5010	TERMINAL
K10A	645 028 0412	SOCKET,BNC 5P
K10B	645 040 9974	JACK,RCA-2
K10C	645 041 1076	SOCKET,DIN 8P
K10H	645 041 6071	SOCKET,I/O 176P
K10H1	610 289 9795	JOINT GUIDE BUSH ML6A
K10H2	610 289 9795	JOINT GUIDE BUSH ML6A
X1061	645 046 9213	OSC,CERAMIC 503.0KHZ
X3051	645 021 1218	OSC,CERAMIC 8.00MHZ
	645 037 5187	OSC,CERAMIC 8.00MHZ
X3061	645 021 1218	OSC,CERAMIC 8.00MHZ
	645 037 5187	OSC,CERAMIC 8.00MHZ

****

ASSY PWB MAIN ***--- See page-93 ---***

TRANSISTOR		
Q1833	405 014 4509	TR 2SC2412K T146 R
	405 014 4608	TR 2SC2412K T146 S
	405 015 8704	TR 2SC2812-L6-TB
	405 015 8902	TR 2SC2812-L7-TB
	405 163 1602	TR 2SC2812N-L6-TB0
	405 163 1701	TR 2SC2812N-L7-TB0
Q1834	405 014 4509	TR 2SC2412K T146 R
	405 014 4608	TR 2SC2412K T146 S
	405 015 8704	TR 2SC2812-L6-TB
	405 015 8902	TR 2SC2812-L7-TB
	405 163 1602	TR 2SC2812N-L6-TB0
	405 163 1701	TR 2SC2812N-L7-TB0
Q1881	405 014 4509	TR 2SC2412K T146 R
	405 014 4608	TR 2SC2412K T146 S
	405 015 8704	TR 2SC2812-L6-TB
	405 015 8902	TR 2SC2812-L7-TB
	405 163 1602	TR 2SC2812N-L6-TB0
	405 163 1701	TR 2SC2812N-L7-TB0
Q2361	405 014 4509	TR 2SC2412K T146 R
	405 014 4608	TR 2SC2412K T146 S
	405 015 8704	TR 2SC2812-L6-TB
	405 015 8902	TR 2SC2812-L7-TB
	405 163 1602	TR 2SC2812N-L6-TB0
	405 163 1701	TR 2SC2812N-L7-TB0
Q281	405 014 4509	TR 2SC2412K T146 R
	405 014 4608	TR 2SC2412K T146 S
	405 015 8704	TR 2SC2812-L6-TB
	405 015 8902	TR 2SC2812-L7-TB
	405 163 1602	TR 2SC2812N-L6-TB0
	405 163 1701	TR 2SC2812N-L7-TB0
Q4861	405 014 4509	TR 2SC2412K T146 R
	405 014 4608	TR 2SC2412K T146 S
	405 015 8704	TR 2SC2812-L6-TB
	405 015 8902	TR 2SC2812-L7-TB
	405 163 1602	TR 2SC2812N-L6-TB0
	405 163 1701	TR 2SC2812N-L7-TB0
Q4862	405 134 5905	TR 2SA1037AK-T146-R
	405 147 2205	TR 2SA1037AK-S-T146
	405 002 0308	TR 2SA1037K T146 R
	405 002 0407	TR 2SA1037K T146 S
	405 002 6706	TR 2SA1179-M6-TB
	405 002 6904	TR 2SA1179-M7-TB
	405 163 1503	TR 2SA1179N-M6-TB
	405 163 2708	TR 2SA1179N-M7-TB
Q5630	405 156 0209	TR 2SK2376
Q5851	405 014 4509	TR 2SC2412K T146 R
	405 014 4608	TR 2SC2412K T146 S
	405 015 8704	TR 2SC2812-L6-TB
	405 015 8902	TR 2SC2812-L7-TB
	405 163 1602	TR 2SC2812N-L6-TB0
	405 163 1701	TR 2SC2812N-L7-TB0
Q9801	405 134 5905	TR 2SA1037AK-T146-R
	405 147 2205	TR 2SA1037AK-S-T146
	405 002 0308	TR 2SA1037K T146 R
	405 002 0407	TR 2SA1037K T146 S
	405 002 6706	TR 2SA1179-M6-TB
	405 002 6904	TR 2SA1179-M7-TB
	405 163 1503	TR 2SA1179N-M6-TB
	405 163 2708	TR 2SA1179N-M7-TB
INTEGRATED CIRCUIT		
IC1302	409 301 5309	IC TC7S32FU-TE85L
IC1311	409 339 3605	IC 24LC16BT/SN-T
IC1331	409 501 9107	IC ICS512MT
IC1341	409 501 9107	IC ICS512MT
IC1351	410 406 6702	IC MBM29LV800TA90NB869S
	410 406 7006	IC MBM29LV800TA90NB869
IC1352	410 352 8508	IC IDT71V016S15PHTR
	410 397 0406	IC IS61LV6416-15T
IC1362	409 475 8403	IC SI-3025LS-TL

Ref. No.	Part No.	Description
IC1801	409 475 3705	IC M66500FP
IC1811	409 339 3605	IC 24LC16BT/SN-T
IC1821	410 364 6905	IC TC74ACT138FT-EL
IC1822	410 367 1402	IC SN74LVC374APW
IC1823	409 301 5309	IC TC7S32FU-TE85L
IC1824	409 301 5309	IC TC7S32FU-TE85L
IC1851	409 421 8808	IC M62420FP
IC1871	409 390 6201	IC EL2244CS
IC1881	410 311 5708	IC MC74HCT244ADT
	410 315 5506	IC HD74HCT244TV
	410 356 7507	IC SN74HCT244PWR
IC201	409 461 7304	IC AD8057ART
IC211	409 461 7304	IC AD8057ART
IC221	409 461 7304	IC AD8057ART
IC231	409 461 7304	IC AD8057ART
IC2311	409 444 0902	IC AD9483KS-100
IC2331	409 357 6602	IC LT1260CS
IC2381	409 461 7304	IC AD8057ART
IC2386	409 461 7304	IC AD8057ART
IC2391	409 461 7304	IC AD8057ART
IC2401	410 376 3404	IC XC2S100-5 PQ208C
	410 388 2105	IC XC2S100-5 PQ208CES
IC2404	410 325 4605	IC TC74LCX244FT
	410 325 4704	IC HD74LVC244AT
	410 421 4400	IC 74LCX244MTCX
IC241	409 461 7304	IC AD8057ART
IC251	409 461 7304	IC AD8057ART
IC2541	409 481 8602	IC LM76CHMX-5
IC2561	409 390 0001	IC LM7171AIMX
	409 486 7709	IC LM7171BIMX
IC2571	409 390 0001	IC LM7171AIMX
	409 486 7709	IC LM7171BIMX
IC2581	409 390 0001	IC LM7171AIMX
	409 486 7709	IC LM7171BIMX
IC2591	409 390 0001	IC LM7171AIMX
	409 486 7709	IC LM7171BIMX
IC261	409 461 7304	IC AD8057ART
IC262	409 461 7304	IC AD8057ART
IC263	409 461 7304	IC AD8057ART
IC281	409 357 6602	IC LT1260CS
IC295	409 416 6505	IC BA05FP-E2
IC301	409 502 4903	IC PW365-20U
IC3201	410 321 8300	IC TC74VCX16244FT
IC3202	410 321 8300	IC TC74VCX16244FT
IC3203	410 321 8300	IC TC74VCX16244FT
IC3204	410 401 7407	IC TC74VCX244FT
IC3231	410 403 4206	IC EP1K10TC144-1
IC3232	409 475 8403	IC SI-3025LS-TL
IC3270	409 462 2308	IC TC7SZ04FU-TE852
IC3271	410 401 7506	IC TC74VCX16374FT
IC3272	410 321 8300	IC TC74VCX16244FT
IC3273	410 401 7506	IC TC74VCX16374FT
IC3274	410 321 8300	IC TC74VCX16244FT
IC3275	410 401 7506	IC TC74VCX16374FT
IC3276	410 321 8300	IC TC74VCX16244FT
IC3277	410 391 2109	IC TC74VCX374FT(EL)
IC3278	410 401 7407	IC TC74VCX244FT
IC3295	410 337 0602	IC HD74LVC14T
IC3296	410 392 4706	IC SN74AHCT1G125DCK
IC3297	410 392 4706	IC SN74AHCT1G125DCK
IC3298	409 330 2508	IC TC7SH04FU-(TE85L)
	410 356 7606	IC SN74AHC1G04HDCKR
IC3299	409 439 8906	IC TC7WH125FU
IC3351	409 419 3709	IC MC10H351ML1
IC3401	410 403 4305	IC EP1K100QC208-2
IC3511	410 311 5708	IC MC74HCT244ADT
	410 315 5506	IC HD74HCT244TV
	410 356 7507	IC SN74HCT244PWR
IC3521	410 311 5708	IC MC74HCT244ADT
	410 315 5506	IC HD74HCT244TV
	410 356 7507	IC SN74HCT244PWR
IC3561	409 422 5806	IC M62398FP
IC401	409 487 8002	IC CXD3511Q
IC406	410 311 5708	IC MC74HCT244ADT
	410 315 5506	IC HD74HCT244TV
	410 356 7507	IC SN74HCT244PWR
IC407	410 311 5708	IC MC74HCT244ADT
	410 315 5506	IC HD74HCT244TV
	410 356 7507	IC SN74HCT244PWR
IC408	410 311 5708	IC MC74HCT244ADT
	410 315 5506	IC HD74HCT244TV
	410 356 7507	IC SN74HCT244PWR
IC4201	410 362 7904	IC TC220C700TB-503
IC4231	409 444 8700	IC ICS1523M-ER
IC4261	409 475 8403	IC SI-3025LS-TL
IC4811	410 325 4605	IC TC74LCX244FT
	410 325 4704	IC HD74LVC244AT
	410 421 4400	IC 74LCX244MTCX
IC4821	410 325 4605	IC TC74LCX244FT
	410 325 4704	IC HD74LVC244AT
	410 421 4400	IC 74LCX244MTCX
IC4831	410 325 4605	IC TC74LCX244FT
	410 325 4704	IC HD74LVC244AT
	410 421 4400	IC 74LCX244MTCX
IC4851	409 330 2508	IC TC7SH04FU-(TE85L)
	410 356 7606	IC SN74AHC1G04HDCKR
IC4855	410 356 7903	IC SN74AHC1G08HDCKR
IC4861	409 416 6505	IC BA05FP-E2
IC4871	410 325 4605	IC TC74LCX244FT
	410 325 4704	IC HD74LVC244AT
	410 421 4400	IC 74LCX244MTCX
IC4881	410 325 4605	IC TC74LCX244FT
	410 325 4704	IC HD74LVC244AT
	410 421 4400	IC 74LCX244MTCX
IC4891	409 497 6302	IC BA09FP-E2
IC501	409 498 6004	IC CXA3562R
IC531	409 498 6004	IC CXA3562R
IC561	409 498 6004	IC CXA3562R
IC5630	409 344 6509	IC UPC1093T-E1
IC5631	409 461 7809	IC PQ20WZ11
IC6301	410 319 4208	IC MB81G163222-80TQ
	410 365 4603	IC MS82V16520-8AGA
IC6321	410 319 4208	IC MB81G163222-80TQ
	410 365 4603	IC MS82V16520-8AGA
IC6341	410 319 4208	IC MB81G163222-80TQ
	410 365 4603	IC MS82V16520-8AGA
IC801	410 402 7307	IC HD64F7045F28-B841-S
	410 402 7901	IC HD64F7045F28-B841
IC802	409 344 1900	IC MN1382-Q-TX
IC8201	409 504 8206	IC AD9886KS-140
IC8202	409 416 6406	IC BA033FP-E2
	409 410 1001	IC UPC2933T-E1
IC8281	409 458 3401	IC M62393FP
IC871	410 407 1409	IC MBM29LV160BE-90-B875-S
	410 407 1607	IC MBM29LV160BE-90-B875
IC872	410 365 5600	IC SN74LVCC4245APWR
IC873	410 365 5600	IC SN74LVCC4245APWR
IC874	410 311 5708	IC MC74HCT244ADT
	410 315 5506	IC HD74HCT244TV
	410 356 7507	IC SN74HCT244PWR
IC875	410 311 5708	IC MC74HCT244ADT
	410 315 5506	IC HD74HCT244TV
	410 356 7507	IC SN74HCT244PWR
IC876	410 311 5708	IC MC74HCT244ADT
	410 315 5506	IC HD74HCT244TV
	410 356 7507	IC SN74HCT244PWR
IC887	409 461 7304	IC AD8057ART
IC892	410 367 1501	IC M5M51008CFP-70HI
	410 415 5208	IC M5M51008DFP-70HI
IC893	409 330 2508	IC TC7SH04FU-(TE85L)
	410 356 7606	IC SN74AHC1G04HDCKR
IC9801	409 468 8908	IC ML60851CTB
CAPACITOR		
C1311	403 280 0508	ELECT 470U M 4V
C1312	403 164 0204	CERAMIC 0.1U Z 25V
C1331	403 149 9208	CERAMIC 0.01U Z 50V
C1341	403 149 9208	CERAMIC 0.01U Z 50V
C1351	403 280 0508	ELECT 470U M 4V
C1352	403 164 0204	CERAMIC 0.1U Z 25V
C1354	403 164 0204	CERAMIC 0.1U Z 25V
C1365	403 280 0805	ELECT 330U M 6.3V
C1367	403 280 0508	ELECT 470U M 4V
C1368	403 164 0204	CERAMIC 0.1U Z 25V
C1376	403 164 0204	CERAMIC 0.1U Z 25V
C1377	403 164 0204	CERAMIC 0.1U Z 25V
C1503	403 164 0204	CERAMIC 0.1U Z 25V
C1533	403 164 0204	CERAMIC 0.1U Z 25V
C1563	403 164 0204	CERAMIC 0.1U Z 25V
C1801	403 164 0204	CERAMIC 0.1U Z 25V
C1802	403 164 0204	CERAMIC 0.1U Z 25V
C1803	403 164 0204	CERAMIC 0.1U Z 25V
C1804	403 280 0805	ELECT 330U M 6.3V
C1811	403 164 0204	CERAMIC 0.1U Z 25V
C1821	403 164 0204	CERAMIC 0.1U Z 25V
C1822	403 164 0204	CERAMIC 0.1U Z 25V
C1823	403 164 0204	CERAMIC 0.1U Z 25V
C1850	403 280 1604	ELECT 220U M 16V
C1851	403 267 0606	NP-ELECT 4.7U M 16V
C1852	403 280 1604	ELECT 220U M 16V
C1853	403 215 2904	CERAMIC 0.022U K 25V
C1854	403 272 5603	CERAMIC 0.033U K 16V
C1856	403 348 5803	CERAMIC 0.47U K 10V
C1857	403 149 9208	CERAMIC 0.01U Z 50V
C1858	403 175 3300	ELECT 47U M 16V
C1859	403 164 0204	CERAMIC 0.1U Z 25V
C1861	403 272 5603	CERAMIC 0.033U K 16V
C1862	403 348 5803	CERAMIC 0.47U K 10V
C1863	403 215 2904	CERAMIC 0.022U K 25V
C1864	403 280 1604	ELECT 220U M 16V
C1865	403 164 0204	CERAMIC 0.1U Z 25V
C1866	403 280 1604	ELECT 220U M 16V
C1867	403 267 0606	NP-ELECT 4.7U M 16V
C1871	403 157 1904	CERAMIC 10P D 50V
C1872	403 348 5803	CERAMIC 0.47U K 10V
C1873	403 157 1904	CERAMIC 10P D 50V
C1881	403 164 0204	CERAMIC 0.1U Z 25V
C1893	403 164 0204	CERAMIC 0.1U Z 25V
C1894	403 164 0204	CERAMIC 0.1U Z 25V
C1895	403 164 0204	CERAMIC 0.1U Z 25V
C202	403 164 0204	CERAMIC 0.1U Z 25V

Ref. No.	Part No.	Description			
C204	403 164 0204	CERAMIC	0.1U	Z	25V
C205	403 157 1904	CERAMIC	10P	D	50V
C206	403 267 0804	NP-ELECT	47U	M	6.3V
C211	403 157 1904	CERAMIC	10P	D	50V
C212	403 267 0804	NP-ELECT	47U	M	6.3V
C214	403 157 1508	CERAMIC	3P	C	50V
C215	403 157 1508	CERAMIC	3P	C	50V
C216	403 157 1508	CERAMIC	3P	C	50V
C221	403 157 1904	CERAMIC	10P	D	50V
C222	403 267 0804	NP-ELECT	47U	M	6.3V
C2301	403 267 0804	NP-ELECT	47U	M	6.3V
C2302	403 267 0804	NP-ELECT	47U	M	6.3V
C2303	403 267 0804	NP-ELECT	47U	M	6.3V
C2311	403 280 0805	ELECT	330U	M	6.3V
C2312	403 164 0204	CERAMIC	0.1U	Z	25V
C2313	403 280 0607	ELECT	220U	M	6.3V
C2314	403 164 0204	CERAMIC	0.1U	Z	25V
C2315	403 162 6208	ELECT	1U	M	50V
C2316	403 164 0204	CERAMIC	0.1U	Z	25V
C2318	403 164 0204	CERAMIC	0.1U	Z	25V
C2319	403 164 0204	CERAMIC	0.1U	Z	25V
C232	403 164 0204	CERAMIC	0.1U	Z	25V
C2321	403 164 0204	CERAMIC	0.1U	Z	25V
C2331	403 164 0204	CERAMIC	0.1U	Z	25V
C2332	403 164 0204	CERAMIC	0.1U	Z	25V
C2334	403 164 0204	CERAMIC	0.1U	Z	25V
C2336	403 164 0204	CERAMIC	0.1U	Z	25V
C2338	403 164 0204	CERAMIC	0.1U	Z	25V
C234	403 164 0204	CERAMIC	0.1U	Z	25V
C2370	403 164 0204	CERAMIC	0.1U	Z	25V
C2377	403 280 0805	ELECT	330U	M	6.3V
C2378	403 164 0204	CERAMIC	0.1U	Z	25V
C2379	403 280 0805	ELECT	330U	M	6.3V
C2381	403 157 1508	CERAMIC	3P	C	50V
C2382	403 157 1904	CERAMIC	10P	D	50V
C2386	403 157 1508	CERAMIC	3P	C	50V
C2387	403 157 1904	CERAMIC	10P	D	50V
C2391	403 157 1508	CERAMIC	3P	C	50V
C2392	403 157 1904	CERAMIC	10P	D	50V
C2401	403 280 0508	ELECT	470U	M	4V
C2402	403 164 0204	CERAMIC	0.1U	Z	25V
C2403	403 280 0508	ELECT	470U	M	4V
C2404	403 164 0204	CERAMIC	0.1U	Z	25V
C2406	403 164 0204	CERAMIC	0.1U	Z	25V
C2407	403 164 0204	CERAMIC	0.1U	Z	25V
C2408	403 164 0204	CERAMIC	0.1U	Z	25V
C2409	403 164 0204	CERAMIC	0.1U	Z	25V
C2413	403 164 0204	CERAMIC	0.1U	Z	25V
C2414	403 164 0204	CERAMIC	0.1U	Z	25V
C2416	403 164 0204	CERAMIC	0.1U	Z	25V
C2417	403 164 0204	CERAMIC	0.1U	Z	25V
C2419	403 164 0204	CERAMIC	0.1U	Z	25V
C2421	403 164 0204	CERAMIC	0.1U	Z	25V
C2423	403 164 0204	CERAMIC	0.1U	Z	25V
C2424	403 164 0204	CERAMIC	0.1U	Z	25V
C2428	403 164 0204	CERAMIC	0.1U	Z	25V
C2429	403 164 0204	CERAMIC	0.1U	Z	25V
C2470	403 162 4709	ELECT	10U	M	16V
C2471	403 164 0204	CERAMIC	0.1U	Z	25V
C2472	403 164 0204	CERAMIC	0.1U	Z	25V
C2473	403 162 4709	ELECT	10U	M	16V
C2491	403 164 0204	CERAMIC	0.1U	Z	25V
C2501	403 280 1604	ELECT	220U	M	16V
C2502	403 164 0204	CERAMIC	0.1U	Z	25V
C2503	403 280 1604	ELECT	220U	M	16V
C2504	403 164 0204	CERAMIC	0.1U	Z	25V
C2511	403 164 0204	CERAMIC	0.1U	Z	25V
C2520	403 280 1604	ELECT	220U	M	16V
C2521	403 164 0204	CERAMIC	0.1U	Z	25V
C2522	403 280 1604	ELECT	220U	M	16V
C2530	403 280 1604	ELECT	220U	M	16V
C2531	403 164 0204	CERAMIC	0.1U	Z	25V
C2532	403 280 1604	ELECT	220U	M	16V
C2541	403 164 0204	CERAMIC	0.1U	Z	25V
C2563	403 157 1904	CERAMIC	10P	D	50V
C2573	403 157 1904	CERAMIC	10P	D	50V
C2583	403 157 1904	CERAMIC	10P	D	50V
C2593	403 157 1904	CERAMIC	10P	D	50V
C261	403 304 1801	ELECT	100U	M	6.3V
C262	403 283 6309	CERAMIC	1U	Z	10V
	403 336 5600	CERAMIC	1U	Z	10V
C263	403 304 1801	ELECT	100U	M	6.3V
C264	403 283 6309	CERAMIC	1U	Z	10V
	403 336 5600	CERAMIC	1U	Z	10V
C265	403 155 4204	CERAMIC	15P	J	50V
C266	403 157 1904	CERAMIC	10P	D	50V
C267	403 157 2109	CERAMIC	13P	J	50V
C268	403 157 1904	CERAMIC	10P	D	50V
C269	403 157 2208	CERAMIC	16P	J	50V
C270	403 157 1904	CERAMIC	10P	D	50V
C281	403 164 0204	CERAMIC	0.1U	Z	25V
C282	403 164 0204	CERAMIC	0.1U	Z	25V
C283	403 164 0204	CERAMIC	0.1U	Z	25V
C284	403 164 0204	CERAMIC	0.1U	Z	25V
C287	403 164 0204	CERAMIC	0.1U	Z	25V

Ref. No.	Part No.	Description			
C296	403 175 0606	ELECT	100U	M	6.3V
C297	403 164 0204	CERAMIC	0.1U	Z	25V
C311	403 280 0508	ELECT	470U	M	4V
C312	403 164 0204	CERAMIC	0.1U	Z	25V
C313	403 280 0508	ELECT	470U	M	4V
C314	403 164 0204	CERAMIC	0.1U	Z	25V
C315	403 164 0204	CERAMIC	0.1U	Z	25V
C316	403 164 0204	CERAMIC	0.1U	Z	25V
C3201	403 280 0508	ELECT	470U	M	4V
C3202	403 164 0204	CERAMIC	0.1U	Z	25V
C3203	403 164 0204	CERAMIC	0.1U	Z	25V
C3204	403 113 3805	CERAMIC	1000P	K	50V
C3205	403 164 0204	CERAMIC	0.1U	Z	25V
C3206	403 164 0204	CERAMIC	0.1U	Z	25V
C3207	403 113 3805	CERAMIC	1000P	K	50V
C3208	403 164 0204	CERAMIC	0.1U	Z	25V
C3209	403 164 0204	CERAMIC	0.1U	Z	25V
C3211	403 113 3805	CERAMIC	1000P	K	50V
C3212	403 164 0204	CERAMIC	0.1U	Z	25V
C3213	403 164 0204	CERAMIC	0.1U	Z	25V
C3231	403 280 0508	ELECT	470U	M	4V
C3232	403 164 0204	CERAMIC	0.1U	Z	25V
C3233	403 280 0508	ELECT	470U	M	4V
C3234	403 164 0204	CERAMIC	0.1U	Z	25V
C3235	403 164 0204	CERAMIC	0.1U	Z	25V
C3236	403 164 0204	CERAMIC	0.1U	Z	25V
C3237	403 164 0204	CERAMIC	0.1U	Z	25V
C3239	403 164 0204	CERAMIC	0.1U	Z	25V
C3241	403 164 0204	CERAMIC	0.1U	Z	25V
C3261	403 164 0204	CERAMIC	0.1U	Z	25V
C3263	403 164 0204	CERAMIC	0.1U	Z	25V
C3264	403 164 0204	CERAMIC	0.1U	Z	25V
C3265	403 164 0204	CERAMIC	0.1U	Z	25V
C3266	403 164 0204	CERAMIC	0.1U	Z	25V
C3271	403 280 0508	ELECT	470U	M	4V
C3272	403 113 3805	CERAMIC	1000P	K	50V
C3273	403 164 0204	CERAMIC	0.1U	Z	25V
C3274	403 164 0204	CERAMIC	0.1U	Z	25V
C3275	403 164 0204	CERAMIC	0.1U	Z	25V
C3276	403 164 0204	CERAMIC	0.1U	Z	25V
C3277	403 113 3805	CERAMIC	1000P	K	50V
C3278	403 113 3805	CERAMIC	1000P	K	50V
C3279	403 164 0204	CERAMIC	0.1U	Z	25V
C3281	403 164 0204	CERAMIC	0.1U	Z	25V
C3282	403 164 0204	CERAMIC	0.1U	Z	25V
C3283	403 164 0204	CERAMIC	0.1U	Z	25V
C3284	403 113 3805	CERAMIC	1000P	K	50V
C3285	403 113 3805	CERAMIC	1000P	K	50V
C3286	403 164 0204	CERAMIC	0.1U	Z	25V
C3287	403 164 0204	CERAMIC	0.1U	Z	25V
C3288	403 164 0204	CERAMIC	0.1U	Z	25V
C3289	403 164 0204	CERAMIC	0.1U	Z	25V
C3291	403 113 3805	CERAMIC	1000P	K	50V
C3292	403 164 0204	CERAMIC	0.1U	Z	25V
C3293	403 164 0204	CERAMIC	0.1U	Z	25V
C3294	403 164 0204	CERAMIC	0.1U	Z	25V
C3297	403 164 0204	CERAMIC	0.1U	Z	25V
C3351	403 164 0204	CERAMIC	0.1U	Z	25V
C3352	403 304 1801	ELECT	100U	M	6.3V
C3401	403 175 0606	ELECT	100U	M	6.3V
C3402	403 164 0204	CERAMIC	0.1U	Z	25V
C3403	403 175 0606	ELECT	100U	M	6.3V
C3404	403 164 0204	CERAMIC	0.1U	Z	25V
C3405	403 164 0204	CERAMIC	0.1U	Z	25V
C3410	403 164 0204	CERAMIC	0.1U	Z	25V
C3411	403 164 0204	CERAMIC	0.1U	Z	25V
C3414	403 164 0204	CERAMIC	0.1U	Z	25V
C3415	403 164 0204	CERAMIC	0.1U	Z	25V
C3416	403 164 0204	CERAMIC	0.1U	Z	25V
C3417	403 164 0204	CERAMIC	0.1U	Z	25V
C3418	403 164 0204	CERAMIC	0.1U	Z	25V
C3419	403 164 0204	CERAMIC	0.1U	Z	25V
C3421	403 164 0204	CERAMIC	0.1U	Z	25V
C3425	403 164 0204	CERAMIC	0.1U	Z	25V
C3427	403 164 0204	CERAMIC	0.1U	Z	25V
C3428	403 164 0204	CERAMIC	0.1U	Z	25V
C3431	403 164 0204	CERAMIC	0.1U	Z	25V
C3432	403 164 0204	CERAMIC	0.1U	Z	25V
C3433	403 164 0204	CERAMIC	0.1U	Z	25V
C3434	403 164 0204	CERAMIC	0.1U	Z	25V
C3511	403 164 0204	CERAMIC	0.1U	Z	25V
C3521	403 164 0204	CERAMIC	0.1U	Z	25V
C3522	403 280 0805	ELECT	330U	M	6.3V
C3523	403 113 3805	CERAMIC	1000P	K	50V
C3561	403 164 0204	CERAMIC	0.1U	Z	25V
C3562	403 304 1801	ELECT	100U	M	6.3V
C3563	403 113 3805	CERAMIC	1000P	K	50V
C3564	403 164 0204	CERAMIC	0.1U	Z	25V
C400	403 164 0204	CERAMIC	0.1U	Z	25V
C401	403 280 0508	ELECT	470U	M	4V
C402	403 164 0204	CERAMIC	0.1U	Z	25V
C403	403 280 0508	ELECT	470U	M	4V
C404	403 164 0204	CERAMIC	0.1U	Z	25V
C405	403 113 3805	CERAMIC	1000P	K	50V
C406	403 164 0204	CERAMIC	0.1U	Z	25V

Ref. No.	Part No.	Description
C409	403 164 0204	CERAMIC 0.1U Z 25V
C410	403 164 0204	CERAMIC 0.1U Z 25V
C411	403 164 0204	CERAMIC 0.1U Z 25V
C412	403 164 0204	CERAMIC 0.1U Z 25V
C413	403 164 0204	CERAMIC 0.1U Z 25V
C415	403 113 3805	CERAMIC 1000P K 50V
C416	403 164 0204	CERAMIC 0.1U Z 25V
C419	403 113 3805	CERAMIC 1000P K 50V
C420	403 164 0204	CERAMIC 0.1U Z 25V
C4201	403 280 0508	ELECT 470U M 4V
C4202	403 164 0204	CERAMIC 0.1U Z 25V
C4204	403 164 0204	CERAMIC 0.1U Z 25V
C4205	403 164 0204	CERAMIC 0.1U Z 25V
C4206	403 164 0204	CERAMIC 0.1U Z 25V
C4208	403 164 0204	CERAMIC 0.1U Z 25V
C4209	403 164 0204	CERAMIC 0.1U Z 25V
C421	403 164 0204	CERAMIC 0.1U Z 25V
C4212	403 164 0204	CERAMIC 0.1U Z 25V
C4213	403 164 0204	CERAMIC 0.1U Z 25V
C4214	403 164 0204	CERAMIC 0.1U Z 25V
C4215	403 164 0204	CERAMIC 0.1U Z 25V
C4232	403 164 0204	CERAMIC 0.1U Z 25V
C4233	403 162 4709	ELECT 10U M 16V
C4234	403 164 0204	CERAMIC 0.1U Z 25V
C4235	403 162 4709	ELECT 10U M 16V
C4236	403 164 0204	CERAMIC 0.1U Z 25V
C4237	403 155 1609	CERAMIC 33P J 50V
C4238	403 157 7302	CERAMIC 6800P K 50V
C4239	403 164 0204	CERAMIC 0.1U Z 25V
C4241	403 113 3805	CERAMIC 1000P K 50V
C4242	403 164 0204	CERAMIC 0.1U Z 25V
C4243	403 149 9208	CERAMIC 0.01U Z 50V
C4244	403 162 4709	ELECT 10U M 16V
C426	403 113 3805	CERAMIC 1000P K 50V
C4263	403 280 0508	ELECT 470U M 4V
C4264	403 164 0204	CERAMIC 0.1U Z 25V
C427	403 113 3805	CERAMIC 1000P K 50V
C428	403 113 3805	CERAMIC 1000P K 50V
C434	403 113 3805	CERAMIC 1000P K 50V
C440	403 164 0204	CERAMIC 0.1U Z 25V
C445	403 164 0204	CERAMIC 0.1U Z 25V
C446	403 164 0204	CERAMIC 0.1U Z 25V
C447	403 164 0204	CERAMIC 0.1U Z 25V
C449	403 113 3805	CERAMIC 1000P K 50V
C454	403 164 0204	CERAMIC 0.1U Z 25V
C456	403 164 0204	CERAMIC 0.1U Z 25V
C457	403 113 3805	CERAMIC 1000P K 50V
C458	403 164 0204	CERAMIC 0.1U Z 25V
C461	403 164 0204	CERAMIC 0.1U Z 25V
C463	403 164 0204	CERAMIC 0.1U Z 25V
C464	403 113 3805	CERAMIC 1000P K 50V
C465	403 164 0204	CERAMIC 0.1U Z 25V
C467	403 113 3805	CERAMIC 1000P K 50V
C468	403 164 0204	CERAMIC 0.1U Z 25V
C471	403 113 3805	CERAMIC 1000P K 50V
C474	403 164 0204	CERAMIC 0.1U Z 25V
C477	403 164 0204	CERAMIC 0.1U Z 25V
C481	403 164 0204	CERAMIC 0.1U Z 25V
C4811	403 164 0204	CERAMIC 0.1U Z 25V
C4821	403 164 0204	CERAMIC 0.1U Z 25V
C4831	403 164 0204	CERAMIC 0.1U Z 25V
C4851	403 164 0204	CERAMIC 0.1U Z 25V
C4855	403 164 0204	CERAMIC 0.1U Z 25V
C4861	403 164 0204	CERAMIC 0.1U Z 25V
C4862	403 280 0805	ELECT 330U M 6.3V
C4871	403 164 0204	CERAMIC 0.1U Z 25V
C4881	403 164 0204	CERAMIC 0.1U Z 25V
C4891	403 341 7507	ELECT 100U M 25V
C501	403 280 1604	ELECT 220U M 16V
C502	403 164 0204	CERAMIC 0.1U Z 25V
C504	403 280 0805	ELECT 330U M 6.3V
C505	403 164 0204	CERAMIC 0.1U Z 25V
C506	403 164 0204	CERAMIC 0.1U Z 25V
C507	403 164 0204	CERAMIC 0.1U Z 25V
C508	403 323 1301	CERAMIC 0.47U Z 10V
C509	403 323 1301	CERAMIC 0.47U Z 10V
C510	403 323 1301	CERAMIC 0.47U Z 10V
C511	403 341 7507	ELECT 100U M 25V
C512	403 164 0204	CERAMIC 0.1U Z 25V
C531	403 280 1604	ELECT 220U M 16V
C532	403 164 0204	CERAMIC 0.1U Z 25V
C534	403 280 0805	ELECT 330U M 6.3V
C535	403 164 0204	CERAMIC 0.1U Z 25V
C536	403 164 0204	CERAMIC 0.1U Z 25V
C537	403 164 0204	CERAMIC 0.1U Z 25V
C538	403 323 1301	CERAMIC 0.47U Z 10V
C539	403 323 1301	CERAMIC 0.47U Z 10V
C540	403 323 1301	CERAMIC 0.47U Z 10V
C541	403 341 7507	ELECT 100U M 25V
C542	403 164 0204	CERAMIC 0.1U Z 25V
C561	403 280 1604	ELECT 220U M 16V
C562	403 164 0204	CERAMIC 0.1U Z 25V
C564	403 280 0805	ELECT 330U M 6.3V
C565	403 164 0204	CERAMIC 0.1U Z 25V
C566	403 164 0204	CERAMIC 0.1U Z 25V
C567	403 164 0204	CERAMIC 0.1U Z 25V
C568	403 323 1301	CERAMIC 0.47U Z 10V
C569	403 323 1301	CERAMIC 0.47U Z 10V
C570	403 323 1301	CERAMIC 0.47U Z 10V
C571	403 341 7507	ELECT 100U M 25V
C572	403 164 0204	CERAMIC 0.1U Z 25V
C5811	403 164 0204	CERAMIC 0.1U Z 25V
C5812	403 164 0204	CERAMIC 0.1U Z 25V
C5813	403 164 0204	CERAMIC 0.1U Z 25V
C5835	403 299 1602	CERAMIC 1U K 16V
C5836	403 341 7507	ELECT 100U M 25V
C5837	403 341 7507	ELECT 100U M 25V
C5853	403 164 0204	CERAMIC 0.1U Z 25V
C5864	403 164 0204	CERAMIC 0.1U Z 25V
C5865	403 341 7507	ELECT 100U M 25V
C5866	403 341 7507	ELECT 100U M 25V
C5867	403 164 0204	CERAMIC 0.1U Z 25V
C5868	403 341 7507	ELECT 100U M 25V
C5875	403 164 0204	CERAMIC 0.1U Z 25V
C5876	403 164 0204	CERAMIC 0.1U Z 25V
C6301	403 164 0204	CERAMIC 0.1U Z 25V
C6302	403 280 0508	ELECT 470U M 4V
C6303	403 164 0204	CERAMIC 0.1U Z 25V
C6304	403 113 3805	CERAMIC 1000P K 50V
C6307	403 164 0204	CERAMIC 0.1U Z 25V
C6308	403 164 0204	CERAMIC 0.1U Z 25V
C6309	403 164 0204	CERAMIC 0.1U Z 25V
C6311	403 113 3805	CERAMIC 1000P K 50V
C6314	403 164 0204	CERAMIC 0.1U Z 25V
C6321	403 164 0204	CERAMIC 0.1U Z 25V
C6323	403 164 0204	CERAMIC 0.1U Z 25V
C6324	403 113 3805	CERAMIC 1000P K 50V
C6325	403 164 0204	CERAMIC 0.1U Z 25V
C6328	403 164 0204	CERAMIC 0.1U Z 25V
C6329	403 164 0204	CERAMIC 0.1U Z 25V
C6331	403 164 0204	CERAMIC 0.1U Z 25V
C6332	403 113 3805	CERAMIC 1000P K 50V
C6335	403 164 0204	CERAMIC 0.1U Z 25V
C6341	403 164 0204	CERAMIC 0.1U Z 25V
C6343	403 164 0204	CERAMIC 0.1U Z 25V
C6344	403 113 3805	CERAMIC 1000P K 50V
C6345	403 164 0204	CERAMIC 0.1U Z 25V
C6348	403 164 0204	CERAMIC 0.1U Z 25V
C6349	403 164 0204	CERAMIC 0.1U Z 25V
C6351	403 164 0204	CERAMIC 0.1U Z 25V
C6352	403 113 3805	CERAMIC 1000P K 50V
C6355	403 164 0204	CERAMIC 0.1U Z 25V
C801	403 164 0204	CERAMIC 0.1U Z 25V
C802	403 164 0204	CERAMIC 0.1U Z 25V
C803	403 155 1609	CERAMIC 33P J 50V
C804	403 155 1609	CERAMIC 33P J 50V
C806	403 175 4505	ELECT 47U M 6.3V
C807	403 164 0204	CERAMIC 0.1U Z 25V
C808	403 215 1006	CERAMIC 470P J 50V
C809	403 162 4709	ELECT 10U M 16V
C811	403 283 6309	CERAMIC 1U Z 10V
	403 336 5600	CERAMIC 1U Z 10V
C812	403 164 0204	CERAMIC 0.1U Z 25V
C813	403 164 0204	CERAMIC 0.1U Z 25V
C814	403 280 0805	ELECT 330U M 6.3V
C815	403 164 0204	CERAMIC 0.1U Z 25V
C816	403 164 0204	CERAMIC 0.1U Z 25V
C8201	403 164 0204	CERAMIC 0.1U Z 25V
C8202	403 164 0204	CERAMIC 0.1U Z 25V
C8203	403 164 0204	CERAMIC 0.1U Z 25V
C8204	403 164 0204	CERAMIC 0.1U Z 25V
C8218	403 175 0606	ELECT 100U M 6.3V
C8219	403 164 0204	CERAMIC 0.1U Z 25V
C8221	403 164 0204	CERAMIC 0.1U Z 25V
C8222	403 164 0204	CERAMIC 0.1U Z 25V
C8223	403 164 0204	CERAMIC 0.1U Z 25V
C8231	403 164 0204	CERAMIC 0.1U Z 25V
C8232	403 157 7203	CERAMIC 3900P K 50V
C8233	403 306 5401	CERAMIC 0.039U K 16V
C8235	403 164 0204	CERAMIC 0.1U Z 25V
C8237	403 164 0204	CERAMIC 0.1U Z 25V
C8250	401 105 7909	MT-GLAZE 0.000 ZA 1/16W
C8251	403 164 0204	CERAMIC 0.1U Z 25V
C8253	403 164 0204	CERAMIC 0.1U Z 25V
C8255	403 164 0204	CERAMIC 0.1U Z 25V
C8257	401 105 7909	MT-GLAZE 0.000 ZA 1/16W
C8258	403 215 2904	CERAMIC 0.022U K 25V
C8259	401 105 7909	MT-GLAZE 0.000 ZA 1/16W
C8271	403 164 0204	CERAMIC 0.1U Z 25V
C8272	403 164 0204	CERAMIC 0.1U Z 25V
C8273	403 162 6208	ELECT 1U M 50V
C8274	403 164 0204	CERAMIC 0.1U Z 25V
C8275	403 164 0204	CERAMIC 0.1U Z 25V
C8281	403 283 6309	CERAMIC 1U Z 10V
	403 336 5600	CERAMIC 1U Z 10V
C8282	403 283 6309	CERAMIC 1U Z 10V
	403 336 5600	CERAMIC 1U Z 10V
C8283	403 322 7809	ELECT 220U M 6.3V
C8284	403 113 3805	CERAMIC 1000P K 50V
C8291	403 280 0805	ELECT 330U M 6.3V

Ref. No.	Part No.	Description
C8292	403 164 0204	CERAMIC 0.1U Z 25V
C8296	403 175 0606	ELECT 100U M 6.3V
C8297	403 164 0204	CERAMIC 0.1U Z 25V
C871	403 280 0508	ELECT 470U M 4V
C872	403 164 0204	CERAMIC 0.1U Z 25V
C873	403 164 0204	CERAMIC 0.1U Z 25V
C874	403 164 0204	CERAMIC 0.1U Z 25V
C875	403 164 0204	CERAMIC 0.1U Z 25V
C876	403 164 0204	CERAMIC 0.1U Z 25V
C877	403 164 0204	CERAMIC 0.1U Z 25V
C878	403 164 0204	CERAMIC 0.1U Z 25V
C879	403 164 0204	CERAMIC 0.1U Z 25V
C886	403 164 0204	CERAMIC 0.1U Z 25V
C887	403 283 6309	CERAMIC 1U Z 10V
	403 336 5600	CERAMIC 1U Z 10V
C888	403 157 6602	CERAMIC 470P K 50V
C892	403 164 0204	CERAMIC 0.1U Z 25V
C893	403 164 0204	CERAMIC 0.1U Z 25V
C894	403 280 0805	ELECT 330U M 6.3V
C9801	403 280 0508	ELECT 470U M 4V
C9802	403 164 0204	CERAMIC 0.1U Z 25V
C9804	403 113 3805	CERAMIC 1000P K 50V
C9805	403 153 9102	CERAMIC 5P C 50V
C9806	403 298 9609	CERAMIC 0.1U K 16V
C9807	403 164 0204	CERAMIC 0.1U Z 25V
C9809	403 164 0204	CERAMIC 0.1U Z 25V
C9811	403 280 0805	ELECT 330U M 6.3V
C9812	403 164 0204	CERAMIC 0.1U Z 25V
RESISTOR		
RB2511	645 037 3107	R-NETWORK 10X4 0.063W
	645 028 5981	R-NETWORK 10X4 1/16W
RB2512	645 037 3107	R-NETWORK 10X4 0.063W
	645 028 5981	R-NETWORK 10X4 1/16W
RB2513	645 037 3107	R-NETWORK 10X4 0.063W
	645 028 5981	R-NETWORK 10X4 1/16W
RB2514	645 037 3107	R-NETWORK 10X4 0.063W
	645 028 5981	R-NETWORK 10X4 1/16W
RB2515	645 037 3107	R-NETWORK 10X4 0.063W
	645 028 5981	R-NETWORK 10X4 1/16W
RB2516	645 037 3107	R-NETWORK 10X4 0.063W
	645 028 5981	R-NETWORK 10X4 1/16W
RB2521	645 037 3107	R-NETWORK 10X4 0.063W
	645 028 5981	R-NETWORK 10X4 1/16W
RB2522	645 037 3107	R-NETWORK 10X4 0.063W
	645 028 5981	R-NETWORK 10X4 1/16W
RB2523	645 037 3107	R-NETWORK 10X4 0.063W
	645 028 5981	R-NETWORK 10X4 1/16W
RB2524	645 037 3107	R-NETWORK 10X4 0.063W
	645 028 5981	R-NETWORK 10X4 1/16W
RB2525	645 037 3107	R-NETWORK 10X4 0.063W
	645 028 5981	R-NETWORK 10X4 1/16W
RB2526	645 037 3107	R-NETWORK 10X4 0.063W
	645 028 5981	R-NETWORK 10X4 1/16W
RB2531	645 037 3107	R-NETWORK 10X4 0.063W
	645 028 5981	R-NETWORK 10X4 1/16W
RB2532	645 037 3107	R-NETWORK 10X4 0.063W
	645 028 5981	R-NETWORK 10X4 1/16W
RB2533	645 037 3107	R-NETWORK 10X4 0.063W
	645 028 5981	R-NETWORK 10X4 1/16W
RB2534	645 037 3107	R-NETWORK 10X4 0.063W
	645 028 5981	R-NETWORK 10X4 1/16W
RB2535	645 037 3107	R-NETWORK 10X4 0.063W
	645 028 5981	R-NETWORK 10X4 1/16W
RB2536	645 037 3107	R-NETWORK 10X4 0.063W
	645 028 5981	R-NETWORK 10X4 1/16W
RB301	645 020 7822	R-NETWORK 10KX4 0.063W
	645 025 5380	R-NETWORK 10KX4 1/16W
RB331	645 031 3363	R-NETWORK 680X4 1/16W
RB332	645 031 3363	R-NETWORK 680X4 1/16W
RB333	645 031 3363	R-NETWORK 680X4 1/16W
RB334	645 031 3363	R-NETWORK 680X4 1/16W
RB335	645 031 3363	R-NETWORK 680X4 1/16W
RB336	645 031 3363	R-NETWORK 680X4 1/16W
RB337	645 031 3363	R-NETWORK 680X4 1/16W
RB338	645 031 3363	R-NETWORK 680X4 1/16W
RB339	645 031 3363	R-NETWORK 680X4 1/16W
RB341	645 031 3363	R-NETWORK 680X4 1/16W
RB342	645 031 3363	R-NETWORK 680X4 1/16W
RB343	645 031 3363	R-NETWORK 680X4 1/16W
RB4881	645 037 3107	R-NETWORK 10X4 0.063W
	645 028 5981	R-NETWORK 10X4 1/16W
RB4882	645 037 3107	R-NETWORK 10X4 0.063W
	645 028 5981	R-NETWORK 10X4 1/16W
RB4883	645 021 0358	R-NETWORK 100X4 0.063W
	645 031 3325	R-NETWORK 100X4 1/16W
RB4885	645 021 0358	R-NETWORK 100X4 0.063W
	645 031 3325	R-NETWORK 100X4 1/16W
RB5811	645 020 7822	R-NETWORK 10KX4 0.063W
	645 025 5380	R-NETWORK 10KX4 1/16W
RB5851	645 037 3107	R-NETWORK 10X4 0.063W
	645 028 5981	R-NETWORK 10X4 1/16W
RB5852	645 037 3107	R-NETWORK 10X4 0.063W
	645 028 5981	R-NETWORK 10X4 1/16W
RB804	645 037 4920	R-NETWORK 3.3KX4 0.063W
	645 031 4070	R-NETWORK 3.3KX4 1/16W
RB805	645 037 4920	R-NETWORK 3.3KX4 0.063W
	645 031 4070	R-NETWORK 3.3KX4 1/16W
RB806	645 037 4920	R-NETWORK 3.3KX4 0.063W
	645 031 4070	R-NETWORK 3.3KX4 1/16W
RB807	645 037 4920	R-NETWORK 3.3KX4 0.063W
	645 031 4070	R-NETWORK 3.3KX4 1/16W
RB9801	645 021 0365	R-NETWORK 100KX4 0.063W
	645 025 5397	R-NETWORK 100KX4 1/16W
RB9802	645 021 0365	R-NETWORK 100KX4 0.063W
	645 025 5397	R-NETWORK 100KX4 1/16W
R1302	401 105 7909	MT-GLAZE 0.000 ZA 1/16W
R1303	401 105 0405	MT-GLAZE 100 JA 1/16W
R1304	401 105 7909	MT-GLAZE 0.000 ZA 1/16W
R1305	401 105 0405	MT-GLAZE 100 JA 1/16W
R1306	401 105 0405	MT-GLAZE 100 JA 1/16W
R1307	401 105 0405	MT-GLAZE 100 JA 1/16W
R1311	401 105 2003	MT-GLAZE 1.8K JA 1/16W
R1312	401 105 0306	MT-GLAZE 10 JA 1/16W
R1313	401 105 2003	MT-GLAZE 1.8K JA 1/16W
R1314	401 105 0306	MT-GLAZE 10 JA 1/16W
R1321	401 105 7909	MT-GLAZE 0.000 ZA 1/16W
R1322	401 105 7909	MT-GLAZE 0.000 ZA 1/16W
R1323	401 105 7909	MT-GLAZE 0.000 ZA 1/16W
R1332	401 105 7909	MT-GLAZE 0.000 ZA 1/16W
R1334	401 105 0603	MT-GLAZE 10K JA 1/16W
R1337	401 105 7909	MT-GLAZE 0.000 ZA 1/16W
R1342	401 105 7909	MT-GLAZE 0.000 ZA 1/16W
R1343	401 105 7909	MT-GLAZE 0.000 ZA 1/16W
R1345	401 105 7909	MT-GLAZE 0.000 ZA 1/16W
R1350	401 105 7909	MT-GLAZE 0.000 ZA 1/16W
R1352	401 105 0603	MT-GLAZE 10K JA 1/16W
R1355	401 105 0603	MT-GLAZE 10K JA 1/16W
R1356	401 105 7909	MT-GLAZE 0.000 ZA 1/16W
R1358	401 105 0603	MT-GLAZE 10K JA 1/16W
R1366	401 105 7909	MT-GLAZE 0.000 ZA 1/16W
R1369	401 276 4707	MT-GLAZE 0.000 ZA 1/3W
R1371	401 105 0405	MT-GLAZE 100 JA 1/16W
R1372	401 105 0405	MT-GLAZE 100 JA 1/16W
R1373	401 105 7909	MT-GLAZE 0.000 ZA 1/16W
R1376	401 105 7909	MT-GLAZE 0.000 ZA 1/16W
R1379	401 105 0603	MT-GLAZE 10K JA 1/16W
R1381	401 105 0603	MT-GLAZE 10K JA 1/16W
R1383	401 105 0603	MT-GLAZE 10K JA 1/16W
R1384	401 105 0603	MT-GLAZE 10K JA 1/16W
R1385	401 105 7909	MT-GLAZE 0.000 ZA 1/16W
R1503	401 105 7909	MT-GLAZE 0.000 ZA 1/16W
R1516	401 105 7909	MT-GLAZE 0.000 ZA 1/16W
R1517	401 105 7909	MT-GLAZE 0.000 ZA 1/16W
R1520	401 105 7909	MT-GLAZE 0.000 ZA 1/16W
R1533	401 105 7909	MT-GLAZE 0.000 ZA 1/16W
R1546	401 105 7909	MT-GLAZE 0.000 ZA 1/16W
R1547	401 105 7909	MT-GLAZE 0.000 ZA 1/16W
R1550	401 105 7909	MT-GLAZE 0.000 ZA 1/16W
R1563	401 105 7909	MT-GLAZE 0.000 ZA 1/16W
R1576	401 105 7909	MT-GLAZE 0.000 ZA 1/16W
R1577	401 105 7909	MT-GLAZE 0.000 ZA 1/16W
R1580	401 105 7909	MT-GLAZE 0.000 ZA 1/16W
R1801	401 105 2003	MT-GLAZE 1.8K JA 1/16W
R1802	401 105 4106	MT-GLAZE 3.3K JA 1/16W
R1811	401 105 0405	MT-GLAZE 100 JA 1/16W
R1812	401 105 0405	MT-GLAZE 100 JA 1/16W
R1813	401 105 5301	MT-GLAZE 4.7K JA 1/16W
R1814	401 105 5301	MT-GLAZE 4.7K JA 1/16W
R1815	401 105 0405	MT-GLAZE 100 JA 1/16W
R1816	401 105 0405	MT-GLAZE 100 JA 1/16W
R1820	401 105 0603	MT-GLAZE 10K JA 1/16W
R1821	401 105 7909	MT-GLAZE 0.000 ZA 1/16W
R1822	401 105 0504	MT-GLAZE 1K JA 1/16W
R1823	401 105 2003	MT-GLAZE 1.8K JA 1/16W
R1824	401 105 4106	MT-GLAZE 3.3K JA 1/16W
R1825	401 105 2003	MT-GLAZE 1.8K JA 1/16W
R1826	401 105 2003	MT-GLAZE 1.8K JA 1/16W
R1829	401 105 0603	MT-GLAZE 10K JA 1/16W
R1841	401 105 0504	MT-GLAZE 1K JA 1/16W
R1843	401 105 0603	MT-GLAZE 10K JA 1/16W
R1844	401 105 0504	MT-GLAZE 1K JA 1/16W
R1846	401 105 0603	MT-GLAZE 10K JA 1/16W
R1850	401 105 2003	MT-GLAZE 1.8K JA 1/16W
R1851	401 105 4502	MT-GLAZE 390 JA 1/16W
R1852	401 105 0405	MT-GLAZE 100 JA 1/16W
R1853	401 105 0405	MT-GLAZE 100 JA 1/16W
R1854	401 105 0702	MT-GLAZE 100K JA 1/16W
R1855	401 105 4502	MT-GLAZE 390 JA 1/16W
R1856	401 105 2003	MT-GLAZE 1.8K JA 1/16W
R1857	401 105 1501	MT-GLAZE 1.5K JA 1/16W
R1858	401 105 5301	MT-GLAZE 4.7K JA 1/16W
R1859	401 105 5301	MT-GLAZE 4.7K JA 1/16W
R1860	401 105 0603	MT-GLAZE 10K JA 1/16W
R1861	401 105 0603	MT-GLAZE 10K JA 1/16W
R1862	401 105 0603	MT-GLAZE 10K JA 1/16W
R1863	401 105 0603	MT-GLAZE 10K JA 1/16W
R1864	401 105 0603	MT-GLAZE 10K JA 1/16W
R1865	401 105 0603	MT-GLAZE 10K JA 1/16W
R1866	401 105 0603	MT-GLAZE 10K JA 1/16W
R1867	401 105 0603	MT-GLAZE 10K JA 1/16W

Ref. No.	Part No.	Description
R1868	401 105 0603	MT-GLAZE 10K JA 1/16W
R1869	401 105 0603	MT-GLAZE 10K JA 1/16W
R1871	401 105 6605	MT-GLAZE 6.8K JA 1/16W
R1872	401 105 0504	MT-GLAZE 1K JA 1/16W
R1873	401 105 0504	MT-GLAZE 1K JA 1/16W
R1874	401 105 6605	MT-GLAZE 6.8K JA 1/16W
R1876	401 105 7909	MT-GLAZE 0.000 ZA 1/16W
R1877	401 105 7909	MT-GLAZE 0.000 ZA 1/16W
R1878	401 105 7909	MT-GLAZE 0.000 ZA 1/16W
R1881	401 105 0702	MT-GLAZE 100K JA 1/16W
R1883	401 105 0405	MT-GLAZE 100 JA 1/16W
R1884	401 105 0603	MT-GLAZE 10K JA 1/16W
R1885	401 105 0603	MT-GLAZE 10K JA 1/16W
R1888	401 105 4106	MT-GLAZE 3.3K JA 1/16W
R1889	401 105 0306	MT-GLAZE 10 JA 1/16W
R1898	401 105 0603	MT-GLAZE 10K JA 1/16W
R201	401 105 7909	MT-GLAZE 0.000 ZA 1/16W
R202	401 113 4402	MT-GLAZE 75 JA 1/16W
R204	401 105 3901	MT-GLAZE 33 JA 1/16W
R205	401 105 0504	MT-GLAZE 1K JA 1/16W
R208	401 105 3901	MT-GLAZE 33 JA 1/16W
R211	401 105 7909	MT-GLAZE 0.000 ZA 1/16W
R212	401 113 4402	MT-GLAZE 75 JA 1/16W
R214	401 105 3901	MT-GLAZE 33 JA 1/16W
R215	401 105 0504	MT-GLAZE 1K JA 1/16W
R218	401 105 3901	MT-GLAZE 33 JA 1/16W
R220	401 105 3901	MT-GLAZE 33 JA 1/16W
R221	401 105 7909	MT-GLAZE 0.000 ZA 1/16W
R222	401 113 4402	MT-GLAZE 75 JA 1/16W
R225	401 105 0504	MT-GLAZE 1K JA 1/16W
R228	401 105 3901	MT-GLAZE 33 JA 1/16W
R2304	401 105 7909	MT-GLAZE 0.000 ZA 1/16W
R2305	401 105 7909	MT-GLAZE 0.000 ZA 1/16W
R2306	401 105 7909	MT-GLAZE 0.000 ZA 1/16W
R231	401 105 2805	MT-GLAZE 2.2K JA 1/16W
R2313	401 105 7909	MT-GLAZE 0.000 ZA 1/16W
R2314	401 105 7909	MT-GLAZE 0.000 ZA 1/16W
R2322	401 105 7909	MT-GLAZE 0.000 ZA 1/16W
R2323	401 105 0504	MT-GLAZE 1K JA 1/16W
R2324	401 105 7909	MT-GLAZE 0.000 ZA 1/16W
R233	401 105 3901	MT-GLAZE 33 JA 1/16W
R2331	401 105 0603	MT-GLAZE 10K JA 1/16W
R2332	401 105 0603	MT-GLAZE 10K JA 1/16W
R2333	401 105 0603	MT-GLAZE 10K JA 1/16W
R2334	401 105 0504	MT-GLAZE 1K JA 1/16W
R2335	401 105 0504	MT-GLAZE 1K JA 1/16W
R2336	401 105 0504	MT-GLAZE 1K JA 1/16W
R2337	401 105 3901	MT-GLAZE 33 JA 1/16W
R2338	401 105 3901	MT-GLAZE 33 JA 1/16W
R2339	401 105 3901	MT-GLAZE 33 JA 1/16W
R234	401 105 0504	MT-GLAZE 1K JA 1/16W
R235	401 105 5905	MT-GLAZE 560 JA 1/16W
R2351	401 105 0603	MT-GLAZE 10K JA 1/16W
R2352	401 105 0603	MT-GLAZE 10K JA 1/16W
R2353	401 105 0603	MT-GLAZE 10K JA 1/16W
R2354	401 105 0603	MT-GLAZE 10K JA 1/16W
R2355	401 105 0603	MT-GLAZE 10K JA 1/16W
R2356	401 105 0603	MT-GLAZE 10K JA 1/16W
R2361	401 105 6506	MT-GLAZE 680 JA 1/16W
R2362	401 105 2706	MT-GLAZE 220 JA 1/16W
R2363	401 105 5301	MT-GLAZE 4.7K JA 1/16W
R2364	401 105 0603	MT-GLAZE 10K JA 1/16W
R237	401 105 0405	MT-GLAZE 100 JA 1/16W
R2371	401 105 0405	MT-GLAZE 100 JA 1/16W
R2372	401 105 0405	MT-GLAZE 100 JA 1/16W
R2373	401 105 0405	MT-GLAZE 100 JA 1/16W
R2374	401 105 0405	MT-GLAZE 100 JA 1/16W
R2375	401 105 0405	MT-GLAZE 100 JA 1/16W
R2376	401 105 0405	MT-GLAZE 100 JA 1/16W
R238	401 105 0405	MT-GLAZE 100 JA 1/16W
R2382	401 105 3901	MT-GLAZE 33 JA 1/16W
R2383	401 105 0504	MT-GLAZE 1K JA 1/16W
R2387	401 105 3901	MT-GLAZE 33 JA 1/16W
R2388	401 105 0504	MT-GLAZE 1K JA 1/16W
R239	401 105 0405	MT-GLAZE 100 JA 1/16W
R2392	401 105 3901	MT-GLAZE 33 JA 1/16W
R2393	401 105 0504	MT-GLAZE 1K JA 1/16W
R2401	401 105 7909	MT-GLAZE 0.000 ZA 1/16W
R2402	401 105 7909	MT-GLAZE 0.000 ZA 1/16W
R241	401 105 2805	MT-GLAZE 2.2K JA 1/16W
R2415	401 105 7909	MT-GLAZE 0.000 ZA 1/16W
R2417	401 105 7909	MT-GLAZE 0.000 ZA 1/16W
R2419	401 105 0603	MT-GLAZE 10K JA 1/16W
R2423	401 105 7909	MT-GLAZE 0.000 ZA 1/16W
R2425	401 105 0603	MT-GLAZE 10K JA 1/16W
R2426	401 105 0603	MT-GLAZE 10K JA 1/16W
R2428	401 105 0306	MT-GLAZE 10 JA 1/16W
R2429	401 105 0306	MT-GLAZE 10 JA 1/16W
R243	401 105 3901	MT-GLAZE 33 JA 1/16W
R2430	401 105 7909	MT-GLAZE 0.000 ZA 1/16W
R2431	401 105 5905	MT-GLAZE 560 JA 1/16W
R2433	401 105 7909	MT-GLAZE 0.000 ZA 1/16W
R2434	401 105 0504	MT-GLAZE 1K JA 1/16W
R2435	401 105 0504	MT-GLAZE 1K JA 1/16W
R2436	401 105 7909	MT-GLAZE 0.000 ZA 1/16W
R2437	401 105 5301	MT-GLAZE 4.7K JA 1/16W
R2438	401 105 5301	MT-GLAZE 4.7K JA 1/16W
R2439	401 105 7909	MT-GLAZE 0.000 ZA 1/16W
R244	401 105 0504	MT-GLAZE 1K JA 1/16W
R2440	401 105 5301	MT-GLAZE 4.7K JA 1/16W
R2441	401 105 7909	MT-GLAZE 0.000 ZA 1/16W
R2442	401 105 7909	MT-GLAZE 0.000 ZA 1/16W
R2443	401 105 7909	MT-GLAZE 0.000 ZA 1/16W
R2445	401 105 7909	MT-GLAZE 0.000 ZA 1/16W
R2446	401 105 7909	MT-GLAZE 0.000 ZA 1/16W
R2447	401 105 7909	MT-GLAZE 0.000 ZA 1/16W
R2448	401 105 7909	MT-GLAZE 0.000 ZA 1/16W
R2449	401 105 7909	MT-GLAZE 0.000 ZA 1/16W
R245	401 105 5905	MT-GLAZE 560 JA 1/16W
R2451	401 105 7909	MT-GLAZE 0.000 ZA 1/16W
R2452	401 105 7909	MT-GLAZE 0.000 ZA 1/16W
R2453	401 105 0306	MT-GLAZE 10 JA 1/16W
R2455	401 105 7909	MT-GLAZE 0.000 ZA 1/16W
R2458	401 105 0306	MT-GLAZE 10 JA 1/16W
R2460	401 105 0504	MT-GLAZE 1K JA 1/16W
R2462	401 105 5905	MT-GLAZE 560 JA 1/16W
R2463	401 105 0504	MT-GLAZE 1K JA 1/16W
R2465	401 105 7909	MT-GLAZE 0.000 ZA 1/16W
R2466	401 105 7909	MT-GLAZE 0.000 ZA 1/16W
R2470	401 105 7909	MT-GLAZE 0.000 ZA 1/16W
R2471	401 105 7909	MT-GLAZE 0.000 ZA 1/16W
R2483	401 105 7909	MT-GLAZE 0.000 ZA 1/16W
R2484	401 105 7909	MT-GLAZE 0.000 ZA 1/16W
R2485	401 105 7909	MT-GLAZE 0.000 ZA 1/16W
R2486	401 105 7909	MT-GLAZE 0.000 ZA 1/16W
R2492	401 105 7909	MT-GLAZE 0.000 ZA 1/16W
R2496	401 105 7909	MT-GLAZE 0.000 ZA 1/16W
R2497	401 105 7909	MT-GLAZE 0.000 ZA 1/16W
R2498	401 105 7909	MT-GLAZE 0.000 ZA 1/16W
R2501	401 035 4108	MT-GLAZE 0.000 ZA 1/8W
R2502	401 037 7800	MT-GLAZE 150 JA 1/10W
R2503	401 037 7800	MT-GLAZE 150 JA 1/10W
R2504	401 037 7800	MT-GLAZE 150 JA 1/10W
R251	401 105 2805	MT-GLAZE 2.2K JA 1/16W
R253	401 105 3901	MT-GLAZE 33 JA 1/16W
R254	401 105 0504	MT-GLAZE 1K JA 1/16W
R2541	401 105 0405	MT-GLAZE 100 JA 1/16W
R2542	401 105 0405	MT-GLAZE 100 JA 1/16W
R2543	401 105 0603	MT-GLAZE 10K JA 1/16W
R255	401 105 5905	MT-GLAZE 560 JA 1/16W
R2561	401 105 5905	MT-GLAZE 560 JA 1/16W
R2562	401 105 2003	MT-GLAZE 1.8K JA 1/16W
R2565	401 105 7909	MT-GLAZE 0.000 ZA 1/16W
R2568	401 105 7909	MT-GLAZE 0.000 ZA 1/16W
R2571	401 105 5905	MT-GLAZE 560 JA 1/16W
R2572	401 105 2003	MT-GLAZE 1.8K JA 1/16W
R2575	401 105 7909	MT-GLAZE 0.000 ZA 1/16W
R2578	401 105 7909	MT-GLAZE 0.000 ZA 1/16W
R2581	401 105 5905	MT-GLAZE 560 JA 1/16W
R2582	401 105 2003	MT-GLAZE 1.8K JA 1/16W
R2585	401 105 7909	MT-GLAZE 0.000 ZA 1/16W
R2588	401 105 7909	MT-GLAZE 0.000 ZA 1/16W
R2591	401 105 5905	MT-GLAZE 560 JA 1/16W
R2592	401 105 2003	MT-GLAZE 1.8K JA 1/16W
R2595	401 105 7909	MT-GLAZE 0.000 ZA 1/16W
R2598	401 105 7909	MT-GLAZE 0.000 ZA 1/16W
R261	401 105 2706	MT-GLAZE 220 JA 1/16W
R263	401 105 0504	MT-GLAZE 1K JA 1/16W
R266	401 105 2706	MT-GLAZE 220 JA 1/16W
R268	401 105 0504	MT-GLAZE 1K JA 1/16W
R271	401 105 2706	MT-GLAZE 220 JA 1/16W
R273	401 105 0504	MT-GLAZE 1K JA 1/16W
R284	401 105 0504	MT-GLAZE 1K JA 1/16W
R285	401 105 0504	MT-GLAZE 1K JA 1/16W
R286	401 105 7909	MT-GLAZE 0.000 ZA 1/16W
R287	401 105 7909	MT-GLAZE 0.000 ZA 1/16W
R288	401 105 7909	MT-GLAZE 0.000 ZA 1/16W
R289	401 105 0504	MT-GLAZE 1K JA 1/16W
R290	401 105 5301	MT-GLAZE 4.7K JA 1/16W
R291	401 105 6506	MT-GLAZE 680 JA 1/16W
R292	401 105 2706	MT-GLAZE 220 JA 1/16W
R293	401 105 0603	MT-GLAZE 10K JA 1/16W
R294	401 105 2805	MT-GLAZE 2.2K JA 1/16W
R295	401 105 2805	MT-GLAZE 2.2K JA 1/16W
R296	401 105 2805	MT-GLAZE 2.2K JA 1/16W
R301	401 105 7909	MT-GLAZE 0.000 ZA 1/16W
R302	401 105 7909	MT-GLAZE 0.000 ZA 1/16W
R303	401 105 2003	MT-GLAZE 1.8K JA 1/16W
R304	401 105 7909	MT-GLAZE 0.000 ZA 1/16W
R305	401 105 2003	MT-GLAZE 1.8K JA 1/16W
R306	401 105 7909	MT-GLAZE 0.000 ZA 1/16W
R307	401 105 0405	MT-GLAZE 100 JA 1/16W
R308	401 105 0405	MT-GLAZE 100 JA 1/16W
R309	401 105 0405	MT-GLAZE 100 JA 1/16W
R318	401 105 0603	MT-GLAZE 10K JA 1/16W
R3201	401 105 0405	MT-GLAZE 100 JA 1/16W
R3203	401 105 7909	MT-GLAZE 0.000 ZA 1/16W
R3204	401 105 7909	MT-GLAZE 0.000 ZA 1/16W
R3229	401 105 0405	MT-GLAZE 100 JA 1/16W
R3232	401 105 0405	MT-GLAZE 100 JA 1/16W

Ref. No.	Part No.	Description
R3233	401 105 0405	MT-GLAZE 100 JA 1/16W
R3234	401 105 7909	MT-GLAZE 0.000 ZA 1/16W
R3235	401 105 7909	MT-GLAZE 0.000 ZA 1/16W
R3236	401 105 7909	MT-GLAZE 0.000 ZA 1/16W
R3237	401 105 7909	MT-GLAZE 0.000 ZA 1/16W
R3238	401 105 7909	MT-GLAZE 0.000 ZA 1/16W
R3239	401 105 0405	MT-GLAZE 100 JA 1/16W
R324	401 105 0405	MT-GLAZE 100 JA 1/16W
R3240	401 105 7909	MT-GLAZE 0.000 ZA 1/16W
R3241	401 105 7909	MT-GLAZE 0.000 ZA 1/16W
R3244	401 105 0306	MT-GLAZE 10 JA 1/16W
R3245	401 105 0306	MT-GLAZE 10 JA 1/16W
R3246	401 105 0306	MT-GLAZE 10 JA 1/16W
R3248	401 105 7909	MT-GLAZE 0.000 ZA 1/16W
R3249	401 105 7909	MT-GLAZE 0.000 ZA 1/16W
R325	401 105 7909	MT-GLAZE 0.000 ZA 1/16W
R3250	401 105 0405	MT-GLAZE 100 JA 1/16W
R3251	401 105 7909	MT-GLAZE 0.000 ZA 1/16W
R3254	401 105 0405	MT-GLAZE 100 JA 1/16W
R3255	401 105 0405	MT-GLAZE 100 JA 1/16W
R3256	401 105 0405	MT-GLAZE 100 JA 1/16W
R3257	401 105 7909	MT-GLAZE 0.000 ZA 1/16W
R3258	401 105 7909	MT-GLAZE 0.000 ZA 1/16W
R326	401 105 0603	MT-GLAZE 10K JA 1/16W
R3261	401 105 7909	MT-GLAZE 0.000 ZA 1/16W
R3268	401 105 7909	MT-GLAZE 0.000 ZA 1/16W
R3269	401 105 7909	MT-GLAZE 0.000 ZA 1/16W
R3271	401 105 7909	MT-GLAZE 0.000 ZA 1/16W
R3272	401 105 7909	MT-GLAZE 0.000 ZA 1/16W
R3273	401 105 0405	MT-GLAZE 100 JA 1/16W
R3274	401 105 7909	MT-GLAZE 0.000 ZA 1/16W
R3275	401 105 7909	MT-GLAZE 0.000 ZA 1/16W
R3278	401 105 7909	MT-GLAZE 0.000 ZA 1/16W
R328	401 105 0603	MT-GLAZE 10K JA 1/16W
R3284	401 105 7909	MT-GLAZE 0.000 ZA 1/16W
R3295	401 105 7909	MT-GLAZE 0.000 ZA 1/16W
R3296	401 105 7909	MT-GLAZE 0.000 ZA 1/16W
R3297	401 105 7909	MT-GLAZE 0.000 ZA 1/16W
R3298	401 105 7909	MT-GLAZE 0.000 ZA 1/16W
R3299	401 105 7909	MT-GLAZE 0.000 ZA 1/16W
R331	401 105 7909	MT-GLAZE 0.000 ZA 1/16W
R332	401 105 7909	MT-GLAZE 0.000 ZA 1/16W
R333	401 105 7909	MT-GLAZE 0.000 ZA 1/16W
R334	401 105 7909	MT-GLAZE 0.000 ZA 1/16W
R335	401 105 7909	MT-GLAZE 0.000 ZA 1/16W
R3356	401 105 7909	MT-GLAZE 0.000 ZA 1/16W
R336	401 105 7909	MT-GLAZE 0.000 ZA 1/16W
R3360	401 105 7909	MT-GLAZE 0.000 ZA 1/16W
R3361	401 105 7909	MT-GLAZE 0.000 ZA 1/16W
R3362	401 105 7909	MT-GLAZE 0.000 ZA 1/16W
R3363	401 105 7909	MT-GLAZE 0.000 ZA 1/16W
R3364	401 105 7909	MT-GLAZE 0.000 ZA 1/16W
R3366	401 105 7909	MT-GLAZE 0.000 ZA 1/16W
R3367	401 105 7909	MT-GLAZE 0.000 ZA 1/16W
R3368	401 105 7909	MT-GLAZE 0.000 ZA 1/16W
R3369	401 105 7909	MT-GLAZE 0.000 ZA 1/16W
R337	401 105 7909	MT-GLAZE 0.000 ZA 1/16W
R338	401 105 7909	MT-GLAZE 0.000 ZA 1/16W
R3380	401 105 7909	MT-GLAZE 0.000 ZA 1/16W
R3381	401 105 7909	MT-GLAZE 0.000 ZA 1/16W
R3382	401 105 7909	MT-GLAZE 0.000 ZA 1/16W
R3383	401 105 7909	MT-GLAZE 0.000 ZA 1/16W
R3384	401 105 7909	MT-GLAZE 0.000 ZA 1/16W
R3385	401 105 7909	MT-GLAZE 0.000 ZA 1/16W
R3386	401 105 7909	MT-GLAZE 0.000 ZA 1/16W
R3387	401 105 7909	MT-GLAZE 0.000 ZA 1/16W
R3388	401 105 7909	MT-GLAZE 0.000 ZA 1/16W
R339	401 105 0306	MT-GLAZE 10 JA 1/16W
R3390	401 105 7909	MT-GLAZE 0.000 ZA 1/16W
R3392	401 105 7909	MT-GLAZE 0.000 ZA 1/16W
R3395	401 105 7909	MT-GLAZE 0.000 ZA 1/16W
R3398	401 105 7909	MT-GLAZE 0.000 ZA 1/16W
R3399	401 105 7909	MT-GLAZE 0.000 ZA 1/16W
R340	401 105 7909	MT-GLAZE 0.000 ZA 1/16W
R3401	401 105 7909	MT-GLAZE 0.000 ZA 1/16W
R3402	401 105 7909	MT-GLAZE 0.000 ZA 1/16W
R3403	401 105 7909	MT-GLAZE 0.000 ZA 1/16W
R3404	401 105 7909	MT-GLAZE 0.000 ZA 1/16W
R3405	401 105 7909	MT-GLAZE 0.000 ZA 1/16W
R3406	401 105 7909	MT-GLAZE 0.000 ZA 1/16W
R3407	401 105 7909	MT-GLAZE 0.000 ZA 1/16W
R3408	401 105 7909	MT-GLAZE 0.000 ZA 1/16W
R3409	401 105 7909	MT-GLAZE 0.000 ZA 1/16W
R341	401 105 7909	MT-GLAZE 0.000 ZA 1/16W
R3410	401 105 7909	MT-GLAZE 0.000 ZA 1/16W
R3411	401 105 7909	MT-GLAZE 0.000 ZA 1/16W
R3412	401 105 7909	MT-GLAZE 0.000 ZA 1/16W
R3413	401 105 7909	MT-GLAZE 0.000 ZA 1/16W
R3414	401 105 7909	MT-GLAZE 0.000 ZA 1/16W
R3415	401 105 7909	MT-GLAZE 0.000 ZA 1/16W
R3416	401 105 7909	MT-GLAZE 0.000 ZA 1/16W
R3417	401 105 7909	MT-GLAZE 0.000 ZA 1/16W
R3418	401 105 7909	MT-GLAZE 0.000 ZA 1/16W
R3419	401 105 7909	MT-GLAZE 0.000 ZA 1/16W
R342	401 105 7909	MT-GLAZE 0.000 ZA 1/16W
R3420	401 105 7909	MT-GLAZE 0.000 ZA 1/16W
R3421	401 105 7909	MT-GLAZE 0.000 ZA 1/16W
R3422	401 105 7909	MT-GLAZE 0.000 ZA 1/16W
R3423	401 105 7909	MT-GLAZE 0.000 ZA 1/16W
R3424	401 105 7909	MT-GLAZE 0.000 ZA 1/16W
R3425	401 105 7909	MT-GLAZE 0.000 ZA 1/16W
R3426	401 105 7909	MT-GLAZE 0.000 ZA 1/16W
R3427	401 105 7909	MT-GLAZE 0.000 ZA 1/16W
R3428	401 105 7909	MT-GLAZE 0.000 ZA 1/16W
R3429	401 105 7909	MT-GLAZE 0.000 ZA 1/16W
R343	401 105 0306	MT-GLAZE 10 JA 1/16W
R3430	401 105 7909	MT-GLAZE 0.000 ZA 1/16W
R3431	401 105 7909	MT-GLAZE 0.000 ZA 1/16W
R3432	401 105 7909	MT-GLAZE 0.000 ZA 1/16W
R3433	401 105 7909	MT-GLAZE 0.000 ZA 1/16W
R3434	401 105 7909	MT-GLAZE 0.000 ZA 1/16W
R3435	401 105 7909	MT-GLAZE 0.000 ZA 1/16W
R3436	401 105 7909	MT-GLAZE 0.000 ZA 1/16W
R3437	401 105 7909	MT-GLAZE 0.000 ZA 1/16W
R3438	401 105 7909	MT-GLAZE 0.000 ZA 1/16W
R3439	401 105 7909	MT-GLAZE 0.000 ZA 1/16W
R3440	401 105 7909	MT-GLAZE 0.000 ZA 1/16W
R3441	401 105 7909	MT-GLAZE 0.000 ZA 1/16W
R3442	401 105 7909	MT-GLAZE 0.000 ZA 1/16W
R3443	401 105 7909	MT-GLAZE 0.000 ZA 1/16W
R3444	401 105 7909	MT-GLAZE 0.000 ZA 1/16W
R3445	401 105 7909	MT-GLAZE 0.000 ZA 1/16W
R3446	401 105 7909	MT-GLAZE 0.000 ZA 1/16W
R3447	401 105 7909	MT-GLAZE 0.000 ZA 1/16W
R3448	401 105 7909	MT-GLAZE 0.000 ZA 1/16W
R3449	401 105 7909	MT-GLAZE 0.000 ZA 1/16W
R3450	401 105 7909	MT-GLAZE 0.000 ZA 1/16W
R3451	401 105 7909	MT-GLAZE 0.000 ZA 1/16W
R3452	401 105 7909	MT-GLAZE 0.000 ZA 1/16W
R3453	401 105 7909	MT-GLAZE 0.000 ZA 1/16W
R3454	401 105 7909	MT-GLAZE 0.000 ZA 1/16W
R3455	401 105 0603	MT-GLAZE 10K JA 1/16W
R3456	401 105 7909	MT-GLAZE 0.000 ZA 1/16W
R3457	401 105 7909	MT-GLAZE 0.000 ZA 1/16W
R3458	401 105 7909	MT-GLAZE 0.000 ZA 1/16W
R3459	401 105 7909	MT-GLAZE 0.000 ZA 1/16W
R3460	401 105 7909	MT-GLAZE 0.000 ZA 1/16W
R3461	401 105 7909	MT-GLAZE 0.000 ZA 1/16W
R3462	401 105 7909	MT-GLAZE 0.000 ZA 1/16W
R3463	401 105 7909	MT-GLAZE 0.000 ZA 1/16W
R3464	401 105 7909	MT-GLAZE 0.000 ZA 1/16W
R3465	401 105 7909	MT-GLAZE 0.000 ZA 1/16W
R3466	401 105 7909	MT-GLAZE 0.000 ZA 1/16W
R3467	401 105 7909	MT-GLAZE 0.000 ZA 1/16W
R3468	401 105 7909	MT-GLAZE 0.000 ZA 1/16W
R3469	401 105 7909	MT-GLAZE 0.000 ZA 1/16W
R3470	401 105 7909	MT-GLAZE 0.000 ZA 1/16W
R3471	401 105 7909	MT-GLAZE 0.000 ZA 1/16W
R3472	401 105 7909	MT-GLAZE 0.000 ZA 1/16W
R3473	401 105 7909	MT-GLAZE 0.000 ZA 1/16W
R3474	401 105 7909	MT-GLAZE 0.000 ZA 1/16W
R3475	401 105 7909	MT-GLAZE 0.000 ZA 1/16W
R3476	401 105 7909	MT-GLAZE 0.000 ZA 1/16W
R3477	401 105 7909	MT-GLAZE 0.000 ZA 1/16W
R3478	401 105 7909	MT-GLAZE 0.000 ZA 1/16W
R3479	401 105 7909	MT-GLAZE 0.000 ZA 1/16W
R348	401 105 0306	MT-GLAZE 10 JA 1/16W
R3481	401 105 7909	MT-GLAZE 0.000 ZA 1/16W
R3482	401 105 7909	MT-GLAZE 0.000 ZA 1/16W
R3483	401 105 7909	MT-GLAZE 0.000 ZA 1/16W
R3484	401 105 7909	MT-GLAZE 0.000 ZA 1/16W
R3486	401 105 0306	MT-GLAZE 10 JA 1/16W
R3487	401 105 7909	MT-GLAZE 0.000 ZA 1/16W
R3488	401 105 7909	MT-GLAZE 0.000 ZA 1/16W
R3489	401 105 7909	MT-GLAZE 0.000 ZA 1/16W
R349	401 105 0306	MT-GLAZE 10 JA 1/16W
R3490	401 105 7909	MT-GLAZE 0.000 ZA 1/16W
R3491	401 105 7909	MT-GLAZE 0.000 ZA 1/16W
R3492	401 105 7909	MT-GLAZE 0.000 ZA 1/16W
R3493	401 105 7909	MT-GLAZE 0.000 ZA 1/16W
R3494	401 105 7909	MT-GLAZE 0.000 ZA 1/16W
R3495	401 105 7909	MT-GLAZE 0.000 ZA 1/16W
R3496	401 105 7909	MT-GLAZE 0.000 ZA 1/16W
R3497	401 105 7909	MT-GLAZE 0.000 ZA 1/16W
R3498	401 105 7909	MT-GLAZE 0.000 ZA 1/16W
R3499	401 105 7909	MT-GLAZE 0.000 ZA 1/16W
R3511	401 105 7909	MT-GLAZE 0.000 ZA 1/16W
R3512	401 105 7909	MT-GLAZE 0.000 ZA 1/16W
R3513	401 105 7909	MT-GLAZE 0.000 ZA 1/16W
R3514	401 105 7909	MT-GLAZE 0.000 ZA 1/16W
R3515	401 105 7909	MT-GLAZE 0.000 ZA 1/16W
R3516	401 105 7909	MT-GLAZE 0.000 ZA 1/16W
R3517	401 105 7909	MT-GLAZE 0.000 ZA 1/16W
R3518	401 105 7909	MT-GLAZE 0.000 ZA 1/16W
R352	401 105 0603	MT-GLAZE 10K JA 1/16W
R3521	401 105 7909	MT-GLAZE 0.000 ZA 1/16W
R3522	401 105 7909	MT-GLAZE 0.000 ZA 1/16W
R3523	401 105 7909	MT-GLAZE 0.000 ZA 1/16W
R3524	401 105 7909	MT-GLAZE 0.000 ZA 1/16W
R3525	401 105 7909	MT-GLAZE 0.000 ZA 1/16W

Ref. No.	Part No.	Description
R3526	401 105 7909	MT-GLAZE 0.000 ZA 1/16W
R3527	401 105 7909	MT-GLAZE 0.000 ZA 1/16W
R3528	401 105 7909	MT-GLAZE 0.000 ZA 1/16W
R353	401 105 6506	MT-GLAZE 680 JA 1/16W
R354	401 105 7909	MT-GLAZE 0.000 ZA 1/16W
R355	401 105 7909	MT-GLAZE 0.000 ZA 1/16W
R3562	401 105 7909	MT-GLAZE 0.000 ZA 1/16W
R3563	401 105 0504	MT-GLAZE 1K JA 1/16W
R3564	401 105 0504	MT-GLAZE 1K JA 1/16W
R3565	401 105 0603	MT-GLAZE 10K JA 1/16W
R3566	401 105 0603	MT-GLAZE 10K JA 1/16W
R3567	401 105 0603	MT-GLAZE 10K JA 1/16W
R3568	401 105 0405	MT-GLAZE 100 JA 1/16W
R3569	401 105 0405	MT-GLAZE 100 JA 1/16W
R357	401 105 0405	MT-GLAZE 100 JA 1/16W
R3571	401 105 1105	MT-GLAZE 12K JA 1/16W
R3572	401 105 1105	MT-GLAZE 12K JA 1/16W
R3573	401 105 1105	MT-GLAZE 12K JA 1/16W
R3574	401 105 7909	MT-GLAZE 0.000 ZA 1/16W
R3575	401 105 7909	MT-GLAZE 0.000 ZA 1/16W
R3576	401 105 7909	MT-GLAZE 0.000 ZA 1/16W
R358	401 105 0405	MT-GLAZE 100 JA 1/16W
R3581	401 105 5301	MT-GLAZE 4.7K JA 1/16W
R3582	401 105 2904	MT-GLAZE 22K JA 1/16W
R3583	401 105 5301	MT-GLAZE 4.7K JA 1/16W
R3584	401 105 2904	MT-GLAZE 22K JA 1/16W
R3585	401 105 5301	MT-GLAZE 4.7K JA 1/16W
R3586	401 105 2904	MT-GLAZE 22K JA 1/16W
R359	401 105 7909	MT-GLAZE 0.000 ZA 1/16W
R361	401 105 7909	MT-GLAZE 0.000 ZA 1/16W
R3611	401 105 5301	MT-GLAZE 4.7K JA 1/16W
R3612	401 105 5400	MT-GLAZE 47K JA 1/16W
R3613	401 105 2805	MT-GLAZE 2.2K JA 1/16W
R3614	401 105 5301	MT-GLAZE 4.7K JA 1/16W
R3615	401 105 5400	MT-GLAZE 47K JA 1/16W
R3616	401 105 2805	MT-GLAZE 2.2K JA 1/16W
R3617	401 105 5301	MT-GLAZE 4.7K JA 1/16W
R3618	401 105 5400	MT-GLAZE 47K JA 1/16W
R3619	401 105 2805	MT-GLAZE 2.2K JA 1/16W
R363	401 105 7909	MT-GLAZE 0.000 ZA 1/16W
R371	401 105 0405	MT-GLAZE 100 JA 1/16W
R372	401 105 0405	MT-GLAZE 100 JA 1/16W
R373	401 105 0405	MT-GLAZE 100 JA 1/16W
R374	401 105 0405	MT-GLAZE 100 JA 1/16W
R375	401 105 0405	MT-GLAZE 100 JA 1/16W
R376	401 105 0405	MT-GLAZE 100 JA 1/16W
R377	401 105 0405	MT-GLAZE 100 JA 1/16W
R378	401 105 0405	MT-GLAZE 100 JA 1/16W
R379	401 105 0405	MT-GLAZE 100 JA 1/16W
R382	401 105 7909	MT-GLAZE 0.000 ZA 1/16W
R383	401 105 7909	MT-GLAZE 0.000 ZA 1/16W
R388	401 105 0405	MT-GLAZE 100 JA 1/16W
R390	401 105 0603	MT-GLAZE 10K JA 1/16W
R392	401 105 0603	MT-GLAZE 10K JA 1/16W
R393	401 105 7909	MT-GLAZE 0.000 ZA 1/16W
R395	401 105 0603	MT-GLAZE 10K JA 1/16W
R397	401 105 0603	MT-GLAZE 10K JA 1/16W
R398	401 105 0603	MT-GLAZE 10K JA 1/16W
R399	401 105 0603	MT-GLAZE 10K JA 1/16W
R401	401 105 7909	MT-GLAZE 0.000 ZA 1/16W
R402	401 105 7909	MT-GLAZE 0.000 ZA 1/16W
R410	401 105 0603	MT-GLAZE 10K JA 1/16W
R412	401 105 7909	MT-GLAZE 0.000 ZA 1/16W
R413	401 105 0603	MT-GLAZE 10K JA 1/16W
R415	401 105 0603	MT-GLAZE 10K JA 1/16W
R4200	401 105 7909	MT-GLAZE 0.000 ZA 1/16W
R4201	401 105 7909	MT-GLAZE 0.000 ZA 1/16W
R4202	401 105 7909	MT-GLAZE 0.000 ZA 1/16W
R4204	401 105 7909	MT-GLAZE 0.000 ZA 1/16W
R4205	401 105 2706	MT-GLAZE 220 JA 1/16W
R4206	401 105 5905	MT-GLAZE 560 JA 1/16W
R4207	401 105 7909	MT-GLAZE 0.000 ZA 1/16W
R4211	401 105 7909	MT-GLAZE 0.000 ZA 1/16W
R4212	401 105 7909	MT-GLAZE 0.000 ZA 1/16W
R4213	401 105 7909	MT-GLAZE 0.000 ZA 1/16W
R4214	401 105 7909	MT-GLAZE 0.000 ZA 1/16W
R4215	401 105 7909	MT-GLAZE 0.000 ZA 1/16W
R4216	401 105 7909	MT-GLAZE 0.000 ZA 1/16W
R4217	401 105 7909	MT-GLAZE 0.000 ZA 1/16W
R4219	401 105 7909	MT-GLAZE 0.000 ZA 1/16W
R4231	401 105 7909	MT-GLAZE 0.000 ZA 1/16W
R4232	401 105 7909	MT-GLAZE 0.000 ZA 1/16W
R4236	401 105 7909	MT-GLAZE 0.000 ZA 1/16W
R4237	401 105 6605	MT-GLAZE 6.8K JA 1/16W
R4238	401 105 0603	MT-GLAZE 10K JA 1/16W
R4239	401 105 7909	MT-GLAZE 0.000 ZA 1/16W
R4241	401 105 7909	MT-GLAZE 0.000 ZA 1/16W
R4244	401 105 7909	MT-GLAZE 0.000 ZA 1/16W
R4245	401 105 4007	MT-GLAZE 330 JA 1/16W
R4261	401 105 7909	MT-GLAZE 0.000 ZA 1/16W
R4264	401 276 4707	MT-GLAZE 0.000 ZA 1/3W
R440	401 105 0603	MT-GLAZE 10K JA 1/16W
R441	401 105 1402	MT-GLAZE 150 JA 1/16W
R442	401 105 1402	MT-GLAZE 150 JA 1/16W
R472	401 105 1402	MT-GLAZE 150 JA 1/16W
R474	401 105 1402	MT-GLAZE 150 JA 1/16W
R475	401 105 1402	MT-GLAZE 150 JA 1/16W
R476	401 105 1402	MT-GLAZE 150 JA 1/16W
R481	401 105 7909	MT-GLAZE 0.000 ZA 1/16W
R482	401 105 7909	MT-GLAZE 0.000 ZA 1/16W
R483	401 105 7909	MT-GLAZE 0.000 ZA 1/16W
R4844	401 105 0504	MT-GLAZE 1K JA 1/16W
R4845	401 105 0504	MT-GLAZE 1K JA 1/16W
R4846	401 105 7909	MT-GLAZE 0.000 ZA 1/16W
R4847	401 105 4106	MT-GLAZE 3.3K JA 1/16W
R4855	401 105 0603	MT-GLAZE 10K JA 1/16W
R4857	401 105 7909	MT-GLAZE 0.000 ZA 1/16W
R4858	401 105 7909	MT-GLAZE 0.000 ZA 1/16W
R4859	401 105 7909	MT-GLAZE 0.000 ZA 1/16W
R4861	401 105 0603	MT-GLAZE 10K JA 1/16W
R4865	401 105 5301	MT-GLAZE 4.7K JA 1/16W
R4867	401 105 6001	MT-GLAZE 5.6K JA 1/16W
R4868	401 105 5202	MT-GLAZE 470 JA 1/16W
R4869	401 105 2003	MT-GLAZE 1.8K JA 1/16W
R487	401 105 7909	MT-GLAZE 0.000 ZA 1/16W
R4871	401 105 0900	MT-GLAZE 120 JA 1/16W
R4872	401 105 0405	MT-GLAZE 100 JA 1/16W
R4873	401 105 0504	MT-GLAZE 1K JA 1/16W
R4874	401 105 7909	MT-GLAZE 0.000 ZA 1/16W
R4875	401 105 7909	MT-GLAZE 0.000 ZA 1/16W
R4876	401 105 7909	MT-GLAZE 0.000 ZA 1/16W
R4877	401 105 7909	MT-GLAZE 0.000 ZA 1/16W
R4878	401 105 7909	MT-GLAZE 0.000 ZA 1/16W
R4879	401 105 7909	MT-GLAZE 0.000 ZA 1/16W
R488	401 105 7909	MT-GLAZE 0.000 ZA 1/16W
R4881	401 035 4108	MT-GLAZE 0.000 ZA 1/8W
R4882	401 105 7909	MT-GLAZE 0.000 ZA 1/16W
R4883	401 035 4108	MT-GLAZE 0.000 ZA 1/8W
R4884	401 035 4108	MT-GLAZE 0.000 ZA 1/8W
R4885	401 105 7909	MT-GLAZE 0.000 ZA 1/16W
R4886	401 105 7909	MT-GLAZE 0.000 ZA 1/16W
R4887	401 035 4108	MT-GLAZE 0.000 ZA 1/8W
R4888	401 035 4108	MT-GLAZE 0.000 ZA 1/8W
R489	401 105 7909	MT-GLAZE 0.000 ZA 1/16W
R4891	401 105 7909	MT-GLAZE 0.000 ZA 1/16W
R4892	401 105 7909	MT-GLAZE 0.000 ZA 1/16W
R4893	401 105 7909	MT-GLAZE 0.000 ZA 1/16W
R4895	401 035 4108	MT-GLAZE 0.000 ZA 1/8W
R4896	401 105 7909	MT-GLAZE 0.000 ZA 1/16W
R4897	401 035 4108	MT-GLAZE 0.000 ZA 1/8W
R4898	401 105 7909	MT-GLAZE 0.000 ZA 1/16W
R4899	401 105 7909	MT-GLAZE 0.000 ZA 1/16W
R490	401 105 7909	MT-GLAZE 0.000 ZA 1/16W
R491	401 105 7909	MT-GLAZE 0.000 ZA 1/16W
R492	401 105 7909	MT-GLAZE 0.000 ZA 1/16W
R501	401 105 0306	MT-GLAZE 10 JA 1/16W
R502	401 105 0603	MT-GLAZE 10K JA 1/16W
R503	401 105 7909	MT-GLAZE 0.000 ZA 1/16W
R504	401 105 0306	MT-GLAZE 10 JA 1/16W
R505	401 105 0306	MT-GLAZE 10 JA 1/16W
R506	401 105 0306	MT-GLAZE 10 JA 1/16W
R507	401 105 0306	MT-GLAZE 10 JA 1/16W
R508	401 105 0306	MT-GLAZE 10 JA 1/16W
R509	401 105 0306	MT-GLAZE 10 JA 1/16W
R510	401 105 0306	MT-GLAZE 10 JA 1/16W
R511	401 105 0306	MT-GLAZE 10 JA 1/16W
R512	401 105 0306	MT-GLAZE 10 JA 1/16W
R513	401 105 0306	MT-GLAZE 10 JA 1/16W
R514	401 105 0603	MT-GLAZE 10K JA 1/16W
R515	401 105 0306	MT-GLAZE 10 JA 1/16W
R516	401 105 0306	MT-GLAZE 10 JA 1/16W
R517	401 105 1402	MT-GLAZE 150 JA 1/16W
R518	401 105 3208	MT-GLAZE 270 JA 1/16W
R519	401 105 1402	MT-GLAZE 150 JA 1/16W
R520	401 105 3208	MT-GLAZE 270 JA 1/16W
R521	401 105 7909	MT-GLAZE 0.000 ZA 1/16W
R531	401 105 0306	MT-GLAZE 10 JA 1/16W
R532	401 105 0603	MT-GLAZE 10K JA 1/16W
R533	401 105 7909	MT-GLAZE 0.000 ZA 1/16W
R534	401 105 0306	MT-GLAZE 10 JA 1/16W
R535	401 105 0306	MT-GLAZE 10 JA 1/16W
R536	401 105 0306	MT-GLAZE 10 JA 1/16W
R537	401 105 0306	MT-GLAZE 10 JA 1/16W
R538	401 105 0306	MT-GLAZE 10 JA 1/16W
R539	401 105 0306	MT-GLAZE 10 JA 1/16W
R540	401 105 0306	MT-GLAZE 10 JA 1/16W
R541	401 105 0306	MT-GLAZE 10 JA 1/16W
R542	401 105 0306	MT-GLAZE 10 JA 1/16W
R543	401 105 0306	MT-GLAZE 10 JA 1/16W
R544	401 105 0603	MT-GLAZE 10K JA 1/16W
R545	401 105 0306	MT-GLAZE 10 JA 1/16W
R546	401 105 0306	MT-GLAZE 10 JA 1/16W
R547	401 105 1402	MT-GLAZE 150 JA 1/16W
R548	401 105 3208	MT-GLAZE 270 JA 1/16W
R549	401 105 1402	MT-GLAZE 150 JA 1/16W
R550	401 105 3208	MT-GLAZE 270 JA 1/16W
R551	401 105 7909	MT-GLAZE 0.000 ZA 1/16W
R561	401 105 0306	MT-GLAZE 10 JA 1/16W
R562	401 105 0603	MT-GLAZE 10K JA 1/16W
R563	401 105 7909	MT-GLAZE 0.000 ZA 1/16W

Ref. No.	Part No.	Description
R5631	401 105 5301	MT-GLAZE 4.7K JA 1/16W
R5632	401 105 5301	MT-GLAZE 4.7K JA 1/16W
R5633	401 105 4502	MT-GLAZE 390 JA 1/16W
R5634	401 105 4601	MT-GLAZE 3.9K JA 1/16W
R564	401 105 0306	MT-GLAZE 10 JA 1/16W
R565	401 105 0306	MT-GLAZE 10 JA 1/16W
R566	401 105 0306	MT-GLAZE 10 JA 1/16W
R567	401 105 0306	MT-GLAZE 10 JA 1/16W
R568	401 105 0306	MT-GLAZE 10 JA 1/16W
R569	401 105 0306	MT-GLAZE 10 JA 1/16W
R570	401 105 0306	MT-GLAZE 10 JA 1/16W
R571	401 105 0306	MT-GLAZE 10 JA 1/16W
R572	401 105 0306	MT-GLAZE 10 JA 1/16W
R573	401 105 0306	MT-GLAZE 10 JA 1/16W
R574	401 105 0603	MT-GLAZE 10K JA 1/16W
R575	401 105 0306	MT-GLAZE 10 JA 1/16W
R576	401 105 0306	MT-GLAZE 10 JA 1/16W
R577	401 105 1402	MT-GLAZE 150 JA 1/16W
R578	401 105 3208	MT-GLAZE 270 JA 1/16W
R579	401 105 1402	MT-GLAZE 150 JA 1/16W
R580	401 105 3208	MT-GLAZE 270 JA 1/16W
R5801	401 035 4108	MT-GLAZE 0.000 ZA 1/8W
R5802	401 105 7909	MT-GLAZE 0.000 ZA 1/16W
R581	401 105 7909	MT-GLAZE 0.000 ZA 1/16W
R5831	401 035 4108	MT-GLAZE 0.000 ZA 1/8W
R5832	401 035 4108	MT-GLAZE 0.000 ZA 1/8W
R5834	401 035 4108	MT-GLAZE 0.000 ZA 1/8W
R5835	401 035 4108	MT-GLAZE 0.000 ZA 1/8W
R5836	645 030 1056	PROTECTOR,IC 3.8A 72V
R5837	401 105 7404	MT-GLAZE 8.2K JA 1/16W
R5838	401 105 1501	MT-GLAZE 1.5K JA 1/16W
R5839	401 105 2409	MT-GLAZE 2K JA 1/16W
R5842	402 080 6802	FUSIBLE RES 0.39 JH 1/4W
R5843	645 030 1056	PROTECTOR,IC 3.8A 72V
R5851	401 105 3307	MT-GLAZE 2.7K JA 1/16W
R5853	401 105 0405	MT-GLAZE 100 JA 1/16W
R5854	401 105 0405	MT-GLAZE 100 JA 1/16W
R5855	401 105 0405	MT-GLAZE 100 JA 1/16W
R5856	401 105 0405	MT-GLAZE 100 JA 1/16W
R5857	401 105 0405	MT-GLAZE 100 JA 1/16W
R5858	401 105 0405	MT-GLAZE 100 JA 1/16W
R5859	401 035 4108	MT-GLAZE 0.000 ZA 1/8W
R5860	401 105 0603	MT-GLAZE 10K JA 1/16W
R5861	401 105 7909	MT-GLAZE 0.000 ZA 1/16W
R5862	401 105 7909	MT-GLAZE 0.000 ZA 1/16W
R5863	401 105 0603	MT-GLAZE 10K JA 1/16W
R5864	401 105 5202	MT-GLAZE 470 JA 1/16W
R5865	401 105 5202	MT-GLAZE 470 JA 1/16W
R5866	401 105 0603	MT-GLAZE 10K JA 1/16W
R5869	401 105 0603	MT-GLAZE 10K JA 1/16W
R5870	401 105 7909	MT-GLAZE 0.000 ZA 1/16W
R5871	401 035 4108	MT-GLAZE 0.000 ZA 1/8W
R5872	401 105 7909	MT-GLAZE 0.000 ZA 1/16W
R5873	401 105 7909	MT-GLAZE 0.000 ZA 1/16W
R5881	401 035 4108	MT-GLAZE 0.000 ZA 1/8W
R5882	401 105 7909	MT-GLAZE 0.000 ZA 1/16W
R5883	401 105 7909	MT-GLAZE 0.000 ZA 1/16W
R5884	401 105 7909	MT-GLAZE 0.000 ZA 1/16W
R5885	401 105 7909	MT-GLAZE 0.000 ZA 1/16W
R5886	401 105 7909	MT-GLAZE 0.000 ZA 1/16W
R5894	401 105 0603	MT-GLAZE 10K JA 1/16W
R5895	401 105 0603	MT-GLAZE 10K JA 1/16W
R5896	401 105 0603	MT-GLAZE 10K JA 1/16W
R5897	401 105 0603	MT-GLAZE 10K JA 1/16W
R5898	401 105 0603	MT-GLAZE 10K JA 1/16W
R5899	401 105 0603	MT-GLAZE 10K JA 1/16W
R6301	401 105 2706	MT-GLAZE 220 JA 1/16W
R6302	401 105 5905	MT-GLAZE 560 JA 1/16W
R6321	401 105 2706	MT-GLAZE 220 JA 1/16W
R6322	401 105 5905	MT-GLAZE 560 JA 1/16W
R6341	401 105 2706	MT-GLAZE 220 JA 1/16W
R6343	401 105 5905	MT-GLAZE 560 JA 1/16W
R7301	401 105 2607	MT-GLAZE 22 JA 1/16W
R7302	401 105 2607	MT-GLAZE 22 JA 1/16W
R7303	401 105 2607	MT-GLAZE 22 JA 1/16W
R7304	401 105 2607	MT-GLAZE 22 JA 1/16W
R7305	401 105 2607	MT-GLAZE 22 JA 1/16W
R7306	401 105 2607	MT-GLAZE 22 JA 1/16W
R7307	401 105 2607	MT-GLAZE 22 JA 1/16W
R7308	401 105 2607	MT-GLAZE 22 JA 1/16W
R7309	401 105 2607	MT-GLAZE 22 JA 1/16W
R7311	401 105 2607	MT-GLAZE 22 JA 1/16W
R7312	401 105 2607	MT-GLAZE 22 JA 1/16W
R7313	401 105 2607	MT-GLAZE 22 JA 1/16W
R7314	401 105 2607	MT-GLAZE 22 JA 1/16W
R7315	401 105 2607	MT-GLAZE 22 JA 1/16W
R7316	401 105 2607	MT-GLAZE 22 JA 1/16W
R7317	401 105 2607	MT-GLAZE 22 JA 1/16W
R7318	401 105 2607	MT-GLAZE 22 JA 1/16W
R7319	401 105 2607	MT-GLAZE 22 JA 1/16W
R7321	401 105 2607	MT-GLAZE 22 JA 1/16W
R7322	401 105 2607	MT-GLAZE 22 JA 1/16W
R7323	401 105 2607	MT-GLAZE 22 JA 1/16W
R7324	401 105 2607	MT-GLAZE 22 JA 1/16W
R7325	401 105 2607	MT-GLAZE 22 JA 1/16W
R7326	401 105 2607	MT-GLAZE 22 JA 1/16W
R7327	401 105 2607	MT-GLAZE 22 JA 1/16W
R7328	401 105 2607	MT-GLAZE 22 JA 1/16W
R7329	401 105 2607	MT-GLAZE 22 JA 1/16W
R7331	401 105 2607	MT-GLAZE 22 JA 1/16W
R7332	401 105 2607	MT-GLAZE 22 JA 1/16W
R7333	401 105 2607	MT-GLAZE 22 JA 1/16W
R7334	401 105 2607	MT-GLAZE 22 JA 1/16W
R7335	401 105 2607	MT-GLAZE 22 JA 1/16W
R7336	401 105 2607	MT-GLAZE 22 JA 1/16W
R7337	401 105 2607	MT-GLAZE 22 JA 1/16W
R7338	401 105 2607	MT-GLAZE 22 JA 1/16W
R7339	401 105 2607	MT-GLAZE 22 JA 1/16W
R7341	401 105 2607	MT-GLAZE 22 JA 1/16W
R7342	401 105 2607	MT-GLAZE 22 JA 1/16W
R7343	401 105 2607	MT-GLAZE 22 JA 1/16W
R7344	401 105 2607	MT-GLAZE 22 JA 1/16W
R7345	401 105 2607	MT-GLAZE 22 JA 1/16W
R7346	401 105 2607	MT-GLAZE 22 JA 1/16W
R7347	401 105 2607	MT-GLAZE 22 JA 1/16W
R7348	401 105 2607	MT-GLAZE 22 JA 1/16W
R7349	401 105 2607	MT-GLAZE 22 JA 1/16W
R7361	401 105 2607	MT-GLAZE 22 JA 1/16W
R7362	401 105 2607	MT-GLAZE 22 JA 1/16W
R7363	401 105 2607	MT-GLAZE 22 JA 1/16W
R7364	401 105 2607	MT-GLAZE 22 JA 1/16W
R7365	401 105 2607	MT-GLAZE 22 JA 1/16W
R7366	401 105 2607	MT-GLAZE 22 JA 1/16W
R7367	401 105 2607	MT-GLAZE 22 JA 1/16W
R7368	401 105 2607	MT-GLAZE 22 JA 1/16W
R7370	401 105 2607	MT-GLAZE 22 JA 1/16W
R7371	401 105 7909	MT-GLAZE 0.000 ZA 1/16W
R7372	401 105 7909	MT-GLAZE 0.000 ZA 1/16W
R7373	401 105 7909	MT-GLAZE 0.000 ZA 1/16W
R7374	401 105 7909	MT-GLAZE 0.000 ZA 1/16W
R7375	401 105 7909	MT-GLAZE 0.000 ZA 1/16W
R7376	401 105 7909	MT-GLAZE 0.000 ZA 1/16W
R7377	401 105 2607	MT-GLAZE 22 JA 1/16W
R7501	401 105 0306	MT-GLAZE 10 JA 1/16W
R7502	401 105 0306	MT-GLAZE 10 JA 1/16W
R7503	401 105 0306	MT-GLAZE 10 JA 1/16W
R7504	401 105 0306	MT-GLAZE 10 JA 1/16W
R7505	401 105 0306	MT-GLAZE 10 JA 1/16W
R7506	401 105 0306	MT-GLAZE 10 JA 1/16W
R7507	401 105 0306	MT-GLAZE 10 JA 1/16W
R7508	401 105 0306	MT-GLAZE 10 JA 1/16W
R7509	401 105 0306	MT-GLAZE 10 JA 1/16W
R7510	401 105 0306	MT-GLAZE 10 JA 1/16W
R7511	401 105 7909	MT-GLAZE 0.000 ZA 1/16W
R7514	401 105 7909	MT-GLAZE 0.000 ZA 1/16W
R7516	401 105 7909	MT-GLAZE 0.000 ZA 1/16W
R7518	401 105 7909	MT-GLAZE 0.000 ZA 1/16W
R7520	401 105 7909	MT-GLAZE 0.000 ZA 1/16W
R7522	401 105 7909	MT-GLAZE 0.000 ZA 1/16W
R7524	401 105 7909	MT-GLAZE 0.000 ZA 1/16W
R7525	401 105 7909	MT-GLAZE 0.000 ZA 1/16W
R7526	401 105 7909	MT-GLAZE 0.000 ZA 1/16W
R7531	401 105 0306	MT-GLAZE 10 JA 1/16W
R7532	401 105 0306	MT-GLAZE 10 JA 1/16W
R7533	401 105 0306	MT-GLAZE 10 JA 1/16W
R7534	401 105 0306	MT-GLAZE 10 JA 1/16W
R7535	401 105 0306	MT-GLAZE 10 JA 1/16W
R7536	401 105 0306	MT-GLAZE 10 JA 1/16W
R7537	401 105 0306	MT-GLAZE 10 JA 1/16W
R7538	401 105 0306	MT-GLAZE 10 JA 1/16W
R7539	401 105 0306	MT-GLAZE 10 JA 1/16W
R7540	401 105 0306	MT-GLAZE 10 JA 1/16W
R7541	401 105 7909	MT-GLAZE 0.000 ZA 1/16W
R7544	401 105 7909	MT-GLAZE 0.000 ZA 1/16W
R7546	401 105 7909	MT-GLAZE 0.000 ZA 1/16W
R7548	401 105 7909	MT-GLAZE 0.000 ZA 1/16W
R7550	401 105 7909	MT-GLAZE 0.000 ZA 1/16W
R7551	401 105 7909	MT-GLAZE 0.000 ZA 1/16W
R7554	401 105 7909	MT-GLAZE 0.000 ZA 1/16W
R7555	401 105 7909	MT-GLAZE 0.000 ZA 1/16W
R7556	401 105 7909	MT-GLAZE 0.000 ZA 1/16W
R7561	401 105 0306	MT-GLAZE 10 JA 1/16W
R7562	401 105 0306	MT-GLAZE 10 JA 1/16W
R7563	401 105 0306	MT-GLAZE 10 JA 1/16W
R7564	401 105 0306	MT-GLAZE 10 JA 1/16W
R7565	401 105 0306	MT-GLAZE 10 JA 1/16W
R7566	401 105 0306	MT-GLAZE 10 JA 1/16W
R7567	401 105 0306	MT-GLAZE 10 JA 1/16W
R7568	401 105 0306	MT-GLAZE 10 JA 1/16W
R7569	401 105 0306	MT-GLAZE 10 JA 1/16W
R7570	401 105 0306	MT-GLAZE 10 JA 1/16W
R7571	401 105 7909	MT-GLAZE 0.000 ZA 1/16W
R7574	401 105 7909	MT-GLAZE 0.000 ZA 1/16W
R7576	401 105 7909	MT-GLAZE 0.000 ZA 1/16W
R7578	401 105 7909	MT-GLAZE 0.000 ZA 1/16W
R7580	401 105 7909	MT-GLAZE 0.000 ZA 1/16W
R7584	401 105 7909	MT-GLAZE 0.000 ZA 1/16W
R800	401 105 0603	MT-GLAZE 10K JA 1/16W
R803	401 105 0603	MT-GLAZE 10K JA 1/16W
R804	401 105 0603	MT-GLAZE 10K JA 1/16W

Ref. No.	Part No.	Description
R805	401 105 7909	MT-GLAZE 0.000 ZA 1/16W
R806	401 105 7909	MT-GLAZE 0.000 ZA 1/16W
R809	401 105 0405	MT-GLAZE 100 JA 1/16W
R810	401 105 7909	MT-GLAZE 0.000 ZA 1/16W
R812	401 105 0603	MT-GLAZE 10K JA 1/16W
R815	401 105 7909	MT-GLAZE 0.000 ZA 1/16W
R816	401 105 0603	MT-GLAZE 10K JA 1/16W
R817	401 105 7909	MT-GLAZE 0.000 ZA 1/16W
R818	401 105 0603	MT-GLAZE 10K JA 1/16W
R820	401 105 7909	MT-GLAZE 0.000 ZA 1/16W
R821	401 105 5301	MT-GLAZE 4.7K JA 1/16W
R8218	401 037 5004	MT-GLAZE 0.000 ZA 1/10W
R822	401 105 7909	MT-GLAZE 0.000 ZA 1/16W
R8222	401 105 7909	MT-GLAZE 0.000 ZA 1/16W
R823	401 105 5301	MT-GLAZE 4.7K JA 1/16W
R8231	401 105 4106	MT-GLAZE 3.3K JA 1/16W
R8232	401 037 5004	MT-GLAZE 0.000 ZA 1/10W
R8234	401 105 7909	MT-GLAZE 0.000 ZA 1/16W
R8235	401 105 7909	MT-GLAZE 0.000 ZA 1/16W
R8236	401 105 0603	MT-GLAZE 10K JA 1/16W
R8237	401 105 7909	MT-GLAZE 0.000 ZA 1/16W
R824	401 105 4007	MT-GLAZE 330 JA 1/16W
R825	401 105 2904	MT-GLAZE 22K JA 1/16W
R8251	401 105 0405	MT-GLAZE 100 JA 1/16W
R8252	401 105 0405	MT-GLAZE 100 JA 1/16W
R8254	401 105 7909	MT-GLAZE 0.000 ZA 1/16W
R8256	401 105 7909	MT-GLAZE 0.000 ZA 1/16W
R827	401 105 2904	MT-GLAZE 22K JA 1/16W
R8271	401 105 7909	MT-GLAZE 0.000 ZA 1/16W
R8272	401 105 7909	MT-GLAZE 0.000 ZA 1/16W
R8274	401 105 0306	MT-GLAZE 10 JA 1/16W
R8275	401 105 0306	MT-GLAZE 10 JA 1/16W
R8280	401 105 0603	MT-GLAZE 10K JA 1/16W
R8281	401 105 7909	MT-GLAZE 0.000 ZA 1/16W
R8284	401 105 7909	MT-GLAZE 0.000 ZA 1/16W
R8286	401 105 7909	MT-GLAZE 0.000 ZA 1/16W
R8287	401 105 7909	MT-GLAZE 0.000 ZA 1/16W
R8288	401 105 0603	MT-GLAZE 10K JA 1/16W
R8289	401 105 0603	MT-GLAZE 10K JA 1/16W
R829	401 105 0900	MT-GLAZE 120 JA 1/16W
R8291	401 105 0405	MT-GLAZE 100 JA 1/16W
R8292	401 105 0405	MT-GLAZE 100 JA 1/16W
R8296	401 037 5004	MT-GLAZE 0.000 ZA 1/10W
R831	401 105 5202	MT-GLAZE 470 JA 1/16W
R832	401 105 0702	MT-GLAZE 100K JA 1/16W
R833	401 105 0405	MT-GLAZE 100 JA 1/16W
R834	401 105 5301	MT-GLAZE 4.7K JA 1/16W
R835	401 105 0405	MT-GLAZE 100 JA 1/16W
R836	401 105 0405	MT-GLAZE 100 JA 1/16W
R837	401 105 0405	MT-GLAZE 100 JA 1/16W
R838	401 105 0405	MT-GLAZE 100 JA 1/16W
R839	401 105 5301	MT-GLAZE 4.7K JA 1/16W
R840	401 105 0603	MT-GLAZE 10K JA 1/16W
R841	401 105 5301	MT-GLAZE 4.7K JA 1/16W
R842	401 105 5301	MT-GLAZE 4.7K JA 1/16W
R843	401 105 5301	MT-GLAZE 4.7K JA 1/16W
R844	401 105 0504	MT-GLAZE 1K JA 1/16W
R845	401 105 0504	MT-GLAZE 1K JA 1/16W
R846	401 105 0504	MT-GLAZE 1K JA 1/16W
R847	SEE PAGE-93	
R848	401 105 0603	MT-GLAZE 10K JA 1/16W
R849	401 105 0405	MT-GLAZE 100 JA 1/16W
R850	401 105 0603	MT-GLAZE 10K JA 1/16W
R851	401 105 0603	MT-GLAZE 10K JA 1/16W
R852	401 105 0603	MT-GLAZE 10K JA 1/16W
R853	401 105 2904	MT-GLAZE 22K JA 1/16W
R854	401 105 2904	MT-GLAZE 22K JA 1/16W
R855	401 105 2904	MT-GLAZE 22K JA 1/16W
R856	401 105 2904	MT-GLAZE 22K JA 1/16W
R857	401 105 5301	MT-GLAZE 4.7K JA 1/16W
R858	401 105 5301	MT-GLAZE 4.7K JA 1/16W
R859	401 105 0603	MT-GLAZE 10K JA 1/16W
R861	401 105 0405	MT-GLAZE 100 JA 1/16W
R862	401 105 5301	MT-GLAZE 4.7K JA 1/16W
R863	401 105 5301	MT-GLAZE 4.7K JA 1/16W
R864	401 105 0405	MT-GLAZE 100 JA 1/16W
R865	401 105 0405	MT-GLAZE 100 JA 1/16W
R866	401 105 2003	MT-GLAZE 1.8K JA 1/16W
R867	401 105 4106	MT-GLAZE 3.3K JA 1/16W
R868	401 105 7909	MT-GLAZE 0.000 ZA 1/16W
R869	401 105 4304	MT-GLAZE 330K JA 1/16W
R870	401 105 7909	MT-GLAZE 0.000 ZA 1/16W
R871	401 105 7909	MT-GLAZE 0.000 ZA 1/16W
R873	401 105 0603	MT-GLAZE 10K JA 1/16W
R875	401 105 0603	MT-GLAZE 10K JA 1/16W
R877	401 105 5301	MT-GLAZE 4.7K JA 1/16W
R878	401 105 0405	MT-GLAZE 100 JA 1/16W
R879	401 105 0504	MT-GLAZE 1K JA 1/16W
R880	401 105 7909	MT-GLAZE 0.000 ZA 1/16W
R882	401 105 7909	MT-GLAZE 0.000 ZA 1/16W
R886	401 105 7909	MT-GLAZE 0.000 ZA 1/16W
R890	401 105 0603	MT-GLAZE 10K JA 1/16W
R891	401 105 0603	MT-GLAZE 10K JA 1/16W
R893	401 105 0603	MT-GLAZE 10K JA 1/16W
R895	401 105 0603	MT-GLAZE 10K JA 1/16W
R896	401 105 0603	MT-GLAZE 10K JA 1/16W
R9801	401 105 1501	MT-GLAZE 1.5K JA 1/16W
R9803	401 105 8005	MT-GLAZE 1M JA 1/16W
R9804	401 105 0405	MT-GLAZE 100 JA 1/16W
R9805	401 105 0405	MT-GLAZE 100 JA 1/16W
R9806	401 105 0405	MT-GLAZE 100 JA 1/16W
R9807	401 105 0405	MT-GLAZE 100 JA 1/16W
R9809	401 105 7909	MT-GLAZE 0.000 ZA 1/16W
R9813	401 105 0702	MT-GLAZE 100K JA 1/16W
COIL		
L2311TM	645 008 0081	INDUCTOR,390U K
L2341	645 040 7796	FILTER,LP 30MHZ
L2342	645 040 7796	FILTER,LP 30MHZ
L2343	645 040 7796	FILTER,LP 30MHZ
L2501	645 026 1008	INDUCTOR,3.3U M
L2506	645 026 1008	INDUCTOR,3.3U M
L3201	645 020 1776	INDUCTOR,3.3U M
L3202	401 035 4108	MT-GLAZE 0.000 ZA 1/8W
L3231	645 020 1776	INDUCTOR,3.3U M
L3232	645 020 1776	INDUCTOR,3.3U M
L3271	645 020 1776	INDUCTOR,3.3U M
L3351	645 026 1008	INDUCTOR,3.3U M
L3521	645 026 1008	INDUCTOR,3.3U M
L401	645 020 1776	INDUCTOR,3.3U M
L402	645 020 1776	INDUCTOR,3.3U M
L4231	401 037 5004	MT-GLAZE 0.000 ZA 1/10W
L501	645 020 1776	INDUCTOR,3.3U M
L502	645 002 5129	INDUCTOR,0.47U M
L531	645 020 1776	INDUCTOR,3.3U M
L532	645 002 5129	INDUCTOR,0.47U M
L561	645 020 1776	INDUCTOR,3.3U M
L562	645 002 5129	INDUCTOR,0.47U M
L6301	401 035 4108	MT-GLAZE 0.000 ZA 1/8W
L8281	645 026 1008	INDUCTOR,3.3U M
L9801	645 021 1645	INDUCTOR,2.2U J
DIODE		
D1301	407 223 1102	ZENER DIODE 02DZ6.2Y(TPH3
D1851	407 223 1003	ZENER DIODE 02DZ5.1Y(TPH3
D1852	407 092 9506	DIODE SB07-03C-TB
D2502	407 149 0807	DIODE 1SS355-TE-17
D2503	407 149 0807	DIODE 1SS355-TE-17
D4871	407 223 1102	ZENER DIODE 02DZ6.2Y(TPH3
D4872	407 223 1102	ZENER DIODE 02DZ6.2Y(TPH3
D4873	407 223 1102	ZENER DIODE 02DZ6.2Y(TPH3
D4874	407 223 1102	ZENER DIODE 02DZ6.2Y(TPH3
D5631	407 149 0807	DIODE 1SS355-TE-17
D5801	407 223 1102	ZENER DIODE 02DZ6.2Y(TPH3
D5811	407 223 1102	ZENER DIODE 02DZ6.2Y(TPH3
D5812	407 223 1102	ZENER DIODE 02DZ6.2Y(TPH3
D5813	407 223 1102	ZENER DIODE 02DZ6.2Y(TPH3
D5831	407 223 5001	DIODE D1FM3
D5832	407 223 5001	DIODE D1FM3
D5833	407 223 5001	DIODE D1FM3
D5862	407 223 1102	ZENER DIODE 02DZ6.2Y(TPH3
D5863	407 223 1102	ZENER DIODE 02DZ6.2Y(TPH3
D5867	407 223 1102	ZENER DIODE 02DZ6.2Y(TPH3
D5868	407 223 1102	ZENER DIODE 02DZ6.2Y(TPH3
D5871	407 223 1102	ZENER DIODE 02DZ6.2Y(TPH3
D5881	407 223 1102	ZENER DIODE 02DZ6.2Y(TPH3
D801	407 092 9506	DIODE SB07-03C-TB
MISCELLANEOUS		
IC886	407 221 9704	SENSOR MPXA4115A6T1
TPBLK	645 036 4266	TERMINAL
TPCLKCG	645 036 4266	TERMINAL
TPCLKI	645 036 4266	TERMINAL
TPCOAST	645 036 4266	TERMINAL
TPDCKE	645 036 4266	TERMINAL
TPDCLK	645 036 4266	TERMINAL
TPDENB	645 036 4266	TERMINAL
TPDENG	645 036 4266	TERMINAL
TPDENR	645 036 4266	TERMINAL
TPDHS	645 036 5010	TERMINAL
TPDVS	645 036 5010	TERMINAL
TPGADCL	645 036 4266	TERMINAL
TPGCLKO	645 036 4266	TERMINAL
TPGFBK	645 036 5010	TERMINAL
TPGHS	645 036 5010	TERMINAL
TPGPEN	645 036 5010	TERMINAL
TPGREF	645 036 5010	TERMINAL
TPGVS	645 036 5010	TERMINAL
TPHCG	645 036 4266	TERMINAL
TPHSFO	645 036 4266	TERMINAL
TPHV	645 036 5010	TERMINAL
TPMCK	645 036 4266	TERMINAL
TPMSCL	645 036 4266	TERMINAL
TPMSDA	645 036 4266	TERMINAL
TPNMI	645 036 5010	TERMINAL
TPRSTPW1	645 036 5010	TERMINAL
TPRXDPW	645 036 4266	TERMINAL
TPSINTR	645 036 4266	TERMINAL
TPTXDPW	645 036 4266	TERMINAL
TPV	645 036 5010	TERMINAL
TPVCG	645 036 4266	TERMINAL
TP1351	645 036 5010	TERMINAL
TP1352	645 036 5010	TERMINAL

Ref. No.	Part No.	Description	Ref. No.	Part No.	Description
TP1381	645 036 5010	TERMINAL			
TP201	645 036 5010	TERMINAL			
TP211	645 036 5010	TERMINAL			
TP221	645 036 5010	TERMINAL			
TP2301R	645 036 5010	TERMINAL			
TP2302G	645 036 5010	TERMINAL			
TP2303B	645 036 5010	TERMINAL			
TP2401-H	645 036 5010	TERMINAL			
TP2401-V	645 036 5010	TERMINAL			
TP2516	645 036 5010	TERMINAL			
TP2517	645 036 5010	TERMINAL			
TP2526	645 036 5010	TERMINAL			
TP2527	645 036 5010	TERMINAL			
TP2536	645 036 5010	TERMINAL			
TP2537	645 036 5010	TERMINAL			
TP2561	645 036 5010	TERMINAL			
TP2571	645 036 5010	TERMINAL			
TP303	645 036 4266	TERMINAL			
TP304	645 036 4266	TERMINAL			
TP32DE	645 036 5010	TERMINAL			
TP32H1	645 036 5010	TERMINAL			
TP32H2	645 036 5010	TERMINAL			
TP32V1	645 036 5010	TERMINAL			
TP32V2	645 036 5010	TERMINAL			
TP401	645 036 5010	TERMINAL			
TP402	645 036 5010	TERMINAL			
TP4201	645 036 4266	TERMINAL			
TP4202	645 036 4266	TERMINAL			
TP4203	645 036 4266	TERMINAL			
TP4204	645 036 4266	TERMINAL			
TP4205	645 036 4266	TERMINAL			
TP4232	645 036 5010	TERMINAL			
TP801	645 036 5010	TERMINAL			
TP820B	645 036 5010	TERMINAL			
TP820G	645 036 5010	TERMINAL			
TP820R	645 036 5010	TERMINAL			
K1301	645 029 6338	PULG,5P			
K2B	645 009 8390	PLUG,ANT 2P			
K2G	645 009 8390	PLUG,ANT 2P			
K2R	645 009 8390	PLUG,ANT 2P			
K25D	645 050 2309	SOCKET,FPC 32P			
K25E	645 050 2309	SOCKET,FPC 32P			
K25F	645 050 2309	SOCKET,FPC 32P			
K301	645 005 6949	PLUG,SIDE-ZR-SM3 6P			
K302	645 030 5702	SOCKET,FPC 50P			
K32A	645 040 6775	SOCKET,PWB 40P			
K32B	645 040 6775	SOCKET,PWB 40P			
K8A	645 041 8136	PLUG,40P			
K8B	645 042 6834	PLUG,30P			
K8D	645 030 6679	PLUG,32P			
K8E	645 041 8136	PLUG,40P			
K8F	645 041 0079	PLUG,13P			
K8P	645 029 6314	PULG,3P			
K8Q	645 029 6338	PULG,5P			
K8R	645 043 3719	PLUG,3P			
K8S	645 029 6314	PULG,3P			
K8U	645 029 6314	PULG,3P			
K8V	645 029 6321	PULG,4P			
K8W	645 023 8659	PLUG,5P			
K8X	645 023 8659	PLUG,5P			
X1331	645 047 6587	OSC,CRYSTAL 26.000MHZ			
X1341	645 029 6468	OSC,CRYSTAL 27.000MHZ			
X801	645 035 2249	OSC,CRYSTAL 6.7584MHZ			
X9801	645 035 8906	OSC,CRYSTAL 48MHZ			

Ref. No.	Part No.	Description

****

ASSY PWB MAIN MY6A

	610 293 0894	ASSY PWB MAIN MY6A
R847	401 105 8203	MT-GLAZE 68K JA 1/16W

****

ACCESSORIES FOR PLC-XF30 ONLY. (009MY6A)

	645 015 3976	CABLE,FXAF
	610 234 0969	CABLE
	610 293 9699	COMPL,COVER LENS A-MV6A (including "**")
**	610 290 9258	COVER LNS B-MV6A
**	610 293 8937	COVER LNS C-MV6A
**	610 293 8944	COVER LNS D-MV6A
	610 289 1645	COMPL,HOLDER LENS-ML6A (including "***")
***	412 062 4009	SPECIAL SCREW
***	411 001 9303	SCR BIN 4X10
***	610 289 1676	HOLDER LENS A-ICPP
AA9901	645 047 7867	ASSY,REMOCON CXJT
A9901C	610 283 3867	RC-BATTERY LID-CXFJ
	610 294 3115	LENS INST MANUAL-MV6A
	645 031 8207	ADAPTOR,MAC/IBM
	645 043 9704	ADAPTOR,DVI/VGA
	610 294 3344	COVER,DUST-MV6A
⚠	645 002 9189	CORD,POWER-3.0MK
⚠	645 002 9196	CORD,POWER-3.0MK,EU
⚠	645 003 1137	CORD,POWER-3.0MK,UK
	645 030 6624	CABLE,INTERFACE VGA
	645 039 7196	CABLE,MOUSE MAC
	645 039 7202	CABLE,MOUSE PS/2
	645 039 7219	CABLE,MOUSE SRAL
	645 043 3702	CABLE,DVI-D
Owner's Manual	See the **Production change notice** of the cover. (Page-1)	

****

ACCESSORIES FOR PLC-XF30N ONLY. (009MY6AA)

	645 015 3976	CABLE,FXAF
	610 234 0969	CABLE
	610 293 9699	COMPL,COVER LENS A-MV6A (including "**")
**	610 290 9258	COVER LNS B-MV6A
**	610 293 8937	COVER LNS C-MV6A
**	610 293 8944	COVER LNS D-MV6A
	610 289 1645	COMPL,HOLDER LENS-ML6A (including "***")
***	412 062 4009	SPECIAL SCREW
***	411 001 9303	SCR BIN 4X10
***	610 289 1676	HOLDER LENS A-ICPP
AA9901	645 047 7867	ASSY,REMOCON CXJT
A9901C	610 283 3867	RC-BATTERY LID-CXFJ
	610 294 3115	LENS INST MANUAL-MV6A
	645 031 8207	ADAPTOR,MAC/IBM
	645 043 9704	ADAPTOR,DVI/VGA
	610 294 3344	COVER,DUST-MV6A
⚠	645 002 9189	CORD,POWER-3.0MK
⚠	645 002 9196	CORD,POWER-3.0MK,EU
⚠	645 003 1137	CORD,POWER-3.0MK,UK
	645 030 6624	CABLE,INTERFACE VGA
	645 039 7196	CABLE,MOUSE MAC
	645 039 7202	CABLE,MOUSE PS/2
	645 039 7219	CABLE,MOUSE SRAL
	645 043 3702	CABLE,DVI-D
Owner's Manual	See the **Production change notice** of the cover. (Page-1)	

****

****

ACCESSORIES FOR PLC-XF30NL ONLY. (009MY6AL)

	645 015 3976	CABLE,FXAF
	610 234 0969	CABLE
	610 293 9699	COMPL,COVER LENS A-MV6A (including "**")
**	610 290 9258	COVER LNS B-MV6A
**	610 293 8937	COVER LNS C-MV6A
**	610 293 8944	COVER LNS D-MV6A
	610 289 1645	COMPL,HOLDER LENS-ML6A (including "***")
***	412 062 4009	SPECIAL SCREW
***	411 001 9303	SCR BIN 4X10
***	610 289 1676	HOLDER LENS A-ICPP
AA9901	645 047 7867	ASSY,REMOCON CXJT
A9901C	610 283 3867	RC-BATTERY LID-CXFJ
	610 294 3115	LENS INST MANUAL-MV6A
	645 031 8207	ADAPTOR,MAC/IBM
	645 043 9704	ADAPTOR,DVI/VGA
	610 294 3344	COVER,DUST-MV6A
⚠	645 002 9189	CORD,POWER-3.0MK
	645 030 6624	CABLE,INTERFACE VGA
	645 039 7196	CABLE,MOUSE MAC
	645 039 7202	CABLE,MOUSE PS/2
	645 039 7219	CABLE,MOUSE SRAL
	645 043 3702	CABLE,DVI-D
Owner's Manual	See the **Production change notice** of the cover. (Page-1)	

****

SANYO --

Memo

Memo

Jan./ '02/ 2000 Printed in Japan

SANYO Electric Co., Ltd

PLC-XF30/30N/30NL
Reference No. SM511029S

SCHEMATIC DIAGRAM S1

05DMY6A---01

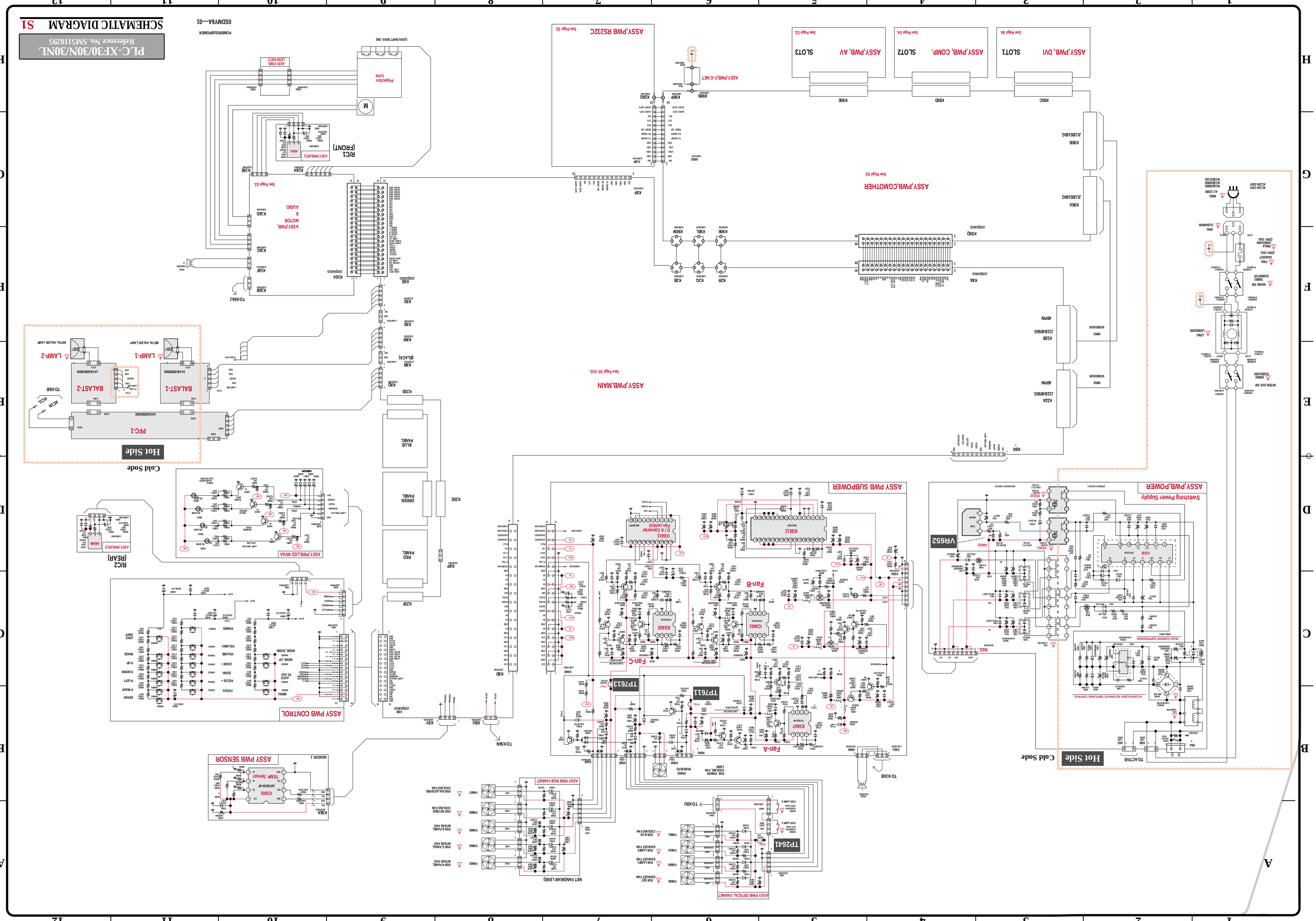

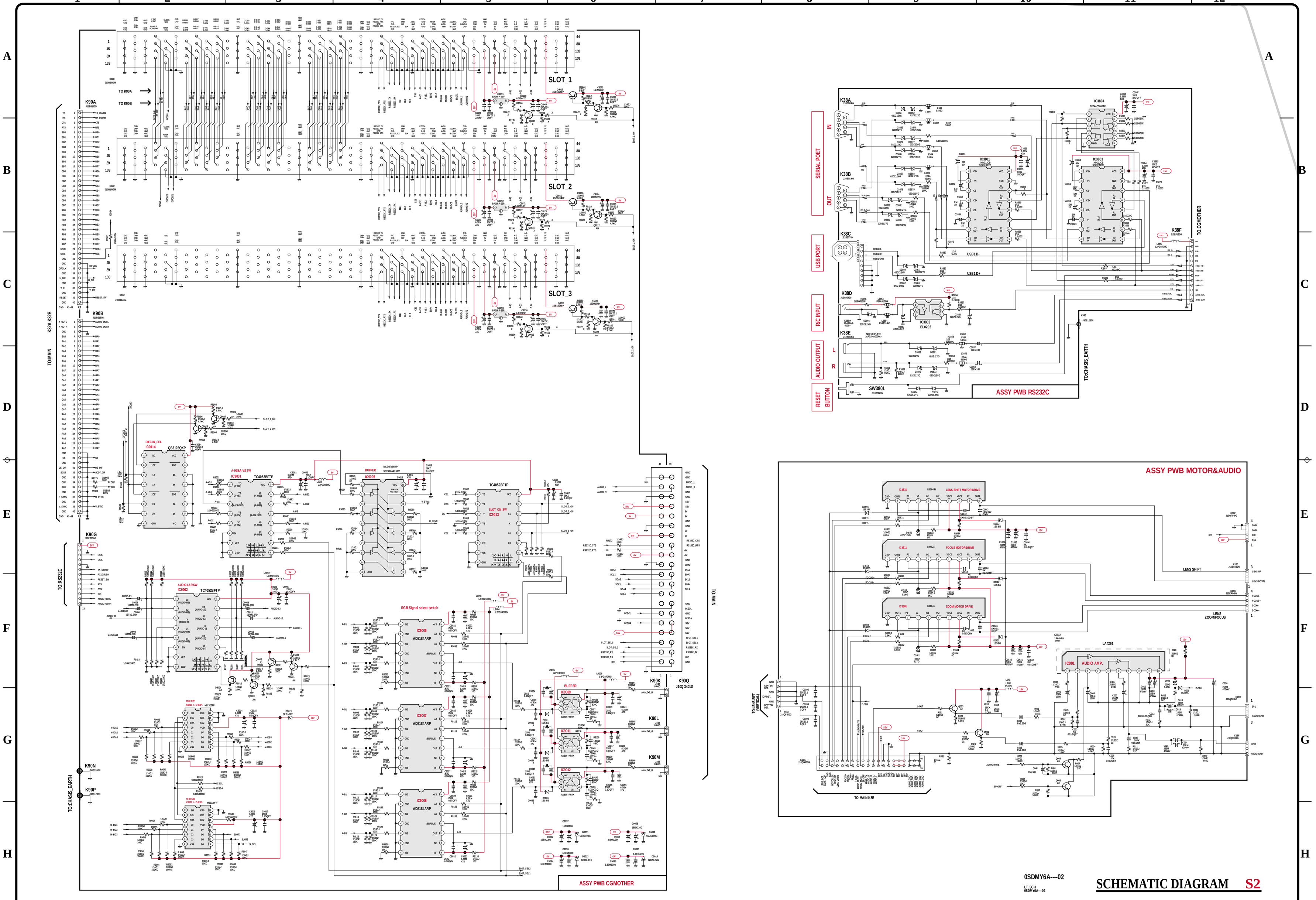
SLOT_1
SLOT_2
SLOT_3
TO K90A
TO K90B
K90A
K90B
TO:MAIN
K32A,K32B
K90G
TO:RS232C
K90N
K90P
TO:CHASSIS EARTH
DFCLK_SEL
IC9014
QS3125QXP
A-HS&A-VS SW
IC9001
TC4052BFTP
BUFFER
IC9005
MC74F2446SP
SN74F2446SPW
TC4052BFTP
SLOT_ON_SW
IC9013
AUDIO-L&R SW
IC9002
TC4052BFTP
RGB Signal select switch
IC9006
AD8184ARP
IC9007
AD8184ARP
IC9008
AD8184ARP
BUFFER
IC9009
AD8057ARTK
IC9011
AD8057ARTK
IC9012
AD8057ARTK
K90K
K90L
K90M
K90Q
J10Q-G401G
TO:MAIN
ASSY PWB CGMOTHER
SERIAL PORT
IN
OUT
USB PORT
RIC INPUT
AUDIO OUTPUT
L
R
RESET BUTTON
K38A
K38B
K38C
K38D
K38E
IC3801
IC3803
IC3804
IC3802
EL0202
SW3801
K38F
TO:COMOTHER
TO:CHASSIS EARTH
ASSY PWB RS232C
ASSY PWB MOTOR&AUDIO
LENS SHIFT MOTOR DRIVE
FOCUS MOTOR DRIVE
ZOOM MOTOR DRIVE
LENS SHIFT
LENS ZOOM/FOCUS
IC001
AUDIO AMP.
LA-4261
TO:MAIN K9E
0SDMY6A----02
LT SCH
0SDMY6A----02
SCHEMATIC DIAGRAM S2

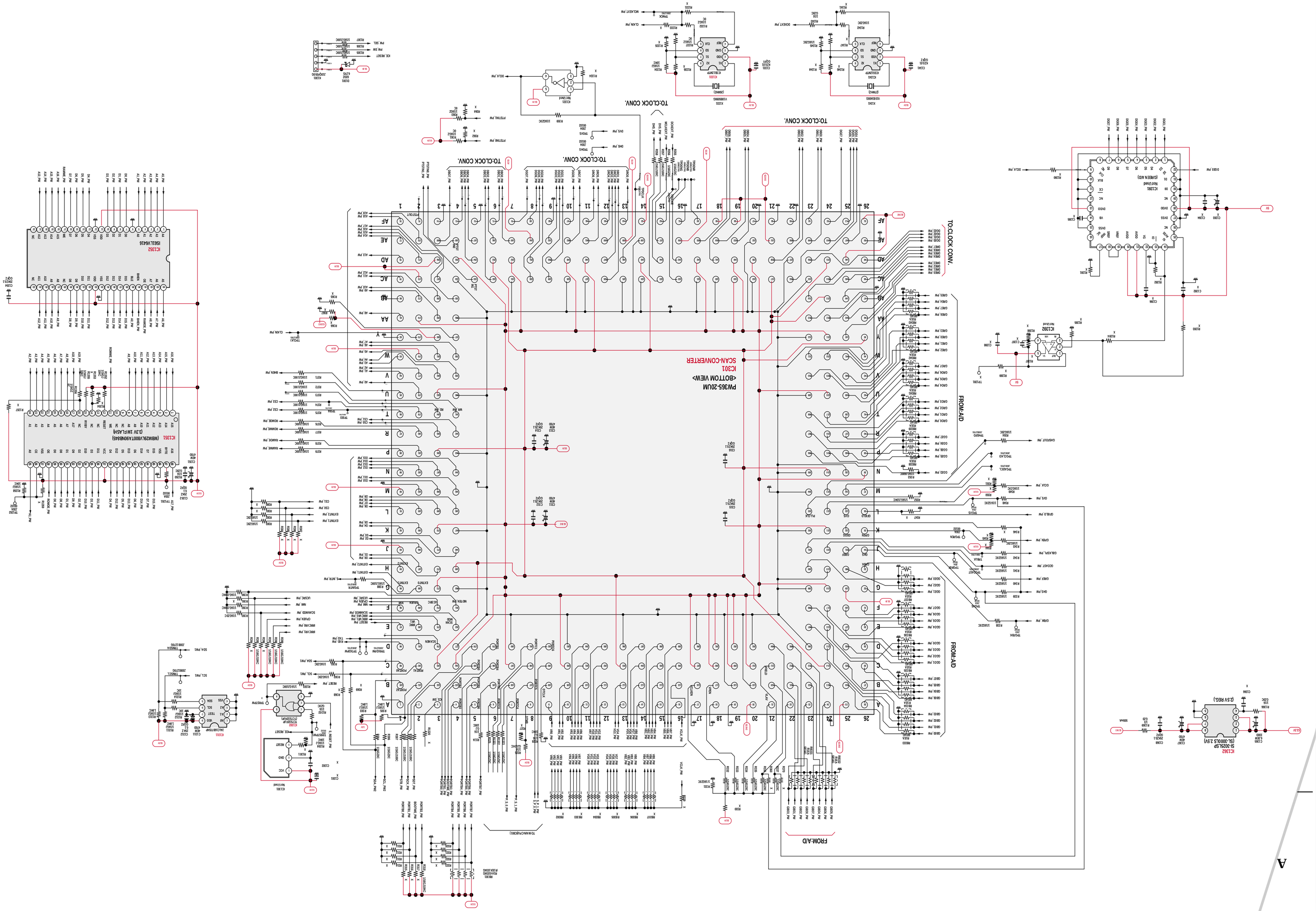

SCAN-CONVERTER

0SDMY6A----07

ASSY MAIN 3 / 6

SCHEMATIC DIAGRAM S7

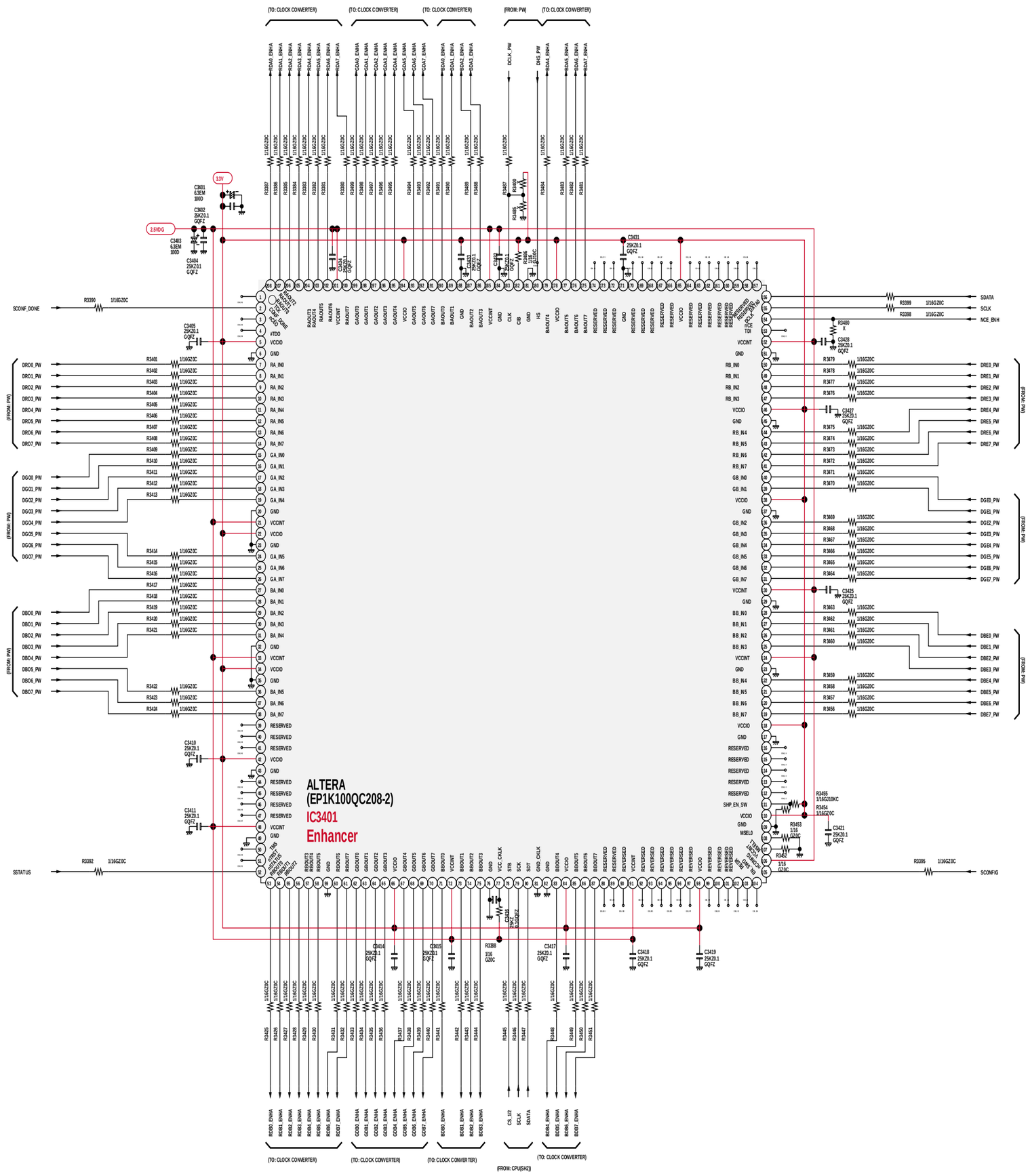

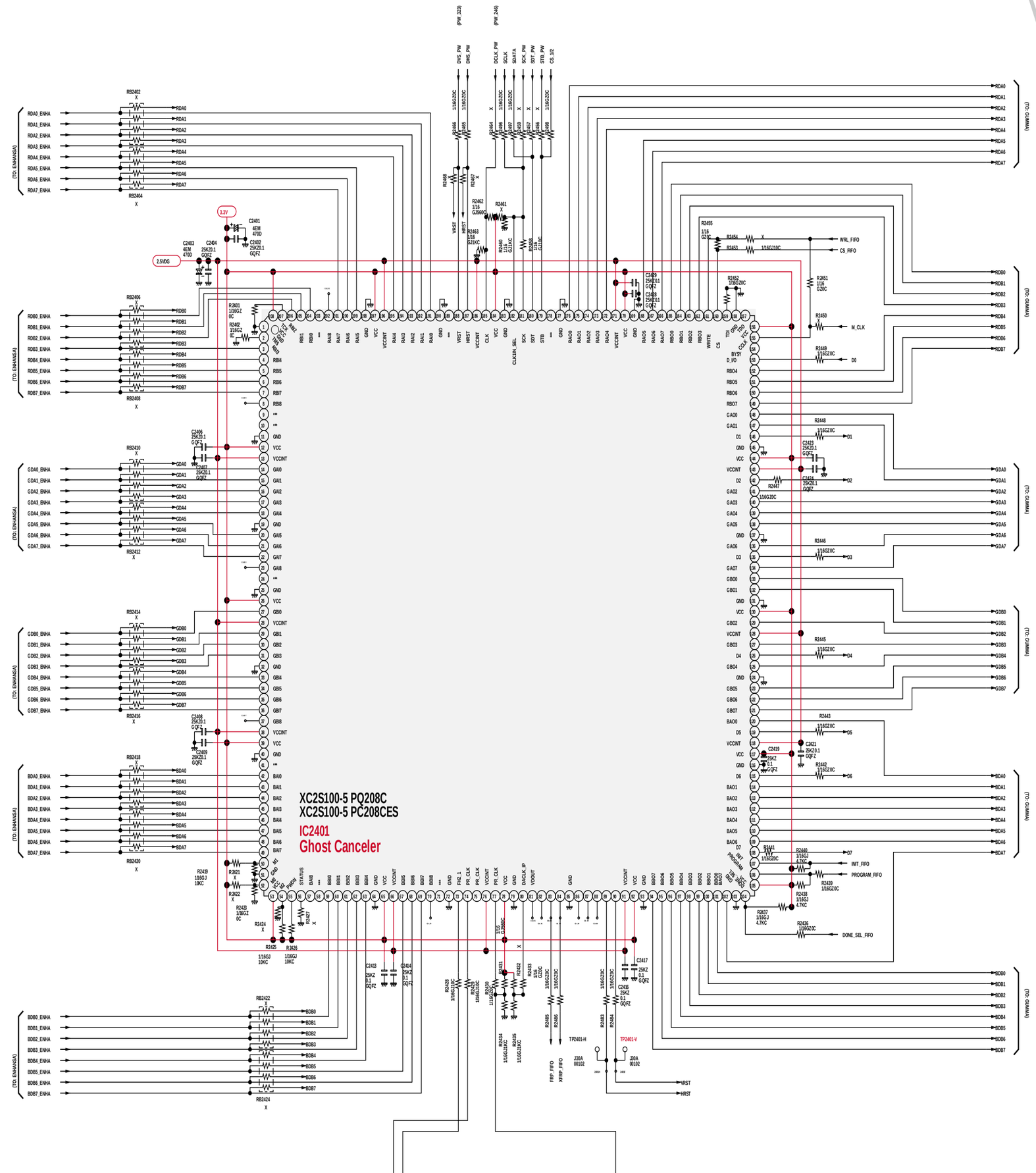

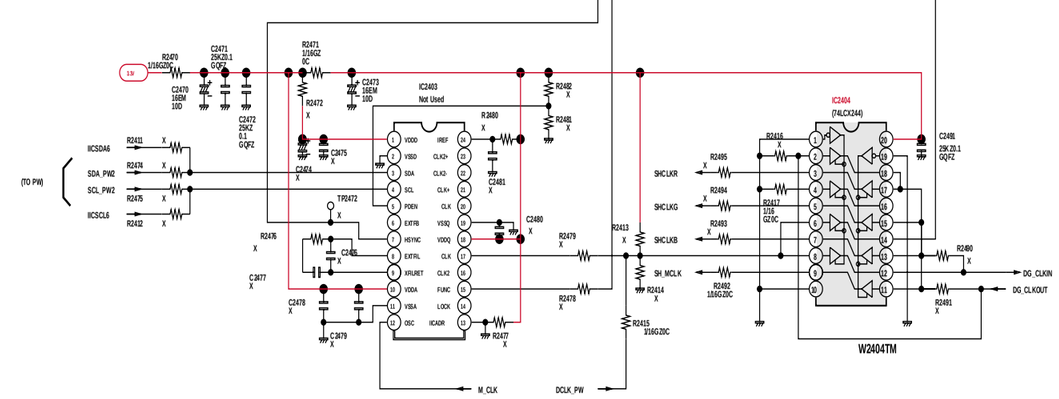

Enhancer & Clock converter
0SDMY6A---08

ASSY MAIN 4 / 6

SCHEMATIC DIAGRAM S8

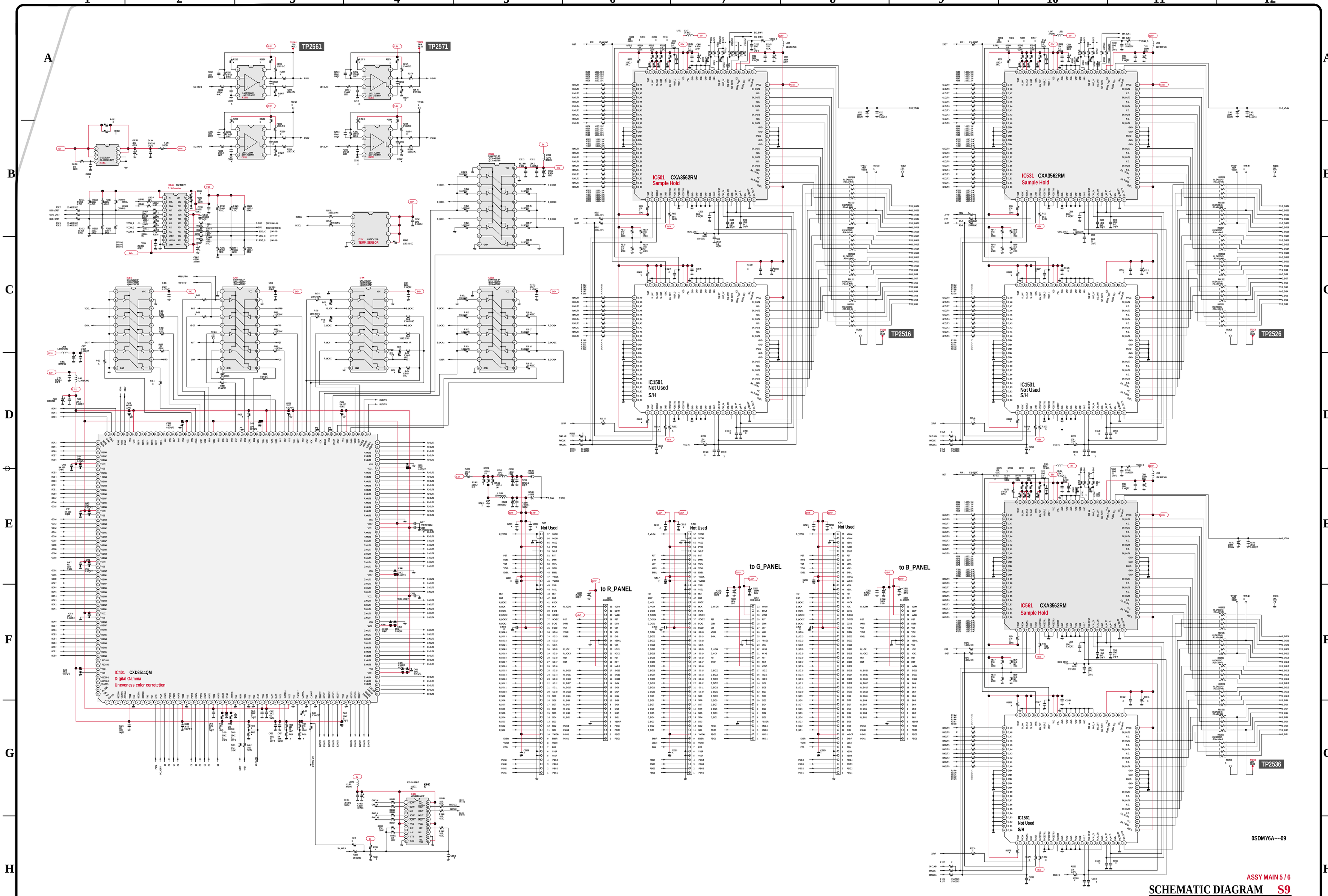
TP2561
TP2571
IC501 CXA3562RM
Sample Hold
IC531 CXA3562RM
Sample Hold
IC1501
Not Used
S/H
IC1531
Not Used
S/H
TP2516
TP2526
IC401 CXD3511QM
Digital Gamma
Uneveness color correction
IC561 CXA3562RM
Sample Hold
IC1561
Not Used
S/H
TP2536
Not Used
to R_PANEL
to G_PANEL
to B_PANEL
0SDMY6A----09
ASSY MAIN 5 / 6
SCHEMATIC DIAGRAM S9

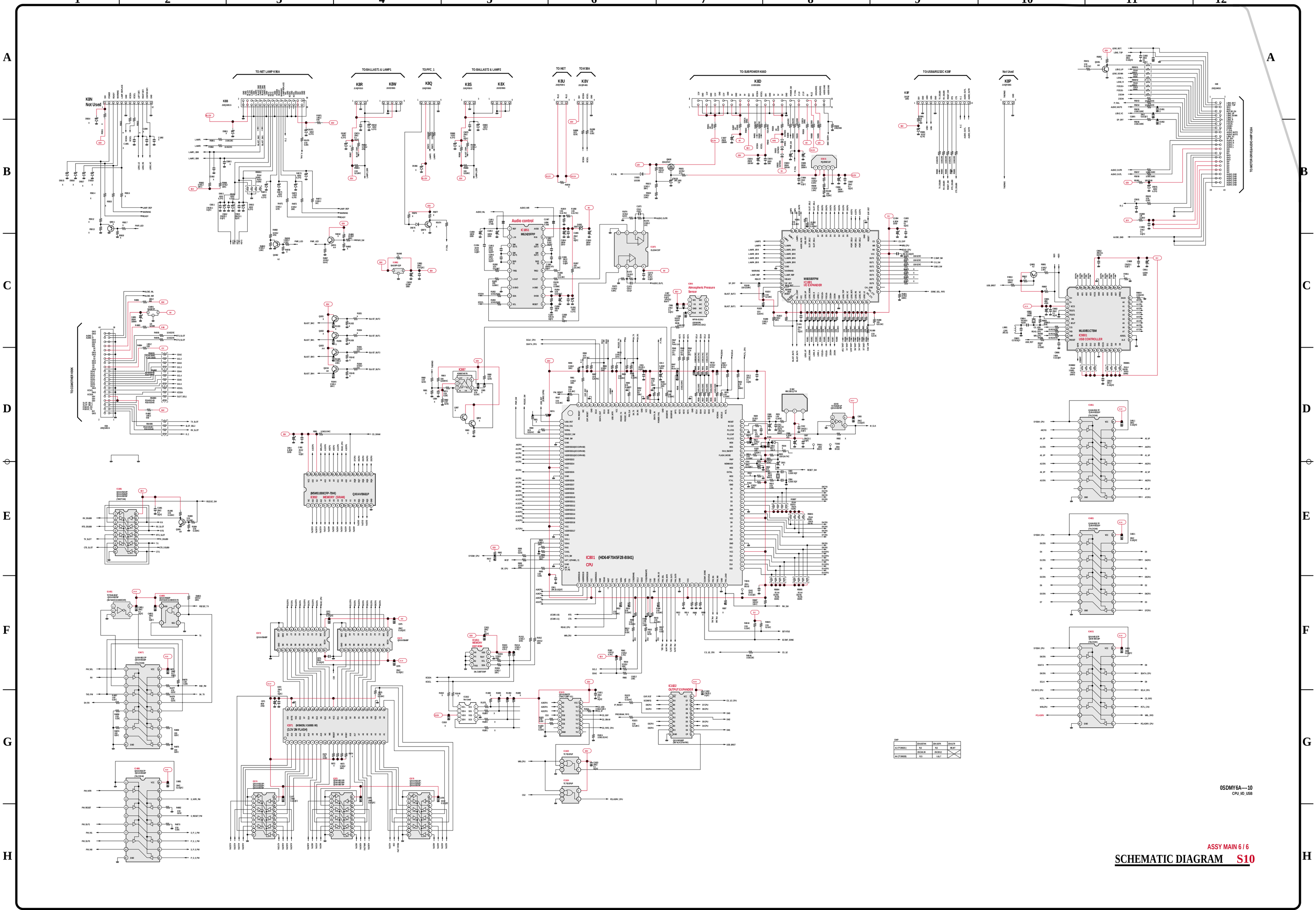

0SDMY6A----10
CPU_I/O_USB

ASSY MAIN 6 / 6

SCHEMATIC DIAGRAM S10

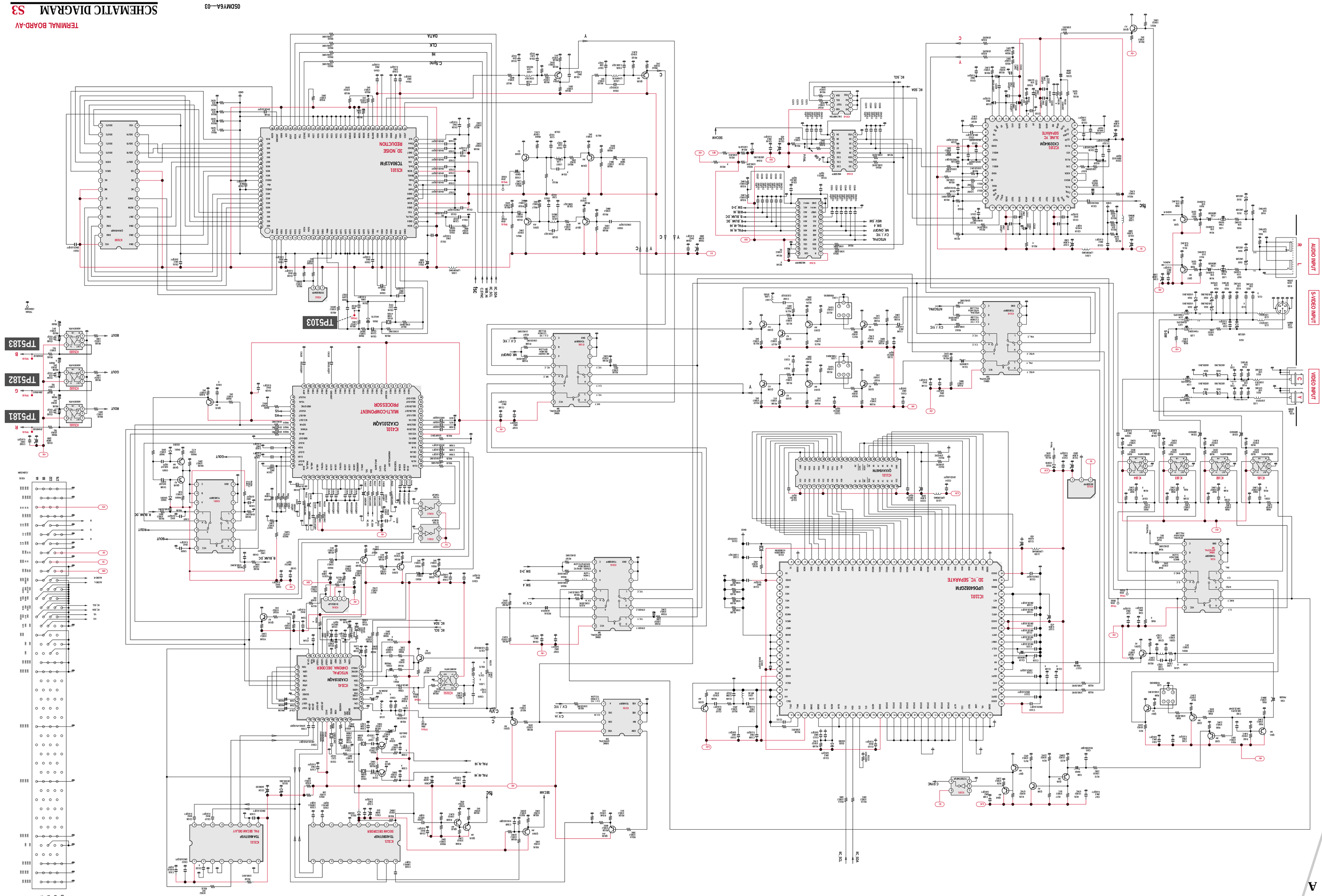
TERMINAL BOARD-AV
SCHEMATIC DIAGRAM S3
05DMY6A---03
IC5101
TC90A11FM
3D NOISE REDUCTION
IC4101
CX42101A0QM
MULTI-COMPONENT PROCESSOR
IC4141
CX42101A0QM
NTSC/PAL CHROMA DECODER
IC3131
TDA8835TN/P
SECAM DECODER
IC3131
TDA8845TN/P
PAL SECAM DELAY
IC1101
UPD64082GCM
3D Y/C SEPARATE
IC2101
CXD2606QM
3D Y/C SEPARATE
IC2101
SLIMC 1C
TP5103
TP5181
TP5182
TP5183
AUDIO INPUT
S-VIDEO INPUT
VIDEO INPUT

SCHEMATIC DIAGRAM S4

TERMINAL BOARD-COMPONENT and TERMINAL BOARD-DVI

05DMY6A----04

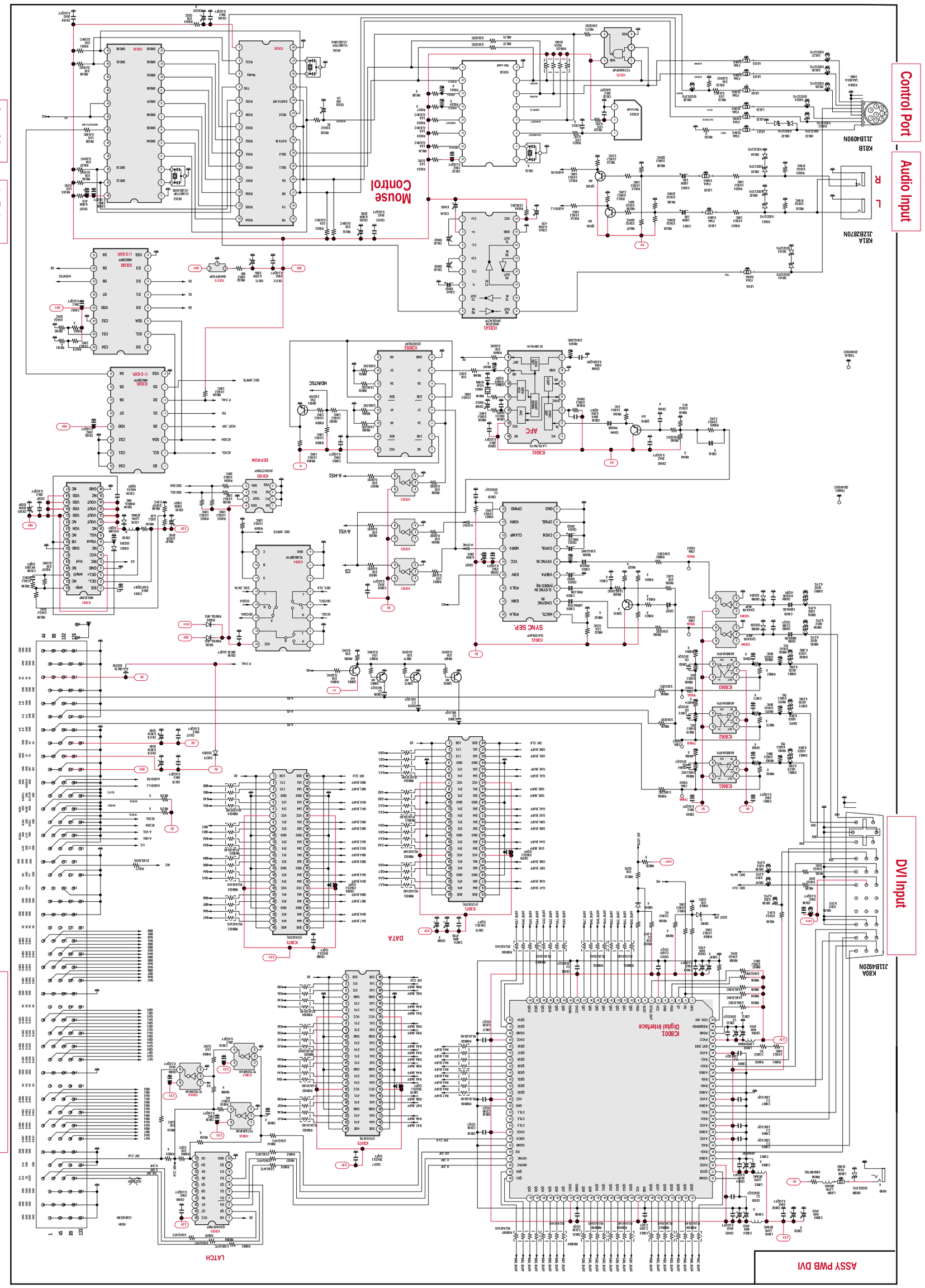

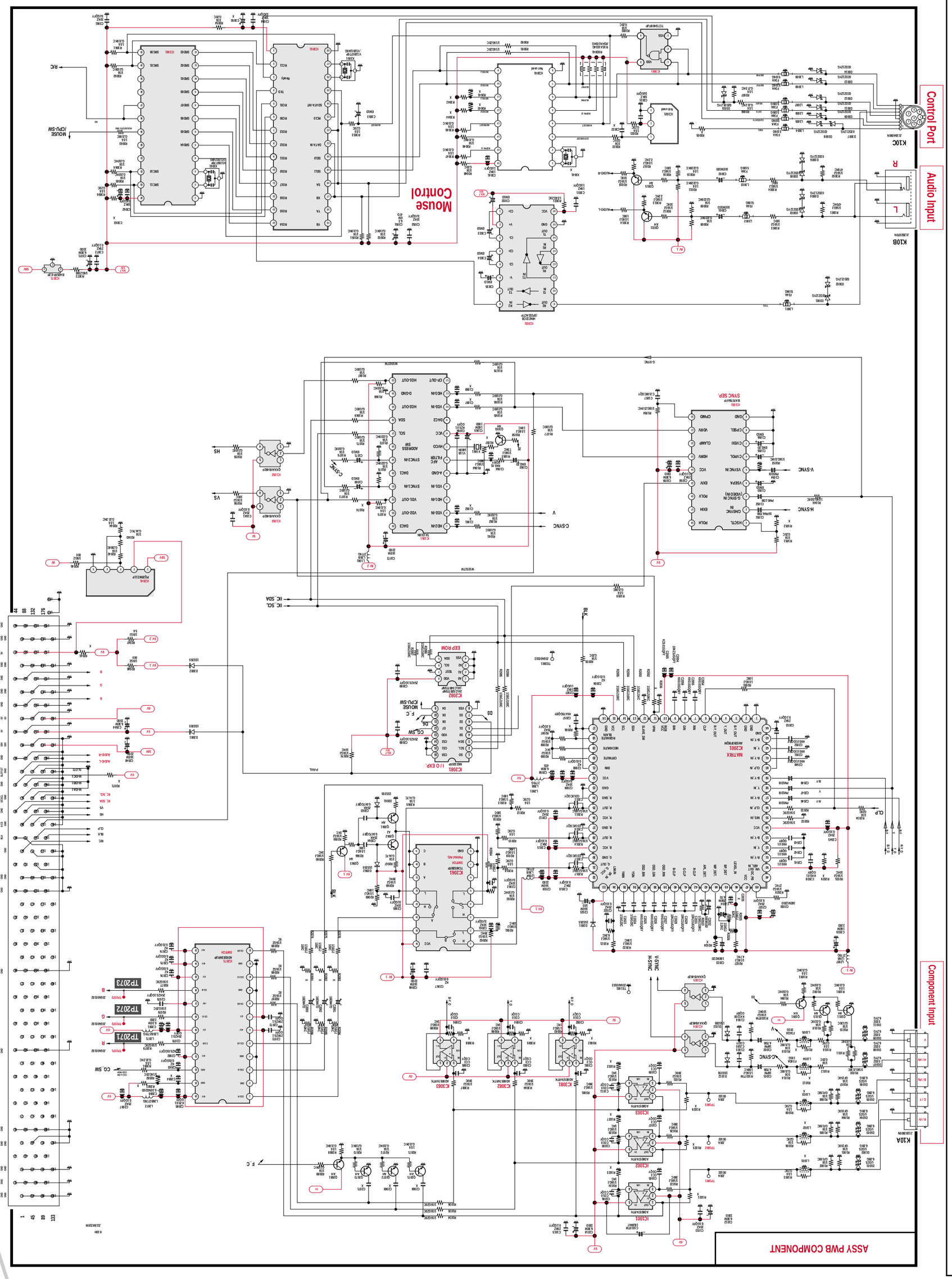

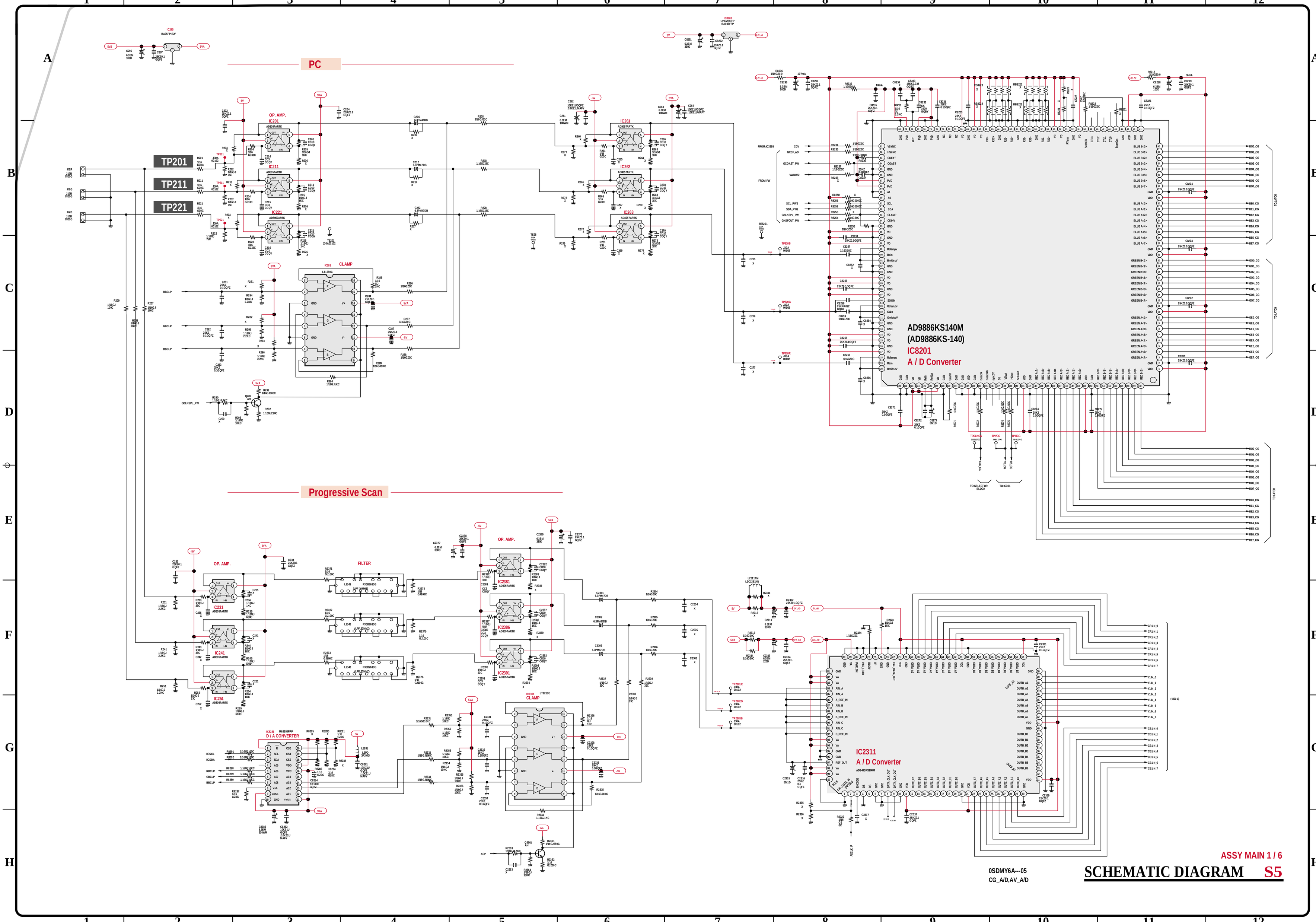
PC
TP201
TP211
TP221
OP. AMP.
IC201
IC211
IC221
CLAMP
IC281
Progressive Scan
FILTER
IC231
IC241
IC251
IC261
IC262
IC263
IC2381
IC2386
IC2391
D / A CONVERTER
IC8201
AD9886KS140M
(AD9886KS-140)
A / D Converter
IC2311
AD9883KS100M
TO:SELECTOR BLOCK
TO:IC301
0SDMY6A---05
CG_A/D,AV_A/D
ASSY MAIN 1 / 6
SCHEMATIC DIAGRAM S5

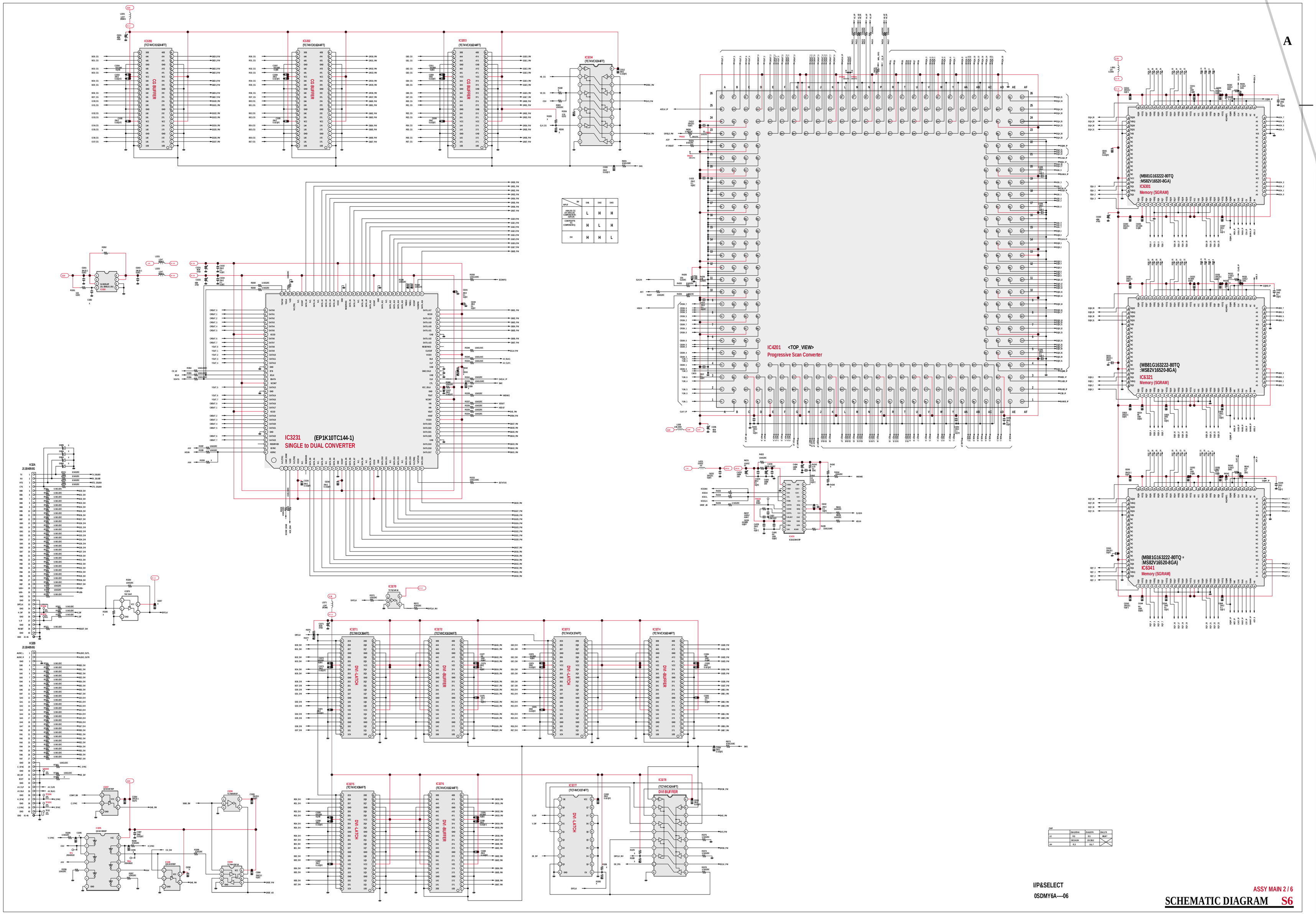
IC3231 (EP1K10TC144-1)
SINGLE to DUAL CONVERTER
IC4201 <TOP_VIEW>
Progressive Scan Converter
(MB81G163222-80TQ
:MS82V16520-8GA)
IC6301
Memory (SGRAM)
(MB81G163222-80TQ
:MS82V16520-8GA)
IC6321
Memory (SGRAM)
(MB81G163222-80TQ
:MS82V16520-8GA)
IC6341
Memory (SGRAM)
IC3271 (TC74VCX364FT)
DVI-LATCH
IC3272 (TC74VCX16244FT)
DVI-BUFFER
IC3273 (TC74VCX374FT)
DVI-LATCH
IC3274 (TC74VCX16244FT)
DVI-BUFFER
IC3275 (TC74VCX364FT)
DVI-LATCH
IC3276 (TC74VCX16244FT)
DVI-BUFFER
IC3277 (TC74VCX374FT)
DVI-LATCH
IC3278 (TC74VCX374FT)
DVI BUFFER
I/P&SELECT
0SDMY6A----06
ASSY MAIN 2 / 6
SCHEMATIC DIAGRAM S6

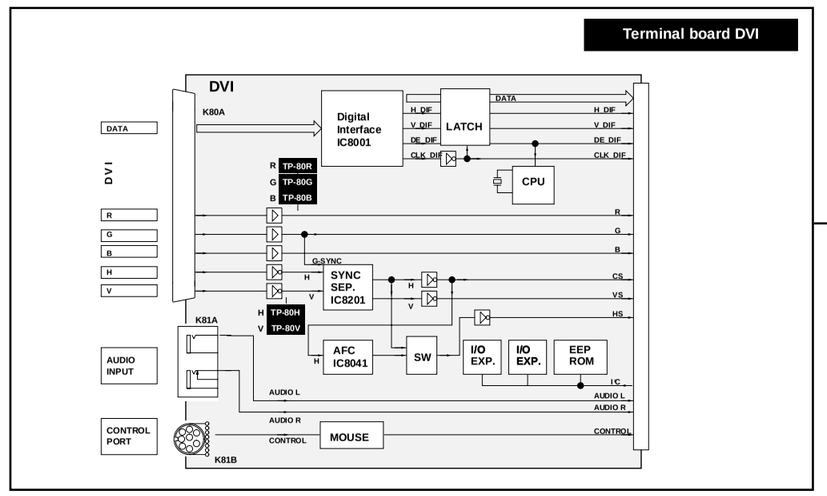

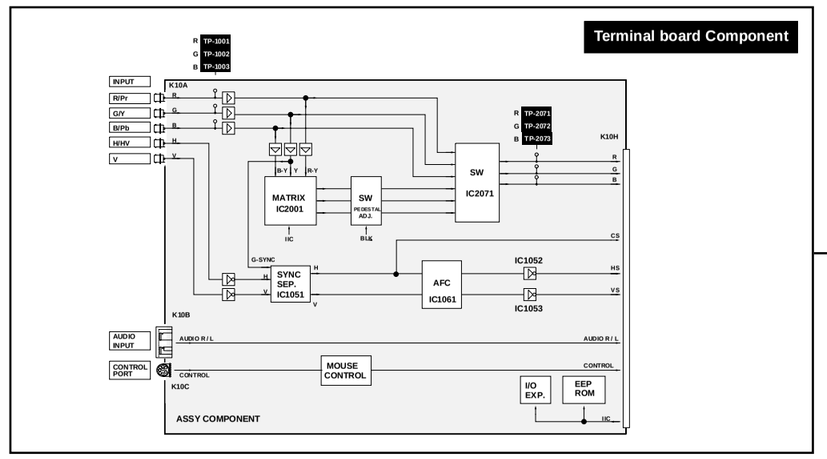

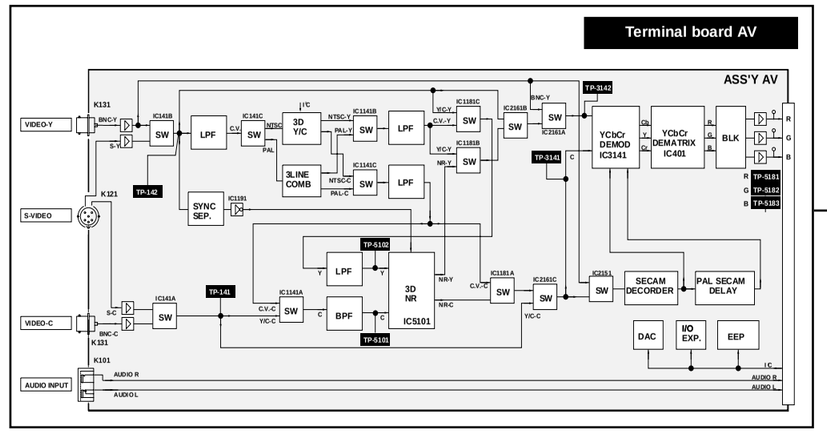

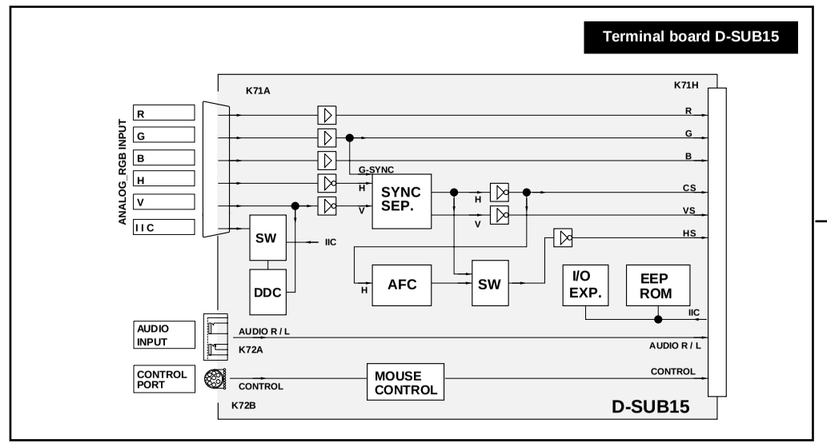

The Terminal board D-SUB15 does not exist in some partcular models.

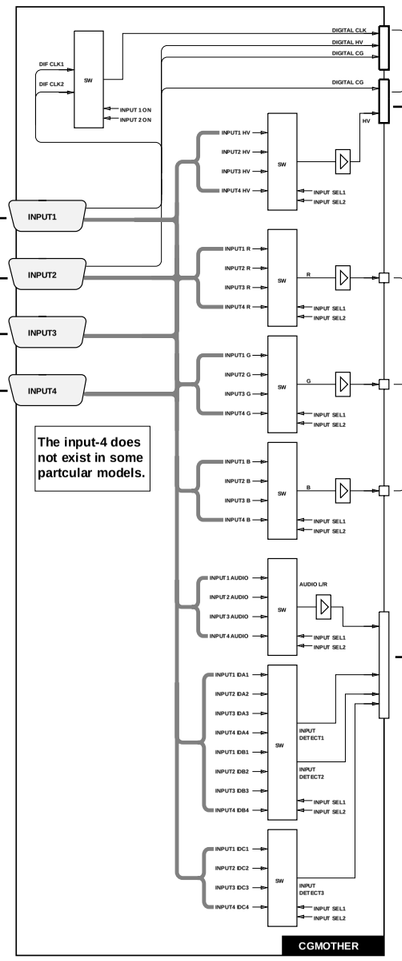

The input-4 does not exist in some partcular models.

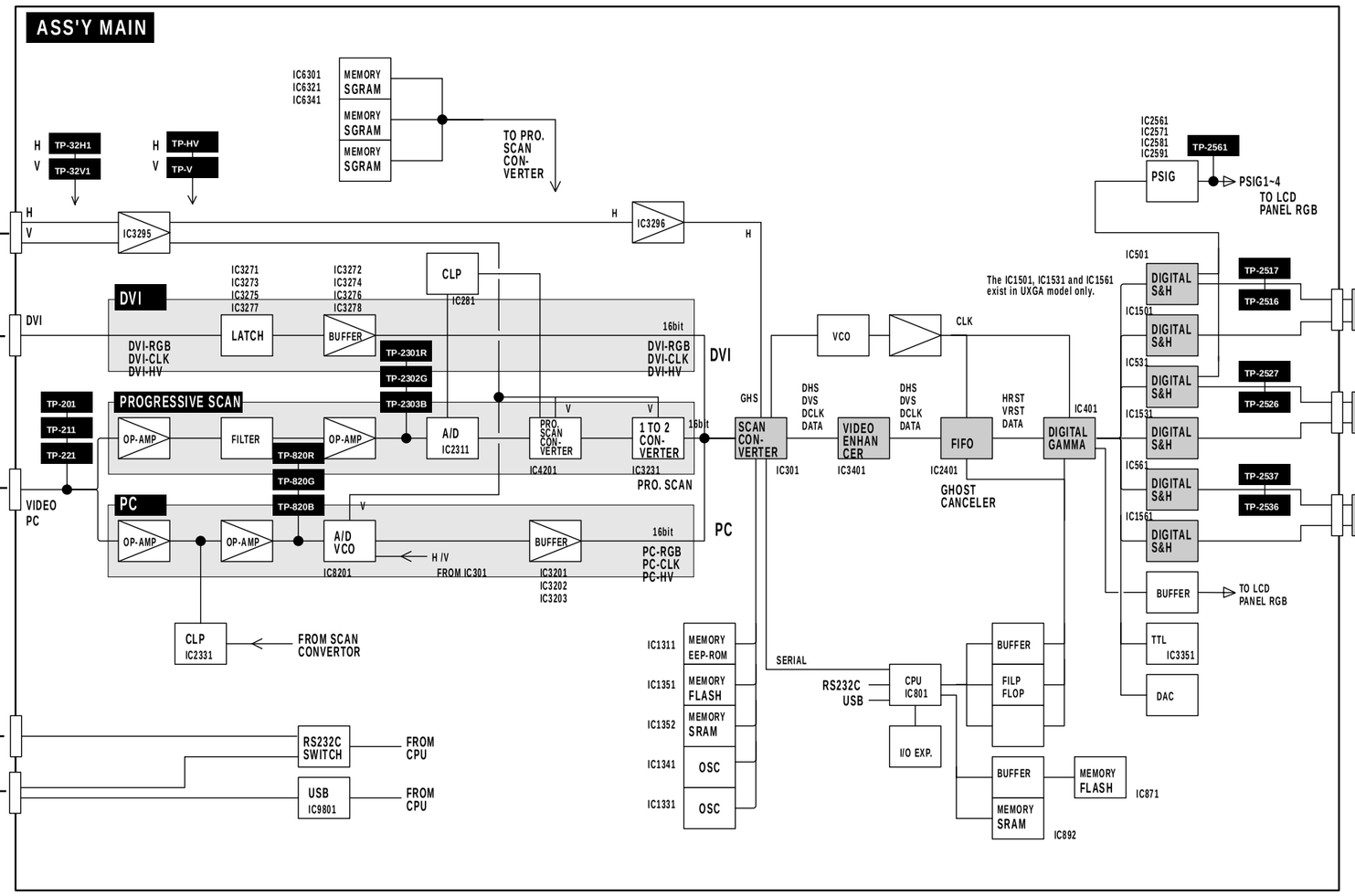

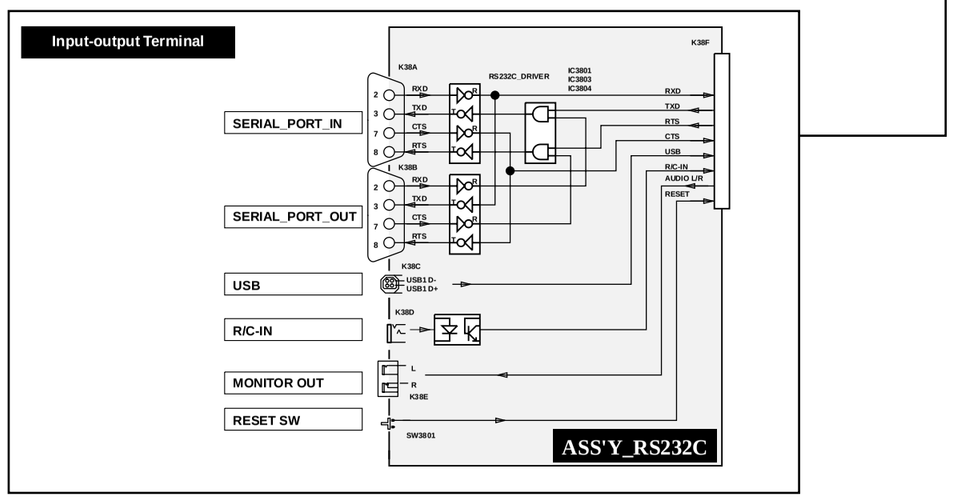

B1 Block diagram -- Signal lines

BLOCKDIAGRAM

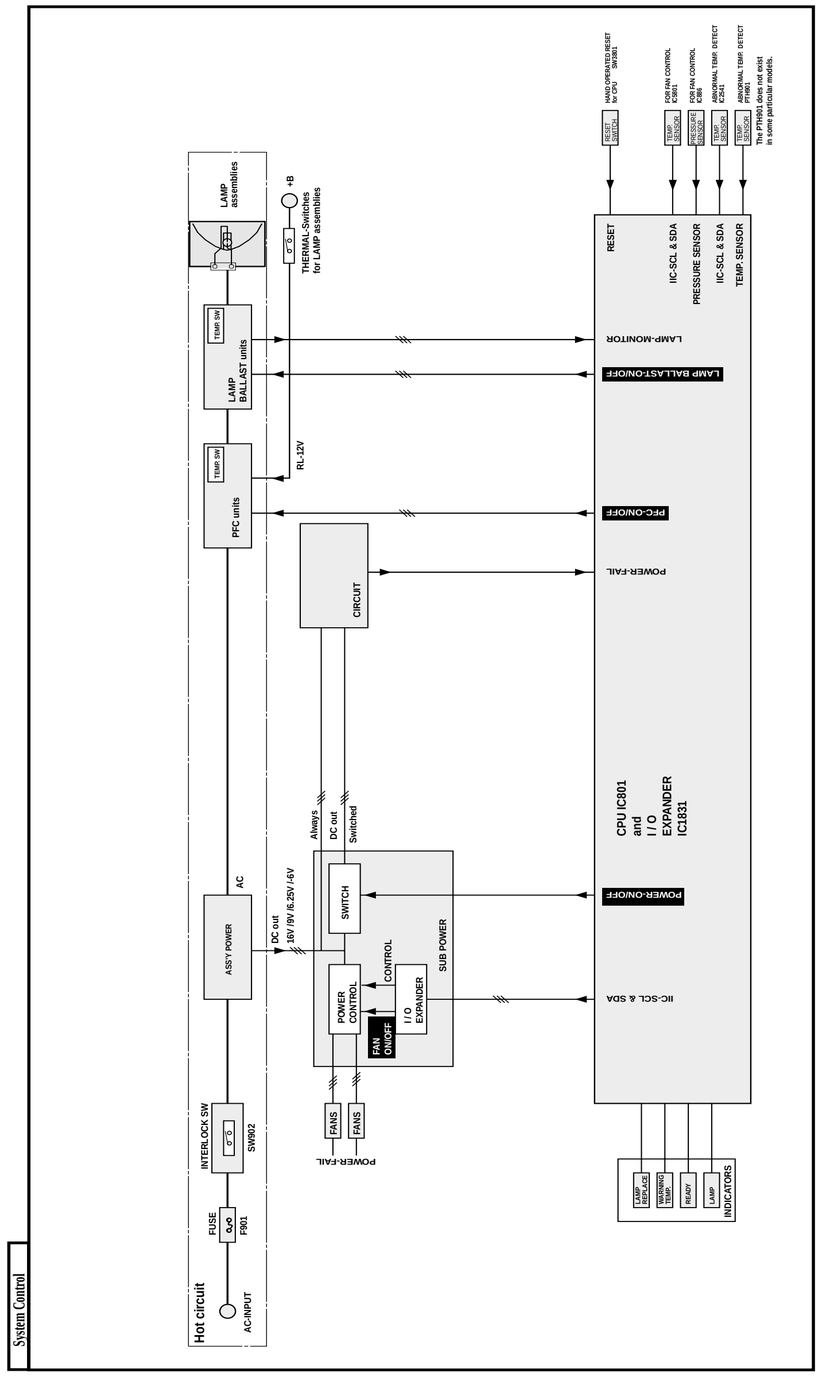

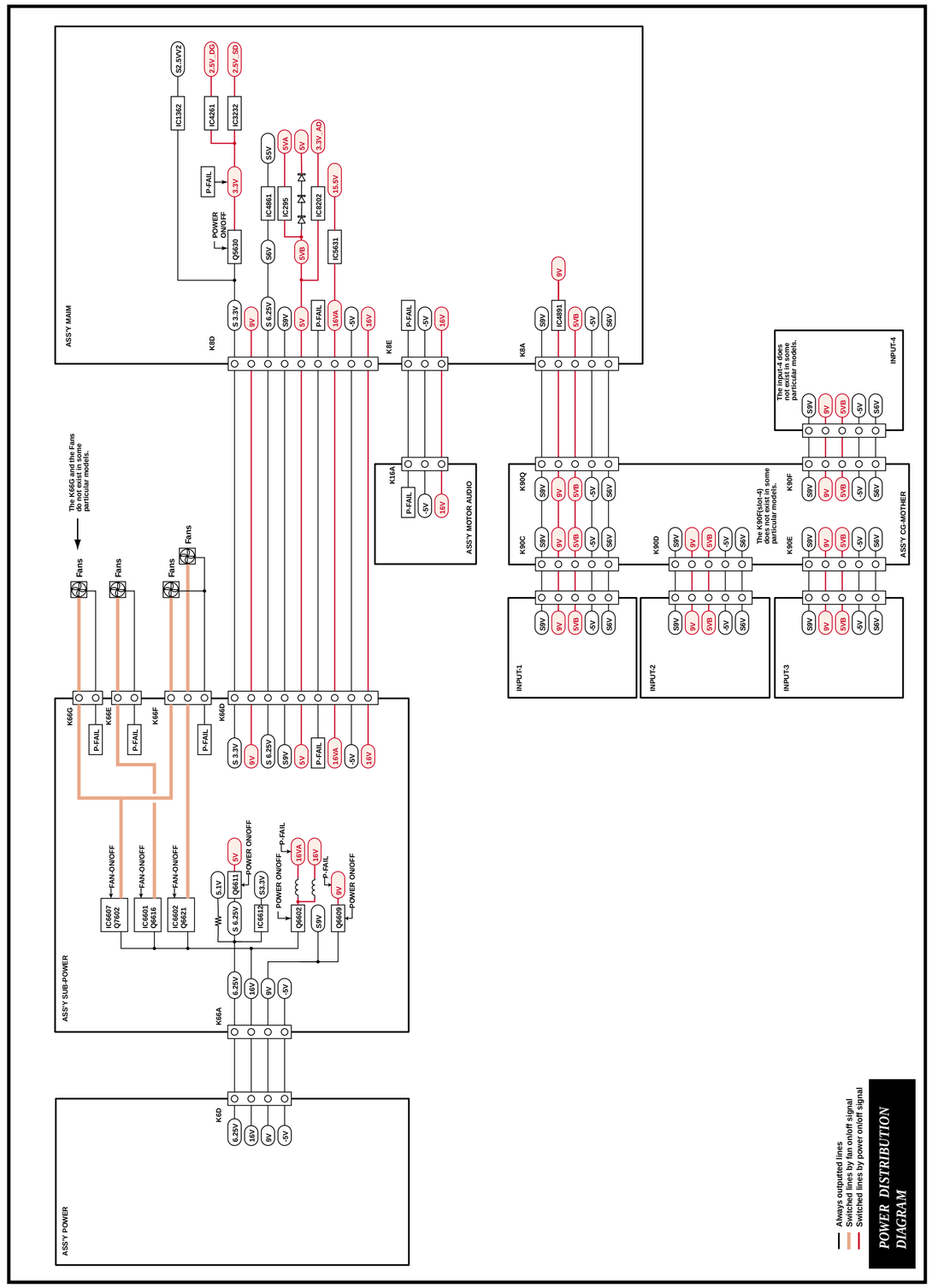

B2 Block diagram -- System control

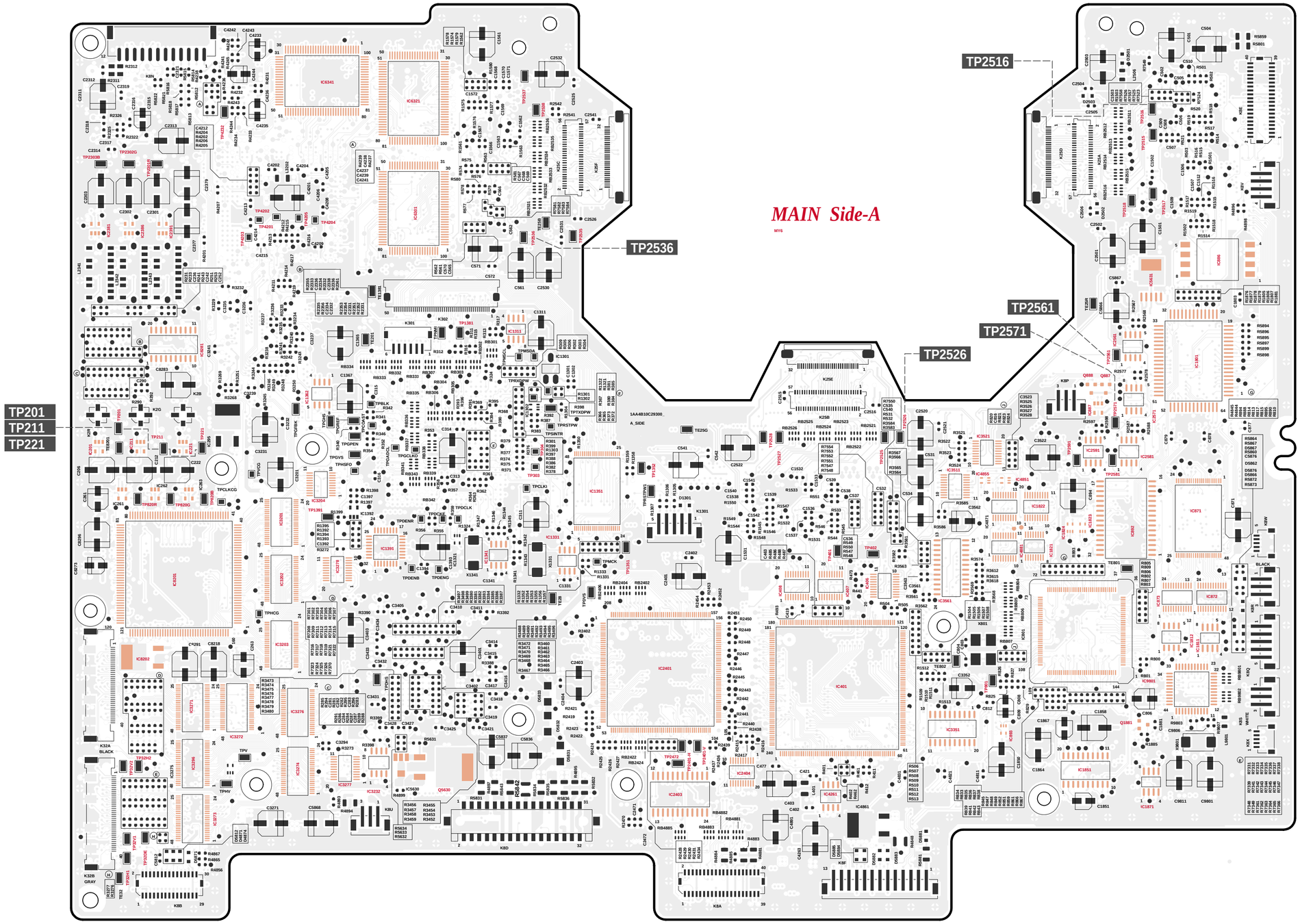

P1 PWB parts location diagram

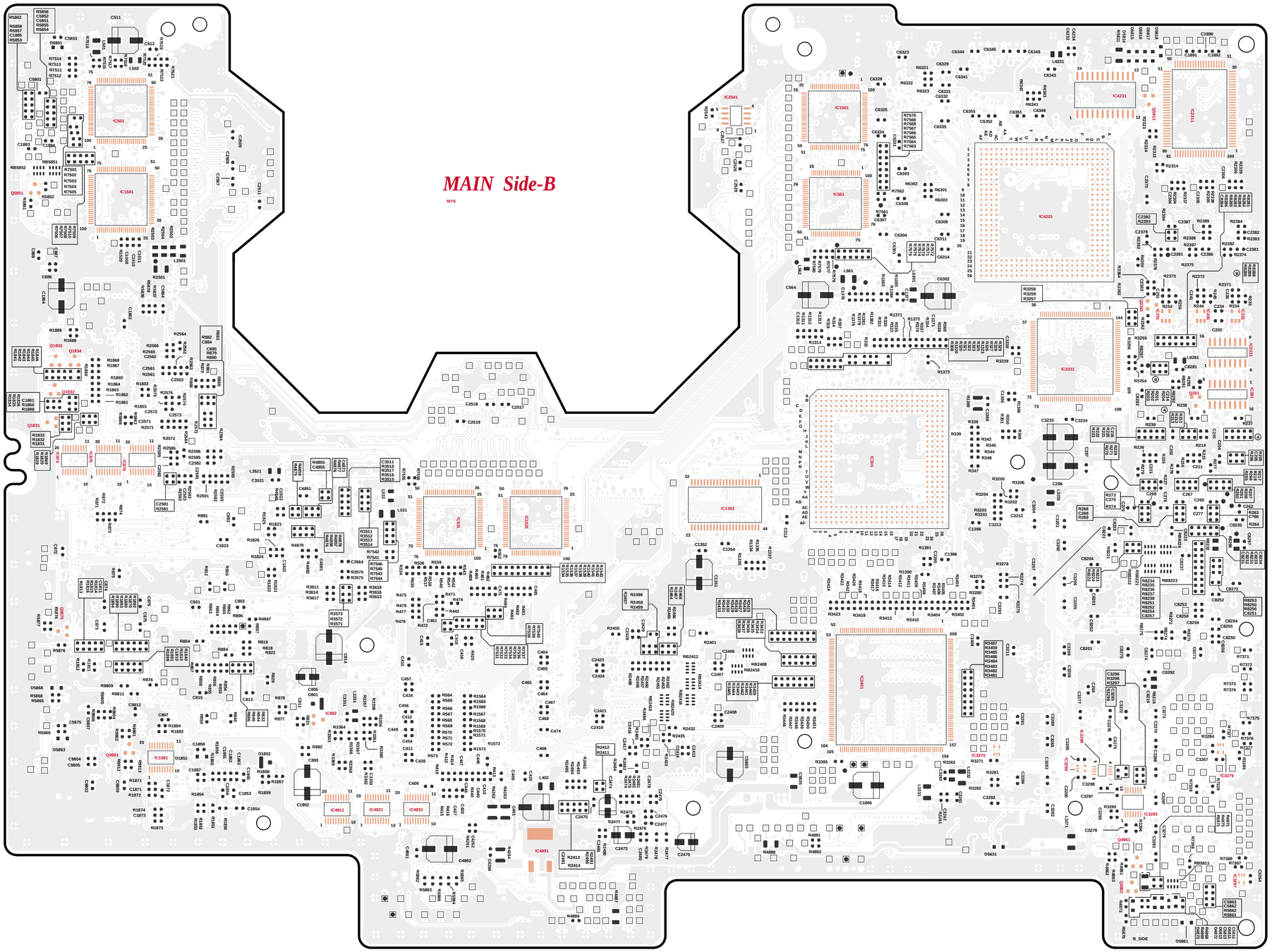

P2 PWB parts location diagram

P3 PWB parts location diagram

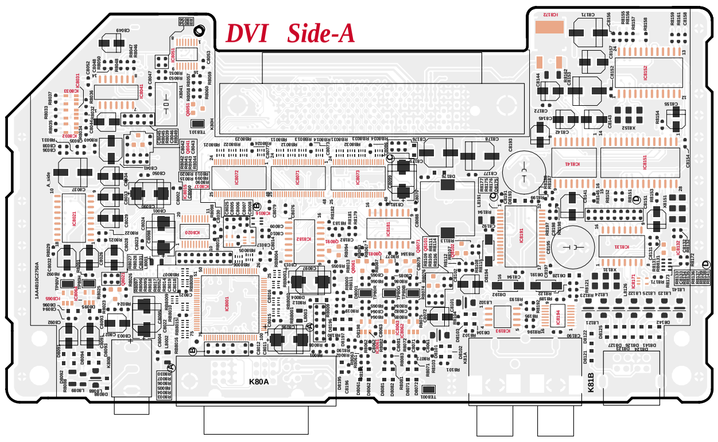

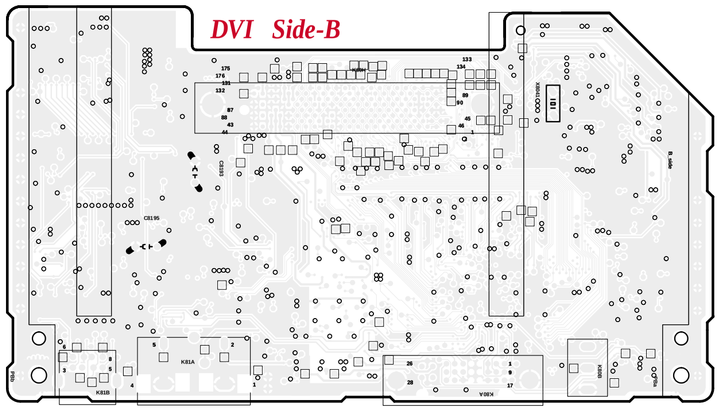

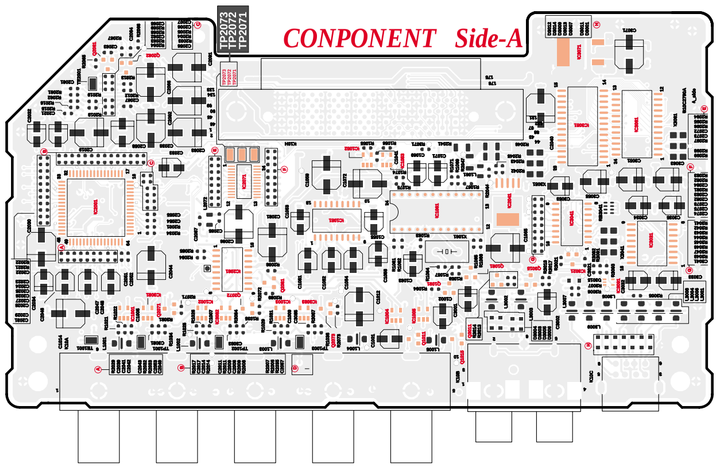

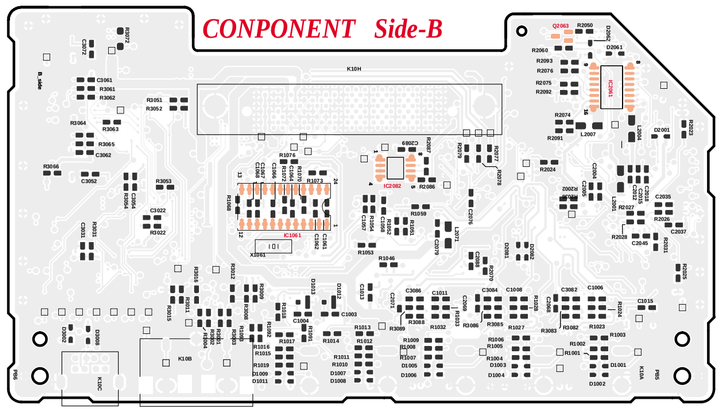

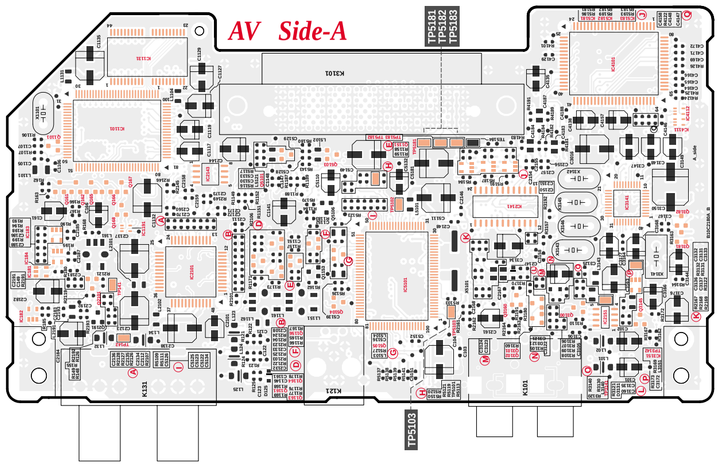

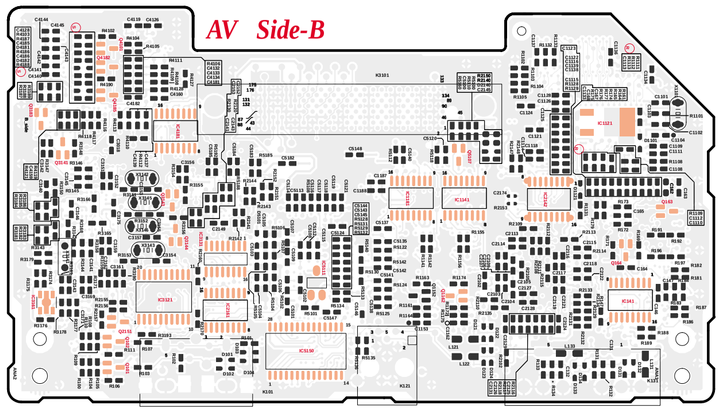

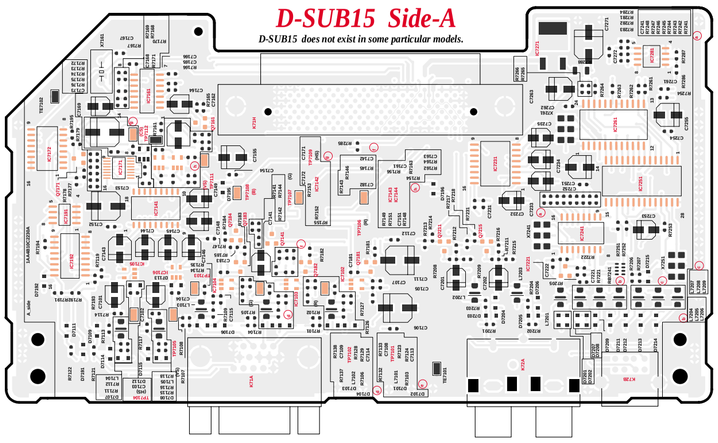

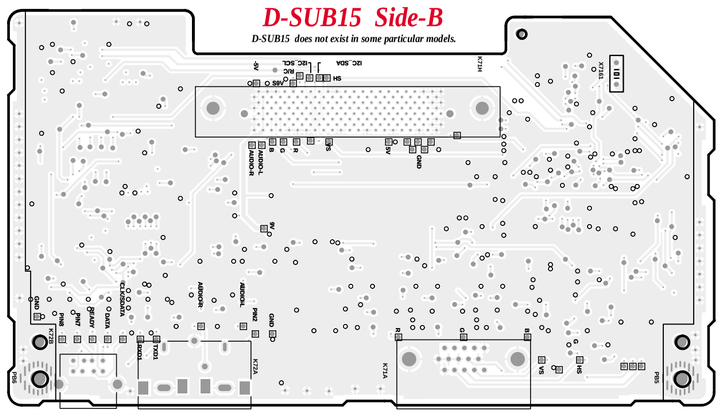

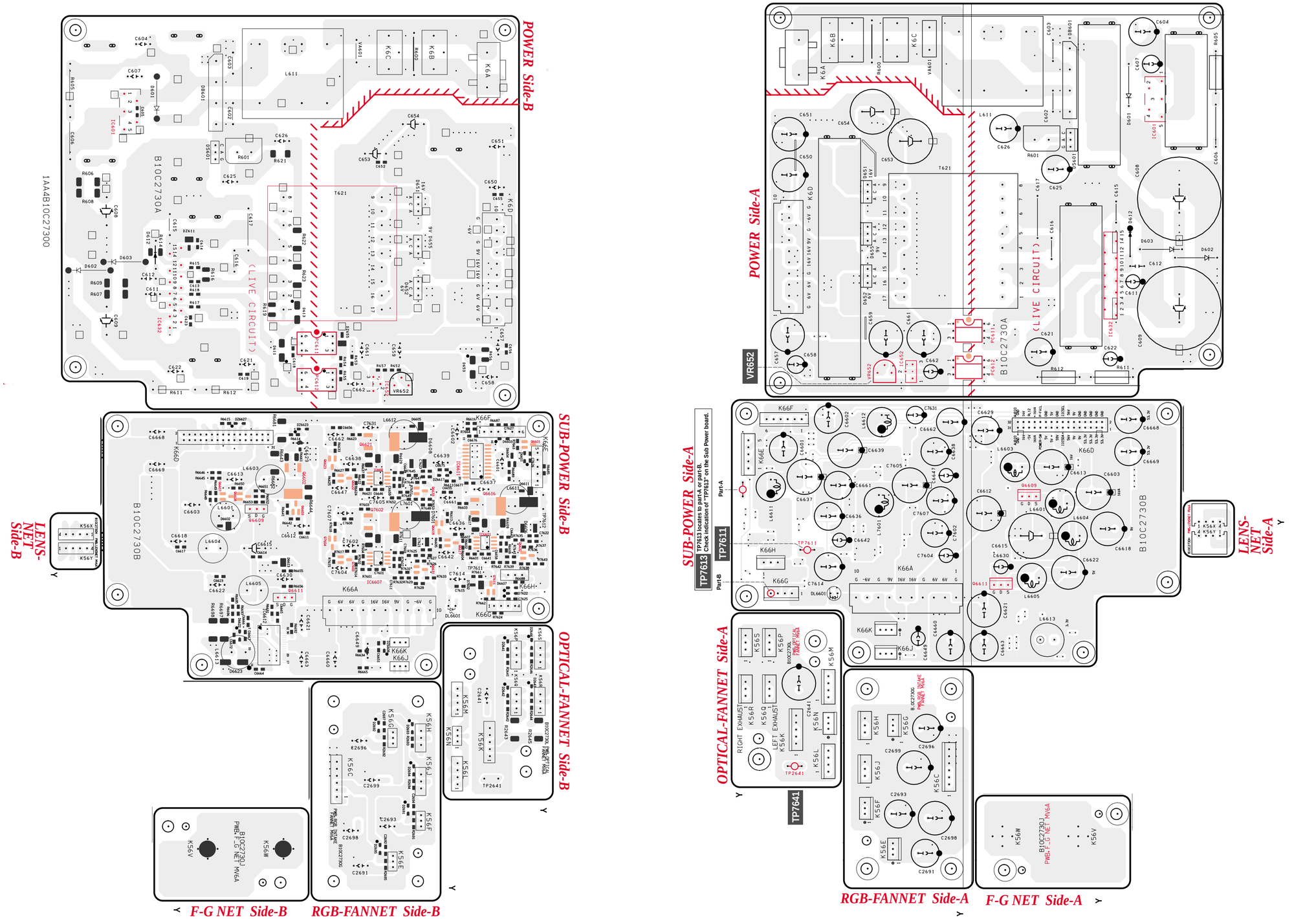

P4 PWB parts location diagram

P5 PWB parts location diagram

CG-MOTHER Side-A

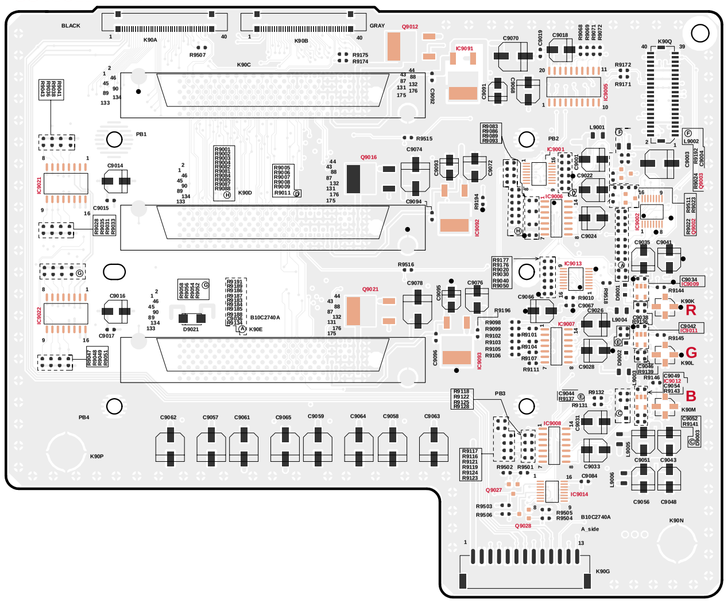

CG-MOTHER Side-B

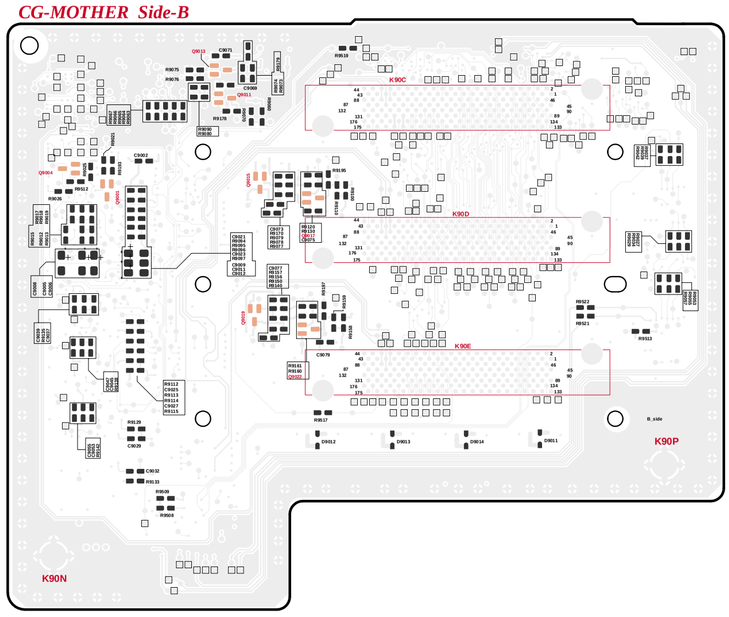

MOTOR & AUDIO Side-A

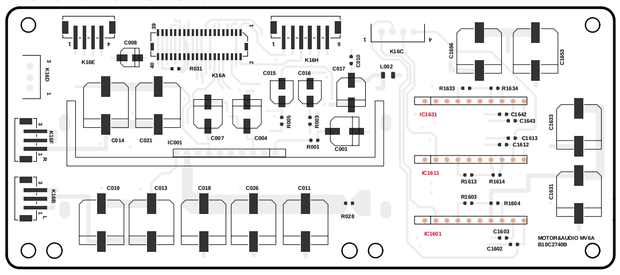

MOTOR & AUDIO Side-B

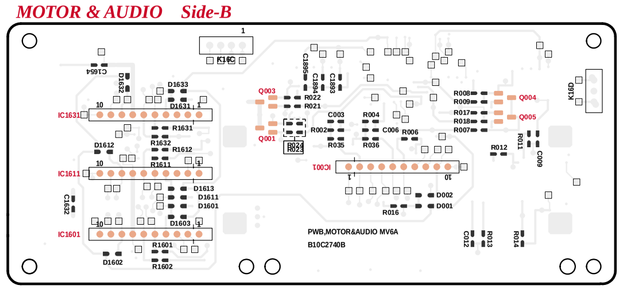

CONTROL Side-A

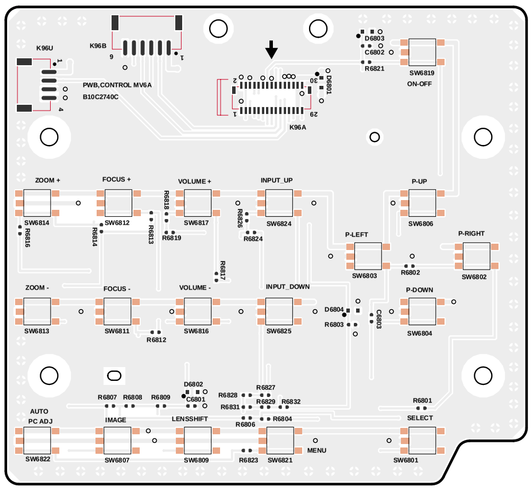

CONTROL Side-B

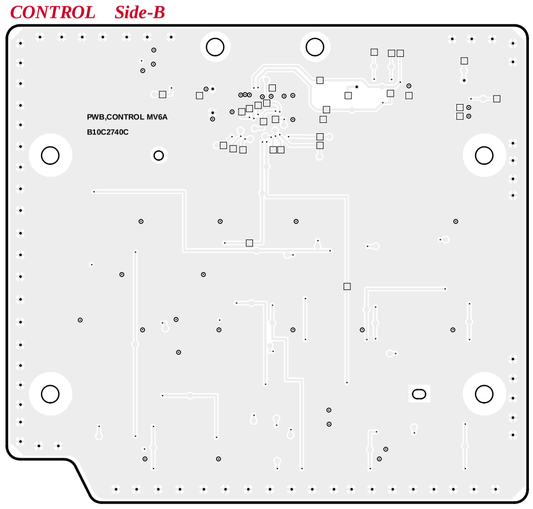

RC-1 Side-A

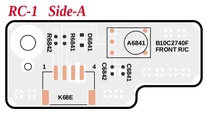

RC-1 Side-B

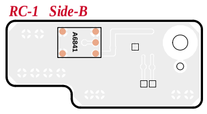

RC-2 Side-A

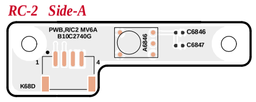

RC-1 Side-B

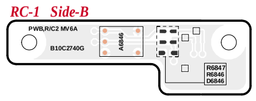

RS232C Side-A

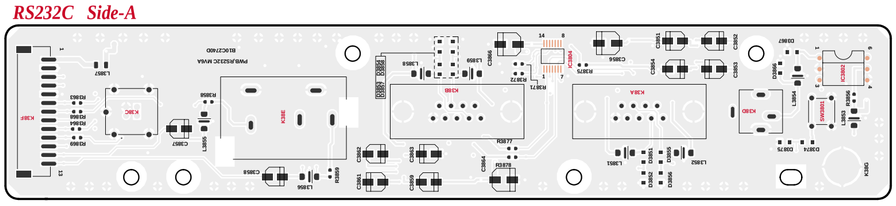

LED Side-A

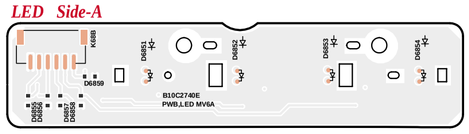

LED Side-B

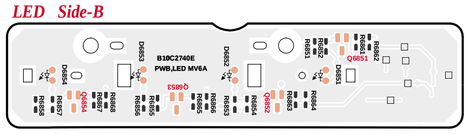

RS232C Side-B

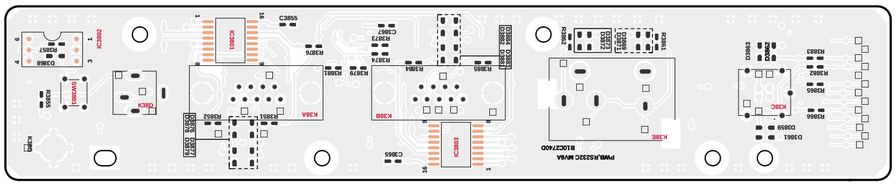

SENSOR Side-A

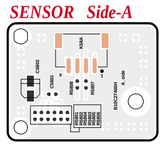

SENSOR Side-B