ORDER NO.MKE0501404C1

Service Manual

Digital Video Camcorder

Panasonic Mini DV NTSC USB SD LEICA DICOMAR MultiMediaCard™ PictBridge

PV-GS250PP

A-MECHANISM

Color

(S)..... Silver Type

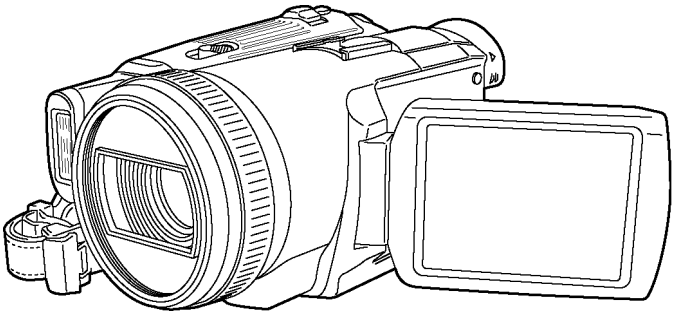

Panasonic

© 2005 Matsushita Kotobuki Electronics Industries LTD. All rights reserved. Unauthorized copying and distribution is a violation of law.

SPECIFICATIONS

Digital Video Camera

ITEM	SPECIFICATION
POWER	Source: DC 7.9 / 7.2 V Consumption: Recording 4.0 W (When using Viewfinder) 4.3 W (When using LCD Monitor)
RECORDING FORMAT	Mini DV (Consumer-use Digital Video SD Format)
TAPE USED	6.35 mm digital video tape
RECORDING / PLAYBACK TIME	SP mode: 80 min. with DVM80 LP mode: 120 min. with DVM80
CAMERA	Filter Diameter: 43.0 mm
	Zoom: 10:1 Power Zoom
	Monitor: 2.5-inch LCD
	Lens: Auto Iris, F1.6, Focal Length; 2.85 - 28.5 mm Macro (Full Range AF)
	Image Sensor: 1/6-inch 3CCD Image Sensor
	Viewfinder: Color Electronic Viewfinder
WEB CAMERA	Compression: Motion JPEG Image Size: 320 × 240 pixels (QVGA) Frame rate: Approx.6 fps
VIDEO	Recording System: Digital Component
	Television System: EIA Standard: 525 Lines, 60 Fields NTSC Color Signal
	Video Output Level: 1.0 Vp-p, 75 ohm S-Video Output Level: Y Output; 1.0 Vp-p, 75 ohm C Output; 0.286 Vp-p, 75 ohm Video Input Level: 1.0 Vp-p, 75 ohm S-Video Input Level: Y Input; 1.0 Vp-p, 75 ohm C Input; 0.286 Vp-p, 75 ohm
AUDIO	Recording System: PCM Digital Recording 16 bit (48 kHz/2 ch) 12 bit (32 kHz/4 ch)
	Audio Output Level (Line): 316 mV, 600 ohm Audio Input Level (Line): 316 mV, 10k ohm or more Mic Input: Mic sensitivity -50dB(0dB=1V/Pa,1kHz) (Stereo Mini Jack)
CARD MEMORY FUNCTIONS	Recording Media: SD Memory Card, MultiMediaCard Still picture recording file format: JPEG (Desing rule for Camera File system, based on Exif 2.2 standard), DPOF corresponding Still Image Size: Mega Pixel Recording; 2048 × 1512 (3.1 million pixels) 1600 × 1200 (1.9 million pixels) 1280 × 960 (1.2 million pixels) VGA Recording; 640 × 480

ITEM	SPECIFICATION
STANDARD ILLUMINATION	1,400 lx
MINIMUM REQUIRED ILLUMINATION	1 lx (Color Night View Mode)
USB	Card reader / writer function, USB 2.0 compliant (max. 12Mbps) No copyright protection support / PictBridge - compliant
DIGITAL INTERFACE	DV Input / Output Terminal (IEEE1394, 4-pin)
VIDEO FLASH	GN 5.5
MICROPHONE	Stereo (with a zoom function)
SPEAKER	1 round speaker ϕ20 mm
OPERATING TEMPERATURE	0 - 40 °C
OPERATING HUMIDITY	10 - 80 %
WEIGHT	Approx. 500 g (without Battery, DV cassette and lens cap) Approx. 600 g (with Battery, DV cassette and lens cap)
DIMENSIONS	Approx. 81 (W) × 73 (H) × 144 (D) mm
STANDARD ACCESSORIES	1 pc. AC Adaptor 1 pc. Battery Pack Unit 1 pc. DC Cable 1 pc. AC Cord 1 pc. AV Cable 1 pc. Remote Controller 1 pc. Bottom-type Battery 1 pc. CD-ROM 1 pc. USB Cable 1 pc. Shoulder Belt 1 pc. Universal Remote Controller 1 pc. Hood Cap Unit.
SOLDER	This model use lead free solder (PbF).

Weight and dimensions are approximate values.
Specifications may change without prior notice.

⚠ WARNING

This service information is designed for experienced repair technicians only and is not designed for use by the general public.
It does not contain warnings or cautions to advise non-technical individuals of potential dangers in attempting to service a product.
Products powered by electricity should be serviced or repaired only by experienced professional technicians. Any attempt to service or repair the product or products dealt with in this service information by anyone else could result in serious injury or death.

CONTENTS

Page

1 SERVICE INFORMATION ---- **4**
1.1. Service Information Regarding IC2001 of PV-GS250PP ---- 4
1.2. Service Information Regarding Simultaneous Exchange of MONITOR C.B.A. and LCD PANEL UNIT of PV-GS250PP ---- 5
2 INTRODUCTION ---- **7**
2.1. INTRODUCTION ---- 7
2.2. ABOUT LEAD FREE SOLDER (PbF) ---- 7
3 SAFETY PRECAUTIONS ---- **8**
3.1. GENERAL GUIDELINES ---- 8
3.2. LEAKAGE CURRENT COLD CHECK ---- 8
3.3. LEAKAGE CURRENT HOT CHECK (See Figure. 1) ---- 8
4 PREVENTION OF ELECTRO STATIC DISCHARGE (ESD) TO ELECTROSTATICALLY SENSITIVE (ES) DEVICES ---- **9**
5 HOW TO REPLACE THE LITHIUM BATTERY (PROCEDURE) ---- **10**
6 HOW TO RECYCLE THE LITHIUM BATTERY ---- **11**
7 ADJUSTMENT PROCEDURES ---- **12**
7.1. DISASSEMBLE FLOW CHART ---- 12
7.2. DISASSEMBLY PROCEDURES ---- 13
7.3. DISASSEMBLY PROCEDURES MECHA. UNIT ---- 22
7.4. DISASSEMBLY PROCEDURES OF CAMERA LENS UNIT ---- 26
8 SERVICE CAUTION ---- **27**
8.1. HOW TO DISCHARGE THE CAPACITOR ON FRONT C.B.A. ---- 27
8.2. EEPROM DATA FOR SPARE PARTS OF THE MAIN C.B.A. ---- 27

8.3. SERVICE EXTENSION CABLE FOR ALL C.B.A. INCLUDED IN MODULE UNIT 27
8.4. LOCATION FOR CONNECTORS OF THE MAIN C.B.A. & SUB C.B.A. 29
8.5. CSP IC LOCATION OF THE MAIN C.B.A. & SUB C.B.A. 31
8.6. TEMPERATURE PROFILE FOR HEAT RESISTANCE OF CSP IC 33
9 ELECTRICAL ADJUSTMENT PROCEDURES 34
9.1. COMPUTER ASSISTED ADJUSTMENT SYSTEM <TATSUJIN> ADJUSTMENT. 34
9.2. SET-UP MANUAL FOR DV-Camcorder. 34
9.3. SET UP PC-EVR ADJUSTMENT PROGRAM 37
9.4. INITIAL GUIDELINE 38
10 MECHANICAL ADJUSTMENT PROCEDURES 39
10.1. ADJUSTMENT ITEM 39
10.2. ADJUSTMENT PROCEDURES 39
11 SERVICE MODE 41
11.1. ERROR DISPLAY 41
11.2. SERVICE MENU 41
12 ABBREVIATIONS 43
13 BLOCK DIAGRAM 51
13.1. OVERALL BLOCK DIAGRAM 51
13.2. CAMERA 1 BLOCK DIAGRAM (SENSOR BLOCK DIAGRAM) 52
13.3. CAMERA 2 BLOCK DIAGRAM (PROCESS BLOCK DIAGRAM) 53
13.4. LENS DRIVE BLOCK DIAGRAM 54
13.5. CONTROL 1 BLOCK DIAGRAM 55
13.6. CONTROL 2 BLOCK DIAGRAM 56
13.7. VIDEO BLOCK DIAGRAM 57
13.8. MONITOR BLOCK DIAGRAM 58
14 SCHEMATIC DIAGRAMS 59
14.1. INTERCONNECTION SCHEMATIC DIAGRAM 59
14.2. SIDE (L) FLEX. CARD / CASSETTE COVER SCHEMATIC DIAGRAM 61
14.3. LCD HINGE (MONITOR FLEX.) SCHEMATIC DIAGRAM 61
14.4. MF SENSOR SCHEMATIC DIAGRAM 61
14.5. REAR OPERATION UNIT SCHEMATIC DIAGRAM 62
14.6. EVF SCHEMATIC DAIGRAM 62
14.7. CCD FLEX. CARD SCHEMATIC DIAGRAM 63
14.8. FRONT SCHEMATIC DIAGRAM 64
14.9. JACK SCHEMATIC DIAGRAM 65
14.10. SIDE (R) / LCD DET. SCHEMATIC DIAGRAM 66
14.11. MONITOR SCHEMATIC DIAGRAM 67
14.12. SUB (SUB CONNECTION) SCHEMATIC DIAGRAM 68
14.13. SUB (LCD) SCHEMATIC DIAGRAM 70
14.14. SUB (SUB POWER) SCHEMATIC DIAGRAM 71
14.15. SUB (LENS DRIVE) SCHEMATIC DIAGRAM 72
14.16. SUB (CAMERA) SCHEMATIC DIAGRAM 74
14.17. MAIN (MAIN CONNECTION) SCHEMATIC DIAGRAM 80
14.18. MAIN (AVIO) SCHEMATIC DIAGRAM 83
14.19. MAIN (EX INPUT) SCHEMATIC DIAGRAM 84
14.20. MAIN (VIDEO) SCHEMATIC DIAGRAM 86
14.21. MAIN (POWER) SCHEMATIC DIAGRAM 90
14.22. MAIN (CONTROL) SCHEMATIC DIAGRAM 92
15 CIRCUIT BOARD ASSEMBLIES 97
15.1. EVF C.B.A. 97
15.2. LCD DET C.B.A. 97
15.3. SIDE (R) C.B.A. 97
15.4. CCD FLEX. CARD C.B.A. 98
15.5. FRONT C.B.A. 99
15.6. JACK C.B.A. 100
15.7. MONITOR C.B.A. 101
15.8. SUB C.B.A. (COMPONENT SIDE) 102
15.9. SUB C.B.A. (FOIL SIDE) 103
15.10. MAIN C.B.A. (COMPONENT SIDE) 105
15.11. MAIN C.B.A. (FOIL SIDE) 106
16 CHECKING POINT OF THE CSP IC 109
16.1. CHECKING POINT TABLE 109
16.2. WAVEFORM TABLE (PLAY MODE) 124
17 EXPLODED VIEWS 130
17.1. FRAME & CASING SECTION (1) 130
17.2. FRAME & CASING SECTION (2) 131
17.3. LCD SECTION 132
17.4. CAMERA LENS SECTION 133
17.5. VCR MECHANISM SECTION 134
17.6. PACKING PARTS & ACCESSORIES SECTION 135
18 REPLACEMENT PARTS LIST 136
18.1. FRAME & CASING SECTION (1) PARTS LIST 136
18.2. FRAME & CASING SECTION (2) PARTS LIST 136
18.3. LCD SECTION PARTS LIST 136
18.4. CAMERA LENS SECTION PARTS LIST 137
18.5. VCR MECHANISM SECTION PARTS LIST 137
18.6. PACKING PARTS & ACCESSORIES SECTION PARTS LIST 137
18.7. ELECTRICAL REPLACEMENT PARTS LIST 138

1 SERVICE INFORMATION

1.1. Service Information Regarding IC2001 of PV-GS250PP

1.1.1. Overview

- DVC model PV-GS250PP will be manufactured 2 distinctly different IC2001.
- These 2 version of IC2001 will be referred to as IC type “FLASH” and “MASK”.
- Supply of the replacement part asks to cause with only “MASK TYPE”.

1.1.2. How to Distinguish the Types of IC2001

FLASH TYPE	MASK TYPE
◆ Part No. :TMP1962F1DXBG	◆ Part No. :TMP1962C1DXBG-0104

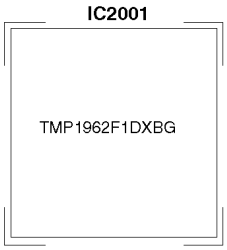

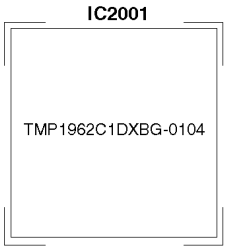

1.1.3. Attention for exchanges the IC2001

- There are not the exchangeability between the “FLASH TYPE” and “MASK TYPE” of IC2001.
- Do the addition (R2031and R2150) and also deletion (R2008 and R2022) of the following part simultaneously, when exchange to the “MASK TYPE” from the “FLASH TYPE” of IC2001.
- It exchange only IC, in the case that IC2001 is “MASK TYPE”. (The exchange of the chip resistor is not necessary.)

Ref. No.	Change of Part No.		Part Name & Description	Pcs	Remarks
	Flash Type	Mask type			
IC2001	-------	VUAVM150KMKT (IC2001 of Mask Type and M.RESISTOR 1/6W 0 ohm 2pcs.)	32 BIT 1-CHIP MICROCOMPUTER	1	Change
R2008	ERG2GE0R00Y	-------		0	Deletion
R2022	ERGJ2GEJ474X	-------		0	Deletion
R2031	-------	ERG2GE0R00Y	M. RESISTOR CH 1/6W 0	1	Addition
R2150	-------	ERG2GE0R00Y	M. RESISTOR CH 1/6W 0	1	Addition

1.2. Service Information Regarding Simultaneous Exchange of MONITOR C.B.A. and LCD PANEL UNIT of PV-GS250PP

1.2.1. Overview

- DVC model PV-GS250PP will be manufactured 4 distinctly different MONITOR C.B.A. and 2 distinctly different LCD PANEL UNIT.
- These 4 version of MONITOR C.B.A. will be referred to as C.B.A. type “A”, “B”, “C” and “D”.
- These 2 version of LCD PANEL UNIT will be referred to as UNIT type “A” and “B”.
- There are not the exchangeability between the “A”, “B”, “C” and “D” of MONITOR C.B.A..
- There are not the exchangeability between the “A” and “B” of LCD PANEL UNIT.
- MONITOR C.B.A. and LCD PANEL UNIT supply it the kit.

  (Do not supply it in one of each individually MONITOR C.B.A. and LCD PANEL UNIT.)

1.2.2. How to Distinguish the Types of MONITOR C.B.A. and LCD PANEL UNIT

MONITOR C.B.A.			
TYPE A	TYPE B	TYPE C	TYPE D
(VEP08340A)	(VEP08340B)	(VEP08340C)	(VEP08340D)
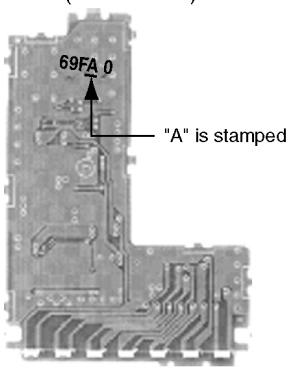	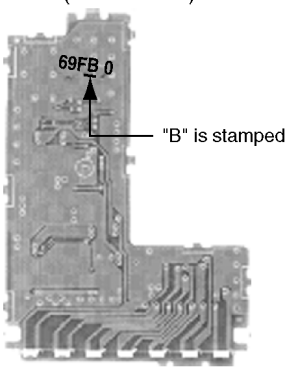	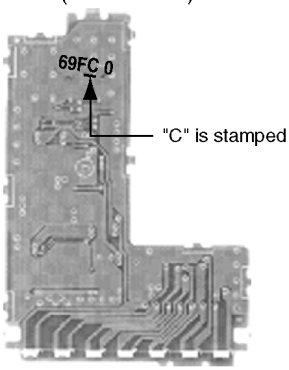	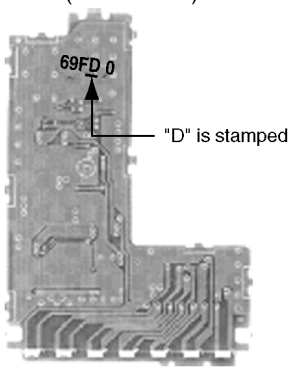

LCD PANEL UNIT	
TYPE A	TYPE B
(L5BDDYH00016)	(L5BDDYH00019)
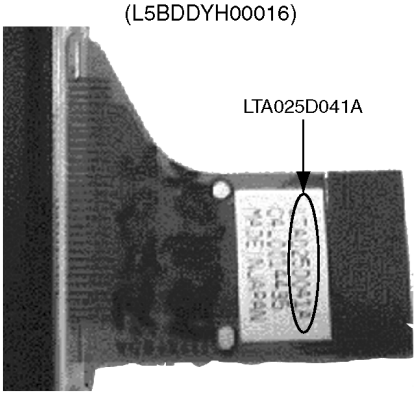	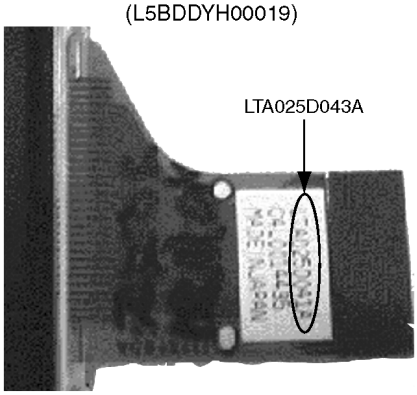

1.2.3. Difference Comparison Chart

ITEM	TYPE A	TYPE B	TYPE C	TYPE D
MONITOR C.B.A.	VEP08340A	VEP08340B	VEP08340C	VEP08340D
LCD PANEL UNIT	L5BDDYH00016	L5BDDYH00016	L5BDDYH00019	L5BDDYH00019
R901	ERJ3GEY0R00A	ERJ3GEY0R00A	ERJ3RBD182	ERJ3RBD182
R905	-------	ERJ3RBD823	-------	ERJ3RBD823
R910	ERJ3RBD682	ERJ3RBD682	ERJ3RBD822	ERJ3RBD822

1.2.4. Attention for exchange the MONITOR C.B.A..

・In the case that the LCD PANEL UNIT is TYPE “A”.

Replace the chip resistor of R901 and R910 to the chip resistor that is doing the same pack to the kit.

R901 ERJ3RBD182 → ERJ3GEY0R00

R910 ERJ3RBD822 → ERJ3RBD682

・In the case that the LCD PANEL UNIT is TYPE “B”.

Exchange only the MONITOR C.B.A..

1.2.5. Attention for exchange the LCD PANEL UNIT.

・In the case that the MONITOR C.B.A. is TYPE “A” and “B”.

Replace the chip resistor of R901 and R910 to the chip resistor that is doing the same pack to the kit.

R901 ERJ3RBD182 → ERJ3GEY0R00

R910 ERJ3RBD822 → ERJ3RBD682

・In the case that the MONITOR C.B.A. is TYPE “C” and “D”.

Exchange only the LCD PANEL UNIT.

CAUTION:

It does the confirmation of the MONITOR C.B.A. and LCD PANEL UNIT without fail on the occasion of the repair and please do the part exchange.

2 INTRODUCTION

2.1. INTRODUCTION

This service manual contains technical information which will allow service personnel´s to understand and service this model.Please place orders using the parts list and not the drawing reference numbers.

If the circuit is changed or modified, this information will be followed by supplement service manual to be filed with original service manual.

Note 1:

These movie camera uses AC Adaptor is PV-DAC14D

2.2. ABOUT LEAD FREE SOLDER (PbF)

Distinction of PbF PCB:

PCBs (manufactured) using lead free solder will have a PbF stamp or printing on the PCB.
(Please refer to figures.)

Printed case

Stamped case

CAUTION:

- Pb free solder has a higher melting point than standard solder;
  Typically the melting point is 50 °F - 70 °F (30 °C - 40 °C) higher.
  Please use a soldering iron with temperature control and adjust it to 700 °F±20 °F (370 °C± 10 °C).
  In case of using high temperature soldering iron, please be carefull not to heat too long.
- Pb free solder will tend to splash when heated too high (about 1100 °F/600 °C).
- All products with the printed circuit board with PbF stamp or printing must be serviced with lead free solder.
  When soldering or unsoldering, completely remove all of the solder from the pins or solder area,
  and be sure to heat the soldering points with the lead free solder until it melts sufficiently.

Recommendations

Recommended lead free solder composition is Sn96.5 Ag3.0 Cu0.5.

3 SAFETY PRECAUTIONS

3.1. GENERAL GUIDELINES

1. IMPORTANT SAFETY NOTICE
   There are special components used in this equipment which are important for safety. These parts are marked by ⚠ in the Schematic Diagrams, Circuit Board Layout, Exploded Views and Replacement Parts List. It is essential that these critical parts should be replaced with manufacturer's specified parts to prevent X-RADIATION, shock fire, or other hazards. Do not modify the original design without permission of manufacturer.
2. An Isolation Transformer should always be used during the servicing of AC Adaptor whose chassis is not isolated from the AC power line. Use a transformer of adequate power rating as this protects the technician from accidents resulting in personal injury from electrical shocks. It will also protect AC Adaptor from being damaged by accidental shorting that may occur during servicing.
3. When servicing, observe the original lead dress. It a short circuit is found, replace all parts which have been overheated or damaged by the short circuit.
4. After servicing, see to it that all the protective devices such as insulation barriers, insulation papers shields are properly installed.
5. After servicing, make the following leakage current checks to prevent the customer from being exposed to shock hazards.

3.2. LEAKAGE CURRENT COLD CHECK

1. Unplug the AC cord and connect a jumper between the two prongs on the plug.
2. Measure the resistance value, with an ohmmeter, between the jumpered AC plug and each exposed metallic cabinet part on the equipment such as screwheads, connectors, control shafts, etc. When the exposed metallic part has a return path to the chassis, the reading should be between 1MΩ and 5.2MΩ. When the exposed metal does not have a return path to the chassis, the reading must be infinity.

3.3. LEAKAGE CURRENT HOT CHECK (See Figure 1)

1. Plug the AC cord directly into the AC outlet. Do not use an isolation transformer for this check.
2. Connect "A" to exposed metallic part on the set. And connect "B" to a good earth ground, as shown in Figure 1.
3. Use an AC voltmeter, with 1 kΩ/V or more sensitivity, to measure the potential across the resistor.
4. Check each exposed metallic part, and measure the voltage at each point.
5. Reverse the AC plug in the AC outlet and repeat each of the above measurements.
6. The potential at any point should not exceed 0.25 V RMS.

   A leakage current tester (Simpson Model 229 or equivalent) may be used to make the hot checks, leakage current must not exceed 1/2 mA. In case a measurement is outside of the limits specified, there is a possibility of a shock hazard, and the equipment should be repaired and rechecked before it is returned to the customer.

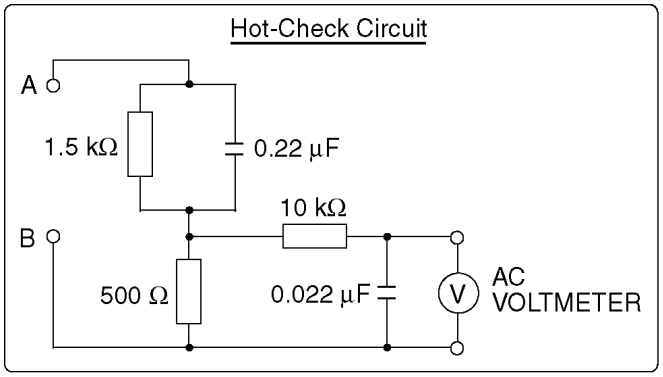

Figure 1

4 PREVENTION OF ELECTRO STATIC DISCHARGE (ESD) TO ELECTROSTATICALLY SENSITIVE (ES) DEVICES

Some semiconductor (solid state) devices can be damaged easily by static electricity. Such components commonly are called Electrostatically Sensitive (ES) Devices. Examples of typical ES devices are integrated circuits and some field-effect transistors and semiconductor “chip” components. The following techniques should be used to help reduce the incidence of component damage caused by electro static discharge (ESD).

1. Immediately before handling any semiconductor component or semiconductor-equipped assembly, drain off any ESD on your body by touching a known earth ground. Alternatively, obtain and wear a commercially available discharging ESD wrist strap, which should be removed for potential shock reasons prior to applying power to the unit under test.
2. After removing an electrical assembly equipped with ES devices, place the assembly on a conductive surface such as aluminum foil, to prevent electrostatic charge buildup or exposure of the assembly.
3. Use only a grounded-tip soldering iron to solder or unsolder ES devices.
4. Use only an antistatic solder removal device. Some solder removal devices not classified as “antistatic (ESD protected)” can generate electrical charge sufficient to damage ES devices.
5. Do not use freon-propelled chemicals. These can generate electrical charges sufficient to damage ES devices.
6. Do not remove a replacement ES device from its protective package until immediately before you are ready to install it. (Most replacement ES devices are packaged with leads electrically shorted together by conductive foam, aluminum foil or comparable conductive material).
7. Immediately before removing the protective material from the leads of a replacement ES device, touch the protective material to the chassis or circuit assembly into which the device will be installed.

   CAUTION:

   Be sure no power is applied to the chassis or circuit, and observe all other safety precautions.
8. Minimize bodily motions when handling unpackaged replacement ES devices. (Otherwise harmless motion such as the brushing together of your clothes fabric or the lifting of your foot from a carpeted floor can generate static electricity (ESD) sufficient to damage an ES device).

5 HOW TO REPLACE THE LITHIUM BATTERY (PROCEDURE)

1. Remove the Side Case (L) C.B.A.. (Refer to Disassembly Procedures.)
2. Unsolder the Lithium Battery “ML920S/F9D” and then replace the new one. (See Fig. B1.)
3. Danger of explosion if battery is incorrectly replaced. Replace only with the same or equivalent type.

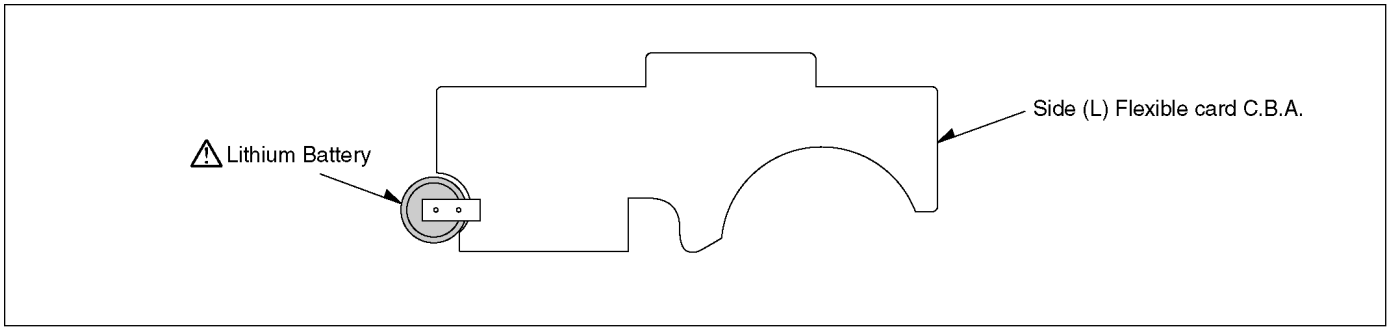

Fig. B1

Note:

The lithium battery is a critical component. (Type No.: N9ZZ00000297.)

It must never be subjected to excessive heat or discharge.

It must therefore only be fitted in equipment designed specifically for its use.

Replacement batteries must be of the same type and manufacture.

They must be fitted in the same manner and location as the original battery, with the correct polarity contacts observed.

Do not attempt to re-charge the old battery or re-use it for any other purpose.

It should be disposed of in waste products destined for burial rather than incineration.

CAUTION

Danger of explosion if battery is incorrectly replaced.
Replace only with the same or equivalent type recommended by the equipment manufacturer.
Discard used batteries according to manufacturer's instructions.

PRECAUTION

Le fait de remplacer incorrectement la pile peut présenter des risques d'explosion.
Remplacer la pile uniquement par une pile identique ou de type équivalent recommandée par le fabricant. Se débarrasser des piles usagées conformément aux instructions du fabricant.

VORSICHT

Bei einer falsch eingesetzten Batterie besteht Explosionsgefahr. Nur mit einer vom Hersteller empfohlenen Batterie vom gleichen Typ ersetzen.
Verbrauchte Batterien beim Fachhändler oder einer Sammelstelle für Sonderstoffe abliefern.

VARNING

Explosionsfara vid felaktigt batteribyte.
Använd samma batterityp eller en ekvivalent typ som rekommenderas av apparattillverkaren.
Kassera använt batteri enligt fabrikantens instruktion.

ADVARSEL!

Lithiumbatteri-Eksplosionsfare ved fejlagtig håndtering.
Udskiftning má kun ske med batteri af samme fabrikat og type.
Levér det brugte batteri tilbage til leverandøren.

VAROITUS

Paristo voi räjähtää, jos se on virheellisesti asennettu.
Vaihda paristo ainoastaan laitevalmistajan suosittelemaan tyyppiin.
Hävitä käytetty paristo valmistajan ohjeiden mukaisesti.

6 HOW TO RECYCLE THE LITHIUM BATTERY

U.S.A. CONSUMERS: ATTENTION:

A lithium ion/polymer battery that is recyclable powers the product you have purchased. Please call 1-800-8-BATTERY for information on how to recycle this battery.

ATTENTION:

A lithium ion/polymer battery that is recyclable powers the product you have purchased. Please call 1-800-8-BATTERY for information on how to recycle this battery.

7 ADJUSTMENT PROCEDURES

7.1. DISASSEMBLE FLOW CHART

This flow chart indicates the disassembly steps the cabinet parts, C.B.A. and Mecha. Unit in order to access to be serviced. When reinstalling, perform the steps in the reverse order.

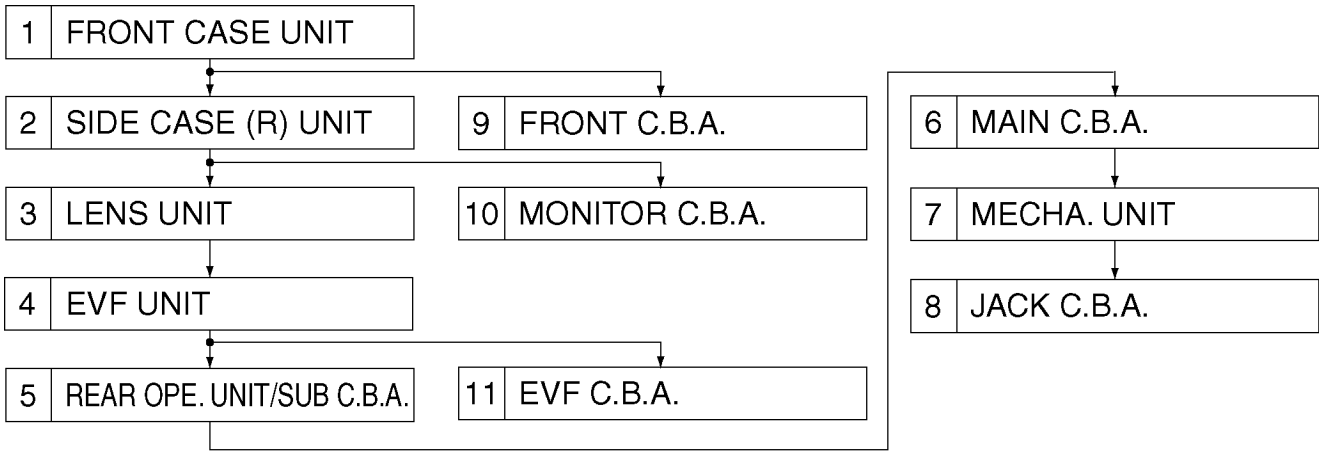

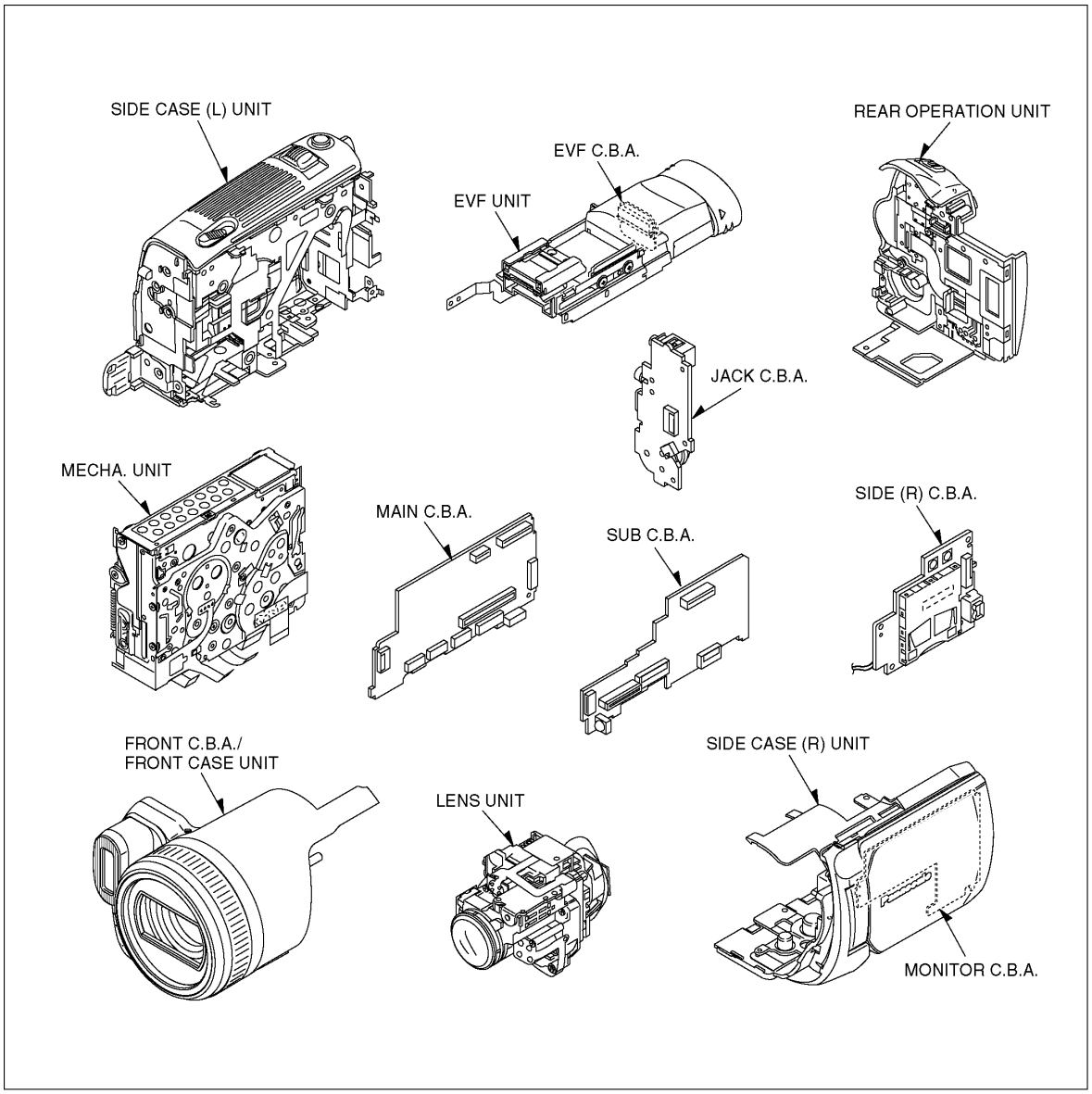

7.2. DISASSEMBLY PROCEDURES

Flow-Chart for Disassembly Procedure

No.	Item / Part	Fig.	Removal (Screw,Connector,Flex. & Other)
1	Front Case Unit	Fig. D2	Remove the Grip Belt Piece with the procedure of arrow 1,2,3.
		Fig. D3	2-Screws (A), 2-Screws (B)
		Fig. D4	2-Screws (C)
		Fig. D5	Open the LCD Unit 1-Screw (D)
		Fig. D6	1-Connector FP4801 Front Case Unit
2	Side Case (R) Unit / LCD Unit	Fig. D7	3-Screws (E)
		Fig. D8	Tilt up the EVF 1-Screw (F), 1-Screw (G)
		Fig. D9	2-Connectors FP602, FP6503 2-Tabs Side Case (R) Unit / LCD Unit
3	Lens Unit	Fig. D10	1-Screw (H) 2-Connectors FP201, FP701 Lens Unit
4	EVF Unit	Fig. D11	1-Screw (I), 1-Screw (J) 2-Connectors FP601, FP3402 EVF Unit
5	Rear Operation Unit / Sub C.B.A.	Fig. D12	1-Screw (K), 1-Screw (L) 2-Connectors FP1001, FP6502 Rear Operation Unit 1-Connector FP4002 Sub C.B.A.
6	Main C.B.A.	Fig. D13	8-Connectors FP2201, FP2202, FP2203, FP2204, FP5001, FP6501, FP6504, FP6505 1-Screw (M) 2-Tabs Main C.B.A.
7	Mecha. Unit	Fig. D14	Open the Cassette Cover 3-Screws (N) Mecha. Unit
8	Jack C.B.A.	Fig. D15	1-Screw (O), 1-Screw (P), 1-Screw (Q) Jack C.B.A.
9	Front C.B.A.	Fig. D16	3-Screws (R), 1-Screw (S) 1-Tab Front C.B.A.
10	Monitor C.B.A.	Fig. D17	1-Screw (T), 1-Screw (U), 1-Screw (V), 1-Screw (W) Hinge Support Plate
		Fig. D18	1-Screw (X)
		Fig. D19	1-Tab R Cover / LCD Unit
		Fig. D20	2-Screws (Y) 6-Tabs LCD Case (Upper) Unit
		Fig. D21	1-Connector FP902 LCD Hinge Unit
		Fig. D22	1-Connector FP901 2-Tabs Monitor C.B.A.
11	EVF C.B.A.	Fig. D23	2-Screws (Z) EVF Slide
		Fig. D24	1-Tab View ADJ. Unit
		Fig. D25	Remove a,b,c,d department (remove department previously). EVF Case (Upper) Unit Remove e,f department. EVF Case (Lower) Unit
		Fig. D26	2-Connectors FP801,FP802 2-Tabs EVF C.B.A.

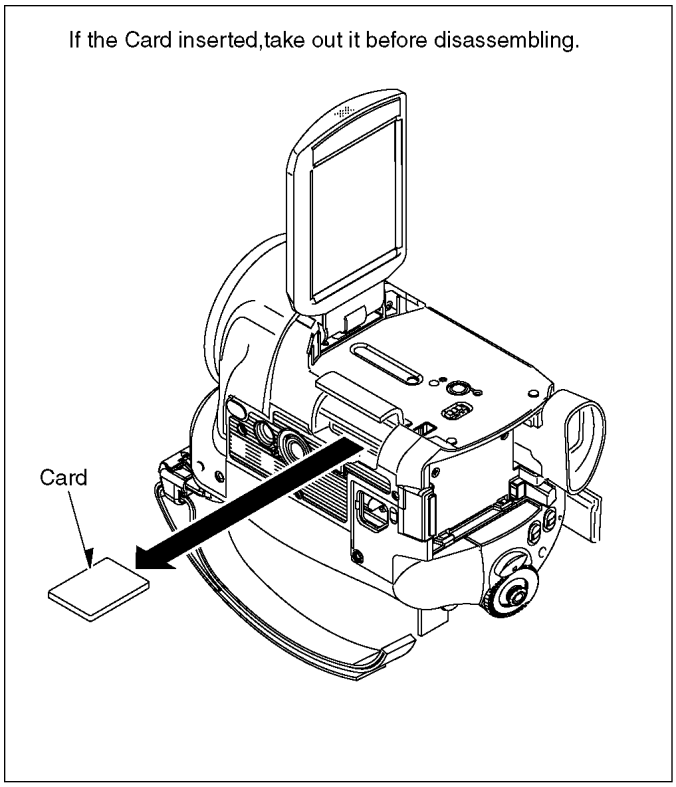

Fig. D1

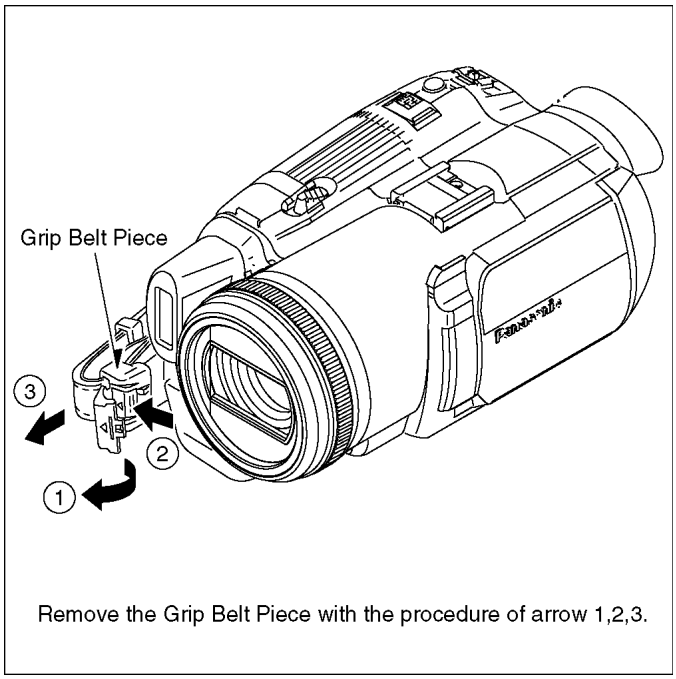

Fig. D2

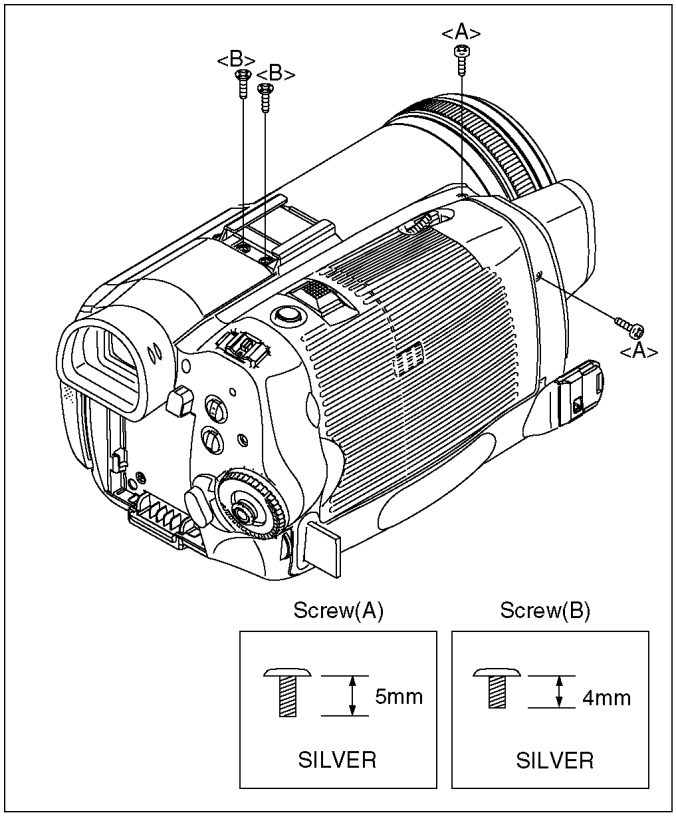

Fig. D3

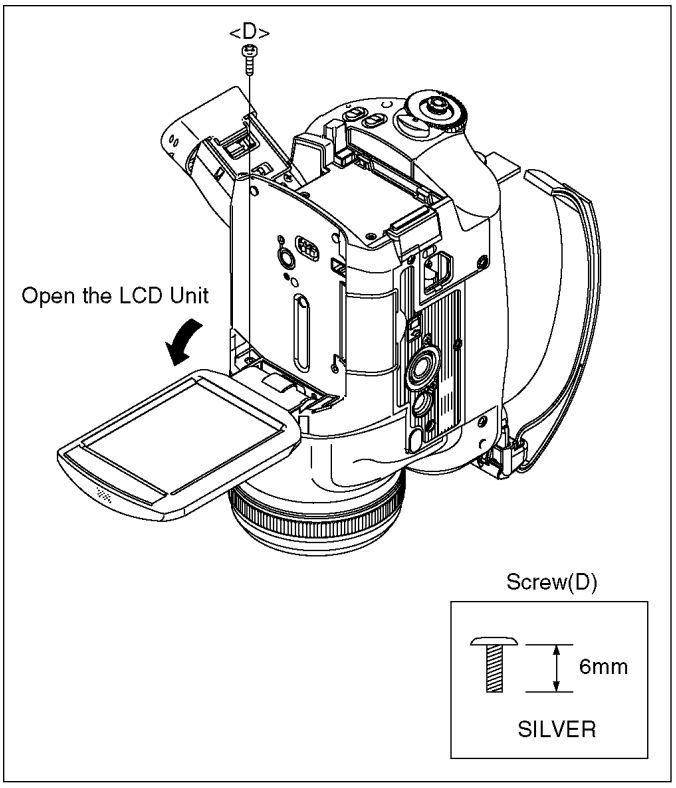

Fig. D5

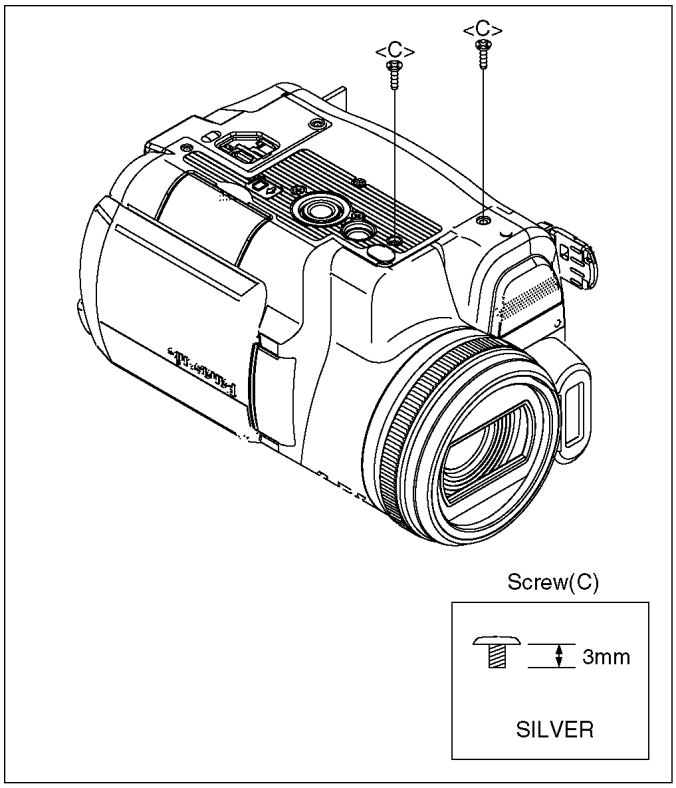

Fig. D4

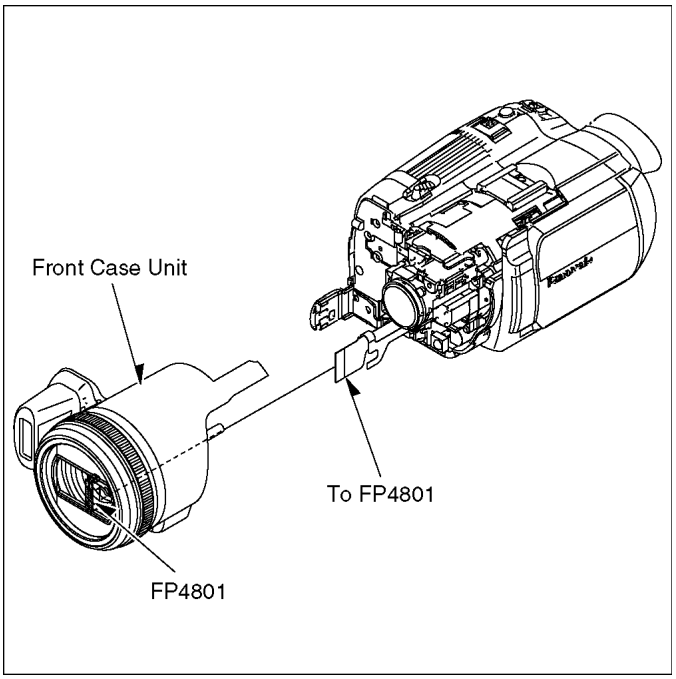

Fig. D6

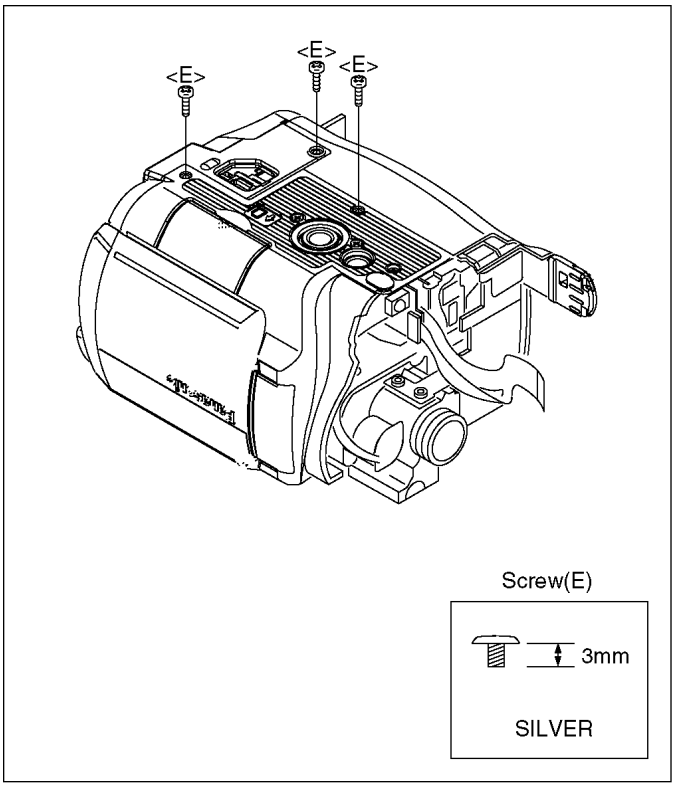

Fig. D7

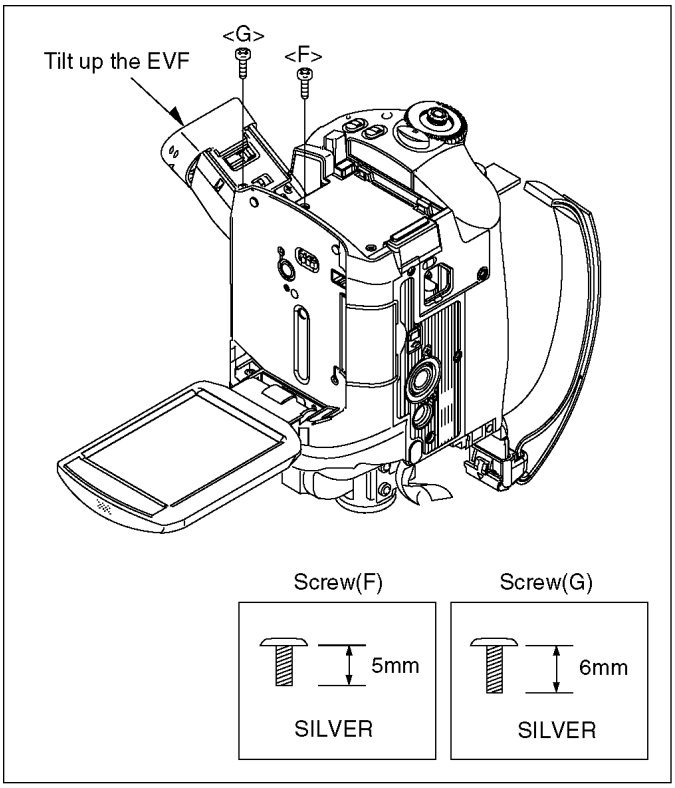

Fig. D8

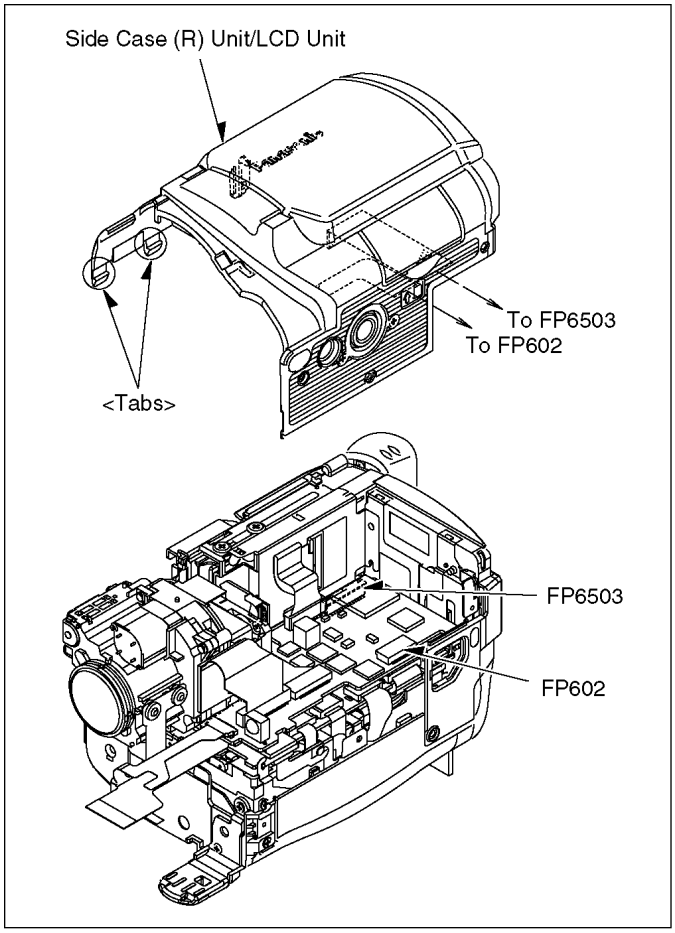

Fig. D9

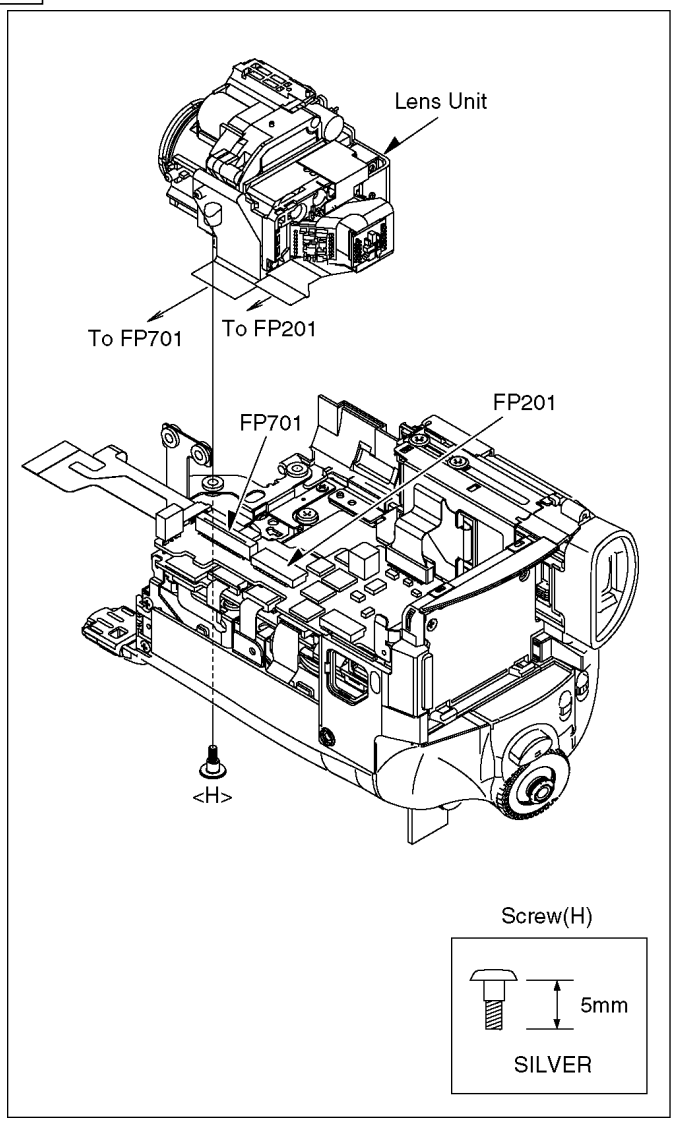

Fig. D10

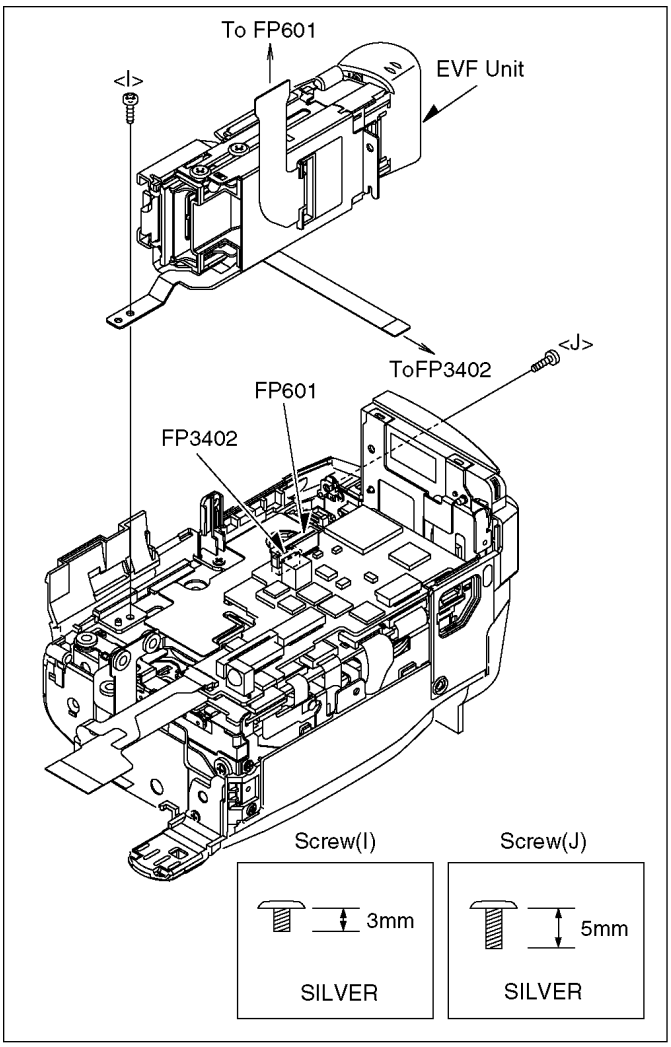

Fig. D11

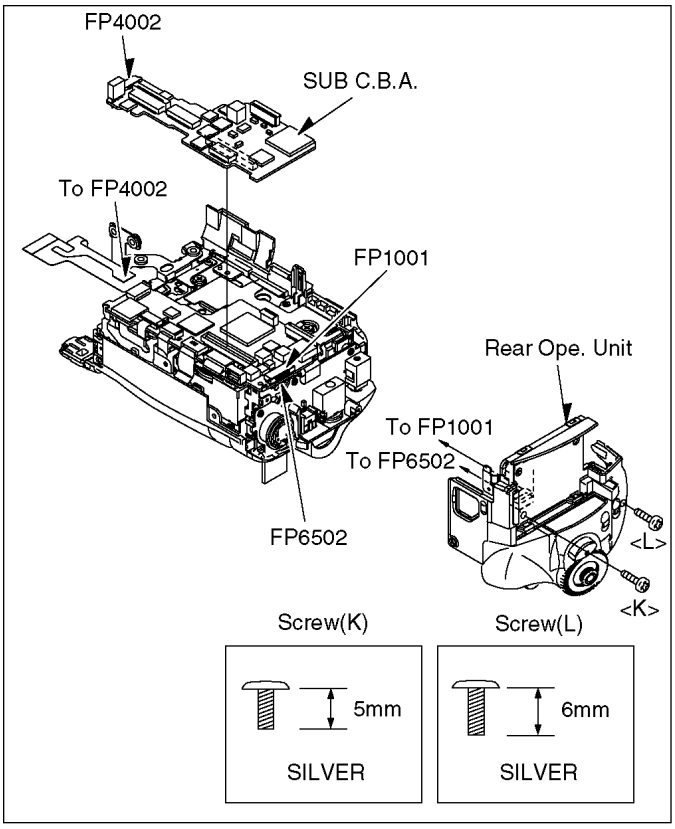

Fig. F12

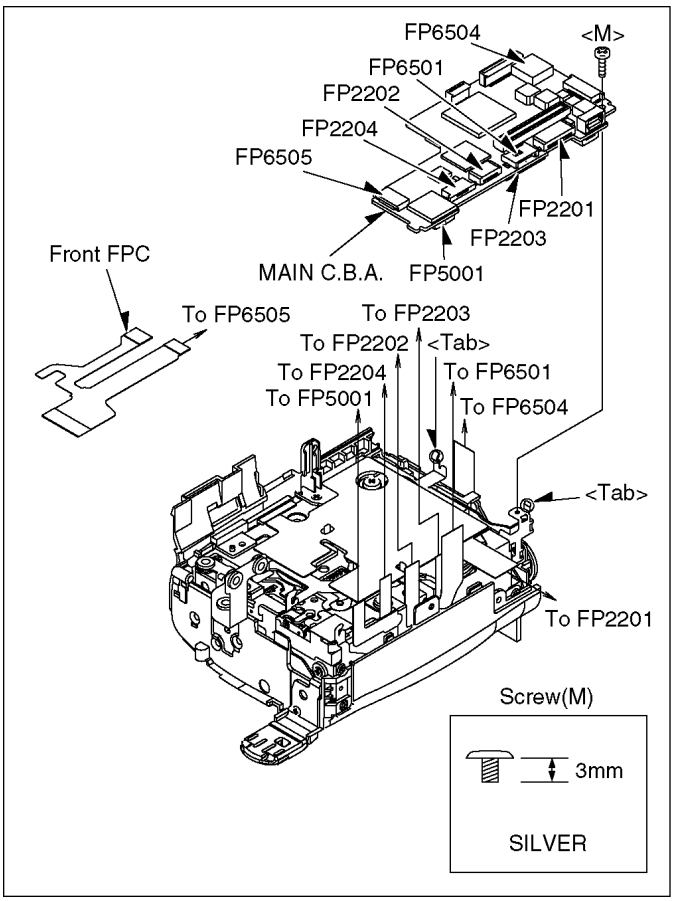

Fig. D13

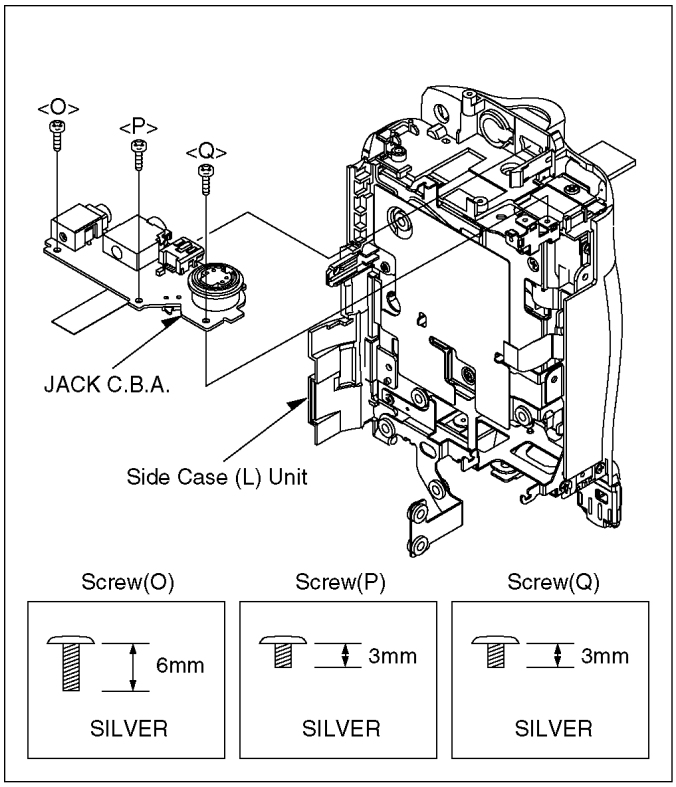

Fig. D15

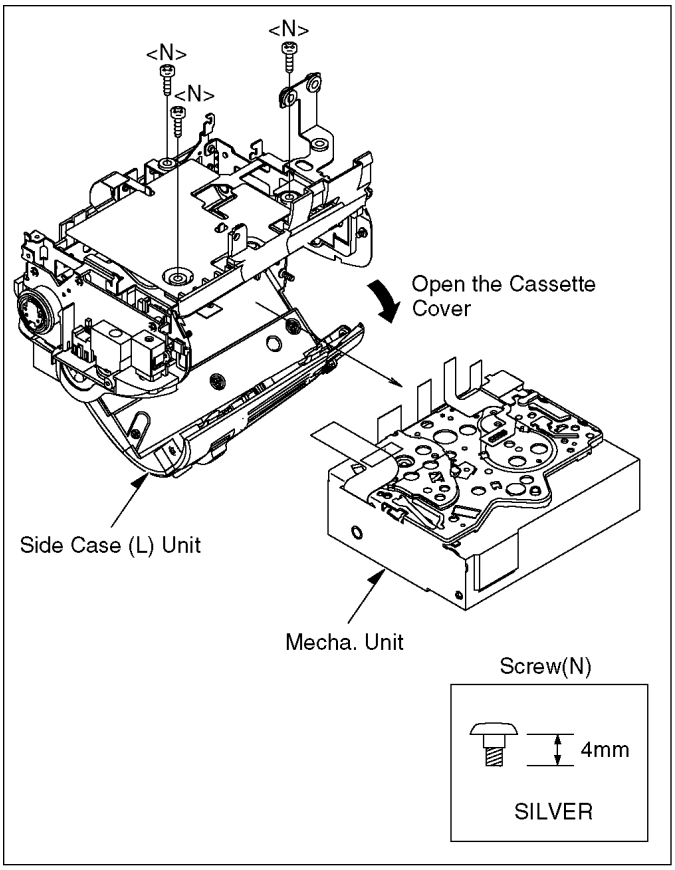

Fig. D14

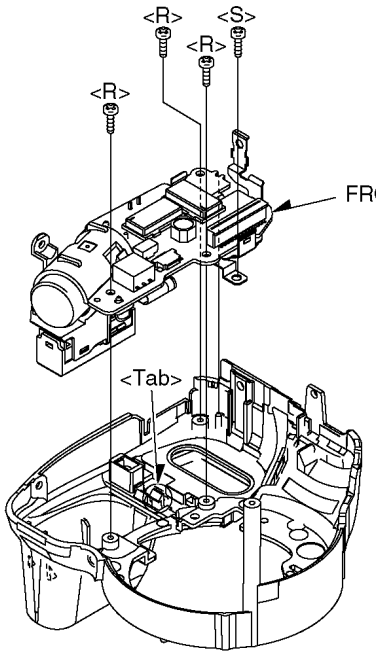

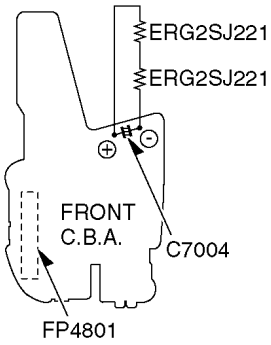

CAUTION
Be sure to discharge the capacitor on Front C.B.A. before disassembling.

CAUTION
Be careful of the high voltage circuit on Front C.B.A. when servicing.

Method:
1. Prepare the 2 Resistors (ERG2SJ221:220 ohm/4w) for discharge.
   Note:
   Above 2 Resistors may be substituted with equivalent type.
2. Make short circuit using 2 Resistors between C7004(+) and C7004(-) for 3 seconds as follows.
3. After discharging, confirm that the capacitor voltage is sufficiently lowered using a voltmeter.

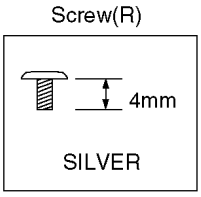

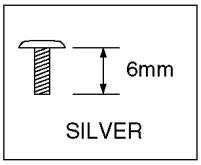

Fig. D16

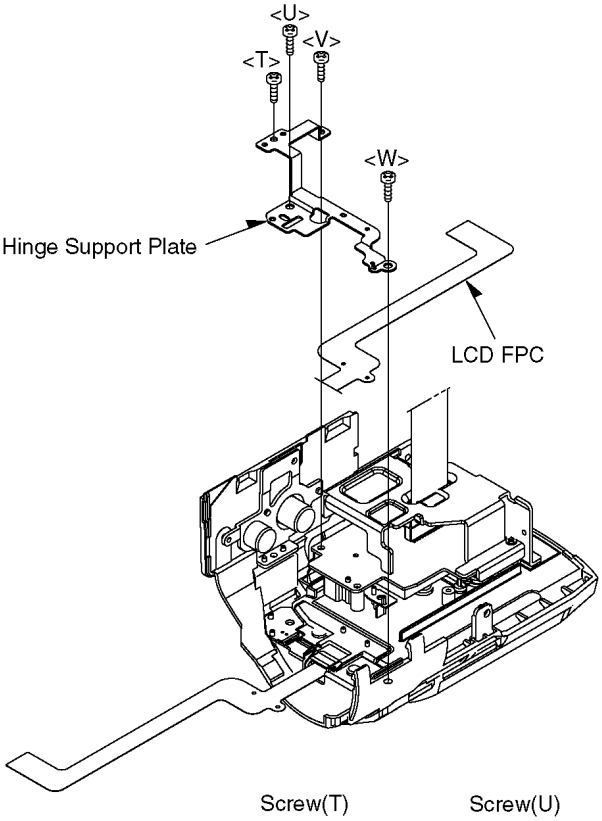

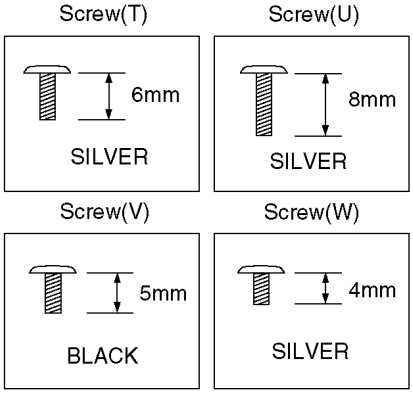

Fig. D17

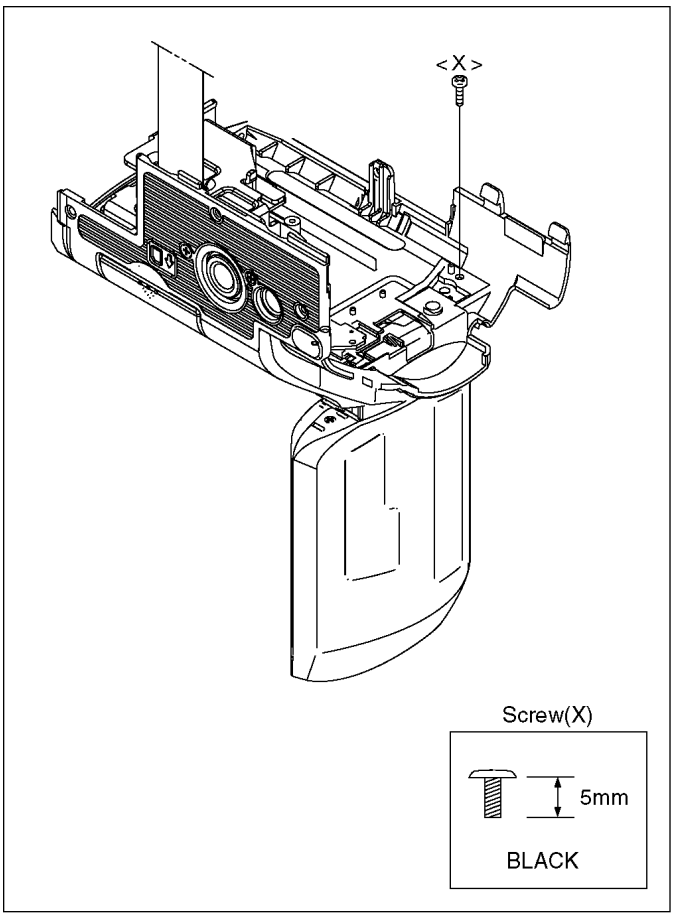

Fig. D18

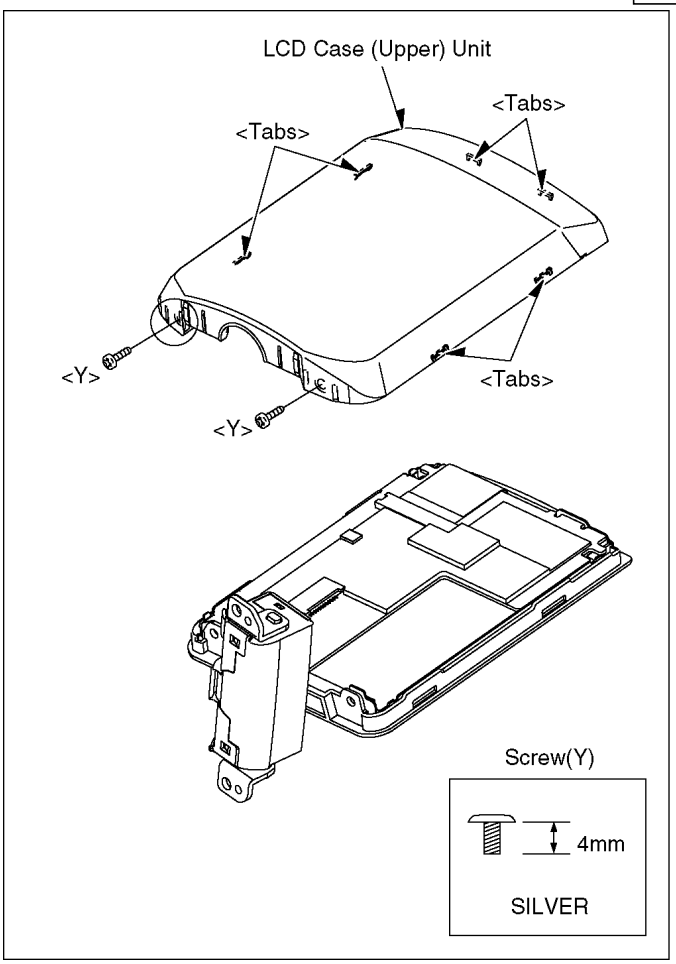

Fig. D20

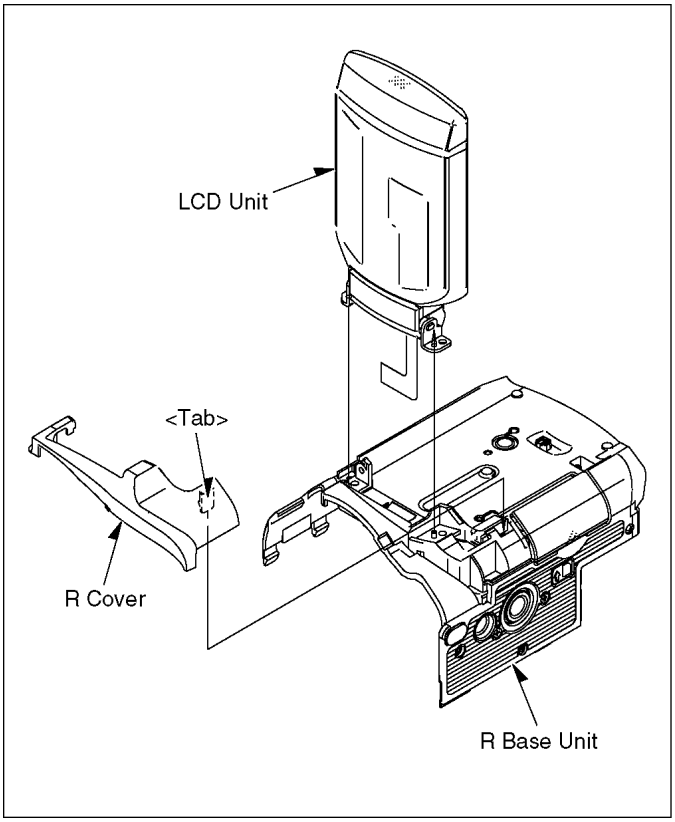

Fig. D19

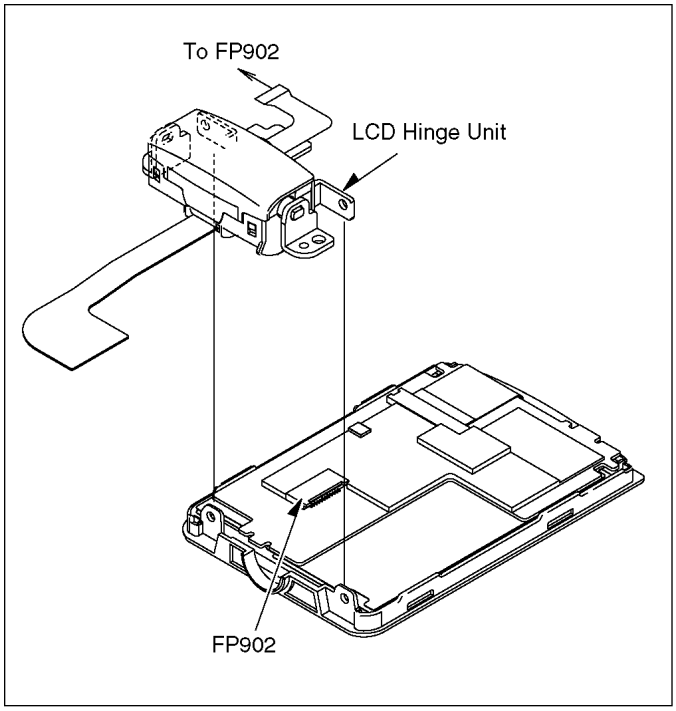

Fig. D21

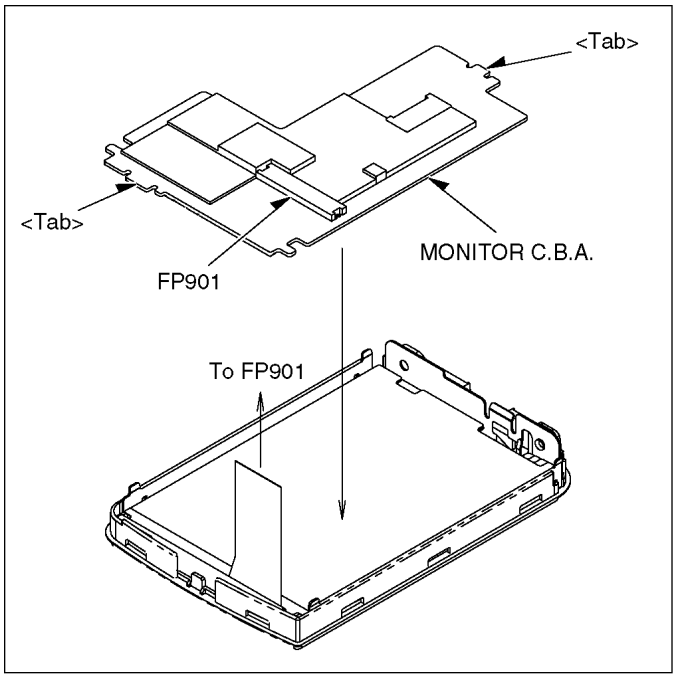

Fig. D22

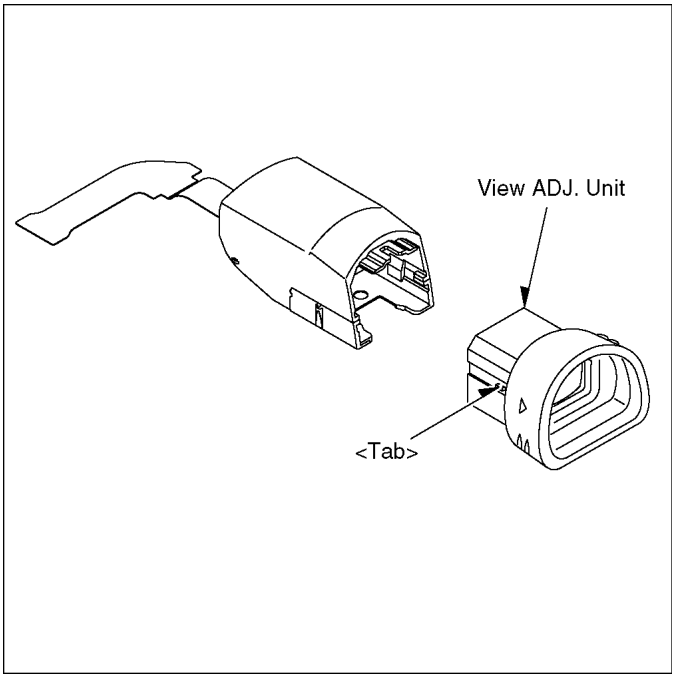

Fig. D24

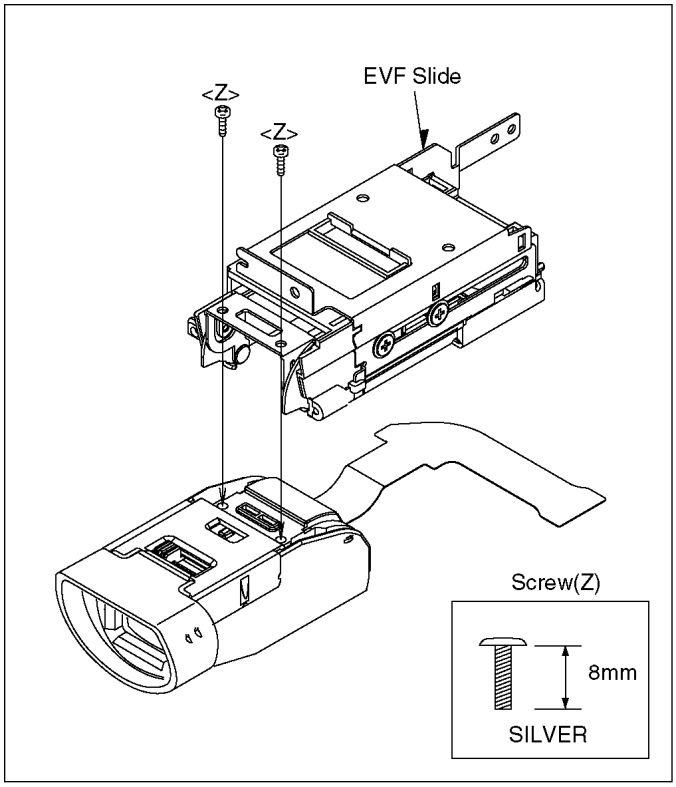

Fig. D23

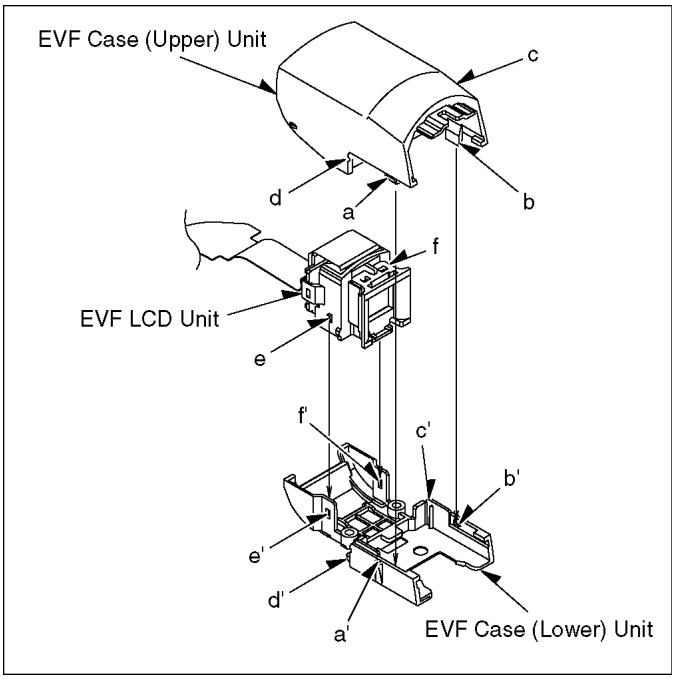

Fig.D25

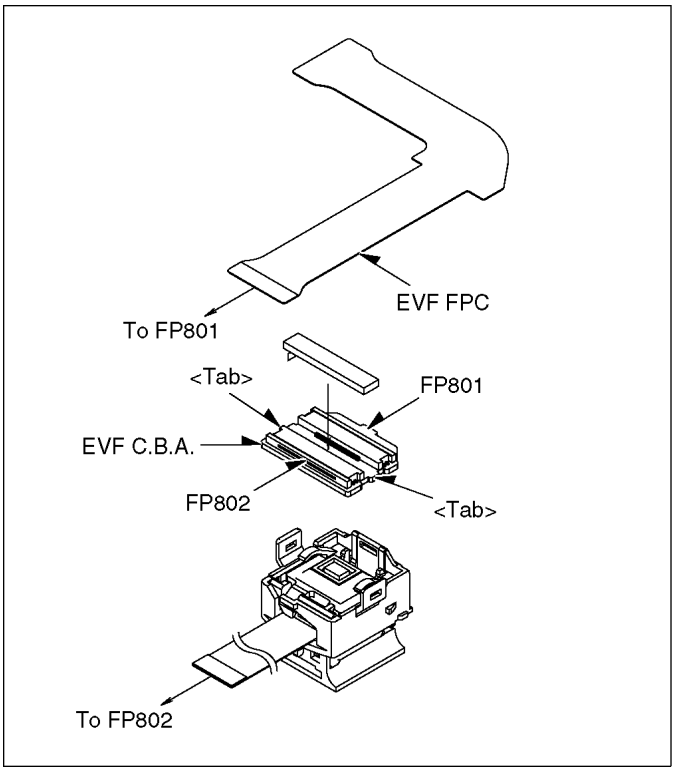

Fig. D26

7.3. DISASSEMBLY PROCEDURES MECHA. UNIT

Flow-Chart for Disassmbly Procedures

No.	Item / Part	Fig.	Removal (Screw, Connector, Flex. & Other)
1	Cassette Up Unit	Fig. M1	It makes the mechanism position in Eject condition (For Battery)
		Fig. M2	3-Screws (A)
		Fig. M3	3-Tabs
		Fig. M4	It remove the piece arrangement unit from rail department
2	Cylinder Unit	Fig. M5	1-Screw (B)
		Fig. M6	3-Screw (C) Cylinder Unit

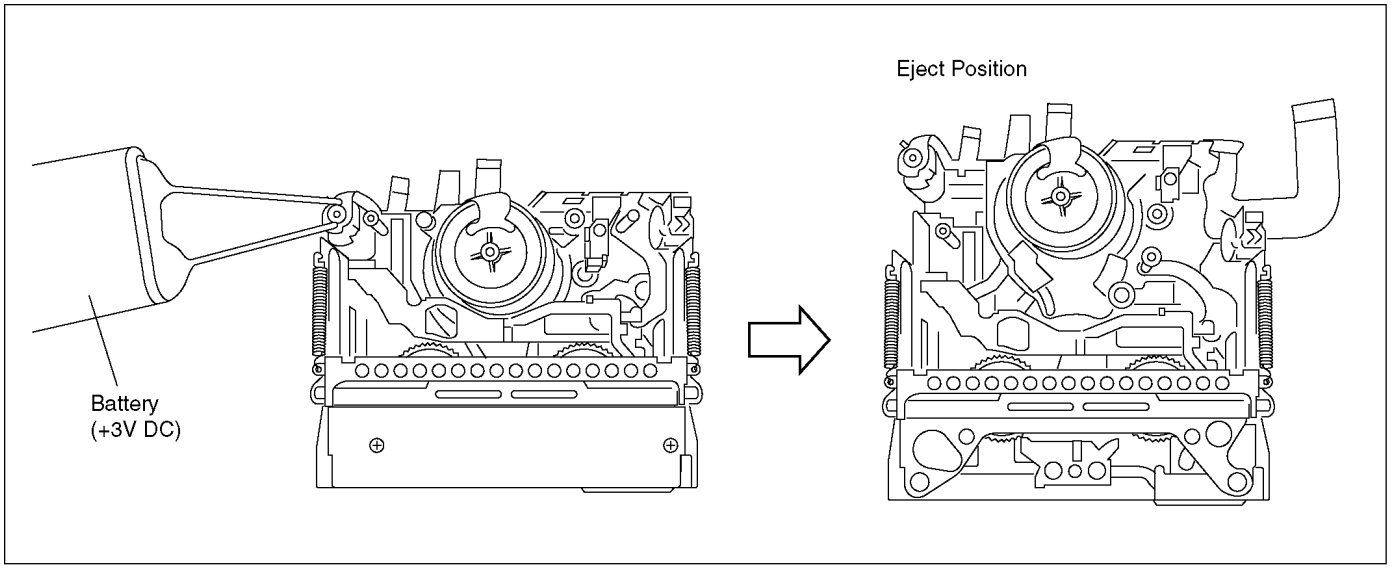

Fig. M1

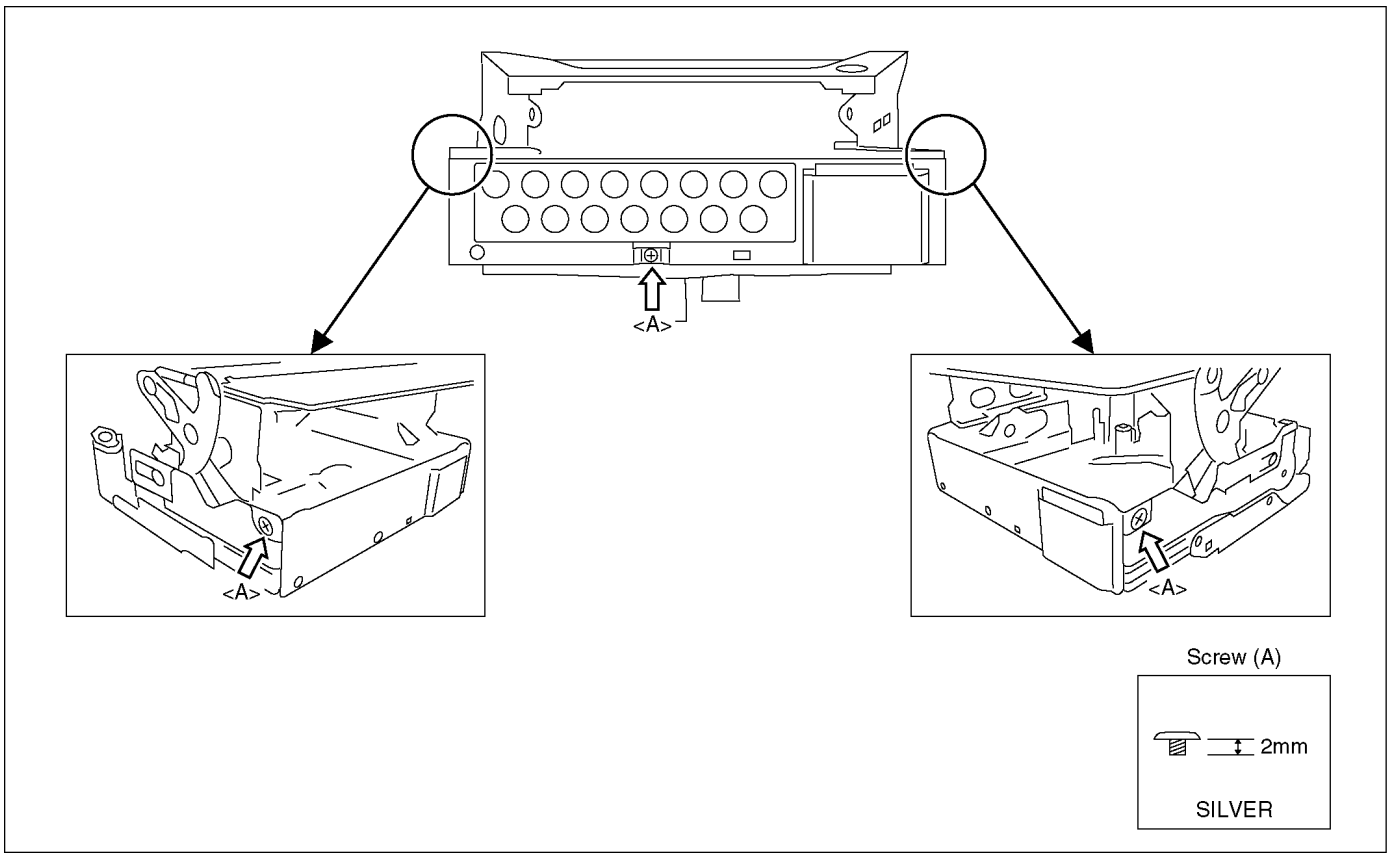

Fig. M2

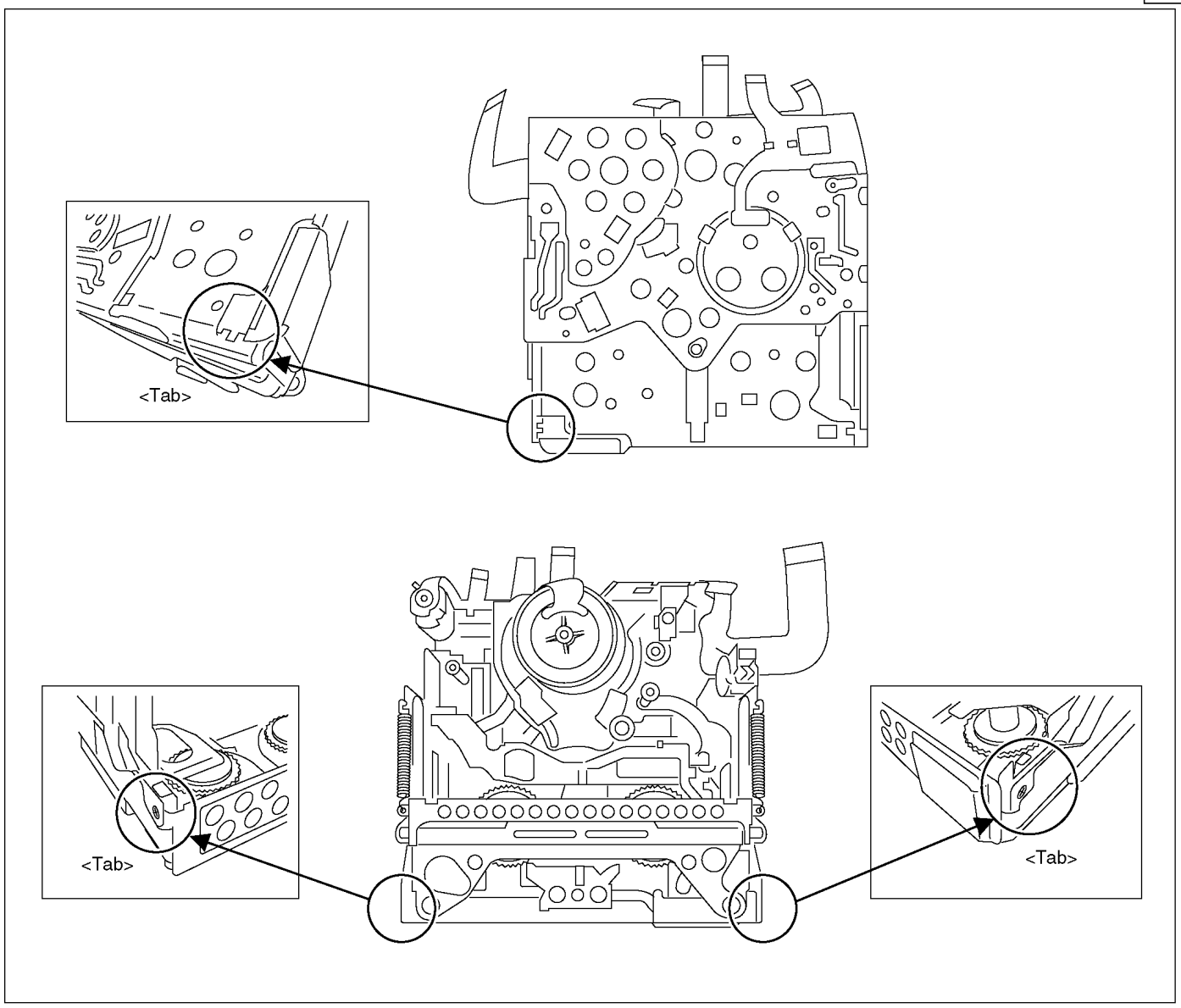

Fig. M3

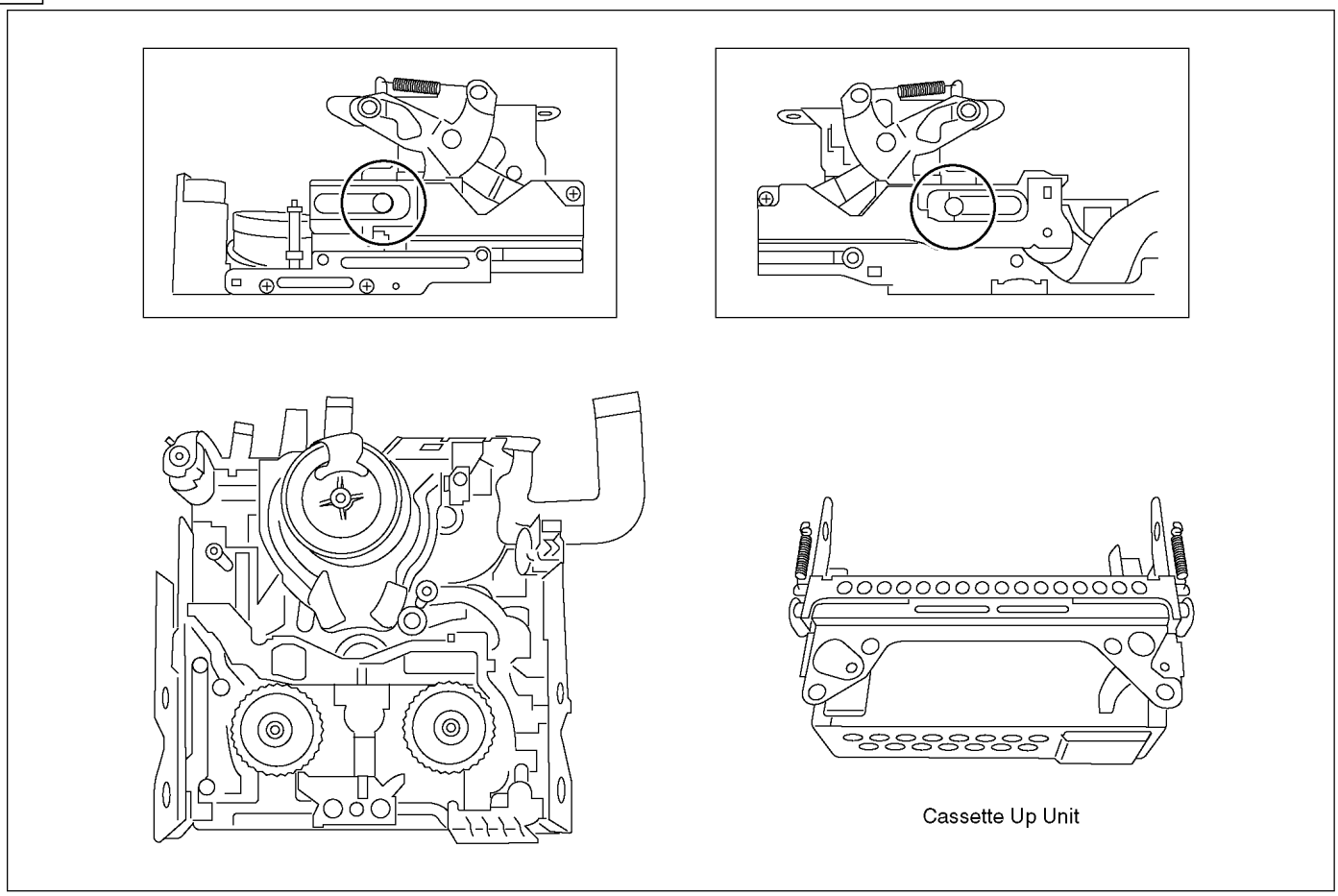

Fig. M4

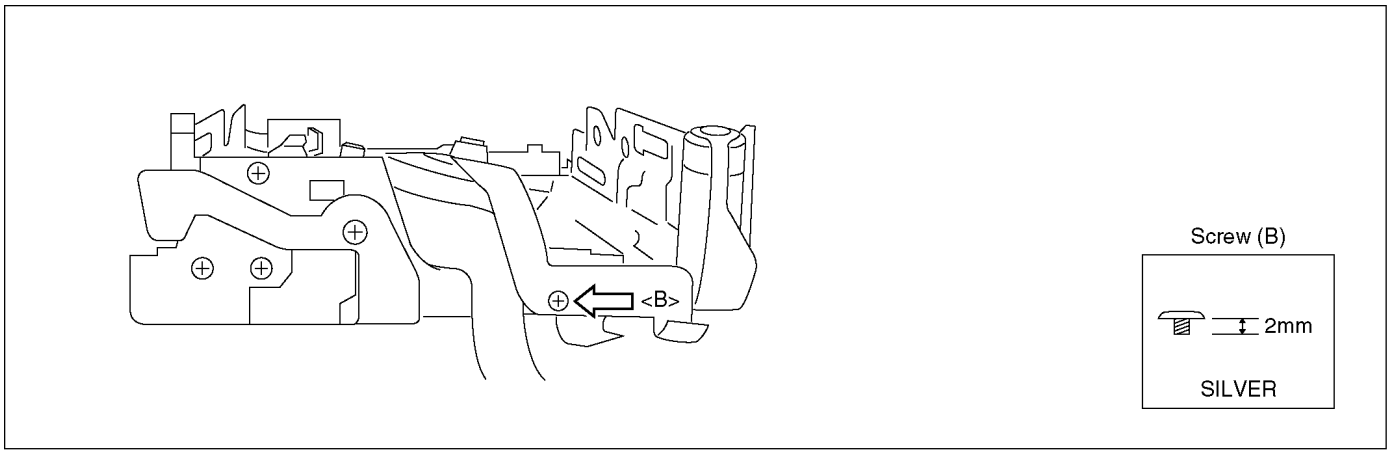

Fig. M5

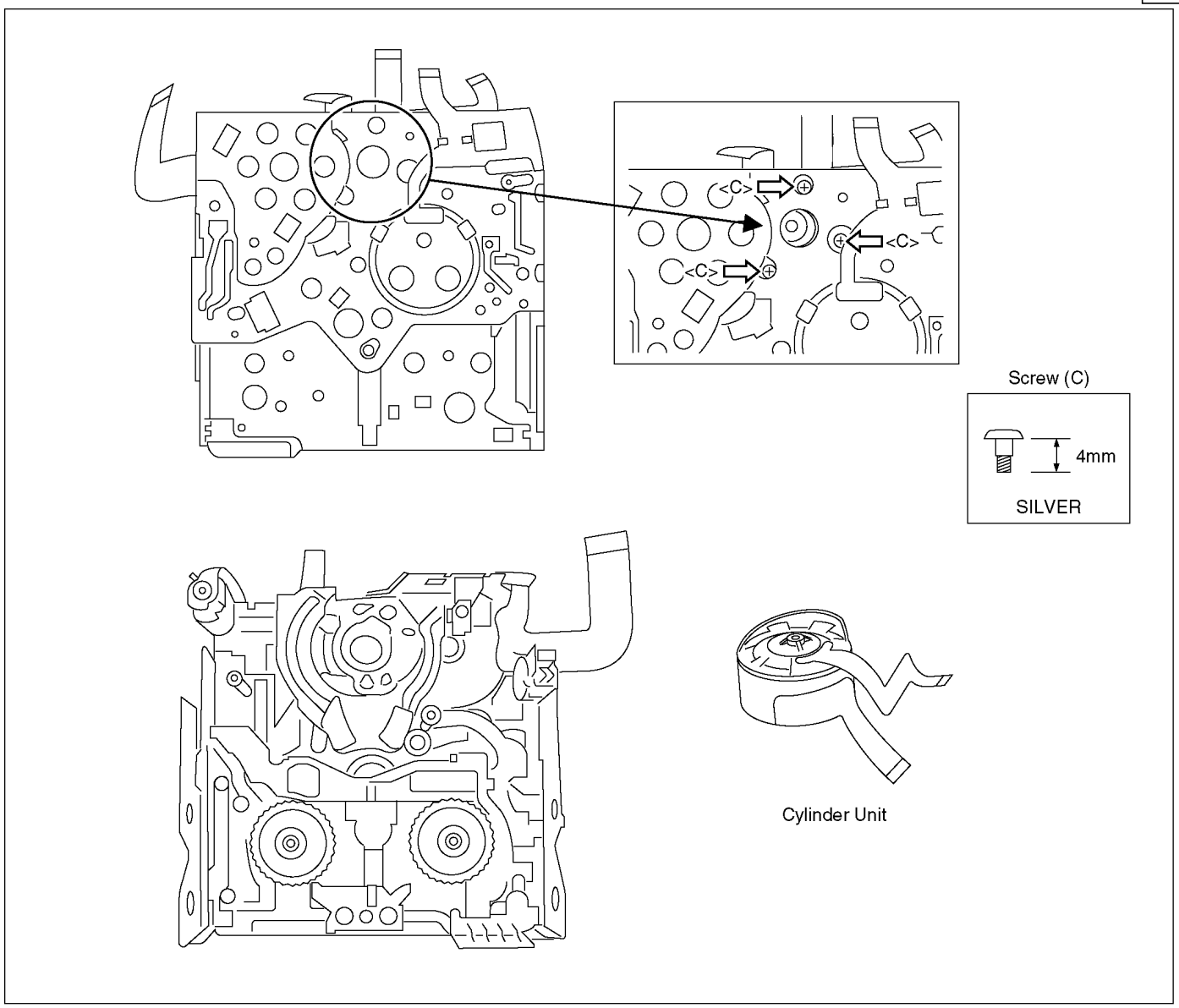

Fig. M6

7.4. DISASSEMBLY PROCEDURES OF CAMERA LENS UNIT

The following flowchart describes order or steps for removing the Camera lens unit and certain printed circuit boards in order to make access to the item needing service.

To reassemble the unit follow the steps in reverse order.

1. Prism Unit & Radiator Sheet B	Ref.-No.301/318
2. Crystal Filter & CCD Cushion	Ref.-No.302/303
3. Main Body Unit	Ref.-No.313
4. 2nd Lens Transfer Frame Unit & Z Guide Pole	Ref.-No.312/315/316
5. Small Stepping Motor Unit	Ref.-No.314
6. Iris Unit	Ref.-No.311
7. Lens FPC Unit	Ref.-No.317
8. 4th Lens Frame Unit & OIS Unit	Ref.-No.308/310
9. Master Flange Unit & F Guide Pole	Ref.-No.305/306/307

Note 1:
Each Ref.numbers are equivalent to number of Fig.L2 and Parts List.

Fig. L1

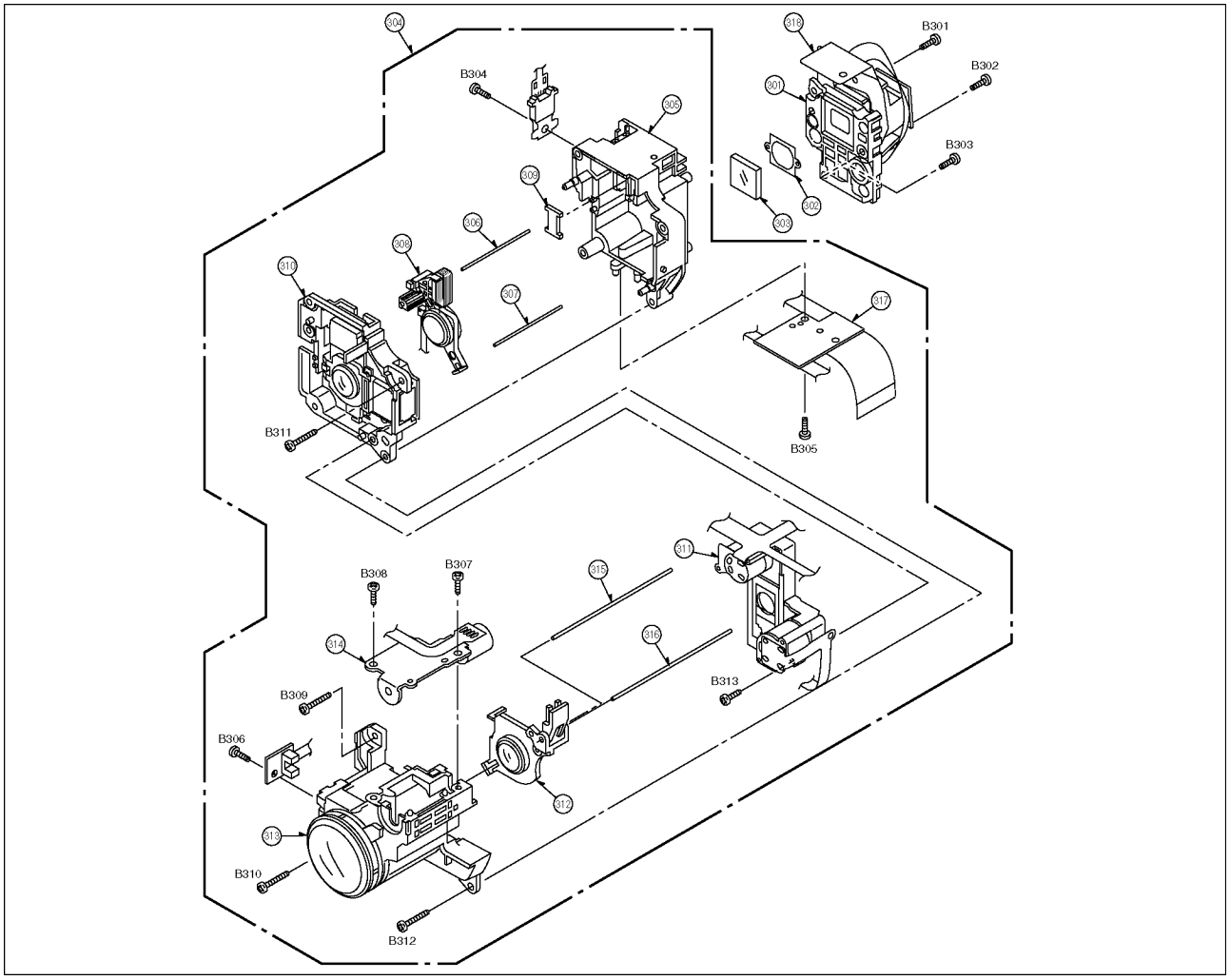

Fig. L2

8 SERVICE CAUTION

8.1. HOW TO DISCHARGE THE CAPACITOR ON FRONT C.B.A.

CAUTION
Be sure to discharge the capacitor on Front C.B.A. before disassembling.
CAUTION
Be careful of the high voltage circuit on Front C.B.A. when servicing.

Method:
1. Prepare the 2 Resistors (ERG2SJ221:220 ohm/4w) for discharge.

Note:
Above 2 Resistors may be substituted with equivalent type.

2. Make short circuit using 2 Resistors between C7004(+) and C7004(-) for 3 seconds as follows.
3. After discharging, confirm that the capacitor voltage is sufficiently lowered using a voltmeter.

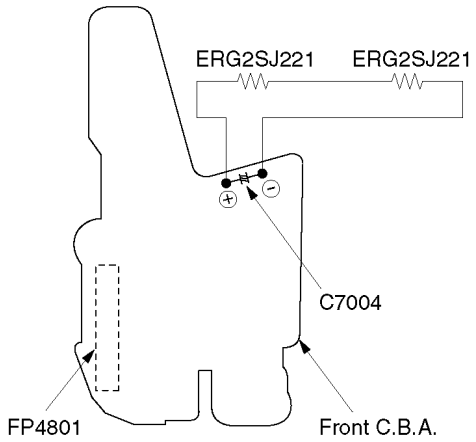

8.2. EEPROM DATA FOR SPARE PARTS OF THE MAIN C.B.A.

When the Main C.B.A. is replaced, the fixed and average data must be changed by Tatsujin kit according to the Movie Camera's suffix.

Then, confirm and/or adjust the VTR and Camera section one by one.

8.3. SERVICE EXTENSION CABLE FOR ALL C.B.A. INCLUDED IN MODULE UNIT

This models is required the following extension cables for all connections.

Use the following extension cables when checking or adjusting individual circuit boards.

Ref.	Part No.	Pin	Part Name	Connection			Q'ty	Remarks
(1)	VFK1388	12	Flat Cable	FP4002 (Sub)	-	FP4801 (Front)	1	as PV-GS55
(2)	VFK1442	21	Flat Cable	FP6505 (Main)	-	FP4801 (Front)	1	as PV-DV851
(3)	VFK1575C4520	45	Flat Cable	FP701 (Sub)	-	Lens Unit	1	as PV-GS400
(4)	VFK1459	39	Flat Cable	FP201 (Sub)	-	PP201 (Prism Unit)	1	as PV-DV852
(5)	VFK1440	10	Flat Cable	FP3402 (Sub)	-	Hot Shoe	1	as PV-DV851
(6)	VFK1491	27	Flat Cable	FP602 (Sub)	-	FP902 (Monitor)	1	as PV-DV951
(7)	VFK1582BD020	120	Flat Cable	PS3001 (Main)	-	PP301 (Sub)	1	as PV-GS150
(8)	VFK1491	27	Flat Cable	FP6504 (Main)	-	FP6201 (Jack)	1	as PV-DV951
(9)	VFK1282	22	Flat Cable	FP601 (Sub)	-	FP801 (EVF)	1	as PV-GS50
(10)	VFK1388	12	Flat Cable	FP6501 (Main)	-	Side L Unit	1	as PV-GS55
(11)	VFK1173	14	Flat Cable	FP6502 (Main)	-	Rear Operation Unit	1	as PV-DV851
(12)	VFK1492	26	Flat Cable	FP6503 (Main)	-	FP6301 (Side R)	1	as PV-DV952
(13)	VFK1173	14	Flat Cable	FP1001 (Main)	-	Battery Catcher	1	as PV-DV851
(14)	VFK1443	18	Flat Cable	FP2203 (Main)	-	Mechanism Unit (Sub)	1	as PV-DV851
(15)	VFK1440	10	Flat Cable	FP2202 (Main)	-	Cylinder (Drive)	1	as PV-DV851
(16)	VFK1441	8	Flat Cable	FP5001 (Main)	-	Cylinder (Head AMP)	1	as PV-DV851
(17)	VFK1443	18	Flat Cable	FP2201 (Main)	-	Capstan (Drive)	1	as PV-DV851
(18)	VFK1441	8	Flat Cable	FP2204 (Main)	-	Loading Moter	1	as PV-DV851

How to use extension cables.

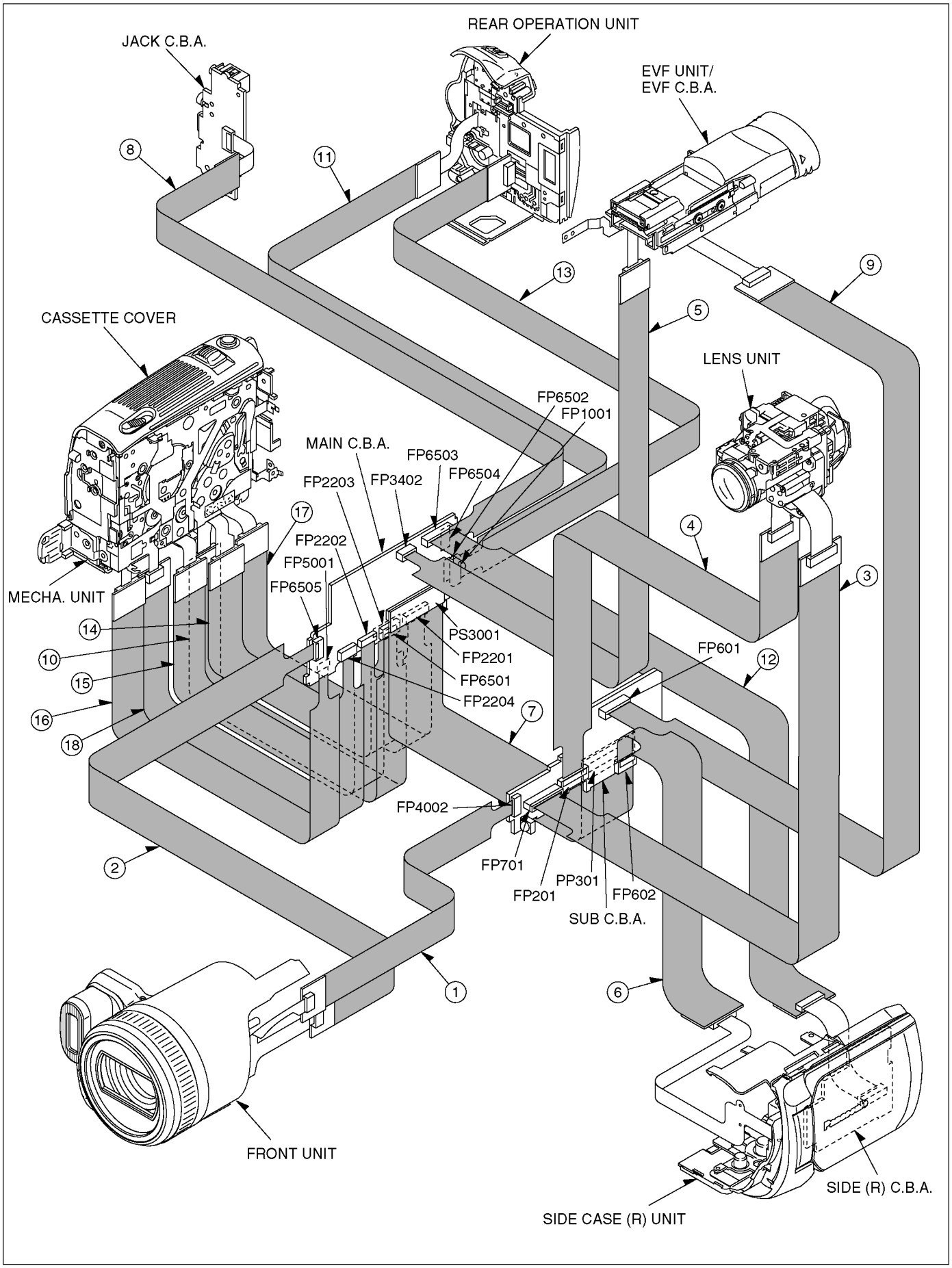

Fig. T1

8.4. LOCATION FOR CONNECTORS OF THE MAIN C.B.A. & SUB C.B.A.

8.4.1. MAIN C.B.A.

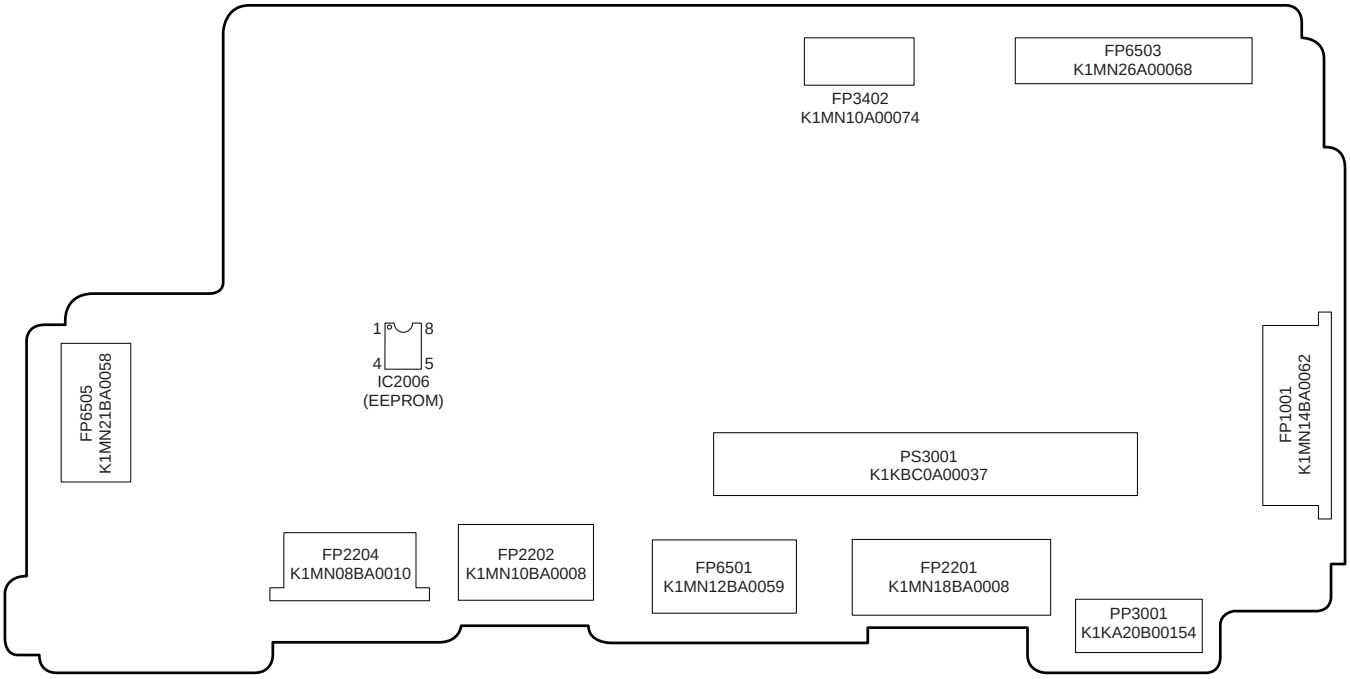

(COMPONENT SIDE)

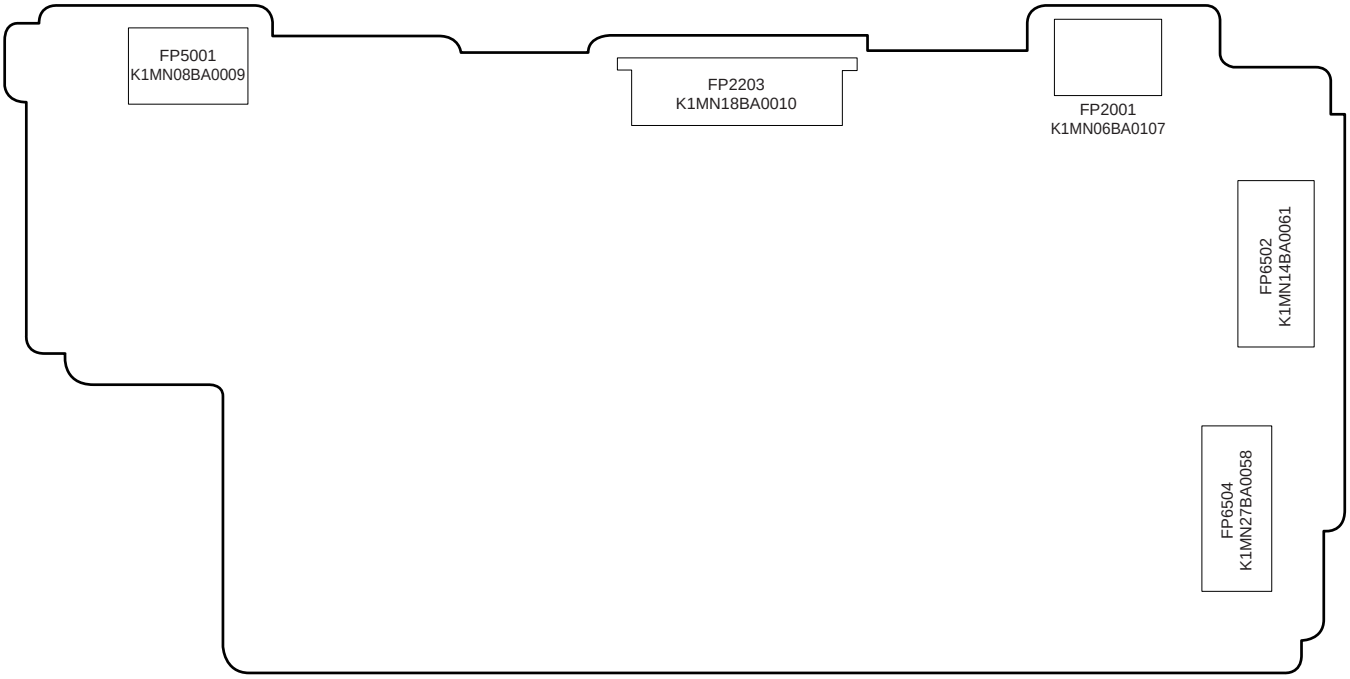

(FOIL SIDE)

8.4.2. SUB C.B.A.

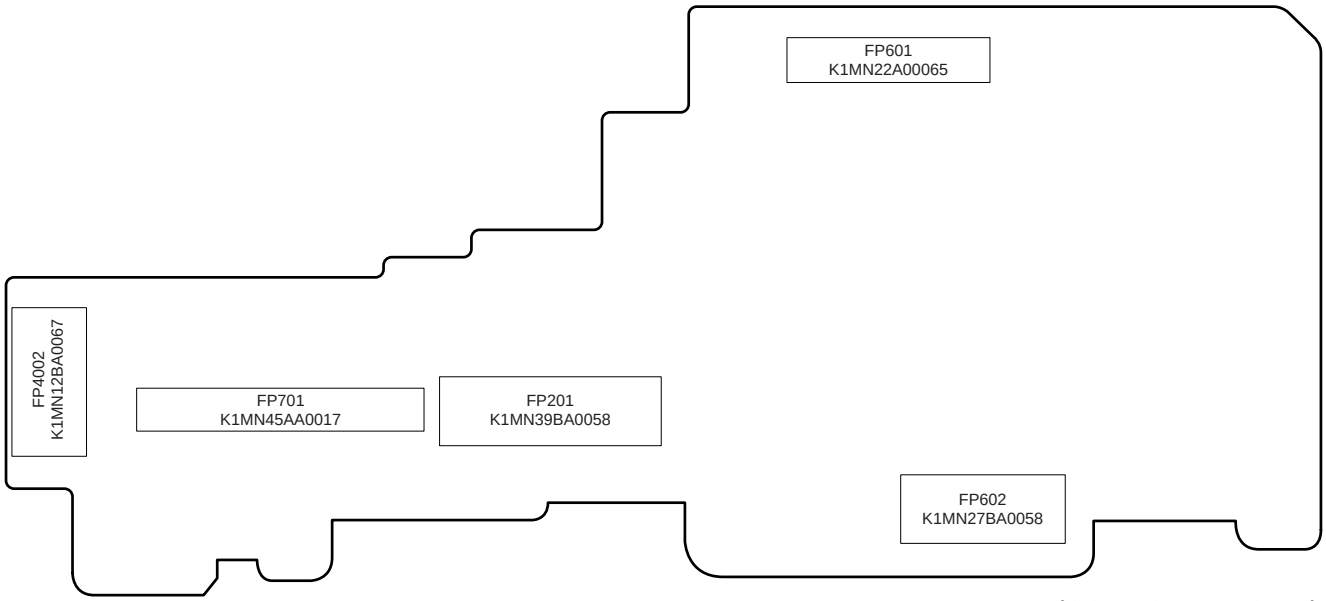

(COMPONENT SIDE)

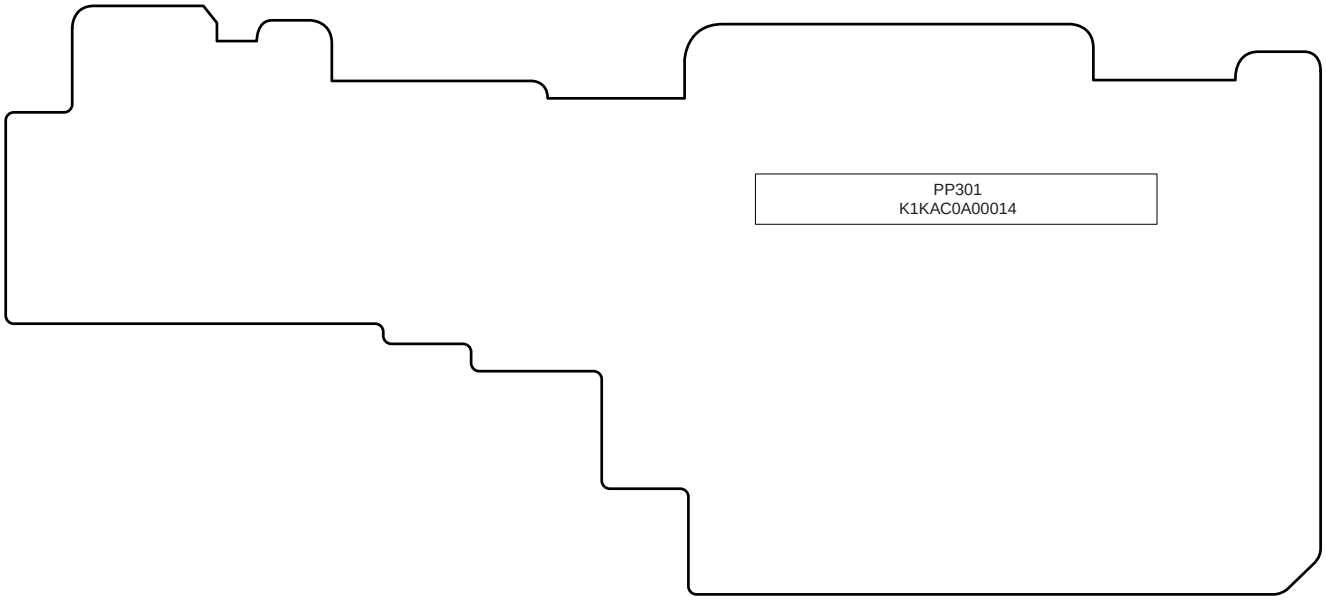

(FOIL SIDE)

8.5. CSP IC LOCATION OF THE MAIN C.B.A. & SUB C.B.A.

Make sure to install CSP IC in the correct position of the Main C.B.A. & Sub C.B.A. as shown.

8.5.1. MAIN C.B.A.

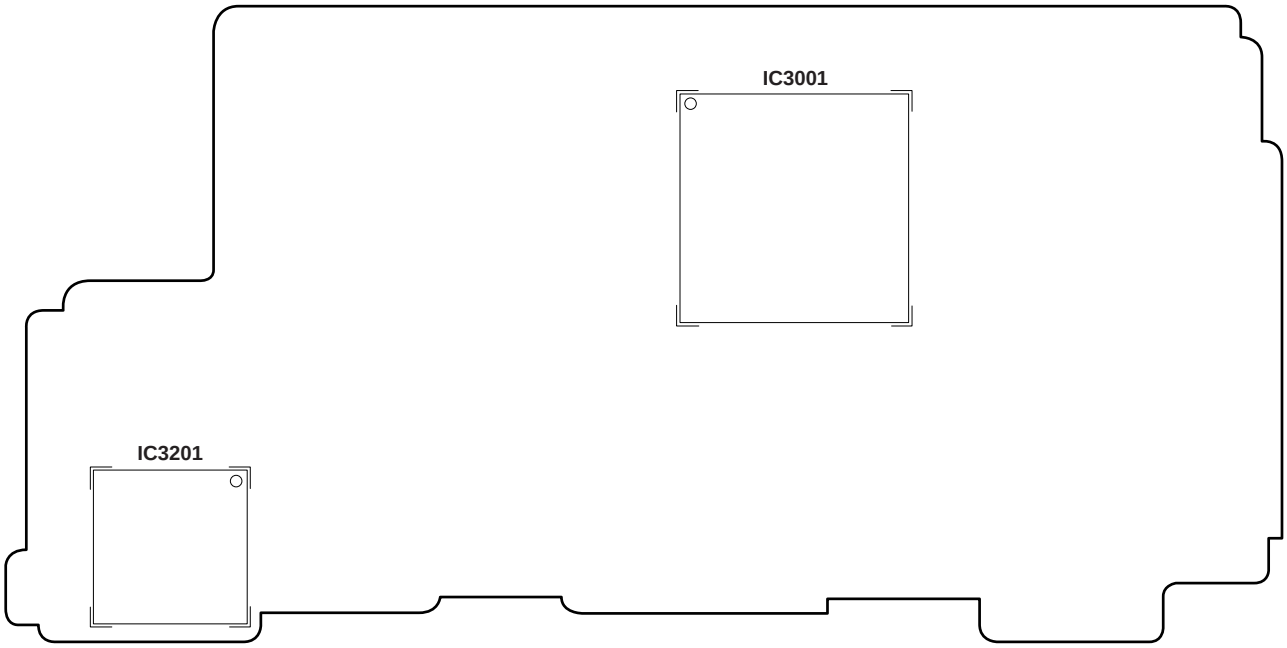

(COMPONENT SIDE)

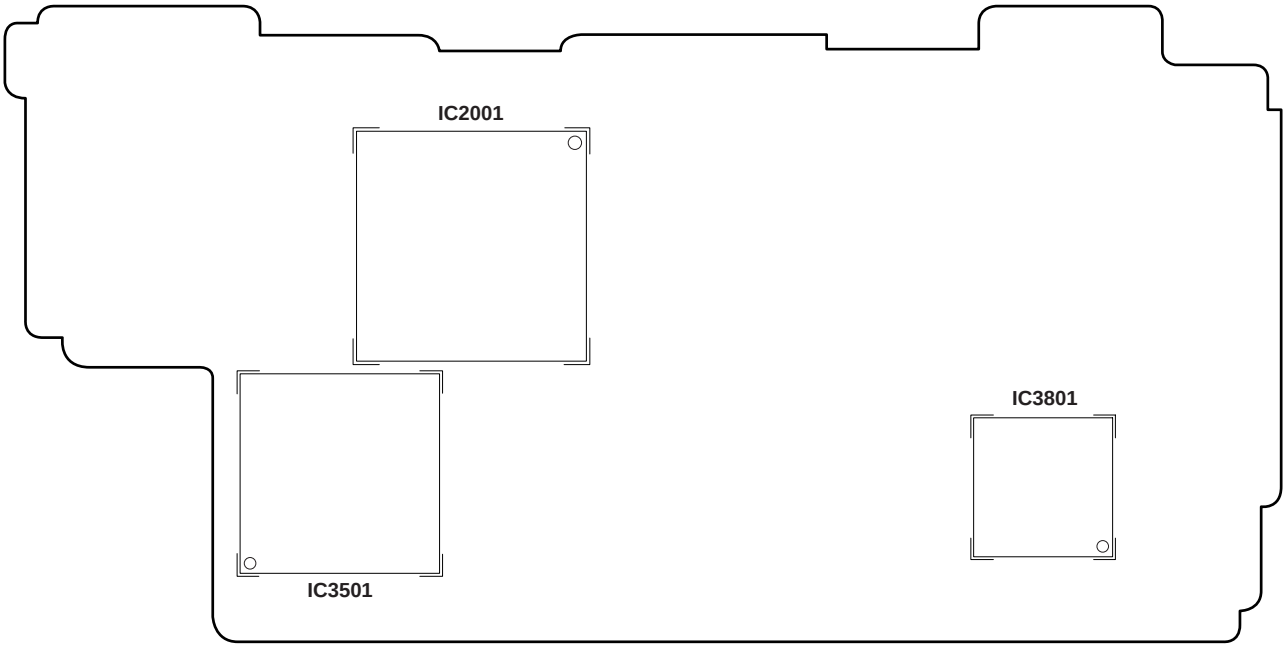

(FOIL SIDE)

8.5.2. SUB C.B.A.

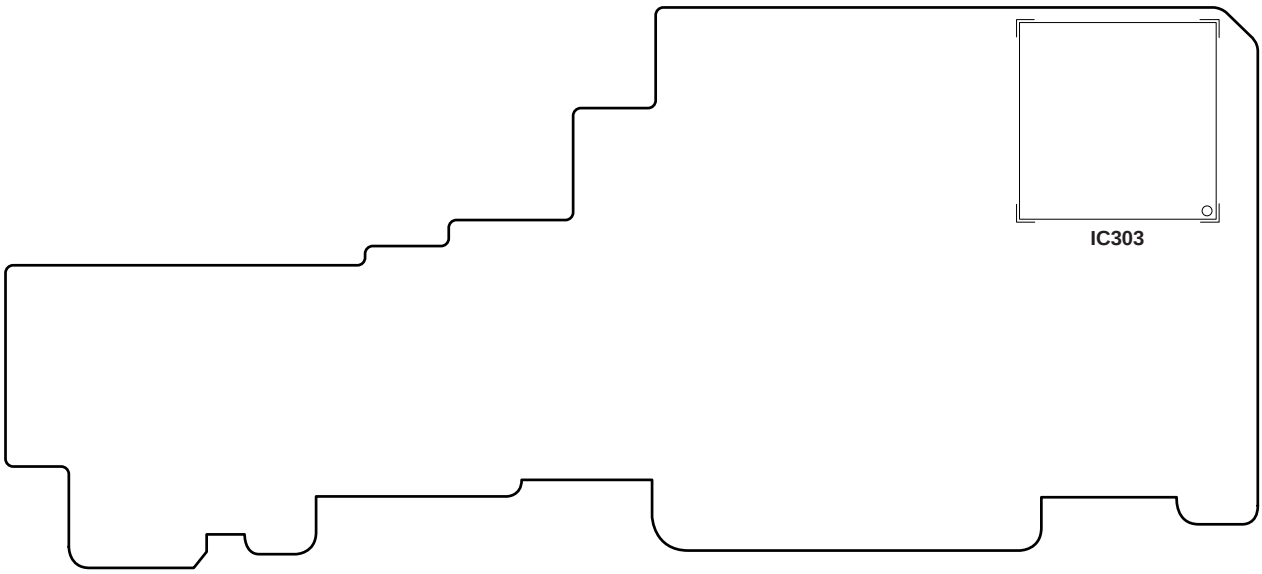

(COMPONENT SIDE)

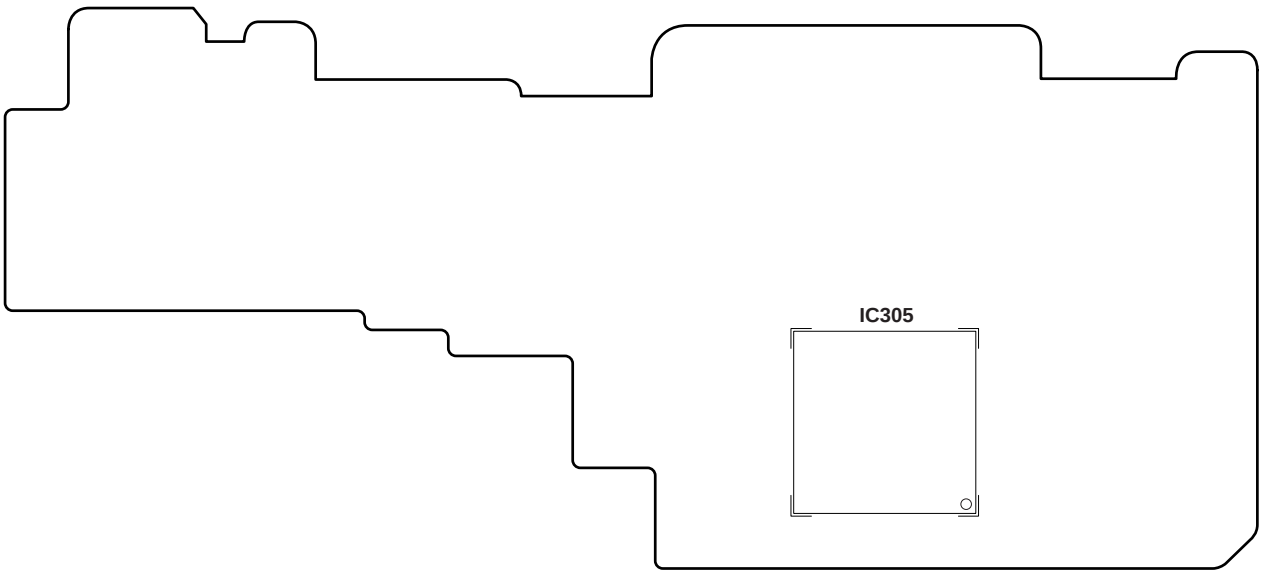

(FOIL SIDE)

8.6. TEMPERATURE PROFILE FOR HEAT RESISTANCE OF CSP IC

When using equipment other than the Pre-Heater, refer to the temperature profile.

CSP ICs for Model of PV-GS250 have the following temperature profile.

8.6.1. IC TEMPERATURE PROFILE (IC303)

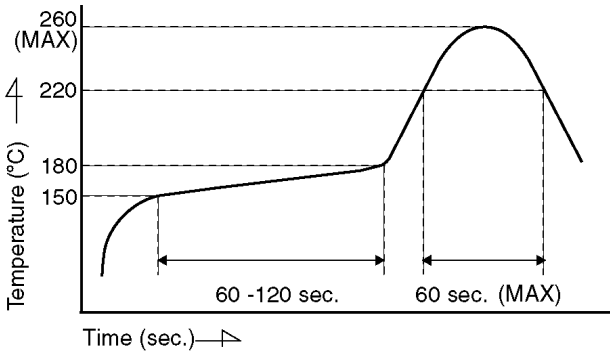

8.6.2. IC TEMPERATURE PROFILE (IC305)

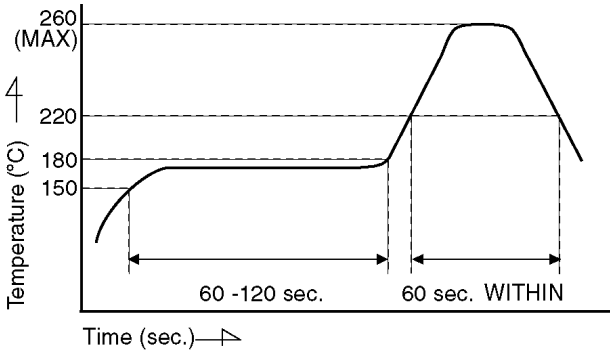

8.6.3. IC TEMPERATURE PROFILE (IC2001)

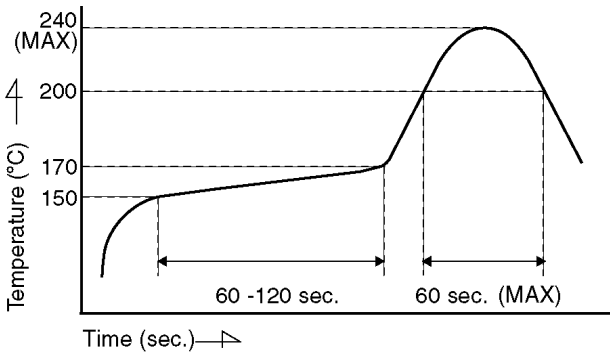

8.6.4. IC TEMPERATURE PROFILE (IC3001, IC3501)

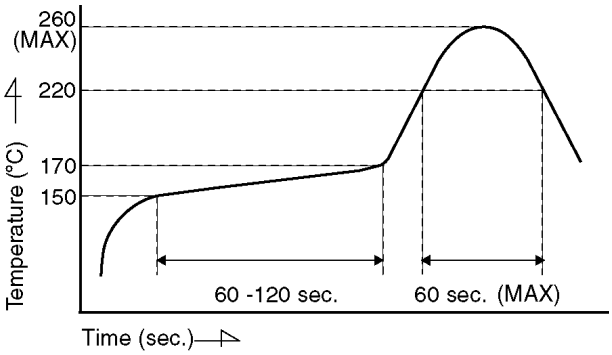

8.6.5. IC TEMPERATURE PROFILE (IC3201)

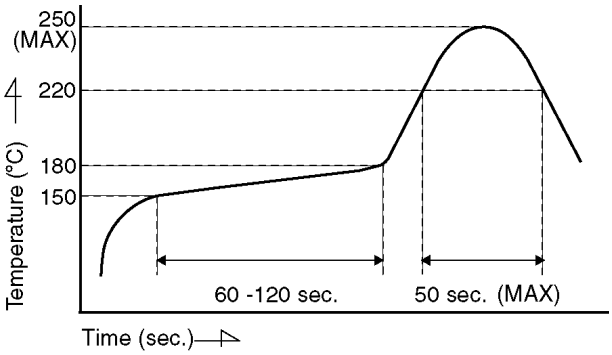

8.6.6. IC TEMPERATURE PROFILE (IC3801)

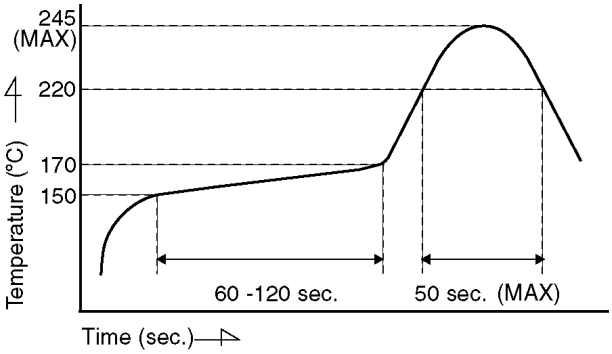

9 ELECTRICAL ADJUSTMENT PROCEDURES

9.1. COMPUTER ASSISTED ADJUSTMENT SYSTEM <TATSUJIN> ADJUSTMENT.

This unit employs the computer assisted system named; “TATSUJIN PC-Adjustment” for Electrical adjustment.

9.2. SET-UP MANUAL FOR DV-Camcorder.

1. SAVE THE SOFTWARE

   Install the effective model’s TATSUJIN Software to PC: Personal Computer.

2. SET-UP (CONNECTION)

   a. Remove the EVR cover of the DV Camcorder.

      Unlock the locking tab and remove the EVR cover as shown in Fig. E1.

   b. Make a connection.

      Connect the PC, the PC/IF Unit and the DV Camcorder as shown in Fig.E2 and E3.

   c. Check the SW position on Measuning Board.

      The position of SW on Measuning Board checks as shown in Fig. E4.

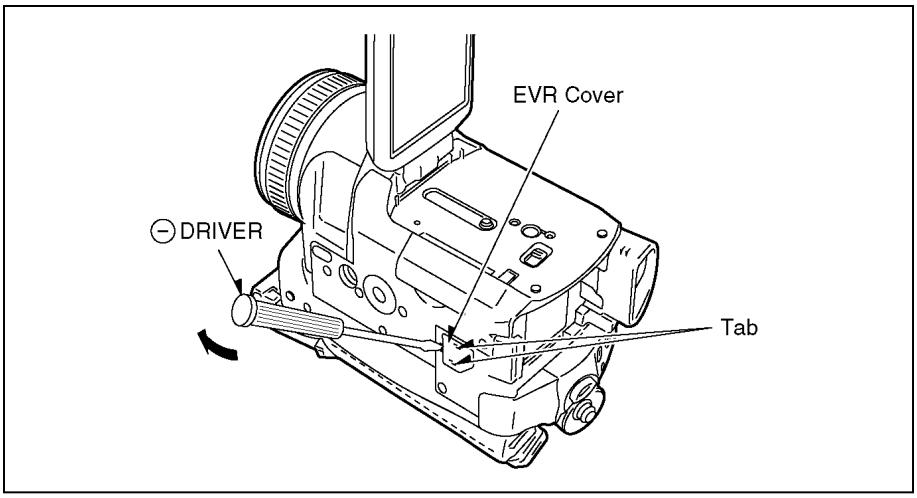

Fig. E1

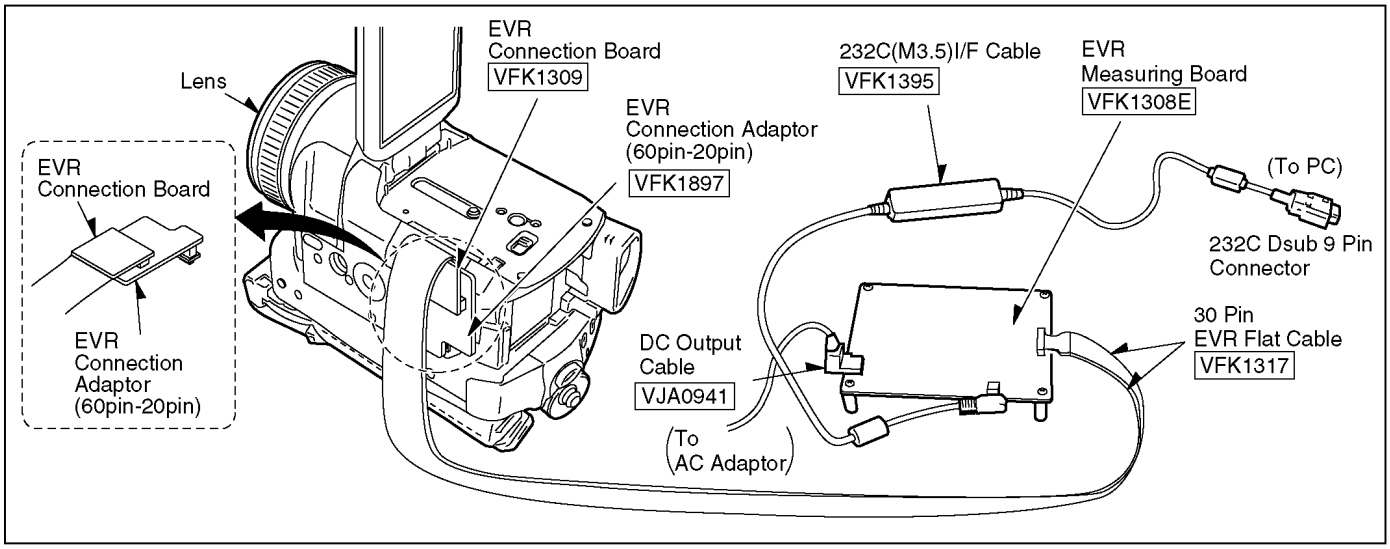

Fig. E2 Necessary Equipment & Tools for Connection.

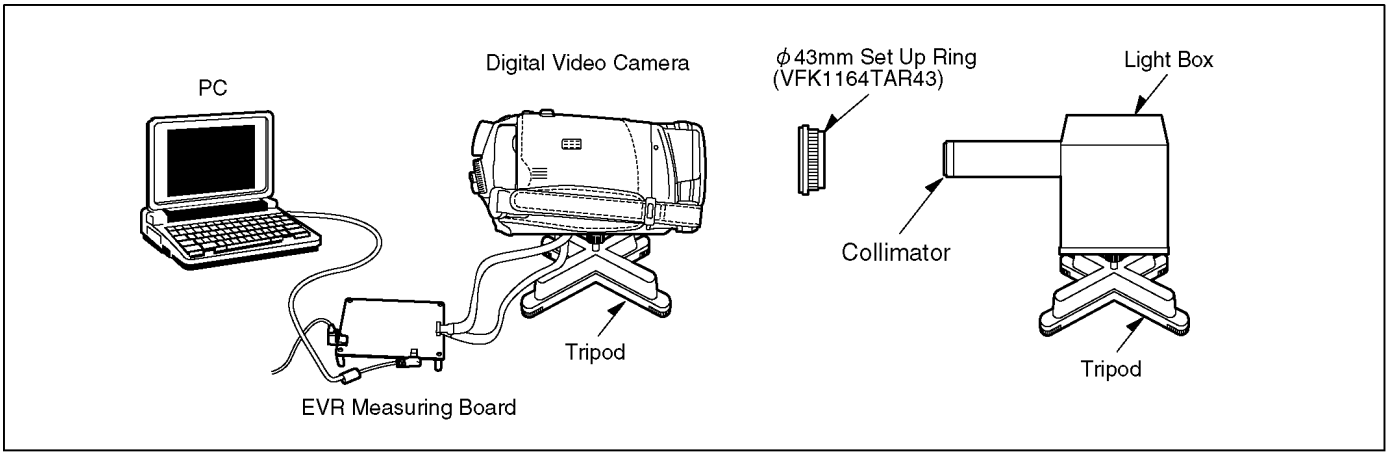

Fig. E3 Rough image of set-up connection

Ref	Name	Parts No.	Q'ty	Remarks
1	DV Camcorder	---	1	The Camcorder being adjusted.
2	Personnel Computer	---	1	With Tatsujin Software.
3	AC Adaptor	---	2	The AC Adaptor for DV Camcorder. The AC Adaptor for M. Board.
4	DC output Cable	--- VJA0941	2	The AC Adaptor for DV Camcorder. The AC Adaptor for M. Board.
5	232C (M3.5) I/F Cable	VFK1395	1	
6	Measuring Board	VFK1308E	1	
7	30 pin Flat Cable	VFK1317	2	
8	Step Up Ring	VFK1164TAR43	1	For Collimator 43mm
9	Connection Board	VFK1309	1	
10	Connection Adaptor (60-20pin)	VFK1897	1	
11	TATSUJIN PC-Adjustment Program	VF0A2004DV30	1	

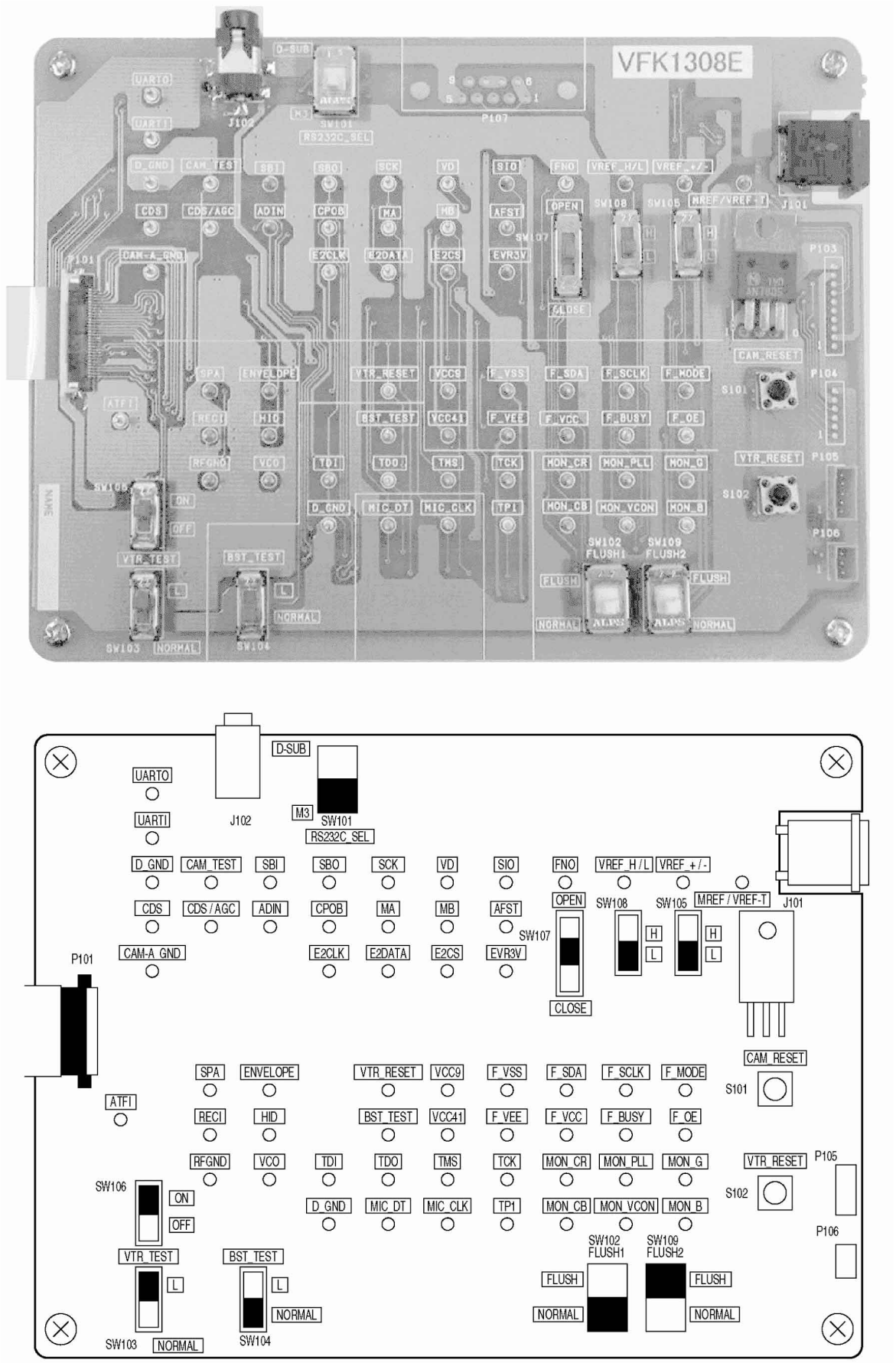

Fig. E4

(Extension cables (VFK1317 × 2pcs) ----- Measuring Board (VFK1308E) ----- 232C I/F Cable (VFK1395))

9.3. SET UP PC-EVR ADJUSTMENT PROGRAM

1. Turn on the PC and install the TATSUJIN Adjustment Program into the PC.
2. Execute the “Gs250.exe“ file by double clicking to start up the PC-EVR Adjustment Program.

   The main menu will be displayed.
3. Select the desired model.
4. Turn on the camcorder. Then, click “Start.”

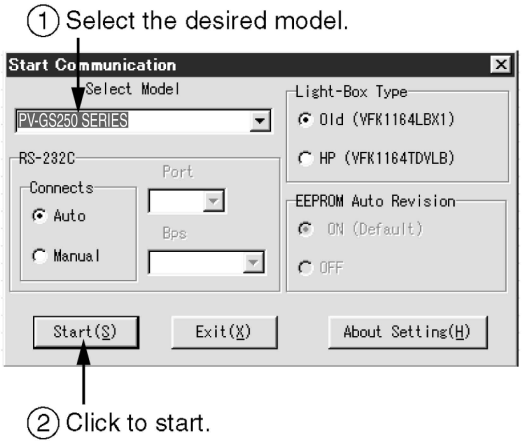

Fig. E5-1

5. The communication is complete, and the dialog will appear.

   Then, click “VCR (V) or Cam (C)” to save the EEPROM data,

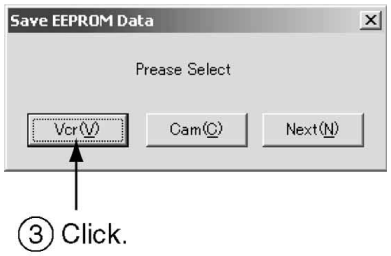

Fig. E5-2

6. Saving for EEPROM data is complete, menu will appear.

   To perform each adjustment, display the adjustment menu by selecting the desired menu from “Camera Adjust,” “Video Adjust,” “LCD Adjust” or “EVF Adjust” and select each adjustment item.

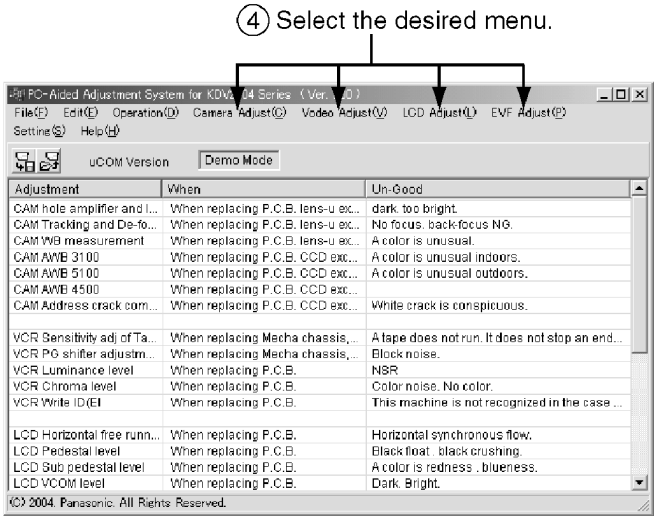

Fig. E5-3

Note:

The adjustment data is stored to the EEPROM IC after each adjustment.

7. After adjustment, to end the software, select “Exit” in File menu or close the window.

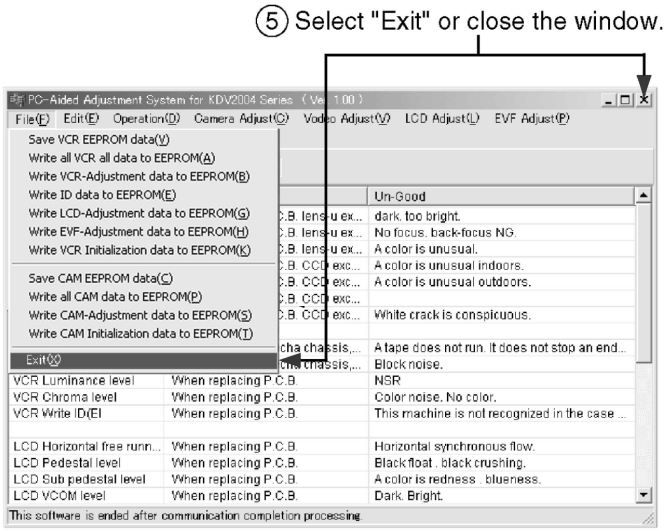

Fig. E5-4

9.4. INITIAL GUIDELINE

The table below shows which adjustments are necessary according to the unit parts and individual parts to be replaced. Make sure to perform these adjustments shown below as necessary.

Adjustment Item	Replacement Parts	Sub C.B.A.	Main C.B.A.	IC307 (EEPROM)	IC2006 (EEPROM)	Lens Unit	Prism Unit	Iris Unit	4ht Moving Frame Unit	Cylinder Unit	Main Chassis Unit	LCD Panel	EVF C.B.A.
Camera	CAM hole amplifier / Iris PWM / ND hole amplifier / ND Iris PWM	○		○		○	○	○					
	CAM Tracking and De-focus	○		○	○	○	○	○	○				
	CAM Revision CCD scratch	○		○			○						
	CAM ALC adjustment	○		○		○	○	○					
	CAM AWB adjustment	○		○			○						
Video	VCR Sensitivity ADJ. of Tape sensors		○		○						○		
	VCR PG shifter adjustment		○		○					○	○		
	VCR Luminance level		○		○								
	VCR Chroma level		○		○								
LCD	LCD Contrast		○		○							○	
	LCD Pedestal level		○		○							○	
	LCD PLL		○		○							○	
	LCD COM bias		○		○							○	
	LCD COM level		○		○							○	
	LCD White balance		○		○							○	
EVF	LED Rank Adjustment		○		○								○

Note : ○ : Adjustment Item

10 MECHANICAL ADJUSTMENT PROCEDURES

10.1. ADJUSTMENT ITEM

Item	Adjustment at the time of the part exchange		
	Half finished goods mechanism	Clyinder	Remarks
Linearlty adjustment& BER value confirmation	○	○	

10.2. ADJUSTMENT PROCEDURES

●Linearlty adjustment & BER value confirmation

1. Remove the mechanism adjustment cover of tis machine as shown in Fig. D1.
2. The spcial tool at the time of electricity adjustment is connected.

   Reference of the connection figure of electricity adjustment.
3. The enbelope detection spcial tool board (VFK1641) is connected to EVR adjustment board as shown in Fig. D2.
4. The enbelope detection spcial tool board is connected to oscilloscope as shown in Fig. D2.
5. The post is adjusted with the post driver(VFK1899) so that recycles the standard tape and the detection wave-link become a flat as shown in Fig. D3.

   *At the time of the clyinder unit exchange unnecessary.
6. The post is adjusted with the post driver so that recycles a alignment tape(VFM3010EDS) and the detection wave-link become a flat once again.
7. Recycling the tape that video-taped it wirh this machine after adjustment, the BER value is confirmed withthe item of the BER the item of the BER confirmation of expert soft inside.

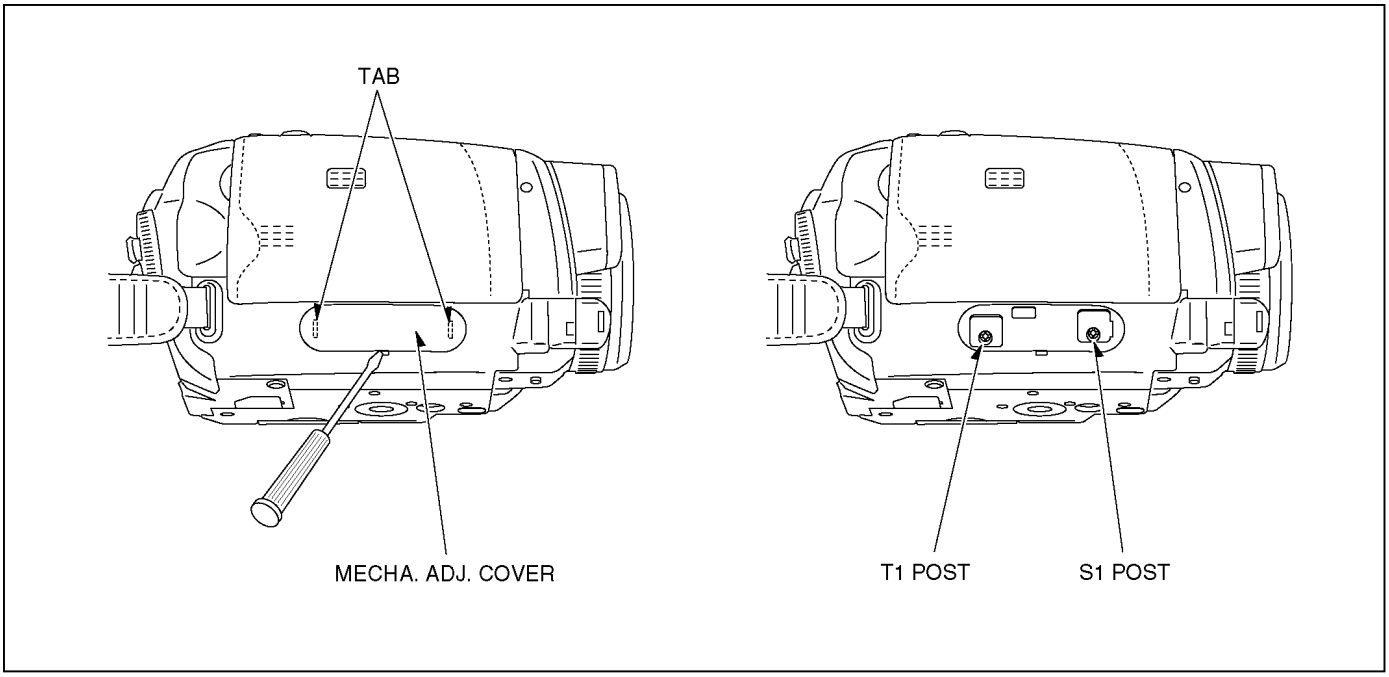

Fig. D1

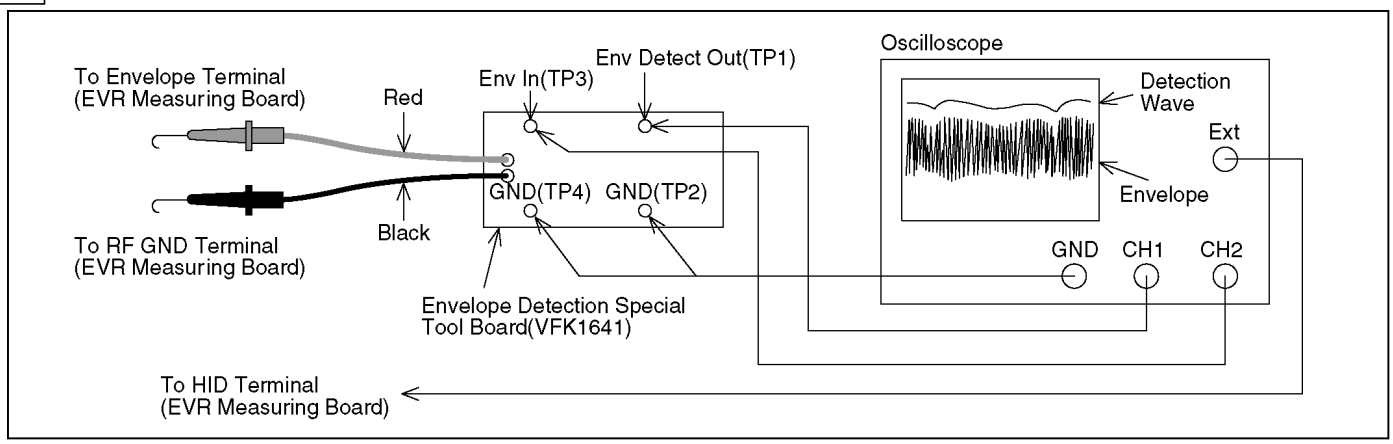
To Envelope Terminal
(EVR Measuring Board)
Red
Env In(TP3)
Env Detect Out(TP1)
Oscilloscope
Detection
Wave
Ext
Envelope
GND(TP4)
GND(TP2)
Black
To RF GND Terminal
(EVR Measuring Board)
GND
CH1
CH2
Envelope Detection Special
Tool Board(VFK1641)
To HID Terminal
(EVR Measuring Board)

Fig. D2

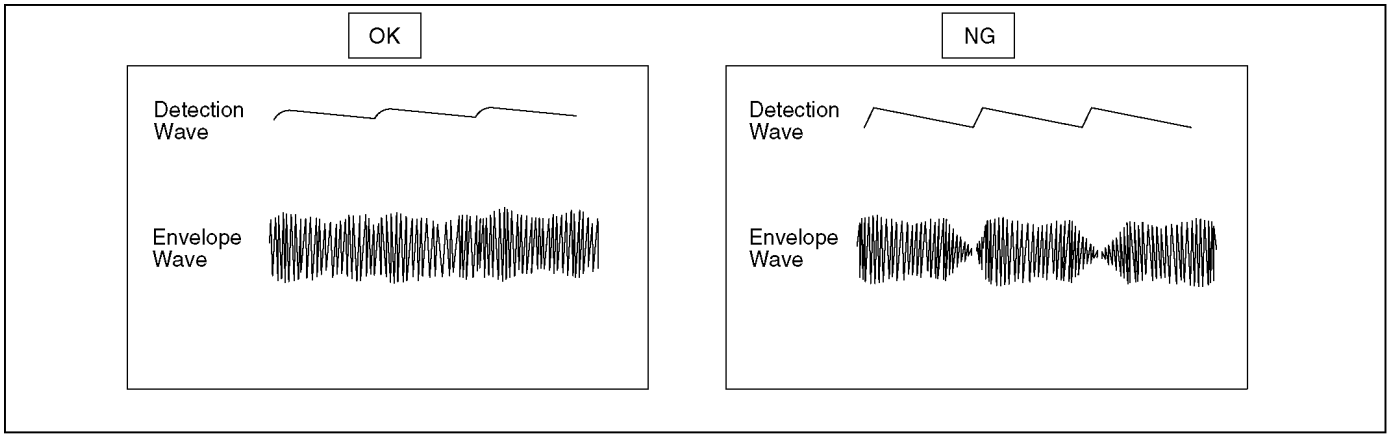
OK
Detection
Wave
Envelope
Wave
NG
Detection
Wave
Envelope
Wave

Fig. D3

11 SERVICE MODE

11.1. ERROR DISPLAY

"PUSH THE RESET SWITCH" is displayed automatically on the EVF or the LCD Monitor when an undesirable condition has occured.

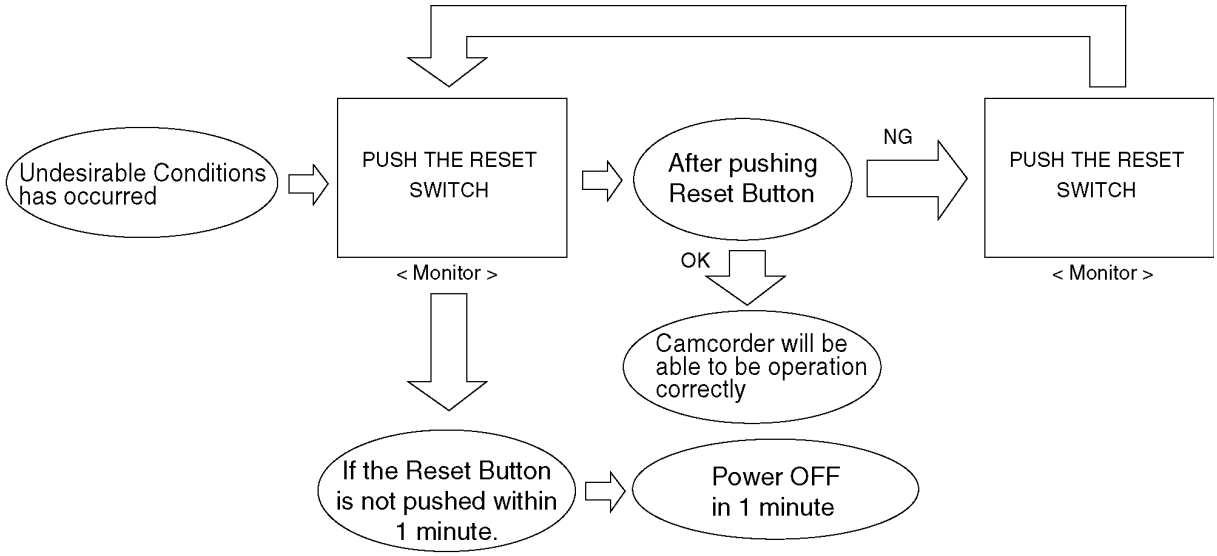

Note:

When "PUSH THE RESET SWITCH" is displayed repeatedly, required.
Check the Error Code which is listed in the Service Menu.

11.2. SERVICE MENU

When abnormal detection contents are confirmed a When I do the following operation automatic diagnosis cord is displayed. (Service Menu)

To enter the Service Menu

Press the [QUICK START] button and [JOYSTICK LEFT ◀] button and [PHOTO SHOT] button simultaneously for 3 seconds (with no SD card inserted).

NOTE:

In the case that a tape or SD card is included the above operation does not work.

This function displays the following items in the Service Menu.

・*1 ... Cylinder elapsed time reset

After replacint the Cylinder Unit, clear the Cylinder elapsed time to 0.

Set to Service Menu.

Item [8] is selected with the [JOYSTICK UP or DOWN ▲/▼] button.

It modes to the [OFF/ON] screen with the [JOYSTICK RIGHT ▶] button.

[ON] is selected with the [JOYSTICK UP or DOWN ▲/▼] button.

Press the [JOYSTICK CENTER] button.

・*2 ... Cylinder elapsed time

This item displays the Cylinder elapsed time (in Base 16).

Set to Service Menu.

Item [3] is selected with the [JOYSTICK UP or DOWN ▲/▼] button.

It modes to the [OFF/ON] screen with the [JOYSTICK RIGHT ▶] button.

[ON] is selected with the [JOYSTICK UP or DOWN ▲/▼] button.

Press the [JOYSTICK CENTER] button.

Calculation method of the Cylinder elapsed time:

(Fot exampe) If "0001234F" is displayed, 0001234F (in Base 16) = 74574 (in Base 10)
74574 x 4.3 (seconds) = 320672.5 (seconds)
fixed value
320672.5 / 3600 (seconds) = 89.1 (hours)

・*3 ... Mechanism lock code record

The current lock code, the last lock code and the lock code before last are displayed in the Item [3] screen.

・*4 ... Lens motor lock code record

The current lock code, the last lock code and the lock code before last are displayed in the Item [3] screen.

Cylinder elapsed time and lock code (Item [3] screen)

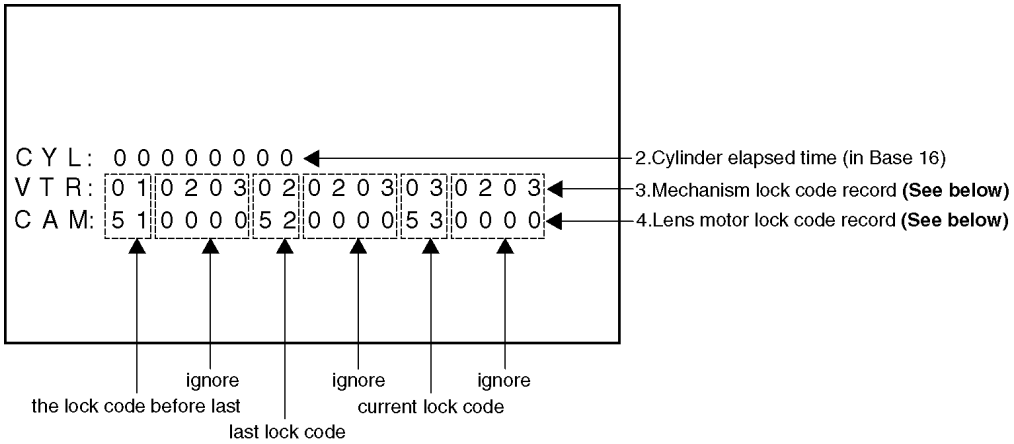

Mechanism & Lens motor lock code

DISPLAY	CONDITION
01	T-REEL LOCK
02	S-REEL LOCK
03	UNLOADING LOCK
04	LOADING LOCK
05	CYLINDER
51	ZOOM MOTOR LOCK
52	FOCUS MOTOR LOCK

To exit the Service Menu

Unplug the AC Cord.

Please do the error cord backup record the clear after repair completion.

CLEAR METHOD

If the Card and Tape inserted, take out it before Service Mode operation.

Making the mode dial of This Machine a PC connection mode, push [QUICK START] button and [JOYSTICK LEFT ◀] button and [RECORDING START/STOP] button simultaneously for 3 seconds.

NOTE:

Do not operate items 1 ~ 7(Except for 3) in the Service Menu.

12 ABBREVIATIONS

	INITIAL/LOGO	ABBREVIATIONS
A	A GND	Analogue GND
	A HASW	Audio Head Amp Switching Pulse
	A HSW	Audio Switching Pulse
	A MUTE	Audio Mute
	A ORP	Audio Overlap Pulse
	A. TR	Auto Tracking
	A0-8, 0-17	Memory Address
	A3V2	AD Converter Reference Voltage
	AB0-4	Address Bus
	AB0-4, AB12-15	Address Bus Line 0-4, 12-15
	ABSF	Focus Encoder Input
	ACI	Analogue Channel Cording IC
	AD	AD Converter
	AD	Auto Date, Analogue Digital Converter
	AD CLK	AD Clock
	AD REC	Audio Delayed REC
	AD0-6	Address
	AD0-6, ADR0-6	Address Data Line
	ADCLK	Analogue Digital Converter Clock
	ADCNT	Analogue Digital Control
	ADCS	Analogue Digital Chip Select
	A-DET	Audio Detect
	ADREC	Audio Delaied Rec
	ADUB	Audio Dubbing
	AE	Auto Expose
	AECNT	Auto Expose Control
	AEE(H)	Audio E-E (H)
	AEH	Audio Erase Head
	AEIRQ	Auto Expose Interrupt Request
	AF/MF	Auto Focus/Manual Focus
	AF DIS CS	AF DIS Chip Select
	A-FADE(L)	Audio Fade (L)
	AF-AMP	AF HALL Bias
	AFCS	Auto Focus Chip Select
	AFRP	Audio PLL Voltage Control
	AF-VN	Zoom Encoder V-Ref (–)
	AF-VP	Zoom Encoder VREF (+)
	AGC	Automatic Gain Control
	AGCCNT	Automatic Gain Control Control
	AGND	Analogue Ground/Audio Ground
	AGS	Anti Ground Shooting
	AH(P) / (R)	Audio Head (Play) / (Record)
	AHASW	Audio Head Amp Switch Pulse
	AHSW	Audio Head Switch Pulse
	AI, AO	Buffer Input, Output
	AIBCK	Bit Clock (to A/D Converter)
	AIDAT	Serial Data (to A/D Converter)
	AILRCK	L/R Clock (to A/D Converter)
	AIMCK	Master Clock (to A/D Converter)
	ALC CNT	Auto Level Control Control

	INITIAL/LOGO	ABBREVIATIONS
	ALC MAIN	Auto Level Control Drive
	ALE	Address Latch Enable
	A-LOCK	Full Auto Switch
	A-MUT(H)	Audio Mute (H)
	ANLPTH	Analogue Loop Through High
	AORP	Audio Overlap Pulse
	APCNT	Aperture Control
	APS	Auto Power Save
	ART VH	Artifical Vertical Sync
	AT CNT	Automatic Tracking Gain Adjust
	ATF	Automatic Track Finding
	ATFCLK	41.85MHz Clock
	ATFG	Auto Track Gain
	ATL	Auto Lock Select
	ATN	Absolute Track Number
	ATR OFF(H)	Auto Tracking Off (H)
	ATV	Advanced TV
	AUDIO(N)	Audio (Normal)
	AUX	Auxiliary
	AVDD	Analogue VDD
	AVSS	Analogue Ground
	AWTB	Auto White Balance B-Y
	AWTR	Auto White Balance R-Y
B	BACK	Back-up
	BACK UP	Microcomputer Back-up
	BACK VDD	Back-up Power
	BATT	Battery
	BATT ALARM	Battery Alarm
	BATT REF	Reference Voltage for Battery
	BCB	B Carrier Balance
	BCBM(B-Y)	B-Y Carrier Balance
	BCBM(R-Y)	R-Y Carrier Balance
	BD0-7	REC/Play In/Out Buss
	BDCK	Standard Bus Data Clock (9MHz)
	BDEN	Standard Bus Data Enable
	BEND	Data Block End Request
	BF	Burst Flag Pulse
	BFA	Burst Flag Pulse for Encorder
	BFO/BFI	Burst Flug Input/Output
	BI, BO	Buffer Input, Output
	BL	Back Light
	BL ON	Back Light ON (L)
	BL4V	Back Light 4V
	BLC 0, 1	Back Light Y Control Out, In
	BLDI/O	Back Light Drive Input/Output
	BLK	Blanking Pulse
	BLKA	Blanking for Encorder
	BLKA	Blanking Pulse for Encorder
	BLKI/O	Blanking Pulse In/Out

	INITIAL/LOGO	ABBREVIATIONS
	BLKZ	Blanking Pulse for Zoom Encorder
	BM	Balance Modulator
	BQUIET	Bus Out Control Signal
	BUF IN/OUT	Buffer In/Out
	B-Y KB	B-Y Carrier Balance
	B-YO	B-Y Signal Out
C	C A In/Out	Pre-Aperture In/Out
	CAPSTP	Capstan Stop Flag
	C CNT	Colour Control
	C SYNC	Composite Sync Signal
	C/N	Carrier/Noise
	C0-7, C00-07	Chrominance Signal 0-7
	CAGAIN	Aperture Gain Control
	CAM	Camera
	CAM CLK	Camera Clock
	CAM RST	Camera Reset
	CAM SIOC	Camera Serial In/Out Contol
	CAM T	Camera Test
	CAM TL	Capstan Trque Limit
	CAP EC	Capstan Trque Control
	CAP P(H)	Capstan Power On (H)
	CAP R/F/S	Capstan Reverse (H)/Stop (M)/Forward (L)
	CAP SW	Capstan Power Control Switch
	CAPSTP H	Capstan Stop Flag (Stop High)
	CAPVM	Capstan Motor Current
	CAPVS	Capstan Motor Power Control Switch
	CAS	Compresion, Audio Process, Shuffling/Deshuffling
	CAS	Memory Address Strobe (Active Low)
	CASDOWN, DWN	Cassette Down (L)
	CB, CR	Chroma B, Chroma R
	CBLK	Composite Blanking Pulse
	CC	Channel Cording
	CCA	Curent Drive Control
	CCA	Current Control Amp
	CCD	Charge Coupled Devise
	CCW	Counterclockwise
	CD SP0-7	Digital Chroma
	CDS	Correlate Double Sampling Signal
	CDS1, 2	Sampling Pulse for CCD Output Signal
	CE	Chip Enable
	CE	Control Pulse Erase
	CEC	Capstan Error Code
	C-ERA(H)	Control Erase (H)
	CFEM	Chrominance Memory Signal
	CFM	Chrominance Field Memory
	CFM1-4	Chroma Field Memory Signal
	CG CLK	Character Generator Clock
	CG CLK DATA	Clock Generator Data
	CG DATA	Character Generator Data
	CGC	Chrominance Gain Control
	CGCS	Character Generator Chip Select
	CGO	Character Generator Serial Data
	CH	Charge

	INITIAL/LOGO	ABBREVIATIONS
	CH1	Channel 1 (Odd Field)
	CHR	Character
	CHR BACK	Character Back-up
	CHR MIX	Character Mix
	CI, CO	Buffer In/Out
	CI,CO	Buffer Input & Output
	CIF	Control Signal Forward Input
	CIF, CIR	Positive Control Pulse, Negative Control Pulse
	CIR	Control Signal Reverse Input
	CK	Clock
	CL/CLK	Clock
	CLASS	Classeffication Signal for Compress (DCT/VLC)
	CLASS 0.1	Class Control Signal Durring DCT/VLC
	CLK135	13.5MHz System Clock
	CLK18	18MHz System Clock
	CLK2	Clock 2 (824XFH: 12.875MHz)
	CLK246	24.576MHz Clock
	CLK27	27MHz System Clock
	CLK450	450KHz Clock
	CLKDCLK	Digital Clock
	CLK-PH	Clock Phase Control
	CLK-REF	Reference Clock
	CLP-RST-H	Clamp Reset High Signal
	CLX	TFT X-axis Transmission Clock
	CLX, CLX1-4	Shift Clock for X Direction (LCD Panel)
	CLY	Shift Clock for Y Direction (LCD Panel)
	CLY	TFT Y-axis Transmission Clock
	CLY FG	Cylinder FG Signal
	CMEMO0-3	Chroma Memory Output Signal 0-3
	CMIX	Character Mix
	CMO	Chrominance Memory Output
	COMPC	Position Detection Pulse
	COM RDY	Serial Enable Signal
	CMODE	Camera Mode
	CNCLK	Clock
	CNR	Chrominance Noise Reduction
	CNT, CONT	Control
	CO	Control Out
	CO0-7	Chrominance Output 0 to 7 (Digital)
	COM	Common
	COM RDY	Serial Transmission Enable
	COMB	Comb Filter
	COS EQ	Cosin Equalizer
	CP	Clamp Pulse
	CP ON(H)	Camera Power On(H)
	CP2, 20	Clamp Pulse
	CP2A, CP2O	Encoder Clamp Pulse
	CPN	Component Signal
	CPOB	Clamp Pulse for Optical Blanking
	CPS	Composite Signal
	CPV	Gate Scan Clock
	CR OUT	Pre Apature Out
	CR POW SW	Camera Remote Power On Switch
	CRA	Aperture Gain Control

	INITIAL/LOGO	ABBREVIATIONS
	CRA	Pre Apature Gain Control
	CRST	Camera Reset
	CS	Chip Select
	CS 0-7	Chrominance Signal Out 0-7
	CSEL	Clock Phase Select
	CSI 0-7	Chrominance Signal In 0-7
	CTSW	Crosstalk Switch
	CURR	Current
	CW	Clockwise
	CYL EC	Cylinder Motor Trque Control
	CYL PG	Cylinder Motor PG
	CYL VM	Cylinder Motor Current or Power
D	D CLK	Digital Clock
	D MODE	Digital Mode Switch Signal
	D01-03	Zoom 01-03
	DA UV SEL	D/A Convertor U/V Select
	DAC	Digital Analogue Converter
	DAG	Digital Analogue Ground
	DB0-7	Data 0-7
	DB0-7	Microprocessor Data
	DCC	DC Clamp Control
	DCCNT	DC Control
	DCI	Digital Channel Cording IC
	DCLR	Digital Clear
	DCP	Digital Clamp Pulse
	DCS-CLK, DA	CAS & DV I/F Serial Clock
	DC-STP1	DCS Serial Start
	DC-STP2	DCS Serial Stop
	DCT	Discrete Cosine Transform (Compression)
	DCX7	Serial Data
	DEDP 0-3	Playback Data
	DEDR 0-3	Rec Data
	DEMO	Demodulation
	DEMP	A/D Convertor Empahsis Control
	DEMP	De-Emphasis
	DFD 0-7	Encode Data In/Out Between Shaffling Memory
	DFD0-7	Encode Input/Output Signal for Shuffling Memory
	DIBDCK	Bit Clock
	DICLK	Digital Clock
	DIDAT	Serial Data
	DIDAT	Serial Data Durring Digital Audio In
	DIF	Digital Interface
	DILRCK	L/R Clock
	DILRCK	Serial Clock Durring Digital Audio In
	DIMCK	Master Clock
	DIMCK	Mater Clock Durring Digital Audio In
	DIO 1-8	Data In/Out
	DIOS	Data In/Out Select Control Signal
	DIOS	Select Signal for Digital In/Out
	DIS	Digital Image Stabilizer
	DIS R/B	Digital Image Stabilizer Read (H)/Busy (L)
	DIS R/B	DIS IC Rady/Busy
	DIS/KAND	Digital Image Stabilizer/Sensitivity

	INITIAL/LOGO	ABBREVIATIONS
	DISCS	Dis Chip Select
	DISP	Display
	DL	Delay Line
	DOBCK	Audio A/D Convertor Bit Clock
	DOCTL	Data Output Control Signal
	DODAT	Serial Data (to D/A Converter)
	DOLRCK	Audio A/D Converter LR Clock
	DOLRCK	L/R Clock (to D/A Converter)
	DOMCK	Audio A/D Converter Master Clock
	DOMCK	Master Clock (to D/A Converter)
	DQ 1-16	Memory Data
	DRAM CAS	D-RAM Colum Address Strobe
	DRAM OE	D-RAM Out Enable
	DRAM RAS	D-RAM Read Address Strobe
	DREC	AV Delayed REC Start Pulse
	DRK	Dark (LPF Switch for Auto Focus)
	DS1, 2	Double Sampling Pulse
	DSF 0-7	Data In/Out for Shaffling Memory
	DSF 0-7	Input/Output Data to Shuffling Memory (18MHz)
	DSP	Digital Signal Processor
	DSP R/B	DSP IC Rady/Busy
	DSP-48K-H	DSP IC Clock Select
	DSTB	Data Stobe Signal
	DSV	Digital Sum Variation
	DV	Digital Video
	DVB	Digital Video Broadcast
	DVC	Digital Video Cassette
	DVDD	Digital VDD
	DVIO	Digital Video Input Output
	DVSS	Digital Ground
	DX	Shift Data for X Direction (for LCD)
	DY	Shift Data for Y Direction (for LCD)
	DY	TFT Y-axis Shift Data
	DZ	Digital Zoom
E	E Snap	Electric Snap Shot
	E ZM	Electric Zoom
	E2 CS or E2P CS	EEPROM Chip Select
	E2 R/B	EEPROM Rady/Busy
	E2P	EEPROM
	EARP	Earphone
	EC	Torque Control
	ECC	Error Correction Cording
	ECM	Electric Condencer Mic
	ECR	Reference Voltage for Capstan Torque
	EDA	Error Correction, DCI, ATF Servo
	EE CS	EEPROM Chip Select
	EE R/B	EEPROM Read (H)/Busy (L)
	EEPROM	Electric Erasable Programable Read Only Memory
	EIS	Electric Image Stabilizer (DIS)
	EMP	A/D Convertor Emphasis Control
	ENAB	Enable
	ENV	Enverope
	EOB	End of Block

	INITIAL/LOGO	ABBREVIATIONS
	EQ	Equalizer
	EVF	Electric View Finder
	EXT DC	External DC (AC Adaptor)
	EXT DC(H)	AC Adaptor DC (H)
	EXT NOREG	AC Adaptor 6V
	EXT S DATA	Serial Data for Edit
	EXT SCK	Serial Clock for Edit
	EZOOM	Electric Zoom
F		
	F ENC	Lens F-Value
	FACT MODE	Factry Mode (not used in the service)
	FB	Feed Back
	FC	Saw Tooth Signal In
	FCK	Clock
	FCO	Saw Tooth Signal Generator
	FENC	Focus Encoder
	FEND	Frame End Pulse
	FH2B	FH/2 (15.625KHz / 2=7.8125KHz)
	FIX OSD	Auto Tracking Off (H)
	FLICK	Flicker Output
	FM	Field Memory
	FM0-7	Field Memory 0-7
	FMCO0-3	Field Memory Chrominance Out 0-4
	FMDIR	Focus Motor Direction
	FMOEM	Field Memory Enable
	FMOEO	Field Memory Enable
	FMT1-4	Focus Motor Terminal 1-4
	FMY00-07	Field Memory Luminance Out 0-7
	FMYI0-07	Field Memory Luminance In 0-7
	FNO	F Value
	FPS	Frame Refference Signal
	FR	Capstan Reverse High
	FRP	Frame Refference Pulse
	FRPSO	Frame Start Pulse
G	G1, G2, G3	Gap 1, 2 and 3
	GCA	Gain Control AMP
	GCNT	Gain Control
	G-CNT	AGC Adjustment
	GCTRL	Gain Control
	GENE	Generator
	GF	FG AMP Terminal
	GSW	Ground for Switching Power
H	H/M/N	Hi-Fi / Mix / Normal
	H/N	Hi-Fi / Normal
	H1, 2	H. CCD Drive Pulse
	HAP	Horizontal Aperture
	HASW	Head AMP Switching Pulse
	HB	Hall Bias
	HBR SET	High Brightness Set
	HBRST	High Brightness Set
	HCLR	High Clear
	HCP	Shift Clock for Horizontal Drive

	INITIAL/LOGO	ABBREVIATIONS
	HD	Horizontal Drive Pulse
	HDTV	High Definition TV
	HEX	Hexadecimal
	HG	Hall Gain
	HID	Head Switching Pulse
	HLT	High Bright Signal
	HALL IN(+), (–)	Input Signal from Hall IC
	HP	Headphone
	HPF	High Pass Filter
	HSE	Modulated Data Output
	HSP	Timing Pulse for Shaffling Memory
	HSS	Horizontal Sync Signal
	HSW	Head Switching Pulse
	HS-WT	High Speed Zoom
	HSZ	High Speed Zoom
I	I/F	Interface
	I-2 C	Inter Integrated Circuit
	ID(H)	Wide Television (H)
	IMP	Inter Microprocessor Protocol
	INF	CCD Input Signal 1
	INF	Input Frame Signal
	INS	CCD Input SIgnal 2
	INTER	Interval Recording
	INV	Inverter
	IOU	R-Y Analogue Signal Output
	IOV	B-Y Analogue Signal Output
	IOY	Y Analogue Signal Output
	IR	Infrared Rays
	IRDET	Imfrared Ray Detection
	IREF	Current Adjustment Terminal
	IRIS/SH	Iris / Shutter Control
	IRQ	Interrupt Request
	ITI	Insert & Track Information
J	JPEG	Joint Photographic Image Cording Experts Group
K	KANDO	Digital Gain Up
	KB	Carrier Balance
	KEY IN	Key Scan
	KND	Digital Gain Up
	KNEE	Luminance Compensate
L	LCD	Liquid Crystal Display
	LCD P(L)	LCD Power On (L)
	LD	Load Pulse
	LDD	Liquid Direct Drive
	LEDCNT	LED Control
	LI-BATT	Lithium Battery
	LOAD	Loading
	LOAD F, R	Loading Direction (F: Forward / R: Reverse)
	LPF	Low Pass Filter
	LRMONO	Monoral Audio (L + R)
	LSB	Least Significant Bit

	INITIAL/LOGO	ABBREVIATIONS
	LVL	LPF Switch for Auto Focus
M	M1-3	Motor Coil Terminal 1 to 3
	MA0-5	Microprocessor Address Data 0-5
	Mbps	Megahertz Bit Per Second
	MD	Modulation
	MD0-7	Microprocessor Data 0-7
	MDT0-7	Microprocessor Data 0-7
	ME (TAPE)	Metal Evaporated (Tape)
	MENB	Focus Motor Enable
	MFF	Manual Focus Far
	MFN	Manual Focus Near
	MHSYNC	Monitor Horizontal Sync Signal
	MIC	Memory In Cassette
	MIG	Meta In Gap
	MIX N.R.D.	Non Rec Data Mix
	MOD	Modulation
	MOUT	Mic Out
	MP (TAPE)	Metal Particle (Tape)
	MPEG	Moving Picture Image Cording Experts Group
	MPEG2	Moving Picture Image Cording Experts Group Phase 2
	MRST	Focus Motor Reset
	MSB	Most Signal Bit
	MVSYNC	Monitor Vertical Sync Signal
N	N/F	Near/Far Focus
	N/P	NTSC/PAL
	NB1-3	Base for NPN Transistor
	NC	No Connection
	NC1-3	Corrector of NPN Transistor
	NCLR	Power On Reset
	NCP1	Clamp Pulse
	NCP2+VDH	Clamp Pulse + Horizontal Drive Pulse
	NCP2+VDM	Clamp Pulse + Gate Pulse
	NDE	Non Liner De-Emphasis
	NE	Emitor of NPN Transistor
	NLE	Non Liner Emphasis
	NR	Noise Reduction
	NRD	Non Rec Data
	NRD BLK	Non Rec Data Blanking
	NRD CLK	No Rec Data Clock
	NRE	Read Enable Input (Low Active)
	NWE	Write Enable (Low Active)
O	OB	Optical Black
	OBCNT	Optical Black Control
	OBREF	Reference Voltage for Optical Black Control
	OE	Output Enable
	OFH	Horizontal Counted Down Clock Signal (Reference)
	OFS	Offset
	OP	Operation AMP Output
	OSD	ON Screen Display
	OVL	Overlap Pulse
	OZ	Optical Zoom

	INITIAL/LOGO	ABBREVIATIONS
P	P SW	Power Switch
	PB1-3	PNP Base 1-3
	PBCTL	Play Back Control
	PBCTL	Pre-Branking Control
	PBH	Head Amp Switch
	PBLK	Pre-Blanking (Pulse)
	PC1-3	Corrector of PNP Transistor
	PCBM	Carrier Balance
	PCH	Phase Compensator (Hall AMP)
	PCI	Phase Compensator (Current)
	PCO	Phase Compensator Out
	PCS	Switching Power Control
	PCV	Phase Compensator (Voltage)
	PE	Emitter of PNP Transistor
	PED	Pedestal
	PEDECNT	Pedestal Control
	PENO	Alarm (L)
	PFP	Pilot Frame Position
	PGA, B	Power Ground A, B
	PGC	Pulse Generator Comparator
	PGI	Pulse Generator Input
	PGMM	Pulse Generator Monostable Multivibrator
	PGO	Output of Pulse Generator AMP
	PMODE	Select Signal for Normal / Wide Screen
	PON	Power On
	POR	Power On Reset
	POSCOM	Common Position
	PREAMP	Pre-AMP
	PREBLK	Pre-Blanking
	PT	Protect for V Voltage
	PWM	Pulse Width Modulation
	PWMB	Pulse Width Modulation Pulse
Q	Q2H	Source Output Select
R	R CTL P	Recorded Control Pulse (+)
	R CTL R	Recorded Control Pulse (–)
	R/B	Read/Busy
	R/L	Direction Control for Data Transmition
	RA	Recording AMP
	RA1	Rec AMP 1
	RAC AC	Rec Audio Current
	RAD	Read Address Data
	RAE	Read Address Enable
	RB	Read Busy
	R-B	R Bias
	RCB	R Carrier Balance
	RE	Read Enable
	RE(F), (S)	Rotary Erase Head Transformer
	REB	R Bias
	REC CC	Rec Current Control
	REC CCNT	Rec Current Control
	RECCTRL	Recording Control Pulse
	RECI	Rec Amp Switch

	INITIAL/LOGO	ABBREVIATIONS
	RENCF	Lens Control (Forward)
	RENCR	Lens Control (Reverse)
	RERASE	Rotary Erase Head
	RGBIV1-2	1V Inverted Signal 1-2
	RGO R/G OFF	Offset Voltage for AWT R
	RSF	Capstan Direction (Reverse / Stop / Forward)
	RST	Reset
	RSTB	R Strobe
	RSTPWD	Reset Power Down Input
	RSTR	Reset Read
	RSTW	Reset Write
	RT	Saw Tooth Terminal
	RVCO	Resister for Oscillation
	RW	Read Write
	RWAE	Read Write Enable
S	S PHOT	Supply Photo Transistor
	S/H	Sampling Hold
	S/S	Start/Stop
	SBD	Serial Data
	SBI	Serial Data Input
	SBO	Serial Data Output
	SBT	Serial Clock
	SCAN0-5	Key Scan 0-5
	SCK	Serial Clock
	SCR	Search
	SCR, S.C.R.	Still Cue Review
	SEG.	Segment
	SET	White Balance Set
	SH/IRIS	Shutter/Iris Control
	SHIFT	Capasitor for Phase Shift
	SI	Serial Data Input
	SIC	Shift In Clock Input
	SIOC	Serial In/Out Control
	SMCE	Shaffling Memory Chip Enable
	SMRS	Shaffling Memory Read Strobe
	SMWE	Shaffling Memory Write Enable
	SMWS	Shaffling Memory Read Strobe
	SNAP	Snap Shot
	SNS LED	Sensor LED
	SO	Serial Data Output
	SPA	ATF Smapling Pulse
	SPEN	8 Bit Shift Register Enable
	SPK	Speaker
	SPO	Reset for Switcing Power
	SPST	8 Bit Shift Register Strobe
	SREELP	Supply Reel Pulse
	SRT	Start
	SSA	Start Sync block Area
	SSW	Select Signal for Low Pass Filter
	ST5V	Safety Tab 5V
	STAB	Safety Tab Switch
	STB	Stand by Signal
	STB	Strobe

	INITIAL/LOGO	ABBREVIATIONS
	SWB	Switching Pre-Drive Pulse
	SYL EC	Cylinder Torque Control
	SYL FG	Cylinder FG
T	T PHOT	Take-up Photo Transistor
	TBC	Time Base Conntrol
	TFT	Thim Film Transistor
	TH	Thermostat for Battery
	TI	Test Mode Select
	TL	Torque Limit
	TM	Sub Code
	TMD	Sub Code Data
	TRE	Tracking Error Signal
	TREEL(P)	Take-up Reel (Pulse)
	TRFIX	Tracking Fix
	TRIWAVE	Tracking Wave
	TRP	Tracking Position
	TRP	Trap
	TSR	Head Switching Refference
	TST	Time Scale Transfer
U	U/V SEL	R-Y/B-Y Select Signal
	UNLOAD	Un-Loading
	UNRE	Microprocessor Read Enable
	UNWE	Microprocessor Write Enable
	UV	R-Y/B-Y
	UV SEL	R-Y/B-Y Select Signal
V	V1-V4	V. CCD Drive Pulse
	VB	VH Filter Switching
	VCE	Power Terminal
	VCNTL	Video Control
	VCO	Voltage Control Oscillator
	VCP	Shift Clock Output for Vertical Drive
	VCTLD	Video Control
	VCTRL	Voltage Charge Control
	VD	Vertical Drive Pulse
	VDDX	X Drive Power for Colour LCD
	VDDXY	XY Drive Power for Colour LCD
	VDDY	Y Drive Power for Colour LCD
	VDREC	Video Delayed Rec
	Vgg	Voltage for Gate IC
	Vgl	Gate off Voltage
	VID	Video Signal Out
	VIN	Video In
	VITC	Vertical Interval Time Code
	VITERBI	One of Signal Detection Method
	VL	Low Voltage
	VLC	Variable Length Cording
	VLOCKP	Artificial Sync Pulse
	VLP	Artificial Sync Pulse
	VM	Motor Voltage
	VMD	Velocity Mode Data
	VMD1-3	Electric Shutter Mode

INITIAL/LOGO		ABBREVIATIONS
	VMODE	NTSC/PAL Select Switch
	VMVH	VH Filter Switching
	VORP	Video Overlap
	VRB	Voltage Refference Bottom
	VRBS	Voltage Refference Bottom Output
	VREF1R3V	Refference Voltage 1.3V
	VREF3R3V	Refference Voltage 3.3V
	VREFH	Refference Voltage High Side
	VREFL	Refference Voltage Low Side
	VRI	Refference Voltage Input
	VRO	Refference Voltage Output
	VRT	Voltage Refference Top
	VRTS	Voltage Refference Top Output
	VS	Switching Comparator
	VSS	Vertical Sync Signal
	VSSX	X Driver Power for Colour LCD
	VSSXY	X-Y Driver Power for Colour LCD
W	W/N	Mode Select for Window Mode
	W/N	Wide / Normal
	WAD	Write Address Enable
	WAE	Write Address Enable
	WAERAE	Write Address Enable
	WARI	Interrupt
	WB	White Balance
	WE	Write Enable
	WEM	Memory Write Enable
	WHD	Wide Horizontal Drive Pulse
	WIDE A	Wide Zoom
	WSB	B AGC Control
	WSR	R AGC Control
	WTV	Wide TV
X	XP	FG Logic Reset
Y	Y FM0-7	Y Field Memory 0-7
	YCE	Cylinder Error Code
	YGC	Y Gain Control
	YMO 0-7	Y Field Memory 0-7
	YNCST	Noize Canceller
	YNR	Luminance Noise Reduction
	YSDP 0-7	Digital Y Out 0-7
Z	Z.ENC	Zoom Encoder
	Z.MIC	Zoom Mic
	ZENC	Zoom Encoder Output
	ZMDIR	Zoom Drive
	ZMEN	Zoom Enable
	ZMT	Zoom Motor Tele Side
	ZMT (+)/(–)	Zoom Motor (+)/(–)
	ZMTER	Zoom Motor Tele Side
	ZMW	Zoom Motor Wide Side
	ZSW	Zoom Switch

13 BLOCK DIAGRAM

13.1. OVERALL BLOCK DIAGRAM

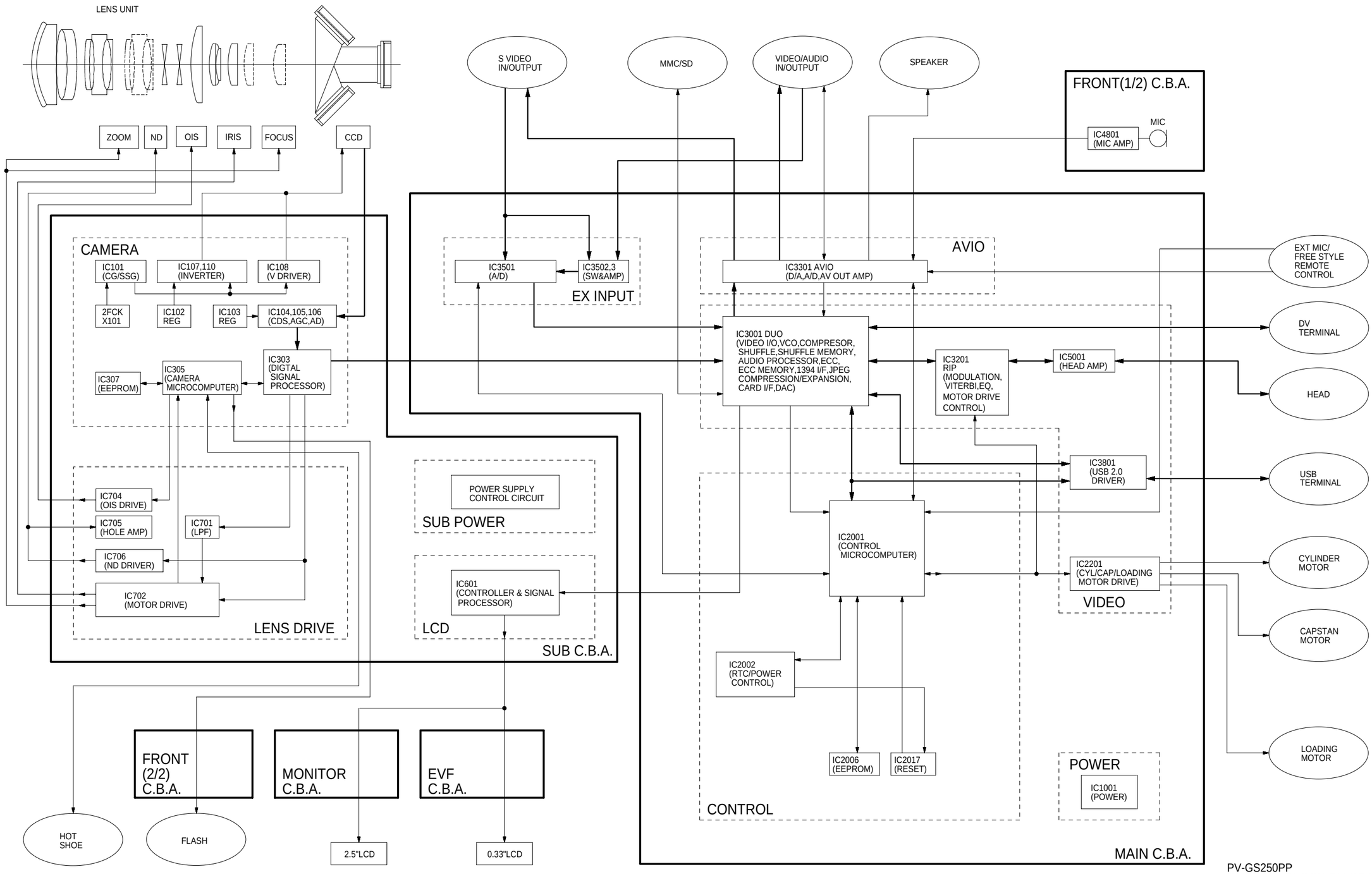

PV-GS250PP
OVERALL BLOCK DIAGRAM

13.2. CAMERA 1 BLOCK DIAGRAM (SENSOR BLOCK DIAGRAM)

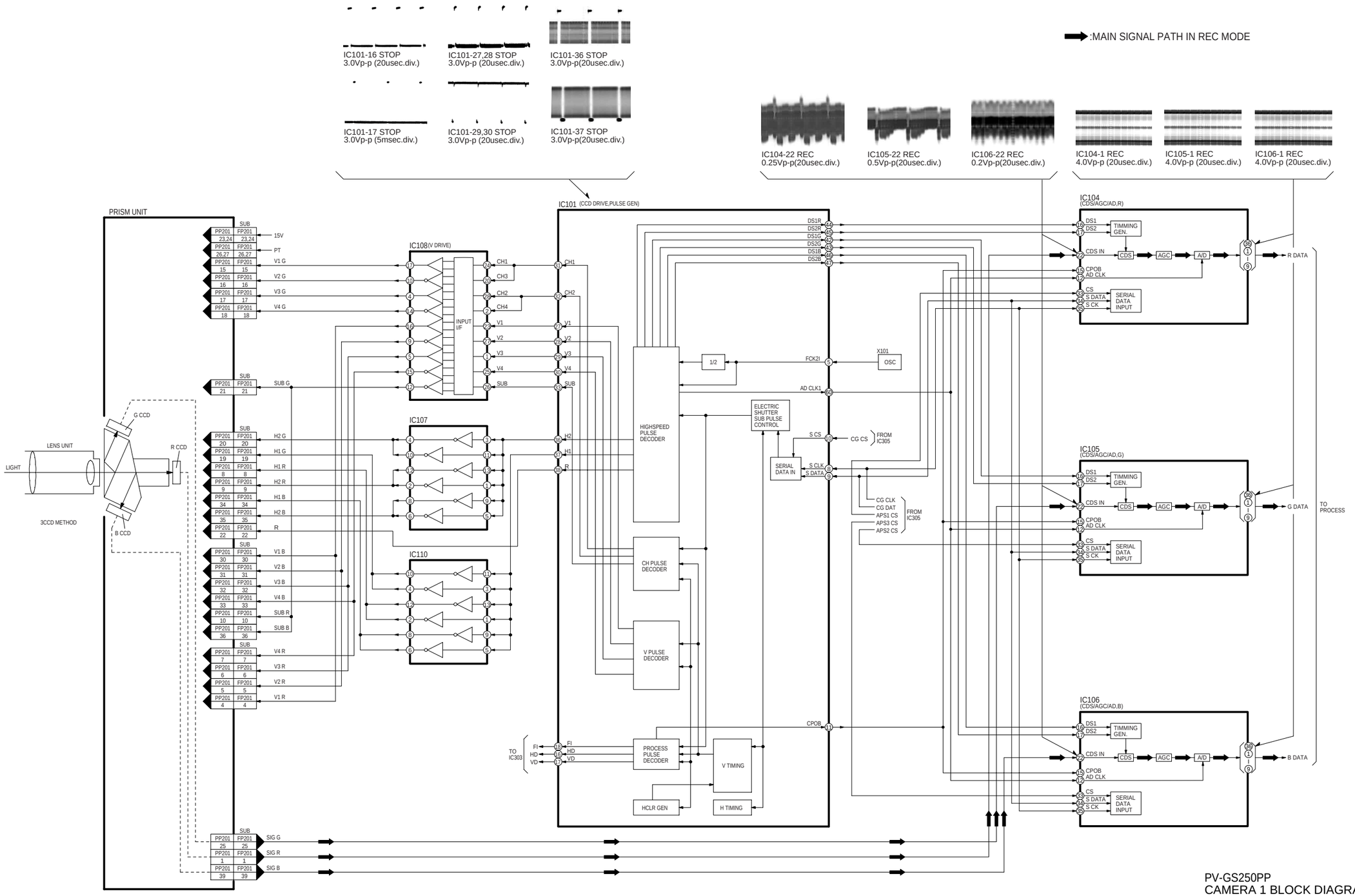

PV-GS250PP
CAMERA 1 BLOCK DIAGRAM
(SENSOR BLOCK DIAGRAM)

13.3. CAMERA 2 BLOCK DIAGRAM (PROCESS BLOCK DIAGRAM)

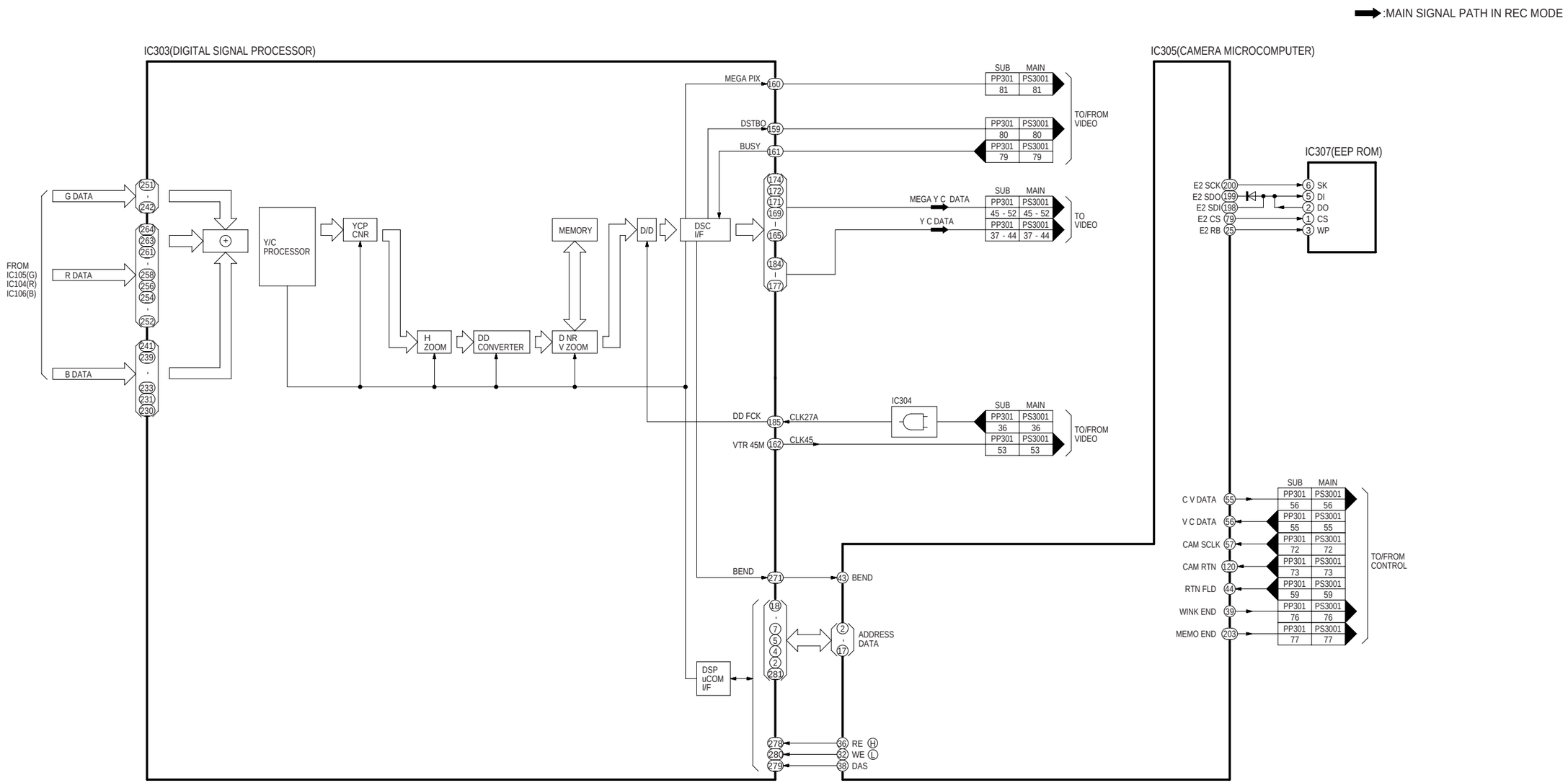

PV-GS250PP
CAMERA 2 BLOCK DIAGRAM
(PROCESS BLOCK DIAGRAM)

13.4. LENS DRIVE BLOCK DIAGRAM

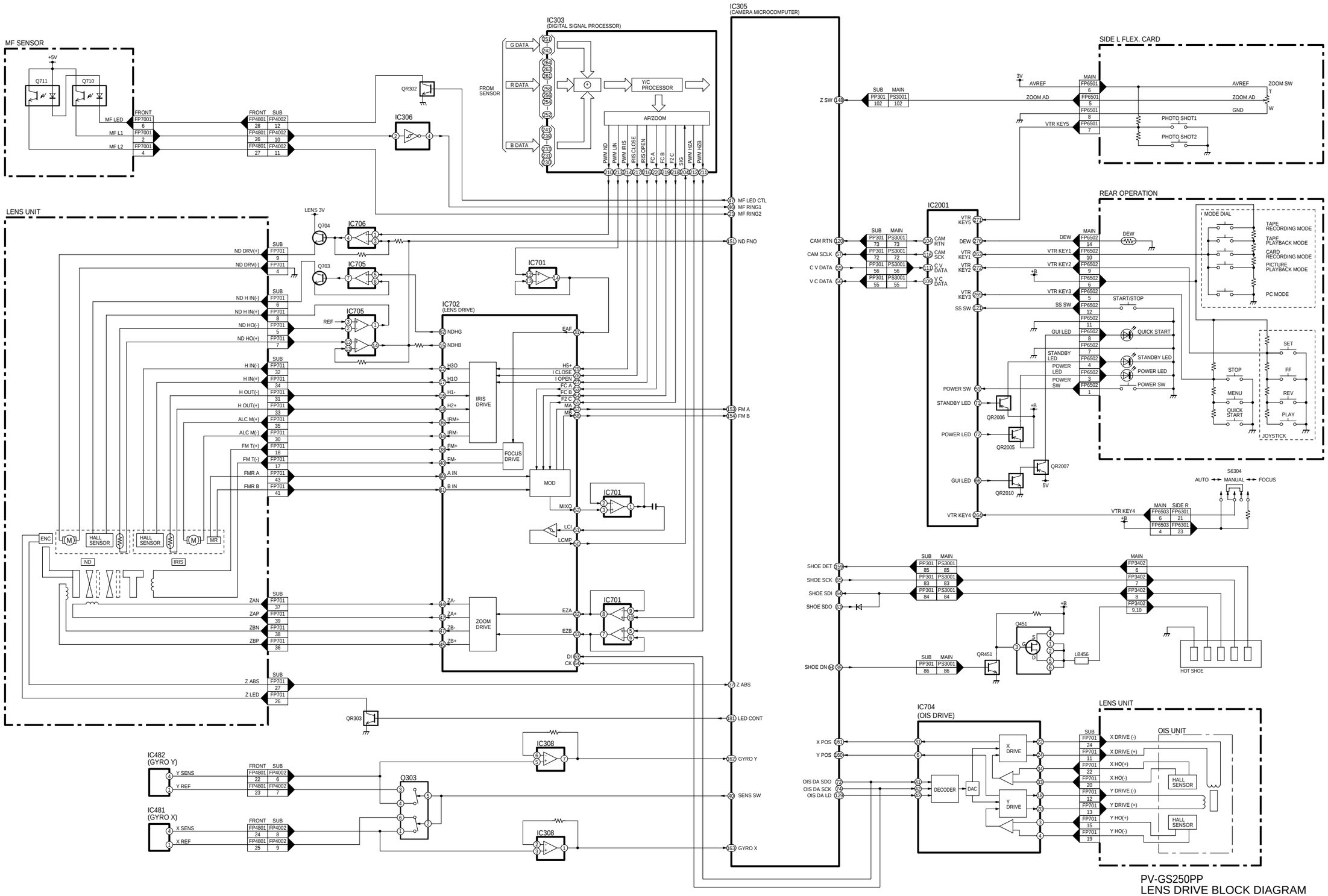

PV-GS250PP
LENS DRIVE BLOCK DIAGRAM

13.5. CONTROL 1 BLOCK DIAGRAM

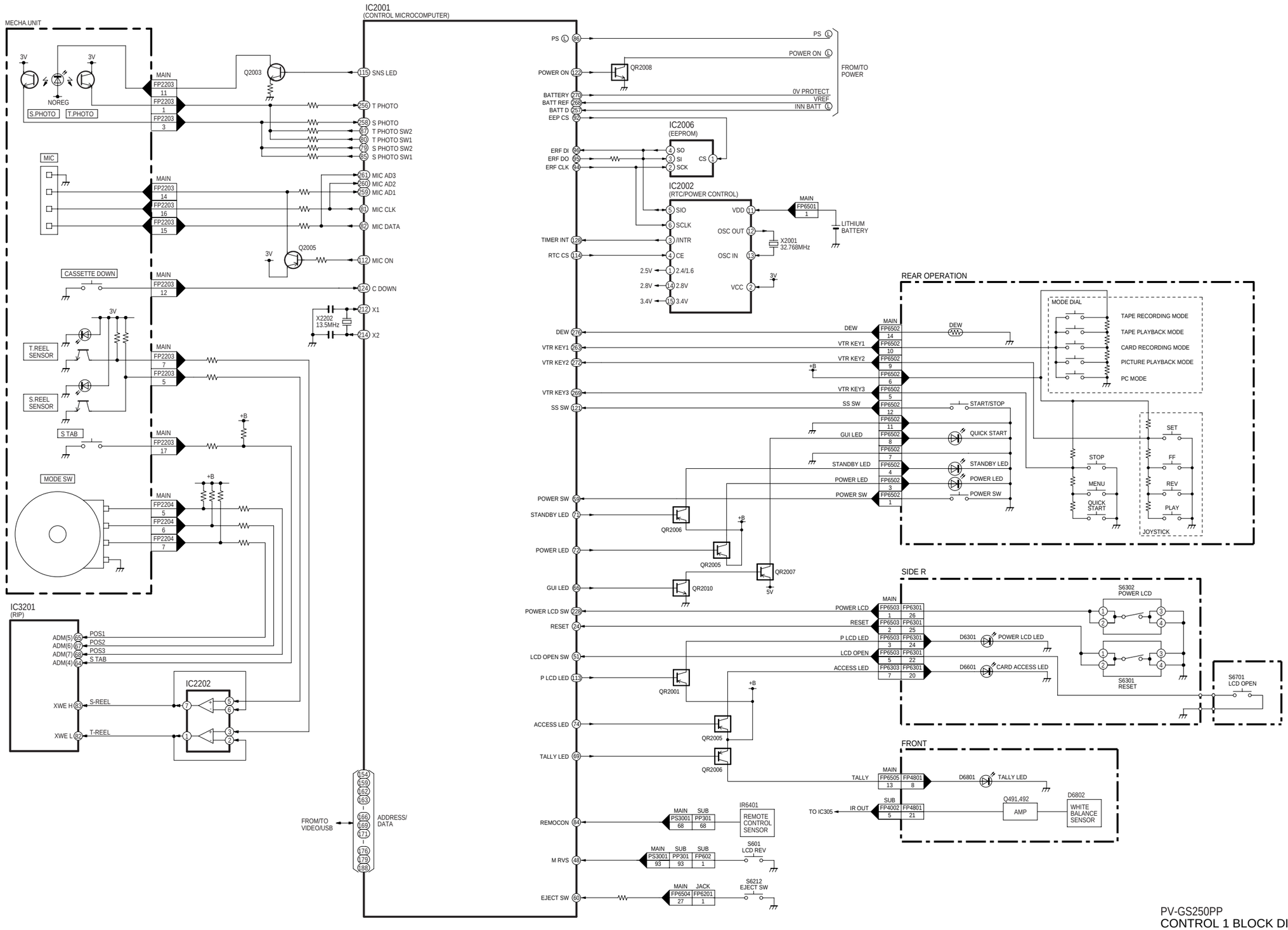

PV-GS250PP
CONTROL 1 BLOCK DIAGRAM

13.6. CONTROL 2 BLOCK DIAGRAM

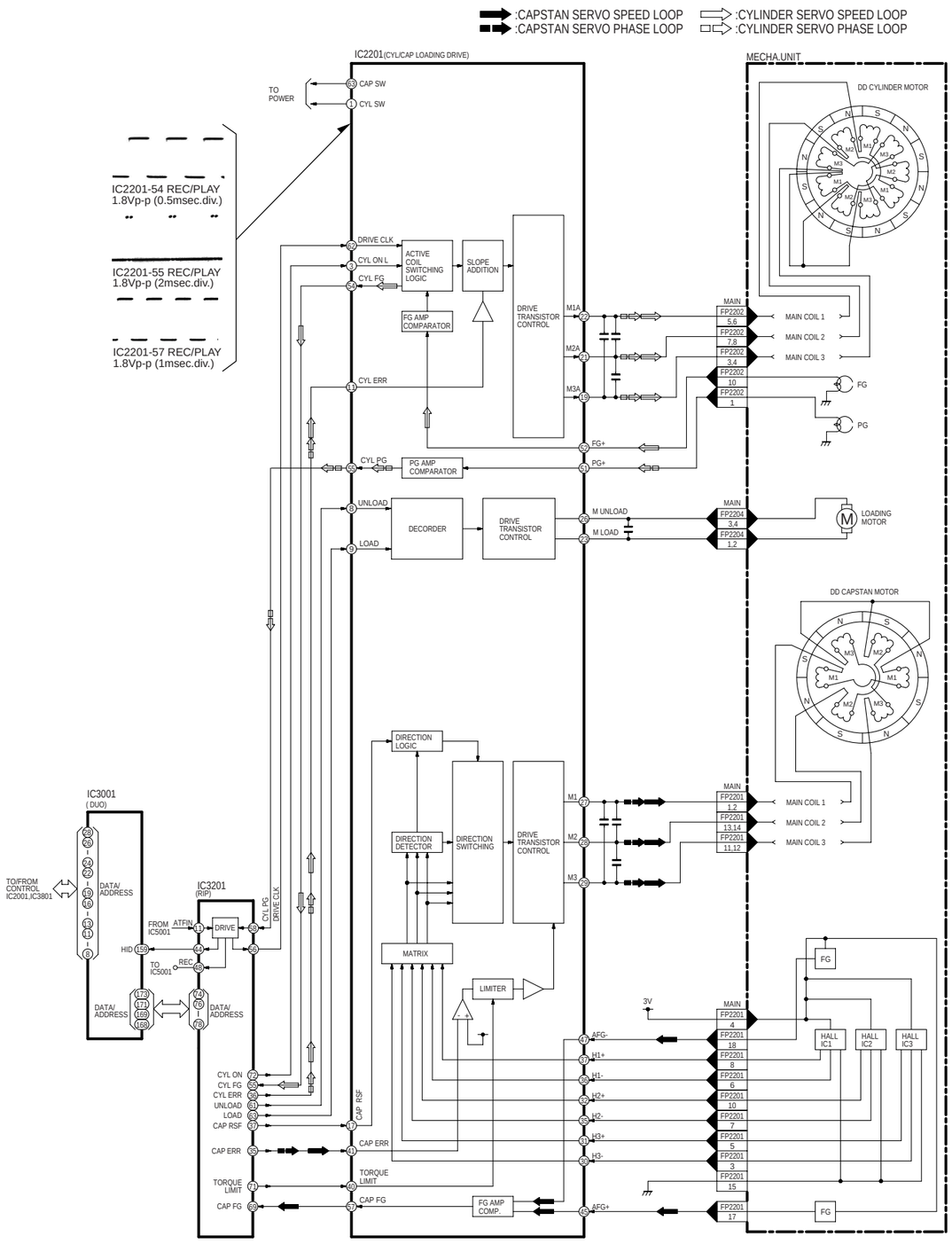

PV-GS250PP
CONTROL 2 BLOCK DIAGRAM

13.7. VIDEO BLOCK DIAGRAM

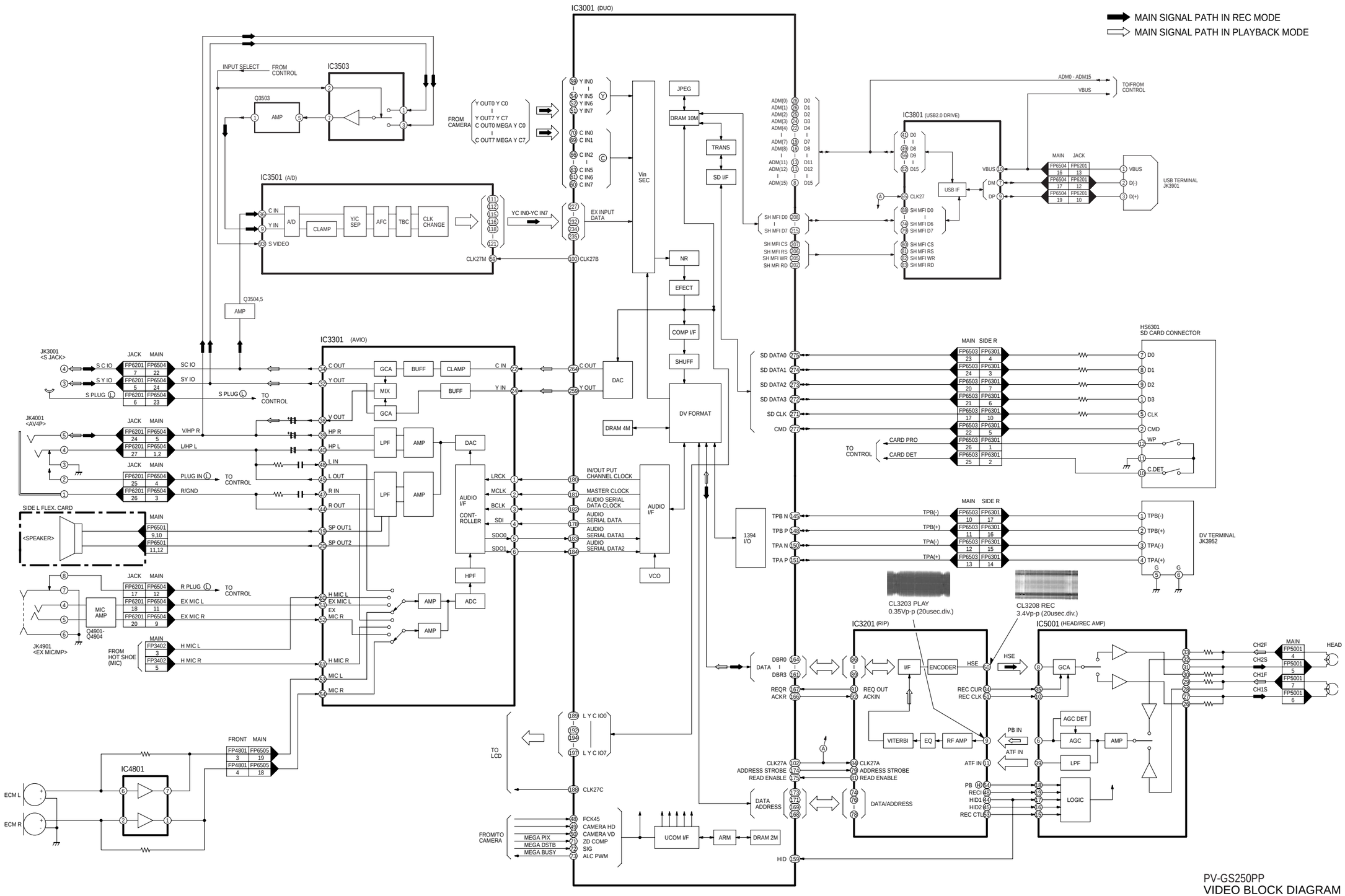

13.8. MONITOR BLOCK DIAGRAM

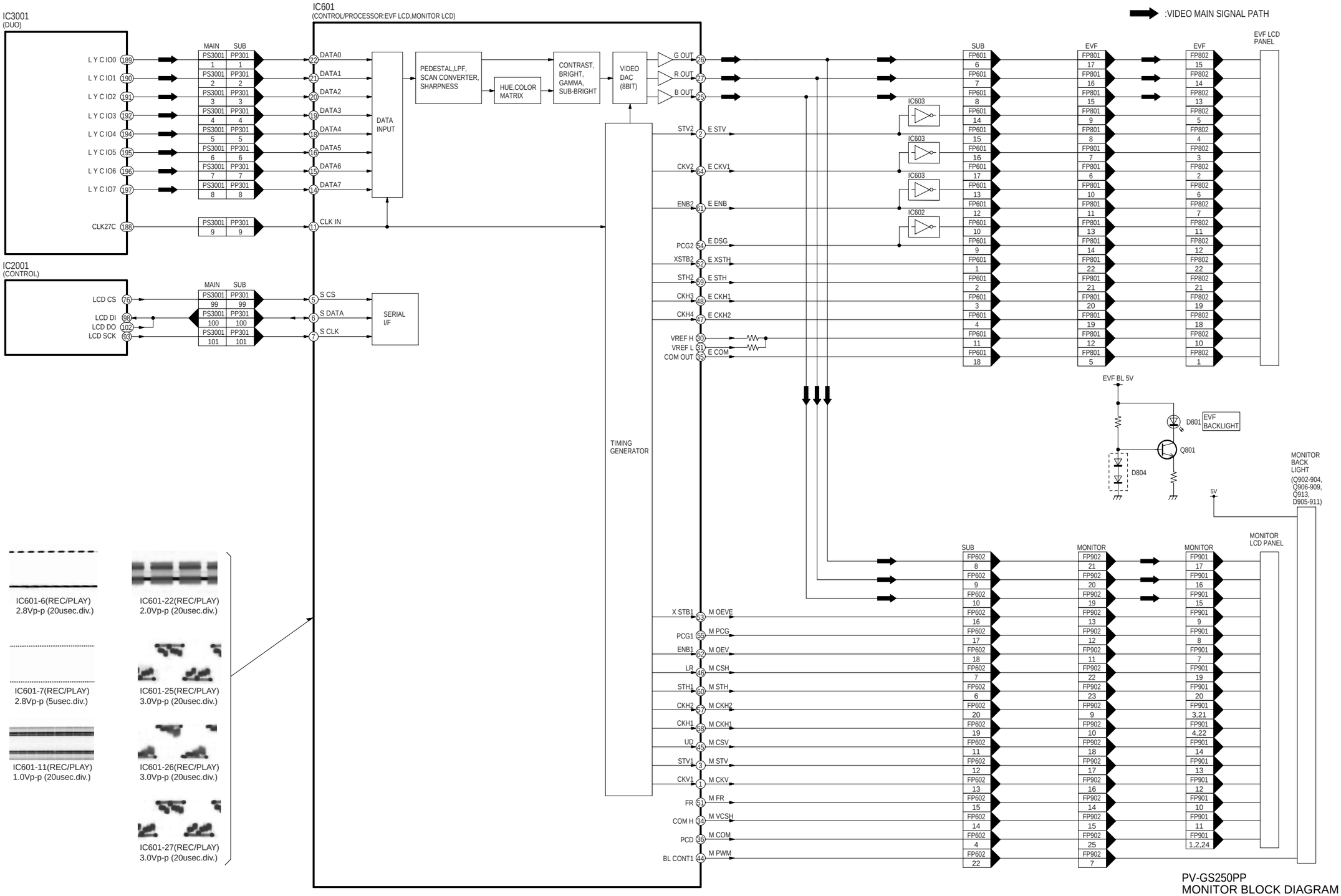

PV-GS250PP
MONITOR BLOCK DIAGRAM

14 SCHEMATIC DIAGRAMS

14.1. INTERCONNECTION SCHEMATIC DIAGRAM

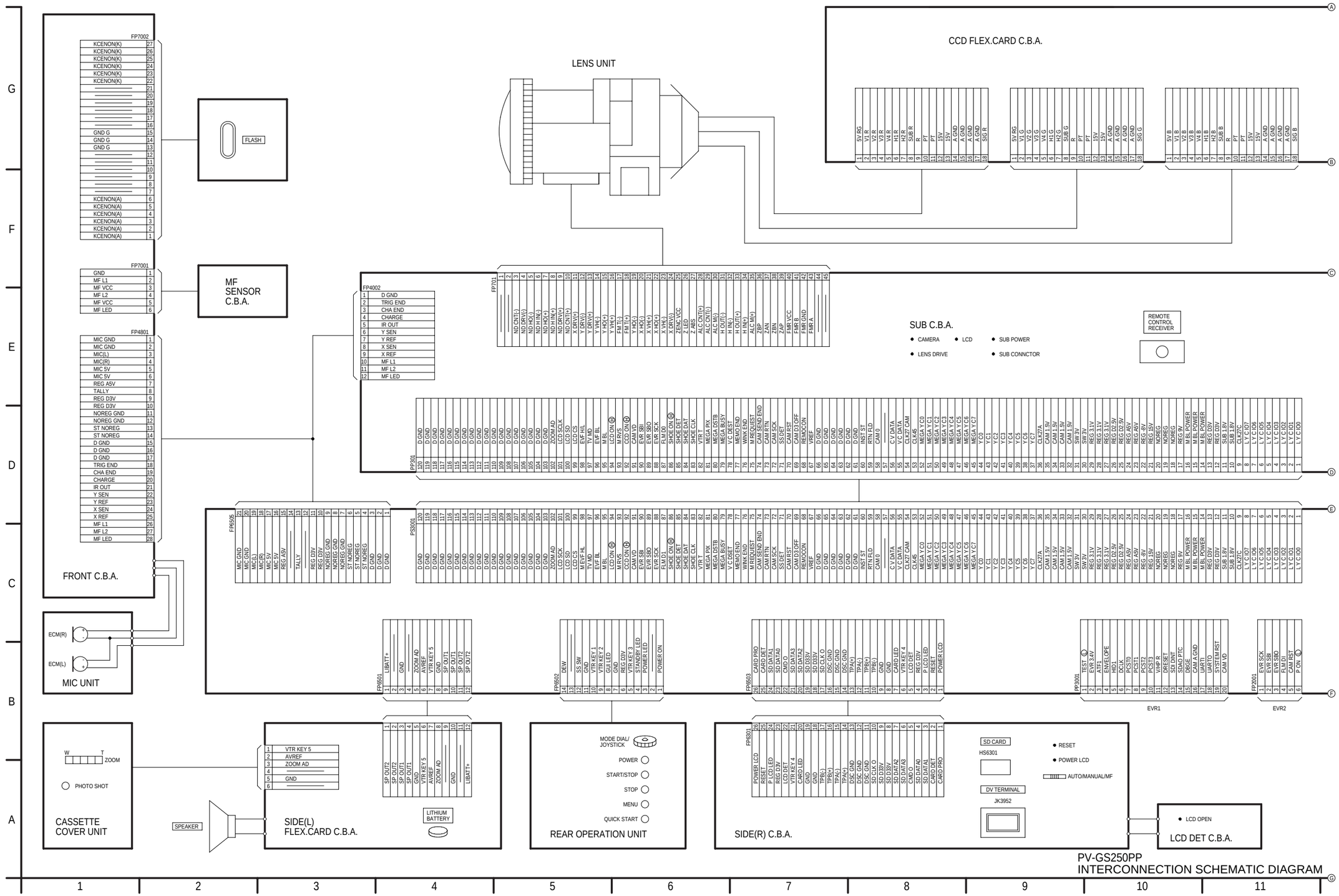

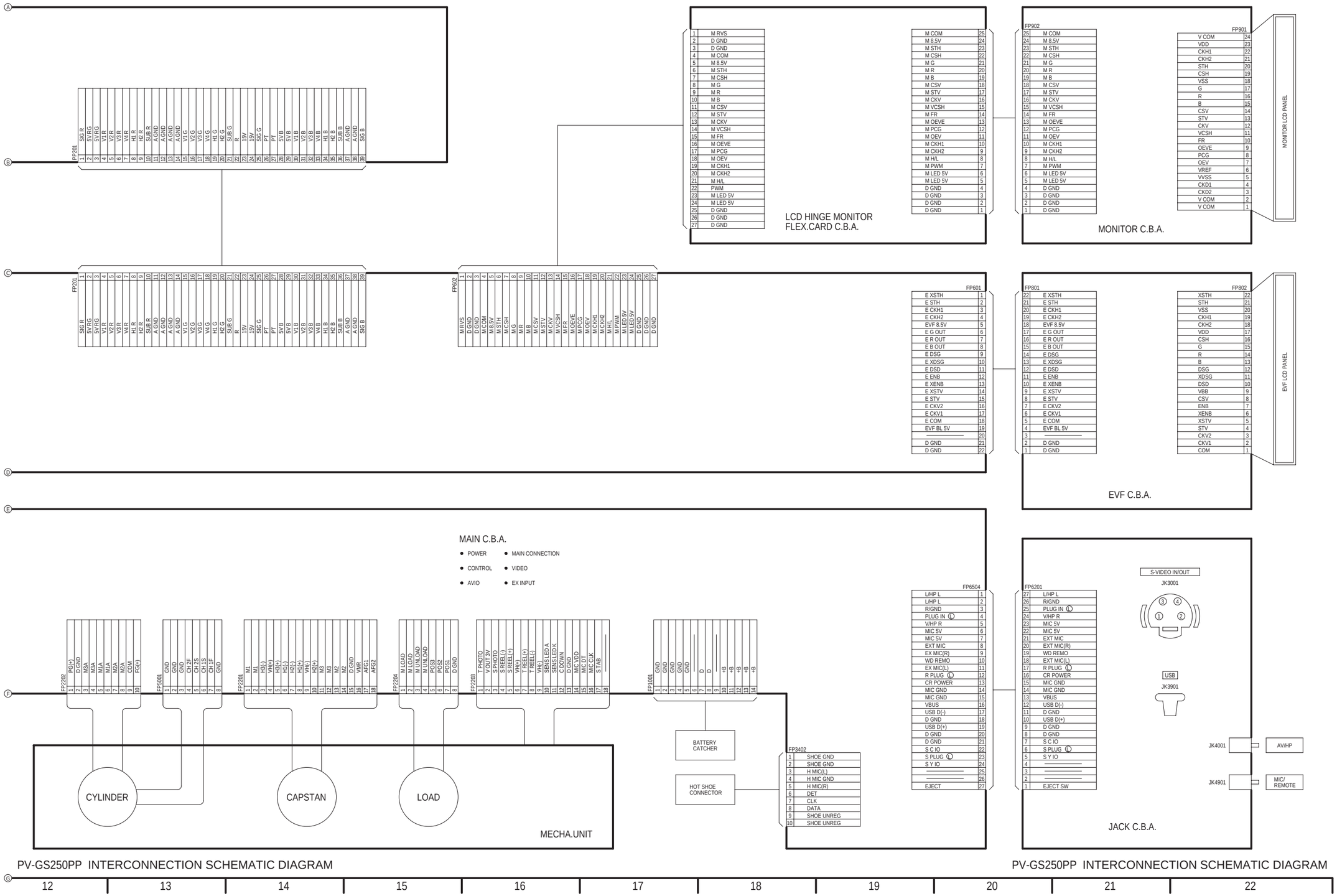

PV-GS250PP INTERCONNECTION SCHEMATIC DIAGRAM

PV-GS250PP INTERCONNECTION SCHEMATIC DIAGRAM

14.2. SIDE (L) FLEX. CARD / CASSETTE COVER SCHEMATIC DIAGRAM

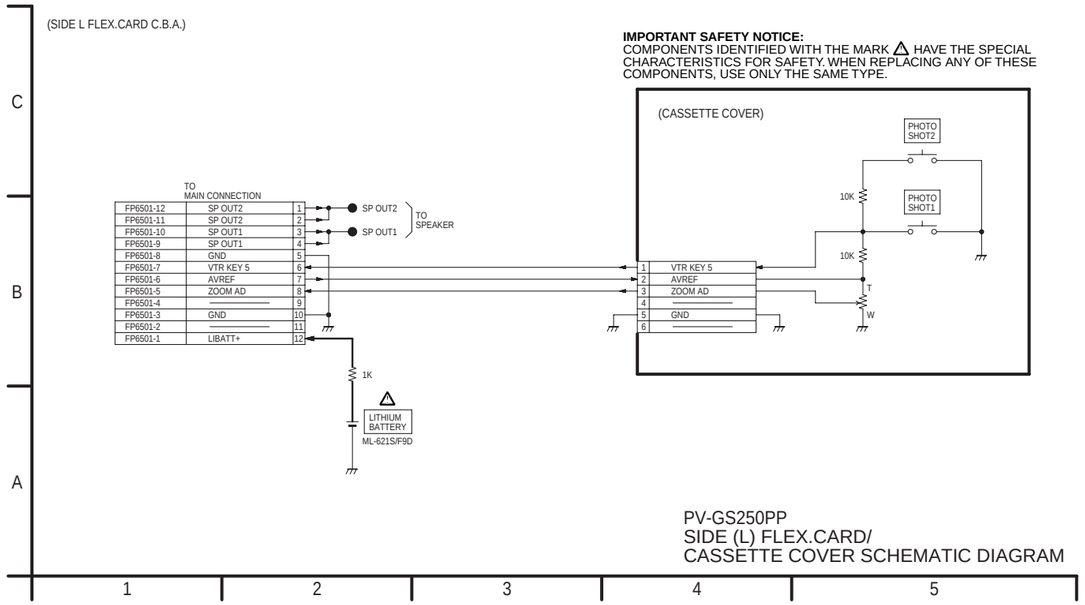

14.3. LCD HINGE (MONITOR FLEX.) SCHEMATIC DIAGRAM

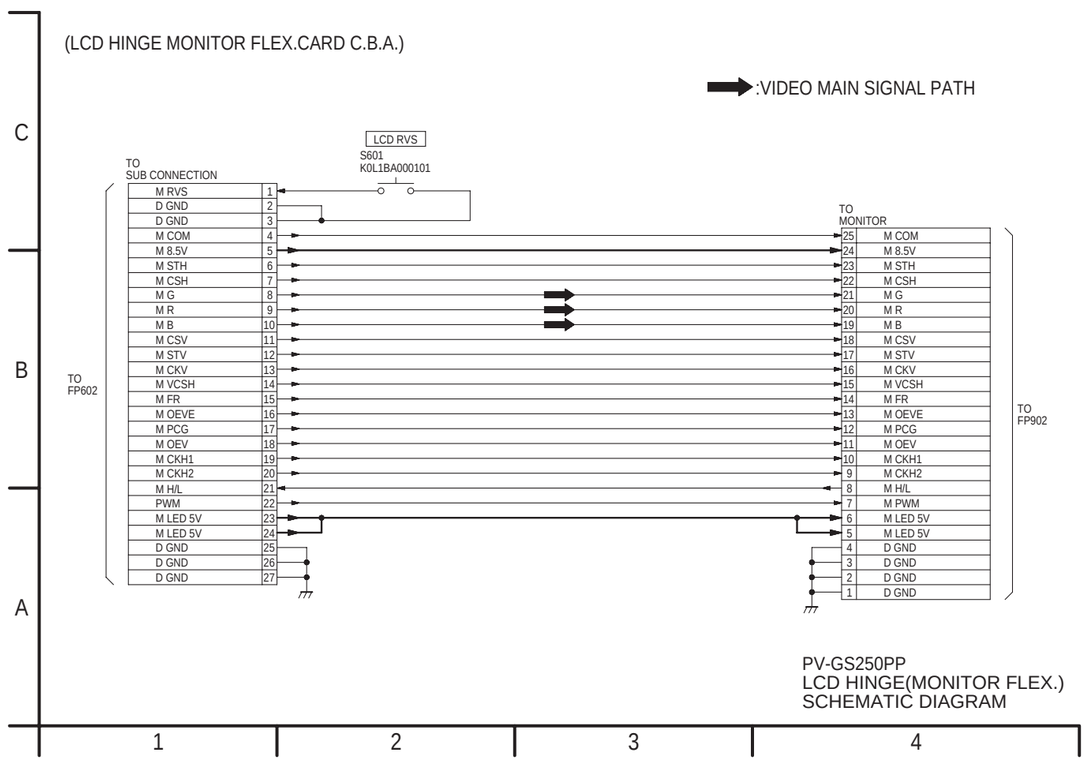

14.4. MF SENSOR SCHEMATIC DIAGRAM

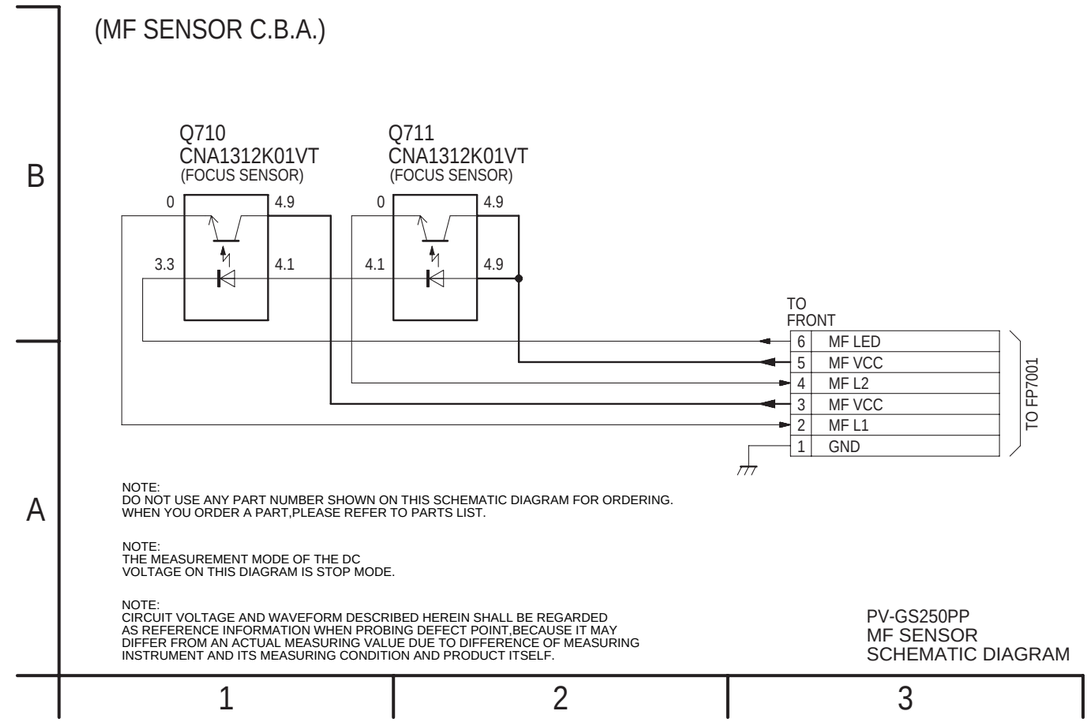

14.5. REAR OPERATION UNIT SCHEMATIC DIAGRAM

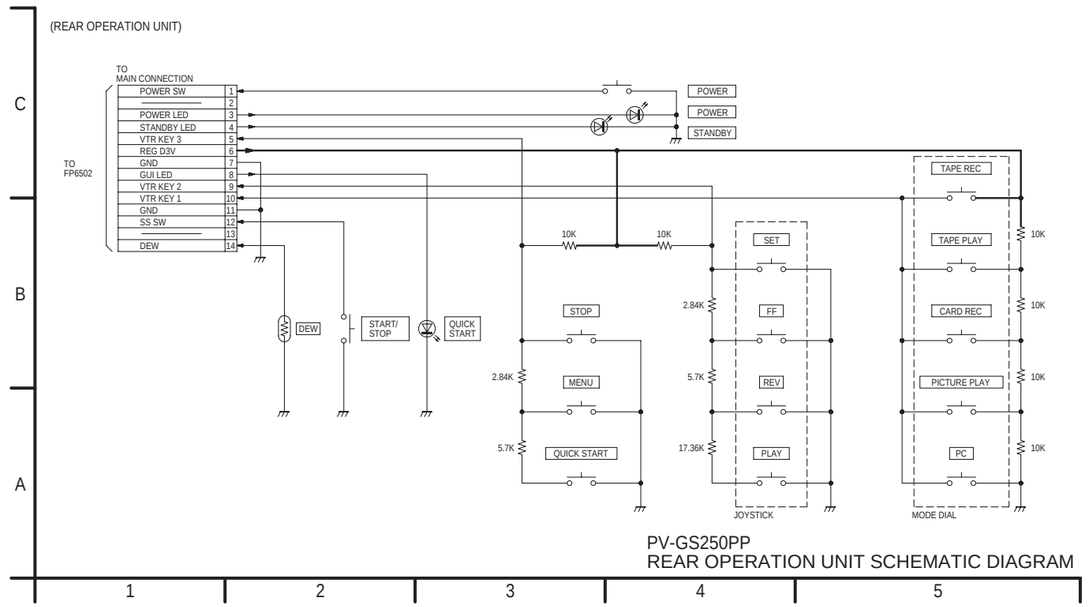

14.6. EVF SCHEMATIC DAIGRAM

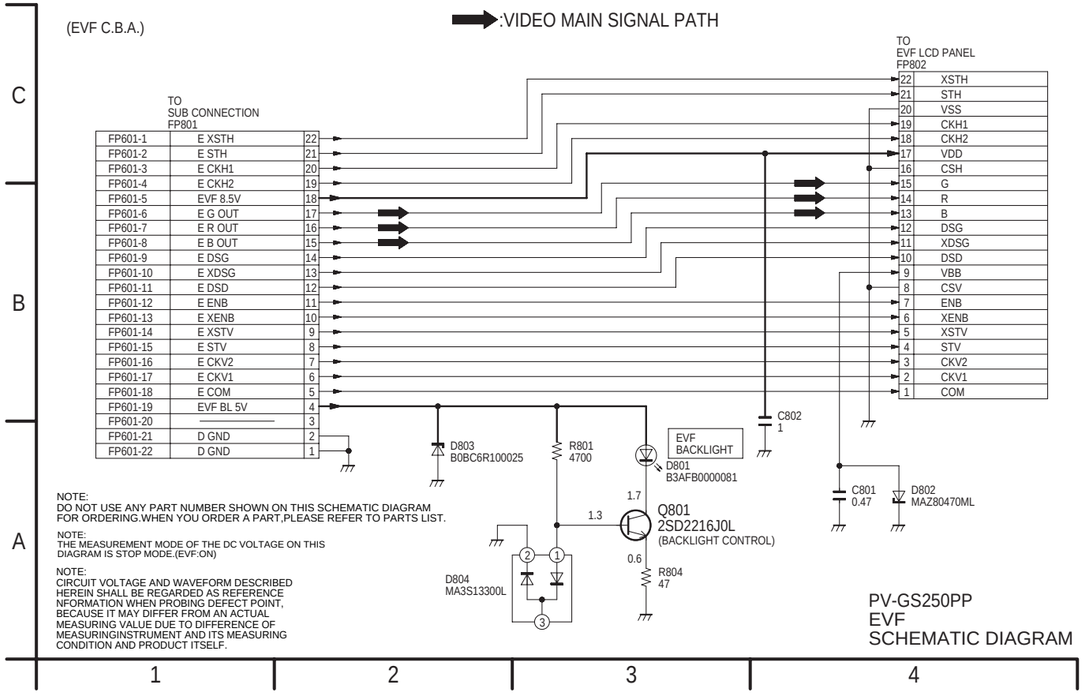

14.7. CCD FLEX. CARD SCHEMATIC DIAGRAM

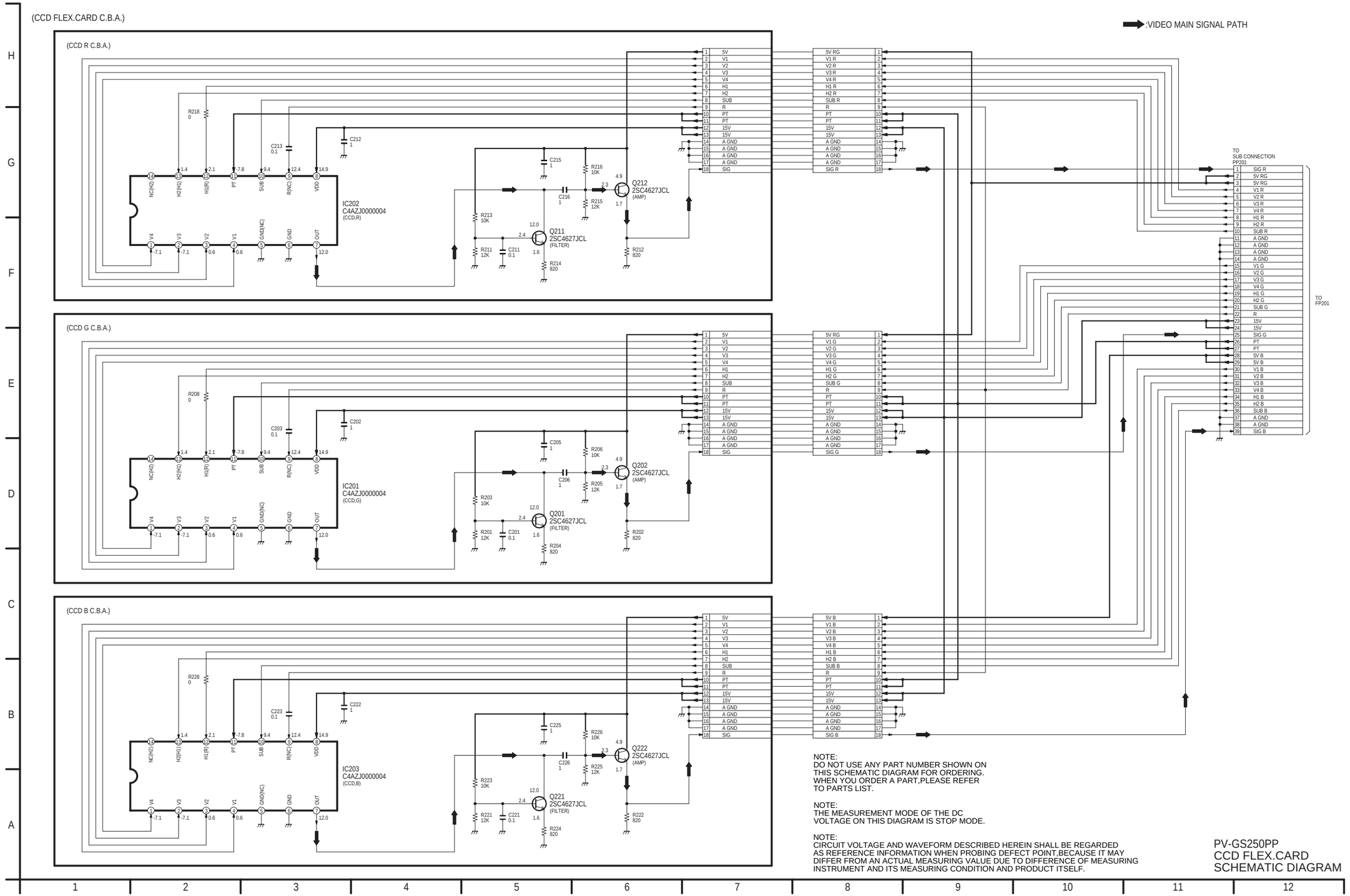

NOTE:
DO NOT USE ANY PART NUMBER SHOWN ON THIS SCHEMATIC DIAGRAM FOR ORDERING. WHEN YOU ORDER A PART,PLEASE REFER TO PARTS LIST.

NOTE:
THE MEASUREMENT MODE OF THE DC VOLTAGE ON THIS DIAGRAM IS STOP MODE.

NOTE:
CIRCUIT VOLTAGE AND WAVEFORM DESCRIBED HEREIN SHALL BE REGARDED AS REFERENCE INFORMATION WHEN PROBING DEFECT POINT,BECAUSE IT MAY DIFFER FROM AN ACTUAL MEASURING VALUE DUE TO DIFFERENCE OF MEASURING INSTRUMENT AND ITS MEASURING CONDITION AND PRODUCT ITSELF.

PV-GS250PP
CCD FLEX.CARD
SCHEMATIC DIAGRAM

14.8. FRONT SCHEMATIC DIAGRAM

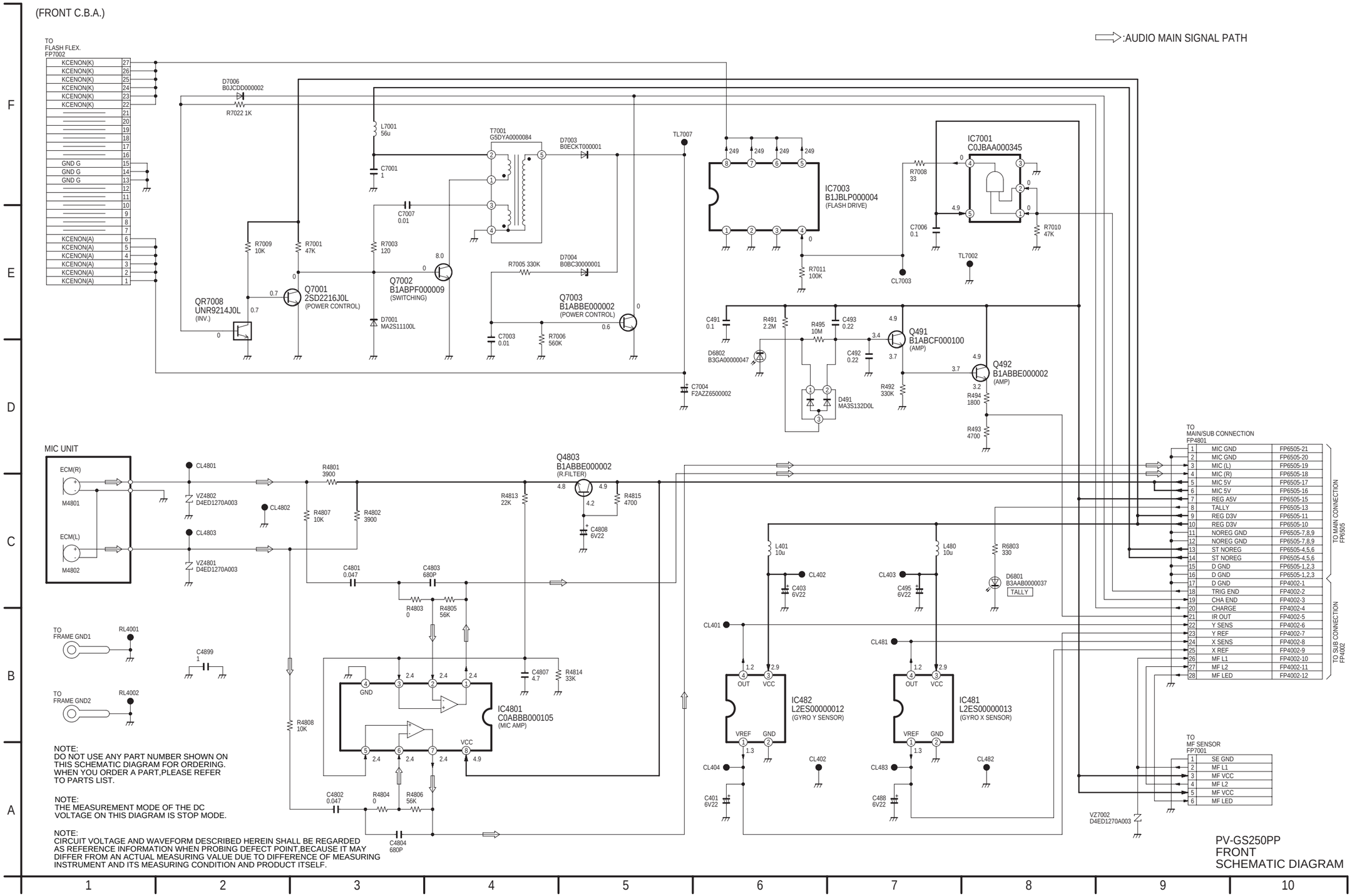

14.9. JACK SCHEMATIC DIAGRAM

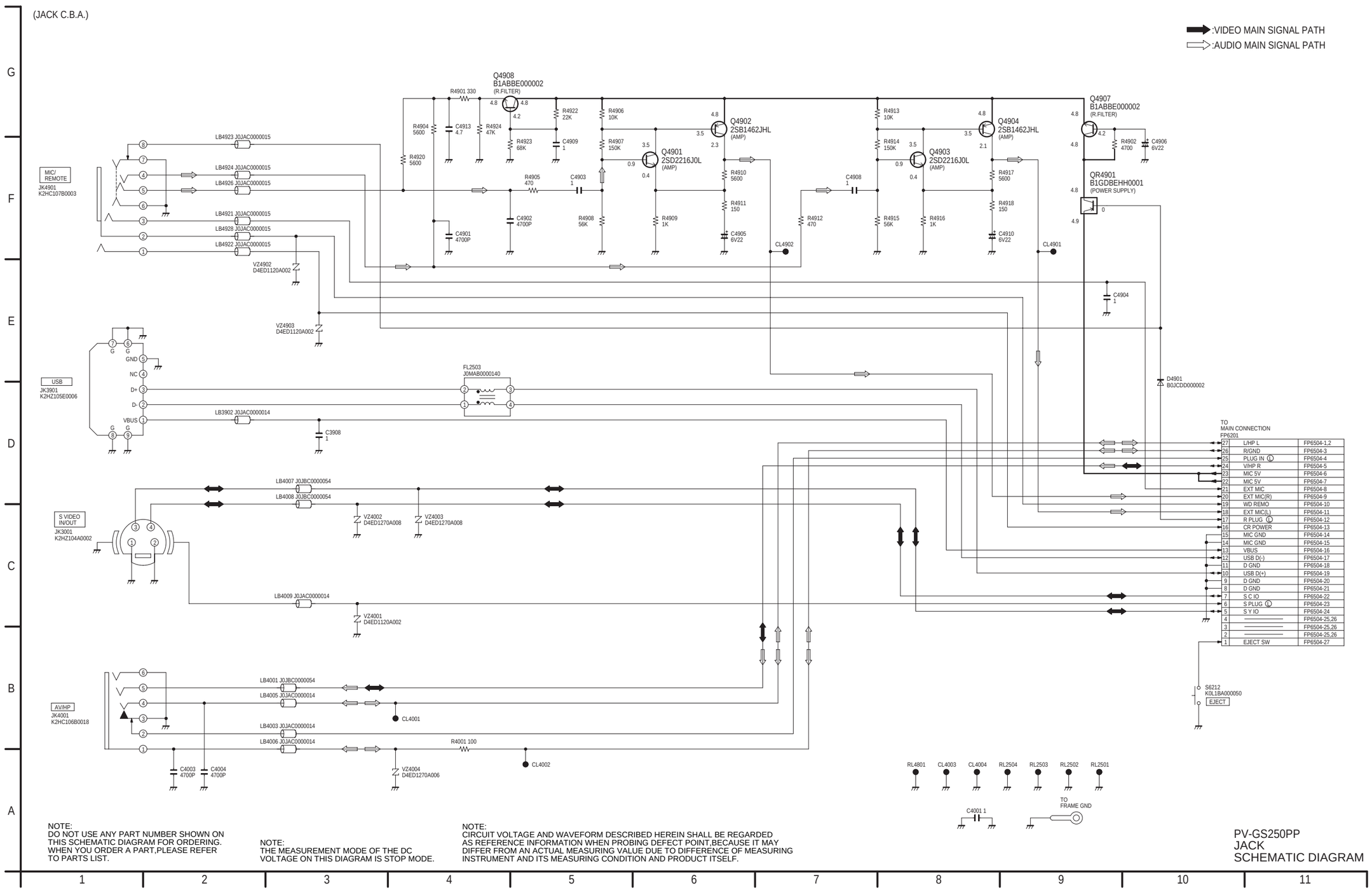

NOTE:
DO NOT USE ANY PART NUMBER SHOWN ON THIS SCHEMATIC DIAGRAM FOR ORDERING. WHEN YOU ORDER A PART,PLEASE REFER TO PARTS LIST.

NOTE:
THE MEASUREMENT MODE OF THE DC VOLTAGE ON THIS DIAGRAM IS STOP MODE.

NOTE:
CIRCUIT VOLTAGE AND WAVEFORM DESCRIBED HEREIN SHALL BE REGARDED AS REFERENCE INFORMATION WHEN PROBING DEFECT POINT,BECAUSE IT MAY DIFFER FROM AN ACTUAL MEASURING VALUE DUE TO DIFFERENCE OF MEASURING INSTRUMENT AND ITS MEASURING CONDITION AND PRODUCT ITSELF.

PV-GS250PP
JACK
SCHEMATIC DIAGRAM

14.10. SIDE (R) / LCD DET. SCHEMATIC DIAGRAM

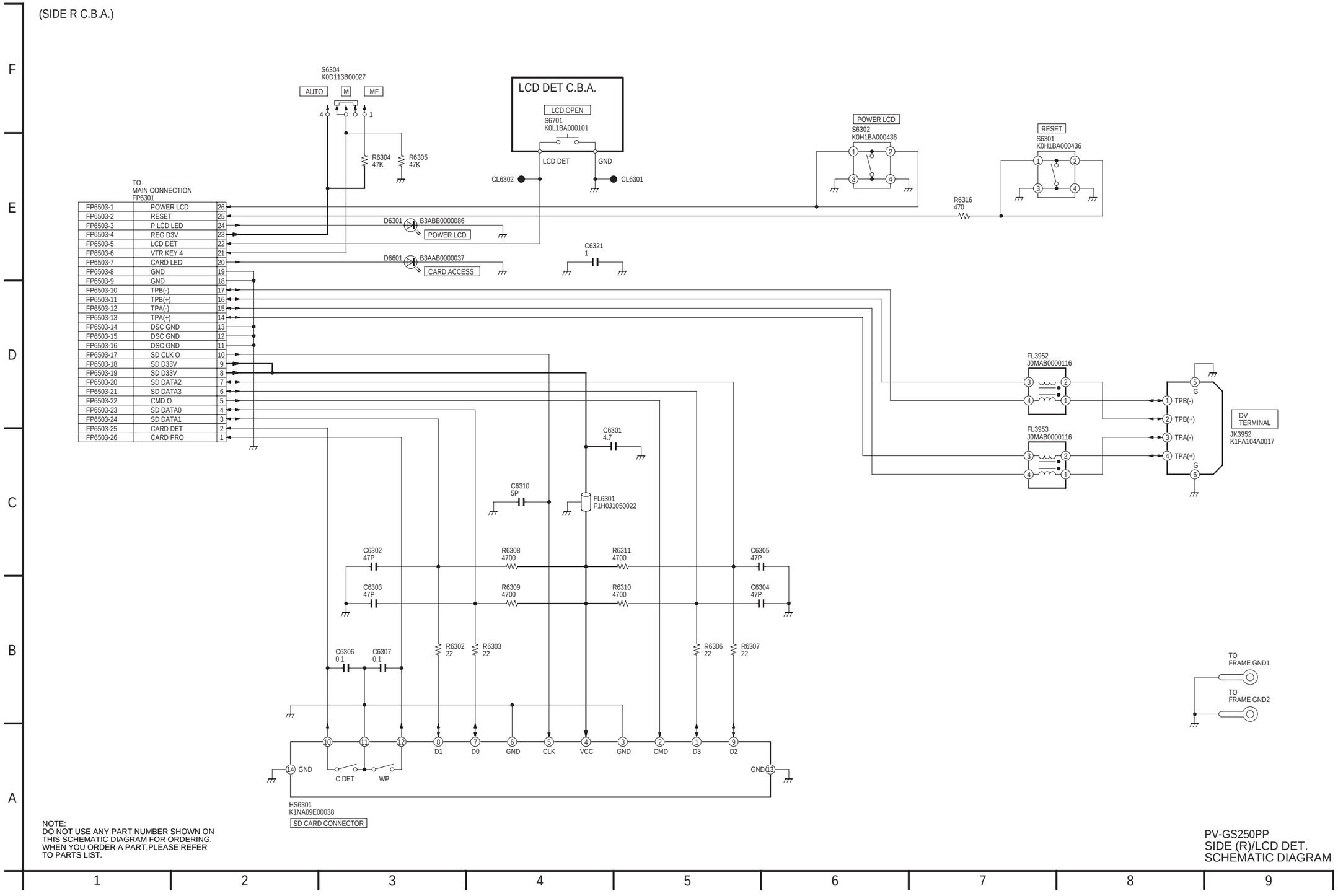

NOTE:
DO NOT USE ANY PART NUMBER SHOWN ON THIS SCHEMATIC DIAGRAM FOR ORDERING. WHEN YOU ORDER A PART,PLEASE REFER TO PARTS LIST.

PV-GS250PP
SIDE (R)/LCD DET.
SCHEMATIC DIAGRAM

14.11. MONITOR SCHEMATIC DIAGRAM

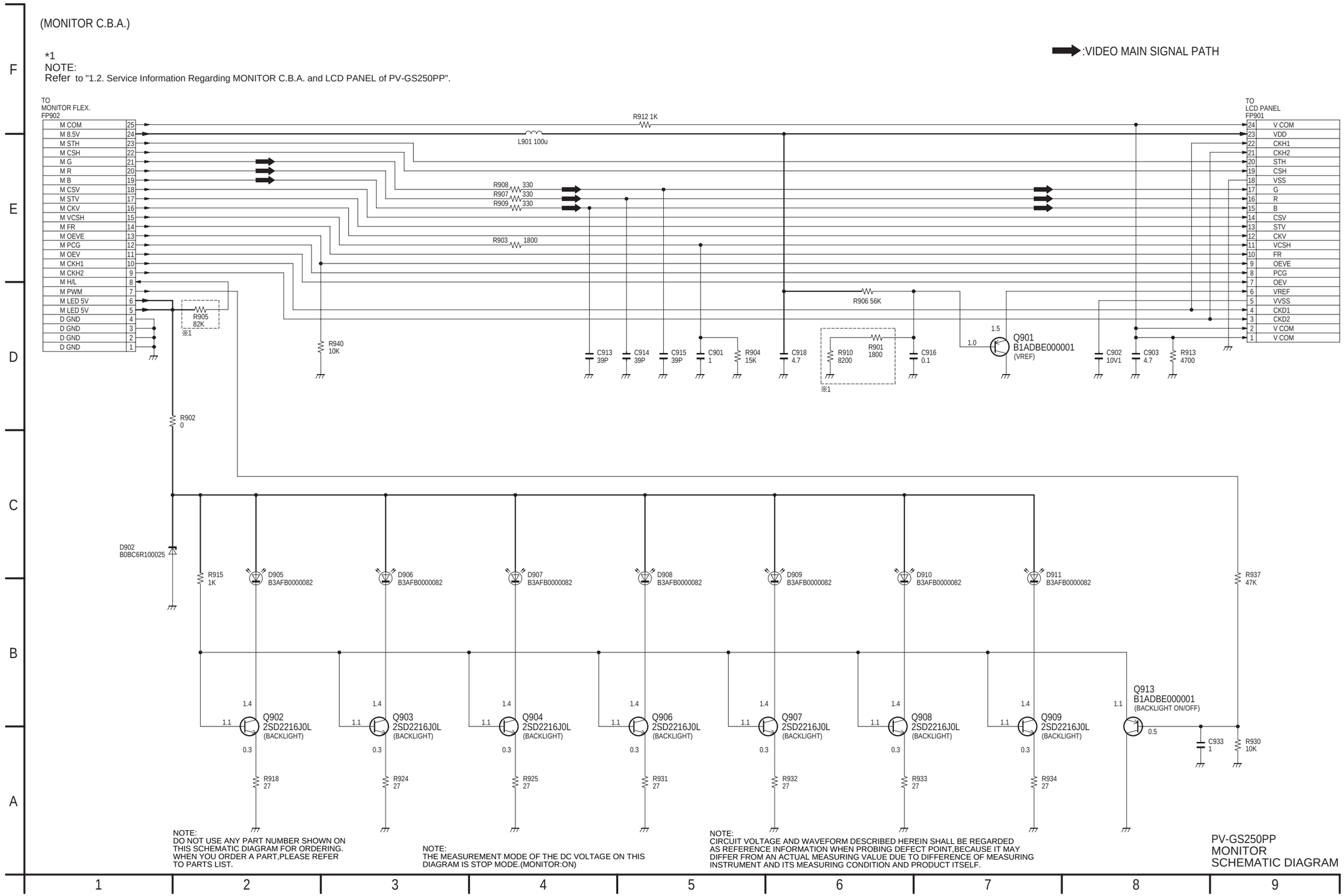

14.12. SUB (SUB CONNECTION) SCHEMATIC DIAGRAM

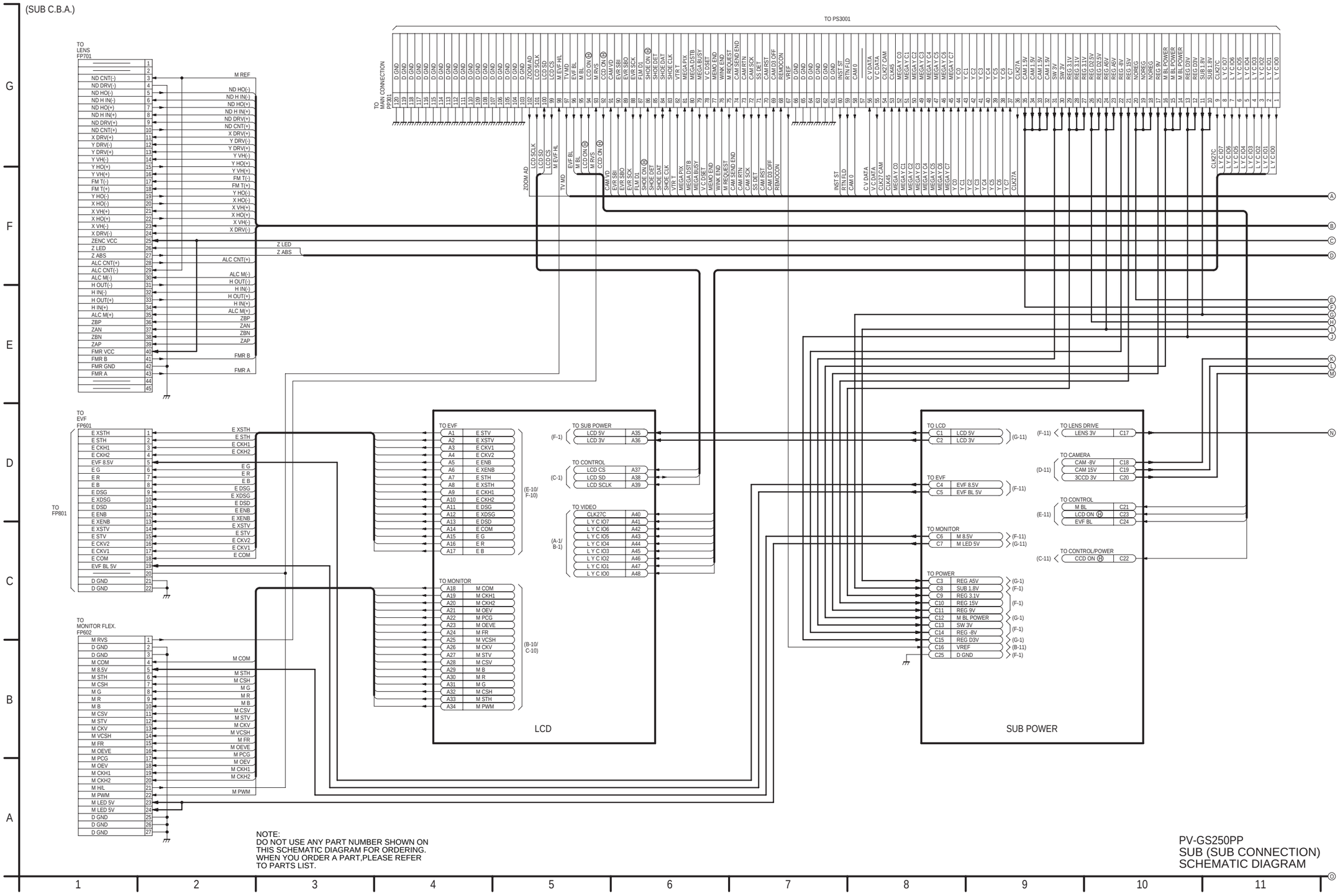

NOTE:
DO NOT USE ANY PART NUMBER SHOWN ON THIS SCHEMATIC DIAGRAM FOR ORDERING. WHEN YOU ORDER A PART,PLEASE REFER TO PARTS LIST.

PV-GS250PP
SUB (SUB CONNECTION)
SCHEMATIC DIAGRAM

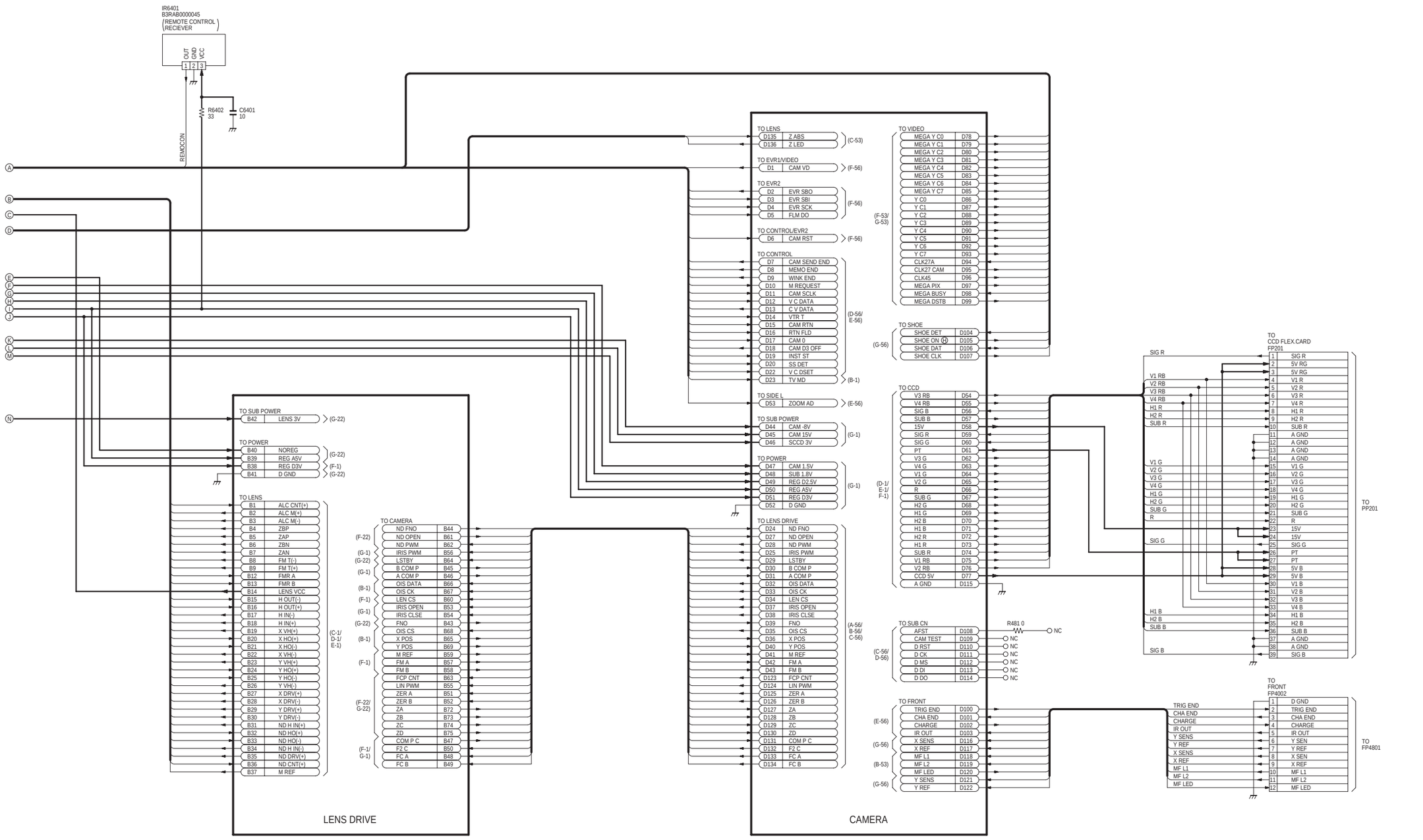

PV-GS250PP
SUB (SUB CONNECTION)
SCHEMATIC DIAGRAM

PV-GS250PP
SUB (SUB CONNECTION)
SCHEMATIC DIAGRAM

14.13. SUB (LCD) SCHEMATIC DIAGRAM

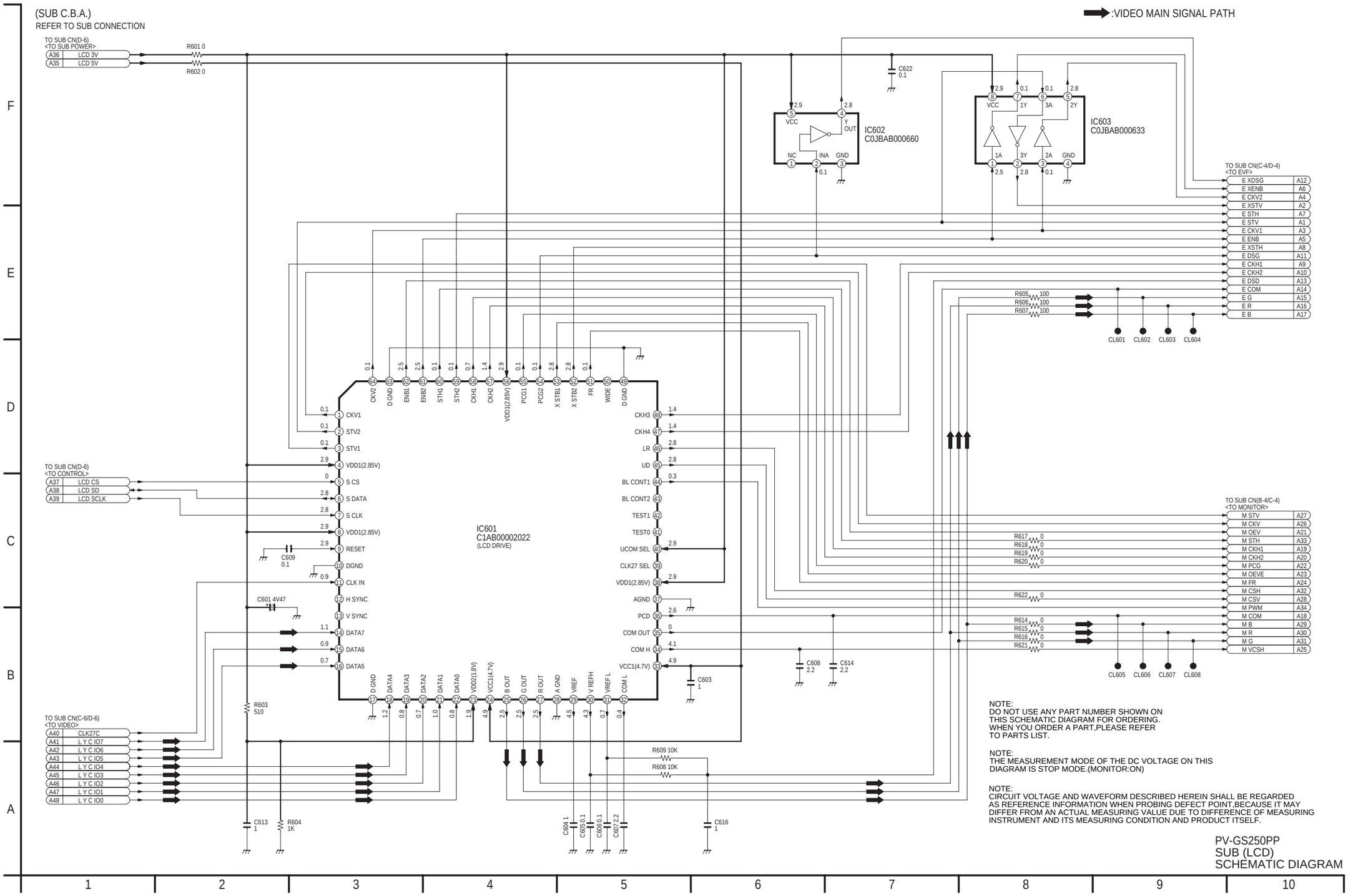

14.14. SUB (SUB POWER) SCHEMATIC DIAGRAM

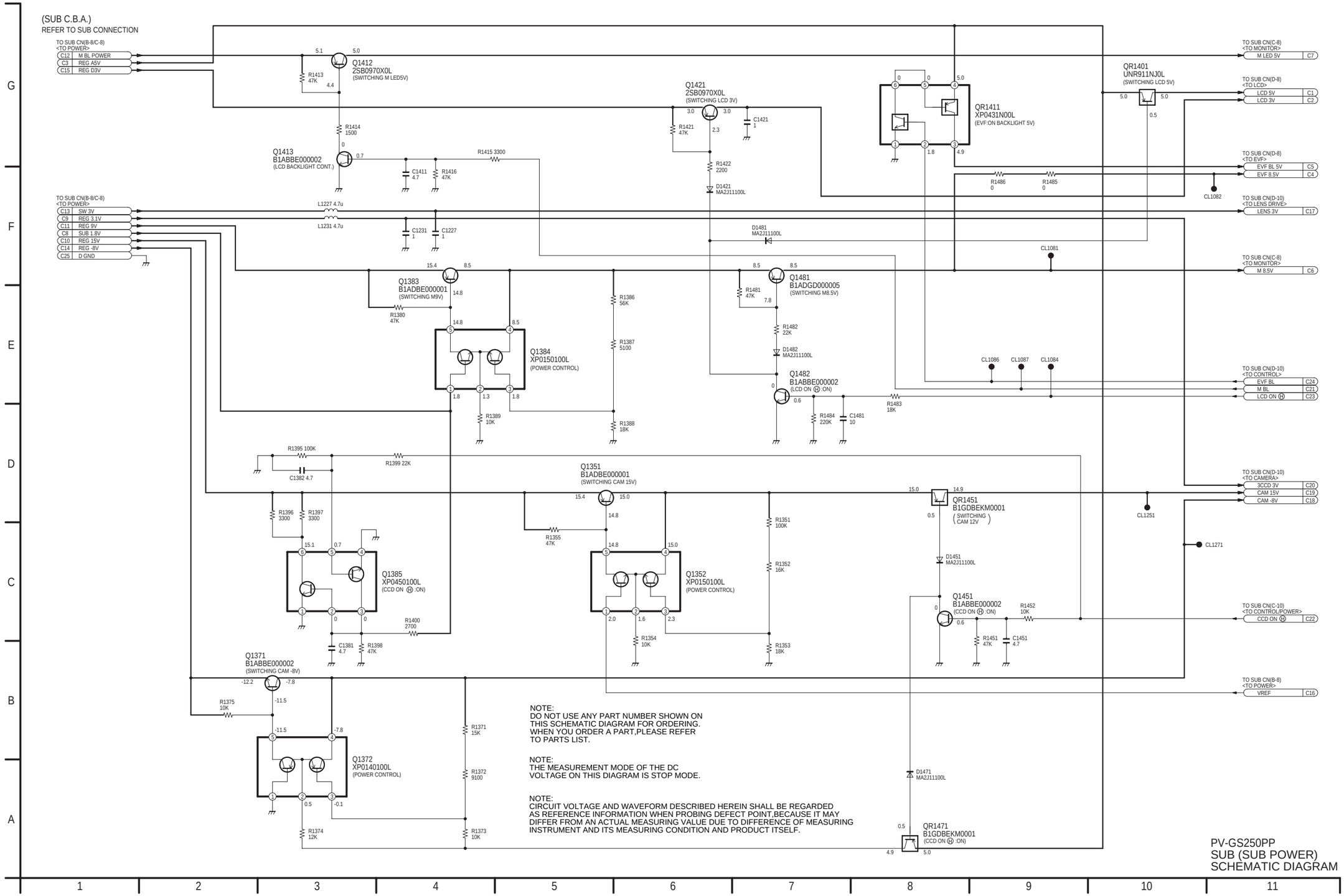

14.15. SUB (LENS DRIVE) SCHEMATIC DIAGRAM

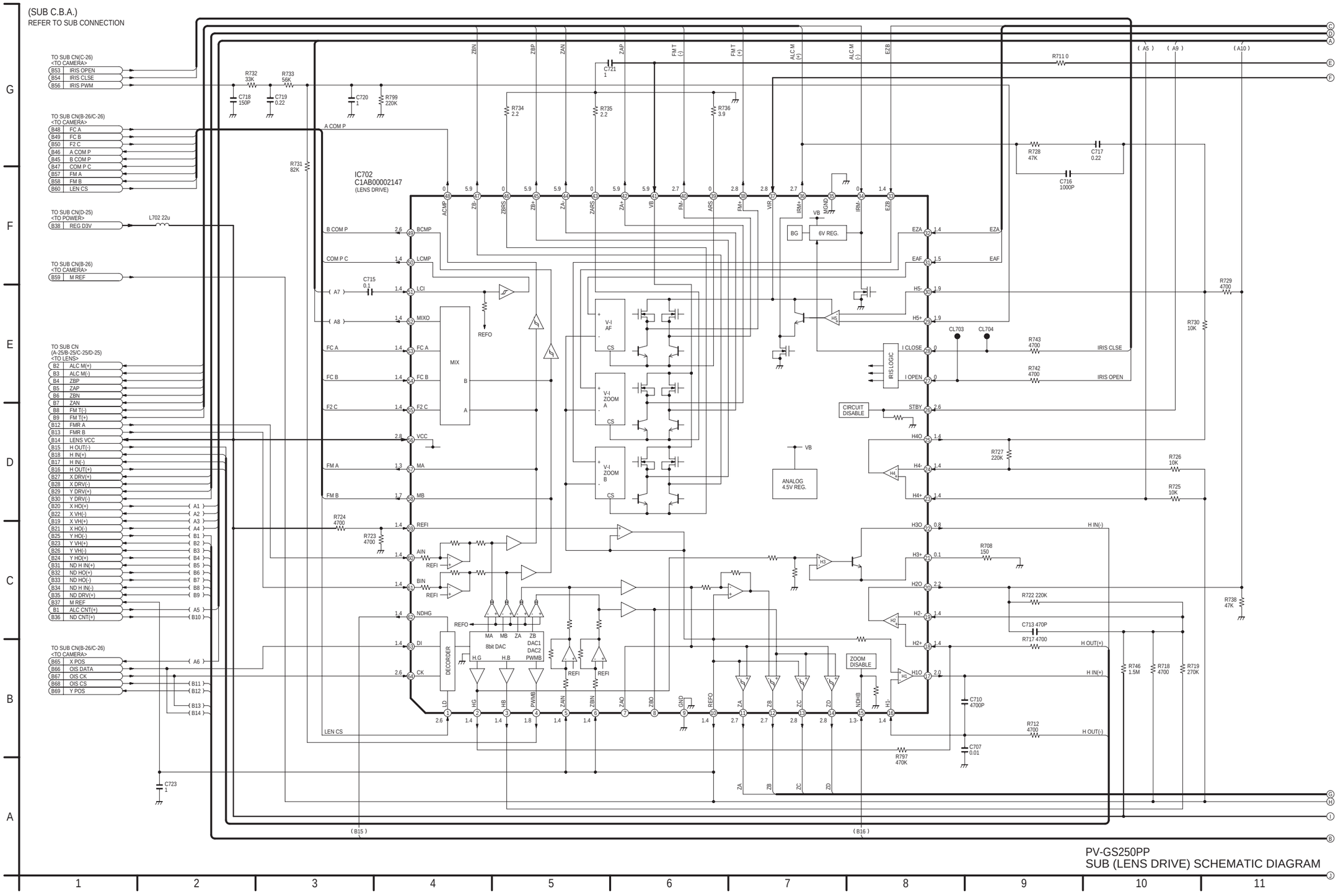

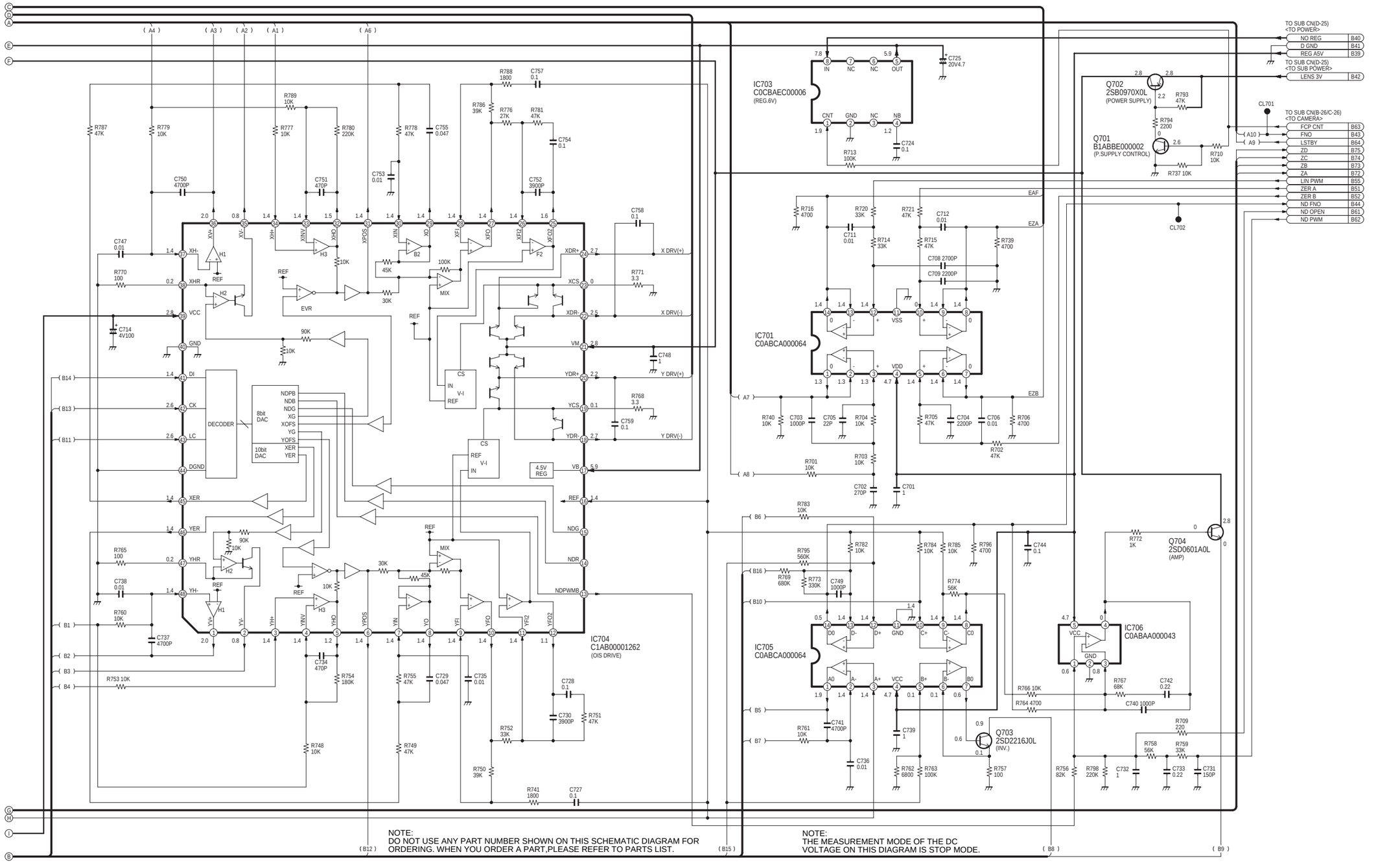

NOTE:
DO NOT USE ANY PART NUMBER SHOWN ON THIS SCHEMATIC DIAGRAM FOR ORDERING. WHEN YOU ORDER A PART,PLEASE REFER TO PARTS LIST.

NOTE:
THE MEASUREMENT MODE OF THE DC VOLTAGE ON THIS DIAGRAM IS STOP MODE.

NOTE:
CIRCUIT VOLTAGE AND WAVEFORM DESCRIBED HEREIN SHALL BE REGARDED AS REFERENCE INFORMATION WHEN PROBING DEFECT POINT,BECAUSE IT MAY DIFFER FROM AN ACTUAL MEASURING VALUE DUE TO DIFFERENCE OF MEASURING INSTRUMENT AND ITS MEASURING CONDITION AND PRODUCT ITSELF.

PV-GS250PP
SUB (LENS DRIVE) SCHEMATIC DIAGRAM

PV-GS250PP
SUB (LENS DRIVE) SCHEMATIC DIAGRAM

14.16. SUB (CAMERA) SCHEMATIC DIAGRAM

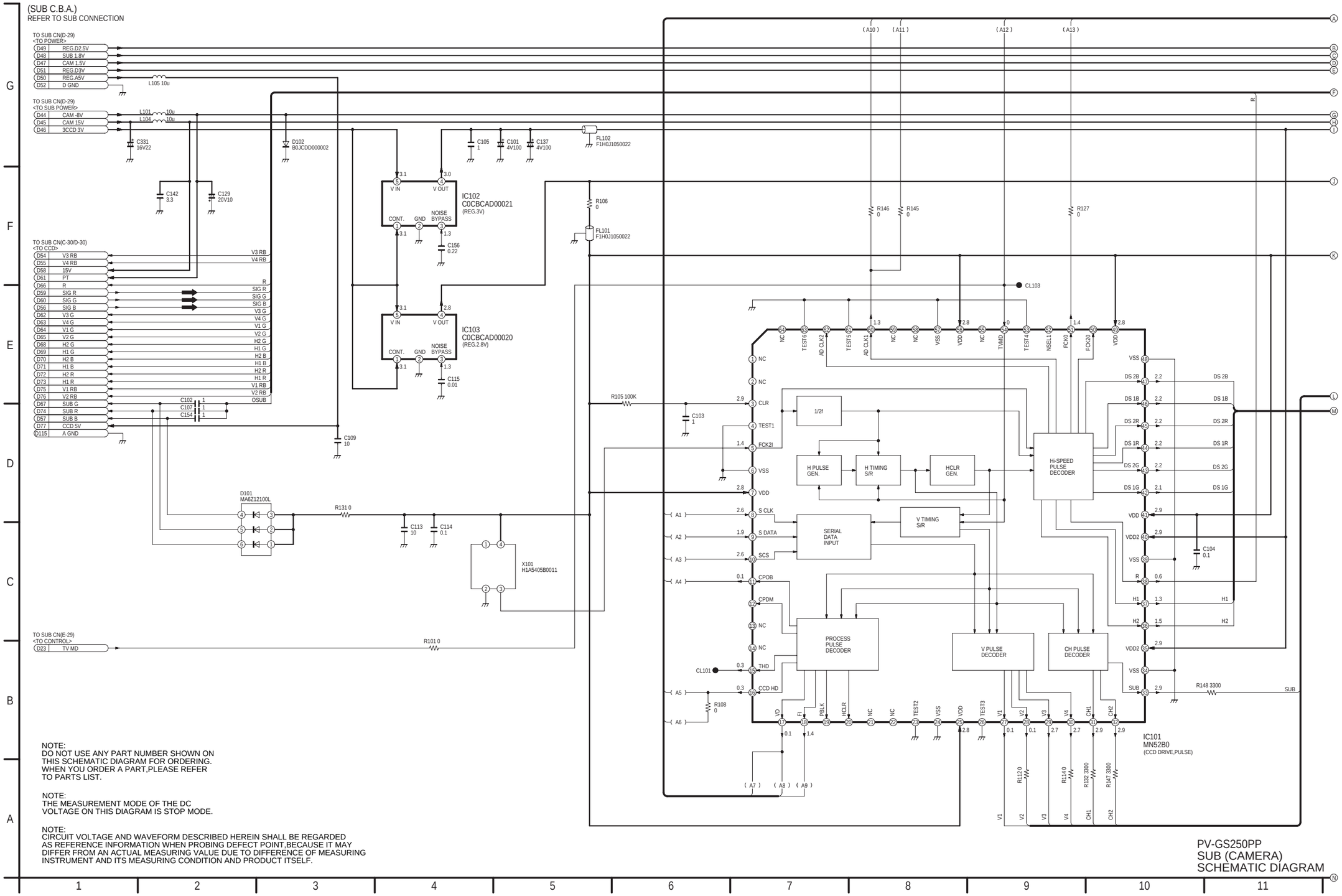

NOTE:
DO NOT USE ANY PART NUMBER SHOWN ON THIS SCHEMATIC DIAGRAM FOR ORDERING. WHEN YOU ORDER A PART,PLEASE REFER TO PARTS LIST.

NOTE:
THE MEASUREMENT MODE OF THE DC VOLTAGE ON THIS DIAGRAM IS STOP MODE.

NOTE:
CIRCUIT VOLTAGE AND WAVEFORM DESCRIBED HEREIN SHALL BE REGARDED AS REFERENCE INFORMATION WHEN PROBING DEFECT POINT,BECAUSE IT MAY DIFFER FROM AN ACTUAL MEASURING VALUE DUE TO DIFFERENCE OF MEASURING INSTRUMENT AND ITS MEASURING CONDITION AND PRODUCT ITSELF.

PV-GS250PP
SUB (CAMERA)
SCHEMATIC DIAGRAM

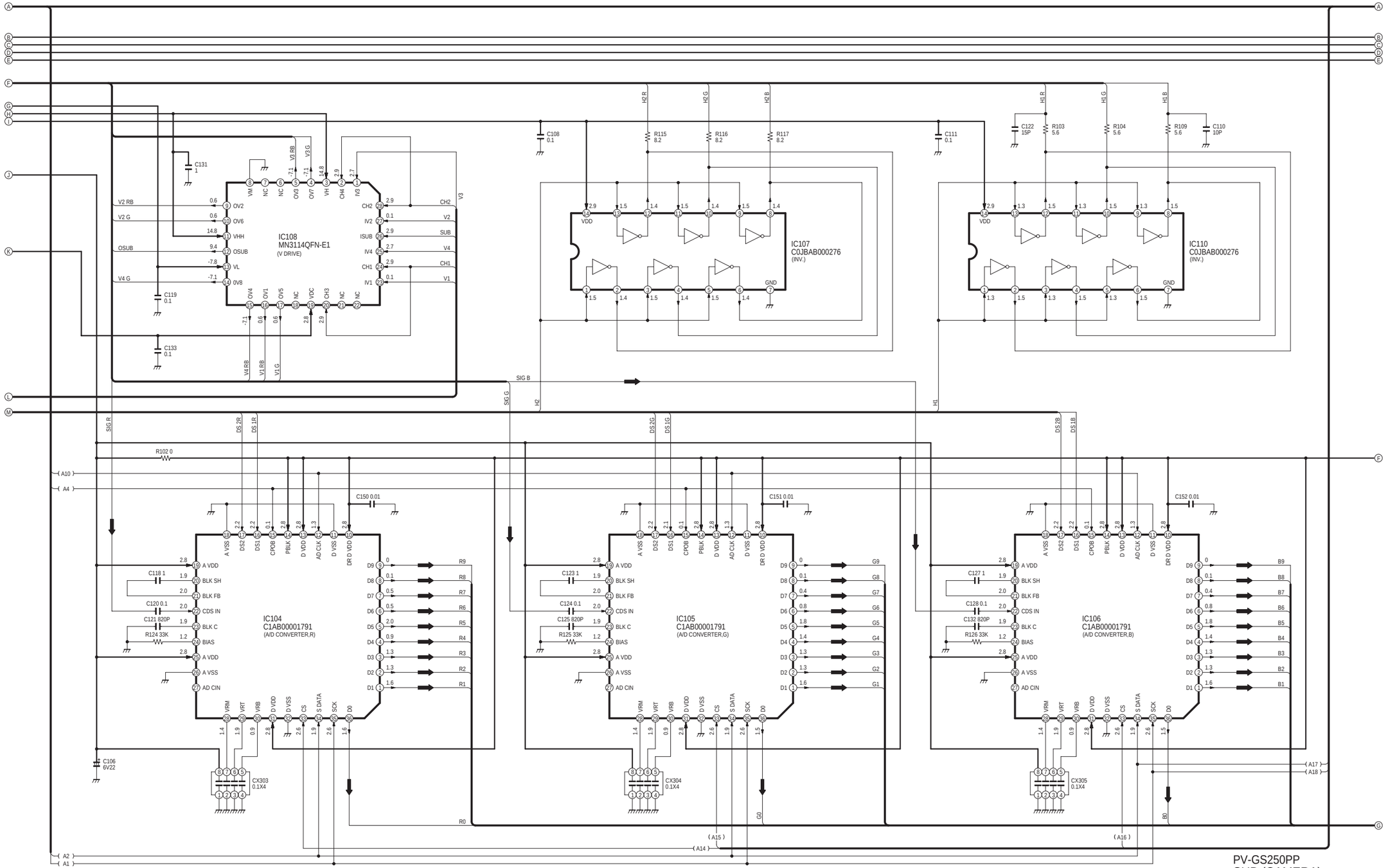

PV-GS250PP SUB (CAMERA) SCHEMATIC DIAGRAM

PV-GS250PP
SUB (CAMERA)
SCHEMATIC DIAGRAM

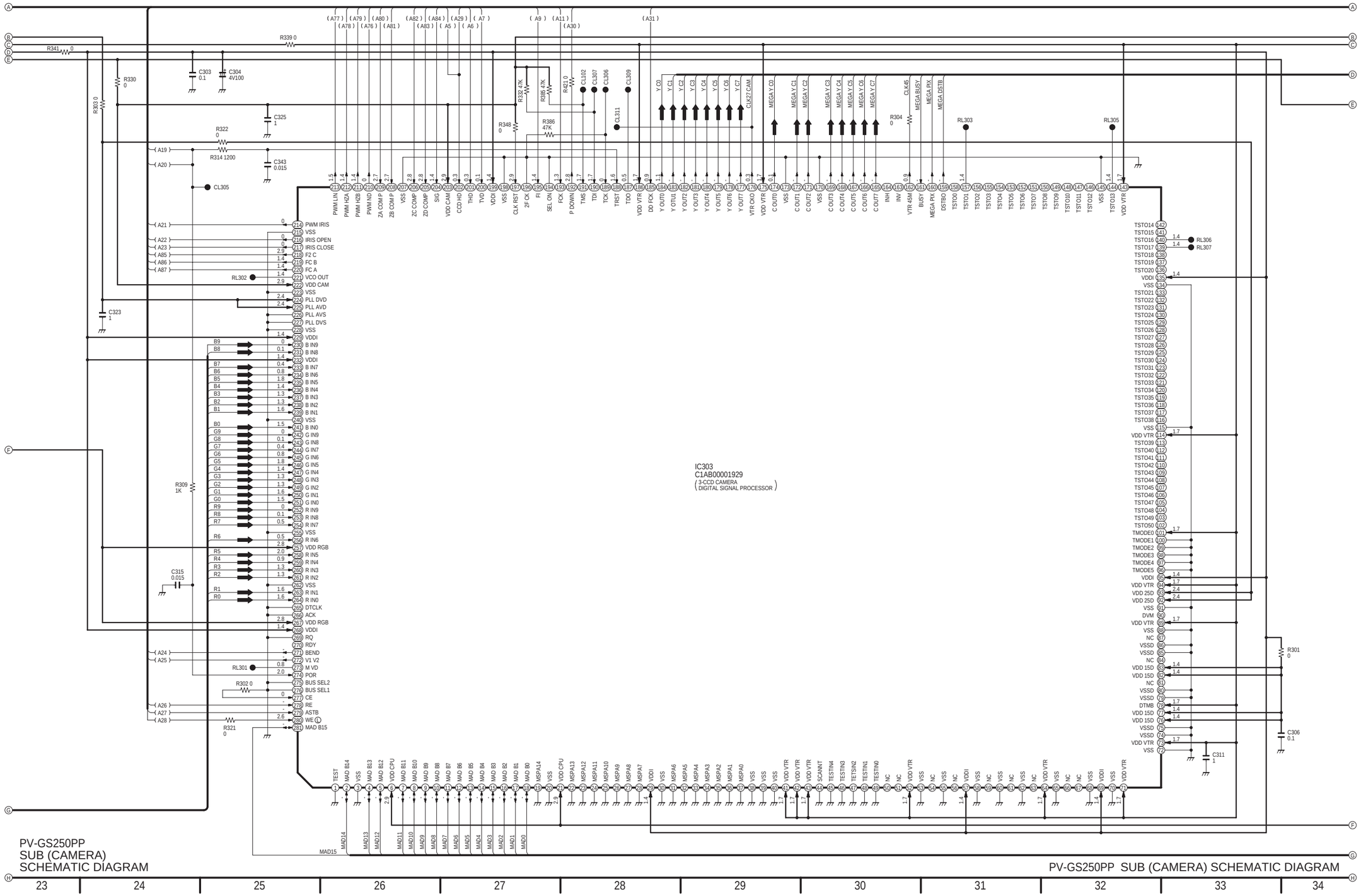

PV-GS250PP
SUB (CAMERA)
SCHEMATIC DIAGRAM

PV-GS250PP SUB (CAMERA) SCHEMATIC DIAGRAM

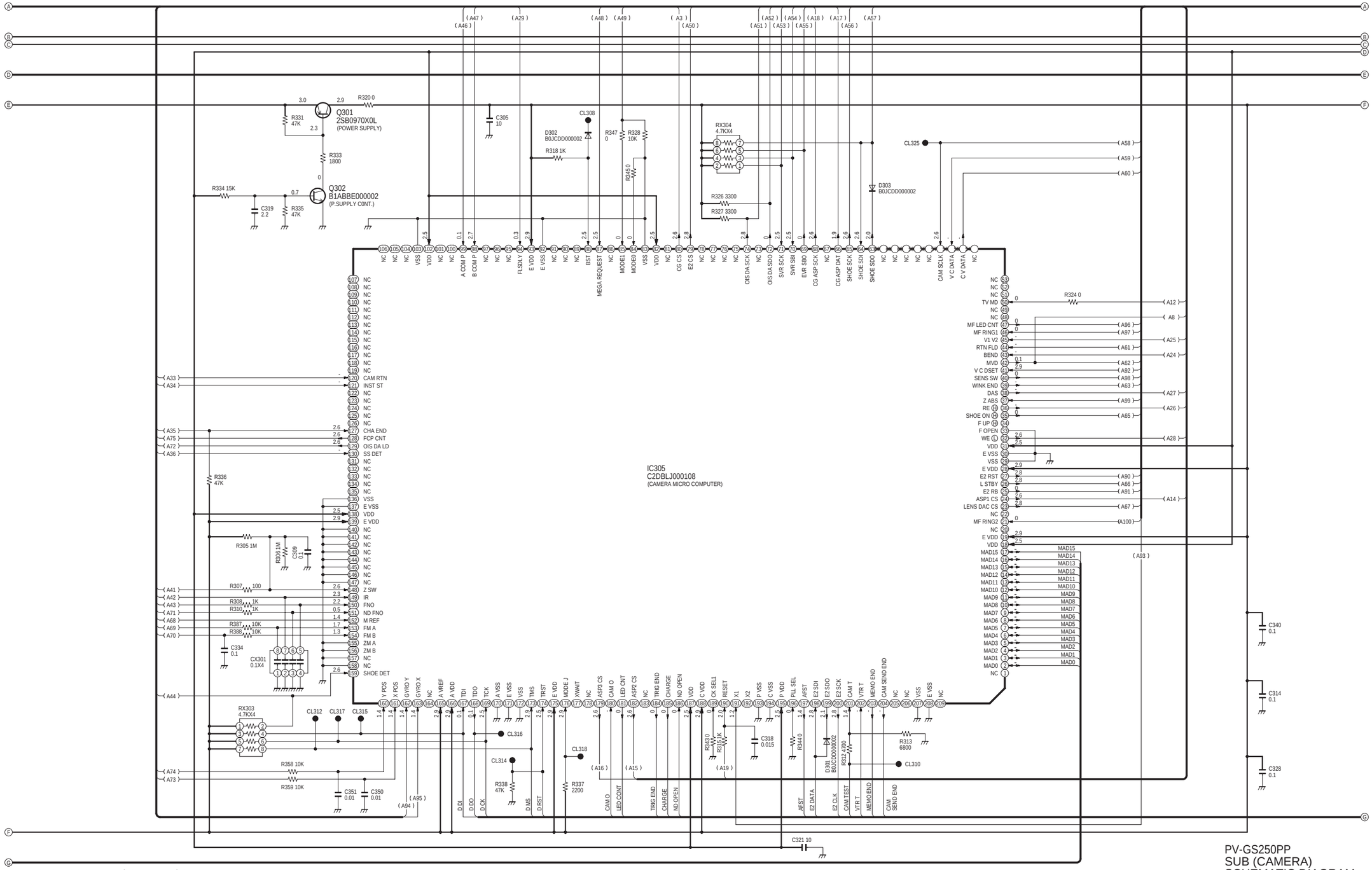

PV-GS250PP SUB (CAMERA) SCHEMATIC DIAGRAM

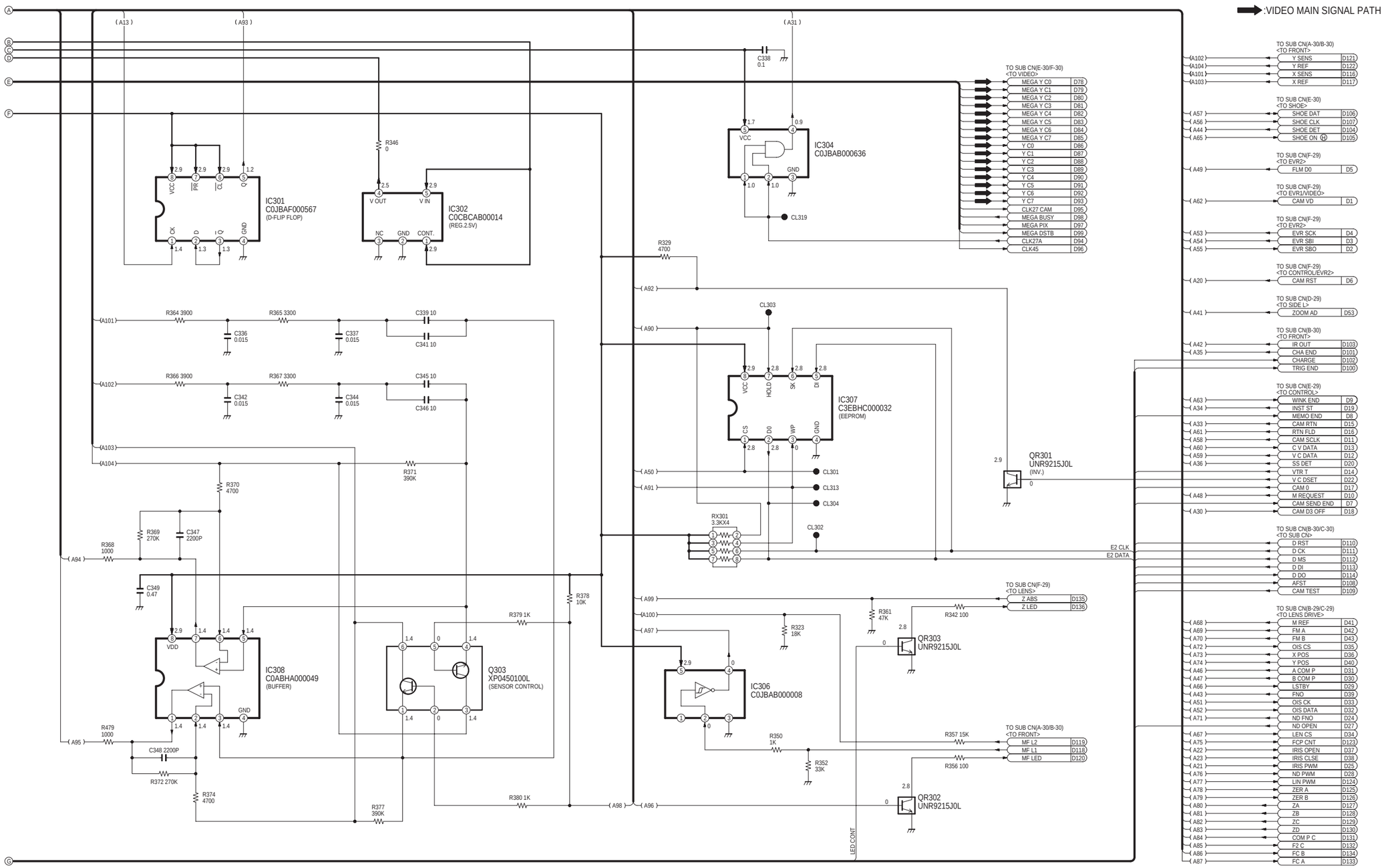

PV-GS250PP
SUB (CAMERA)
SCHEMATIC DIAGRAM

PV-GS250PP
SUB (CAMERA)
SCHEMATIC DIAGRAM

46 47 48 49 50 51 52 53 54 55 56

14.16.1. CAMERA I/O TABLE

IC305 : CAMERA MICROCOMPUTER

Pin No.	Signal Name	I/O	Explanation
1	NC	-	NC
2	MAD0	I/O	Address Data
3	MAD1	I/O	Address Data
4	MAD2	I/O	Address Data
5	MAD3	I/O	Address Data
6	MAD4	I/O	Address Data
7	MAD5	I/O	Address Data
8	MAD6	I/O	Address Data
9	MAD7	I/O	Address Data
10	MAD8	I/O	Address Data
11	MAD9	I/O	Address Data
12	MAD10	I/O	Address Data
13	MAD11	I/O	Address Data
14	MAD12	I/O	Address Data
15	MAD13	I/O	Address Data
16	MAD14	I/O	Address Data
17	MAD15	I/O	Address Data
18	VDD	I	Voltage
19	E VDD	I	Voltage
20	NC	-	NC
21	MF RING 2	I	MF Ring 2
22	NC	-	NC
23	LENS DAC CS	O	Lens Chip Select
24	APS1 CS	O	APS1 Chip Select
25	E2 RB	O	EEPROM Ready/Busy
26	LSTBY	O	Standby
27	E2 RST	O	EEPROM Reset
28	E VDD	I	Voltage
29	VSS	-	GND
30	E VSS	-	GND
31	VDD	I	Voltage
32	WE Ⓛ	O	Write Enable ON/OFF
33	F OPEN	-	NC
34	F UP Ⓗ	-	NC
35	SHOE ON Ⓗ	O	SHOE Power ON/OFF
36	RE Ⓗ	O	Write Enable ON/OFF
37	Z ABS	I	Zoom Encoder
38	DAS	O	Address Strobe
39	WINK END	O	WINK END
40	SENS SW	O	Sensor Level Control
41	V C DSET	I	DMA Forwarding Timing
42	MVD	O	VD To DSP LSI
43	BEND	I	Data Block End Request
44	RTN FLD	I	Camera Microcomputer Field Signal
45	V1 V2	I	ACT Detect End
46	MF RING 1	I	MF Ring 1
47	MF LED CNT	O	MF LED Drive Control
48	NC	-	NC
49	NC	-	NC
50	TV MD	I	NTSC/PAL Select
51	NC	-	NC
52	NC	-	NC
53	NC	-	NC
54	NC	-	NC
55	C V DATA	O	VTR Serial Data Output
56	V C DATA	I	VTR Serial Data Input
57	CAM SCLK	I	VTR Serial Clock
58	NC	-	NC
59	NC	-	NC
60	NC	-	NC
61	NC	-	NC

Pin No.	Signal Name	I/O	Explanation
62	NC	-	NC
63	SHOE SDO	O	SHOE Serial Data Output
64	SHOE SDI	I	SHOE Serial Data Input
65	SHOE SCK	O	SHOE Serial Clock
66	CG ASP DAT	O	Character Generation Serial Data
67	NC	-	NC
68	CG ASP SCK	O	Character Generation Clock
69	EVR SBO	O	EVR Serial Data Output
70	SVR SBI	I	EVR Serial Data Input
71	SVR SCK	I	EVR Serial Clock
72	OIS DA SDO	O	OIS DAC Serial Data Output
73	NC	-	NC
74	OIS DA SCK	O	OIS DAC Serial Clock
75	NC	-	NC
76	NC	-	NC
77	NC	-	NC
78	NC	-	NC
79	E2 CS	O	EEPROM Chip Select
80	CG CS	O	Character Generation Chip Select
81	NC	-	NC
82	VDD	I	Voltage
83	VSS	-	GND
84	MODE0	I	Mode Select 1
85	MODE1	I	Mode Select 2
86	NC	-	NC
87	MEGA REQUEST	I	Mega Pixel Request
88	BST	I	Boundary Scan Test SW
89	NC	-	NC
90	NC	-	NC
91	NC	-	NC
92	E VSS	-	GND
93	E VDD	I	Voltage
94	FLSDLY	I	Flashing Delay
95	NC	-	NC
96	NC	-	NC
97	NC	-	NC
98	B COMP	I	Liner Adjust (B COMP Capture)
99	A COMP	I	Liner Adjust (A COMP Capture)
100	NC	-	NC
101	NC	-	NC
102	VDD	I	Voltage
103	VSS	-	GND
104	NC	-	NC
105	NC	-	NC
106	NC	-	NC
107	NC	-	NC
108	NC	-	NC
109	NC	-	NC
110	NC	-	NC
111	NC	-	NC
112	NC	-	NC
113	NC	-	NC
114	NC	-	NC
115	NC	-	NC
116	NC	-	NC
117	NC	-	NC
118	NC	-	NC
119	NC	-	NC
120	CAM RTN	I	Camera Clock Deference Signal
121	INST ST	I	REC Control
122	NC	-	NC

Pin No.	Signal Name	I/O	Explanation
123	NC	-	NC
124	NC	-	NC
125	NC	-	NC
126	NC	-	NC
127	CHA END	I	Flash Charge End
128	FCP CNT	O	Powre Supply Control
129	OIS DA LD	O	OIS DAC Data Output
130	SS DET	I	Start/Stop Detect
131	NC	-	NC
132	NC	-	NC
133	NC	-	NC
134	NC	-	NC
135	NC	-	NC
136	VSS	-	GND
137	E VSS	-	GND
138	VDD	I	Voltage
139	E VDD	I	Voltage
140	NC	-	NC
141	NC	-	NC
142	NC	-	NC
143	NC	-	NC
144	NC	-	NC
145	NC	-	NC
146	NC	-	NC
147	NC	-	NC
148	Z SW	I	Zoom SW Voltage
149	IR	I	IR Sensor
150	FNO	I	F Value
151	ND FNO	I	ND F Value
152	M REF	I	Voltage
153	FM A	I	Auto Focus FG A Monitor
154	FM B	I	Auto Focus FG B Monitor
155	ZM A	-	NC
156	ZM B	-	NC
157	NC	-	NC
158	NC	-	NC
159	SHOE DET	I	SHOE Detect
160	Y POS	I	Y Position Detect (OIS)
161	X POS	I	X Position Detect (OIS)
162	GYRO Y	I	Y Position Detect
163	GYRO X	I	X Position Detect
164	NC	-	NC
165	A VREF	I	Voltage
166	A VDD	I	Voltage

Pin No.	Signal Name	I/O	Explanation
167	TDI	I	TEST Serial Data Input
168	TDO	O	TEST Serial Data Output
169	TCK	I	TEST Serial Clock
170	A VSS	-	GND
171	E VSS	-	GND
172	VSS	-	GND
173	TMS	I	TEST Master Clock
174	TRST	I	TEST Reset
175	E VDD	I	Voltage
176	MODE J	I	Mode Select
177	XWAIT	-	NC
178	NC	-	NC
179	ASP3 CS	O	ASP3 Chip Select
180	CAM 0	I	CAM Microcomputer Communication
181	LED CNT	O	LED Drive Control
182	ASP2 CS	O	ASP2 Chip Select
183	NC	-	NC
184	TRIG END	O	Flash Trigger End
185	CHARGE	O	Flash Cherge
186	ND OPEN	-	GND
187	VDD	I	Voltage
188	C VDD	I	Voltage
189	CK SEL1	I	Clock Select
190	RESET	I	Reset
191	X1	I	OSC In
192	X2	-	NC
193	P VSS	-	GND
194	C VSS	-	GND
195	P VDD	I	Voltage
196	PLL SEL	I	PLL Select
197	AFST	O	Process Timing Pulse
198	E2 SDI	I	EEPROM Serial Data In
199	E2 SDO	O	EEPROM Serial Data Out
200	E2 SCK	O	EEPROM Serial Clock
201	CAM T	I	Camera Test
202	VTR T	I	Sync Serial Communication Enable
203	MEMO END	O	Memory End
204	CAM SEND END	O	CAM SEND END
205	NC	-	NC
206	NC	-	NC
207	VSS	-	GND
208	E VSS	-	GND
209	NC	-	NC

14.17. MAIN (MAIN CONNECTION) SCHEMATIC DIAGRAM

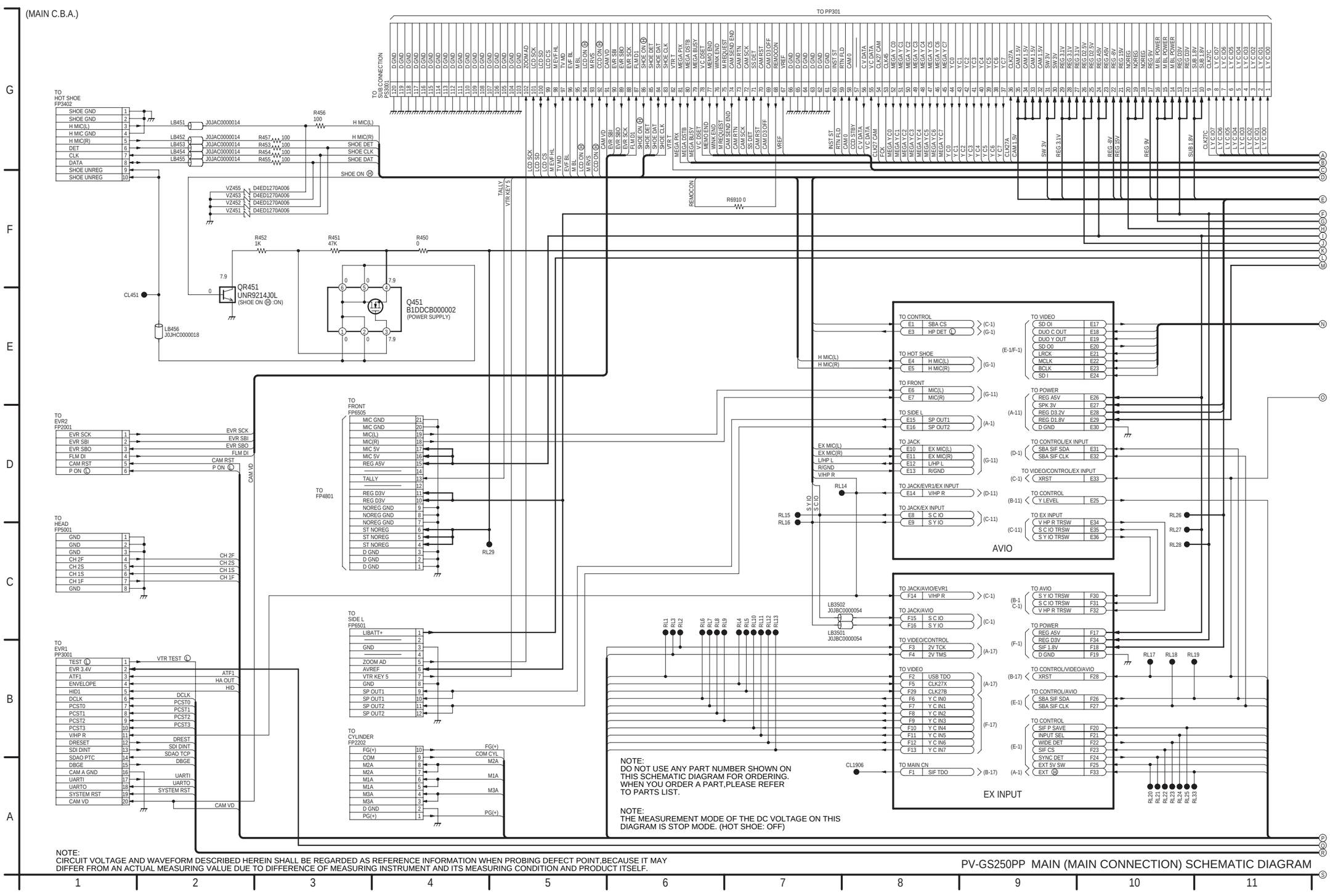

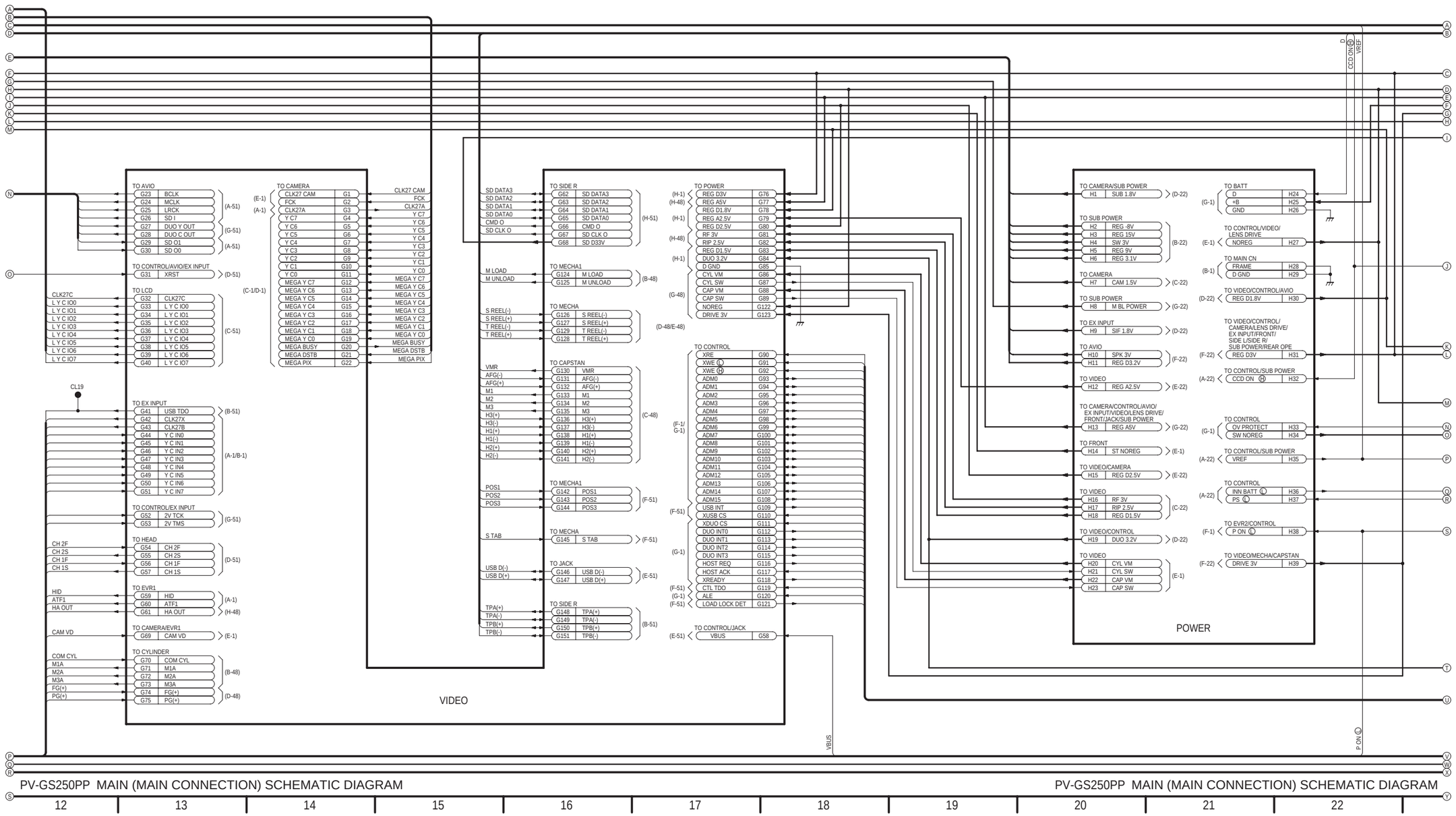

PV-GS250PP MAIN (MAIN CONNECTION) SCHEMATIC DIAGRAM

PV-GS250PP MAIN (MAIN CONNECTION) SCHEMATIC DIAGRAM

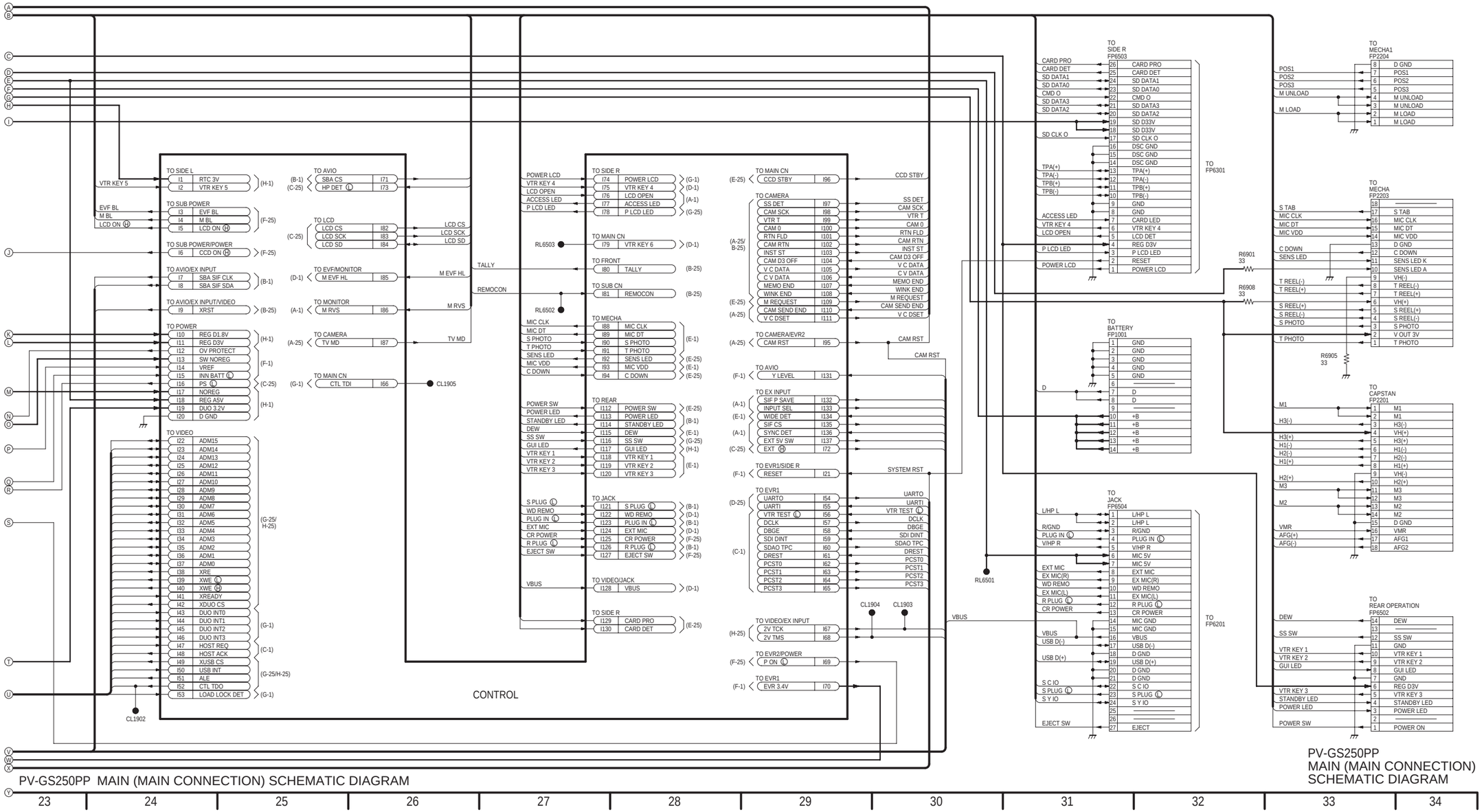

PV-GS250PP MAIN (MAIN CONNECTION) SCHEMATIC DIAGRAM

14.18. MAIN (AVIO) SCHEMATIC DIAGRAM

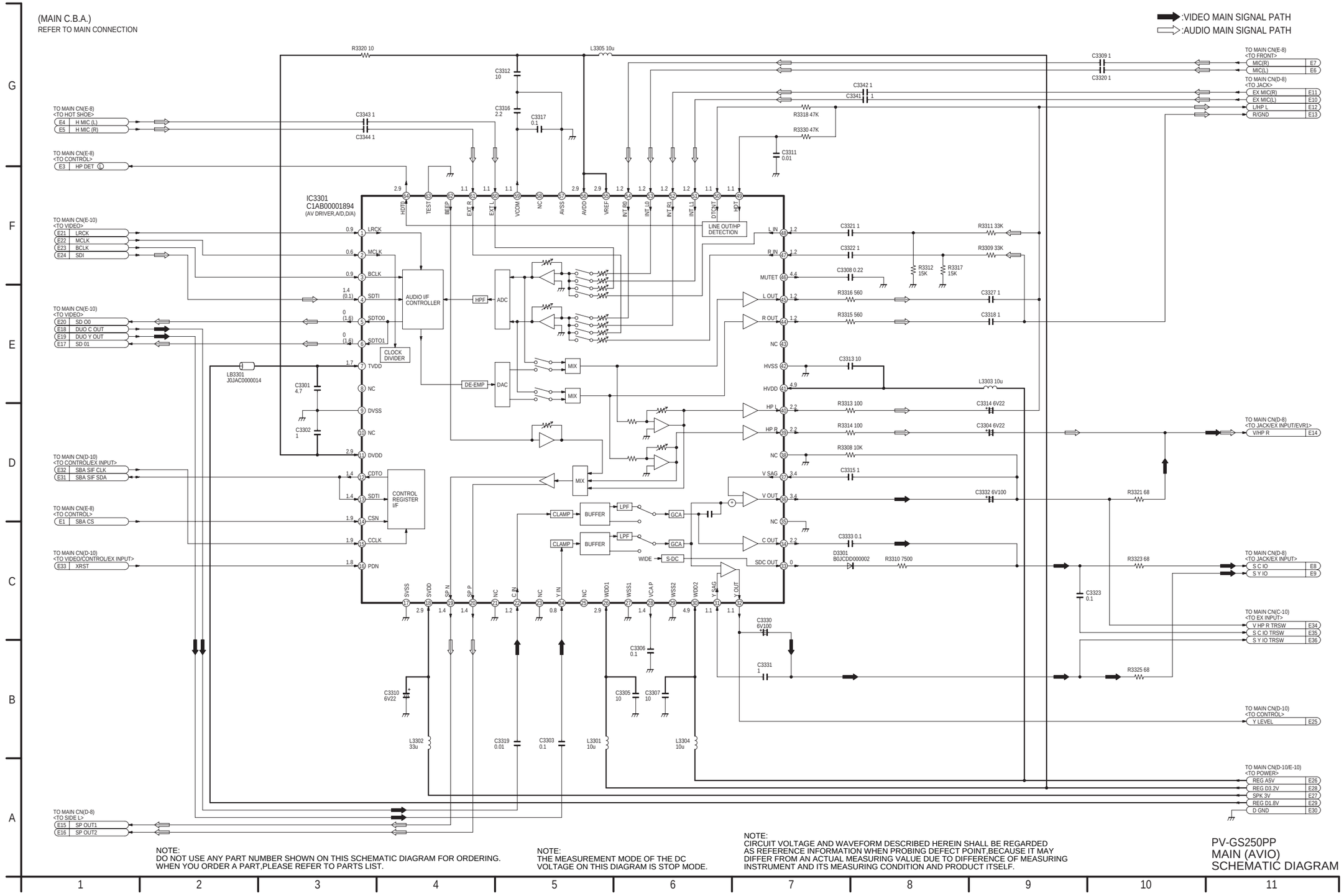

NOTE:
DO NOT USE ANY PART NUMBER SHOWN ON THIS SCHEMATIC DIAGRAM FOR ORDERING.
WHEN YOU ORDER A PART,PLEASE REFER TO PARTS LIST.

NOTE:
THE MEASUREMENT MODE OF THE DC
VOLTAGE ON THIS DIAGRAM IS STOP MODE.

NOTE:
CIRCUIT VOLTAGE AND WAVEFORM DESCRIBED HEREIN SHALL BE REGARDED
AS REFERENCE INFORMATION WHEN PROBING DEFECT POINT,BECAUSE IT MAY
DIFFER FROM AN ACTUAL MEASURING VALUE DUE TO DIFFERENCE OF MEASURING
INSTRUMENT AND ITS MEASURING CONDITION AND PRODUCT ITSELF.

PV-GS250PP
MAIN (AVIO)
SCHEMATIC DIAGRAM

14.19. MAIN (EX INPUT) SCHEMATIC DIAGRAM

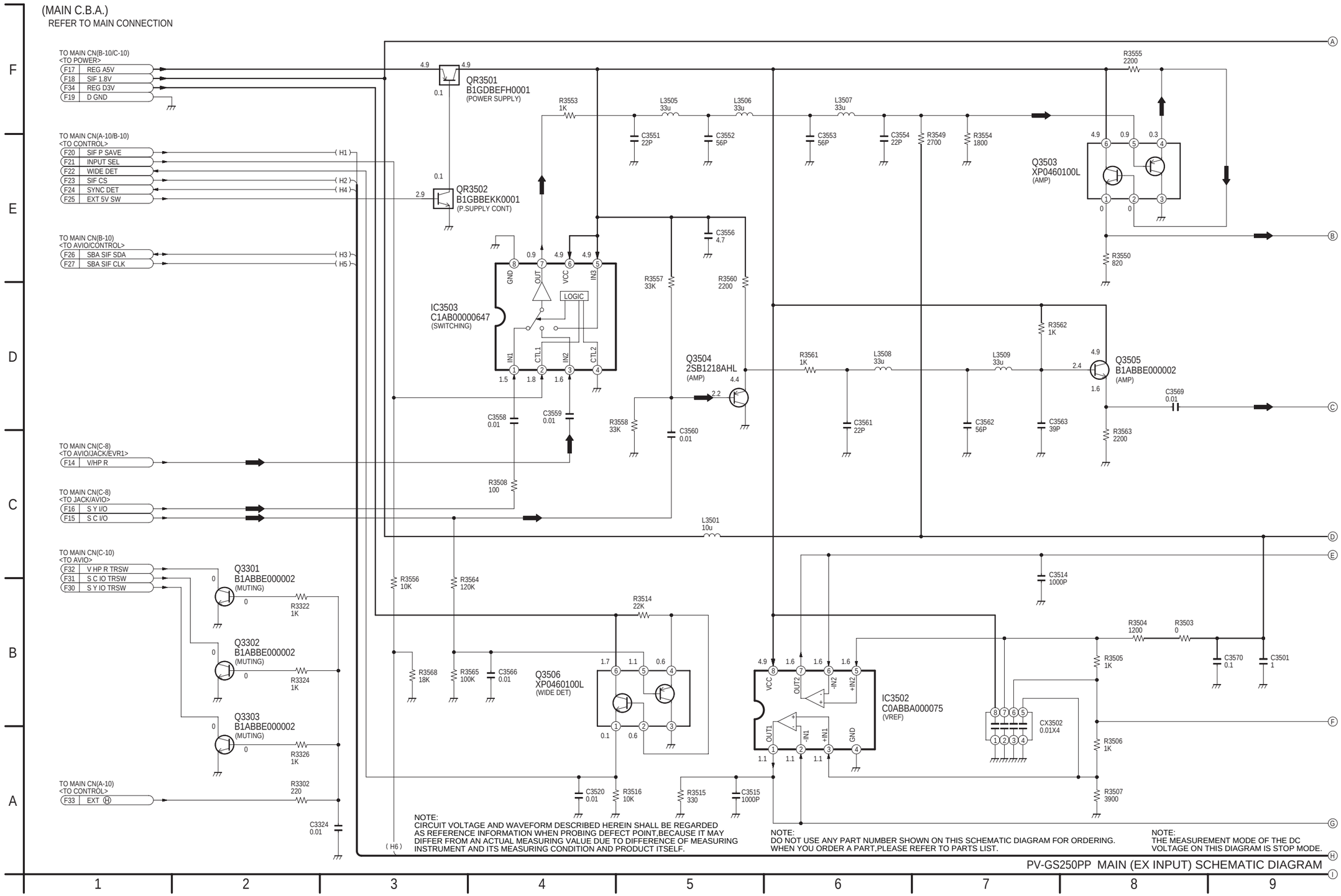

:MAIN SIGNAL PATH REC MODE

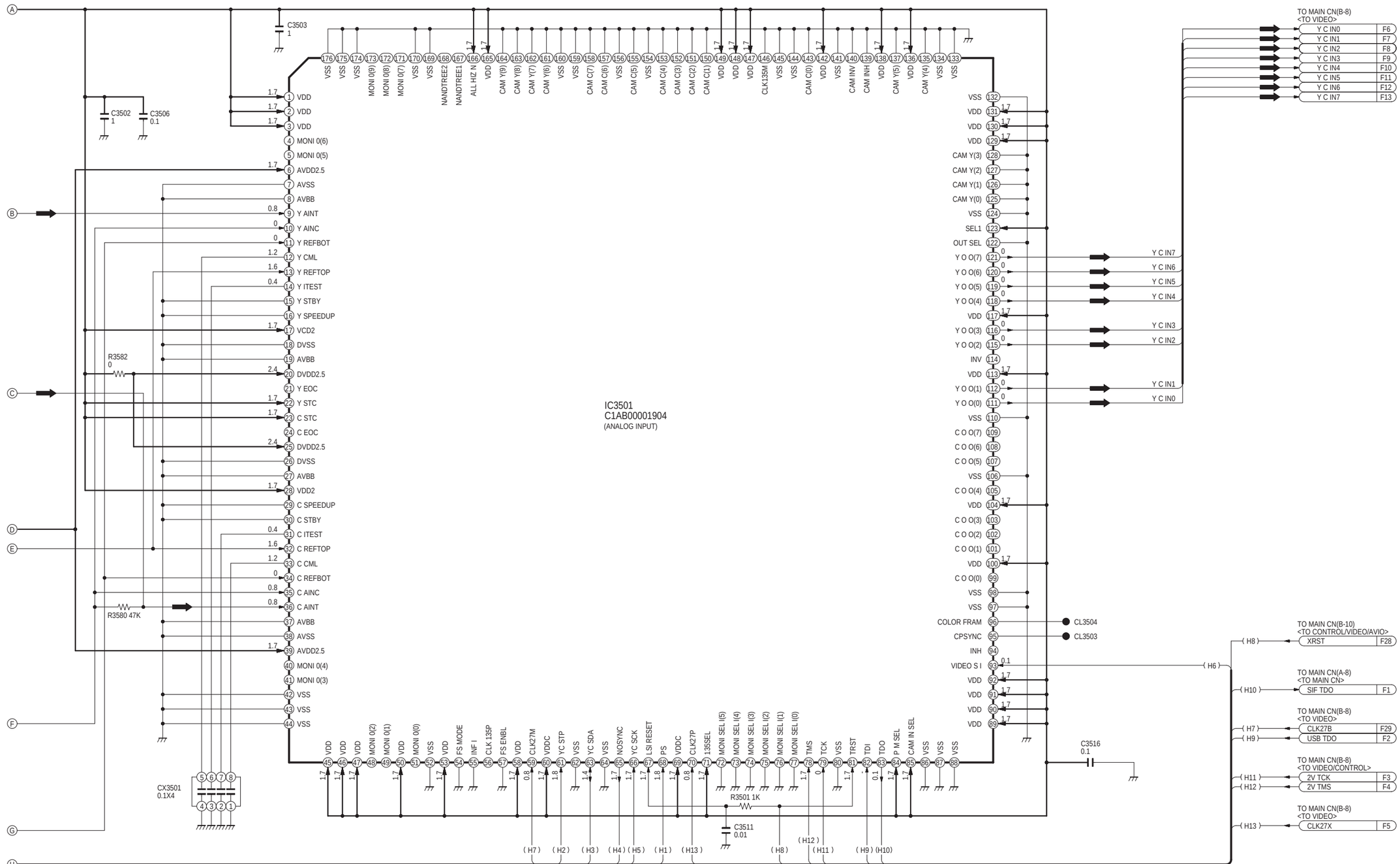

PV-GS250PP MAIN (EX INPUT) SCHEMATIC DIAGRAM

PV-GS250PP MAIN (EX INPUT) SCHEMATIC DIAGRAM

14.20. MAIN (VIDEO) SCHEMATIC DIAGRAM

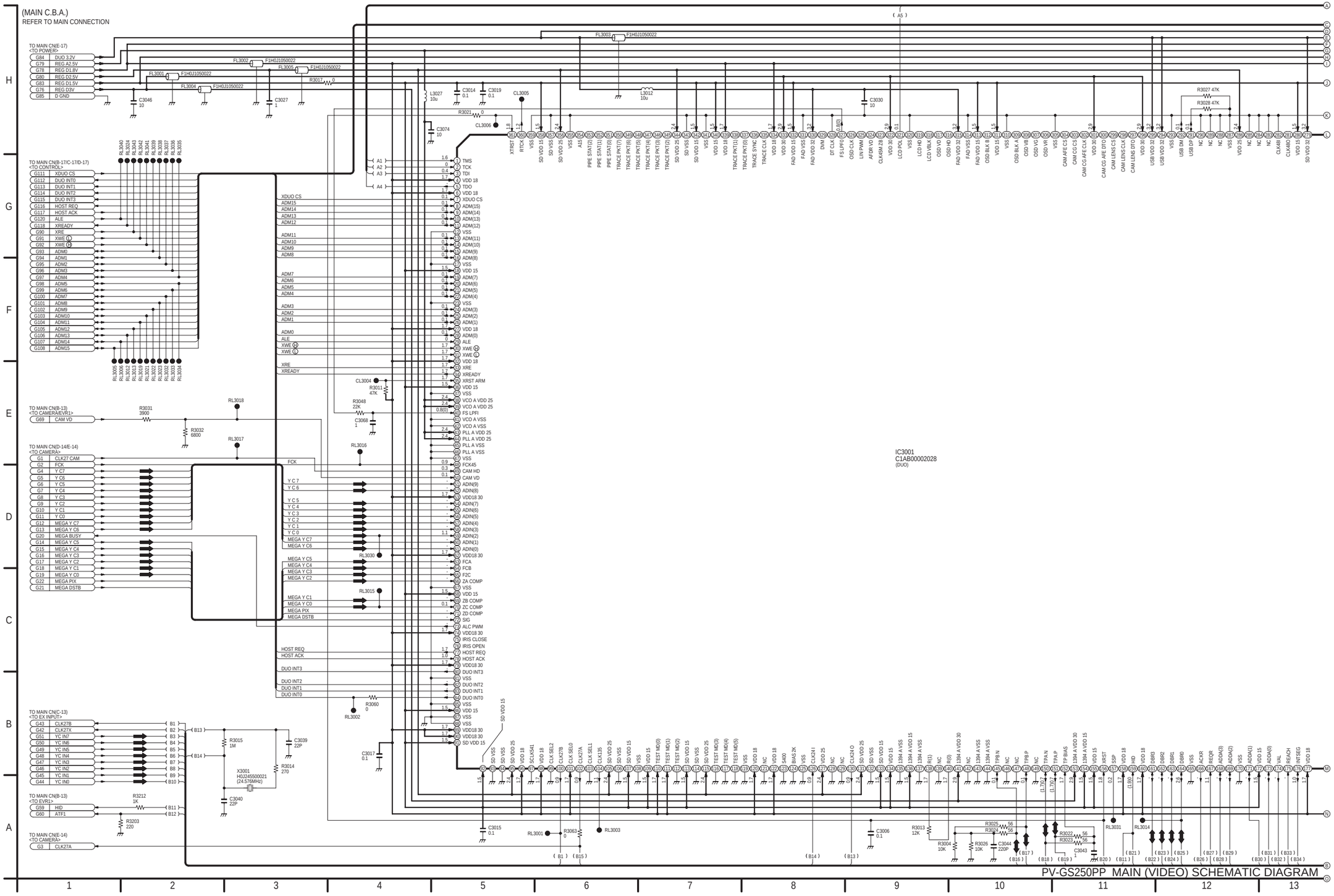

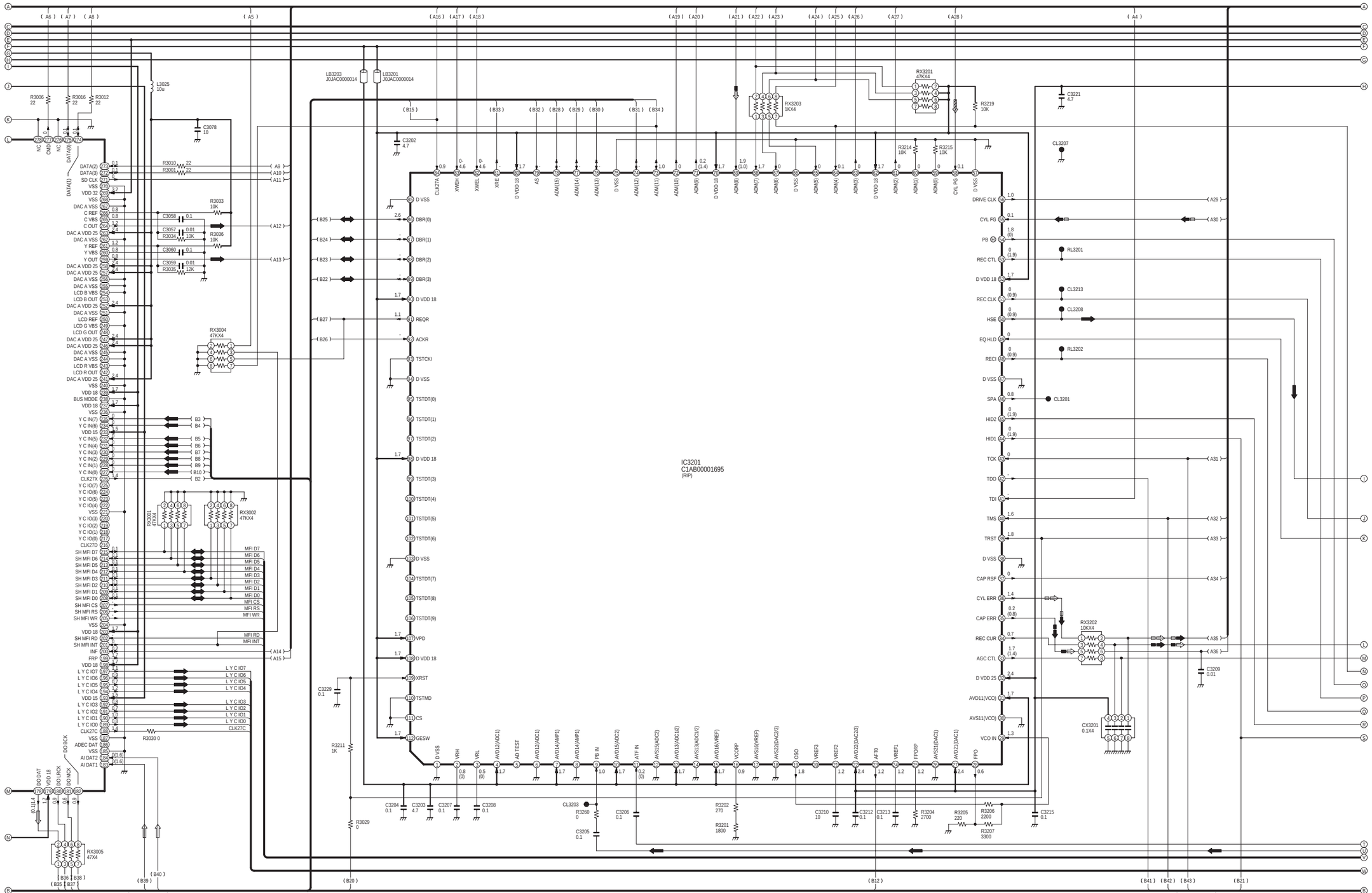
IC3201
C1AB00001695
(RIP)
LB3203
J0JAC0000014
LB3201
J0JAC0000014
L3025
10u
C3078
10
C3202
4.7
C3221
4.7
C3058
C3057
C3060
C3059
R3033
10K
R3036
10K
R3034
10K
R3035
12K
R3010
R3001
R3030 0
RX3004
47KX4
RX3301
47KX4
RX3002
47KX4
RX3005
47KX4
RX3203
1KX4
RX3201
47KX4
RX3202
10KX4
CX3201
0.1X4
R3006
R3016
R3012
R3214
10K
R3215
10K
R3219
10K
R3211
1K
R3029
0
R3260
0
R3202
270
R3201
1800
R3204
2700
R3205
220
R3206
2200
R3207
3300
C3209
0.01
C3229
0.1
C3204
C3203
C3207
C3208
C3205
C3206
C3210
C3212
C3213
C3215
CL3203
CL3207
CL3201
RL3201
RL3202
CL3213
CL3208
DRIVE CLK
CYL FG
PB
REC CTL
REC CLK
HSE
EQ HLD
RECI
SPA
HID2
HID1
TCK
TDO
TDI
TMS
TRST
CAP RSF
CYL ERR
CAP ERR
REC CUR
AGC CTL
AVD11(VCO)
AVS11(VCO)
VCO IN
D VDD 25
D VSS
D VDD 18
DBR(0)
DBR(1)
DBR(2)
DBR(3)
REQR
ACKR
TSTCKI
TSTDT(0)
TSTDT(1)
TSTDT(2)
TSTDT(3)
TSTDT(4)
TSTDT(5)
TSTDT(6)
TSTDT(7)
TSTDT(8)
TSTDT(9)
VPD
XRST
TSTMD
CS
GESW
DATA(2)
DATA(3)
SD CLK
VSS
VDD 32
DAC A VSS
C REF
C VBS
C OUT
DAC A VDD 25
Y REF
Y VBS
Y OUT
LCD B VBS
LCD B OUT
LCD REF
LCD G VBS
LCD G OUT
LCD R VBS
LCD R OUT
VDD 18
BUS MODE
VDD 15
Y C IN(7)
Y C IN(6)
Y C IN(5)
Y C IN(4)
Y C IN(3)
Y C IN(2)
Y C IN(1)
Y C IN(0)
CLK27X
Y C IO(7)
Y C IO(6)
Y C IO(5)
Y C IO(4)
Y C IO(3)
Y C IO(2)
Y C IO(1)
Y C IO(0)
CLK27D
SH MFI D7
SH MFI D6
SH MFI D5
SH MFI D4
SH MFI D3
SH MFI D2
SH MFI D1
SH MFI D0
SH MFI CS
SH MFI RS
SH MFI WR
SH MFI RD
SH MFI INT
INF
FRP
L Y C IO7
L Y C IO6
L Y C IO5
L Y C IO4
L Y C IO3
L Y C IO2
L Y C IO1
L Y C IO0
CLK27C
ADEC DAT
AI DAT2
AI DAT1
DO DAT
DO BCK
DO LRCK
DO MCK
MFI D7
MFI D6
MFI D5
MFI D4
MFI D3
MFI D2
MFI D1
MFI D0
MFI CS
MFI RS
MFI WR
MFI RD
MFI INT
PV-GS250PP MAIN (VIDEO) SCHEMATIC DIAGRAM
PV-GS250PP MAIN (VIDEO) SCHEMATIC DIAGRAM

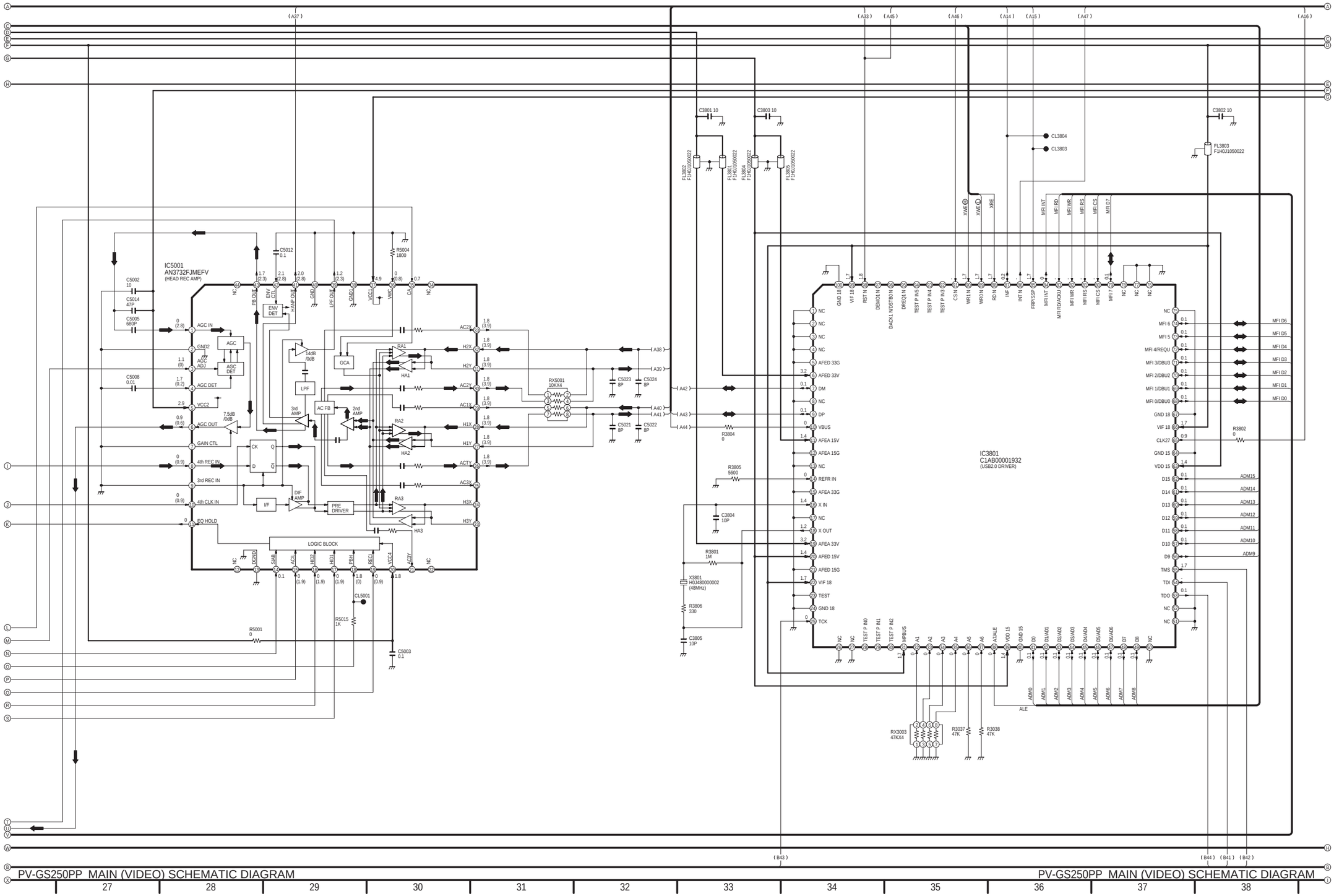

PV-GS250PP MAIN (VIDEO) SCHEMATIC DIAGRAM

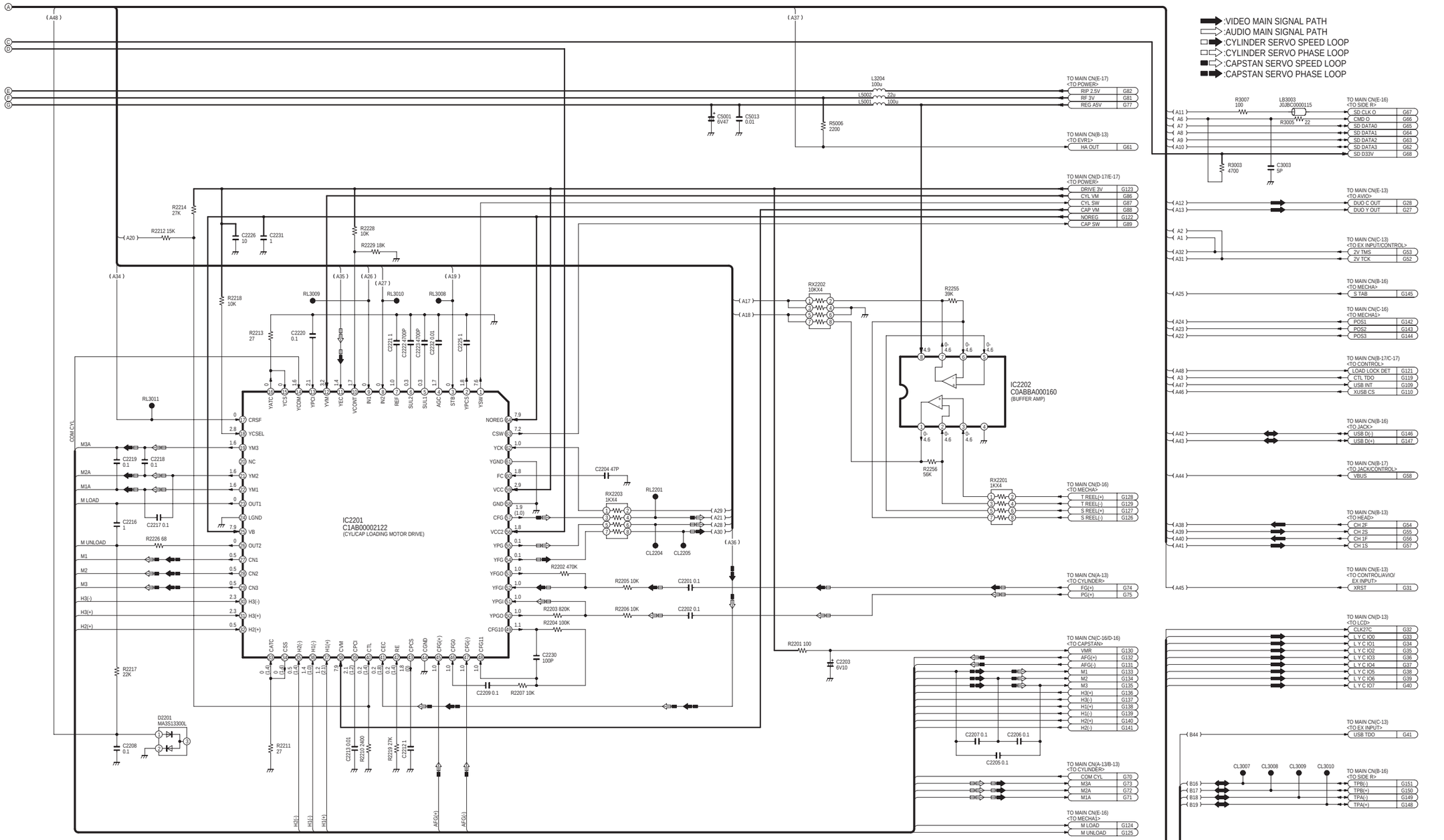

NOTE:
DO NOT USE ANY PART NUMBER SHOWN ON THIS SCHEMATIC DIAGRAM FOR ORDERING. WHEN YOU ORDER A PART,PLEASE REFER TO PARTS LIST.

NOTE:
THE MEASUREMENT MODE OF THE DC VOLTAGE ON THIS DIAGRAM IS PLAYBACK MODE. THE MEASUREMENT MODE OF THE DC VOLTAGE IN THE BRACKETS( )ON THIS DIAGRAM IS RECORD MODE.(SP MODE)

NOTE:
CIRCUIT VOLTAGE AND WAVEFORM DESCRIBED HEREIN SHALL BE REGARDED AS REFERENCE INFORMATION WHEN PROBING DEFECT POINT,BECAUSE IT MAY DIFFER FROM AN ACTUAL MEASURING VALUE DUE TO DIFFERENCE OF MEASURING INSTRUMENT AND ITS MEASURING CONDITION AND PRODUCT ITSELF.

PV-GS250PP MAIN (VIDEO) SCHEMATIC DIAGRAM

PV-GS250PP
MAIN (VIDEO)
SCHEMATIC DIAGRAM

14.21. MAIN (POWER) SCHEMATIC DIAGRAM

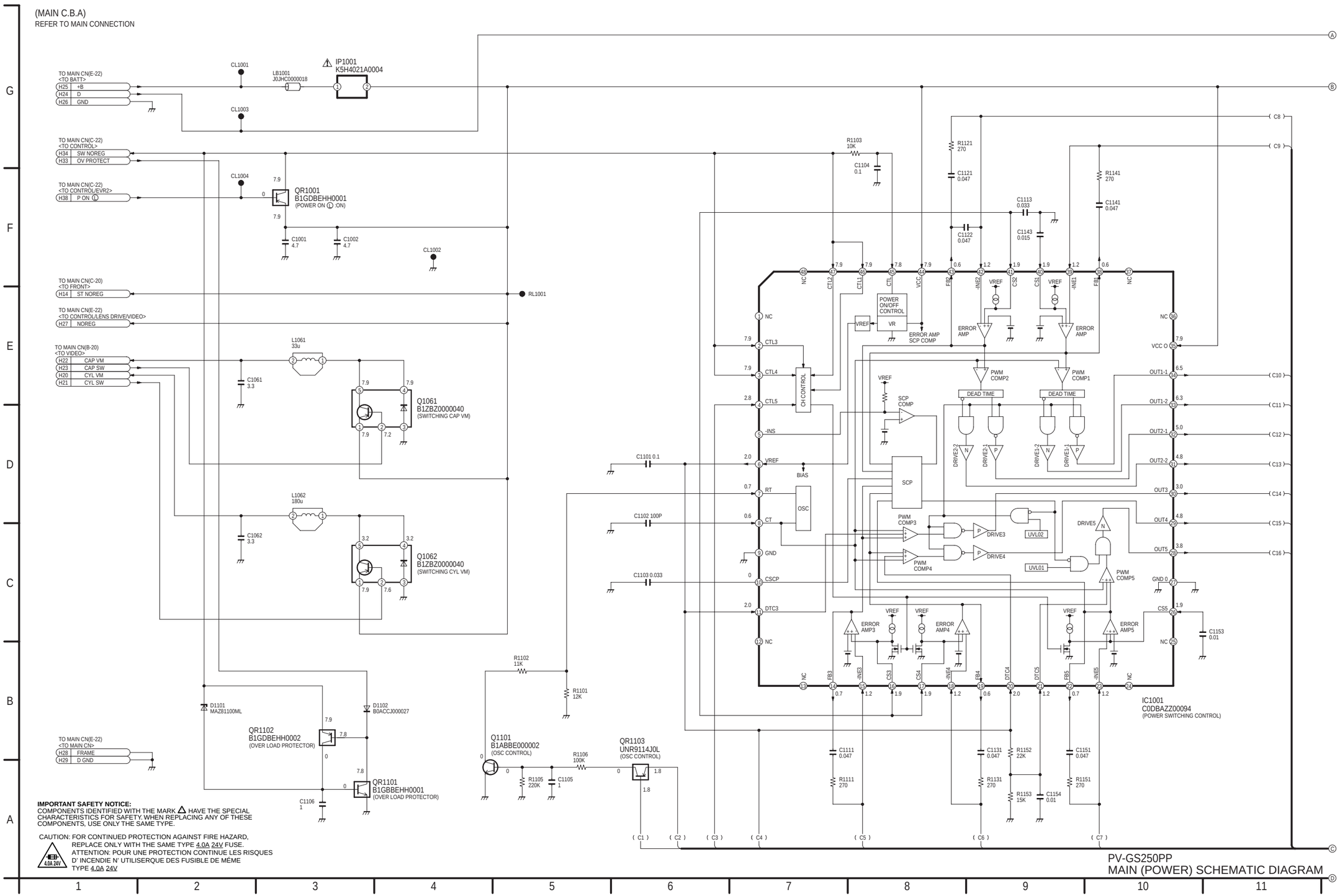

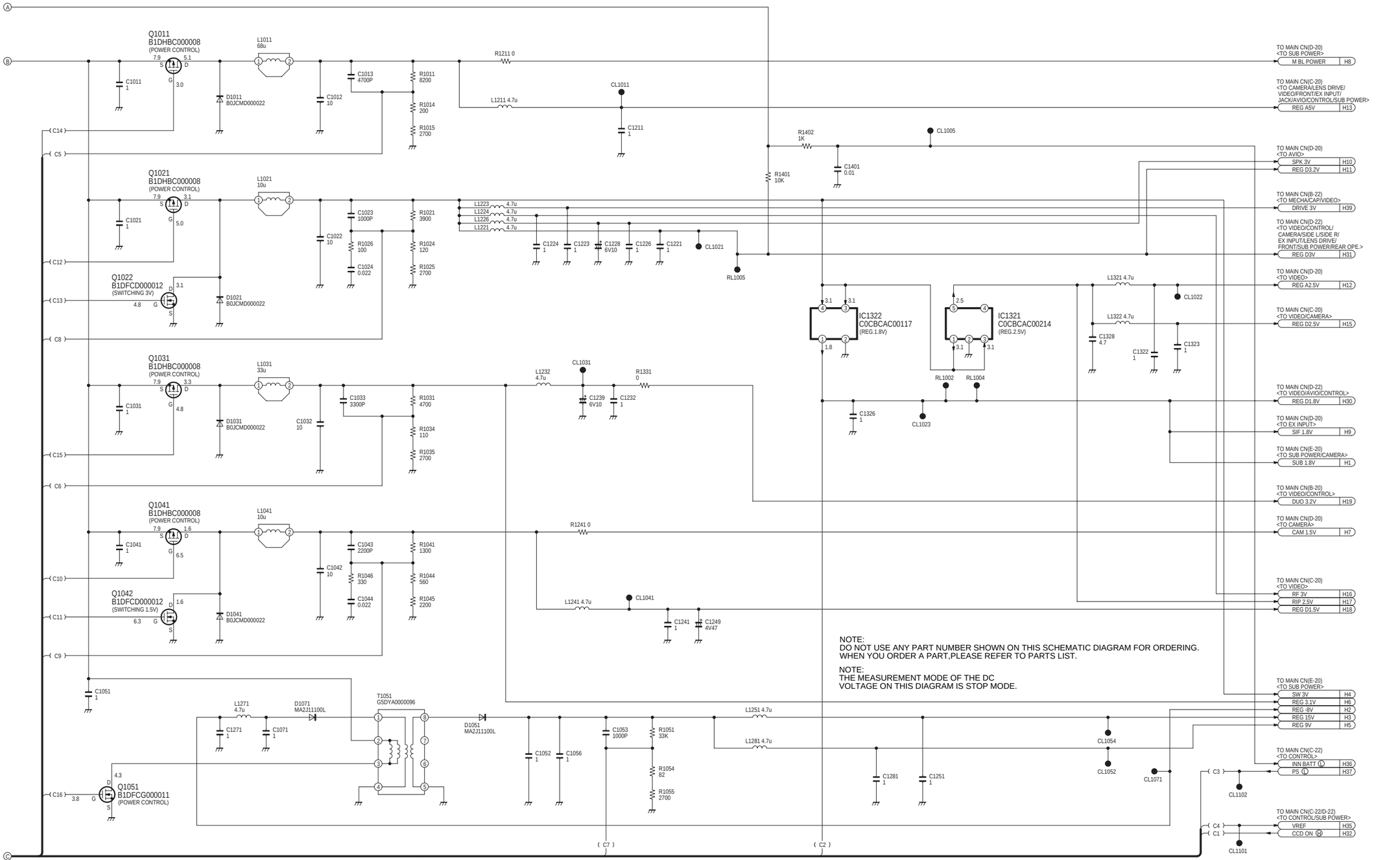

NOTE:
DO NOT USE ANY PART NUMBER SHOWN ON THIS SCHEMATIC DIAGRAM FOR ORDERING.
WHEN YOU ORDER A PART,PLEASE REFER TO PARTS LIST.

NOTE:
THE MEASUREMENT MODE OF THE DC
VOLTAGE ON THIS DIAGRAM IS STOP MODE.

PV-GS250PP
MAIN (POWER) SCHEMATIC DIAGRAM

NOTE:
CIRCUIT VOLTAGE AND WAVEFORM DESCRIBED HEREIN SHALL BE REGARDED AS REFERENCE INFORMATION WHEN PROBING DEFECT POINT,BECAUSE IT MAY DIFFER FROM AN ACTUAL MEASURING VALUE DUE TO DIFFERENCE OF MEASURING INSTRUMENT AND ITS MEASURING CONDITION AND PRODUCT ITSELF.

PV-GS250PP
MAIN (POWER) SCHEMATIC DIAGRAM

14.22. MAIN (CONTROL) SCHEMATIC DIAGRAM

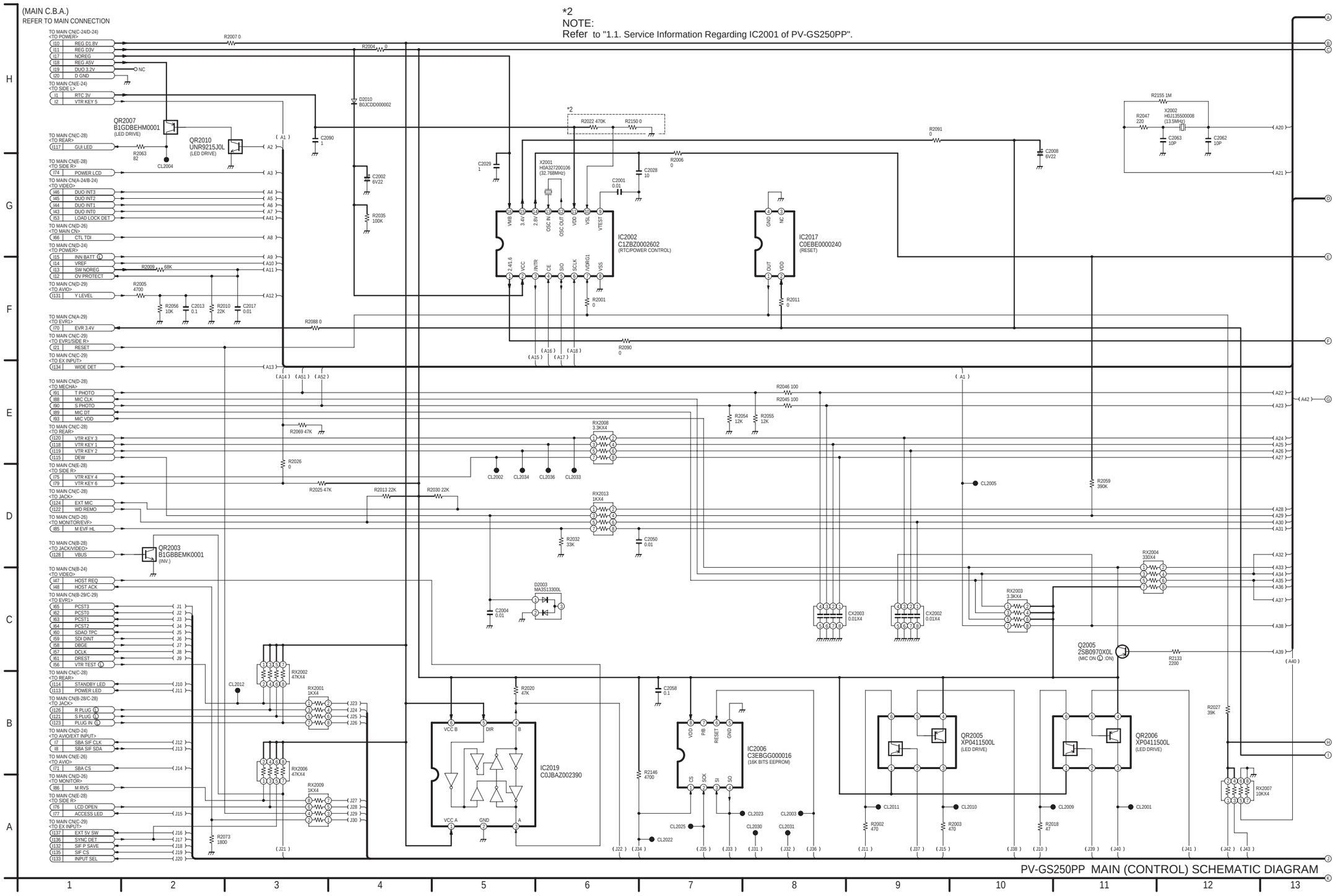

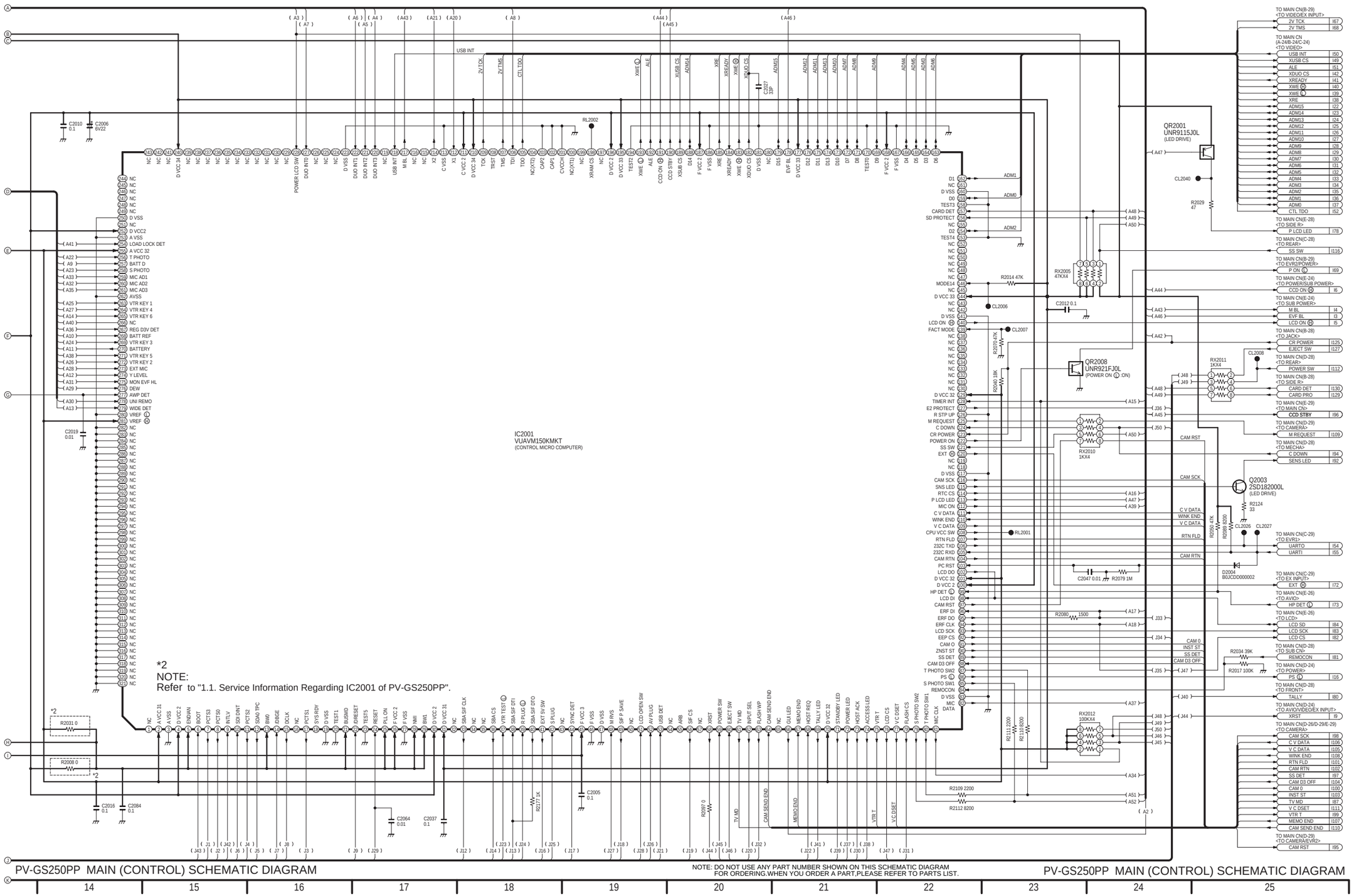

PV-GS250PP MAIN (CONTROL) SCHEMATIC DIAGRAM

PV-GS250PP MAIN (CONTROL) SCHEMATIC DIAGRAM

14.22.1. CONTROL DC VOLTAGE CHART (SP MODE)

ICs DC VOLTAGE CHART (SP MODE)

Ref. No.	IC2001																			
MODE	1	2	3	4	5	6	7	8	9	10	11	12	13	14	15	16	17	18	19	20
STOP	-	2.8	-	2.5	2.5	2.5	-	-	2.5	-	-	-	2.5	-	-	-	-	-	-	-
PLAY	-	2.8	-	2.5	2.5	2.5	-	-	2.5	-	-	-	2.5	-	-	-	-	-	-	-
REC	-	2.8	-	2.5	2.5	2.5	-	-	2.5	-	-	-	2.5	-	-	-	-	-	-	-
F.F.	-	2.8	-	2.5	2.5	2.5	-	-	2.5	-	-	-	2.5	-	-	-	-	-	-	-
REW	-	2.8	-	2.5	2.5	2.5	-	-	2.5	-	-	-	2.5	-	-	-	-	-	-	-
Ref. No.	IC2001																			
MODE	21	22	23	24	25	26	27	28	29	30	31	32	33	34	35	36	37	38	39	40
STOP	2.5	-	-	2.1	2.5	2.5	-	2.5	2.5	2.5	1.8	-	1.8	-	-	1.8	1.8	1.4	1.8	1.4
PLAY	2.5	-	-	2.1	2.5	2.5	-	2.5	2.5	2.5	1.8	-	1.8	-	-	1.8	1.8	1.4	1.8	1.4
REC	2.5	-	-	2.1	2.5	2.5	-	2.5	2.5	2.5	1.8	-	1.8	-	-	1.8	1.8	1.4	1.8	1.4
F.F.	2.5	-	-	2.1	2.5	2.5	-	2.5	2.5	2.5	1.8	-	1.8	-	-	1.8	1.8	1.4	1.8	1.4
REW	2.5	-	-	2.1	2.5	2.5	-	2.5	2.5	2.5	1.8	-	1.8	-	-	1.8	1.8	1.4	1.8	1.4
Ref. No.	IC2001																			
MODE	41	42	43	44	45	46	47	48	49	50	51	52	53	54	55	56	57	58	59	60
STOP	2.9	1.8	-	1.7	3.4	-	-	0	1.8	-	1.8	1.8	1.7	-	-	1.8	-	1.8	0	0
PLAY	2.9	1.8	-	1.7	3.4	-	-	0	1.8	-	1.8	1.8	1.7	-	-	1.8	-	1.8	0	0
REC	2.9	1.8	-	1.7	3.4	-	-	0	1.8	-	1.8	1.8	1.7	-	-	1.8	-	1.8	0	0
F.F.	2.9	1.8	-	1.7	3.4	-	-	0	1.8	-	1.8	1.8	1.7	-	-	1.8	-	1.8	0	0
REW	2.9	1.8	-	1.7	3.4	-	-	0	1.8	-	1.8	1.8	1.7	-	-	1.8	-	1.8	0	0
Ref. No.	IC2001																			
MODE	61	62	63	64	65	66	67	68	69	70	71	72	73	74	75	76	77	78	79	80
STOP	0	1.8	2.6	-	-	2.8	-	2.8	2.8	2.8	2.8	0	0.6	0	-	0	0	2.7	0	0
PLAY	0	1.8	2.6	-	-	2.8	-	2.8	2.8	2.8	2.8	0	0.6	0	-	0	0	2.7	0	0
REC	0	1.8	2.6	-	-	2.8	-	2.8	0	2.8	2.8	0	0.6	0	-	0	0	2.7	0	0
F.F.	0	1.8	2.6	-	-	2.8	-	2.8	2.8	2.8	2.8	0	0.6	0	-	0	0	2.7	0	0
REW	0	1.8	2.6	-	-	2.8	-	2.8	2.8	2.8	2.8	0	0.6	0	-	0	0	2.7	0	0
Ref. No.	IC2001																			
MODE	81	82	83	84	85	86	87	88	89	90	91	92	93	94	95	96	97	98	99	100
STOP	2.8	2.8	-	3.6	0	2.8	0	0	-	-	-	2.8	1.2	2.8	0	2.7	2.0	0	2.8	2.5
PLAY	2.8	2.8	-	0	0	2.8	0	0	-	-	-	2.8	1.2	2.8	0.5	2.7	2.0	0.7	2.8	2.5
REC	2.8	2.8	-	0	0	2.8	0	2.8	-	-	-	2.8	1.2	2.8	0.5	2.7	2.0	0.7	2.8	2.5
F.F.	2.8	2.8	-	0	0	2.8	0	0	-	-	-	0	1.2	2.8	0	2.7	2.0	0	2.8	2.5
REW	2.8	2.8	-	0	0	2.8	0	0	-	-	-	0	1.2	2.8	0	2.7	2.0	0	2.8	2.5
Ref. No.	IC2001																			
MODE	101	102	103	104	105	106	107	108	109	110	111	112	113	114	115	116	117	118	119	120
STOP	2.8	0	2.5	-	2.7	2.7	-	2.8	-	-	-	0	2.8	1.9	2.8	-	-	-	-	0
PLAY	2.8	0.7	2.5	-	2.7	2.7	-	2.8	-	-	-	0	2.8	1.9	2.4	-	-	-	-	0
REC	2.8	0.7	2.5	-	2.7	2.7	-	2.8	-	-	-	0	2.8	1.9	2.8	-	-	-	-	0
F.F.	2.8	0	2.5	-	2.7	2.7	-	2.8	-	-	-	0	2.8	1.9	2.4	-	-	-	-	0
REW	2.8	0	2.5	-	2.7	2.7	-	2.8	-	-	-	0	2.8	1.9	2.4	-	-	-	-	0
Ref. No.	IC2001																			
MODE	121	122	123	124	125	126	127	128	129	130	131	132	133	134	135	136	137	138	139	140
STOP	2.8	2.8	2.8	0	2.5	-	0	2.6	2.8	-	-	-	-	-	-	-	-	-	0	1.8
PLAY	2.8	2.8	2.8	0	2.5	-	0	2.6	2.8	-	-	-	-	-	-	-	-	-	0	1.8
REC	2.8	2.8	2.8	0	2.5	-	0	2.6	2.8	-	-	-	-	-	-	-	-	-	0	1.8
F.F.	2.8	2.8	2.8	0	2.5	-	0	2.6	2.8	-	-	-	-	-	-	-	-	-	0	1.8
REW	2.8	2.8	2.8	0	2.5	-	0	2.6	2.8	-	-	-	-	-	-	-	-	-	0	1.8
Ref. No.	IC2001																			
MODE	141	142	143	144	145	146	147	148	149	150	151	152	153	154	155	156	157	158	159	160
STOP	-	-	-	1.8	-	1.8	-	-	-	-	-	-	-	0.1	-	1.8	1.8	-	0.1	-
PLAY	-	-	-	1.8	-	1.8	-	-	-	-	-	-	-	0.1	-	1.8	1.8	-	0.1	-
REC	-	-	-	1.8	-	1.8	-	-	-	-	-	-	-	0.1	-	1.8	1.8	-	0.1	-
F.F.	-	-	-	1.8	-	1.8	-	-	-	-	-	-	-	0.1	-	1.8	1.8	-	0.1	-
REW	-	-	-	1.8	-	1.8	-	-	-	-	-	-	-	0.1	-	1.8	1.8	-	0.1	-
Ref. No.	IC2001																			
MODE	161	162	163	164	165	166	167	168	169	170	171	172	173	174	175	176	177	178	179	180
STOP	-	0.1	0.1	0.1	0.1	0.1	-	2.5	0.1	-	0.1	0.1	0.1	0.1	0.1	0.1	1.8	2.9	0.1	-
PLAY	-	0.1	0.1	0.1	0.1	0.1	-	2.5	0.1	-	0.1	0.1	0.1	0.1	0.1	0.1	1.8	2.9	0.1	-
REC	-	0.1	0.1	0.1	0.1	0.1	-	2.5	0.1	-	0.1	0.1	0.1	0.1	0.1	0.1	1.8	2.9	0.1	-
F.F.	-	0.1	0.1	0.1	0.1	0.1	-	2.5	0.1	-	0.1	0.1	0.1	0.1	0.1	0.1	1.8	2.9	0.1	-
REW	-	0.1	0.1	0.1	0.1	0.1	-	2.5	0.1	-	0.1	0.1	0.1	0.1	0.1	0.1	1.8	2.9	0.1	-
Ref. No.	IC2001																			
MODE	181	182	183	184	185	186	187	188	189	190	191	192	193	194	195	196	197	198	199	200
STOP	-	0.1	1.7	1.7	1.7	-	2.5	0.1	-	1.8	0	0	1.7	-	1.8	2.5	-	0.1	-	-
PLAY	-	0.1	1.7	1.7	1.7	-	2.5	0.1	-	1.8	0	0	1.7	-	1.8	2.5	-	0.1	-	-
REC	-	0.1	1.7	1.7	1.7	-	2.5	0.1	-	1.8	1.8	0	1.7	-	1.8	2.5	-	0.1	-	-
F.F.	-	0.1	1.7	1.7	1.7	-	2.5	0.1	-	1.8	0	0	1.7	-	1.8	2.5	-	0.1	-	-
REW	-	0.1	1.7	1.7	1.7	-	2.5	0.1	-	1.8	0	0	1.7	-	1.8	2.5	-	0.1	-	-
Ref. No.	IC2001																			
MODE	201	202	203	204	205	206	207	208	209	210	211	212	213	214	215	216	217	218	219	220
STOP	-	-	-	-	-	0.1	1.6	-	0	1.8	2.5	1.1	-	1.1	-	-	1.8	-	-	-
PLAY	-	-	-	-	-	0.1	1.6	-	0	1.8	2.5	1.1	-	1.1	-	-	1.8	-	-	-
REC	-	-	-	-	-	0.1	1.6	-	0	1.8	2.5	1.1	-	1.1	-	-	1.8	-	-	-
F.F.	-	-	-	-	-	0.1	1.6	-	0	1.8	2.5	1.1	-	1.1	-	-	1.8	-	-	-
REW	-	-	-	-	-	0.1	1.6	-	0	1.8	2.5	1.1	-	1.1	-	-	1.8	-	-	-
Ref. No.	IC2001																			
MODE	221	222	223	224	225	226	227	228	229	230	231	232	233	234	235	236	237	238	239	240
STOP	-	-	-	-	-	-	-	1.8	-	-	-	-	-	-	-	-	-	-	-	1.8
PLAY	-	-	-	-	-	-	-	1.8	-	-	-	-	-	-	-	-	-	-	-	1.8
REC	-	-	-	-	-	-	-	1.8	-	-	-	-	-	-	-	-	-	-	-	1.8
F.F.	-	-	-	-	-	-	-	1.8	-	-	-	-	-	-	-	-	-	-	-	1.8
REW	-	-	-	-	-	-	-	1.8	-	-	-	-	-	-	-	-	-	-	-	1.8

Ref. No.	IC2001																			
MODE	241	242	243	244	245	246	247	248	249	250	251	252	253	254	255	256	257	258	259	260
STOP	-	-	-	-	-	-	-	-	-	-	-	2.5	-	0	2.8	0	2.8	0	2.8	2.8
PLAY	-	-	-	-	-	-	-	-	-	-	-	2.5	-	0	2.8	0	2.8	0	2.8	2.8
REC	-	-	-	-	-	-	-	-	-	-	-	2.5	-	0	2.8	0	2.8	0	2.8	2.8
F.F.	-	-	-	-	-	-	-	-	-	-	-	2.5	-	0	2.8	0	2.8	0	2.8	2.8
REW	-	-	-	-	-	-	-	-	-	-	-	2.5	-	0	2.8	0	2.8	0	2.8	2.8
Ref. No.	IC2001																			
MODE	261	262	263	264	265	266	267	268	269	270	271	272	273	274	275	276	277	278	279	280
STOP	2.8	-	1.4	2.8	2.8	0	2.8	2.8	2.1	2.8	2.1	1.4	0	1.1	2.8	2.8	2.8	2.8	0.1	-
PLAY	2.8	-	2.1	2.8	2.8	0	2.8	2.8	2.1	2.8	2.1	0.7	2.8	1.1	2.8	2.8	2.8	2.8	0.1	-
REC	2.8	-	2.1	2.8	2.8	0	2.8	2.8	2.1	2.8	2.1	2.1	0	1.1	2.8	2.8	2.8	2.8	0.1	-
F.F.	2.8	-	2.1	2.8	2.8	0	2.8	2.8	2.1	2.8	2.1	2.1	1.4	1.1	2.8	2.8	2.8	2.8	0.1	-
REW	2.8	-	2.1	2.8	2.8	0	2.8	2.8	2.1	2.8	2.1	1.4	1.4	1.1	2.8	2.8	2.8	2.8	0.1	-
Ref. No.	IC2001																			
MODE	281	282	283	284	285	286	287	288	289	290	291	292	293	294	295	296	297	298	299	300
STOP	2.8	-	-	-	-	-	-	-	-	-	-	-	-	-	-	-	-	-	-	-
PLAY	2.8	-	-	-	-	-	-	-	-	-	-	-	-	-	-	-	-	-	-	-
REC	2.8	-	-	-	-	-	-	-	-	-	-	-	-	-	-	-	-	-	-	-
F.F.	2.8	-	-	-	-	-	-	-	-	-	-	-	-	-	-	-	-	-	-	-
REW	2.8	-	-	-	-	-	-	-	-	-	-	-	-	-	-	-	-	-	-	-
Ref. No.	IC2001																			
MODE	301	302	303	304	305	306	307	308	309	310	311	312	313	314	315	316	317	318	319	320
STOP	-	-	-	-	-	-	-	-	-	-	-	-	-	-	-	-	-	-	-	-
PLAY	-	-	-	-	-	-	-	-	-	-	-	-	-	-	-	-	-	-	-	-
REC	-	-	-	-	-	-	-	-	-	-	-	-	-	-	-	-	-	-	-	-
F.F.	-	-	-	-	-	-	-	-	-	-	-	-	-	-	-	-	-	-	-	-
REW	-	-	-	-	-	-	-	-	-	-	-	-	-	-	-	-	-	-	-	-
Ref. No.	IC2001		IC2002																	
MODE	321		1	2	3	4	5	6	7	8	9	10	11	12	13	14	15	16		
STOP	-		2.5	2.9	2.6	0	2.7	2.8	2.3	0	3.3	2.9	3.0	0.5	0.3	2.8	3.4	7.9		
PLAY	-		2.5	2.9	2.6	0	2.7	2.8	2.3	0	3.3	2.9	3.0	0.5	0.3	2.8	3.4	7.9		
REC	-		2.5	2.9	2.6	0	2.7	2.8	2.3	0	3.3	2.9	3.0	0.5	0.3	2.8	3.4	7.9		
F.F.	-		2.5	2.9	2.6	0	2.7	2.8	2.3	0	3.3	2.9	3.0	0.5	0.3	2.8	3.4	7.9		
REW	-		2.5	2.9	2.6	0	2.7	2.8	2.3	0	3.3	2.9	3.0	0.5	0.3	2.8	3.4	7.9		
Ref. No.			IC2006							IC2017					IC2019					
MODE	1	2	3	4	5	6	7	8		1	2	3	4		1	2	3	4	5	6
STOP	2.8	2.8	2.7	2.7	0	0	-	2.9		2.3	3.4	-	0		1.8	0	1.7	2.8	1.8	2.9
PLAY	2.8	2.8	2.7	2.7	0	0	-	2.9		2.3	3.4	-	0		1.8	0	1.7	2.8	1.8	2.9
REC	2.8	2.8	2.7	2.7	0	0	-	2.9		2.3	3.4	-	0		1.8	0	1.7	2.8	1.8	2.9
F.F.	0	2.8	2.7	2.7	0	0	-	2.9		2.3	3.4	-	0		1.8	0	1.7	2.8	1.8	2.9
REW	0	2.8	2.7	2.7	0	0	-	2.9		2.3	3.4	-	0		1.8	0	1.7	2.8	1.8	2.9

TRs DC VOLTAGE CHART (SP MODE)

Ref. No.	Q2003				Q2005														
MODE	E	C	B		E	C	B												
STOP	0	0	2.8		2.9	2.8	0												
PLAY	0	0	2.4		2.9	2.8	0												
REC	0	0	2.8		2.9	2.8	0												
F.F.	0	0	2.4		2.9	2.8	0												
REW	0	0	2.4		2.9	2.8	0												
Ref. No.	QR2001				QR2003				QR2005										
MODE	E	C	B		E	C	B		1	2	3	4	5	6					
STOP	2.9	0	2.8		0	1.7	0		2.9	0	2.8	2.9	0	2.8					
PLAY	2.9	0	2.8		0	1.7	0		2.9	0	2.8	2.9	0	2.8					
REC	2.9	0	2.8		0	1.7	0		2.9	0	2.8	2.9	0	2.8					
F.F.	2.9	0	2.8		0	1.7	0		2.9	0	2.8	2.9	0	2.8					
REW	2.9	0	2.8		0	1.7	0		2.9	0	2.8	2.9	0	0					
Ref. No.	QR2006								QR2007				QR2008				QR2010		
MODE	1	2	3	4	5	6			E	C	B		E	C	B		E	C	B
STOP	2.9	2.8	0	2.9	2.8	0			4.9	5.0	0		0	0	2.8		0	0	2.8
PLAY	2.9	2.8	0	2.9	2.8	0			4.9	5.0	0		0	0	2.8		0	0	2.8
REC	2.9	2.8	2.8	2.9	0	0			4.9	5.0	0		0	0	2.8		0	0	2.8
F.F.	2.9	2.8	0	2.9	2.8	0			4.9	5.0	0		0	0	2.8		0	0	2.8
REW	2.9	2.8	0	2.9	2.8	0			4.9	5.0	0		0	0	2.8		0	0	2.8

NOTE:
CIRCUIT VOLTAGE AND WAVEFORM DESCRIBED HEREIN SHALL BE REGARDED AS REFERENCE INFORMATION WHEN PROBING DEFECT POINT,BECAUSE IT MAY DIFFER FROM AN ACTUAL MEASURING VALUE DUE TO DIFFERENCE OF MEASURING INSTRUMENT AND ITS MEASURING CONDITION AND PRODUCT ITSELF.

14.22.2. CONTROL I/O TABLE

IC2001 : VTR CONTROL MICROCOMPUTER

Pin No.	Signal Name	I/O	Explanation
1	NC	-	NC
2	A VCC 31	I	Voltage
3	A VSS	-	GND
4	D VCC 2	I	Voltage
5	ENDIAN	I	Voltage
6	BOOT	I	BOOT
7	PCTS3	O	PCTS3 (EVR2)
8	PCTS0	O	PCTS2 (EVR2)
9	INTLV	I	Inter Leave Mode
10	SDI DINT	I	SDI DINT (EVR2)
11	PCTS2	O	PCTS2 (EVR2)
12	SDAO TPC	O	SDAO (EVR2)
13	BW0	I	Voltage
14	/DBGE	I	/DBGE (EVR2)
15	DCLK	O	DCLK (EVR2)
16	NC	-	NC
17	PCTS1	O	PCTS1 (EVR2)
18	SYS RDY	-	NC
19	D VSS	-	GND
20	TEST1	-	GND
21	BUSMD	I	Voltage
22	/DRESET	I	/DRESET (EVR2)
23	TEST5	-	GND
24	RESET	I	System Reset
25	PLL ON	I	Voltage
26	F VCC 2	I	Voltage
27	F VSS	-	GND
28	NMI	I	Voltage
29	BW1	I	Voltage
30	D VCC 2	I	Voltage
31	D VCC 31	I	Voltage
32	NC	-	NC
33	SBA SIF CLK	O	Sub Audio Serial Clock
34	NC	-	NC
35	NC	-	NC
36	SBA CS	O	Sub Audio Chip Select
37	VTR TEST Ⓛ	I	VTR Test
38	SBA SIF DTI	I	Sub Audio Serial Data Input
39	R PLUG Ⓛ	I	AV Jack Connection: Ⓛ
40	SBA SIF DTO	O	Sub Audio Serial Data Output
41	EXT 5V SW	O	Power Supply Control
42	S PLUG	I	S-Jack Detection
43	NC	-	NC
44	SYNC DET	I	SYNC Detection
45	F VCC 3	I	Voltage
46	F VSS	-	GND
47	D VSS	-	GND
48	M RVS	I	LCD Panel Reversal Input
49	SIF P SAVE	O	SIF Power Save
50	NC	-	NC
51	LCD OPEN SW	I	LCD Panel Open SW Input
52	AV PLUG	I	AV Jack Detection
53	USB DET	I	USB Cable Connection Detect
54	NC	-	NC
55	ARB	-	NC
56	SIF CS	O	SIF Serial Chip Select
57	NC	-	NC
58	XRST	O	System Reset
59	POWER SW	I	Power SW Input
60	EJECT SW	I	EJECT SW Input
61	TV MD	O	NTSC/PAL Select

Pin No.	Signal Name	I/O	Explanation
62	INPUT SEL	O	S/AV Input Terminal Change
63	FLASH WP	O	Flash Write Protect
64	CAM SEND END	I	CAM SEND END
65	NC	-	NC
66	GUI LED	O	GUI LED
67	MEMO END	I	Memory End
68	HOST REQ	I	Camera Microcomputer Request
69	TALLY LED	O	TALLY LED
70	D VCC 32	I	Voltage
71	STANDBY LED	O	STANDBY LED
72	POWER LED	O	POWER LED
73	HOST ACK	O	Camera Microcomputer ACK
74	ACCESS LED	O	ACCESS LED
75	VTR T	O	Sync Serial Communication Enable
76	LCD CS	O	LCD Chip Select
77	V C DSET	O	DMA Forwarding Timing
78	FLASH CS	O	Flash Chip Select
79	S PHOTO SW2	O	Tape Supply Photo Sensor SW2
80	T PHOTO SW1	O	Tape Take-up Photo Sensor SW1
81	MIC CLK	O	MIC Serial Clock
82	MIC DATA	O	MIC Serial Data Output
83	D VSS	-	GND
84	REMOCON	I	IR Remote Control Input
85	S PHOTO SW1	O	Tape Supply Photo Sensor SW1
86	PS Ⓛ	O	Power Save Terminal Control (Standby: L)
87	T PHOTO SW2	O	Tape Take-up Photo Sensor SW2
88	CAM D3 OFF	I	Camera Power Control
89	SS DET	O	Start/Stop Detect
90	ZNST ST	O	REC Control
91	CAM 0	O	CAM Microcomputer Communication
92	EEP CS	O	EEPROM Chip Select
93	LCD SCK	O	LCD (Monitor) Serial Clock
94	ERF CLK	O	EEPROM Serial Clock
95	ERF DO	O	EEPROM Serial Data Output
96	ERF DI	I	EEPROM Serial Data Input
97	CAM RST	O	Camera Reset
98	LCD DI	I	LCD (Monitor) Serial Data Input
99	HP DET Ⓛ	I	Headphone Detect
100	D VCC 2	I	Voltage
101	D VCC 32	I	Voltage
102	LCD DO	O	LCD (Monitor) Serial Data Output
103	PC RST	I	RS232C Reset
104	CAM RTN	O	Camera Clock Deference Signal
105	232C RXD	I	RS232C Data Input
106	232C TXD	O	RS232C Data Output
107	RTN FLD	O	Camera Microcomputer Field Signal
108	CPU VCC SW	O	Microcomputer Power Supply Change
109	V C DATA	O	VTR Serial Data Output
110	WINK END	I	WINK END
111	C V DATA	I	VTR Serial Data Input
112	MIC ON	O	MIC Power Supply: Ⓛ
113	P LCD LED	O	LCD Backlight
114	RTC CS	O	RTC Chip Select
115	SNS LED	O	LED Illumination: Ⓗ
116	CAM SCK	O	Camera Serial Clock
117	D VSS	-	GND
118	NC	-	NC
119	NC	-	NC
120	EXT Ⓗ	O	Analog Input: Ⓗ
121	SS SW	I	Start/Stop SW Input
122	POWER ON	O	Power ON: Ⓗ

Pin No.	Signal Name	I/O	Explanation
123	CR POWER	I	AWP Power Supply Control
124	C DOWN	I	Cassette Down
125	MEGA REQ	O	Mega Pixel Request
126	R STP UP	-	GND
127	E2 PROTECT	O	EEPROM Reset
128	TIMER INT	I	Clock Interruption
129	D VCC 32	I	Voltage
130	NC	-	NC
131	NC	-	NC
132	NC	-	NC
133	NC	-	NC
134	NC	-	NC
135	NC	-	NC
136	NC	-	NC
137	NC	-	NC
138	NC	-	NC
139	FACT MODE	I	Factory Mode
140	LCD ON Ⓗ	O	LCD Power ON/OFF
141	D VSS	-	GND
142	NC	-	NC
143	NC	-	NC
144	D VCC 33	I	Voltage
145	NC	-	NC
146	MODE 14	-	GND
147	NC	-	NC
148	NC	-	NC
149	NC	-	NC
150	NC	-	NC
151	NC	-	NC
152	NC	-	NC
153	TEST4	-	GND
154	D2	I/O	Data Bus
155	NC	-	NC
156	SD PROTECT	I	SD Card Protect
157	CARD DET	I	SD Card Detect
158	TEST3	-	GND
159	D0	I/O	Data Bus
160	D VSS	-	GND
161	NC	-	NC
162	D1	I/O	Data Bus
163	D6	I/O	Data Bus
164	D3	I/O	Data Bus
165	D5	I/O	Data Bus
166	D4	I/O	Data Bus
167	F VSS	-	GND
168	F VCC 2	I	Voltage
169	D9	I/O	Data Bus
170	TEST0	-	GND
171	D8	I/O	Data Bus
172	D7	I/O	Data Bus
173	D10	I/O	Data Bus
174	D13	I/O	Data Bus
175	D11	I/O	Data Bus
176	D12	I/O	Data Bus
177	D VCC 33	I	Voltage
178	EVF BL	O	EVF Backlight ON: Ⓗ
179	D15	I/O	Data Bus
180	NC	-	NC
181	D VSS	-	GND
182	XDUO CS	O	DUO Chip Select
183	XWE Ⓗ	O	X Write Strobe Ⓗ

Pin No.	Signal Name	I/O	Explanation
184	XREADY	I	X Ready Strobe
185	XRE	O	X Read Strobe
186	F VSS	-	GND
187	F VCC 2	I	Voltage
188	D14	I/O	Data Bus
189	XSUB CS	O	USB Chip Select
190	CCD STBY	O	CCD Standby
191	CCD ON Ⓗ	O	CCD Power ON/OFF
192	ALE	O	Address Latch Enable
193	XWE Ⓛ	O	X Write Strobe Ⓛ
194	TEST2	-	GND
195	D VCC 33	I	Voltage
196	D VCC 2	I	Voltage
197	NC	-	NC
198	X RAM CS	-	NC
199	NC	-	NC
200	NC(XT1)	-	NC
201	CVCCH	-	GND
202	CAP1	-	GND
203	CAP2	-	GND
204	NC(XT2)	-	NC
205	TDO	O	Test Data Output
206	TDI	I	Test Data Input
207	TMS	O	Test Mode Select Output
208	TRST	-	NC
209	TCK	O	Test Clock Output
210	D VCC 34	I	Voltage
211	C VCC 2	I	Voltage
212	X1	I	Crystal 13.5MHz
213	C VSS	-	GND
214	X2	O	Crystal 13.5MHz
215	NC	-	NC
216	NC	-	NC
217	M BL	O	LCD Backlight ON: Ⓗ
218	USB INT	I	USB IC Interruption
219	NC	-	NC
220	DUO INT3	I	VIDEO IC Interruption 3
221	DUO INT2	I	VIDEO IC Interruption 2
222	DUO INT1	I	VIDEO IC Interruption 1
223	D VSS	-	GND
224	NC	-	NC
225	NC	-	NC
226	NC	-	NC
227	DUO INT0	I	VIDEO IC Interruption 0
228	POWER LCD SW	I	LCD Power SW
229	NC	-	NC
230	NC	-	NC
231	NC	-	NC
232	NC	-	NC
233	NC	-	NC
234	NC	-	NC
235	NC	-	NC
236	NC	-	NC
237	NC	-	NC
238	NC	-	NC
239	NC	-	NC
240	D VCC 34	I	Voltage
241	NC	-	NC
242	NC	-	NC
243	NC	-	NC
244	NC	-	NC

Pin No.	Signal Name	I/O	Explanation
245	NC	-	NC
246	NC	-	NC
247	NC	-	NC
248	NC	-	NC
249	NC	-	NC
250	D VSS	-	GND
251	NC	-	NC
252	D VCC 2	I	Voltage
253	A VSS	-	GND
254	LOAD LOCK DET	I	Finger Scissors Detection
255	A VCC 32	I	Voltage
256	T PHOTO	I	Tape Take-up Photo Sensor Detect
257	BATT D	I	D Terminal Input
258	S PHOTO	I	Tape Supply Photo Sensor Detect
259	MIC AD1	I	Contact ID Input 1
260	MIC AD2	I	Contact ID Input 2
261	MIC AD3	I	Contact ID Input 3
262	A VSS	-	GND
263	VTR KEY 1	I	Analog Key Input 1
264	VTR KEY 4	I	Analog Key Input 4
265	VTR KEY 6	I	Analog Key Input 6
266	NC	-	NC
267	REG D3V DET	I	Shutdown Detect
268	BATT REF	I	Battery Input
269	VTR KEY 3	I	Analog Key Input 3
270	BATTERY	I	Battery Protect
271	VTR KEY 5	I	Analog Key Input 5
272	VTR KEY 2	I	Analog Key Input 2
273	EXT MIC	I	Free Style Remote Control Detection
274	Y LEVEL	I	Y Level
275	MON EVF HL	I	EVF Select
276	DEW	I	DEW Sensor
277	AWP DET	I	AWP Connection Detection
278	UNI REMO	I	Wire Remote Control SW
279	WIDE DET	I	Cinema/Wide Discrimination
280	VREF L	I	GND
281	VREF H	I	Voltage
282	NC	-	NC
283	NC	-	NC

Pin No.	Signal Name	I/O	Explanation
284	NC	-	NC
285	NC	-	NC
286	NC	-	NC
287	NC	-	NC
288	NC	-	NC
289	NC	-	NC
290	NC	-	NC
291	NC	-	NC
292	NC	-	NC
293	NC	-	NC
294	NC	-	NC
295	NC	-	NC
296	NC	-	NC
297	NC	-	NC
298	NC	-	NC
299	NC	-	NC
300	NC	-	NC
301	NC	-	NC
302	NC	-	NC
303	NC	-	NC
304	NC	-	NC
305	NC	-	NC
306	NC	-	NC
307	NC	-	NC
308	NC	-	NC
309	NC	-	NC
310	NC	-	NC
311	NC	-	NC
312	NC	-	NC
313	NC	-	NC
314	NC	-	NC
315	NC	-	NC
316	NC	-	NC
317	NC	-	NC
318	NC	-	NC
319	NC	-	NC
320	NC	-	NC
321	NC	-	NC

15 CIRCUIT BOARD ASSEMBLIES

15.1. EVF C.B.A.

(VEP29163A)

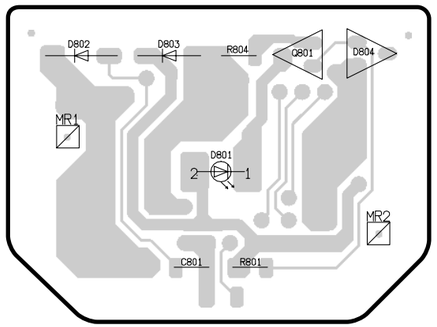

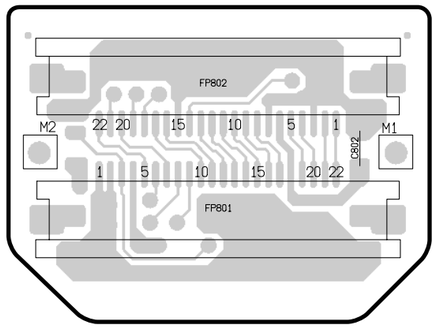

(COMPONENT SIDE) (FOIL SIDE)

PV-GS250PP
EVF C.B.A.

15.2. LCD DET C.B.A.

(VEP001J2A)

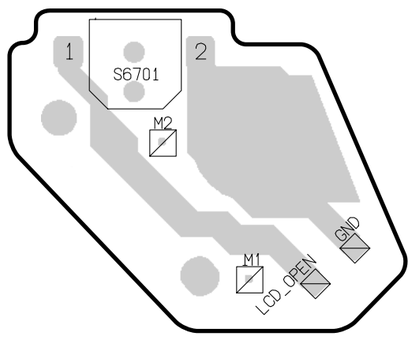

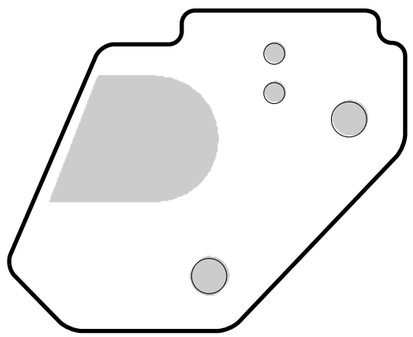

（COMPONENT SIDE） （FOIL SIDE）

PV-GS250PP
LCD DET C.B.A.

15.3. SIDE (R) C.B.A.

(VEP001H8B)

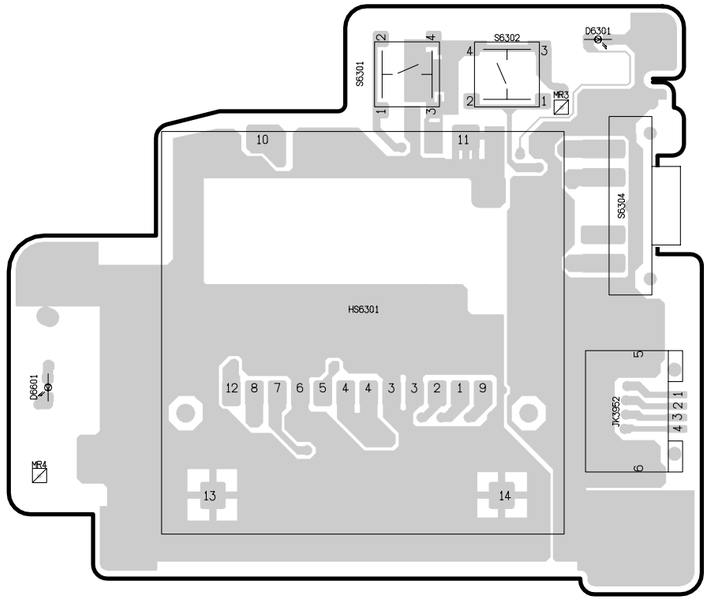

(COMPONENT SIDE)

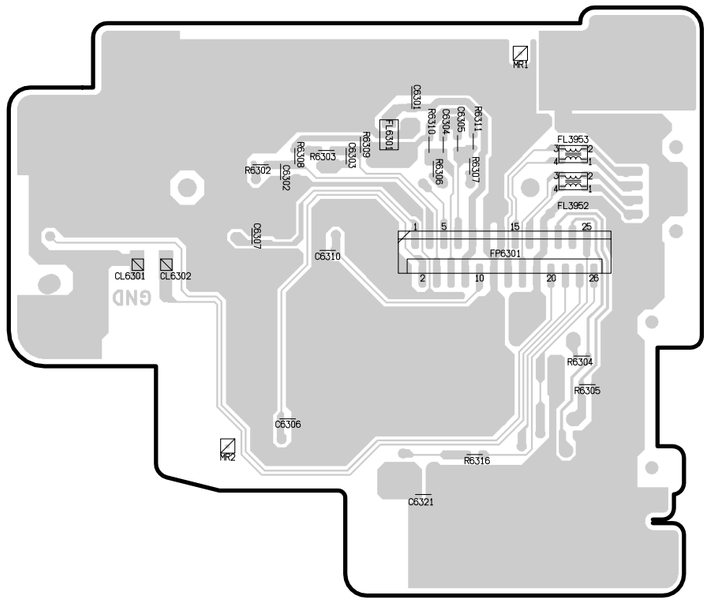

(FOIL SIDE)

PV-GS250PP
SIDE (R) C.B.A.

15.4. CCD FLEX. CARD C.B.A.

(VXQ1288)

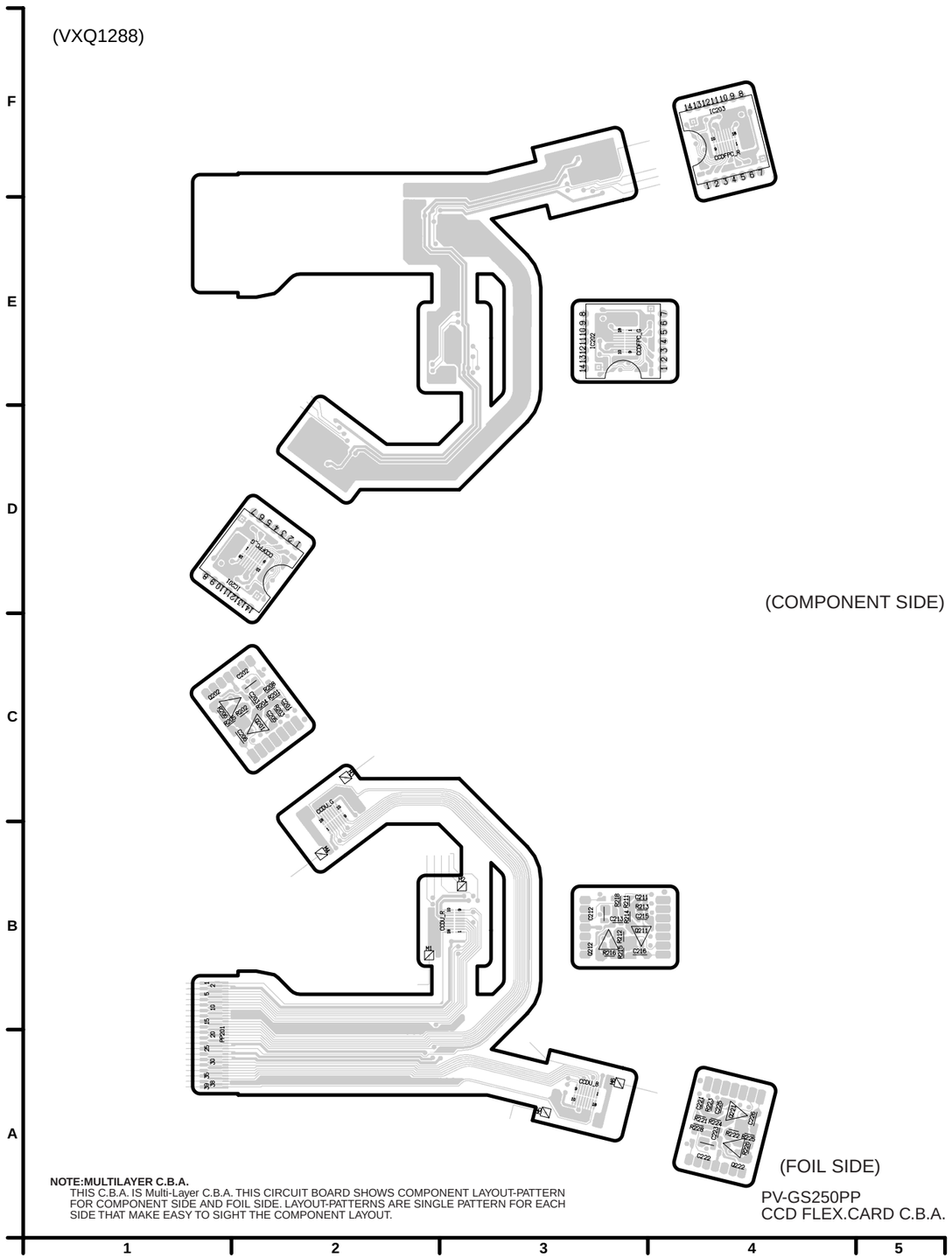

NOTE:MULTILAYER C.B.A.
THIS C.B.A. IS Multi-Layer C.B.A. THIS CIRCUIT BOARD SHOWS COMPONENT LAYOUT-PATTERN FOR COMPONENT SIDE AND FOIL SIDE. LAYOUT-PATTERNS ARE SINGLE PATTERN FOR EACH SIDE THAT MAKE EASY TO SIGHT THE COMPONENT LAYOUT.

PV-GS250PP
CCD FLEX.CARD C.B.A.

15.5. FRONT C.B.A.

(VEP04883A)

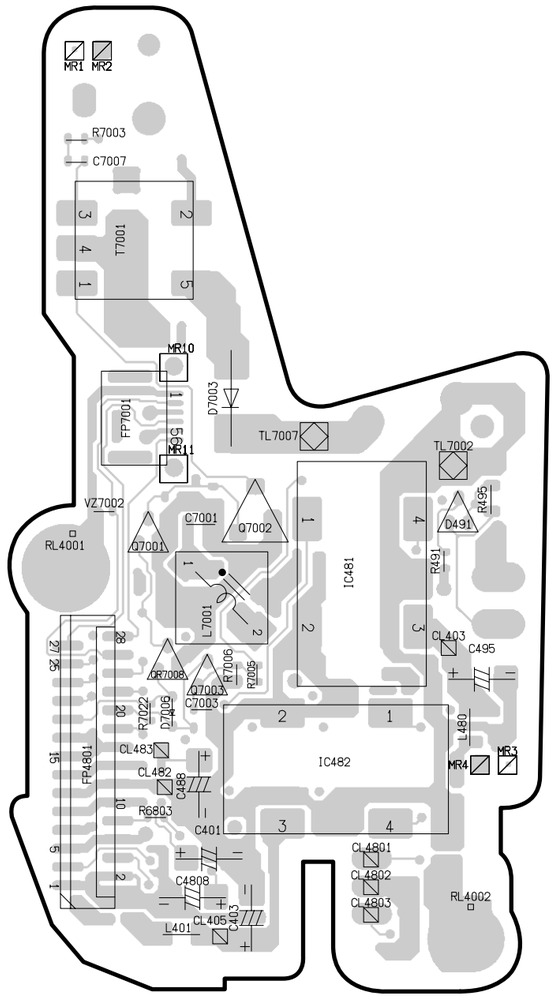

(COMPONENT SIDE)

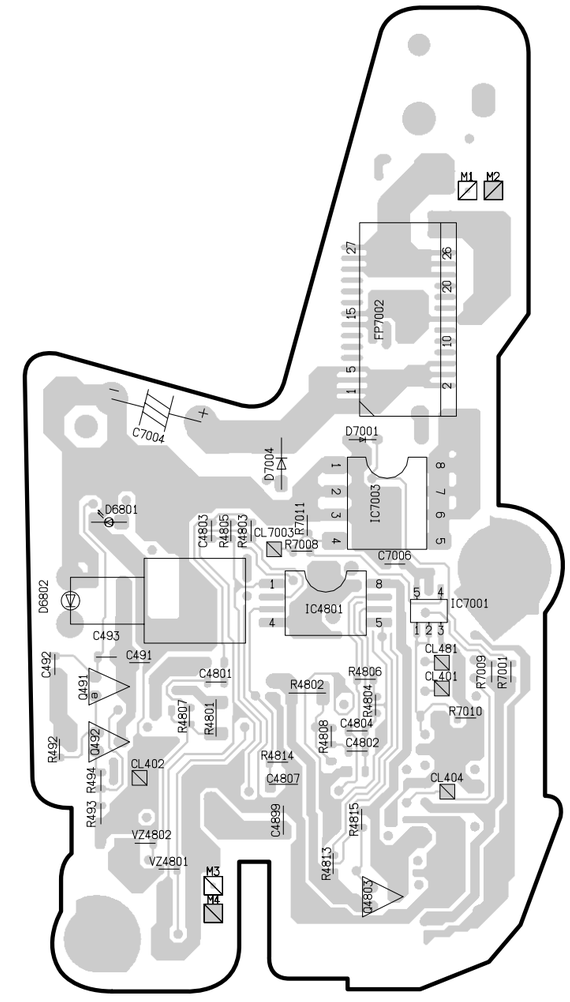

(FOIL SIDE)

NOTE:MULTILAYER C.B.A.
THIS C.B.A. IS Multi-Layer C.B.A. THIS CIRCUIT BOARD SHOWS COMPONENT LAYOUT-PATTERN FOR COMPONENT SIDE AND FOIL SIDE. LAYOUT-PATTERNS ARE SINGLE PATTERN FOR EACH SIDE THAT MAKE EASY TO SIGHT THE COMPONENT LAYOUT.

PV-GS250PP
FRONT C.B.A.

15.6. JACK C.B.A.

(VEP001H7A)

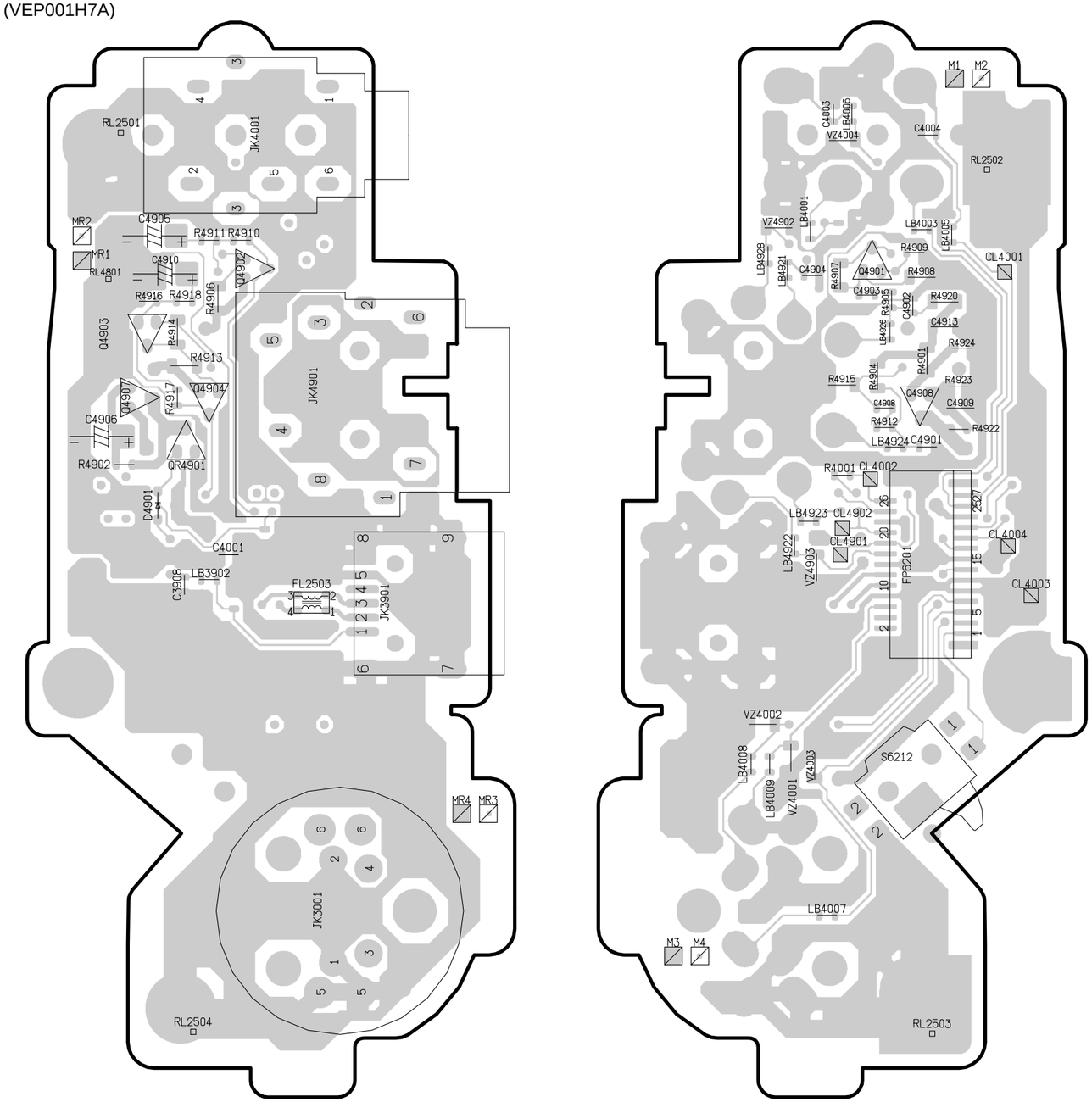

(COMPONENT SIDE) (FOIL SIDE)

NOTE:MULTILAYER C.B.A.
THIS C.B.A. IS Multi-Layer C.B.A. THIS CIRCUIT BOARD SHOWS COMPONENT LAYOUT-PATTERN FOR COMPONENT SIDE AND FOIL SIDE. LAYOUT-PATTERNS ARE SINGLE PATTERN FOR EACH SIDE THAT MAKE EASY TO SIGHT THE COMPONENT LAYOUT.

PV-GS250PP
JACK C.B.A.

Jack C.B.A.			
Transister		LB4007	B-5
Q4901	E-5	LB4008	B-4
Q4902	E-2	LB4009	B-5
Q4903	E-1	LB4921	E-5
Q4904	D-2	LB4922	C-5
Q4907	D-1	LB4923	D-5
Q4908	D-5	LB4924	D-5
Transister &Resister		LB4926	E-5
QR4901	D-2	LB4928	E-5
Test Point		**Capacitor**	
CL4001	E-6	C3908	C-2
CL4002	D-5	C4001	C-2
CL4003	C-6	C4003	F-5
CL4004	D-6	C4004	F-5
CL4901	C-5	C4901	D-5
CL4902	D-5	C4902	E-5
RL2501	F-1	C4903	E-5
RL2502	E-6	C4904	E-5
RL2503	A-5	C4905	E-1
RL2504	A-2	C4906	D-1
RL4801	E-1	C4908	D-5
Connector		C4909	D-5
FP6201	C-5	C4910	E-2
Jack		C4913	E-5
JK3001	B-2	**Resistor**	
JK3901	C-3	R4001	D-5
JK4001	F-2	R4901	D-5
JK4901	D-2	R4902	D-1
Diode		R4904	D-5
D4901	D-1	R4905	E-5
Absorber		R4906	E-2
VZ4001	B-5	R4907	E-5
VZ4002	C-5	R4908	E-5
VZ4003	B-5	R4909	E-5
VZ4004	F-5	R4910	E-2
VZ4902	E-5	R4911	E-2
VZ4903	C-5	R4912	D-5
Filter		R4913	D-2
FL2503	C-2	R4914	E-2
Switch		R4915	D-5
S6212	B-5	R4916	E-1
Coil		R4917	D-2
LB3902	C-2	R4918	E-2
LB4001	E-5	R4920	E-5
LB4003	E-5	R4922	D-6
LB4005	E-5	R4923	D-5
LB4006	F-5	R4924	D-5

15.7. MONITOR C.B.A.

(VEP08340CKIT)

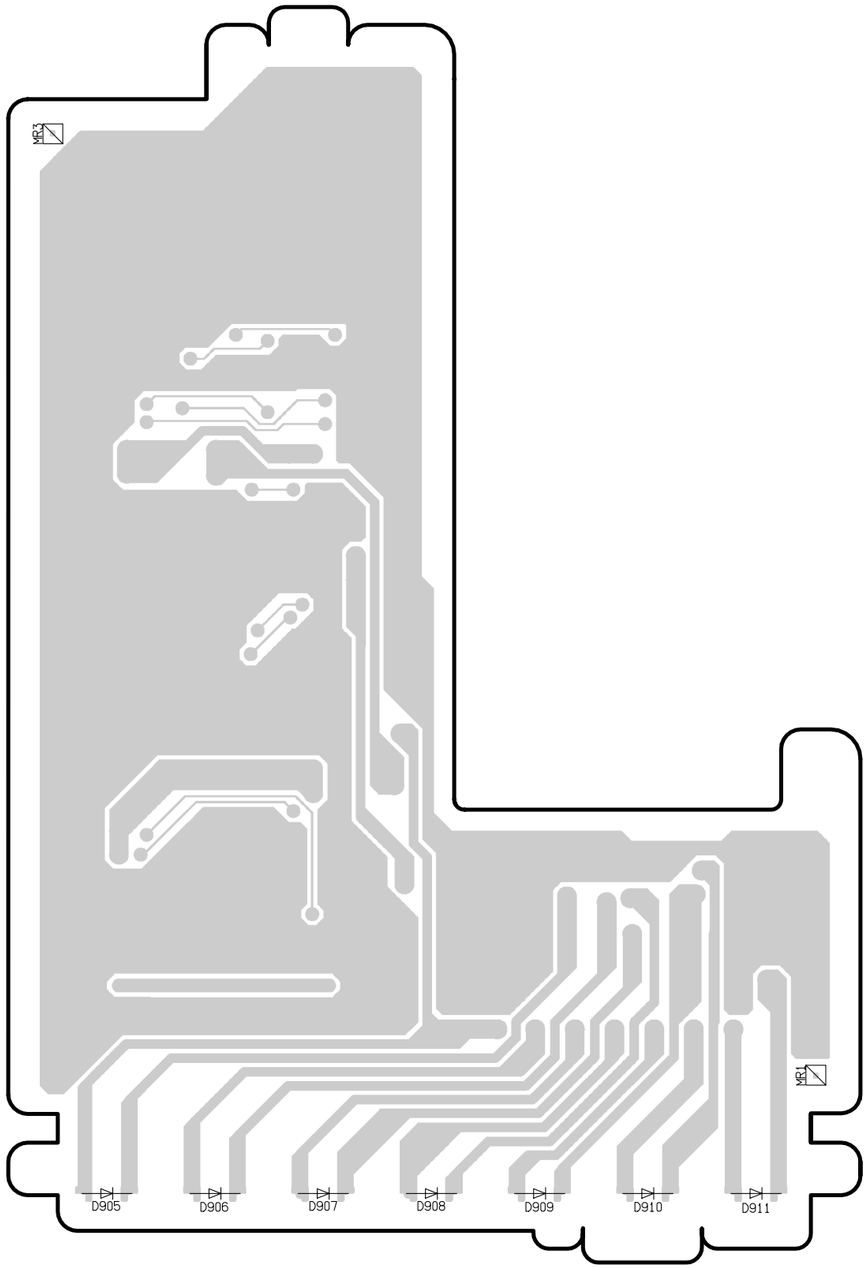

(COMPONENT SIDE)

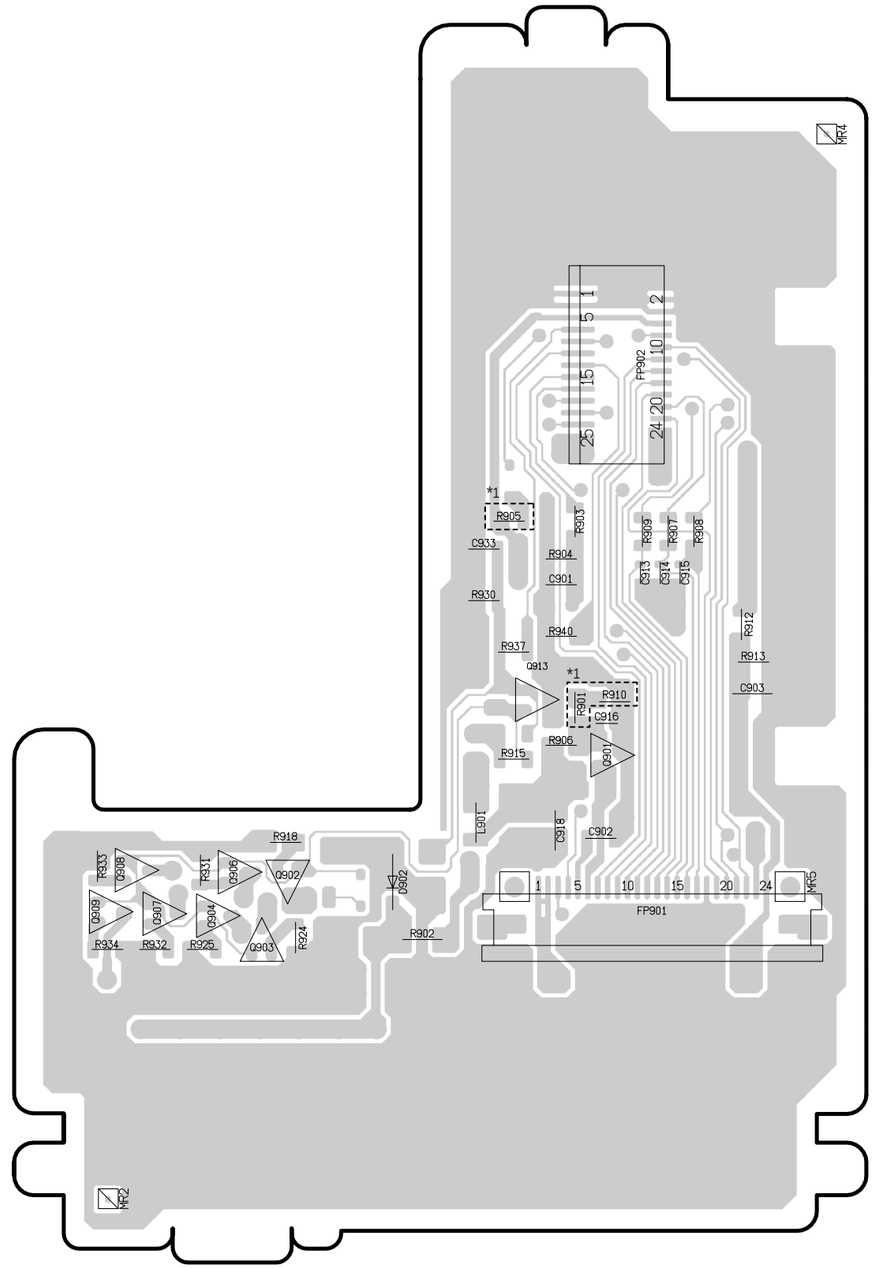

(FOIL SIDE)

*1
NOTE:
Refer to "1.2. Service Information Regarding MONITOR C.B.A. and LCD PANEL of PV-GS250PP".

PV-GS250PP
MONITOR C.B.A.

15.8. SUB C.B.A. (COMPONENT SIDE)

(VEP23613C)

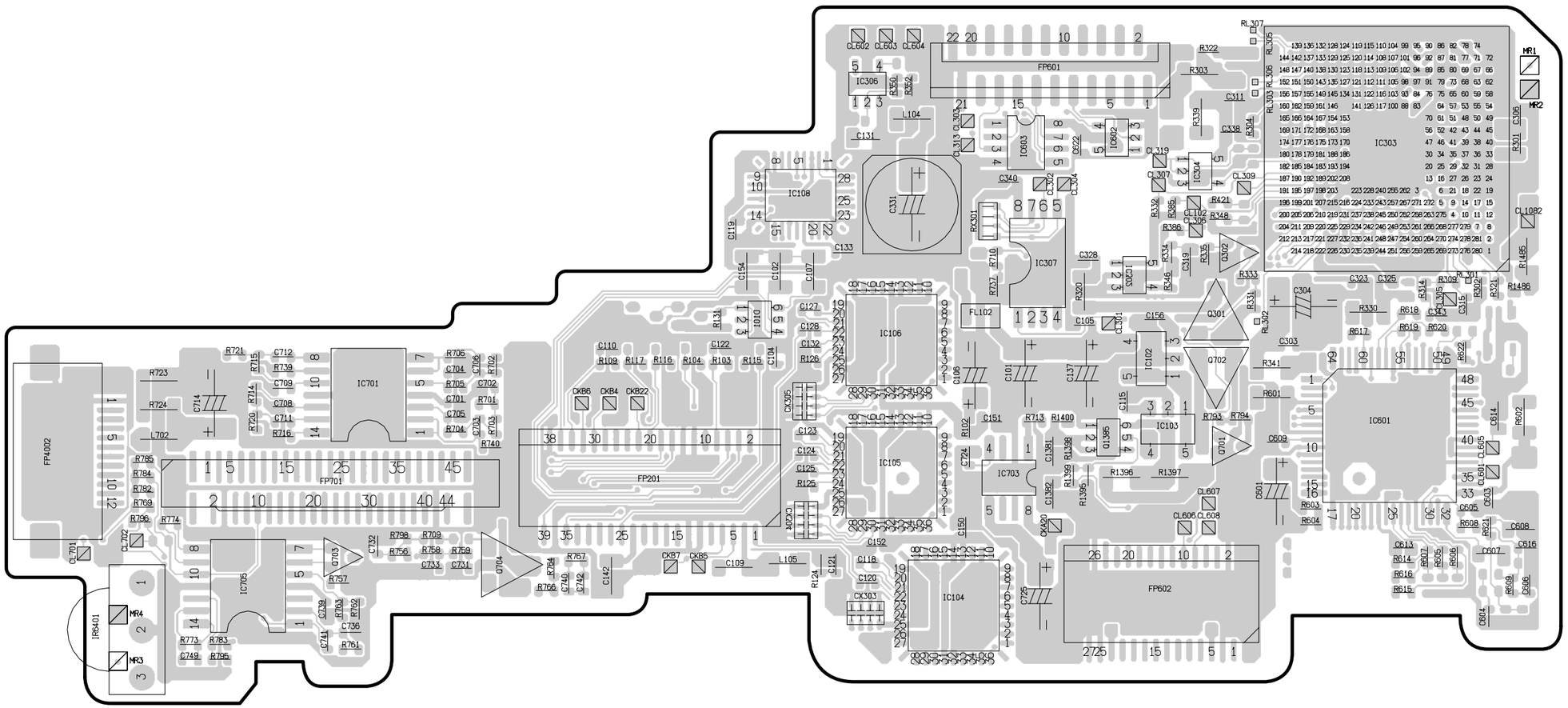

NOTE:MULTILAYER C.B.A.
THIS C.B.A. IS Multi-Layer C.B.A. THIS CIRCUIT BOARD SHOWS COMPONENT LAYOUT-PATTERN FOR COMPONENT SIDE AND FOIL SIDE. LAYOUT-PATTERNS ARE SINGLE PATTERN FOR EACH SIDE THAT MAKE EASY TO SIGHT THE COMPONENT LAYOUT.

(COMPONENT SIDE)

PV-GS250PP
SUB C.B.A.

15.9. SUB C.B.A. (FOIL SIDE)

(VEP23613C)

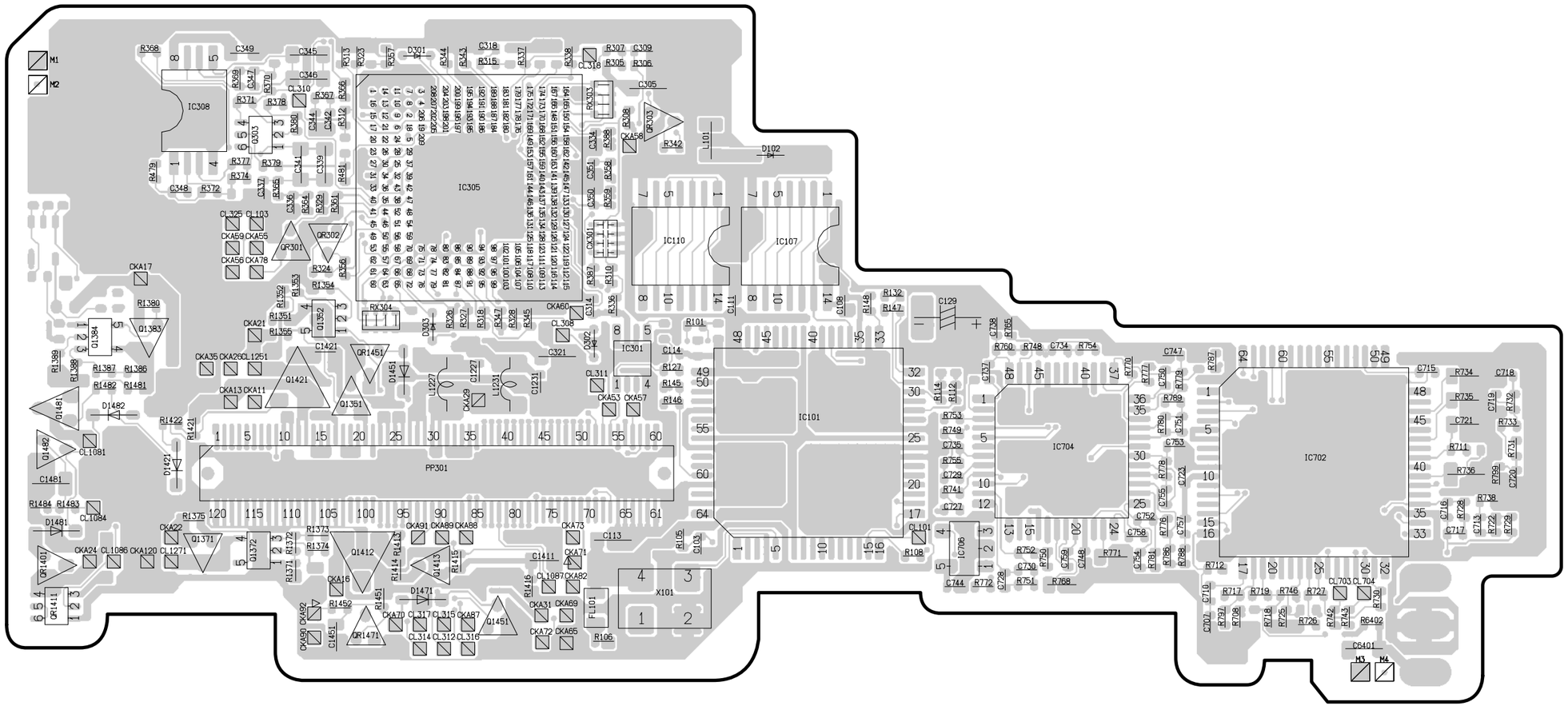

NOTE:MULTILAYER C.B.A.
THIS C.B.A. IS Multi-Layer C.B.A. THIS CIRCUIT BOARD SHOWS COMPONENT LAYOUT-PATTERN FOR COMPONENT SIDE AND FOIL SIDE. LAYOUT-PATTERNS ARE SINGLE PATTERN FOR EACH SIDE THAT MAKE EASY TO SIGHT THE COMPONENT LAYOUT.

(FOIL SIDE)

PV-GS250PP
SUB C.B.A.

Sub C.B.A.

Integrated Circuit			CL310	D-2	F	C101	C-6	C	C604	B-9	C	C1451	A-3	F	R345	C-4	F	R721	C-2	C	R797	A-7	F
IC101	B-5	F	CL311	C-4	F	C102	D-5	C	C605	B-9	C	C1481	B-1	F	R346	C-7	C	R722	B-9	F	R798	B-3	C
IC102	C-7	C	CL312	A-3	F	C103	B-4	F	C606	B-9	C	C6401	A-8	F	R347	C-3	F	R723	C-2	C	R799	B-9	F
IC103	C-7	C	CL313	D-6	C	C104	C-5	C	C607	B-9	C	CX301	D-4	F	R348	D-7	C	R724	C-2	C	R1351	C-2	F
IC104	B-6	C	CL314	A-3	F	C105	C-7	C	C608	B-9	C	CX303	B-5	C	R350	D-6	C	R725	A-8	F	R1352	C-2	F
IC105	B-6	C	CL315	A-3	F	C106	C-6	C	C609	C-8	C	CX304	B-5	C	R352	D-6	C	R726	A-8	F	R1353	C-2	F
IC106	C-6	C	CL316	A-3	F	C107	D-5	C	C613	B-8	C	CX305	C-5	C	R356	C-3	F	R727	B-8	F	R1354	C-2	F
IC107	C-5	F	CL317	A-3	F	C108	C-5	F	C614	C-9	C	**Resistor**			R357	D-3	F	R728	B-8	F	R1355	C-2	F
IC108	D-5	C	CL318	D-4	F	C109	B-5	C	C616	B-9	C	R101	C-4	F	R358	D-4	F	R729	B-9	F	R1371	B-2	F
IC110	C-4	F	CL319	D-7	C	C110	C-4	C	C622	D-7	C	R102	C-6	C	R359	D-4	F	R730	B-8	F	R1372	B-2	F
IC301	C-4	F	CL325	D-2	F	C111	C-5	F	C701	C-3	C	R103	C-5	C	R361	D-3	F	R731	B-9	F	R1373	B-2	F
IC302	D-7	C	CL601	B-9	C	C113	B-4	F	C702	C-3	C	R104	C-5	C	R364	D-2	F	R732	C-9	F	R1374	B-2	F
IC303	D-8	C	CL602	E-5	C	C114	C-4	F	C703	C-3	C	R105	B-4	F	R365	D-2	F	R733	B-9	F	R1375	B-2	F
IC304	D-7	C	CL603	E-6	C	C115	C-7	C	C704	C-3	C	R106	A-4	F	R366	D-3	F	R734	C-8	F	R1380	C-2	F
IC305	D-3	F	CL604	E-6	C	C118	B-5	C	C705	C-3	C	R108	B-6	F	R367	D-2	F	R735	C-8	F	R1386	C-1	F
IC306	E-5	C	CL605	C-9	C	C119	D-5	C	C706	C-3	C	R109	C-4	C	R368	D-2	F	R736	B-8	F	R1387	C-1	F
IC307	D-6	C	CL606	B-7	C	C120	B-5	C	C707	A-7	F	R112	C-6	F	R369	D-2	F	R737	C-6	C	R1388	C-1	F
IC308	D-2	F	CL607	B-7	C	C121	B-5	C	C708	C-2	C	R114	C-6	F	R370	D-2	F	R738	B-9	F	R1389	C-1	F
IC601	C-8	C	CL608	B-7	C	C122	C-5	C	C709	C-2	C	R115	C-5	C	R371	D-2	F	R739	C-2	C	R1395	B-7	C
IC602	D-7	C	CL701	B-1	C	C123	C-5	C	C710	B-7	F	R116	C-4	C	R372	D-2	F	R740	C-3	C	R1396	B-7	C
IC603	D-6	C	CL702	B-2	C	C124	C-5	C	C711	C-2	C	R117	C-4	C	R374	D-2	F	R741	B-6	F	R1397	B-7	C
IC701	C-3	C	CL703	B-8	F	C125	B-5	C	C712	C-2	C	R124	B-5	C	R377	D-2	F	R742	A-8	F	R1398	C-7	C
IC702	B-8	F	CL704	B-8	F	C127	C-5	C	C713	B-9	F	R125	B-5	C	R378	D-2	F	R743	A-8	F	R1399	B-7	C
IC703	B-6	C	CL1081	B-1	F	C128	C-5	C	C714	C-2	C	R126	C-5	C	R379	D-2	F	R746	B-8	F	R1400	C-7	C
IC704	B-6	F	CL1082	D-9	C	C129	C-6	F	C715	C-8	F	R127	C-4	F	R380	D-2	F	R748	C-6	F	R1413	B-3	F
IC705	B-2	C	CL1084	B-1	F	C131	D-5	C	C716	B-8	F	R131	C-5	C	R385	D-7	C	R749	B-6	F	R1414	B-3	F
IC706	B-6	F	CL1086	B-1	F	C132	C-5	C	C717	B-8	F	R132	C-5	F	R386	D-7	C	R750	B-6	F	R1415	B-3	F
Transister			CL1087	B-4	F	C133	D-5	C	C718	C-9	F	R145	C-4	F	R387	C-4	F	R751	B-6	F	R1416	B-4	F
Q301	C-7	C	CL1251	C-2	F	C137	C-7	C	C719	C-9	F	R146	C-4	F	R388	D-4	F	R752	B-6	F	R1421	B-2	F
Q302	D-7	C	CL1271	B-2	F	C142	B-4	C	C720	B-9	F	R147	C-5	F	R421	D-7	C	R753	C-6	F	R1422	B-2	F
Q303	D-2	F	RL301	C-9	C	C150	B-6	C	C721	B-8	F	R148	C-5	F	R479	D-2	F	R754	C-6	F	R1451	B-3	F
Q701	C-7	C	RL302	C-8	C	C151	C-6	C	C723	B-7	F	R301	D-9	C	R481	D-3	F	R755	B-6	F	R1452	B-3	F
Q702	C-7	C	RL303	D-8	C	C152	B-6	C	C724	C-6	C	R302	C-9	C	R601	C-8	C	R756	B-3	C	R1481	C-1	F
Q703	B-3	C	RL305	E-7	C	C154	D-5	C	C725	B-6	C	R303	E-7	C	R602	C-9	C	R757	B-3	C	R1482	C-1	F
Q704	B-4	C	RL306	E-8	C	C156	C-7	C	C727	B-6	F	R304	D-7	C	R603	B-8	C	R758	B-3	C	R1483	B-1	F
Q1351	C-3	F	RL307	E-7	C	C303	C-8	C	C728	B-6	F	R305	D-4	F	R604	B-8	C	R759	B-3	C	R1484	B-1	F
Q1352	C-2	F	**Connector**			C304	C-8	C	C729	B-6	F	R306	D-4	F	R605	B-8	C	R760	C-6	F	R1485	D-9	C
Q1371	B-2	F	FP201	B-4	C	C305	D-4	F	C730	B-6	F	R307	D-4	F	R606	B-9	C	R761	B-3	C	R1486	C-9	C
Q1372	B-2	F	FP601	E-6	C	C306	D-9	C	C731	B-3	C	R308	D-4	F	R607	B-8	C	R762	B-3	C	R6402	A-8	F
Q1383	C-2	F	FP602	B-7	C	C309	D-4	F	C732	B-3	C	R309	C-9	C	R608	B-9	C	R763	B-3	C	RX301	D-6	C
Q1384	C-1	F	FP701	B-3	C	C311	D-7	C	C733	B-3	C	R310	C-4	F	R609	B-9	C	R764	B-4	C	RX303	D-4	F
Q1385	C-7	C	FP4002	C-1	C	C314	C-4	F	C734	C-6	F	R312	D-3	F	R614	B-8	C	R765	C-6	F	RX304	C-3	F
Q1412	B-3	F	PP301	B-3	F	C315	C-9	C	C735	B-6	F	R313	D-3	F	R615	B-8	C	R766	B-4	C			
Q1413	B-3	F	**Diode**			C318	E-3	F	C736	B-3	C	R314	C-8	C	R616	B-8	C	R767	B-4	C			
Q1421	C-2	F	D101	C-5	C	C319	D-7	C	C737	C-6	F	R315	D-3	F	R617	C-8	C	R768	B-6	F			
Q1451	A-3	F	D102	D-5	F	C321	C-4	F	C738	C-6	F	R318	C-3	F	R618	C-8	C	R769	B-2	C			
Q1481	C-1	F	D301	D-3	F	C323	C-8	C	C739	B-3	C	R320	C-7	C	R619	C-8	C	R770	C-7	F			
Q1482	B-1	F	D302	C-4	F	C325	C-8	C	C740	B-4	C	R321	C-9	C	R620	C-8	C	R771	B-7	F			
Transister &Resister			D303	C-3	F	C328	D-7	C	C741	B-3	C	R322	E-7	C	R621	B-9	C	R772	B-6	F			
QR301	C-2	F	D1421	B-2	F	C331	D-6	C	C742	B-4	C	R323	D-3	F	R622	C-9	C	R773	B-2	C			
QR302	C-3	F	D1451	C-3	F	C334	D-4	F	C744	B-6	F	R324	C-2	F	R701	C-3	C	R774	B-2	C			
QR303	D-4	F	D1471	B-3	F	C336	D-2	F	C747	C-7	F	R326	C-3	F	R702	C-4	C	R776	B-7	F			
QR1401	B-1	F	D1481	B-1	F	C337	D-2	F	C748	B-6	F	R327	C-3	F	R703	C-4	C	R777	C-7	F			
QR1411	B-1	F	D1482	C-1	F	C338	D-7	C	C749	A-2	C	R328	C-3	F	R704	C-3	C	R778	B-7	F			
QR1451	C-3	F	**Ir Recever**			C339	D-3	F	C750	C-7	F	R329	D-2	F	R705	C-3	C	R779	C-7	F			
QR1471	A-3	F	IR6401	B-2	C	C340	D-6	C	C751	B-7	F	R330	C-8	C	R706	C-3	C	R780	B-7	F			
Test Point			**Filter**			C341	D-2	F	C752	B-7	F	R331	C-8	C	R708	A-7	F	R781	B-7	F			
CL101	B-6	F	FL101	B-4	F	C342	D-3	F	C753	B-7	F	R332	D-7	C	R709	B-3	C	R782	B-2	C			
CL102	D-7	C	FL102	C-6	C	C343	C-8	C	C754	B-7	F	R333	C-7	C	R710	D-6	C	R783	B-2	C			
CL103	D-2	F	**Crystal Ocillator**			C344	D-2	F	C755	B-7	F	R334	D-7	C	R711	B-8	F	R784	B-2	C			
CL301	C-7	C	X101	B-4	F	C345	D-2	F	C757	B-7	F	R335	D-7	C	R712	B-7	F	R785	C-2	C			
CL302	D-6	C	**Coil**			C346	D-2	F	C758	B-7	F	R336	C-4	F	R713	C-6	C	R786	B-7	F			
CL303	D-6	C	L101	D-4	F	C347	D-2	F	C759	B-6	F	R337	D-4	F	R714	C-2	C	R787	C-7	F			
CL304	D-7	C	L104	D-6	C	C348	D-2	F	C1227	C-3	F	R338	D-4	F	R715	C-2	C	R788	B-7	F			
CL305	C-9	C	L105	B-5	C	C349	D-2	F	C1231	C-4	F	R339	D-7	C	R716	C-2	C	R789	C-7	F			
CL306	D-7	C	L702	C-2	C	C350	D-4	F	C1381	C-6	C	R341	C-8	C	R717	B-7	F	R793	C-7	C			
CL307	D-7	C	L1227	C-3	F	C351	D-4	F	C1382	B-6	C	R342	D-4	F	R718	A-7	F	R794	C-7	C			
CL308	C-4	F	L1231	C-3	F	C601	B-8	C	C1411	B-4	F	R343	D-3	F	R719	B-7	F	R795	A-2	C			
CL309	D-7	C	**Capacitor**			C603	B-9	C	C1421	C-3	F	R344	D-3	F	R720	C-2	C	R796	B-2	C			

ADDRESS INFORMATION **C**...COMPONENT SIDE **F**...FOIL SIDE

15.10. MAIN C.B.A. (COMPONENT SIDE)

(VEP03G74E)

NOTE:MULTILAYER C.B.A.
THIS C.B.A. IS Multi-Layer C.B.A. THIS CIRCUIT BOARD SHOWS COMPONENT LAYOUT-PATTERN FOR COMPONENT SIDE AND FOIL SIDE. LAYOUT-PATTERNS ARE SINGLE PATTERN FOR EACH SIDE THAT MAKE EASY TO SIGHT THE COMPONENT LAYOUT.

IMPORTANT SAFETY NOTICE:
COMPONENTS IDENTIFIED WITH THE MARK ⚠ HAVE THE SPECIAL CHARACTERISTICS FOR SAFETY. WHEN REPLACING ANY OF THESE COMPONENTS, USE ONLY THE SAME TYPE.

CAUTION: FOR CONTINUED PROTECTION AGAINST FIRE HAZARD, REPLACE ONLY WITH THE SAME TYPE 4.0A 24V FUSE.
ATTENTION: POUR UNE PROTECTION CONTINUE LES RISQUES D' INCENDIE N' UTILISERQUE DES FUSIBLE DE MÉME TYPE 4.0A 24V

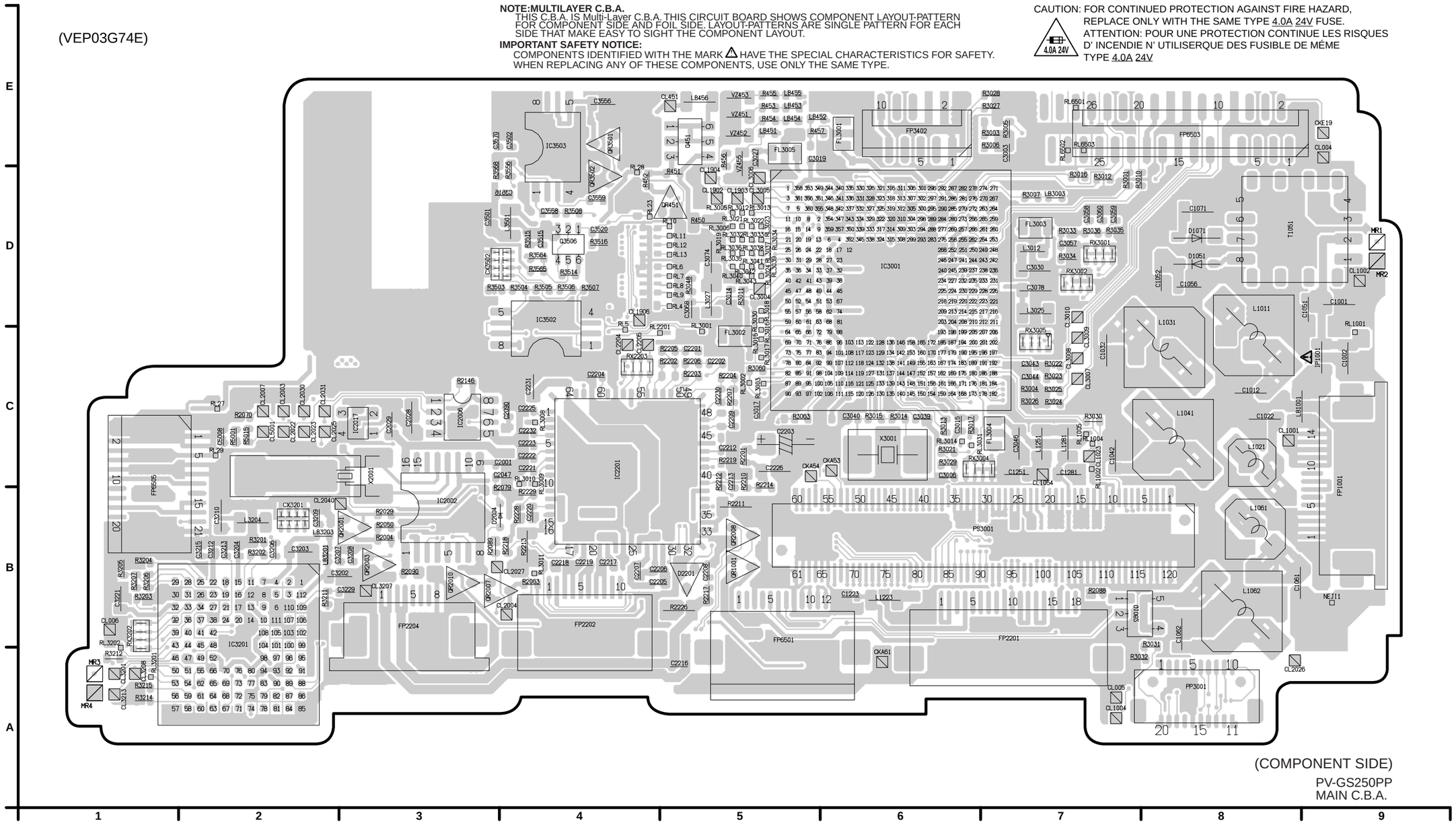

(COMPONENT SIDE)

PV-GS250PP
MAIN C.B.A.

15.11. MAIN C.B.A. (FOIL SIDE)

(VEP03G74E)

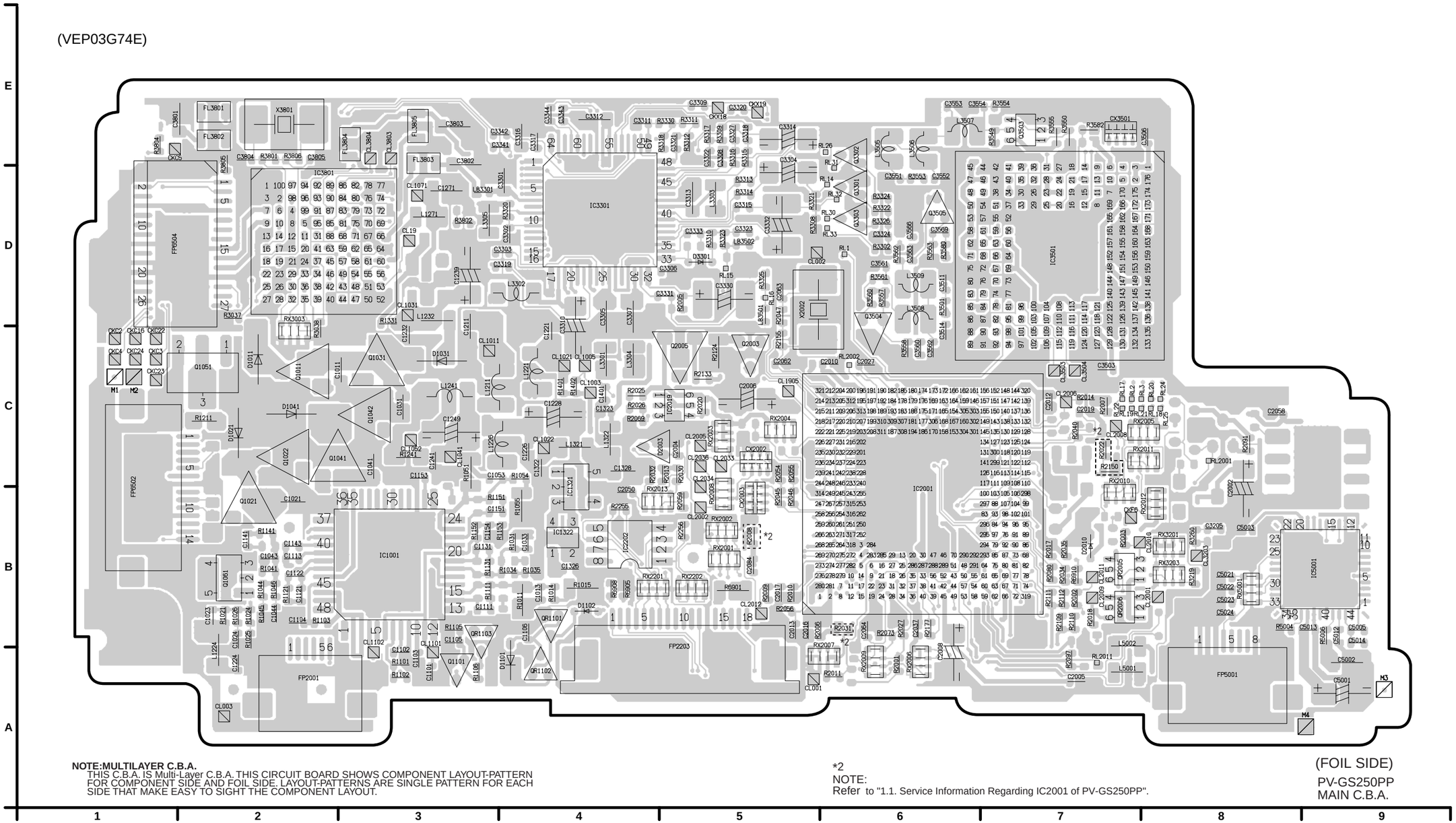

NOTE:MULTILAYER C.B.A.
THIS C.B.A. IS Multi-Layer C.B.A. THIS CIRCUIT BOARD SHOWS COMPONENT LAYOUT-PATTERN FOR COMPONENT SIDE AND FOIL SIDE. LAYOUT-PATTERNS ARE SINGLE PATTERN FOR EACH SIDE THAT MAKE EASY TO SIGHT THE COMPONENT LAYOUT.

*2
NOTE:
Refer to "1.1. Service Information Regarding IC2001 of PV-GS250PP".

(FOIL SIDE)
PV-GS250PP
MAIN C.B.A.

Main C.B.A.

Integrated Circuit			CL1011	C-3	F	RL12	D-5	C	RL6503	E-7	C	L1241	C-3	F	C1122	B-2	F	C2226	C-5	C	C3343	E-4	F	R1046	B-2	F	R2124	C-5	F	R3212	A-1	C	RX2005	C-7	F
IC1001	B-3	F	CL1021	C-4	F	RL13	D-5	C	**Connector**			L1251	C-7	C	C1131	B-3	F	C2230	C-5	C	C3344	E-4	F	R1051	C-3	F	R2133	C-5	F	R3214	A-1	C	RX2006	A-6	F
IC1321	C-4	F	CL1022	C-4	F	RL14	D-6	F	FP1001	C-9	C	L1271	D-3	F	C1141	B-2	F	C2231	C-4	C	C3501	D-3	C	R1054	C-4	F	R2146	C-3	C	R3215	A-1	C	RX2007	A-6	F
IC1322	B-4	F	CL1023	C-7	C	RL15	D-5	F	FP2001	A-2	F	L1281	C-7	C	C1143	B-2	F	C2232	C-4	C	C3502	E-4	C	R1055	B-4	F	R2150	C-7	F	R3219	B-8	F	RX2008	B-5	F
IC2001	B-6	F	CL1031	D-3	F	RL16	D-5	F	FP2201	B-7	C	L1321	C-4	F	C1151	B-3	F	C3003	E-7	C	C3503	C-7	F	R1101	A-3	F	R2155	C-5	F	R3260	B-8	F	RX2009	A-6	F
IC2002	B-3	C	CL1041	C-3	F	RL17	C-7	F	FP2202	B-4	C	L1322	C-4	F	C1153	C-3	F	C3006	C-6	C	C3506	E-8	F	R1102	A-3	F	R2177	B-6	F	R3302	D-6	F	RX2010	B-7	F
IC2006	C-3	C	CL1052	C-3	F	RL18	C-8	F	FP2203	B-5	F	L3012	D-7	C	C1154	B-3	F	C3014	D-5	C	C3511	D-6	F	R1103	B-2	F	R2201	C-5	C	R3308	D-5	F	RX2011	C-7	F
IC2017	C-3	C	CL1054	C-7	C	RL19	C-7	F	FP2204	B-3	C	L3025	D-7	C	C1211	C-3	F	C3015	C-6	C	C3514	C-6	F	R1105	B-3	F	R2202	C-5	C	R3309	E-5	F	RX2012	B-8	F
IC2019	C-5	F	CL1071	D-3	F	RL20	C-8	F	FP3402	E-6	C	L3027	D-5	C	C1221	C-4	F	C3017	C-5	C	C3515	D-4	C	R1106	A-3	F	R2203	C-5	C	R3310	D-5	F	RX2013	B-4	F
IC2201	C-4	C	CL1101	A-3	F	RL21	C-7	F	FP5001	A-8	F	L3204	B-2	C	C1223	B-6	C	C3019	E-5	C	C3516	D-4	C	R1111	B-3	F	R2204	C-5	C	R3311	E-5	F	RX2201	B-4	F
IC2202	B-4	F	CL1102	A-3	F	RL22	C-7	F	FP6501	A-5	C	L3301	C-4	F	C1224	A-2	F	C3027	E-5	C	C3520	D-4	C	R1121	B-2	F	R2205	C-5	C	R3312	E-5	F	RX2202	B-5	F
IC3001	D-6	C	CL1902	D-5	C	RL23	D-4	C	FP6502	C-1	F	L3302	D-4	F	C1226	C-4	F	C3030	D-7	C	C3551	D-6	F	R1131	B-3	F	R2206	C-5	C	R3313	D-5	F	RX2203	C-4	C
IC3201	B-2	C	CL1903	D-5	C	RL24	C-8	F	FP6503	E-8	C	L3303	D-5	F	C1228	C-4	F	C3039	C-6	C	C3552	D-6	F	R1141	B-2	F	R2207	C-5	C	R3314	D-5	F	RX3001	D-7	C
IC3301	D-4	F	CL1904	D-5	C	RL25	C-8	F	FP6504	D-2	F	L3304	C-4	F	C1232	C-3	F	C3040	C-6	C	C3553	E-6	F	R1151	B-3	F	R2210	C-5	C	R3315	E-5	F	RX3002	D-7	C
IC3501	D-7	F	CL1905	C-5	F	RL26	E-6	F	FP6505	C-1	C	L3305	D-3	F	C1239	D-3	F	C3043	C-7	C	C3554	E-7	F	R1152	B-3	F	R2211	B-5	C	R3316	E-5	F	RX3003	C-2	F
IC3502	D-4	C	CL1906	D-4	C	RL27	C-2	C	PP3001	A-8	C	L3501	D-4	C	C1241	C-3	F	C3044	C-7	C	C3556	E-4	C	R1153	B-4	F	R2212	C-5	C	R3317	E-5	F	RX3004	C-7	C
IC3503	E-4	C	CL2001	B-8	F	RL28	D-4	C	PS3001	B-7	C	L3505	E-6	F	C1249	C-3	F	C3046	C-7	C	C3558	D-4	C	R1211	C-2	F	R2213	B-4	C	R3318	E-5	F	RX3005	C-7	C
IC3801	D-2	F	CL2002	B-5	F	RL29	C-2	C	**Fuse**			L3506	E-6	F	C1251	C-7	C	C3057	D-7	C	C3559	D-4	C	R1241	C-3	F	R2214	C-5	C	R3320	D-4	F	RX3201	B-8	F
IC5001	B-9	F	CL2003	C-2	C	RL30	D-6	F	IP1001	C-9	C	L3507	E-6	F	C1271	D-3	F	C3058	D-7	C	C3560	C-6	F	R1331	D-3	F	R2217	B-5	C	R3321	D-5	F	RX3202	B-1	C
Transister			CL2004	B-4	C	RL31	D-6	F	**Diode**			L3508	D-6	F	C1281	C-7	C	C3059	D-7	C	C3561	D-6	F	R1401	C-4	F	R2218	B-4	C	R3322	D-6	F	RX3203	B-8	F
Q451	E-5	C	CL2005	C-5	F	RL32	D-6	F	D1011	C-2	F	L3509	D-6	F	C1322	C-4	F	C3060	D-7	C	C3562	C-6	F	R1402	C-4	F	R2219	C-5	C	R3323	D-5	F	RX5001	B-8	F
Q1011	C-2	F	CL2006	C-7	F	RL33	D-6	F	D1021	C-2	F	L5001	A-7	F	C1323	C-4	F	C3068	D-5	C	C3563	D-6	F	R2001	A-6	F	R2226	B-5	C	R3324	D-6	F			
Q1021	B-2	F	CL2007	C-2	C	RL1001	C-9	C	D1031	C-3	F	L5002	A-7	F	C1326	B-4	F	C3074	D-5	C	C3566	D-6	F	R2002	B-7	F	R2228	B-4	C	R3325	D-5	F			
Q1022	C-2	F	CL2008	C-7	F	RL1002	C-7	C	D1041	C-2	F	LB451	E-5	C	C1328	C-4	F	C3078	D-7	C	C3569	D-6	F	R2003	B-7	F	R2229	B-4	C	R3326	D-6	F			
Q1031	C-3	F	CL2009	B-7	F	RL1004	C-7	C	D1051	D-8	C	LB452	E-5	C	C1401	C-4	F	C3202	B-2	C	C3570	E-3	C	R2004	B-3	C	R2255	B-4	F	R3330	E-5	F			
Q1041	C-2	F	CL2010	B-7	F	RL1005	C-7	C	D1071	D-8	C	LB453	E-5	C	C2001	C-4	C	C3203	B-2	C	C3801	E-2	F	R2005	D-5	F	R2256	B-5	F	R3501	D-6	F			
Q1042	C-3	F	CL2011	B-7	F	RL2001	C-8	F	D1101	A-4	F	LB454	E-5	C	C2002	C-8	F	C3204	B-2	C	C3802	E-3	F	R2006	B-6	F	R3001	D-7	C	R3503	D-3	C			
Q1051	C-2	F	CL2012	B-5	F	RL2002	C-6	F	D1102	B-4	F	LB455	E-5	C	C2004	C-5	F	C3205	B-8	F	C3803	E-3	F	R2007	C-7	F	R3003	E-7	C	R3504	D-4	C			
Q1061	B-2	F	CL2022	C-2	C	RL2011	A-7	F	D2003	C-4	F	LB456	E-5	C	C2005	A-7	F	C3206	B-2	C	C3804	E-2	F	R2009	B-5	F	R3004	C-7	C	R3505	D-4	C			
Q1062	B-7	C	CL2023	C-2	C	RL2201	C-5	C	D2004	B-3	C	LB1001	C-8	C	C2006	C-5	F	C3207	B-3	C	C3805	E-2	F	R2010	B-5	F	R3005	E-7	C	R3506	D-4	C			
Q1101	A-3	F	CL2025	C-2	C	RL3001	D-5	C	D2010	B-7	F	LB3003	D-7	C	C2008	A-6	F	C3208	B-3	C	C5001	A-9	F	R2011	A-6	F	R3006	E-7	C	R3507	D-4	C			
Q2003	C-5	F	CL2026	A-8	C	RL3002	C-5	C	D2201	B-5	C	LB3201	B-2	C	C2010	C-6	F	C3209	B-2	C	C5002	A-9	F	R2013	C-5	F	R3007	D-7	C	R3508	D-4	C			
Q2005	C-5	F	CL2027	B-3	C	RL3003	C-5	C	D3301	D-5	F	LB3203	B-2	C	C2012	C-7	F	C3210	B-2	C	C5003	B-8	F	R2014	C-7	F	R3010	D-7	C	R3514	D-4	C			
Q3301	D-6	F	CL2030	C-2	C	RL3005	D-5	C	**Absorber**			LB3301	D-3	F	C2013	B-5	F	C3212	B-2	C	C5005	B-9	F	R2017	B-7	F	R3011	D-5	C	R3515	D-4	C			
Q3302	E-6	F	CL2031	C-2	C	RL3006	D-5	C	VZ451	E-5	C	LB3501	D-5	F	C2016	B-5	F	C3213	B-2	C	C5008	C-2	C	R2018	B-7	F	R3012	D-7	C	R3516	D-4	C			
Q3303	D-6	F	CL2033	C-5	F	RL3008	C-4	C	VZ452	E-5	C	LB3502	D-5	F	C2017	B-5	F	C3215	B-2	C	C5012	B-9	F	R2020	C-5	F	R3013	C-6	C	R3549	E-7	F			
Q3503	E-7	F	CL2034	C-5	F	RL3009	C-4	C	VZ453	E-5	C	**Capacitor**			C2019	C-7	F	C3221	B-1	C	C5013	B-9	F	R2025	C-4	F	R3014	C-6	C	R3550	E-7	F			
Q3504	C-6	F	CL2036	C-5	F	RL3010	C-4	C	VZ455	D-5	C	C1001	D-9	C	C2027	C-6	F	C3229	B-3	C	C5014	B-9	F	R2026	C-4	F	R3015	C-6	C	R3553	D-6	F			
Q3505	D-6	F	CL2040	B-3	C	RL3011	B-4	C	**Transformer**			C1002	C-9	C	C2028	C-3	C	C3301	D-4	F	C5021	B-8	F	R2027	B-6	F	R3016	D-7	C	R3554	E-7	F			
Q3506	D-4	C	CL2204	C-4	C	RL3012	D-5	C	T1051	D-8	C	C1011	C-3	F	C2029	C-3	C	C3302	D-4	F	C5022	B-8	F	R2029	B-3	C	R3017	C-6	C	R3555	E-7	F			
Transister &Resister			CL2205	C-4	C	RL3013	D-5	C	**Filter**			C1012	C-8	C	C2037	B-6	F	C3303	D-4	F	C5023	B-8	F	R2030	C-5	F	R3021	C-6	C	R3556	D-4	C			
QR451	D-5	C	CL3004	D-5	C	RL3014	C-6	C	FL3001	E-6	C	C1013	B-4	F	C2047	C-4	C	C3304	D-5	F	C5024	B-8	F	R2031	B-6	F	R3022	C-7	C	R3557	D-6	F			
QR1001	B-5	C	CL3005	D-5	C	RL3015	C-5	C	FL3002	C-5	C	C1021	B-2	F	C2050	B-4	F	C3305	D-4	F	CX2002	C-5	F	R2032	C-4	F	R3023	C-7	C	R3558	C-6	F			
QR1101	B-4	F	CL3006	D-5	C	RL3016	D-5	C	FL3003	D-7	C	C1022	C-8	C	C2058	C-8	F	C3306	D-5	F	CX2003	B-5	F	R2034	B-7	F	R3024	C-7	C	R3560	D-6	F			
QR1102	A-4	F	CL3007	C-7	C	RL3017	C-5	C	FL3004	C-7	C	C1023	B-2	F	C2062	C-5	F	C3307	D-4	F	CX3201	B-2	C	R2035	B-7	F	R3025	C-7	C	R3561	D-6	F			
QR1103	B-3	F	CL3008	C-7	C	RL3018	D-5	C	FL3005	E-5	C	C1024	B-2	F	C2063	D-5	F	C3308	E-5	F	CX3501	E-7	F	R2040	C-7	F	R3026	C-7	C	R3562	D-6	F			
QR2001	B-3	C	CL3009	C-7	C	RL3019	D-5	C	FL3801	E-2	F	C1031	C-3	F	C2064	B-6	F	C3309	E-5	F	CX3502	D-4	C	R2045	B-5	F	R3027	E-7	C	R3563	D-6	F			
QR2003	B-3	C	CL3010	D-7	C	RL3021	D-5	C	FL3802	E-2	F	C1032	C-7	C	C2084	B-5	F	C3310	C-4	F	**Resistor**			R2046	B-5	F	R3028	E-7	C	R3564	D-4	C			
QR2005	B-7	F	CL3201	A-1	C	RL3022	D-5	C	FL3803	E-3	F	C1033	B-4	F	C2090	C-4	C	C3311	E-4	F	R450	D-5	C	R2047	D-5	F	R3029	C-6	C	R3565	D-4	C			
QR2006	B-7	F	CL3203	B-8	F	RL3023	D-5	C	FL3804	E-3	F	C1041	C-3	F	C2201	C-5	C	C3312	E-4	F	R451	D-5	C	R2050	B-3	C	R3030	C-7	C	R3568	D-3	C			
QR2007	B-3	C	CL3207	B-3	C	RL3024	D-5	C	FL3805	E-3	F	C1042	C-7	C	C2202	C-5	C	C3313	D-5	F	R452	D-4	C	R2054	C-5	F	R3031	B-8	C	R3580	D-6	F			
QR2008	B-5	C	CL3208	A-1	C	RL3030	D-5	C	**Crystal Ocillator**			C1043	B-2	F	C2203	C-5	C	C3314	E-5	F	R453	E-5	C	R2055	C-5	F	R3032	A-7	C	R3582	E-7	F			
QR2010	B-3	C	CL3213	A-1	C	RL3031	C-6	C	X2001	C-3	C	C1044	B-2	F	C2204	C-4	C	C3315	D-5	F	R454	E-5	C	R2056	B-5	F	R3033	D-7	C	R3801	E-2	F			
QR3501	E-4	C	CL3503	C-7	F	RL3032	D-5	C	X2002	D-5	F	C1051	D-9	C	C2205	B-4	C	C3316	E-4	F	R455	E-5	C	R2059	B-5	F	R3034	D-7	C	R3802	D-3	F			
QR3502	D-4	C	CL3504	C-7	F	RL3033	D-5	C	X3001	C-6	C	C1052	D-8	C	C2206	B-4	C	C3317	E-4	F	R456	E-5	C	R2063	B-4	C	R3035	D-7	C	R3804	E-1	F			
Test Point			CL3803	E-3	F	RL3034	D-5	C	X3801	E-2	F	C1053	C-3	F	C2207	B-4	C	C3318	E-5	F	R457	E-5	C	R2069	C-4	F	R3036	D-7	C	R3805	E-2	F			
CL1	A-5	F	CL3804	E-3	F	RL3035	D-5	C	**Coil**			C1056	D-8	C	C2208	B-5	C	C3319	D-4	F	R1011	B-4	F	R2070	C-2	C	R3037	D-2	F	R3806	E-2	F			
CL2	D-5	F	CL5001	C-2	C	RL3036	D-5	C	L1011	C-8	C	C1061	B-8	C	C2209	C-5	C	C3320	E-5	F	R1014	B-4	F	R2073	B-6	F	R3038	C-2	F	R5001	C-2	C			
CL3	A-2	F	RL1	D-6	F	RL3037	D-5	C	L1021	C-8	C	C1062	B-8	C	C2212	C-5	C	C3321	E-5	F	R1015	B-4	F	R2079	B-4	C	R3048	D-5	C	R5004	B-8	F			
CL4	E-9	C	RL2	C-7	F	RL3038	D-5	C	L1031	C-8	C	C1071	D-8	C	C2213	C-5	C	C3322	E-5	F	R1021	B-2	F	R2080	B-7	F	R3060	C-5	C	R5006	B-9	F			
CL5	A-7	C	RL3	C-7	F	RL3039	D-5	C	L1041	C-8	C	C1101	A-3	F	C2216	A-5	C	C3323	D-5	F	R1024	B-2	F	R2088	B-7	C	R3063	C-5	C	R5015	C-2	C			
CL6	B-1	C	RL4	D-5	C	RL3040	D-5	C	L1061	B-8	C	C1102	A-3	F	C2217	B-4	C	C3324	D-6	F	R1025	B-2	F	R2089	B-3	C	R3201	B-2	C	R6901	B-5	F			
CL19	D-3	F	RL5	D-4	C	RL3041	D-5	C	L1062	B-8	C	C1103	A-3	F	C2218	B-4	C	C3327	E-5	F	R1026	B-2	F	R2090	B-3	C	R3202	B-2	C	R6905	B-4	F			
CL451	E-5	C	RL6	D-5	C	RL3042	D-5	C	L1211	C-3	F	C1104	B-2	F	C2219	B-4	C	C3330	D-5	F	R1031	B-4	F	R2091	C-8	F	R3203	B-1	C	R6908	B-4	F			
CL1001	C-8	C	RL7	D-5	C	RL3043	D-5	C	L1221	C-4	F	C1105	B-3	F	C2220	B-4	C	C3331	D-5	F	R1034	B-4	F	R2097	A-7	F	R3204	B-1	C	R6910	B-7	F			
CL1002	D-9	C	RL8	D-5	C	RL3201	A-1	C	L1223	B-6	C	C1106	B-4	F	C2221	C-4	C	C3332	D-5	F	R1035	B-4	F	R2109	B-7	F	R3205	B-1	C	RX2001	B-5	F			
CL1003	C-4	F	RL9	D-5	C	RL3202	A-1	C	L1224	A-2	F	C1111	B-3	F	C2222	C-4	C	C3333	D-5	F	R1041	B-2	F	R2110	B-7	F	R3206	B-1	C	RX2002	B-5	F			
CL1004	A-7	C	RL10	D-5	C	RL6501	E-7	C	L1226	C-4	F	C1113	B-2	F	C2223	C-4	C	C3341	E-3	F	R1044	B-2	F	R2111	B-7	F	R3207	B-1	C	RX2003	C-5	F			
CL1005	C-4	F	RL11	D-5	C	RL6502	E-7	C	L1232	D-3	F	C1121	B-2	F	C2225	C-4	C	C3342	E-3	F	R1045	B-2	F	R2112	B-7	F	R3211	B-2	C	RX2004	C-5	F			

ADDRESS INFORMATION **C**...COMPONENT SIDE **F**...FOIL SIDE

16 CHECKING POINT OF THE CSP IC

16.1. CHECKING POINT TABLE

Check Point of the IC303

CSP IC		Check Point		WF NO.	Remarks	CSP IC		Check Point		WF NO.	Remarks
Pin	Name					Pin	Name				
1	TEST	———	—	—		61	NC	———	—	—	
2	MAD B14	———	—	—		62	VSS	———	—	—	
3	VSS	———	—	—		63	NC	———	—	—	
4	MAD B13	———	—	—		64	VDD VTR	———	—	—	
5	MAD B12	———	—	—		65	VSS	———	—	—	
6	VDD CPU	———	—	—		66	NC	———	—	—	
7	MAD B11	———	—	—		67	NC	———	—	—	
8	MAD B10	———	—	—		68	VSS	———	—	—	
9	MAD B9	———	—	—		69	VDDI	———	—	—	
10	MAD B8	———	—	—		70	VSS	———	—	—	
11	MAD B7	———	—	—		71	VDD VTR	———	—	—	
12	MAD B6	———	—	—		72	VSS	———	—	—	
13	MAD B5	———	—	—		73	VDD VTR	———	—	—	
14	MAD B4	———	—	—		74	VSSD	———	—	—	
15	MAD B3	———	—	—		75	VSSD	———	—	—	
16	MAD B2	———	—	—		76	VDD 15D	———	—	—	
17	MAD B1	———	—	—		77	VDD 15D	———	—	—	
18	MAD B0	———	—	—		78	DTMB	———	—	—	
19	MSPA14	———	—	—		79	VSSD	———	—	—	
20	VSS	———	—	—		80	VSSD	———	—	—	
21	VDD CPU	———	—	—		81	NC	———	—	—	
22	MSPA13	———	—	—		82	VDD 15D	———	—	—	
23	MSPA12	———	—	—		83	VDD 15D	———	—	—	
24	MSPA11	———	—	—		84	NC	———	—	—	
25	MSPA10	———	—	—		85	VSSD	———	—	—	
26	MSPA9	———	—	—		86	VSSD	———	—	—	
27	MSPA8	———	—	—		87	NC	———	—	—	
28	MSPA7	———	—	—		88	VSS	———	—	—	
29	VDDI	———	—	—		89	VDD VTR	———	—	—	
30	VSS	———	—	—		90	DVM	———	—	—	
31	MSPA6	———	—	—		91	VSS	———	—	—	
32	MSPA5	———	—	—		92	VDD 25D	———	—	—	
33	MSPA4	———	—	—		93	VDD 25D	———	—	—	
34	MSPA3	———	—	—		94	VDD VTR	———	—	—	
35	MSPA2	———	—	—		95	VDDI	———	—	—	
36	MSPA1	———	—	—		96	TMODE5	———	—	—	
37	MSPA0	———	—	—		97	TMODE4	———	—	—	
38	VSS	———	—	—		98	TMODE3	———	—	—	
39	VSS	———	—	—		99	TMODE2	———	—	—	
40	VSS	———	—	—		100	TMODE1	———	—	—	
41	VDD VTR	———	—	—		101	TMODE0	———	—	—	
42	VDD VTR	———	—	—		102	TSTO50	———	—	—	
43	VDD VTR	———	—	—		103	TSTO49	———	—	—	
44	SCANNT	———	—	—		104	TSTO48	———	—	—	
45	TRST IN4	———	—	—		105	TSTO47	———	—	—	
46	TRST IN3	———	—	—		106	TSTO46	———	—	—	
47	TRST IN2	———	—	—		107	TSTO45	———	—	—	
48	TRST IN1	———	—	—		108	TSTO44	———	—	—	
49	TEST IN0	———	—	—		109	TSTO43	———	—	—	
50	NC	———	—	—		110	TSTO42	———	—	—	
51	NC	———	—	—		111	TSTO41	———	—	—	
52	VDD VTR	———	—	—		112	TSTO40	———	—	—	
53	VSS	———	—	—		113	TSTO39	———	—	—	
54	NC	———	—	—		114	VDD VTR	———	—	—	
55	VSS	———	—	—		115	VSS	———	—	—	
56	NC	———	—	—		116	TSTO38	———	—	—	
57	VDDI	———	—	—		117	TSTO37	———	—	—	
58	VSS	———	—	—		118	TSTO36	———	—	—	
59	NC	———	—	—		119	TSTO35	———	—	—	
60	VSS	———	—	—		120	TSTO34	———	—	—	

(C): COMPONENT SIDE (F):FOIL SIDE

Check Point of the IC303

CSP IC Pin	CSP IC Name	Check Point		WF NO.	Remarks
121	TSTO33	———	—	—	
122	TSTO32	———	—	—	
123	TSTO31	———	—	—	
124	TSTO30	———	—	—	
125	TSTO29	———	—	—	
126	TSTO28	———	—	—	
127	TSTO27	———	—	—	
128	TSTO26	———	—	—	
129	TSTO25	———	—	—	
130	TSTO24	———	—	—	
131	TSTO23	———	—	—	
132	TSTO22	———	—	—	
133	TSTO21	———	—	—	
134	VSS	———	—	—	
135	VDDI	———	—	—	
136	TSTO20	———	—	—	
137	TSTO19	———	—	—	
138	TSTO18	———	—	—	
139	TSTO17	RL307	E-7	WF-1	SUB C.B.A. (C)
140	TSTO16	RL306	E-8	WF-1	SUB C.B.A. (C)
141	TSTO15	———	—	—	
142	TSTO14	———	—	—	
143	VDD VTR	———	—	—	
144	TSTO13	RL305	E-7	WF-1	SUB C.B.A. (C)
145	VSS	———	—	—	
146	TSTO12	———	—	—	
147	TSTO11	———	—	—	
148	TSTO10	———	—	—	
149	TSTO9	———	—	—	
150	TSTO8	———	—	—	
151	TSTO7	———	—	—	
152	TSTO6	———	—	—	
153	TSTO5	———	—	—	
154	TSTO4	———	—	—	
155	TSTO3	———	—	—	
156	TSTO2	———	—	—	
157	TSTO1	RL303	D-8	WF-1	SUB C.B.A. (C)
158	TSTO0	———	—	—	
159	DSTB O	———	—	—	
160	MEGA PIX	———	—	—	
161	BUSY	———	—	—	
162	VTR 45M	R304 (UPPER)	D-7	WF-12	SUB C.B.A. (C)
163	INV	———	—	—	
164	INH	———	—	—	
165	C OUT7	———	—	—	
166	C OUT6	———	—	—	
167	C OUT5	———	—	—	
168	C OUT4	———	—	—	
169	C OUT3	———	—	—	
170	VSS	———	—	—	
171	C OUT2	———	—	—	
172	C OUT1	———	—	—	
173	VSS	———	—	—	
174	C OUT0	RL3015	C-5	WF-1	MAIN C.B.A. (C)
175	VDD VTR	———	—	—	
176	VTR CKO	CL311	C-4	WF-122	SUB C.B.A. (F)
177	Y OUT7	———	—	—	
178	Y OUT6	———	—	—	
179	Y OUT5	———	—	—	
180	Y OUT4	———	—	—	

CSP IC Pin	CSP IC Name	Check Point		WF NO.	Remarks
181	Y OUT3	———	—	—	
182	Y OUT2	———	—	—	
183	Y OUT1	———	—	—	
184	Y OUT0	RL3030	D-5	WF-1	MAIN C.B.A. (C)
185	DD FCK	IC304-4	D-7	WF-1	SUB C.B.A. (C)
186	VDD VTR	———	—	—	
187	TDO	CL309	D-7	WF-1	SUB C.B.A. (C)
188	TRST	C343 (LEFT)	C-8	WF-1	SUB C.B.A. (C)
189	TCK	CL306	D-7	WF-1	SUB C.B.A. (C)
190	TDI	CL307	D-7	WF-1	SUB C.B.A. (C)
191	TMS	CL102	D-7	WF-1	SUB C.B.A. (C)
192	P DOWN	R421 (RIGHT)	D-7	WF-1	SUB C.B.A. (C)
193	FCK	R145 (LEFT)	C-4	WF-1	SUB C.B.A. (F)
194	SEL ON	———	—	—	
195	FI	IC101-18	B-5	WF-1	SUB C.B.A. (F)
196	2F CK	———	—	—	
197	CLK RST	R348 (RIGHT)	D-7	WF-1	SUB C.B.A. (C)
198	VSS	———	—	—	
199	VDDI	———	—	—	
200	TVD	IC101-17	B-5	WF-1	SUB C.B.A. (F)
201	THD	R108 (RIGHT)	B-6	WF-1	SUB C.B.A. (F)
202	CCD HD	IC101-16	B-5	WF-1	SUB C.B.A. (F)
203	VDD CAM	———	—	—	
204	SIG	IC702-50	B-8	WF-1	SUB C.B.A. (F)
205	ZD COM P	IC702-14	B-8	WF-4	SUB C.B.A. (F)
206	ZC COM P	IC702-13	B-8	WF-4	SUB C.B.A. (F)
207	VSS	———	—	—	
208	ZB COM P	IC702-12	B-8	WF-2	SUB C.B.A. (F)
209	ZA COM P	IC702-11	B-8	WF-3	SUB C.B.A. (F)
210	PWM ND	C731 (RIGHT)	B-3	WF-1	SUB C.B.A. (C)
211	PWM HZB	R702 (UPPER)	C-4	WF-159	SUB C.B.A. (C)
212	PWM HZA	R721 (LEFT)	C-2	WF-159	SUB C.B.A. (C)
213	PWM LIN	R720 (LOWER)	C-2	WF-159	SUB C.B.A. (C)
214	PWM IRIS	C718 (RIGHT)	C-9	WF-1	SUB C.B.A. (F)
215	VSS	———	—	—	
216	IRIS OPEN	R742 (LOWER)	A-8	WF-1	SUB C.B.A. (F)
217	IRIS CLOSE	R743 (LOWER)	A-8	WF-1	SUB C.B.A. (F)
218	F2 C	IC702-55	B-8	WF-140	SUB C.B.A. (F)
219	FC B	IC702-54	B-8	WF-140	SUB C.B.A. (F)
220	FC A	IC702-53	B-8	WF-140	SUB C.B.A. (F)
221	VCO OUT	RL302	C-8	WF-181	SUB C.B.A. (C)
222	VDD CAM	———	—	—	
223	VSS	———	—	—	
224	PLL DVD	———	—	—	
225	PLL AVD	———	—	—	
226	PLL AVS	———	—	—	
227	PLL DVS	———	—	—	
228	VSS	———	—	—	
229	VDDI	———	—	—	
230	B IN9	IC106-9	C-6	WF-1	SUB C.B.A. (C)
231	B IN8	IC106-8	C-6	WF-39	SUB C.B.A. (C)
232	VDDI	———	—	—	
233	B IN7	IC106-7	C-6	WF-39	SUB C.B.A. (C)
234	B IN6	IC106-6	C-6	WF-39	SUB C.B.A. (C)
235	B IN5	IC106-5	C-6	WF-127	SUB C.B.A. (C)
236	B IN4	IC106-4	C-6	WF-207	SUB C.B.A. (C)
237	B IN3	IC106-3	C-6	WF-207	SUB C.B.A. (C)
238	B IN2	IC106-2	C-6	WF-207	SUB C.B.A. (C)
239	B IN1	IC106-1	C-6	WF-207	SUB C.B.A. (C)
240	VSS	———	—	—	

(C): COMPONENT SIDE (F): FOIL SIDE

Check Point of the IC303

CSP IC		Check Point		WF NO.	Remarks
Pin	Name				
241	B IN0	IC106-36	C-6	WF-207	SUB C.B.A. (C)
242	G IN9	IC105-9	B-6	WF-39	SUB C.B.A. (C)
243	G IN8	IC105-8	B-6	WF-39	SUB C.B.A. (C)
244	G IN7	IC105-7	B-6	WF-93	SUB C.B.A. (C)
245	G IN6	IC105-6	B-6	WF-207	SUB C.B.A. (C)
246	G IN5	IC105-5	B-6	WF-207	SUB C.B.A. (C)
247	G IN4	IC105-4	B-6	WF-207	SUB C.B.A. (C)
248	G IN3	IC105-3	B-6	WF-207	SUB C.B.A. (C)
249	G IN2	IC105-2	B-6	WF-207	SUB C.B.A. (C)
250	G IN1	IC105-1	B-6	WF-207	SUB C.B.A. (C)
251	G IN0	IC105-36	B-6	WF-207	SUB C.B.A. (C)
252	R IN9	IC104-9	B-6	WF-39	SUB C.B.A. (C)
253	R IN8	IC104-8	B-6	WF-207	SUB C.B.A. (C)
254	R IN7	IC104-7	B-6	WF-207	SUB C.B.A. (C)
255	VSS	———	——	——	
256	R IN6	IC104-6	B-6	WF-207	SUB C.B.A. (C)
257	VDD RGB	———	——	——	
258	R IN5	IC104-5	B-6	WF-207	SUB C.B.A. (C)
259	R IN4	IC104-4	B-6	WF-207	SUB C.B.A. (C)
260	R IN3	IC104-3	B-6	WF-207	SUB C.B.A. (C)
261	R IN2	IC104-2	B-6	WF-207	SUB C.B.A. (C)
262	VSS	———	——	——	
263	R IN1	IC104-1	B-6	WF-207	SUB C.B.A. (C)
264	R IN0	IC104-36	B-6	WF-207	SUB C.B.A. (C)
265	DT CLK	———	——	——	
266	ACK	———	——	——	
267	VDD RGB	———	——	——	
268	VDDI	———	——	——	
269	RQ	———	——	——	
270	RDY	———	——	——	
271	BEND	———	——	——	
272	V1 V2	———	——	——	
273	M VD	RL301	C-9	WF-1	SUB C.B.A. (C)
274	POR	C315 (UPPER)	C-9	WF-1	SUB C.B.A. (C)
275	BUS SEL2	———	——	——	
276	BUS SEL1	———	——	——	
277	CE	R302 (UPPER)	C-9	WF-1	SUB C.B.A. (C)
278	RE	———	——	——	
279	ASTB	———	——	——	
280	WE Ⓛ	R321 (UPPER)	C-9	WF-203	SUB C.B.A. (C)
281	MAD B15	———	——	——	

(C): COMPONENT SIDE (F):FOIL SIDE

Check Point of the IC305

CSP IC Pin	CSP IC Name	Check Point		WF NO.	Remarks
1	NC	———	—	—	
2	MAD0	———	—	—	
3	MAD1	———	—	—	
4	MAD2	———	—	—	
5	MAD3	———	—	—	
6	MAD4	———	—	—	
7	MAD5	———	—	—	
8	MAD6	———	—	—	
9	MAD7	———	—	—	
10	MAD8	———	—	—	
11	MAD9	———	—	—	
12	MAD10	———	—	—	
13	MAD11	———	—	—	
14	MAD12	———	—	—	
15	MAD13	———	—	—	
16	MAD14	———	—	—	
17	MAD15	———	—	—	
18	VDD	———	—	—	
19	E VDD	———	—	—	
20	NC	———	—	—	
21	MF RING2	R323 (LOWER)	D-3	WF-1	SUB C.B.A. (F)
22	NC	———	—	—	
23	LENS DAC CS	IC702-1	B-8	WF-1	SUB C.B.A. (F)
24	APS1 CS	IC104-33	B-6	WF-1	SUB C.B.A. (C)
25	E2 RB	IC307-3	D-6	WF-1	SUB C.B.A. (C)
26	L STBY	IC702-26	B-8	WF-1	SUB C.B.A. (F)
27	E2 RST	IC307-7	D-6	WF-1	SUB C.B.A. (C)
28	E VDD	———	—	—	
29	VSS	———	—	—	
30	E VSS	———	—	—	
31	VDD	———	—	—	
32	WE Ⓛ	R321 (LOWER)	C-9	WF-203	SUB C.B.A. (C)
33	F OPEN	———	—	—	
34	F UP Ⓗ	———	—	—	
35	SHOE ON Ⓗ	QR451-B	D-5	WF-1	MAIN C.B.A. (C)
36	RE Ⓗ	———	—	—	
37	Z ABS	R361 (UPPER)	D-3	WF-1	SUB C.B.A. (F)
38	DAS	———	—	—	
39	WINK END	———	—	—	
40	SENS SW	R378 (LEFT)	D-2	WF-1	SUB C.B.A. (F)
41	V C DSET	QR301-C	C-2	WF-1	SUB C.B.A. (F)
42	MVD	IC101-17	B-5	WF-1	SUB C.B.A. (F)
43	BEND	———	—	—	
44	RTN FLD	———	—	—	
45	V1 V2	———	—	—	
46	MF RING1	IC306-4	E-5	WF-1	SUB C.B.A. (C)
47	MF LED CNT	Q302-B	C-3	WF-1	SUB C.B.A. (F)
48	NC	———	—	—	
49	NC	———	—	—	
50	TV MD	R324 (RIGHT)	C-2	WF-1	SUB C.B.A. (F)
51	NC	———	—	—	
52	NC	———	—	—	
53	NC	———	—	—	
54	NC	———	—	—	
55	C V DATA	———	—	—	
56	V C DATA	———	—	—	
57	CAM SCLK	CL325	D-2	WF-1	SUB C.B.A. (F)
58	NC	———	—	—	
59	NC	———	—	—	
60	NC	———	—	—	

CSP IC Pin	CSP IC Name	Check Point		WF NO.	Remarks
61	NC	———	—	—	
62	NC	———	—	—	
63	SHOE SDO	D303-K	C-3	WF-18	SUB C.B.A. (F)
64	SHOE SDI	D303-A	C-3	WF-18	SUB C.B.A. (F)
65	SHOE SCK	R454 (LEFT)	E-5	WF-153	MAIN C.B.A. (C)
66	CG ASP DAT	IC101-9	B-5	WF-23	SUB C.B.A. (F)
67	NC	———	—	—	
68	CG ASP SCK	IC106-35	C-6	WF-1	SUB C.B.A. (C)
69	EVR SBO	RX304-5	C-3	WF-1	SUB C.B.A. (F)
70	SVR SBI	RX304-3	C-3	WF-1	SUB C.B.A. (F)
71	SVR SCK	RX304-1	C-3	WF-1	SUB C.B.A. (F)
72	OIS DA SDO	IC702-63	B-8	WF-1	SUB C.B.A. (F)
73	NC	———	—	—	
74	OIS DA SCK	IC702-64	B-8	WF-153	SUB C.B.A. (F)
75	NC	———	—	—	
76	NC	———	—	—	
77	NC	———	—	—	
78	NC	———	—	—	
79	E2 CS	IC307-1	D-6	WF-1	SUB C.B.A. (C)
80	CG CS	IC101-10	B-5	WF-1	SUB C.B.A. (F)
81	NC	———	—	—	
82	VDD	———	—	—	
83	VSS	———	—	—	
84	MODE0	R345 (LOWER)	C-4	WF-1	SUB C.B.A. (F)
85	MODE1	R347 (UPPER)	C-3	WF-1	SUB C.B.A. (F)
86	NC	———	—	—	
87	MEGA REQ	RX2010-2	B-7	WF-1	MAIN C.B.A. (F)
88	BST	D302-A	C-4	WF-1	SUB C.B.A. (F)
89	NC	———	—	—	
90	NC	———	—	—	
91	NC	———	—	—	
92	E VSS	———	—	—	
93	E VDD	———	—	—	
94	FLSDLY	IC101-16	B-5	WF-1	SUB C.B.A. (F)
95	NC	———	—	—	
96	NC	———	—	—	
97	NC	———	—	—	
98	B COM P	IC702-49	B-8	WF-1	SUB C.B.A. (F)
99	A COM P	IC702-48	B-8	WF-1	SUB C.B.A. (F)
100	NC	———	—	—	
101	NC	———	—	—	
102	VDD	———	—	—	
103	VSS	———	—	—	
104	NC	———	—	—	
105	NC	———	—	—	
106	NC	———	—	—	
107	NC	———	—	—	
108	NC	———	—	—	
109	NC	———	—	—	
110	NC	———	—	—	
111	NC	———	—	—	
112	NC	———	—	—	
113	NC	———	—	—	
114	NC	———	—	—	
115	NC	———	—	—	
116	NC	———	—	—	
117	NC	———	—	—	
118	NC	———	—	—	
119	NC	———	—	—	
120	CAM RTN	———	—	—	

(C): COMPONENT SIDE (F):FOIL SIDE

Check Point of the IC305

CSP IC Pin	CSP IC Name	Check Point		WF NO.	Remarks
121	INST ST	———	—	—	
122	NC	———	—	—	
123	NC	———	—	—	
124	NC	———	—	—	
125	NC	———	—	—	
126	NC	———	—	—	
127	CHA END	R336 (UPPER)	C-4	WF-1	SUB C.B.A. (F)
128	FCP CNT	R710 (LOWER)	D-6	WF-1	SUB C.B.A. (C)
129	OIS DA LD	IC704-43	B-6	WF-1	SUB C.B.A. (F)
130	SS DET	———	—	—	
131	NC	———	—	—	
132	NC	———	—	—	
133	NC	———	—	—	
134	NC	———	—	—	
135	NC	———	—	—	
136	VSS	———	—	—	
137	E VSS	———	—	—	
138	VDD	———	—	—	
139	E VDD	———	—	—	
140	NC	———	—	—	
141	NC	———	—	—	
142	NC	———	—	—	
143	NC	———	—	—	
144	NC	———	—	—	
145	NC	———	—	—	
146	NC	———	—	—	
147	NC	———	—	—	
148	Z SW	C309 (LEFT)	D-4	WF-1	SUB C.B.A. (F)
149	IR	CX301-7	D-4	WF-1	SUB C.B.A. (F)
150	FNO	CX301-5	D-4	WF-1	SUB C.B.A. (F)
151	ND FNO	CX301-6	D-4	WF-1	SUB C.B.A. (F)
152	M REF	IC702-10	B-8	WF-1	SUB C.B.A. (F)
153	FM A	CX301-8	D-4	WF-1	SUB C.B.A. (F)
154	FM B	R388 (UPPER)	D-4	WF-1	SUB C.B.A. (F)
155	ZM A	———	—	—	
156	ZM B	———	—	—	
157	NC	———	—	—	
158	NC	———	—	—	
159	SHOE DET	RX303-2	D-4	WF-1	SUB C.B.A. (F)
160	Y POS	C351 (UPPER)	D-4	WF-1	SUB C.B.A. (F)
161	X POS	C350 (LOWER)	D-4	WF-1	SUB C.B.A. (F)
162	GYRO Y	R368 (LEFT)	D-2	WF-1	SUB C.B.A. (F)
163	GYRO X	R479 (UPPER)	D-2	WF-1	SUB C.B.A. (F)
164	NC	———	—	—	
165	A VREF	———	—	—	
166	A VDD	———	—	—	
167	TDI	CL315	A-3	WF-1	SUB C.B.A. (F)
168	TDO	CL316	A-3	WF-1	SUB C.B.A. (F)
169	TCK	CL317	A-3	WF-1	SUB C.B.A. (F)
170	A VSS	———	—	—	
171	E VSS	———	—	—	
172	VSS	———	—	—	
173	TMS	CL312	A-3	WF-1	SUB C.B.A. (F)
174	TRST	CL314	A-3	WF-1	SUB C.B.A. (F)
175	E VDD	———	—	—	
176	MODE J	CL318	D-4	WF-1	SUB C.B.A. (F)
177	XWAIT	———	—	—	
178	NC	———	—	—	
179	ASP3 CS	IC106-33	C-6	WF-1	SUB C.B.A. (C)
180	CAM 0	———	—	—	

CSP IC Pin	CSP IC Name	Check Point		WF NO.	Remarks
181	LED CNT	QR303-B	D-4	WF-1	SUB C.B.A. (F)
182	ASP2 CS	IC105-33	B-6	WF-1	SUB C.B.A. (C)
183	NC	———	—	—	
184	TRIG END	IC7001-1	B-8	WF-1	FRONT C.B.A. (F)
185	CHARGE	R7022 (LOWER)	B-2	WF-1	FRONT C.B.A. (C)
186	ND OPEN	R709 (RIGHT)	B-3	WF-1	SUB C.B.A. (C)
187	VDD	———	—	—	
188	C VDD	———	—	—	
189	CK SEL1	R343 (LOWER)	D-3	WF-1	SUB C.B.A. (F)
190	RESET	C318 (RIGHT)	E-3	WF-1	SUB C.B.A. (F)
191	X1	IC301-5	C-4	WF-211	SUB C.B.A. (F)
192	X2	———	—	—	
193	P VSS	———	—	—	
194	C VSS	———	—	—	
195	P VDD	———	—	—	
196	PLL SEL	R344 (LOWER)	D-3	WF-1	SUB C.B.A. (F)
197	AFST	R481 (LOWER)	D-3	WF-1	SUB C.B.A. (F)
198	E2 SDI	D301-A	D-3	WF-1	SUB C.B.A. (F)
199	E2 SDO	D301-K	D-3	WF-1	SUB C.B.A. (F)
200	E2 SCK	IC307-6	D-6	WF-1	SUB C.B.A. (C)
201	CAM T	R313 (LOWER)	D-3	WF-1	SUB C.B.A. (F)
202	VTR T	———	—	—	
203	MEMO END	———	—	—	
204	CAM SEND END	———	—	—	
205	NC	———	—	—	
206	NC	———	—	—	
207	VSS	———	—	—	
208	E VSS	———	—	—	
209	NC	———	—	—	

(C): COMPONENT SIDE (F):FOIL SIDE

Check Point of the IC2001

CSP IC Pin	CSP IC Name	Check Point		WF NO.	Remarks
1	NC	———	——	——	
2	A VCC 31	———	——	——	
3	A VSS	———	——	——	
4	D VCC 2	———	——	——	
5	ENDIAN	———	——	——	
6	BOOT	RX2007-3	A-6	WF-1	MAIN C.B.A. (F)
7	PCTS3	———	——	——	
8	PCTS0	———	——	——	
9	INTLV	RX2007-1	A-6	WF-1	MAIN C.B.A. (F)
10	SDI DINT	———	——	——	
11	PCTS2	———	——	——	
12	SDAO TPC	———	——	——	
13	BW0	———	——	——	
14	/DBEG	———	——	——	
15	DCLK	———	——	——	
16	NC	———	——	——	
17	PCTS1	———	——	——	
18	SYS RDY	———	——	——	
19	D VSS	———	——	——	
20	TEST1	———	——	——	
21	BUSMD	———	——	——	
22	/DRESET	———	——	——	
23	TEST5	———	——	——	
24	RESET	C2064 (LOWER)	B-6	WF-1	MAIN C.B.A. (F)
25	PLL ON	———	——	——	
26	F VCC 2	———	——	——	
27	F VSS	———	——	——	
28	NMI	———	——	——	
29	BW1	———	——	——	
30	D VCC 2	———	——	——	
31	D VCC 31	———	——	——	
32	NC	———	——	——	
33	SBA SIF CLK	IC3301-15	D-4	WF-1	MAIN C.B.A. (F)
34	NC	———	——	——	
35	NC	———	——	——	
36	SBA CS	IC3301-14	D-4	WF-217	MAIN C.B.A. (F)
37	VTR TEST Ⓛ	RX2001-2	B-5	WF-1	MAIN C.B.A. (F)
38	SBA SIF DTI	IC3301-12	D-4	WF-1	MAIN C.B.A. (F)
39	R PLUG Ⓛ	RX2001-4	B-5	WF-1	MAIN C.B.A. (F)
40	SBA SIF DTO	R2177 (UPPER)	B-6	WF-1	MAIN C.B.A. (F)
41	EXT 5V SW	RL20	C-8	WF-1	MAIN C.B.A. (F)
42	S PLUG	RX2001-6	B-5	WF-1	MAIN C.B.A. (F)
43	NC	———	——	——	
44	SYNC DET	RX2006-5	A-6	WF-1	MAIN C.B.A. (F)
45	F VCC 3	———	——	——	
46	F VSS	———	——	——	
47	D VSS	———	——	——	
48	M RVS	RX2009-7	A-6	WF-1	MAIN C.B.A. (F)
49	SIF P SAVE	RL25	C-8	WF-1	MAIN C.B.A. (F)
50	NC	———	——	——	
51	LCD OPEN SW	RX2009-5	A-6	WF-1	MAIN C.B.A. (F)
52	AV PLUG	RX2001-8	B-5	WF-1	MAIN C.B.A. (F)
53	USB DET	RX2006-7	A-6	WF-1	MAIN C.B.A. (F)
54	NC	———	——	——	
55	ARB	———	——	——	
56	SIF CS	RL22	C-7	WF-217	MAIN C.B.A. (F)
57	NC	———	——	——	
58	XRST	R2097 (LOWER)	A-7	WF-1	MAIN C.B.A. (F)
59	POWER SW	RX2012-3	B-8	WF-1	MAIN C.B.A. (F)
60	EJECT SW	RX2012-5	B-8	WF-1	MAIN C.B.A. (F)

CSP IC Pin	CSP IC Name	Check Point		WF NO.	Remarks
61	TV MD	R101 (LEFT)	C-4	WF-1	SUB C.B.A. (F)
62	INPUT SEL	RL24	C-8	WF-1	MAIN C.B.A. (F)
63	FLASH WP	CL2031	C-2	WF-1	MAIN C.B.A. (C)
64	CAM SEND END	———	——	——	
65	NC	———	——	——	
66	GUI LED	QR2010-B	B-3	WF-1	MAIN C.B.A. (C)
67	MEMO END	———	——	——	
68	HOST REQ	IC2019-4	C-5	WF-1	MAIN C.B.A. (F)
69	TALLY LED	QR2006-5	B-7	WF-1	MAIN C.B.A. (F)
70	D VCC 32	———	——	——	
71	STANDBY LED	QR2006-2	B-7	WF-1	MAIN C.B.A. (F)
72	POWER LED	QR2005-2	B-7	WF-1	MAIN C.B.A. (F)
73	HOST ACK	RX2009-1	A-6	WF-1	MAIN C.B.A. (F)
74	ACCESS LED	QR2005-5	B-7	WF-1	MAIN C.B.A. (F)
75	VTR T	———	——	——	
76	LCD CS	IC601-5	C-8	WF-1	SUB C.B.A. (C)
77	V C DSET	QR301-B	C-2	WF-1	SUB C.B.A. (F)
78	FLASH CS	CL2030	C-2	WF-1	MAIN C.B.A. (C)
79	S PHOTO SW2	R2112 (UPPER)	B-7	WF-1	MAIN C.B.A. (F)
80	T PHOTO SW1	R2109 (UPPER)	B-7	WF-1	MAIN C.B.A. (F)
81	MIC CLK	RX2004-4	C-5	WF-1	MAIN C.B.A. (F)
82	MIC DATA	RX2004-6	C-5	WF-1	MAIN C.B.A. (F)
83	D VSS	———	——	——	
84	REMOCON	R2017 (LOWER)	B-7	WF-131	MAIN C.B.A. (F)
85	S PHOTO SW1	R2111 (UPPER)	B-7	WF-1	MAIN C.B.A. (F)
86	PS Ⓛ	CL1102	A-3	WF-1	MAIN C.B.A. (F)
87	T PHOTO SW2	R2110 (UPPER)	B-7	WF-1	MAIN C.B.A. (F)
88	CAM D3 OFF	R421 (LEFT)	D-7	WF-1	SUB C.B.A. (C)
89	SS DET	———	——	——	
90	ZNST ST	———	——	——	
91	CAM 0	———	——	——	
92	EEP CS	CL2022	C-2	WF-160	MAIN C.B.A. (C)
93	LCD SCK	IC601-7	C-8	WF-163	SUB C.B.A. (C)
94	ERF CLK	CL2025	C-2	WF-163	MAIN C.B.A. (C)
95	ERF DO	R2080 (UPPER)	B-7	WF-164	MAIN C.B.A. (F)
96	ERF DI	R2080 (LOWER)	B-7	WF-165	MAIN C.B.A. (F)
97	CAM RST	RX2010-7	B-7	WF-1	MAIN C.B.A. (F)
98	LCD DI	IC601-6	C-8	WF-164	SUB C.B.A. (C)
99	HP DET Ⓛ	R2050 (RIGHT)	B-3	WF-1	MAIN C.B.A. (C)
100	D VCC 2	———	——	——	
101	D VCC 32	———	——	——	
102	LCD DO	IC601-6	C-8	WF-164	SUB C.B.A. (C)
103	PC RST	C2047 (LEFT)	C-4	WF-1	MAIN C.B.A. (C)
104	CAM RTN	———	——	——	
105	232C RXD	CL2027	B-3	WF-1	MAIN C.B.A. (C)
106	232C TXD	CL2026	A-8	WF-1	MAIN C.B.A. (C)
107	RTN FLD	———	——	——	
108	CPU VCC SW	RL2001	C-8	WF-1	MAIN C.B.A. (F)
109	V C DATA	———	——	——	
110	WINK END	———	——	——	
111	C V DATA	———	——	——	
112	MIC ON	R2133 (RIGHT)	C-5	WF-1	MAIN C.B.A. (F)
113	P LCD LED	QR2001-B	B-3	WF-1	MAIN C.B.A. (C)
114	RTC CS	IC2002-4	B-3	WF-131	MAIN C.B.A. (C)
115	SNS LED	Q2003-B	C-5	WF-161	MAIN C.B.A. (F)
116	CAM SCK	CL325	D-2	WF-1	SUB C.B.A. (F)
117	D VSS	———	——	——	
118	NC	———	——	——	
119	NC	———	——	——	
120	EXT Ⓗ	RL33	D-6	WF-1	MAIN C.B.A. (F)

(C): COMPONENT SIDE (F):FOIL SIDE

Check Point of the IC2001

CSP IC Pin	CSP IC Name	Check Point		WF NO.	Remarks
121	SS SW	RX2010-5	B-7	WF-1	MAIN C.B.A. (F)
122	POWER ON	QR2008-B	B-5	WF-1	MAIN C.B.A. (C)
123	CR POWER	R2040 (LOWER)	C-7	WF-1	MAIN C.B.A. (F)
124	C DOWN	RX2010-3	B-7	WF-1	MAIN C.B.A. (F)
125	MEGA REQ	RX2010-1	B-7	WF-1	MAIN C.B.A. (F)
126	R STP UP	———	——	——	
127	E2 PROTECT	CL2003	C-2	WF-1	MAIN C.B.A. (C)
128	TIMER INT	IC2002-3	B-3	WF-1	MAIN C.B.A. (C)
129	D VCC 32	———	——	——	
130	NC	———	——	——	
131	NC	———	——	——	
132	NC	———	——	——	
133	NC	———	——	——	
134	NC	———	——	——	
135	NC	———	——	——	
136	NC	———	——	——	
137	NC	———	——	——	
138	NC	———	——	——	
139	FACT MODE	CL2007	C-2	WF-1	MAIN C.B.A. (C)
140	LCD ON Ⓗ	CL1084	B-1	WF-1	SUB C.B.A. (F)
141	D VSS	———	——	——	
142	NC	———	——	——	
143	NC	———	——	——	
144	D VCC 33	———	——	——	
145	NC	———	——	——	
146	MODE 14	CL2006	C-7	WF-1	MAIN C.B.A. (F)
147	NC	———	——	——	
148	NC	———	——	——	
149	NC	———	——	——	
150	NC	———	——	——	
151	NC	———	——	——	
152	NC	———	——	——	
153	TEST4	———	——	——	
154	D2	RL3037	D-5	WF-1	MAIN C.B.A. (C)
155	NC	———	——	——	
156	SD PROTECT	RX2005-5	C-7	WF-1	MAIN C.B.A. (F)
157	CARD DET	RX2005-3	C-7	WF-1	MAIN C.B.A. (F)
158	TEST3	———	——	——	
159	D0	RL3039	D-5	WF-1	MAIN C.B.A. (C)
160	D VSS	———	——	——	
161	NC	———	——	——	
162	D1	RL3038	D-5	WF-1	MAIN C.B.A. (C)
163	D6	RL3033	D-5	WF-1	MAIN C.B.A. (C)
164	D3	RL3036	D-5	WF-1	MAIN C.B.A. (C)
165	D5	RL3034	D-5	WF-1	MAIN C.B.A. (C)
166	D4	RL3035	D-5	WF-1	MAIN C.B.A. (C)
167	F VSS	———	——	——	
168	F VCC 2	———	——	——	
169	D9	RL3022	D-5	WF-1	MAIN C.B.A. (C)
170	TEST0	———	——	——	
171	D8	RL3023	D-5	WF-1	MAIN C.B.A. (C)
172	D7	RL3032	D-5	WF-1	MAIN C.B.A. (C)
173	D10	RL3021	D-5	WF-1	MAIN C.B.A. (C)
174	D13	RL3012	D-5	WF-1	MAIN C.B.A. (C)
175	D11	RL3019	D-5	WF-1	MAIN C.B.A. (C)
176	D12	RL3013	D-5	WF-1	MAIN C.B.A. (C)
177	D VCC 33	———	——	——	
178	EVF BL	CL1086	B-1	WF-1	SUB C.B.A. (F)
179	D15	RL3005	D-5	WF-1	MAIN C.B.A. (C)
180	NC	———	——	——	

CSP IC Pin	CSP IC Name	Check Point		WF NO.	Remarks
181	D VSS	———	——	——	
182	XDUO CS	C2027 (LEFT)	C-6	WF-1	MAIN C.B.A. (F)
183	XWE Ⓗ	RL3041	D-5	WF-1	MAIN C.B.A. (C)
184	XREADY	RL3024	D-5	WF-1	MAIN C.B.A. (C)
185	XRE	RL3043	D-5	WF-1	MAIN C.B.A. (C)
186	F VSS	———	——	——	
187	F VCC 2	———	——	——	
188	D14	RL3006	D-5	WF-1	MAIN C.B.A. (C)
189	XSUB CS	———	——	——	
190	CCD STBY	———	——	——	
191	CCD ON Ⓗ	QR1103-B	B-3	WF-1	MAIN C.B.A. (F)
192	ALE	RL3040	D-5	WF-1	MAIN C.B.A. (C)
193	XWE Ⓛ	RL3042	D-5	WF-1	MAIN C.B.A. (C)
194	TEST2	———	——	——	
195	D VCC 33	———	——	——	
196	D VCC 2	———	——	——	
197	NC	———	——	——	
198	X RAM CS	RL2002	C-6	WF-1	MAIN C.B.A. (F)
199	NC	———	——	——	
200	NC(XT1)	———	——	——	
201	CVCCH	———	——	——	
202	CAP1	———	——	——	
203	CAP2	———	——	——	
204	NC(XT2)	———	——	——	
205	TDO	CL1902	D-5	WF-1	MAIN C.B.A. (C)
206	TDI	CL1905	C-5	WF-1	MAIN C.B.A. (F)
207	TMS	RL3	C-7	WF-1	MAIN C.B.A. (F)
208	TRST	———	——	——	
209	TCK	RL2	C-7	WF-1	MAIN C.B.A. (F)
210	D VCC 34	———	——	——	
211	C VCC 2	———	——	——	
212	X1	C2062 (LEFT)	C-5	WF-143	MAIN C.B.A. (F)
213	C VSS	———	——	——	
214	X2	R2155 (UPPER)	C-5	WF-143	MAIN C.B.A. (F)
215	NC	———	——	——	
216	NC	———	——	——	
217	M BL	CL1087	B-4	WF-1	SUB C.B.A. (F)
218	USB INT	———	——	——	
219	NC	———	——	——	
220	DUO INT3	———	——	——	
221	DUO INT2	———	——	——	
222	DUO INT1	———	——	——	
223	D VSS	———	——	——	
224	NC	———	——	——	
225	NC	———	——	——	
226	NC	———	——	——	
227	DUO INT0	———	——	——	
228	POWER LCD SW	RX2005-7	C-7	WF-1	MAIN C.B.A. (F)
229	NC	———	——	——	
230	NC	———	——	——	
231	NC	———	——	——	
232	NC	———	——	——	
233	NC	———	——	——	
234	NC	———	——	——	
235	NC	———	——	——	
236	NC	———	——	——	
237	NC	———	——	——	
238	NC	———	——	——	
239	NC	———	——	——	
240	D VCC 34	———	——	——	

(C): COMPONENT SIDE (F):FOIL SIDE

Check Point of the IC2001

CSP IC		Check Point		WF NO.	Remarks
Pin	Name				
241	NC	———	—	—	
242	NC	———	—	—	
243	NC	———	—	—	
244	NC	———	—	—	
245	NC	———	—	—	
246	NC	———	—	—	
247	NC	———	—	—	
248	NC	———	—	—	
249	NC	———	—	—	
250	D VSS	———	—	—	
251	NC	———	—	—	
252	D VCC 2	———	—	—	
253	A VSS	———	—	—	
254	LOAD LOCK DET	C2208 (LOWER)	B-5	WF-1	MAIN C.B.A. (C)
255	A VCC32	———	—	—	
256	T PHOTO	CX2003-4	B-5	WF-1	MAIN C.B.A. (F)
257	BATT D	CL1005	C-4	WF-1	MAIN C.B.A. (F)
258	S PHOTO	CX2003-3	B-5	WF-1	MAIN C.B.A. (F)
259	MIC AD1	RX2004-2	C-5	WF-1	MAIN C.B.A. (F)
260	MIC AD2	RX2004-4	C-5	WF-1	MAIN C.B.A. (F)
261	MIC AD3	RX2004-6	C-5	WF-1	MAIN C.B.A. (F)
262	A VSS	———	—	—	
263	VTR KEY 1	CX2003-2	B-5	WF-1	MAIN C.B.A. (F)
264	VTR KEY 4	CX2003-1	B-5	WF-1	MAIN C.B.A. (F)
265	VTR KEY 6	R2069 (RIGHT)	C-4	WF-1	MAIN C.B.A. (F)
266	NC	RX2007-5	A-6	WF-1	MAIN C.B.A. (F)
267	REG D3V DET	RX2004-8	C-5	WF-1	MAIN C.B.A. (F)
268	BATT REF	CL1101	A-3	WF-1	MAIN C.B.A. (F)
269	VTR KEY 3	CX2002-3	C-5	WF-1	MAIN C.B.A. (F)
270	BATTERY	C2017 (UPPER)	B-5	WF-1	MAIN C.B.A. (F)
271	VTR KEY 5	CX2002-4	C-5	WF-1	MAIN C.B.A. (F)
272	VTR KEY 2	CX2002-2	C-5	WF-1	MAIN C.B.A. (F)
273	EXT MIC	RX2013-2	B-4	WF-1	MAIN C.B.A. (F)
274	Y LEVEL	C2013 (UPPER)	B-5	WF-1	MAIN C.B.A. (F)
275	MON EVF HL	RX2013-8	B-4	WF-1	MAIN C.B.A. (F)
276	DEW	RX2013-4	B-4	WF-1	MAIN C.B.A. (F)
277	AWP DET	C2019 (LEFT)	C-7	WF-1	MAIN C.B.A. (F)
278	UNI REMO	CX2002-1	C-5	WF-1	MAIN C.B.A. (F)
279	WIDE DET	RL23	D-4	WF-1	MAIN C.B.A. (C)
280	VREF Ⓛ	———	—	—	
281	VREF Ⓗ	———	—	—	
282	NC	———	—	—	
283	NC	———	—	—	
284	NC	———	—	—	
285	NC	———	—	—	
286	NC	———	—	—	
287	NC	———	—	—	
288	NC	———	—	—	
289	NC	———	—	—	
290	NC	———	—	—	
291	NC	———	—	—	
292	NC	———	—	—	
293	NC	———	—	—	
294	NC	———	—	—	
295	NC	———	—	—	
296	NC	———	—	—	
297	NC	———	—	—	
298	NC	———	—	—	
299	NC	———	—	—	
300	NC	———	—	—	

CSP IC		Check Point		WF NO.	Remarks
Pin	Name				
301	NC	———	—	—	
302	NC	———	—	—	
303	NC	———	—	—	
304	NC	———	—	—	
305	NC	———	—	—	
306	NC	———	—	—	
307	NC	———	—	—	
308	NC	———	—	—	
309	NC	———	—	—	
310	NC	———	—	—	
311	NC	———	—	—	
312	NC	———	—	—	
313	NC	———	—	—	
314	NC	———	—	—	
315	NC	———	—	—	
316	NC	———	—	—	
317	NC	———	—	—	
318	NC	———	—	—	
319	NC	———	—	—	
320	NC	———	—	—	
321	NC	———	—	—	

(C): COMPONENT SIDE (F): FOIL SIDE

Check Point of the IC3001

CSP IC Pin	CSP IC Name	Check Point		WF NO.	Remarks
1	TMS	RL3	C-7	WF-1	MAIN C.B.A. (F)
2	TCK	RL2	C-7	WF-1	MAIN C.B.A. (F)
3	TDI	CL1902	D-5	WF-1	MAIN C.B.A. (C)
4	VDD 18	———	——	——	
5	TDO	———	——	——	
6	VDD 18	———	——	——	
7	XDUO CS	C2027 (LEFT)	C-6	WF-1	MAIN C.B.A. (F)
8	ADM (15)	RL3005	D-5	WF-1	MAIN C.B.A. (C)
9	ADM (14)	RL3006	D-5	WF-1	MAIN C.B.A. (C)
10	ADM (13)	RL3012	D-5	WF-1	MAIN C.B.A. (C)
11	ADM (12)	RL3013	D-5	WF-1	MAIN C.B.A. (C)
12	VSS	———	——	——	
13	ADM (11)	RL3019	D-5	WF-1	MAIN C.B.A. (C)
14	ADM (10)	RL3021	D-5	WF-1	MAIN C.B.A. (C)
15	ADM (9)	RL3022	D-5	WF-1	MAIN C.B.A. (C)
16	ADM (8)	RL3023	D-5	WF-1	MAIN C.B.A. (C)
17	VSS	———	——	——	
18	VDD 15	———	——	——	
19	ADM (7)	RL3032	D-5	WF-1	MAIN C.B.A. (C)
20	ADM (6)	RL3033	D-5	WF-1	MAIN C.B.A. (C)
21	ADM (5)	RL3034	D-5	WF-1	MAIN C.B.A. (C)
22	ADM (4)	RL3035	D-5	WF-1	MAIN C.B.A. (C)
23	VSS	———	——	——	
24	ADM (3)	RL3036	D-5	WF-1	MAIN C.B.A. (C)
25	ADM (2)	RL3037	D-5	WF-1	MAIN C.B.A. (C)
26	ADM (1)	RL3038	D-5	WF-1	MAIN C.B.A. (C)
27	VDD 18	———	——	——	
28	ADM (0)	RL3039	D-5	WF-1	MAIN C.B.A. (C)
29	ALE	RL3040	D-5	WF-1	MAIN C.B.A. (C)
30	XWE Ⓗ	RL3041	D-5	WF-1	MAIN C.B.A. (C)
31	XWE Ⓛ	RL3042	D-5	WF-1	MAIN C.B.A. (C)
32	VDD 18	———	——	——	
33	XRE	RL3043	D-5	WF-1	MAIN C.B.A. (C)
34	XREADY	RL3024	D-5	WF-1	MAIN C.B.A. (C)
35	XRST ARM	CL3004	D-5	WF-1	MAIN C.B.A. (C)
36	VDD 15	———	——	——	
37	VSS	———	——	——	
38	VCO A VDD 25	———	——	——	
39	VCO A VDD 25	———	——	——	
40	FS LPFI	C3068 (UPPER)	D-5	WF-1	MAIN C.B.A. (C)
41	VCO A VSS	———	——	——	
42	VCO A VSS	———	——	——	
43	PLL A VDD 25	———	——	——	
44	PLL A VDD 25	———	——	——	
45	PLL A VSS	———	——	——	
46	PLL A VSS	———	——	——	
47	VSS	———	——	——	
48	FCK45	RL3016	D-5	WF-12	MAIN C.B.A. (C)
49	CAM HD	RL3017	C-5	WF-122	MAIN C.B.A. (C)
50	CAM VD	RL3018	D-5	WF-1	MAIN C.B.A. (C)
51	ADIN (9)	———	——	——	
52	ADIN (8)	———	——	——	
53	VDD18 30	———	——	——	
54	ADIN (7)	———	——	——	
55	ADIN (6)	———	——	——	
56	ADIN (5)	———	——	——	
57	ADIN (4)	———	——	——	
58	ADIN (3)	———	——	——	
59	ADIN (2)	RL3030	D-5	WF-1	MAIN C.B.A. (C)
60	ADIN (1)	———	——	——	

CSP IC Pin	CSP IC Name	Check Point		WF NO.	Remarks
61	ADIN (0)	———	——	——	
62	VDD18 30	———	——	——	
63	FCA	———	——	——	
64	FCB	———	——	——	
65	F2C	———	——	——	
66	ZA COMP	———	——	——	
67	VSS	———	——	——	
68	VDD 15	———	——	——	
69	ZB COMP	———	——	——	
70	ZC COMP	RL3015	C-5	WF-1	MAIN C.B.A. (C)
71	ZD COMP	———	——	——	
72	SIG	———	——	——	
73	ALC PWM	———	——	——	
74	VDD 18 30	———	——	——	
75	IRIS CLOSE	———	——	——	
76	IRIS OPEN	———	——	——	
77	HOST REQ	IC2019-3	C-5	WF-1	MAIN C.B.A. (F)
78	HOST ACK	RX2009-2	A-6	WF-1	MAIN C.B.A. (F)
79	VDD 18 30	———	——	——	
80	DUO INT3	———	——	——	
81	VSS	———	——	——	
82	DUO INT2	———	——	——	
83	DUO INT1	———	——	——	
84	DUO INT0	———	——	——	
85	VSS	———	——	——	
86	VDD 15	———	——	——	
87	VSS	———	——	——	
88	VSS	———	——	——	
89	VDD18 30	———	——	——	
90	VDD18 30	———	——	——	
91	SD VDD 15	———	——	——	
92	SD VDD 15	———	——	——	
93	SD VSS	———	——	——	
94	SD VSS	———	——	——	
95	SD VDD 25	———	——	——	
96	VDD 18	———	——	——	
97	SCLK541	———	——	——	
98	VDD 18	———	——	——	
99	CLK SEL2	———	——	——	
100	CLK27B	RL3001	D-5	WF-183	MAIN C.B.A.(C)
101	CLK SEL0	———	——	——	
102	CLK27A	R3063 (RIGHT)	C-5	WF-183	MAIN C.B.A. (C)
103	CLK SEL1	———	——	——	
104	CLK135	RL3003	C-5	WF-183	MAIN C.B.A. (C)
105	SD VDD 25	———	——	——	
106	SD VSS	———	——	——	
107	SD VDD 15	———	——	——	
108	VSS	———	——	——	
109	VDD 15	———	——	——	
110	TEST MD (0)	———	——	——	
111	TEST MD (1)	———	——	——	
112	TEST MD (2)	———	——	——	
113	SD VDD 15	———	——	——	
114	SD VSS	———	——	——	
115	SD VDD 25	———	——	——	
116	TEST MD (3)	———	——	——	
117	TEST MD (4)	———	——	——	
118	TEST MD (5)	———	——	——	
119	VSS	———	——	——	
120	VDD 18	———	——	——	

(C): COMPONENT SIDE (F):FOIL SIDE

Check Point of the IC3001

CSP IC Pin	CSP IC Name	Check Point		WF NO.	Remarks
121	NC	———	—	—	
122	VDD 18	———	—	—	
123	S400	———	—	—	
124	BIAS 2K	———	—	—	
125	VSS	———	—	—	
126	CLK24 I	C3040 (RIGHT)	C-6	WF-132	MAIN C.B.A. (C)
127	VDD 25	———	—	—	
128	NC	———	—	—	
129	NC	———	—	—	
130	CLK24 O	C3039 (LEFT)	C-6	WF-132	MAIN C.B.A. (C)
131	SD VDD 25	———	—	—	
132	SD VSS	———	—	—	
133	SD VDD 15	———	—	—	
134	VDD 15	———	—	—	
135	1394 A VSS	———	—	—	
136	1394 A VDD 15	———	—	—	
137	1394 A VSS	———	—	—	
138	R (1)	R3013 (LOWER)	C-6	WF-1	MAIN C.B.A. (C)
139	NC	———	—	—	
140	R (0)	R3013 (UPPER)	C-6	WF-1	MAIN C.B.A. (C)
141	1394 A VDD 30	———	—	—	
142	NC	———	—	—	
143	1394 A VSS	———	—	—	
144	1394 A VSS	———	—	—	
145	TPB N	CL3007	C-7	WF-1	MAIN C.B.A. (C)
146	NC	———	—	—	
147	NC	———	—	—	
148	TPB P	CL3008	C-7	WF-1	MAIN C.B.A. (C)
149	NC	———	—	—	
150	TPA N	CL3009	C-7	WF-1	MAIN C.B.A. (C)
151	TPA P	CL3010	D-7	WF-1	MAIN C.B.A. (C)
152	TP BIAS	C3043 (RIGHT)	C-7	WF-1	MAIN C.B.A. (C)
153	1394 A VDD 30	———	—	—	
154	1394 A VDD 15	———	—	—	
155	VDD 15	———	—	—	
156	XRST	C3006 (RIGHT)	C-6	WF-1	MAIN C.B.A. (C)
157	SSP	RL3031	C-6	WF-1	MAIN C.B.A. (C)
158	VDD 18	———	—	—	
159	HID	IC5001-17	B-9	WF-140	MAIN C.B.A. (F)
160	VDD 18	———	—	—	
161	DBR3	———	—	—	
162	DBR2	———	—	—	
163	DBR1	———	—	—	
164	DBR0	RL3014	C-6	WF-1	MAIN C.B.A. (C)
165	VSS	———	—	—	
166	ACKR	———	—	—	
167	REQR	RX3004-5	C-7	WF-1	MAIN C.B.A. (C)
168	ADDA (3)	———	—	—	
169	ADDA (2)	———	—	—	
170	VSS	———	—	—	
171	ADDA (1)	———	—	—	
172	VDD 15	———	—	—	
173	ADDA (0)	———	—	—	
174	VAL	———	—	—	
175	REACH	———	—	—	
176	INTSEG	RX3004-7	C-7	WF-218	MAIN C.B.A. (C)
177	VDD 18	———	—	—	
178	DO DAT	RX3005-2	C-7	WF-184	MAIN C.B.A. (C)
179	VDD 18	———	—	—	
180	DO LRCK	RX3005-4	C-7	WF-185	MAIN C.B.A. (C)

CSP IC Pin	CSP IC Name	Check Point		WF NO.	Remarks
181	DO MCK	RX3005-6	C-7	WF-186	MAIN C.B.A. (C)
182	DO BCK	RX3005-8	C-7	WF-187	MAIN C.B.A. (C)
183	AI DAT1	IC3301-5	D-4	WF-1	MAIN C.B.A. (F)
184	AI DAT2	IC3301-6	D-4	WF-1	MAIN C.B.A. (F)
185	VSS	———	—	—	
186	ADEC DAT	———	—	—	
187	VSS	———	—	—	
188	CLK27C	R3030 (LEFT)	C-7	WF-122	MAIN C.B.A. (C)
189	L Y C IO0	IC601-22	C-8	WF-210	SUB C.B.A. (C)
190	L Y C IO1	IC601-21	C-8	WF-210	SUB C.B.A. (C)
191	L Y C IO2	IC601-20	C-8	WF-210	SUB C.B.A. (C)
192	L Y C IO3	IC601-19	C-8	WF-210	SUB C.B.A. (C)
193	VDD 15	———	—	—	
194	L Y C IO4	IC601-18	C-8	WF-210	SUB C.B.A. (C)
195	L Y C IO5	IC601-16	C-8	WF-210	SUB C.B.A. (C)
196	L Y C IO6	IC601-15	C-8	WF-210	SUB C.B.A. (C)
197	L Y C IO7	IC601-14	C-8	WF-210	SUB C.B.A. (C)
198	VDD 18	———	—	—	
199	FRP	CL3803	E-3	WF-1	MAIN C.B.A. (F)
200	INF	CL3804	E-3	WF-1	MAIN C.B.A. (F)
201	SH MFI INT	RX3004-3	C-7	WF-1	MAIN C.B.A. (C)
202	SH MFI RD	———	—	—	
203	VDD 18	———	—	—	
204	VSS	———	—	—	
205	SH MFI WR	———	—	—	
206	SH MFI RS	———	—	—	
207	SH MFI CS	———	—	—	
208	SH MFI D0	RX3002-7	D-7	WF-1	MAIN C.B.A.(C)
209	SH MFI D1	RX3002-5	D-7	WF-1	MAIN C.B.A.(C)
210	SH MFI D2	RX3002-3	D-7	WF-1	MAIN C.B.A.(C)
211	SH MFI D3	RX3002-1	D-7	WF-1	MAIN C.B.A.(C)
212	SH MFI D4	RX3001-7	D-7	WF-1	MAIN C.B.A.(C)
213	SH MFI D5	RX3001-5	D-7	WF-1	MAIN C.B.A.(C)
214	SH MFI D6	RX3001-3	D-7	WF-1	MAIN C.B.A.(C)
215	SH MFI D7	RX3001-1	D-7	WF-1	MAIN C.B.A.(C)
216	CLK27D	———	—	—	
217	Y C IO (0)	———	—	—	
218	Y C IO (1)	———	—	—	
219	Y C IO (2)	———	—	—	
220	Y C IO (3)	———	—	—	
221	VSS	———	—	—	
222	Y C IO (4)	———	—	—	
223	Y C IO (5)	———	—	—	
224	Y C IO (6)	———	—	—	
225	Y C IO (7)	———	—	—	
226	CLK 27X	RL4	D-5	WF-1	MAIN C.B.A. (C)
227	Y C IN (0)	RL6	D-5	WF-1	MAIN C.B.A. (C)
228	Y C IN (1)	RL7	D-5	WF-1	MAIN C.B.A. (C)
229	Y C IN (2)	RL8	D-5	WF-1	MAIN C.B.A. (C)
230	Y C IN (3)	RL9	D-5	WF-1	MAIN C.B.A. (C)
231	Y C IN (4)	RL10	D-5	WF-1	MAIN C.B.A. (C)
232	Y C IN (5)	RL11	D-5	WF-1	MAIN C.B.A. (C)
233	VDD 15	———	—	—	
234	Y C IN (6)	RL12	D-5	WF-1	MAIN C.B.A. (C)
235	Y C IN (7)	RL13	D-5	WF-1	MAIN C.B.A. (C)
236	VSS	———	—	—	
237	VDD 18	———	—	—	
238	BUS MODE	———	—	—	
239	VDD 18	———	—	—	
240	VSS	———	—	—	

(C): COMPONENT SIDE (F):FOIL SIDE

Check Point of the IC3001

CSP IC Pin	CSP IC Name	Check Point		WF NO.	Remarks
241	DAC A VDD 25	———	—	—	
242	LCD R OUT	———	—	—	
243	LCD R VBS	———	—	—	
244	DAC A VSS	———	—	—	
245	DAC A VSS	———	—	—	
246	DAC A VDD 25	———	—	—	
247	DAC A VDD 25	———	—	—	
248	LCD G OUT	———	—	—	
249	LCD G VBS	———	—	—	
250	LCD REF	———	—	—	
251	DAC A VSS	———	—	—	
252	DAC A VDD 25	———	—	—	
253	LCD B OUT	———	—	—	
254	LCD B VBS	———	—	—	
255	DAC A VSS	———	—	—	
256	DAC A VSS	———	—	—	
257	DAC A VDD 25	———	—	—	
258	DAC A VDD 25	———	—	—	
259	Y OUT	C3303 (LEFT)	D-4	WF-171	MAIN C.B.A. (F)
260	Y VBS	C3060 (LOWER)	D-7	WF-1	MAIN C.B.A. (C)
261	Y REF	C3059 (LOWER)	D-7	WF-1	MAIN C.B.A. (C)
262	DAC A VSS	———	—	—	
263	DAC A VDD 25	———	—	—	
264	C OUT	C3319 (LEFT)	D-4	WF-1	MAIN C.B.A. (F)
265	C VBS	C3058 (LOWER)	D-7	WF-1	MAIN C.B.A. (C)
266	C REF	C3057 (LEFT)	D-7	WF-1	MAIN C.B.A. (C)
267	DAC A VSS	———	—	—	
268	VSS	———	—	—	
269	VDD 32	———	—	—	
270	VSS	———	—	—	
271	SD CLK	R3007 (LEFT)	D-7	WF-1	MAIN C.B.A. (C)
272	DATA (3)	R3001 (LOWER)	D-7	WF-1	MAIN C.B.A. (C)
273	DATA (2)	R3010 (LOWER)	D-7	WF-1	MAIN C.B.A. (C)
274	DATA (1)	R3012 (LEFT)	D-7	WF-1	MAIN C.B.A. (C)
275	DATA (0)	R3016 (LEFT)	D-7	WF-1	MAIN C.B.A. (C)
276	NC	———	—	—	
277	CMD	R3006 (LEFT)	E-7	WF-1	MAIN C.B.A. (C)
278	NC	———	—	—	
279	SD VDD 32	———	—	—	
280	VDD 15	———	—	—	
281	CLK48 O	———	—	—	
282	CLK48 I	———	—	—	
283	NC	———	—	—	
284	NC	———	—	—	
285	NC	———	—	—	
286	VDD 25	———	—	—	
287	VSS	———	—	—	
288	NC	———	—	—	
289	NC	———	—	—	
290	NC	———	—	—	
291	USB DP	R3028 (LEFT)	E-7	WF-1	MAIN C.B.A. (C)
292	USB DM	R3027 (LEFT)	E-7	WF-1	MAIN C.B.A. (C)
293	VSS	———	—	—	
294	USB VDD 32	———	—	—	
295	USB VDD 32	———	—	—	
296	VDD 30	———	—	—	
297	CAM LENS DTO	———	—	—	
298	CAM LENS CLK	———	—	—	
299	CAM LENS CS	———	—	—	
300	CAM C G AFE DTO	———	—	—	
301	VDD 30	———	—	—	

CSP IC Pin	CSP IC Name	Check Point		WF NO.	Remarks
302	CAM CG AFE CLK	———	—	—	
303	CAM CG CS	———	—	—	
304	CAM AFE CS	———	—	—	
305	VSS	———	—	—	
306	OSD VR	———	—	—	
307	OSD VG	———	—	—	
308	OSD VB	———	—	—	
309	OSD BLK A	———	—	—	
310	VSS	———	—	—	
311	VDD 15	———	—	—	
312	OSD BLK B	———	—	—	
313	FAD VDD 15	———	—	—	
314	FAD VSS	———	—	—	
315	FAD VDD 32	———	—	—	
316	OSD HD	———	—	—	
317	OSD VD	———	—	—	
318	LCD VBLK	———	—	—	
319	LCD HD	———	—	—	
320	VSS	———	—	—	
321	LCD POL	RX3004-1	C-7	WF-1	MAIN C.B.A. (C)
322	VDD 30	———	—	—	
323	CLK45M ZB	———	—	—	
324	AFDR VD	———	—	—	
325	LIN PWM	———	—	—	
326	OSD CLK	———	—	—	
327	FS LPF0	R3048 (UPPER)	D-5	WF-1	MAIN C.B.A. (C)
328	DT CLK	———	—	—	
329	DVM	———	—	—	
330	FAD VDD 32	———	—	—	
331	FAD VSS	———	—	—	
332	FAD VDD 15	———	—	—	
333	VDD 30	———	—	—	
334	VDD 18	———	—	—	
335	TRACE CLK	———	—	—	
336	TRACE SYNC	———	—	—	
337	TRACE PKT (0)	———	—	—	
338	TRACE PKT (1)	———	—	—	
339	VDD 18	———	—	—	
340	VDD 15	———	—	—	
341	VSS	———	—	—	
342	SD VDD 15	———	—	—	
343	SD VSS	———	—	—	
344	SD VDD 25	———	—	—	
345	TRACE PKT (2)	———	—	—	
346	TRACE PKT (3)	———	—	—	
347	TRACE PKT (4)	———	—	—	
348	TRACE PKT (5)	———	—	—	
349	TRACE PKT (6)	———	—	—	
350	TRACE PKT (7)	———	—	—	
351	PIPE STAT (0)	———	—	—	
352	PIPE STAT (1)	———	—	—	
353	PIPE STAT (2)	———	—	—	
354	A15	———	—	—	
355	VSS	———	—	—	
356	SD VDD 25	———	—	—	
357	SD VSS	———	—	—	
358	SD VDD 15	———	—	—	
359	VSS	———	—	—	
360	RTCK	CL3005	D-5	WF-1	MAIN C.B.A. (C)
361	XTRST	CL3006	D-5	WF-1	MAIN C.B.A. (C)

(C): COMPONENT SIDE (F):FOIL SIDE

Check Point of the IC3201

CSP IC Pin	CSP IC Name	Check Point		WF NO.	Remarks
1	D VSS	———	—	—	
2	VRH	C3207 (LOWER)	B-3	WF-1	MAIN C.B.A. (C)
3	VRL	C3208 (LOWER)	B-3	WF-1	MAIN C.B.A. (C)
4	AVD12 (ADC1)	———	—	—	
5	AD TEST	———	—	—	
6	AVD12 (ADC1)	———	—	—	
7	AVD14 (AMP1)	———	—	—	
8	AVD14 (AMP1)	———	—	—	
9	PB IN	CL3203	B-8	WF-142	MAIN C.B.A. (F)
10	AVD15 (ADC2)	———	—	—	
11	ATF IN	C3206 (LOWER)	B-2	WF-176	MAIN C.B.A. (C)
12	AVS15 (ADC2)	———	—	—	
13	AVD13 (ADC1/2)	———	—	—	
14	AVS13 (ADC1/2)	———	—	—	
15	AVD16 (VREF)	———	—	—	
16	VCORP	R3202 (LEFT)	B-2	WF-2	MAIN C.B.A. (C)
17	AVS16 (VREF)	———	—	—	
18	AVS22 (DAC2/3)	———	—	—	
19	OSO	R3206 (UPPER)	B-1	WF-1	MAIN C.B.A. (C)
20	VREF3	———	—	—	
21	VREF2	C3210 (LOWER)	B-2	WF-1	MAIN C.B.A. (C)
22	AVD22 (DAC2/3)	———	—	—	
23	ATF0	R3203 (LEFT)	B-1	WF-1	MAIN C.B.A. (C)
24	VERF1	C3213 (LOWER)	B-2	WF-1	MAIN C.B.A. (C)
25	FPORP	R3204 (RIGHT)	B-1	WF-1	MAIN C.B.A. (C)
26	AVS21 (DAC1)	———	—	—	
27	AVD21 (DAC1)	———	—	—	
28	FPO	R3207 (UPPER)	B-1	WF-1	MAIN C.B.A. (C)
29	VCO IN	R3207 (LOWER)	B-1	WF-1	MAIN C.B.A. (C)
30	AVS11 (VCO)	———	—	—	
31	AVD11 (VCO)	———	—	—	
32	D VDD 25	———	—	—	
33	AGC CTL	RX3202-7	B-1	WF-1	MAIN C.B.A. (C)
34	REC CUR	RX3202-3	B-1	WF-1	MAIN C.B.A. (C)
35	CAP ERR	RX3202-5	B-1	WF-1	MAIN C.B.A. (C)
36	CYL ERR	RX3202-1	B-1	WF-1	MAIN C.B.A. (C)
37	CAP RSF	RL3011	B-4	WF-1	MAIN C.B.A. (C)
38	DVSS	———	—	—	
39	TRST	R3029 (LEFT)	C-6	WF-1	MAIN C.B.A. (C)
40	TMS	RL3	C-7	WF-1	MAIN C.B.A. (F)
41	TDI	———	—	—	
42	TDO	———	—	—	
43	TCK	RL2	C-7	WF-1	MAIN C.B.A. (F)
44	HID1	IC5001-17	B-9	WF-140	MAIN C.B.A. (F)
45	HID2	IC5001-16	B-9	WF-1	MAIN C.B.A. (F)
46	SPA	CL3201	A-1	WF-1	MAIN C.B.A. (C)
47	D VSS	———	—	—	
48	RECI	IC5001-19	B-9	WF-1	MAIN C.B.A. (F)
49	EQ HLD	IC5001-11	B-9	WF-1	MAIN C.B.A. (F)
50	HSE	CL3208	A-1	WF-1	MAIN C.B.A. (C)
51	REC CLK	CL3213	A-1	WF-190	MAIN C.B.A. (C)
52	DVDD18	———	—	—	
53	REC CTL	IC5001-15	B-9	WF-1	MAIN C.B.A. (F)
54	PB Ⓗ	R5015 (UPPER)	C-2	WF-1	MAIN C.B.A. (C)
55	CYL FG	CL2205	C-4	WF-180	MAIN C.B.A. (C)
56	DRIVE CLK	RX2203-2	C-4	WF-178	MAIN C.B.A. (C)
57	D VSS	———	—	—	
58	CYL PG	CL2204	C-4	WF-179	MAIN C.B.A. (C)
59	ADM (0)	R3215 (RIGHT)	A-1	WF-1	MAIN C.B.A. (C)
60	ADM (1)	R3214 (RIGHT)	A-1	WF-1	MAIN C.B.A. (C)
61	ADM (2)	RL3010	C-4	WF-1	MAIN C.B.A. (C)
62	D VDD 18	———	—	—	
63	ADM (3)	RL3009	C-4	WF-1	MAIN C.B.A. (C)
64	ADM (4)	RX3203-7	B-8	WF-1	MAIN C.B.A. (F)
65	ADM (5)	RX3203-5	B-8	WF-1	MAIN C.B.A. (F)
66	D VSS	———	—	—	
67	ADM (6)	RX3203-3	B-8	WF-1	MAIN C.B.A. (F)
68	ADM (7)	RX3203-1	B-8	WF-1	MAIN C.B.A. (F)
69	ADM (8)	RL2201	C-5	WF-98	MAIN C.B.A. (C)
70	D VDD 18	———	—	—	
71	ADM (9)	R2212 (LOWER)	C-5	WF-1	MAIN C.B.A. (C)
72	ADM (10)	RL3008	C-4	WF-1	MAIN C.B.A. (C)
73	ADM (11)	RX3004-7	C-7	WF-218	MAIN C.B.A. (C)
74	ADM (12)	———	—	—	
75	D VSS	———	—	—	
76	ADM (13)	———	—	—	
77	ADM (14)	———	—	—	
78	ADM (15)	———	—	—	
79	AS	———	—	—	
80	D VDD 18	———	—	—	
81	XRE	———	—	—	
82	XWEL	RX2202-5	B-5	WF-157	MAIN C.B.A. (F)
83	XWEH	RX2202-3	B-5	WF-158	MAIN C.B.A. (F)
84	CLK27A	R3063 (LEFT)	C-5	WF-183	MAIN C.B.A. (C)
85	D VSS	———	—	—	
86	DBR (0)	RL3014	C-6	WF-1	MAIN C.B.A. (C)
87	DBR (1)	———	—	—	
88	DBR (2)	———	—	—	
89	DBR (3)	———	—	—	
90	D VDD 18	———	—	—	
91	REQR	RX3004-5	C-7	WF-1	MAIN C.B.A. (C)
92	ACKR	———	—	—	
93	TSTCKI	———	—	—	
94	D VSS	———	—	—	
95	TSTDT (0)	———	—	—	
96	TSTDT (1)	———	—	—	
97	TSTDT (2)	———	—	—	
98	D VDD 18	———	—	—	
99	TSTDT (3)	———	—	—	
100	TSTDT (4)	———	—	—	
101	TSTDT (5)	———	—	—	
102	TSTDT (6)	———	—	—	
103	D VSS	———	—	—	
104	TSTDT (7)	———	—	—	
105	TSTDT (8)	———	—	—	
106	TSTDT (9)	———	—	—	
107	VPD	———	—	—	
108	D VDD 18	———	—	—	
109	XRST	R3211 (UPPER)	B-2	WF-1	MAIN C.B.A. (C)
110	TSTMD	———	—	—	
111	CS	———	—	—	
112	GE SW	———	—	—	

(C): COMPONENT SIDE (F):FOIL SIDE

Check Point of the IC3501

CSP IC Pin	CSP IC Name	Check Point		WF NO.	Remarks
1	VDD	———	——	——	
2	VDD	———	——	——	
3	VDD	———	——	——	
4	MONI 0 (6)	———	——	——	
5	MONI 0 (5)	———	——	——	
6	AVDD 2.5	———	——	——	
7	AVSS	———	——	——	
8	AVBB	———	——	——	
9	Y AINT	Q3503-1	E-7	WF-1	MAIN C.B.A. (F)
10	Y AINC	CX3502-6	D-4	WF-1	MAIN C.B.A. (C)
11	Y REFBOT	IC3502-1	D-4	WF-1	MAIN C.B.A. (C)
12	Y CML	CX3501-5	E-7	WF-1	MAIN C.B.A. (F)
13	Y REFTOP	IC3502-7	D-4	WF-1	MAIN C.B.A. (C)
14	Y ITEST	CX3501-6	E-7	WF-1	MAIN C.B.A. (F)
15	Y STBY	———	——	——	
16	Y SPEEDUP	———	——	——	
17	VCD2	———	——	——	
18	DVSS	———	——	——	
19	AVBB	———	——	——	
20	DVDD2.5	———	——	——	
21	Y EOC	———	——	——	
22	Y STC	———	——	——	
23	C STC	———	——	——	
24	C EOC	———	——	——	
25	DVDD2.5	———	——	——	
26	DVSS	———	——	——	
27	AVBB	———	——	——	
28	VDD2	———	——	——	
29	C SPEEDUP	———	——	——	
30	C STBY	———	——	——	
31	C ITEST	CX3501-7	E-7	WF-1	MAIN C.B.A. (F)
32	C REFTOP	IC3502-7	D-4	WF-1	MAIN C.B.A. (C)
33	C CML	CX3501-8	E-7	WF-1	MAIN C.B.A. (F)
34	C REFBOT	IC3502-1	D-4	WF-1	MAIN C.B.A. (C)
35	C AINC	CX3502-6	D-4	WF-1	MAIN C.B.A. (C)
36	C AINT	C3569 (RIGHT)	D-6	WF-1	MAIN C.B.A. (F)
37	AVBB	———	——	——	
38	AVSS	———	——	——	
39	AVDD2.5	———	——	——	
40	MONI 0 (4)	———	——	——	
41	MONI 0 (3)	———	——	——	
42	VSS	———	——	——	
43	VSS	———	——	——	
44	VSS	———	——	——	
45	VDD	———	——	——	
46	VDD	———	——	——	
47	VDD	———	——	——	
48	MONI 0 (2)	———	——	——	
49	MONI 0 (1)	———	——	——	
50	VDD	———	——	——	
51	MONI 0 (0)	———	——	——	
52	VSS	———	——	——	
53	VDD	———	——	——	
54	FS MODE	———	——	——	
55	INF I	———	——	——	
56	CLK 135P	———	——	——	
57	FS ENBL	———	——	——	
58	VDD	———	——	——	
59	CLK27M	RL5	D-4	WF-143	MAIN C.B.A. (C)
60	VDDC	———	——	——	

CSP IC Pin	CSP IC Name	Check Point		WF NO.	Remarks
61	YC STP	RL22	C-7	WF-217	MAIN C.B.A. (F)
62	VSS	———	——	——	
63	YC SDA	IC3301-12	D-4	WF-1	MAIN C.B.A. (F)
64	VSS	———	——	——	
65	NOSYNC	RX2006-5	A-6	WF-1	MAIN C.B.A. (F)
66	YC SCK	IC3301-15	D-4	WF-1	MAIN C.B.A. (F)
67	LSI RESET	R3501 (UPPER)	D-6	WF-1	MAIN C.B.A. (F)
68	PS	RL25	C-8	WF-1	MAIN C.B.A. (F)
69	VDDC	———	——	——	
70	CLK27P	RL4	D-5	WF-143	MAIN C.B.A. (C)
71	135SEL	———	——	——	
72	MONI SEL I (5)	———	——	——	
73	MONI SEL I (4)	———	——	——	
74	MONI SEL I (3)	———	——	——	
75	MONI SEL I (2)	———	——	——	
76	MONI SEL I (1)	———	——	——	
77	MONI SEL I (0)	———	——	——	
78	TMS	RL3	C-7	WF-1	MAIN C.B.A. (F)
79	TCK	RL2	C-7	WF-1	MAIN C.B.A. (F)
80	VSS	———	——	——	
81	TRST	R3501 (LOWER)	D-6	WF-1	MAIN C.B.A. (F)
82	TDI	RL1	D-6	WF-1	MAIN C.B.A. (F)
83	TDO	CL1906	D-4	WF-1	MAIN C.B.A. (C)
84	P M SEL	———	——	——	
85	CAM IN SEL	———	——	——	
86	VSS	———	——	——	
87	VSS	———	——	——	
88	VSS	———	——	——	
89	VDD	———	——	——	
90	VDD	———	——	——	
91	VDD	———	——	——	
92	VDD	———	——	——	
93	VIDEO S I	R3568 (LOWER)	D-3	WF-1	MAIN C.B.A. (C)
94	INH	———	——	——	
95	CPSYNC	CL3503	C-7	W-F131	MAIN C.B.A. (F)
96	COLOR FRAM	CL3504	C-7	WF-131	MAIN C.B.A. (F)
97	VSS	———	——	——	
98	VSS	———	——	——	
99	C O O (0)	———	——	——	
100	VDD	———	——	——	
101	C O O (1)	———	——	——	
102	C O O (2)	———	——	——	
103	C O O (3)	———	——	——	
104	VDD	———	——	——	
105	C O O (4)	———	——	——	
106	VSS	———	——	——	
107	C O O (5)	———	——	——	
108	C O O (6)	———	——	——	
109	C O O (7)	———	——	——	
110	VSS	———	——	——	
111	Y O O (0)	RL6	D-5	WF-1	MAIN C.B.A. (C)
112	Y O O (1)	RL7	D-5	WF-1	MAIN C.B.A. (C)
113	VDD	———	——	——	
114	INV	———	——	——	
115	Y O O (2)	RL8	D-5	WF-1	MAIN C.B.A. (C)
116	Y O O (3)	RL9	D-5	WF-1	MAIN C.B.A. (C)
117	VDD	———	——	——	
118	Y O O (4)	RL10	D-5	WF-1	MAIN C.B.A. (C)
119	Y O O (5)	RL11	D-5	WF-1	MAIN C.B.A. (C)
120	Y O O (6)	RL12	D-5	WF-1	MAIN C.B.A. (C)

(C): COMPONENT SIDE (F):FOIL SIDE

Check Point of the IC3501

CSP IC		Check Point		WF NO.	Remarks
Pin	Name				
121	Y O O (7)	RL13	D-5	WF-1	MAIN C.B.A. (C)
122	OUT SEL	———	——	——	
123	SEL 1	———	——	——	
124	VSS	———	——	——	
125	CAM Y (0)	———	——	——	
126	CAM Y (1)	———	——	——	
127	CAM Y (2)	———	——	——	
128	CAM Y (3)	———	——	——	
129	VDD	———	——	——	
130	VDD	———	——	——	
131	VDD	———	——	——	
132	VSS	———	——	——	
133	VSS	———	——	——	
134	VSS	———	——	——	
135	CAM Y (4)	———	——	——	
136	VDD	———	——	——	
137	CAM Y (5)	———	——	——	
138	VDD	———	——	——	
139	CAM INH	———	——	——	
140	CAM INV	———	——	——	
141	VSS	———	——	——	
142	VDD	———	——	——	
143	CAM C (0)	———	——	——	
144	VSS	———	——	——	
145	VSS	———	——	——	
146	CLK 135M	———	——	——	
147	VDD	———	——	——	
148	VDD	———	——	——	
149	VDD	———	——	——	
150	CAM C (1)	———	——	——	
151	CAM C (2)	———	——	——	
152	CAM C (3)	———	——	——	
153	CAM C (4)	———	——	——	
154	VSS	———	——	——	
155	CAM C (5)	———	——	——	
156	VSS	———	——	——	
157	CAM C (6)	———	——	——	
158	CAM C (7)	———	——	——	
159	VSS	———	——	——	
160	VSS	———	——	——	
161	CAM Y (6)	———	——	——	
162	CAM Y (7)	———	——	——	
163	CAM Y (8)	———	——	——	
164	CAM Y (9)	———	——	——	
165	VDD	———	——	——	
166	ALL HIZ N	———	——	——	
167	NANDTREE 1	———	——	——	
168	NANDTREE 2	———	——	——	
169	VSS	———	——	——	
170	VSS	———	——	——	
171	MONI 0 (7)	———	——	——	
172	MONI 0 (8)	———	——	——	
173	MONI 0 (9)	———	——	——	
174	VSS	———	——	——	
175	VSS	———	——	——	
176	VSS	———	——	——	

(C): COMPONENT SIDE (F): FOIL SIDE

Check Point of the IC3801

CSP IC Pin	CSP IC Name	Check Point		WF NO.	Remarks
1	NC	———	—	—	
2	NC	———	—	—	
3	NC	———	—	—	
4	NC	———	—	—	
5	AFED 33G	———	—	—	
6	AFED 33V	———	—	—	
7	DM	FL2503-4	C-2	WF-1	JACK C.B.A. (C)
8	NC	———	—	—	
9	DP	FL2503-3	C-2	WF-1	JACK C.B.A. (C)
10	VBUS	R3804 (LOWER)	E-1	WF-1	MAIN C.B.A. (F)
11	AFEA 15V	———	—	—	
12	AFEA 15G	———	—	—	
13	NC	———	—	—	
14	REFR IN	R3805 (LOWER)	E-2	WF-1	MAIN C.B.A. (F)
15	AFEA 33G	———	—	—	
16	X IN	C3804 (RIGHT)	E-2	WF-143	MAIN C.B.A. (F)
17	NC	———	—	—	
18	X OUT	C3805 (LEFT)	E-2	WF-143	MAIN C.B.A. (F)
19	AFEA 33V	———	—	—	
20	AFED 15V	———	—	—	
21	AFED 15G	———	—	—	
22	VIF 18	———	—	—	
23	TEST	———	—	—	
24	GND 18	———	—	—	
25	TCK	RL2	C-7	WF-1	MAIN C.B.A. (F)
26	NC	———	—	—	
27	NC	———	—	—	
28	TEST P IN0	———	—	—	
29	TEST P IN1	———	—	—	
30	TEST P IN2	———	—	—	
31	MPBUS	———	—	—	
32	A1	RX3003-2	C-2	WF-1	MAIN C.B.A. (F)
33	A2	RX3003-4	C-2	WF-1	MAIN C.B.A. (F)
34	A3	RX3003-6	C-2	WF-1	MAIN C.B.A. (F)
35	A4	RX3003-8	C-2	WF-1	MAIN C.B.A. (F)
36	A5	R3037 (RIGHT)	D-2	WF-1	MAIN C.B.A. (F)
37	A6	R3038 (UPPER)	C-2	WF-1	MAIN C.B.A. (F)
38	A7/ALE	RL3040	D-5	WF-1	MAIN C.B.A. (C)
39	VDD 15	———	—	—	
40	GND 15	———	—	—	
41	D0	RL3039	D-5	WF-1	MAIN C.B.A. (C)
42	D1/AD1	RL3038	D-5	WF-1	MAIN C.B.A. (C)
43	D2/AD2	RL3037	D-5	WF-1	MAIN C.B.A. (C)
44	D3/AD3	RL3036	D-5	WF-1	MAIN C.B.A. (C)
45	D4/AD4	RL3035	D-5	WF-1	MAIN C.B.A. (C)
46	D5/AD5	RL3034	D-5	WF-1	MAIN C.B.A. (C)
47	D6/AD6	RL3033	D-5	WF-1	MAIN C.B.A. (C)
48	D7	RL3032	D-5	WF-1	MAIN C.B.A. (C)
49	D8	RL3023	D-5	WF-1	MAIN C.B.A. (C)
50	NC	———	—	—	

CSP IC Pin	CSP IC Name	Check Point		WF NO.	Remarks
51	NC	———	—	—	
52	NC	———	—	—	
53	TDO	RL1	D-6	WF-1	MAIN C.B.A. (F)
54	TDI	———	—	—	
55	TMS	RL3	C-7	WF-1	MAIN C.B.A. (F)
56	D9	RL3022	D-5	WF-1	MAIN C.B.A. (C)
57	D10	RL3021	D-5	WF-1	MAIN C.B.A. (C)
58	D11	RL3019	D-5	WF-1	MAIN C.B.A. (C)
59	D12	RL3013	D-5	WF-1	MAIN C.B.A. (C)
60	D13	RL3012	D-5	WF-1	MAIN C.B.A. (C)
61	D14	RL3006	D-5	WF-1	MAIN C.B.A. (C)
62	D15	RL3005	D-5	WF-1	MAIN C.B.A. (C)
63	VDD 15	———	—	—	
64	GND 15	———	—	—	
65	CLK27	R3802 (RIGHT)	D-3	WF-183	MAIN C.B.A. (F)
66	VIF 18	———	—	—	
67	GND 18	———	—	—	
68	MFI 0/DBU0	RX3002-7	D-7	WF-1	MAIN C.B.A. (C)
69	MFI 1/DBU1	RX3002-5	D-7	WF-1	MAIN C.B.A. (C)
70	MFI 2/DBU2	RX3002-3	D-7	WF-1	MAIN C.B.A. (C)
71	MFI 3/DBU3	RX3002-1	D-7	WF-1	MAIN C.B.A. (C)
72	MFI 4/REQU	RX3001-7	D-7	WF-1	MAIN C.B.A. (C)
73	MFI 5	RX3001-5	D-7	WF-1	MAIN C.B.A. (C)
74	MFI 6	RX3001-3	D-7	WF-1	MAIN C.B.A. (C)
75	NC	———	—	—	
76	NC	———	—	—	
77	NC	———	—	—	
78	NC	———	—	—	
79	MFI 7	RX3001-1	D-7	WF-1	MAIN C.B.A. (C)
80	MFI CS	———	—	—	
81	MFI RS	———	—	—	
82	MFI WR	———	—	—	
83	MFI RD/ACKU	———	—	—	
84	MFI INT	RX3004-3	C-7	WF-1	MAIN C.B.A. (C)
85	FRP/SSP	CL3803	E-3	WF-1	MAIN C.B.A. (F)
86	INT N	———	—	—	
87	INF	CL3804	E-3	WF-1	MAIN C.B.A. (F)
88	RD N	RL3043	D-5	WF-1	MAIN C.B.A. (C)
89	WR0 N	RL3042	D-5	WF-1	MAIN C.B.A. (C)
90	WR1 N	RL3041	D-5	WF-1	MAIN C.B.A. (C)
91	CS N	———	—	—	
92	TEST P IN3	———	—	—	
93	TEST P IN4	———	—	—	
94	TEST P IN5	———	—	—	
95	DREQ1 N	———	—	—	
96	DACK1 N/DSTB0 N	———	—	—	
97	DEMO1 N	———	—	—	
98	RST N	R3029 (LEFT)	C-6	WF-1	MAIN C.B.A. (C)
99	VIF 18	———	—	—	
100	GND 18	———	—	—	

(C): COMPONENT SIDE (F):FOIL SIDE

16.2. WAVEFORM TABLE (PLAY MODE)

WF-1	WF-2	WF-3	WF-4	WF-5
WF-6	WF-7	WF-8	WF-9	WF-10
WF-11	WF-12	WF-13	WF-14	WF-15
WF-16	WF-17	WF-18	WF-19	WF-20
WF-21	WF-22	WF-23	WF-24	WF-25
WF-26	WF-27	WF-28	WF-29	WF-30
WF-31	WF-32	WF-33	WF-34	WF-35
WF-36	WF-37	WF-38	WF-39	WF-40

WF-41 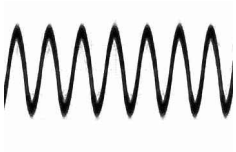	WF-42 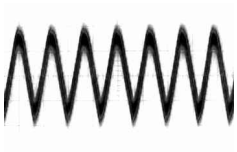	WF-43 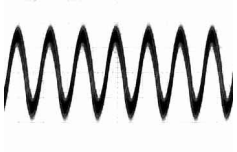	WF-44 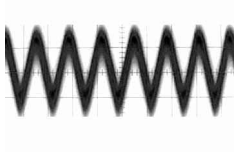	WF-45 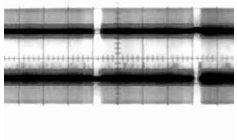
WF-46 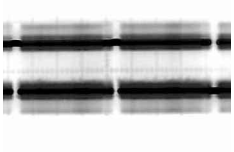	WF-47 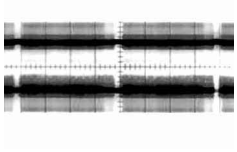	WF-48 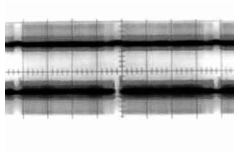	WF-49 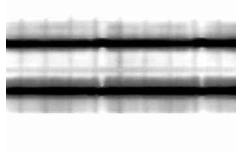	WF-50 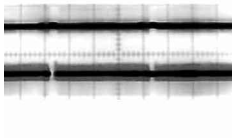
WF-51	WF-52 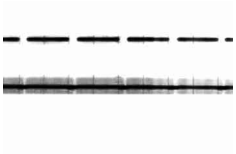	WF-53 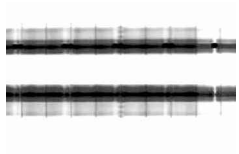	WF-54 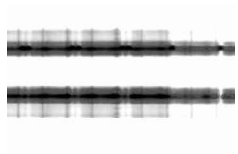	WF-55 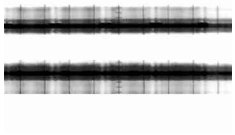
WF-56 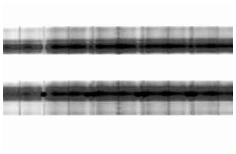	WF-57	WF-58 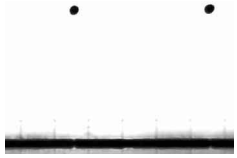	WF-59	WF-60 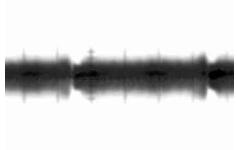
WF-61 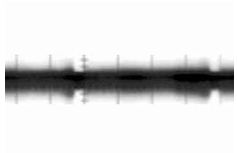	WF-62 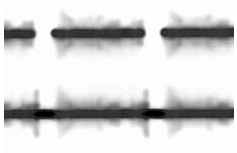	WF-63 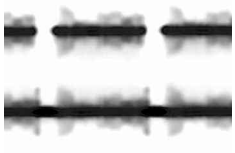	WF-64 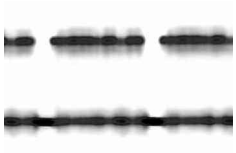	WF-65 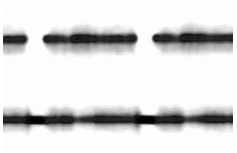
WF-66	WF-67 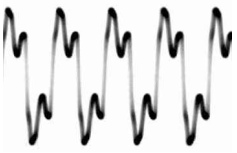	WF-68 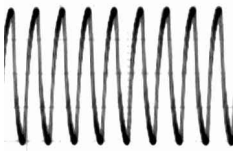	WF-69	WF-70 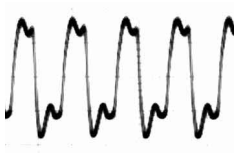
WF-71	WF-72	WF-73	WF-74	WF-75
WF-76 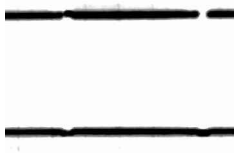	WF-77 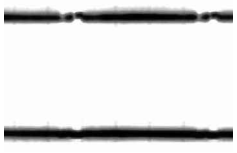	WF-78	WF-79	WF-80

WF-81	WF-82	WF-83	WF-84	WF-85
WF-86	WF-87	WF-88	WF-89	WF-90
WF-91	WF-92	WF-93	WF-94	WF-95
WF-96	WF-97	WF-98	WF-99	WF-100
WF-101	WF-102	WF-103	WF-104	WF-105
WF-106	WF-107	WF-108	WF-109	WF-110
WF-111	WF-112	WF-113	WF-114	WF-115
WF-116	WF-117	WF-118	WF-119	WF-120

WF-121 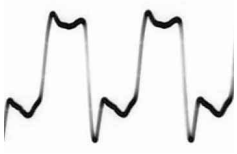	WF-122 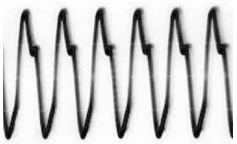	WF-123 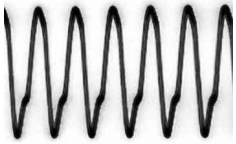	WF-124 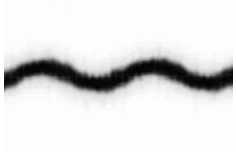	WF-125
WF-126	WF-127	WF-128	WF-129 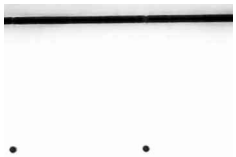	WF-130
WF-131 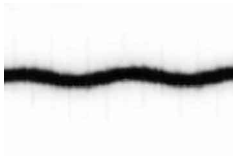	WF-132 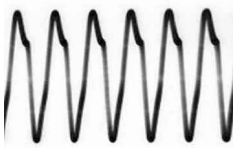	WF-133 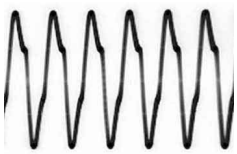	WF-134	WF-135
WF-136 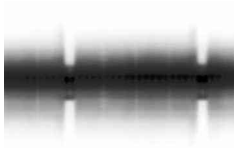	WF-137	WF-138	WF-139 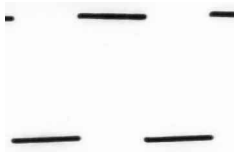	WF-140
WF-141	WF-142	WF-143 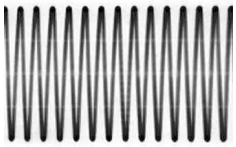	WF-144 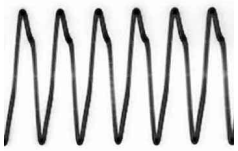	WF-145 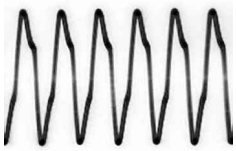
WF-146 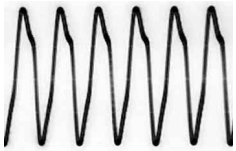	WF-147	WF-148	WF-149 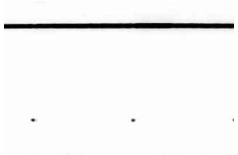	WF-150
WF-151 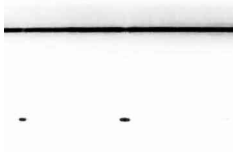	WF-152	WF-153	WF-154	WF-155
WF-156 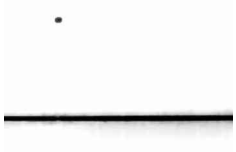	WF-157	WF-158	WF-159 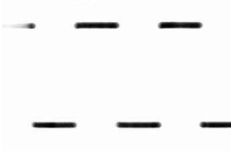	WF-160 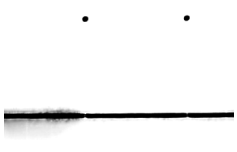

WF-161	WF-162	WF-163	WF-164	WF-165
WF-166	WF-167	WF-168	WF-169	WF-170
WF-171	WF-172	WF-173	WF-174	WF-175
WF-176	WF-177	WF-178	WF-179	WF-180
WF-181	WF-182	WF-183	WF-184	WF-185
WF-186	WF-187	WF-188	WF-189	WF-190
WF-191	WF-192	WF-193	WF-194	WF-195
WF-196	WF-197	WF-198	WF-199	WF-200

WF-201 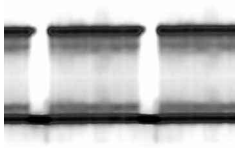	WF-202 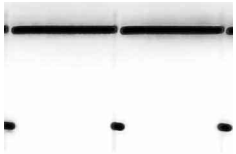	WF-203	WF-204 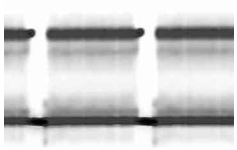	WF-205 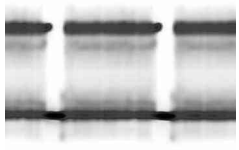
WF-206 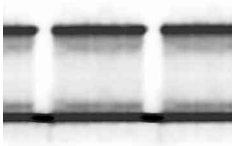	WF-207 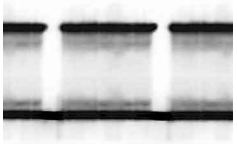	WF-208 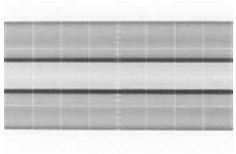	WF-209 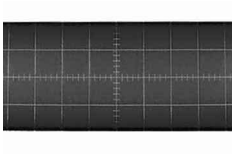	WF-210 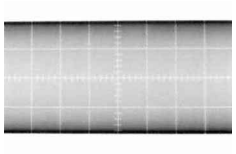
WF-211 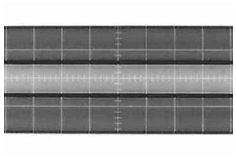	WF-212	WF-213 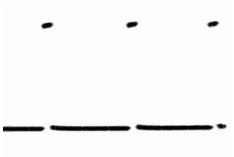	WF-214 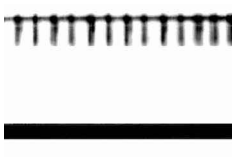	WF-215 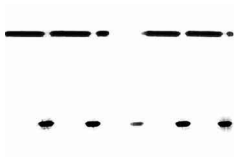
WF-216	WF-217 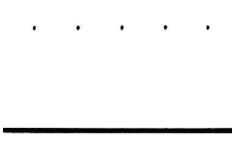	WF-218 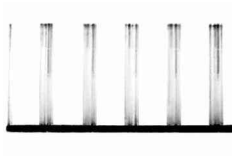	WF-219	WF-220
WF-221 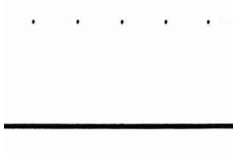	WF-222 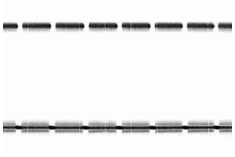	WF-223 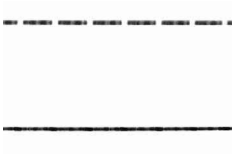	WF-224 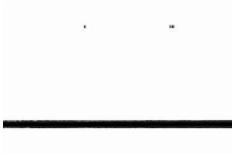	WF-225 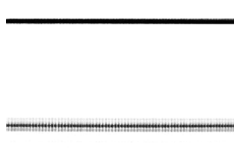
WF-226 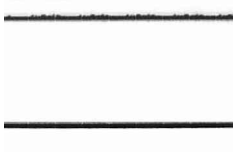	WF-227 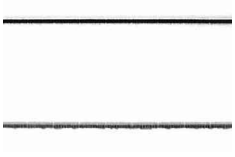	WF-228 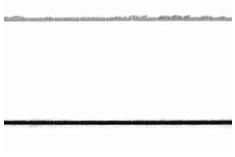	WF-229 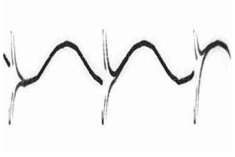	WF-230 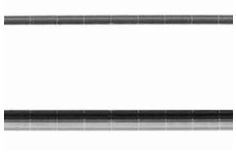
WF-231	WF-232 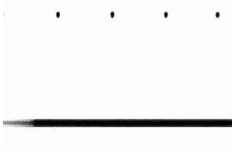	WF-233 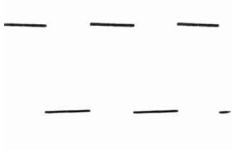	WF-234 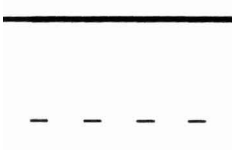	WF-235 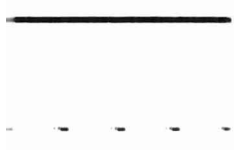
WF-236 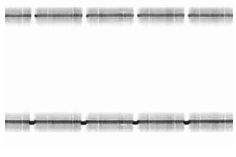				

17 EXPLODED VIEWS

17.1. FRAME & CASING SECTION (1)

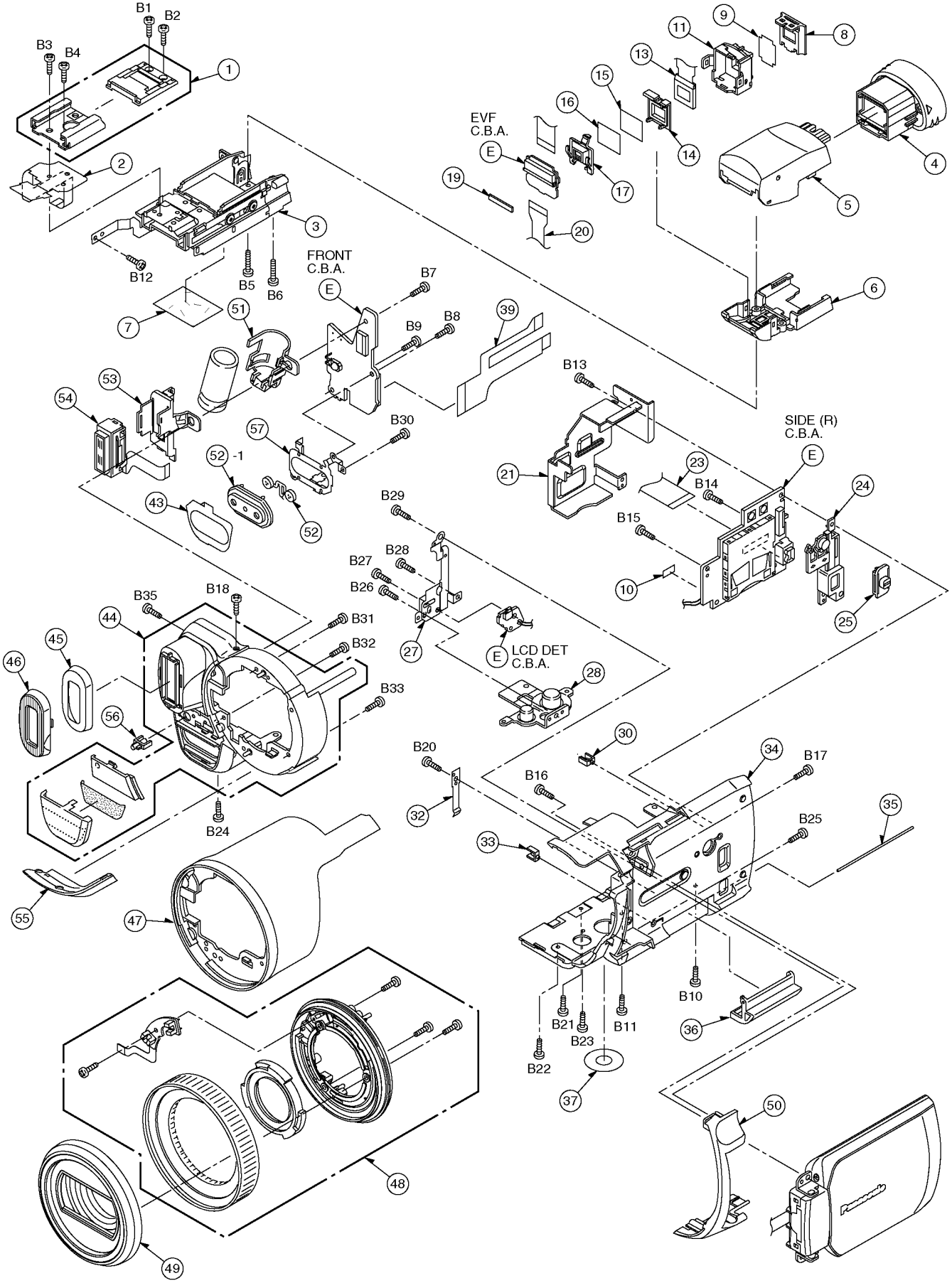

17.2. FRAME & CASING SECTION (2)

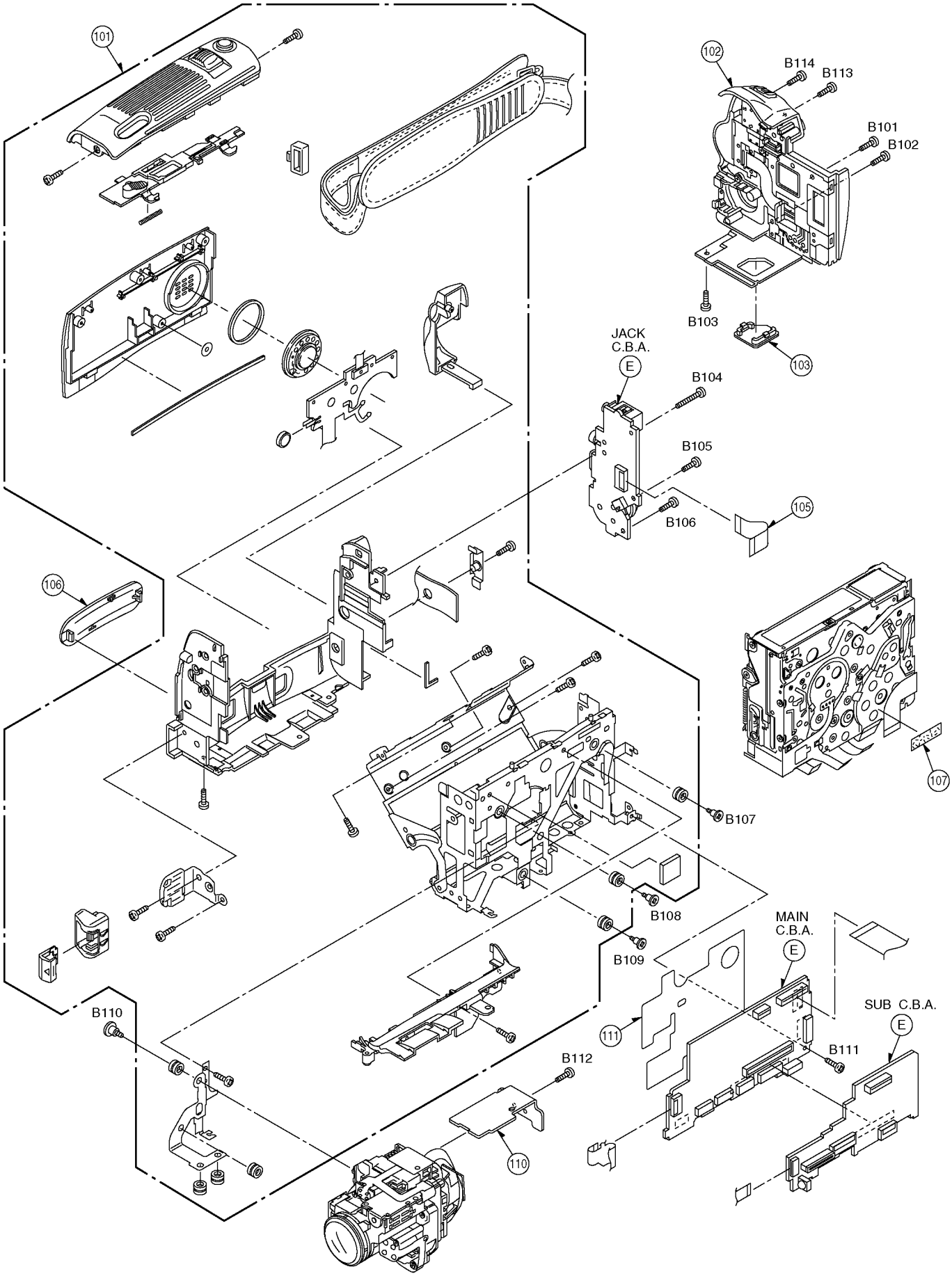

17.3. LCD SECTION

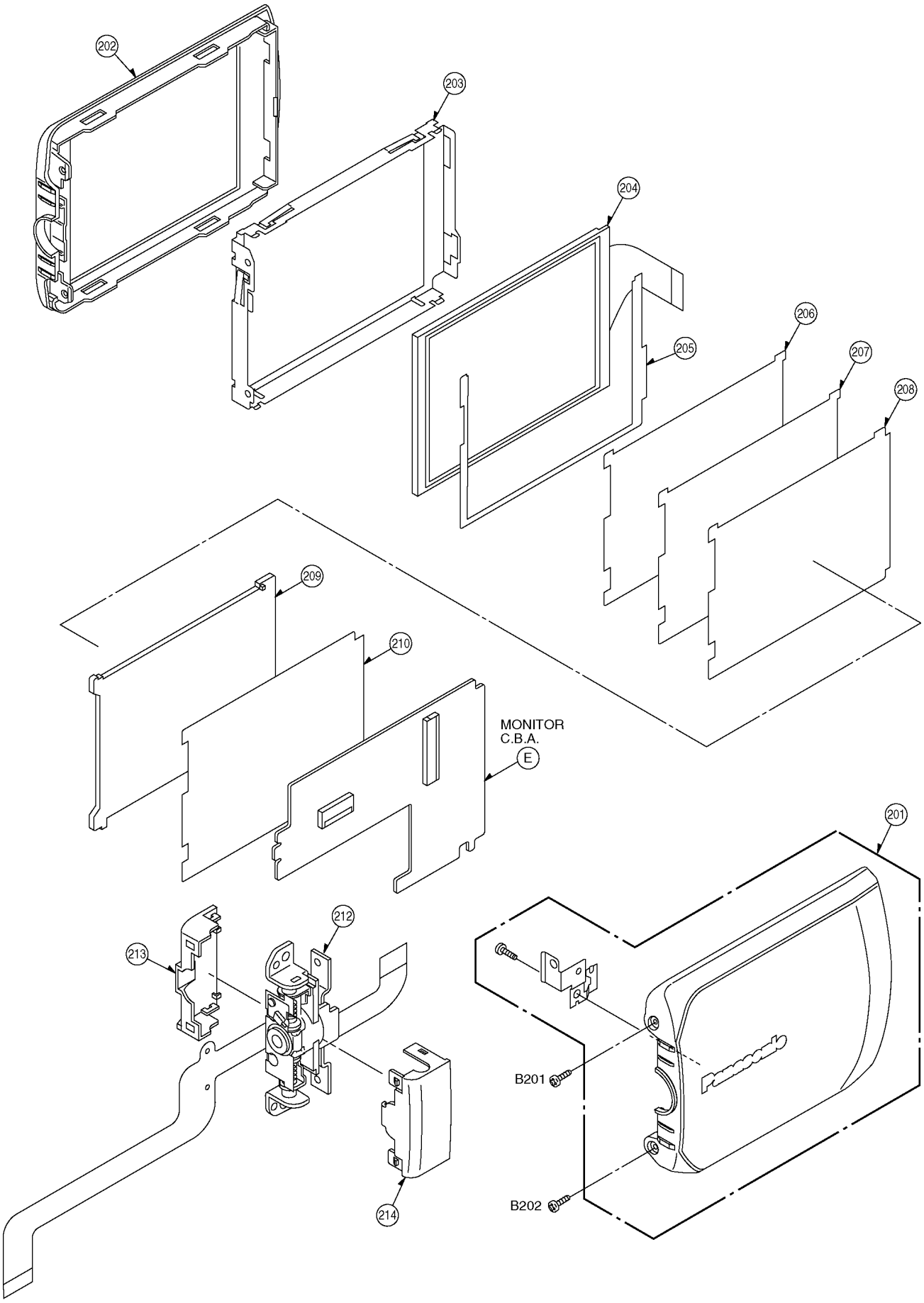

17.4. CAMERA LENS SECTION

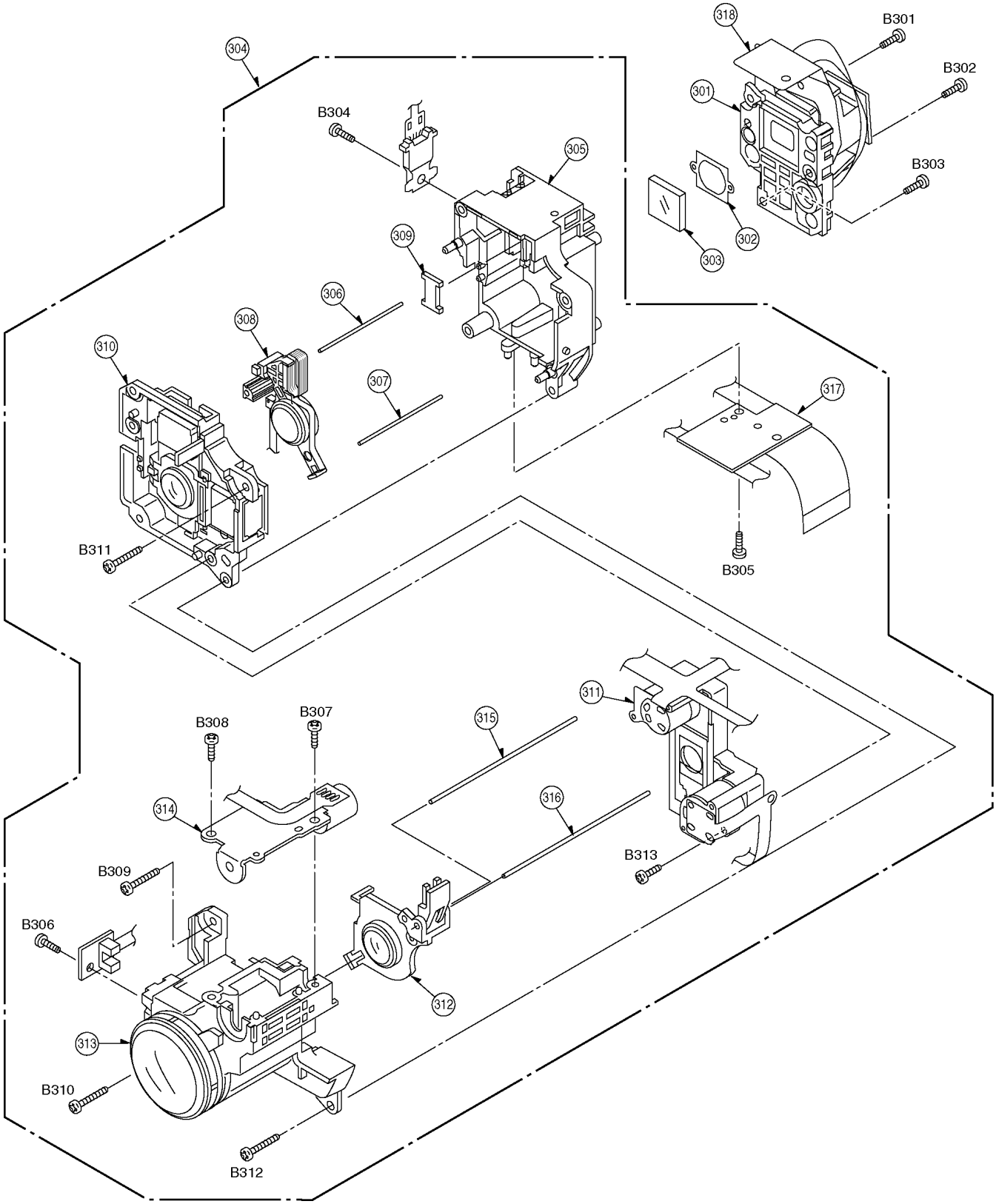

17.5. VCR MECHANISM SECTION

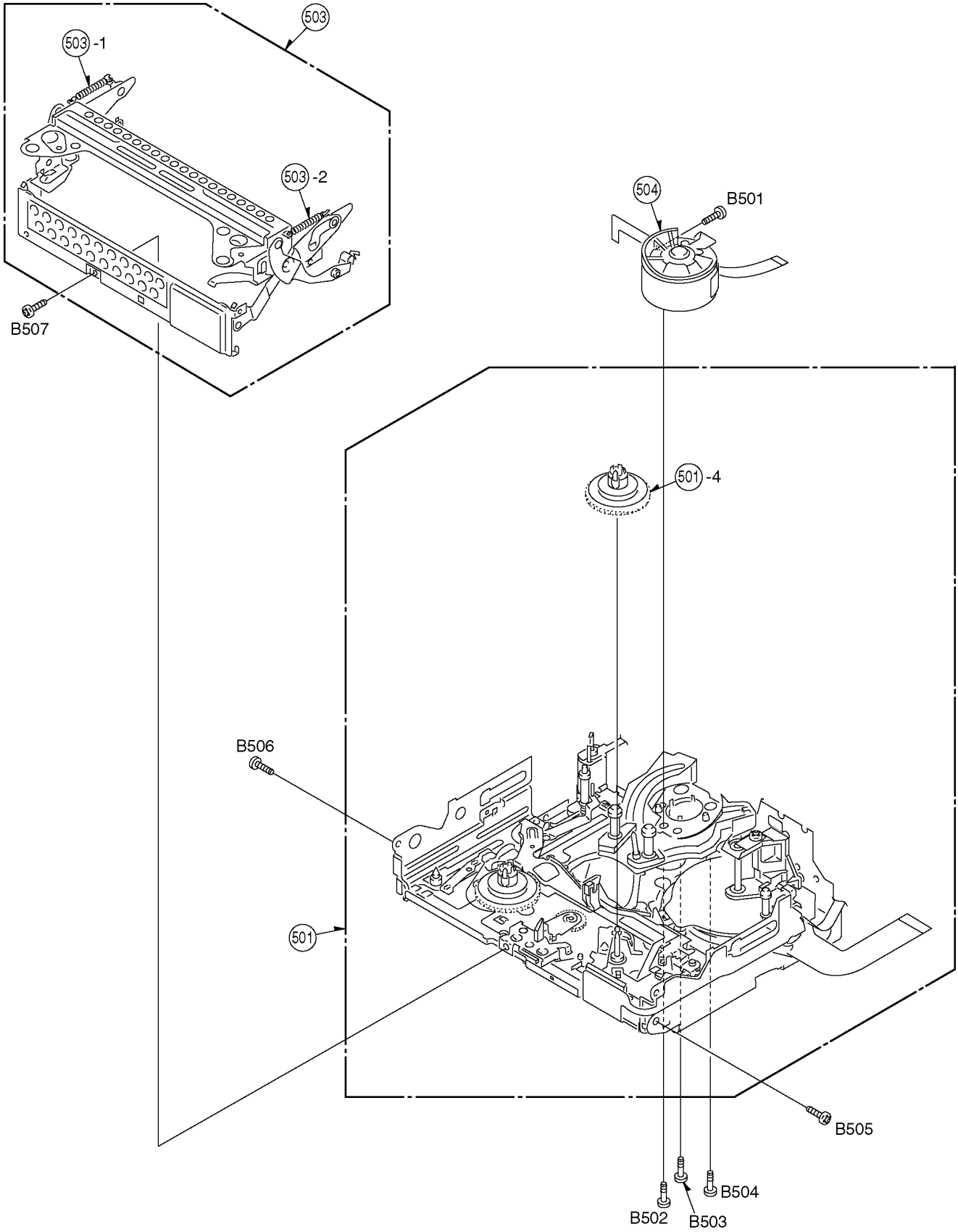

17.6. PACKING PARTS & ACCESSORIES SECTION

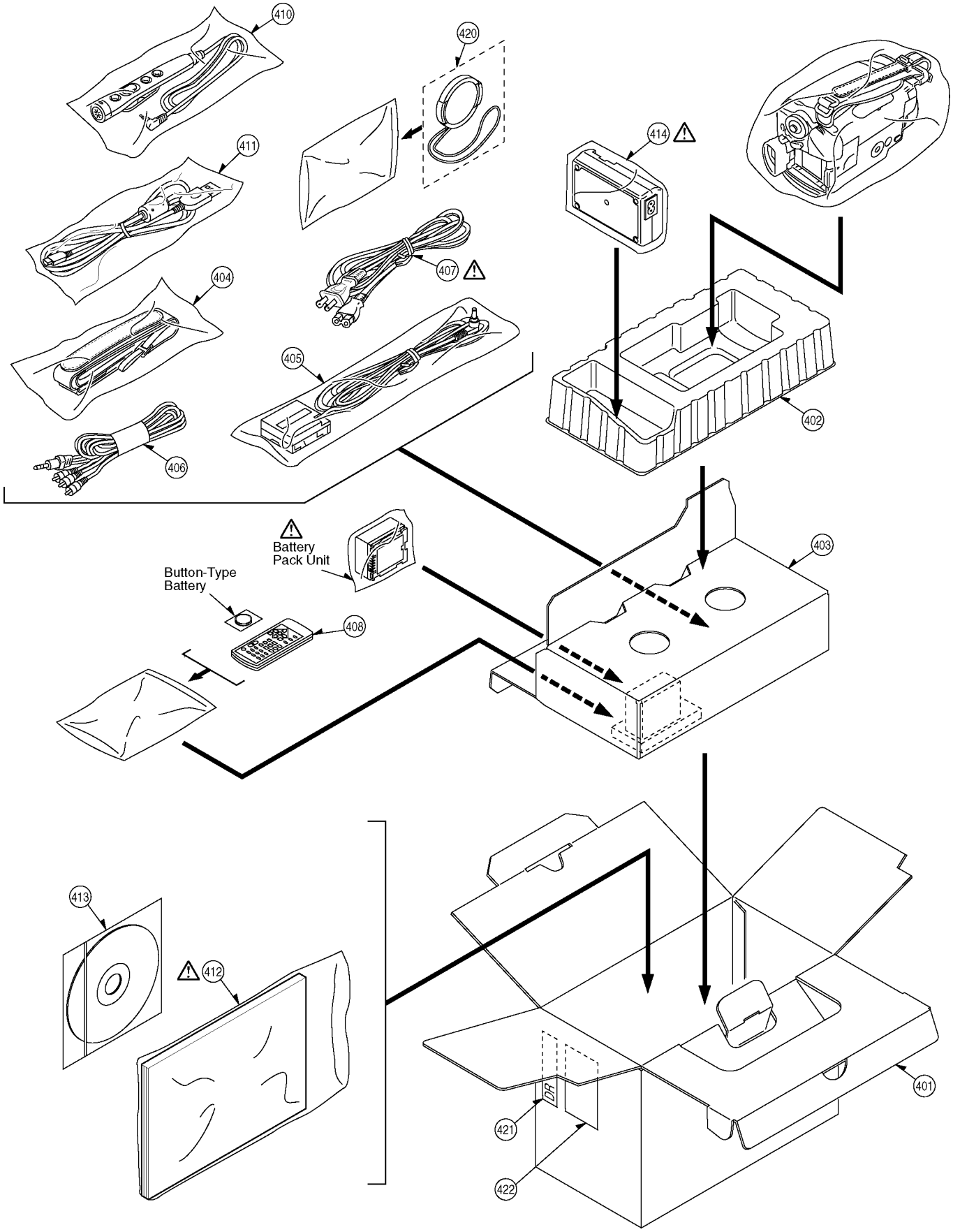

18 REPLACEMENT PARTS LIST

18.1. FRAME & CASING SECTION (1) PARTS LIST

Note: 1. *Be sure to make your orders of replacement parts according to this list.
2. IMPORTANT SAFETY NOTICE
Components identified with the mark △ have the special characteristics for safety. When replacing any of these components, use only the same type.
3. Definition of Parts supplier:
Parts without mark in the Remarks column are supplied from SPC.

Ref. No.	Part No.	Part Name & Description	Pcs	Remarks
1	K1FB108H0021	HOT SHOE	1	
2	VWJ1760	HOT SHOE FPC	1	
3	VXA7934	EVF SLIDEU	1	
4	VYK1M15	EVF VIEW ADJ. U.	1	
5	VKM6659	EVF TOP CASE	1	
6	VKM6662	EVF BOTTOM CASE	1	
7	VGQ7909	TAPE	1	
8	VGQ8335	POLARIZING PLATE HOLDER	1	
9	VGL1146	LENS POLARIZATION PLATE	1	
10	VGQ6816	SHEET	1	
11	VGQ8336	LCD PIECE	1	
13	L5BDDXH00014	EVF PANEL	1	
14	VGQ8346	LCD OSAE PIECE	1	
15	VGL1145	BL PANEL	1	
16	VGL1144	EVF DIFFUSION SHEET	1	
17	VGQ7102	BL PIECE	1	
19	VGQ8431	EVF PORON	1	
20	VWJ1759	EVF FPC	1	
21	VSC5691	IC HEAT DISSIPATION PLATE	1	
23	VWJ1771	SIDE-R FPC	1	
24	VGQ8280	KNOB HOLDER	1	
25	VGU9729	MODE CHANGE KNOB	1	
27	VMP8255	HINGE SUPPORT PLATE	1	
28	VMP8207	TRIPOD PLATE	1	
30	VGL1142	PANEL LIGHT	1	
32	VMC1956	SD DOOR SPRING	1	
33	VGL1142	PANEL LIGHT	1	
34	VYK1M68	R BASE (1) UNIT	1	
35	VMS7555	SD SHAFT	1	
36	VKF3974	SD DOOR	1	
37	VGQ8212	SHEET	1	
39	VWJ1757	FRONT FPC	1	
43	VGQ8347	MIC SOUNDPROOF SHEET	1	
44	VYK1M09	FRONT CASE (1) U	1	
45	VKM6669	FLASH MIDDLE CASE	1	
46	VKM6668	FLASH TOP CASE	1	
47	VGK3110	LENS ORNAMENT	1	
48	VYQ3274	MFU	1	
49	VYQ3275	HOOD U	1	
50	VKM6672	R COVER	1	
51	VGQ8345	CONDENSER HOLDER	1	
52	VEP04887A	ECM C.B.A.	1	
52-1	VMT1532	MIC DUMPER GUM	1	
53	VKM6670	FLASH BOTTOM CASE	1	
54	EFN-MVT34	FLASH	1	
55	VKW3267	SENSOR WINDOR	1	
56	VGL1140	PANEL LIGHT	1	
57	VSC5693	MIC ANGLE	1	
B1	VHD1526	SCREW	1	
B2	VHD1526	SCREW	1	
B3	XQS2+A25FN	SCREW	1	
B4	XQS2+A25FN	SCREW	1	
B5	XQN16+BJ8FN	SCREW	1	
B6	XQN16+BJ8FN	SCREW	1	
B7	XQN16+BJ4FN	SCREW	1	
B8	XQN16+BJ4FN	SCREW	1	
B9	XQN16+BJ4FN	SCREW	1	
B10	XQN16+B3FN	SCREW	1	
B11	XQN16+B3FN	SCREW	1	
B12	XQN16+B3FN	SCREW	1	
B13	XQN16+BJ6FN	SCREW	1	
B14	XQN16+BJ6FN	SCREW	1	
B15	XQN16+BJ6FN	SCREW	1	
B16	XQN16+BJ5FJK	SCREW	1	
B17	XQN16+BJ6FN	SCREW	1	
B18	XQN16+BJ5FN	SCREW	1	
B20	XQN16+BJ35FN	SCREW	1	
B21	XQN16+B3FN	SCREW	1	
B22	XQN16+B3FN	SCREW	1	
B23	XQN16+B3FN	SCREW	1	
B24	XQN16+B3FN	SCREW	1	
B25	XQN16+BJ6FN	SCREW	1	
B26	XQN16+BJ6FN	SCREW	1	
B27	VHD1756	SCREW	1	
B28	XQN16+BJ5FJK	SCREW	1	
B29	VHD1776	SCREW	1	
B30	XQN16+BJ6FN	SCREW	1	
B31	XQN16+BJ6FN	SCREW	1	
B32	XQN16+BJ6FN	SCREW	1	
B33	XQN16+BJ6FN	SCREW	1	
B35	XQN16+BJ5FN	SCREW	1	

18.2. FRAME & CASING SECTION (2) PARTS LIST

Note: 1. *Be sure to make your orders of replacement parts according to this list.
2. IMPORTANT SAFETY NOTICE
Components identified with the mark △ have the special characteristics for safety. When replacing any of these components, use only the same type.
3. Definition of Parts supplier:
Parts without mark in the Remarks column are supplied from SPC.

Ref. No.	Part No.	Part Name & Description	Pcs	Remarks
101	N9ZZ00000294	SIDE CASE (L) 1U	1	
102	N9ZZ00000296	REAR OPERATION U	1	
103	VKF3963	EVR COVER	1	
105	VWJ1752	JACK FPC	1	
106	VKF3965	MECHA ADJ. COVER	1	
107	VGQ6407	SHEET	1	
110	VSC5692	CCD RADIATION PLATE	1	
111	VGQ8435	SHIELD BARRIER	1	
B101	XQN16+B5FN	SCREW	1	
B102	XQN16+B5FN	SCREW	1	
B103	XQN16+B3FN	SCREW	1	
B104	XQN16+B6FN	SCREW	1	
B105	XQN16+BJ3FN	SCREW	1	
B106	XQN16+B3FN	SCREW	1	
B107	VHD1133	SCREW	1	
B108	VHD1133	SCREW	1	
B109	VHD1133	SCREW	1	
B110	VHD1353	SCREW	1	
B111	XQN16+B3FN	SCREW	1	
B112	XQN16+BJ6FN	SCREW	1	
B113	XQN16+BJ6FN	SCREW	1	
B114	XQN16+B5FN	SCREW	1	

18.3. LCD SECTION PARTS LIST

Note: 1. *Be sure to make your orders of replacement parts according to this list.
2. IMPORTANT SAFETY NOTICE
Components identified with the mark △ have the special characteristics for safety. When replacing any of these components, use only the same type.
3. Definition of Parts supplier:
Parts without mark in the Remarks column are supplied from SPC.

Ref. No.	Part No.	Part Name & Description	Pcs	Remarks
201	VYK1M60	LCD TOP CASE U	1	
202	VKM6667	LCD BOTOM CASE	1	
203	VSC5681	LCD SHIELD CASE	1	
204	VUALCD150KIT	LCD (MONITOR)	1	
205	VGQ8351	MONITOR SHEET	1	
206	VGL1137	PRISM SHEET A	1	
207	VGL1138	PRISM SHEET B	1	
208	VGL1109	SHEET	1	
209	VKW3178	POLARIZATION PLATE	1	
210	VGL1143	REFLECTION SHEET	1	
212	VXD0444	LCD HINGE (1) U	1	
213	VGQ8338	HINJI BOTOM COVER	1	
214	VGQ8337	HINJI TOP COVER	1	
B201	VHD1675	SCREW	1	
B202	VHD1675	SCREW	1	

18.4. CAMERA LENS SECTION PARTS LIST

Note: 1. *Be sure to make your orders of replacement parts according to this list.
2. IMPORTANT SAFETY NOTICE
Components identified with the mark ⚠ have the special characteristics for safety. When replacing any of these components, use only the same type.
3. Definition of Parts supplier:
Parts without mark in the Remarks column are supplied from SPC.

Ref. No.	Part No.	Part Name & Description	Pcs	Remarks
301	VXQ1288	PRISM UNIT	1	
302	VDL1646	CRYSTAL OPTICS FILTER	1	
303	VMX3456	CUSHION	1	
304	VXW0695	LENS UNIT	1	
305	VXQ1292	MASTER FLANGE UNIT	1	
306	VMS6838	F GUIDE POLE	1	
307	VMS6838	F GUIDE POLE	1	
308	VXP2435	4TH LENS FRAME UNIT	1	
309	VMA0S74	SIDE YORK	1	
310	VXQ1290	OIS UNIT	1	
311	L9ZZ00000218	IRIS UNIT	1	
312	VXP2424	2ND LENS TRANSFER FRAME U	1	
313	VXQ1289	MAIN BODY UNIT	1	
314	L6HA66NC0006	SMALL STEPPING MOTORS	1	
315	VMS7424	Z GUIDE POLE	1	
316	VMS7424	Z GUIDE POLE	1	
317	VEK0H21	LENS FPC UNIT	1	
318	VGQ8430	RADIATOR SHEET B	1	
B301	XQN16+CJ5FJ	SCREW	1	
B302	XQN16+CJ5FJ	SCREW	1	
B303	XQN16+CJ5FJ	SCREW	1	
B304	XQN16+CJ5FJ	SCREW	1	
B305	XQN16+CJ5FJ	SCREW	1	
B306	XQN16+CJ5FJ	SCREW	1	
B307	XQN16+CJ5FJ	SCREW	1	
B308	XQN16+CJ5FJ	SCREW	1	
B309	XQN16+CJ7FJ	SCREW	1	
B310	XQN16+CJ7FJ	SCREW	1	
B311	XQN16+CJ7FJ	SCREW	1	
B312	XQN16+CJ7FJ	SCREW	1	
B313	XQN16+CJ5FJ	SCREW	1	

18.5. VCR MECHANISM SECTION PARTS LIST

Note: 1. *Be sure to make your orders of replacement parts according to this list.
2. IMPORTANT SAFETY NOTICE
Components identified with the mark ⚠ have the special characteristics for safety. When replacing any of these components, use only the same type.
3. Definition of Parts supplier:
Parts without mark in the Remarks column are supplied from SPC.

Ref. No.	Part No.	Part Name & Description	Pcs	Remarks
501	VXA8014	MECHA. CHASSIS	1	
501-4	VXR0403	T REEL U	1	
503	VXA7932	CASSETTE UP U	1	
503-1	VMB3766	CASSETTE UP SPRING	1	
503-2	VMB3766	CASSETTE UP SPRING	1	
504	VEG1663	CYLINDER U	1	
B501	VHD1632	SCREW	1	
B502	VHD1757	SCREW	1	
B503	VHD1757	SCREW	1	
B504	VHD1757	SCREW	1	
B505	VHD1754	SCREW	1	
B506	VHD1754	SCREW	1	
B507	VHD1754	SCREW	1	

18.6. PACKING PARTS & ACCESSORIES SECTION PARTS LIST

Note: 1. *Be sure to make your orders of replacement parts according to this list.
2. IMPORTANT SAFETY NOTICE
Components identified with the mark ⚠ have the special characteristics for safety. When replacing any of these components, use only the same type.
3. Definition of Parts supplier:
Parts without mark in the Remarks column are supplied from SPC.
4. Supply of CD-ROM, in accordance with license protection, is allowable as replacement parts only for customers who accidentally damaged or lost their own.

Ref. No.	Part No.	Part Name & Description	Pcs	Remarks
401	VPG1B71	PACKING CASE	1	
402	VPN6278	CUSHION	1	
403	VPK2942	ACCESSORIES BOX	1	
404	VFC3506-1A	SHOULDER BELT	1	
405	K2GJ2DZ00017	DC CABLE	1	
406	K2KC4CB00018	AV CABLE	1	
407	K2CA2CA00025	AC CABLE	1	⚠
408	N2QAEC000012	REMOTE CONTROLLER	1	
410	N2QCBD000030	UNIVERSAL	1	
		REMOTECONTROLLER		
411	VFA0444	USB CABLE	1	
412	LSQT0862A	OPERATING INSTRUCTIONS (ENGLISH, CANADIAN-FRENCH, SPANISH)	1	⚠
413	VFF0265-S	CD-ROM	1	See "Notes"
414	PV-DAC14D	AC ADAPTOR	1	⚠
420	VYF2992	HOOD CAP U.	1	
421	N9ZZ00000027	SECURITY TAG	1	
422	N9ZZ00000158	SECURITY TAG	1	

18.7. ELECTRICAL REPLACEMENT PARTS LIST

Note: 1. Be sure to make your orders of replacement parts according to this list.
2. IMPORTANT SAFETY NOTICE: Components identified with the mark ⚠ have the special characteristics for safety. When replacing any of these components, use only the same type.
3. Unless otherwise specified,
All resistors are in OHMS, K=1,000 OHMS. All capacitors are in MICROFARADS (uf), P=uuF.
4. The P.C. Board units marked width "■" show below the main assembled parts.
5. The marking (RTL) indicaters the retention time is limited for this item.
After the discontinuation of this assembly in production, it will no longer be available.
6. Definition of Parts supplier:
Parts without mark in the Remarks column are supplied from SPC.

Ref. No.	Part No.	Part Name & Description	Pcs	Remarks
■	VEP03G74E	MAIN C.B.A.	1	(RTL)
■	VEP23613C	SUB C.B.A.	1	(RTL)
■	VEP001H7A	JACK C.B.A.	1	(RTL)
■	VEP001H8B	SIDE (R) C.B.A.	1	(RTL)
■	VEP001J2A	LCD-DET C.B.A.	1	(RTL)
■	VEP08340CKIT	MONITOR C.B.A.	1	(RTL)
■	VEP29163A	EVF B/L C.B.A.	1	(RTL)
■	VEP20B18A	MF SENSOR C.B.A.	1	(RTL)
■	VEP04883A	FRONT C.B.A.	1	(RTL)
■	VEP03G74E	MAIN C.B.A.		(RTL)
C1001	F1J1A475A023	C.CAPACITOR CH 10V 4.7U	1	
C1002	F1J1A475A023	C.CAPACITOR CH 10V 4.7U	1	
C1011	ECJ1VB1A105K	C.CAPACITOR CH 10V 1U	1	
C1012	F1J0J106A025	C.CAPACITOR CH 6.3V 10U	1	
C1013	ECJ0EB1E472K	C.CAPACITOR CH 25V 4700P	1	
C1021	ECJ1VB1A105K	C.CAPACITOR CH 10V 1U	1	
C1022	F1J0J106A025	C.CAPACITOR CH 6.3V 10U	1	
C1023	ECJ0EB1E102K	C.CAPACITOR CH 25V 1000P	1	
C1024	ECJ0EB1C223K	C.CAPACITOR CH 16V 0.022U	1	
C1031	ECJ1VB1A105K	C.CAPACITOR CH 10V 1U	1	
C1032	F1J0J106A025	C.CAPACITOR CH 6.3V 10U	1	
C1033	ECUE1E332KBQ	C.CAPACITOR CH 25V 3300P	1	ECJ0EB1E332K
C1041	ECJ1VB1A105K	C.CAPACITOR CH 10V 1U	1	
C1042	F1J0J106A025	C.CAPACITOR CH 6.3V 10U	1	
C1043	ECJ0EB1E222K	C.CAPACITOR CH 25V 2200P	1	
C1044	ECJ0EB1C223K	C.CAPACITOR CH 16V 0.022U	1	
C1051	ECJ1VB1A105K	C.CAPACITOR CH 10V 1U	1	
C1052	ECJ1VB1C105K	C.CAPACITOR CH 16V 1U	1	
C1053	ECJ0EB1E102K	C.CAPACITOR CH 25V 1000P	1	
C1056	ECJ1VB1C105K	C.CAPACITOR CH 16V 1U	1	
C1061	ECUV1A335KBN	C.CAPACITOR CH 10V 3.3U	1	F1J1A335A005
C1062	ECUV1A335KBN	C.CAPACITOR CH 10V 3.3U	1	F1J1A335A005
C1071	F1J1E105A080	C.CAPACITOR CH 25V 1U	1	
C1101	ECJ0EB1A104K	C.CAPACITOR CH 10V 0.1U	1	
C1102	ECJ0EC1H101J	C.CAPACITOR CH 50V 100P	1	
C1103	ECUE1C333KBQ	C.CAPACITOR CH 16V 0.033U	1	F1G1C333A004
C1104	ECJ0EB1A104K	C.CAPACITOR CH 10V 0.1U	1	
C1105	F1G0J105A001	C.CAPACITOR CH 6.3V 1U	1	
C1106	F1G0J105A001	C.CAPACITOR CH 6.3V 1U	1	
C1111	ECJ0EB1A473K	C.CAPACITOR CH 10V 0.047U	1	
C1113	ECUE1C333KBQ	C.CAPACITOR CH 16V 0.033U	1	F1G1C333A004
C1121	ECJ0EB1A473K	C.CAPACITOR CH 10V 0.047U	1	
C1122	ECJ0EB1A473K	C.CAPACITOR CH 10V 0.047U	1	
C1131	ECJ0EB1A473K	C.CAPACITOR CH 10V 0.047U	1	
C1141	ECJ0EB1A473K	C.CAPACITOR CH 10V 0.047U	1	
C1143	ECJ0EB1C153K	C.CAPACITOR CH 16V 0.015U	1	
C1151	ECJ0EB1A473K	C.CAPACITOR CH 10V 0.047U	1	
C1153	ECJ0EB1C103K	C.CAPACITOR CH 16V 0.01U	1	
C1154	ECJ0EB1C103K	C.CAPACITOR CH 16V 0.01U	1	
C1211	ECJ1VB1A105K	C.CAPACITOR CH 10V 1U	1	
C1221	F1G0J105A001	C.CAPACITOR CH 6.3V 1U	1	
C1223	F1G0J105A001	C.CAPACITOR CH 6.3V 1U	1	
C1224	F1G0J105A001	C.CAPACITOR CH 6.3V 1U	1	
C1226	F1G0J105A001	C.CAPACITOR CH 6.3V 1U	1	
C1228	F3F0J106A055	E.CAPACITOR CH 6.3V 10U	1	
C1232	F1G0J105A001	C.CAPACITOR CH 6.3V 1U	1	
C1239	F3F0J106A055	E.CAPACITOR CH 6.3V 10U	1	
C1241	F1G0J105A001	C.CAPACITOR CH 6.3V 1U	1	
C1249	RCST0GY476RG	T.CAPACITOR CH 4V 47U	1	F3F0G4760001
C1251	ECJ1VB1C105K	C.CAPACITOR CH 16V 1U	1	
C1271	F1J1E105A080	C.CAPACITOR CH 25V 1U	1	
C1281	ECJ1VB1C105K	C.CAPACITOR CH 16V 1U	1	
C1322	F1G0J105A001	C.CAPACITOR CH 6.3V 1U	1	
C1323	F1G0J105A001	C.CAPACITOR CH 6.3V 1U	1	
C1326	F1G0J105A001	C.CAPACITOR CH 6.3V 1U	1	
C1328	F1H0J475A009	C.CAPACITOR CH 6.3V 4.7U	1	
C1401	ECJ0EB1C103K	C.CAPACITOR CH 16V 0.01U	1	
C2001	ECJ0EB1C103K	C.CAPACITOR CH 16V 0.01U	1	
C2002	ECST0JY226Z	T.CAPACITOR CH 6.3V 22U	1	F3F0J226A007
C2004	ECJ0EB1C103K	C.CAPACITOR CH 16V 0.01U	1	
C2005	ECJ0EB1A104K	C.CAPACITOR CH 10V 0.1U	1	
C2006	F3F0J226A055	C.CAPACITOR CH 6.3V 22U	1	
C2008	F3F0J226A055	C.CAPACITOR CH 6.3V 22U	1	
C2010	ECJ0EB1A104K	C.CAPACITOR CH 10V 0.1U	1	
C2012	ECJ0EB1A104K	C.CAPACITOR CH 10V 0.1U	1	
C2013	ECJ0EB1A104K	C.CAPACITOR CH 10V 0.1U	1	
C2016	ECJ0EB1A104K	C.CAPACITOR CH 10V 0.1U	1	

Ref. No.	Part No.	Part Name & Description	Pcs	Remarks
C2017	ECJ0EB1C103K	C.CAPACITOR CH 16V 0.01U	1	
C2019	ECJ0EB1C103K	C.CAPACITOR CH 16V 0.01U	1	
C2027	ECJ0EC1H330J	C.CAPACITOR CH 50V 33P	1	
C2028	F1J0J106A025	C.CAPACITOR CH 6.3V 10U	1	
C2029	ECJ1VB1C105K	C.CAPACITOR CH 16V 1U	1	
C2037	ECJ0EB1A104K	C.CAPACITOR CH 10V 0.1U	1	
C2047	ECJ0EB1C103K	C.CAPACITOR CH 16V 0.01U	1	
C2050	ECJ0EB1C103K	C.CAPACITOR CH 16V 0.01U	1	
C2058	ECJ0EB1A104K	C.CAPACITOR CH 10V 0.1U	1	
C2062	ECJ0EC1H100D	C.CAPACITOR CH 50V 10P	1	
C2063	ECJ0EC1H100D	C.CAPACITOR CH 50V 10P	1	
C2064	ECJ0EB1C103K	C.CAPACITOR CH 16V 0.01U	1	
C2084	ECJ0EB1A104K	C.CAPACITOR CH 10V 0.1U	1	
C2090	F1G0J105A001	C.CAPACITOR CH 6.3V 1U	1	
C2201	ECJ0EB1A104K	C.CAPACITOR CH 10V 0.1U	1	
C2202	ECJ0EB1A104K	C.CAPACITOR CH 10V 0.1U	1	
C2203	F3F0J106A055	E.CAPACITOR CH 6.3V 10U	1	
C2204	F1G1H470A566	C.CAPACITOR CH 50V 47P	1	
C2205	ECJ0EB1A104K	C.CAPACITOR CH 10V 0.1U	1	
C2206	ECJ0EB1A104K	C.CAPACITOR CH 10V 0.1U	1	
C2207	ECJ0EB1A104K	C.CAPACITOR CH 10V 0.1U	1	
C2208	ECJ0EB1A104K	C.CAPACITOR CH 10V 0.1U	1	
C2209	ECJ0EB1A104K	C.CAPACITOR CH 10V 0.1U	1	
C2212	F1G0J105A001	C.CAPACITOR CH 6.3V 1U	1	
C2213	ECJ0EB1C103K	C.CAPACITOR CH 16V 0.01U	1	
C2216	F1G0J105A001	C.CAPACITOR CH 6.3V 1U	1	
C2217	ECJ0EB1A104K	C.CAPACITOR CH 10V 0.1U	1	
C2218	ECJ0EB1A104K	C.CAPACITOR CH 10V 0.1U	1	
C2219	ECJ0EB1A104K	C.CAPACITOR CH 10V 0.1U	1	
C2220	ECJ0EB1A104K	C.CAPACITOR CH 10V 0.1U	1	
C2221	F1G0J105A001	C.CAPACITOR CH 6.3V 1U	1	
C2222	ECJ0EB1E472K	C.CAPACITOR CH 25V 4700P	1	
C2223	ECJ0EB1E472K	C.CAPACITOR CH 25V 4700P	1	
C2225	F1G0J105A001	C.CAPACITOR CH 6.3V 1U	1	
C2226	F1J0J106A025	C.CAPACITOR CH 6.3V 10U	1	
C2230	ECJ0EC1H101J	C.CAPACITOR CH 50V 100P	1	
C2231	ECJ1VB1C105K	C.CAPACITOR CH 16V 1U	1	
C2232	ECJ0EB1C103K	C.CAPACITOR CH 16V 0.01U	1	
C3003	ECJ0EC1H050C	C.CAPACITOR CH 50V 5P	1	
C3006	ECJ0EB1A104K	C.CAPACITOR CH 10V 0.1U	1	

Ref. No.	Part No.	Part Name & Description	Pcs	Remarks
C3014	ECJ0EB1A104K	C.CAPACITOR CH 10V 0.1U	1	
C3015	ECJ0EB1A104K	C.CAPACITOR CH 10V 0.1U	1	
C3017	ECJ0EB1A104K	C.CAPACITOR CH 10V 0.1U	1	
C3019	ECJ0EB1A104K	C.CAPACITOR CH 10V 0.1U	1	
C3027	F1G0J105A001	C.CAPACITOR CH 6.3V 1U	1	
C3030	F1J0J106A025	C.CAPACITOR CH 6.3V 10U	1	
C3039	ECJ0EC1H220J	C.CAPACITOR CH 50V 22P	1	
C3040	ECJ0EC1H220J	C.CAPACITOR CH 50V 22P	1	
C3043	F1G0J105A001	C.CAPACITOR CH 6.3V 1U	1	
C3044	ECJ0EC1H221J	C.CAPACITOR CH 50V 220P	1	
C3046	F1J0J106A025	C.CAPACITOR CH 6.3V 10U	1	
C3057	ECJ0EB1C103K	C.CAPACITOR CH 16V 0.01U	1	
C3058	ECJ0EB1A104K	C.CAPACITOR CH 10V 0.1U	1	
C3059	ECJ0EB1C103K	C.CAPACITOR CH 16V 0.01U	1	
C3060	ECJ0EB1A104K	C.CAPACITOR CH 10V 0.1U	1	
C3068	F1G0J105A001	C.CAPACITOR CH 6.3V 1U	1	
C3074	F1J0J106A025	C.CAPACITOR CH 6.3V 10U	1	
C3078	F1J0J106A025	C.CAPACITOR CH 6.3V 10U	1	
C3202	F1H0J475A009	C.CAPACITOR CH 6.3V 4.7U	1	
C3203	F1H0J475A009	C.CAPACITOR CH 6.3V 4.7U	1	
C3204	ECJ0EB1A104K	C.CAPACITOR CH 10V 0.1U	1	
C3205	ECJ0EB1A104K	C.CAPACITOR CH 10V 0.1U	1	
C3206	ECJ0EB1A104K	C.CAPACITOR CH 10V 0.1U	1	
C3207	ECJ0EB1A104K	C.CAPACITOR CH 10V 0.1U	1	
C3208	ECJ0EB1A104K	C.CAPACITOR CH 10V 0.1U	1	
C3209	ECJ0EB1C103K	C.CAPACITOR CH 16V 0.01U	1	
C3210	F1J0J106A025	C.CAPACITOR CH 6.3V 10U	1	
C3212	ECJ0EB1A104K	C.CAPACITOR CH 10V 0.1U	1	
C3213	ECJ0EB1A104K	C.CAPACITOR CH 10V 0.1U	1	
C3215	ECJ0EB1A104K	C.CAPACITOR CH 10V 0.1U	1	
C3221	F1H0J475A009	C.CAPACITOR CH 6.3V 4.7U	1	
C3229	ECJ0EB1A104K	C.CAPACITOR CH 10V 0.1U	1	
C3301	F1H0J475A009	C.CAPACITOR CH 6.3V 4.7U	1	
C3302	F1G0J105A001	C.CAPACITOR CH 6.3V 1U	1	
C3303	ECJ0EB1A104K	C.CAPACITOR CH 10V 0.1U	1	
C3304	F3F0J226A055	C.CAPACITOR CH 6.3V 22U	1	
C3305	F1J0J106A025	C.CAPACITOR CH 6.3V 10U	1	
C3306	ECJ0EB1A104K	C.CAPACITOR CH 10V 0.1U	1	
C3307	F1J0J106A025	C.CAPACITOR CH 6.3V 10U	1	
C3308	F1G0J224A004	C.CAPACITOR CH 6.3V 0.22U	1	

Ref. No.	Part No.	Part Name & Description	Pcs	Remarks
C3309	F1G0J105A001	C.CAPACITOR CH 6.3V 1U	1	
C3310	F3F0J226A055	C.CAPACITOR CH 6.3V 22U	1	
C3311	ECJ0EB1C103K	C.CAPACITOR CH 16V 0.01U	1	
C3312	F1J0J106A025	C.CAPACITOR CH 6.3V 10U	1	
C3313	F1J0J106A025	C.CAPACITOR CH 6.3V 10U	1	
C3314	F3F0J226A055	C.CAPACITOR CH 6.3V 22U	1	
C3315	F1G0J105A001	C.CAPACITOR CH 6.3V 1U	1	
C3316	F1H0J2250003	C.CAPACITOR CH 6.3V 2.2U	1	
C3317	ECJ0EB1A104K	C.CAPACITOR CH 10V 0.1U	1	
C3318	F1G0J105A001	C.CAPACITOR CH 6.3V 1U	1	
C3319	ECJ0EB1C103K	C.CAPACITOR CH 16V 0.01U	1	
C3320	F1G0J105A001	C.CAPACITOR CH 6.3V 1U	1	
C3321	F1G0J105A001	C.CAPACITOR CH 6.3V 1U	1	
C3322	F1G0J105A001	C.CAPACITOR CH 6.3V 1U	1	
C3323	ECJ0EB1A104K	C.CAPACITOR CH 10V 0.1U	1	
C3324	ECJ0EB1C103K	C.CAPACITOR CH 16V 0.01U	1	
C3327	F1G0J105A001	C.CAPACITOR CH 6.3V 1U	1	
C3330	F3G0J1070004	E.CAPACITOR CH 6.3V 100U	1	
C3331	F1G0J105A001	C.CAPACITOR CH 6.3V 1U	1	
C3332	F3G0J1070004	E.CAPACITOR CH 6.3V 100U	1	
C3333	ECJ0EB1A104K	C.CAPACITOR CH 10V 0.1U	1	
C3341	F1G0J105A001	C.CAPACITOR CH 6.3V 1U	1	
C3342	F1G0J105A001	C.CAPACITOR CH 6.3V 1U	1	
C3343	F1G0J105A001	C.CAPACITOR CH 6.3V 1U	1	
C3344	F1G0J105A001	C.CAPACITOR CH 6.3V 1U	1	
C3501	F1G0J105A001	C.CAPACITOR CH 6.3V 1U	1	
C3502	F1G0J105A001	C.CAPACITOR CH 6.3V 1U	1	
C3503	F1G0J105A001	C.CAPACITOR CH 6.3V 1U	1	
C3506	ECJ0EB1A104K	C.CAPACITOR CH 10V 0.1U	1	
C3511	ECJ0EB1C103K	C.CAPACITOR CH 16V 0.01U	1	
C3514	ECJ0EB1E102K	C.CAPACITOR CH 25V 1000P	1	
C3515	ECJ0EB1E102K	C.CAPACITOR CH 25V 1000P	1	
C3516	ECJ0EB1A104K	C.CAPACITOR CH 10V 0.1U	1	
C3520	ECJ0EB1C103K	C.CAPACITOR CH 16V 0.01U	1	
C3551	ECJ0EC1H220J	C.CAPACITOR CH 50V 22P	1	
C3552	ECJ0EC1H560J	C.CAPACITOR CH 50V 56P	1	
C3553	ECJ0EC1H560J	C.CAPACITOR CH 50V 56P	1	
C3554	ECJ0EC1H220J	C.CAPACITOR CH 50V 22P	1	
C3556	F1H0J475A009	C.CAPACITOR CH 6.3V 4.7U	1	
C3558	ECJ0EB1C103K	C.CAPACITOR CH 16V 0.01U	1	

Ref. No.	Part No.	Part Name & Description	Pcs	Remarks
C3559	ECJ0EB1C103K	C.CAPACITOR CH 16V 0.01U	1	
C3560	ECJ0EB1C103K	C.CAPACITOR CH 16V 0.01U	1	
C3561	ECJ0EC1H220J	C.CAPACITOR CH 50V 22P	1	
C3562	ECJ0EC1H560J	C.CAPACITOR CH 50V 56P	1	
C3563	ECJ0EC1H390J	C.CAPACITOR CH 50V 39P	1	
C3566	ECJ0EB1C103K	C.CAPACITOR CH 16V 0.01U	1	
C3569	ECJ0EB1C103K	C.CAPACITOR CH 16V 0.01U	1	
C3570	ECJ0EB1A104K	C.CAPACITOR CH 10V 0.1U	1	
C3801	F1J0J106A025	C.CAPACITOR CH 6.3V 10U	1	
C3802	F1J0J106A025	C.CAPACITOR CH 6.3V 10U	1	
C3803	F1J0J106A025	C.CAPACITOR CH 6.3V 10U	1	
C3804	ECJ0EC1H100D	C.CAPACITOR CH 50V 10P	1	
C3805	ECJ0EC1H100D	C.CAPACITOR CH 50V 10P	1	
C5001	F3F0J4760002	E.CAPACITOR CH 6.3V 47U	1	
C5002	F1J0J106A025	C.CAPACITOR CH 6.3V 10U	1	
C5003	ECJ0EB1A104K	C.CAPACITOR CH 10V 0.1U	1	
C5005	ECUX1E681KBQ	C.CAPACITOR CH 25V 680P	1	ECJ0EB1E681K
C5008	ECJ0EB1C103K	C.CAPACITOR CH 16V 0.01U	1	
C5012	ECJ0EB1A104K	C.CAPACITOR CH 10V 0.1U	1	
C5013	ECJ0EB1C103K	C.CAPACITOR CH 16V 0.01U	1	
C5014	F1G1H470A566	C.CAPACITOR CH 50V 47P	1	
C5021	ECUM1H080DCQ	C.CAPACITOR CH 50V 8P	1	
C5022	ECUM1H080DCQ	C.CAPACITOR CH 50V 8P	1	
C5023	ECUM1H080DCQ	C.CAPACITOR CH 50V 8P	1	
C5024	ECUM1H080DCQ	C.CAPACITOR CH 50V 8P	1	
CX2002	F1L1E103A065	C.CAPACITOR CH 25V 0.01U	1	
CX2003	F1L1E103A065	C.CAPACITOR CH 25V 0.01U	1	
CX3201	F1L0J104A020	C.CAPACITOR CH 6.3V 0.1U	1	
CX3501	F1L0J104A020	C.CAPACITOR CH 6.3V 0.1U	1	
CX3502	F1L1E103A065	C.CAPACITOR CH 25V 0.01U	1	
D1011	B0JCMD000022	DIODE	1	
D1021	B0JCMD000022	DIODE	1	
D1031	B0JCMD000022	DIODE	1	
D1041	B0JCMD000022	DIODE	1	
D1051	MA2J11100L	DIODE	1	
D1071	MA2J11100L	DIODE	1	
D1101	MAZ81100ML	DIODE	1	
D1102	B0ACCJ000027	DIODE	1	
D2003	MA3S13300L	DIODE	1	
D2004	B0JCDD000002	DIODE	1	
D2010	B0JCDD000002	DIODE	1	
D2201	MA3S13300L	DIODE	1	
D3301	B0JCDD000002	DIODE	1	
FL3001	F1H0J1050022	FILTER	1	
FL3002	F1H0J1050022	FILTER	1	
FL3003	F1H0J1050022	FILTER	1	

Ref. No.	Part No.	Part Name & Description	Pcs	Remarks
FL3004	F1H0J1050022	FILTER	1	
FL3005	F1H0J1050022	FILTER	1	
FL3801	F1H0J1050022	FILTER	1	
FL3802	F1H0J1050022	FILTER	1	
FL3803	F1H0J1050022	FILTER	1	
FL3804	F1H0J1050022	FILTER	1	
FL3805	F1H0J1050022	FILTER	1	
FP1001	K1MN14BA0062	CONNECTOR 14P	1	
FP2201	K1MN18BA0067	CONNECTOR 18P	1	
FP2202	K1MN10BA0067	CONNECTOR 10P	1	
FP2203	K1MN18BA0060	CONNECTOR 18P	1	
FP2204	K1MN08BA0060	CONNECTOR 8P	1	
FP3402	K1MN10A00074	CONNECTOR 10P	1	
FP5001	K1MN08BA0107	CONNECTOR 8P	1	
FP6501	K1MN12BA0059	CONNECTOR 12P	1	
FP6502	K1MN14BA0061	CONNECTOR 14P	1	
FP6503	K1MN26A00068	CONNECTOR 26P	1	
FP6504	K1MN27BA0058	CONNECTOR 27P	1	
FP6505	K1MN21BA0058	CONNECTOR 21P	1	
IC1001	C0DBAZZ00094	IC	1	
IC1321	C0CBCAC00214	IC	1	
IC1322	C0CBCAC00117	IC	1	
IC2001	VUAVM150KMKT	IC	1	
IC2002	C1ZBZ0002602	IC	1	
IC2006	C3EBGG000016	IC	1	
IC2017	C0EBE0000240	IC	1	
IC2019	C0JBAZ002390	IC	1	
IC2201	C1AB00002122	IC	1	
IC2202	C0ABBA000160	IC	1	
IC3001	C1AB00002028	IC	1	
IC3201	C1AB00001695	IC	1	
IC3301	C1AB00001894	IC	1	
IC3501	C1AB00001904	IC	1	
IC3502	NJM2904V	IC	1	C0ABBA000084
IC3503	BA7653AFV	IC	1	C9ZB00000281
IC3801	C1AB00001932	IC	1	
IC5001	AN3732FJMEFV	IC	1	
IP1001	K5H4021A0004	FUSE	1	⚠
L1011	G1C680MA0133	INDUCTOR	1	
L1021	G1C100MA0084	CHIP INDUCTOR 10UH	1	
L1031	G1C330MA0133	CHIP INDUCTOR 33UH	1	
L1041	G1C100MA0133	CHIP INDUCTOR 10UH	1	
L1061	G1C330MA0085	CHIP INDUCTOR 33UH	1	
L1062	G1C181MA0133	CHIP INDUCTOR 180UH	1	
L1211	G1C4R7MA0073	COIL 4.7UH	1	
L1221	G1C4R7MA0073	COIL 4.7UH	1	
L1223	G1C4R7MA0076	COIL 4.7UH	1	
L1224	G1C4R7MA0076	COIL 4.7UH	1	
L1226	G1C4R7MA0073	COIL 4.7UH	1	
L1232	G1C4R7MA0076	COIL 4.7UH	1	
L1241	G1C4R7MA0073	COIL 4.7UH	1	
L1251	G1C4R7MA0076	COIL 4.7UH	1	
L1271	G1C4R7MA0076	COIL 4.7UH	1	
L1281	G1C4R7MA0076	COIL 4.7UH	1	
L1321	G1C4R7MA0076	COIL 4.7UH	1	
L1322	G1C4R7MA0076	COIL 4.7UH	1	
L3012	G1C100MA0060	CHIP INDUCTOR 10UH	1	
L3025	G1C100KA0055	CHIP INDUCTOR 10UH	1	
L3027	G1C100KA0055	CHIP INDUCTOR 10UH	1	
L3204	G1C101KA0055	CHIP INDUCTOR 100UH	1	
L3301	G1C100KA0055	CHIP INDUCTOR 10UH	1	
L3302	G1C330MA0111	CHIP INDUCTOR 33UH	1	
L3303	G1C100KA0055	CHIP INDUCTOR 10UH	1	
L3304	G1C100KA0055	CHIP INDUCTOR 10UH	1	
L3305	G1C100KA0055	CHIP INDUCTOR 10UH	1	
L3501	G1C100KA0055	CHIP INDUCTOR 10UH	1	
L3505	G1C330K00017	CHIP INDUCTOR 33UH	1	

Ref. No.	Part No.	Part Name & Description	Pcs	Remarks
L3506	G1C330K00017	CHIP INDUCTOR 33UH	1	
L3507	G1C330K00017	CHIP INDUCTOR 33UH	1	
L3508	G1C330K00017	CHIP INDUCTOR 33UH	1	
L3509	G1C330K00017	CHIP INDUCTOR 33UH	1	
L5001	G1C101KA0055	CHIP INDUCTOR 100UH	1	
L5002	G1C220KA0055	CHIP INDUCTOR 22UH	1	
LB451	J0JAC0000014	FILTER	1	J0JAC0000016
LB452	J0JAC0000014	FILTER	1	J0JAC0000016
LB453	J0JAC0000014	FILTER	1	J0JAC0000016
LB454	J0JAC0000014	FILTER	1	J0JAC0000016
LB455	J0JAC0000014	FILTER	1	J0JAC0000016
LB456	VLP0332A420	CHIP BEAD	1	J0JHC0000017
LB1001	VLP0332A420	CHIP BEAD	1	J0JHC0000017
LB3003	J0JBC0000115	INDUCTOR	1	
LB3201	J0JAC0000014	FILTER	1	J0JAC0000016
LB3203	J0JAC0000014	FILTER	1	J0JAC0000016
LB3301	J0JAC0000014	FILTER	1	J0JAC0000016
LB3501	J0JBC0000054	INDUCTOR	1	J0JBC0000059
LB3502	J0JBC0000054	INDUCTOR	1	J0JBC0000059
PP3001	K1KA20B00154	CONNECTOR 20P	1	
PS3001	K1KBC0A00037	CONNECTOR	1	
Q451	B1DDCB000002	TRANSISTOR	1	
Q1011	B1DHBC000008	TRANSISTOR	1	
Q1021	B1DHBC000008	TRANSISTOR	1	
Q1022	B1DFCD000012	TRANSISTOR	1	
Q1031	B1DHBC000008	TRANSISTOR	1	
Q1041	B1DHBC000008	TRANSISTOR	1	
Q1042	B1DFCD000012	TRANSISTOR	1	
Q1051	B1DFCG000011	TRANSISTOR	1	
Q1061	B1ZBZ0000040	TRANSISTOR	1	
Q1062	B1ZBZ0000040	TRANSISTOR	1	
Q1101	B1ABBE000002	TRANSISTOR	1	
Q2003	2SD1820	TRANSISTOR	1	
Q2005	2SB970-R	TRANSISTOR	1	2SB09700R
Q3301	B1ABBE000002	TRANSISTOR	1	
Q3302	B1ABBE000002	TRANSISTOR	1	
Q3303	B1ABBE000002	TRANSISTOR	1	
Q3503	XP0460100L	TRANSISTOR	1	
Q3504	2SB1218A-R	TRANSISTOR	1	2SB1218AR
Q3505	B1ABBE000002	TRANSISTOR	1	
Q3506	XP0460100L	TRANSISTOR	1	
QR451	UN9214JTX	TRANSISTOR-RESISTOR	1	
QR1001	B1GDBEHH0001	TRANSISTOR-RESISTOR	1	
QR1101	B1GBBEHH0001	TRANSISTOR-RESISTOR	1	
QR1102	B1GDBEHH0002	TRANSISTOR-RESISTOR	1	
QR1103	UN9114	TRANSISTOR-RESISTOR	1	UNR9114
QR2001	UNR9115J0L	TRANSISTOR	1	
QR2003	B1GBBEMK0001	TRANSISTOR-RESISTOR	1	
QR2005	XP4115	TRANSISTOR-RESISTOR	1	XP04115
QR2006	XP4115	TRANSISTOR-RESISTOR	1	XP04115
QR2007	B1GDBEHM0001	TRANSISTOR-RESISTOR	1	
QR2008	UN921F	TRANSISTOR	1	
QR2010	UNR9215J0L	TRANSISTOR-RESISTOR	1	
QR3501	B1GDBEFH0001	TRANSISTOR-RESISTOR	1	
QR3502	B1GBBEKK0001	TRANSISTOR-RESISTOR	1	
R450	ERJ6GEY0R00V	M.RESISTOR CH 1/10W 0	1	D0GBR00JA017

Ref. No.	Part No.	Part Name & Description	Pcs	Remarks
R451	ERJ2GEJ473Y	M.RESISTOR CH 1/16W 47K	1	
R452	ERJ2GEJ102X	M.RESISTOR CH 1/16W 1K	1	ERJ2RMJ102X
R453	ERJ2GEJ101	M.RESISTOR CH 1/16W 100	1	
R454	ERJ2GEJ101	M.RESISTOR CH 1/16W 100	1	
R455	ERJ2GEJ101	M.RESISTOR CH 1/16W 100	1	
R456	ERJ2GEJ101	M.RESISTOR CH 1/16W 100	1	
R457	ERJ2GEJ101	M.RESISTOR CH 1/16W 100	1	
R1011	ERJ6RBB822	M.RESISTOR CH 1/10W 8.2K	1	
R1014	ERJ2RHD201	M.RESISTOR CH 1/16W 200	1	
R1015	ERJ6RBB272	M.RESISTOR CH 1/10W 2.7K	1	
R1021	ERJ2RHD392	M.RESISTOR CH 1/16W 3.9K	1	
R1024	ERJ2RHD121	M.RESISTOR CH 1/16W 120	1	
R1025	ERJ2RHD272	M.RESISTOR CH 1/16W 2.7K	1	
R1026	ERJ2GEJ101	M.RESISTOR CH 1/16W 100	1	
R1031	ERJ2RHD472	M.RESISTOR CH 1/16W 4.7K	1	
R1034	ERJ2RHD111	M.RESISTOR CH 1/16W 110	1	
R1035	ERJ2RHD272	M.RESISTOR CH 1/16W 2.7K	1	
R1041	ERJ2RHD132	M.RESISTOR CH 1/16W 1.3K	1	
R1044	ERJ2RHD561	M.RESISTOR CH 1/16W 560	1	
R1045	ERJ2RHD222	M.RESISTOR CH 1/16W 2.2K	1	
R1046	ERJ2GEJ331	M.RESISTOR CH 1/16W 330	1	
R1051	ERJ6RBB333	M.RESISTOR CH 1/10W 33K	1	
R1054	ERJ2RKD820	M.RESISTOR CH 1/16W 82	1	
R1055	ERJ6RBB272	M.RESISTOR CH 1/10W 2.7K	1	
R1101	ERJ2RHD123	M.RESISTOR CH 1/16W 12K	1	
R1102	ERJ2RHD113	M.RESISTOR CH 1/16W 11K	1	
R1103	ERJ2GEJ103	M.RESISTOR CH 1/16W 10K	1	
R1105	ERJ2GEJ224	M.RESISTOR CH 1/16W 220K	1	
R1106	ERJ2GEJ104	M.RESISTOR CH 1/16W 100K	1	
R1111	ERJ2GEJ271	M.RESISTOR CH 1/16W 270	1	
R1121	ERJ2GEJ271	M.RESISTOR CH 1/16W 270	1	
R1131	ERJ2GEJ271	M.RESISTOR CH 1/16W 270	1	
R1141	ERJ2GEJ271	M.RESISTOR CH 1/16W 270	1	
R1151	ERJ2GEJ271	M.RESISTOR CH 1/16W 270	1	
R1152	ERJ2RHD223	M.RESISTOR CH 1/16W 22K	1	
R1153	ERJ2RHD153X	M.RESISTOR CH 1/16W 15K	1	
R1211	ERJ3GEY0R00	M.RESISTOR CH 1/10W 0	1	
R1241	ERJ3GEY0R00	M.RESISTOR CH 1/10W 0	1	
R1331	ERJ2GE0R00X	M.RESISTOR CH 1/16W 0	1	
R1401	ERJ2RHD103	M.RESISTOR CH 1/16W 10K	1	

Ref. No.	Part No.	Part Name & Description	Pcs	Remarks
R1402	ERJ2GEJ102X	M.RESISTOR CH 1/16W 1K	1	ERJ2RMJ102X
R2001	ERJ2GE0R00X	M.RESISTOR CH 1/16W 0	1	
R2002	ERJ2GEJ471	M.RESISTOR CH 1/16W 470	1	
R2003	ERJ2GEJ471	M.RESISTOR CH 1/16W 470	1	
R2004	ERJ2GE0R00X	M.RESISTOR CH 1/16W 0	1	
R2005	ERJ2RHD472	M.RESISTOR CH 1/16W 4.7K	1	
R2006	ERJ2GE0R00X	M.RESISTOR CH 1/16W 0	1	
R2007	ERJ2GE0R00X	M.RESISTOR CH 1/16W 0	1	
R2009	ERJ2RHD683	M.RESISTOR CH 1/16W 68K	1	
R2010	ERJ2RHD223	M.RESISTOR CH 1/16W 22K	1	
R2011	ERJ2GE0R00X	M.RESISTOR CH 1/16W 0	1	
R2013	ERJ2GEJ223	M.RESISTOR CH 1/16W 22K	1	
R2014	ERJ2GEJ473Y	M.RESISTOR CH 1/16W 47K	1	
R2017	ERJ2GEJ104	M.RESISTOR CH 1/16W 100K	1	
R2018	ERJ2GEJ470	M.RESISTOR CH 1/16W 47	1	
R2020	ERJ2GEJ473Y	M.RESISTOR CH 1/16W 47K	1	
R2025	ERJ2GEJ473Y	M.RESISTOR CH 1/16W 47K	1	
R2026	ERJ2GE0R00X	M.RESISTOR CH 1/16W 0	1	
R2027	ERJ2GEJ393	M.RESISTOR CH 1/16W 39K	1	
R2029	ERJ2GEJ470	M.RESISTOR CH 1/16W 47	1	
R2030	ERJ2GEJ223	M.RESISTOR CH 1/16W 22K	1	
R2031	ERJ2GE0R00X	M.RESISTOR CH 1/16W 0	1	
R2032	ERJ2GEJ333	M.RESISTOR CH 1/16W 33K	1	
R2034	ERJ2GEJ393	M.RESISTOR CH 1/16W 39K	1	
R2035	ERJ2GEJ104	M.RESISTOR CH 1/16W 100K	1	
R2040	ERJ2GEJ183	M.RESISTOR CH 1/16W 18K	1	
R2045	ERJ2GEJ101	M.RESISTOR CH 1/16W 100	1	
R2046	ERJ2GEJ101	M.RESISTOR CH 1/16W 100	1	
R2047	ERJ2GEJ221	M.RESISTOR CH 1/16W 220	1	
R2050	ERJ2GEJ473Y	M.RESISTOR CH 1/16W 47K	1	
R2054	ERJ2GEJ123	M.RESISTOR CH 1/16W 12K	1	
R2055	ERJ2GEJ123	M.RESISTOR CH 1/16W 12K	1	
R2056	ERJ2RHD103	M.RESISTOR CH 1/16W 10K	1	
R2059	ERJ2GEJ394	M.RESISTOR CH 1/16W 390K	1	
R2063	ERJ2GEJ820	M.RESISTOR CH 1/16W 82	1	
R2069	ERJ2GEJ473Y	M.RESISTOR CH 1/16W 47K	1	
R2070	ERJ2GEJ473Y	M.RESISTOR CH 1/16W 47K	1	
R2073	ERJ2GEJ182	M.RESISTOR CH 1/16W 1.8K	1	
R2079	ERJ2GEJ105	M.RESISTOR CH 1/16W 1M	1	
R2080	ERJ2GEJ152	M.RESISTOR CH 1/16W 1.5K	1	

Ref. No.	Part No.	Part Name & Description	Pcs	Remarks
R2088	ERJ2GE0R00X	M.RESISTOR CH 1/16W 0	1	
R2089	ERJ2GEJ822	M.RESISTOR CH 1/16W 8.2K	1	
R2090	ERJ2GE0R00X	M.RESISTOR CH 1/16W 0	1	
R2091	ERJ2GE0R00X	M.RESISTOR CH 1/16W 0	1	
R2097	ERJ2GE0R00X	M.RESISTOR CH 1/16W 0	1	
R2109	ERJ2GEJ222	M.RESISTOR CH 1/16W 2.2K	1	
R2110	ERJ2GEJ822	M.RESISTOR CH 1/16W 8.2K	1	
R2111	ERJ2GEJ222	M.RESISTOR CH 1/16W 2.2K	1	
R2112	ERJ2GEJ822	M.RESISTOR CH 1/16W 8.2K	1	
R2124	ERJ6GEYJ330V	M.RESISTOR CH 1/10W 33	1	
R2133	ERJ2GEJ222	M.RESISTOR CH 1/16W 2.2K	1	
R2146	ERJ2GEJ472	M.RESISTOR CH 1/16W 4.7K	1	
R2150	ERJ2GE0R00X	M.RESISTOR CH 1/16W 0	1	
R2155	ERJ2GEJ105	M.RESISTOR CH 1/16W 1M	1	
R2177	ERJ2GEJ102X	M.RESISTOR CH 1/16W 1K	1	ERJ2RMJ102X
R2201	ERJ2GEJ101	M.RESISTOR CH 1/16W 100	1	
R2202	ERJ2GEJ474	M.RESISTOR CH 1/16W 470K	1	
R2203	ERJ2GEJ824	M.RESISTOR CH 1/16W 820K	1	
R2204	ERJ2GEJ104	M.RESISTOR CH 1/16W 100K	1	
R2205	ERJ2GEJ103	M.RESISTOR CH 1/16W 10K	1	
R2206	ERJ2GEJ103	M.RESISTOR CH 1/16W 10K	1	
R2207	ERJ2GEJ103	M.RESISTOR CH 1/16W 10K	1	
R2210	ERJ2RHD242	M.RESISTOR CH 1/16W 2.4K	1	
R2211	D1BDR270A053	RESISTOR	1	
R2212	ERJ2GEJ153	M.RESISTOR CH 1/16W 15K	1	
R2213	D1BDR270A053	RESISTOR	1	
R2214	ERJ2RHD273	M.RESISTOR CH 1/16W 27K	1	
R2217	ERJ2GEJ223	M.RESISTOR CH 1/16W 22K	1	
R2218	ERJ2GEJ103	M.RESISTOR CH 1/16W 10K	1	
R2219	ERJ2RHD273	M.RESISTOR CH 1/16W 27K	1	
R2226	D1BDR680A053	RESISTOR	1	
R2228	ERJ2GEJ103	M.RESISTOR CH 1/16W 10K	1	
R2229	ERJ2GEJ183	M.RESISTOR CH 1/16W 18K	1	
R2255	ERJ2GEJ393	M.RESISTOR CH 1/16W 39K	1	
R2256	ERJ2GEJ563	M.RESISTOR CH 1/16W 56K	1	
R3001	ERJ2GEJ220	M.RESISTOR CH 1/16W 22	1	
R3003	ERJ2GEJ472	M.RESISTOR CH 1/16W 4.7K	1	
R3004	ERJ2GEJ103	M.RESISTOR CH 1/16W 10K	1	
R3005	ERJ2GEJ220	M.RESISTOR CH 1/16W 22	1	
R3006	ERJ2GEJ220	M.RESISTOR CH 1/16W 22	1	
R3007	ERJ2GEJ101	M.RESISTOR CH 1/16W 100	1	

Ref. No.	Part No.	Part Name & Description	Pcs	Remarks
R3010	ERJ2GEJ220	M.RESISTOR CH 1/16W 22	1	
R3011	ERJ2GEJ473Y	M.RESISTOR CH 1/16W 47K	1	
R3012	ERJ2GEJ220	M.RESISTOR CH 1/16W 22	1	
R3013	ERJ2RHD123	M.RESISTOR CH 1/16W 12K	1	
R3014	ERJ2GEJ271	M.RESISTOR CH 1/16W 270	1	
R3015	ERJ2GEJ105	M.RESISTOR CH 1/16W 1M	1	
R3016	ERJ2GEJ220	M.RESISTOR CH 1/16W 22	1	
R3017	ERJ2GE0R00X	M.RESISTOR CH 1/16W 0	1	
R3021	ERJ2GE0R00X	M.RESISTOR CH 1/16W 0	1	
R3022	ERJ2RKD560	M.RESISTOR CH 1/16W 56	1	ERJ2RKD560X
R3023	ERJ2RKD560	M.RESISTOR CH 1/16W 56	1	ERJ2RKD560X
R3024	ERJ2RKD560	M.RESISTOR CH 1/16W 56	1	ERJ2RKD560X
R3025	ERJ2RKD560	M.RESISTOR CH 1/16W 56	1	ERJ2RKD560X
R3026	ERJ2GEJ103	M.RESISTOR CH 1/16W 10K	1	
R3027	ERJ2GEJ473Y	M.RESISTOR CH 1/16W 47K	1	
R3028	ERJ2GEJ473Y	M.RESISTOR CH 1/16W 47K	1	
R3029	ERJ2GE0R00X	M.RESISTOR CH 1/16W 0	1	
R3030	ERJ2GE0R00X	M.RESISTOR CH 1/16W 0	1	
R3031	ERJ2GEJ392	M.RESISTOR CH 1/16W 3.9K	1	
R3032	ERJ2GEJ682	M.RESISTOR CH 1/16W 6.8K	1	
R3033	ERJ2RHD103	M.RESISTOR CH 1/16W 10K	1	
R3034	ERJ2RHD103	M.RESISTOR CH 1/16W 10K	1	
R3035	ERJ2GEJ123	M.RESISTOR CH 1/16W 12K	1	
R3036	ERJ2GEJ103	M.RESISTOR CH 1/16W 10K	1	
R3037	ERJ2GEJ473Y	M.RESISTOR CH 1/16W 47K	1	
R3038	ERJ2GEJ473Y	M.RESISTOR CH 1/16W 47K	1	
R3048	ERJ2GEJ223	M.RESISTOR CH 1/16W 22K	1	
R3060	ERJ2GE0R00X	M.RESISTOR CH 1/16W 0	1	
R3063	ERJ2GE0R00X	M.RESISTOR CH 1/16W 0	1	
R3201	ERJ2RHD182	M.RESISTOR CH 1/16W 1.8K	1	
R3202	ERJ2GEJ271	M.RESISTOR CH 1/16W 270	1	
R3203	ERJ2GEJ221	M.RESISTOR CH 1/16W 220	1	
R3204	ERJ2RHD272	M.RESISTOR CH 1/16W 2.7K	1	
R3205	ERJ2GEJ221	M.RESISTOR CH 1/16W 220	1	
R3206	ERJ2GEJ222	M.RESISTOR CH 1/16W 2.2K	1	
R3207	ERJ2GEJ332	M.RESISTOR CH 1/16W 3.3K	1	
R3211	ERJ2GEJ102X	M.RESISTOR CH 1/16W 1K	1	ERJ2RMJ102X
R3212	ERJ2GEJ102X	M.RESISTOR CH 1/16W 1K	1	ERJ2RMJ102X
R3214	ERJ2GEJ103	M.RESISTOR CH 1/16W 10K	1	
R3215	ERJ2GEJ103	M.RESISTOR CH 1/16W 10K	1	

Ref. No.	Part No.	Part Name & Description	Pcs	Remarks
R3219	ERJ2GEJ103	M.RESISTOR CH 1/16W 10K	1	
R3260	ERJ2GE0R00X	M.RESISTOR CH 1/16W 0	1	
R3302	ERJ2GEJ221	M.RESISTOR CH 1/16W 220	1	
R3308	ERJ2GEJ103	M.RESISTOR CH 1/16W 10K	1	
R3309	ERJ2GEJ333	M.RESISTOR CH 1/16W 33K	1	
R3310	ERJ2RHD752	M.RESISTOR CH 1/16W 7.5K	1	
R3311	ERJ2GEJ333	M.RESISTOR CH 1/16W 33K	1	
R3312	ERJ2GEJ153	M.RESISTOR CH 1/16W 15K	1	
R3313	ERJ2GEJ101	M.RESISTOR CH 1/16W 100	1	
R3314	ERJ2GEJ101	M.RESISTOR CH 1/16W 100	1	
R3315	ERJ2GEJ561	M.RESISTOR CH 1/16W 560	1	ERJ2RMJ561X
R3316	ERJ2GEJ561	M.RESISTOR CH 1/16W 560	1	ERJ2RMJ561X
R3317	ERJ2GEJ153	M.RESISTOR CH 1/16W 15K	1	
R3318	ERJ2GEJ473Y	M.RESISTOR CH 1/16W 47K	1	
R3320	ERJ2GEJ100	M.RESISTOR CH 1/16W 10	1	
R3321	ERJ2RKD680	M.RESISTOR CH 1/16W 68	1	
R3322	ERJ2GEJ102X	M.RESISTOR CH 1/16W 1K	1	ERJ2RMJ102X
R3323	ERJ2RKD680	M.RESISTOR CH 1/16W 68	1	
R3324	ERJ2GEJ102X	M.RESISTOR CH 1/16W 1K	1	ERJ2RMJ102X
R3325	ERJ2RKD680	M.RESISTOR CH 1/16W 68	1	
R3326	ERJ2GEJ102X	M.RESISTOR CH 1/16W 1K	1	ERJ2RMJ102X
R3330	ERJ2GEJ473Y	M.RESISTOR CH 1/16W 47K	1	
R3501	ERJ2GEJ102X	M.RESISTOR CH 1/16W 1K	1	ERJ2RMJ102X
R3503	ERJ2GE0R00X	M.RESISTOR CH 1/16W 0	1	
R3504	ERJ2RHD122	M.RESISTOR CH 1/16W 1.2K	1	
R3505	ERJ2RHD102	M.RESISTOR CH 1/16W 1K	1	
R3506	ERJ2RHD102	M.RESISTOR CH 1/16W 1K	1	
R3507	ERJ2RHD392	M.RESISTOR CH 1/16W 3.9K	1	
R3508	ERJ2GEJ101	M.RESISTOR CH 1/16W 100	1	
R3514	ERJ2GEJ223	M.RESISTOR CH 1/16W 22K	1	
R3515	ERJ2GEJ331	M.RESISTOR CH 1/16W 330	1	
R3516	ERJ2GEJ103	M.RESISTOR CH 1/16W 10K	1	
R3549	ERJ2RHD272	M.RESISTOR CH 1/16W 2.7K	1	
R3550	ERJ2GEJ821	M.RESISTOR CH 1/16W 820	1	
R3553	ERJ2RHD102	M.RESISTOR CH 1/16W 1K	1	
R3554	ERJ2GEJ182	M.RESISTOR CH 1/16W 1.8K	1	
R3555	ERJ2GEJ222	M.RESISTOR CH 1/16W 2.2K	1	
R3556	ERJ2GEJ103	M.RESISTOR CH 1/16W 10K	1	
R3557	ERJ2GEJ333	M.RESISTOR CH 1/16W 33K	1	
R3558	ERJ2GEJ333	M.RESISTOR CH 1/16W 33K	1	

Ref. No.	Part No.	Part Name & Description	Pcs	Remarks
R3560	ERJ2GEJ222	M.RESISTOR CH 1/16W 2.2K	1	
R3561	ERJ2RHD102	M.RESISTOR CH 1/16W 1K	1	
R3562	ERJ2RHD102	M.RESISTOR CH 1/16W 1K	1	
R3563	ERJ2GEJ222	M.RESISTOR CH 1/16W 2.2K	1	
R3564	ERJ2GEJ124	M.RESISTOR CH 1/16W 120K	1	
R3565	ERJ2GEJ104	M.RESISTOR CH 1/16W 100K	1	
R3568	ERJ2GEJ183	M.RESISTOR CH 1/16W 18K	1	
R3580	ERJ2GEJ473Y	M.RESISTOR CH 1/16W 47K	1	
R3582	ERJ2GE0R00X	M.RESISTOR CH 1/16W 0	1	
R3801	ERJ2GEJ105	M.RESISTOR CH 1/16W 1M	1	
R3802	ERJ2GE0R00X	M.RESISTOR CH 1/16W 0	1	
R3804	ERJ2GE0R00X	M.RESISTOR CH 1/16W 0	1	
R3805	ERJ2RHD562	M.RESISTOR CH 1/16W 5.6K	1	
R3806	ERJ2GEJ331	M.RESISTOR CH 1/16W 330	1	
R5001	ERJ2GE0R00X	M.RESISTOR CH 1/16W 0	1	
R5004	ERJ2GEJ182	M.RESISTOR CH 1/16W 1.8K	1	
R5006	ERJ2GEJ222	M.RESISTOR CH 1/16W 2.2K	1	
R5015	ERJ2GEJ102X	M.RESISTOR CH 1/16W 1K	1	ERJ2RMJ102X
R6901	ERJ6GEYJ330V	M.RESISTOR CH 1/10W 33	1	
R6905	ERJ2GEJ330	M.RESISTOR CH 1/16W 33	1	
R6908	ERJ2GEJ330	M.RESISTOR CH 1/16W 33	1	
R6910	ERJ2GE0R00X	M.RESISTOR CH 1/16W 0	1	
RX2001	D1H81024A024	RESISTOR	1	
RX2002	D1H84734A024	RESISTOR	1	
RX2003	D1H83324A013	RESISTOR	1	
RX2004	D1H83314A024	RESISTOR	1	
RX2005	D1H84734A024	RESISTOR	1	
RX2006	D1H84734A024	RESISTOR	1	
RX2007	EXB28V103JX	RESISTOR NETWORKS	1	
RX2008	D1H83324A013	RESISTOR	1	
RX2009	D1H81024A024	RESISTOR	1	
RX2010	D1H81024A024	RESISTOR	1	
RX2011	D1H81024A024	RESISTOR	1	
RX2012	EXB28V104JX	RESISTOR NETWORKS	1	
RX2013	D1H81024A024	RESISTOR	1	
RX2201	D1H81024A024	RESISTOR	1	
RX2202	EXB28V103JX	RESISTOR NETWORKS	1	
RX2203	D1H81024A024	RESISTOR	1	
RX3001	D1H84734A024	RESISTOR	1	
RX3002	D1H84734A024	RESISTOR	1	
RX3003	D1H84734A024	RESISTOR	1	
RX3004	D1H84734A024	RESISTOR	1	
RX3005	EXB28V470JX	RESISTOR NETWORKS	1	
RX3201	D1H84734A024	RESISTOR	1	
RX3202	EXB28V103JX	RESISTOR NETWORKS	1	
RX3203	D1H81024A024	RESISTOR	1	
RX5001	EXB28V103JX	RESISTOR NETWORKS	1	
T1051	G5DYA0000096	SWITCHING TRANSFORMER	1	
VZ451	D4ED1270A006	TRANSIENT/SURGE ABSORBER	1	
VZ452	D4ED1270A006	TRANSIENT/SURGE ABSORBER	1	

Ref. No.	Part No.	Part Name & Description	Pcs	Remarks
VZ453	D4ED1270A006	TRANSIENT/SURGE ABSORBER	1	
VZ455	D4ED1270A006	TRANSIENT/SURGE ABSORBER	1	
X2001	H0A327200106	CRYSTAL OSCILLATOR	1	
X2002	H0J135500008	CRYSTAL OSCILLATOR	1	
X3001	H0J245500021	CRYSTAL OSCILLATOR	1	
X3801	H0J480000002	CRYSTAL OSCILLATOR 48MHZ	1	
■	VEP23613C	SUB C.B.A.		(RTL)
C101	F3G0G107A034	E.CAPACITOR CH 4V 100U	1	
C102	F1J1E105A080	C.CAPACITOR CH 25V 1U	1	
C103	F1G0J105A001	C.CAPACITOR CH 6.3V 1U	1	
C104	ECJ0EB1A104K	C.CAPACITOR CH 10V 0.1U	1	
C105	F1G0J105A001	C.CAPACITOR CH 6.3V 1U	1	
C106	F3F0J226A055	C.CAPACITOR CH 6.3V 22U	1	
C107	F1J1E105A080	C.CAPACITOR CH 25V 1U	1	
C108	ECJ0EB1A104K	C.CAPACITOR CH 10V 0.1U	1	
C109	F1J0J106A025	C.CAPACITOR CH 6.3V 10U	1	
C110	ECJ0EC1H100D	C.CAPACITOR CH 50V 10P	1	
C111	ECJ0EB1A104K	C.CAPACITOR CH 10V 0.1U	1	
C113	F1J0J106A025	C.CAPACITOR CH 6.3V 10U	1	
C114	ECJ0EB1A104K	C.CAPACITOR CH 10V 0.1U	1	
C115	ECJ0EB1C103K	C.CAPACITOR CH 16V 0.01U	1	
C118	F1G0J105A001	C.CAPACITOR CH 6.3V 1U	1	
C119	ECJ0EB1A104K	C.CAPACITOR CH 10V 0.1U	1	
C120	ECJ0EB1A104K	C.CAPACITOR CH 10V 0.1U	1	
C121	ECJ0EB1E821K	C.CAPACITOR CH 25V 820P	1	
C122	ECJ0EC1H150J	C.CAPACITOR CH 50V 15P	1	
C123	F1G0J105A001	C.CAPACITOR CH 6.3V 1U	1	
C124	ECJ0EB1A104K	C.CAPACITOR CH 10V 0.1U	1	
C125	ECJ0EB1E821K	C.CAPACITOR CH 25V 820P	1	
C127	F1G0J105A001	C.CAPACITOR CH 6.3V 1U	1	
C128	ECJ0EB1A104K	C.CAPACITOR CH 10V 0.1U	1	
C129	F3G1D106A020	E.CAPACITOR CH 20V 10U	1	
C131	ECJ1VB1C105K	C.CAPACITOR CH 16V 1U	1	
C132	ECJ0EB1E821K	C.CAPACITOR CH 25V 820P	1	
C133	ECJ0EB1A104K	C.CAPACITOR CH 10V 0.1U	1	
C137	F3G0G107A034	E.CAPACITOR CH 4V 100U	1	
C142	F1J1C335A121	C.CAPACITOR CH 16V 3.3U	1	
C150	ECJ0EB1C103K	C.CAPACITOR CH 16V 0.01U	1	
C151	ECJ0EB1C103K	C.CAPACITOR CH 16V 0.01U	1	
C152	ECJ0EB1C103K	C.CAPACITOR CH 16V 0.01U	1	

Ref. No.	Part No.	Part Name & Description	Pcs	Remarks
C154	F1J1E105A080	C.CAPACITOR CH 25V 1U	1	
C156	F1G0J224A004	C.CAPACITOR CH 6.3V 0.22U	1	
C303	ECJ0EB1A104K	C.CAPACITOR CH 10V 0.1U	1	
C304	F3G0G107A034	E.CAPACITOR CH 4V 100U	1	
C305	F1J0J106A025	C.CAPACITOR CH 6.3V 10U	1	
C306	ECJ0EB1A104K	C.CAPACITOR CH 10V 0.1U	1	
C309	ECJ0EB1A104K	C.CAPACITOR CH 10V 0.1U	1	
C311	F1G0J105A001	C.CAPACITOR CH 6.3V 1U	1	
C314	ECJ0EB1A104K	C.CAPACITOR CH 10V 0.1U	1	
C315	ECJ0EB1C153K	C.CAPACITOR CH 16V 0.015U	1	
C318	ECJ0EB1C153K	C.CAPACITOR CH 16V 0.015U	1	
C319	F1H0J2250003	C.CAPACITOR CH 6.3V 2.2U	1	
C321	F1J0J106A025	C.CAPACITOR CH 6.3V 10U	1	
C323	F1G0J105A001	C.CAPACITOR CH 6.3V 1U	1	
C325	F1G0J105A001	C.CAPACITOR CH 6.3V 1U	1	
C328	ECJ0EB1A104K	C.CAPACITOR CH 10V 0.1U	1	
C331	F2G1C2200010	E.CAPACITOR 16V 22U	1	
C334	ECJ0EB1A104K	C.CAPACITOR CH 10V 0.1U	1	
C336	ECJ0EB1C153K	C.CAPACITOR CH 16V 0.015U	1	
C337	ECJ0EB1C153K	C.CAPACITOR CH 16V 0.015U	1	
C338	ECJ0EB1A104K	C.CAPACITOR CH 10V 0.1U	1	
C339	F1J0J106A025	C.CAPACITOR CH 6.3V 10U	1	
C340	ECJ0EB1A104K	C.CAPACITOR CH 10V 0.1U	1	
C341	F1J0J106A025	C.CAPACITOR CH 6.3V 10U	1	
C342	ECJ0EB1C153K	C.CAPACITOR CH 16V 0.015U	1	
C343	ECJ0EB1C153K	C.CAPACITOR CH 16V 0.015U	1	
C344	ECJ0EB1C153K	C.CAPACITOR CH 16V 0.015U	1	
C345	F1J0J106A025	C.CAPACITOR CH 6.3V 10U	1	
C346	F1J0J106A025	C.CAPACITOR CH 6.3V 10U	1	
C347	ECJ0EB1E222K	C.CAPACITOR CH 25V 2200P	1	
C348	ECJ0EB1E222K	C.CAPACITOR CH 25V 2200P	1	
C349	ECJ1VB0J474K	C.CAPACITOR CH 6.3V 0.47U	1	
C350	ECJ0EB1C103K	C.CAPACITOR CH 16V 0.01U	1	
C351	ECJ0EB1C103K	C.CAPACITOR CH 16V 0.01U	1	
C601	RCST0GY476RG	T.CAPACITOR CH 4V 47U	1	F3F0G4760001
C603	F1G0J105A001	C.CAPACITOR CH 6.3V 1U	1	
C604	F1G0J105A001	C.CAPACITOR CH 6.3V 1U	1	
C605	ECJ0EB1A104K	C.CAPACITOR CH 10V 0.1U	1	
C606	ECJ0EB1A104K	C.CAPACITOR CH 10V 0.1U	1	
C607	F1H0J2250003	C.CAPACITOR CH 6.3V 2.2U	1	

Ref. No.	Part No.	Part Name & Description	Pcs	Remarks
C608	F1H0J2250003	C.CAPACITOR CH 6.3V 2.2U	1	
C609	ECJ0EB1A104K	C.CAPACITOR CH 10V 0.1U	1	
C613	F1G0J105A001	C.CAPACITOR CH 6.3V 1U	1	
C614	F1H0J2250003	C.CAPACITOR CH 6.3V 2.2U	1	
C616	F1G0J105A001	C.CAPACITOR CH 6.3V 1U	1	
C622	ECJ0EB1A104K	C.CAPACITOR CH 10V 0.1U	1	
C701	F1G0J105A001	C.CAPACITOR CH 6.3V 1U	1	
C702	ECUX1E271KBQ	C.CAPACITOR CH 25V 270P	1	
C703	ECJ0EB1E102K	C.CAPACITOR CH 25V 1000P	1	
C704	ECJ0EB1E222K	C.CAPACITOR CH 25V 2200P	1	
C705	ECJ0EC1H220J	C.CAPACITOR CH 50V 22P	1	
C706	ECJ0EB1C103K	C.CAPACITOR CH 16V 0.01U	1	
C707	ECJ0EB1C103K	C.CAPACITOR CH 16V 0.01U	1	
C708	ECUE1E272KBQ	C.CAPACITOR CH 25V 2700P	1	ECJ0EB1E272K
C709	ECJ0EB1E222K	C.CAPACITOR CH 25V 2200P	1	
C710	ECJ0EB1E472K	C.CAPACITOR CH 25V 4700P	1	
C711	ECJ0EB1C103K	C.CAPACITOR CH 16V 0.01U	1	
C712	ECJ0EB1C103K	C.CAPACITOR CH 16V 0.01U	1	
C713	ECUX1E471KBQ	C.CAPACITOR CH 25V 470P	1	ECJ0EB1E471K
C714	F3G0G107A034	E.CAPACITOR CH 4V 100U	1	
C715	ECJ0EB1A104K	C.CAPACITOR CH 10V 0.1U	1	
C716	ECJ0EB1E102K	C.CAPACITOR CH 25V 1000P	1	
C717	F1G0J224A004	C.CAPACITOR CH 6.3V 0.22U	1	
C718	ECJ0EC1H151J	C.CAPACITOR CH 50V 150P	1	
C719	F1G0J224A004	C.CAPACITOR CH 6.3V 0.22U	1	
C720	F1G0J105A001	C.CAPACITOR CH 6.3V 1U	1	
C721	ECJ1VB0J105K	C.CAPACITOR CH 6.3V 1U	1	
C723	F1G0J105A001	C.CAPACITOR CH 6.3V 1U	1	
C724	ECJ0EB1A104K	C.CAPACITOR CH 10V 0.1U	1	
C725	F3F1D475A041	E.CAPACITOR CH 20V 4.7U	1	
C727	ECJ0EB1A104K	C.CAPACITOR CH 10V 0.1U	1	
C728	ECJ0EB1A104K	C.CAPACITOR CH 10V 0.1U	1	
C729	ECJ0EB1A473K	C.CAPACITOR CH 10V 0.047U	1	
C730	ECUE1E392KBQ	C.CAPACITOR CH 25V 3900P	1	F1G1E392A056
C731	ECJ0EC1H151J	C.CAPACITOR CH 50V 150P	1	
C732	F1G0J105A001	C.CAPACITOR CH 6.3V 1U	1	
C733	F1G0J224A004	C.CAPACITOR CH 6.3V 0.22U	1	
C734	ECUX1E471KBQ	C.CAPACITOR CH 25V 470P	1	ECJ0EB1E471K
C735	ECJ0EB1C103K	C.CAPACITOR CH 16V 0.01U	1	
C736	ECJ0EB1C103K	C.CAPACITOR CH 16V 0.01U	1	

Ref. No.	Part No.	Part Name & Description	Pcs	Remarks
C737	ECJ0EB1E472K	C.CAPACITOR CH 25V 4700P	1	
C738	ECJ0EB1C103K	C.CAPACITOR CH 16V 0.01U	1	
C739	F1G0J105A001	C.CAPACITOR CH 6.3V 1U	1	
C740	ECJ0EB1E102K	C.CAPACITOR CH 25V 1000P	1	
C741	ECJ0EB1E472K	C.CAPACITOR CH 25V 4700P	1	
C742	F1G0J224A004	C.CAPACITOR CH 6.3V 0.22U	1	
C744	ECJ0EB1A104K	C.CAPACITOR CH 10V 0.1U	1	
C747	ECJ0EB1C103K	C.CAPACITOR CH 16V 0.01U	1	
C748	F1G0J105A001	C.CAPACITOR CH 6.3V 1U	1	
C749	ECJ0EB1E102K	C.CAPACITOR CH 25V 1000P	1	
C750	ECJ0EB1E472K	C.CAPACITOR CH 25V 4700P	1	
C751	ECUX1E471KBQ	C.CAPACITOR CH 25V 470P	1	ECJ0EB1E471K
C752	ECUE1E392KBQ	C.CAPACITOR CH 25V 3900P	1	F1G1E392A056
C753	ECJ0EB1C103K	C.CAPACITOR CH 16V 0.01U	1	
C754	ECJ0EB1A104K	C.CAPACITOR CH 10V 0.1U	1	
C755	ECJ0EB1A473K	C.CAPACITOR CH 10V 0.047U	1	
C757	ECJ0EB1A104K	C.CAPACITOR CH 10V 0.1U	1	
C758	ECJ0EB1A104K	C.CAPACITOR CH 10V 0.1U	1	
C759	ECJ0EB1A104K	C.CAPACITOR CH 10V 0.1U	1	
C1227	F1G0J105A001	C.CAPACITOR CH 6.3V 1U	1	
C1231	F1G0J105A001	C.CAPACITOR CH 6.3V 1U	1	
C1381	F1H0J475A009	C.CAPACITOR CH 6.3V 4.7U	1	
C1382	F1H0J475A009	C.CAPACITOR CH 6.3V 4.7U	1	
C1411	F1H0J475A009	C.CAPACITOR CH 6.3V 4.7U	1	
C1421	F1G0J105A001	C.CAPACITOR CH 6.3V 1U	1	
C1451	F1H0J475A009	C.CAPACITOR CH 6.3V 4.7U	1	
C1481	ECJ2FB0J106K	C.CAPACITOR CH 6.3V 10U	1	
C6401	F1J0J106A025	C.CAPACITOR CH 6.3V 10U	1	
CX301	F1L0J104A020	C.CAPACITOR CH 6.3V 0.1U	1	
CX303	F1L0J104A020	C.CAPACITOR CH 6.3V 0.1U	1	
CX304	F1L0J104A020	C.CAPACITOR CH 6.3V 0.1U	1	
CX305	F1L0J104A020	C.CAPACITOR CH 6.3V 0.1U	1	
D101	MA6S121	DIODE	1	MA6Z121
D102	B0JCDD000002	DIODE	1	
D301	B0JCDD000002	DIODE	1	
D302	B0JCDD000002	DIODE	1	
D303	B0JCDD000002	DIODE	1	
D1421	MA2J11100L	DIODE	1	
D1451	MA2J11100L	DIODE	1	
D1471	MA2J11100L	DIODE	1	
D1481	MA2J11100L	DIODE	1	
D1482	MA2J11100L	DIODE	1	
FL101	F1H0J1050022	FILTER	1	
FL102	F1H0J1050022	FILTER	1	

Ref. No.	Part No.	Part Name & Description	Pcs	Remarks
FP201	K1MN39BA0058	CONNECTOR 39P	1	
FP601	K1MN22A00065	CONNECTOR 22P	1	
FP602	K1MN27BA0058	CONNECTOR 27P	1	
FP701	K1MN45AA0017	CONNECTOR 48P	1	
FP4002	K1MN12BA0067	CONNECTOR 12P	1	
IC101	MN52B0	IC	1	
IC102	C0CBCAD00021	IC	1	
IC103	C0CBCAD00020	IC	1	
IC104	C1AB00001791	IC	1	
IC105	C1AB00001791	IC	1	
IC106	C1AB00001791	IC	1	
IC107	C0JBAB000276	IC	1	
IC108	MN3114QFN-E1	IC	1	
IC110	C0JBAB000276	IC	1	
IC301	C0JBAF000567	IC	1	
IC302	C0CBCAB00014	IC	1	
IC303	C1AB00001929	IC	1	
IC304	C0JBAB000636	IC	1	
IC305	C2DBLJ000102	IC	1	
IC306	TC7SH14FU	IC	1	C0JBAZ001259
IC307	C3EBHC000032	IC	1	
IC308	C0ABHA000049	IC	1	
IC601	C1AB00002022	IC	1	
IC602	C0JBAB000660	IC	1	
IC603	C0JBAB000633	IC	1	
IC701	C0ABCA000064	IC	1	
IC702	C1AB00002147	IC	1	
IC703	C0CBAEC00006	IC	1	
IC704	C1AB00002145	IC	1	
IC705	C0ABCA000064	IC	1	
IC706	NJM2125F	IC	1	C0ABAA000042
IR6401	B3RAB0000045	IR RECEIVER	1	
L101	G1C100KA0055	CHIP INDUCTOR 10UH	1	
L104	G1C100KA0055	CHIP INDUCTOR 10UH	1	
L105	G1C100KA0055	CHIP INDUCTOR 10UH	1	
L702	G1C220KA0055	CHIP INDUCTOR 22UH	1	
L1227	G1C4R7MA0073	COIL 4.7UH	1	
L1231	G1C4R7MA0072	COIL 4.7UH	1	
PP301	VJP4263A120	CONNECTOR (MALE) 120P	1	
Q301	2SB970-R	TRANSISTOR	1	2SB09700R
Q302	B1ABBE000002	TRANSISTOR	1	
Q303	XP4501	TRANSISTOR-TRANSISTOR	1	XP04501
Q701	B1ABBE000002	TRANSISTOR	1	
Q702	2SB970-R	TRANSISTOR	1	2SB09700R
Q703	2SD2216J0L	TRANSISTOR	1	
Q704	2SD0601ARL	TRANSISTOR	1	
Q1351	B1ADBE000001	TRANSISTOR	1	
Q1352	XP1501	TRANSISTOR-TRANSISTOR	1	XP01501
Q1371	B1ABBE000002	TRANSISTOR	1	
Q1372	XP1401	TRANSISTOR-TRANSISTOR	1	XP01401
Q1383	B1ADBE000001	TRANSISTOR	1	
Q1384	XP1501	TRANSISTOR-TRANSISTOR	1	XP01501
Q1385	XP4501	TRANSISTOR-TRANSISTOR	1	XP04501
Q1412	2SB970-R	TRANSISTOR	1	2SB09700R
Q1413	B1ABBE000002	TRANSISTOR	1	
Q1421	2SB970-R	TRANSISTOR	1	2SB09700R
Q1451	B1ABBE000002	TRANSISTOR	1	
Q1481	B1ADGD000005	TRANSISTOR	1	
Q1482	B1ABBE000002	TRANSISTOR	1	
QR301	UNR9215J0L	TRANSISTOR-RESISTOR	1	

Ref. No.	Part No.	Part Name & Description	Pcs	Remarks
QR302	UNR9215J0L	TRANSISTOR-RESISTOR	1	
QR303	UNR9215J0L	TRANSISTOR-RESISTOR	1	
QR1401	UNR911NJ0L	TRANSISTOR-RESISTOR	1	
QR1411	XP0431N00L	TRANSISTOR	1	
QR1451	B1GDBEKM0001	TRANSISTOR-RESISTOR	1	
QR1471	B1GDBEKM0001	TRANSISTOR-RESISTOR	1	
R101	ERJ2GE0R00X	M.RESISTOR CH 1/16W 0	1	
R102	ERJ2GE0R00X	M.RESISTOR CH 1/16W 0	1	
R103	ERJ2GEJ5R6X	M.RESISTOR CH 1/16W 5.6	1	ERJ2RMJ5R6X
R104	ERJ2GEJ5R6X	M.RESISTOR CH 1/16W 5.6	1	ERJ2RMJ5R6X
R105	ERJ2GEJ104	M.RESISTOR CH 1/16W 100K	1	
R106	ERJ2GE0R00X	M.RESISTOR CH 1/16W 0	1	
R108	ERJ2GE0R00X	M.RESISTOR CH 1/16W 0	1	
R109	ERJ2GEJ5R6X	M.RESISTOR CH 1/16W 5.6	1	ERJ2RMJ5R6X
R112	ERJ2GE0R00X	M.RESISTOR CH 1/16W 0	1	
R114	ERJ2GE0R00X	M.RESISTOR CH 1/16W 0	1	
R115	ERJ2GEJ8R2	M.RESISTOR CH 1/16W 8.2	1	
R116	ERJ2GEJ8R2	M.RESISTOR CH 1/16W 8.2	1	
R117	ERJ2GEJ8R2	M.RESISTOR CH 1/16W 8.2	1	
R124	ERJ2GEJ333	M.RESISTOR CH 1/16W 33K	1	
R125	ERJ2GEJ333	M.RESISTOR CH 1/16W 33K	1	
R126	ERJ2GEJ333	M.RESISTOR CH 1/16W 33K	1	
R127	ERJ2GE0R00X	M.RESISTOR CH 1/16W 0	1	
R131	ERJ2GE0R00X	M.RESISTOR CH 1/16W 0	1	
R132	ERJ2GEJ332	M.RESISTOR CH 1/16W 3.3K	1	
R145	ERJ2GE0R00X	M.RESISTOR CH 1/16W 0	1	
R146	ERJ2GE0R00X	M.RESISTOR CH 1/16W 0	1	
R147	ERJ2GEJ332	M.RESISTOR CH 1/16W 3.3K	1	
R148	ERJ2GEJ332	M.RESISTOR CH 1/16W 3.3K	1	
R301	ERJ2GE0R00X	M.RESISTOR CH 1/16W 0	1	
R302	ERJ2GE0R00X	M.RESISTOR CH 1/16W 0	1	
R303	ERJ6GEY0R00V	M.RESISTOR CH 1/10W 0	1	D0GBR00JA017
R304	ERJ2GE0R00X	M.RESISTOR CH 1/16W 0	1	
R305	ERJ2GEJ105	M.RESISTOR CH 1/16W 1M	1	
R306	ERJ2GEJ105	M.RESISTOR CH 1/16W 1M	1	
R307	ERJ2GEJ101	M.RESISTOR CH 1/16W 100	1	
R308	ERJ2GEJ102X	M.RESISTOR CH 1/16W 1K	1	ERJ2RMJ102X
R309	ERJ2GEJ102X	M.RESISTOR CH 1/16W 1K	1	ERJ2RMJ102X
R310	ERJ2GEJ102X	M.RESISTOR CH 1/16W 1K	1	ERJ2RMJ102X
R312	ERJ2GEJ472	M.RESISTOR CH 1/16W 4.7K	1	

Ref. No.	Part No.	Part Name & Description	Pcs	Remarks
R313	ERJ2GEJ682	M.RESISTOR CH 1/16W 6.8K	1	
R314	ERJ2GEJ122	M.RESISTOR CH 1/16W 1.2K	1	
R315	ERJ2GEJ102X	M.RESISTOR CH 1/16W 1K	1	ERJ2RMJ102X
R318	ERJ2GEJ102X	M.RESISTOR CH 1/16W 1K	1	ERJ2RMJ102X
R320	ERJ6GEY0R00V	M.RESISTOR CH 1/10W 0	1	D0GBR00JA017
R321	ERJ2GE0R00X	M.RESISTOR CH 1/16W 0	1	
R322	ERJ2GE0R00X	M.RESISTOR CH 1/16W 0	1	
R323	ERJ2GEJ183	M.RESISTOR CH 1/16W 18K	1	
R324	ERJ2GE0R00X	M.RESISTOR CH 1/16W 0	1	
R326	ERJ2GEJ332	M.RESISTOR CH 1/16W 3.3K	1	
R327	ERJ2GEJ332	M.RESISTOR CH 1/16W 3.3K	1	
R328	ERJ2GEJ103	M.RESISTOR CH 1/16W 10K	1	
R329	ERJ2GEJ472	M.RESISTOR CH 1/16W 4.7K	1	
R330	ERJ6GEY0R00V	M.RESISTOR CH 1/10W 0	1	D0GBR00JA017
R331	ERJ2GEJ473Y	M.RESISTOR CH 1/16W 47K	1	
R332	ERJ2GEJ473Y	M.RESISTOR CH 1/16W 47K	1	
R333	ERJ2GEJ182	M.RESISTOR CH 1/16W 1.8K	1	
R334	ERJ2GEJ153	M.RESISTOR CH 1/16W 15K	1	
R335	ERJ2GEJ473Y	M.RESISTOR CH 1/16W 47K	1	
R336	ERJ2GEJ473Y	M.RESISTOR CH 1/16W 47K	1	
R337	ERJ2GEJ222	M.RESISTOR CH 1/16W 2.2K	1	
R338	ERJ2GEJ473Y	M.RESISTOR CH 1/16W 47K	1	
R339	ERJ6GEY0R00V	M.RESISTOR CH 1/10W 0	1	D0GBR00JA017
R341	ERJ6GEY0R00V	M.RESISTOR CH 1/10W 0	1	D0GBR00JA017
R342	ERJ2GEJ101	M.RESISTOR CH 1/16W 100	1	
R343	ERJ2GE0R00X	M.RESISTOR CH 1/16W 0	1	
R344	ERJ2GE0R00X	M.RESISTOR CH 1/16W 0	1	
R345	ERJ2GE0R00X	M.RESISTOR CH 1/16W 0	1	
R346	ERJ2GE0R00X	M.RESISTOR CH 1/16W 0	1	
R347	ERJ2GE0R00X	M.RESISTOR CH 1/16W 0	1	
R350	ERJ2GEJ102X	M.RESISTOR CH 1/16W 1K	1	ERJ2RMJ102X
R352	ERJ2GEJ333	M.RESISTOR CH 1/16W 33K	1	
R356	ERJ2GEJ101	M.RESISTOR CH 1/16W 100	1	
R357	ERJ2GEJ153	M.RESISTOR CH 1/16W 15K	1	
R358	ERJ2GEJ103	M.RESISTOR CH 1/16W 10K	1	
R359	ERJ2GEJ103	M.RESISTOR CH 1/16W 10K	1	
R361	ERJ2GEJ473Y	M.RESISTOR CH 1/16W 47K	1	
R364	ERJ2GEJ392	M.RESISTOR CH 1/16W 3.9K	1	
R365	ERJ2GEJ332	M.RESISTOR CH 1/16W 3.3K	1	
R366	ERJ2GEJ392	M.RESISTOR CH 1/16W 3.9K	1	

Ref. No.	Part No.	Part Name & Description	Pcs	Remarks
R367	ERJ2GEJ332	M.RESISTOR CH 1/16W 3.3K	1	
R368	ERJ2GEJ102X	M.RESISTOR CH 1/16W 1K	1	ERJ2RMJ102X
R369	ERJ2GEJ274	M.RESISTOR CH 1/16W 270K	1	
R370	ERJ2GEJ472	M.RESISTOR CH 1/16W 4.7K	1	
R371	ERJ2GEJ394	M.RESISTOR CH 1/16W 390K	1	
R372	ERJ2GEJ274	M.RESISTOR CH 1/16W 270K	1	
R374	ERJ2GEJ472	M.RESISTOR CH 1/16W 4.7K	1	
R377	ERJ2GEJ394	M.RESISTOR CH 1/16W 390K	1	
R378	ERJ2GEJ103	M.RESISTOR CH 1/16W 10K	1	
R379	ERJ2GEJ102X	M.RESISTOR CH 1/16W 1K	1	ERJ2RMJ102X
R380	ERJ2GEJ102X	M.RESISTOR CH 1/16W 1K	1	ERJ2RMJ102X
R385	ERJ2GEJ473Y	M.RESISTOR CH 1/16W 47K	1	
R386	ERJ2GEJ473Y	M.RESISTOR CH 1/16W 47K	1	
R387	ERJ2GEJ103	M.RESISTOR CH 1/16W 10K	1	
R388	ERJ2GEJ103	M.RESISTOR CH 1/16W 10K	1	
R421	ERJ2GE0R00X	M.RESISTOR CH 1/16W 0	1	
R479	ERJ2GEJ102X	M.RESISTOR CH 1/16W 1K	1	ERJ2RMJ102X
R481	ERJ2GE0R00X	M.RESISTOR CH 1/16W 0	1	
R601	ERJ6GEY0R00V	M.RESISTOR CH 1/10W 0	1	D0GBR00JA017
R602	ERJ6GEY0R00V	M.RESISTOR CH 1/10W 0	1	D0GBR00JA017
R603	ERJ2RHD511	M.RESISTOR CH 1/16W 510	1	
R604	ERJ2RHD102	M.RESISTOR CH 1/16W 1K	1	
R605	ERJ2GEJ101	M.RESISTOR CH 1/16W 100	1	
R606	ERJ2GEJ101	M.RESISTOR CH 1/16W 100	1	
R607	ERJ2GEJ101	M.RESISTOR CH 1/16W 100	1	
R608	ERJ2RHD103	M.RESISTOR CH 1/16W 10K	1	
R609	ERJ2RHD103	M.RESISTOR CH 1/16W 10K	1	
R614	ERJ2GE0R00X	M.RESISTOR CH 1/16W 0	1	
R615	ERJ2GE0R00X	M.RESISTOR CH 1/16W 0	1	
R616	ERJ2GE0R00X	M.RESISTOR CH 1/16W 0	1	
R617	ERJ2GE0R00X	M.RESISTOR CH 1/16W 0	1	
R618	ERJ2GE0R00X	M.RESISTOR CH 1/16W 0	1	
R619	ERJ2GE0R00X	M.RESISTOR CH 1/16W 0	1	
R620	ERJ2GE0R00X	M.RESISTOR CH 1/16W 0	1	
R621	ERJ2GE0R00X	M.RESISTOR CH 1/16W 0	1	
R622	ERJ2GE0R00X	M.RESISTOR CH 1/16W 0	1	
R701	ERJ2GEJ103	M.RESISTOR CH 1/16W 10K	1	
R702	ERJ2GEJ473Y	M.RESISTOR CH 1/16W 47K	1	
R703	ERJ2GEJ103	M.RESISTOR CH 1/16W 10K	1	
R704	ERJ2GEJ103	M.RESISTOR CH 1/16W 10K	1	

Ref. No.	Part No.	Part Name & Description	Pcs	Remarks
R705	ERJ2GEJ473Y	M.RESISTOR CH 1/16W 47K	1	
R706	ERJ2GEJ472	M.RESISTOR CH 1/16W 4.7K	1	
R708	ERJ2GEJ151	M.RESISTOR CH 1/16W 150	1	
R709	ERJ2GEJ221	M.RESISTOR CH 1/16W 220	1	
R710	ERJ2GEJ103	M.RESISTOR CH 1/16W 10K	1	
R711	ERJ2GE0R00X	M.RESISTOR CH 1/16W 0	1	
R712	ERJ2GEJ472	M.RESISTOR CH 1/16W 4.7K	1	
R713	ERJ2GEJ104	M.RESISTOR CH 1/16W 100K	1	
R714	ERJ2GEJ333	M.RESISTOR CH 1/16W 33K	1	
R715	ERJ2GEJ473Y	M.RESISTOR CH 1/16W 47K	1	
R716	ERJ2GEJ472	M.RESISTOR CH 1/16W 4.7K	1	
R717	ERJ2GEJ472	M.RESISTOR CH 1/16W 4.7K	1	
R718	ERJ2GEJ472	M.RESISTOR CH 1/16W 4.7K	1	
R719	ERJ2GEJ274	M.RESISTOR CH 1/16W 270K	1	
R720	ERJ2GEJ333	M.RESISTOR CH 1/16W 33K	1	
R721	ERJ2GEJ473Y	M.RESISTOR CH 1/16W 47K	1	
R722	ERJ2GEJ224	M.RESISTOR CH 1/16W 220K	1	
R723	ERJ6RBB472	M.RESISTOR CH 1/10W 4.7K	1	
R724	ERJ6RBB472	M.RESISTOR CH 1/10W 4.7K	1	
R725	ERJ2GEJ103	M.RESISTOR CH 1/16W 10K	1	
R726	ERJ2GEJ103	M.RESISTOR CH 1/16W 10K	1	
R727	ERJ2GEJ224	M.RESISTOR CH 1/16W 220K	1	
R728	ERJ2GEJ473Y	M.RESISTOR CH 1/16W 47K	1	
R729	ERJ2GEJ472	M.RESISTOR CH 1/16W 4.7K	1	
R730	ERJ2GEJ103	M.RESISTOR CH 1/16W 10K	1	
R731	ERJ2GEJ823	M.RESISTOR CH 1/16W 82K	1	
R732	ERJ2GEJ333	M.RESISTOR CH 1/16W 33K	1	
R733	ERJ2GEJ563	M.RESISTOR CH 1/16W 56K	1	
R734	ERJ3GEYJ2R2	M.RESISTOR CH 1/10W 2.2	1	
R735	ERJ3GEYJ2R2	M.RESISTOR CH 1/10W 2.2	1	
R736	ERJ6GEYJ3R9	M.RESISTOR CH 1/10W 3.9	1	
R737	ERJ2GEJ103	M.RESISTOR CH 1/16W 10K	1	
R738	ERJ2GEJ473Y	M.RESISTOR CH 1/16W 47K	1	
R739	ERJ2GEJ472	M.RESISTOR CH 1/16W 4.7K	1	
R740	ERJ2GEJ103	M.RESISTOR CH 1/16W 10K	1	
R741	ERJ2GEJ182	M.RESISTOR CH 1/16W 1.8K	1	
R742	ERJ2GEJ472	M.RESISTOR CH 1/16W 4.7K	1	
R743	ERJ2GEJ472	M.RESISTOR CH 1/16W 4.7K	1	
R746	ERJ2GEJ155	M.RESISTOR CH 1/16W 1.5M	1	
R748	ERJ2GEJ103	M.RESISTOR CH 1/16W 10K	1	

Ref. No.	Part No.	Part Name & Description	Pcs	Remarks
R749	ERJ2GEJ473Y	M.RESISTOR CH 1/16W 47K	1	
R750	ERJ2GEJ393	M.RESISTOR CH 1/16W 39K	1	
R751	ERJ2GEJ473Y	M.RESISTOR CH 1/16W 47K	1	
R752	ERJ2GEJ333	M.RESISTOR CH 1/16W 33K	1	
R753	ERJ2GEJ103	M.RESISTOR CH 1/16W 10K	1	
R754	ERJ2GEJ184	M.RESISTOR CH 1/16W 180K	1	
R755	ERJ2GEJ473Y	M.RESISTOR CH 1/16W 47K	1	
R756	ERJ2GEJ823	M.RESISTOR CH 1/16W 82K	1	
R757	ERJ2GEJ101	M.RESISTOR CH 1/16W 100	1	
R758	ERJ2GEJ563	M.RESISTOR CH 1/16W 56K	1	
R759	ERJ2GEJ333	M.RESISTOR CH 1/16W 33K	1	
R760	ERJ2GEJ103	M.RESISTOR CH 1/16W 10K	1	
R761	ERJ2GEJ103	M.RESISTOR CH 1/16W 10K	1	
R762	ERJ2GEJ682	M.RESISTOR CH 1/16W 6.8K	1	
R763	ERJ2GEJ104	M.RESISTOR CH 1/16W 100K	1	
R764	ERJ2GEJ472	M.RESISTOR CH 1/16W 4.7K	1	
R765	ERJ2GEJ101	M.RESISTOR CH 1/16W 100	1	
R766	ERJ2GEJ103	M.RESISTOR CH 1/16W 10K	1	
R767	ERJ2GEJ683	M.RESISTOR CH 1/16W 68K	1	
R768	ERJ3GEYJ3R3	M.RESISTOR CH 1/10W 3.3	1	
R769	ERJ2GEJ684	M.RESISTOR CH 1/16W 680K	1	
R770	ERJ2GEJ101	M.RESISTOR CH 1/16W 100	1	
R771	ERJ3GEYJ3R3	M.RESISTOR CH 1/10W 3.3	1	
R772	ERJ2GEJ102X	M.RESISTOR CH 1/16W 1K	1	ERJ2RMJ102X
R773	ERJ2GEJ334	M.RESISTOR CH 1/16W 330K	1	
R774	ERJ2GEJ563	M.RESISTOR CH 1/16W 56K	1	
R776	ERJ2GED273X	M.RESISTOR CH 1/16W 27K	1	ERJ2RHD273X
R777	ERJ2GEJ103	M.RESISTOR CH 1/16W 10K	1	
R778	ERJ2GEJ473Y	M.RESISTOR CH 1/16W 47K	1	
R779	ERJ2GEJ103	M.RESISTOR CH 1/16W 10K	1	
R780	ERJ2GEJ224	M.RESISTOR CH 1/16W 220K	1	
R781	ERJ2GEJ473Y	M.RESISTOR CH 1/16W 47K	1	
R782	ERJ2GEJ103	M.RESISTOR CH 1/16W 10K	1	
R783	ERJ2GEJ103	M.RESISTOR CH 1/16W 10K	1	
R784	ERJ2GEJ103	M.RESISTOR CH 1/16W 10K	1	
R785	ERJ2GEJ103	M.RESISTOR CH 1/16W 10K	1	
R786	ERJ2GEJ393	M.RESISTOR CH 1/16W 39K	1	
R787	ERJ2GEJ473Y	M.RESISTOR CH 1/16W 47K	1	
R788	ERJ2GEJ182	M.RESISTOR CH 1/16W 1.8K	1	
R789	ERJ2GEJ103	M.RESISTOR CH 1/16W 10K	1	

Ref. No.	Part No.	Part Name & Description	Pcs	Remarks
R793	ERJ2GEJ473Y	M.RESISTOR CH 1/16W 47K	1	
R794	ERJ2GEJ222	M.RESISTOR CH 1/16W 2.2K	1	
R795	ERJ2GEJ564	M.RESISTOR CH 1/16W 560K	1	
R796	ERJ2GEJ472	M.RESISTOR CH 1/16W 4.7K	1	
R797	ERJ2GEJ474	M.RESISTOR CH 1/16W 470K	1	
R798	ERJ2GEJ224	M.RESISTOR CH 1/16W 220K	1	
R799	ERJ2GEJ224	M.RESISTOR CH 1/16W 220K	1	
R1351	ERJ2RHD104	M.RESISTOR CH 1/16W 100K	1	
R1352	ERJ2RHD163	M.RESISTOR CH 1/16W 16K	1	
R1353	ERJ2RHD183	M.RESISTOR CH 1/16W 18K	1	
R1354	ERJ2GEJ103	M.RESISTOR CH 1/16W 10K	1	
R1355	ERJ2GEJ473Y	M.RESISTOR CH 1/16W 47K	1	
R1371	ERJ2RHD153X	M.RESISTOR CH 1/16W 15K	1	
R1372	ERJ2RHD911	M.RESISTOR CH 1/16W 910	1	
R1373	ERJ2RHD103	M.RESISTOR CH 1/16W 10K	1	
R1374	ERJ2GEJ123	M.RESISTOR CH 1/16W 12K	1	
R1375	ERJ2GEJ103	M.RESISTOR CH 1/16W 10K	1	
R1380	ERJ2GEJ473Y	M.RESISTOR CH 1/16W 47K	1	
R1386	ERJ2RHD563	M.RESISTOR CH 1/16W 56K	1	
R1387	ERJ2RHD512	M.RESISTOR CH 1/16W 5.1K	1	
R1388	ERJ2RHD183	M.RESISTOR CH 1/16W 18K	1	
R1389	ERJ2GEJ103	M.RESISTOR CH 1/16W 10K	1	
R1395	ERJ2GEJ104	M.RESISTOR CH 1/16W 100K	1	
R1396	ERJ6GEYJ332V	M.RESISTOR CH 1/10W 3.3K	1	
R1397	ERJ6GEYJ332V	M.RESISTOR CH 1/10W 3.3K	1	
R1398	ERJ2GEJ473Y	M.RESISTOR CH 1/16W 47K	1	
R1399	ERJ2GEJ223	M.RESISTOR CH 1/16W 22K	1	
R1400	ERJ2RHD272	M.RESISTOR CH 1/16W 2.7K	1	
R1413	ERJ2GEJ473Y	M.RESISTOR CH 1/16W 47K	1	
R1414	ERJ2GEJ152	M.RESISTOR CH 1/16W 1.5K	1	
R1415	ERJ2GEJ332	M.RESISTOR CH 1/16W 3.3K	1	
R1416	ERJ2GEJ473Y	M.RESISTOR CH 1/16W 47K	1	
R1421	ERJ2GEJ473Y	M.RESISTOR CH 1/16W 47K	1	
R1422	ERJ2GEJ222	M.RESISTOR CH 1/16W 2.2K	1	
R1451	ERJ2GEJ473Y	M.RESISTOR CH 1/16W 47K	1	
R1452	ERJ2GEJ103	M.RESISTOR CH 1/16W 10K	1	
R1481	ERJ2GEJ473Y	M.RESISTOR CH 1/16W 47K	1	
R1482	ERJ2GEJ223	M.RESISTOR CH 1/16W 22K	1	
R1483	ERJ2GEJ183	M.RESISTOR CH 1/16W 18K	1	
R1484	ERJ2GEJ224	M.RESISTOR CH 1/16W 220K	1	

Ref. No.	Part No.	Part Name & Description	Pcs	Remarks
R1485	ERJ6GEY0R00V	M.RESISTOR CH 1/10W 0	1	D0GBR00JA017
R1486	ERJ2GE0R00X	M.RESISTOR CH 1/16W 0	1	
R6402	ERJ2GEJ330	M.RESISTOR CH 1/16W 33	1	
RX301	D1H83324A013	RESISTOR	1	
RX303	D1H84724A024	RESISTOR	1	
RX304	D1H84724A024	RESISTOR	1	
X101	H1A5405B0011	CRYSTAL OSCILLATOR	1	
■	VEP001H7A	JACK C.B.A.		(RTL)
C3908	F1G0J105A001	C.CAPACITOR CH 6.3V 1U	1	
C4001	F1G0J105A001	C.CAPACITOR CH 6.3V 1U	1	
C4003	ECJ0EB1E472K	C.CAPACITOR CH 25V 4700P	1	
C4004	ECJ0EB1E472K	C.CAPACITOR CH 25V 4700P	1	
C4901	ECJ0EB1E472K	C.CAPACITOR CH 25V 4700P	1	
C4902	ECJ0EB1E472K	C.CAPACITOR CH 25V 4700P	1	
C4903	F1G0J105A001	C.CAPACITOR CH 6.3V 1U	1	
C4904	F1G0J105A001	C.CAPACITOR CH 6.3V 1U	1	
C4905	ECST0JY226Z	T.CAPACITOR CH 6.3V 22U	1	F3F0J226A007
C4906	ECST0JY226Z	T.CAPACITOR CH 6.3V 22U	1	F3F0J226A007
C4908	F1G0J105A001	C.CAPACITOR CH 6.3V 1U	1	
C4909	ECJ1VB0J105K	C.CAPACITOR CH 6.3V 1U	1	
C4910	ECST0JY226Z	T.CAPACITOR CH 6.3V 22U	1	F3F0J226A007
C4913	F1H0J475A009	C.CAPACITOR CH 6.3V 4.7U	1	
D4901	B0JCDD000002	DIODE	1	
FL2503	J0MAB0000140	FILTER	1	
FP6201	K1MN27B00036	CONNECTOR 27P	1	
JK3001	VJJ0670	S-JACK	1	K2HZ104A0002
JK3901	K2HZ105E0008	JACK	1	
JK4001	K2HC106B0018	JACK	1	
JK4901	K2HC107B0003	JACK	1	
LB3902	J0JAC0000014	FILTER	1	J0JAC0000016
LB4001	J0JBC0000054	INDUCTOR	1	J0JBC0000059
LB4003	J0JAC0000014	FILTER	1	J0JAC0000016
LB4005	J0JAC0000014	FILTER	1	J0JAC0000016
LB4006	J0JAC0000014	FILTER	1	J0JAC0000016
LB4007	J0JBC0000054	INDUCTOR	1	J0JBC0000059
LB4008	J0JBC0000054	INDUCTOR	1	J0JBC0000059
LB4009	J0JAC0000014	FILTER	1	J0JAC0000016
LB4921	J0JAC0000015	FILTER	1	J0JAC0000017
LB4922	J0JAC0000015	FILTER	1	J0JAC0000017
LB4923	J0JAC0000015	FILTER	1	J0JAC0000017
LB4924	J0JAC0000015	FILTER	1	J0JAC0000017
LB4926	J0JAC0000015	FILTER	1	J0JAC0000017
LB4928	J0JAC0000015	FILTER	1	J0JAC0000017
Q4901	2SD2216J0L	TRANSISTOR	1	
Q4902	2SB1462JHL	TRANSISTOR	1	
Q4903	2SD2216J0L	TRANSISTOR	1	
Q4904	2SB1462JHL	TRANSISTOR	1	
Q4907	B1ABBE000002	TRANSISTOR	1	
Q4908	B1ABBE000002	TRANSISTOR	1	

Ref. No.	Part No.	Part Name & Description	Pcs	Remarks
QR4901	B1GDBEHH0001	TRANSISTOR-RESISTOR	1	
R4001	ERJ2GEJ101	M.RESISTOR CH 1/16W 100	1	
R4901	ERJ3RBD331	M.RESISTOR CH 1/16W 330	1	
R4902	ERJ2GEJ472	M.RESISTOR CH 1/16W 4.7K	1	
R4904	ERJ3RBD562	M.RESISTOR CH 1/16W 5.6K	1	
R4905	ERJ2GEJ471	M.RESISTOR CH 1/16W 470	1	
R4906	ERJ3RBD103	M.RESISTOR CH 1/16W 10K	1	
R4907	VRE0071E154	M.RESISTOR 150K	1	D0HB154ZA004
R4908	ERJ3RBD563	M.RESISTOR CH 1/16W 56K	1	ERJ3RBD563V
R4909	ERJ2GEJ102X	M.RESISTOR CH 1/16W 1K	1	ERJ2RMJ102X
R4910	ERJ2GEJ562	M.RESISTOR CH 1/16W 5.6K	1	
R4911	ERJ2GEJ151	M.RESISTOR CH 1/16W 150	1	
R4912	ERJ2GEJ471	M.RESISTOR CH 1/16W 470	1	
R4913	ERJ3RBD103	M.RESISTOR CH 1/16W 10K	1	
R4914	VRE0071E154	M.RESISTOR 150K	1	D0HB154ZA004
R4915	ERJ3RBD563	M.RESISTOR CH 1/16W 56K	1	ERJ3RBD563V
R4916	ERJ2GEJ102X	M.RESISTOR CH 1/16W 1K	1	ERJ2RMJ102X
R4917	ERJ2GEJ562	M.RESISTOR CH 1/16W 5.6K	1	
R4918	ERJ2GEJ151	M.RESISTOR CH 1/16W 150	1	
R4920	ERJ3RBD562	M.RESISTOR CH 1/16W 5.6K	1	
R4922	ERJ2GEJ223	M.RESISTOR CH 1/16W 22K	1	
R4923	ERJ2GEJ683	M.RESISTOR CH 1/16W 68K	1	
R4924	ERJ2GEJ473Y	M.RESISTOR CH 1/16W 47K	1	
S6212	ABC1111P	SWITCH	1	K0L1BA000050
VZ4001	D4ED1120A002	TRANSIENT/SURGE ABSORBER	1	
VZ4002	D4ED1270A008	TRANSIENT/SURGE ABSORBER	1	
VZ4003	D4ED1270A008	TRANSIENT/SURGE ABSORBER	1	
VZ4004	D4ED1270A006	TRANSIENT/SURGE ABSORBER	1	
VZ4902	D4ED1120A002	TRANSIENT/SURGE ABSORBER	1	
VZ4903	D4ED1120A002	TRANSIENT/SURGE ABSORBER	1	
■	VEP001H8B	SIDE (R) C.B.A.		(RTL)
C6301	F1H0J475A009	C.CAPACITOR CH 6.3V 4.7U	1	
C6302	F1G1H470A566	C.CAPACITOR CH 50V 47P	1	
C6303	F1G1H470A566	C.CAPACITOR CH 50V 47P	1	
C6304	F1G1H470A566	C.CAPACITOR CH 50V 47P	1	
C6305	F1G1H470A566	C.CAPACITOR CH 50V 47P	1	
C6306	ECJ0EB1A104K	C.CAPACITOR CH 10V 0.1U	1	
C6307	ECJ0EB1A104K	C.CAPACITOR CH 10V 0.1U	1	
C6310	ECJ0EC1H050C	C.CAPACITOR CH 50V 5P	1	

Ref. No.	Part No.	Part Name & Description	Pcs	Remarks
C6321	F1G0J105A001	C.CAPACITOR CH 6.3V 1U	1	
D6301	SML-310MT	LED	1	B3ABB0000091
D6601	B3AAB0000037	LED	1	
FL3952	J0MAB0000116	FILTER	1	
FL3953	J0MAB0000116	FILTER	1	
FL6301	F1H0J1050022	FILTER	1	
FP6301	K1MN26A00068	CONNECTOR 26P	1	
HS6301	K1NA09E00038	SD CARD SLOT	1	
JK3952	K1FA104A0017	JACK	1	
R6302	ERJ2GEJ220	M.RESISTOR CH 1/16W 22	1	
R6303	ERJ2GEJ220	M.RESISTOR CH 1/16W 22	1	
R6304	ERJ2GEJ473Y	M.RESISTOR CH 1/16W 47K	1	
R6305	ERJ2GEJ473Y	M.RESISTOR CH 1/16W 47K	1	
R6306	ERJ2GEJ220	M.RESISTOR CH 1/16W 22	1	
R6307	ERJ2GEJ220	M.RESISTOR CH 1/16W 22	1	
R6308	ERJ2GEJ472	M.RESISTOR CH 1/16W 4.7K	1	
R6309	ERJ2GEJ472	M.RESISTOR CH 1/16W 4.7K	1	
R6310	ERJ2GEJ472	M.RESISTOR CH 1/16W 4.7K	1	
R6311	ERJ2GEJ472	M.RESISTOR CH 1/16W 4.7K	1	
R6316	ERJ2GEJ471	M.RESISTOR CH 1/16W 470	1	
S6301	K0H1BA000436	SWITCH	1	
S6302	K0H1BA000436	SWITCH	1	
S6304	VSS0533	SLIDE SWITCH	1	K0D112A00116
■	VEP001J2A	LCD-DET C.B.A.		(RTL)
S6701	K0L1BA000101	SWITCH	1	
■	VEP08340CKIT	MONITOR C.B.A.		(RTL)
C901	ECJ1VB0J105K	C.CAPACITOR CH 6.3V 1U	1	
C902	ECJ1VB1A105K	C.CAPACITOR CH 10V 1U	1	
C903	F1J1A475A023	C.CAPACITOR CH 10V 4.7U	1	
C913	ECJ0EC1H390J	C.CAPACITOR CH 50V 39P	1	
C914	ECJ0EC1H390J	C.CAPACITOR CH 50V 39P	1	
C915	ECJ0EC1H390J	C.CAPACITOR CH 50V 39P	1	
C916	ECJ0EB1A104K	C.CAPACITOR CH 10V 0.1U	1	
C918	F1J1A475A023	C.CAPACITOR CH 10V 4.7U	1	
C933	ECJ1VB0J105K	C.CAPACITOR CH 6.3V 1U	1	
D902	B0BC6R100025	DIODE	1	
D905	B3AFB0000082	LED	1	
D906	B3AFB0000082	LED	1	
D907	B3AFB0000082	LED	1	
D908	B3AFB0000082	LED	1	
D909	B3AFB0000082	LED	1	
D910	B3AFB0000082	LED	1	
D911	B3AFB0000082	LED	1	

Ref. No.	Part No.	Part Name & Description	Pcs	Remarks
FP901	K1MN24BA0055	CONNECTOR 24P	1	
FP902	K1MN25B00072	CONNECTOR 25P	1	
L901	G1C101KA0055	CHIP INDUCTOR 100UH	1	
Q901	B1ADBE000001	TRANSISTOR	1	
Q902	2SD2216J0L	TRANSISTOR	1	
Q903	2SD2216J0L	TRANSISTOR	1	
Q904	2SD2216J0L	TRANSISTOR	1	
Q906	2SD2216J0L	TRANSISTOR	1	
Q907	2SD2216J0L	TRANSISTOR	1	
Q908	2SD2216J0L	TRANSISTOR	1	
Q909	2SD2216J0L	TRANSISTOR	1	
Q913	B1ADBE000001	TRANSISTOR	1	
R901	ERJ3RBD122	M.RESISTOR CH 1/16W 1.2K	1	
R902	ERJ6GEY0R00V	M.RESISTOR CH 1/10W 0	1	D0GBR00JA017
R903	ERJ3RBD182	M.RESISTOR CH 1/16W 1.8K	1	
R904	ERJ3RBD153	M.RESISTOR CH 1/16W 15K	1	
R906	ERJ3RBD563	M.RESISTOR CH 1/16W 56K	1	ERJ3RBD563V
R907	ERJ3GEYJ331	M.RESISTOR CH 1/10W 330	1	
R908	ERJ3GEYJ331	M.RESISTOR CH 1/10W 330	1	
R909	ERJ3GEYJ331	M.RESISTOR CH 1/10W 330	1	
R910	ERJ3RBD822	M.RESISTOR CH 1/16W 8.2K	1	
R912	ERJ3RBD102	M.RESISTOR CH 1/16W 1K	1	
R913	ERJ3RBD472	M.RESISTOR CH 1/16W 4.7K	1	
R915	ERJ3GEYJ102V	M.RESISTOR CH 1/10W 1K	1	
R918	ERJ3RED270	M.RESISTOR CH 1/16W 27	1	
R924	ERJ3RED270	M.RESISTOR CH 1/16W 27	1	
R925	ERJ3RED270	M.RESISTOR CH 1/16W 27	1	
R930	ERJ3RBD103	M.RESISTOR CH 1/16W 10K	1	
R931	ERJ3RED270	M.RESISTOR CH 1/16W 27	1	
R932	ERJ3RED270	M.RESISTOR CH 1/16W 27	1	
R933	ERJ3RED270	M.RESISTOR CH 1/16W 27	1	
R934	ERJ3RED270	M.RESISTOR CH 1/16W 27	1	
R937	ERJ3RBD473	M.RESISTOR CH 1/16W 47K	1	
R940	ERJ3GEYJ103V	M.RESISTOR CH 1/10W 10K	1	D0GB103JA002
■	VEP29163A	EVF B/L C.B.A.		(RTL)
C801	ECJ1VB0J474K	C.CAPACITOR CH 6.3V 0.47U	1	
C802	ECJ1VB1A105K	C.CAPACITOR CH 10V 1U	1	
D801	B3AFB0000081	LED	1	
D802	MA8047M	DIODE	1	MAZ80470M
D803	B0BC6R100025	DIODE	1	
D804	MA3S13300L	DIODE	1	
FP801	K1MN22BA0055	CONNECTOR 22P	1	
FP802	K1MN22BA0050	CONNECTOR 22P	1	
Q801	2SD2216J0L	TRANSISTOR	1	

Ref. No.	Part No.	Part Name & Description	Pcs	Remarks
R801	ERJ3GEYJ472	M.RESISTOR CH 1/10W 4.7K	1	
R804	ERJ3RED470	M.RESISTOR CH 1/16W 47	1	
■	VEP20B18A	MF SENSOR C.B.A.		(RTL)
Q710	CNA1312K01VT	PHOTO SENSOR	1	
Q711	CNA1312K01VT	PHOTO SENSOR	1	
■	VEP04883A	FRONT C.B.A.		(RTL)
C401	F3F0J226A055	C.CAPACITOR CH 6.3V 22U	1	
C403	F3F0J226A055	C.CAPACITOR CH 6.3V 22U	1	
C488	F3F0J226A055	C.CAPACITOR CH 6.3V 22U	1	
C491	ECJ0EB1A104K	C.CAPACITOR CH 10V 0.1U	1	
C492	F1G0J224A004	C.CAPACITOR CH 6.3V 0.22U	1	
C493	F1G0J224A004	C.CAPACITOR CH 6.3V 0.22U	1	
C495	F3F0J226A055	C.CAPACITOR CH 6.3V 22U	1	
C4801	ECJ0EB1A473K	C.CAPACITOR CH 10V 0.047U	1	
C4802	ECJ0EB1A473K	C.CAPACITOR CH 10V 0.047U	1	
C4803	ECUX1E681KBQ	C.CAPACITOR CH 25V 680P	1	ECJ0EB1E681K
C4804	ECUX1E681KBQ	C.CAPACITOR CH 25V 680P	1	ECJ0EB1E681K
C4807	F1H0J475A009	C.CAPACITOR CH 6.3V 4.7U	1	
C4808	F3F0J226A055	C.CAPACITOR CH 6.3V 22U	1	
C4899	ECJ1VB0J105K	C.CAPACITOR CH 6.3V 1U	1	
C7001	ECJ1VB1C105K	C.CAPACITOR CH 16V 1U	1	
C7003	ECJ0EB1C103K	C.CAPACITOR CH 16V 0.01U	1	
C7004	F2AZZ6500002	E.CAPACITOR	1	
C7006	ECJ0EB1A104K	C.CAPACITOR CH 10V 0.1U	1	
C7007	ECJ0EB1C103K	C.CAPACITOR CH 16V 0.01U	1	
D491	MA3S132D0L	DIODE	1	
D6801	B3AAB0000037	LED	1	
D6802	B3GA00000047	PHOTO DETECTORS	1	
D7001	MA2S11100L	DIODE	1	
D7003	B0ECKT000001	DIODE	1	
D7004	B0BC30000001	DIODE	1	
D7006	B0JCDD000002	DIODE	1	
FP4801	K1MN28A00042	CONNECTOR 28P	1	
FP7001	K1MN06BA0108	CONNECTOR 6P	1	
FP7002	K1MN27BA0058	CONNECTOR 27P	1	
IC481	L2ES00000013	IC	1	
IC482	L2ES00000012	IC	1	
IC4801	NJM2115V	IC	1	C0ABBB000104
IC7001	C0JBAA000345	IC	1	
IC7003	B1JBLP000010	IC	1	
L401	G1C100KA0055	CHIP INDUCTOR 10UH	1	
L480	G1C100KA0055	CHIP INDUCTOR 10UH	1	
L7001	G1C560MA0024	CHIP INDUCTOR 56UH	1	
Q491	B1ABCF000100	TRANSISTOR	1	
Q492	B1ABBE000002	TRANSISTOR	1	
Q4803	B1ABBE000002	TRANSISTOR	1	
Q7001	2SD2216J0L	TRANSISTOR	1	
Q7002	B1ABPF000009	TRANSISTOR	1	

Ref. No.	Part No.	Part Name & Description	Pcs	Remarks
Q7003	B1ABBE000002	TRANSISTOR	1	
QR7008	UN9214JTX	TRANSISTOR-RESISTOR	1	
R491	ERJ2GEJ225	M.RESISTOR CH 1/16W 2.2M	1	ERJ2RMJ225X
R492	ERJ2GEJ334	M.RESISTOR CH 1/16W 330K	1	
R493	ERJ2GEJ472	M.RESISTOR CH 1/16W 4.7K	1	
R494	ERJ2GEJ182	M.RESISTOR CH 1/16W 1.8K	1	
R495	ERJ3GEYJ106	M.RESISTOR CH 1/10W 10M	1	
R4801	ERJ6GEYG392	M.RESISTOR CH 1/10W 3.9K	1	
R4802	ERJ6GEYG392	M.RESISTOR CH 1/10W 3.9K	1	
R4803	ERJ2GE0R00X	M.RESISTOR CH 1/16W 0	1	
R4804	ERJ2GE0R00X	M.RESISTOR CH 1/16W 0	1	
R4805	ERJ2GEJ563	M.RESISTOR CH 1/16W 56K	1	
R4806	ERJ2GEJ563	M.RESISTOR CH 1/16W 56K	1	
R4807	ERJ2GEJ103	M.RESISTOR CH 1/16W 10K	1	
R4808	ERJ2GEJ103	M.RESISTOR CH 1/16W 10K	1	
R4813	ERJ2GEJ223	M.RESISTOR CH 1/16W 22K	1	
R4814	ERJ2GEJ333	M.RESISTOR CH 1/16W 33K	1	
R4815	ERJ2GEJ472	M.RESISTOR CH 1/16W 4.7K	1	
R6803	ERJ2GEJ331	M.RESISTOR CH 1/16W 330	1	
R7001	ERJ2GEJ473Y	M.RESISTOR CH 1/16W 47K	1	
R7003	ERJ2GEJ121	M.RESISTOR CH 1/16W 120	1	
R7005	ERJ2GEJ334	M.RESISTOR CH 1/16W 330K	1	
R7006	ERJ2GEJ564	M.RESISTOR CH 1/16W 560K	1	
R7008	ERJ2GEJ330	M.RESISTOR CH 1/16W 33	1	
R7009	ERJ2GEJ103	M.RESISTOR CH 1/16W 10K	1	
R7010	ERJ2GEJ473Y	M.RESISTOR CH 1/16W 47K	1	
R7011	ERJ2GEJ104	M.RESISTOR CH 1/16W 100K	1	
R7022	ERJ2GEJ102X	M.RESISTOR CH 1/16W 1K	1	ERJ2RMJ102X
T7001	G5DYA0000084	SWITCHING TRANSFORMER	1	
VZ4801	D4ED1270A003	TRANSIENT/SURGE ABSORBER	1	
VZ4802	D4ED1270A003	TRANSIENT/SURGE ABSORBER	1	
VZ7002	D4ED1270A003	TRANSIENT/SURGE ABSORBER	1	