ORDER NO. MD0805007CE

Service Manual

CD Stereo System

COMPACT disc DIGITAL AUDIO

SA-AK770PL
SA-AK770GCP

Colour

(K)... Black Type

Remote Control SB-WAK770 SB-AK770 SA-AK770 SB-AK770

The illustration shown SC-AK770GCP.

Notes: This model's CD mechanism changer unit is CR14C. Please refer to the original Service Manual (Order No. MD0805031CE) for this mechanism.

Specifications

■ AMPLIFIER SECTION

RMS output power

Front Ch (both channels driven)

250 W per channel (6 Ω), 1 kHz, 10% THD

Subwoofer Ch

200 W per channel (6 Ω), 100 Hz, 10% THD

Total RMS stereo mode power 700 W

PMPO 7700 W

■ FM/AM TUNER, TERMINALS SECTION

Preset station FM 30 stations

AM 15 stations

Frequency Modulation (FM)

Frequency range

87.9 to 107.9 MHz (200 kHz steps) (PL only)

87.5 to 108.00 MHz (100 kHz steps) (PL only)

87.50 to 108.00 MHz (50 kHz steps) (GCP only)

Antenna terminal(s) 75 Ω (unbalanced)

Amplitude Modulation (AM)

Frequency range

520 to 1710kHz (10 kHz steps) (PL only)

522 to 1629 kHz (9 kHz step) (GCP only)

522 to 1630 kHz (10 kHz steps) (GCP only)

Music Port (front) jack

Sensitivity 100 mV, 4.0 k Ω

Terminal Stereo, 3.5 mm jack

Headphone jack

Terminal Stereo, 3.5 mm jack

Output level (CD, 1 kHz, -20 dB) 32 Ω (Max)

Mic jack

Sensitivity 0.7 mV, 1.2 k Ω

Terminal Mono, 3.5 mm jack (1 system)

■ CASSETTE DECK SECTION

Type 1 way

Track system 4 track, 2 channel

Heads

Record/playback Solid permalloy head

Erasure Double gap ferrite head

Motor DC servo motor

Recording system AC bias 100 kHz

Erase system AC erase 100 kHz

Tape speed 4.8 cm/s

Overall frequency response (+3, -6 dB) at DECK OUT

NORMAL 35 Hz to 10 kHz

S/N ratio 50 dB (A weighted)

Wow and flutter 0.18 % (WRMS)

Fast forward and rewind time

Panasonic®

© 2008 Matsushita Electric Industrial Co. Ltd.. All rights reserved. Unauthorized copying and distribution is a violation of law.

Approx. 120 seconds with C-60 cassette tape

■ DISC SECTION

Disc played [8 cm or 12 cm]

(1) CD-Audio (CD-DA)

(2) CD-R/RW (CD-DA, MP3* formatted disc)

(3) MP3*

* MPEG-1 Layer 3, MPEG-2 Layer 3

Pick up

Wavelength	780 nm
Beam Source	Semiconductor laser

Audio output (Disc)

Number of channel	2.1 (FL, FR, SW)

FL = Front left channel

FR = Front right channel

SW = Subwoofer channel

■ USB SECTION

USB Port	
USB Standard	USB 2.0 full speed

Media file format support

MP3 (*.mp3)

USB device file system

FAT 12

FAT 16

FAT 32

USB port power	500 mA (Max)

USB Ripping (recording)

Recording file format

MP3 (*.mp3)

Bit rate	128 kbps / 192 kbps / 320 kbps
USB recording speed	1x, max 4x (CD only)

■ GENERAL

Power supply

AC 120 V, 60Hz (PL only)

AC 110 to 127/220 to 240 V, 50/60 Hz (GCP only)

Power consumption	164 W (PL Only)
	145 W (GCP Only)
Dimensions (WxHxD)	250 x 331 x 334 mm
Mass	4.9 kg
Operating temperature range	0 to 40°C
Operating humidity range	35 to 80% RH (no condensation)

Power consumption in standby mode:

0.3 W (approx.) (PL only)

0.5 W (approx.) (GCP only)

■ SYSTEM

SC-AK770 (PL)	Music center: SA-AK770 (PL)
	Speakers: SB-AK770 (PL)
	Subwoofer: SB-WAK770 (PL)
SC-AK770 (GCP)	Music center: SA-AK770 (GCP)
	Speakers: SB-AK770 (PL)
	Subwoofer: SB-WAK770 (PL)

For information on speaker system, please refer to the original Service Manual (Order No. MD0805008CE) for SB-AK770PL-K & (Order No. MD0805009CE) for SB-WAK770PL-K.

Notes:

1. Specifications are subject to change without notice. Mass and dimensions are approximate.
2. Total harmonic distortion is measured by the digital spectrum analyzer.

⚠ WARNING

This service information is designed for experienced repair technicians only and is not designed for use by the general public.
It does not contain warnings or cautions to advise non-technical individuals of potential dangers in attempting to service a product.
Products powered by electricity should be serviced or repaired only by experienced professional technicians. Any attempt to service or repair the product or products dealt with in this service information by anyone else could result in serious injury or death.

CONTENTS

	Page
1 Safety Precautions	**3**
2 Prevention of Electro Static Discharge (ESD) to Electrostatically Sensitive (ES) Devices	**5**
3 Handling Precautions for Traverse Unit	**6**
4 Precaution of Laser Diode	**8**
5 About Lead Free Solder (PbF)	**9**
6 Operation Procedures	**10**
7 Self diagnosis and special mode setting	**14**
8 Assembling and Disassembling	**22**
9 Disassembly and Assembly of Traverse Unit Assembly in Play Position	**58**
10 Service Fixture and Tools	**60**
11 Service Positions	**60**
12 Procedure for Checking Operation of Individual Parts of Deck Mechanism Unit	**68**
13 Measurement And Adjustments	**69**
14 Voltage Measurement and Waveform Chart	**71**
15 Wiring Diagram	**79**
16 Block Diagram	**81**
17 Notes Of Schematic Diagram	**89**
18 Schematic Diagram	**91**
19 Printed Circuit Board	**109**
20 Illustration of ICs, Transistors and Diodes	**117**
21 Terminal Function of Integrated Circuits	**118**
22 Exploded Views	**121**
23 Replacement Parts List	**125**

1 Safety Precautions

1.1. General Guidelines

1. When servicing, observe the original lead dress. If a short circuit is found, replace all parts which have been overheated or damaged by the short circuit.
2. After servicing, ensure that all the protective devices such as insulation barriers and insulation papers shields are properly installed.
3. After servicing, check for leakage current checks to prevent from being exposed to shock hazards.

(This “Safety Precaution” is applied only in U.S.A.) (For PL Only)

1. Before servicing, unplug the power cord to prevent an electric shock.
2. When replacing parts, use only manufacturer’s recommended components for safety.
3. Check the condition of the power cord. Replace if wear or damage is evident.
4. After servicing, be sure to restore the lead dress, insulation barriers, insulation papers, shields, etc.
5. Before returning the serviced equipment to the customer, be sure to make the following insulation resistance test to prevent the customer from being exposed to a shock hazard.

1.1.1. Leakage Current Cold Check

1. Unplug the AC cord and connect a jumper between the two prongs on the plug.
2. Using an ohmmeter measure the resistance value, between the jumpered AC plug and each exposed metallic cabinet part on the equipment such as screwheads, connectors, control shafts, etc. When the exposed metallic part has a return path to the chassis, the reading should be between 1MΩ and 5.2MΩ.
   When the exposed metal does not have a return path to the chassis, the reading must be ∞ .

1.1.2. Leakage Current Hot Check (See Figure 1)

1. Plug the AC cord directly into the AC outlet. Do not use an isolation transformer for this check.
2. Connect a 1.5kΩ, 10 watts resistor, in parallel with a 0.15µF capacitor, between each exposed metallic part on the set and a good earth ground such as a water pipe, as shown in Figure 1.
3. Use an AC voltmeter, with 1000 ohms/volt or more sensitivity, to measure the potential across the resistor.
4. Check each exposed metallic part, and measure the voltage at each point.
5. Reverse the AC plug in the AC outlet and repeat each of the above measurements.
6. The potential at any point should not exceed 0.75 volts RMS. A leakage current tester (Simpson Model 229 or equivalent) may be used to make the hot checks, leakage current must not exceed 1/2 milliamp. Should the measurement is out of the limits specified, there is a possibility of a shock hazard, and the equipment should be repaired and rechecked before it is returned to the customer.

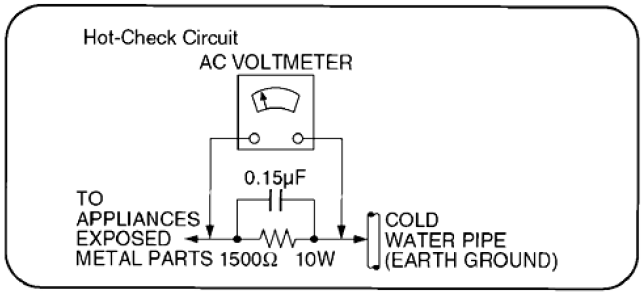

Fig. 1

1.2. Before Use (For GCP Only)

Be sure to disconnect the mains cord before adjusting the voltage selector.

Use a minus(-) screwdriver to set the voltage selector (on the rear panel) to the voltage setting for the area in which the unit will be used. (If the power supply in your area is 110V or 127V, set to the “127V” position.)

Note that this unit will be seriously damaged if this setting is not made correctly. (There is no voltage selector for some countries, the correct voltage is already set.)

1.3. Before repair and adjustment

Disconnect AC power, discharge AC Capacitors C5700, C5701, C5703, C5704, C5705 (PL Only); C5700, C5701, C5703, C5704, C5705, C5706 & C5707 (GCP Only) through a 10Ω, 5W resistor to ground.

DO NOT SHORT-CIRCUIT DIRECTLY (with a screwdriver blade, for instance), as this may destroy solid state devices.

After repairs are completed, restore power gradually using a variac, to avoid overcurrent.

Current consumption at AC 120V, 60 Hz in NO SIGNAL mode (volume min at CD mode) should be ~ 750mA (For PL only).

Current consumption at AC 110V~127V, 50/60 Hz in NO SIGNAL mode (volume min at CD mode) should be ~ 750mA (For GCP only).

Current consumption at AC 220V~240V, 50/60 Hz in NO SIGNAL mode (volume min at CD mode) should be ~ 500mA (For GCP only).

1.4. Protection Circuitry

The protection circuitry may have operated if either of the following conditions are noticed:

- No sound is heard when the power is turned on.
- Sound stops during a performance.

The function of this circuitry is to prevent circuitry damage if, for example, the positive and negative speaker connection wires are "shorted", or if speaker systems with an impedance less than the indicated rated impedance of the amplifier are used.

If this occurs, follow the procedure outlines below:

1. Turn off the power.
2. Determine the cause of the problem and correct it.
3. Turn on the power once again after one minute.

Note :

When the protection circuitry functions, the unit will not operate unless the power is first turned off and then on again.

1.5. Safety Part Information

Safety Parts List:

There are special components used in this equipment which are important for safety.

These parts are marked by ⚠ in the Schematic Diagrams & Replacement Parts List. It is essential that these critical parts should be replaced with manufacturer's specified parts to prevent shock, fire or other hazards. Do not modify the original design without permission of manufacturer.

Table 1

Reference No.	Part No.	Part name & Description	Remarks
18	RGRX0070F-A	REAR PANEL	[M] PL ⚠
18	RGRX0070G-A	REAR PANEL	[M] GCP ⚠
36	RKMX0144-K	TOP CABINET	[M] ⚠
51	RMZ0339	ZENER COVER	[M] GCP ⚠
68	REXX0686	WHITE WIRE (VOLTAGE SELECTOR)	[M] GCP ⚠
69	REXX0687	BLUE WIRE (VOLTAGE SELECTOR)	[M] GCP ⚠
84	REXX0684	BLACK WIRE	[M] PL ⚠
85	REXX0685	RED WIRE	[M] PL ⚠
89	REZX0024	RED WIRE	[M] GCP ⚠
90	REZX0023	BLACK WIRE	[M] GCP ⚠
340	RAEX0190A-V	TRAVERSE ASSEMBLY UNIT	[M] (RTL) ⚠
A2	K2CB2CB00021	AC CORD	[M] PL ⚠
A2	K2CQ2CA00007	AC CORD	[M] GCP ⚠
PCB4	REPX0622E	SMPS P.C.B.	[M] (RTL) PL ⚠
	REPX0622G	SMPS P.C.B.	[M] (RTL) GCP ⚠
PCB10	REPX0622E	AC INLET P.C.B.	[M] (RTL) PL ⚠
	REPX0622G	AC INLET P.C.B.	[M] (RTL) GCP ⚠
PCB13	REPX0622G	VOLTAGE SELECTOR P.C.B.	[M] (RTL) GCP ⚠
DZ5701	ERZV10V511CS	ZENER	[M] ⚠
S5701	K0ABCA000007	SW VOLTAGE SELECTOR	[M] GCP ⚠
L5702	ELF22V035B	LINE FILTER	[M] ⚠
T2900	G4D1A0000117	SWITCHING TRANSFORMER	[M] ⚠

Reference No.	Part No.	Part name & Description	Remarks
T5701	ETS48AB116AC	SWITCHING TRANSFORMER	[M] GCP ⚠
T5701	ETS48AB12GAC	SWITCHING TRANSFORMER	[M] PL ⚠
T5751	ETS19AB256AG	BACKUP SW TRANFORMER	[M] ⚠
PC5701	B3PBA0000402	PHOTO COUPLER	[M] ⚠
PC5702	B3PBA0000402	PHOTO COUPLER	[M] ⚠
PC5720	B3PBA0000402	PHOTO COUPLER	[M] ⚠
PC5799	B3PBA0000402	PHOTO COUPLER	[M] ⚠
F1	K5D802APA008	FUSE	[M] PL ⚠
F1	K5D802BNA005	FUSE	[M] GCP ⚠
FP2901	K5G4013A0001	FUSE PROTECTOR	[M] ⚠
TH5701	D4CAA5R10001	THERMISTOR	[M] PL ⚠
TH5702	D4CAC8R00002	THERMISTOR	[M] GCP ⚠
P5701	K2AA2B000017	AC INLET	[M] GCP ⚠
P5701	K2AB2B000010	AC INLET	[M] PL ⚠
C5700	F1BAF1020020	1000pF	[M] ⚠
C5701	F0CAF334A087	0.33uF	[M] ⚠
C5703	F0C2H1040001	0.1uF 500V	[M] GCP ⚠
C5703	F0CAF224A085	0.22uF	[M] PL ⚠
C5704	F1BAF1020020	1000pF	[M] ⚠
C5705	F1BAF1020020	1000pF	[M] ⚠
C5706	F1BAF1020020	1000pF	[M] GCP ⚠
C5707	F1BAF1020020	1000pF	[M] GCP ⚠

2 Prevention of Electro Static Discharge (ESD) to Electrostatically Sensitive (ES) Devices

Some semiconductor (solid state) devices can be damaged easily by electricity. Such components commonly are called Electrostatically Sensitive (ES) Devices. Examples of typical ES devices are integrated circuits and some field-effect transistors and semiconductor “chip” components. The following techniques should be used to help reduce the incidence of component damage caused by electro static discharge (ESD).

1. Immediately before handling any semiconductor component or semiconductor-equiped assembly, drain off any ESD on your body by touching a known earth ground. Alternatively, obtain and wear a commercially available discharging ESD wrist strap, which should be removed for potential shock reasons prior to applying power to the unit under test.
2. After removing an electrical assembly equiped with ES devices, place the assembly on a conductive surface such as aluminium foil, to prevent electrostatic charge build up or exposure of the assembly.
3. Use only a grounded-tip soldering iron to solder or unsolder ES devices.
4. Use only an anti-static solder remover device. Some solder removal devices not classified as “anti-static (ESD protected)” can generate electrical charge to damage ES devices.
5. Do not use freon-propelled chemicals. These can generate electrical charges sufficient to damage ES devices.
6. Do not remove a replacement ES device from its protective package until immediately before you are ready to install it. (Most replacement ES devices are packaged with leads electrically shorted together by conductive foam, aluminium foil or comparable conductive material).
7. Immediately before removing the protective material from the leads of a replacement ES device, touch the protective material to the chassis or circuit assembly into which the device will be installed.

   Caution

   Be sure no power is applied to the chassis or circuit, and observe all other safety precautions.
8. Minimize body motions when handling unpackaged replacement ES devices. (Otherwise harmless motion such as the brushing together of your clothes fabric or the lifting of your foot from a carpeted floor can generate static electricity (ESD) sufficient to damage an ES device).

3 Handling Precautions for Traverse Unit

The laser diode in the optical pickup unit may break down due to static electricity of clothes or human body. Special care must be taken avoid caution to electrostatic breakdown when servicing and handling the laser diode in the traverse unit.

3.1. Cautions to Be Taken in Handling the Optical Pickup Unit

The laser diode in the optical pickup unit may be damaged due to electrostatic discharge generating from clothes or human body. Special care must be taken avoid caution to electrostatic discharge damage when servicing the laser diode.

1. Do not give a considerable shock to the optical pickup unit as it has an extremely high-precise structure.
2. To prevent the laser diode from the electrostatic discharge damage, the flexible cable of the optical pickup unit removed should be short-circuited with a short pin or a clip.
3. The flexible cable may be cut off if an excessive force is applied to it. Use caution when handling the flexible cable.
4. The antistatic FPC is connected to the new optical pickup unit. After replacing the optical pickup unit and connecting the flexible cable, cut off the antistatic FPC.

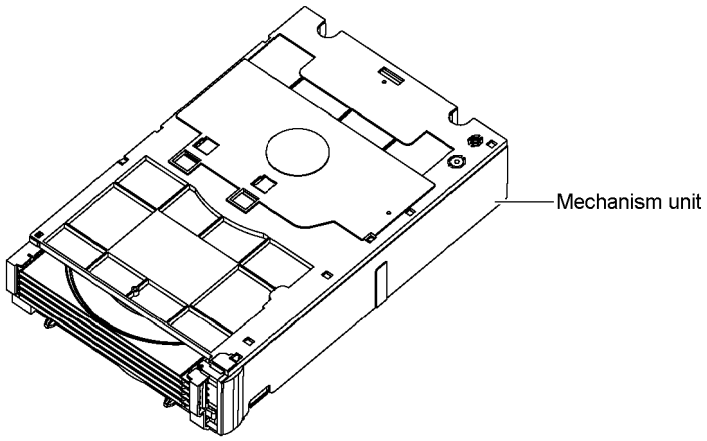

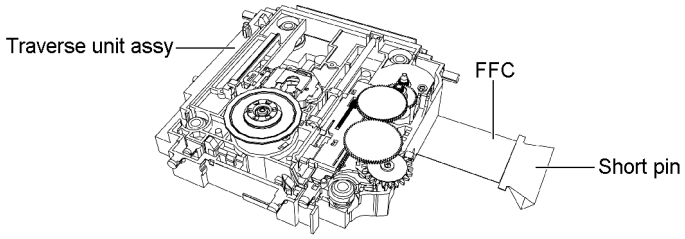

[Caution]
Ground the cable with a clip or a short pin.

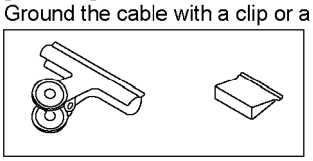

Clip or Short Pin

3.2. Grounding for electrostatic breakdown prevention

Some devices such as the CD player use the optical pickup (laser diode) and the optical pickup will be damaged by static electricity in the working environment. Proceed servicing works under the working environment where grounding works is completed.

3.2.1. Worktable grounding

1. Put a conductive material (sheet) or iron sheet on the area where the optical pickup is placed, and ground the sheet.

3.2.2. Human body grounding

1. Use the anti-static wrist strap to discharge the static electricity form your body.

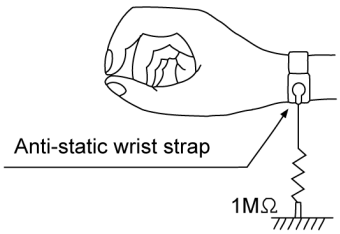
Anti-static wrist strap
1MΩ

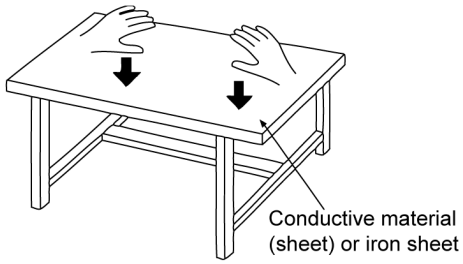
Conductive material
(sheet) or iron sheet

4 Precaution of Laser Diode

CAUTION:
THIS PRODUCT UTILIZES A LASER.
USE OF CONTROLS OR ADJUSTMENTS OR PERFORMANCE OF PROCEDURES OTHER THAN THOSE SPECIFIED HEREIN MAY RESULT IN HAZARDOUS RADIATION EXPOSURE.

CAUTION :

This product utilizes a laser diode with the unit turned "on", invisible laser radiation is emitted from the pickup lens.
Wavelength: 785 nm (CD) / 655 nm (DVD)
Maximum output radiation power from pickup: 100 µW/VDE

Laser radiation from the pickup unit is safety level, but be sure the followings:

1. Do not disassemble the pickup unit, since radiation from exposed laser diode is dangerous.
2. Do not adjust the variable resistor on the pickup unit. It was already adjusted.
3. Do not look at the focus lens using optical instruments.
4. Recommend not to look at pickup lens for a long time.

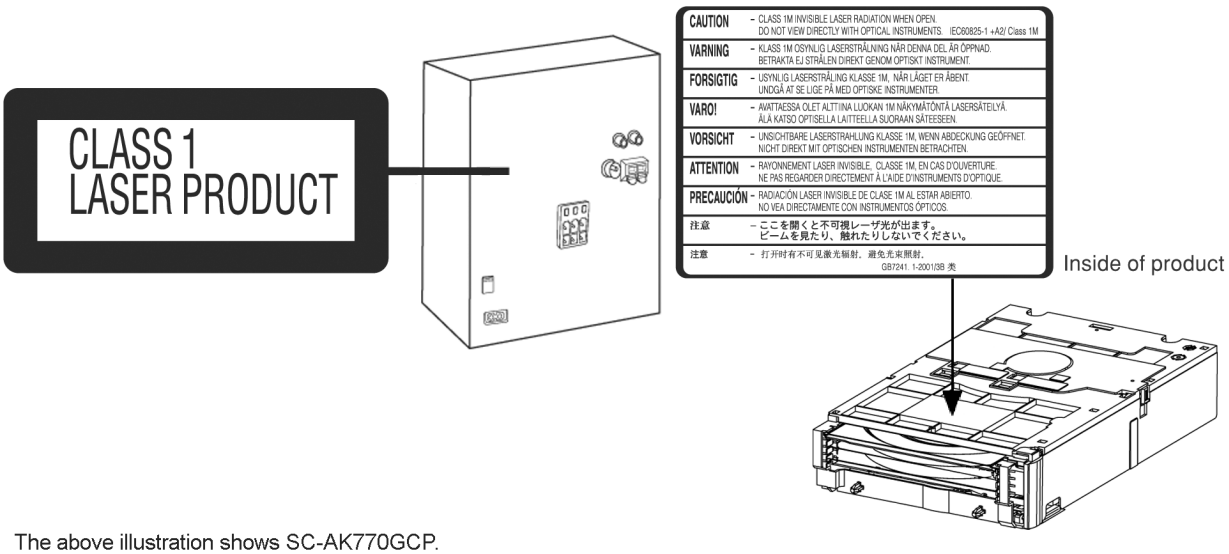

The above illustration shows SC-AK770GCP.

5 About Lead Free Solder (PbF)

5.1. Service caution based on legal restrictions

5.1.1. General description about Lead Free Solder (PbF)

The lead free solder has been used in the mounting process of all electrical components on the printed circuit boards used for this equipment in considering the globally environmental conservation.

The normal solder is the alloy of tin (Sn) and lead (Pb). On the other hand, the lead free solder is the alloy mainly consists of tin (Sn), silver (Ag) and Copper (Cu), and the melting point of the lead free solder is higher approx.30 degrees C (86°F) more than that of the normal solder.

Definition of PCB Lead Free Solder being used

The letter of “PbF” is printed either foil side or components side on the PCB using the lead free solder. (See right figure)	PbF

Service caution for repair work using Lead Free Solder (PbF)

- The lead free solder has to be used when repairing the equipment for which the lead free solder is used.
  (Definition: The letter of “PbF” is printed on the PCB using the lead free solder.)
- To put lead free solder, it should be well molten and mixed with the original lead free solder.
- Remove the remaining lead free solder on the PCB cleanly for soldering of the new IC.
- Since the melting point of the lead free solder is higher than that of the normal lead solder, it takes the longer time to melt the lead free solder.
- Use the soldering iron (more than 70W) equipped with the temperature control after setting the temperature at 350±30 degrees C (662±86°F).

Recommended Lead Free Solder (Service Parts Route.)

- The following 3 types of lead free solder are available through the service parts route.
  RFKZ03D01K----------(0.3mm 100g Reel)
  RFKZ06D01K----------(0.6mm 100g Reel)
  RFKZ10D01K----------(1.0mm 100g Reel)

Note

* Ingredient: Tin (Sn), 96.5%, Silver (Ag) 3.0%, Copper (Cu) 0.5%, Cobalt (Co) / Germanium (Ge) 0.1 to 0.3%

6 Operation Procedures

6.1. Main Unit Key Buttons Operations

Overview of controls

Main unit

Refer to the numbers in parentheses for page reference. Buttons labeled such as ❶ function in exactly the same way as the controls on the remote control.

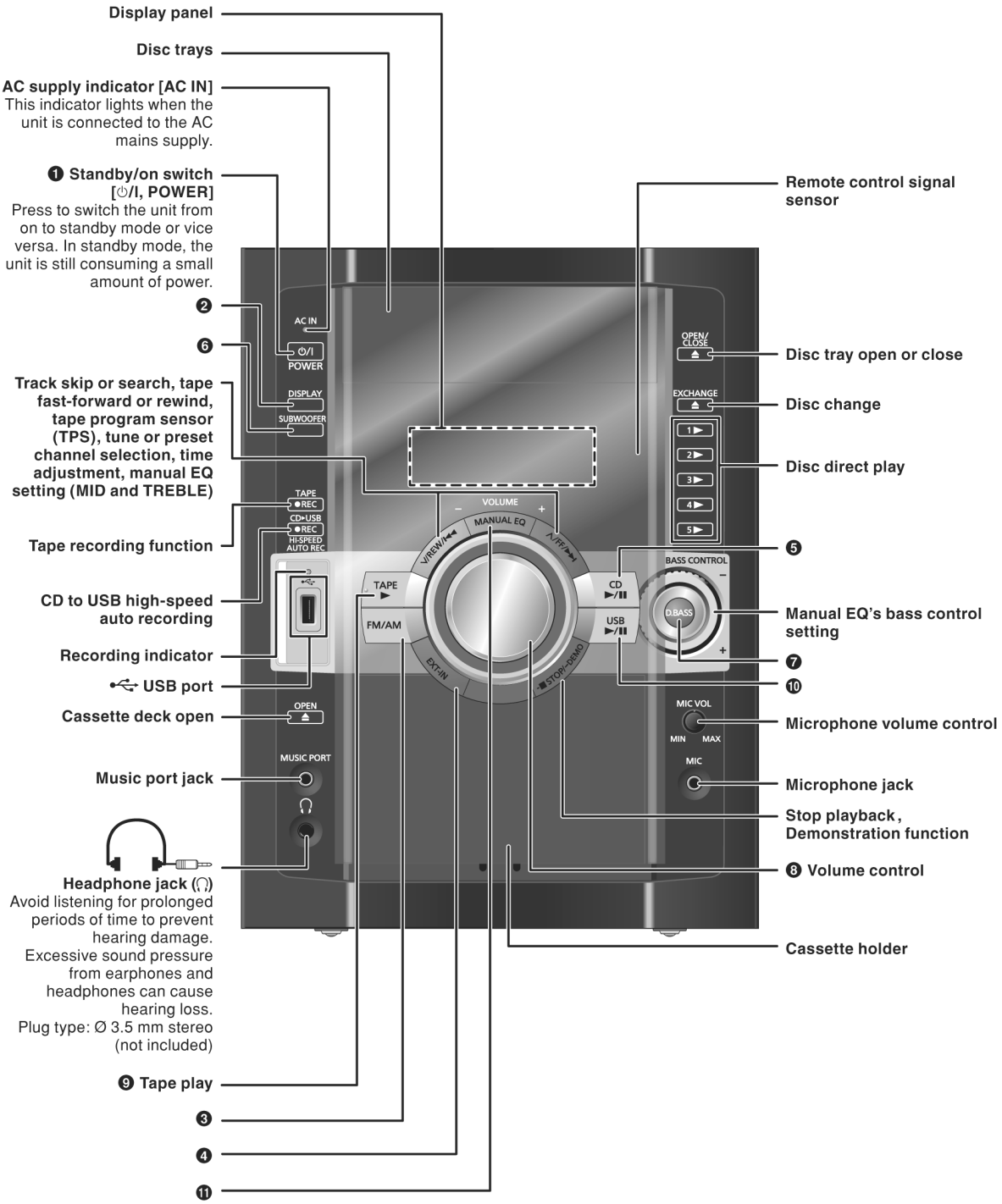

6.2. Remote Control Key Buttons Operations

Remote control

Buttons labeled such as ❶ function in exactly the same way as the controls on the main unit.

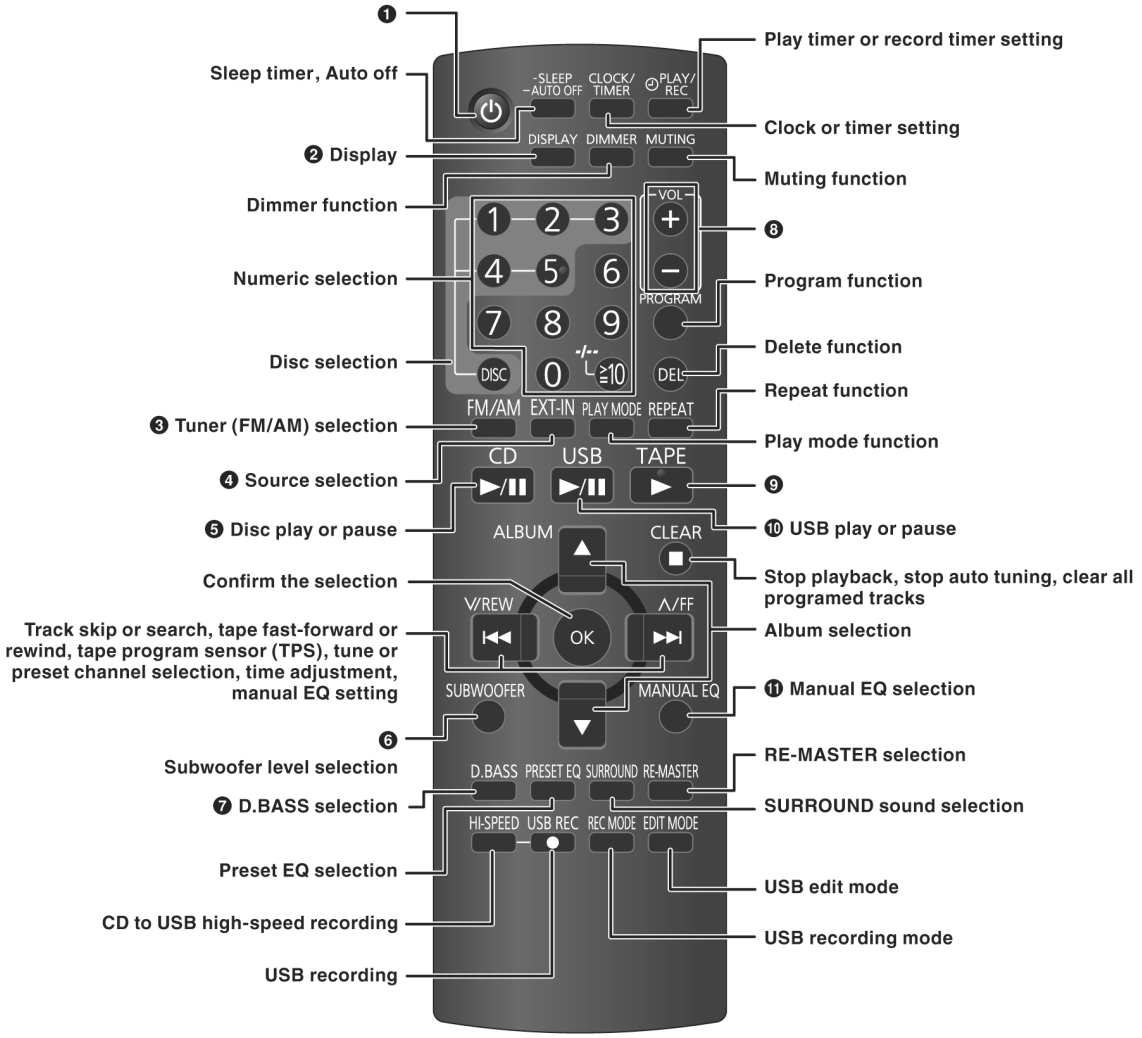

-SLEEP –AUTO OFF	DIMMER	MUTING
This auto off function allows you to turn off the unit in **disc, tape or USB** mode only after left unused for 10 minutes. • Press and hold [-SLEEP, –AUTO OFF] to activate the function. • Press and hold [-SLEEP, –AUTO OFF] again to cancel. • The setting is maintained even if the unit is turned off.	To dim the display panel. • Press the button to activate. • Press the button again to cancel.	To mute the sound. • Press the button to activate. • Press the button again or adjust the volume to cancel.

NOTE on CDs

- This unit can access up to 99 tracks.
- Choose disc with this mark.
- This unit can play MP3 files and CD-DA format audio CD-R/RW that have been finalized.
- It may not be able to play some CD-R/RW due to the condition of the recording.
- Do not use irregularly shaped disc.
- Do not use disc with labels and stickers that are coming off or with adhesive exuding from under labels and stickers.
- Do not attach extra labels or stickers on the disc.
- Do not write anything on the disc.

Note about using a DualDisc

The digital audio content side of a DualDisc does not meet the technical specifications of the Compact Disc Digital Audio (CD-DA) format so playback may not be possible.

NOTE on MP3

- Files are treated as tracks and folders are treated as albums.
- This unit can access up to 999 tracks, 255 albums and 20 sessions.
- Disc must conform to ISO9660 level 1 or 2 (except for extended formats).
- To play in a certain order, prefix the folder and file names with 3-digits numbers in the order you want to play them.

When “NOT MP3/ERROR1” appears on the display, an unsupported MP3 format is being played. The unit will skip that track and play the next one.

Limitations on MP3 play

- If you have recorded MP3 on the same disc as CD-DA, only the format recorded in the first session can be played.
- Some MP3s may not be played due to the condition of the disc or recording.
- Recordings will not necessarily be played in the order you recorded them.

6.3. Using the Music Port

This feature enables you to enjoy music from a portable audio equipment.

Connecting to a portable audio equipment

This feature enables you to enjoy music from a portable audio equipment.

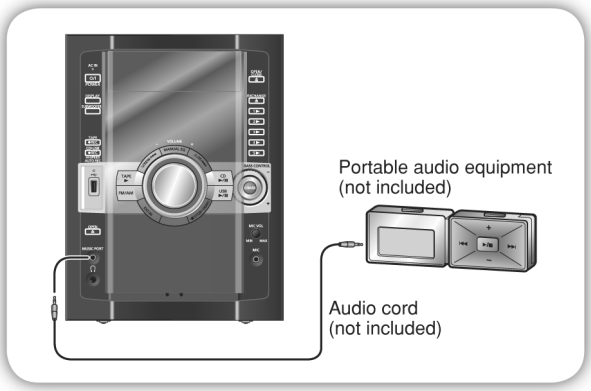

The illustrations show SC-AK770GCP.

EXT-IN

Playing or recording from a portable audio equipment

Switch off the equalizer function (if there is any) of the portable audio equipment before you plug into the MUSIC PORT jack. Otherwise, sound from the speaker may be distorted.

1 **Plug the audio cord into the MUSIC PORT jack.**

2 **Press [EXT-IN] repeatedly until “MUSIC PORT” is displayed.**
For listening : Proceed to step 3.
For recording : Press [● REC, TAPE] on the main unit to start recording.

3 **Play the portable audio equipment. (See the portable audio equipment’s instruction manual.)**

6.4. Connecting and Playing a USB Mass Storage Class Device

Connecting and playing a USB mass storage device

The USB connectivity enables you to connect and play MP3 tracks from USB mass storage class. Typically, USB memory devices. (Bulk only transfer)

Preparation

Before connecting any USB mass storage device to the unit, ensure that the data stored therein has been backed up.

USB enabled device
(not included)
It is not recommended to use a USB extension cable. The device connected via the cable will not be recognised by this unit.

1 Reduce the volume and connect the USB mass storage device.

2 Press [►/II, USB] to start play.

To	Action
Pause play USB ►/II	Press [►/II, USB]. Press again to resume play.
Stop play CLEAR ■	Press [■, CLEAR]. The current track will be memorized. Press [►/II, USB] to resume play. OR Press [■, CLEAR] again to clear the memory.
Skip tracks V/REW ∧/FF I◄◄ ►►I	Press [I◄◄, ∨/REW] or [►►I, ∧/FF]. OR Press the numeric buttons.
Skip album ALBUM ▲ ▼	Press [▲/▼, ALBUM].

Compatible devices

Devices which are defined as USB mass storage class:
– USB devices that support bulk only transfer.
– USB devices that support USB 2.0 full speed.

Supported format

Files must have the extension ".mp3" or ".MP3".

Note:
- Folders are defined as album.
- Files are defined as track.
- Track must have the extension ".mp3" or ".MP3".
- CBI (Control/Bulk/Interrupt) is not supported.
- A device using NTFS file system is not supported.
  [Only FAT 12/16/32 (File Allocation Table 12/16/32) file system is supported]
- Depending on the sector size, some files may not work.
- Maximum album: 255 albums
- Maximum track: 2500 tracks
- Maximum track in one album: 999 tracks
- Only one memory card will be selected when connecting a multiport USB card reader. Typically the first memory card inserted.
- Disconnect the USB card reader from the unit when you remove the memory card. Failure to do so may cause malfunction to the device.
- When you connect a compatible digital audio player to the USB port, charging may be activated. It will not charge when the unit is in standby mode (during "DEMO OFF").

7 Self diagnosis and special mode setting

This unit is equipped with features of self-diagnostic & special mode setting for checking the functions & reliability.

Special Note : Checking of the reliability (ageing) & changer operation must be carry out to ensure good working condition in unit.

7.1. Service Mode Summary Table

The service modes can be activated by pressing various button combination on the main unit and remote control unit.Below is the summary for the various modes for checking:

Player buttons	Remote control unit buttons	Application	Note
[STOP]	[4], [7]	Entering into doctor mode	(Refer to section .7.2.1. service mode Table 1 for more information.)
[STOP]	[►►I, ∧/FF]	Entering into service mode	(Refer to section .7.2.1. service mode Table 1 for more information.)

Mode	Remote control unit buttons	Application	Note
In Doctor Mode	[1]	FL all segment & LED inspection	(Refer to section .7.2.2. service mode Table 2 for more information.)
	[MUSIC.P]	Tuner Check	(Refer to section .7.2.2. service mode Table 2 for more information.)
	[7]	Volume 50 setting check	(Refer to section .7.2.2. service mode Table 2 for more information.)
	[8]	Volume 35 setting check	(Refer to section .7.2.2. service mode Table 2 for more information.)
	[9]	Volume 0 setting check	(Refer to section .7.2.2. service mode Table 2 for more information.)
	[2]	Micro-P Version Display	(Refer to section .7.2.2. service mode Table 2 for more information.)
	[4]	CD→USB Recording & Playing inspection	(Refer to section .7.2.2. service mode Table 2 for more information.)
	[5]	CD-MP3 Reading & Playing inspection	(Refer to section .7.2.2. service mode Table 2 for more information.)
	[≧10], [1], [1]	CD Loading Test Mode	(Refer to section .7.2.2. service mode Table 2 for more information.)
	[≧10], [1], [2]	CD Traverse Unit Test Mode	(Refer to section .7.2.2. service mode Table 2 for more information.)
	[≧10], [1], [3]	CD Combination Test Mode	(Refer to section .7.2.2. service mode Table 2 for more information.)

Mode	Remote control unit buttons	Application	Note
In Service Mode	[1]	self diagnostic history	(Refer to section .7.2.3. service mode Table 3 for more information.)
	[2]	Micro-P FW	(Refer to section .7.2.3. service mode Table 3 for more information.)
	[3]	Cold Start (Reset)	(Refer to section .7.2.3. service mode Table 3 for more information.)

7.2. Service Mode Table

Below is the various special modes for checking:-

7.2.1. Service Mode Table 1

Item		**FL Display**	**Key Operation**
Mode Name	**Description**		**Front Key**
Doctor Mode	To enter into Doctor Mode.		In any mode: 1. Press [■, CLEAR] button on main unit follow by [4] and [7] on remote control. To exit Doctor Mode, press [⏻/I] button on main unit or remote control.
Service Mode	To enter into Service Mode.		1. Select [CD] for DISC mode (Ensure no disc is inserted). 2. Press and hold [■, CLEAR]button on main unit for 2 seconds follow by [►►I, ∧/FF] on remote control. To exit, press [⏻/I] button on main unit or remote control.

7.2.2. Service Mode Table 2

Item		FL Display	Key Operation
Mode Name	**Description**		**Front Key**
FL Display Test	To check the FL segments display (All segments will light up)	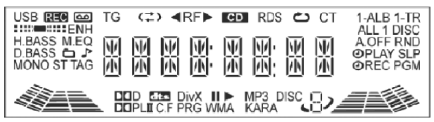	In doctor mode: 1. Press [1] button on remote control. To exit Doctor Mode, press [⏻/❙] button on main unit or remote control.
Tuner Check	To Inspect Tuner Check	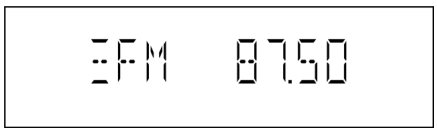	In doctor mode: 1. Press [MUSIC.P] button on remote control. To exit Doctor Mode, press [⏻/❙] button on main unit or remote control.
Volume Setting Mode	To check for the volume setting of the main unit. The volume will be automatically set to its respective level (in dB). During this mode, treble/bass/EQ will be set to '0'dB & OFF.	Display 1 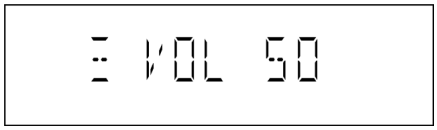	In doctor mode: 1. Press [7] button on remote control. To exit Doctor Mode, press [⏻/❙] button on main unit or remote control.
		Display 1 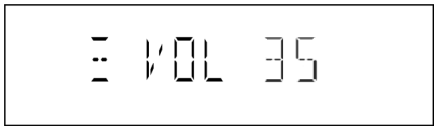	In doctor mode: 2. Press [8] button on remote control. To exit Doctor Mode, press [⏻/❙] button on main unit or remote control.
		Display 1 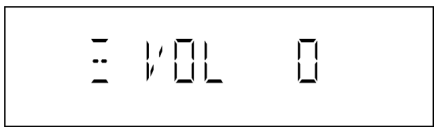	In doctor mode: 3. Press [9] button on remote control. To exit Doctor Mode, press [⏻/❙] button on main unit or remote control.
Micro-P Version Display	Checking of various items and firmware version. Note: The micro-processor version as shown is an example. It will be revise when there is an updates.	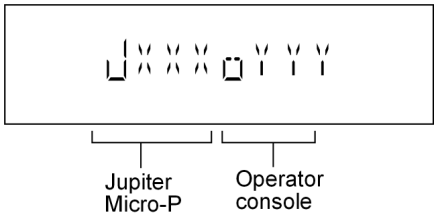	In doctor mode: 1. Press [2] button on remote control. To exit Doctor Mode, press [⏻/❙] button on main unit or remote control.
CD→USB Recording & Playing inspection	To check for the CD→USB Recording setting of the main unit. The volume will be automatically set to its respective level (in dB). During this mode, treble/bass/EQ will be set to '0'dB & OFF.	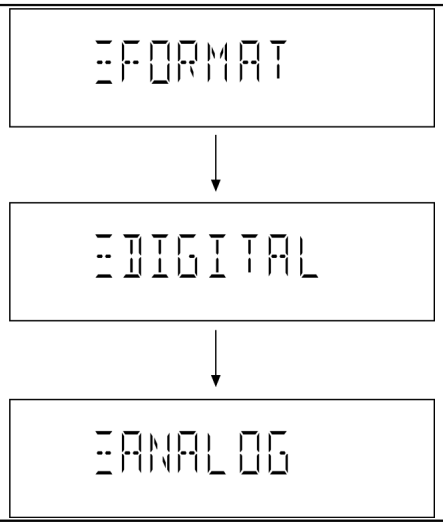	In doctor mode: 1. Press [4] button on remote control. To exit Doctor Mode, press [⏻/❙] button on main unit or remote control.

Item		FL Display	Key Operation
Mode Name	**Description**		**Front Key**
CD-MP3 Reading & Playing inspection	To check for the CD-MP3 Reading setting of the main unit. The volume will be automatically set to its respective level (in dB). During this mode, treble/bass/EQ will be set to '0'dB & OFF. (For more information, refer to section 8.2.4)	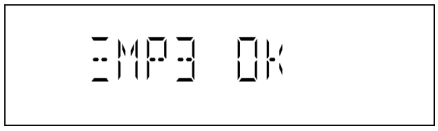	In doctor mode: 1. Press [5] button on remote control. To exit Doctor Mode, press [⏻/❙] button on main unit or remote control.
CD Loading Test Mode	To determine the reliability of CD Loading Unit. To check for the open/close operation for the CD loading unit. It fails when there is abnormality in opening or closing.	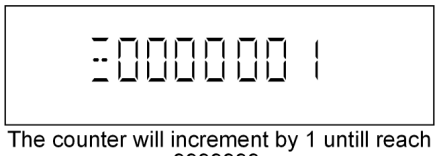 The counter will increment by 1 untill reach 9999999. 	In doctor Mode: 1. Press [≧10], [1] & [1] button on remote control. To cancel, press [PROGRAM] button on remote control. To exit Doctor Mode, press [⏻/❙] button on main unit or remote control.
CD Traverse Unit Test Mode	To check for the traverse unit operation. In this mode, the first & lost track is access & read (TOC). It fails when TOC is not completed by IDS or the traverse is out of focus.	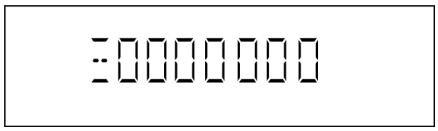	In doctor Mode: 1. Press [≧10], [1] & [2] button on remote control. To cancel, press [PROGRAM] button on remote control. To exit Doctor Mode, press [⏻/❙] button on main unit or remote control.
CD Combination Test Mode	A combination of CD loading & Traverse unit test.	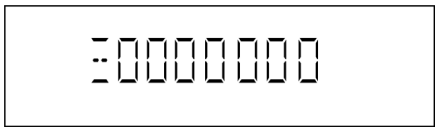	In doctor Mode: 1. Press [≧10], [1] & [3] button on remote control. To cancel, press [PROGRAM] button on remote control. To exit Doctor Mode, press [⏻/❙] button on main unit or remote control.

7.2.3. Service Mode Table 3

Item		FL Display	Key Operation
Mode Name	**Description**		**Front Key**
Self Diagnostic History	Checking the records for self-diagnostic.		In service mode: 1. Press [1] button on remote control. To exit Service Mode, press [⏻/❙] button on main unit or remote control. To clear history, press & hold [0] for 5 seconds or more.
Micro-P Version Display	Checking of various items and firmware version. Note: The micro-processor version as shown is an example. It will be revise when there is an updates. FL Display sequenceDisplay [1→2]	(Display 1) 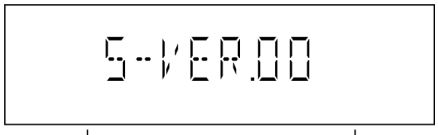 System Version (Display 2) Jupiter Micro-P Version System Version	In service mode: 1. Press [2] button on remote control. To exit Service Mode, press [⏻/❙] button on main unit or remote control.

Item		FL Display	Key Operation
Mode Name	Description		Front Key
Cold Start (Reset)	To activate cold start ipon next AC power up.	-- -- -- -- -- -- -- --	In service mode: 1. Press [3] button on remote control. To exit Service Mode, press [⏻/⏽] button on main unit or remote control.

7.3. Reliability Test Mode (CR14C Mechanism)

Below is the process flow chart of ageing for the Mechanism unit (CR14C).

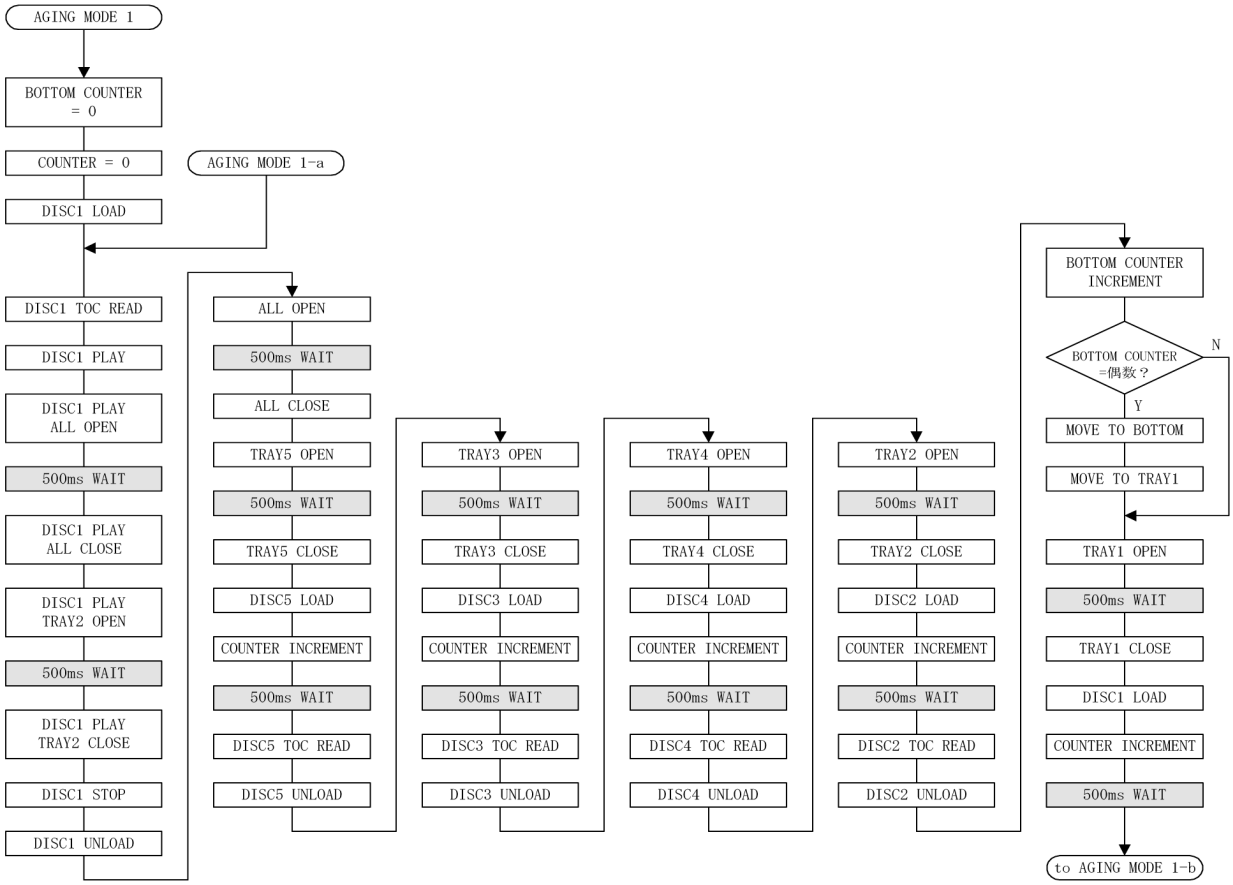

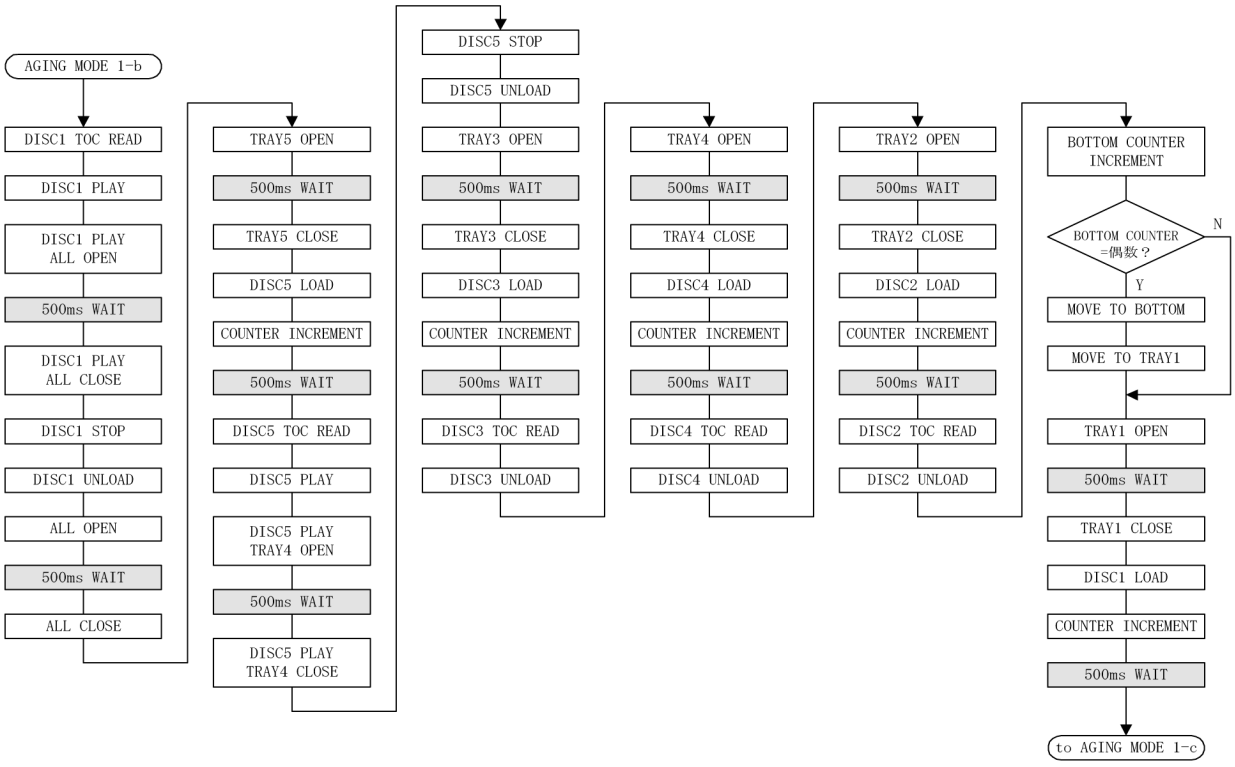
AGING MODE 1-b
DISC1 TOC READ
DISC1 PLAY
DISC1 PLAY ALL OPEN
500ms WAIT
DISC1 PLAY ALL CLOSE
DISC1 STOP
DISC1 UNLOAD
ALL OPEN
500ms WAIT
ALL CLOSE
TRAY5 OPEN
500ms WAIT
TRAY5 CLOSE
DISC5 LOAD
COUNTER INCREMENT
500ms WAIT
DISC5 TOC READ
DISC5 PLAY
DISC5 PLAY TRAY4 OPEN
500ms WAIT
DISC5 PLAY TRAY4 CLOSE
DISC5 STOP
DISC5 UNLOAD
TRAY3 OPEN
500ms WAIT
TRAY3 CLOSE
DISC3 LOAD
COUNTER INCREMENT
500ms WAIT
DISC3 TOC READ
DISC3 UNLOAD
TRAY4 OPEN
500ms WAIT
TRAY4 CLOSE
DISC4 LOAD
COUNTER INCREMENT
500ms WAIT
DISC4 TOC READ
DISC4 UNLOAD
TRAY2 OPEN
500ms WAIT
TRAY2 CLOSE
DISC2 LOAD
COUNTER INCREMENT
500ms WAIT
DISC2 TOC READ
DISC2 UNLOAD
BOTTOM COUNTER INCREMENT
BOTTOM COUNTER =偶数？
N
Y
MOVE TO BOTTOM
MOVE TO TRAY1
TRAY1 OPEN
500ms WAIT
TRAY1 CLOSE
DISC1 LOAD
COUNTER INCREMENT
500ms WAIT
to AGING MODE 1-c

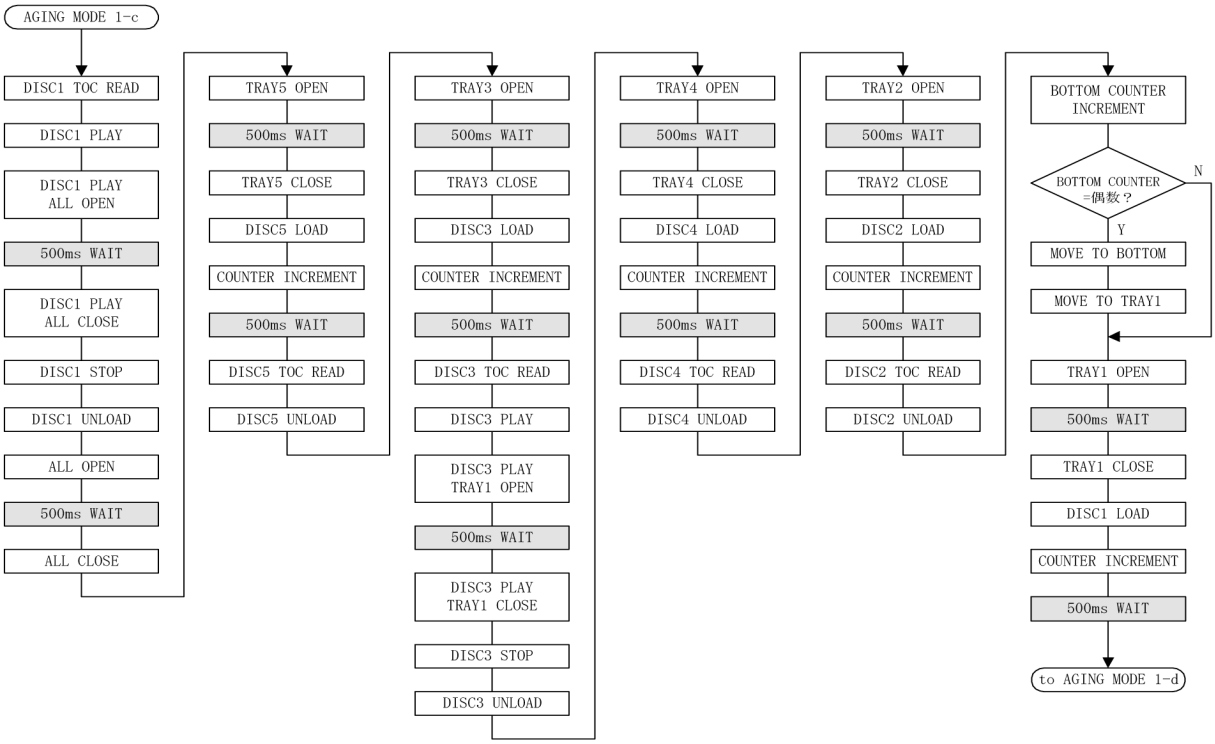
AGING MODE 1-c
DISC1 TOC READ
DISC1 PLAY
DISC1 PLAY ALL OPEN
500ms WAIT
DISC1 PLAY ALL CLOSE
DISC1 STOP
DISC1 UNLOAD
ALL OPEN
500ms WAIT
ALL CLOSE
TRAY5 OPEN
500ms WAIT
TRAY5 CLOSE
DISC5 LOAD
COUNTER INCREMENT
500ms WAIT
DISC5 TOC READ
DISC5 UNLOAD
TRAY3 OPEN
500ms WAIT
TRAY3 CLOSE
DISC3 LOAD
COUNTER INCREMENT
500ms WAIT
DISC3 TOC READ
DISC3 PLAY
DISC3 PLAY TRAY1 OPEN
500ms WAIT
DISC3 PLAY TRAY1 CLOSE
DISC3 STOP
DISC3 UNLOAD
TRAY4 OPEN
500ms WAIT
TRAY4 CLOSE
DISC4 LOAD
COUNTER INCREMENT
500ms WAIT
DISC4 TOC READ
DISC4 UNLOAD
TRAY2 OPEN
500ms WAIT
TRAY2 CLOSE
DISC2 LOAD
COUNTER INCREMENT
500ms WAIT
DISC2 TOC READ
DISC2 UNLOAD
BOTTOM COUNTER INCREMENT
BOTTOM COUNTER =偶数？
N
Y
MOVE TO BOTTOM
MOVE TO TRAY1
TRAY1 OPEN
500ms WAIT
TRAY1 CLOSE
DISC1 LOAD
COUNTER INCREMENT
500ms WAIT
to AGING MODE 1-d

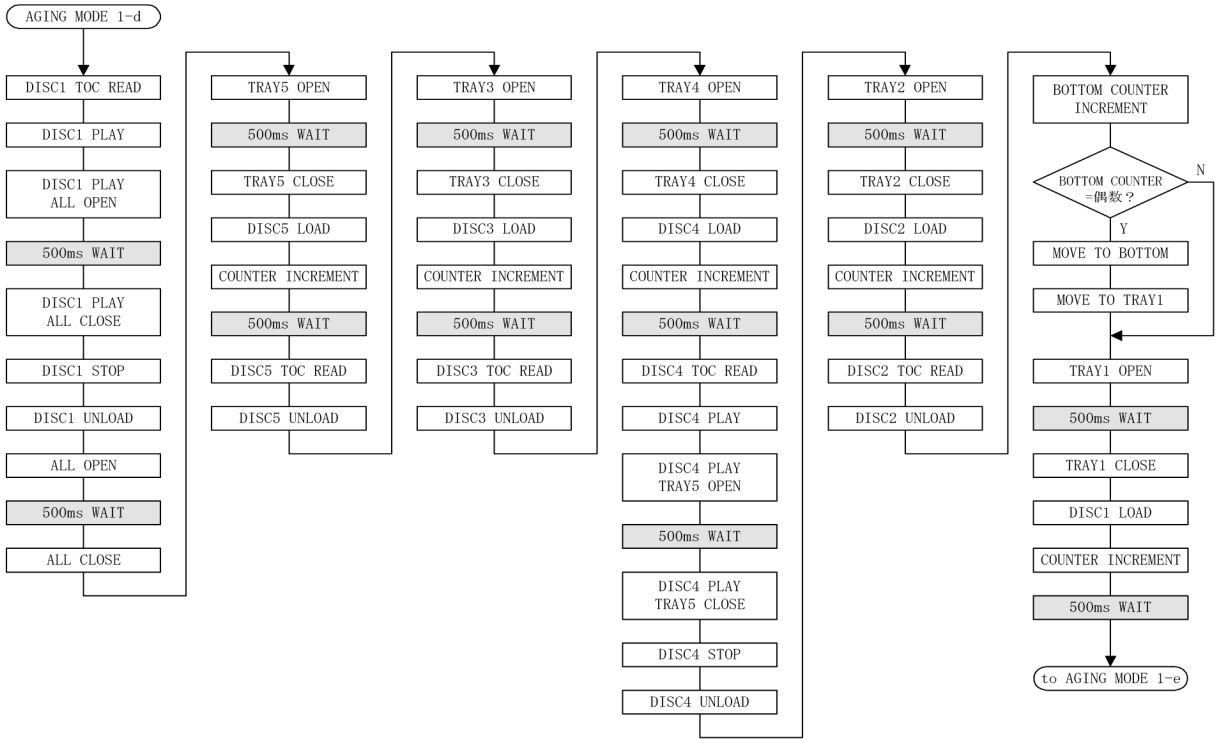

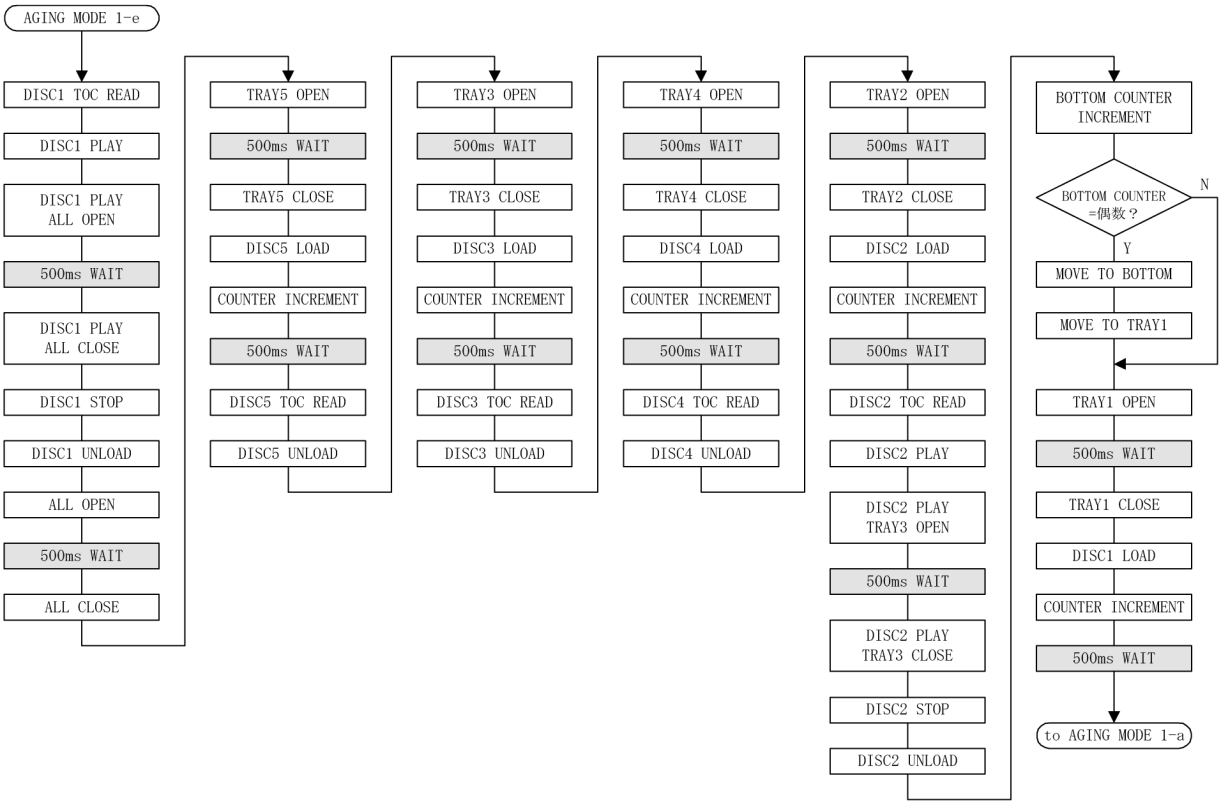

7.4. Error code Table Display

Self-Diagnosis Function (refer Section “7.2.1 Service Mode Table 1”) provides information on any problems occuring for the unit and its respective components by displaying the error codes. These error code such as U**, H** and F** are stored in memory and held unless it is cleared.

The error code is automatically display after entering into self-diagnostic mode.

7.4.1. Error Code Table (For Deck Mechanism)

Error Code	Diagnosis Contents	Description of error	Automatic FL Display	Remarks
H01	Mode SW, plunger and capstan motor abnormal	Normal operation during mecha transition, MODE SW abnormal is memorized. The content of abnormality can be confirmed in the abnormal detection mode explained in the later section.		For deck mechanism unit. Press [■, CLEAR] on main unit for next error.
H02	Rec INH SW abnormal	The content of abnormality can be confirmed in the abnormal detection mode explained in the later section.		For deck mechanism unit. Press [■, CLEAR] on main unit for next error.
H03	HALF SW abnormal			For deck mechanism unit. Press [■, CLEAR] on main unit for next error.
F01	Reel pulse abnormal			For deck mechanism unit. Press [■, CLEAR] on main unit for next error.
F02	TPS abnormal			For deck mechanism unit. Press [■, CLEAR] on main unit for next error.

7.4.2. Error Code Table (For CD Mechanism Unit)

Error Code	Diagnosis Contents	Description of error	Automatic FL Display	Remarks
LOAD	Load operation faulty	The load operation cannot complete when time out --> Falsaf reverse operates again then time out again, it is memorized.		For CD Mechanism unit (CR14C). Press [EXCHANGE] on main unit for next error.
UNLD	Unload operation faulty	The unload operation cannot complete when time out --> Falsaf reverse operates again then time out again, it is memorized.		For CD Mechanism unit (CR14C). Press [EXCHANGE] on main unit for next error.
UP	Exchange open operation faulty	The exchange open operation cannot complete when time out --> operation time out again, it is memorized.		For CD Mechanism unit (CR14C). Press [EXCHANGE] on main unit for next error.
DOWN	Down operation faulty	The down operation cannot complete when time out --> Falsaf reverse operates again then time out again, it is memorized.		For CD Mechanism unit (CR14C). Press [EXCHANGE] on main unit for next error.
OPEN	Open operation faulty	The open operation cannot complete when time out --> Falsaf reverse operates again then time out again, it is memorized.		For CD Mechanism unit (CR14C). Press [EXCHANGE] on main unit for next error.
CLOSE	Close operation faulty	The open operation cannot complete when time out --> Falsaf reverse operates again then time out again, it is memorized.		For CD Mechanism unit (CR14C). Press [EXCHANGE] on main unit for next error.
MODEL	Mode change to updown operation faulty	The mode change to updown operation cannot complete when time out reversing --> operates again then time out again, it is memorized. Mode change to updown.		For CD Mechanism unit (CR14C). Press [EXCHANGE] on main unit for next error.

Error Code	Diagnosis Contents	Description of error	Automatic FL Display	Remarks
MODEH	Mode change to horizontal operation faulty	The mode change to horizontal operation cannot complete when time out reversing --> operates again then time out again, it is memorized. Mode change to horizontal.		For CD Mechanism unit (CR14C). Press [EXCHANGE] on main unit for next error.
INITIALIZE	Initialize operation faulty	The initialize operation cannot complete, it is memorized.		For CD Mechanism unit (CR14C). Press [EXCHANGE] on main unit for next error.

7.4.3. Error Code Table (For Power Supply)

Error Code	Diagnosis Contents	Description of error	Automatic FL Display	Remarks
F61	Power Amp IC output abnormal	Upon power on, PCNT=HIGH, DCDET2=L after checking LSI.	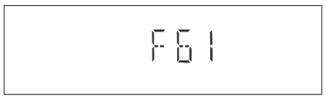	For power. Press [■, CLEAR] on main unit for next error.
F76		DCDET1 = L (NG)		
F61-76		Both DCDET1 and DCDET2 “L“ (NG)	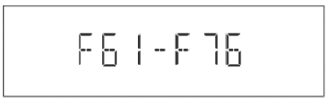	

8 Assembling and Disassembling

8.1. Caution

Special Note:

This model uses a new Mechanism unit (CR14C). In this following section does not contain the necessary disassembly & assembly information for the Mechanism unit (CR14C) except the disassembly & assembly of traverse unit. Kindly refer to the original service manual for the Mechanism unit. (Order No. MD0805031CE).

"Attention Servicer"

Some chassis components may have sharp edges. Be careful when disassembling and servicing.

1. This section describes procedures for checking the operation of the major printed circuit boards and replacing the main components.
2. For reassembly after operation checks or replacement, reverse the respective procedures.
   Special reassembly procedures are described only when required.
3. Select items from the following index when checks or replacement are required.
4. Refer to the Parts No. on the page of "Replacement Parts List" (Section 23), if necessary.

CAUTION NOTE:
Please use original screws and at correct locations.

Caution:

After replacing of Mechanism Unit (CR14C), ageing test is necessary. Please confirm operation for Mechanism Unit (CR14C).

Below is the list of disassembly sections

- **Disassembly of Top Cabinet**
- **Disassembly of Mechanism Unit (CR14C)**
- **Disassembly of Jupiter USB P.C.B.**
- **Disassembly of Fan Unit**
- **Disassembly of Rear Panel**
- **Disassembly of Front Panel Unit**
- **Disassembly of Panel P.C.B., Tact Switch P.C.B., Remote Sensor P.C.B., Side Bar (L) Led P.C.B. & Side Bar (R) Led P.C.B.**
- **Disassembly of Mic P.C.B.**
- **Disassembly of USB Connector/Led P.C.B.**
- **Disassembly of Music Port P.C.B.**
- **Disassembly of CD Lid**
- **Disassembly of Deck Mechanism Unit**
- **Disassembly of Deck P.C.B.**
- **Disassembly of Deck Mechanism**
- **Disassembly of Deck Mechanism P.C.B.**
- **Disassembly of Cassette Lid**
- **Rectification for Tape Jam Problem**
- **Disassembly of Traverse Unit**
- **Disassembly of D-Amp P.C.B.**
- **Replacement of Audio Digital Amp IC (IC5400)**
- **Replacement of Audio Digital Amp IC (IC5000)**
- **Replacement of Audio Digital Amp IC (IC5200)**
- **Disassembly of Main P.C.B.**
- **Replacement for Voltage Regulator IC (IC2761)**
- **Replacement for Switch Regulator (Q2751)**
- **Disassembly of SMPS P.C.B.**
- **Replacement for Switch Regulator IC (IC5701)**

- **Replacement for Switch Regulator Diode (D5702)**
- **Replacement for Regulator Diode (D5801)**
- **Replacement for Regulator Diode (D5802)**
- **Replacement for Regulator Diode (D5803)**
- **Disassembly of AC Inlet P.C.B.**
- **Disassembly of Voltage Selector P.C.B. (For GCP Only)**

Below shown is part no. of different screws types used:

a	:RHD30007-K2J	h	:XTW3+8TFJ
b	:RHD30119-S	i	:XTB3+10JFJ
c	:XTW3+12TFJ	j	:XTW2+10LFJ
d	:RHD26046-L	k	:XYC2+JF17FJ
e	:XTV3+10GFJ-M	l	:XTW3+18TFJ
f	:XTW2+5LFJ	q	:XTW26+10SFJ
g	:RHD30111-3	r	:RHD26022-1

8.2. Disassembly flow chart

The following chart is the procedure for disassembling the casing and inside parts for internal inspection when carrying out the servicing.

To assemble the unit, reverse the steps shown in the chart as below.

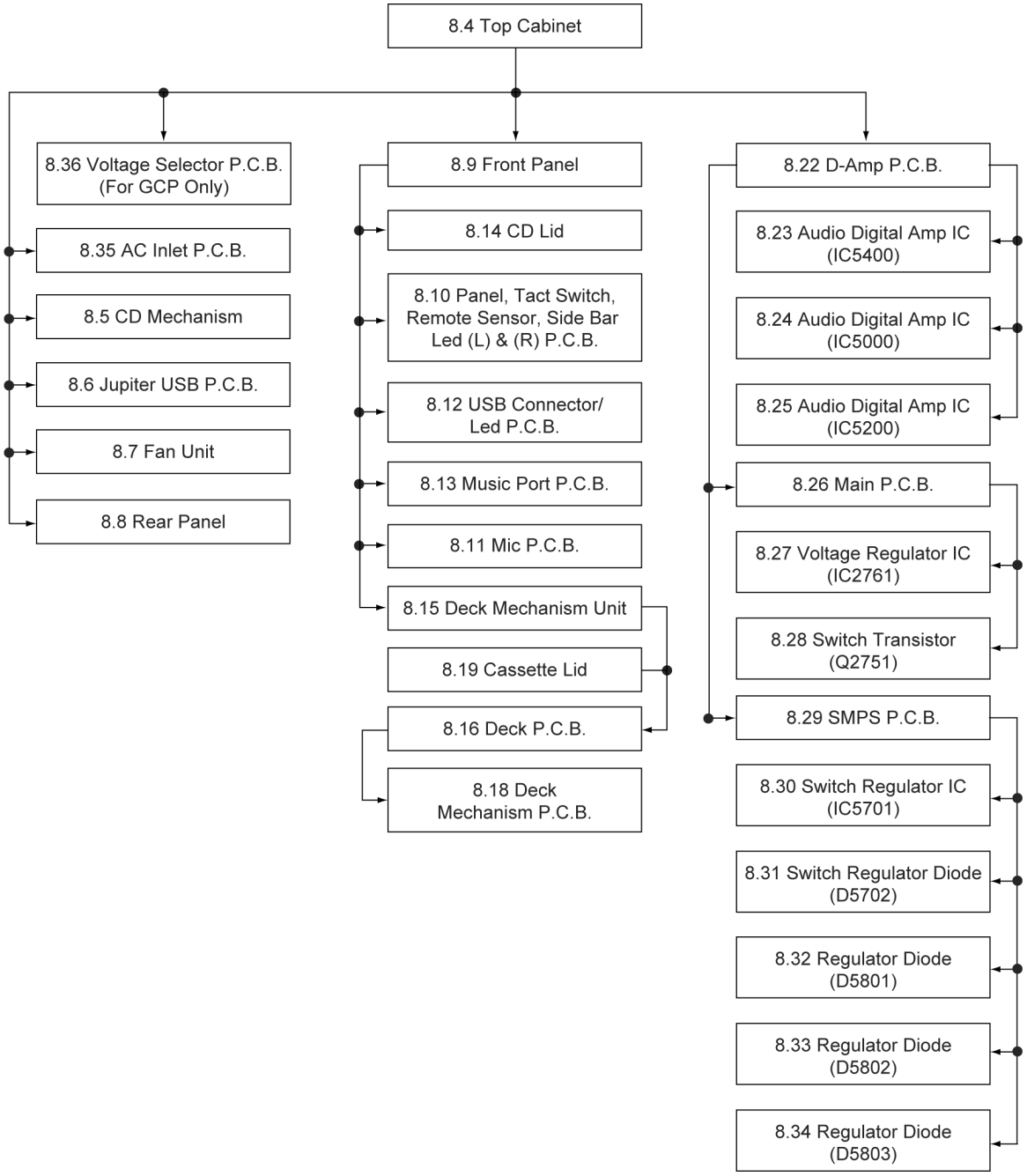

8.3. Main Components and P.C.B. Location

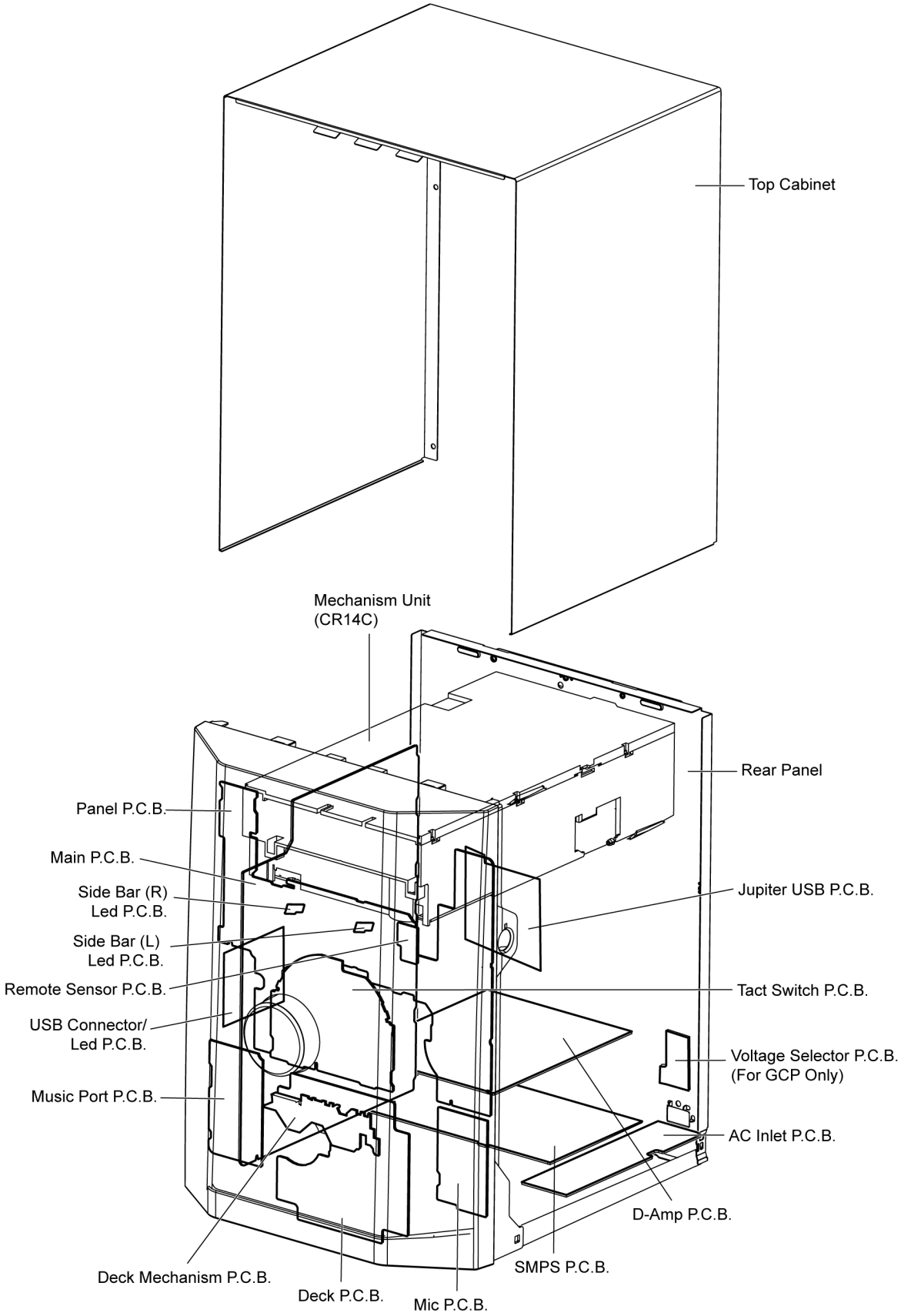

8.4. Disassembly of Top Cabinet

Step 1 Remove 3 screws on both sides of Top Cabinet.

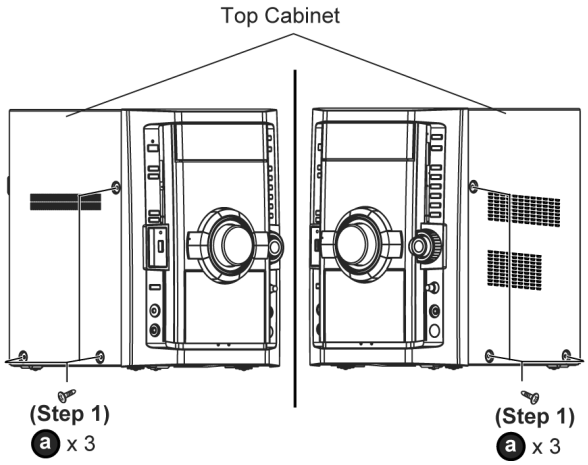

Step 2 Remove 5 screws at the rear panel.

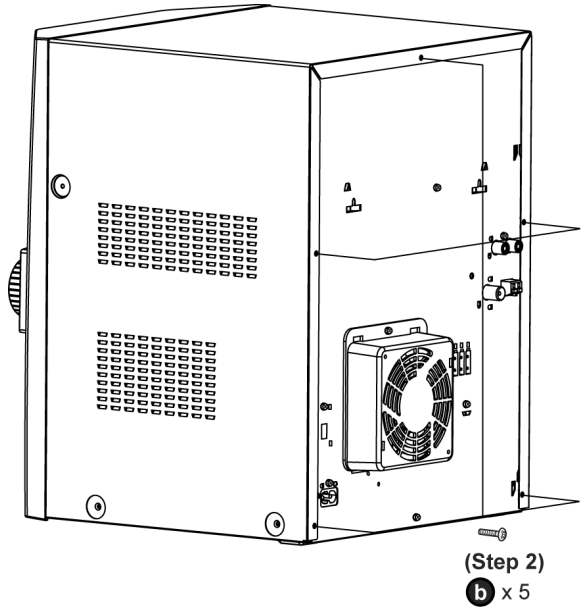

Step 3 Lift the sides of Top Cabinet outwards as arrow shown.

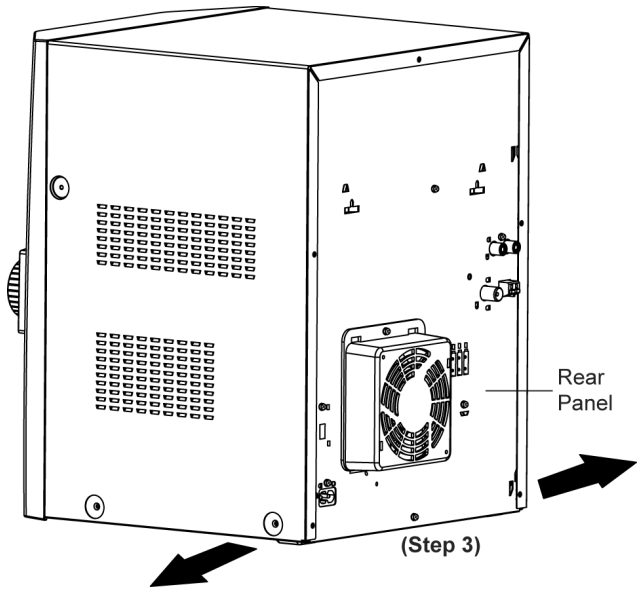

Step 4 Push the Top Cabinet backwards to release the catches.

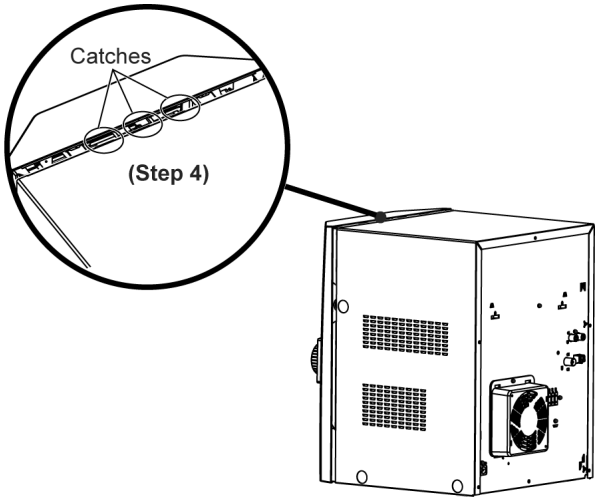

Step 5 Lift up the Top Cabinet and remove it in the direction of arrow.

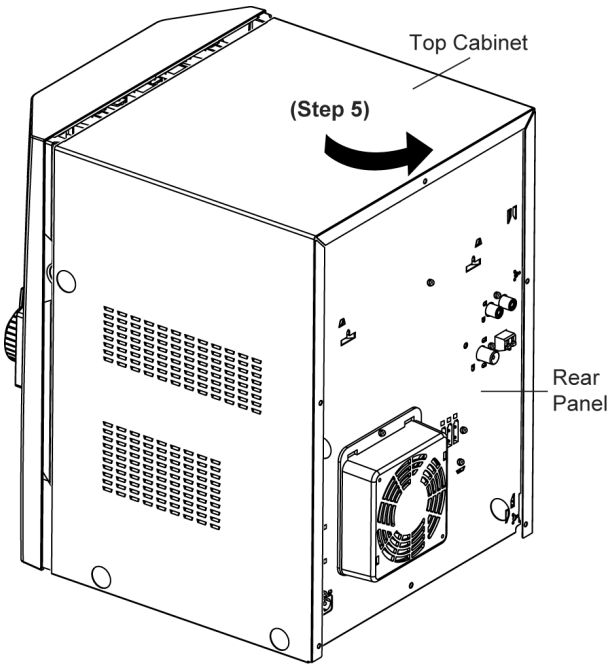

8.5. Disassembly of Mechanism Unit (CR14C)

- Follow the (Step 1) - (Step 5) of Item 8.4

Step 1 Remove 1 screw at rear panel.

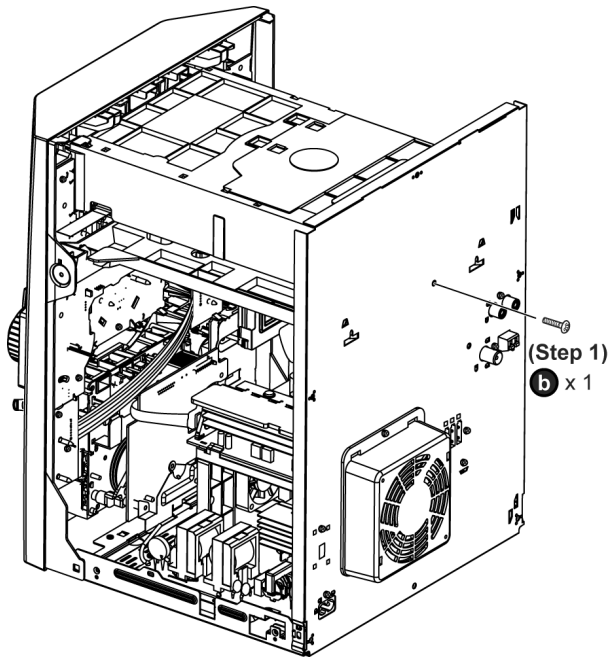

Step 2 Detach 22P FFC cable at connector (CN2801) at Main P.C.B..

Step 3 Detach 11P FFC cable at connector (CN2802) at Main P.C.B..

Step 4 Detach 6P FFC cable at connector (CN2815) at Main P.C.B..

Step 5 Detach 20P FFC cable at connector (CN2804) at Main P.C.B..

Step 6 Detach 5P wire cable at connector (CN1113) at USB Connector/Led P.C.B..

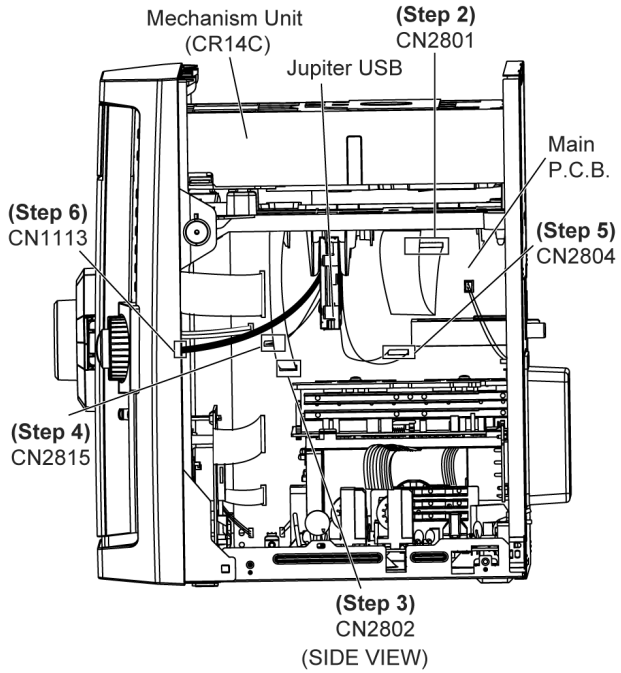

Step 7 Release the claws outwards on both sides.

Step 8 Release catches at both sides.

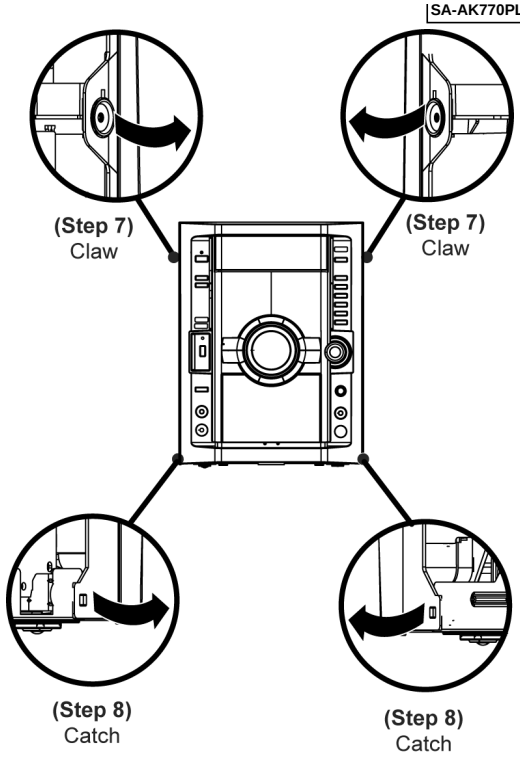

Special Note: During reassembling procedure, ensure both the claws and catches are fully catched.

Assembly is secured upon hearing a click sound.

Step 9 Release the tabs at the bottom of the front panel.

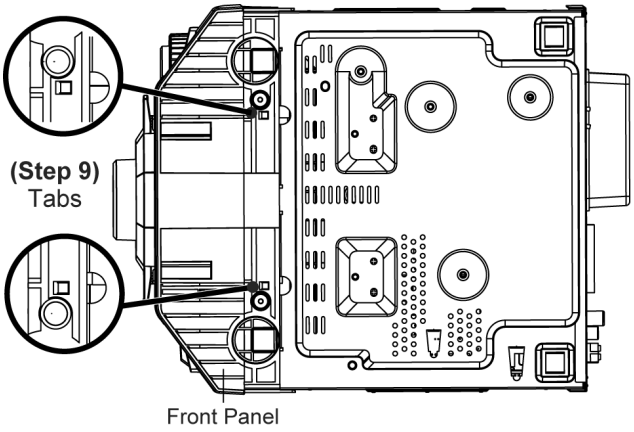

Caution: Do not exert strong force when releasing the tabs.

Step 10 Shift the front panel unit slightly forward in the direction of arrows.

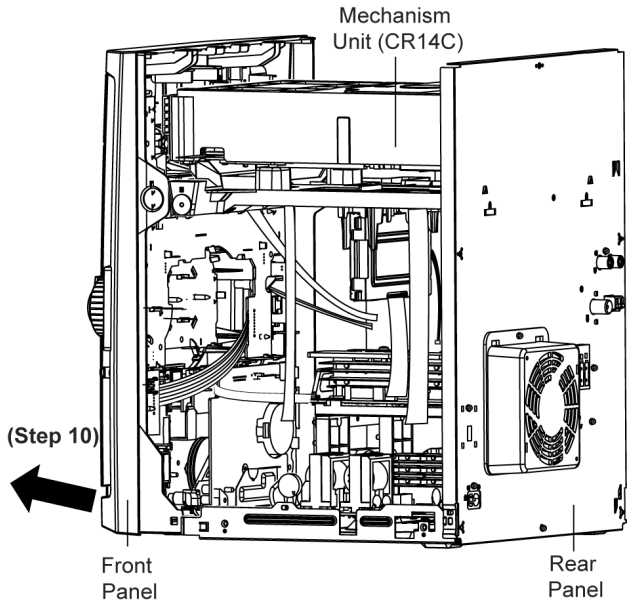

Step 11 Release mechanism unit from the 2 locators.

Step 12 Lift up the Mechanism Unit (CR14C).

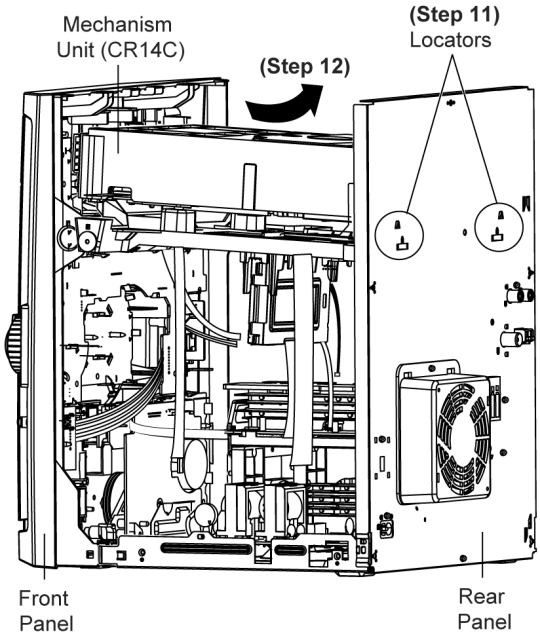

- **Disassembly of Mecha Chassis**

Step 13 Remove 2 screws.

Step 14 Remove the Mecha Chassis as arrow shown.

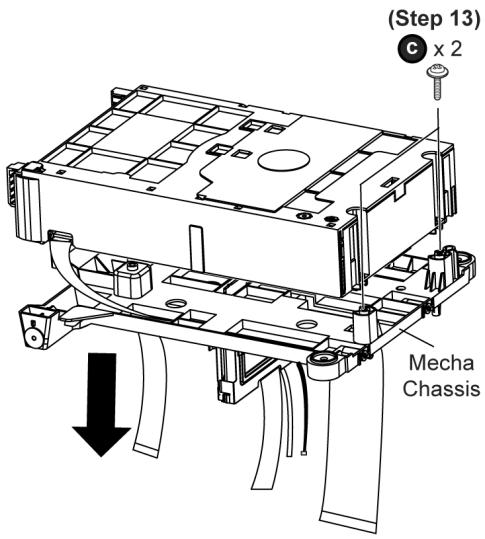

Notes:

1. For disassembly & assembly of traverse unit, please refer to original Service Manual for the Disassembly and Assembly of the Mechanism Unit (CR14C).
2. During reassembling procedure, ensure the Mechanism Unit (CR14C) is seated properly at the locators.

8.6. Disassembly of Jupiter USB P.C.B.

- Follow the (Step 1) - (Step 5) of Item 8.4
- Follow the (Step 1) - (Step 12) of Item 8.5

Step 1 Remove 2 screws.

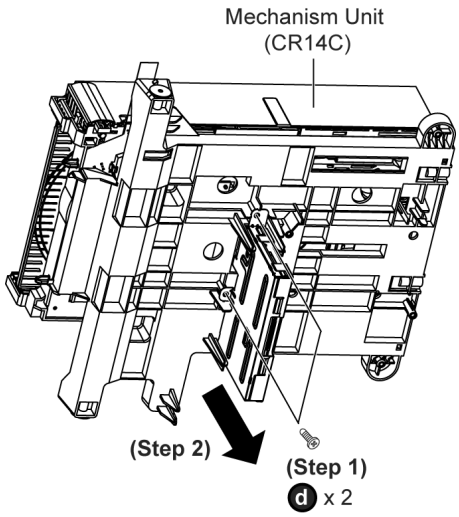

Step 2 Remove Jupiter USB Unit.

Step 3 Release all the catches.

Step 4 Remove Jupiter USB Cover in the direction of arrow.

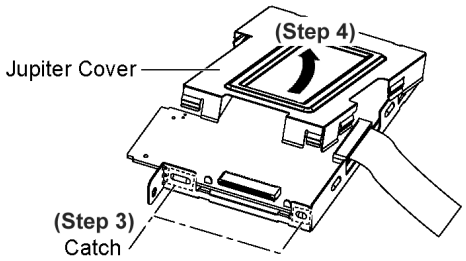

Step 5 Desolder 4 points.

Step 6 Remove Jupiter USB P.C.B..

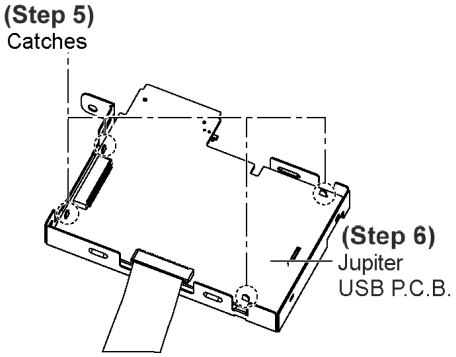

Note : During reassembling procedures, ensure 4 points is solder onto Jupiter USB P.C.B..

8.7. Disassembly of Fan Unit

- Follow the (Step 1) - (Step 5) of Item 8.4

Step 1 Detach 2P wire cable at connector (CN2810) at Main P.C.B..

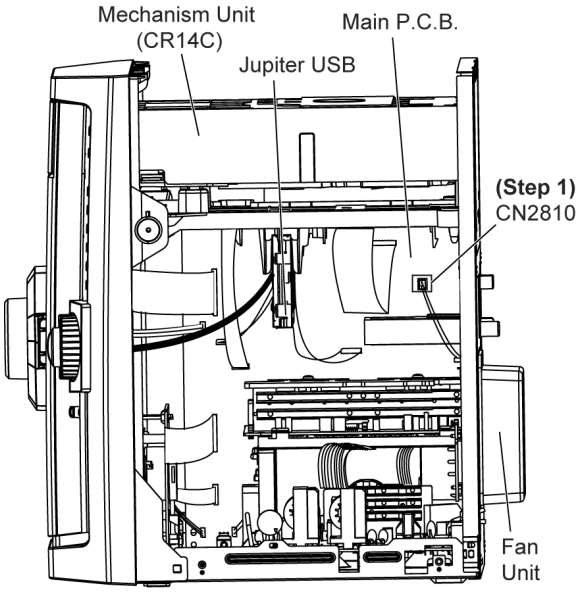

Step 2 Remove 2P wire cable from the hook.

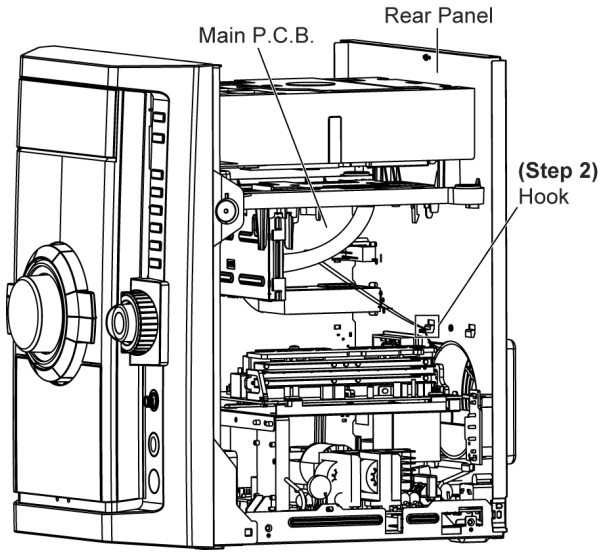

Step 3 Remove 1 screw at the rear panel.

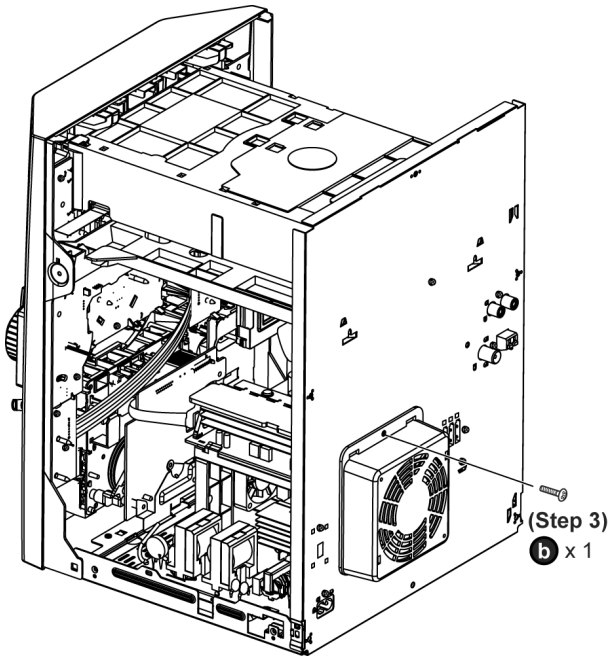

Step 4 Lift the Fan Unit slightly as arrow shown.

Step 5 Remove the Fan Unit.

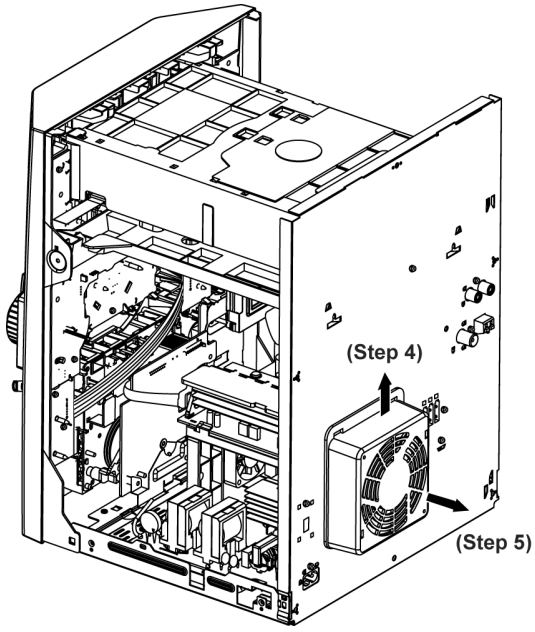

Note: During reassembling procedures, ensure wires are properly dressed in the hook.

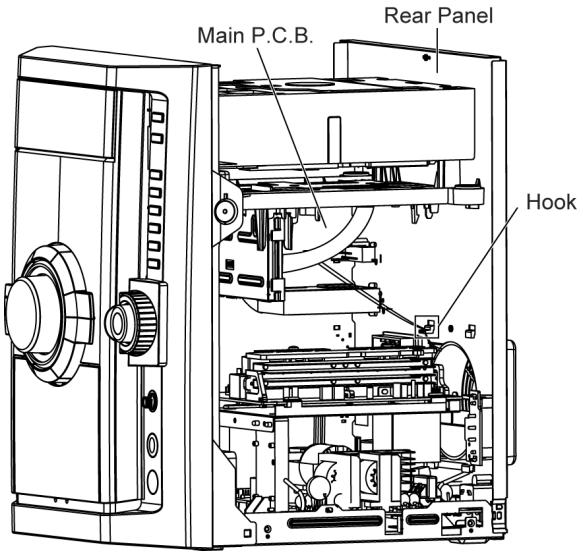

8.8. Disassembly of Rear Panel

- Follow the (Step 1) - (Step 5) of Item 8.4
- Follow the (Step 1) of Item 8.7

Step 1 Remove 9 screws at rear panel (For PL only).

Step 1 Remove 10 screws at rear panel (For GCP only).

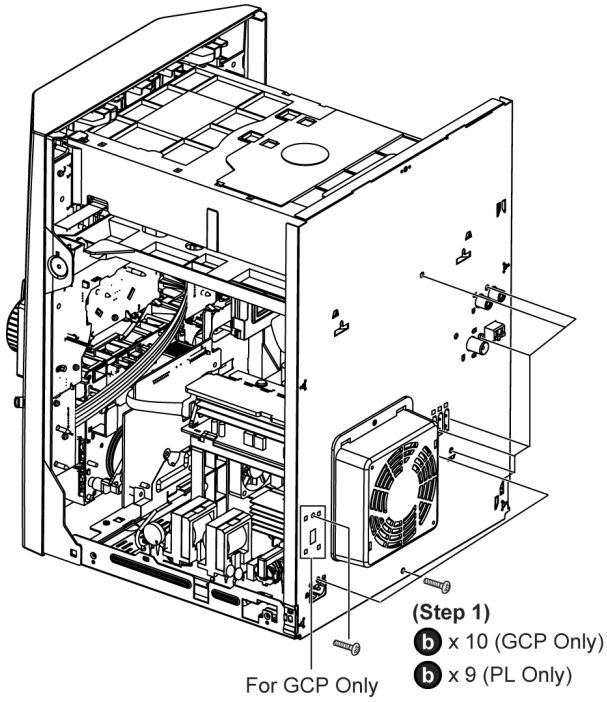

Step 2 Slide the Voltage Seclector P.C.B. as arrow shown.

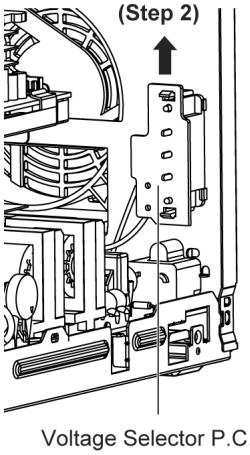

Step 3 Slightly lift up the Mechanism Unit (CR14C) from the 2 locators.

Step 4 Release 2 catch from the side panel.

Step 5 Remove the rear panel.

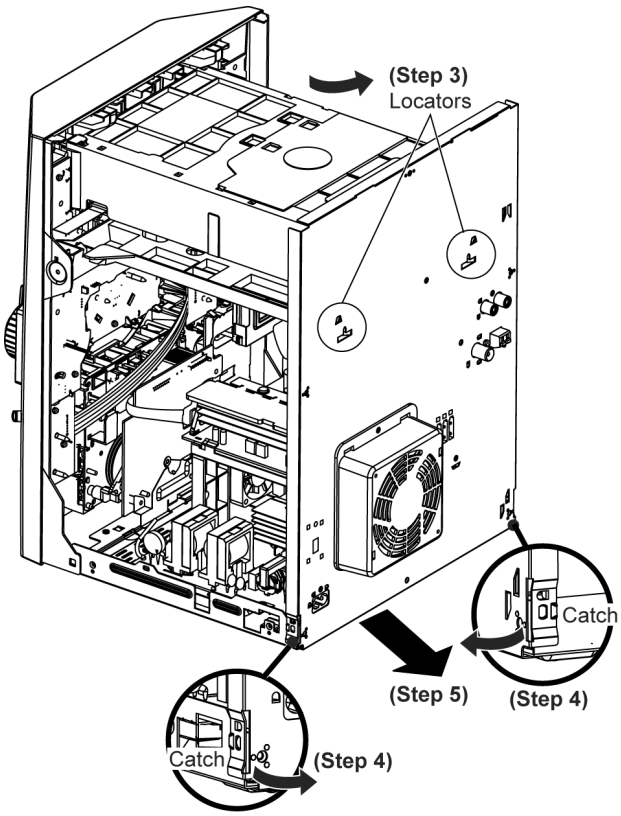

8.9. Disassembly of Front Panel Unit

- Follow the (Step 1) - (Step 5) of Item 8.4
- Follow the (Step 7) - (Step 10) of Item 8.5

Step 1 Detach 27P FFC cable at connector (CN2806) at Main P.C.B..

Step 2 Detach 2P wire cable at connector (CN1112) at Main P.C.B..

Step 3 Detach 21P FFC cable at connector (CN2011) at Main P.C.B..

Step 4 Detach 10P FFC cable at connector (CN2807) at Main P.C.B..

Step 5 Detach 2P wire cable at connector (CN2001) at Main P.C.B..

Step 6 Detach 5P wire cable at connector (CN1113) at USB Connector/ Led P.C.B..

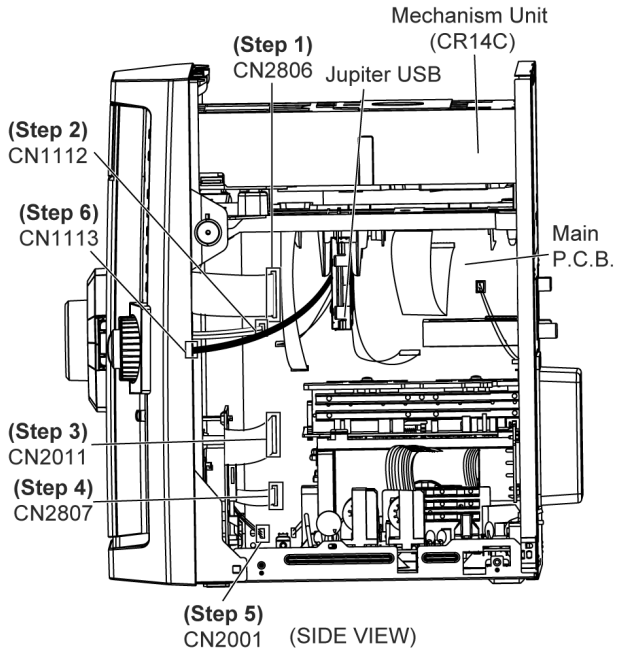

Step 7 Detach the front panel unit.

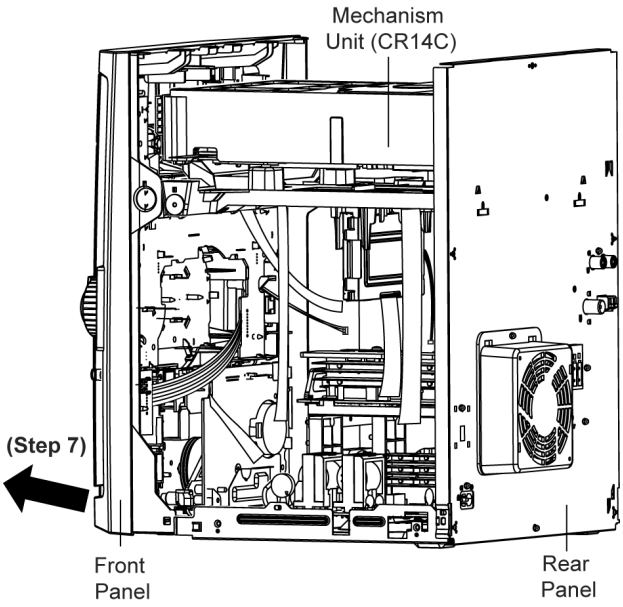

8.10. Disassembly of Panel P.C.B., Tact Switch P.C.B., Remote Sensor P.C.B., Side Bar (L) Led P.C.B. & Side Bar (R) Led P.C.B.

- Follow the (Step 1) - (Step 5) of Item 8.4
- Follow the (Step 7) - (Step 10) of Item 8.5
- Follow the (Step 1) - (Step 7) of Item 8.9

Step 1 Remove Volume knob as arrow shown.

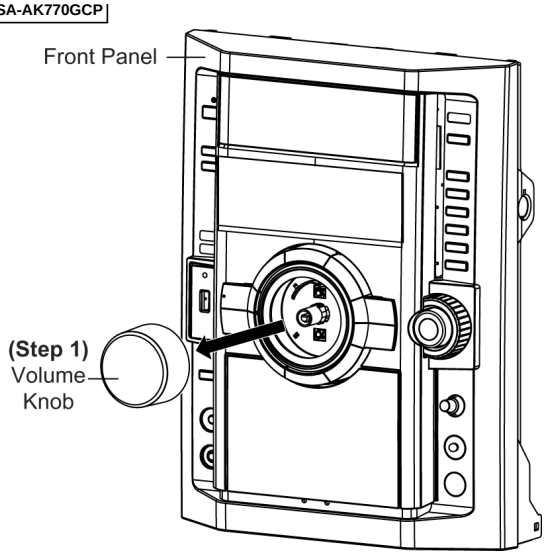

Step 2 Remove 9 screws at Panel P.C.B..

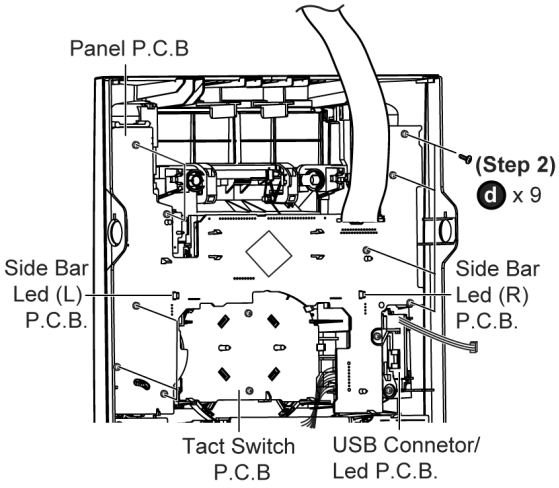

Step 3 Remove 2 screws at Tact Switch P.C.B..

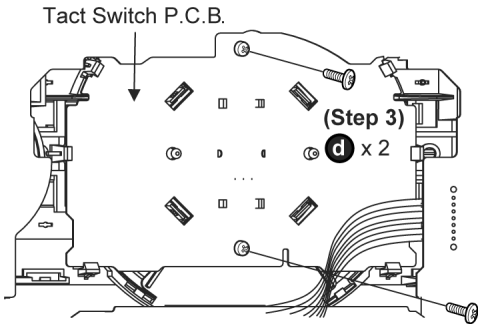

Step 4 Release 2 catches at Panel P.C.B..

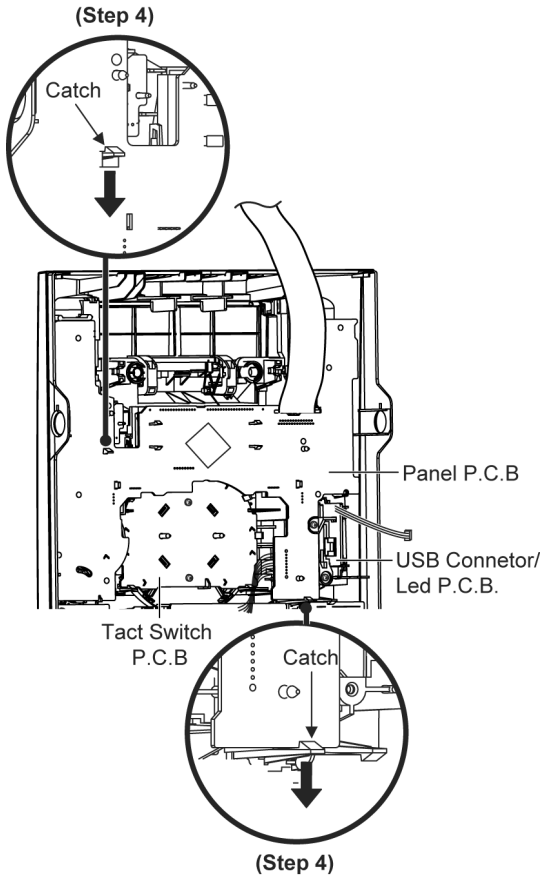

Step 5 Release 6 catches at Tact Switch P.C.B..

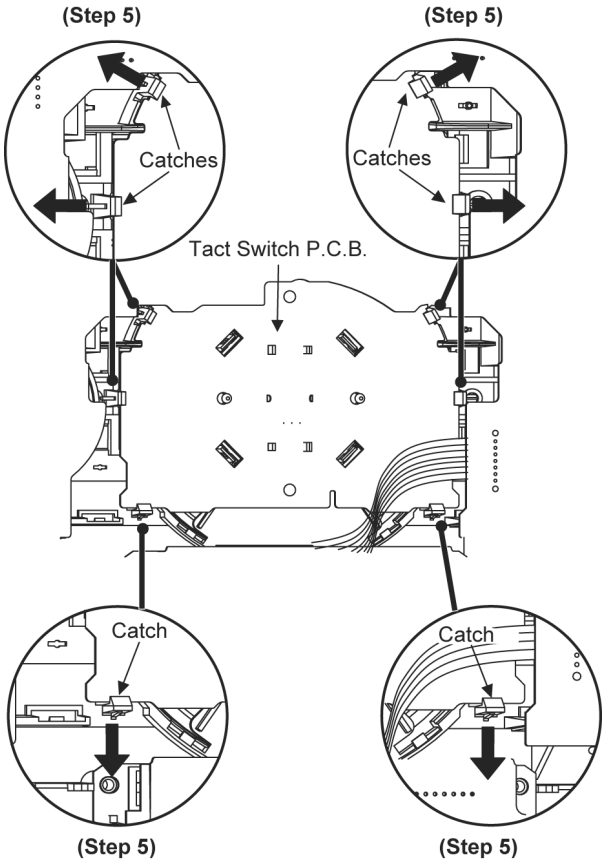

Step 6 Release 2 catches at Remote Sensor P.C.B..

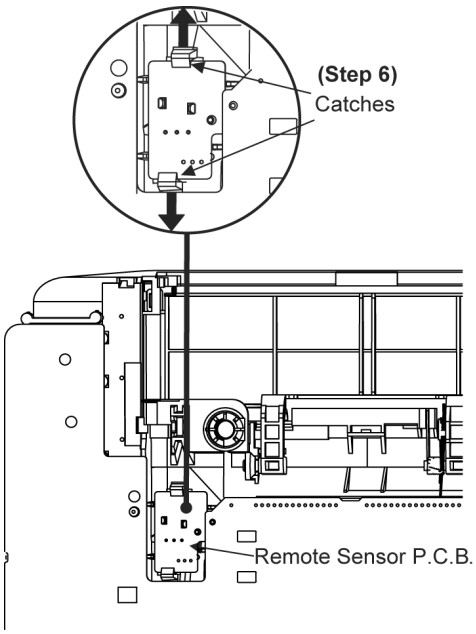

Step 7 Lift up the Panel P.C.B., Tact Switch P.C.B. & Remote Sensor P.C.B. altogether as arrow shown.

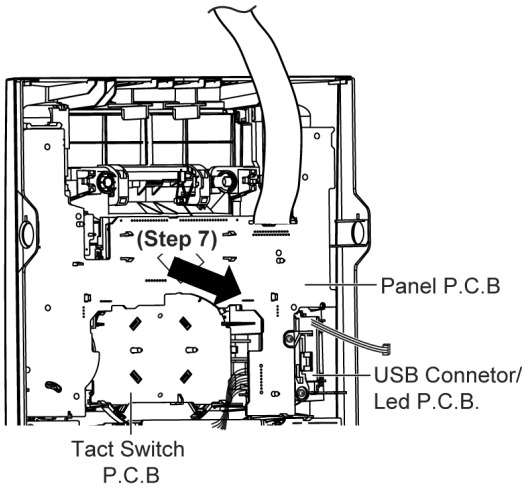

Step 8 Desolder cable (ZJ6601) on Panel P.C.B..

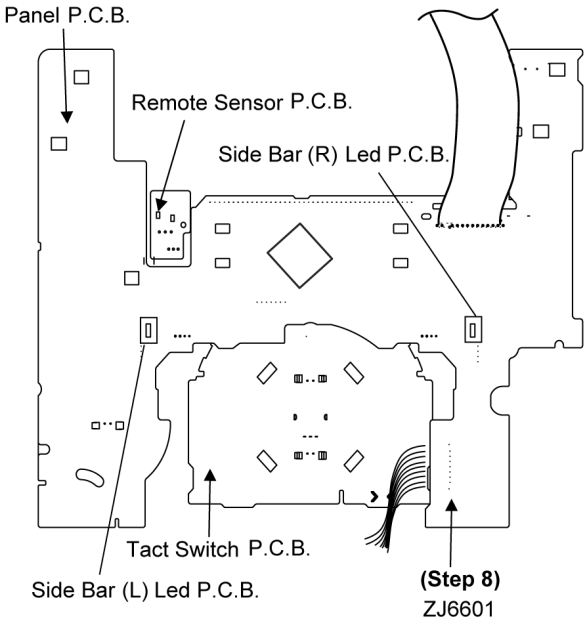

- **Disassembly of Side Bar (L) Led P.C.B.**

Step 9 Detach 4P connector (CN6604) at Side Bar (L) Led P.C.B. at Panel P.C.B..

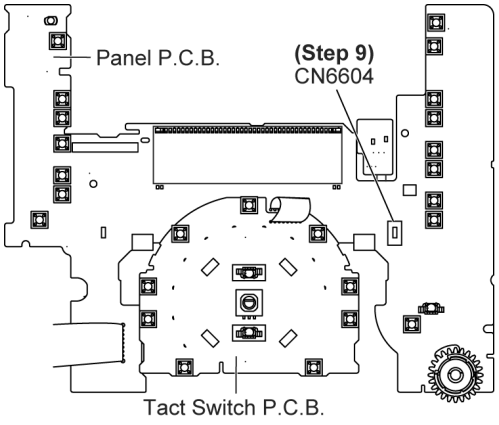

- **Disassembly of Side Bar (R) Led P.C.B.**

Step 10 Detach 4P connector (CN6602) at Side Bar (R) Led P.C.B. at Panel P.C.B..

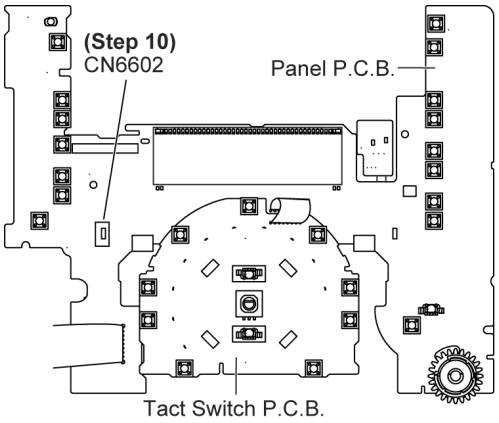

Caution:

1. During assembling of the P.C.B.s, ensure that the diode shown on Tact Switch P.C.B. are in upright position.

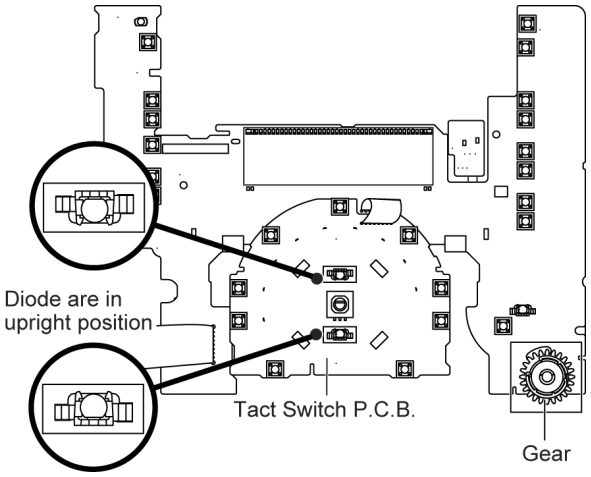

2. During reassembling procedures, ensure that D-Bass knob is seated properly.

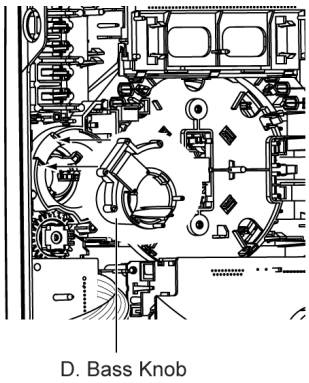

8.11. Disassembly of Mic P.C.B.

- Follow the (Step 1) - (Step 5) of Item 8.4
- Follow the (Step 7) - (Step 10) of Item 8.5
- Follow the (Step 1) - (Step 7) of Item 8.9

Step 1 Remove Mic knob as arrow shown.

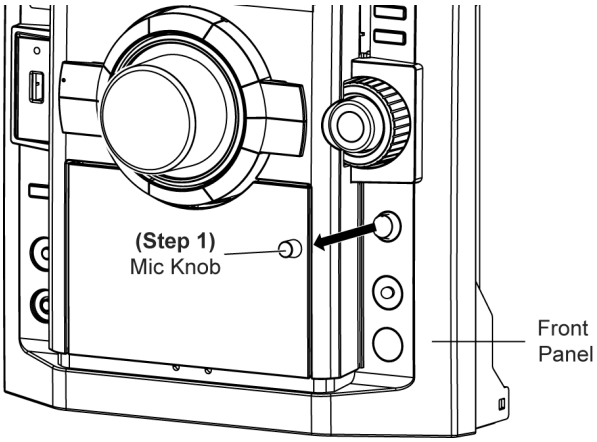

Step 2 Remove 2 screws at Mic P.C.B..

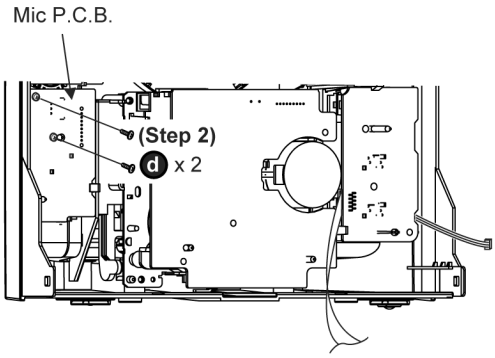

Step 3 Release 1 catch at Mic P.C.B..

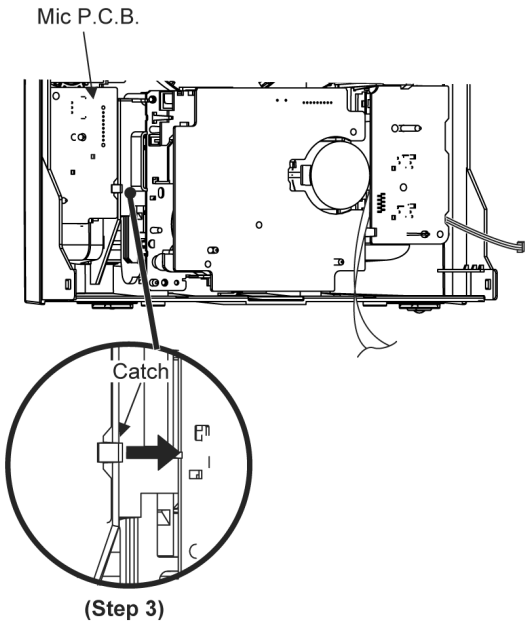

Step 4 Detach 7P FFC wire cable at connector (CN6701) at Mic P.C.B..

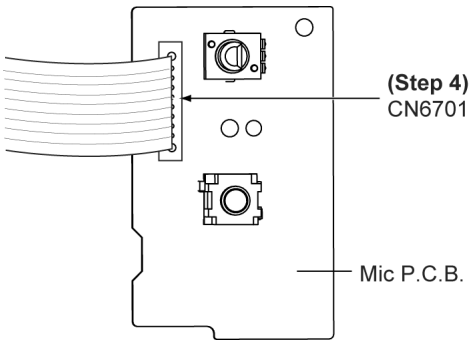

8.12. Disassembly of USB Connector/Led P.C.B.

- Follow the (Step 1) - (Step 5) of Item 8.4
- Follow the (Step 7) - (Step 10) of Item 8.5
- Follow the (Step 1) - (Step 7) of Item 8.9

Step 1 Remove 2 screws at USB Connector/Led P.C.B..

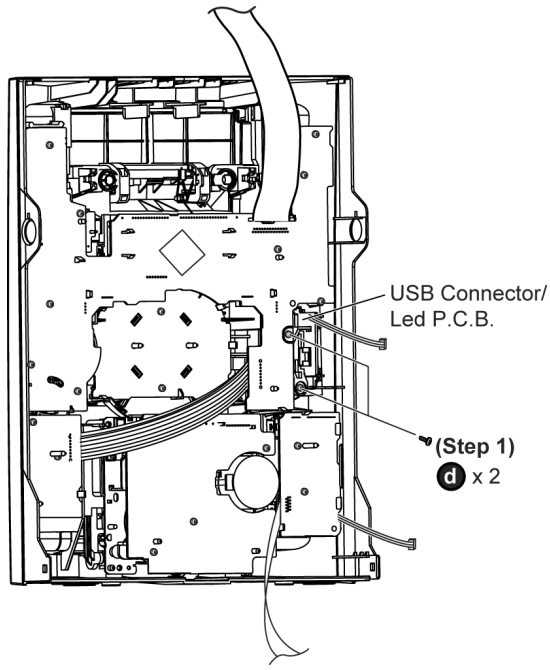

8.13. Disassembly of Music Port P.C.B.

- Follow the (Step 1) - (Step 5) of Item 8.4
- Follow the (Step 7) - (Step 10) of Item 8.5
- Follow the (Step 1) - (Step 7) of Item 8.9

Step 1 Remove 2 screws at Music Port P.C.B..

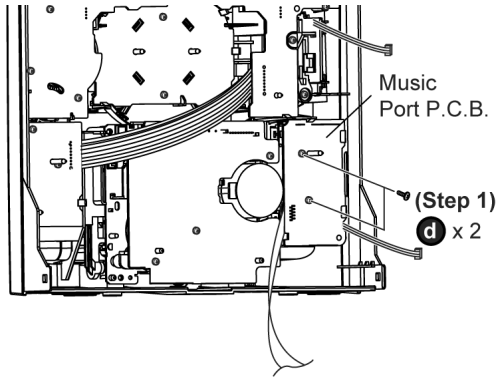

Step 2 Release 2 catches.

Step 3 Lift up the Music Port P.C.B..

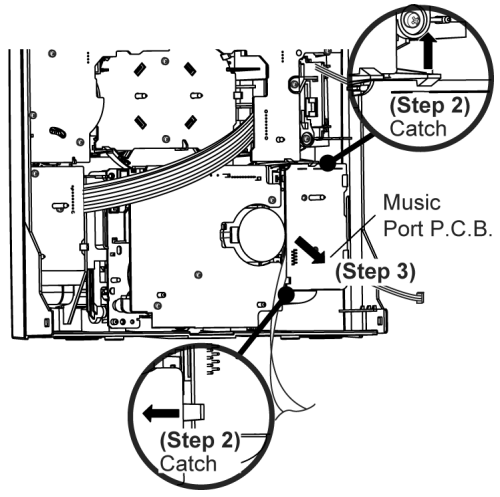

8.14. Disassembly of CD Lid

- Follow the (Step 1) - (Step 5) of Item 8.4
- Follow the (Step 7) - (Step 10) of Item 8.5
- Follow the (Step 1) - (Step 7) of Item 8.9

Step 1 Remove the spring as arrow shown in order of sequences (1) to (3).

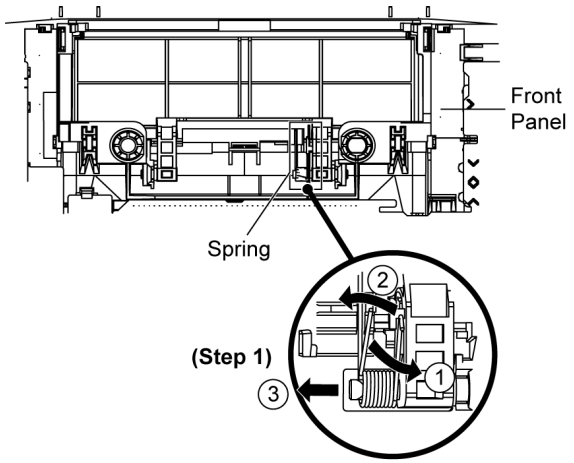

Step 2 Remove CD Lid as arrow shown.

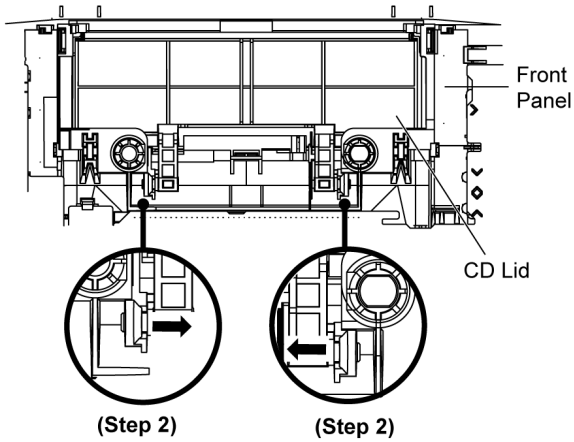

Note: Please ensure that the spring is assembly at right position.

8.15. Disassembly of Deck Mechanism Unit

- Follow the (Step 1) - (Step 5) of Item 8.4
- Follow the (Step 7) - (Step 10) of Item 8.5
- Follow the (Step 1) - (Step 7) of Item 8.9

Step 1 Remove 4 screws at Deck Mechanism.

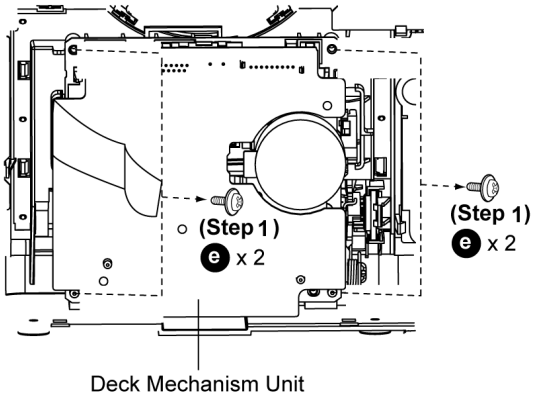

Step 2 Push the lever upward as arrow shown to open the cassette lid ass´y.

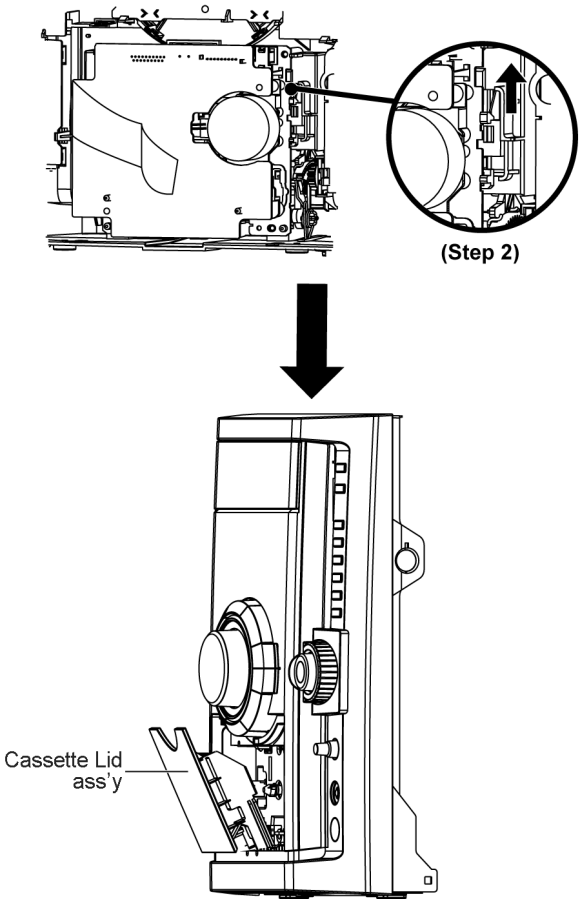

Step 3 Remove the deck mechanism unit.

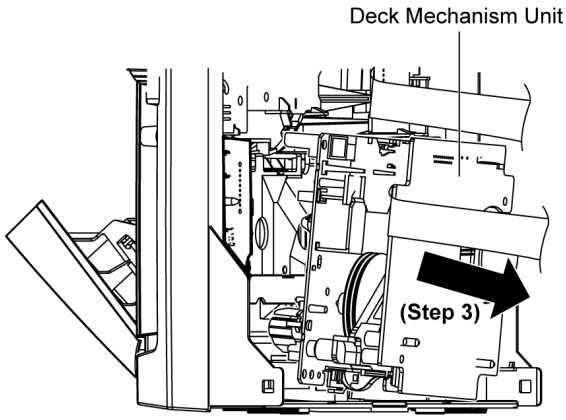

8.16. Disassembly of Deck P.C.B.

- Follow the (Step 1) - (Step 5) of Item 8.4
- Follow the (Step 7) - (Step 10) of Item 8.5
- Follow the (Step 1) - (Step 7) of Item 8.9
- Follow the (Step 1) - (Step 3) of Item 8.15

Step 1 Remove 3 screws.

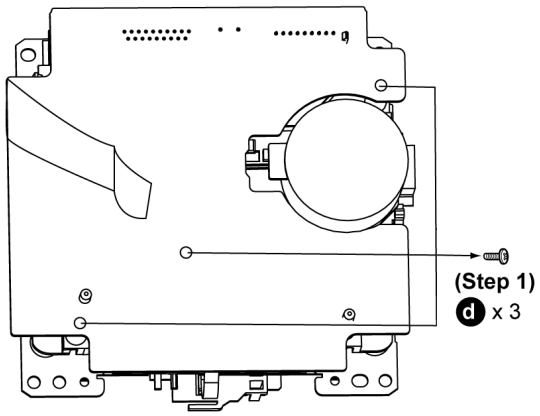

Step 2 Desolder 2P wire at the motor terminal.

Step 3 Detach 9P cable at connector (CP1902) on Deck P.C.B..

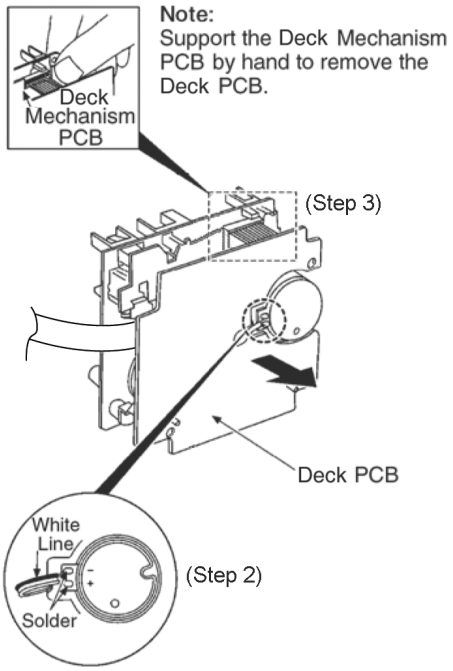

Step 4 Detach connector CP1301 from the head connector.

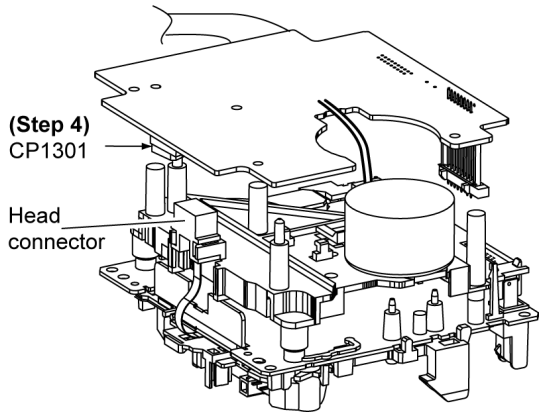

8.17. Disassembly of Deck Mechanism

- Follow the (Step 1) - (Step 5) of Item 8.4
- Follow the (Step 7) - (Step 10) of Item 8.5
- Follow the (Step 1) - (Step 7) of Item 8.9
- Follow the (Step 1) - (Step 3) of Item 8.15
- Follow the (Step 1) - (Step 4) of Item 8.16

8.17.1. Replacement of Pinch Roller and Head Block

Step 1 Release catch to remove the Pinch Roller (F) Assy.

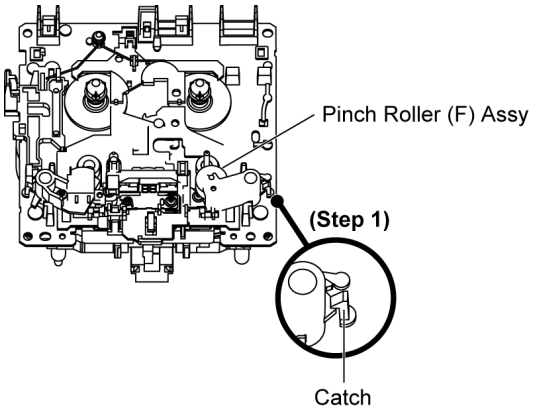

Step 2 Release the catches to remove the head connector.

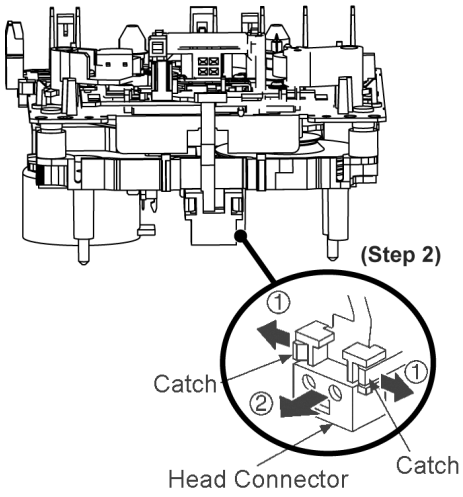

Step 3 Remove 2 screws at the Deck Mechanism unit.

Step 4 Remove head block.

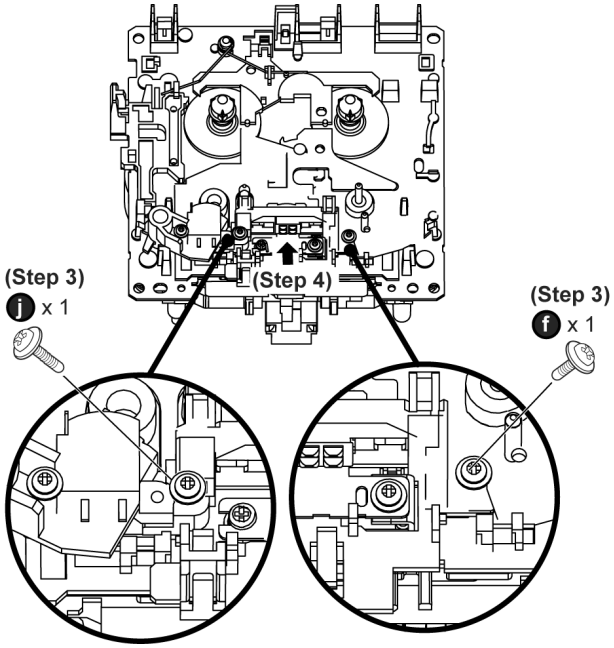

8.17.2. Replacement of Motor, Capstan Belt A, Capstan Belt B, and Winding Belt

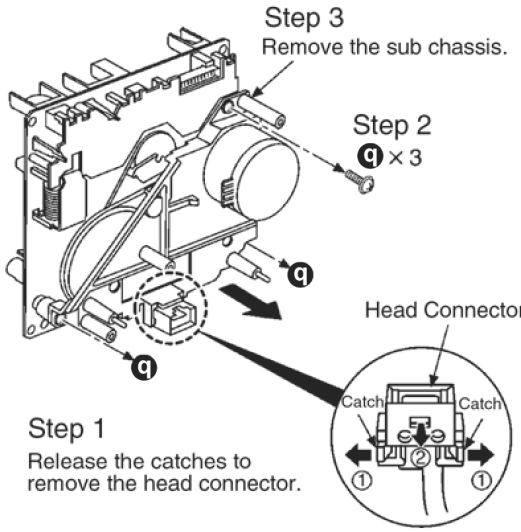

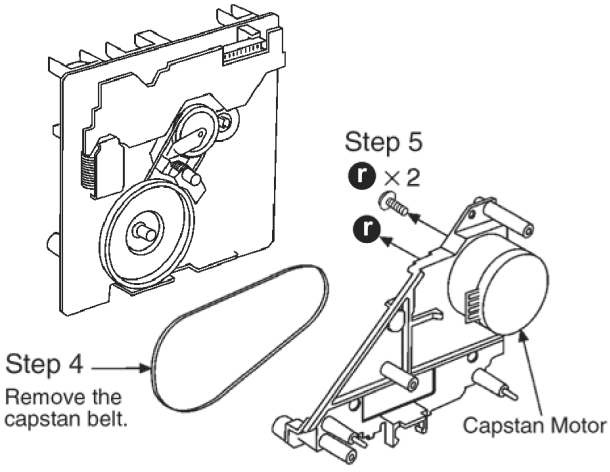

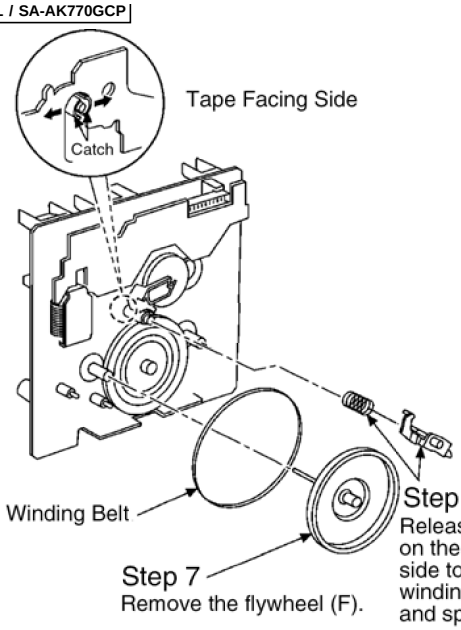

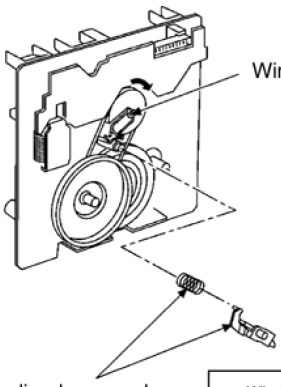

Step 5

Install the winding lever and spring while the winding arm is pressed to the arrow direction. (Be sure that the winding lever is firmly inserted and the catch is hooked.)

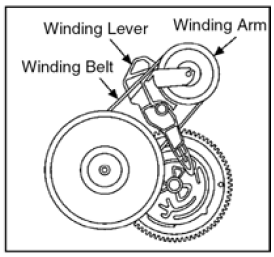

Note:
The winding lever should be positioned as shown in the right figure.

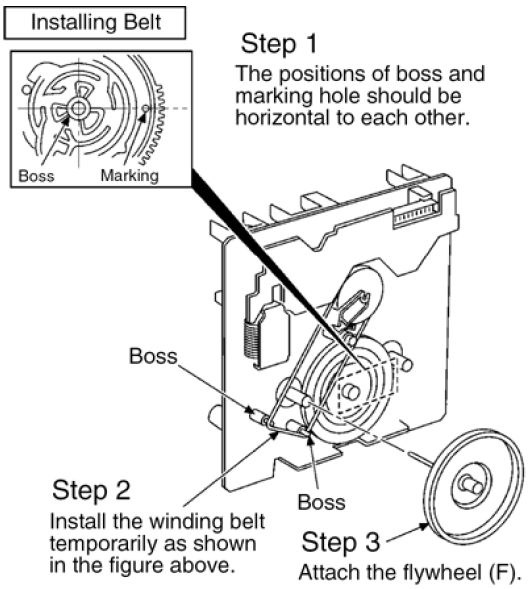

Step 6

Install the capstan belt temporarily as shown in the figure below.

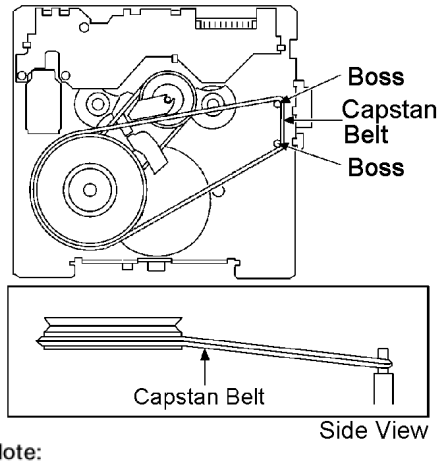

Note:
Keep the belt away from grease.

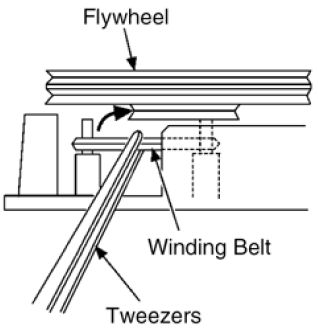

Step 4

Catch the winding belt on the flywheel (F).

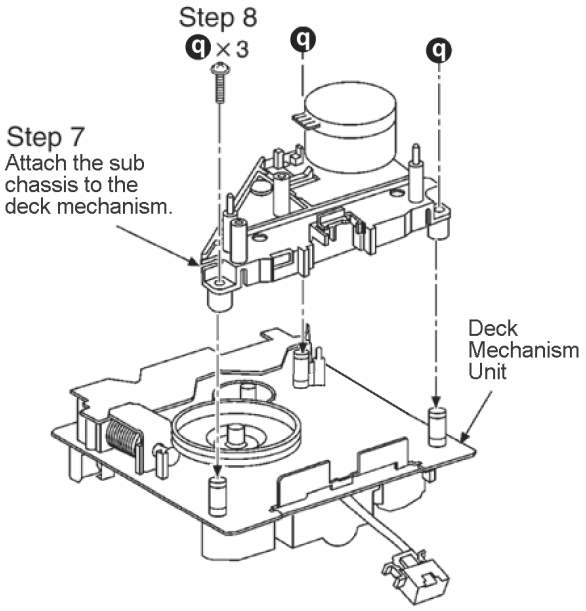

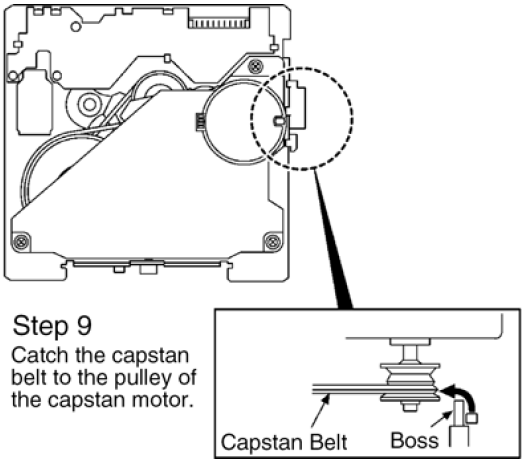

8.18. Disassembly of Deck Mechanism P.C.B.

- Follow the (Step 1) - (Step 5) of Item 8.4
- Follow the (Step 7) - (Step 10) of Item 8.5
- Follow the (Step 1) - (Step 7) of Item 8.9
- Follow the (Step 1) - (Step 3) of Item 8.15
- Follow the (Step 1) - (Step 4) of Item 8.16

Step 1 Desolder plunger terminals.

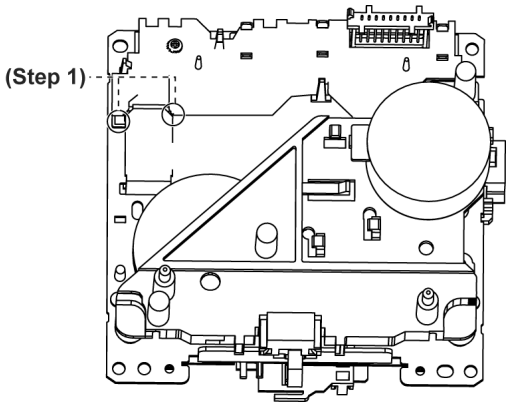

Step 2 Remove 1 screw at Deck Mechanism P.C.B..

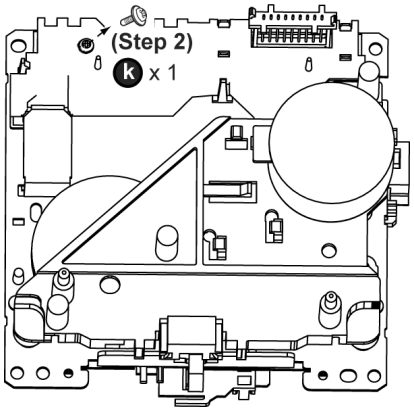

Step 3 Release 3 catches to remove the Deck Mechanism P.C.B..

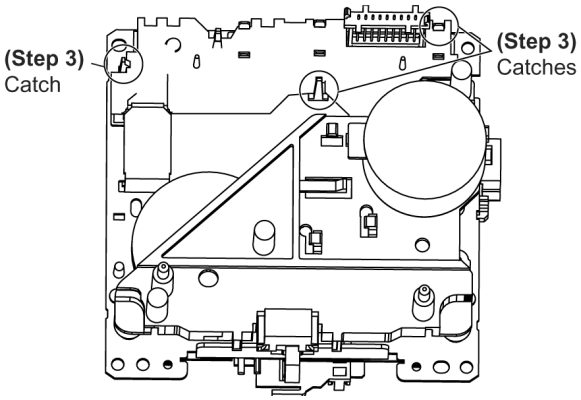

8.19. Disassembly of Cassette Lid

- Follow the (Step 1) - (Step 5) of Item 8.4
- Follow the (Step 7) - (Step 10) of Item 8.5
- Follow the (Step 1) - (Step 7) of Item 8.9
- Follow the (Step 1) - (Step 3) of Item 8.15

Step 1 Remove the spring.

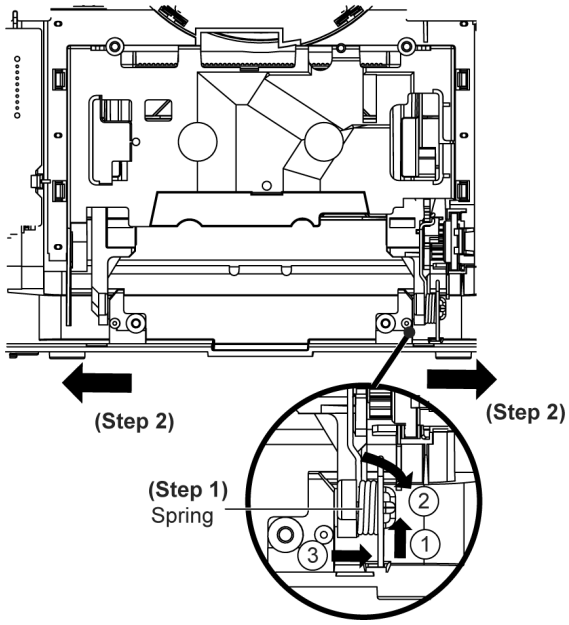

Step 2 Push the cassette lid in the direction of arrows.

8.20. Rectification for Tape Jam Problem

- Follow the (Step 1) - (Step 5) of Item 8.4

Step 1 If a cassette tape cannot be removed from the deck (the tape is caught by the capstan or pinch roller during playback or recording), rotate the flywheel F in the direction of the arrow to remove it.

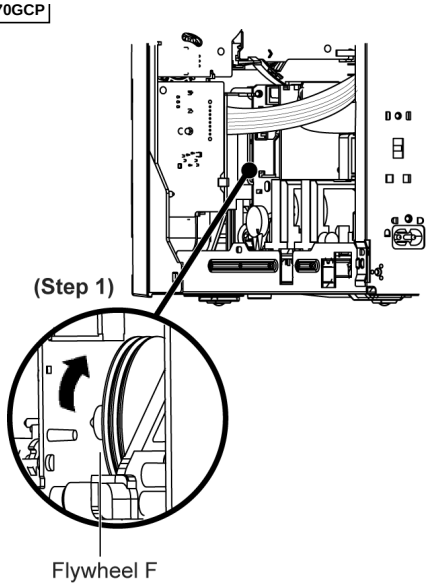

Step 2 Push the lever upward and open the cassette lid.

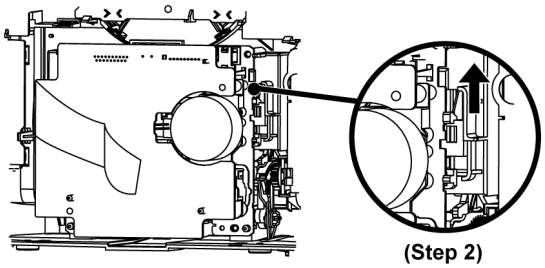

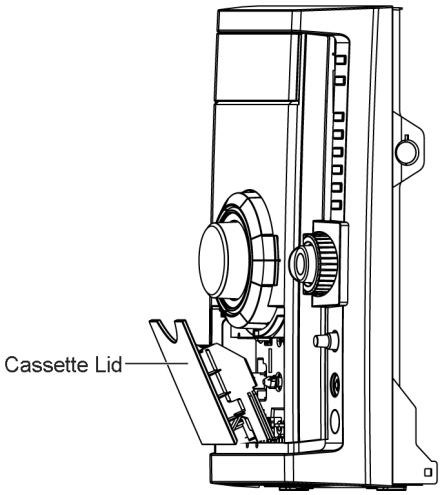

Note: Follow Disassembly of Cassette Lid to remove the cassette tape.

8.21. Disassembly of Traverse Unit

- Follow the (Step 1) - (Step 5) of Item 8.4
- Follow the (Step 1) - (Step 14) of Item 8.5

Step 1 Flip over the traverse unit.

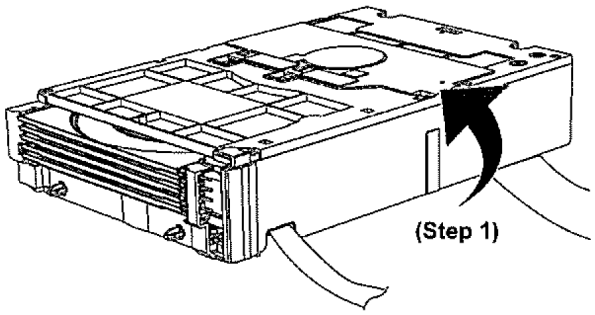

Step 2 Desolder 4 solder points.

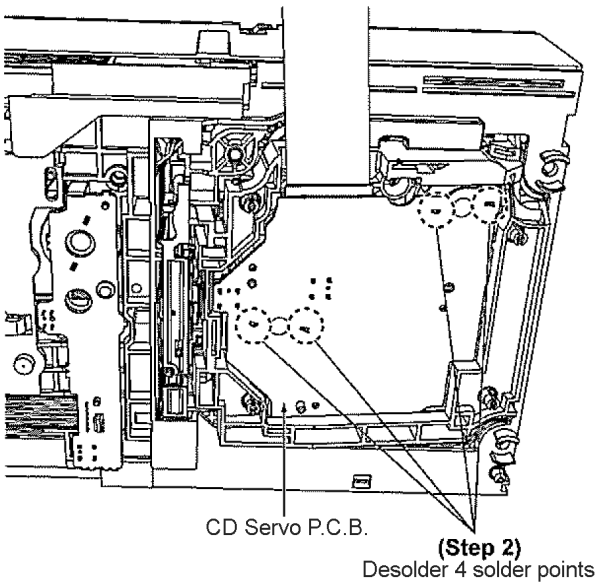

Step 3 Remove 3 screws.

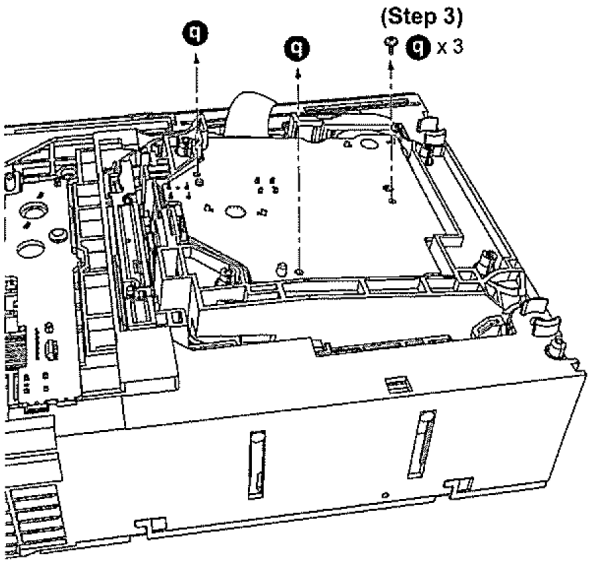

Step 4 Flip over the CD Servo P.C.B..

Step 5 Detach the 16P FFC cable at connector (CN7001) at CD Servo P.C.B..

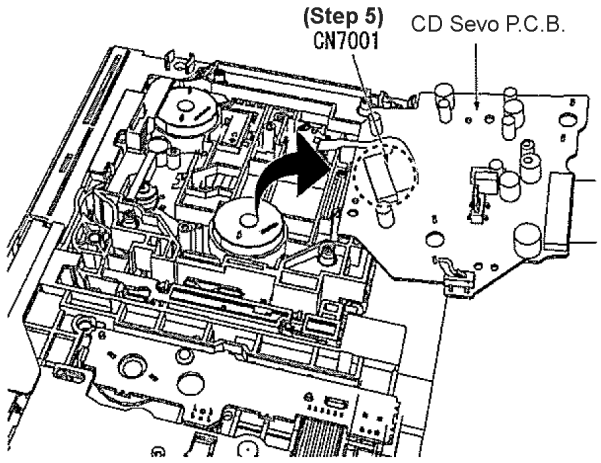

8.22. Disassembly of D-Amp P.C.B.

- Follow the (Step 1) - (Step 5) of Item 8.4
- Follow the (Step 1) - (Step 12) of Item 8.5

Step 1 Detach 17P FFC cable at connector (CN5050) at D-Amp P.C.B..

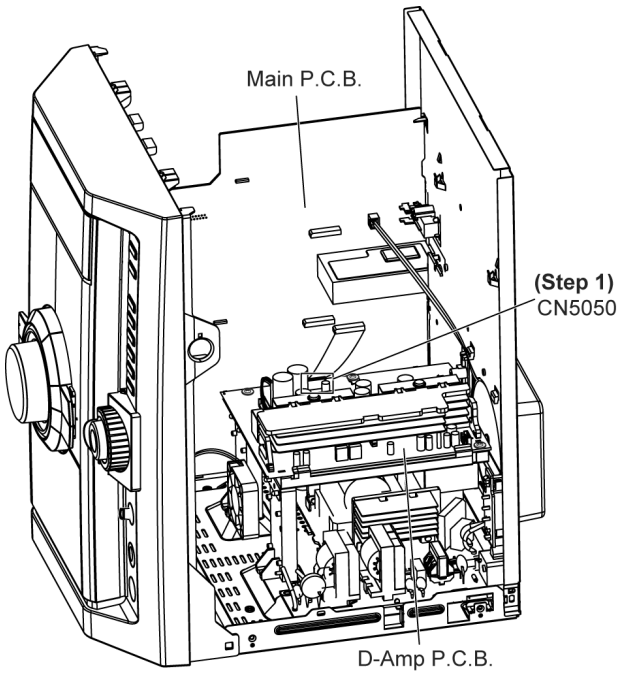

Step 2 Detach 8P wire connector (CN5500) at D-Amp P.C.B..

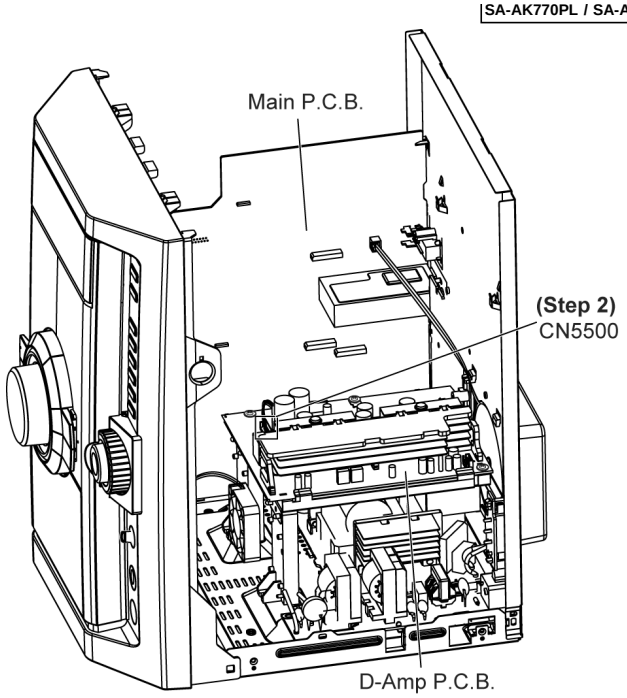

Step 3 Detach 2P wire connector (CN2820) at Main P.C.B. .

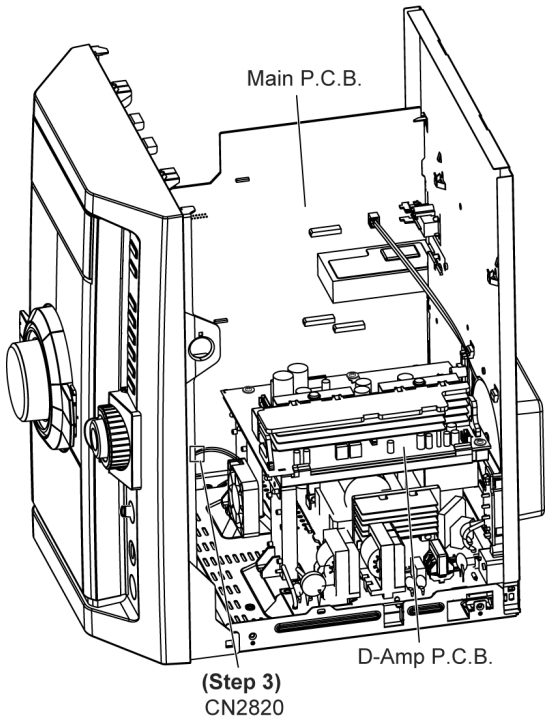

Step 4 Remove 2 screws at D-Amp P.C.B. chassis support .

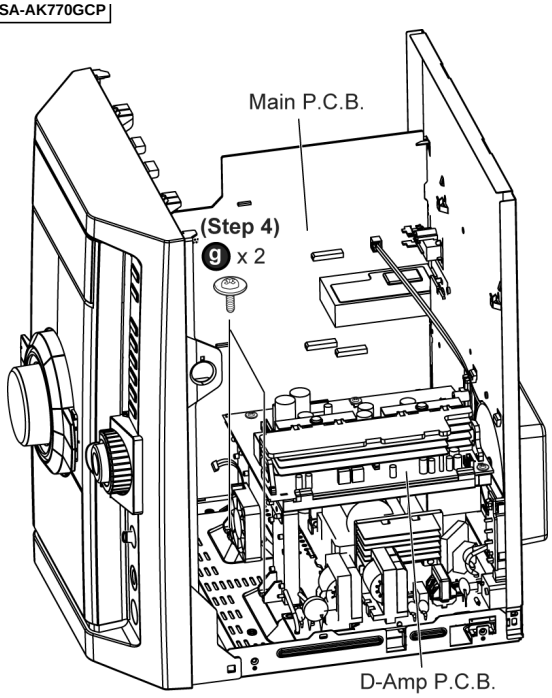

Step 5 Remove 4 screws at the rear panel.

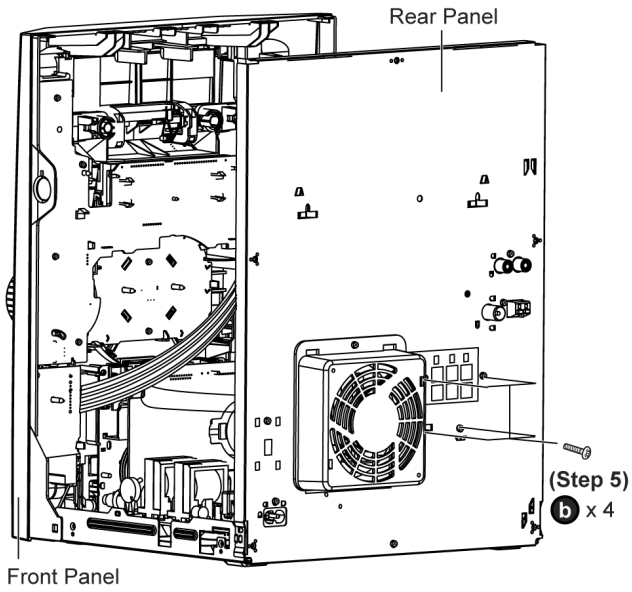

Step 6 Lift up the D-Amp P.C.B. together with the chassis support as arrow shown.

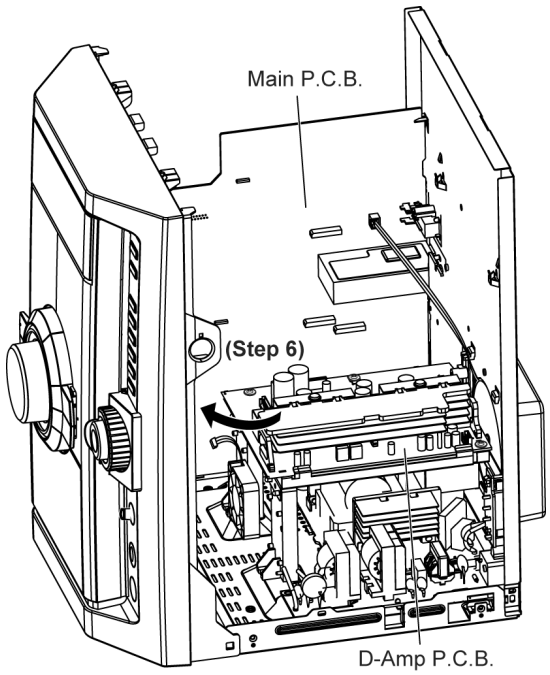

Step 7 Remove 3 screws from D-Amp P.C.B..

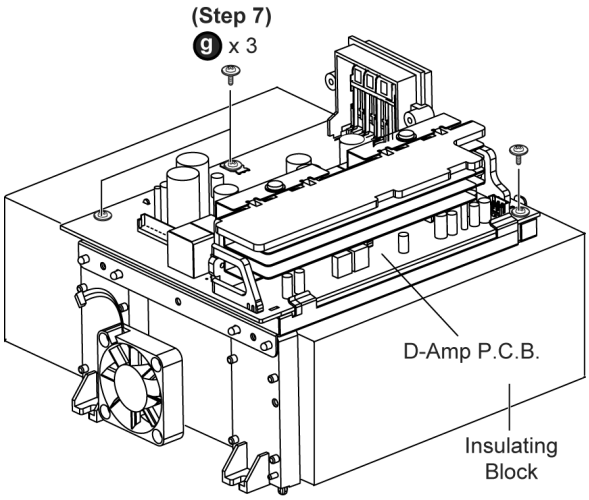

Step 8 Lift up D-Amp P.C.B. as arrow shown.

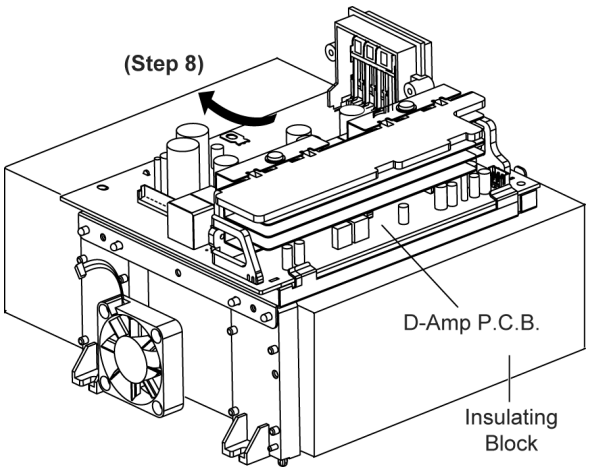

Note: During reassembling procedures, ensure the P.C.B. is seated properly at the chassis support.

- **Disassembly of Fan Unit**

Step 9 Remove 1 screw at fan unit detach to the chassis

support.

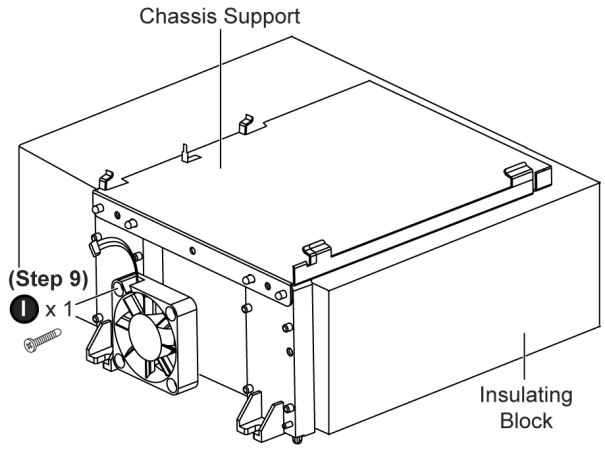

8.23. Replacement of Audio Digital Amp IC (IC5400)

- Follow the (Step 1) - (Step 5) of Item 8.4
- Follow the (Step 1) - (Step 12) of Item 8.5
- Follow the (Step 1) - (Step 8) of Item 8.22

Step 1 Flip over D-Amp P.C.B..

Step 2 Desolder pins of the Audio Digital Amp IC (IC5400) on the reverse side of D-Amp P.C.B..

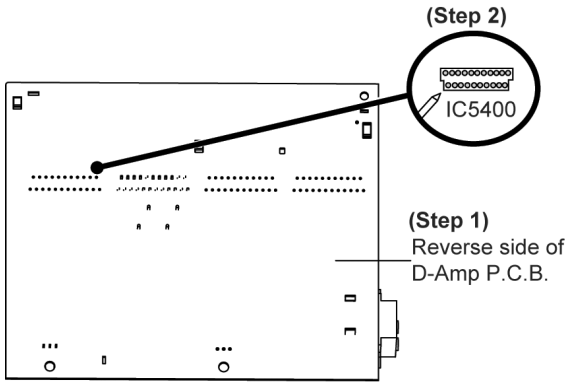

Step 3 Remove 1 screw.

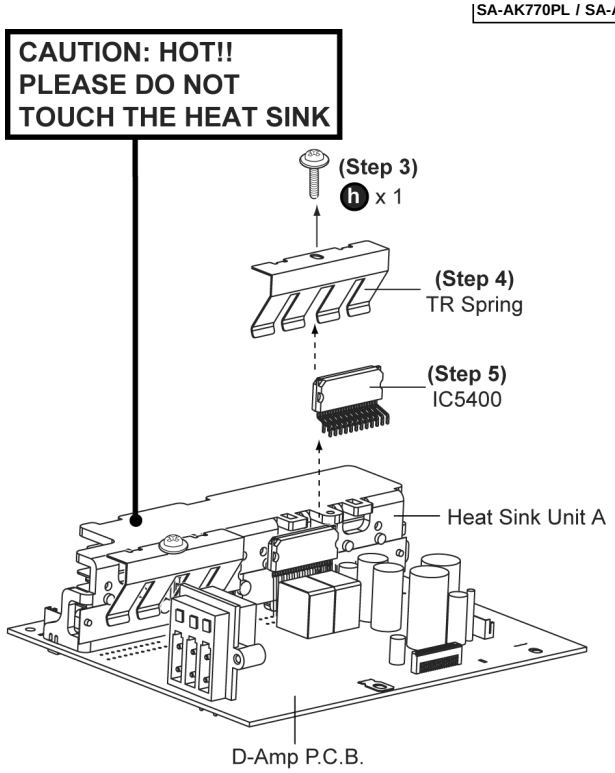

Step 4 Remove TR Spring in the direction of arrow shown.

Step 5 Remove Audio Digital Amp IC (IC5400) from the heat sink unit A.

Caution: Handle the heat sink Unit A power unit with caution due to its high temperature after prolonged use. Touching it, may lead to injuries.

8.23.1. Assembly of Audio Digital Amp IC (IC5400)

Step 1 Fix the Audio Digital Amp IC onto the heat sink unit A.

Step 2 Screw back TR Spring onto the heat sink unit A.

Make sure it is well tighten to prevent overheat.

Note: Use a blower to remove the minute particles that might caused left on the TR Spring.

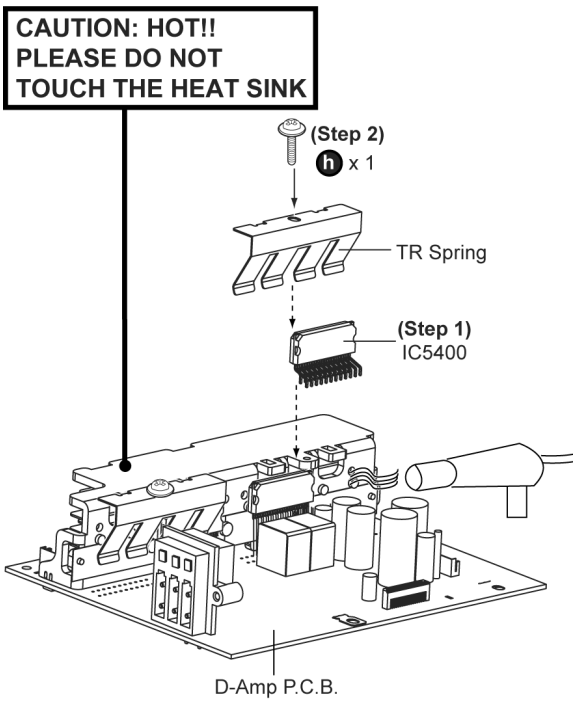

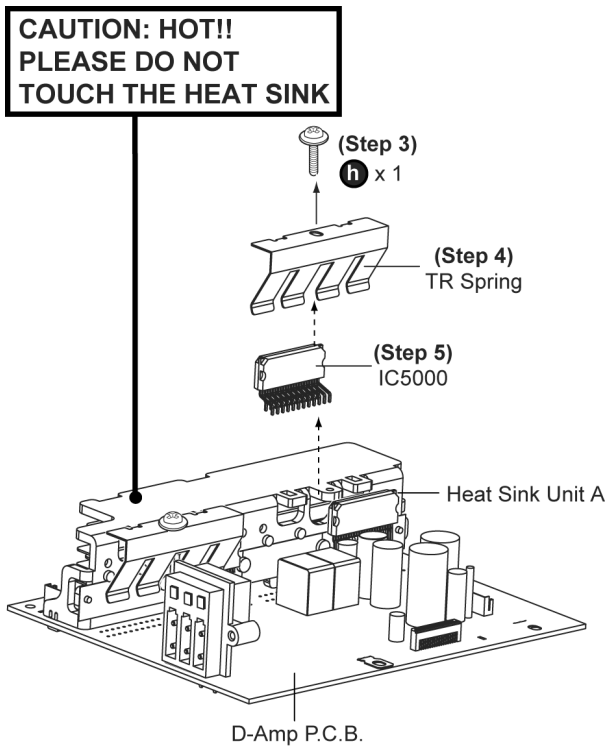

8.24. Replacement of Audio Digital Amp IC (IC5000)

- Follow the (Step 1) - (Step 5) of Item 8.4
- Follow the (Step 1) - (Step 12) of Item 8.5
- Follow the (Step 1) - (Step 8) of Item 8.22

Step 1 Flip over D-Amp P.C.B..

Step 2 Desolder pins of the Audio Digital Amp IC (IC5000) on the reverse side of D-Amp P.C.B..

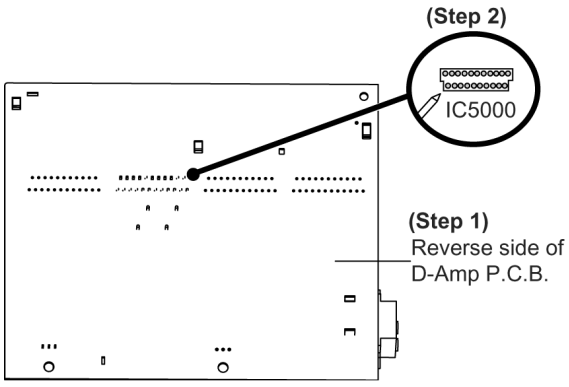

Step 3 Remove 1 screw.

Step 4 Remove TR Spring in the direction of arrow shown.

Step 5 Remove Audio Digital Amp IC (IC5000) from the heat sink unit A.

Caution: Handle the heat sink Unit A power unit with caution due to its high temperature after prolonged use. Touching it, may lead to injuries.

8.24.1. Assembly of Audio Digital Amp IC (IC5000)

Step 1 Fix the Audio Digital Amp IC onto the heat sink unit A.

Step 2 Screw back TR Spring onto the heat sink unit A.

Make sure it is well tighten to prevent overheat.

Note: Use a blower to remove the minute particles that might caused left on the TR Spring.

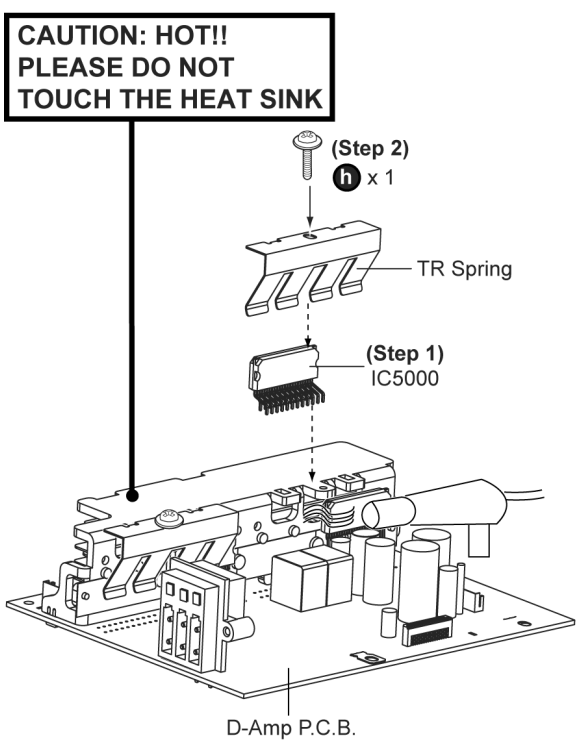

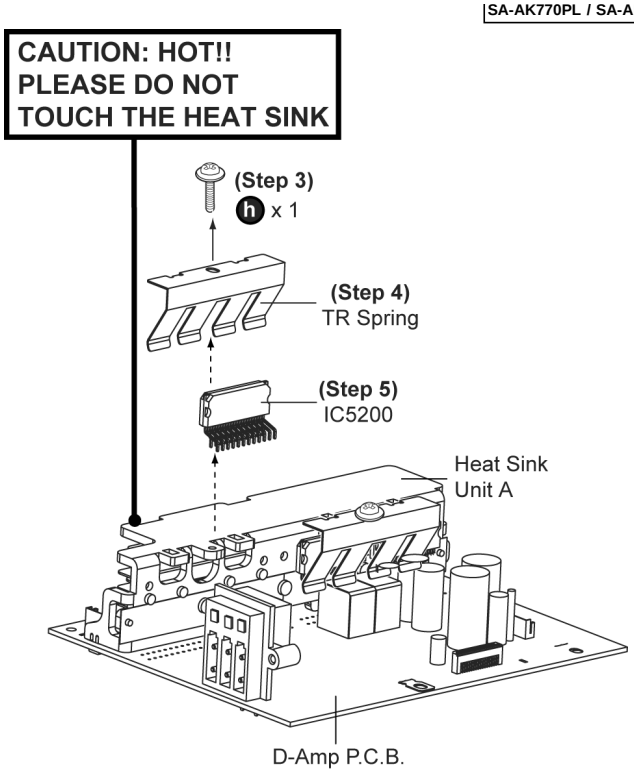

8.25. Replacement of Audio Digital Amp IC (IC5200)

- Follow the (Step 1) - (Step 5) of Item 8.4
- Follow the (Step 1) - (Step 12) of Item 8.5
- Follow the (Step 1) - (Step 8) of Item 8.22

Step 1 Flip over D-Amp P.C.B..

Step 2 Desolder pins of the Audio Digital Amp IC (IC5200) on the reverse side of D-Amp P.C.B..

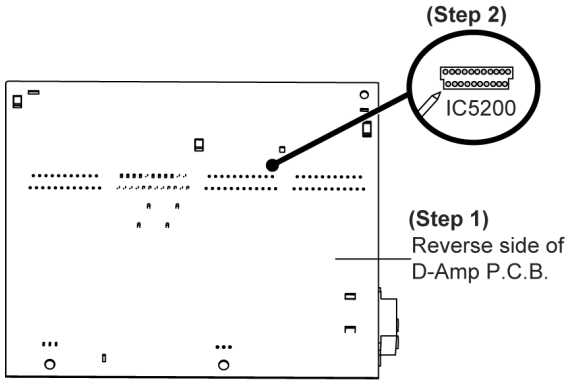

Step 3 Remove 1 screw.

Step 4 Remove TR Spring in the direction of arrow shown.

Step 5 Remove Audio Digital Amp IC (IC5200) from the heat sink unit A.

Caution: Handle the heat sink Unit A power unit with caution due to its high temperature after prolonged use. Touching it, may lead to injuries.

8.25.1. Assembly of Audio Digital Amp IC (IC5200)

Step 1 Fix the Audio Digital Amp IC onto the heat sink unit A.

Step 2 Screw back TR Spring onto the heat sink unit A.

Make sure it is well tighten to prevent overheat.

Note: Use a blower to remove the minute particles that might caused left on the TR Spring.

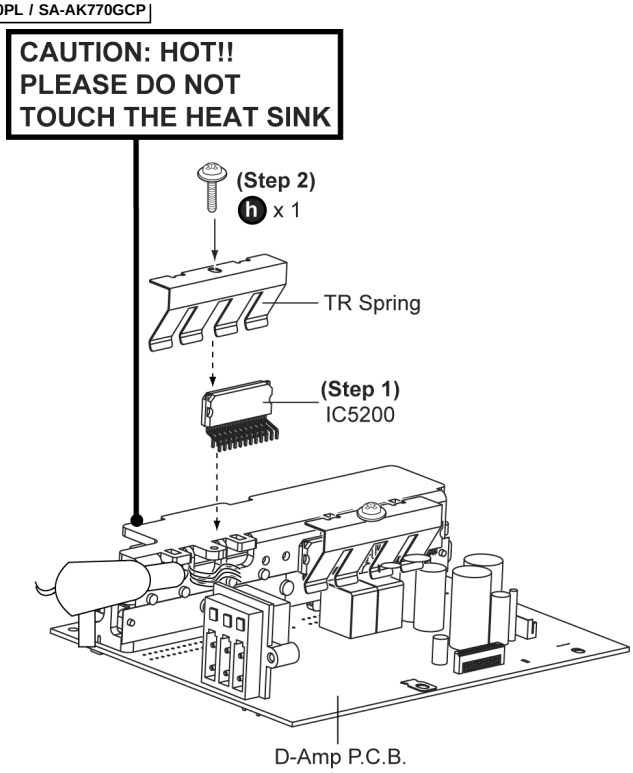

8.26. Disassembly of Main P.C.B.

- Follow the (Step 1) - (Step 5) of Item 8.4
- Follow the (Step 1) - (Step 12) of Item 8.5
- Follow the (Step 1) - (Step 6) of Item 8.22

Step 1 Detach 27P FFC cable at connector (CN2806) at Main P.C.B..

Step 2 Detach 2P wire cable at connector (CN1112) at Main P.C.B..

Step 3 Detach 21P FFC cable at connector (CN2011) at Main P.C.B..

Step 4 Detach 10P FFC cable at connector (CN2807) at Main P.C.B..

Step 5 Detach 2P wire cable at connector (CN2001) at Main P.C.B..

Step 6 Detach 2P wire cable at connector (CN2810) at Main P.C.B..

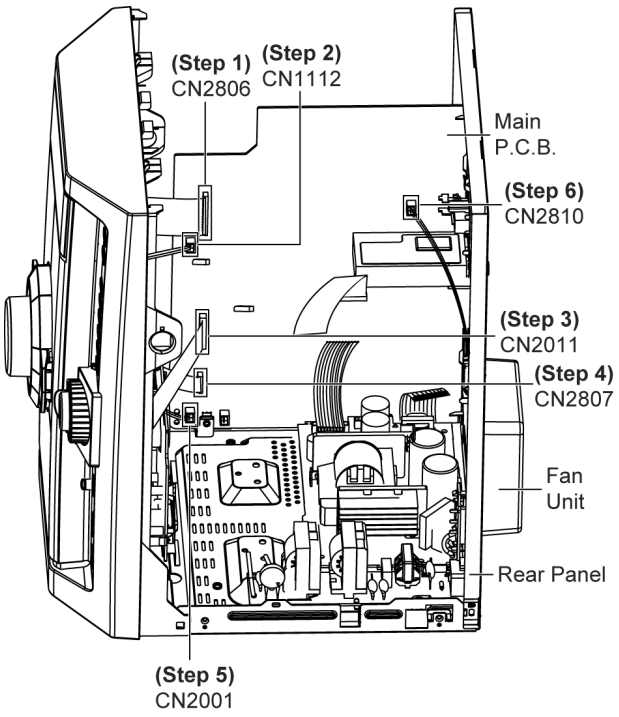

Step 7 Detach 11P wire cable at connector (CN5802) at SMPS P.C.B..

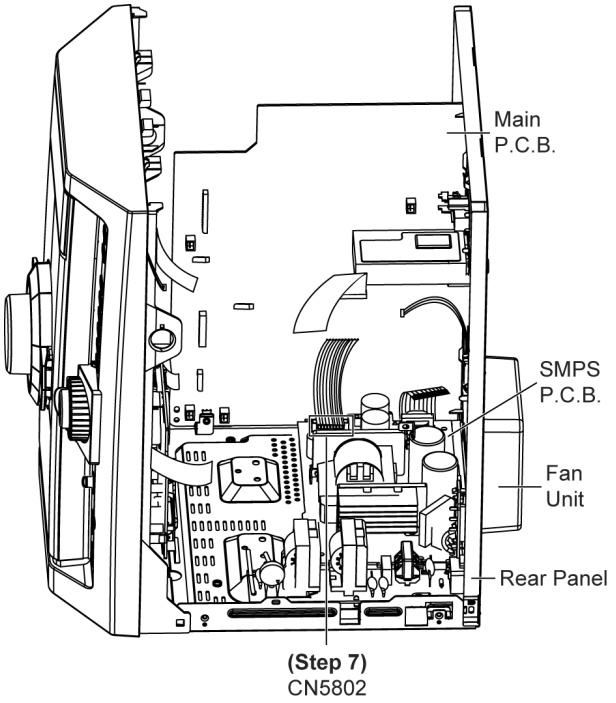

Step 8 Remove 2 screws.

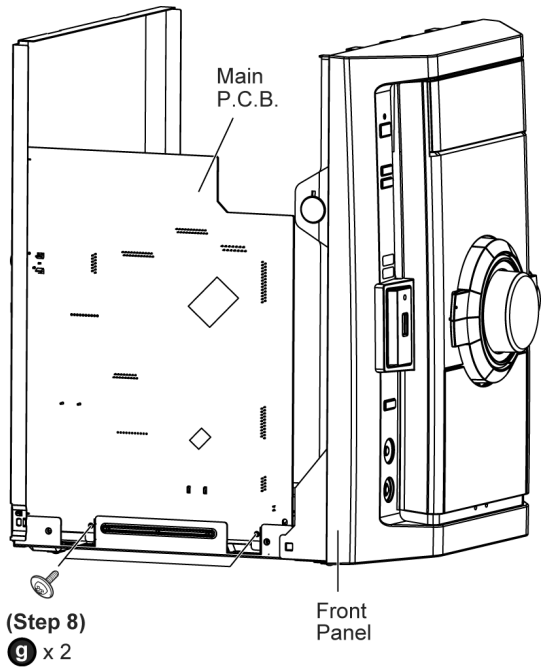

Step 9 Remove 2 screws at rear panel.

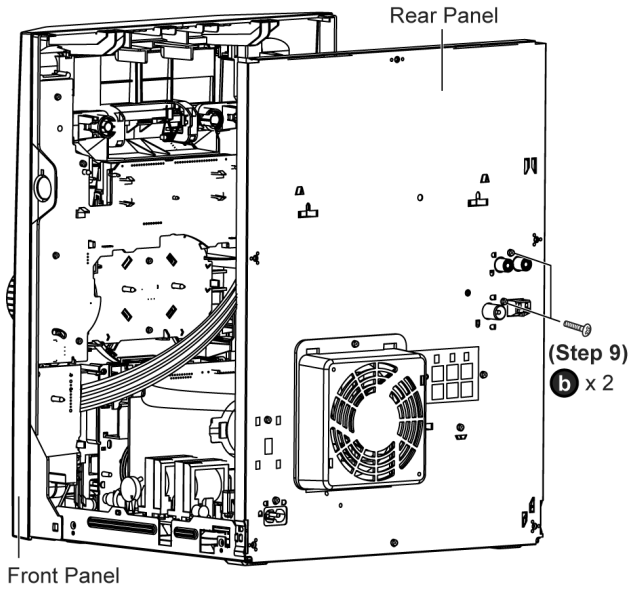

Step 10 Lift up Main P.C.B. as arrow shown.

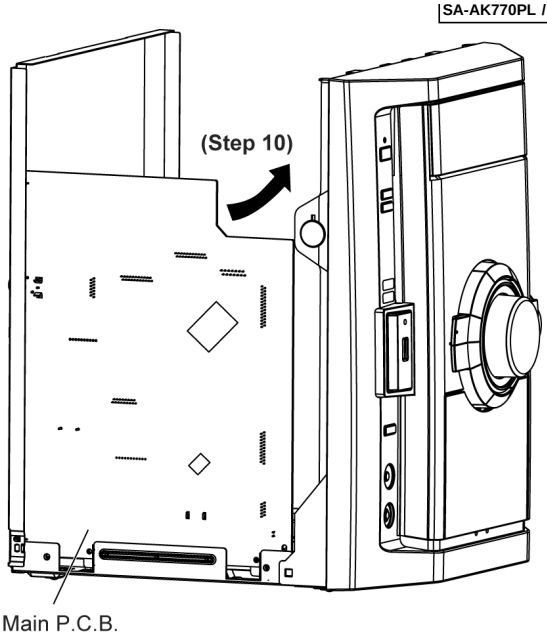

Caution Note: While lifting up Main P.C.B., please handle Jack (CN3601) and Tuner Pack with care.

8.27. Replacement of Voltage Regulator IC (IC2761)

- Follow the (Step 1) - (Step 5) of Item 8.4
- Follow the (Step 1) - (Step 12) of Item 8.5
- Follow the (Step 1) - (Step 6) of Item 8.22
- Follow the (Step 1) - (Step 10) of Item 8.26

Step 1 Desolder pins of the Voltage Regulator IC (IC2761) on the reverse side of Main P.C.B..

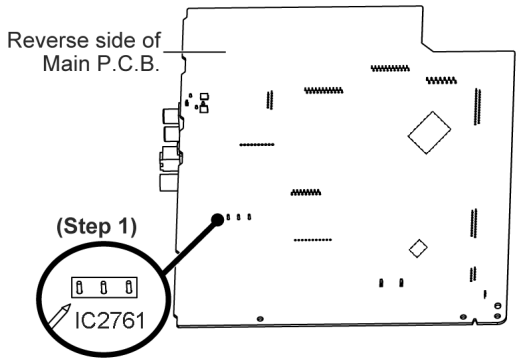

Step 2 Remove 1 screw form the Main P.C.B..

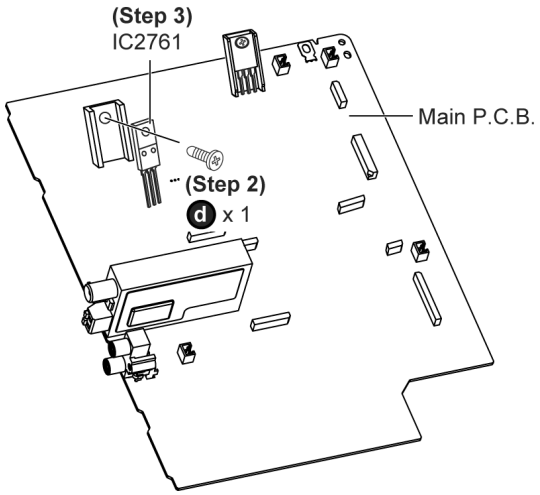

Step 3 Remove the Voltage Regulator IC (IC2761) from the heat sink.

Caution: Handle the heat sink with caution due to its high temperature after prolonged use. Touching it may lead to injuries.

8.27.1. Assembly of Voltage Regulator IC (IC2761)

Step 1 Apply grease to heat sink.

Step 2 Fix and screw the Voltage Regulator IC (IC2761) to the heat sink.

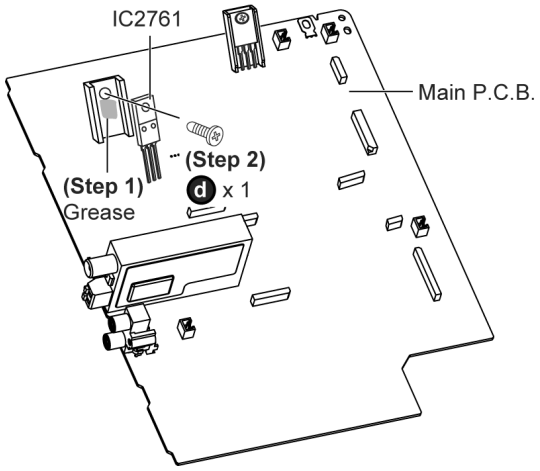

Note: Ensure the Voltage Regulator IC (IC2761) is tightly screwed to the heat sink.

8.28. Replacement of Switch Transistor (Q2751)

- Follow the (Step 1) - (Step 5) of Item 8.4
- Follow the (Step 1) - (Step 12) of Item 8.5
- Follow the (Step 1) - (Step 6) of Item 8.22
- Follow the (Step 1) - (Step 10) of Item 8.26

Step 1 Desolder pins of the Switch Transistor (Q2751) on the reverse side of Main P.C.B..

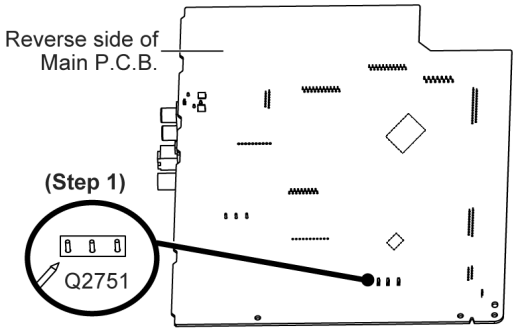

Step 2 Remove 1 screw form the Main P.C.B..

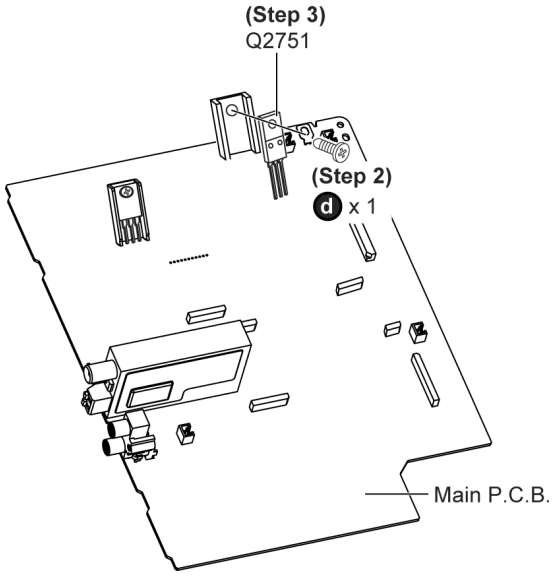

Step 3 Remove the Switch Transistor (Q2751) from the heat sink.

Caution: Handle the heat sink with caution due to its high temperature after prolonged use. Touching it may lead to injuries.

8.28.1. Assembly of Switch Transistor (Q2751)

Step 1 Apply grease to heat sink.

Step 2 Fix and screw the Switch Transistor (Q2751) to the heat sink.

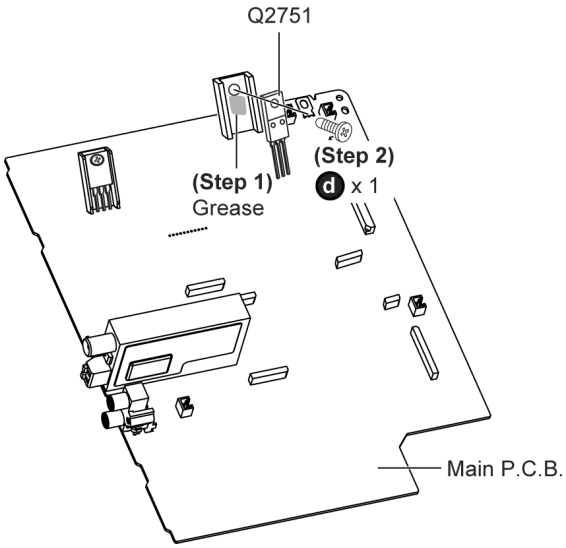

Note: Ensure the Switch Transistor (Q2751) is tightly screwed to the heat sink.

8.29. Disassembly of SMPS P.C.B.

- Follow the (Step 1) - (Step 5) of Item 8.4
- Follow the (Step 1) - (Step 12) of Item 8.5
- Follow the (Step 1) - (Step 6) of Item 8.22

Step 1 Detach 8P wire at connector (CN5802) at SMPS P.C.B..

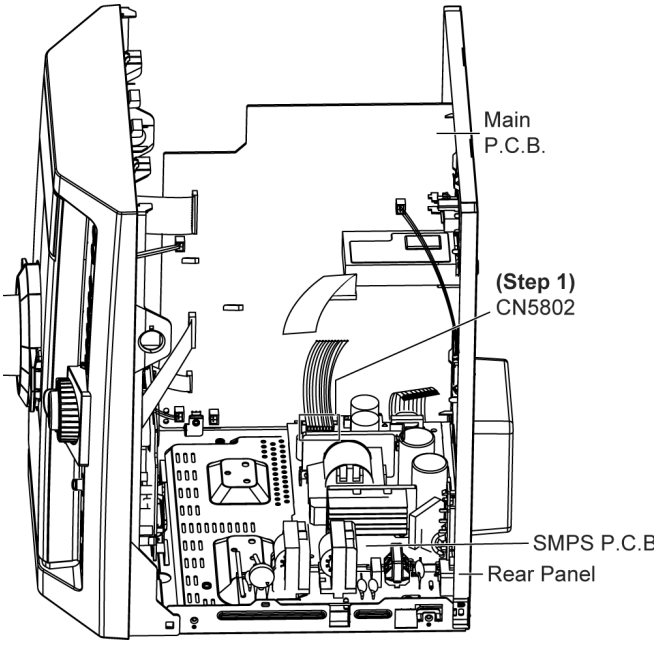

Step 2 Remove 4 screws at SMPS P.C.B..

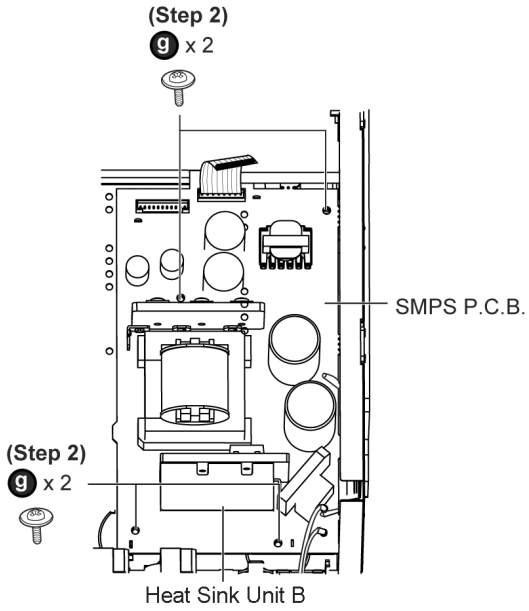

Step 3 Lift up the SMPS P.C.B. as arrow shown.

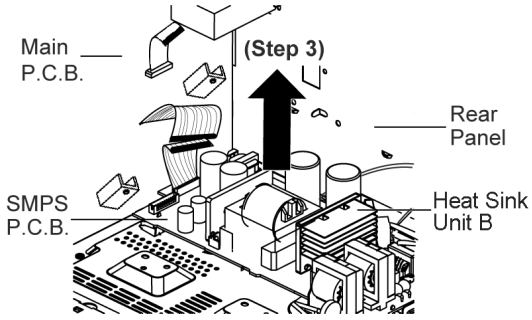

Step 4 Flip the SMPS P.C.B. and desolder 2 wire pins (red and black).

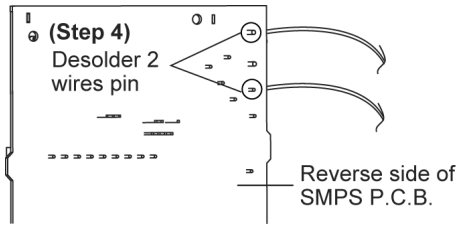

- **For GCP Only**

Step 5 Desolder 2 wire pin (White and blue).

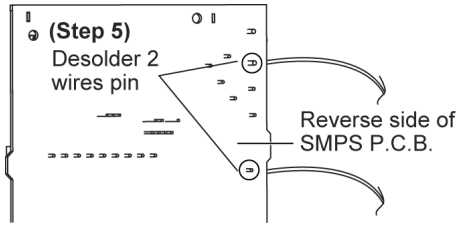

Note: During reassembling procedures, ensure the P.C.B. is seated properly at the locator.

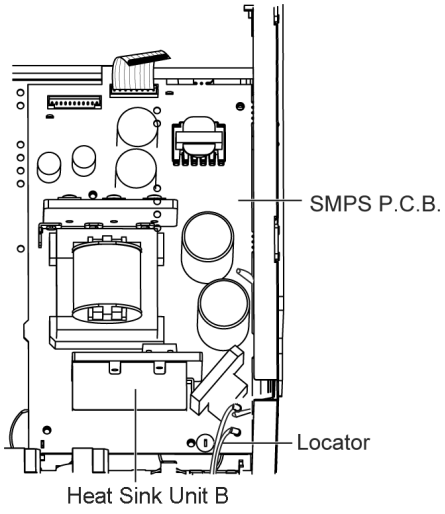

8.30. Replacement of Switch Regulator IC (IC5701)

- Follow the (Step 1) - (Step 5) of Item 8.4
- Follow the (Step 1) - (Step 12) of Item 8.5
- Follow the (Step 1) - (Step 6) of Item 8.22
- Follow the (Step 1) - (Step 5) of Item 8.29

Step 1 Desolder pins of the Switch Regulator IC (IC5701) on

the reverse side of SMPS P.C.B..

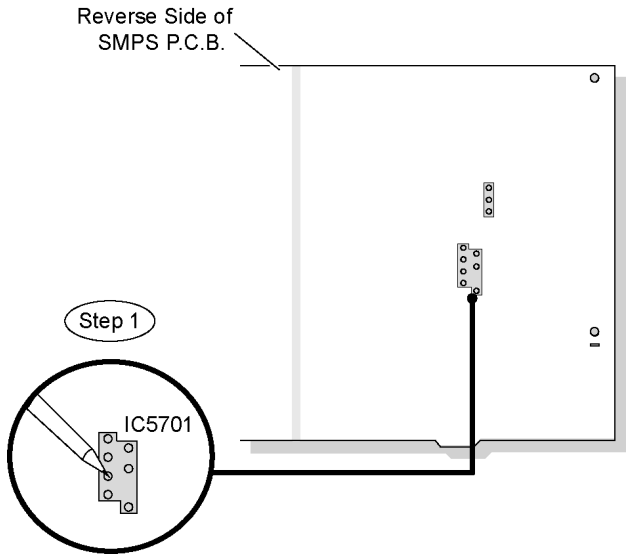

Step 2 Remove 1 screw from the Switch Regulator IC (IC5701).

Step 3 Remove the Switch Regulator IC (IC5701) from the heat sink Unit B.

Caution: Handle the heat sink Unit B with caution due to its high temperature after prolonged use. Touching it may lead to injuries.

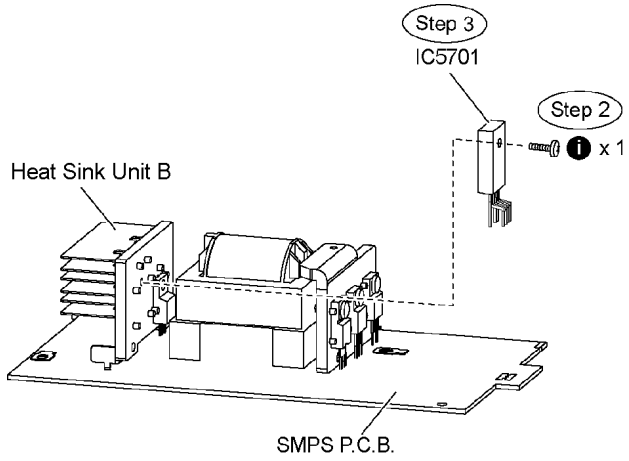

Note : Refer to the diagrams of SMPS P.C.B. (Item 19.6.) for location of the part.

8.30.1. Assembly of Switch Regulator IC (IC5701)

Step 1 Apply grease to the heat sink Unit B.

Step 2 Fix and screw the Switch Regulator IC (IC5701) to the heat sink Unit B.

Special Note: Ensure the Switch Regulator IC (IC5701) is tightly screwed to the heat sink Unit B.

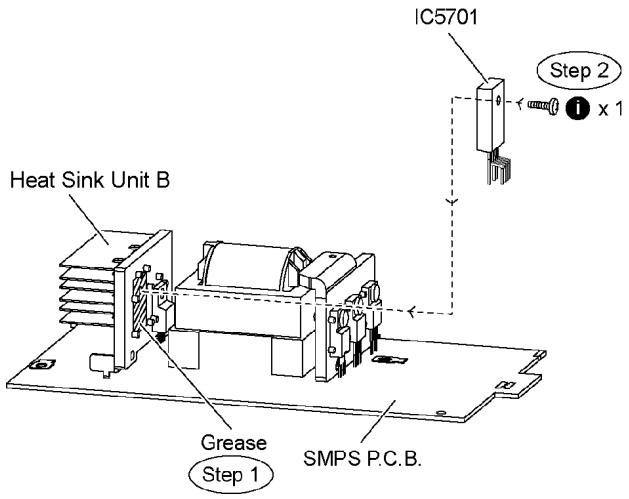

Step 3 Solder pins of the Switch Regulator IC (IC5701) on the reverse side of SMPS P.C.B..

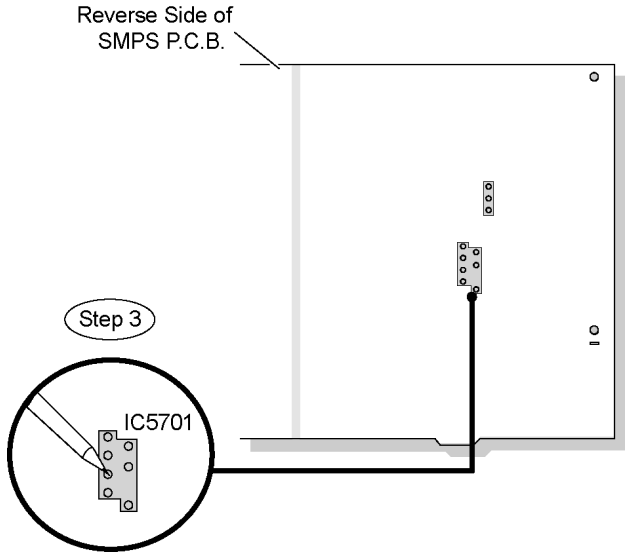

Special Note: Ensure pins of the Switch Regulator IC (IC5701) are properly seated and soldered on SMPS P.C.B..

8.31. Replacement of Switch Regulator Diode (D5702)

- Follow the (Step 1) - (Step 5) of Item 8.4
- Follow the (Step 1) - (Step 12) of Item 8.5
- Follow the (Step 1) - (Step 6) of Item 8.22
- Follow the (Step 1) - (Step 5) of Item 8.29

Step 1 Desolder pins of the Switch Regulator Diode (D5702) on the reverse side of SMPS P.C.B..

Step 2 Desolder pins of the heat sink Unit B.

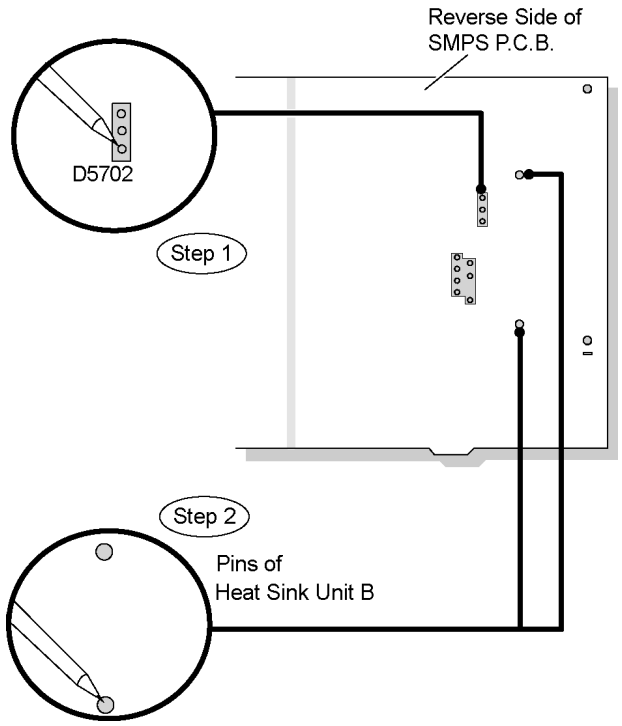

Step 3 Remove 1 screw from the Switch Regulator Diode (D5702).

Step 4 Remove the heat sink Unit B in the direction of arrows.

Step 5 Remove 1 screw from the Switch Regulator Diode. (D5702).

Step 6 Remove the Switch Regulator Diode (D5702) from the heat sink Unit B.

Caution: Handle the heat sink Unit B with caution due to its high temperature after prolonged use. Touching it may lead to injuries.

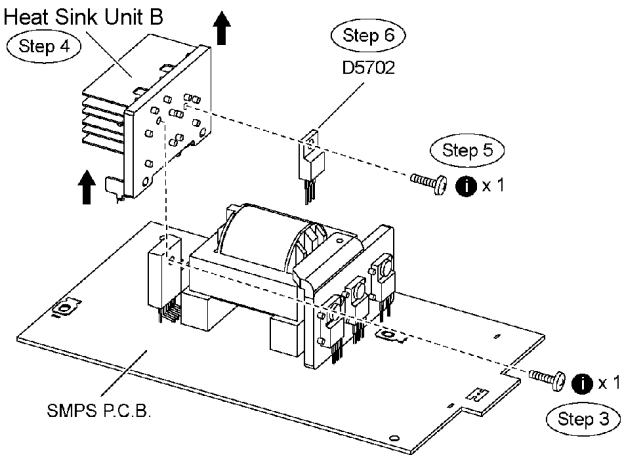

Note : Refer to the diagrams of SMPS P.C.B. (Item 19.6.) for location of the part.

8.31.1. Assembly of Switch Regulator Diode (D5702)

Step 1 Apply grease to the heat sink Unit B.

Step 2 Fix and screw the Switch Regulator Diode (D5702) to the heat sink Unit B.

Special Note: Ensure the Switch Regulator Diode (D5702) is tightly screwed to the heat sink Unit B.

Step 3 Fix the heat sink Unit B on SMPS P.C.B. in the direction of arrows.

Step 4 Fix and screw the Switch Regulator IC (IC5701) to the heat sink Unit B.

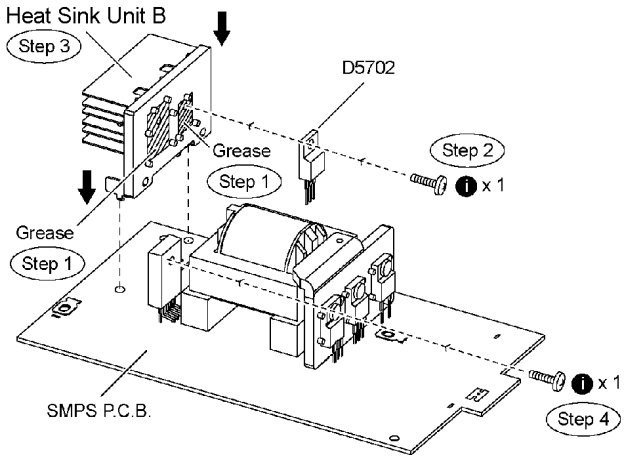

Special Note: Ensure the heat sink Unit B is properly seated on SMPS P.C.B..

Step 5 Solder pins of the Switch Regulator Diode (D5702) on the reverse side of SMPS P.C.B..

Step 6 Solder pins of the heat sink Unit B on the reverse side of SMPS P.C.B..

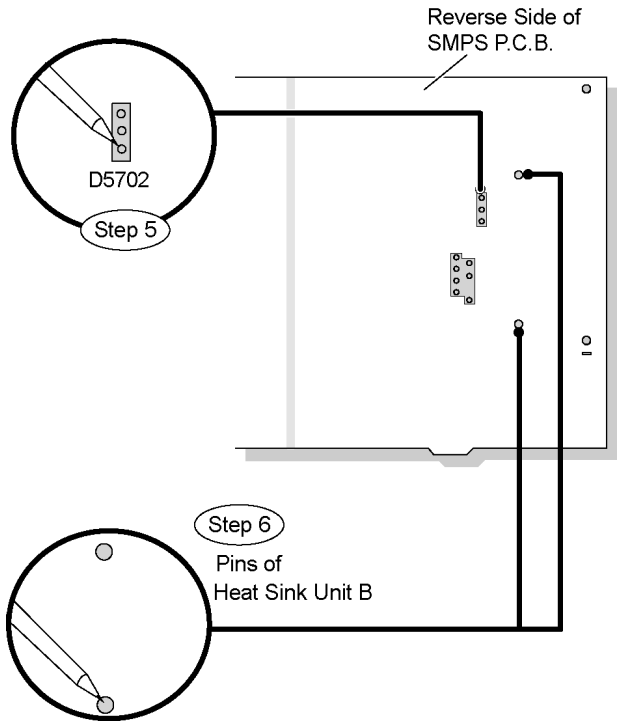

Special Note: Ensure pins of the switch regulator diode (D5702) are properly seated and soldered on SMPS P.C.B..

8.32. Replacement of Regulator Diode (D5801)

- Follow the (Step 1) - (Step 5) of Item 8.4
- Follow the (Step 1) - (Step 12) of Item 8.5
- Follow the (Step 1) - (Step 6) of Item 8.22
- Follow the (Step 1) - (Step 5) of Item 8.29

Step 1 Desolder pins of the Regulator Diode (D5801) on the reverse side of SMPS P.C.B..

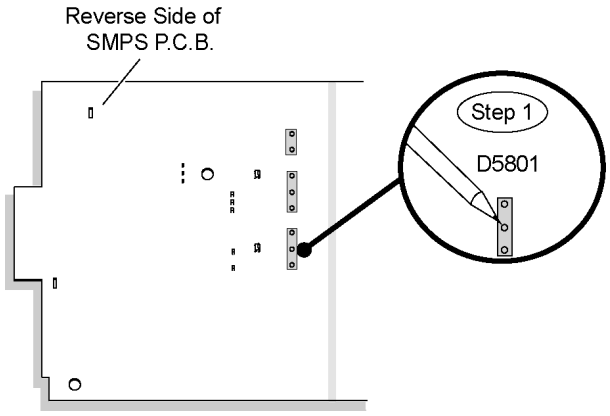

Step 2 Remove 1 screw from the Regulator Diode (D5801).

Step 3 Remove the Regulator Diode (D5801) from the heat sink unit C.

Caution: Handle the heat sink unit C with caution due to its high temperature after prolonged use. Touching it may lead to injuries.

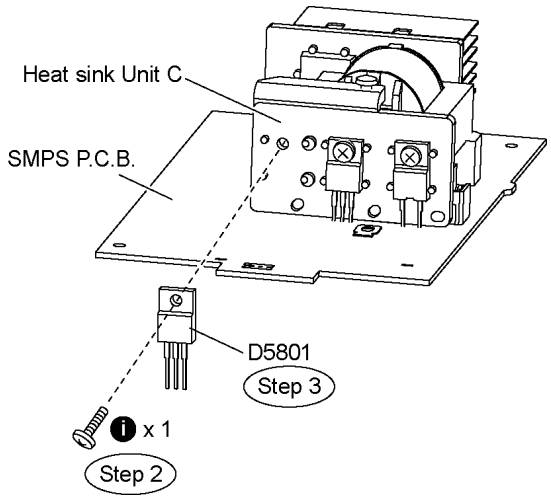

Note: Refer to the diagrams of SMPS P.C.B. (Item 19.6.) for location of the part.

8.32.1. Assembly of Regulator Diode (D5801)

Step 1 Apply grease to the heat sink unit C.

Step 2 Fix and screw the Regulator Diode (D5801) to the heat sink unit C.

Special Note: Ensure the Regulator Diode (D5801) is tightly screwed to the heat sink unit C.

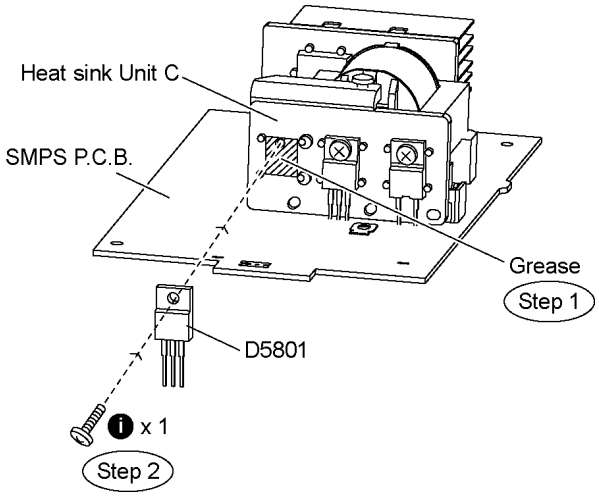

Step 3 Solder pins of the Regulator Diode (D5801) on the reverse side of SMPS P.C.B..

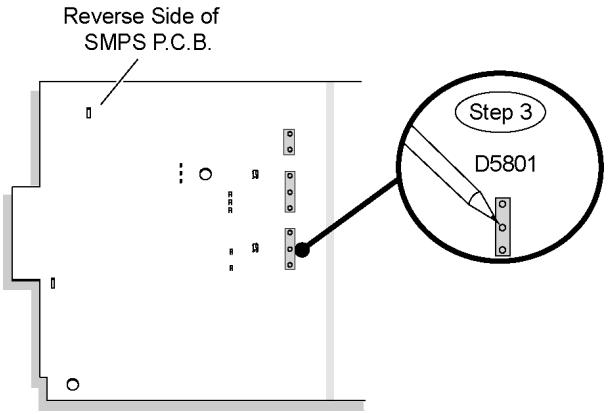

Special Note: Ensure pins of the Regulator Diode (D5801) are properly seated and soldered on SMPS P.C.B..

8.33. Replacement of Regulator Diode (D5802)

- Follow the (Step 1) - (Step 5) of Item 8.4
- Follow the (Step 1) - (Step 12) of Item 8.5
- Follow the (Step 1) - (Step 6) of Item 8.22
- Follow the (Step 1) - (Step 5) of Item 8.29

Step 1 Desolder pins of the Regulator Diode (D5802) on the reverse side of SMPS P.C.B..

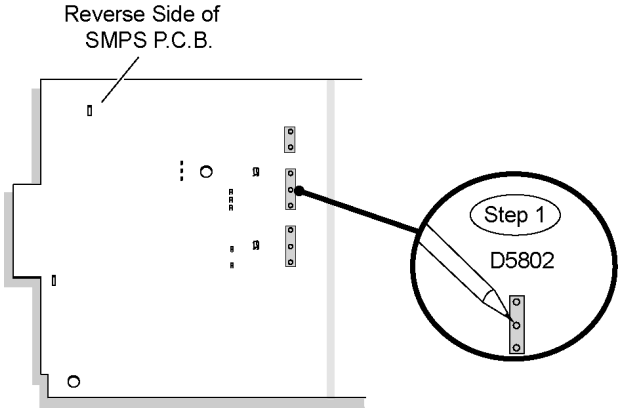

Step 2 Remove 1 screw from the Regulator Diode (D5802).

Step 3 Remove the Regulator Diode (D5802) from the heat sink unit C.

Caution: Handle the heat sink unit C with caution due to its high temperature after prolonged use. Touching it may lead to injuries.

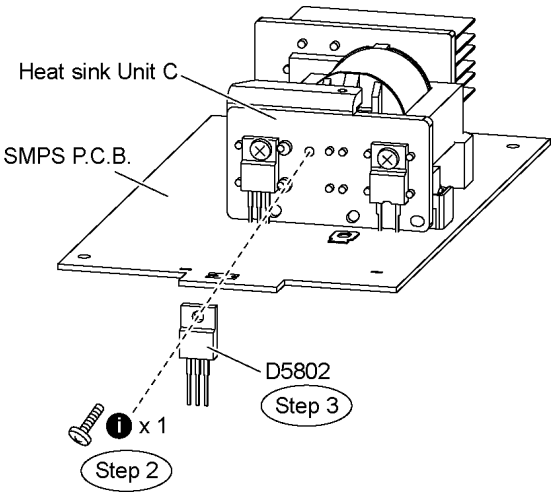

Note: Refer to the diagrams of SMPS P.C.B. (Item 19.6.) for location of the part.

8.33.1. Assembly of Regulator Diode (D5802)

Step 1 Apply grease to the heat sink unit C.

Step 2 Fix and screw the Regulator Diode (D5802) to the heat sink unit C.

Special Note: Ensure the Regulator Diode (D5802) is tightly screwed to the heat sink unit C.

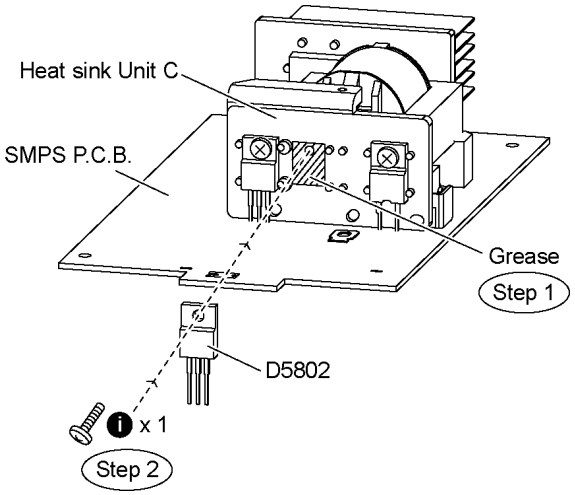

Step 3 Solder pins of the Regulator Diode (D5802) on the reverse side of SMPS P.C.B..

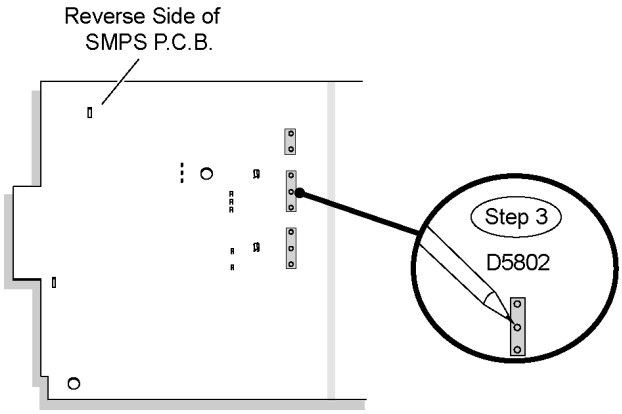

Special Note: Ensure pins of the Regulator Diode (D5802) are properly seated and soldered on SMPS P.C.B..

8.34. Replacement of Regulator Diode (D5803)

- Follow the (Step 1) - (Step 5) of Item 8.4
- Follow the (Step 1) - (Step 12) of Item 8.5
- Follow the (Step 1) - (Step 6) of Item 8.22
- Follow the (Step 1) - (Step 5) of Item 8.29

Step 1 Desolder pins of the Regulator Diode (D5803) on the reverse side of SMPS P.C.B..

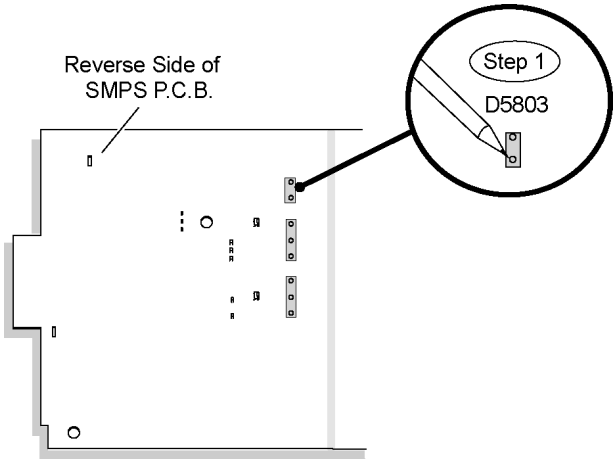

Step 2 Remove 1 screw from the Regulator Diode (D5803).

Step 3 Remove the Regulator Diode (D5803) from the heat sink unit C.

Caution: Handle the heat sink unit C with caution due to its high temperature after prolonged use. Touching it may lead to injuries.

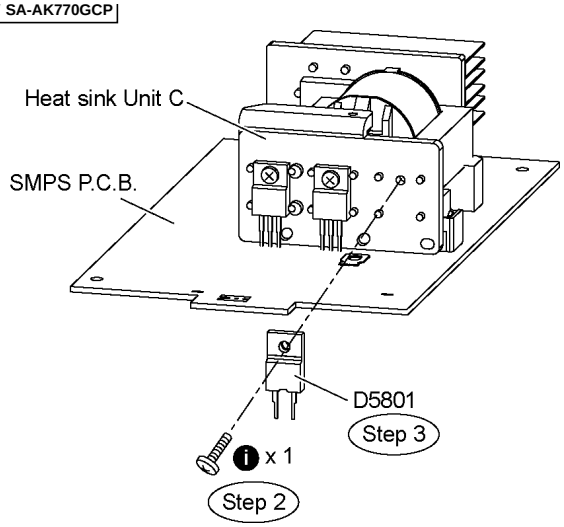

Note: Refer to the diagrams of SMPS P.C.B. (Item 19.6.) for location of the part.

8.34.1. Assembly of Regulator Diode (D5803)

Step 1 Apply grease to the heat sink unit C.

Step 2 Fix and screw the Regulator Diode (D5803) to the heat sink unit C.

Special Note: Ensure the Regulator Diode (D5803) is tightly screwed to the heat sink unit C.

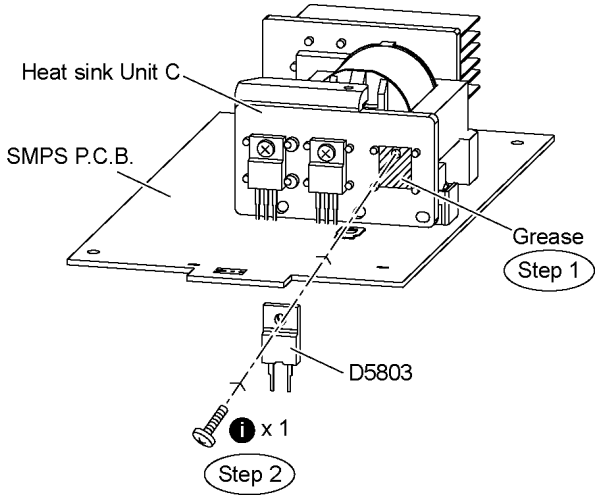

Step 3 Solder pins of the Regulator Diode (D5803) on the reverse side of SMPS P.C.B..

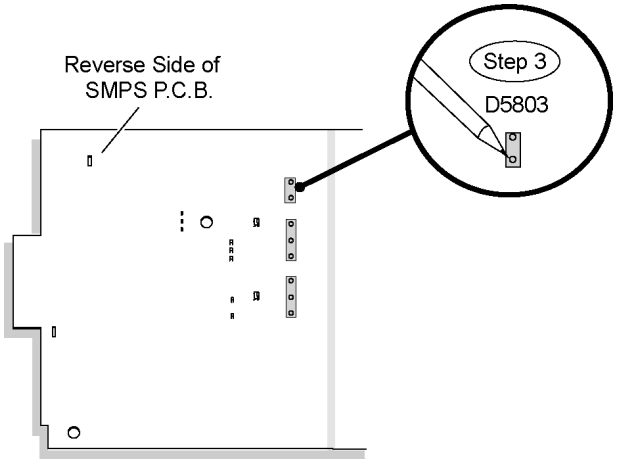

Special Note: Ensure pins of the Regulator Diode (D5803) are properly seated and soldered on SMPS P.C.B..

8.35. Disassembly of AC Inlet P.C.B.

- Follow the (Step 1) - (Step 5) of Item 8.4

Step 1 Remove 2 screws at AC Inlet P.C.B..

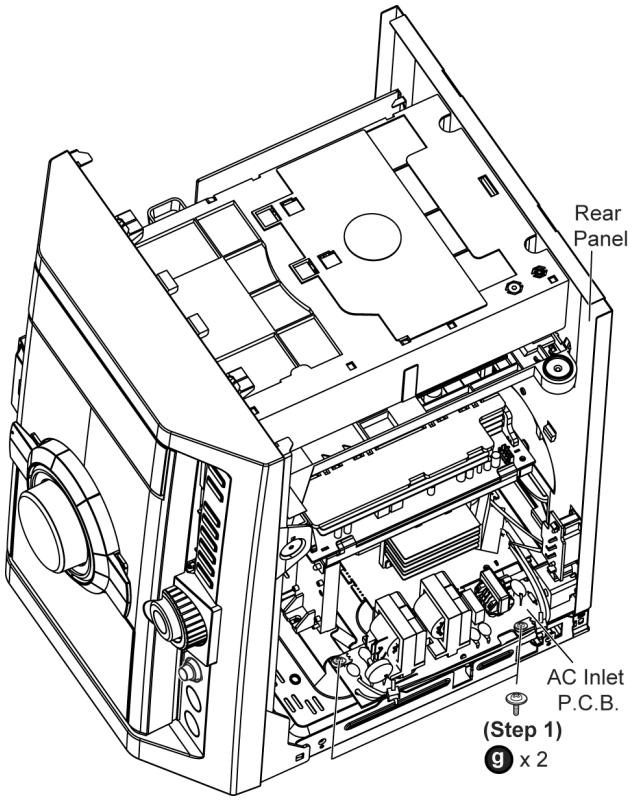

Step 2 Cut 2 tie wraps.

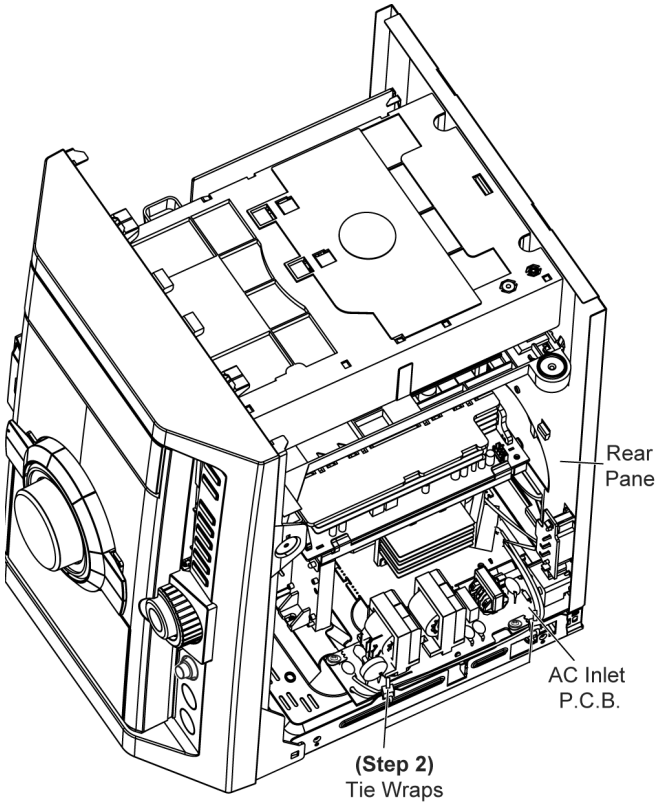

Step 3 Remove 1 screw at the rear panel.

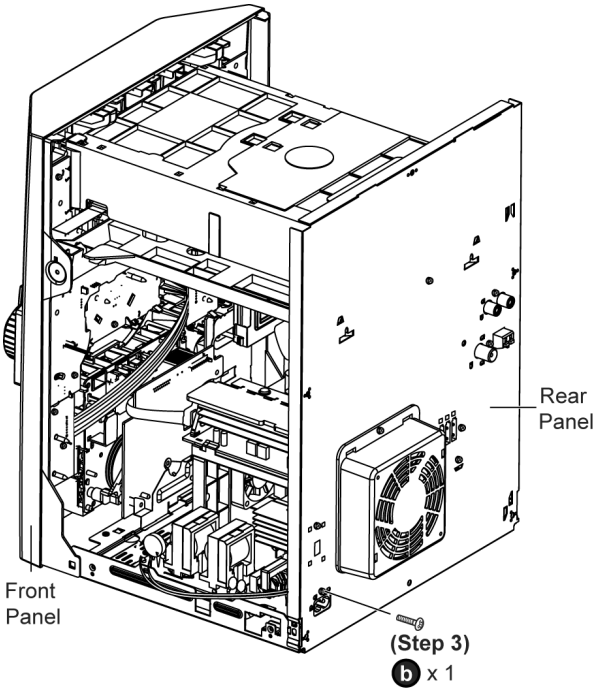

Step 4 Detach the rear panel slightly backward as arrow shown.

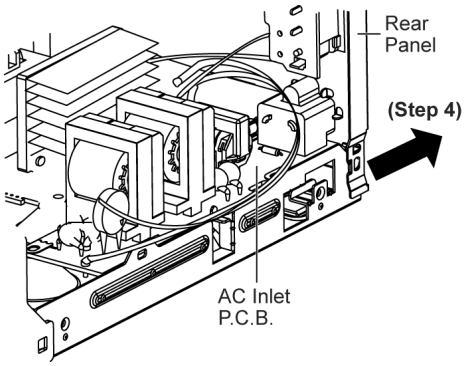

Step 5 Lift up the AC Inlet P.C.B..

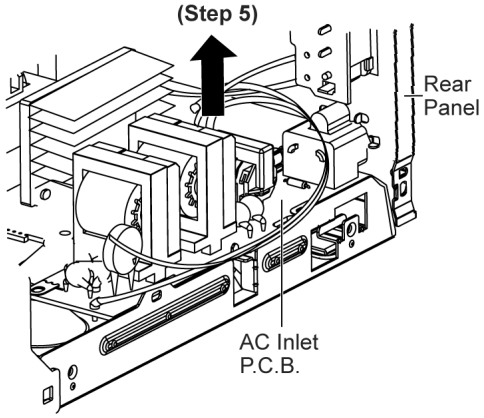

Step 6 Flip over the AC Inlet P.C.B. and desolder 2 wire pins (red and black).

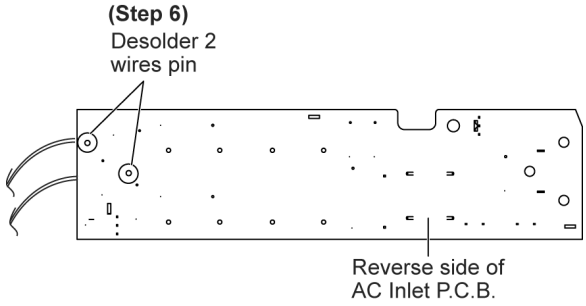

Caution: Remember to use tie wraps to tie red/ black wires between AC Inlet P.C.B. to the chassis.

Note: During reassembling procedures, ensure the P.C.B. is seated properly at the locators.

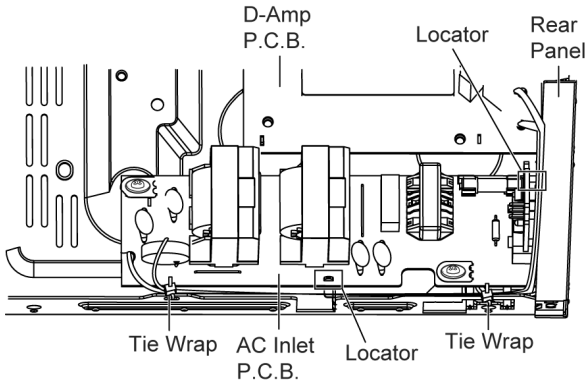

8.36. Disassembly of Voltage Selector (For GCP Only)

- Follow the (Step 1) - (Step 5) of Item 8.4

Step 1 Remove 1 screw at rear panel.

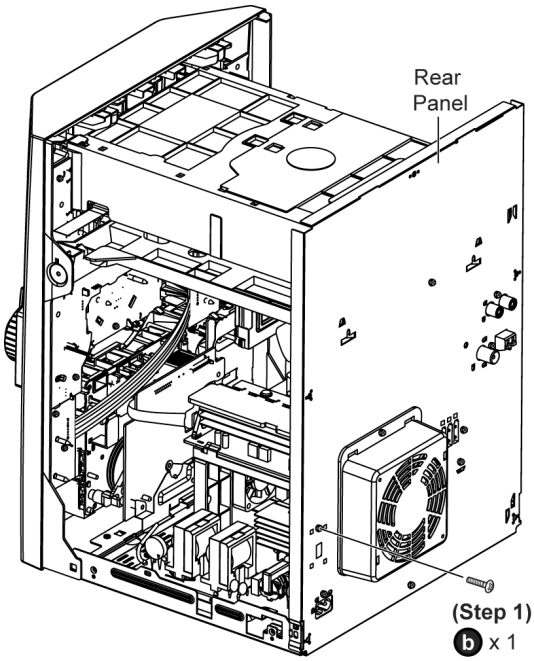

Step 2 Push up the voltage selector from rear panel as arrow shown.

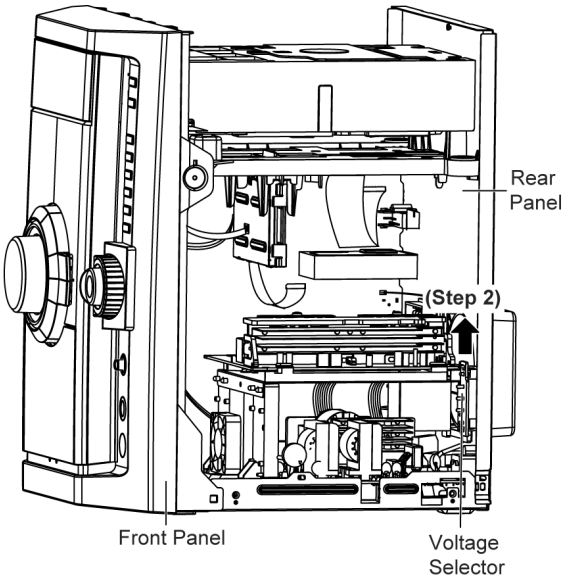

Step 3 Desolder 3 pins of Voltage Selector P.C.B..

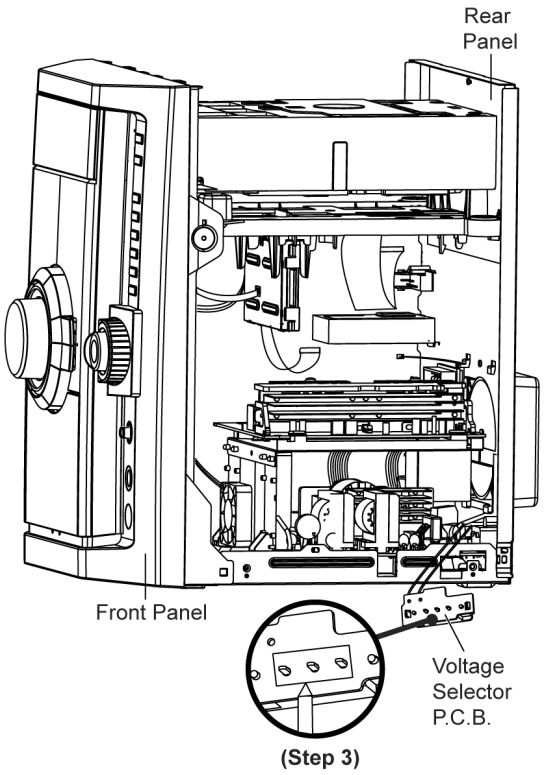

Step 4 Release 2 catches on Voltage Selector P.C.B..

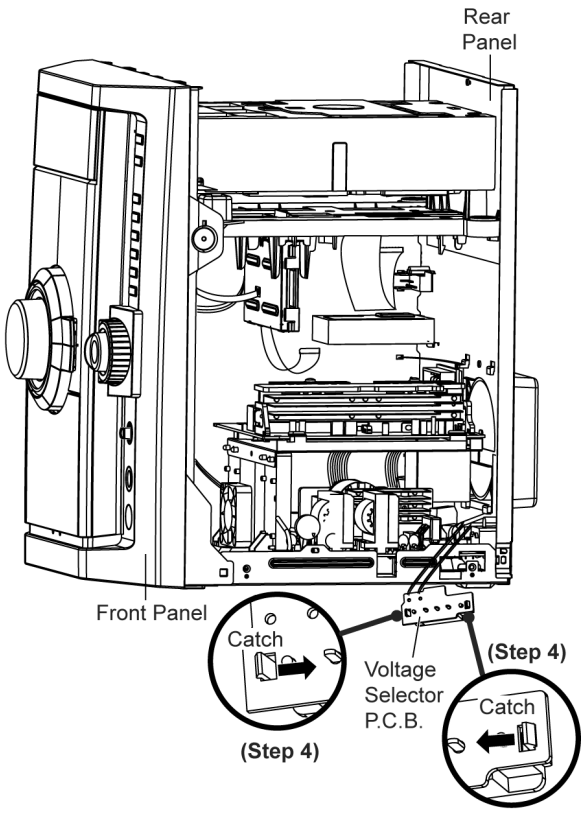

Step 5 Desolder 2 wire pin (White and blue).

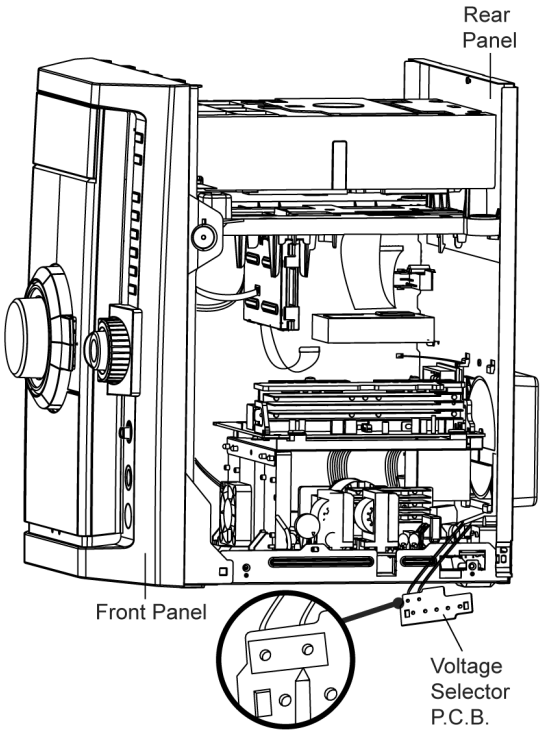

(Step 5)

9 Disassembly and Assembly of Traverse Unit Assembly in Play Position

9.1. Disassembly of Traverse Unit Assembly

- Disassembly of Traverse Unit Assembly in play position

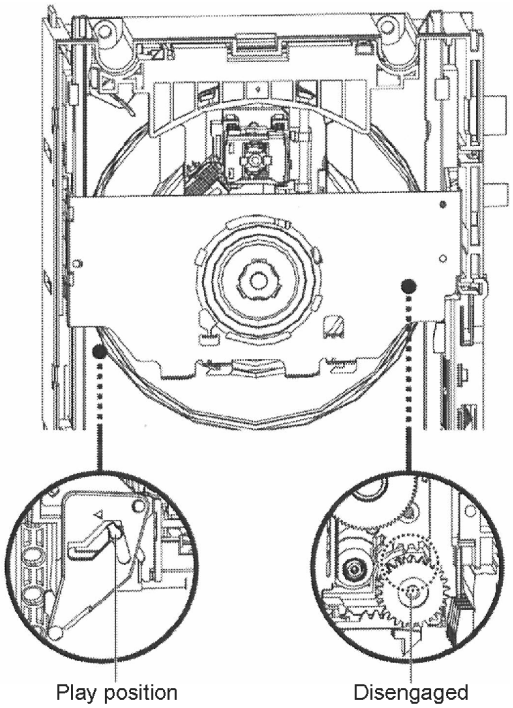

Step 1 Release the catch and push the guide as arrows shown to open both grooves.

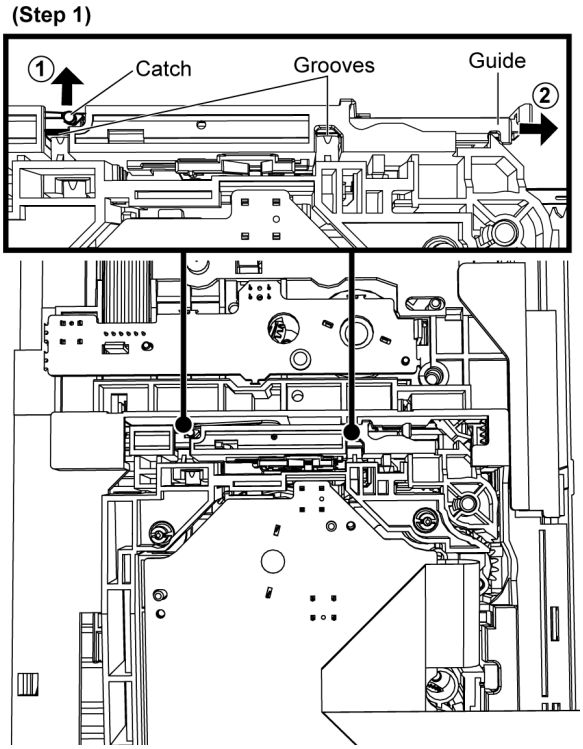

Step 2 Detach the FFC wires from the adhesive area.

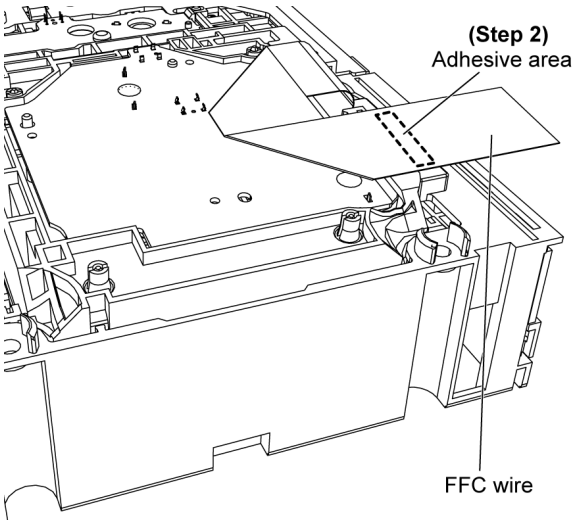

Step 3 Remove the traverse unit assembly as arrows shown.

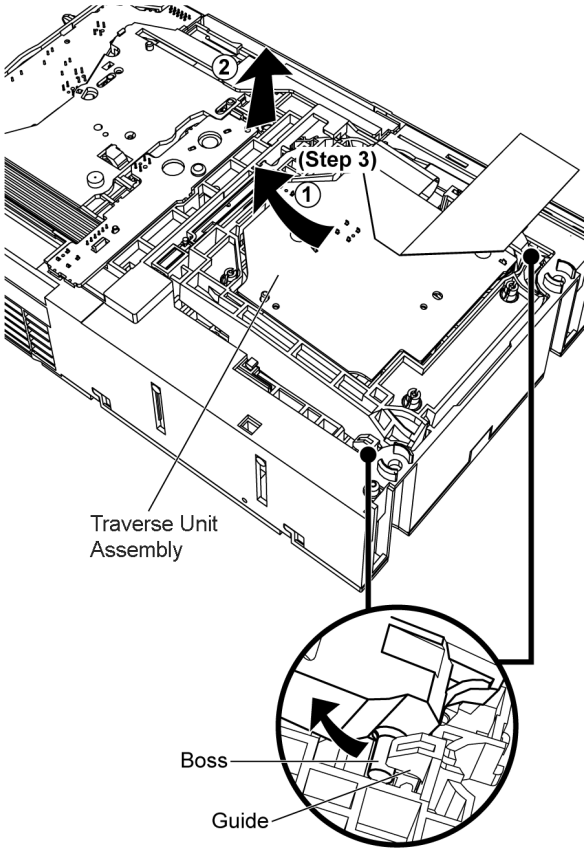

9.2. Assembly of Traverse Unit Assembly

Step 1 Slot the traverse unit assembly into the guides as arrow shown.

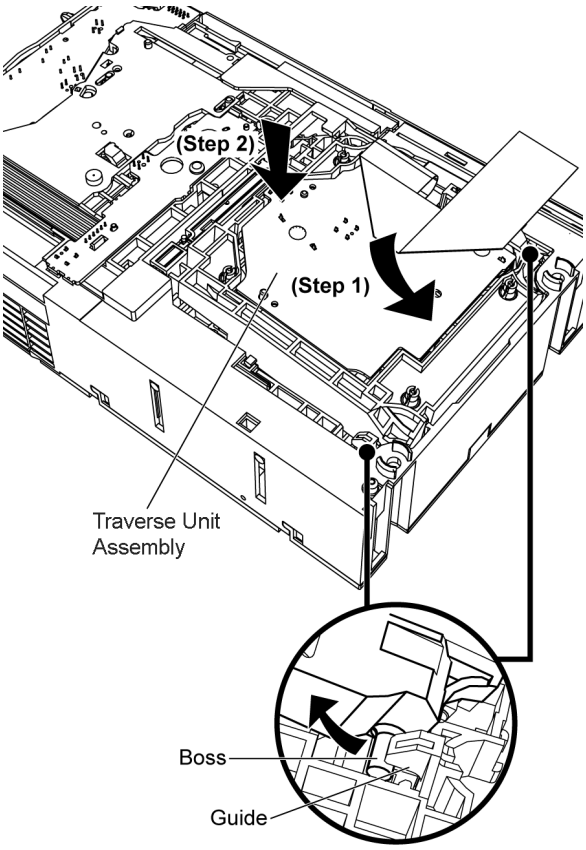

(Step 4)

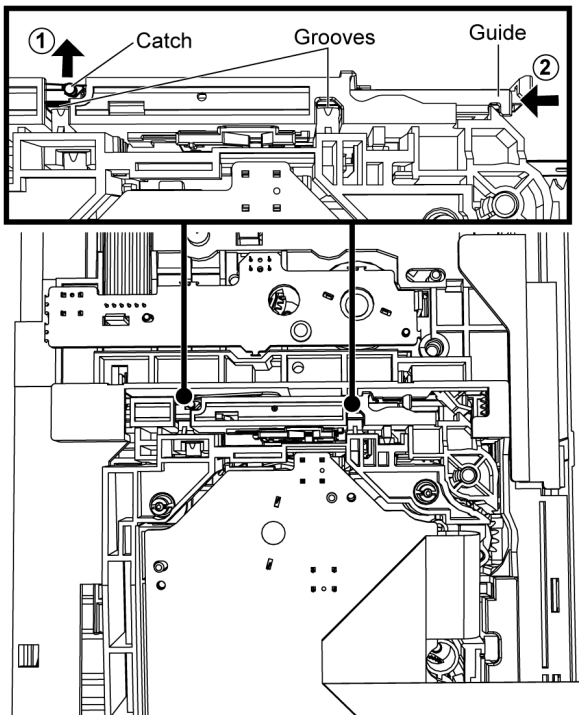

Note: Ensure the bosses fix exactly onto the guides.

Step 2 Place down the traverse unit assembly.

Step 3 Fix the FFC wires by using the adhesive tape.

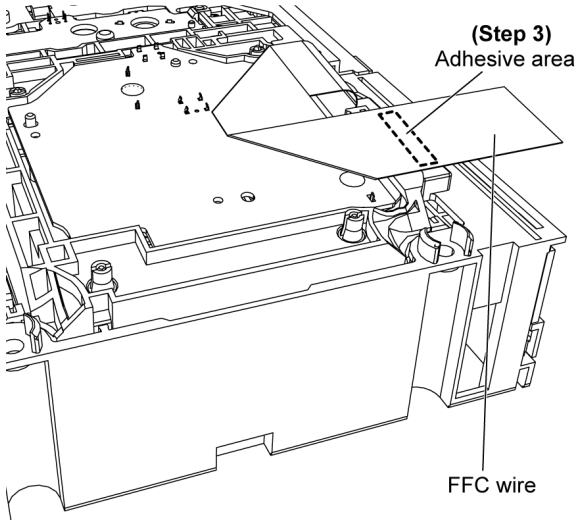

Step 4 Release the catch and push the guide as arrows shown to close both grooves.

10 Service Fixture and Tools

Service Tools	
Extension FFC	
(A) Main P.C.B. (CN5050) - D-Amp P.C.B. (CN5050)	REEX0930 (17P FFC Wires)
(B) Main P.C.B. (CN2701) - SMPS P.C.B. (CN5802)	REXX0680 (11P Wires)
(C) SMPS P.C.B. (H5801) - D-Amp P.C.B. (CN5500)	REXX0683 (8 Pin Flat Wires)

11 Service Positions

Note: For description of the disassembly procedures, see the Section 8.

11.1. Checking and Repairing of Main P.C.B.

Step 1 Remove Top Cabinet.

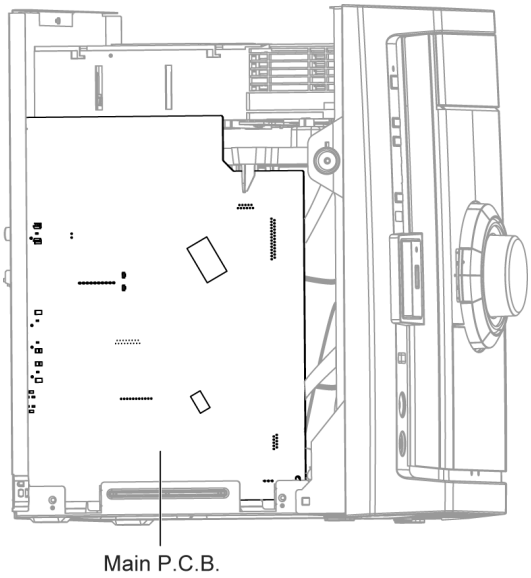

Note: Main P.C.B. can be checked at its original position.

11.2. Checking and Repairing Panel, Deck P.C.B., Tact Switch P.C.B., Music Port P.C.B. & USB Connector/Led P.C.B.

Step 1 Remove Top Cabinet.

Step 2 Remove Front Panel Unit.

Step 3 Remove Deck Mechanism Unit.

Step 4 Remove USB Connector/Led P.C.B..

Step 5 Connect 27P FFC cable at connector (CN2806) at Main P.C.B..

Step 6 Connect 21P FFC cable at connector (CN2011) at Main P.C.B..

Step 7 Connect 10P FFC cable at connector (CN2807) at Main P.C.B..

Step 8 Connect 2P wire cable at connector (CN2001) at Main P.C.B..

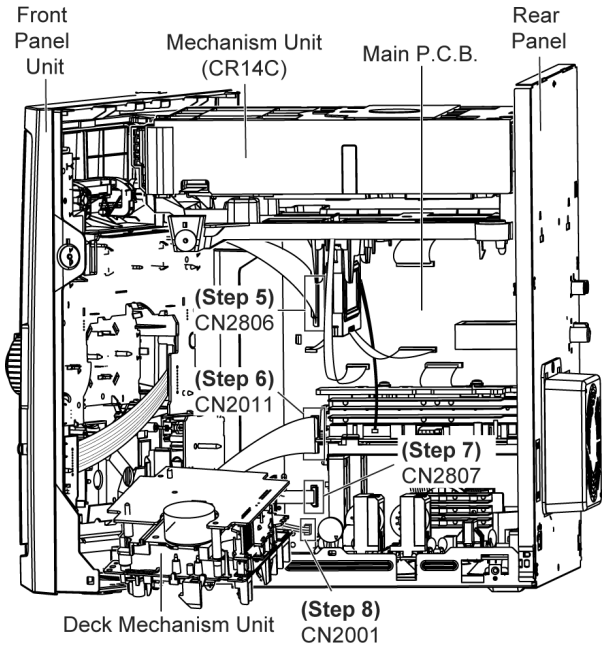

Step 9 Connect 2P wire cable at connector (CN1112) at Main P.C.B..

Step 10 Connect 5P wire cable at connector (CN1113) at USB Connector/ Led P.C.B..

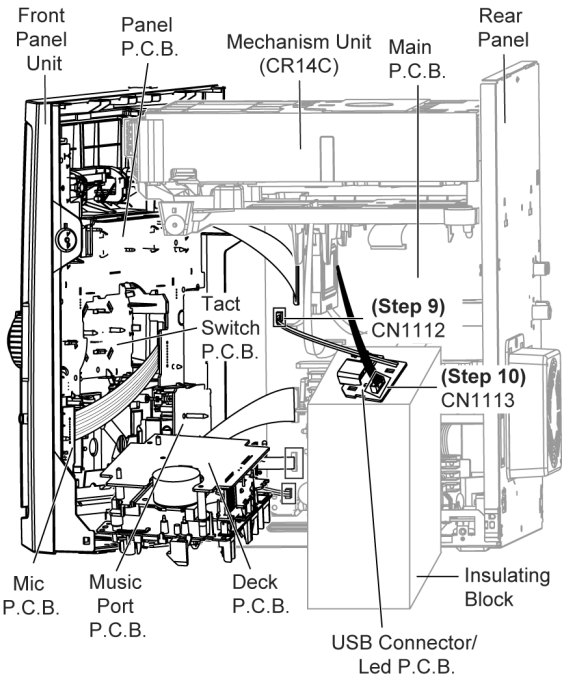

Step 11 Check and repair Panel P.C.B., Deck P.C.B., Tact

Switch P.C.B., Music Port P.C.B. & USB Connector/Led P.C.B..

11.3. Checking and Repairing Jupiter USB P.C.B. (Side A & B)

- **Checking Jupiter USB P.C.B. (Side A)**

Step 1 Remove Top Cabinet.

Step 2 Remove Mechanism Unit.

Step 3 Remove 2 screws at mecha chassis.

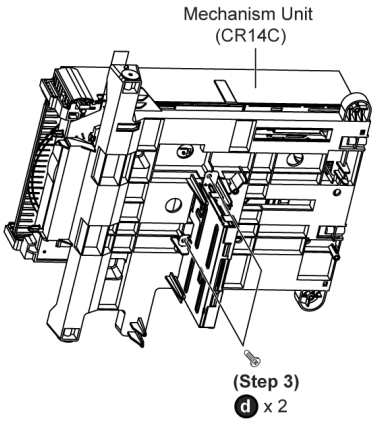

Step 4 Remove Jupiter USB cover.

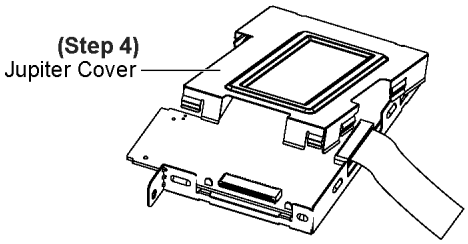

Step 5 Desolder 4 points.

Step 6 Remove Jupiter USB P.C.B..

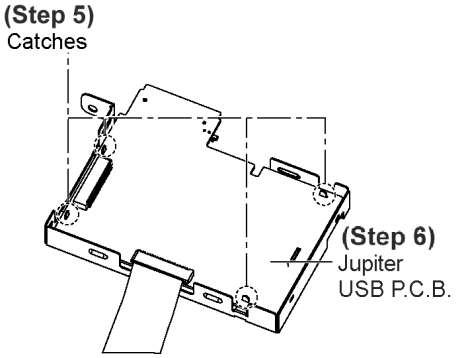

Step 7 Position Mechanism Unit (CR14C) according to the diagram shown.

Step 8 Connect 22P FFC cable at connector (CN2801) at Main P.C.B..

Step 9 Connect 11P cable at connector (CN2802) at Main P.C.B..

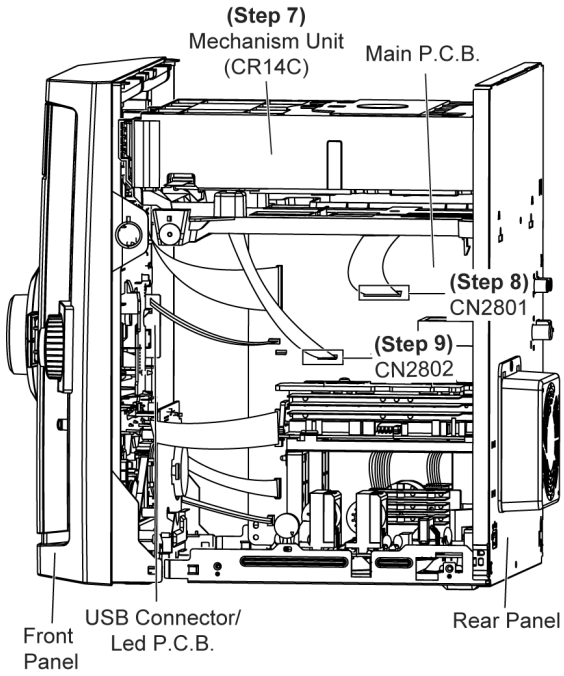

Step 10 Connect 6P FFC cable at connector (CN2815) at Main P.C.B..

Step 11 Connect 20P FFC cable at connector (CN2804) at Main P.C.B..

Step 12 Connect 5P wire cable at connector (CN1113) at USB Connector/Led P.C.B..

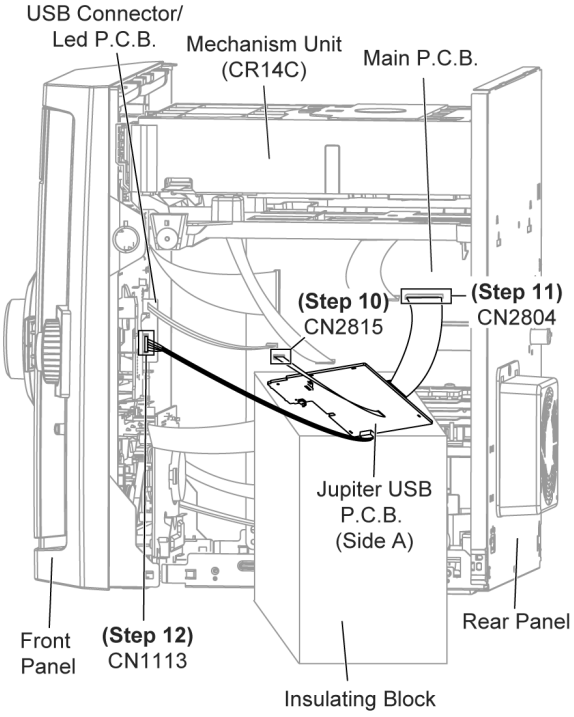

Step 13 Check and repair Jupiter USB P.C.B. (Side A).

- **Checking Jupiter USB P.C.B. (Side B)**

Step 14 Flip over the Jupiter USB P.C.B. (Side A).

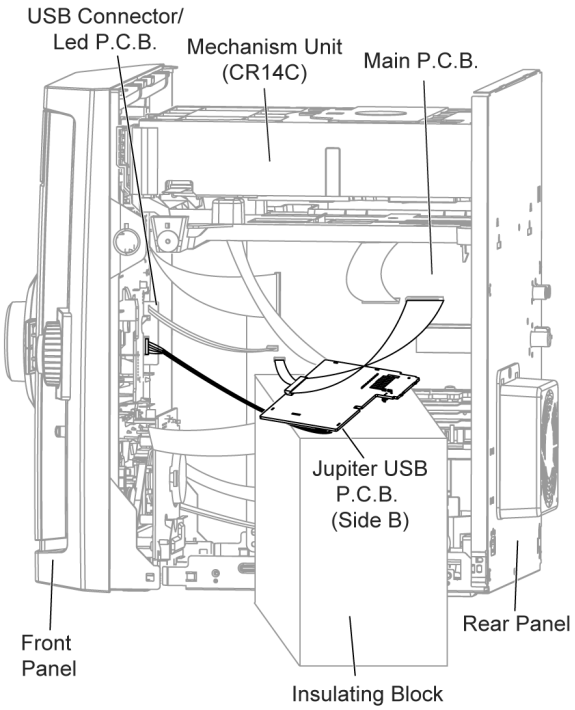

Step 15 Check and repair Jupiter USB P.C.B. (Side B).

11.4. Checking and Repairing Mic P.C.B.

Step 1 Remove Top Cabinet.

Step 2 Release the claws outwards on both sides.

Step 3 Release the catches at both sides.

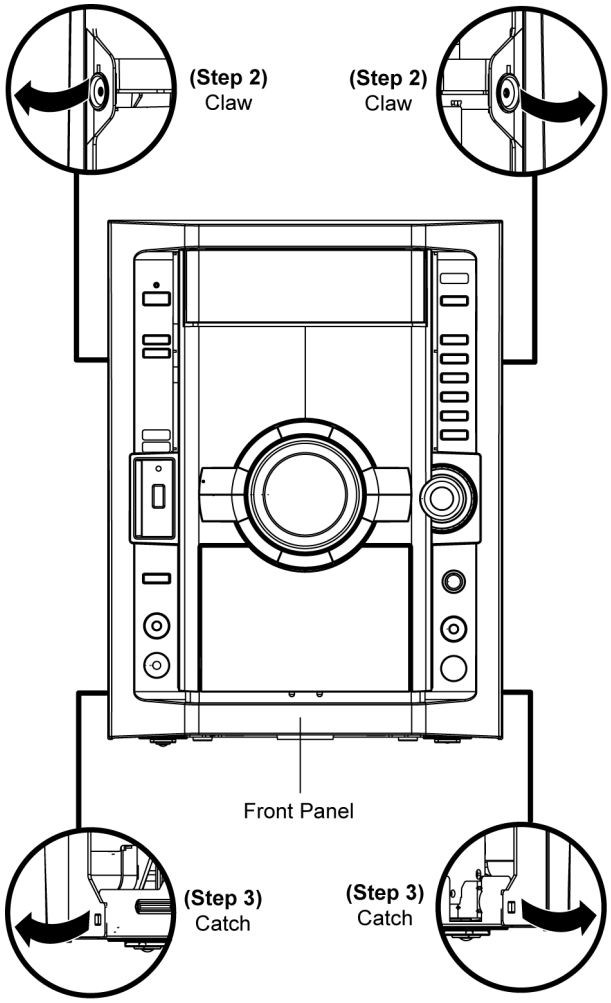

Step 4 Release the tabs at the bottom of the front panel.

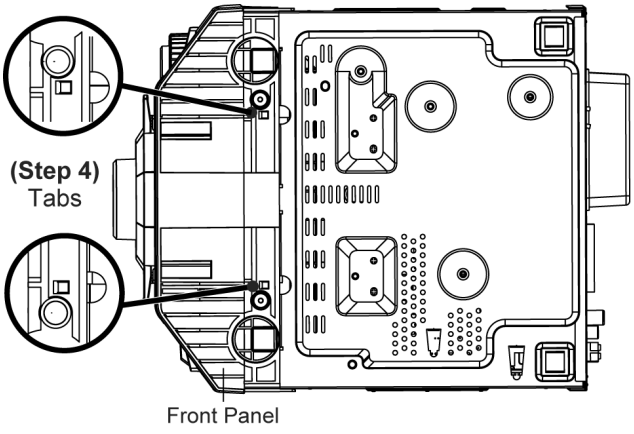

Step 5 Shift the front panel unit slightly forward in the direction of the arrow.

Step 6 Check and repair the Mic P.C.B. at its original position.

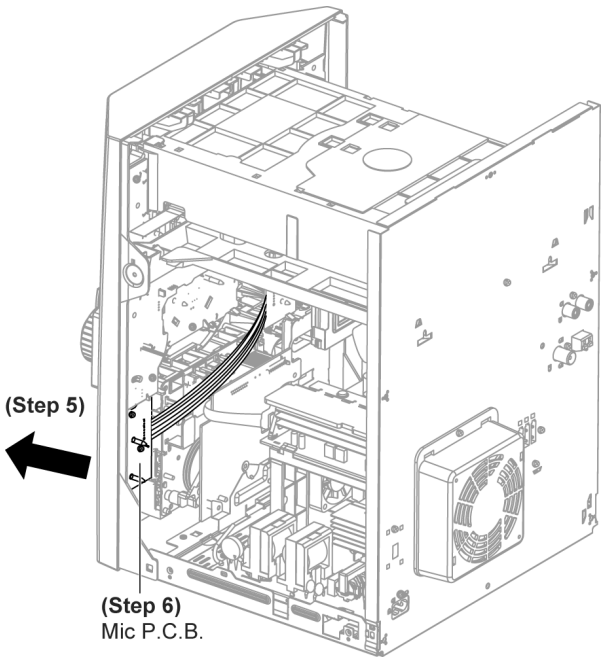

11.5. Checking and Repairing of D-Amp P.C.B.

Step 1 Remove Top Cabinet.

Step 2 Remove the mechanism unit.

Step 3 Detach 17P FFC cable at connector (CN5050) at D-Amp P.C.B..

Step 4 Detach 8P wire cable at connector (CN5500) at D-Amp P.C.B..

Step 5 Detach 2P wire cable at connector (CN2820) at Main P.C.B..

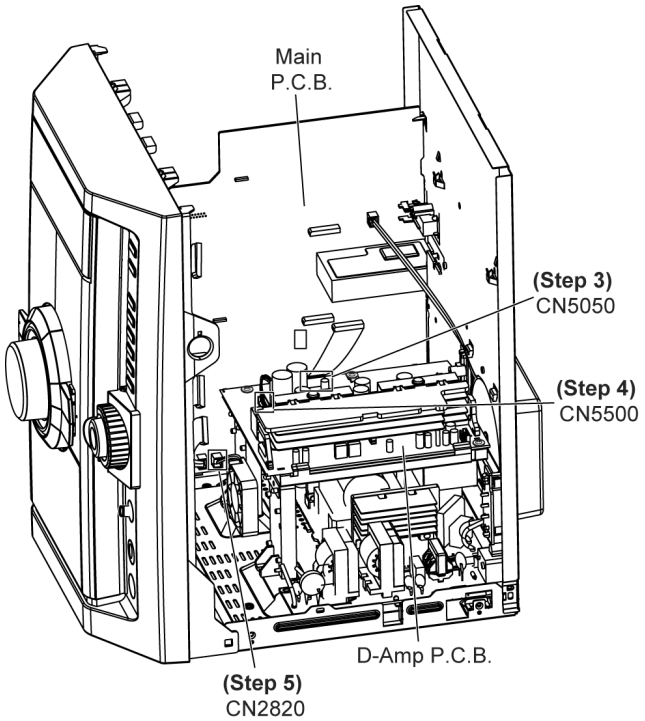

Step 6 Remove 2 screws at chassis supports.

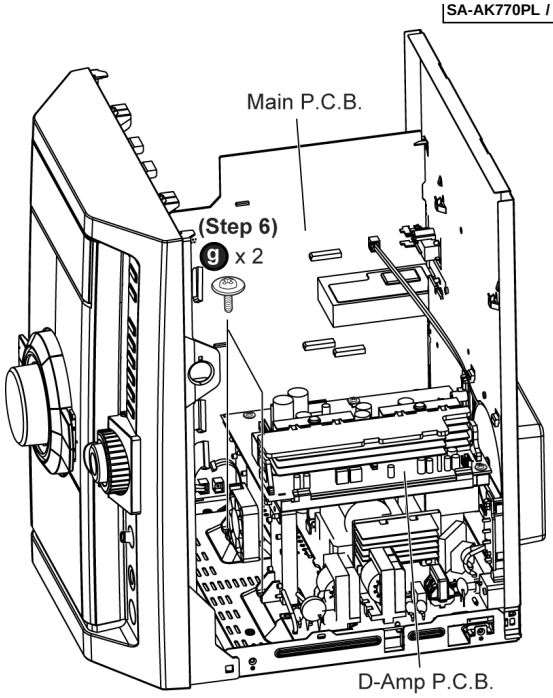

Step 7 Remove 4 screws at the rear panel.

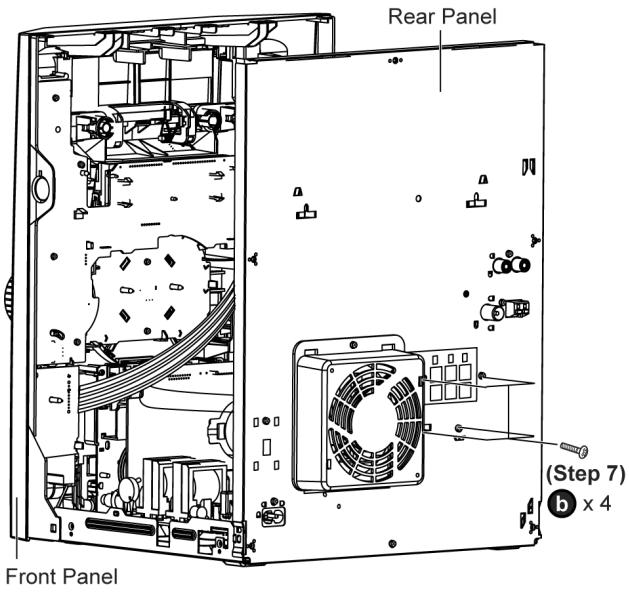

Step 8 Lift up the D-Amp P.C.B. together with the chassis support as arrow shown.

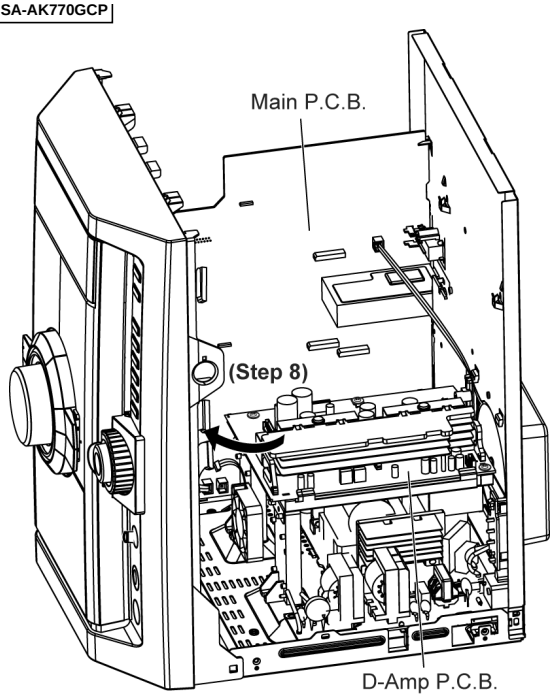

Step 9 Remove 3 screws from D-Amp P.C.B..

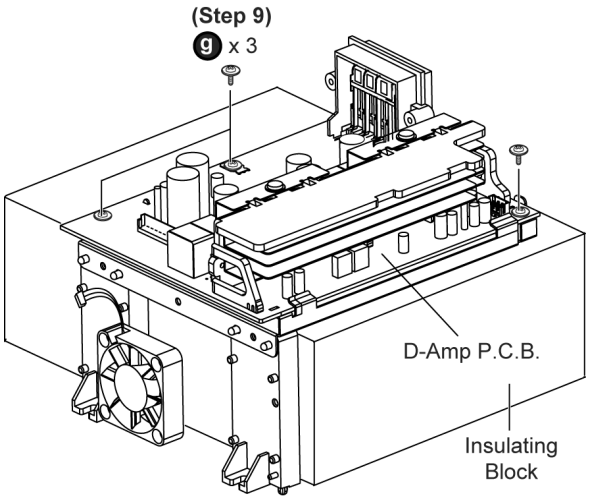

Step 10 Lift up D-Amp P.C.B. as arrow shown.

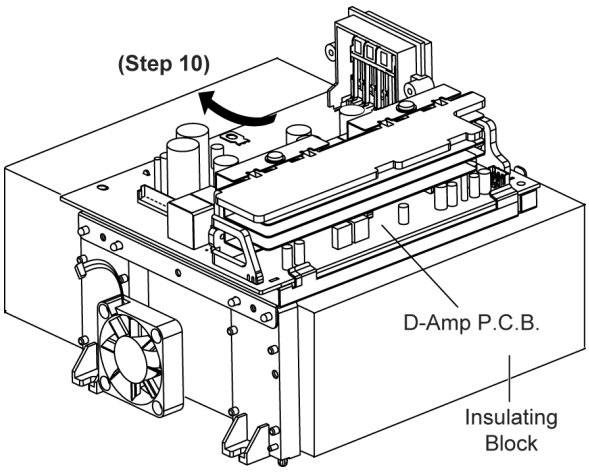

Step 11 Remove 1 screw at Fan Unit detach to the chassis support.

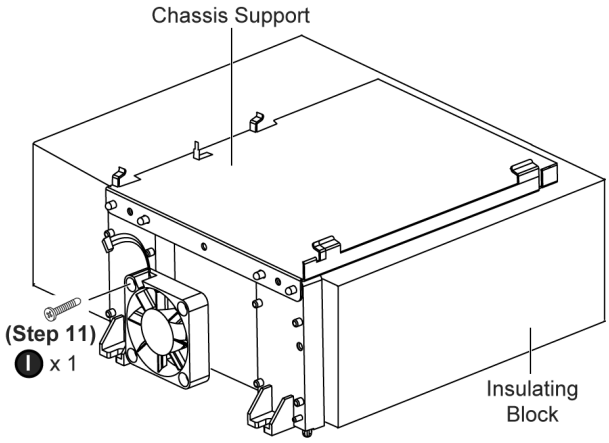

Step 12 Connnect 2P wire cable at the connector (CN2820) at Main P.C.B..

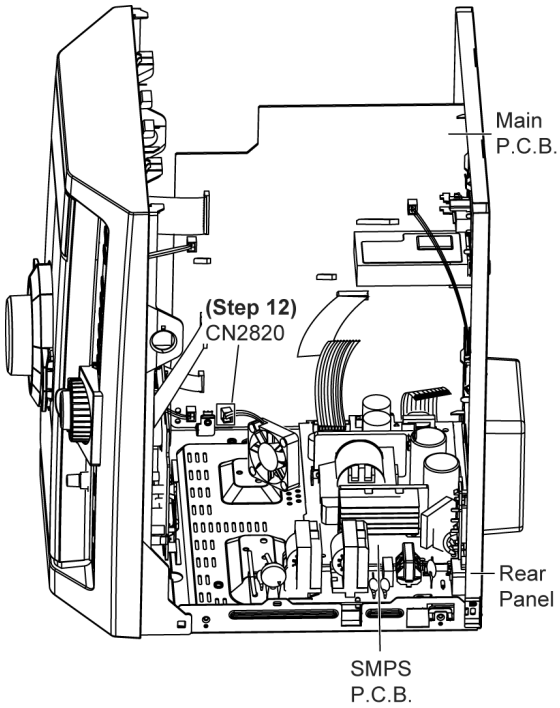

Step 13 Position Mechanism Unit CR14C according to the diagram shown.

Step 14 Connect 22P FFC cable at the connector (CN2801) on Main P.C.B..

Step 15 Connect 11P FFC cable at the connector (CN2802) on Main P.C.B..

Step 16 Connect 6P FFC cable at connector (CN2815) at Main P.C.B..

Step 17 Connect 20P FFC cable at connector (CN2804) at Main P.C.B..

Step 18 Connect 5P wire cable at connector (CN1113) at USB Connector/Led P.C.B..

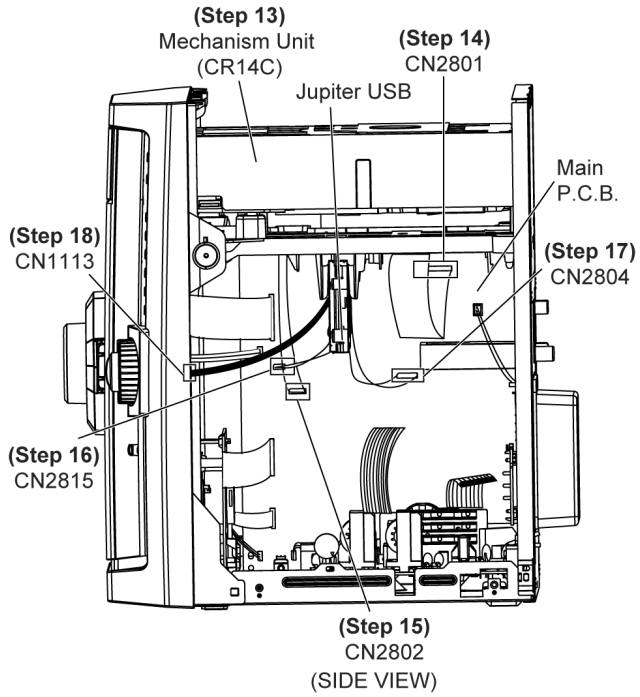

Step 19 Attach original cable with extension cable (REXX0683) (8P cable from H5801 to CN5500).

Step 20 Connect extension cable (REEX0930) (17P cable from CN5050 to CN5050).

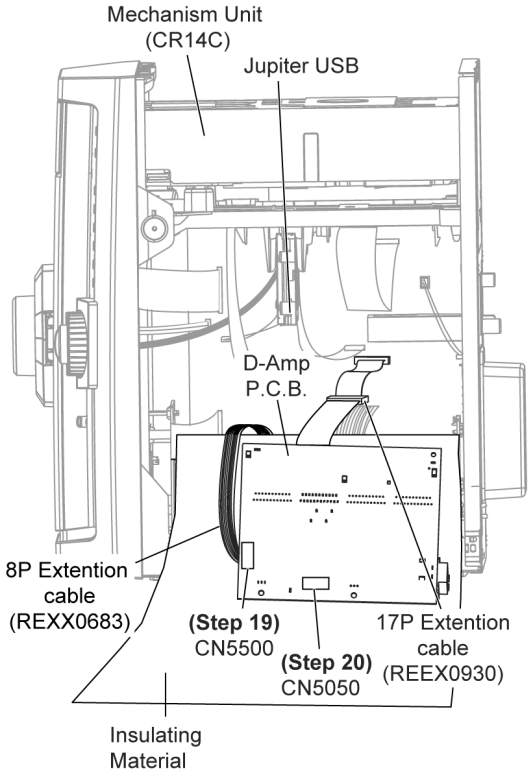

Step 21 Check and repair D-Amp P.C.B. according to the diagram shown.

11.6. Checking and Repairing of AC Inlet P.C.B. & SMPS P.C.B.

- Follow (Step 1) - (Step 12) of item 11.5

Step 1 Detach wire connector at connector CN5802 at SMPS P.C.B..

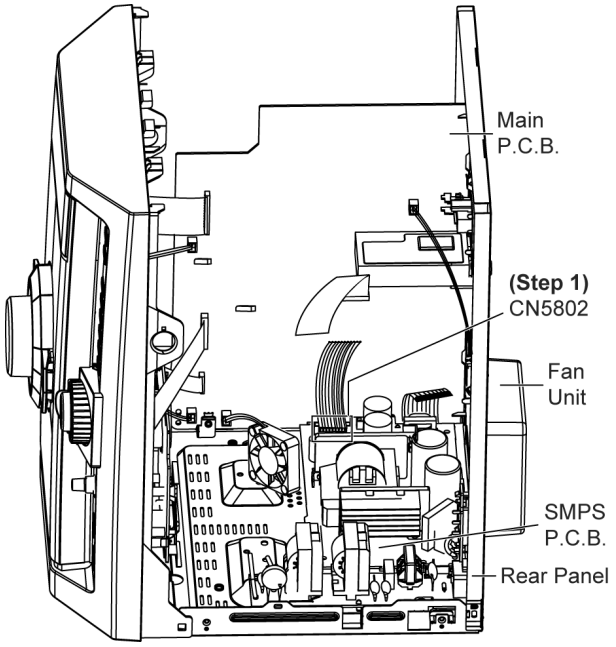

Step 2 Remove 4 screws.

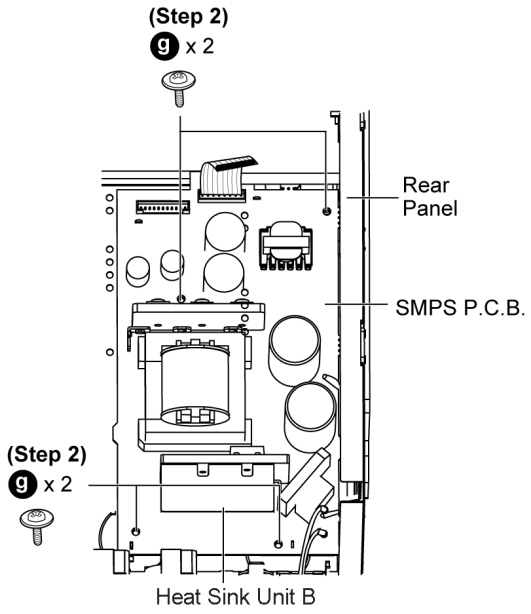

Step 3 Remove 2 screws at AC Inlet P.C.B..

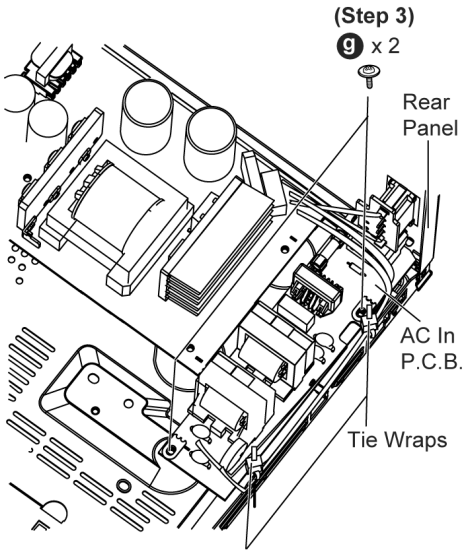

Step 4 Cut 2 tie wraps.

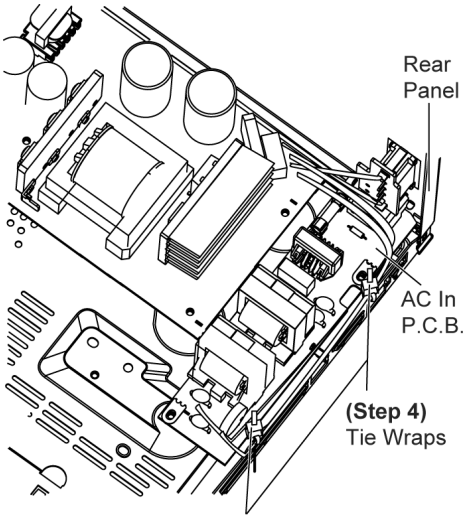

Step 5 Remove 1 screw at the rear panel.

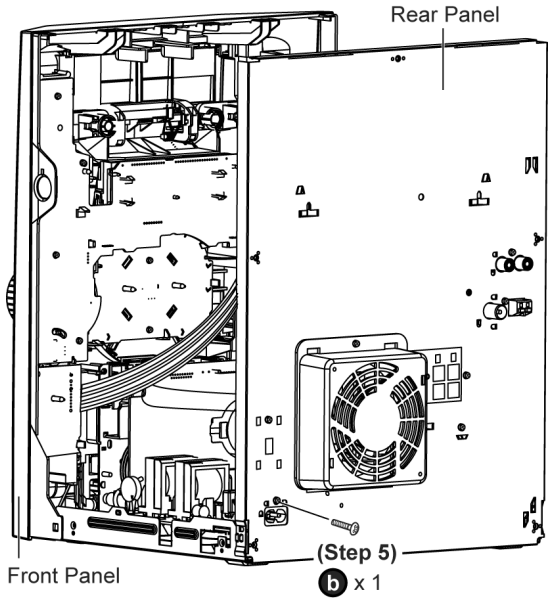

Step 6 Move the rear panel slightly backward as arrow shown, lift up the AC Inlet P.C.B. together with the SMPS P.C.B..

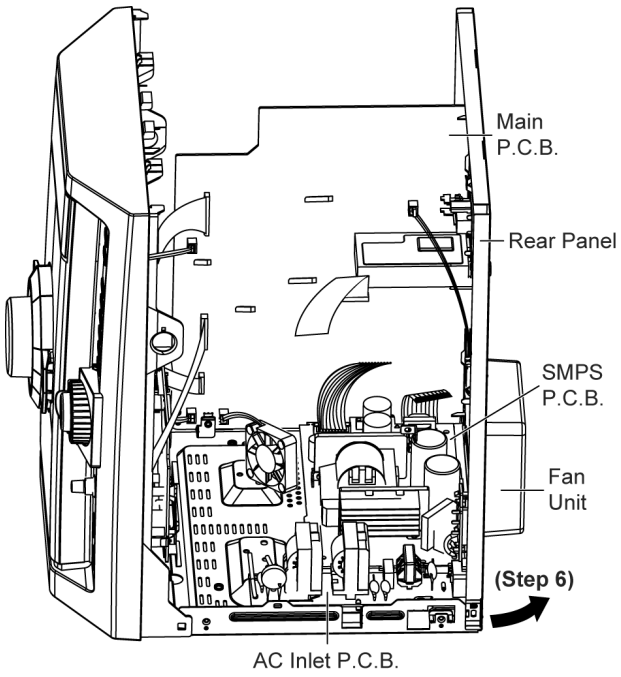

Step 7 Position SMPS P.C.B. & AC Inlet P.C.B. according to the diagram shown.

Step 8 Position Mechanism Unit (CR14C) according to the diagram shown.

Step 9 Connect 22P FFC cable at the connector (CN2801) on Main P.C.B..

Step 10 Connect 11P FFC cable at the connector (CN2802) on Main P.C.B..

Step 11 Connect 6P FFC cable at connector (CN2815) at Main P.C.B..

Step 12 Connect 20P FFC cable at connector (CN2804) at Main P.C.B..

Step 13 Connect 5P wire cable at the connector (CN1113) on USB Connector/Led P.C.B..

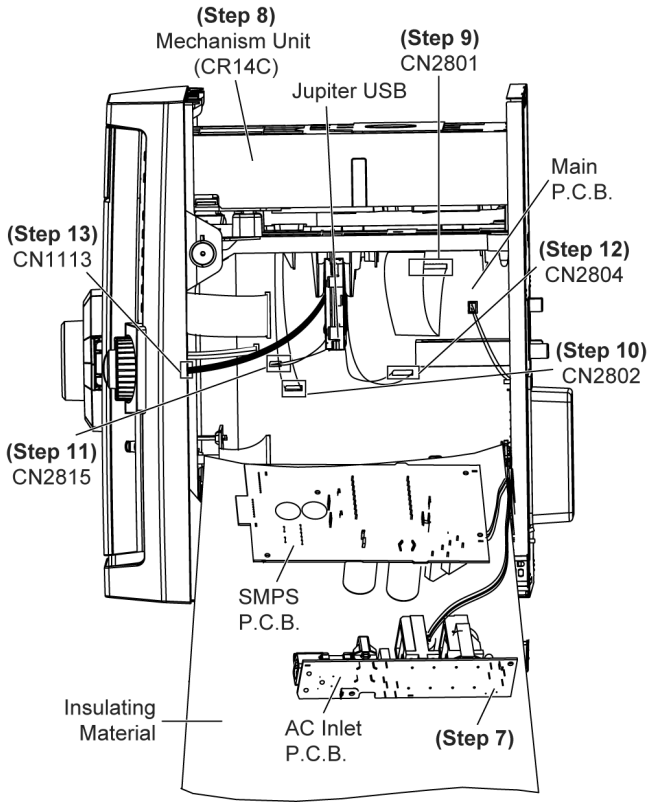

Step 14 Attach original cable with extension cable (REXX0683) (8P cable from H5801 to CN5500).

Step 15 Attach original cable with extension cable (REXX0680) (11P cable from CN2701 to CN5802).

Step 16 Connect extension cable (REEX0930) (17P cable from CN5050 to CN5050).

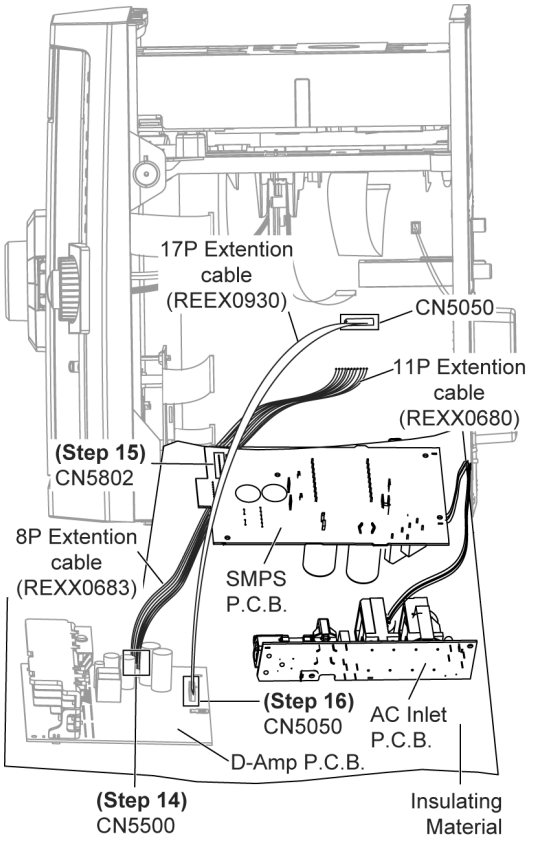

Step 17 Service AC Inlet P.C.B. & SMPS P.C.B. respectively.

12 Procedure for Checking Operation of Individual Parts of Deck Mechanism Unit

12.1. Operation Check with Cassette Tape

1. Pull up the EJECT lever using a rubber band. (Fig. 6)
2. Supply DC5V to MOTOR. (→ MOTOR rotates.) (Fig. 5)
3. Insert a cassette tape to the unit.
4. Supply DC9V to the plunger, and turn the power ON and OFF. (→ Power +PL, -PL) (Fig. 5)
   a. FWD PLAY: Supply the plunger power in a flash. (ON: approx. 5msec)
   b. FWD FF: Supply the plunger power in a flash at PLAY mode. (ON: approx. 5msec)
   c. STOP: Supply the plunger power in a flash at FWD FF mode. (ON: approx. 5msec)
   d. REV PLAY: Supply the plunger power in a normal timing at STOP mode. (ON: approx. 200msec)
   e. REV REW: Supply the plunger power in a flash at REV PLAY mode. (ON: approx. 50msec)
   f. STOP: Supply the plunger power in a flash at FF mode. (ON: approx. 50msec)
   Repeat the operation (→ FWD PLAY)
   (Note) Other operation may start if a timing of supplying the plunger power is missed.

12.1.1. Connection Status between Mechanism and Power Supply (Motor, Plunger)

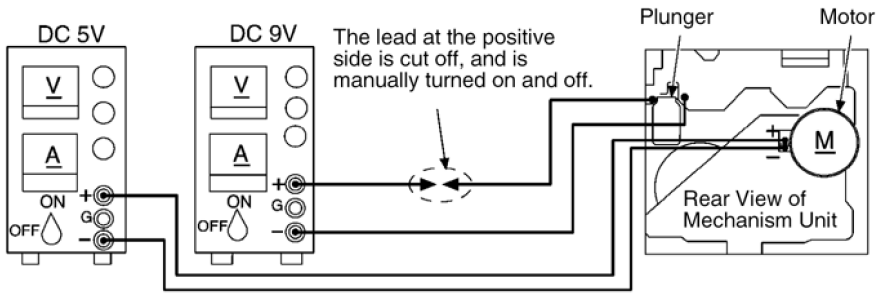

Fig. 5

12.1.2. Operative Parts of Deck Mechanism Unit (EJECT lever fitted with rubber band, Plunger/Rib operation)

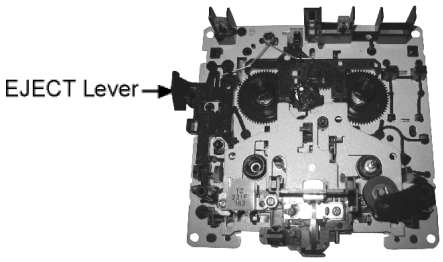

Fig. 6

12.2. Operation Check without Cassette Tape

1. Pull up the EJECT lever using a rubber band. (Fig. 6)
2. Supply DC5V to MOTOR. (→ MOTOR rotates.)
3. Lift up the mechanism unit's plunger/rib with the tip of a negative screwdriver, and operate the unit in the same timing as supplying the power. (Fig. 7)

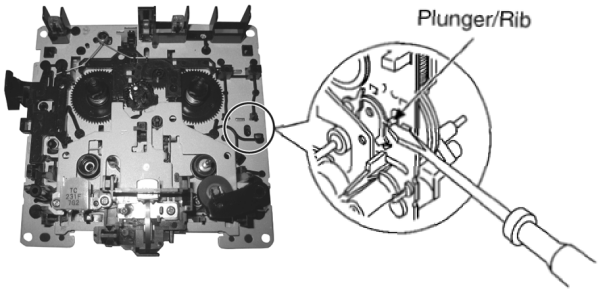

13 Measurement And Adjustments

13.1. Cassette Deck Section

13.1.1. Requirements

- Test tape (QZZCFM) (QZZCWAT)
- Normal blank cassette tape (QZZCRA)
- Digital frequency counter
- Oscilloscope
- Electrical voltmeter
- Headphone jack output jig (Fig 8)

13.1.2. Setting of Unit

- VOLUME: MAX

13.1.3. Preparations

1. Apply under [8. Assembling and Disassembling].
2. Remove 4 screws from the mechanism unit to disassemble. under [8.15 Disassembly of Deck Mechanism Unit].
3. Connect the headphone jack output jig (Fig 8) to headphone jack.

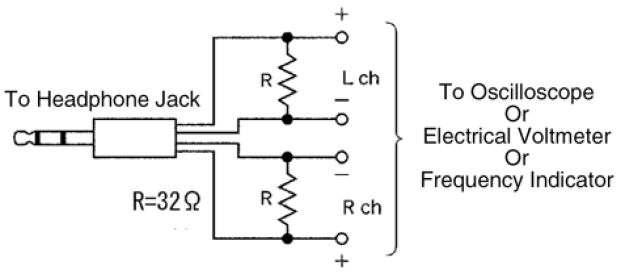

Fig. 8

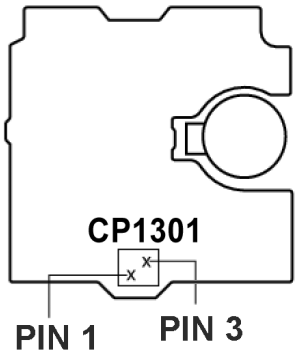

Fig. 9

13.1.4. Tape Speed Adjustment

- Normal speed adjustment (only during forward playback)

(Product reference value: 3,000±90Hz)

1. Connect a frequency indicator. (Fig 10)
2. Playback the middle portion of the test tape (QZZCWAT).
3. Adjust the motor screw so that the following output level is produced. (Fig 11)

   Adjustment Range: 3,000 ± 90Hz (a constant speed)

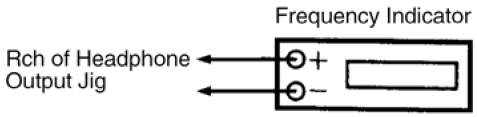

Fig. 10

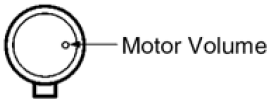

Fig. 11

13.1.5. Bias Voltage Check

1. Connect an electrical voltmeter. (Fig 12) (Fig 9 for location of Test point)
2. Set the function to “TAPE” position.
3. Insert a normal blank cassette tape (QZZCRA).
4. While pressing and holding down [REC (●)] button, press [TAPE (►, TAPE)] button to pause the recording mode. (Repeat pressing the buttons till the recording pause mode is activated.)
5. Check that the output level is within the standard range.

   Standard Range: 20 ± 3mV

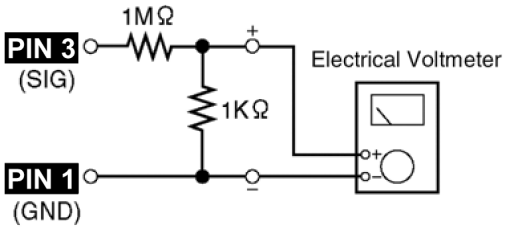

Fig. 12

13.1.6. Bias Frequency Check

1. Connect a digital frequency counter (Fig 13).
2. Set the function to “TAPE” position.
3. Insert a normal blank cassette tape (QZZCRA) and press “REC” mode on main unit.
4. Check that the output frequency is within the standard range.

Standard Value: 100 ±8 kHz

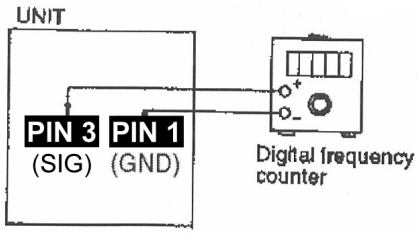

Fig. 13

14 Voltage Measurement and Waveform Chart

Note:

Circuit voltage and waveform described herein shall be regarded as reference information when probing defect point, because it may differ from an actual measuring value due to difference of Measuring instrument and its measuring condition and product itself.

14.1. Voltage Measurement

14.1.1. CD Servo P.C.B.

Ref No.	IC7001																			
MODE	1	2	3	4	5	6	7	8	9	10	11	12	13	14	15	16	17	18	19	20
CD PLAY	0	0	0	0	0	0	0	0	0	0	0	0	4.34	0	0	0	0	0	0	3.2
STANDBY	0	0	0	0	0	0	0	0	0	0	0	0	0	0	0	0	0	0	0	0
Ref No.	IC7001																			
MODE	21	22	23	24	25	26	27	28	29	30	31	32	33	34	35	36	37	38	39	40
CD PLAY	1.6	0	1.6	1.6	1.8	0	3.2	1.5	3.2	3.2	0	1.6	1.6	0	0	1.9	1.9	0	1.7	1.7
STANDBY	0	0	0	0	0	0	0	0	0	0	0	0	0	0	0	0	0	0	0	0
Ref No.	IC7001																			
MODE	41	42	43	44	45	46	47	48	49	50	51	52	53	54	55	56	57	58	59	60
CD PLAY	0.2	2.4	1.7	1.9	1	0	3.2	1.2	0	1.2	1.6	1.6	0.9	1.4	1.5	1.5	0	3.2	0	0
STANDBY	0	0	0	0	0	0	0	0	0	0	0	0	0	0	0	0	0	0	0	0
Ref No.	IC7001																			
MODE	61	62	63	64	65	66	67	68	69	70	71	72	73	74	75	76	77	78	79	80
CD PLAY	3.2						3	3	3	2.9	0	3.2	0	1.6	0	1.6	3.2	0	3.2	1.6
STANDBY	0	0	0	0	0	0	0	0	0	0	0	0	0	0	0	0	0	0	0	0
Ref No.	IC7001																			
MODE	81	82	83	84	85	86	87	88	89	90	91	92	93	94	95	96	97	98	99	100
CD PLAY	1.6	1.6	0	0	0	0	0	0	0	0	0	0	3.2	0	0	0	0	0	0	0
STANDBY	0	0	0	0	0	0	0	0	0	0	0	0	0	0	0	0	0	0	0	0
Ref No.	IC7002																			
MODE	1	2	3	4	5	6	7	8	9	10	11	12	13	14	15	16	17	18	19	20
CD PLAY	1.6	0	1.5	0	0	0	0	0	0	0	1.7	3.2	3.2	3.2	2.8	3.8	3.2	3.2	0	7.1
STANDBY	0	0	0	0	0	0	0	0	0	0	0	0	0	0	0	0	0	0	0	0
Ref No.	IC7002																			
MODE	21	22	23	24	25	26	27	28	29	30										
CD PLAY	0	0	0	0	7.1	1.6	1.6	1.6	0	0										
STANDBY	0	0	0	0	0	0	0	0	0	0										
Ref No.	Q7601																			
MODE	E	C	B																	
CD PLAY	3.1	2	2.4																	
STANDBY	0	0.1	0																	
AK770PL/GCP CD SERVO P.C.B.																				

14.1.2. Main P.C.B.

Ref No.	IC2801																			
MODE	1	2	3	4	5	6	7	8	9	10	11	12	13	14	15	16	17	18	19	20
CD PLAY	1.5v	86	60	70	-0.58v	-0.6v	-0.6v	-0.58v	-0.6v	68	1v	-157	-0.6v	-0.6v	-0.6v	-0.6v	-0.58v	0.9	-0.6v	-0.6v
STANDBY	1.6v	1.6v	1.6v	1.6v	1.6v	1.6v	0	-0.9v	-0.9v	1v	0.6v	-3v	1.6v	0.2v	1.6v	3.3v	3.3v	3.3v	0	2v
Ref No.	IC2801																			
MODE	21	22	23	24	25	26	27	28	29	30	31	32	33	34	35	36	37	38	39	40
CD PLAY	-1.3v	-0.5v	-174	-140	-0.6v	-134	-0.6v	-0.4v	-0.65v	1.9v	-174	-1.5v	-175	-170	1.9v	-2.1v	-1v	-174	-0.5v	-0.2v
STANDBY	2.6v	2.6	2.6v	2.6v	2.6v	2.8v	2.8v	0	3.3v	-174	3.5v	3.6v	4.3v	4.3v	55.4v	55.6v	0.6v	-0.6v	4.1v	3.2v
Ref No.	IC2801																			
MODE	41	42	43	44	45	46	47	48	49	50	51	52	53	54	55	56	57	58	59	60
CD PLAY	-192	-194	1v	-0.8v	1v	-0.2v	-0.9v	-2v	-0.9v	-0.7v	-0.2v	-158	2.6v	0.7v	-1.3v	0.37v	1.3v	-0.5v	-0.5v	-195
STANDBY	3.9v	3.8v	1.6v	0.5v	3.6v	-0.6v	0	3.2v	3.2	3.1	2.9v	2.8v	-0.5v	2.6v	2.5v	2.1v	-0.5v	1.7v	2.1v	2v
Ref No.	IC2801																			
MODE	61	62	63	64	65	66	67	68	69	70	71	72	73	74	75	76	77	78	79	80
CD PLAY	2.6v	1.2v	-2.1v	-0.6v	-0.3v	-176	2.7v	1.6v	-1.8v	-1v	-0.5v	-0.3v	-171	0.8v	0.48v	0.9v	-0.5v	0.4v	0.8v	-2.1v
STANDBY	2.2v	3.3v	1.6v	0.5v	1.5v	1.6v	6v	6.1v	6.2v	0.6v	1.9v	6.3v	0.6v	2v	2v	2.1v	2.1v	2.1v	2.6v	0.6v
Ref No.	IC2801																			
MODE	81	82	83	84	85	86	87	88	89	90	91	92	93	94	95	96	97	98	99	100
CD PLAY	1.8v	-1.8v	-0.4v	-139	2.2v	-1.5v	-0.8v	-0.5v	2.4v	-110v	-1.2v	1.6v	1v	0.3v	173	-2.6v	1.6v	0.7v	0.4v	0.25v
STANDBY	2.2v	2.2v	2.2v	2.2v	3.3v	0.5v	2.2v	2.2v	3v	2.5v	2.2	3.3v	3.3v	2.95v	2.5	0.5v	2.5v	3.3v	3.3v	3.3v
Ref No.	IC2810									IC2121										
MODE	1	2	3	4	5	6	7	8		1	2	3	4	5	6	7	8			
CD PLAY	-0.68V	-0.59V	-2.3V	-1.4V	0.5V	0.34V	-1.1V	2.3V		-0.83V	-2.1V	-191	-6V	3.8V	1.6V	0.7V	0.7V			
STANDBY	-0.7V	3.3V	3.9V	3.8	1.6V	1.6V	0.5	3.2V		5.2V	61	1.1V	0.34V	1.1V	54	60	108			
Ref No.	IC2761				IC2741					IC2701										
MODE	1	2	3		1	2	3	4	5		1	2	3	4	5					
CD PLAY	9.2V	-8V	4.3V		-1.6V	-5V	2.1V	-1.3V	-1.2V		6V	-4.7V	-8.5V	-3.1V	6V					
STANDBY	11.9V	-1.9	16.5V		5.8V	-1.3	5.8V	-0.37V	3.3V		16.5V	7.8V	-2.2	0.9V	11V					
Ref No.	IC2804																			
MODE	1	2	3	4	5	6	7	8												
CD PLAY	-6V	176	-167	-8.1V	3.1V	1.1V	0.2V	7.9V												
STANDBY	-4.4	-0.8V	-0.8V	-9.1V	-0.9	-0.6	-4.2	9.3V												
Ref No.	IC2803																			
MODE	1	2	3	4	5	6	7	8	9	10	11	12	13	14	15	16	17	18	19	20
CD PLAY	-0.6V	-157	-0.7V	0.6V	0.4V	0.2V	183	0.18V	142	173	162	144	165	188	180	172	180	-0.7V	163	170
STANDBY	-0.8V	0.5V	0.4V	0.4V	0.4V	0.4V	0.4V	0.15	0.15	-0.16	-0.16	0.64	0.5V	0.4V	0.4V	0.4V	0.4V	0	136	137
Ref No.	IC2803																			
MODE	21	22	23	24	25	26	27	28	29	30	31	32	33	34	35	36	37	38	39	40
CD PLAY	4.1V	-1.4V	-0.7V	-0.24V	-3V	-0.6V	1.2V	0.7V	0.4V	0.25V	183	146	148	167	175	176	174	176	-0.46V	176
STANDBY	108	0.4	0.4	0.4V	0.3V	0	0.36V	169	149	136	138	140	-0.27V	0.29V	0.26V	0.26V	0.27V	0.26V	-0.82V	0.26V
Ref No.	IC2803																			
MODE	41	42	43	44	45	46	47	48	49	50	51	52								
CD PLAY	-0.5V	177	-0.46V	176	173	183	161	-0.45V	-0.43V	0.21V	-0.43V	194								
STANDBY	-0.6V	0.24V	0.6V	0.23V	0.47V	0.22V	0.22V	-0.6V	180	-0.43V	0.31V	0.2V								
Ref No.	Q2711				Q2745				Q2743				Q2317				Q2360			
MODE	E	C	B		E	C	B		E	C	B		E	C	B		E	C	B	
CD PLAY	3.9V	5.7V	3.2V		3.3V	47	-0.9		2.6V	3.3V	3.3V		-2.6	-2.6	0.59V		-2.6	-2.6	0.62V	
STANDBY	3.4V	5.7V	4V		-1.5	46.6	3.3V		3.3V	3.3V	2.6V		-2.6	-2.6	0.59V		-2.6	-2.6	0.62V	
Ref No.	Q2735				Q2312				Q2311				Q2771				Q2772			
MODE	E	C	B		E	C	B		E	C	B		E	C	B		E	C	B	
CD PLAY	8V	10V	8.4		-0.8	-0.8	0.59V		-0.8	-0.8	0.59V		-2.3	3.1V	-18.4		-19	3.14V	-2.4	
STANDBY	8V	11.2V	8.6V		-0.8	-0.8	0.59V		-0.8	-0.8	0.59		-2.4	3.1V	-18.4		-19	3.14V	-2.4	
Ref No.	QR2317				Q2967				Q2970				Q2012				Q2011			
MODE	E	C	B		E	C	B		E	C	B		E	C	B		E	C	B	
CD PLAY	-1.1	-7.5V	3.3		0.9	11.7V	2		3.3	-0.4	3		3.3	11.7V	3		3.3	11.7V	3	
STANDBY	1.7V	1.7V	-0.9		0.9	11.9V	2		3.3V	-0.4	3V		3.4	11.9V	3.3		3.4	11.9V	3.2	
Ref No.	Q2743				Q2900				Q2751				Q2812				Q2375			
MODE	E	C	B		E	C	B		E	C	B		E	C	B		E	C	B	
CD PLAY	-1	-8V	-0.6V		3.2	17.8V	-0.3V		9.44	16.7V	10V		1.3	3.3V	-0.3		-2.6	-2.6	0.59V	
STANDBY	-1.9	-9.8V	-0.61V		3.2	17.8V	-0.3V		9.4V	16.48V	10V		-0.1	3.3	0		-2.6	-2.6	0.59V	
Ref No.	Q2359				Q2962				Q2761				Q2371				Q2372			
MODE	E	C	B		E	C	B		E	C	B		E	C	B		E	C	B	
CD PLAY	-2.6	-2.6	0.62V		11.9V	11.5V	11.8V		-9.2V	-11.6V	11.8V		1.3	3.3V	-0.3		-2.6	-2.6	0.59V	
STANDBY	-2.6	-2.6	0.62V		11.9V	3.1	11.9V		-9.2V	-11.4V	-9.8V		-0.1	3.3	0		-2.6	-2.6	0.59V	
Ref No.	Q2373				Q2374				Q2417				Q2501				Q2708			
MODE	E	C	B		E	C	B		E	C	B		E	C	B		E	C	B	
CD PLAY	-2.6	-2.6	0.62V		11.9V	11.5V	11.8V		-9.2V	-11.6V	11.8V		1.3	3.3V	-0.3		-2.6	-2.6	0.59V	
STANDBY	-2.6	-2.6	0.62V		11.9V	3.1	11.9V		-9.2V	-11.4V	-9.8V		-0.1	3.3	0		-2.6	-2.6	0.59V	
Ref No.	Q2942				Q2943				Q2947				Q2948				Q2949			
MODE	E	C	B		E	C	B		E	C	B		E	C	B		E	C	B	
CD PLAY	-2.6	-2.6	0.62V		11.9V	11.5V	11.8V		-9.2V	-11.6V	11.8V		1.3	3.3V	-0.3		-2.6	-2.6	0.59V	
STANDBY	-2.6	-2.6	0.62V		11.9V	3.1	11.9V		-9.2V	-11.4V	-9.8V		-0.1	3.3	0		-2.6	-2.6	0.59V	
Ref No.	Q2961				QR111															
MODE	E	C	B		E	C	B													
CD PLAY	-2.6	-2.6	0.62V		-2.6	-2.6	0.62V													
STANDBY	-2.6	-2.6	0.62V		-2.6	-2.6	0.62V													

SA-AK770PL/GCP MAIN P.C.B.

14.1.3. Panel P.C.B.

Ref No.	IC6601																			
MODE	1	2	3	4	5	6	7	8	9	10	11	12	13	14	15	16	17	18	19	20
CD PLAY	0	0	0	0	1.8V	1.2V	0.4V	0	2.5V	0	0	0	3.3V	-14V	-14V	-20V	-22.3V	-24V	-20.6V	-20.6V
STANDBY	0	0	0	0	1.9V	1V	0	3.4V	2.6V	0	0	0	3.3V	-14V	-14V	-18.5V	-22.6V	-22V	-22.6V	-20V
Ref No.	IC6601																			
MODE	21	22	23	24	25	26	27	28	29	30	31	32	33	34	35	36	37	38	39	40
CD PLAY	-16.7V	-24.5V	-24.6V	-22.6V	-14.7V	-22.6V	-16.7V	-22.7V	-22.7V	-25.1V	-23.3V	-22.8V	-23.1V	-22.8V	-22.8V	-22.9V	-22.7V	-22.8V	-22.7V	-22.9V
STANDBY	-16.7V	-24.5V	-22.6V	-22.2V	-20.7V	-22.6V	-23V	-22.6V	-24.6V	-25	-22.3V	-21V	-22V	-22.8V	-22.4V	-23V	-22V	-22.2V	-22.8V	-22.8V
Ref No.	IC6601				Q6600					Q6641										
MODE	41	42	43	44		E	C	B		E	C	B								
CD PLAY	-22.9V	-22.5V	3.3V	0		3.2V	-0.1V	2.8V		-0.3V	3V	-0.3V								
STANDBY	-22.2V	-22.8V	3.3V	0		3.3V	0	2.9V		0	3.1V	0								

SA-AK770PL/GCP PANEL P.C.B.

14.1.4. SMPS P.C.B.

Ref No.	IC5801				IC5701								IC5799							
MODE	1	2	3		1	2	3	4	5	6	7		1	2	3	4	5	6	7	8
CD PLAY	-2.2	-29.5	-26.8		162	0	0	19.3	0.1	1.4	0.5		6.0	1.6	1.8	20.3	162.2	-	0	0
STANDBY	-2.2	-29.5	-26.8		162	0	0	19.3	0.1	1.4	0.5		6.0	1.6	2.0	20.3	163.0	-	0	0
Ref No.	IC5780									IC5899										
MODE	1	2	3	4	5	6	7	8		1	2	3								
CD PLAY	6.0	1.6	1.8	20.3	162.2	-	0	0		25.4V	2.5V	0								
STANDBY	6.0	1.6	2.0	20.3	163.0	-	0	0		25.3V	2.5V	0								
Ref No.	Q5720				Q5721				Q5722				Q5750				Q5802			
MODE	E	C	B		E	C	B		E	C	B		E	C	B		E	C	B	
CD PLAY	-11.6V	-11.3V	-11.6V		3V	-0.2V	3V		3V	-0.2V	3V		3.1V	-0.2V	3V		3.3V	-0.1V	2.2V	
STANDBY	-11.6V	-11.1V	-11.4V		3.1V	0	2.7V		3.1V	0	2.7V		3.3V	0.1V	2.8V		3.4V	0	2.7V	
Ref No.	Q5803				Q5860				Q5861				Q5862				Q5898			
MODE	E	C	B		E	C	B		E	C	B		E	C	B		E	C	B	
CD PLAY	-11.4V	-11.4V	-11.5V		3.3V	-0.1	2.7V		3.2V	-0.1	2.8V		3.2V	-0.1V	2.8V		3.1V	-0.1V	2.8V	
STANDBY	-11.5V	-11.6V	-11.3V		3.3V	0	2.8V		3.3	0	2.9V		3.3V	0	2.9V		3.2V	0	2.9V	
Ref No.	QR5801				QR5802				QR5810											
MODE	E	C	B		E	C	B		E	C	B									
CD PLAY	0	5.0	0		0	4.5	0		0	0.1	5									
STANDBY	0	5.0	0		1.5	1.5	0		0	0	5									

SA-AK770PL/GCP SMPS P.C.B.

14.1.5. D-Amp P.C.B.

Ref No.	IC5000																			
MODE	1	2	3	4	5	6	7	8	9	10	11	12	13	14	15	16	17	18	19	20
CD PLAY	2.5	0.1	0.1	2.9	0	-29.3	-29.3	29.3	11	-0.1	-29.5	-17.3	-29.5	-0.1	11	29.3	-29.3	-29.3	0	29
STANDBY	2.5	0.1	0.1	2.9	0	-29.3	-21	29.3	11	-0.1	-29.5	-17.3	-29.5	-0.1	11	29.3	-29.3	-29.2	0	29
Ref No.	IC5000																			
MODE	21	22	23																	
CD PLAY	-0.1	-0.1	2.5																	
STANDBY	-0.1	-0.1	2.5																	
Ref No.	IC5200																			
MODE	1	2	3	4	5	6	7	8	9	10	11	12	13	14	15	16	17	18	19	20
CD PLAY	2.5	0.1	0.1	2.9	0	-29.3	-29.3	29.3	11	-0.1	-29.5	-17.3	-29.5	-0.1	11	29.3	-29.3	-29.3	0	29
STANDBY	2.5	0.1	0.1	2.9	0	-29.3	-21	29.3	11	-0.1	-29.5	-17.3	-29.5	-0.1	11	29.3	-29.3	-29.2	0	29
Ref No.	IC5400																			
MODE	21	22	23																	
CD PLAY	-0.1	-0.1	2.5																	
STANDBY	-0.1	-0.1	2.5																	
Ref No.	IC5400																			
MODE	1	2	3	4	5	6	7	8	9	10	11	12	13	14	15	16	17	18	19	20
CD PLAY	2.5	0.1	0.1	2.9	0	-29.3	-29.3	29.3	11	-0.1	-29.5	-17.3	-29.5	-0.1	11	29.3	-29.3	-29.3	0	29
STANDBY	2.5	0.1	0.1	2.9	0	-29.3	-21	29.3	11	-0.1	-29.5	-17.3	-29.5	-0.1	11	29.3	-29.3	-29.2	0	29
Ref No.	IC5400				IC5500															
MODE	21	22	23		1	2	3	4	5	6	7	8	9	10	11	12	13	14		
CD PLAY	-0.1	-0.1	2.5		0	5.2	5	0	2.7	2.2	0	2.5	2.6	2.6	2.5	0	5.2	5.2		
STANDBY	-0.1	-0.1	2.5		0	5.2	5	0	2.7	2.2	0	2.5	2.6	2.6	2.5	0	5.2	5.2		
Ref No.	IC5501																			
MODE	1	2	3	4	5	6	7	8	9	10	11	12	13	14						
CD PLAY	2.5	2.6	2.5	0	2.6	0	0	0	0	0	0	0	5.2	5.2						
STANDBY	2.5	2.6	2.5	0	2.6	0	0	0	0	0	0	0	5.2	5.2						
Ref No.	Q5101				Q5102				Q5601				Q5603				Q5604			
MODE	E	C	B		E	C	B		E	C	B		E	C	B		E	C	B	
CD PLAY	-0.1V	3V	-0.1V		-0.3V	3V	-0.3V		-0.3V	3V	-0.3V		3.2V	-0.1V	2.8V		-0.1V	3.1V	-0.1V	
STANDBY	0	3V	0		0	3.2V	0		0	3.1V	0		3.3V	0	2.9V		0	3.2V	0	

SA-AK770PL/GCP D-AMP P.C.B.

14.1.6. Deck P.C.B. & Deck Mechanism P.C.B.

Ref No.	IC1000																			
MODE	1	2	3	4	5															
CD PLAY	0	0	0	0	0															
STANDBY	0	0	0	0	0															
Ref No.	IC1001																			
MODE	1	2	3	4	5	6	7	8	9	10	11	12	13	14	15	16	17	18	19	20
CD PLAY	0	0.3V	0.3V	0.1V	0	0	0	0.1V	0	0	0	0	0	0	0.1V	0	0	0	0.1V	0.3V
STANDBY	0	0.3V	0.3V	0.1V	0	0	0	0.1V	0	0	0	0	0	0	0.1V	0	0	0	0.1V	0.3
Ref No.	IC1001																			
MODE	21	22																		
CD PLAY	0.3V	0																		
STANDBY	0.3V	0																		
Ref No.	Q1303				Q1304				Q1309				Q1310				Q1312			
MODE	E	C	B		E	C	B		E	C	B		E	C	B		E	C	B	
CD PLAY	0	0	0		0	0	0		0	0	0		0	0	0		0	0	0	
STANDBY	0	0	0		0	0	0		0	0	0		0	0	0		0	0	0	
Ref No.	Q1314				Q1315				Q1316				Q1317							
MODE	E	C	B		E	C	B		E	C	B		E	C	B					
CD PLAY	3V	3V	0.5V		3V	1.7V	9.1V		1.7V	1.7V	2.4V		0	0	0					
STANDBY	2.2V	2.2V	0.3V		2.2V	2.2V	1.5V		2.1V	2.1V	2.2V		0	0	0					

SA-AK770PL/GCP DECK P.C.B.

Ref No.	IC971																			
MODE	1	2	3	4																
CD PLAY	0.5	0	3.9	5																
STANDBY	0	0	0	0																

SA-AK770PL/GCP DECK MECHANISM P.C.B.

14.1.7. Tact Switch P.C.B. & Mic P.C.B.

Ref No.	Q6511		
MODE	E	C	B
CD PLAY	-0.3V	3V	-0.3V
STANDBY	0	3.1V	0

SA-AK770PL/GCP TACT SWITCH P.C.B.

Ref No.	IC6701							
MODE	1	2	3	4	5	6	7	8
CD PLAY	4.8	0.8	-1	-9v	-1	-0.7	11	9.4v
STANDBY	5	-0.7	-0.9	-9v	-0.9	-0.5	11.2	9.4v

SA-AK770PL/GCP MIC P.C.B.

14.1.8. Jupiter USB P.C.B.

Ref No.	IC502																			
MODE	1	2	3	4	5	6	7	8												
CD PLAY	0.02	5.17	5.17	0.02	3.26	5.17	5.17	5.17												
STANDBY	0	0.32	0.32	0.02	0.07	0.01	0.01	0												
Ref No.	IC551																			
MODE	1	2	3	4	5	6	7	8	9	10	11	12	13	14	15	16				
CD PLAY	2.57	2.57	0	2.57	0.01	5.15	3.27	0.01	1.24	1.64	1.63	1.63	3.26	3.26	0.02	0.01				
STANDBY	0.01	0.03	0	0	0	0.16	0.07	0	0.02	0.03	0.03	0.03	0	0.07	0	0				
Ref No.	IC552																			
MODE	1	2	3	4	5	6	7	8	9	10	11	12	13	14	15	16				
CD PLAY	1.63	1.63	0.02	1.64	3.26	0.02	0.01	5.13	5.10	2.58	2.57	2.57	0.01	5.15	0.02	5.15				
STANDBY	0.02	0	0.02	0.02	0	0	0	0	0.14	0.36	0.51	0.16	0	0.13	0	0.09				
Ref No.	IC701																			
MODE	1	2	3	4	5	6	7	8	9	10	11	12	13	14	15	16	17	18	19	20
CD PLAY	0.02	0.02	0.02	0.02	0.02	0.02	0.02	0.02	0.02	0.02	3.26	3.29	0.02	3.25	0.08	0.02	0.02	0.02	0.02	0.02
STANDBY	0.02	0.02	0.03	0.03	0.03	0.03	0.03	0.03	0.03	0.03	0.03	0.01	0.03	0.07	0.12	0.02	0.02	0.03	0.03	0.03
Ref No.	IC701																			
MODE	21	22	23	24	25	26	27	28	29	30	31	32	33	34	35	36	37	38	39	40
CD PLAY	0.02	0.02	0.02	0	0.02	3.26	0.02	3.26	3.24	0.09	3.24	0.09	3.25	0.09	3.24	0.09	3.26	3.25	0.08	3.25
STANDBY	0.01	0.02	0.02	0.02	0.02	0.02	0	0.02	0.02	0.07	0.02	0.07	0.02	0.07	0.02	0.07	0.07	0.02	0.07	0.02
Ref No.	IC701																			
MODE	41	42	43	44	45	46	47	48												
CD PLAY	0.09	3.25	0.09	3.25	0.02	0.02	0.02	0.02												
STANDBY	0.07	0.02	0.07	0.02	0.02	0	0	0.02												
Ref No.	IC751																			
MODE	1	2	3	4	5	6	7	8	9	10	11	12	13	14	15	16	17	18	19	20
CD PLAY	3.26	0.07	3.26	0.05	0.09	0.02	0.06	1.12	3.26	0.23	1.20	0.02	0.06	3.26	3.24	3.26	3.25	0	3.25	0.03
STANDBY	0.07	0.03	0.07	0.03	0.02	0	0.03	0.03	0.07	0.03	0.02	0	0.03	0.07	0.02	0.02	0.02	0.02	0	0.02
Ref No.	IC751																			
MODE	21	22	23	24	25	26	27	28	29	30	31	32	33	34	35	36	37	38	39	40
CD PLAY	3.10	0.02	0.02	0.02	0.02	0.02	3.26	0.02	0.02	0.02	0.02	0.02	0.02	0.02	0.02	0.03	3.26	1.50	3.26	0
STANDBY	0.02	0	0	0.02	0.02	0	0.07	0	0.03	0.03	0.03	0.03	0.03	0.03	0.03	0.03	0.03	0.03	0.03	0
Ref No.	IC751																			
MODE	41	42	43	44	45	46	47	48	49	50	51	52	53	54						
CD PLAY	0.02	0.02	3.26	3.26	0.02	0.02	0.02	0.02	3.26	0.02	0.02	0.02	0.02	0.02						
STANDBY	0	0.03	0.07	0.03	0.03	0	0.03	0.03	0.07	0.03	0.02	0	0.03	0						

AK770PL/GCP JUPITER USB P.C.B.

Ref No.	IC801																			
MODE	1	2	3	4	5	6	7	8	9	10	11	12	13	14	15	16	17	18	19	20
CD PLAY	0.02	0.02	0.02	0	0	3.26	0.02	0	0.02	0.02	0.02	0.02	0.02	0	0.02	0	0.02	3.26	0	1.50
STANDBY	0	0.03	0.03	0.03	0.03	0.07	0.03	0.03	0.03	0.03	0	0	0.03	0.03	0.03	0.03	0.03	0.03	0.07	0.02
Ref No.	IC801																			
MODE	21	22	23	24	25	26	27	28	29	30	31	32	33	34	35	36	37	38	39	40
CD PLAY	1.20	0	0.02	3.26	3.26	3.26	3.26	0.02	3.26	3.26	3.26	0.02	0.02	3.26	0.02	0.02	0.02	0.02	0.02	0.02
STANDBY	0	0	0	0.02	0.02	0.03	0.02	0.07	0.03	0.03	0	0.03	0.03	0.07	0.03	0.03	0.03	0	0.03	0.03
Ref No.	IC801																			
MODE	41	42	43	44	45	46	47	48	49	50	51	52	53	54	55	56	57	58	59	60
CD PLAY	0.02	0.02	1.21	3.26	0.02	3.26	3.26	0.02	0.02	3.26	0.02	3.26	0	3.26	3.26	0.11	0.02	3.26	0.02	0.02
STANDBY	0.03	0.03	0	0.07	0.03	0.03	0	0.03	0	0.02	0.02	0.02	0.02	0.07	0.07	0	0	0.07	0.11	0
Ref No.	IC801																			
MODE	61	62	63	64	65	66	67	68	69	70	71	72	73	74	75	76	77	78	79	80
CD PLAY	1.54	1.55	1.55	0.02	0.02	3.24	0.02	3.25	3.27	3.29	3.26	3.25	1.21	3.29	3.26	3.25	3.26	3.26	3.25	0.02
STANDBY	0	0.01	0.01	0	0	0	0.02	0	0.07	0	0.01	0.07	0.03	0	0	0	0.02	0.02	0.02	0.02
Ref No.	IC801																			
MODE	81	82	83	84	85	86	87	88	89	90	91	92	93	94	95	96	97	98	99	100
CD PLAY	3.25	3.26	3.24	3.25	0.02	0.03	0.03	0.03	0.03	0.03	0.03	0.03	0.03	0.02	3.26	0.02	1.21	1.21	0.02	0.02
STANDBY	0	0	0.07	0.02	0.07	0	0.02	0.03	0.03	0.03	0	0.03	0	0.02	0.07	0	0	0	0	0
Ref No.	IC801																			
MODE	101	102	103	104	105	106	107	108	109	110	111	112	113	114	115	116	117	118	119	120
CD PLAY	3.25	3.26	1.17	0.02	0.02	1.66	1.63	1.21	0.02	0.08	0.07	0.04	3.26	0.02	1.64	0.02	1.63	0.02	1.60	1.21
STANDBY	0	0.02	0	0	0	0.02	0.02	0.02	0.02	0.02	0.02	0.02	0.07	0.02	0.02	0	0.02	0.02	0.02	0
Ref No.	IC801																			
MODE	121	122	123	124	125	126	127	128	129	130	131	132	133	134	135	136	137	138	139	140
CD PLAY	1.24	0.02	0.02	0.02	0.02	0.02	3.26	3.25	3.25	3.25	0.02	3.25	3.24	3.25	0.02	3.26	0.02	0.02	0.02	0.02
STANDBY	0.02	0.02	0	0	0	0	0.03	0.02	0.02	0.02	0	0.02	0.02	0	0.02	0.02	0.02	0.02	0.02	0.07
Ref No.	IC801																			
MODE	141	142	143	144	145	146	147	148	149	150	151	152	153	154	155	156	157	158	159	160
CD PLAY	0.02	0.02	0.02	0.02	0.02	1.21	0.02	0.02	0.02	3.26	3.26	3.26	3.26	0.02	0	0.02	0.02	0.02	0.02	0.02
STANDBY	0	0.02	0.02	0.02	0.02	0	0.03	0.03	0.02	0.02	0.02	0.02	0.07	0.02	0.02	0.02	0	0.02	0.03	0.03
Ref No.	IC801																			
MODE	161	162	163	164	165	166	167	168	169	170	171	172	173	174	175	176	177	178	179	180
CD PLAY	0.02	0.02	0.01	0.02	0.02	3.26	1.20	0.02	0.02	0.02	0.02	0.02	3.26	3.24	3.24	3.24	3.24	3.26	0.02	0.02
STANDBY	0.03	0.02	0	0.02	0.02	0.07	0	0.02	0.02	0.02	0.02	0	0.02	0.07	0.07	0.07	0.07	0.03	0	0.07
Ref No.	IC801																			
MODE	181	182	183	184	185	186	187	188	189	190	191	192	193	194	195	196	197	198	199	200
CD PLAY	3.24	3.24	3.24	1.20	3.24	3.24	3.24	3.24	3.26	0.02	0.02	3.24	3.24	3.24	3.24	3.24	3.24	0.02	0	3.26
STANDBY	0.07	0.07	0	0.07	0.07	0.07	0.07	0.07	0.03	0	0.07	0.07	0.07	0.07	0.07	0.07	0	0.07	0.07	0.02
Ref No.	IC801																			
MODE	201	202	203	204	205	206	207	208	209	210	211	212	213	214	215	216				
CD PLAY	0.02	1.21	1.58	0	0.02	1.21	0.02	0.02	0.02	3.26	0.02	0.02	1.18	0.02	0.02	3.26				
STANDBY	0	0.02	0.02	0	0	0	0	0	0.07	0	0	0	0	0	0	0.07				
Ref No.	IC802																			
MODE	1	2	3	4	5															
CD PLAY	2.23	0.02	0	2.23	0															
STANDBY	0.38	0	0	0.37	0															

AK770PL/GCP JUPITER USB P.C.B.

14.2. Waveform Chart

WF No. IC2121- 5,3 (PLAY) 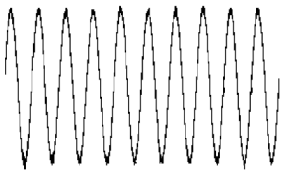 1.45Vp-p(500usec/div)	WF No. IC2121-1,2,6,7 (PLAY) 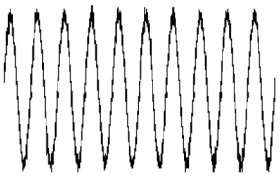 1.517Vp-p(100usec/div)	WF No. IC2801-13,15 (PLAY) 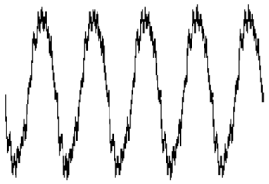 1.183Vp-p(10msec/div)	WF No. IC2804-1,2,3,5,6,7 (PLAY) 323.3mVp-p(5usec/div)
WF No. IC2810-1,2,3,5,6,7 (PLAY) 323.3mVp-p(5usec/div)	WF No. IC5000-1 (PLAY) 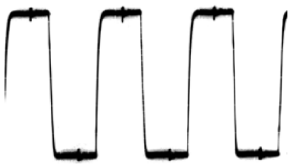 5.6Vp-p(1usec/div)	WF No. IC5000-2 (PLAY) 0.84Vp-p(200usec/div)	WF No. IC5000-10,14 (PLAY) 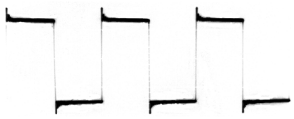 80Vp-p(1usec/div)
WF No. IC5000-22 (PLAY) 0.84Vp-p(200usec/div)	WF No. IC5200-1 (PLAY) 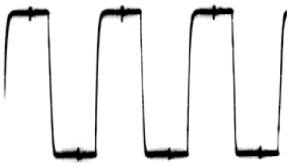 5.6Vp-p(1usec/div)	WF No. IC5200-2 (PLAY) 0.84Vp-p(200usec/div)	WF No. IC5200-10,14 (PLAY) 80Vp-p(1usec/div)
WF No. IC5200-22 (PLAY) 0.84Vp-p(200usec/div)	WF No. IC5400-1 (PLAY) 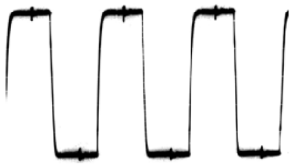 5.6Vp-p(1usec/div)	WF No. IC5400-2 (PLAY) 0.84Vp-p(200usec/div)	WF No. IC5400-10,14 (PLAY) 80Vp-p(1usec/div)
WF No. IC5400-22 (PLAY) 0.84Vp-p(200usec/div)	WF No. IC5500-5 (PLAY) 7.2Vp-p(500nsec/div)	WF No. IC5500-8 (PLAY) 5.6Vp-p(500usec/div)	WF No. IC5701-1 (PLAY) 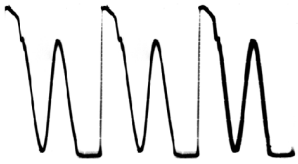 400Vp-p(2usec/div)
WF No. IC5701-4,6 (PLAY) 2Vp-p(5usec/div)	WF No. IC5799-2 (PLAY) 2Vp-p(50usec/div)	WF No. IC5799-3 (PLAY) 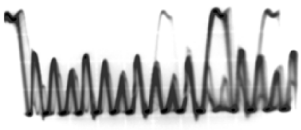 9.6Vp-p(50usec/div)	WF No. IC5799-5 (PLAY) 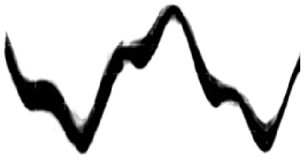 240Vp-p(50usec/div)

WF No. IC5899-1,2,3 (PLAY)	WF No. CN6807-3 (PLAY)	WF No. CN6807-5,8,10 (PLAY)	
		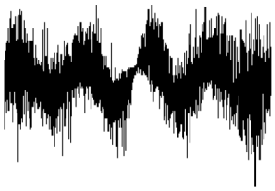	
1.65Vp-p(5msec/div)	410mVp-p(500nsec/div)	323.3mVp-p(100nsec/div)	

15 Wiring Diagram

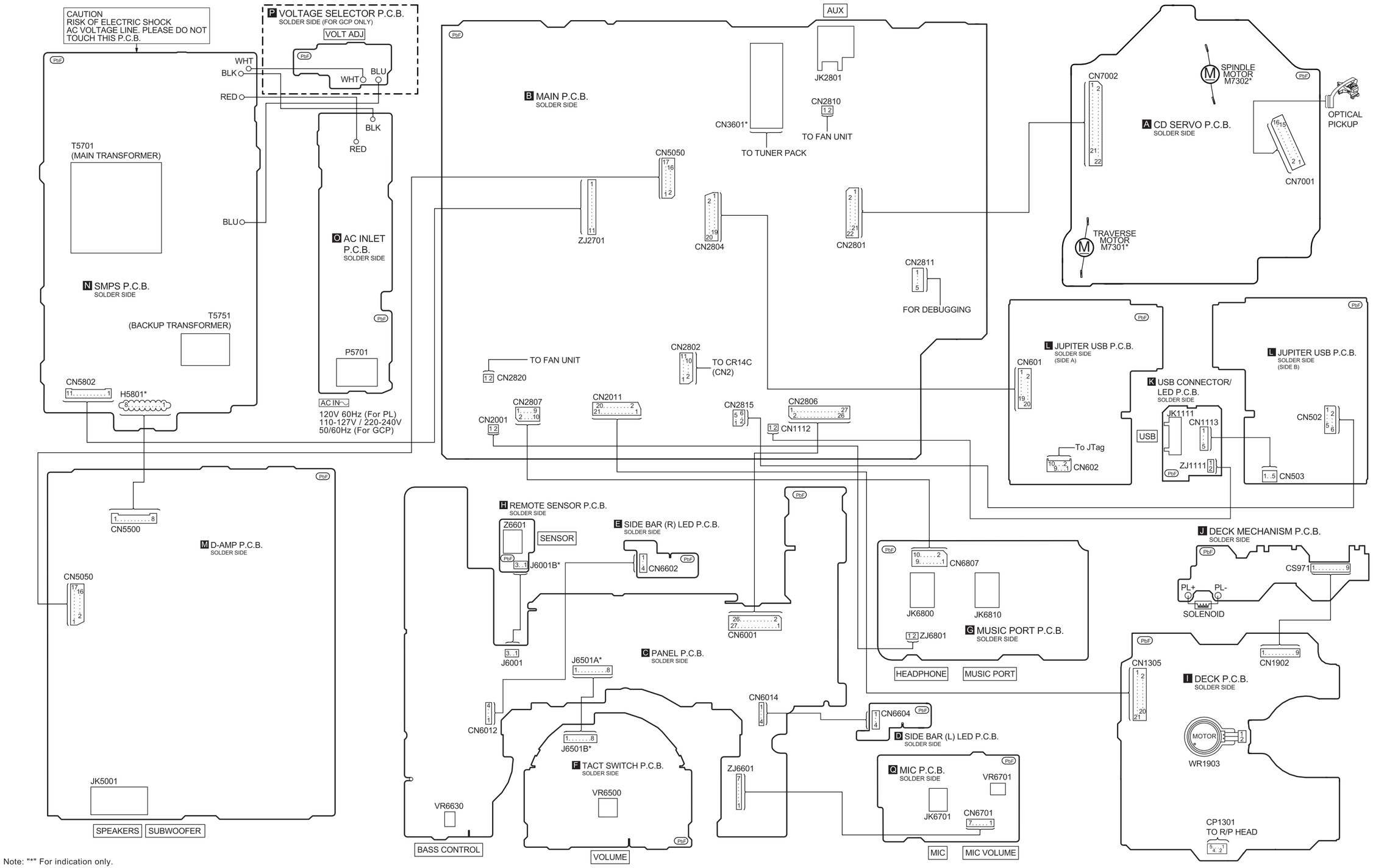

Note: "*" For indication only.

16 Block Diagram

16.1. CD Servo Diagram

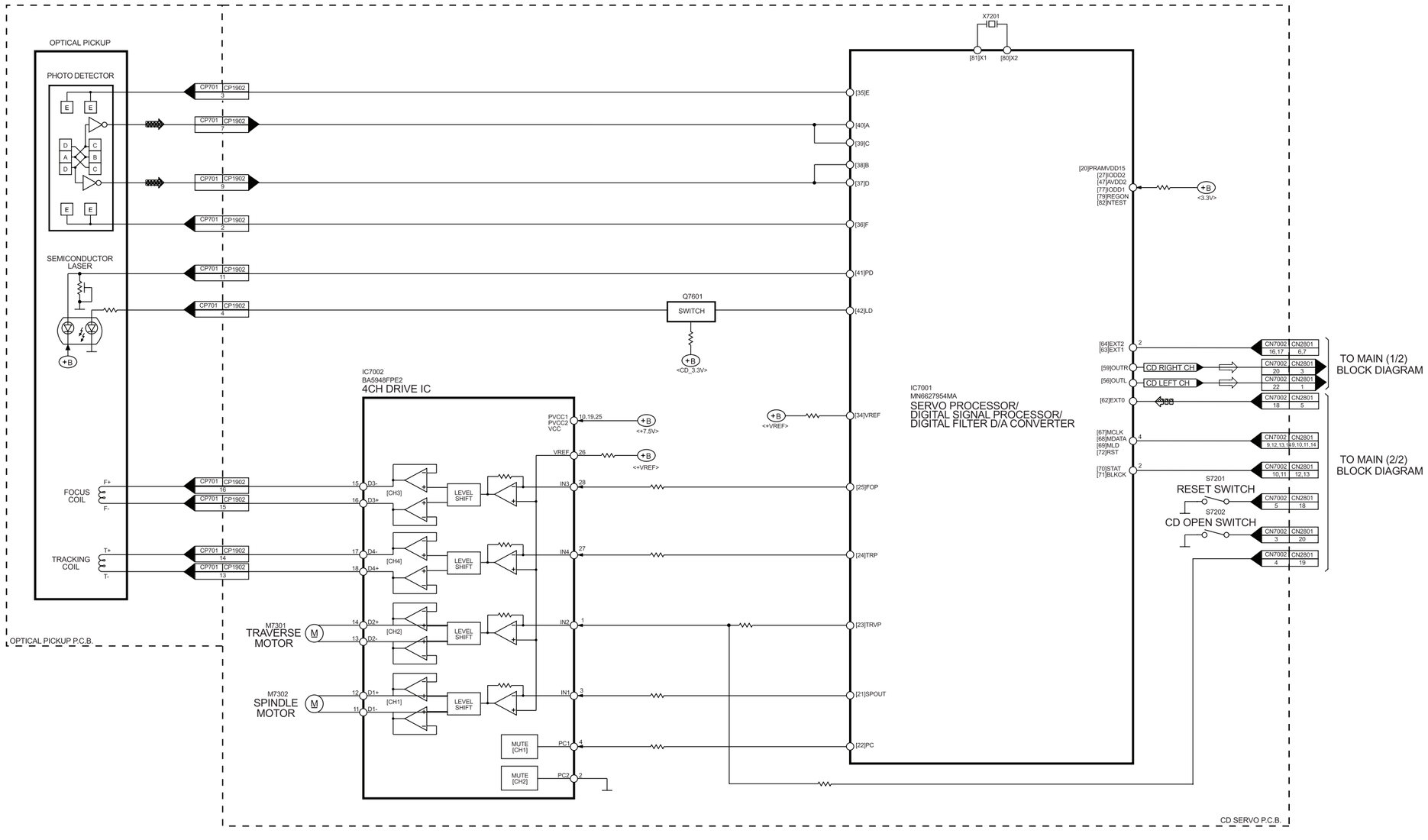

SA-AK770PL/GCP CD SERVO BLOCK DIAGRAM

16.2. Main & USB Connector/Led Diagram

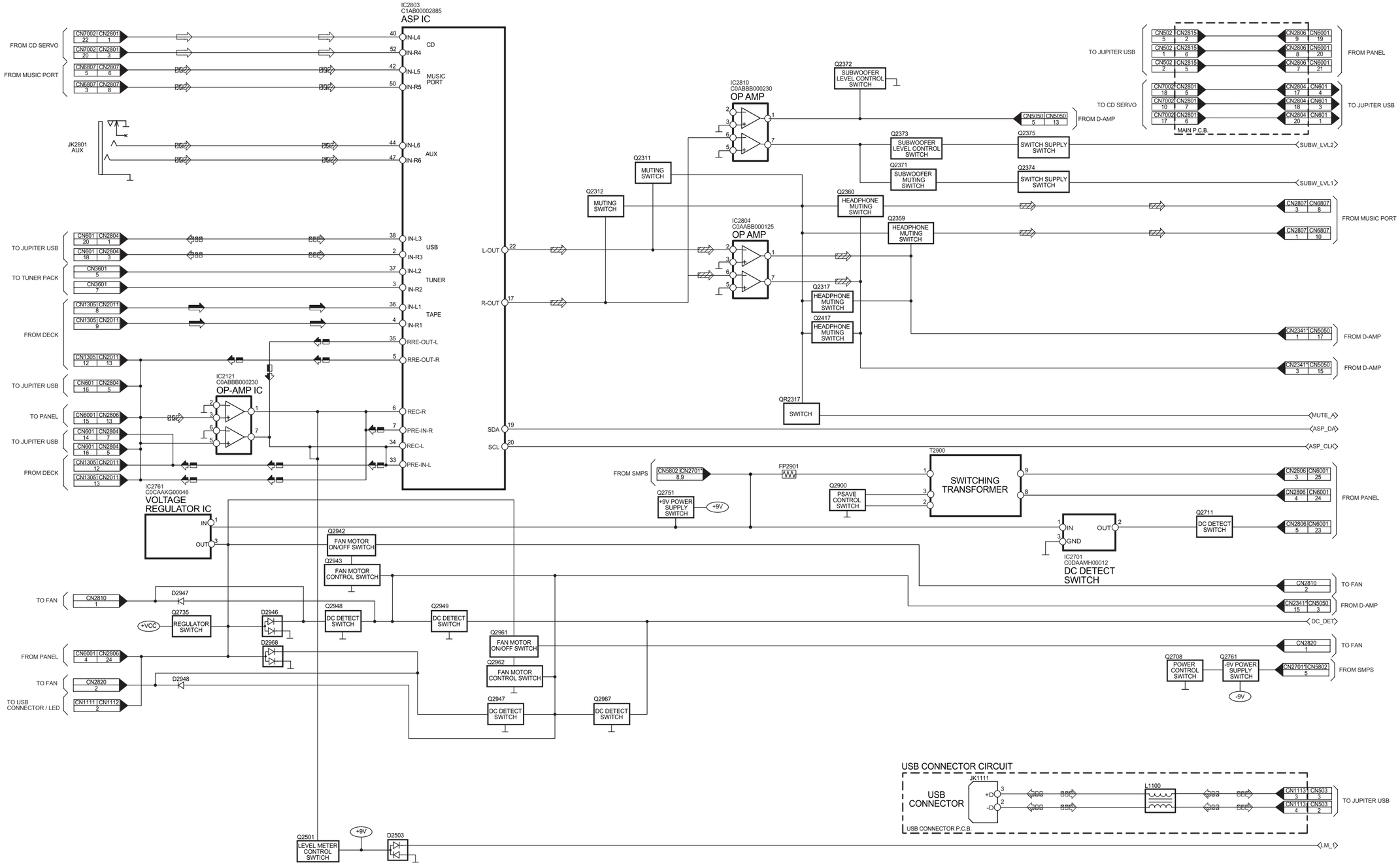

SA-AK770PL/GCP MAIN(1/2) / USB CONNECTOR BLOCK DIAGRAM

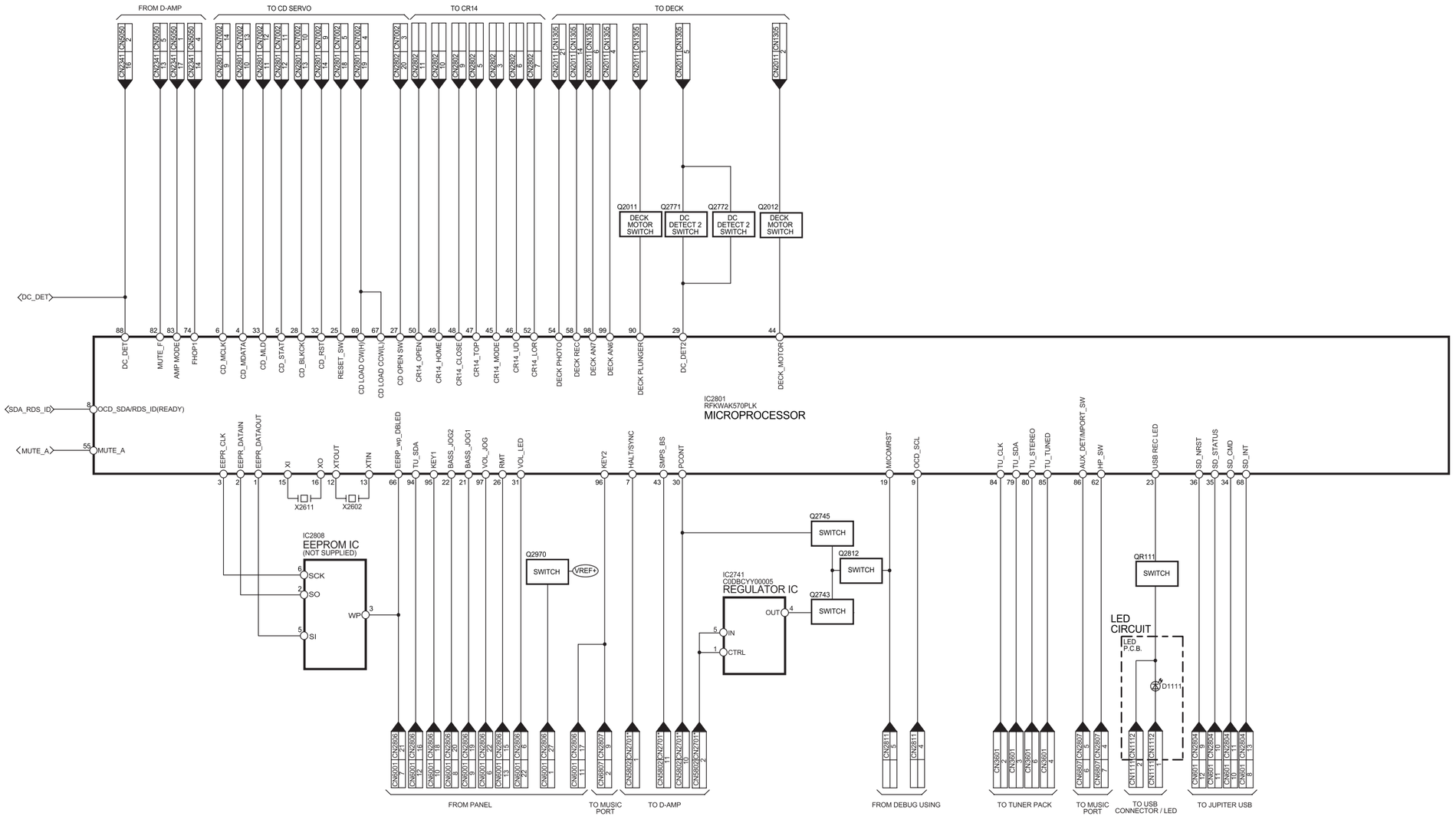

SA-AK770PL/GCP MAIN(2/2) / LED BLOCK DIAGRAM

16.3. Side Bar Led, Panel, Remote Sensor, Music Port, Headphone, Tact Switch & Microphone Diagram

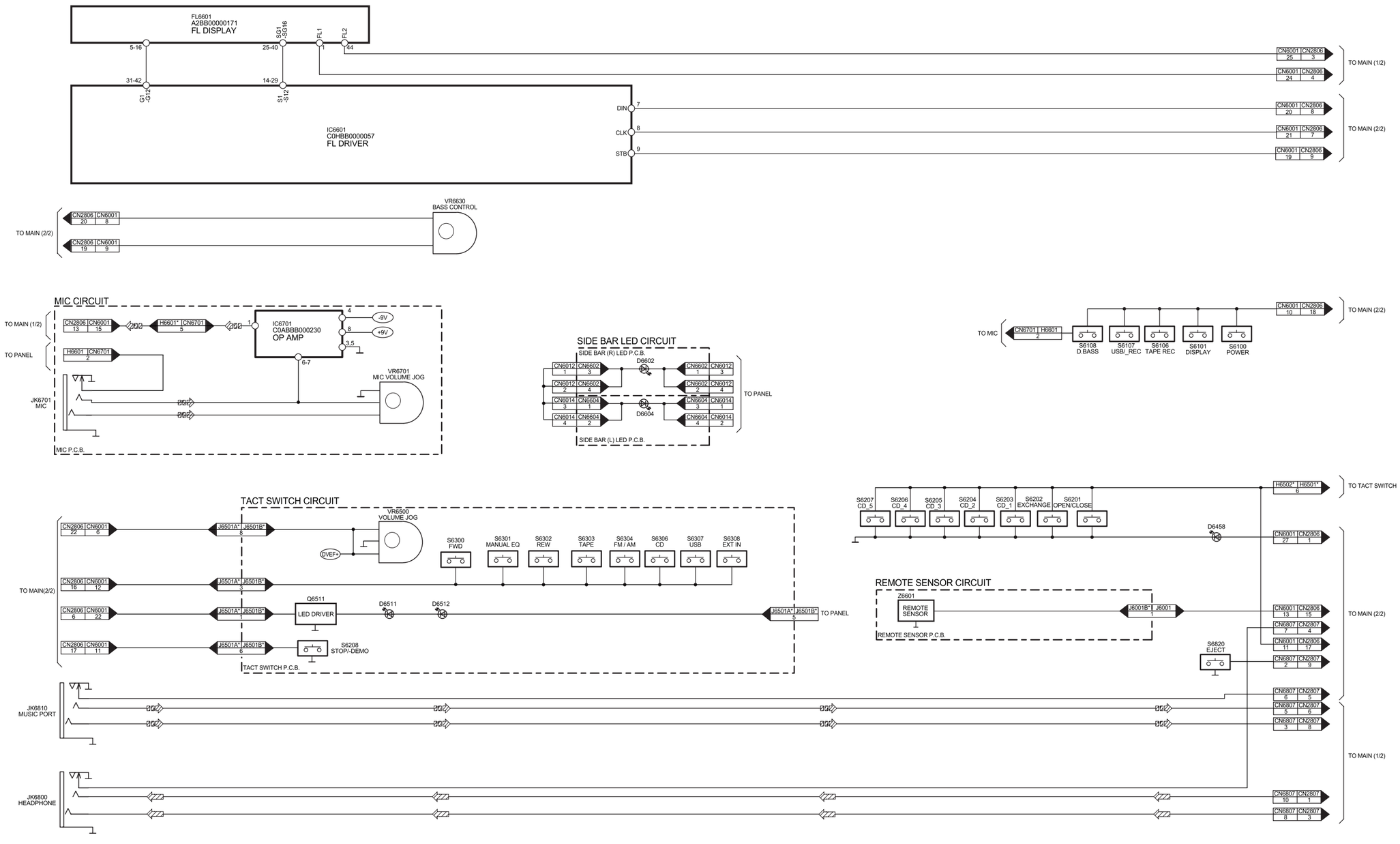

SA-AK770PL/GCP SIDE BAR LED / PANEL / REMOTE SENSOR / MUSIC PORT / HEADPHONE / TACT SWITCH / MICROPHONE BLOCK DIAGRAM

16.4. Jupiter USB Diagram

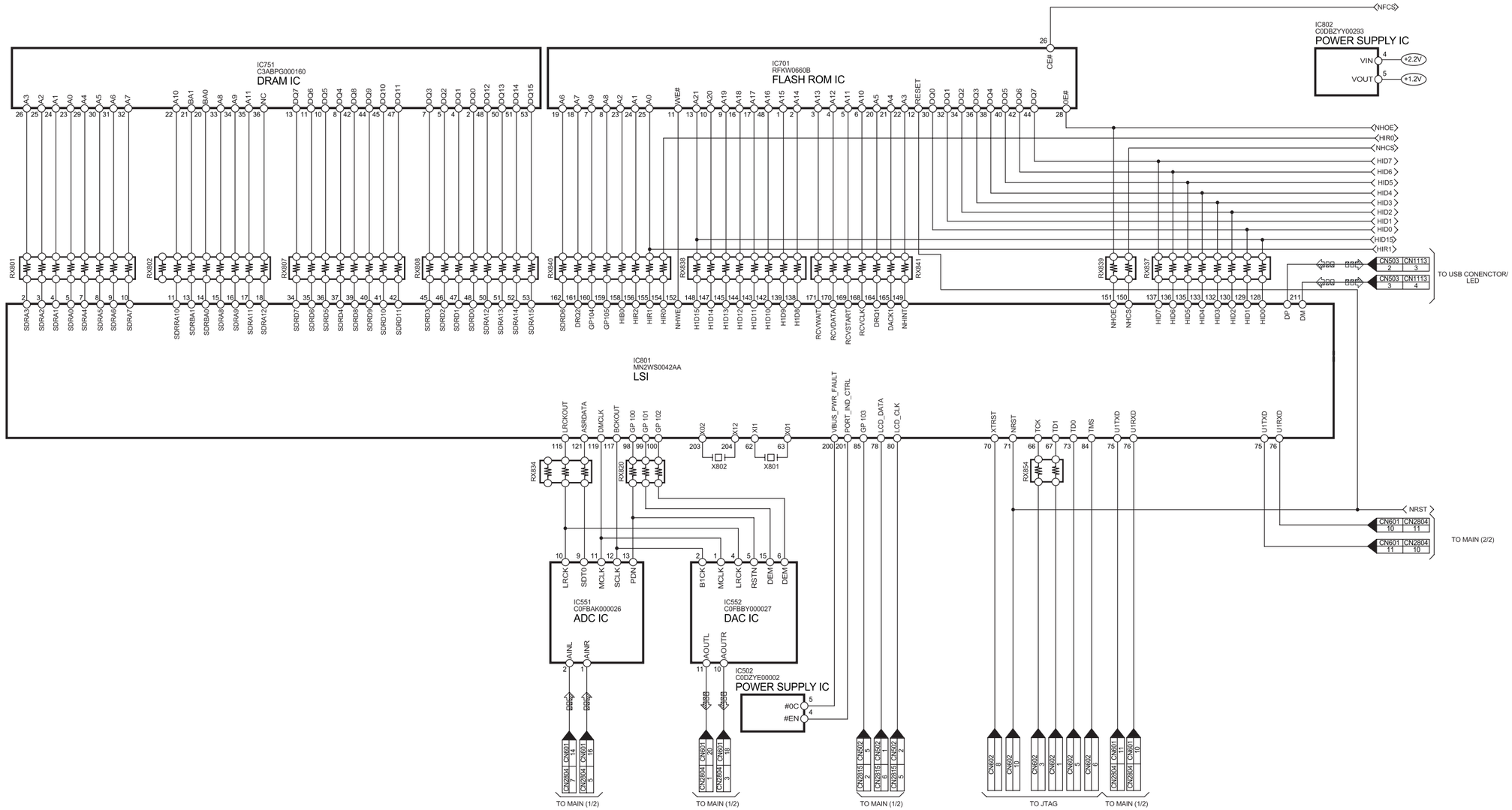

SA-AK770PL/GCP JUPITER USB BLOCK DIAGRAM

16.5. D-Amp Diagram

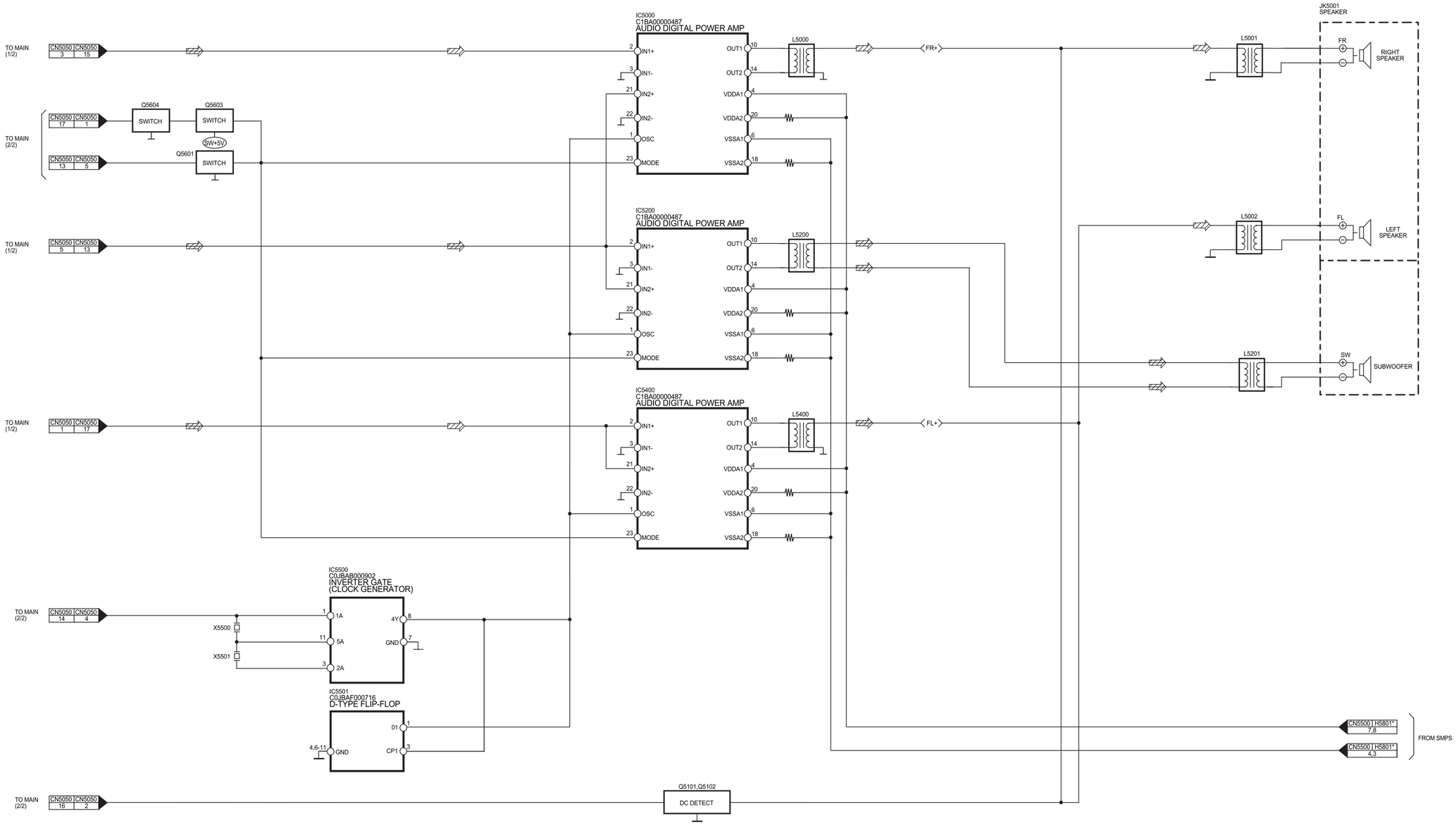

SA-AK770PL/GCP D-AMP BLOCK DIAGRAM

16.6. SMPS, AC Inlet & Voltage Selector Diagram

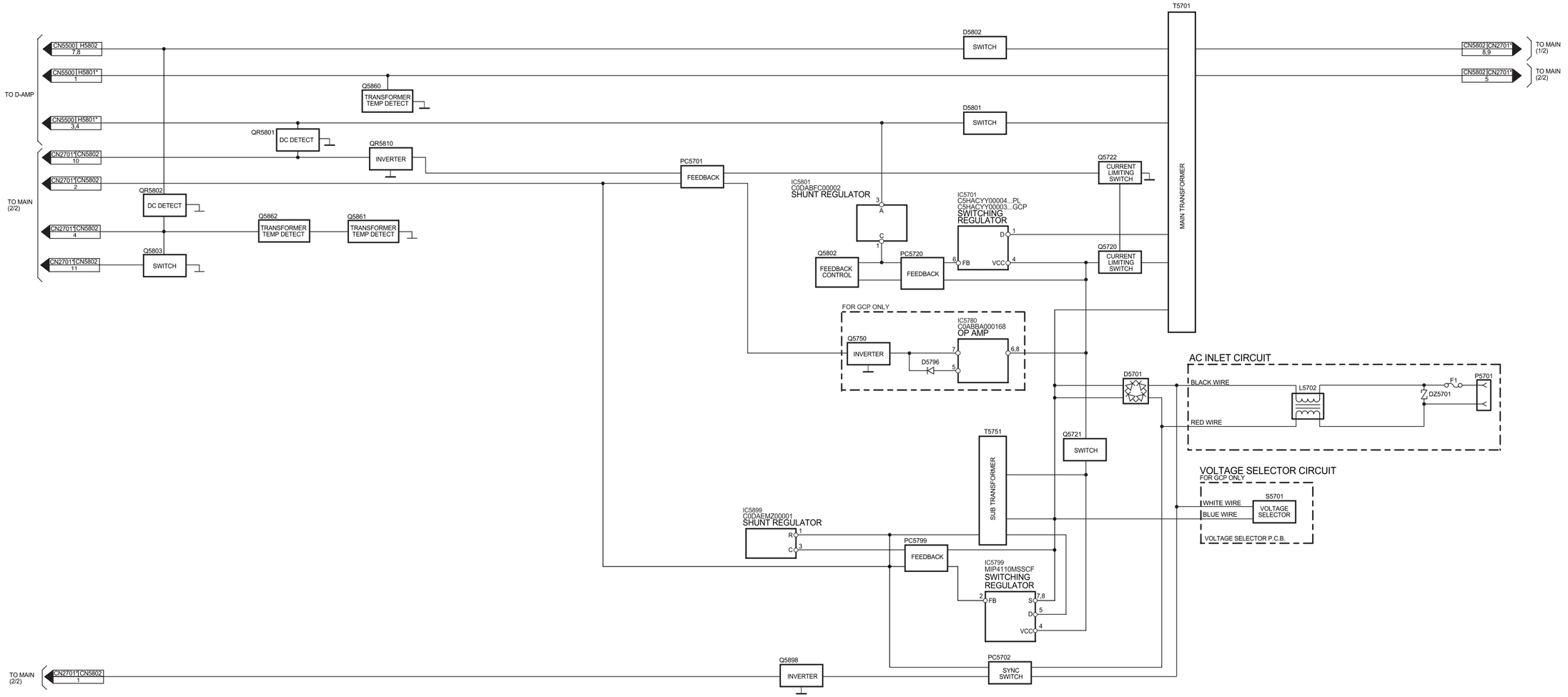

SA-AK770PL/GCP SMPS / AC INLET / VOLTAGE SELECTOR BLOCK DIAGRAM

16.7. Deck & Deck Mechanism Diagram

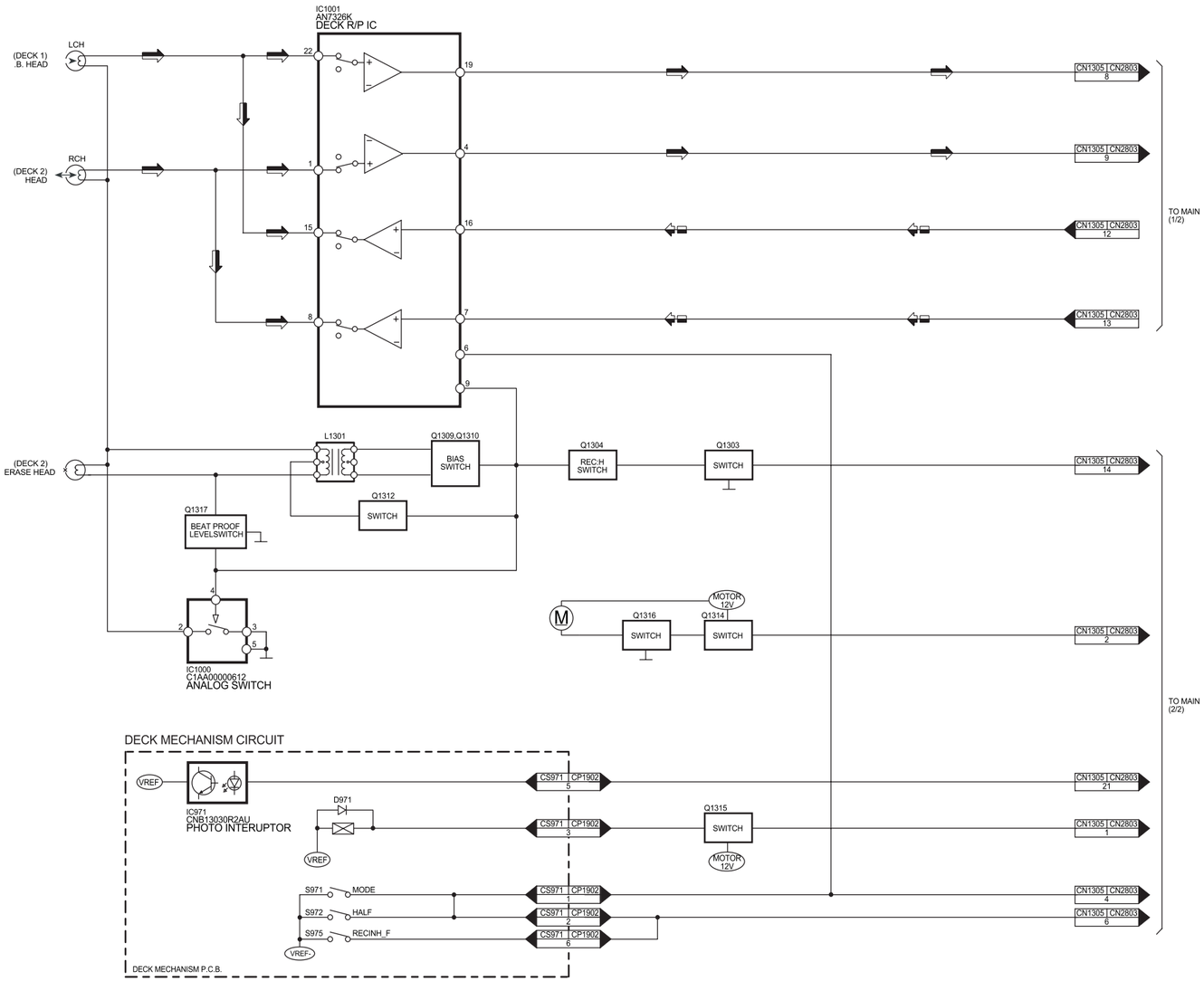

SIGNAL LINES

: MAIN SIGNAL LINE
: TAPE PLAYBACK SIGNAL LINE
: TAPE RECORD SIGNAL LINE
: CD SIGNAL LINE
: FM/AM SIGNAL LINE
: AUX/MIC/MUSIC PORT SIGNAL LINE
: CD DA SIGNAL LINE
: USB SIGNAL LINE

( ) Indicates the Pin No. of Right Channel.

NOTE : Signal Lines are applicable to the Left Channel only.

SA-AK770PL/GCP DECK/DECK MECHANISM/USB BLOCK DIAGRAM

17 Notes Of Schematic Diagram

(All schematic diagrams may be modified at any time with the development of new technology)

Notes:

S971:	Mode switch.
S972:	Half switch.
S975:	Recinh_F switch.
S5701:	Voltage Selector switch (For GCP Only).
S6100:	Power (⏻/I) switch.
S6101:	Display switch.
S6102:	Subwoofer switch.
S6106:	Tape Rec (● REC, TAPE) switch.
S6107:	USB Rec (●, **USB REC**) switch.
S6108:	D.Bass switch.
S6201:	Open/Close (⏏) switch.
S6202:	Exchange (⏏) switch.
S6203:	CD1 (1 ▶) switch.
S6204:	CD2 (2 ▶) switch.
S6205:	CD3 (3 ▶) switch.
S6206:	CD4 (4 ▶) switch.
S6207:	CD5 (5 ▶) switch.
S6208:	Stop/Demo switch.
S6300:	FWD (▶▶I, ∧/FF) switch.
S6301:	Manual_EQ switch.
S6302:	REW (I◀◀, ∨/REW) switch.
S6303:	Tape (▶, TAPE) switch.
S6304:	FM/AM switch.
S6306:	CD (▶/II, CD) switch.
S6307:	USB (▶/II, USB) switch.
S6308:	EXT_IN switch.
S6820:	Eject (⏏, **OPEN**) switch.
S7201:	Rest switch.
S7202:	CD Open switch.
VR6500:	VR Volume.
VR6630:	VR Bass Control.
VR6701:	VR Mic Volume.

- **Importance safety notice :**

  Components identified by ⚠ mark have special characteristics important for safety.
  Furthermore, special parts which have purposes of fire-retardant (resistors), high-quality sound (capacitors), low-noise (resistors), etc. are used.
  When replacing any of components, be sure to use only manufacturer´s specified parts shown in the parts list.

- In case of AC rated voltage Capacitor, the part no. and values will be indicated in the Schematic Diagram.

  AC rated voltage capacitor:

  C5700, C5701, C5703, C5704, C5705, C5706 (FOR GCP ONLY), C5707(FOR GCP ONLY)

- **Resistor**

  Unit of resistance is OHM [Ω] (K=1,000).

- **Capacitor**

  Unit of resistance is µF, unless otherwise noted. F=Farad, pF=Pico-Farad

- **Coil**

  Unit of inductance is H, unless otherwise noted.

- *

  FOR INDICATION ONLY.

- **Voltage and Signal lines:**

  : +B Signal line

  : -B Signal line

  : CD DA signal line

  : CD signal line

  : Tape Record signal line

  : Tape Playback signal line

  : FM/AM signal line

  : Main signal line

  : AUX/Mic/Music Port signal line

  : USB signal line

- **PL only**

CAUTION: FOR CONTINUED PROTECTION AGAINST FIRE HAZARD, REPLACE ONLY WITH SAME TYPE F1 T8AH, 125V FUSE

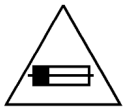

RISK OF FIRE-REPLACE FUSE AS MARKED.

- **GCP only**

CAUTION: FOR CONTINUED PROTECTION AGAINST FIRE HAZARD, REPLACE ONLY WITH SAME TYPE F1 T8AH, 250V FUSE

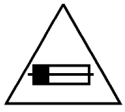

RISK OF FIRE-REPLACE FUSE AS MARKED.

FUSE CAUTION

These symbols located near the fuse indicates that the fuse used is a fast operating type. For continued protection against fire harzard, replace with the same type fuse. For fuse rating, refer to the marking adjacent to the symbol.

18 Schematic Diagram

18.1. (A) CD Servo Circuit

SCHEMATIC DIAGRAM - 1

OPTICAL PICKUP CIRCUIT (FOR REFERENCE ONLY)

A CD SERVO CIRCUIT

: + B SIGNAL LINE : CD DA SIGNAL LINE : CD SIGNAL LINE

LASER DIODE

CN7001

Q7601
B1ADCF000001
LASER POWER DRIVE

IC7001
MN6627954MA
SERVO PROCESSOR/
DIGITAL SIGNAL PROCESSOR/
DIGITAL FILTER D/A CONVERTER

IC7002
BA5948FPE2
4 CH DRIVE IC

M7301*
TRAVERSE MOTOR

M7302*
SPINDLE MOTOR

CN7002

TO **B** MAIN CIRCUIT (CN2801) IN SCHEMATIC DIAGRAM-2

SA-AK770PL/GCP CD SERVO CIRCUIT

18.2. (B) Main Circuit

SCHEMATIC DIAGRAM - 2

B MAIN CIRCUIT

: + B SIGNAL LINE — : - B SIGNAL LINE — :AUX/MIC/MUSIC PORT SIGNAL LINE — :MAIN SIGNAL LINE — : CD SIGNAL LINE — : FM/AM SIGNAL LINE — : TAPE PLAYBACK SIGNAL LINE — : TAPE RECORD SIGNAL LINE — :USB SIGNAL LINE

JK2801 AUX [LCH] [RCH] L2400 G0C101JA0052 C2083 1000P C2084 1000P C2095 C2096 1 R2083 5.6K R2084 5.6K C2081 100P C2082 100P R2081 6.8K R2082 6.8K C2091 1000P C2092 1000P

Q2011,Q2012 B1GBCFJJ0051 DECK MOTOR SWITCH

CN2011 Q2011 Q2012
PL 1, MOTOR_H 2, MO_GND 3, DECK_AD2 4, MOTOR_12V 5, DECK_AD1 6, +9V 7, PBL 8, PBR 9, A_GND 10, A_GND 11, RECIN_L 12, RECIN_R 13, RECIN_H 14, BP 15, DMT 16, DVREF 17, VREF_GND 18, DGND 19, NC 20, PHOTO 21

TO I DECK CIRCUIT (CN1305) IN SCHEMATIC DIAGRAM - 9

R2001 3.3K, R2002 3.3K, R2003 5.6K, R2004 5.6K, C2007 100P, C2008 100P

DECK_PL, DECK_MTR, DECK_AN6, MOTOR_12V, DECK_AN7, +9V, REC_L, REC_R, REC_R_USB, REC_L_USB, DECK_REC, DVREF+, DGND, PHOTO

CN3601* TO TUNER PACK ENG06836QRF
GND 10, VCC 9, DET 8, RCH 7, STEREO 6, LCH 5, TUNED 4, SPA 3, SCL 2, PORT_SELECT 1

C3117 0.01, C3115 47P, C3114 47P, C2803 0.1, C2802 470P, C2801 470P, K2031 0, R2121 4.7K, R2122 6.8K, R2221 4.7K, R2222 6.8K, C2721 220P, C2722 220P, C2221 10P

AGND, +9V, TU_STEREO, TU_CLK, DET, TU_SDA, TU_TUNED

CN2801 TO A CD SERVO CIRCUIT (CN7002) IN SCHEMATIC DIAGRAM - 1
LOUT 1, AGND 2, ROUT 3, +3.3V 4, SRDATA(ST_IN) 5, LRCLK(ST_REQ) 6, BLCK(ST_CLK) 7, TX 8, MCLK 9, MDATA 10, MLD 11, STAT 12, BLKCK 13, RST 14, +3.3V 15, LD SW 16, DGND 17, REST SW 18, LOADING 19, CD OPEN SW 20, PGND 21, 7.5V 22

C2041 1000P, C2042 1000P, R2041 3.3K, R2043 4.7K, R2044 4.7K, R2042 3.3K, C2056 0.01, R2046 3.3K, C2054 0.01, L2051 G0C101JA0052

D+3.3V, JUP_DAT0, JUP_LRCK, JUP_BCLK, CD_MCLK, CD_MDATA, CD_MLD, CD_STAT, CD_BLKCK, CD_RST, CD_RESET_SW, CD_LOADING, CD_OPEN_SW, +7.5V

BB BA BC BD BE BF BG BH

C2005 C2025 C2045 C2065 C2085 C2105 C2172 50V4.7 C2106 50V4.7 C2086 C2066 C2046 C2026 C2006 C2170 10V33

IC2803 C1AB00002885 ASP IC
NC, NC, NC, D_PORTL, VREF, IN6, D_PORTR, NC, NC, NC, USB_JUP_R, USB_JUP_L, TAPE_R, TAPE_L, PRE-OUT, REC, PRE-IN, TRE, MID, BAS, VOL
[39]NC [40]CD_L [42]MUSIC.P_L [27]NC [50]MUSIC.P_R [52]CD_R [13]NC [14]NC [15]NC [16]NC
LOUT, VCC, SCL, SDA, GND, ROUT

K3701 0, K3702 0, C2161 0.01, C2185 0.68, R2185 4.7K, C2181 390, C2183 0.68, C2184 0.01, C2189 0.01, C2191 0.47, C2193 0.01, C2195 0.47, C2197 3300P, C2301 50V3.3, C2302 50V3.3, C2303 50V3.3, C2304 50V3.3, R2301 82K, C2305 50V3.3, R2302 47K, C2306 0.082, C2307 0.01, R2303 22K, R2304 10K, R2305 22K, C2308 1, C2313 0.027, C2182 50V1, C2186 0.68, C2188 390P, R2184 10K, R2185 4.7K

C3702 50V1, C3701 50V1, R3704 27K, R3703 27K, R3701 1.2K, R3702 2.2K, R2118 39K, R2120 39K, C2120 0.01, C2119 6.3V100, +9V

C2129 50V1, R2133 22K, R2137 27K, C2135 47P, C2139 10P, R2127 22K, R2125 18K, C2123 1, MIC, D2143 B0BC2R4A0006, D2144 B0BC2R4A0006, D2141 MA2J11100L, D2142 MA2J11100L, R2143 0

IC2121 C0ABBB000230 OP-AMP IC
R2126 18K, R2128 22K, R2124 12K, C2130 50V1, C2136 47P, C2140 10P, R2134 22K, R2138 27K

IC2121

Q2311-Q2312 B1ABGC000005 MUTING SWITCH
C2311 1, R2311 470, C2315 1, R2315 15K, A_GND, R2316 15K, C2316 1, C2312 1, R2312 470, Q2311, Q2312, R2313 100K, R2314 100K

R2509 100, R2131 22K, R2501 330K, R2503 3.9K, C2503 2.2, D2503 B0ADCC000002, R2132 22K, C2501 1, Q2501, R2505 680, R2502 82K, R2504 100, C2505 16V10, C2507 0.1, R2510 56K, R2506 47K, C2509 10V33, R2508 1K

Q2501 B1ABCF000176 LEVEL METER CONTROL SWITCH

A_GND, ASP_DA, ASP_CLK, LM_1

TO MAIN SECTION (3/4)

TO MAIN SECTION (2/4)

1/4	2/4
3/4	4/4

SA-AK770PL/GCP MAIN CIRCUIT

SCHEMATIC DIAGRAM - 3

B MAIN CIRCUIT

: + B SIGNAL LINE : - B SIGNAL LINE :MAIN SIGNAL LINE

IC2804
C0AABB000125
OP AMP

IC2804

Q2317,Q2417
B1ABGC000005
HEADPHONE MUTING

Q2371,Q2373
B1ABCF000176
SW LV SWITCH

D2371,D2372
MA2J11100L

Q2372
B1ABCF000176
SUBWOOFER LEVEL CONTROL SWITCH

IC2810
C0ABBB000230
SMT OP-AMP IC

QR2317
B1GDCFGA0018
MUTING CONTROL

Q2359,Q2360
B1ABGC000005
HEADPHONE MUTING

Q2374,Q2375
B1GDCFJJ0047
SWITCH SUPPLY SWITCH

Q2961
B1ACKD000006
FAN MOTOR ON/OFF SWITCH

Q2962
B1ABCF000176
FAN SUPPLY CONTROL SWITCH

Q2947,Q2967
B1ABCF000176
DC DETECT SWITCH

Q2942
B1ACKD000006
FAN MOTOR ON/OFF SWITCH

Q2943
B1ABCF000176
FAN SUPPLY CONTROL SWITCH

D2734
B0EAKM000117

D2940
MA2J11100L

D2948
B0BC5R600003

D2968
B0ADCJ000020

CN5050

1	FRONTL
2	SIGNAL A_GND
3	FRONT R
4	AGND
5	SUBWOOFER
6	AGND
7	SURROUND L
8	AGND
9	SURROUND R
10	AGND
11	CENTER
12	MUTE S_C (MODE 1)
13	MUTE F_SW (MODE 2)
14	FHOP
15	Fan
16	DC_DET
17	MOD_DA

TO M D-AMP CIRCUIT (CN5050) IN SCHEMATIC DIAGRAM - 16

CN2820

1	POSITIVE
2	NEGATIVE

FAN

CN2810

1	NEGATIVE
2	POSITIVE

FAN

K2003 0 ...PL
K2004 0 ...GCP

TO MAIN SECTION (1/4)

TO MAIN SECTION (4/4)

1/4	2/4
3/4	4/4

SA-AK770PL/GCP MAIN CIRCUIT

SCHEMATIC DIAGRAM - 4

B MAIN CIRCUIT

: + B SIGNAL LINE : - B SIGNAL LINE :MIC/MUSIC PORT SIGNAL LINE :USB SIGNAL LINE

TO CR14C (CN2)

CN2802: OPEN_SW 11, HOME_SW 10, CLOSE_SENSOR 9, LD_CCW 8, LD_CW 7, UD_SENSOR 6, TOP_SW 5, DGND 4, MODE_SW 3, MGND 2, +7.5V 1

CR14_OPEN, CR14_HOME, CR14_CLOSE, CR14_LOR, CR14_LOF, CR14_UD, CR14_TOP, DGND, CR14_MODE, +7.5V, PA_IN_L, PA_IN_R, VREF+, A_GND, REC_R_USB, REC_L_USB, I_POD_LINK, DA+5V, TU_SDA, SD_NRST, TU_STEREO, SD_STAT, MUTE_S, SD_CMD, MUTE_F, SD_INT, MOD_DA, DC-DC_GND, TU_CLK, D+3.3V, TU_TUNED, PA_SW, JUP_DAT0, AUX_DET/MPORT_SW, JUP_BCLK, DC_DET, OPTION_PCONT, JUP_LRCK, DCDET, DECK_PL, USB_REC_LED, VDD5, DECK PLUNGGER, GND, VSS, LED_SUPPLY, REGION, LM_1, LEVELMTR, KEY3, KEY1, KEY2, V_JOG_A, DECK_AN7, DECK_AN6

TO MAIN SECTION (1/4)

TO MAIN SECTION (4/4)

CN2804: LOUT 1, DAGND 2, ROUT 3, DA+5V 4, RIN 5, ADGND 6, LIN 7, AD+5V 8, NRST 9, TXDOUT 10, RXDIN 11, D+2.2V 12, IREQ 13, DC-DC-GND 14, RX 15, D+3.3V 16, SRDAT0 17, BCLK 18, DC-DC-GND 19, LRCK 20

TO L JUPITER USB CIRCUIT (CN601) IN SCHEMATIC DIAGRAM - 14

TO K USB CONNECTOR /LED CIRCUIT (ZJ1111) IN SCHEMATIC DIAGRAM - 7

CN1112: LED CONTROL 2, RIPPING LED 1

QR111 B1GBCFJJ0051 SWITCH

TO G MUSIC PORT CIRCUIT (ZJ6801) IN SCHEMATIC DIAGRAM -8

CN2001, E2001 K9ZZ00001279

IC2801 RFKWAK570PLK MICROPROCESSOR

Q2812 B1GBCFLL0037 SWITCH

Q2743 B1ACKD000006 CD SUPPLY CONTROL SWITCH

Q2745 B1GBCFLL0037 SWITCH

IC2741 C0DBCYY00005 REGULATOR IC

X2602 H2B100500004

D2611 B0ACCK000005

1/4	2/4
3/4	4/4

SA-AK770PL/GCP MAIN CIRCUIT

SCHEMATIC DIAGRAM - 5

B MAIN CIRCUIT

: + B SIGNAL LINE : - B SIGNAL LINE :MAIN SIGNAL LINE :MUSIC PORT SIGNAL LINE

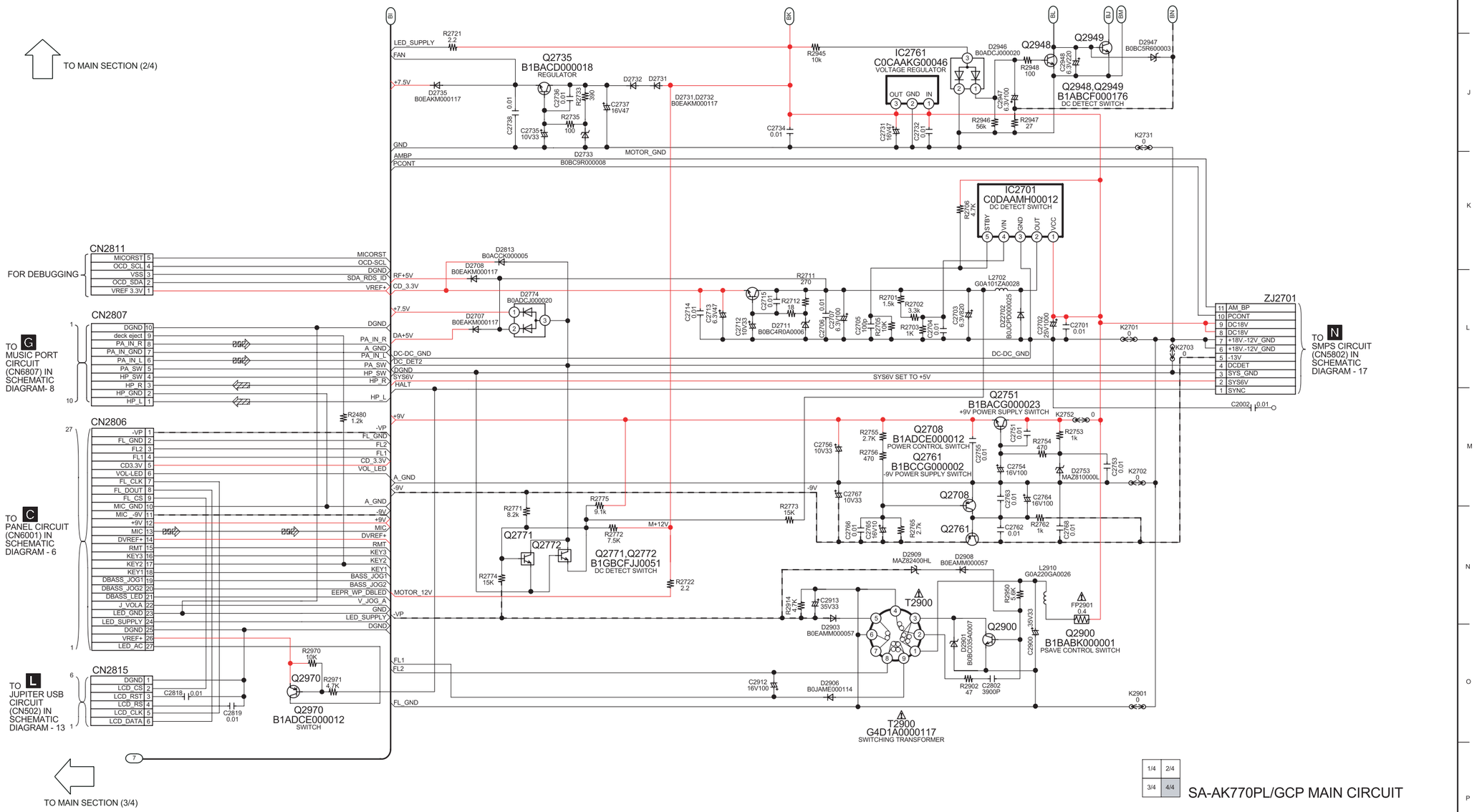

18.3. (C) Panel Circuit

SCHEMATIC DIAGRAM-6

C PANEL CIRCUIT

—— : +B SIGNAL LINE —•— : -B SIGNAL LINE ▷▷▷ : MIC SIGNAL LINE

TO B MAIN CIRCUIT (CN2806) IN SCHEMATIC DIAGRAM- 5

CN6001 (1 … 27)

VFP, FL_GND, FL1, FL2, VOL_LED, FL_CLK, FL_DOUT, FL_CS, MIC_GND, -5V, +5V, R_MIC, DVREF+, DMT, KEY3, KEY2, KEY1, DBASS_JOG1, DBASS_JOG2, J_VOLA, LED_GND, DGND, VREF+, LED_SUPPLY

DGND

D6458 B3AAA0000803 POWER_LED

R6458 1K

R6100 10K

R6200 10K

KEY1

KEY2

VREF+

C6940 0.1

S6100 POWER

S6101 DISPLAY

S6102 SUBWOOFER

S6106 TAPE REC

S6107 USB REC

R6101 1.2K

R6102 1.5K

R6103 2.2K

R6104 3.3k

R6106 4.7K

R6107 6.8k

S6201 OPEN/CLOSE

S6202 EXCHANGE

S6203 CD_1

S6204 CD_2

S6205 CD_3

S6206 CD_4

S6207 CD_5

R6201 0

R6202 2.7K

R6203 2.2K

R6204 3.3K

R6205 4.7K

R6206 6.8K

R6207 15K

KEY2_STOP

KEY1_A

FL6601 A2BB00000171 FL DISPLAY

C6609 0.1

C6608 0.1

P0

IC6601 C0HBB0000057 FL DRIVER

IC6601

R6618 220

FL_DOUT

FL_CLK R6619 220

FL_CS R6620 470

FLGND C6611 330p C6612 330p C6613 330p R6622 82K

C6614 0.01

CD3.3V

VR6630 K9AA024A0008 BASS CONTROL

J6001 TO H REMOTE SENSOR CIRCUIT(J6001B*) IN SCHEMATIC DIAGRAM-8

C6300 1000p

C6634 100P

C6633 100P

R6632 10K

R6631 10K

DBASS_JOG1

DBASS_JOG2

DVREF+

VREF+

RMT

Q6641 B1GBCFJN0033 LED SWITCH

R6642 0

R6641 4.7K

D6641 B3AAA0001014 DBASS_LED

LED_SUPPLY

DBASS_LED

LED_GND

KEY1_A

S6108 D.BASS

R6108 15k

R6109 47K

MIC_SW

FLGND

R6671 22K

C6671 50V22

L6671 J0JBC0000019

R6672 10

D6672 B0BC2R4A0006

Q6600 B1GBCFJN0033 LEVEL SWITCH

R6600 680

LED_GND

P0

VREF+

LED_SUPPLY

R6300 10K

C6938 0.1

VOL_LED, DVREF+, KEY3, KEY2_STOP, J_VOLA

MIC_SW, MIC_GND, MIC, +5V, -5V

CN6012 (D6602 KATOD, D6602 ANOD)

CN6014 (D6604 Katod, D6604 Katod, LED_SUPPLY)

TO E SIDE BAR (R) LED CIRCUIT (CN6602) IN SCHEMATIC DIAGRAM - 7

TO D SIDE BAR (L) LED CIRCUIT (CN6604) IN SCHEMATIC DIAGRAM - 7

J6501A* (VOL_LED, DVREF+, KEY3, KEY2, LED_GND, LED_SUPPLY, KEY2_STOP, VREF+, DGND, J_VOLA)

TO F TACT SWITCH CIRCUIT (J6501B*) IN SCHEMATIC DIAGRAM - 8

ZJ6601 (DGND, MIC_SW, A_GND, A_GND, MIC, +5V, -5V)

TO Q MIC CIRCUIT (CN6701) IN SCHEMATIC DIAGRAM - 10

SA-AK770PL/GCP PANEL CIRCUIT

18.4. (D) Side Bar (L) Led Circuit, (E) Side Bar (R) Led Circuit & (K) USB Connector/Led Circuit

SCHEMATIC DIAGRAM-7

D SIDE BAR (L) LED CIRCUIT

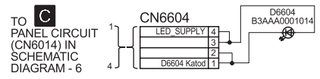

E SIDE BAR (R) LED CIRCUIT

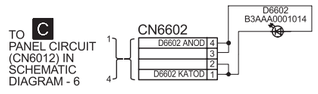

K USB CONNECTOR/LED CIRCUIT

: +B SIGNAL LINE : USB SIGNAL LINE

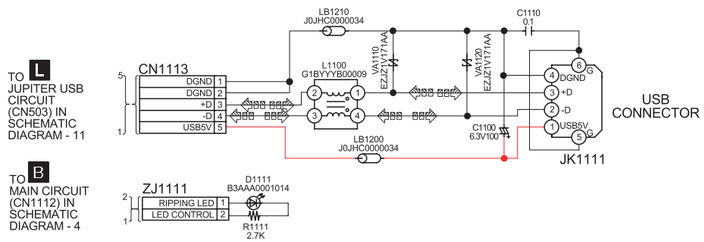

SA-AK770PL/GCP SIDE BAR (L) LED/SIDE BAR (R) LED/USBCONNECTOR/LED CIRCUIT

18.5. (F) Tact Switch Circuit, (G) Music Port Circuit & (H) Remote Sensor Circuit

SCHEMATIC DIAGRAM - 8

F TACT SWITCH CIRCUIT

: -B SIGNAL LINE : +B SIGNAL LINE

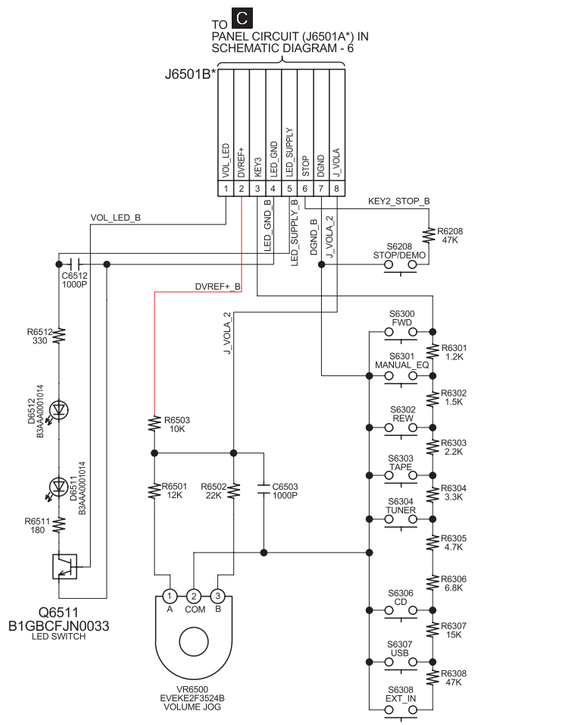

G MUSIC PORT CIRCUIT

: MAIN SIGNAL LINE : MUSIC PORT SIGNAL LINE

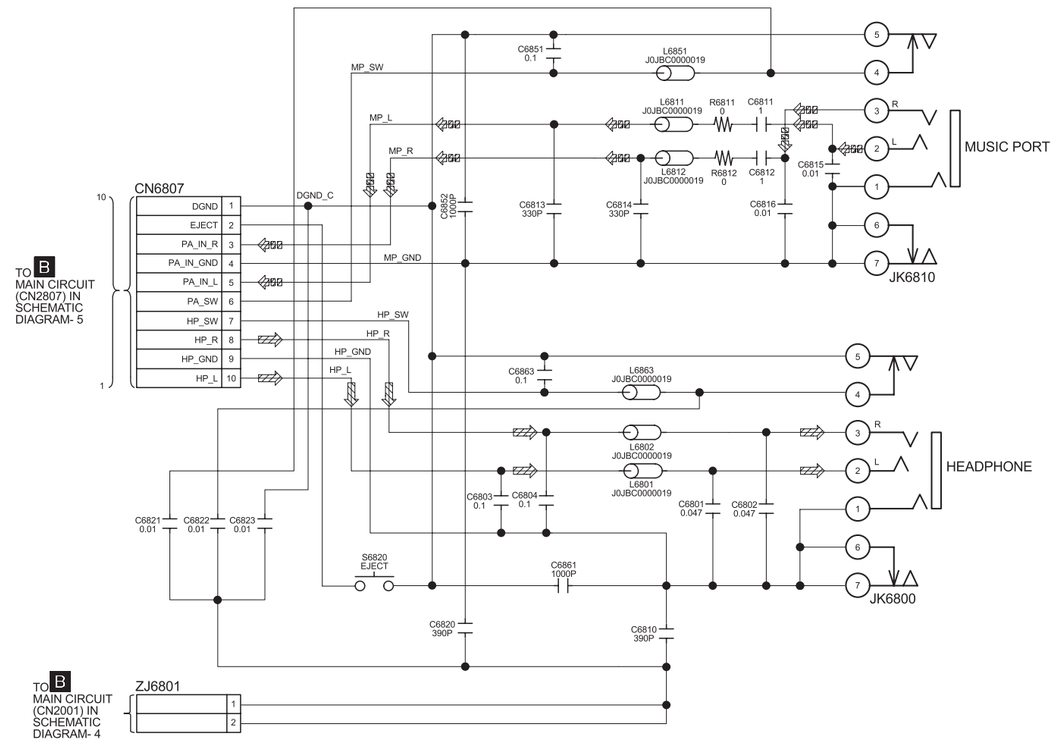

H REMOTE SENSOR CIRCUIT

: +B SIGNAL LINE

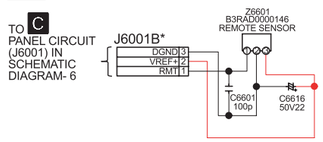

SA-AK770PL/GCP TACT SWITCH/MUSIC PORT/REMOTE SENSOR CIRCUIT

18.6. (I) Deck Circuit

SCHEMATIC DIAGRAM - 9

I DECK CIRCUIT

: +B SIGNAL LINE : -B SIGNAL LINE : TAPE RECORD SIGNAL LINE : TAPE PLAYBACK SIGNAL LINE

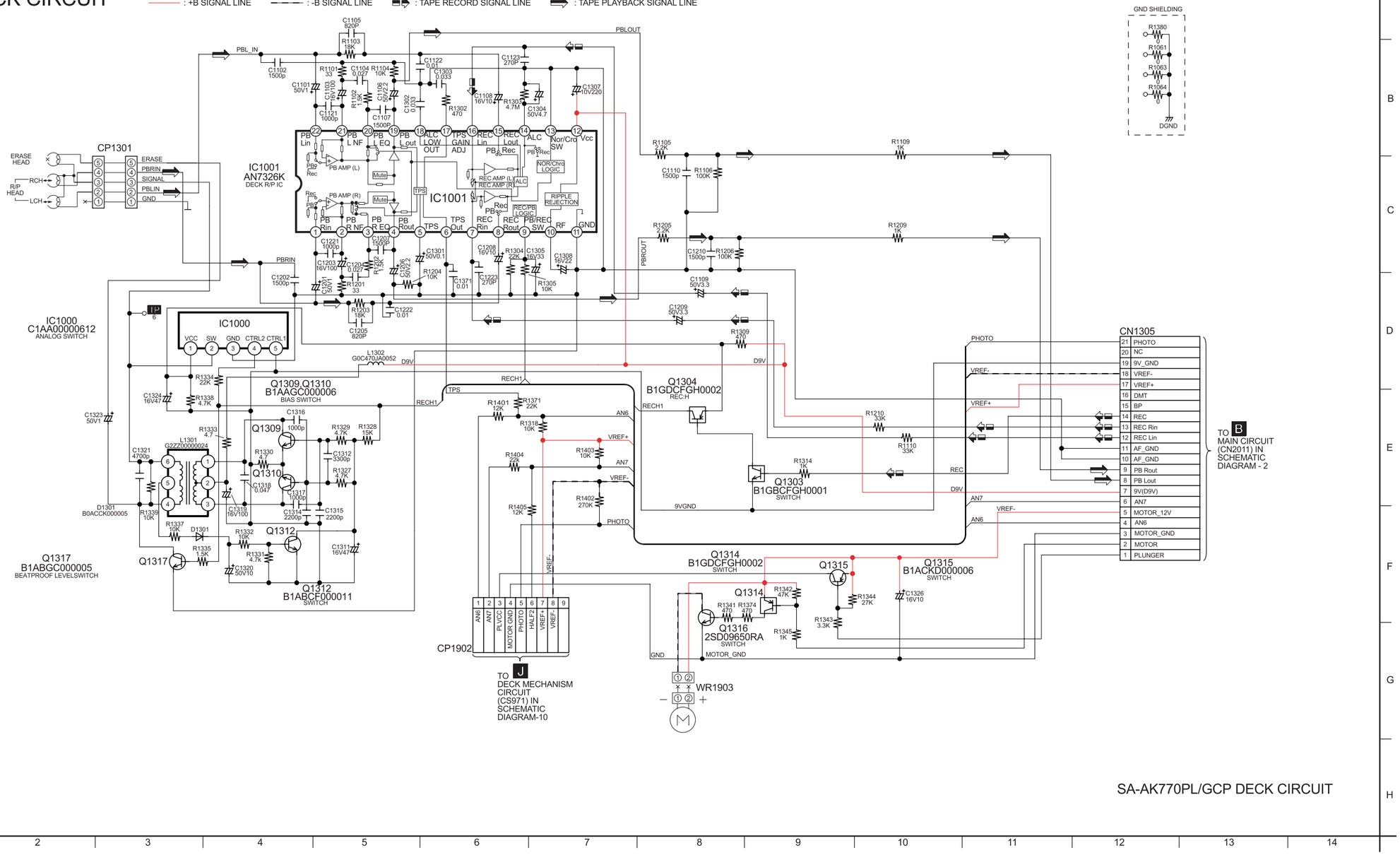

SA-AK770PL/GCP DECK CIRCUIT

18.7. (J) Deck Mechanism Circuit, (O) AC Inlet Circuit, (P) Voltage Selector Circuit (GCP Only) & (Q) Mic Circuit

SCHEMATIC DIAGRAM - 10

J DECK MECHANISM CIRCUIT

:+B SIGNAL LINE :-B SIGNAL LINE

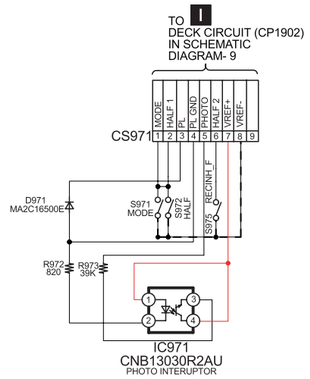

O AC INLET CIRCUIT

: +B SIGNAL LINE : -B SIGNAL LINE

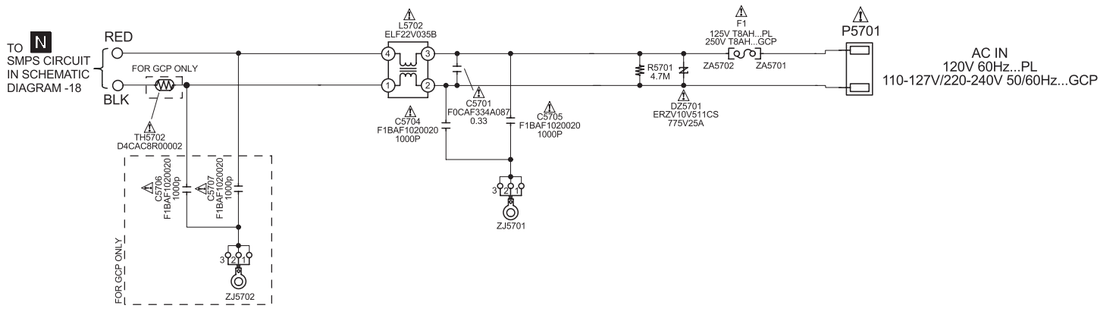

P VOLTAGE SELECTOR CIRCUIT (GCP ONLY)

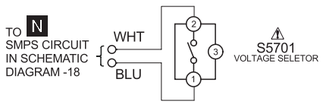

Q MIC CIRCUIT

:+B SIGNAL LINE :-B SIGNAL LINE :MIC SIGNAL LINE

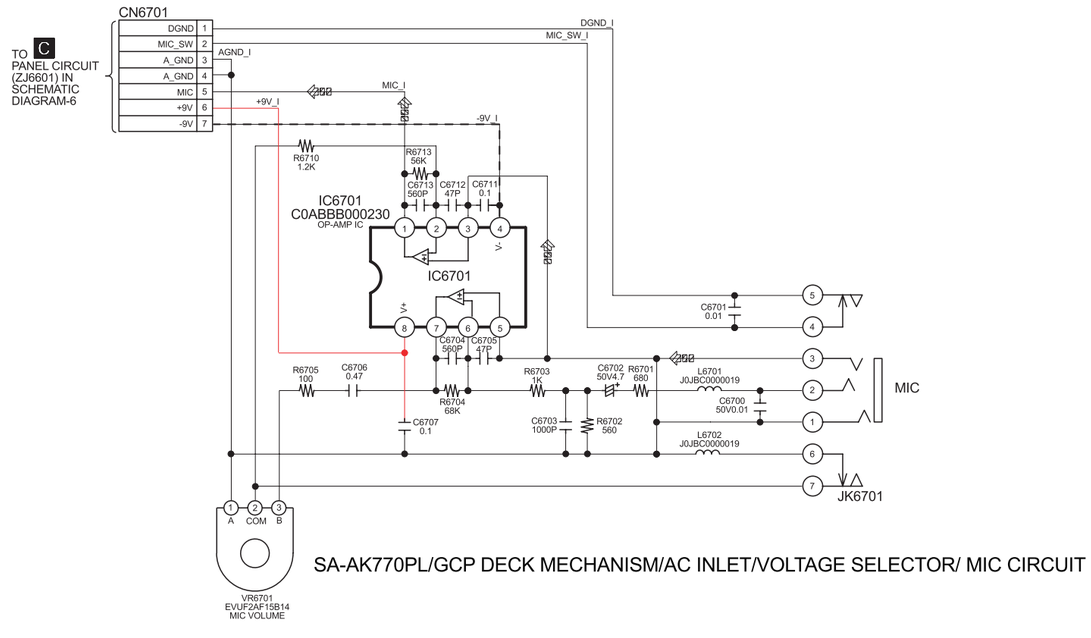

SA-AK770PL/GCP DECK MECHANISM/AC INLET/VOLTAGE SELECTOR/ MIC CIRCUIT

18.8. (L) Jupiter USB Circuit

SCHEMATIC DIAGRAM - 11

L JUPITER USB CIRCUIT

: +B SIGNAL LINE : USB SIGNAL LINE

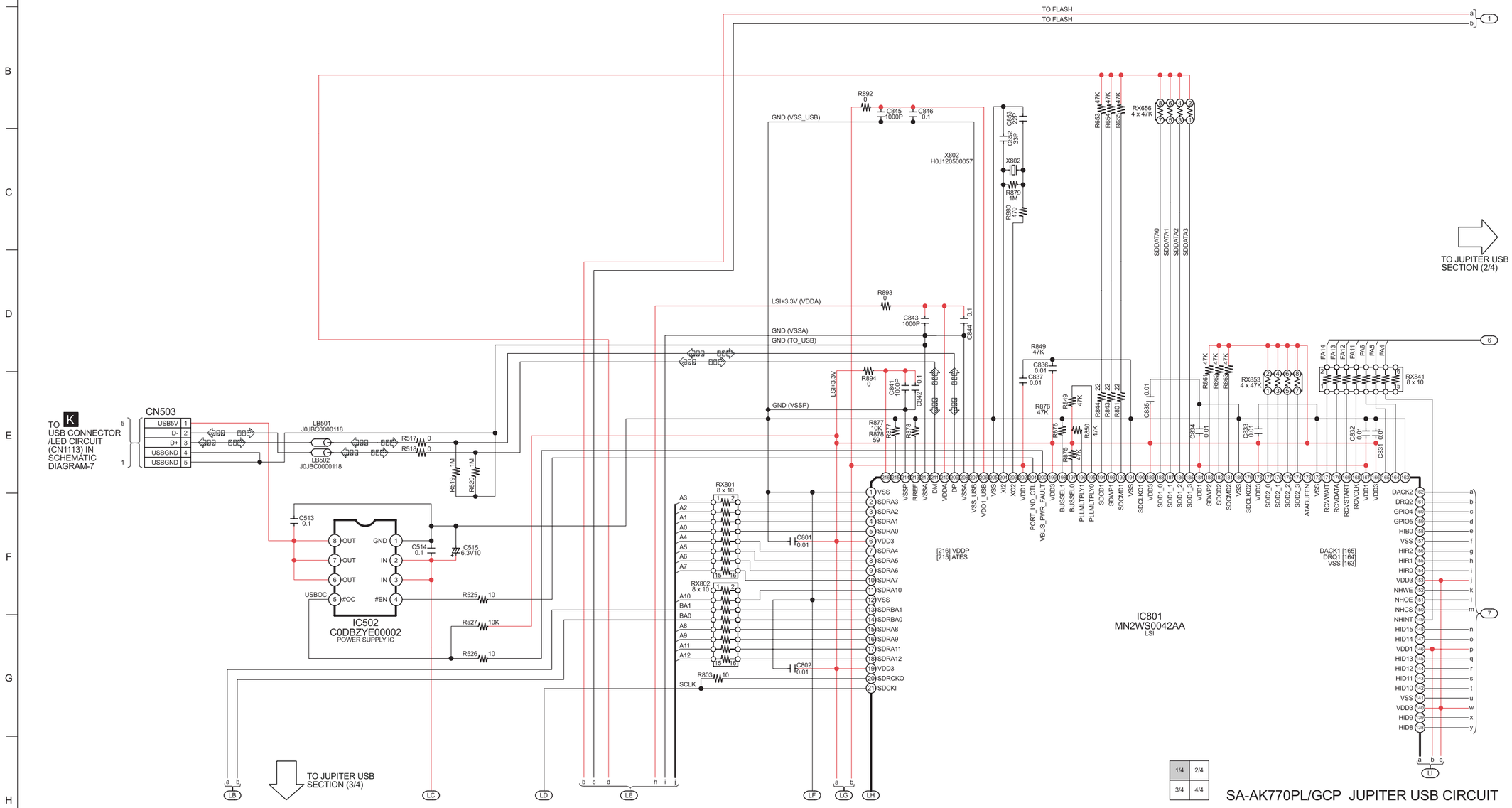

SCHEMATIC DIAGRAM - 12

L JUPITER USB CIRCUIT

: +B SIGNAL LINE

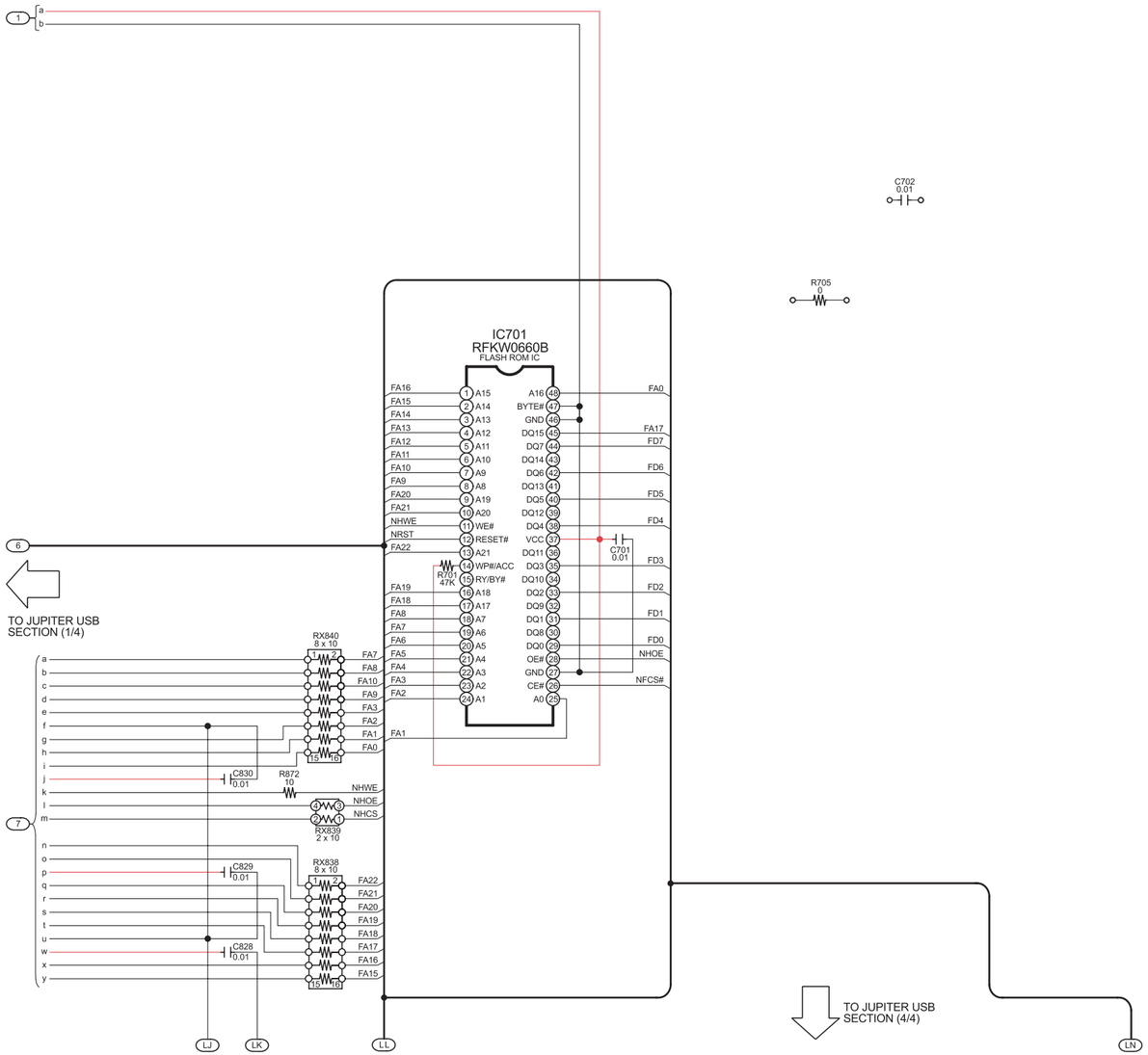

1/4	2/4
3/4	4/4

SA-AK770PL/GCP JUPITER USB CIRCUIT

SCHEMATIC DIAGRAM - 13

L JUPITER USB CIRCUIT

: +B SIGNAL LINE

TO JUPITER USB SECTION (1/4)

IC751
C3ABPG000160
DRAM IC

IC801
MN2WS0042AA
LSI

IC802
C0DBZYY00293
POWER SUPPLY IC

CN502

TO B MAIN CIRCUIT (CN2815) IN SCHEMATIC DIAGRAM-5

TO JUPITER USB SECTION (4/4)

1/4	2/4
3/4	4/4

SA-AK770PL/GCP JUPITER USB CIRCUIT

SCHEMATIC DIAGRAM - 14

L JUPITER USB CIRCUIT

: +B SIGNAL LINE : USB SIGNAL LINE

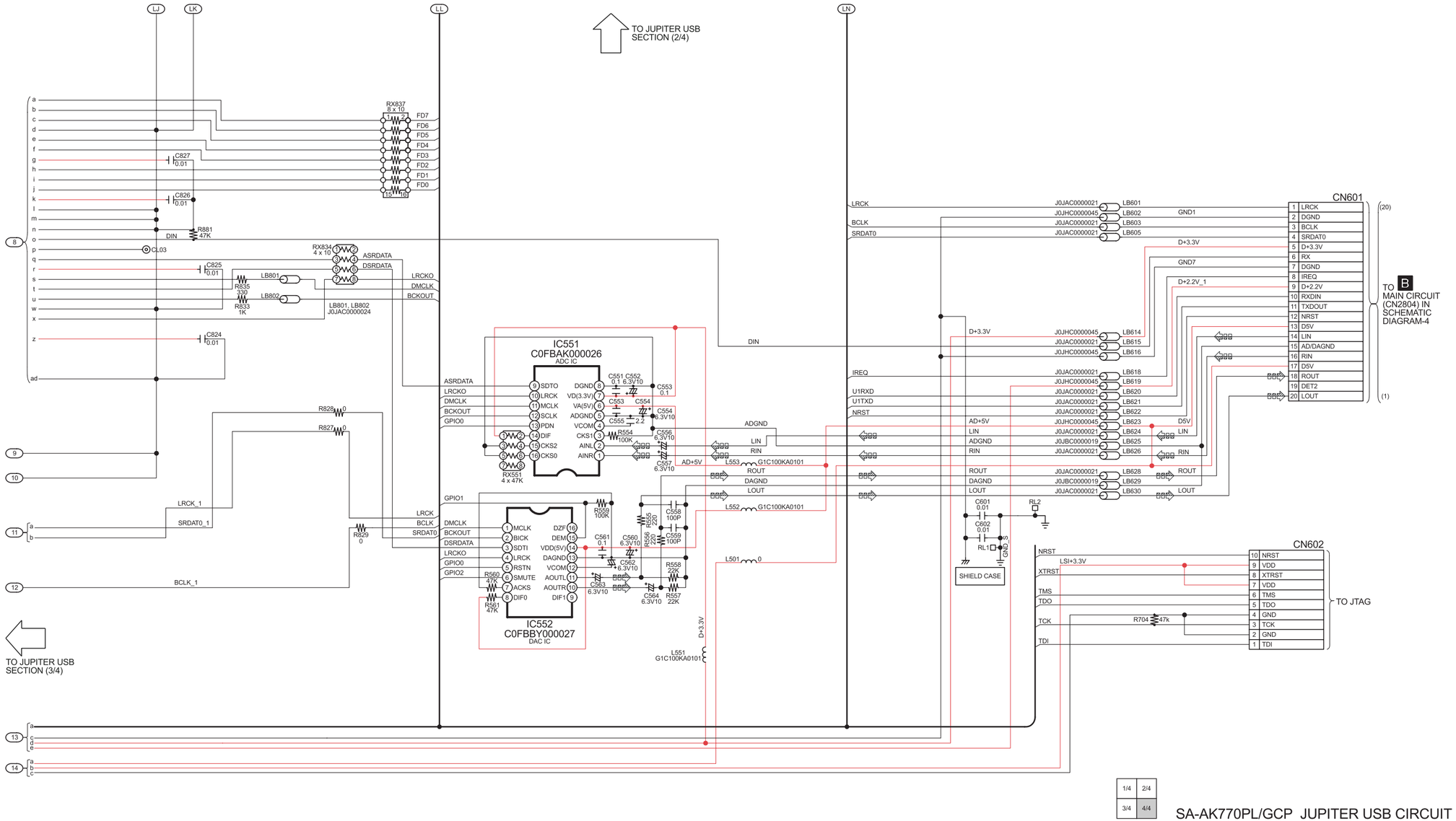

1/4	2/4
3/4	4/4

SA-AK770PL/GCP JUPITER USB CIRCUIT

18.9. (M) D-Amp Circuit

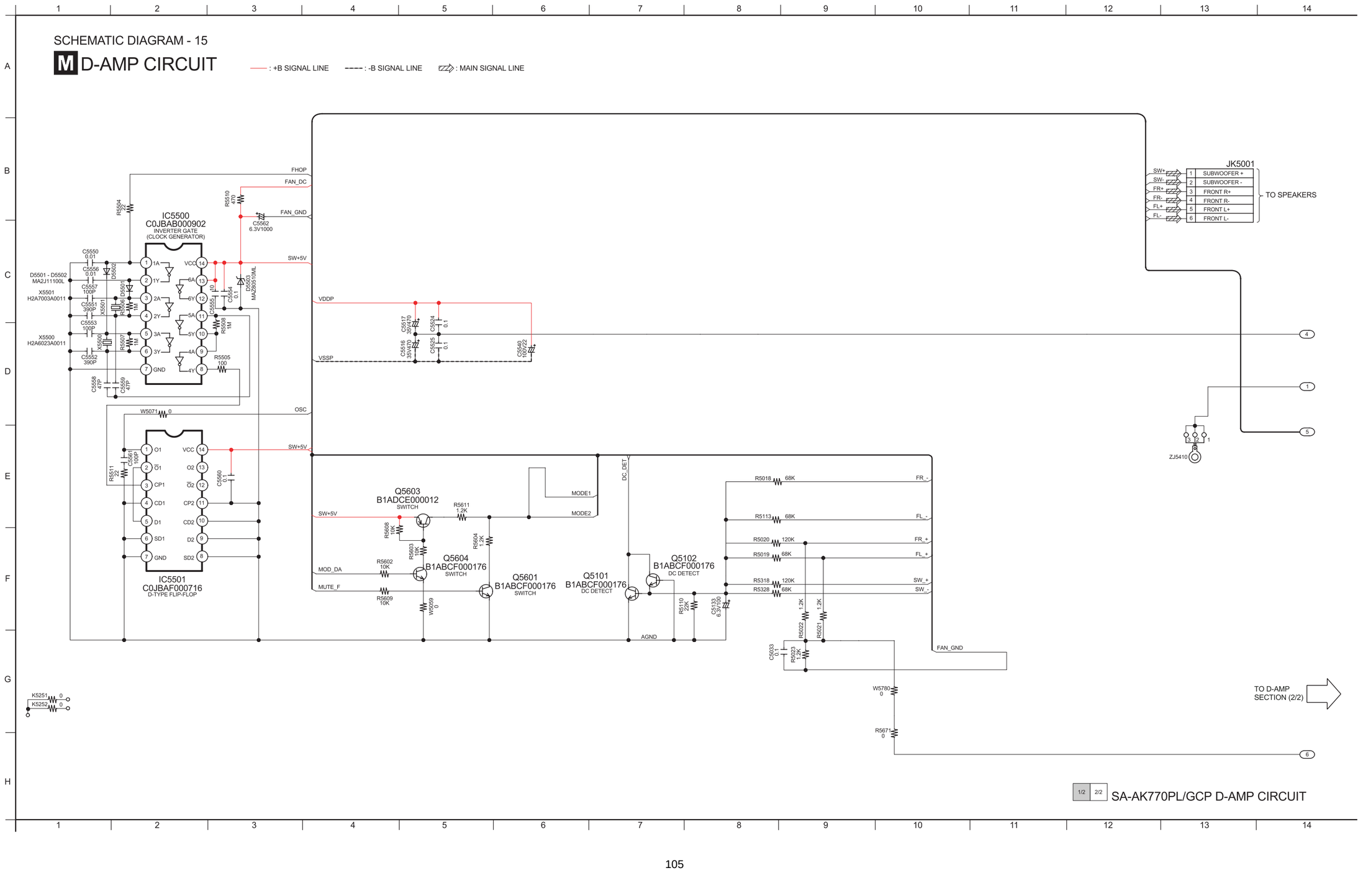

SCHEMATIC DIAGRAM - 16

M D-AMP CIRCUIT

: +B SIGNAL LINE : -B SIGNAL LINE : MAIN SIGNAL LINE

IC5000 C1BA00000487 AUDIO DIGITAL POWER AMP

IC5400 C1BA00000487 AUDIO DIGITAL POWER AMP

IC5200 C1BA00000487 AUDIO DIGITAL POWER AMP

CN5500

CN5050

TO N SMPS CIRCUIT (H5801*) IN SCHEMATIC DIAGRAM - 17

TO D-AMP SECTION (1/2)

TO B MAIN CIRCUIT (CN5050) IN SCHEMATIC DIAGRAM - 3

1/2 2/2 SA-AK770PL/GCP D-AMP CIRCUIT

18.10. (N) SMPS Circuit

SCHEMATIC DIAGRAM - 17

N SMPS CIRCUIT

: +B SIGNAL LINE ----- : -B SIGNAL LINE

TO M D-AMP CIRCUIT (CN5500) IN SCHEMATIC DIAGRAM - 16

H5801*
+30V_SENSE 8
+30V_SENSE 7
GND 6
GND 5
-30V_SENSE 4
-30V_SENSE 3
FAN_GND 2
FAN_18V 1

C5831 0.1
C5832 0.1
C5823 0.1

DCDET
FAN_18V
-30V_SENSE
+30V_SENSE

D5809 MA2J111100L

Q5860 2SA207700L TRANSFORMER TEMP DETECT
R5860 10K
R5864 10K

Q5861 - Q5862 B1ABCF000176 TRANSFORMER TEMP DETECT
R5862 10K
R5863 10K
R5861 4.7K
Q5861
Q5862
C5870 0.1
C5869 0.1

D5801 B0HBSM000043

TH5860 D4CC11040013

T5701 ETS48AB116AC...GCP ETS48AB12GAC...PL MAIN TRANSFORMER
-30V
AMPGND
+30V
+FAN 18V
GND
+18V
-12V
DRAIN
VIN
VCC

R5632 2.2K
R5634 2.2K
C5805 3300/630
C5808 3300/630
C5821 0.01
C5820 0.01
C5840 0.01
C5841 0.01
C5819 0.01
C5822 0.01
C5839 0.01
C5842 0.01

R5703 100K...GCP 33K...PL
R5702 100K...GCP 33K...PL
C5713 0.01
D5702 BI02A2000052

TO SMPS SECTION (2/2)

R5800 12K
R5801 10K
QR5801 UNR221400L DC DETECT
D5807 MA2J111100L
R5841 120K
R5840 82K
C5800 0.01
C5826 0.01
ZJ5801

QR5802 B1GDCFGA0018 DC DETECT

D5802 B0HBSM000043

D5803 B0HFRJ000012
D5804 B0EAMM000057
C5813 35V470
C5816 25V470

CN5802
AM_BP 11
PCONT 10
DC18V 9
DC18V 8
+18V_-12V_GND 7
+18V_-12V_GND 6
-13V 5
DCDET 4
SYS_GND 3
SYS6V 2
SYNC 1

C5812 0.1
C5815 0.1
C5896 0.1
W5801 0

R5822 91
R5821 91
R5820 91
R5823 91
R5824 91
R5825 1K
Q5803 2SC3940ARA SWITCH

Q5720 2SC3940ARA CURRENT LIMITING SWITCH
Q5722 B1ABCF000176 CURRENT LIMITING SWITCH

D5733 B0HCMM000019
R5724 120
Q5721 2SA207700L SWITCH
D5721 B0BC010A0007...GCP MAZ81800ML...PL
R5723 1K
D5726 B0EAKM000117
Q5720
D5729 B0EAMM000057
R5722 1K...GCP 1.2K...PL
R5721 10K
D5728 MA2J11100L
Q5722
C5720 0.1
D5724 MA2J11100L
D5727 MA2J11100L
R5725 0
D5722 B0BC019A0007
D5723 MA2J11100L
C5728 1000P
C5721 220P
C5722 1000P
C5700 F1BAF1020020 1000P
R5728 100K
R5729 10K
ZJ5803

R5732 100
IC5701 C5HACYY00003...GCP C5HACYY00004...PL SWITCHING REGULATOR
OCP/BD
FB
OLP/SS
VCC
GND
S
D
C5730 50V1
C5725 0.1
C5723 470P
C5724 3300
C5726 0.1
R5731 1K
R5733 1K
D5732 B0BC018A0007
C5737 470P
C5727 3300
FOR GCP ONLY
FOR PL ONLY
R5726 82M
R5727 0.1
FOR PL ONLY

R5730 1K
D5725 B0BC6R100010

W5806 0
W5804 0
W5803 0
W5805 0
R5809 330
R5807 330
R5808 2.2K
PC5720 B3PBA0000402
FEED BACK

C5817 100V0.22
R5802 2K
C5810 0.1
R5814 8.2K
R5803 2K
R5804 47K
R5806 15K
C5818 0.1
R5805 2K
IC5801 C0DABFC00002 SHUNT REGULATOR
R5811 15K
R5816 15K
R5815 2.7K
C5825 0.1
Q5802 B1ABCF000176 FEEDBACK CONTROL
R5813 24K
R5812 8.2K
D5806 MAZ80750ML

PC5701 B3PBA0000402
FEED BACK

R5817 330
R5810 330
QR5810 B1GBCFLL0037 INVERTER

K5 0 ...PL
K7 0 ...GCP

SYS6V
PCONT
SYNC
-13V

1/2 2/2

SA-AK770PL/GCP SMPS CIRCUIT

SCHEMATIC DIAGRAM - 18

N SMPS CIRCUIT

: +B SIGNAL LINE ---- : -B SIGNAL LINE

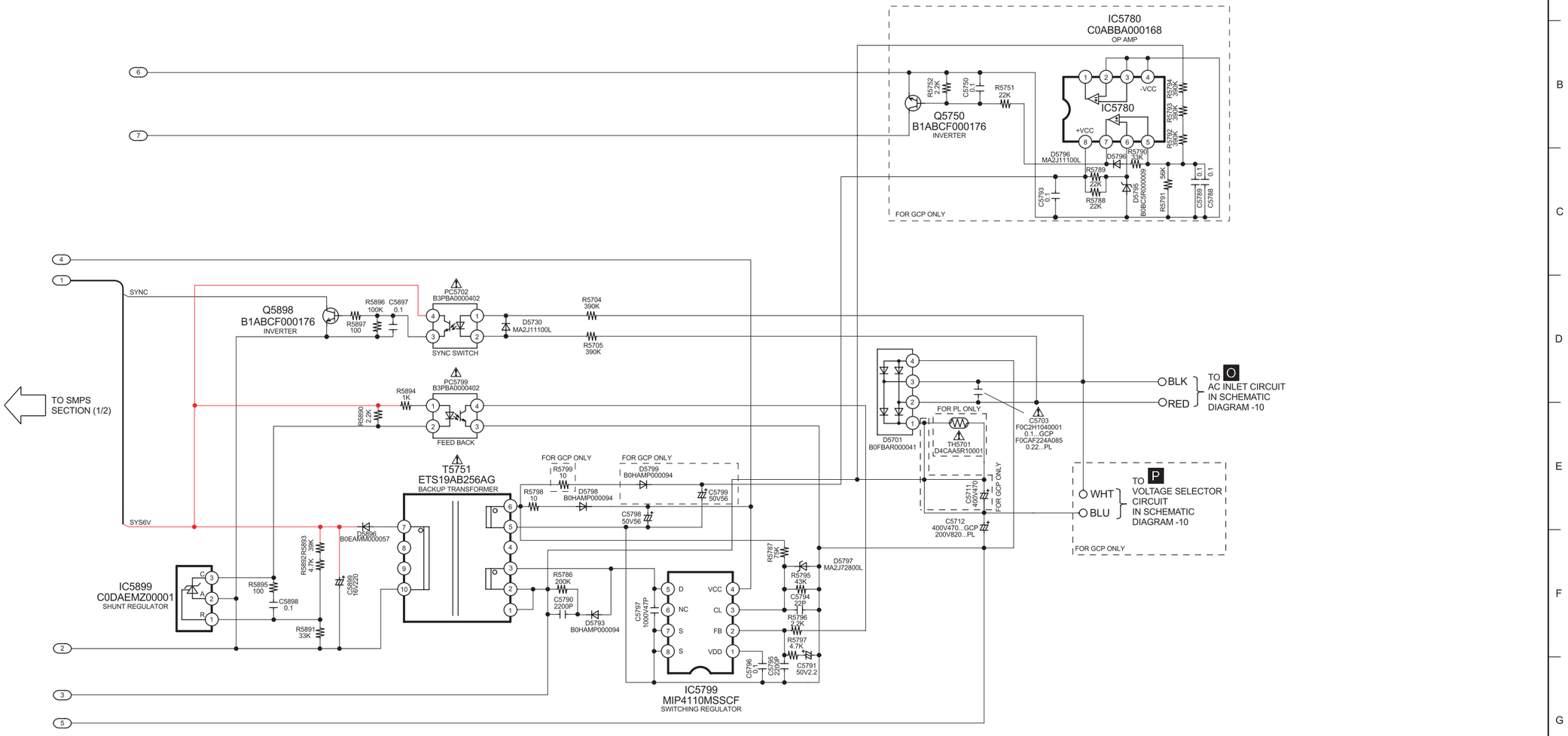

1/2 | 2/2 SA-AK770PL/GCP SMPS CIRCUIT

19 Printed Circuit Board

Note: Circuit board diagrams may be modified at any time with the development of new technology.

19.1. (A) CD Servo P.C.B. & (L) Jupiter USB P.C.B.

A CD SERVO P.C.B. (REPX0636A)

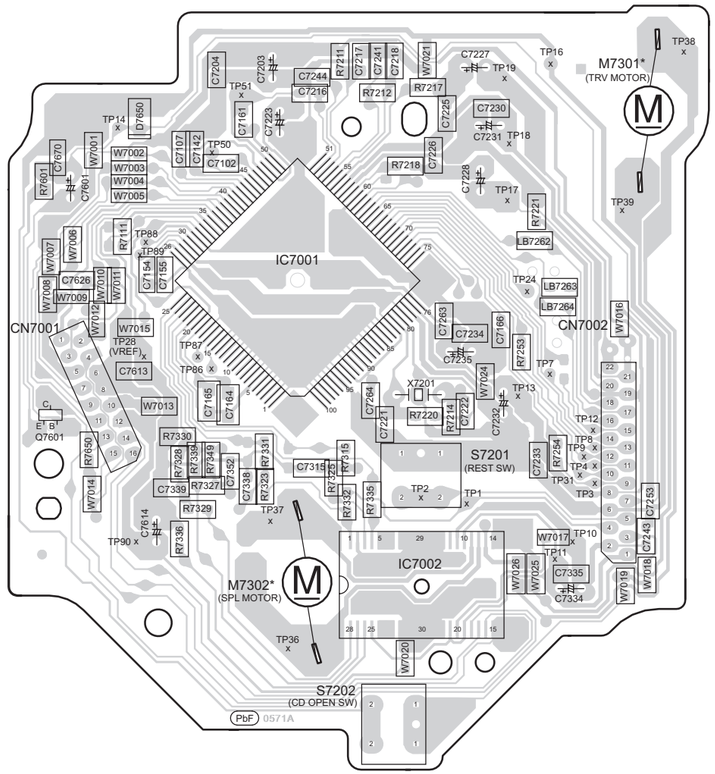

L JUPITER USB P.C.B. (REPX0660B)

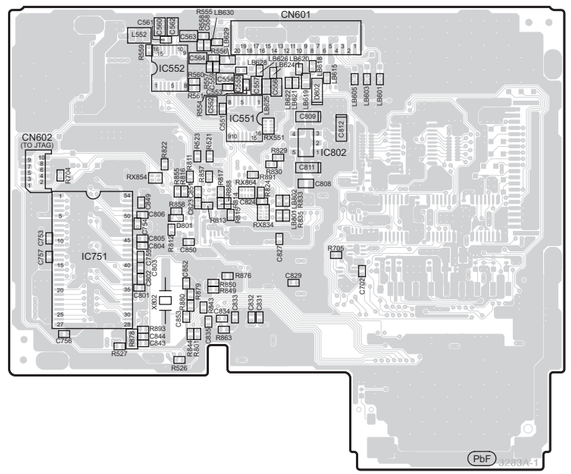

(SIDE A)

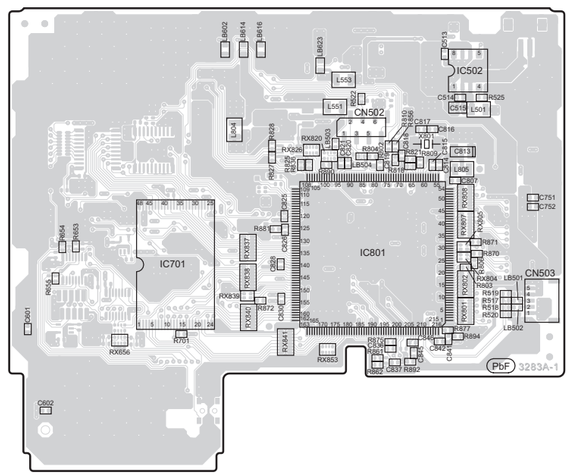

(SIDE B)

SA-AK770PL/GCP
CD SERVO/ JUPITER USB P.C.B.

* FOR INDICATION ONLY

19.2. (B) Main P.C.B., (G) Music Port P.C.B. & (K) USB Connector/Led P.C.B.

B MAIN P.C.B. (REPX0673C...PL)
(REPX0673D...GCP)

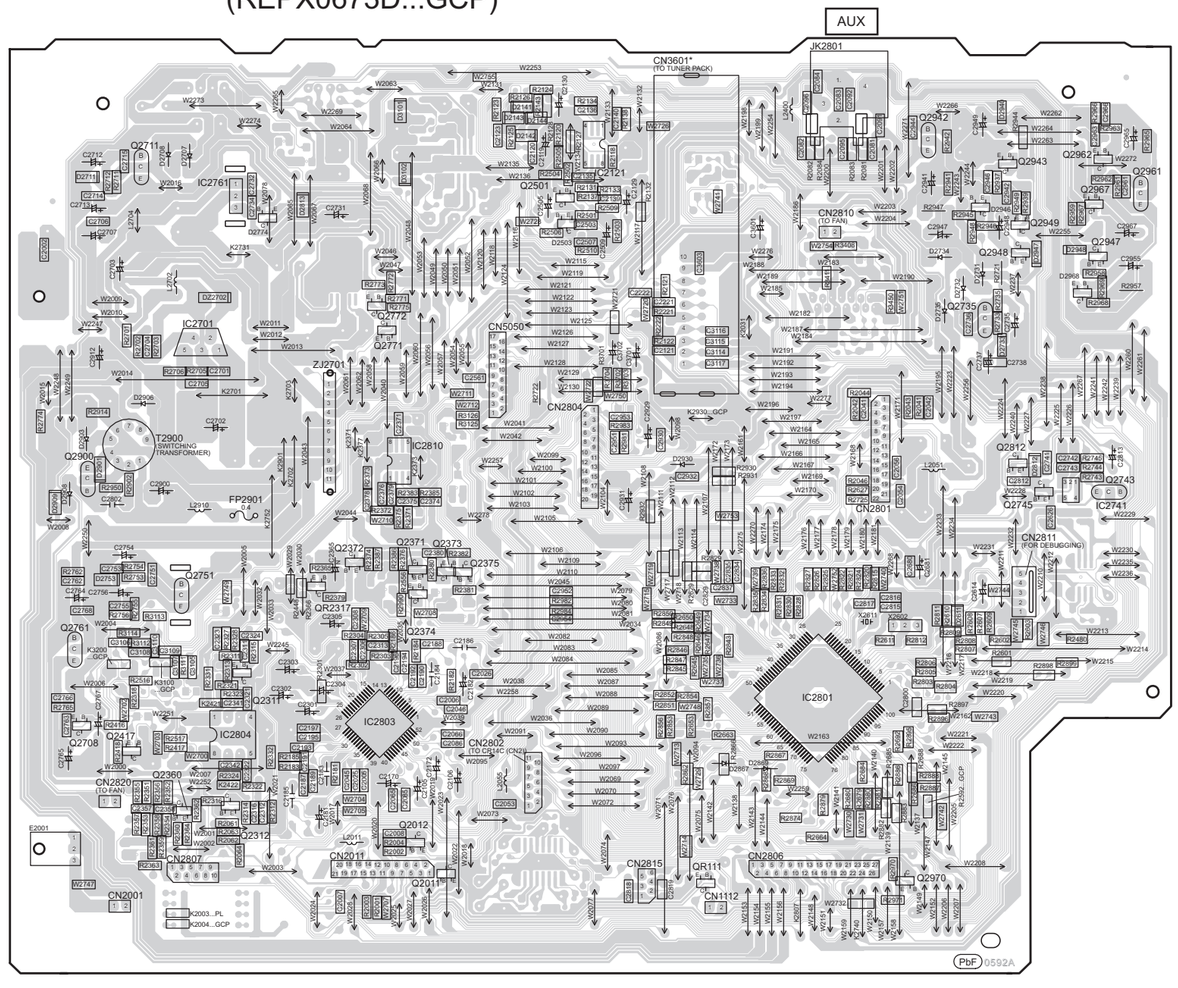

G MUSIC PORT P.C.B. (REPX0649B)

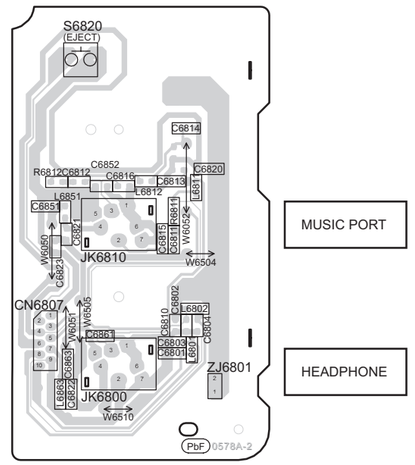

K USB CONNECTOR/LED P.C.B. (REPX0673C...PL)
(REPX0673D...GCP)

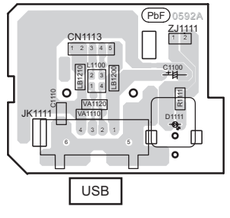

SA-AK770PL/GCP
MAIN / MUSIC PORT / USB CONNECTOR/LED P.C.B.

19.3. (C) Panel P.C.B., (F) Tact Switch P.C.B. & (H) Remote Sensor P.C.B.

C PANEL P.C.B. (REPX0649B)

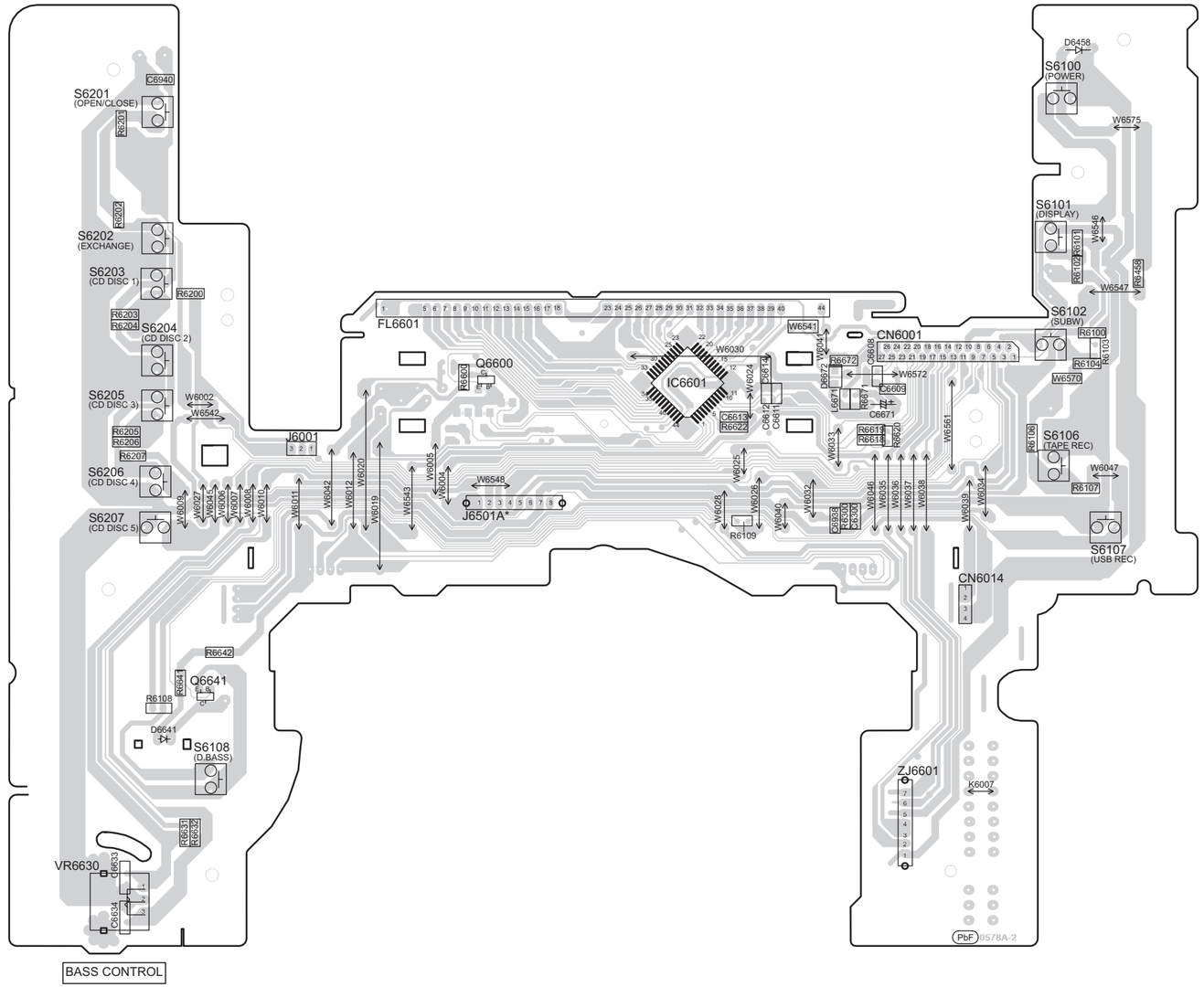

F TACT SWITCH P.C.B. (REPX0649B)

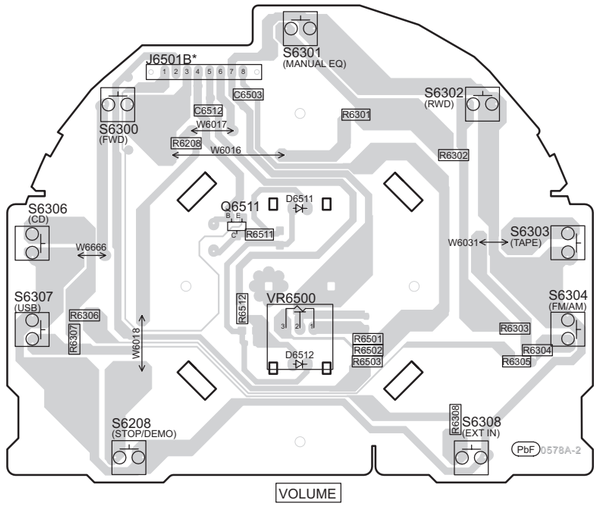

H REMOTE SENSOR P.C.B. (REPX0649B)

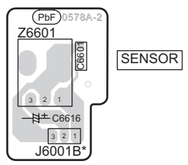

SA-AK770PL/GCP
PANEL / TACT SWITCH / REMOTE SENSOR CIRCUIT P.C.B.

19.4. (I) Deck P.C.B., (J) Deck Mechanism P.C.B. & (O) AC Inlet P.C.B.

I DECK P.C.B. (REPX0647A)

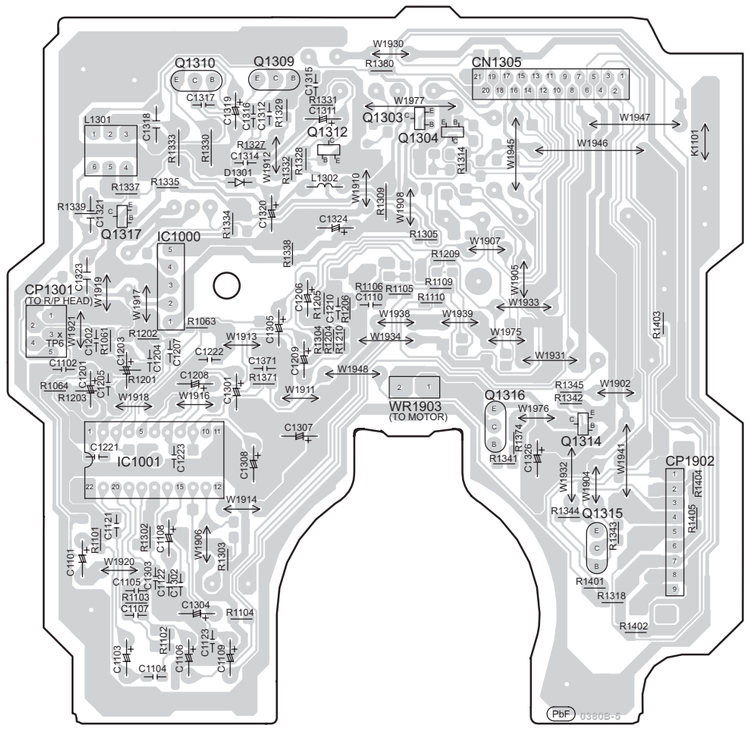

J DECK MECHANISM P.C.B. (REPX0321L)

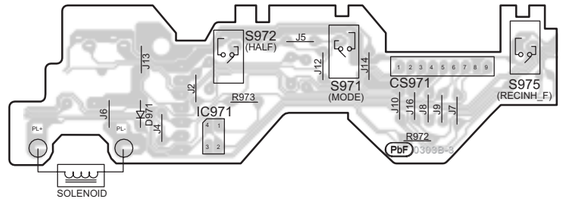

O AC INLET P.C.B. (REPX0622E...PL) (REPX0622G...GCP)

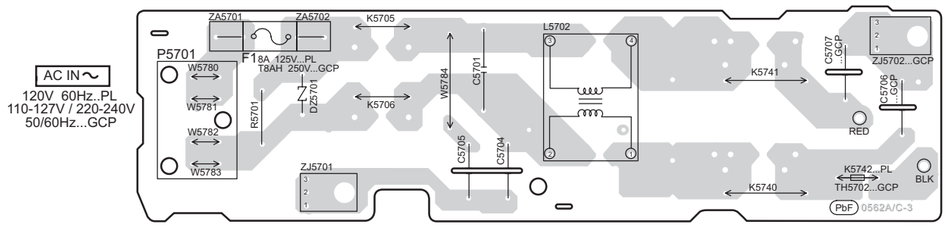

SA-AK770PL/GCP
DECK / DECK MECHANISM / AC INLET P.C.B.

19.5. (M) D-Amp P.C.B.

M D-AMP P.C.B (REPX0638B)

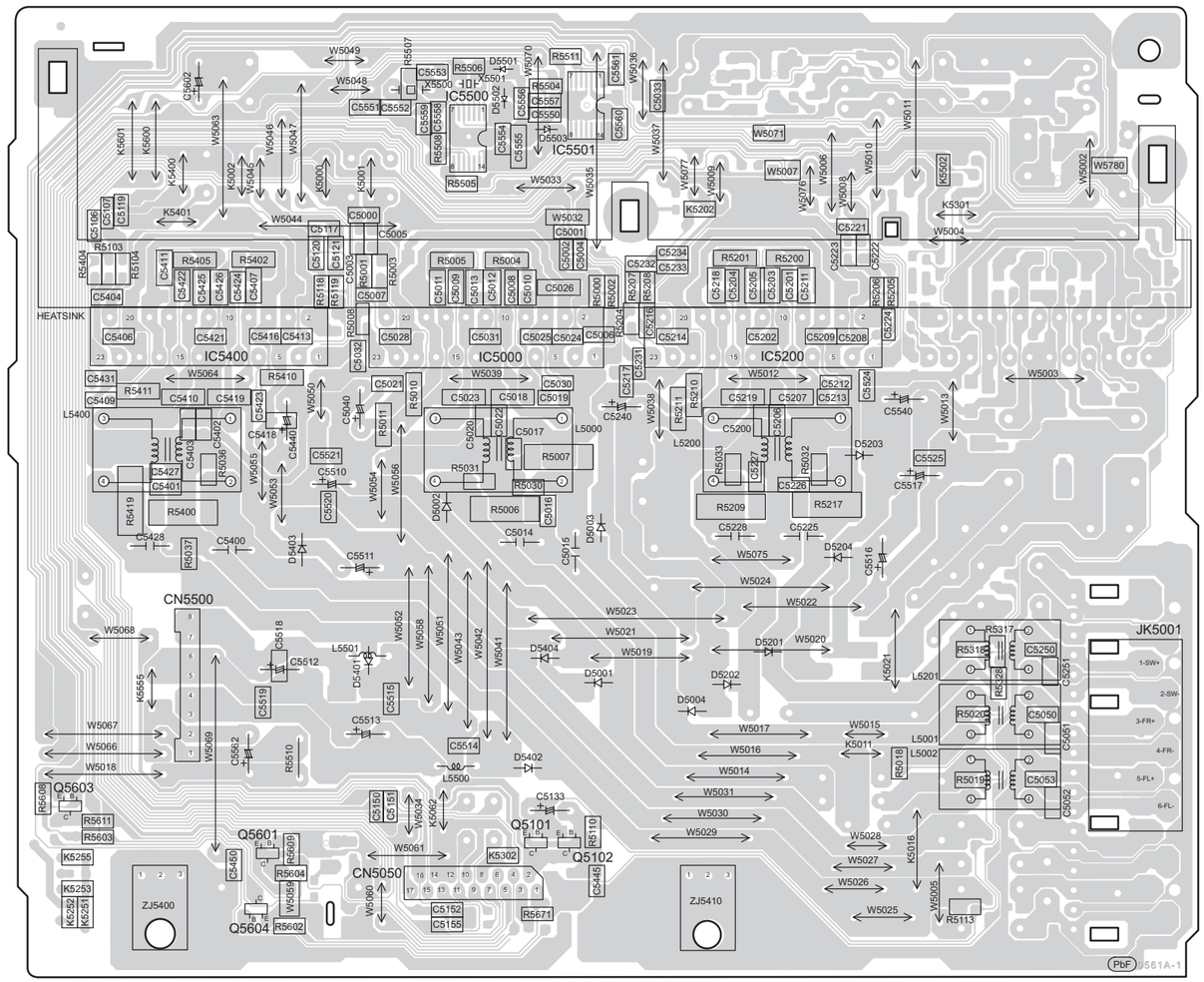

SA-AK770PL/GCP
D-AMP P.C.B.

19.6. (N) SMPS P.C.B.

N SMPS P.C.B. (REPX0622E...PL)
(REPX0622G...GCP)

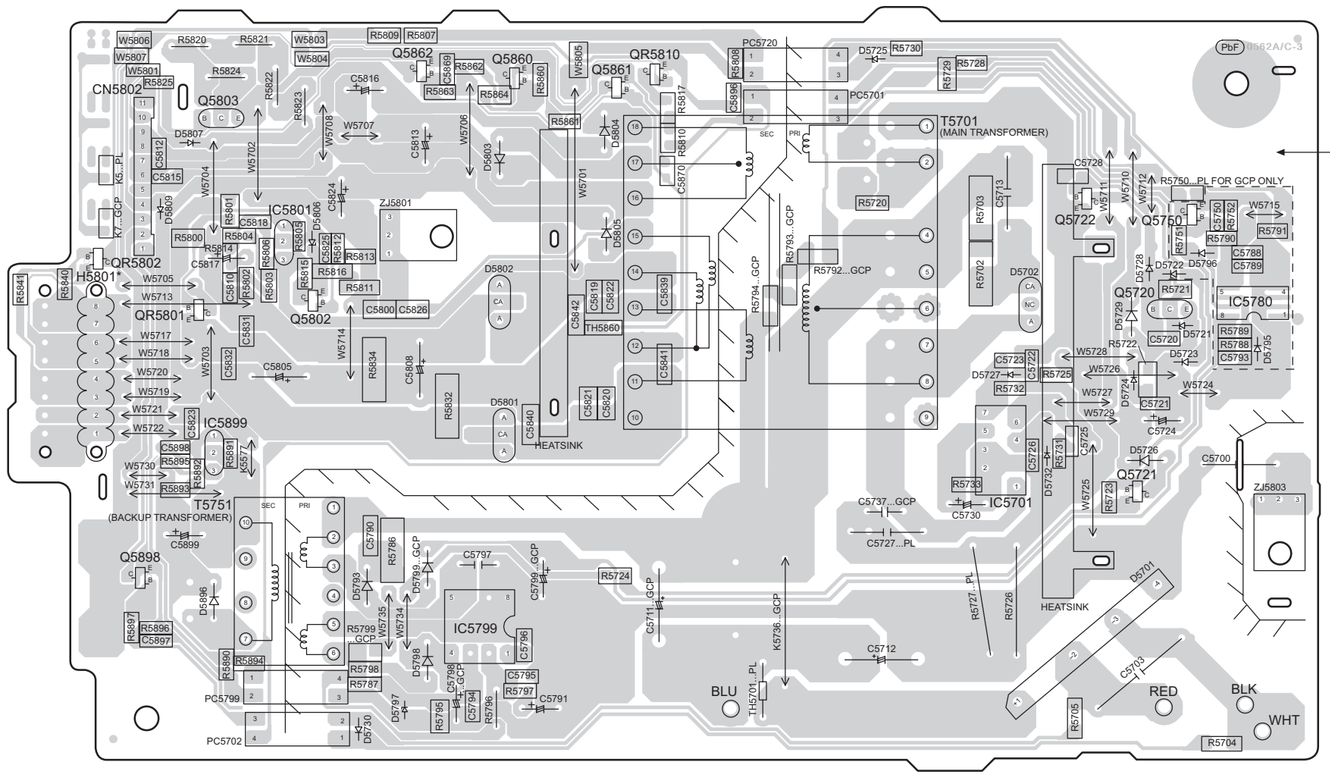

19.7. (D) Side Bar (L) Led P.C.B., (E) Side Bar (R) Led P.C.B., (P) Voltage Selector P.C.B. (GCP Only) & (Q) Mic P.C.B.

P VOLTAGE SELECTOR P.C.B. (REPX0622G...GCP ONLY)

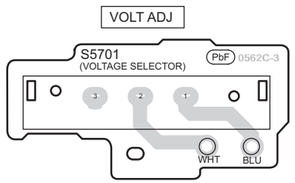

D SIDE BAR (L) LED P.C.B. (REPX0649B)

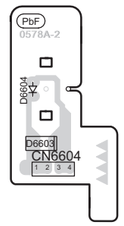

Q MIC P.C.B. (REPX0649B)

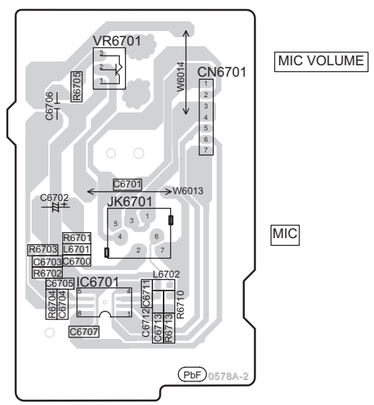

E SIDE BAR (R) LED P.C.B. (REPX0649B)

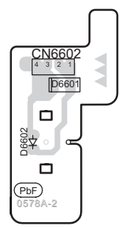

SA-AK770PL/GCP
VOLTAGE SELECTOR / MIC / SIDE BAR (L) LED / SIDE BAR (R) LED P.C.B.

20 Illustration of ICs, Transistors and Diodes

MN6627954MA (100P)
RFKWAK570PLK (100P)
C1AB00002885 (52P)
MN2WS0042AA (216P)
C0HBB0000057 (44P)

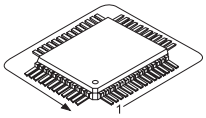

C0FBBY000027 (16P)
C0FBAK000026 (16P)
C0JBAB000902 (14P)
C0JBAF000716 (14P)
C0ABBB000230 (8P)
C3ABPG000160 (54P)
RFKW0660B (48P)

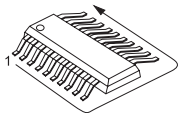

CNB13030R2AU

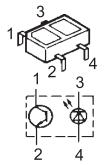

C1AA00000612 (5P)

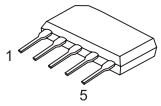

C0AABB000125 (8P)
C0ABBA000168 (8P)

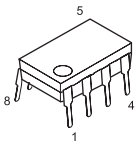

AN7326K (22P)

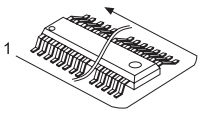

BA5948FPE2

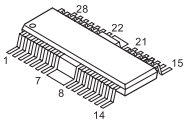

C0CAAKG00046

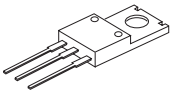

C1BA00000487 (23P)

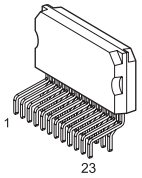

C0DABFC00002 (3P)
C0DAEMZ00001 (3P)

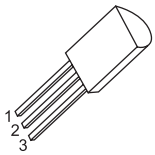

C0DBZYE00002

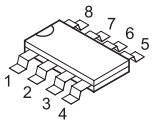

C0DAAMH00012 (5P)

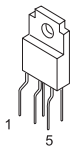

C5HACYY00004 (7P)
C5HACYY00003 (7P)

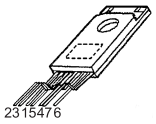

MIP4110MSSCF

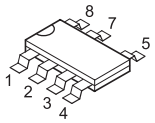

C0DBCYY00005 (5P)

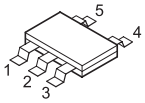

C0DBZYY00293 (5P)

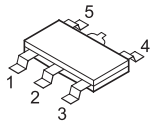

B1BACG000023
B1BCCG000002

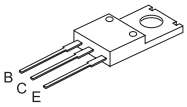

B1ABGC000005
B1GBCFJJ0051
B1ABCF000176
B1ADCF000001
B1ADCE000012
B1GBCFJN0033
B1GBCFGH0001
B1GDCFGA0018

B1GBCFLL0037
B1GBCFJJ0051
B1ABCF000011
B1GDCFGH0002
2SA207700L
UNR221400L

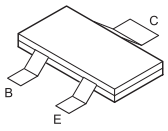

2SC3940ARA

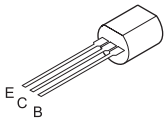

B1BABK000001

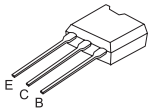

2SD09650RA
B1ACKD000006

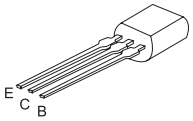

B1AAGC000006

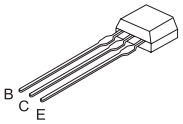

B1BACD000018

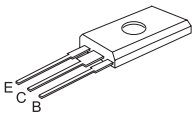

MA2C16500E

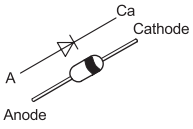

B0ZAZ0000052

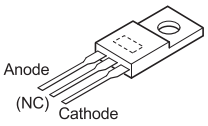

B0HCMM000019

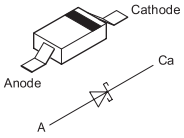

B0HFRJ000012

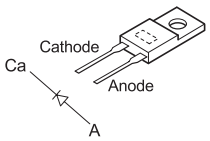

MAZ80560ML
MAZ80510ML
MAZ80750ML
MAZ81800ML
MAZ810000L
MAZ82400HL
B0BC5R600003

B0BC4R0A0006
B0BC9R000008

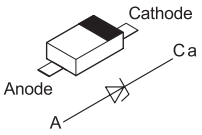

B0BC010A0007
B0BC019A0007
B0BC2R4A0006
B0BC5R000009
B0BC6R100010

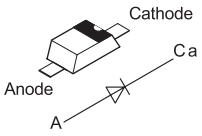

B0ADCC000002
B0ADCJ000020

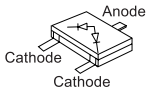

B0ACCK000005
B0JCMD000022

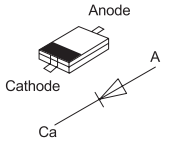

B0FBAR000041

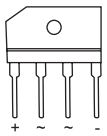

B0JAME000114
B0EAMM000057
B0HAMP000094
B0EAKM000117

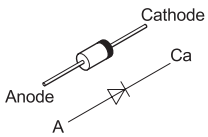

B0BC035A0007

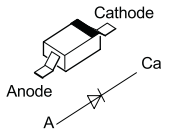

B0HBSM000043

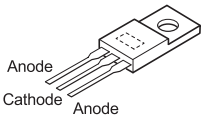

MA2J11100L
MA2J72800L
MA27D2900L

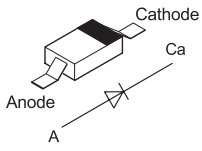

B3AAA0000489
B3AAA0001014

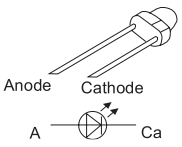

B0JCPD000025

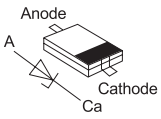

ERZV10V511CS

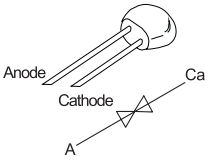

21 Terminal Function of Integrated Circuits

21.1. IC2801 (RFKWAK570PLK) System Microprocessor

Pin No.	Mark	I/O	Function
1	SubW_JogA	I	Subwoofer Jog A
2	SubW_JogB	I	Subwoofer Jog B
3	DEMO	I	Auto Demo Initial Setting, (L: ON, H:OFF) Default: On (L)
4	CD_MDATA	O	CD Micro-P Data
5	CD_STAT	I	553 LSI (CD_Subq combine CD_STAT)
6	CD_MCLK	O	553 LSI (CD_SQCK combine with CD_MCLK)
7	HALT	O	AC Detection Input
8	OCD_SDA/ RDS RDY	I	OCD Serial Data Input
9	OCD_SCL	I	OCD Serial Clock Output
10	CRTIMER	-	CR Timer
11	MMOD	-	USB Normal/Write Mode
12	XTOUT	-	Oscillator Output
13	XTIN	-	Oscillator Input
14	VSS	-	GND
15	XI	-	Oscillator Input
16	XO	-	Oscillator Output
17	VDD33	-	Voltage Supply +3.3V
18	VDD18	-	Voltage Supply +1.8V
19	MICOM RST	-	Micro_processor Reset
20	LON (H)	-	Using Internal Regulator, Connect to H
21	BASS_JOG2	I	Bass Control 2
22	BASS_JOG1	I	Bass Control 1
23	USB REC LED	O	USB Rec Led
24	OCDM OD (H)	O	Using Internal Regulator, Connect to H
25	RESET_SW	-	Reset Switch
26	RMT	I	Remote Control Input
27	CD Unload_SW	I	CD Unload Sw
28	CD_BLKCK	I	CD Subcode Block Clock Input
29	DC Det2	I	Power Detect Input Signal
30	PCONT	O	Power Control Output
31	VOL-LED	O	Vol Led
32	CD_RST	I/O	CD LSI Reset Output (L: Reset)
33	CD_MLD	I/O	CD LSI Command Load
34	SD_CMD (RXDIN)	O	Data Output To SD Module
35	SD_status (TX Dout)	I	Data Input To SD Module
36	SD_NRST	O	DAB Decoder LSI Reset
37	VDD 18	-	Voltage Supply +1.8V
38	Option_PLAY	O	NC
39	VSS	-	GND
40	Option_RSKIP	O	NC
41	Option_FSKIP	O	NC
42	Option_STOP	O	NC
43	SMPS_BP	O	SMPS BP
44	DECK MOTOR	I/O	Deck Motor Control L: OFF; H: ON
45	CR14_Mode	I	CR14 Control
46	CR14_UD	I	CR14 Control Position Detect
47	CR14_Top	I	CR14 Control
48	CR14_Close	I	CR14 Control
49	CR14_Home	I	CR14 Control Change Detect
50	CR14_Open	I	CR14 Control
51	CR14_LOF	O	CR14 Control
52	CR14_LOR	O	CR14 Control
53	Region1	I	Region Setting 1
54	Deck Photo	I	Deck Photo
55	MUTE_A	O	HP/SP Muting Control
56	ASP_CLK	I/O	ASP Control (Clock Signal)
57	ASP_DATA	I/O	ASP Control (Data Signal)
58	DECK REC	I/O	Deck Rec
59	SUBW_LVL 1	O	NC
60	SUBW_LVL 2	O	NC
61	VDD33	-	Voltage Supply +3.3V
62	HP_SW	I	Muting Control for Headphone ON/OFF
63	VSS	-	GND
64	Wmute	O	NC
65	Wdet	I	NC
66	D.Bass_LED	O	D.Bass Led
67	CD_LOAD_CCW (L)	O	CD Load CCW (L)
68	SD_INT	O	SD INT Output
69	CD_LOAD_CW (H)	O	CD Load CW (H)
70	OPTION_DET1	I	Option Detect 1 Input
71	OPTION_DET2	I	Option Detect 2 Input
72	RDS_DATA/SW LED	I	RDS Data Input
73	RDS_CLK	I	RDS Clock Output
74	FHOP1	O	Frequency Shitfing for Digital Amp
75	VDD18	-	Voltage Supply +1.8V
76	DPRT_RXD	I	NC
77	DPRT_TXD	O	NC
78	IPOD_DET	I	Ipod Detect Input
79	TU_SDA	O	Tuner Serial Data Input
80	TU_STEREO	I	Tuner Stereo Signal
81	Mute_S	O	Muting Control for Mute S
82	Mute_F	O	Muting Control for Front
83	AMP_MODE	O	D-Amp Mode Signal
84	TU_CLK	I/O	Tuner Clock Signal
85	TU_TUNED	O	Tuner Tuned Signal
86	AUX_DET/MPORT_ SW	I	Aux Detect Input
87	Option _PCONT	O	5V Supply Pin
88	DCDET	I	Power Detection Input
89	VDD5	-	Voltage Supply +5V
90	DECK PLUNGER	O	Deck Plunger Control L:OFF; H:ON
91	VSS	-	GND
92	Region	I	Region Setting
93	LEVELMTR	I	Level Meter
94	Key 3	I	Key 3 Input
95	Key 1	I	Key 1 Input
96	Key 2	I	Key 2 Input
97	VOL_JOG	I	Volume Jog
98	Deck AN7	I	Deck AN7
99	Deck AN6	I	Deck AN6
100	VHREF	-	Connect External Resistor To VDD5

21.2. IC6601 (C0HBB0000057) FL DISPLAY

Pin No.	Mark	I/O	Function
1	P0	-	NC
2	P1	-	NC
3	P2	-	NC
4	P3	-	NC
5	OSC	I	Oscillator Input
6	NC	-	NC
7	DIN	I	Data Input
8	CLK	I	Clock Input
9	STB	I	Serial Interface Strobe

Pin No.	Mark	I/O	Function
10	K1	-	Key Data Input 1 (No Connection)
11	K2	-	Key Data Input 1 (No Connection)
12	Vss	-	Supply Voltage, Negative Terminal
13	VCC	-	Power Supply (+5V)
14	S1	O	Segment Output 18
15	S2	O	Segment Output 17
16	S3	O	Segment Output 16
17	S4	O	Segment Output 15
18	S5	O	Segment Output 14
19	S6	O	Segment Output 13
20	S7	O	Segment Output 12
21	S8	O	Segment Output 11
22	S9	O	Segment Output 10
23	S10	O	Segment Output 9
24	S11	O	Segment Output 8
25	S12	O	Segment Output 7
26	S13	O	Segment Output 6
27	S14	O	Segment Output 5
28	S15	O	Segment Output 4
29	S16	O	Segment Output 3
30	VEE	-	Voltage Supply
31	G12	O	Segment Output 2
32	G11	O	Segment Output 1
33	G10	O	Grid Segment Output 1
34	G9	O	Grid Segment Output 2
35	G8	O	Grid Segment Output 3
36	G7	O	Grid Segment Output 4
37	G6	O	Grid Segment Output 5
38	G5	O	Grid Segment Output 6
39	G4	O	Grid Segment Output 7
40	G3	O	Grid Segment Output 8
41	G2	O	Grid Segment Output 9
42	G1	O	Grid Segment Output 10
43	VDD	-	Voltage Supply (+5V)
44	VSS	-	Power Supply

22 Exploded Views

22.1. Cabinet Parts Location

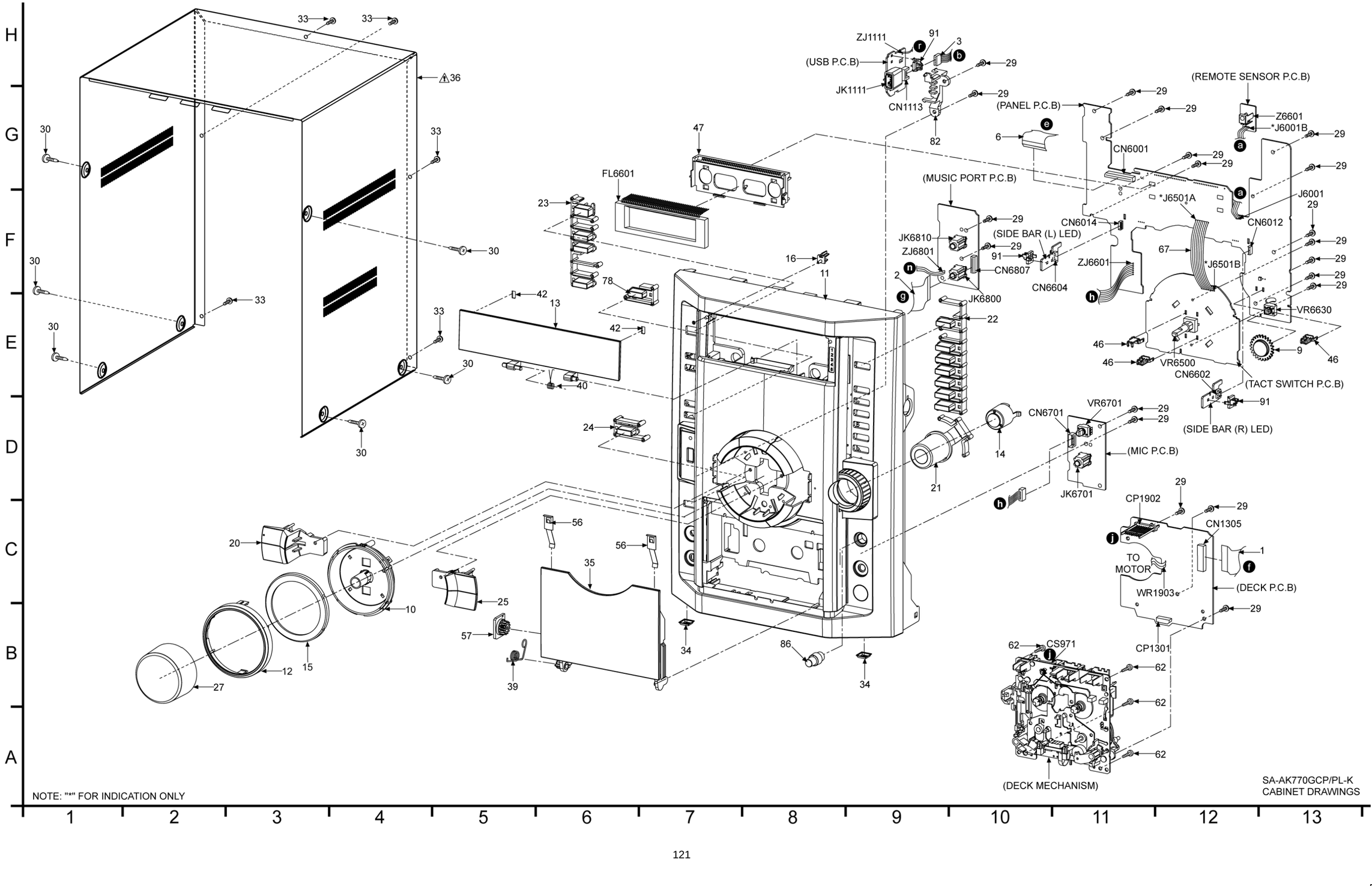

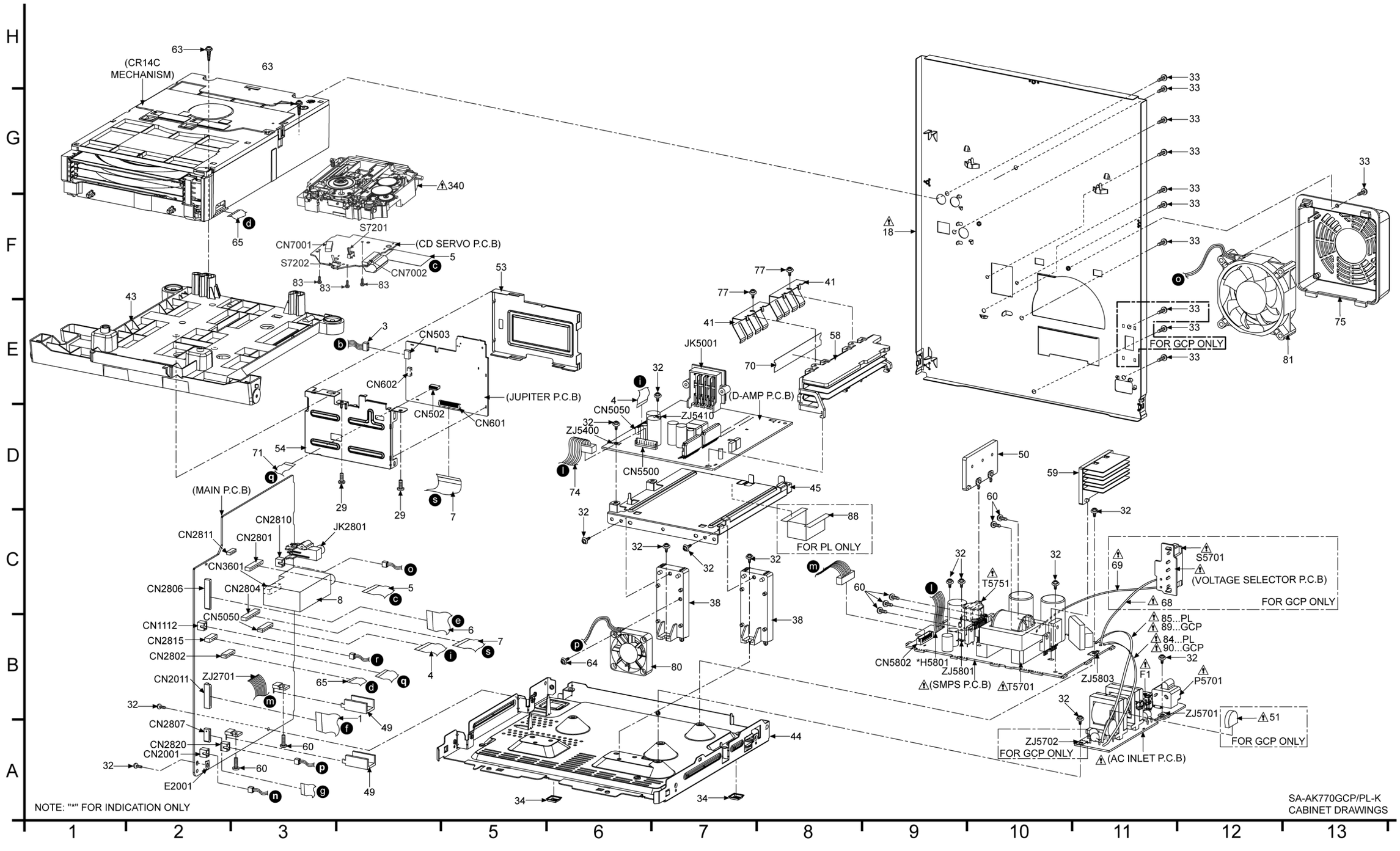

NOTE: "*" FOR INDICATION ONLY

SA-AK770GCP/PL-K
CABINET DRAWINGS

22.2. Deck Mechanism Parts Locations (RAA4407-S)

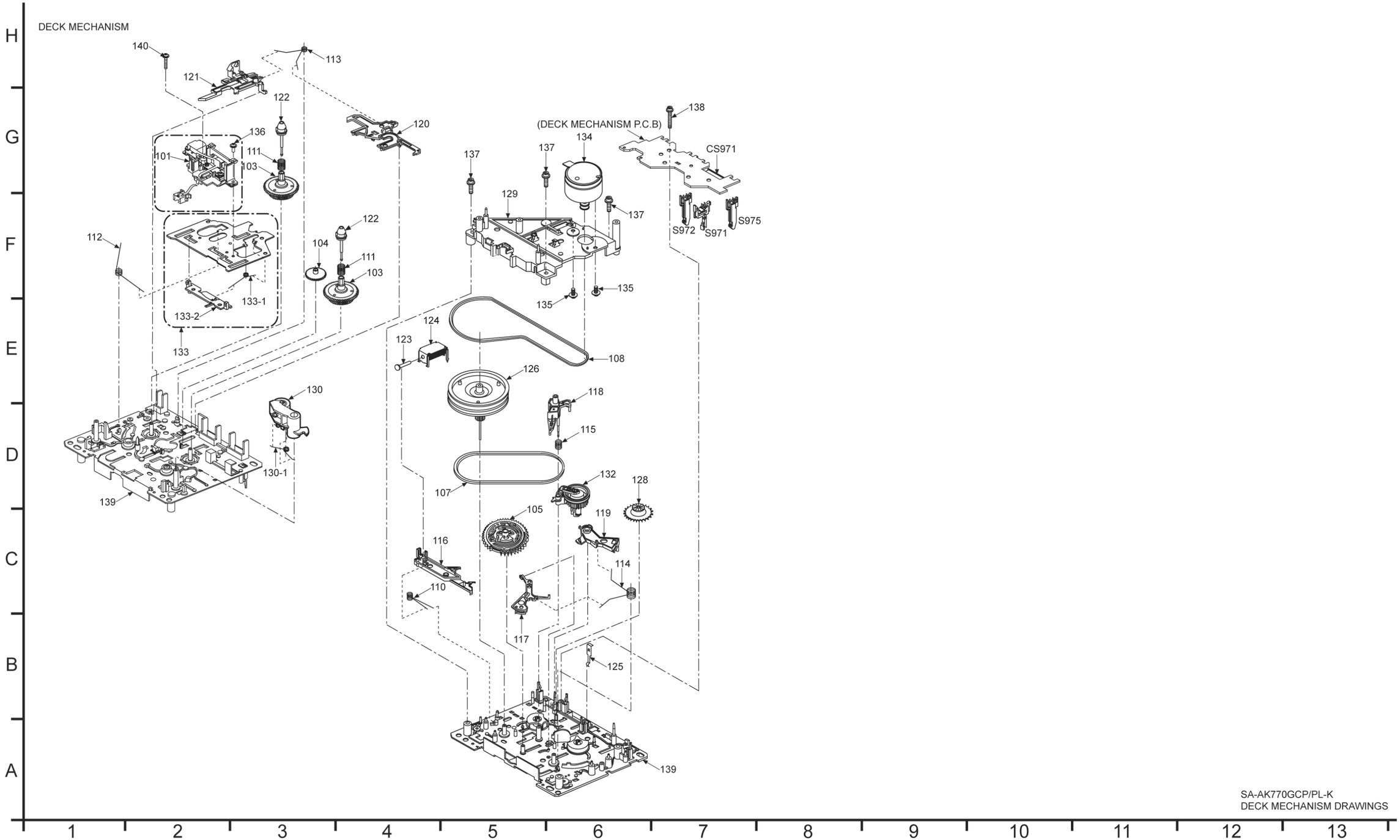

SA-AK770GCP/PL-K
DECK MECHANISM DRAWINGS

22.3. Packaging

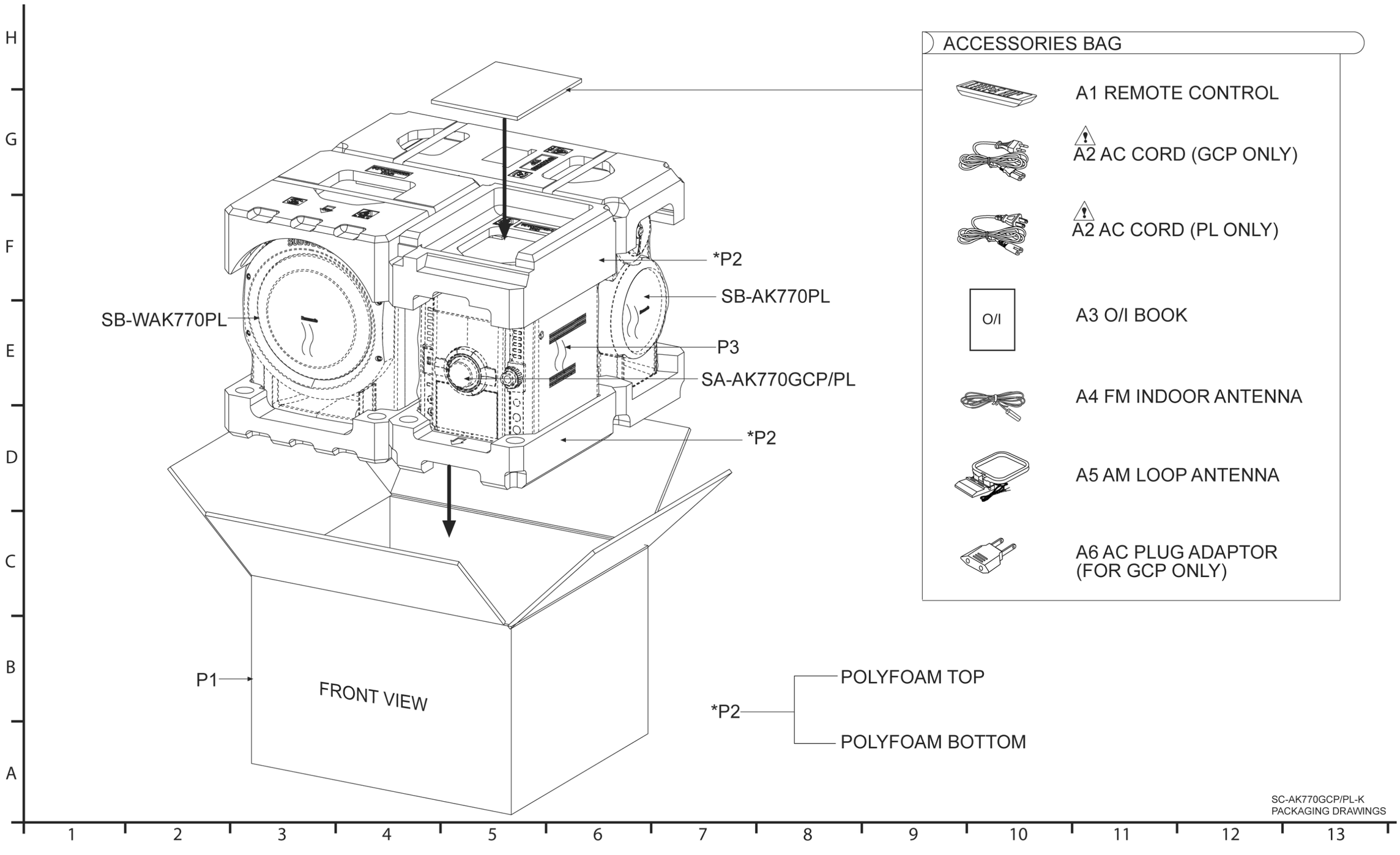

SC-AK770GCP/PL-K
PACKAGING DRAWINGS

23 Replacement Parts List

Notes:

- Important safety notice:

  Components identified by ⚠ mark have special characteristics important for safety.

  Furthermore, special parts which have purposes of fire-retardent (resistors), high-quality sound (capacitors), low noise (resistors), etc are used.

  When replacing any of these components, be sure to use only manufacturer's specified parts shown in the parts list.
- The parenthesized indications in the Remarks columns specify the areas or colour. (Refer to the cover page for area or colour)

  Parts without these indications can be used for all areas.
- Warning: This product uses a laser diode. Refer to caution statements on "Precaution of Laser Diode".
- Capacitor values are in microfarads (μF) unless specified otherwise, P= Pico-farads (pF), F= Farads.
- Resistance values are in ohms, unless specified otherwise, 1K=1,000 (OHM).
- The marking (RTL) indicates that the Retention Time is limited for this items. After the discontinuation of this assembly in production, the item will continue to be available for a specific period of time. The retention period of a availability is dependent on the type of assembly, and in accordance with the laws governing part and product retention. After the end of this period, the assembly will no longer be available.
- [M] Indicates in the Remarks columns indicates parts supplied by **PAVCSG.**
- Reference for O/I book languages are as follows:

Ar:	Arabic	Du:	Dutch	It:	Italian	Sp	Spanish
Cf:	Canadian French	En:	English	Ko:	Korean	Sw:	Swedish
Cz:	Czech	Fr:	French	Po:	Polish	Co:	Traditional Chinese
Da:	Danish	Ge:	German	Ru:	Russian	Cn:	Simplified Chinese
Pe:	Persian	Ur:	Ukraine	Pr:	Portuguese		

Ref. No.	Part No.	Part Name & Description	Remarks
		CABINET AND CHASSIS	
1	REEV0139	21P FFC CABLE (DECK-MAIN)	[M]
2	REEX0740	10P FFC CABLE	[M]
3	REXX0704	5P WIRE (RIPPING-USB)	[M]
4	REEX0881	17P FFC CABLE (MAIN TO DAMP)	[M]
5	REEX0882	21P FFC CABLE (CD-MAIN)	[M]
6	REEX0883	27P FFC CABLE (MAIN-PANEL)	[M]
7	REEX0877	30P FFC CABLE (MAIN-RIPPING)	[M]
8	ENG06836QRF	TUNER PACK	[M]
9	RDGX0040	VOLUME GEAR	[M]
10	RGCX0010-R	LIGHT REFLECTOR	[M]
11	RFKGAAK770PL	FRONT PANEL ASS'Y	[M]
12	RGKX0482-K	VOLUME ORNAMENT	[M]
13	RGKX0483-K1	CD LID	[M]
14	RGKX0488-R	DYNAIMC BASS ORNAMENT	[M]
15	RGLX0164-Q	VOLUME LIGHT PIECE	[M]
16	RGLX0167-Q	POWER LIGHT PIECE	[M]
18	RGRX0070F-A	REAR PANEL	[M] PL ⚠
18	RGRX0070G-A	REAR PANEL	[M] GCP ⚠
20	RGUX0764-K	FUNCTION BUTTON L	[M]
21	RGUX0765-1S	DYNAMIC BASS BUTTON	[M]
22	RGUX0766A-K	5CD CHANGE BUTTON	[M]
23	RGUX0767A-K	POWER CONTROL BUTTON	[M]
24	RGUX0768-K	CASSETTE EJECT BUTTON	[M]
25	RGUX0777-K	FUNCTION BUTTON R	[M]
27	RGWX0072-S	VOLUME KNOB	[M]
29	RHD26046-L	SCREW	[M]
30	RHD30007-K2J	SCREW	[M]
32	RHD30111-3	SCREW	[M]
33	RHD30119-S	SCREW	[M]
34	RKA0072-KJ	LEG CUSHION	[M]
35	RKFX0143-K1	CASSETTE LID	[M]
36	RKMX0144-K	TOP CABINET	[M] ⚠
38	RMAX0333-2	CHASSIS SUPPORT	[M]
39	RMBV0042-2	CASSETTE LID SPRING	[M]

Ref. No.	Part No.	Part Name & Description	Remarks
40	RMBX0086	CD LID OPEN SPRING	[M]
41	RMC0465	TR SPRING	[M]
42	RMGX0033	CUSHION RUBBER	[M]
43	RMKX0151-1	CD CHASSIS	[M]
44	RMKX0148-2	BOTTOM CHASSIS	[M]
45	RMKX0149	INNER CHASSIS	[M]
46	RMNV0059	LED HOLDER	[M]
47	RMNV0079-1	FL HOLDER	[M]
49	RMY0285	HEAT SINK	[M]
50	RXXX0105	HEAT SINK UNIT C	[M]
51	RMZ0339	ZENER COVER	[M] GCP ⚠
53	RSCX0186	SD SHIELD (TOP)	[M]
54	RSCX0187	SD SHIELD (BOTTOM)	[M]
56	RUS757ZAA	CASSETTE HALF SPRING	[M]
57	RXGX0002	DAMPER GEAR	[M]
58	RXXX0085-1J	HEAT SINK UNIT A	[M]
59	RXXX0104	HEAT SINK UNIT B	[M]
60	XTB3+10JFJ	SCREW	[M]
62	XTV3+10GFJ-M	SCREW	[M]
63	XTW3+12TFJ	SCREW	[M]
64	XTW3+18TFJ	SCREW	[M]
65	REEX0904	11P FFC CABLE (MAIN-CD)	[M]
67	RWJ1108055SS	8P WIRE (PANEL-TACT)	[M]
68	REXX0686	WHITE WIRE (VOLTAGE SELECTOR)	[M] GCP ⚠
69	REXX0687	BLUE WIRE (VOLTAGE SELECTOR)	[M] GCP ⚠
70	RMZX0039	IC INSULATOR	[M]
71	REEX0884	6P FFC CABLE (MAIN-RIPPING)	[M]
74	REXX0683	8P WIRE (SMPS-DAMP)	[M]
75	RMQX0318-K	FAN COVER	[M]
77	XTW3+8TFJ	SCREW	[M]
78	RGUX0769-K	RIPPING BUTTON	[M]
80	L6FAYYYH0088	FAN UNIT	[M]
81	L6FALEFH0023	FAN UNIT	[M]
82	RMNX0287A	USB JACK HOLDER	[M]
83	XTN2+6GFJ	SCREW	[M]
84	REXX0684	BLACK WIRE	[M] PL ⚠

Ref. No.	Part No.	Part Name & Description	Remarks
85	REXX0685	RED WIRE	[M] PL ⚠
86	RGWX0056-1K	MIC VOLUME KNOB	[M]
88	RMVX0119	BARRIER COVER	[M] PL
89	REZX0024	RED WIRE	[M] GCP ⚠
90	REZX0023	BLACK WIRE	[M] GCP ⚠
91	RMNX0190	LED HOLDER	[M]
		CASSETTE DECK	
101	REDX0001	R/P HEAD BLOCK SUB ASS'Y	[M]
103	RDG0300	REEL BASE GEAR	[M]
104	RDG0301	WINDING RELAY GEAR	[M]
105	RDK0026-4	MAIN GEAR	[M]
107	RDV0033-4	WINDING BELT	[M]
108	RDV0064-1	CAPSTAN BELT	[M]
110	RMB0312	TRIGGER LEVER SPRING	[M]
111	RMB0400	REEL SPRING	[M]
112	RMB0403	HEAD PANEL SPRING	[M]
113	RMB0404	BRAKE ROD SPRING	[M]
114	RMB0406-5	FR LEVER SPRING	[M]
115	RMB0408	THRUST SPRING	[M]
116	RML0370-4	TRIGGER LEVER	[M]
117	RML0371	FR LEVER	[M]
118	RML0372-2	WINDING LEVER	[M]
119	RML0374-2	EJECT LEVER	[M]
120	RMM0131-1	BRAKE ROD	[M]
121	RMM0133-1	EJECT ROD	[M]
122	RMQ0519	REEL HUB	[M]
123	RMS0398-1	MOVING CORE	[M]
124	RXQ0470-2	PLUNGER ASS'Y	[M]
125	RMC0061	PACK SPRING	[M]
126	RXF0061-1	FLYWHEEL F ASS'Y	[M]
128	RXG0040	FF RELAY GEAR ASS'Y	[M]
129	RMK0283A-2	SUB-CHASSIS	[M]
130	RXL0124	PINCH ROLLER F ASS'Y	[M]
130-1	RMB0401	PINCH ARM SPRING F	[M]
132	RXL0126	WINDING ARM ASSY	[M]
133	RXQ0412-3	HEAD PANEL ASSY	[M]
133-1	RMB0405-1	FR ROD SPRING	[M]
133-2	RMM0132-1	FR ROD	[M]
134	REM0120	CAP MOTOR ASS'Y	[M]
135	RHD26022-1	MOTOR SCREW	[M]
136	XTW2+5LFJ	HEAD BLOCK UNIT SCREW	[M]
137	XTW26+10SFJ	SUB-CHASSIS SCREW	[M]
138	XYC2+JF17FJ	PCB EARTH SCREW	[M]
139	RFKJSTR280PP	MECHA CHASSIS ASS'Y	[M]
140	XTW2+10LFJ	SCREW	[M]
		TRAVERSE UNIT	
340	RAEX0190A-V	TRAVERSE ASSEMBLY UNIT	[M] (RTL) ⚠
		PACKING MATERIALS	
P1	RPGX1886	PACKING CASE	[M] PL
P1	RPGX1887	PACKING CASE	[M] GCP
P2	RPNX0534	POLYFOAM	[M]
P3	RPFX0198	MIRAMAT	[M]
		ACCESSORIES	
A1	N2QAYB000281	REMOTE CONTROL	[M]
A1-1	RKK-HTR0051K	R/C BATTERY COVER	[M]
A2	K2CB2CB00021	AC CORD	[M] PL ⚠
A2	K2CQ2CA00007	AC CORD	[M] GCP ⚠
A3	RQTV0281-M	O/I BOOK	[M] PL
A3	RQTV0282-M	O/I BOOK	[M] GCP
A4	RSA0007-L1	FM INDOOR ANTENNA	[M]

Ref. No.	Part No.	Part Name & Description	Remarks
A5	N1DAAAA00001	AM LOOP ANTENNA	[M]
A6	K2DA42E00001	AC PLUG ADAPTOR	[M] GCP
		PRINTED CIRCUIT BOARDS	
PCB1	REPX0673C	USB CONNECTOR/LED P.C.B.	[M] (RTL) PL
	REPX0673D	USB CONNECTOR/LED P.C.B.	[M] (RTL) GCP
PCB2	REPX0636A	CD SERVO P.C.B.	[M] (RTL)
PCB3	REPX0493A	CD LOADING P.C.B.	[M] (RTL)
PCB4	REPX0622E	SMPS P.C.B.	[M] (RTL) PL ⚠
	REPX0622G	SMPS P.C.B.	[M] (RTL) GCP ⚠
PCB5	REPX0638B	D-AMP P.C.B.	[M] (RTL)
PCB6	REPX0647A	DECK P.C.B.	[M] (RTL)
PCB7	REPX0673C	MAIN P.C.B.	[M] (RTL) PL
	REPX0673D	MAIN P.C.B.	[M] (RTL) GCP
PCB8	REPX0649B	PANEL P.C.B.	[M] (RTL)
PCB9	REPX0321L	DECK MECHANISM P.C.B.	[M] (RTL)
PCB10	REPX0622E	AC INLET P.C.B.	[M] (RTL) PL ⚠
	REPX0622G	AC INLET P.C.B.	[M] (RTL) GCP ⚠
PCB11	REPX0649B	MIC P.C.B.	[M] (RTL)
PCB12	REPX0649B	REMOTE SENSOR P.C.B.	[M] (RTL)
PCB13	REPX0622G	VOLTAGE SELECTOR P.C.B.	[M] (RTL) GCP ⚠
PCB14	REPX0649B	MUSIC PORT P.C.B.	[M] (RTL)
PCB15	REPX0649B	TACT SWITCH P.C.B.	[M] (RTL)
PCB16	REPX0660B	JUPITER USB P.C.B.	[M] (RTL)
PCB17	REPX0649B	SIDE BAR (L) LED P.C.B.	[M] (RTL)
PCB18	REPX0649B	SIDE BAR (R) LED P.C.B.	[M] (RTL)
		INTEGRATED CIRCUITS	
IC502	C0DBZYE00002	IC SWITCHING	[M]
IC551	C0FBAK000026	IC AD CONVERTER	[M]
IC552	C0FBBY000027	IC DA CONVERTER	[M]
IC701	RFKW0660B	IC FLASH ROM IC	[M]
IC751	C3ABPG000160	IC EEPROM	[M]
IC801	MN2WS0042AA	IC MICRO-PROCESSOR	[M]
IC802	C0DBZYY00293	IC VOLTAGE REGULATOR	[M]
IC971	CNB13030R2AU	IC PHOTO INTERUPTOR	[M]
IC1000	C1AA00000612	IC ANALOG SWITCH	[M]
IC1001	AN7326K	IC DECK R/P	[M]
IC2121	C0ABBB000230	IC OP-AMP	[M]
IC2701	C0DAAMH00012	IC DC-DC CONVERTER	[M]
IC2741	C0DBCYY00005	IC +3.3V VOLTAGE REGULATOR	[M]
IC2761	C0CAAKG00046	IC VOLTAGE REGULATOR	[M]
IC2801	RFKWAK570PLK	IC MICRO-PROCESSOR	[M]
IC2803	C1AB00002885	IC AUDIO SOUND PROCESSOR	[M]
IC2804	C0AABB000125	IC OP-AMP	[M]
IC2810	C0ABBB000230	IC OP-AMP	[M]
IC5000	C1BA00000487	IC AUDIO DIGITAL AMP	[M]

Ref. No.	Part No.	Part Name & Description	Remarks
IC5200	C1BA00000487	IC AUDIO DIGITAL AMP	[M]
IC5400	C1BA00000487	IC AUDIO DIGITAL AMP	[M]
IC5500	C0JBAB000902	IC INVERTER GATE	[M]
IC5501	C0JBAF000716	IC D-TYPE FLIP FLOP	[M]
IC5701	C5HACYY00003	IC SHUNT REGULATOR	[M] GCP
IC5701	C5HACYY00004	IC SHUNT REGULATOR	[M] PL
IC5780	C0ABBA000168	IC OP-AMP	[M] GCP
IC5799	MIP4110MSSCF	IC SWITCHIN REGULATOR	[M]
IC5801	C0DABFC00002	IC SHUNT REGULATOR	[M]
IC5899	C0DAEMZ00001	IC SHUNT REGULATOR	[M]
IC6601	C0HBB0000057	IC FL DRIVER	[M]
IC6701	C0ABBB000230	IC MIC-AMP	[M]
IC7001	MN6627954MA	IC SERVO PROCESSOR	[M]
IC7002	BA5948FPE2	IC 4 CH DRIVER	[M]
		TRANSISTORS	
Q1303	B1GBCFGH0001	TRANSISTOR	[M]
Q1304	B1GDCFGH0002	TRANSISTOR	[M]
Q1309	B1AAGC000006	TRANSISTOR	[M]
Q1310	B1AAGC000006	TRANSISTOR	[M]
Q1312	B1ABCF000011	TRANSISTOR	[M]
Q1314	B1GDCFGH0002	TRANSISTOR	[M]
Q1315	B1ACKD000006	TRANSISTOR	[M]
Q1316	2SD09650RA	TRANSISTOR	[M]
Q1317	B1ABGC000005	TRANSISTOR	[M]
Q2011	B1GBCFJJ0051	TRANSISTOR	[M]
Q2012	B1GBCFJJ0051	TRANSISTOR	[M]
Q2311	B1ABGC000005	TRANSISTOR	[M]
Q2312	B1ABGC000005	TRANSISTOR	[M]
Q2317	B1ABGC000005	TRANSISTOR	[M]
Q2359	B1ABGC000005	TRANSISTOR	[M]
Q2360	B1ABGC000005	TRANSISTOR	[M]
Q2371	B1ABCF000176	TRANSISTOR	[M]
Q2372	B1ABCF000176	TRANSISTOR	[M]
Q2373	B1ABCF000176	TRANSISTOR	[M]
Q2374	B1GDCFJJ0047	TRANSISTOR	[M]
Q2375	B1GDCFJJ0047	TRANSISTOR	[M]
Q2417	B1ABGC000005	TRANSISTOR	[M]
Q2501	B1ABCF000176	TRANSISTOR	[M]
Q2708	B1ADCE000012	TRANSISTOR	[M]
Q2711	B1BACG000023	TRANSISTOR	[M]
Q2735	B1BACD000018	TRANSISTOR	[M]
Q2743	B1ACKD000006	TRANSISTOR	[M]
Q2745	B1GBCFLL0037	TRANSISTOR	[M]
Q2751	B1BACG000023	TRANSISTOR	[M]
Q2761	B1BCCG000002	TRANSISTOR	[M]
Q2771	B1GBCFJJ0051	TRANSISTOR	[M]
Q2772	B1GBCFJJ0051	TRANSISTOR	[M]
Q2800	B1GBCFJJ0051	TRANSISTOR	[M]
Q2812	B1GBCFLL0037	TRANSISTOR	[M]
Q2900	B1BABK000001	TRANSISTOR	[M]
Q2942	B1ACKD000006	TRANSISTOR	[M]
Q2943	B1ABCF000176	TRANSISTOR	[M]
Q2947	B1ABCF000176	TRANSISTOR	[M]
Q2948	B1ABCF000176	TRANSISTOR	[M]
Q2949	B1ABCF000176	TRANSISTOR	[M]
Q2961	B1ACKD000006	TRANSISTOR	[M]
Q2962	B1ABCF000176	TRANSISTOR	[M]
Q2967	B1ABCF000176	TRANSISTOR	[M]
Q2970	B1ADCE000012	TRANSISTOR	[M]
Q5101	B1ABCF000176	TRANSISTOR	[M]
Q5102	B1ABCF000176	TRANSISTOR	[M]
Q5601	B1ABCF000176	TRANSISTOR	[M]
Q5603	B1ADCE000012	TRANSISTOR	[M]
Q5604	B1ABCF000176	TRANSISTOR	[M]
Q5720	2SC3940ARA	TRANSISTOR	[M]
Q5721	2SA207700L	TRANSISTOR	[M]
Q5722	B1ABCF000176	TRANSISTOR	[M]
Q5750	B1ABCF000176	TRANSISTOR	[M] GCP
Q5802	B1ABCF000176	TRANSISTOR	[M]
Q5803	2SC3940ARA	TRANSISTOR	[M]
Q5860	2SA207700L	TRANSISTOR	[M]
Q5861	B1ABCF000176	TRANSISTOR	[M]

Ref. No.	Part No.	Part Name & Description	Remarks
Q5862	B1ABCF000176	TRANSISTOR	[M]
Q5898	B1ABCF000176	TRANSISTOR	[M]
Q6511	B1GBCFJN0033	TRANSISTOR	[M]
Q6600	B1GBCFJN0033	TRANSISTOR	[M]
Q6641	B1GBCFJN0033	TRANSISTOR	[M]
Q7601	B1ADCF000001	TRANSISTOR	[M]
QR111	B1GBCFJJ0051	TRANSISTOR	[M]
QR2317	B1GDCFGA0018	TRANSISTOR	[M]
QR5801	UNR221400L	TRANSISTOR	[M]
QR5802	B1GDCFGA0018	TRANSISTOR	[M]
QR5810	B1GBCFLL0037	TRANSISTOR	[M]
		DIODES	
D801	MA27D2900L	DIODE	[M]
D802	B0JCMD000022	DIODE	[M]
D971	MA2C16500E	DIODE	[M]
D1111	B3AAA0001014	DIODE	[M]
D1301	B0ACCK000005	DIODE	[M]
D2141	MA2J11100L	DIODE	[M]
D2142	MA2J11100L	DIODE	[M]
D2143	B0BC2R4A0006	DIODE	[M]
D2144	B0BC2R4A0006	DIODE	[M]
D2371	MA2J11100L	DIODE	[M]
D2372	MA2J11100L	DIODE	[M]
D2503	B0ADCC000002	DIODE	[M]
D2611	B0ACCK000005	DIODE	[M]
D2707	B0EAKM000117	DIODE	[M]
D2708	B0EAKM000117	DIODE	[M]
D2711	B0BC4R0A0006	DIODE	[M]
D2731	B0EAKM000117	DIODE	[M]
D2732	B0EAKM000117	DIODE	[M]
D2733	B0BC9R000008	DIODE	[M]
D2734	B0EAKM000117	DIODE	[M]
D2735	B0EAKM000117	DIODE	[M]
D2753	MAZ810000L	DIODE	[M]
D2774	B0ADCJ000020	DIODE	[M]
D2812	B0ACCK000005	DIODE	[M]
D2813	B0ACCK000005	DIODE	[M]
D2867	B0EAKM000117	DIODE	[M]
D2869	B0EAKM000117	DIODE	[M]
D2901	B0BC035A0007	DIODE	[M]
D2903	B0EAMM000057	DIODE	[M]
D2906	B0JAME000114	DIODE	[M]
D2908	B0EAMM000057	DIODE	[M]
D2909	MAZ82400HL	DIODE	[M]
D2930	B0EAKM000117	DIODE	[M]
D2940	MA2J11100L	DIODE	[M]
D2946	B0ADCJ000020	DIODE	[M]
D2947	B0BC5R600003	DIODE	[M]
D2948	B0BC5R600003	DIODE	[M]
D2968	B0ADCJ000020	DIODE	[M]
D5001	B0HCMM000019	DIODE	[M]
D5002	B0HCMM000019	DIODE	[M]
D5003	B0HCMM000019	DIODE	[M]
D5004	B0HCMM000019	DIODE	[M]
D5201	B0HCMM000019	DIODE	[M]
D5202	B0HCMM000019	DIODE	[M]
D5203	B0HCMM000019	DIODE	[M]
D5204	B0HCMM000019	DIODE	[M]
D5401	B0HCMM000019	DIODE	[M]
D5402	B0HCMM000019	DIODE	[M]
D5403	B0HCMM000019	DIODE	[M]
D5404	B0HCMM000019	DIODE	[M]
D5501	MA2J11100L	DIODE	[M]
D5502	MA2J11100L	DIODE	[M]
D5503	MAZ80510ML	DIODE	[M]
D5701	B0FBAR000041	DIODE	[M]
D5702	B0ZAZ0000052	DIODE	[M]
D5721	B0BC010A0007	DIODE	[M] GCP
D5721	MAZ81800ML	DIODE	[M] PL
D5722	B0BC019A0007	DIODE	[M]
D5723	MA2J11100L	DIODE	[M]
D5724	MA2J11100L	DIODE	[M]

Ref. No.	Part No.	Part Name & Description	Remarks
D5725	B0BC6R100010	DIODE	[M]
D5726	B0EAKM000117	DIODE	[M]
D5727	MA2J11100L	DIODE	[M]
D5728	MA2J11100L	DIODE	[M]
D5729	B0EAMM000057	DIODE	[M]
D5730	MA2J11100L	DIODE	[M]
D5732	B0BC035A0007	DIODE	[M]
D5733	B0HCMM000019	DIODE	[M]
D5793	B0HAMP000094	DIODE	[M]
D5795	B0BC5R000009	DIODE	[M] GCP
D5796	MA2J11100L	DIODE	[M] GCP
D5797	MA2J72800L	DIODE	[M]
D5798	B0HAMP000094	DIODE	[M]
D5799	B0HAMP000094	DIODE	[M] GCP
D5801	B0HBSM000043	DIODE	[M]
D5802	B0HBSM000043	DIODE	[M]
D5803	B0HFRJ000012	DIODE	[M]
D5804	B0EAMM000057	DIODE	[M]
D5805	B0EAMM000057	DIODE	[M]
D5806	MAZ80750ML	DIODE	[M]
D5807	MA2J11100L	DIODE	[M]
D5809	MA2J11100L	DIODE	[M]
D5896	B0EAMM000057	DIODE	[M]
D6458	B3AAA0000489	DIODE	[M]
D6511	B3AAA0001014	DIODE	[M]
D6512	B3AAA0001014	DIODE	[M]
D6602	B3AAA0001014	DIODE	[M]
D6604	B3AAA0001014	DIODE	[M]
D6641	B3AAA0001014	DIODE	[M]
D6672	B0BC2R4A0006	DIODE	[M]
D7650	MAZ80560ML	DIODE	[M]
DZ2702	B0JCPD000025	DIODE	[M]
DZ5701	ERZV10V511CS	ZENER	[M] ⚠
		VARISTORS	
VA1110	EZJZ1V171AA	VARISTOR	[M]
VA1120	EZJZ1V171AA	VARISTOR	[M]
		VARIABLE RESISTORS	
VR6500	EVEKE2F3524B	VOLUME JOG	[M]
VR6630	K9AA024A0008	VR BASS CONTROL	[M]
VR6701	EVUF2AF15B14	MIC JOG	[M]
		SWITCHES	
S971	K0J1BB000017	SW MODE	[M]
S972	K0J1BB000021	SW HALF	[M]
S975	K0J1BB000021	SW RECINH_F	[M]
S5701	K0ABCA000007	SW VOLTAGE SELECTOR	[M] GCP ⚠
S6100	EVQ21405RJ	SW POWER	[M]
S6101	EVQ21405RJ	SW DISPLAY	[M]
S6102	EVQ21405RJ	SW SUBWOOFER	[M]
S6106	EVQ21405RJ	SW TAPE/REC	[M]
S6107	EVQ21405RJ	SW USB/REC	[M]
S6108	EVQ21405RJ	SW D.BASS	[M]
S6201	EVQ21405RJ	SW OPEN/CLOSE	[M]
S6202	EVQ21405RJ	SW EXCHANGE	[M]
S6203	EVQ21405RJ	SW CD1	[M]
S6204	EVQ21405RJ	SW CD2	[M]
S6205	EVQ21405RJ	SW CD3	[M]
S6206	EVQ21405RJ	SW CD4	[M]
S6207	EVQ21405RJ	SW CD5	[M]
S6208	EVQ21405RJ	SW STOP/DEMO	[M]
S6300	EVQ21405RJ	SW FWD	[M]
S6301	EVQ21405RJ	SW MANUAL EQ	[M]
S6302	EVQ21405RJ	SW REW	[M]
S6303	EVQ21405RJ	SW TAPE	[M]
S6304	EVQ21405RJ	SW FM/AM	[M]
S6306	EVQ21405RJ	SW CD	[M]
S6307	EVQ21405RJ	SW USB	[M]
S6308	EVQ21405RJ	SW EXT_IN	[M]

Ref. No.	Part No.	Part Name & Description	Remarks
S6820	EVQ21405RJ	SW EJECT	[M]
S7201	K0L1BA000133	SW REST	[M]
S7202	K0L1BA000133	SW CD OPEN	[M]
		CONNECTORS	
CN502	K1MN06AA0076	6P CONNECTOR	[M]
CN503	K1KA05BA0014	5P CONNECTOR	[M]
CN601	K1MY20BA0046	20P CONNECTOR	[M]
CN602	K1MY10AA0021	10P CONNECTOR	[M]
CN1112	K1KA02AA0186	2P CONNECTOR	[M]
CN1113	K1KA05BA0061	5P CONNECTOR	[M]
CN1305	K1MN21B00010	21P FFC CONNECTOR	[M]
CN2001	K1KA02AA0186	2P CONNECTOR	[M]
CN2011	K1MY21AA0124	21P CONNECTOR	[M]
CN2801	K1MN22AA0004	22P CONNECTOR	[M]
CN2802	K1MN11AA0003	11P CONNECTOR	[M]
CN2804	K1MN20AA0004	20P CONNECTOR	[M]
CN2806	K1MY27AA0124	27P FFC CONNECTOR	[M]
CN2807	K1MN10AA0003	10P FFC CONNECTOR	[M]
CN2810	K1KA02AA0186	2P CONNECTOR	[M]
CN2811	K1KC05A00001	5P CONNECTOR	[M]
CN2815	K1MN06AA0003	6P CONNECTOR	[M]
CN2820	K1KA02AA0186	2P CONNECTOR	[M]
CN5050	K1MN17AA0004	17P CONNECTOR	[M]
CN5500	K1KA08AA0180	8P CONNECTOR	[M]
CN5802	K1KA11AA0194	11P CONNECTOR	[M]
CN6001	K1MY27AA0124	27P FFC CONNECTOR	[M]
CN6012	K1KA04AA0031	4P CONNECTOR	[M]
CN6014	K1KA04AA0031	4P CONNECTOR	[M]
CN6602	K1KB04A00046	4P CONNECTOR	[M]
CN6604	K1KB04A00046	4P CONNECTOR	[M]
CN6701	K1KA07AA0193	7P CONNECTOR	[M]
CN6807	K1MN10AA0003	10P FFC CONNECTOR	[M]
CN7001	K1MN16B00154	16P CONNECTOR	[M]
CN7002	K1MN22BA0005	22P CONNECTOR	[M]
CP1301	K1MY05AA0043	5P CONNECTOR	[M]
CP1902	K1KA09BA0153	9P CONNECTOR	[M]
CS971	RJU071H09M1	9P CONNECTOR	[M]
		COILS & INDUCTORS	
L551	G1C100KA0101	INDUCTOR	[M]
L552	G1C100KA0101	INDUCTOR	[M]
L553	G1C100KA0101	INDUCTOR	[M]
L804	G1C100KA0101	INDUCTOR	[M]
L805	G1C100KA0101	INDUCTOR	[M]
L1100	G1BYYYB00009	COMMON MODE CHOKE COIL	[M]
L1301	G2ZZ00000024	BIAS OSC COIL	[M]
L1302	G0C470JA0052	INDUCTOR	[M]
L2051	G0C101JA0052	INDUCTOR	[M]
L2055	G0C101JA0052	INDUCTOR	[M]
L2400	G0C101JA0052	INDUCTOR	[M]
L2702	G0A101ZA0028	CHOKE COIL	[M]
L2910	G0A220GA0026	CHOKE COIL	[M]
L5000	G0A150L00003	CHOKE COIL	[M]
L5001	G0B9R5K00003	LINE FILTER	[M]
L5002	G0B9R5K00003	LINE FILTER	[M]
L5200	G0A150L00003	CHOKE COIL	[M]
L5201	G0B9R5K00003	LINE FILTER	[M]
L5400	G0A150L00003	CHOKE COIL	[M]
L5500	J0JKB0000020	INDUCTOR	[M]
L5501	J0JKB0000020	INDUCTOR	[M]
L5702	ELF22V035B	LINE FILTER	[M] ⚠
L6671	J0JBC0000019	INDUCTOR	[M]
L6701	J0JBC0000019	INDUCTOR	[M]
L6702	J0JBC0000019	INDUCTOR	[M]
L6801	J0JBC0000019	INDUCTOR	[M]
L6802	J0JBC0000019	INDUCTOR	[M]
L6811	J0JBC0000019	INDUCTOR	[M]
L6812	J0JBC0000019	INDUCTOR	[M]
L6851	J0JBC0000019	INDUCTOR	[M]
L6863	J0JBC0000019	INDUCTOR	[M]
LB503	J0JBC0000118	INDUCTOR	[M]

Ref. No.	Part No.	Part Name & Description	Remarks
LB504	J0JBC0000118	INDUCTOR	[M]
LB601	J0JAC0000021	INDUCTOR	[M]
LB602	J0JHC0000045	INDUCTOR	[M]
LB603	J0JAC0000021	INDUCTOR	[M]
LB605	J0JAC0000021	INDUCTOR	[M]
LB614	J0JHC0000045	INDUCTOR	[M]
LB615	J0JAC0000021	INDUCTOR	[M]
LB616	J0JHC0000045	INDUCTOR	[M]
LB618	J0JAC0000021	INDUCTOR	[M]
LB619	J0JHC0000045	INDUCTOR	[M]
LB620	J0JAC0000021	INDUCTOR	[M]
LB621	J0JAC0000021	INDUCTOR	[M]
LB622	J0JAC0000021	INDUCTOR	[M]
LB623	J0JHC0000045	INDUCTOR	[M]
LB624	J0JAC0000021	INDUCTOR	[M]
LB625	J0JBC0000019	INDUCTOR	[M]
LB626	J0JAC0000021	INDUCTOR	[M]
LB628	J0JAC0000021	INDUCTOR	[M]
LB629	J0JBC0000019	INDUCTOR	[M]
LB630	J0JAC0000021	INDUCTOR	[M]
LB801	J0JAC0000024	INDUCTOR	[M]
LB802	J0JAC0000024	INDUCTOR	[M]
LB1200	J0JHC0000034	INDUCTOR	[M]
LB1210	J0JHC0000034	INDUCTOR	[M]
		TRANSFORMERS	
T2900	G4D1A0000117	SWITCHING TRANSFORMER	[M] ⚠
T5701	ETS48AB116AC	SWITCHING TRANSFORMER	[M] GCP ⚠
T5701	ETS48AB12GAC	SWITCHING TRANSFORMER	[M] PL ⚠
T5751	ETS19AB256AG	BACKUP SW TRANFORMER	[M] ⚠
		COMPOMENT COMBINATION	
Z6601	B3RAD0000146	REMOTE CONTROL SENSOR	[M]
ZA5701	K3GE1ZZ00001	FUSE HOLDER	[M]
ZA5702	K3GE1ZZ00001	FUSE HOLDER	[M]
ZJ5400	K4CZ01000027	TERMINAL	[M]
ZJ5410	K4CZ01000027	TERMINAL	[M]
ZJ5701	K4CZ01000027	TERMINAL	[M]
ZJ5702	K4CZ01000027	TERMINAL	[M] GCP
ZJ5801	K4CZ01000027	TERMINAL	[M]
ZJ5803	K4CZ01000027	TERMINAL	[M]
		WIRES	
J6001	RWJ1103055SS	3P WIRE (PANEL-REMOTE)	[M]
ZJ1111	REXX0681	2P WIRE (USB-MAIN)	[M]
ZJ2701	REXX0680	11P WIRE (MAIN-SMPS)	[M]
ZJ6601	REXX0679	7P WIRE (PANEL-MIC)	[M]
ZJ6801	REXX0681	2P WIRE (PANEL-MUSIC PORT)	[M]
WR1903	RWJ0102050KR	WIRE	[M]
		PHOTO COUPLERS	
PC5701	B3PBA0000402	PHOTO COUPLER	[M] ⚠
PC5702	B3PBA0000402	PHOTO COUPLER	[M] ⚠
PC5720	B3PBA0000402	PHOTO COUPLER	[M] ⚠
PC5799	B3PBA0000402	PHOTO COUPLER	[M] ⚠
		OSCILLATORS	
X801	H0J169500031	CRYSTAL OSCILLATOR	[M]
X802	H0J120500057	CRYSTAL OSCILLATOR	[M]
X2602	H2B100500004	CRYSTAL OSCILLATOR	[M]
X2611	H0A327200115	CRYSTAL OSCILLATOR	[M]
X5500	H2A6023A0011	CRYSTAL OSCILLATOR	[M]
X5501	H2A7003A0011	CRYSTAL OSCILLATOR	[M]
X7201	H0H169500013	CRYSTAL OSCILLATOR	[M]
		FL DISPLAY	

Ref. No.	Part No.	Part Name & Description	Remarks
FL6601	A2BB00000171	LCD DISPLAY	[M]
		FUSES	
F1	K5D802APA008	FUSE	[M] PL ⚠
F1	K5D802BNA005	FUSE	[M] GCP ⚠
		FUSE PROTECTOR	
FP2901	K5G4013A0001	FUSE PROTECTOR	[M] ⚠
		THERMISTORS	
TH5701	D4CAA5R10001	THERMISTOR	[M] PL ⚠
TH5702	D4CAC8R00002	THERMISTOR	[M] GCP ⚠
TH5860	D4CC11040013	THERMISTOR	[M]
		JACKS	
JK1111	K1FY104B0011	USB CONNECTOR	[M]
JK2801	K2HA204B0153	AUX CONNECTOR	[M]
JK5001	K4AL06B00001	JK SPEAKER	[M]
JK6701	K2HC103A0031	JK MIC	[M]
JK6800	K2HC103A0031	JK HEADPHONE	[M]
JK6810	K2HC1YYA0002	JK MUSIC PORT	[M]
P5701	K2AA2B000017	AC INLET	[M] GCP ⚠
P5701	K2AB2B000010	AC INLET	[M] PL ⚠
		EARTH TERMINAL	
E2001	K9ZZ00001279	EARTH PLATE	[M]
		CHIP JUMPERS	
L501	ERJ6GEY0R00V	0 1/8W	[M]
LB501	ERJ2GE0R00X	0 1/16W	[M]
LB502	ERJ2GE0R00X	0 1/16W	[M]
LB7262	D0GBR00JA008	0 1/16W	[M]
LB7263	D0GBR00JA008	0 1/16W	[M]
LB7264	D0GBR00JA008	0 1/16W	[M]
W2700	D0GBR00JA008	0 1/16W	[M]
W2702	D0GBR00JA008	0 1/16W	[M]
W2703	D0GDR00JA017	0 1/10W	[M]
W2704	D0GDR00JA017	0 1/10W	[M]
W2705	D0GDR00JA017	0 1/10W	[M]
W2706	D0GBR00JA008	0 1/16W	[M]
W2707	D0GBR00JA008	0 1/16W	[M]
W2708	D0GBR00JA008	0 1/16W	[M]
W2709	D0GBR00JA008	0 1/16W	[M]
W2710	D0GBR00JA008	0 1/16W	[M]
W2711	D0GDR00JA017	0 1/10W	[M]
W2712	D0GDR00JA017	0 1/10W	[M]
W2713	ERJ8GEY0R00V	0 1/4W	[M]
W2714	D0GDR00JA017	0 1/10W	[M]
W2715	ERJ8GEY0R00V	0 1/4W	[M]
W2717	D0GDR00JA017	0 1/10W	[M]
W2718	ERJ8GEY0R00V	0 1/4W	[M]
W2719	D0GDR00JA017	0 1/10W	[M]
W2720	D0GBR00JA008	0 1/16W	[M]
W2721	D0GBR00JA008	0 1/16W	[M]
W2722	D0GDR00JA017	0 1/10W	[M]
W2723	D0GDR00JA017	0 1/10W	[M]
W2724	D0GBR00JA008	0 1/16W	[M]
W2726	D0GDR00JA017	0 1/10W	[M]
W2728	D0GDR00JA017	0 1/10W	[M]
W2729	D0GBR00JA008	0 1/16W	[M]
W2730	ERJ8GEY0R00V	0 1/4W	[M]
W2731	ERJ8GEY0R00V	0 1/4W	[M]
W2732	ERJ8GEY0R00V	0 1/4W	[M]

Ref. No.	Part No.	Part Name & Description	Remarks
W2733	D0GDR00JA017	0 1/10W	[M]
W2734	D0GBR00JA008	0 1/16W	[M]
W2735	D0GDR00JA017	0 1/10W	[M]
W2736	D0GDR00JA017	0 1/10W	[M]
W2737	D0GBR00JA008	0 1/16W	[M]
W2738	D0GDR00JA017	0 1/10W	[M]
W2739	D0GBR00JA008	0 1/16W	[M]
W2740	D0GBR00JA008	0 1/16W	[M]
W2741	D0GBR00JA008	0 1/16W	[M]
W2742	ERJ8GEY0R00V	0 1/4W	[M]
W2743	ERJ8GEY0R00V	0 1/4W	[M]
W2744	D0GDR00JA017	0 1/10W	[M]
W2745	D0GDR00JA017	0 1/10W	[M]
W2746	D0GDR00JA017	0 1/10W	[M]
W2747	D0GBR00JA008	0 1/16W	[M]
W2748	D0GDR00JA017	0 1/10W	[M]
W2749	D0GBR00JA008	0 1/16W	[M]
W2750	D0GDR00JA017	0 1/10W	[M]
W2751	D0GBR00JA008	0 1/16W	[M]
W2752	D0GBR00JA008	0 1/16W	[M]
W2753	D0GDR00JA017	0 1/10W	[M]
W2754	D0GBR00JA008	0 1/16W	[M]
W2755	D0GBR00JA008	0 1/16W	[M]
W5007	ERJ6GEY0R00V	0 1/8W	[M]
W5032	ERJ8GEY0R00V	0 1/4W	[M]
W5059	ERJ6GEY0R00V	0 1/8W	[M]
W5071	ERJ3GEY0R00V	0 1/10W	[M]
W5780	ERJ6GEY0R00V	0 1/8W	[M]
W5801	ERJ3GEY0R00V	0 1/10W	[M]
W5803	ERJ6GEY0R00V	0 1/8W	[M]
W5804	ERJ3GEY0R00V	0 1/10W	[M]
W5805	ERJ6GEY0R00V	0 1/8W	[M]
W5806	ERJ6GEY0R00V	0 1/8W	[M]
W5807	ERJ6GEY0R00V	0 1/8W	[M]
W6541	D0GDR00JA017	0 1/10W	[M]
W6570	D0GBR00JA008	0 1/16W	[M]
W7001	D0GBR00JA008	0 1/16W	[M]
W7002	D0GBR00JA008	0 1/16W	[M]
W7003	D0GBR00JA008	0 1/16W	[M]
W7004	D0GBR00JA008	0 1/16W	[M]
W7005	D0GBR00JA008	0 1/16W	[M]
W7006	D0GBR00JA008	0 1/16W	[M]
W7007	D0GBR00JA008	0 1/16W	[M]
W7008	D0GBR00JA008	0 1/16W	[M]
W7009	D0GBR00JA008	0 1/16W	[M]
W7010	D0GBR00JA008	0 1/16W	[M]
W7011	D0GBR00JA008	0 1/16W	[M]
W7012	D0GBR00JA008	0 1/16W	[M]
W7013	D0GBR00JA008	0 1/16W	[M]
W7014	D0GBR00JA008	0 1/16W	[M]
W7015	D0GBR00JA008	0 1/16W	[M]
W7016	D0GBR00JA008	0 1/16W	[M]
W7017	D0GBR00JA008	0 1/16W	[M]
W7018	D0GBR00JA008	0 1/16W	[M]
W7019	D0GBR00JA008	0 1/16W	[M]
W7020	D0GBR00JA008	0 1/16W	[M]
W7021	D0GBR00JA008	0 1/16W	[M]
W7024	D0GBR00JA008	0 1/16W	[M]
W7025	ERJ6GEY0R00V	0 1/8W	[M]
W7026	ERJ6GEY0R00V	0 1/8W	[M]
		RESISTORS	
R517	ERJ2GE0R00X	0 1/16W	[M]
R518	ERJ2GE0R00X	0 1/16W	[M]
R519	D0GA105JA023	1M 1/16W	[M]
R520	D0GA105JA023	1M 1/16W	[M]
R521	D0GA100JA023	10 1/16W	[M]
R522	D0GA100JA023	10 1/16W	[M]
R523	D0GA102JA023	1K 1/16W	[M]
R525	D0GA100JA023	10 1/16W	[M]
R526	D0GA100JA023	10 1/16W	[M]
R527	D0GA103JA023	10K 1/16W	[M]
R554	D0GA104JA023	100K 1/16W	[M]

Ref. No.	Part No.	Part Name & Description	Remarks
R555	D0GA221JA023	220 1/16W	[M]
R556	D0GA221JA023	220 1/16W	[M]
R557	D0GA223JA023	22K 1/16W	[M]
R558	D0GA223JA023	22K 1/16W	[M]
R559	D0GA104JA023	100K 1/16W	[M]
R560	D0GA473JA023	47K 1/16W	[M]
R561	D0GA473JA023	47K 1/16W	[M]
R653	D0GA473JA023	47K 1/16W	[M]
R654	D0GA473JA023	47K 1/16W	[M]
R655	D0GA473JA023	47K 1/16W	[M]
R701	D0GA473JA023	47K 1/16W	[M]
R704	D0GA473JA023	47K 1/16W	[M]
R705	ERJ2GE0R00X	0 1/16W	[M]
R801	D0GA220JA023	22 1/16W	[M]
R802	D0GA100JA023	10 1/16W	[M]
R803	D0GA100JA023	10 1/16W	[M]
R804	D0GA100JA023	10 1/16W	[M]
R806	D0GA100JA023	10 1/16W	[M]
R809	ERJ2GEJ101X	100 1/16W	[M]
R810	D0GA100JA023	10 1/16W	[M]
R811	D0GA100JA023	10 1/16W	[M]
R812	D0GA682JA023	6.8K 1/16W	[M]
R813	D0GA473JA023	47K 1/16W	[M]
R814	D0GA473JA023	47K 1/16W	[M]
R815	D0GA473JA023	47K 1/16W	[M]
R816	ERJ2GEJ101X	100 1/16W	[M]
R817	D0GA100JA023	10 1/16W	[M]
R818	D0GA473JA023	47K 1/16W	[M]
R821	D0GA473JA023	47K 1/16W	[M]
R822	D0GA473JA023	47K 1/16W	[M]
R824	D0GA473JA023	47K 1/16W	[M]
R825	D0GA100JA023	10 1/16W	[M]
R827	ERJ2GE0R00X	0 1/16W	[M]
R828	ERJ2GE0R00X	0 1/16W	[M]
R829	ERJ2GE0R00X	0 1/16W	[M]
R830	D0GA100JA023	10 1/16W	[M]
R833	D0GA102JA023	1K 1/16W	[M]
R835	D0GA331JA023	330 1/16W	[M]
R836	D0GA100JA023	10 1/16W	[M]
R843	D0GA220JA023	22 1/16W	[M]
R844	D0GA220JA023	22 1/16W	[M]
R849	D0GA473JA023	47K 1/16W	[M]
R850	D0GA473JA023	47K 1/16W	[M]
R855	D0GA100JA023	10 1/16W	[M]
R856	D0GA100JA023	10 1/16W	[M]
R857	D0GA100JA023	10 1/16W	[M]
R858	ERJ2GEJ101X	100 1/16W	[M]
R861	D0GA473JA023	47K 1/16W	[M]
R862	D0GA473JA023	47K 1/16W	[M]
R863	D0GA473JA023	47K 1/16W	[M]
R870	D0GA100JA023	10 1/16W	[M]
R871	D0GA100JA023	10 1/16W	[M]
R872	D0GA100JA023	10 1/16W	[M]
R875	D0GA473JA023	47K 1/16W	[M]
R876	D0GA473JA023	47K 1/16W	[M]
R877	D0GA103JA023	10K 1/16W	[M]
R878	D1BD5901A030	59 1/10W	[M]
R879	D0GA105JA023	1M 1/16W	[M]
R880	D0GA471JA023	470 1/16W	[M]
R881	D0GA473JA023	47K 1/16W	[M]
R888	ERJ2GE0R00X	0 1/16W	[M]
R890	ERJ2GE0R00X	0 1/16W	[M]
R891	ERJ2GE0R00X	0 1/16W	[M]
R892	ERJ2GE0R00X	0 1/16W	[M]
R893	ERJ2GE0R00X	0 1/16W	[M]
R894	ERJ2GE0R00X	0 1/16W	[M]
R972	D0AE821JA178	820 1/4W	[M]
R973	D0AE393JA178	39K 1/4W	[M]
R1061	D0GBR00JA008	0 1/16W	[M]
R1063	D0GBR00JA008	0 1/16W	[M]
R1064	D0GBR00JA008	0 1/16W	[M]
R1101	D0GB330JA008	33 1/16W	[M]
R1102	D0GB152JA008	1.5K 1/16W	[M]
R1103	D0GB183JA008	18K 1/16W	[M]

Ref. No.	Part No.	Part Name & Description	Remarks
R1104	D0GB103JA008	10K 1/16W	[M]
R1105	D0GB222JA008	2.2K 1/16W	[M]
R1106	D0GB104JA008	100K 1/16W	[M]
R1109	D0GB102JA008	1K 1/16W	[M]
R1110	D0GB333JA008	33K 1/16W	[M]
R1111	D0GB272JA008	2.7K 1/16W	[M]
R1201	D0GB330JA008	33 1/16W	[M]
R1202	D0GB152JA008	1.5K 1/16W	[M]
R1203	D0GB183JA008	18K 1/16W	[M]
R1204	D0GB103JA008	10K 1/16W	[M]
R1205	D0GB222JA008	2.2K 1/16W	[M]
R1206	D0GB104JA008	100K 1/16W	[M]
R1209	D0GB102JA008	1K 1/16W	[M]
R1210	D0GB333JA008	33K 1/16W	[M]
R1302	D0GB471JA008	470 1/16W	[M]
R1303	D0GB475JA008	4.7M 1/16W	[M]
R1304	D0GB223JA008	22K 1/16W	[M]
R1305	D0GB103JA008	10K 1/16W	[M]
R1309	D0AF471JA039	470 1/2W	[M]
R1314	D0GB102JA008	1K 1/16W	[M]
R1318	D0GB103JA008	10K 1/16W	[M]
R1327	D0GB472JA008	4.7K 1/16W	[M]
R1328	D0GB153JA008	15K 1/16W	[M]
R1329	D0GB472JA008	4.7K 1/16W	[M]
R1330	ERD2FCVJ4R7T	4.7 1/4W	[M]
R1331	D0GB472JA008	4.7K 1/16W	[M]
R1332	D0GB103JA008	10K 1/16W	[M]
R1333	ERD2FCVJ4R7T	4.7 1/4W	[M]
R1334	D0GB223JA008	22K 1/16W	[M]
R1335	D0GB152JA008	1.5K 1/16W	[M]
R1337	D0GB103JA008	10K 1/16W	[M]
R1338	D0GB472JA008	4.7K 1/16W	[M]
R1339	D0GD103JA017	10K 1/10W	[M]
R1341	D0GB471JA008	470 1/16W	[M]
R1342	D0GB473JA008	47K 1/16W	[M]
R1343	D0GB332JA008	3.3K 1/16W	[M]
R1344	D0GB273JA008	27K 1/16W	[M]
R1345	D0GB102JA008	1K 1/16W	[M]
R1371	D0GB223JA008	22K 1/16W	[M]
R1374	D0GB471JA008	470 1/16W	[M]
R1380	D0GBR00JA008	0 1/16W	[M]
R1401	D0GB123JA008	12K 1/16W	[M]
R1402	D0GB274JA008	270K 1/16W	[M]
R1403	D0GB103JA008	10K 1/16W	[M]
R1404	D0GB223JA008	22K 1/16W	[M]
R1405	D0GB123JA008	12K 1/16W	[M]
R2001	D0GB332JA008	3.3K 1/16W	[M]
R2002	D0GB332JA008	3.3K 1/16W	[M]
R2003	D0GB562JA008	5.6K 1/16W	[M]
R2004	D0GB562JA008	5.6K 1/16W	[M]
R2041	D0GB332JA008	3.3K 1/16W	[M]
R2042	D0GB332JA008	3.3K 1/16W	[M]
R2043	D0GB472JA008	4.7K 1/16W	[M]
R2044	D0GB472JA008	4.7K 1/16W	[M]
R2046	D0GB332JA008	3.3K 1/16W	[M]
R2061	D0GB471JA008	470 1/16W	[M]
R2062	D0GB392JA008	3.9K 1/16W	[M]
R2063	D0GB392JA008	3.9K 1/16W	[M]
R2064	D0GB471JA008	470 1/16W	[M]
R2081	D0GB682JA008	6.8K 1/16W	[M]
R2082	D0GB682JA008	6.8K 1/16W	[M]
R2083	D0GB562JA008	5.6K 1/16W	[M]
R2084	D0GB562JA008	5.6K 1/16W	[M]
R2118	D0GB392JA008	3.9K 1/16W	[M]
R2120	D0GB392JA008	3.9K 1/16W	[M]
R2121	D0GB472JA008	4.7K 1/16W	[M]
R2122	D0GB682JA008	6.8K 1/16W	[M]
R2123	D0GB123JA008	12K 1/16W	[M]
R2124	D0GB123JA008	12K 1/16W	[M]
R2125	D0GB183JA008	18K 1/16W	[M]
R2126	D0GB183JA008	18K 1/16W	[M]
R2127	D0GB223JA008	22K 1/16W	[M]
R2128	D0GB223JA008	22K 1/16W	[M]
R2131	D0GB223JA008	22K 1/16W	[M]

Ref. No.	Part No.	Part Name & Description	Remarks
R2132	D0GB223JA008	22K 1/16W	[M]
R2133	D0GB223JA008	22K 1/16W	[M]
R2134	D0GB223JA008	22K 1/16W	[M]
R2137	D0GB273JA008	27K 1/16W	[M]
R2138	D0GB273JA008	27K 1/16W	[M]
R2143	D0GBR00JA008	0 1/16W	[M]
R2181	D0GB391JA008	390 1/16W	[M]
R2182	D0GB391JA008	390 1/16W	[M]
R2183	D0GB103JA008	10K 1/16W	[M]
R2184	D0GB103JA008	10K 1/16W	[M]
R2185	D0GB472JA008	4.7K 1/16W	[M]
R2186	D0GB472JA008	4.7K 1/16W	[M]
R2221	D0GB472JA008	4.7K 1/16W	[M]
R2222	D0GB682JA008	6.8K 1/16W	[M]
R2301	D0GB823JA008	82K 1/16W	[M]
R2302	D0GB473JA008	47K 1/16W	[M]
R2303	D0GB223JA008	22K 1/16W	[M]
R2304	D0GB103JA008	10K 1/16W	[M]
R2305	D0GB223JA008	22K 1/16W	[M]
R2311	D0GB471JA008	470 1/16W	[M]
R2312	D0GB471JA008	470 1/16W	[M]
R2313	D0GB104JA008	100K 1/16W	[M]
R2314	D0GB104JA008	100K 1/16W	[M]
R2315	D0GB153JA008	15K 1/16W	[M]
R2316	D0GB153JA008	15K 1/16W	[M]
R2318	D0GB104JA008	100K 1/16W	[M]
R2321	D0GB103JA008	10K 1/16W	[M]
R2322	D0GB103JA008	10K 1/16W	[M]
R2323	D0GB683JA008	68K 1/16W	[M]
R2324	D0GB683JA008	68K 1/16W	[M]
R2327	D0GB183JA008	18K 1/16W	[M]
R2328	D0GB183JA008	18K 1/16W	[M]
R2331	D0GBR00JA008	0 1/16W	[M]
R2332	D0GBR00JA008	0 1/16W	[M]
R2351	D0GB180JA008	18 1/16W	[M]
R2352	D0GB180JA008	18 1/16W	[M]
R2353	D0GB180JA008	18 1/16W	[M]
R2354	D0GB180JA008	18 1/16W	[M]
R2355	D0GB180JA008	18 1/16W	[M]
R2356	D0GB180JA008	18 1/16W	[M]
R2357	D0GB180JA008	18 1/16W	[M]
R2358	D0GB180JA008	18 1/16W	[M]
R2359	D0GB562JA008	5.6K 1/16W	[M]
R2360	D0GB562JA008	5.6K 1/16W	[M]
R2361	D0GB562JA008	5.6K 1/16W	[M]
R2362	D0GB562JA008	5.6K 1/16W	[M]
R2363	D0GB1R0JA008	1 1/16W	[M]
R2364	D0GB1R0JA008	1 1/16W	[M]
R2365	D0GB104JA008	100K 1/16W	[M]
R2366	D0GB821JA008	820 1/16W	[M]
R2370	D0GB123JA008	12K 1/16W	[M]
R2371	D0GB473JA008	47K 1/16W	[M]
R2372	D0GB473JA008	47K 1/16W	[M]
R2373	D0GB153JA008	15K 1/16W	[M]
R2374	D0GB183JA008	18K 1/16W	[M]
R2375	D0GB222JA008	2.2K 1/16W	[M]
R2376	D0GB102JA008	1K 1/16W	[M]
R2379	D0GB183JA008	18K 1/16W	[M]
R2380	D0GB332JA008	3.3K 1/16W	[M]
R2381	D0GB104JA008	100K 1/16W	[M]
R2382	D0GB102JA008	1K 1/16W	[M]
R2383	D0GBR00JA008	0 1/16W	[M]
R2385	D0GB106JA008	10M 1/16W	[M]
R2386	D0GB102JA008	1K 1/16W	[M]
R2387	D0GB102JA008	1K 1/16W	[M]
R2416	D0GB472JA008	4.7K 1/16W	[M]
R2417	D0GB103JA008	10K 1/16W	[M]
R2418	D0GB104JA008	100K 1/16W	[M]
R2448	D0GB223JA008	22K 1/16W	[M]
R2480	D0GB122JA008	1.2K 1/16W	[M]
R2501	D0GB334JA008	330K 1/16W	[M]
R2502	D0GB823JA008	82K 1/16W	[M]
R2503	D0GB392JA008	3.9K 1/16W	[M]
R2504	D0GB101JA008	100 1/16W	[M]

Ref. No.	Part No.	Part Name & Description	Remarks
R2505	D0GB681JA008	680 1/16W	[M]
R2506	D0GB473JA008	47K 1/16W	[M]
R2508	D0GB102JA008	1K 1/16W	[M]
R2509	D0GB101JA008	100 1/16W	[M]
R2510	D0GB563JA008	56K 1/16W	[M]
R2516	D0GB472JA008	4.7K 1/16W	[M]
R2517	D0GB103JA008	10K 1/16W	[M]
R2556	D0GB102JA008	1K 1/16W	[M]
R2592	D0GB103JA008	10K 1/16W	[M]
R2601	D0GB103JA008	10K 1/16W	[M]
R2602	D0GB103JA008	10K 1/16W	[M]
R2603	D0GB473JA008	47K 1/16W	[M]
R2607	D0GB473JA008	47K 1/16W	[M]
R2608	D0GB473JA008	47K 1/16W	[M]
R2609	D0GB473JA008	47K 1/16W	[M]
R2610	D0GB474JA008	470K 1/16W	[M]
R2611	D0GBR00JA008	0 1/16W	[M]
R2627	D0GB103JA008	10K 1/16W	[M]
R2629	D0GB473JA008	47K 1/16W	[M]
R2645	ERJ6GEYJ473V	47K 1/8W	[M]
R2646	D0GB473JA008	47K 1/16W	[M]
R2647	D0GB473JA008	47K 1/16W	[M]
R2648	D0GB473JA008	47K 1/16W	[M]
R2649	D0GB473JA008	47K 1/16W	[M]
R2650	D0GB473JA008	47K 1/16W	[M]
R2653	D0GD102JA017	1K 1/10W	[M]
R2663	ERJ6GEYJ473V	47K 1/8W	[M]
R2664	D0GB472JA008	4.7K 1/16W	[M]
R2679	D0GB223JA008	22K 1/16W	[M]
R2680	D0GB332JA008	3.3K 1/16W	[M]
R2684	D0GB332JA008	3.3K 1/16W	[M]
R2685	D0GB223JA008	22K 1/16W	[M]
R2686	D0GB473JA008	47K 1/16W	[M]
R2688	D0GB473JA008	47K 1/16W	[M]
R2692	D0GB332JA008	3.3K 1/16W	[M] PL
R2692	D0GB562JA008	5.6K 1/16W	[M] GCP
R2701	ERJ3GEYF152V	1.5K 1/10W	[M]
R2702	ERJ3GEYF332V	3.3K 1/10W	[M]
R2703	ERJ3GEYF102V	1K 1/10W	[M]
R2705	D0GB103JA008	10K 1/16W	[M]
R2706	D0GB472JA008	4.7K 1/16W	[M]
R2711	D0GB271JA008	270 1/16W	[M]
R2712	D0GB180JA008	18 1/16W	[M]
R2721	D0AF2R2JA039	2.2 1/2W	[M]
R2722	D0AF2R2JA039	2.2 1/2W	[M]
R2725	D0GB103JA008	10K 1/16W	[M]
R2733	D0GB391JA008	390 1/16W	[M]
R2735	D0GB101JA008	100 1/16W	[M]
R2743	D0GB474JA008	470K 1/16W	[M]
R2744	D0GB472JA008	4.7K 1/16W	[M]
R2745	D0GB102JA008	1K 1/16W	[M]
R2753	D0GD102JA017	1K 1/10W	[M]
R2754	D0GB471JA008	470 1/16W	[M]
R2755	D0GB272JA008	2.7K 1/16W	[M]
R2756	D0GB471JA008	470 1/16W	[M]
R2762	D0GB102JA008	1K 1/16W	[M]
R2765	D0GB272JA008	2.7K 1/16W	[M]
R2771	D0GB822JA008	8.2K 1/16W	[M]
R2772	D0GB752JA008	7.5K 1/16W	[M]
R2773	D0GB153JA008	15K 1/16W	[M]
R2774	D0GB153JA008	15K 1/16W	[M]
R2775	D0GB912JA041	9.1K 1/10W	[M]
R2803	D0GDR00JA017	0 1/10W	[M]
R2804	D0GD101JA017	100 1/10W	[M]
R2805	D0GB101JA008	100 1/16W	[M]
R2806	D0GB102JA008	1K 1/16W	[M]
R2807	D0GB102JA008	1K 1/16W	[M]
R2808	D0GB101JA008	100 1/16W	[M]
R2809	D0GB101JA008	100 1/16W	[M]
R2811	D0GB101JA008	100 1/16W	[M]
R2812	D0GBR00JA008	0 1/16W	[M]
R2815	D0GB473JA008	47K 1/16W	[M]
R2820	D0GB103JA008	10K 1/16W	[M]
R2821	D0GB101JA008	100 1/16W	[M]

Ref. No.	Part No.	Part Name & Description	Remarks
R2822	D0GB101JA008	100 1/16W	[M]
R2824	D0GB103JA008	10K 1/16W	[M]
R2825	D0GB101JA008	100 1/16W	[M]
R2826	D0GB101JA008	100 1/16W	[M]
R2827	D0GB101JA008	100 1/16W	[M]
R2828	D0GB101JA008	100 1/16W	[M]
R2829	D0GB102JA008	1K 1/16W	[M]
R2830	D0GD101JA017	100 1/10W	[M]
R2831	D0GB102JA008	1K 1/16W	[M]
R2832	D0GB102JA008	1K 1/16W	[M]
R2833	D0GB102JA008	1K 1/16W	[M]
R2834	D0GB101JA008	100 1/16W	[M]
R2835	D0GB101JA008	100 1/16W	[M]
R2836	D0GB102JA008	1K 1/16W	[M]
R2843	D0GB101JA008	100 1/16W	[M]
R2845	D0GBR00JA008	0 1/16W	[M]
R2846	D0GDR00JA017	0 1/10W	[M]
R2847	D0GBR00JA008	0 1/16W	[M]
R2848	D0GBR00JA008	0 1/16W	[M]
R2849	D0GBR00JA008	0 1/16W	[M]
R2850	D0GBR00JA008	0 1/16W	[M]
R2851	D0GB101JA008	100 1/16W	[M]
R2852	D0GB101JA008	100 1/16W	[M]
R2854	D0GB101JA008	100 1/16W	[M]
R2856	D0GB101JA008	100 1/16W	[M]
R2857	D0GB101JA008	100 1/16W	[M]
R2862	D0GD102JA017	1K 1/10W	[M]
R2866	D0GD101JA017	100 1/10W	[M]
R2867	D0GB152JA008	1.5K 1/16W	[M]
R2868	D0GB102JA008	1K 1/16W	[M]
R2869	D0GB152JA008	1.5K 1/16W	[M]
R2874	D0GB102JA008	1K 1/16W	[M]
R2879	D0GBR00JA008	0 1/16W	[M]
R2880	D0GB101JA008	100 1/16W	[M]
R2881	D0GB101JA008	100 1/16W	[M]
R2882	D0GB101JA008	100 1/16W	[M]
R2883	D0GB101JA008	100 1/16W	[M]
R2886	D0GB102JA008	1K 1/16W	[M]
R2887	D0GD102JA017	1K 1/10W	[M]
R2888	D0GD102JA017	1K 1/10W	[M]
R2895	D0GB101JA008	100 1/16W	[M]
R2896	D0GB101JA008	100 1/16W	[M]
R2897	D0GB101JA008	100 1/16W	[M]
R2898	D0GB102JA008	1K 1/16W	[M]
R2899	D0GB102JA008	1K 1/16W	[M]
R2902	D0GB470JA008	47 1/16W	[M]
R2914	D0GB472JA008	4.7K 1/16W	[M]
R2930	D0GB101JA008	100 1/16W	[M]
R2931	D0GB101JA008	100 1/16W	[M]
R2932	D0GB101JA008	100 1/16W	[M]
R2937	D0GB103JA008	10K 1/16W	[M]
R2939	D0GB473JA008	47K 1/16W	[M]
R2941	D0GB103JA008	10K 1/16W	[M]
R2942	D0GB472JA008	4.7K 1/16W	[M]
R2944	D0GB562JA008	5.6K 1/16W	[M]
R2945	D0GB103JA008	10K 1/16W	[M]
R2946	D0GB563JA008	56K 1/16W	[M]
R2947	D0AF270JA039	27 1/2W	[M]
R2948	D0GB101JA008	100 1/16W	[M]
R2949	D0GB473JA008	47K 1/16W	[M]
R2950	D0GB562JA008	5.6K 1/16W	[M]
R2957	D0AF680JA039	68 1/2W	[M]
R2958	D0GB101JA008	100 1/16W	[M]
R2959	D0GB683JA008	68K 1/16W	[M]
R2961	D0GB472JA008	4.7K 1/16W	[M]
R2962	D0GB562JA008	5.6K 1/16W	[M]
R2963	D0GB103JA008	10K 1/16W	[M]
R2965	D0GB103JA008	10K 1/16W	[M]
R2966	D0GB824JA008	820K 1/16W	[M]
R2967	D0GB473JA008	47K 1/16W	[M]
R2968	D0GB103JA008	10K 1/16W	[M]
R2969	D0GB563JA008	56K 1/16W	[M]
R2970	D0GB103JA008	10K 1/16W	[M]
R2971	D0GB472JA008	4.7K 1/16W	[M]

Ref. No.	Part No.	Part Name & Description	Remarks
R2981	D0GB182JA008	1.8K 1/16W	[M]
R2982	D0GB182JA008	1.8K 1/16W	[M]
R2983	D0GB472JA008	4.7K 1/16W	[M]
R2984	D0GB472JA008	4.7K 1/16W	[M]
R2990	D0GB102JA008	1K 1/16W	[M]
R3111	D0GB332JA008	3.3K 1/16W	[M]
R3112	D0GB332JA008	3.3K 1/16W	[M]
R3113	D0GB103JA008	10K 1/16W	[M]
R3114	D0GB103JA008	10K 1/16W	[M]
R3125	D0GBR00JA008	0 1/16W	[M]
R3126	D0GBR00JA008	0 1/16W	[M]
R3408	D0GB224JA008	220K 1/16W	[M]
R3411	D0GB224JA008	220K 1/16W	[M]
R3450	D0GB473JA008	47K 1/16W	[M]
R3701	D0GB122JA008	1.2K 1/16W	[M]
R3702	D0GB122JA008	1.2K 1/16W	[M]
R3703	D0GB273JA008	27K 1/16W	[M]
R3704	D0GB273JA008	27K 1/16W	[M]
R5000	ERJ3GEYJ562V	5.6K 1/10W	[M]
R5001	ERJ3GEYJ562V	5.6K 1/10W	[M]
R5002	ERJ3GEYJ562V	5.6K 1/10W	[M]
R5003	ERJ3GEYJ562V	5.6K 1/10W	[M]
R5004	D0GF100JA014	10 1/8W	[M]
R5005	D0GF100JA014	10 1/8W	[M]
R5006	D0GZ220JA012	22 1W	[M]
R5007	D0GZ220JA012	22 1W	[M]
R5008	ERJ3GEYJ101V	100 1/10W	[M]
R5010	D0GF100JA014	10 1/8W	[M]
R5011	D0GF100JA014	10 1/8W	[M]
R5018	ERJ3GEYJ683V	68K 1/10W	[M]
R5019	ERJ3GEYJ683V	68K 1/10W	[M]
R5020	ERJ3GEYJ124V	120K 1/10W	[M]
R5021	ERJ3GEYJ122V	1.2K 1/10W	[M]
R5022	ERJ3GEYJ122V	1.2K 1/10W	[M]
R5023	ERJ3GEYJ122V	1.2K 1/10W	[M]
R5030	ERJ3GEYJ562V	5.6K 1/10W	[M]
R5031	ERJ3GEYJ562V	5.6K 1/10W	[M]
R5032	ERJ3GEYJ562V	5.6K 1/10W	[M]
R5033	ERJ3GEYJ562V	5.6K 1/10W	[M]
R5036	ERJ3GEYJ562V	5.6K 1/10W	[M]
R5037	ERJ3GEYJ562V	5.6K 1/10W	[M]
R5103	ERJ3GEYJ562V	5.6K 1/10W	[M]
R5104	ERJ3GEYJ562V	5.6K 1/10W	[M]
R5110	ERJ3GEYJ223V	22K 1/10W	[M]
R5113	ERJ3GEYJ124V	120K 1/10W	[M]
R5118	ERJ3GEYJ562V	5.6K 1/10W	[M]
R5119	ERJ3GEYJ562V	5.6K 1/10W	[M]
R5200	D0GF100JA014	10 1/8W	[M]
R5201	D0GF100JA014	10 1/8W	[M]
R5204	ERJ3GEYJ101V	100 1/10W	[M]
R5205	ERJ3GEYJ562V	5.6K 1/10W	[M]
R5206	ERJ3GEYJ562V	5.6K 1/10W	[M]
R5207	ERJ3GEYJ562V	5.6K 1/10W	[M]
R5208	ERJ3GEYJ562V	5.6K 1/10W	[M]
R5209	D0GZ220JA012	22 1W	[M]
R5210	D0GF100JA014	10 1/8W	[M]
R5211	D0GF100JA014	10 1/8W	[M]
R5217	D0GZ220JA012	22 1W	[M]
R5317	ERJ3GEYJ122V	1.2K 1/10W	[M]
R5318	ERJ3GEYJ124V	120K 1/10W	[M]
R5328	ERJ3GEYJ683V	68K 1/10W	[M]
R5400	D0GZ220JA012	22 1W	[M]
R5402	D0GF100JA014	10 1/8W	[M]
R5404	ERJ3GEYJ101V	100 1/10W	[M]
R5405	D0GF100JA014	10 1/8W	[M]
R5410	D0GF100JA014	10 1/8W	[M]
R5411	D0GF100JA014	10 1/8W	[M]
R5419	D0GZ220JA012	22 1W	[M]
R5504	ERJ3GEYJ220V	22 1/10W	[M]
R5505	ERJ3GEYJ101V	100 1/10W	[M]
R5506	ERJ3GEYJ105V	1M 1/10W	[M]
R5507	ERJ3GEYJ105V	1M 1/10W	[M]
R5508	ERJ3GEYJ105V	1M 1/10W	[M]
R5510	ERG2SJ471E	470 2W	[M]

Ref. No.	Part No.	Part Name & Description	Remarks
R5511	ERJ3GEYJ220V	22 1/10W	[M]
R5602	ERJ3GEYJ103V	10K 1/10W	[M]
R5603	ERJ3GEYJ103V	10K 1/10W	[M]
R5604	ERJ3GEYJ122V	1.2K 1/10W	[M]
R5608	ERJ3GEYJ103V	10K 1/10W	[M]
R5609	ERJ3GEYJ103V	10K 1/10W	[M]
R5611	ERJ3GEYJ122V	1.2K 1/10W	[M]
R5671	ERJ3GEY0R00V	0 1/10W	[M]
R5701	ERDS1TJ475B	4.7M 1W	[M]
R5702	ERJ1TYJ104U	100K 1W	[M] GCP
R5702	ERJ1TYJ333U	33K 1W	[M] PL
R5703	ERJ1TYJ104U	100K 1W	[M] GCP
R5703	ERJ1TYJ333U	33K 1W	[M] PL
R5704	ERJ8GEYJ394V	390K 1/4W	[M]
R5705	ERJ8GEYJ394V	390K 1/4W	[M]
R5720	ERJ6GEYJ220V	22 1/8W	[M]
R5721	ERJ6GEYJ103V	10K 1/8W	[M]
R5722	ERJ6GEYJ102V	1K 1/8W	[M] GCP
R5722	ERJ6GEYJ122V	1.2K 1/10W	[M] PL
R5723	ERJ3GEYJ102V	1K 1/10W	[M]
R5724	ERJ6GEYJ121V	120 1/8W	[M]
R5725	ERJ3GEY0R00V	0 1/10W	[M]
R5726	ERX2LJ82MP	82m 2W	[M]
R5727	ERX2SZJR10P	0.1 2W	[M] PL
R5728	ERJ3GEYJ104V	100K 1/10W	[M]
R5729	ERJ6GEYJ103V	10K 1/8W	[M]
R5730	ERJ3GEYJ102V	1K 1/10W	[M]
R5731	ERJ3GEY0R00V	0 1/10W	[M]
R5732	ERJ3GEYJ101V	100 1/10W	[M]
R5733	ERJ3GEYJ473V	47K 1/10W	[M]
R5750	ERJ3GEY0R00V	0 1/10W	[M] PL
R5751	ERJ3GEYJ223V	22K 1/10W	[M] GCP
R5752	ERJ3GEYJ222V	2.2K 1/10W	[M] GCP
R5786	ERJ1TYJ204U	200K 1W	[M]
R5787	ERJ3GEYJ753V	75K 1/10W	[M]
R5788	ERJ3GEYJ223V	22K 1/10W	[M] GCP
R5789	ERJ3GEYJ223V	22K 1/10W	[M] GCP
R5790	ERJ3GEYF333V	33K 1/10W	[M] GCP
R5791	ERJ3GEYF563V	56K 1/10W	[M] GCP
R5792	ERJ8GEYJ394V	390K 1/4W	[M] GCP
R5793	ERJ8GEYJ394V	390K 1/4W	[M] GCP
R5794	ERJ8GEYJ394V	390K 1/4W	[M] GCP
R5795	ERJ6GEYJ433V	43K 1/8W	[M]
R5796	ERDS1FVJ222T	2.2K 1/2W	[M]
R5797	ERJ6GEYJ472V	4.7K 1/8W	[M]
R5798	ERJ6GEYJ100V	10 1/8W	[M]
R5799	ERJ6GEYJ100V	10 1/8W	[M] GCP
R5800	ERJ6GEYJ123V	12K 1/8W	[M]
R5801	ERJ6GEYJ103V	10K 1/8W	[M]
R5802	ERJ3RBD272V	2.7K 1/16W	[M]
R5803	ERJ6GEY0R00V	0 1/8W	[M]
R5804	ERJ6RBD473V	47K 1/16W	[M]
R5805	ERJ3RBD222V	2.2K 1/16W	[M]
R5806	ERJ3GEYJ153V	15K 1/10W	[M]
R5807	ERJ6GEYJ331V	330 1/8W	[M]
R5808	ERJ6GEYJ222V	2.2K 1/8W	[M]
R5809	ERJ6GEYJ331V	330 1/8W	[M]
R5810	ERJ3GEYJ331V	330 1/10W	[M]
R5811	ERJ8GEYJ152V	1.5K 1/4W	[M]
R5812	ERJ3RBD822V	8.2K 1/16W	[M]
R5813	ERJ3RBD243V	24K 1/16W	[M]
R5814	ERJ3GEYJ822V	8.2K 1/10W	[M]
R5815	ERJ3GEYJ272V	2.7K 1/10W	[M]
R5816	ERJ8GEYJ152V	1.5K 1/4W	[M]
R5817	ERJ3GEYJ331V	330 1/10W	[M]
R5820	ERG2SJ910E	91 2W	[M]
R5821	ERG2SJ910E	91 2W	[M]
R5822	ERG2SJ910E	91 2W	[M]
R5823	ERG2SJ910E	91 2W	[M]
R5824	ERG2SJ910E	91 2W	[M]
R5825	ERJ3GEYJ102V	1K 1/10W	[M]
R5832	ERJ1TYJ222U	2.2K 1W	[M]
R5834	ERJ1TYJ222U	2.2K 1W	[M]
R5840	ERJ3GEYJ823V	82K 1/10W	[M]

Ref. No.	Part No.	Part Name & Description	Remarks
R5841	ERJ3GEYJ124V	120K 1/10W	[M]
R5860	ERJ3GEYF103V	10K 1/10W	[M]
R5861	ERJ3GEYF472V	4.7K 1/10W	[M]
R5862	ERJ6GEYJ103V	10K 1/8W	[M]
R5863	ERJ6GEYJ103V	10K 1/8W	[M]
R5864	ERJ6GEYF103V	10K 1/8W	[M]
R5890	ERJ3GEYJ222V	2.2K 1/10W	[M]
R5891	ERJ3RBD333V	33K 1/16W	[M]
R5892	ERJ3RBD472V	4.7K 1/16W	[M]
R5893	ERJ3RBD393V	39K 1/16W	[M]
R5894	ERJ3GEYJ102V	1K 1/10W	[M]
R5895	ERJ3GEYJ101V	100 1/10W	[M]
R5896	ERJ3GEYJ104V	100K 1/10W	[M]
R5897	ERJ3GEYJ101V	100 1/10W	[M]
R6100	D0GB103JA008	10K 1/16W	[M]
R6101	D0GB122JA008	1.2K 1/16W	[M]
R6102	D0GB152JA008	1.5K 1/16W	[M]
R6103	D0GB222JA008	2.2K 1/16W	[M]
R6104	D0GB332JA008	3.3K 1/16W	[M]
R6106	D0GB472JA008	4.7K 1/16W	[M]
R6107	D0GB682JA008	6.8K 1/16W	[M]
R6108	D0GB153JA008	15K 1/16W	[M]
R6109	D0GB473JA008	47K 1/16W	[M]
R6200	D0GB103JA008	10K 1/16W	[M]
R6201	D0GBR00JA008	0 1/16W	[M]
R6202	D0GB272JA008	2.7K 1/16W	[M]
R6203	D0GB222JA008	2.2K 1/16W	[M]
R6204	D0GB332JA008	3.3K 1/16W	[M]
R6205	D0GB472JA008	4.7K 1/16W	[M]
R6206	D0GB682JA008	6.8K 1/16W	[M]
R6207	D0GB153JA008	15K 1/16W	[M]
R6208	D0GB473JA008	47K 1/16W	[M]
R6300	D0GB103JA008	10K 1/16W	[M]
R6301	D0GB122JA008	1.2K 1/16W	[M]
R6302	D0GB152JA008	1.5K 1/16W	[M]
R6303	D0GB222JA008	2.2K 1/16W	[M]
R6304	D0GB332JA008	3.3K 1/16W	[M]
R6305	D0GB472JA008	4.7K 1/16W	[M]
R6306	D0GB682JA008	6.8K 1/16W	[M]
R6307	D0GB153JA008	15K 1/16W	[M]
R6308	D0GB473JA008	47K 1/16W	[M]
R6458	D0GB102JA008	1K 1/16W	[M]
R6501	D0GB123JA008	12K 1/16W	[M]
R6502	D0GB223JA008	22K 1/16W	[M]
R6503	D0GB103JA008	10K 1/16W	[M]
R6511	D0GB181JA008	180 1/16W	[M]
R6512	D0GB331JA008	330 1/16W	[M]
R6600	D0GB681JA008	680 1/16W	[M]
R6618	D0GB221JA008	220 1/16W	[M]
R6619	D0GB221JA008	220 1/16W	[M]
R6620	D0GB471JA008	470 1/16W	[M]
R6622	D0GB823JA008	82K 1/16W	[M]
R6631	D0GB103JA008	10K 1/16W	[M]
R6632	D0GB103JA008	10K 1/16W	[M]
R6641	D0GB472JA008	4.7K 1/16W	[M]
R6642	D0GBR00JA008	0 1/16W	[M]
R6671	D0GB223JA008	22K 1/16W	[M]
R6672	D0GB100JA008	10 1/16W	[M]
R6701	D0GB681JA008	680 1/16W	[M]
R6702	D0GB561JA008	560 1/16W	[M]
R6703	D0GB102JA008	1K 1/16W	[M]
R6704	D0GB683JA008	68K 1/16W	[M]
R6705	D0GB101JA008	100 1/16W	[M]
R6710	D0GB122JA008	1.2K 1/16W	[M]
R6713	D0GB563JA008	56K 1/16W	[M]
R6811	D0GBR00JA008	0 1/16W	[M]
R6812	D0GBR00JA008	0 1/16W	[M]
R7111	D0GB103JA008	10K 1/16W	[M]
R7211	ERJ3GEYJ823V	82K 1/10W	[M]
R7212	ERJ3GEYJ821V	820 1/10W	[M]
R7214	ERJ3GEYJ471V	470 1/10W	[M]
R7217	D0GB102JA008	1K 1/16W	[M]
R7218	D0GB102JA008	1K 1/16W	[M]
R7220	ERJ3GEYJ105V	1M 1/10W	[M]

Ref. No.	Part No.	Part Name & Description	Remarks
R7221	ERJ3GEYJ101V	100 1/10W	[M]
R7253	ERJ3GEYJ100V	10 1/10W	[M]
R7254	D0GB102JA008	1K 1/16W	[M]
R7315	ERJ3GEYJ332V	3.3K 1/10W	[M]
R7323	ERJ3GEYJ682V	6.8K 1/10W	[M]
R7325	ERJ3GEYJ331V	330 1/10W	[M]
R7327	D0GB102JA008	1K 1/16W	[M]
R7328	D0GB103JA008	10K 1/16W	[M]
R7329	D0GB102JA008	1K 1/16W	[M]
R7330	ERJ3GEYJ562V	5.6K 1/10W	[M]
R7331	D0GB273JA008	27K 1/16W	[M]
R7332	D0GB102JA008	1K 1/16W	[M]
R7335	ERJ3GEYJ101V	100 1/10W	[M]
R7336	ERJ3GEYJ100V	10 1/10W	[M]
R7339	D0GB102JA008	1K 1/16W	[M]
R7349	ERJ3GEYJ183V	18K 1/10W	[M]
R7601	ERJ3GEYJ4R7V	4.7 1/10W	[M]
R7650	ERJ3GEYJ5R6V	5.6 1/10W	[M]
RX551	D1H84734A024	RESISTOR NETWORK	[M]
RX656	D1H84734A024	RESISTOR NETWORK	[M]
RX801	EXB2HV100JV	RESISTOR NETWORK	[M]
RX802	EXB2HV100JV	RESISTOR NETWORK	[M]
RX804	D1H410020002	RESISTOR NETWORK	[M]
RX805	D1H410020002	RESISTOR NETWORK	[M]
RX807	EXB2HV100JV	RESISTOR NETWORK	[M]
RX808	EXB2HV100JV	RESISTOR NETWORK	[M]
RX820	D1H81004A024	RESISTOR NETWORK	[M]
RX826	D1H84734A024	RESISTOR NETWORK	[M]
RX834	D1H81004A024	RESISTOR NETWORK	[M]
RX837	EXB2HV100JV	RESISTOR NETWORK	[M]
RX838	EXB2HV100JV	RESISTOR NETWORK	[M]
RX839	D1H410020002	RESISTOR NETWORK	[M]
RX840	EXB2HV100JV	RESISTOR NETWORK	[M]
RX841	EXB2HV100JV	RESISTOR NETWORK	[M]
RX853	D1H84734A024	RESISTOR NETWORK	[M]
RX854	D1H410020002	RESISTOR NETWORK	[M]
RX864	D1H84734A024	RESISTOR NETWORK	[M]
K5	ERJ3GEY0R00V	0 1/10W	[M] PL
K7	ERJ3GEY0R00V	0 1/10W	[M] GCP
K2003	D0GBR00JA008	0 1/16W	[M] PL
K2004	D0GBR00JA008	0 1/16W	[M] GCP
K2421	D0GBR00JA008	0 1/16W	[M]
K2422	D0GBR00JA008	0 1/16W	[M]
K3100	D0GBR00JA008	0 1/16W	[M]
K3200	D0GBR00JA008	0 1/16W	[M]
K5202	ERJ3GEY0R00V	0 1/10W	[M]
K5251	ERJ3GEY0R00V	0 1/10W	[M]
K5252	ERJ3GEY0R00V	0 1/10W	[M]
K5302	ERJ3GEY0R00V	0 1/10W	[M]
K5502	ERJ3GEY0R00V	0 1/10W	[M]
		CAPACITORS	
C1	F1D1E103A001	0.01uF 25V	[M]
C2	F2A1C101A147	100uF 16V	[M]
C513	F1G1A1040006	0.1uF 10V	[M]
C514	F1G1A1040006	0.1uF 10V	[M]
C515	F1J0J106A004	10uF 6.3V	[M]
C551	F1G1A1040006	0.1uF 10V	[M]
C552	F1J0J106A004	10uF 6.3V	[M]
C553	F1G1A1040006	0.1uF 10V	[M]
C554	F1J0J106A004	10uF 6.3V	[M]
C555	ECJ1VB0J225M	2.2uF 6.3V	[M]
C556	F1J0J106A004	10uF 6.3V	[M]
C557	F1J0J106A004	10uF 6.3V	[M]
C558	F1G1H101A566	100pF 50V	[M]
C559	F1G1H101A566	100pF 50V	[M]
C560	F1J0J106A004	10uF 6.3V	[M]
C561	F1G1A1040006	0.1uF 10V	[M]
C562	F1J0J106A004	10uF 6.3V	[M]
C563	F1J0J106A004	10uF 6.3V	[M]
C564	F1J0J106A004	10uF 6.3V	[M]
C601	F1G1C1030007	0.01uF 16V	[M]
C602	F1G1C1030007	0.01uF 16V	[M]

Ref. No.	Part No.	Part Name & Description	Remarks
C701	F1G1C1030007	0.01uF 16V	[M]
C702	F1G1C1030007	0.01uF 16V	[M]
C751	F1G1C1030007	0.01uF 16V	[M]
C752	F1G1C1030007	0.01uF 16V	[M]
C753	F1G1C1030007	0.01uF 16V	[M]
C754	F1G1C1030007	0.01uF 16V	[M]
C755	F1G1C1030007	0.01uF 16V	[M]
C756	F1G1C1030007	0.01uF 16V	[M]
C757	F1G1C1030007	0.01uF 16V	[M]
C801	F1G1C1030007	0.01uF 16V	[M]
C802	F1G1C1030007	0.01uF 16V	[M]
C803	F1G1C1030007	0.01uF 16V	[M]
C804	F1G1C1030007	0.01uF 16V	[M]
C805	F1G1C1030007	0.01uF 16V	[M]
C806	F1G1C1030007	0.01uF 16V	[M]
C807	F1G1C1030007	0.01uF 16V	[M]
C808	ECJ1VB0J475M	4.7uF 6.3V	[M]
C809	F3G0J476A030	47uF 6.3V	[M]
C811	F3G0J476A030	47uF 6.3V	[M]
C812	F3G0J476A030	47uF 6.3V	[M]
C813	F3G0J476A030	47uF 6.3V	[M]
C814	F1G1C1030007	0.01uF 16V	[M]
C815	F1G1C1030007	0.01uF 16V	[M]
C816	F1G1H150A565	15pF 50V	[M]
C817	F1G1H150A565	15pF 50V	[M]
C818	F1G1C1030007	0.01uF 16V	[M]
C819	F1G1C1030007	0.01uF 16V	[M]
C820	F1G1C1030007	0.01uF 16V	[M]
C821	F1G1C1030007	0.01uF 16V	[M]
C823	F1G1E1020001	1000pF 25V	[M]
C824	F1G1C1030007	0.01uF 16V	[M]
C825	F1G1C1030007	0.01uF 16V	[M]
C826	F1G1C1030007	0.01uF 16V	[M]
C827	F1G1C1030007	0.01uF 16V	[M]
C828	F1G1C1030007	0.01uF 16V	[M]
C829	F1G1C1030007	0.01uF 16V	[M]
C830	F1G1C1030007	0.01uF 16V	[M]
C831	F1G1C1030007	0.01uF 16V	[M]
C832	F1G1C1030007	0.01uF 16V	[M]
C833	F1G1C1030007	0.01uF 16V	[M]
C834	F1G1C1030007	0.01uF 16V	[M]
C835	F1G1C1030007	0.01uF 16V	[M]
C836	F1G1C1030007	0.01uF 16V	[M]
C837	F1G1C1030007	0.01uF 16V	[M]
C841	F1G1E1020001	1000pF 25V	[M]
C842	F1G1A1040006	0.1uF 10V	[M]
C843	F1G1E1020001	1000pF 25V	[M]
C844	F1G1A1040006	0.1uF 10V	[M]
C845	F1G1E1020001	1000pF 25V	[M]
C846	F1G1A1040006	0.1uF 10V	[M]
C849	F1G1C1030007	0.01uF 16V	[M]
C850	F1G1C1030007	0.01uF 16V	[M]
C851	F1G1E1020001	1000pF 25V	[M]
C852	F1G1H330A565	33pF 50V	[M]
C853	F1G1H220A565	22pF 50V	[M]
C1100	F2A0J101A208	100uF 6.3V	[M]
C1101	F2A1H1R0A145	1.0uF 50V	[M]
C1102	F1H1H152A219	1500pF 50V	[M]
C1103	F2A1C101A147	100uF 16V	[M]
C1104	F1H1E273A002	0.027uF 25V	[M]
C1105	F1H1H8210002	820pF 50V	[M]
C1106	F2A1H2R2A145	2.2uF 50V	[M]
C1107	F1H1H152A219	1500pF 50V	[M]
C1108	F2A1C100A147	10uF 16V	[M]
C1109	F2A1H3R3A145	3.3uF 50V	[M]
C1110	F1H1C104A042	0.1uF 16V	[M]
C1110	F1H1H152A219	1500pF 50V	[M]
C1121	F1H1H102A219	1000pF 50V	[M]
C1122	F1H1E103A029	0.01uF 25V	[M]
C1123	ECJ1VB1H271K	270pF 50V	[M]
C1201	F2A1H1R0A145	1.0uF 50V	[M]
C1202	F1H1H152A219	1500pF 50V	[M]
C1203	F2A1C101A147	100uF 16V	[M]
C1204	F1H1E273A002	0.027uF 25V	[M]

Ref. No.	Part No.	Part Name & Description	Remarks
C1205	F1H1H8210002	820pF 50V	[M]
C1206	F2A1H2R2A145	2.2uF 50V	[M]
C1207	F1H1H152A219	1500pF 50V	[M]
C1208	F2A1C100A147	10uF 16V	[M]
C1209	F2A1H3R3A145	3.3uF 50V	[M]
C1210	F1H1H152A219	1500pF 50V	[M]
C1221	F1H1H102A219	1000pF 50V	[M]
C1222	F1H1E103A029	0.01uF 25V	[M]
C1223	ECJ1VB1H271K	270pF 50V	[M]
C1301	ECEA1HKA0R1B	0.1uF 50V	[M]
C1302	F1H1C333A071	0.033uF 16V	[M]
C1303	F1H1C333A071	0.033uF 16V	[M]
C1304	F2A1H4R7A234	4.7uF 50V	[M]
C1305	F2A1C330A234	33uF 16V	[M]
C1307	ECA1AAK221XQ	220uF 10V	[M]
C1308	F2A1C220A234	22uF 16V	[M]
C1311	F2A1C470A234	47uF 16V	[M]
C1312	F1H1H332A013	3300pF 50V	[M]
C1314	F1H1H222A013	2200pF 50V	[M]
C1315	F1H1H222A013	2200pF 50V	[M]
C1316	F1H1H102A219	1000pF 50V	[M]
C1317	F1H1H102A219	1000pF 50V	[M]
C1318	ECQV1H473JL3	0.047uF 50V	[M]
C1319	F2A1C101A147	100uF 16V	[M]
C1320	F2A1H100A214	10uF 50V	[M]
C1321	F0A2A472A019	4700pF 100V	[M]
C1323	ECEA1HKN010B	1uF 50V	[M]
C1324	F2A1C470A234	47uF 16V	[M]
C1326	F2A1C100A147	10uF 16V	[M]
C1371	F1H1E103A029	0.01uF 25V	[M]
C2002	F1H1H103A219	0.01uF 50V	[M]
C2005	F1H0J1050013	1uF 6.3V	[M]
C2006	F1H0J1050013	1uF 6.3V	[M]
C2007	F1H1H101A720	100pF 50V	[M]
C2008	F1H1H101A720	100pF 50V	[M]
C2025	F1H0J1050013	1uF 6.3V	[M]
C2026	F1H0J1050013	1uF 6.3V	[M]
C2041	F1H1H102A219	1000pF 50V	[M]
C2042	F1H1H102A219	1000pF 50V	[M]
C2045	F1H0J1050013	1uF 6.3V	[M]
C2046	F1H0J1050013	1uF 6.3V	[M]
C2053	F1H1H102A219	1000pF 50V	[M]
C2054	F1H1H103A219	0.01uF 50V	[M]
C2056	F1H1H103A219	0.01uF 50V	[M]
C2065	F1H0J1050013	1uF 6.3V	[M]
C2066	F1H0J1050013	1uF 6.3V	[M]
C2081	F1H1H101A720	100pF 50V	[M]
C2082	F1H1H101A720	100pF 50V	[M]
C2083	F1H1H102A219	1000pF 50V	[M]
C2084	F1H1H102A219	1000pF 50V	[M]
C2085	F1H0J1050013	1uF 6.3V	[M]
C2086	F1H0J1050013	1uF 6.3V	[M]
C2091	F1H1H102A219	1000pF 50V	[M]
C2092	F1H1H102A219	1000pF 50V	[M]
C2095	F1H0J1050013	1uF 6.3V	[M]
C2096	F1H0J1050013	1uF 6.3V	[M]
C2105	F2A1H4R7A213	4.7uF 50V	[M]
C2106	F2A1H4R7A213	4.7uF 50V	[M]
C2119	F2A0J101A181	100uF 6.3V	[M]
C2120	F1H1H103A219	0.01uF 50V	[M]
C2121	F1H1H222A219	2200pF 50V	[M]
C2123	F1H0J1050013	1uF 6.3V	[M]
C2129	F2A1H1R0A213	1.0uF 50V	[M]
C2130	F2A1H1R0A213	1.0uF 50V	[M]
C2135	F1H1H470A004	47pF 50V	[M]
C2136	F1H1H470A004	47pF 50V	[M]
C2139	F1H1H100A017	10pF 50V	[M]
C2140	F1H1H100A017	10pF 50V	[M]
C2170	F2A1A330A159	33uF 10V	[M]
C2172	F2A1H4R7A213	4.7uF 50V	[M]
C2181	F2A1H1R0A213	1.0uF 50V	[M]
C2182	F2A1H1R0A213	1.0uF 50V	[M]
C2183	ECQV1H684JL3	0.68uF 50V	[M]
C2184	ECQV1H684JL3	0.68uF 50V	[M]

Ref. No.	Part No.	Part Name & Description	Remarks
C2185	ECQV1H684JL3	0.68uF 50V	[M]
C2186	ECQV1H684JL3	0.68uF 50V	[M]
C2187	F1H1H392A013	3900pF 50V	[M]
C2188	F1H1H392A013	3900pF 50V	[M]
C2189	F1H1H103A219	0.01uF 50V	[M]
C2190	F1H1H103A219	0.01uF 50V	[M]
C2191	F1H1H103A219	0.01uF 50V	[M]
C2192	F1H1H103A219	0.01uF 50V	[M]
C2193	F1H1C473A088	0.047uF 16V	[M]
C2194	F1H1C473A088	0.047uF 16V	[M]
C2195	F1H1C474A008	0.47uF 16V	[M]
C2196	F1H1C474A008	0.47uF 16V	[M]
C2197	F1H1H332A013	3300pF 50V	[M]
C2221	F1H1H222A219	2200pF 50V	[M]
C2222	F1H1H101A720	100pF 50V	[M]
C2301	F2A1H3R3A213	3.3uF 50V	[M]
C2302	F2A1H3R3A213	3.3uF 50V	[M]
C2303	F2A1H3R3A213	3.3uF 50V	[M]
C2304	F2A1H3R3A213	3.3uF 50V	[M]
C2305	F2A1H3R3A213	3.3uF 50V	[M]
C2306	F1H1C823A001	0.082uF 16V	[M]
C2307	F1H1C3330001	0.033uF 16V	[M]
C2308	F1H0J1050013	1uF 6.3V	[M]
C2311	F1H0J1050013	1uF 6.3V	[M]
C2312	F1H0J1050013	1uF 6.3V	[M]
C2313	F1H1E2730002	0.027uF 25V	[M]
C2315	F1H0J1050013	1uF 6.3V	[M]
C2316	F1H0J1050013	1uF 6.3V	[M]
C2321	F1H1H470A004	47pF 50V	[M]
C2322	F1H1H470A004	47pF 50V	[M]
C2323	D0GBR00JA008	0 1/16W	[M]
C2324	D0GBR00JA008	0 1/16W	[M]
C2341	F1H1H100A017	10pF 50V	[M]
C2342	F1H1H100A017	10pF 50V	[M]
C2357	F1H1H102A219	1000pF 50V	[M]
C2358	F1H1H102A219	1000pF 50V	[M]
C2365	ECEA1EKN4R7B	4.7uF 25V	[M]
C2371	F1H1H101A720	100pF 50V	[M]
C2374	F1H1H103A219	0.01uF 50V	[M]
C2375	F1H1H101A720	100pF 50V	[M]
C2376	F1H1C104A042	0.1uF 16V	[M]
C2378	F1H0J1050013	1uF 6.3V	[M]
C2379	F1H0J1050013	1uF 6.3V	[M]
C2380	F1H1H103A219	0.01uF 50V	[M]
C2501	F1H0J1050013	1uF 6.3V	[M]
C2503	F1H1A225A051	2.2uF 10V	[M]
C2505	F2A1C100A207	10uF 16V	[M]
C2507	F1H1A224A007	0.1uF 10V	[M]
C2509	F2A1A330A159	33uF 10V	[M]
C2561	D0GDR00JA017	0 1/10W	[M]
C2614	F2A1C100A207	10uF 16V	[M]
C2626	F1H1H101A720	100pF 50V	[M]
C2680	F1H1C104A042	0.1uF 16V	[M]
C2681	F2A0J470A167	47uF 6.3V	[M]
C2701	F1H1H103A219	0.01uF 50V	[M]
C2702	F2A1E102A207	1000uF 25V	[M]
C2703	EEUFC0J821B	820uF 6.3V	[M]
C2704	F1H1H103A219	0.01uF 50V	[M]
C2705	F1H1H101A720	100pF 50V	[M]
C2706	F1H1H103A219	0.01uF 50V	[M]
C2707	F2A0J101A181	100uF 6.3V	[M]
C2712	F2A1A330A159	33uF 10V	[M]
C2713	F2A0J470A167	47uF 6.3V	[M]
C2714	F1H1H103A219	0.01uF 50V	[M]
C2715	F1H1H103A219	0.01uF 50V	[M]
C2731	F2A1C470A180	47uF 16V	[M]
C2732	F1H1H103A219	0.01uF 50V	[M]
C2734	F1H1H103A219	0.01uF 50V	[M]
C2735	F2A1A330A159	33uF 10V	[M]
C2736	F1H1H103A219	0.01uF 50V	[M]
C2737	F2A1C470A180	47uF 16V	[M]
C2738	F1H1H103A219	0.01uF 50V	[M]
C2741	F1H1C104A042	0.1uF 16V	[M]
C2742	F1H1C104A042	0.1uF 16V	[M]

Ref. No.	Part No.	Part Name & Description	Remarks
C2743	F1H1H103A219	0.01uF 50V	[M]
C2751	F1H1H103A219	0.01uF 50V	[M]
C2753	F1H1H103A219	0.01uF 50V	[M]
C2754	F2A1C101A208	100uF 16V	[M]
C2755	F1H1H103A219	0.01uF 50V	[M]
C2756	F2A1A330A159	33uF 10V	[M]
C2762	F1H1H103A219	0.01uF 50V	[M]
C2763	F1H1H103A219	0.01uF 50V	[M]
C2764	F2A1C101A208	100uF 16V	[M]
C2765	F2A1C100A207	10uF 16V	[M]
C2766	F1H1H103A219	0.01uF 50V	[M]
C2767	F2A1A330A159	33uF 10V	[M]
C2768	F1H1H103A219	0.01uF 50V	[M]
C2800	F1H1C104A042	0.1uF 16V	[M]
C2802	ECQB1H392KF3	3900pF 50V	[M]
C2812	F1H0J1050013	1uF 6.3V	[M]
C2813	F2A1H3R3A213	3.3uF 50V	[M]
C2815	F1H1H220A004	22pF 50V	[M]
C2816	F1H1H180A230	18pF 50V	[M]
C2817	F1H1C104A042	0.1uF 16V	[M]
C2818	F1H1H103A219	0.01uF 50V	[M]
C2819	F1H1H103A219	0.01uF 50V	[M]
C2829	F1H1H102A219	1000pF 50V	[M]
C2834	F1H1H101A720	100pF 50V	[M]
C2835	F1H1H101A720	100pF 50V	[M]
C2837	F1H1C104A042	0.1uF 16V	[M]
C2900	F2A1V330A379	33uF 35V	[M]
C2912	ECEA1CKS101B	100uF 16V	[M]
C2913	F2A1V330A379	33uF 35V	[M]
C2929	F2A0J101A181	100uF 6.3V	[M]
C2930	F1H1H103A219	0.01uF 50V	[M]
C2931	F2A1A330A159	33uF 10V	[M]
C2932	F1H1H103A219	0.01uF 50V	[M]
C2941	F2A1C470A180	47uF 16V	[M]
C2942	F1H1C104A042	0.1uF 16V	[M]
C2944	F1H1H102A219	1000pF 50V	[M]
C2946	F1H1H103A219	0.01uF 50V	[M]
C2947	F2A0J101A181	100uF 6.3V	[M]
C2948	F2A0J221A181	220uF 6.3V	[M]
C2949	F2A1H2R2A234	2.2uF 50V	[M]
C2951	F1H0J1050013	1uF 6.3V	[M]
C2952	F1H0J1050013	1uF 6.3V	[M]
C2953	F1H1H102A219	1000pF 50V	[M]
C2954	F1H1H102A219	1000pF 50V	[M]
C2955	F2A0J101A013	100uF 6.3V	[M]
C2961	F1H1H102A219	1000pF 50V	[M]
C2963	F1H1C104A042	0.1uF 16V	[M]
C2965	F2A1C470A180	47uF 16V	[M]
C2966	F1H1C104A042	0.1uF 16V	[M]
C2967	F2A0J221A181	220uF 6.3V	[M]
C3105	F1H0J1050013	1uF 6.3V	[M]
C3106	F1H0J1050013	1uF 6.3V	[M]
C3107	F1H1H682A219	6800pF 50V	[M]
C3108	F1H1H682A219	6800pF 50V	[M]
C3109	D0GBR00JA008	0 1/16W	[M]
C3110	D0GBR00JA008	0 1/16W	[M]
C3114	F1H1H470A004	47pF 50V	[M]
C3115	F1H1H470A004	47pF 50V	[M]
C3116	F1H1H561A013	560pF 50V	[M]
C3117	F1H1H103A219	0.01uF 50V	[M]
C3601	F2A1C221A019	220uF 16V	[M]
C3603	F1H1C104A042	0.1uF 16V	[M]
C3701	F2A1H1R0A213	1.0uF 50V	[M]
C3702	F2A1H1R0A213	1.0uF 50V	[M]
C5000	ECJ1VB1H102K	1000pF 50V	[M]
C5001	ECJ1VB1H102K	1000pF 50V	[M]
C5002	F1H1A474A001	0.47uF 10V	[M]
C5003	F1H1A474A001	0.47uF 10V	[M]
C5004	F1H1A474A001	0.47uF 10V	[M]
C5005	F1H1A474A001	0.47uF 10V	[M]
C5006	ECJ1VB1H331K	330pF 50V	[M]
C5007	ECJ1VB1H331K	330pF 50V	[M]
C5008	ECJ1VB1H153K	0.015uF 50V	[M]
C5009	ECJ1VB1H153K	0.015uF 50V	[M]

Ref. No.	Part No.	Part Name & Description	Remarks
C5010	ECJ2VC2A221J	220pF 100V	[M]
C5011	ECJ2VC2A221J	220pF 100V	[M]
C5012	ECJ2VC2A221J	220pF 100V	[M]
C5013	ECJ2VC2A221J	220pF 100V	[M]
C5014	ECQV1H684JL3	0.68uF 50V	[M]
C5015	ECQV1H684JL3	0.68uF 50V	[M]
C5016	ECJ1VB1H104K	0.1uF 50V	[M]
C5017	ECJ1VB1H104K	0.1uF 50V	[M]
C5018	F1K2A1040007	0.1uF 100V	[M]
C5019	ECJ1VB1H104K	0.1uF 50V	[M]
C5020	ECJ1VB1H104K	0.1uF 50V	[M]
C5021	ECJ1VB1H104K	0.1uF 50V	[M]
C5022	ECJ1VB1H104K	0.1uF 50V	[M]
C5023	F1K2A1040007	0.1uF 100V	[M]
C5024	ECJ1VB1H104K	0.1uF 50V	[M]
C5025	ECJ1VB1H104K	0.1uF 50V	[M]
C5028	ECJ1VB1H104K	0.1uF 50V	[M]
C5030	ECJ1VC1H221J	220pF 50V	[M]
C5031	ECJ1VB1C224K	0.22uF 16V	[M]
C5032	ECJ1VB1H102K	1000pF 50V	[M]
C5033	ECJ1VB1H104K	0.1uF 50V	[M]
C5040	F2A2A2200035	22uF 100V	[M]
C5050	ECJ1VB1H104K	0.1uF 50V	[M]
C5051	ECJ1VB1H104K	0.1uF 50V	[M]
C5052	ECJ1VB1H104K	0.1uF 50V	[M]
C5053	ECJ1VB1H104K	0.1uF 50V	[M]
C5106	F1H1A474A001	0.47uF 10V	[M]
C5107	F1H1A474A001	0.47uF 10V	[M]
C5117	ECJ1VB1H102K	1000pF 50V	[M]
C5119	ECJ1VB1H102K	1000pF 50V	[M]
C5120	F1H1A474A001	0.47uF 10V	[M]
C5121	F1H1A474A001	0.47uF 10V	[M]
C5133	F2A0J101A245	100uF 6.3V	[M]
C5150	ECJ1VB1H102K	1000pF 50V	[M]
C5151	ECJ1VB1H102K	1000pF 50V	[M]
C5152	ECJ1VB1H102K	1000pF 50V	[M]
C5155	ECJ1VB1H102K	1000pF 50V	[M]
C5200	ECJ1VB1H104K	0.1uF 50V	[M]
C5201	ECJ1VB1H153K	0.015uF 50V	[M]
C5202	ECJ1VB1C224K	0.22uF 16V	[M]
C5203	ECJ2VC2A221J	220pF 100V	[M]
C5204	ECJ1VB1H153K	0.015uF 50V	[M]
C5205	ECJ2VC2A221J	220pF 100V	[M]
C5206	ECJ1VB1H104K	0.1uF 50V	[M]
C5207	F1K2A1040007	0.1uF 100V	[M]
C5208	ECJ1VB1H104K	0.1uF 50V	[M]
C5209	ECJ1VB1H104K	0.1uF 50V	[M]
C5211	ECJ2VC2A221J	220pF 100V	[M]
C5212	ECJ1VC1H221J	220pF 50V	[M]
C5213	ECJ1VB1H104K	0.1uF 50V	[M]
C5214	ECJ1VB1H104K	0.1uF 50V	[M]
C5216	ECJ1VB1H331K	330pF 50V	[M]
C5217	ECJ1VB1H104K	0.1uF 50V	[M]
C5218	ECJ2VC2A221J	220pF 100V	[M]
C5219	F1K2A1040007	0.1uF 100V	[M]
C5221	ECJ1VB1H102K	1000pF 50V	[M]
C5222	F1H1A474A001	0.47uF 10V	[M]
C5223	F1H1A474A001	0.47uF 10V	[M]
C5224	ECJ1VB1H331K	330pF 50V	[M]
C5225	ECQV1H684JL3	0.68uF 50V	[M]
C5226	ECJ1VB1H104K	0.1uF 50V	[M]
C5227	ECJ1VB1H104K	0.1uF 50V	[M]
C5228	ECQV1H684JL3	0.68uF 50V	[M]
C5231	ECJ1VB1H102K	1000pF 50V	[M]
C5232	F1H1A474A001	0.47uF 10V	[M]
C5233	F1H1A474A001	0.47uF 10V	[M]
C5234	ECJ1VB1H102K	1000pF 50V	[M]
C5240	F2A2A2200035	22uF 100V	[M]
C5250	ECJ1VB1H104K	0.1uF 50V	[M]
C5251	ECJ1VB1H104K	0.1uF 50V	[M]
C5400	ECQV1H684JL3	0.68uF 50V	[M]
C5401	ECJ1VB1H104K	0.1uF 50V	[M]
C5402	ECJ1VB1H104K	0.1uF 50V	[M]
C5403	ECJ1VB1H104K	0.1uF 50V	[M]

Ref. No.	Part No.	Part Name & Description	Remarks
C5404	ECJ1VB1H331K	330pF 50V	[M]
C5406	ECJ1VB1H104K	0.1uF 50V	[M]
C5407	ECJ2VC2A221J	220pF 100V	[M]
C5409	ECJ1VB1H104K	0.1uF 50V	[M]
C5410	F1K2A1040007	0.1uF 100V	[M]
C5411	ECJ2VC2A221J	220pF 100V	[M]
C5412	ECJ1VB1H331K	330pF 50V	[M]
C5413	ECJ1VB1H104K	0.1uF 50V	[M]
C5416	ECJ1VB1A474K	0.47uF 10V	[M]
C5418	ECJ1VB1H104K	0.1uF 50V	[M]
C5419	F1K2A1040007	0.1uF 100V	[M]
C5421	ECJ1VB1C224K	0.22uF 16V	[M]
C5422	ECJ1VB1H153K	0.015uF 50V	[M]
C5423	ECJ1VC1H221J	220pF 50V	[M]
C5424	ECJ1VB1H153K	0.015uF 50V	[M]
C5425	ECJ2VC2A221J	220pF 100V	[M]
C5426	ECJ2VC2A221J	220pF 100V	[M]
C5427	ECJ1VB1H104K	0.1uF 50V	[M]
C5428	ECQV1H684JL3	0.68uF 50V	[M]
C5431	ECJ1VB1H102K	1000pF 50V	[M]
C5440	F2A2A2200035	22uF 100V	[M]
C5445	ECJ1VB1H104K	0.1uF 50V	[M]
C5450	ECJ1VB1H104K	0.1uF 50V	[M]
C5508	F2A1V4710074	470uF 35V	[M]
C5509	F2A1V4710074	470uF 35V	[M]
C5510	F2A1V4710074	470uF 35V	[M]
C5511	F2A1V4710074	470uF 35V	[M]
C5512	F2A1V4710074	470uF 35V	[M]
C5513	F2A1V4710074	470uF 35V	[M]
C5514	ECJ1VB1H104K	0.1uF 50V	[M]
C5515	ECJ1VB1H104K	0.1uF 50V	[M]
C5516	F2A1V4710074	470uF 35V	[M]
C5517	F2A1V4710074	470uF 35V	[M]
C5518	ECJ1VB1H104K	0.1uF 50V	[M]
C5519	ECJ1VB1H104K	0.1uF 50V	[M]
C5520	ECJ1VB1H104K	0.1uF 50V	[M]
C5521	ECJ1VB1H104K	0.1uF 50V	[M]
C5522	ECJ1VB1H104K	0.1uF 50V	[M]
C5523	ECJ1VB1H104K	0.1uF 50V	[M]
C5524	ECJ1VB1H104K	0.1uF 50V	[M]
C5525	ECJ1VB1H104K	0.1uF 50V	[M]
C5540	F2A2A2200035	22uF 100V	[M]
C5550	ECJ1VB1H103K	0.01uF 50V	[M]
C5551	ECJ1VB1H391K	390pF 50V	[M]
C5552	ECJ1VB1H391K	390pF 50V	[M]
C5553	ECJ1VC1H101J	100pF 50V	[M]
C5554	ECJ1VB1H104K	0.1uF 50V	[M]
C5555	F1K1C1060001	10uF 16V	[M]
C5556	ECJ1VB1H103K	0.01uF 50V	[M]
C5557	ECJ1VC1H101J	100pF 50V	[M]
C5558	ECJ1VC1H470J	47pF 50V	[M]
C5559	ECJ1VC1H470J	47pF 50V	[M]
C5560	ECJ1VB1H104K	0.1uF 50V	[M]
C5561	ECJ1VC1H101J	100pF 50V	[M]
C5562	F2A0J102A016	1000uF 6.3V	[M]
C5602	ECA1CAK100XB	10uF 16V	[M]
C5700	F1BAF1020020	1000pF	[M] ⚠
C5701	F0CAF334A087	0.33uF	[M] ⚠
C5703	F0C2H1040001	0.1uF 500V	[M] GCP ⚠
C5703	F0CAF224A085	0.22uF	[M] PL ⚠
C5704	F1BAF1020020	1000pF	[M] ⚠
C5705	F1BAF1020020	1000pF	[M] ⚠
C5706	F1BAF1020020	1000pF	[M] GCP ⚠
C5707	F1BAF1020020	1000pF	[M] GCP ⚠
C5711	F2B2G471A083	470uF 400V	[M] GCP
C5712	F2B2D8210010	820uF 200V	[M] PL
C5712	F2B2G471A083	470uF 400V	[M] GCP
C5713	F0C2J1030005	0.01uF 630V	[M]
C5720	ECJ1VB1H104K	0.1uF 50V	[M]
C5721	ECJ1VB1H221K	220pF 50V	[M]
C5722	ECJ1VB1H102K	1000pF 50V	[M]

Ref. No.	Part No.	Part Name & Description	Remarks
C5723	ECJ1VB1H471K	470pF 50V	[M]
C5724	F2A1H5600009	56uF 50V	[M]
C5725	ECJ1VB1H104K	0.1uF 50V	[M]
C5726	ECJ1VB1H104K	0.1uF 50V	[M]
C5727	ECQP6332JUB	3300uF 630V	[M] PL
C5728	ECJ1VB1H102K	1000pF 50V	[M]
C5730	ECEA1HKS010B	1uF 50V	[M]
C5737	F1A3A471A035	470pF 1000V	[M] GCP
C5750	ECJ1VB1H104K	0.1uF 50V	[M] GCP
C5788	ECJ1VB1H104K	0.1uF 50V	[M] GCP
C5789	ECJ1VB1H104K	0.1uF 50V	[M] GCP
C5790	ECJ3YB2J222K	2200pF 630V	[M]
C5791	ECEA1HKA2R2B	2.2uF 50V	[M]
C5793	ECJ1VB1H104K	0.1uF 50V	[M] GCP
C5794	ECJ1VC1H220J	22pF 50V	[M]
C5795	ECJ2VC1H222J	2200pF 50V	[M]
C5796	F1J1H104A717	0.1uF 50V	[M]
C5797	F1A3A470A023	47pF 1000V	[M]
C5798	F2A1H5600009	56uF 50V	[M]
C5799	F2A1H5600009	56uF 50V	[M] GCP
C5800	F1J2E1030004	0.01uF 250V	[M]
C5805	F2B1V332A007	3300uF 35V	[M]
C5808	F2B1V332A007	3300uF 35V	[M]
C5810	ECJ1VB1H104K	0.1uF 50V	[M]
C5812	ECJ1VB1H104K	0.1uF 50V	[M]
C5813	F2A1V4710035	470uF 35V	[M]
C5815	ECJ1VB1H104K	0.1uF 50V	[M]
C5816	F2A1E471A652	470uF 25V	[M]
C5817	F2A2AR22A358	0.22uF 100V	[M]
C5818	ECJ1VB1H104K	0.1uF 50V	[M]
C5819	F1J2E1030004	0.01uF 250V	[M]
C5820	F1J2E1030004	0.01uF 250V	[M]
C5821	F1J2E1030004	0.01uF 250V	[M]
C5822	F1J2E1030004	0.01uF 250V	[M]
C5823	ECJ1VB1H104K	0.1uF 50V	[M]
C5824	F2A1E471A652	470uF 25V	[M]
C5825	ECJ1VB1H104K	0.1uF 50V	[M]
C5826	F1J2E1030004	0.01uF 250V	[M]
C5831	ECJ1VB1H104K	0.1uF 50V	[M]
C5832	ECJ1VB1H104K	0.1uF 50V	[M]
C5839	F1J2E1030004	0.01uF 250V	[M]
C5840	F1J2E1030004	0.01uF 250V	[M]
C5841	F1J2E1030004	0.01uF 250V	[M]
C5842	F1J2E1030004	0.01uF 250V	[M]
C5869	ECJ1VB1H104K	0.1uF 50V	[M]
C5870	F1H1H104A013	0.1uF 50V	[M]
C5896	ECJ1VB1H104K	0.1uF 50V	[M]
C5897	ECJ1VB1H104K	0.1uF 50V	[M]
C5898	ECJ1VB1H104K	0.1uF 50V	[M]
C5899	F2A1C221A104	220uF 16V	[M]
C6300	F1H1H102A219	1000pF 50V	[M]
C6503	F1H1H102A219	1000pF 50V	[M]
C6512	F1H1H102A219	1000pF 50V	[M]
C6601	F1H1H101A720	100pF 50V	[M]
C6608	F1H1H104A013	0.1uF 50V	[M]
C6609	F1H1H104A013	0.1uF 50V	[M]
C6611	F1H1H331A013	330pF 50V	[M]
C6612	F1H1H331A013	330pF 50V	[M]
C6613	F1H1H331A013	330pF 50V	[M]
C6614	F1H1H103A219	0.01uF 50V	[M]
C6616	F2A1H220A182	22uF 50V	[M]
C6633	F1H1H101A720	100pF 50V	[M]
C6634	F1H1H101A720	100pF 50V	[M]
C6671	F2A1H220A182	22uF 50V	[M]
C6700	F1H1H103A219	0.01uF 50V	[M]
C6701	F1H1H103A219	0.01uF 50V	[M]
C6702	F2A1H4R7A213	4.7uF 50V	[M]
C6703	F1H1H102A219	1000pF 50V	[M]
C6704	F1H1H561A013	560pF 50V	[M]
C6705	F1H1H470A004	47pF 50V	[M]
C6706	ECQV1H474JL3	0.47uF 50V	[M]
C6707	F1H1C104A042	0.1uF 16V	[M]
C6711	F1H1H104A013	0.1uF 50V	[M]
C6712	F1H1H470A004	47pF 50V	[M]

Ref. No.	Part No.	Part Name & Description	Remarks
C6713	F1H1H561A013	560pF 50V	[M]
C6801	F1H1H473A783	0.047uF 50V	[M]
C6802	F1H1H473A783	0.047uF 50V	[M]
C6803	F1H1C104A042	0.1uF 16V	[M]
C6804	F1H1C104A042	0.1uF 16V	[M]
C6810	ECJ1VB1H391K	390pF 50V	[M]
C6811	F1H0J1050013	1uF 6.3V	[M]
C6812	F1H0J1050013	1uF 6.3V	[M]
C6813	F1H1H331A013	330pF 50V	[M]
C6814	F1H1H331A013	330pF 50V	[M]
C6815	F1H1H103A219	0.01uF 50V	[M]
C6816	F1H1H103A219	0.01uF 50V	[M]
C6820	ECJ1VB1H391K	390pF 50V	[M]
C6821	F1H1H103A219	0.01uF 50V	[M]
C6822	F1H1H103A219	0.01uF 50V	[M]
C6823	F1H1H103A219	0.01uF 50V	[M]
C6851	F1H1C104A042	0.1uF 16V	[M]
C6852	F1H1H102A219	1000pF 50V	[M]
C6861	F1H1H102A219	1000pF 50V	[M]
C6863	F1H1C104A042	0.1uF 16V	[M]
C6938	F1H1C104A042	0.1uF 16V	[M]
C6940	F1H1C104A042	0.1uF 16V	[M]
C7102	F1H1A474A025	0.47uF 10V	[M]
C7107	ECJ1VB1H223K	0.022uF 50V	[M]
C7142	ECJ1VB1H332K	3300pF 50V	[M]
C7154	ECJ1VB1C104K	0.1uF 16V	[M]
C7155	ECJ1VB1C104K	0.1uF 16V	[M]
C7161	ECJ1VB1C104K	0.1uF 16V	[M]
C7164	ECJ2FF1A106Z	10uF 10V	[M]
C7165	ECJ2FF1A106Z	10uF 10V	[M]
C7166	F1H1H103A219	0.01uF 50V	[M]
C7203	F2A0J221A200	220uF 6.3V	[M]
C7204	ECJ1VB1C104K	0.1uF 16V	[M]
C7216	ECJ1VB1H681K	680pF 50V	[M]
C7217	ECJ1VB1C104K	0.1uF 16V	[M]
C7218	ECJ1VB1C823K	0.082uF 16V	[M]
C7221	ECJ1VC1H150J	15pF 50V	[M]
C7222	ECJ1VC1H150J	15pF 50V	[M]
C7223	F2A1H4R70037	4.7uF 50V	[M]
C7225	F1H1H102A219	1000pF 50V	[M]
C7226	F1H1H102A219	1000pF 50V	[M]
C7227	ECA1HAK010XI	1uF 50V	[M]
C7228	ECA1HAK010XI	1uF 50V	[M]
C7230	ECJ1VB1C104K	0.1uF 16V	[M]
C7231	F2A0J221A200	220uF 6.3V	[M]
C7232	F2A0J221A200	220uF 6.3V	[M]
C7233	F1H1C104A008	0.1uF 16V	[M]
C7234	ECJ1VB1C104K	0.1uF 16V	[M]
C7235	F2A1C100A133	10uF 16V	[M]
C7241	F1H1H102A219	1000pF 50V	[M]
C7243	F1H1C104A008	0.1uF 16V	[M]
C7244	ECJ1VB1C153K	0.015uF 16V	[M]
C7253	F1H1H471A219	470pF 50V	[M]
C7263	ECJ1VB1C104K	0.1uF 16V	[M]
C7264	ECJ1VB1C104K	0.1uF 16V	[M]
C7315	F1H1A474A025	0.47uF 10V	[M]
C7334	ECEA1AKA221I	220uF 10V	[M]
C7335	F1H1C104A008	0.1uF 16V	[M]
C7338	ECJ1VB1E273K	0.027uF 25V	[M]
C7339	ECJ1VB1C183K	0.018uF 16V	[M]
C7352	ECJ1VB1C183K	0.018uF 16V	[M]
C7601	ECEA0JKA330I	33uF 6.3V	[M]
C7613	ECJ1VB1C104K	0.1uF 16V	[M]
C7614	F2A0J101A198	100uF 6.3V	[M]
C7626	ECJ1VB1C104K	0.1uF 16V	[M]
C7670	ECJ1VB1C104K	0.1uF 16V	[M]