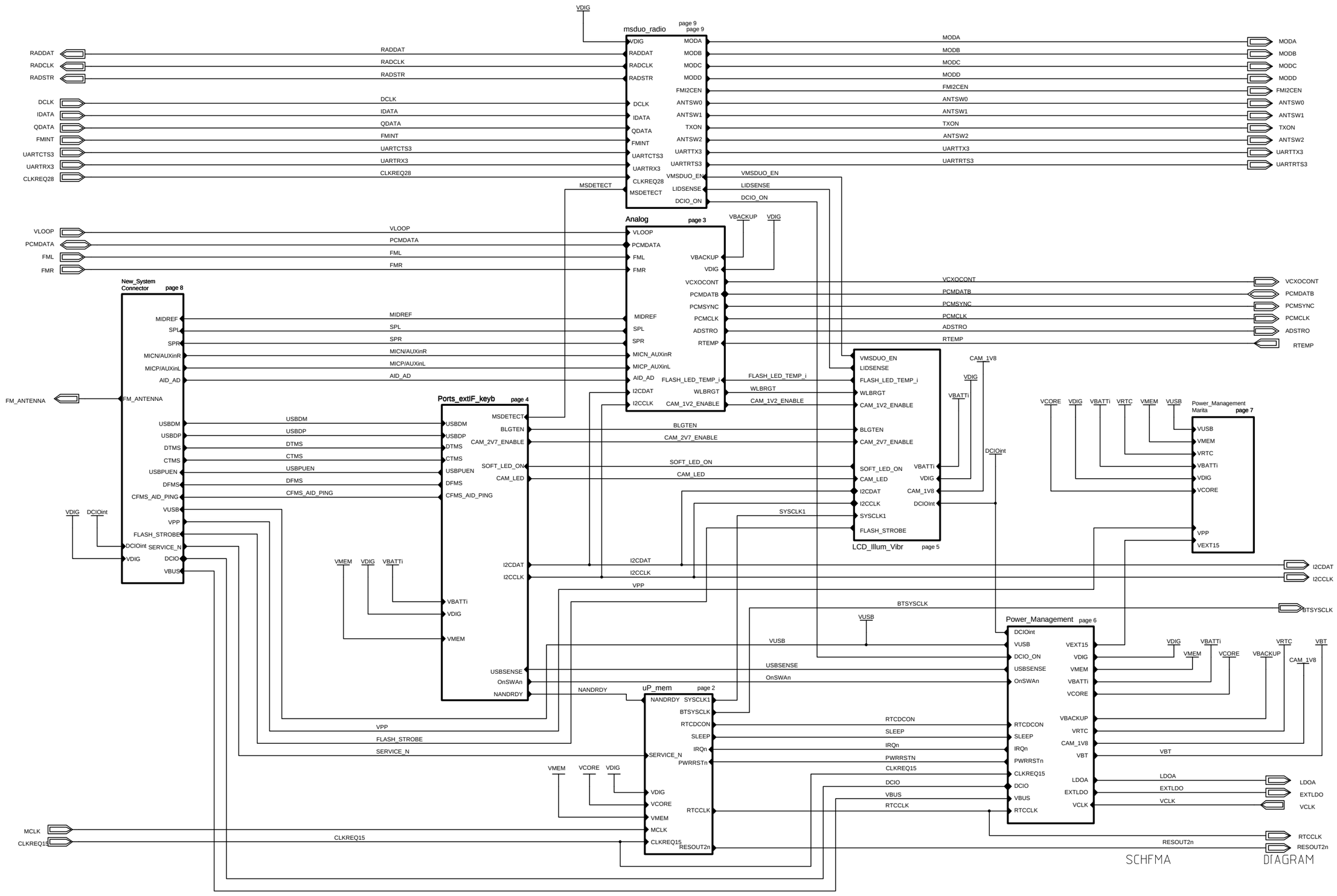
msduo_radio
page 9
Analog
page 3
New_System Connector
page 8
Ports_extIF_keyb
page 4
LCD_Illum_Vibr
page 5
Power_Management Marita
page 7
Power_Management
page 6
uP_mem
page 2
RADDAT
RADCLK
RADSTR
DCLK
IDATA
QDATA
FMINT
UARTCTS3
UARTRX3
CLKREQ28
MODA
MODB
MODC
MODD
FMI2CEN
ANTSW0
ANTSW1
TXON
ANTSW2
UARTTX3
UARTRTS3
VMSDUO_EN
LIDSENSE
DCIO_ON
MSDETECT
VLOOP
PCMDATA
FML
FMR
VBACKUP
VDIG
VCXOCONT
PCMDATB
PCMSYNC
PCMCLK
ADSTRO
RTEMP
MIDREF
SPL
SPR
MICN/AUXinR
MICP/AUXinL
AID_AD
FLASH_LED_TEMP_i
WLBRGT
CAM_1V2_ENABLE
FM_ANTENNA
USBDM
USBDP
DTMS
CTMS
USBPUEN
DFMS
CFMS_AID_PING
VUSB
VPP
FLASH_STROBE
SERVICE_N
DCIO
VBUS
BLGTEN
CAM_2V7_ENABLE
SOFT_LED_ON
CAM_LED
I2CDAT
I2CCLK
SYSCLK1
CAM_1V8
DCIOint
VBATTi
VMEM
VCORE
VEXT15
USBSENSE
OnSWAn
NANDRDY
BTSYSCLK
RTCDCON
SLEEP
IRQn
PWRRSTn
CLKREQ15
RTCCLK
RESOUT2n
MCLK
LDOA
EXTLDO
VCLK
VBT
VRTC
VMEM
VCORE
VBACKUP
CAM_1V8
VBT
VDIG
DCIOint
VCORE
VDIG
VBATTi
VRTC
VMEM
VUSB
VUSB
VPP
VEXT15
VDIG
VMEM
VBATTi
VCORE
VBACKUP
VRTC
CAM_1V8
VBT
LDOA
EXTLDO
VCLK
RTCCLK
RESOUT2n
SCHFMA
DIAGRAM

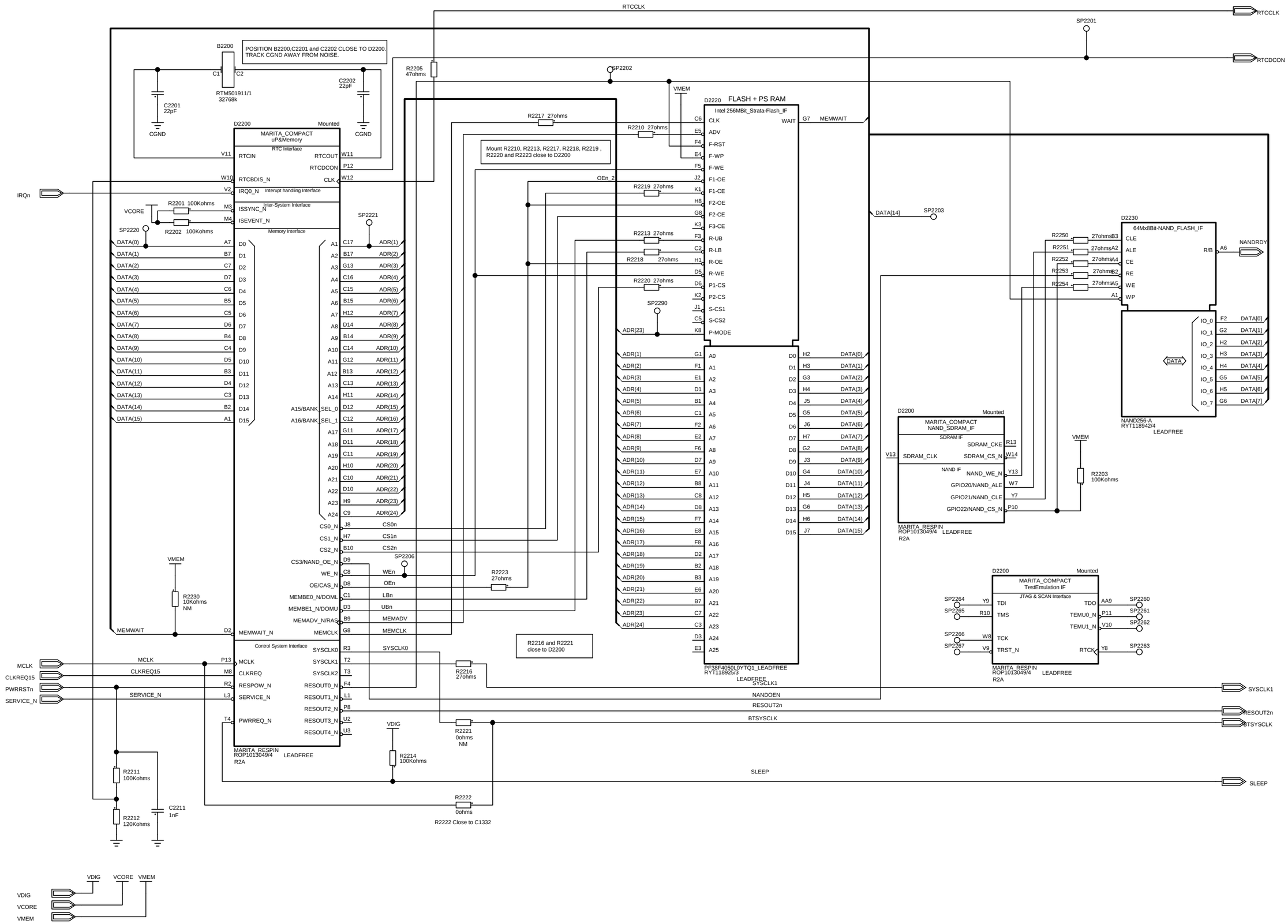
RTCCLK
RTCDCON
SP2201
POSITION B2200,C2201 and C2202 CLOSE TO D2200.
TRACK CGND AWAY FROM NOISE.
B2200
RTM501911/1
32768k
C2201
22pF
C2202
22pF
CGND
R2205
47ohms
SP2202
VMEM
D2220
FLASH + PS RAM
Intel 256MBit_Strata-Flash_IF
PF38F4050L0YTQ1_LEADFREE
RYT118925/3
LEADFREE
D2200
Mounted
MARITA_COMPACT
uP&Memory
RTC Interface
Interupt handling Interface
Inter-System Interface
Memory Interface
Control System Interface
MARITA_RESPIN
ROP1013049/4
R2A
LEADFREE
IRQn
VCORE
R2201 100Kohms
R2202 100Kohms
SP2220
SP2221
R2217 27ohms
R2210 27ohms
R2219 27ohms
R2213 27ohms
R2218 27ohms
R2220 27ohms
Mount R2210, R2213, R2217, R2218, R2219 ,
R2220 and R2223 close to D2200
OEn_2
SP2290
ADR[23]
MEMWAIT
DATA[14]
SP2203
D2230
64Mx8Bit-NAND_FLASH_IF
NAND256-A
RYT118942/4
LEADFREE
NANDRDY
R2250
R2251
R2252
R2253
R2254
27ohms
DATA
D2200
Mounted
MARITA_COMPACT
NAND_SDRAM_IF
SDRAM IF
NAND IF
MARITA_RESPIN
ROP1013049/4
R2A
LEADFREE
R2203
100Kohms
R2230
10Kohms
NM
SP2206
R2223
27ohms
R2216 and R2221
close to D2200
D2200
Mounted
MARITA_COMPACT
TestEmulation IF
JTAG & SCAN Interface
SP2264
SP2265
SP2266
SP2267
SP2260
SP2261
SP2262
SP2263
MARITA_RESPIN
ROP1013049/4
R2A
LEADFREE
MCLK
CLKREQ15
PWRRSTn
SERVICE_N
MEMWAIT
R2216
27ohms
SYSCLK1
NANDOEN
RESOUT2n
BTSYSCLK
SLEEP
R2221
0ohms
NM
VDIG
R2214
100Kohms
R2211
100Kohms
R2212
120Kohms
C2211
1nF
R2222
0ohms
R2222 Close to C1332
VDIG
VCORE
VMEM

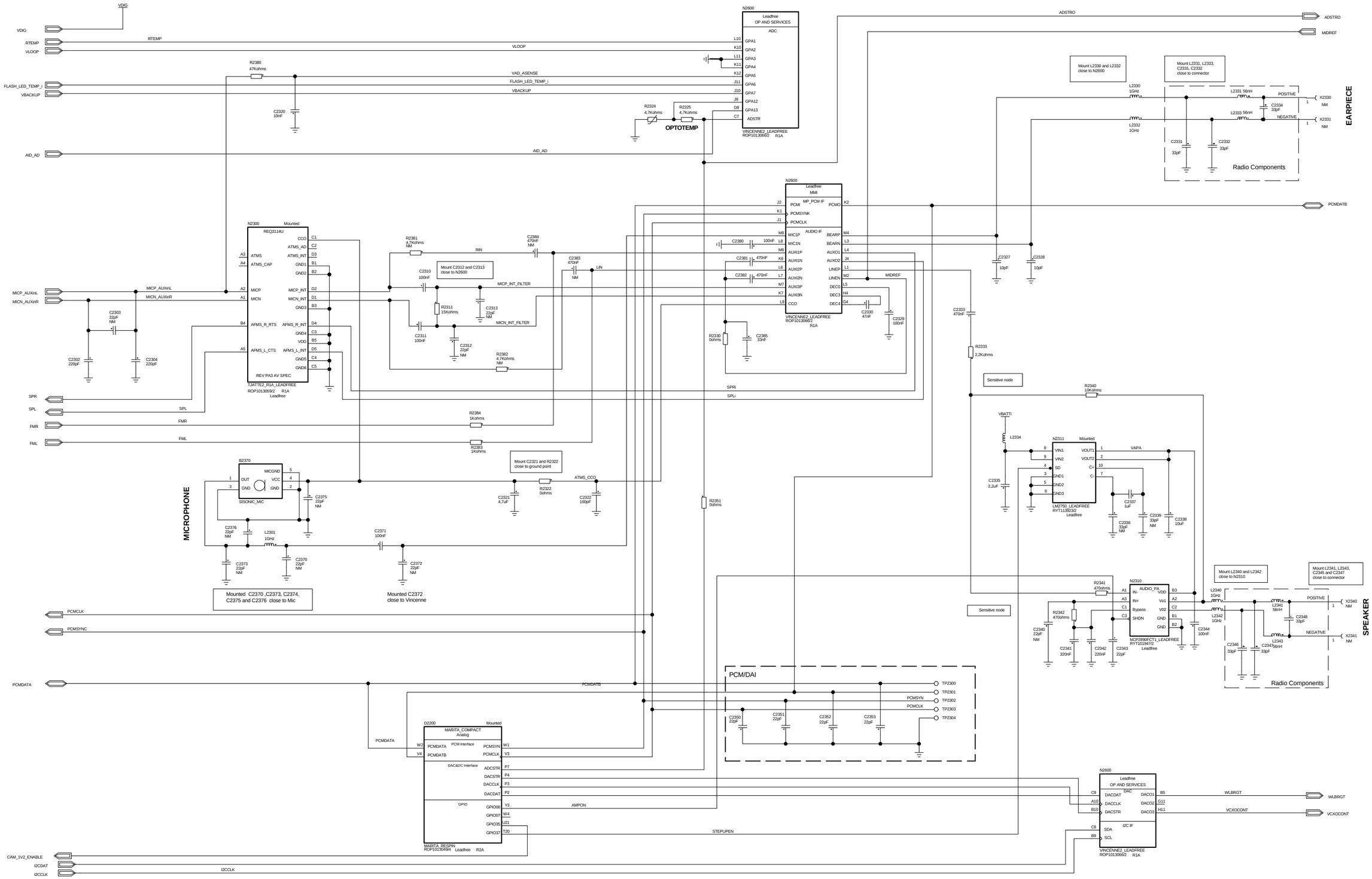
VDIG
RTEMP
VLOOP
FLASH_LED_TEMP_I
VBACKUP
AID_AD
ADSTRO
MIDREF
PCMDATB
MICP_AUXinL
MICN_AUXinR
SPR
SPL
FMR
FML
PCMCLK
PCMSYNC
PCMDATA
CAM_1V2_ENABLE
I2CDAT
I2CCLK
WLBRGT
VCXOCONT
N2600
Leadfree
OP AND SERVICES
ADC
VINCENNE2_LEADFREE
ROP101306602 R1A
OPTOTEMP
R2380
47Kohms
C2320
10nF
R2324
4,7Kohms
R2325
4,7Kohms
N2300
Mounted
REQ2114U
TJATTE2_R1A_LEADFREE
ROP1013059/2 R1A
Leadfree
REV PA3 AV SPEC
C2303
22pF
NM
C2302
220pF
C2304
220pF
R2381
4,7Kohms
NM
RIN
C2384
470nF
NM
C2383
470nF
NM
LIN
C2310
100nF
Mount C2312 and C2313
close to N2600
MICP_INT_FILTER
MICN_INT_FILTER
R2311
15Kohms
C2313
22pF
NM
C2311
100nF
C2312
22pF
NM
R2382
4,7Kohms
NM
N2600
Leadfree
MM
MP_PCM IF
AUDIO IF
VINCENNE2_LEADFREE
ROP101306602
R1A
C2380
100nF
C2381
470nF
C2382
470nF
C2330
47nF
C2329
100nF
R2330
0ohms
C2385
33nF
C2327
10pF
C2328
10pF
C2333
470nF
R2333
2,2Kohms
Sensitive node
R2340
10Kohms
VBATTi
L2334
N2311
Mounted
LM2750_LEADFREE
RYT111392/2
Leadfree
VAPA
C2335
2,2uF
C2337
1uF
C2336
33pF
NM
C2339
33pF
NM
C2338
10uF
Mount L2330 and L2332
close to N2600
Mount L2331, L2333,
C2331, C2332
close to connector
L2330
1GHz
L2332
1GHz
L2331 56nH
L2333 56nH
POSITIVE
NEGATIVE
C2334
33pF
X2330
NM
X2331
NM
C2331
33pF
C2332
33pF
Radio Components
EARPIECE
B2370
SISONIC_MIC
MICROPHONE
C2375
22pF
NM
C2376
22pF
NM
L2301
1GHz
C2373
22pF
NM
C2370
22pF
NM
C2371
100nF
C2372
22pF
NM
Mounted C2370 ,C2373, C2374,
C2375 and C2376 close to Mic
Mounted C2372
close to Vincenne
Mount C2321 and R2322
close to ground point
C2321
4,7uF
R2322
0ohms
C2322
100pF
ATMS_CCO
R2351
0ohms
R2341
470ohms
N2310
NCP2890FCT1_LEADFREE
RYT101947/2
Leadfree
AUDIO_PA
R2342
470ohms
C2340
22pF
NM
C2341
220nF
C2342
220nF
C2343
22pF
C2344
100nF
Mount L2340 and L2342
close to N2310
Mount L2341, L2343,
C2345 and C2347
close to connector
L2340
1GHz
L2342
1GHz
L2341
56nH
L2343
56nH
C2348
33pF
C2346
33pF
C2347
33pF
X2340
NM
X2341
NM
SPEAKER
Radio Components
PCM/DAI
TP2300
TP2301
TP2302
TP2303
TP2304
C2350
22pF
C2351
22pF
C2352
22pF
C2353
22pF
D2200
Mounted
MARITA_COMPACT
Analog
PCM Interface
DAC&DC Interface
GPIO
MARITA_RESPIN
ROP101304984 Leadfree R2A
AMPON
STEPUPEN
N2600
Leadfree
OP AND SERVICES
DAC
I2C IF
VINCENNE2_LEADFREE
ROP101306602 R1A

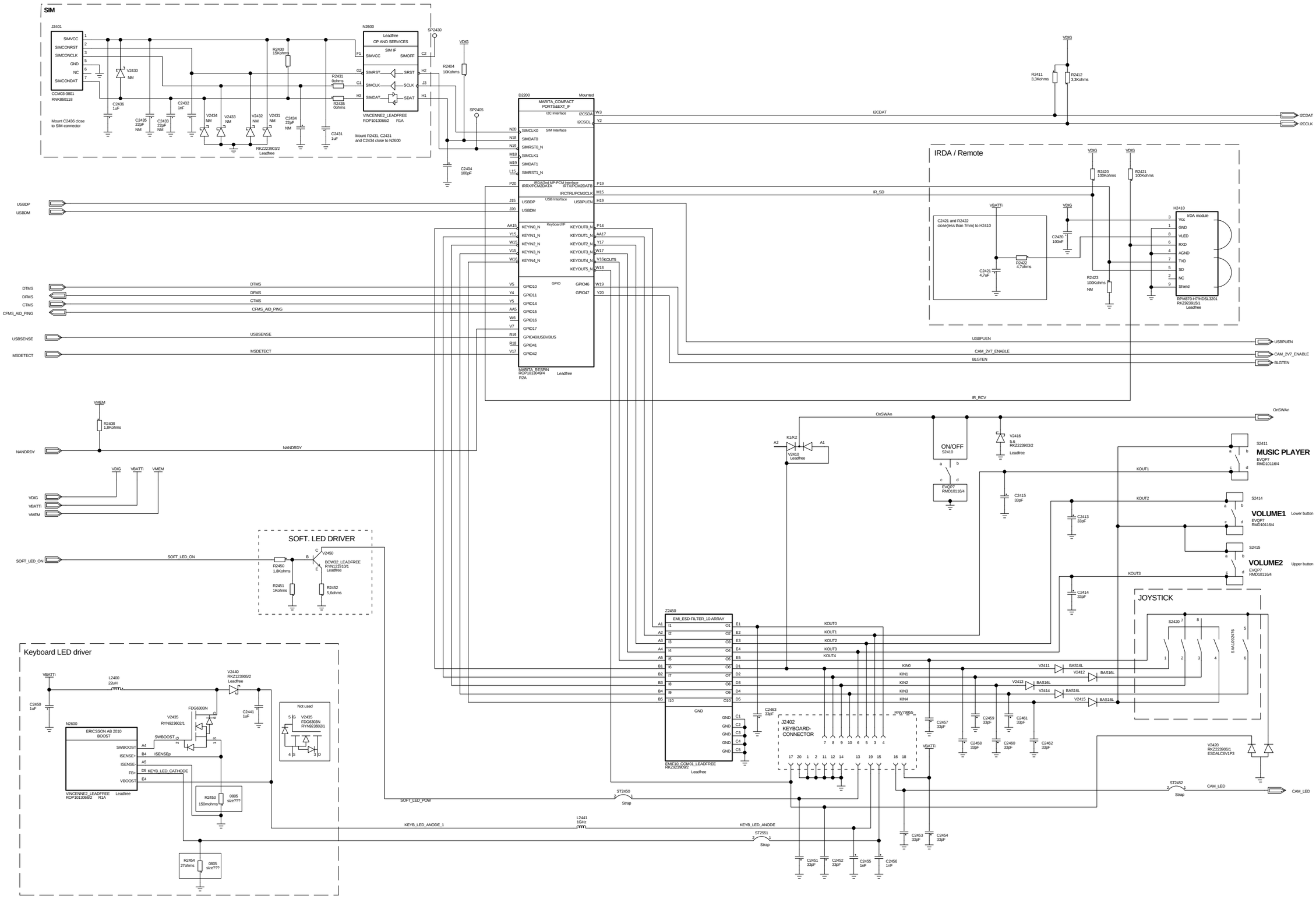
SIM
J2401
SIMVCC
SIMCONRST
SIMCONCLK
GND
NC
SIMCONDAT
CCM03-3801
RN#360118
Mount C2436 close to SIM-connector
V2430 NM
C2436 1uF
C2435 22pF NM
C2433 22pF NM
C2432 1nF
V2434 NM
V2433 NM
V2432 NM
V2431 NM
C2434 22pF NM
RK22390 3/2 Leadfree
R2430 15Kohms
R2431 0ohms
R2435 0ohms
C2431 1uF
Mount R2431, C2431 and C2434 close to N2600
N2600
Leadfree
OP AND SERVICES
SIM IF
SIMVCC
SIMOFF
SIMRST
SRST
SIMCLK
SCLK
SIMDAT
SDAT
VINCENNE2_LEADFREE
ROP10130666/2 R1A
SP2430
VDIG
R2404 10Kohms
SP2405
C2404 100pF
D2200
Mounted
MARITA_COMPACT PORTS&EXT_IF
I2C Interface
I2CSDA
I2CSCL
SIM Interface
SIMCLK0
SIMDAT0
SIMRST0_N
SIMCLK1
SIMDAT1
SIMRST1_N
IRDA/2nd MP-PCM Interface
IRRXPCM2DATA
IRTXPCM2DATB
IRCTRLPCM2CLK
USB Interface
USBDP
USBDM
USBPUEN
Keyboard IF
KEYIN0_N
KEYIN1_N
KEYIN2_N
KEYIN3_N
KEYIN4_N
KEYOUT0_N
KEYOUT1_N
KEYOUT2_N
KEYOUT3_N
KEYOUT4_N
KEYOUT5_N
GPIO
GPIO10
GPIO11
GPIO14
GPIO15
GPIO16
GPIO17
GPIO43/USBVBUS
GPIO41
GPIO42
GPIO46
GPIO47
MARITA_BESPIN
ROP10113049/4
R2A
Leadfree
I2CDAT
I2CCLK
IR_SD
USBPUEN
CAM_2V7_ENABLE
BLGTEN
IR_RCV
DTMS
DFMS
CTMS
CFMS_AID_PING
USBSENSE
MSDETECT
NANDRDY
VMEM
R2408 1,8Kohms
VDIG
VBATTi
SOFT_LED_ON
SOFT. LED DRIVER
R2450 1,8Kohms
V2450
BCW32_LEADFREE
RYN1129 10/1
Leadfree
R2451 1Kohms
R2452 5,6ohms
Keyboard LED driver
L2400 22uH
V2440 RK2123905/2 Leadfree
C2450 1uF
C2441 1uF
N2600
ERICSSON AB 2010
BOOST
SWBOOST
ISENSE+
ISENSE-
FB+
VBOOST
ISENSEp
KEYB_LED_CATHODE
VINCENNE2_LEADFREE
ROP10130662 R1A
V2435 RYN923602/1
FDG6303N
Not used
V2435 FDG6303N RYN923602/1
R2453 150mohms
0805 size???
R2454 27ohms
0805 size???
SOFT_LED_POW
ST2450
Strap
KEYB_LED_ANODE_1
L2441 1GHz
KEYB_LED_ANODE
ST2551
Strap
IRDA / Remote
R2411 3,3Kohms
R2412 3,3Kohms
R2420 100Kohms
R2421 100Kohms
C2421 and R2422 close(less than 7mm) to H2410
C2421 4,7uF
R2422 4,7ohms
C2420 100nF
R2423 100Kohms NM
H2410
IrDA module
Vcc
GND
VLED
RXD
AGND
TXD
SD
NC
Shield
RPM870-H7/HDSL3201
RK2523915/1
Leadfree
OnSWAn
K1/K2
A2
A1
V2410 Leadfree
ON/OFF
S2410
EVQP7 RMD10116/4
V2416 5,6 RK2223903/2 Leadfree
C2415 33pF
S2411
MUSIC PLAYER
KOUT1
S2414
VOLUME1
Lower button
KOUT2
C2413 33pF
S2415
VOLUME2
Upper button
KOUT3
C2414 33pF
JOYSTICK
S2420
SXX1092476
Z2450
EMI_ESD-FILTER_10-ARRAY
KOUT0
KOUT1
KOUT2
KOUT3
KOUT4
KIN0
KIN1
KIN2
KIN3
KIN4
GND
EMIF10_COM01_LEADFREE
RK2529092
C2463 33pF
J2402
KEYBOARD-CONNECTOR
RNV79955
C2457 33pF
C2458 33pF
C2459 33pF
C2460 33pF
C2461 33pF
C2462 33pF
V2411 BAS16L
V2412 BAS16L
V2413 BAS16L
V2414 BAS16L
V2415 BAS16L
V2420 RK2223906/1 ESDALC6V1P3
ST2452
Strap
CAM_LED
C2453 33pF
C2454 33pF
C2451 33pF
C2452 33pF
C2455 1nF
C2456 1nF

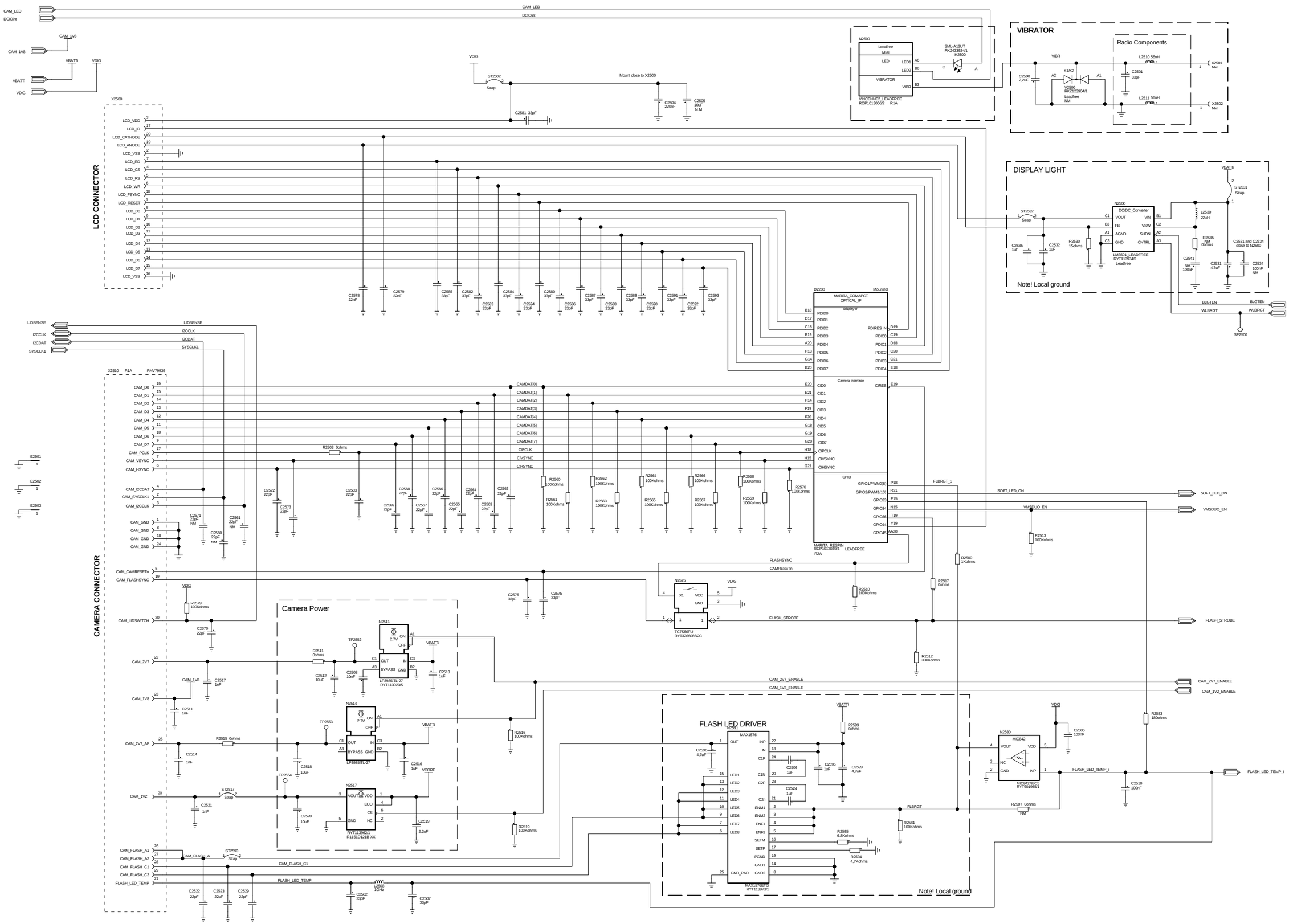
CAM_LED
DCIOint
CAM_1V8
VBATTI
VDIG
LCD CONNECTOR
X2500
LCD_VDD
LCD_ID
LCD_CATHODE
LCD_ANODE
LCD_VSS
LCD_RD
LCD_CS
LCD_RS
LCD_WR
LCD_FSYNC
LCD_RESET
LCD_D0
LCD_D1
LCD_D2
LCD_D3
LCD_D4
LCD_D5
LCD_D6
LCD_D7
ST2502
Strap
Mount close to X2500
C2504 220nF
C2505 10uF NM
C2581 33pF
C2578 22nF
C2579 22nF
C2585 33pF
C2582 33pF
C2583 33pF
C2584 33pF
C2594 33pF
C2580 33pF
C2586 33pF
C2587 33pF
C2588 33pF
C2589 33pF
C2590 33pF
C2591 33pF
C2592 33pF
C2593 33pF
N2600
Leadfree
MMI
LED
VIBRATOR
LED1
LED2
VIBR
VINCENNE2_LEADFREE
ROP101306652 R1A
SML-A12UT
RK243392/1
H2500
VIBRATOR
Radio Components
VIBR
C2500 2,2uF
K1/K2
V2500
RK212390/1
Leadfree
NM
L2510 56nH
L2511 56nH
C2501 33pF
X2501 NM
X2502 NM
DISPLAY LIGHT
VBATTI
ST2531
Strap
ST2532
Strap
N2500
DC/DC_Converter
VOUT
FB
AGND
GND
VIN
VSW
SHDN
CNTRL
LM3501_LEADFREE
RYT111934/2
Leadfree
L2530 22uH
C2535 1uF
C2532 1uF
R2530 15ohms
R2535 NM 0ohms
C2541 NM 100nF
C2531 4,7uF
C2531 and C2534 close to N2500
C2534 100nF NM
Note! Local ground
BLGTEN
WLBRGT
SP2500
LIDSENSE
I2CCLK
I2CDAT
SYSCLK1
D2200
Mounted
MARITA_COMAPCT
OPTICAL_IF
Display IF
PDID0
PDID1
PDID2
PDID3
PDID4
PDID5
PDID6
PDID7
PDIRES_N
PDIC0
PDIC1
PDIC2
PDIC3
PDIC4
Camera Interface
CID0
CID1
CID2
CID3
CID4
CID5
CID6
CID7
CIPCLK
CIVSYNC
CIHSYNC
CIRES
GPIO
GPIO1/PWM0(8)
GPIO2/PWM1(10)
GPIO23
GPIO34
GPIO36
GPIO44
GPIO45
MARITA_RESPIN
ROP101304914
R2A
LEADFREE
FLBRGT_1
SOFT_LED_ON
VMSDUO_EN
R2513 100Kohms
R2580 1Kohms
R2517 0ohms
R2510 100Kohms
R2512 330Kohms
FLASHSYNC
CAMRESETn
FLASH_STROBE
CAM_2V7_ENABLE
CAM_1V2_ENABLE
FLASH_LED_TEMP_I
X2510
R1A
RNV79939
CAMERA CONNECTOR
CAM_D0
CAM_D1
CAM_D2
CAM_D3
CAM_D4
CAM_D5
CAM_D6
CAM_D7
CAM_PCLK
CAM_VSYNC
CAM_HSYNC
CAM_I2CDAT
CAM_SYSCLK1
CAM_I2CCLK
CAM_GND
CAMDAT[0]
CAMDAT[1]
CAMDAT[2]
CAMDAT[3]
CAMDAT[4]
CAMDAT[5]
CAMDAT[6]
CAMDAT[7]
CIPCLK
CIVSYNC
CIHSYNC
R2503 0ohms
R2560 100Kohms
R2561 100Kohms
R2562 100Kohms
R2563 100Kohms
R2564 100Kohms
R2565 100Kohms
R2566 100Kohms
R2567 100Kohms
R2568 100Kohms
R2569 100Kohms
R2570 100Kohms
E2501
E2502
E2503
CAM_CAMRESETn
CAM_FLASHSYNC
CAM_LIDSWITCH
CAM_2V7
CAM_1V8
CAM_2V7_AF
CAM_1V2
CAM_FLASH_A1
CAM_FLASH_A2
CAM_FLASH_C1
CAM_FLASH_C2
FLASH_LED_TEMP
R2579 100Kohms
C2570 22pF
Camera Power
N2511
2,7V
ON
OFF
OUT
IN
BYPASS
GND
LP3985ITL-27
RYT113920/5
TP2552
R2511 0ohms
C2512 10uF
C2508 10nF
C2513 1uF
N2514
LP3985ITL-27
TP2553
R2515 0ohms
C2518 10uF
C2516 1uF
VCORE
N2517
VOUT
VDD
ECO
CE
NC
RYT113962/1
R1161D121B-XX
TP2554
ST2517
Strap
C2520 10uF
C2519 2,2uF
R2516 100Kohms
R2519 100Kohms
ST2590
Strap
C2522 22pF
C2523 22pF
C2529 22pF
L2508 1GHz
C2502 33pF
C2507 33pF
C2576 33pF
C2575 33pF
N2575
X1
VCC
GND
TC7S66FU
RYT32660662/C
FLASH LED DRIVER
N2591
MAX1576
OUT
INP
IN
C1P
C1N
C2P
C2n
LED1
LED2
LED3
LED4
LED5
LED6
LED7
LED8
ENM1
ENM2
ENF1
ENF2
SETM
SETF
PGND
GND1
GND2
GND_PAD
MAX1576ETG
RYT113973/1
C2596 4,7uF
C2509 1uF
C2524 1uF
C2595 1uF
R2599 0ohms
C2599 4,7uF
R2595 6,8Kohms
R2594 4,7Kohms
FLBRGT
R2581 100Kohms
Note! Local ground
N2580
MIC842
VOUT
VDD
NC
GND
INP
MIC842NBCF
RYT90195/1
C2506 100nF
R2583 180ohms
R2507 0ohms
NM
C2510 100nF

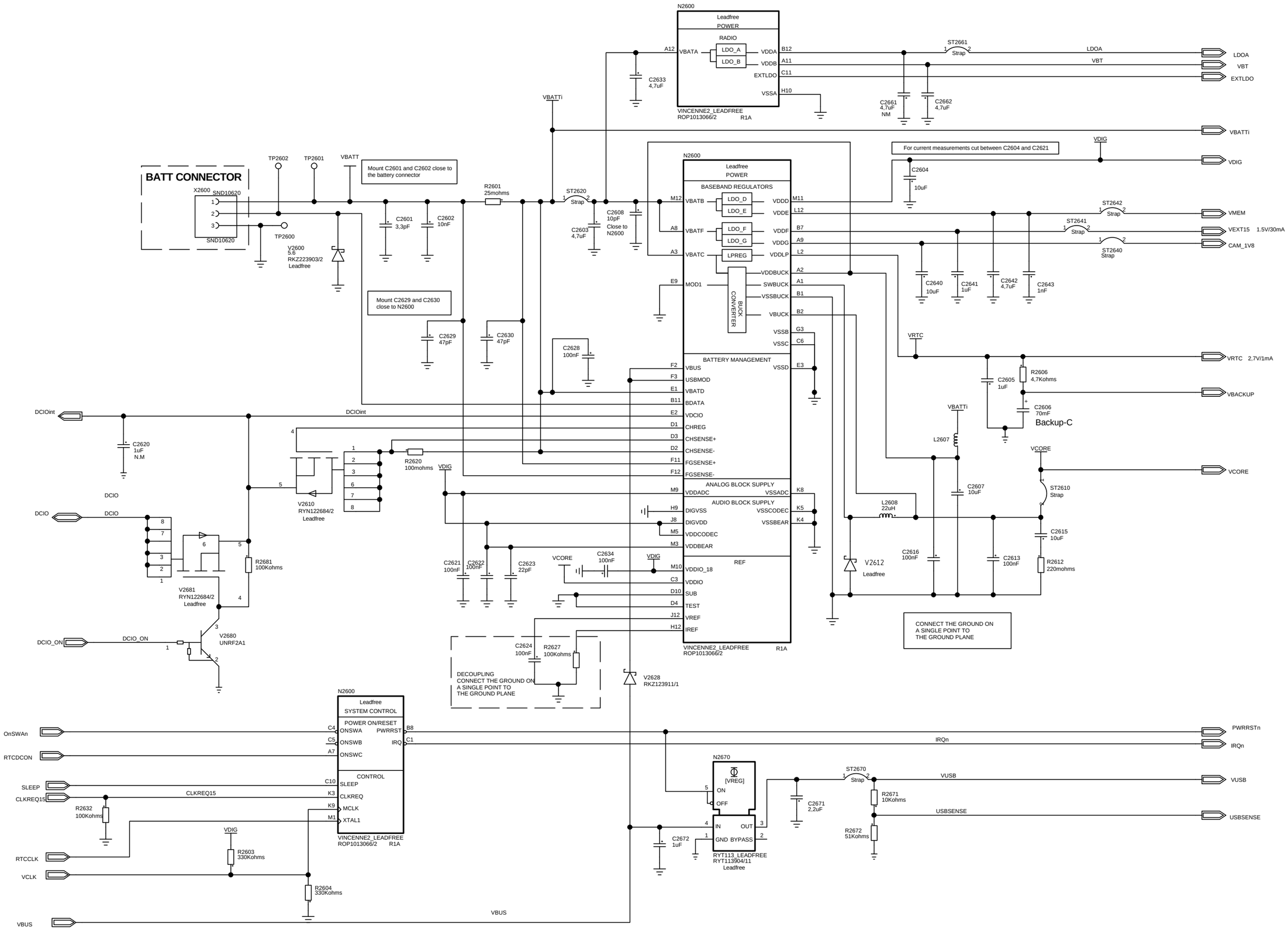
BATT CONNECTOR
X2600
SND10620
TP2602
TP2601
TP2600
VBATT
Mount C2601 and C2602 close to the battery connector
C2601 3,3pF
C2602 10nF
R2601 25mohms
V2600 5.6 RKZ223903/2 Leadfree
Mount C2629 and C2630 close to N2600
C2629 47pF
C2630 47pF
C2628 100nF
ST2620 Strap
C2603 4,7uF
C2608 10pF Close to N2600
C2633 4,7uF
VBATTi
N2600
Leadfree
POWER
RADIO
LDO_A
LDO_B
VBATA
VDDA
VDDB
EXTLDO
VSSA
A12
B12
A11
C11
H10
VINCENNE2_LEADFREE ROP1013066/2
R1A
ST2661 Strap
C2661 4,7uF NM
C2662 4,7uF
LDOA
VBT
EXTLDO
VBATTi
VDIG
For current measurements cut between C2604 and C2621
C2604 10uF
BASEBAND REGULATORS
LDO_D
LDO_E
LDO_F
LDO_G
LPREG
VBATB
VBATF
VBATC
VDDD
VDDE
VDDF
VDDG
VDDLP
M12
A8
A3
M11
L12
B7
A9
L2
MOD1
E9
BUCK CONVERTER
VDDBUCK
SWBUCK
VSSBUCK
VBUCK
A2
A1
B1
B2
VSSB
VSSC
G3
C6
ST2642 Strap
ST2641 Strap
ST2640 Strap
VMEM
VEXT15 1.5V/30mA
CAM_1V8
C2640 10uF
C2641 1uF
C2642 4,7uF
C2643 1nF
VRTC
VRTC 2,7V/1mA
C2605 1uF
R2606 4,7Kohms
VBACKUP
C2606 70mF
Backup-C
BATTERY MANAGEMENT
VBUS
USBMOD
VBATD
BDATA
VDCIO
CHREG
CHSENSE+
CHSENSE-
FGSENSE+
FGSENSE-
VSSD
F2
F3
E1
B11
E2
D1
D3
D2
F11
F12
E3
DCIOint
C2620 1uF N.M
R2620 100mohms
VDIG
V2610 RYN122684/2 Leadfree
DCIO
R2681 100Kohms
V2681 RYN122684/2 Leadfree
V2680 UNRF2A1
DCIO_ON
ANALOG BLOCK SUPPLY
VDDADC
VSSADC
K8
AUDIO BLOCK SUPPLY
DIGVSS
DIGVDD
VDDCODEC
VDDBEAR
VSSCODEC
VSSBEAR
H9
J8
M5
M3
K5
K4
C2621 100nF
C2622 100nF
C2623 22pF
VCORE
C2634 100nF
REF
VDDIO_18
VDDIO
SUB
TEST
VREF
IREF
M10
C3
D10
D4
J12
H12
C2624 100nF
R2627 100Kohms
DECOUPLING
CONNECT THE GROUND ON A SINGLE POINT TO THE GROUND PLANE
V2628 RKZ123911/1
VBATTi
L2607
C2607 10uF
VCORE
ST2610 Strap
L2608 22uH
C2615 10uF
V2612 Leadfree
C2616 100nF
C2613 100nF
R2612 220mohms
CONNECT THE GROUND ON A SINGLE POINT TO THE GROUND PLANE
N2600
Leadfree
SYSTEM CONTROL
POWER ON/RESET
ONSWA
ONSWB
ONSWC
PWRRST
IRQ
C4
C5
A7
B8
C1
CONTROL
SLEEP
CLKREQ
MCLK
XTAL1
C10
K3
K9
M1
VINCENNE2_LEADFREE ROP1013066/2 R1A
OnSWAn
RTCDCON
SLEEP
CLKREQ15
R2632 100Kohms
VDIG
R2603 330Kohms
RTCCLK
VCLK
R2604 330Kohms
VBUS
PWRRSTn
IRQn
N2670
[VREG]
ON
OFF
IN
OUT
GND
BYPASS
RYT113_LEADFREE RYT1113904/11 Leadfree
C2672 1uF
C2671 2,2uF
ST2670 Strap
VUSB
R2671 10Kohms
USBSENSE
R2672 51Kohms

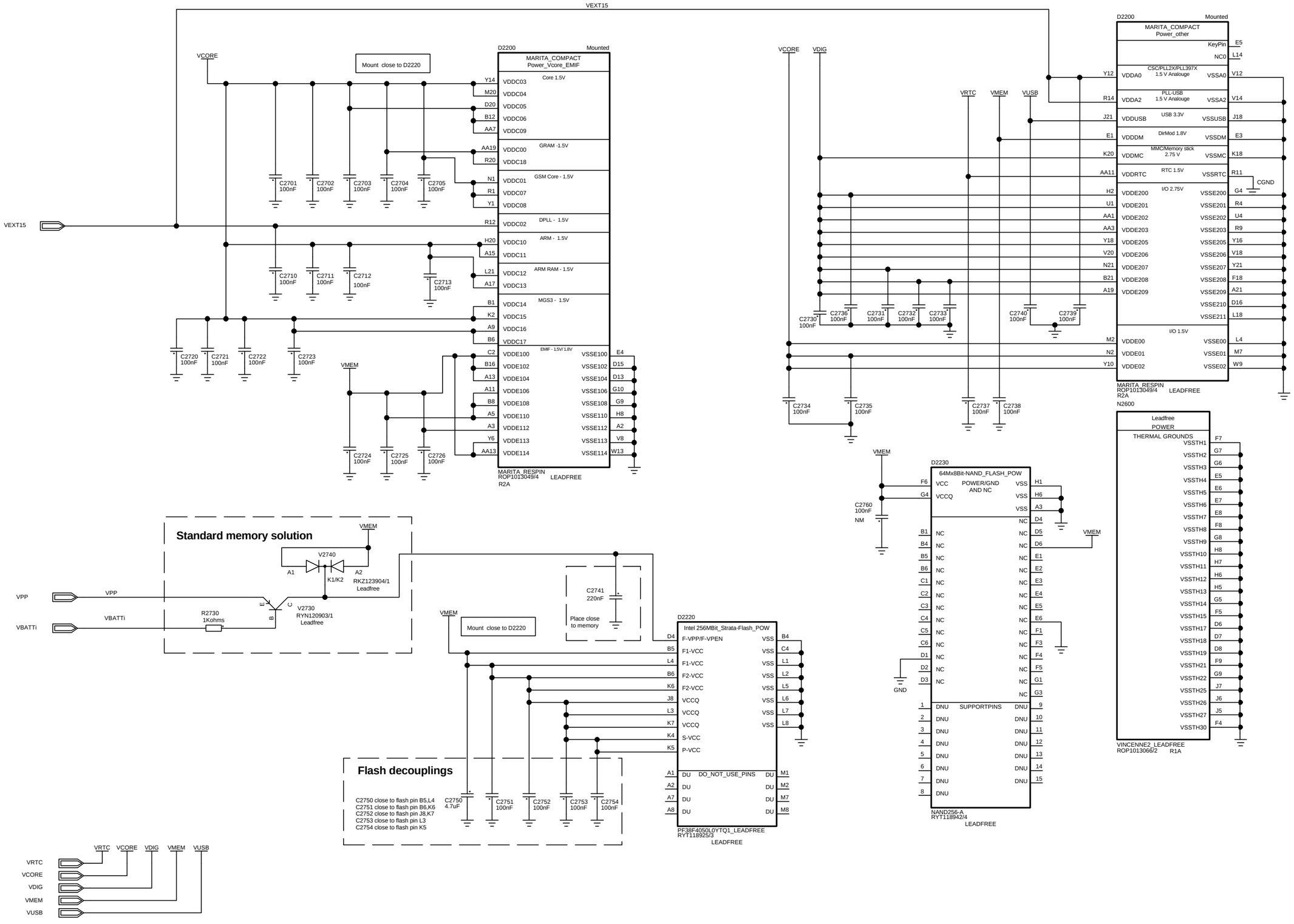
VEXT15
VCORE
Mount close to D2220
D2200
Mounted
MARITA_COMPACT
Power_Vcore_EMIF
Core 1.5V
GRAM -1.5V
GSM Core - 1.5V
DPLL - 1.5V
ARM - 1.5V
ARM RAM - 1.5V
MGS3 - 1.5V
EMIF - 1.5V/1.8V
VDDC03
VDDC04
VDDC05
VDDC06
VDDC09
VDDC00
VDDC18
VDDC01
VDDC07
VDDC08
VDDC02
VDDC10
VDDC11
VDDC12
VDDC13
VDDC14
VDDC15
VDDC16
VDDC17
VDDE100
VDDE102
VDDE104
VDDE106
VDDE108
VDDE110
VDDE112
VDDE113
VDDE114
VSSE100
VSSE102
VSSE104
VSSE106
VSSE108
VSSE110
VSSE112
VSSE113
VSSE114
C2701 100nF
C2702 100nF
C2703 100nF
C2704 100nF
C2705 100nF
C2710 100nF
C2711 100nF
C2712 100nF
C2713 100nF
C2720 100nF
C2721 100nF
C2722 100nF
C2723 100nF
C2724 100nF
C2725 100nF
C2726 100nF
VMEM
MARITA_RESPIN
ROP1013049/4
R2A
LEADFREE
VRTC
VMEM
VUSB
D2200
Mounted
MARITA_COMPACT
Power_other
KeyPin
NC0
CSC/PLL2X/PLL397X
1.5 V Analouge
PLL-USB
1.5 V Analouge
USB 3.3V
DirMod 1.8V
MMC/Memory stick
2.75 V
RTC 1.5V
I/O 2.75V
I/O 1.5V
VDDA0
VDDA2
VDDUSB
VDDDM
VDDMC
VDDRTC
VDDE200
VDDE201
VDDE202
VDDE203
VDDE205
VDDE206
VDDE207
VDDE208
VDDE209
VDDE00
VDDE01
VDDE02
VSSA0
VSSA2
VSSUSB
VSSDM
VSSMC
VSSRTC
VSSE200
VSSE201
VSSE202
VSSE203
VSSE205
VSSE206
VSSE207
VSSE208
VSSE209
VSSE210
VSSE211
VSSE00
VSSE01
VSSE02
CGND
C2730 100nF
C2736 100nF
C2731 100nF
C2732 100nF
C2733 100nF
C2740 100nF
C2739 100nF
C2734 100nF
C2735 100nF
C2737 100nF
C2738 100nF
MARITA_RESPIN
ROP1013049/4
R2A
LEADFREE
N2600
Leadfree
POWER
THERMAL GROUNDS
VSSTH1
VSSTH2
VSSTH3
VSSTH4
VSSTH5
VSSTH6
VSSTH7
VSSTH8
VSSTH9
VSSTH10
VSSTH11
VSSTH12
VSSTH13
VSSTH14
VSSTH15
VSSTH17
VSSTH18
VSSTH19
VSSTH21
VSSTH22
VSSTH25
VSSTH26
VSSTH27
VSSTH30
VINCENNE2_LEADFREE
ROP1013066/2
R1A
D2230
64Mx8Bit-NAND_FLASH_POW
VCC
VCCQ
POWER/GND
AND NC
VSS
NC
SUPPORTPINS
DNU
C2760 100nF
NM
GND
NAND256-A
RYT118942/4
LEADFREE
Standard memory solution
VMEM
V2740
A1
A2
K1/K2
RKZ123904/1
Leadfree
VPP
VBATTi
R2730
1Kohms
V2730
RYN120903/1
Leadfree
C2741
220nF
Place close
to memory
Mount close to D2220
D2220
Intel 256MBit_Strata-Flash_POW
F-VPP/F-VPEN
F1-VCC
F2-VCC
VCCQ
S-VCC
P-VCC
DO_NOT_USE_PINS
DU
PF38F4050L0YTQ1_LEADFREE
RYT118925/3
LEADFREE
Flash decouplings
C2750 close to flash pin B5,L4
C2751 close to flash pin B6,K6
C2752 close to flash pin J8,K7
C2753 close to flash pin L3
C2754 close to flash pin K5
C2750 4.7uF
C2751 100nF
C2752 100nF
C2753 100nF
C2754 100nF
VRTC
VCORE
VDIG
VMEM
VUSB

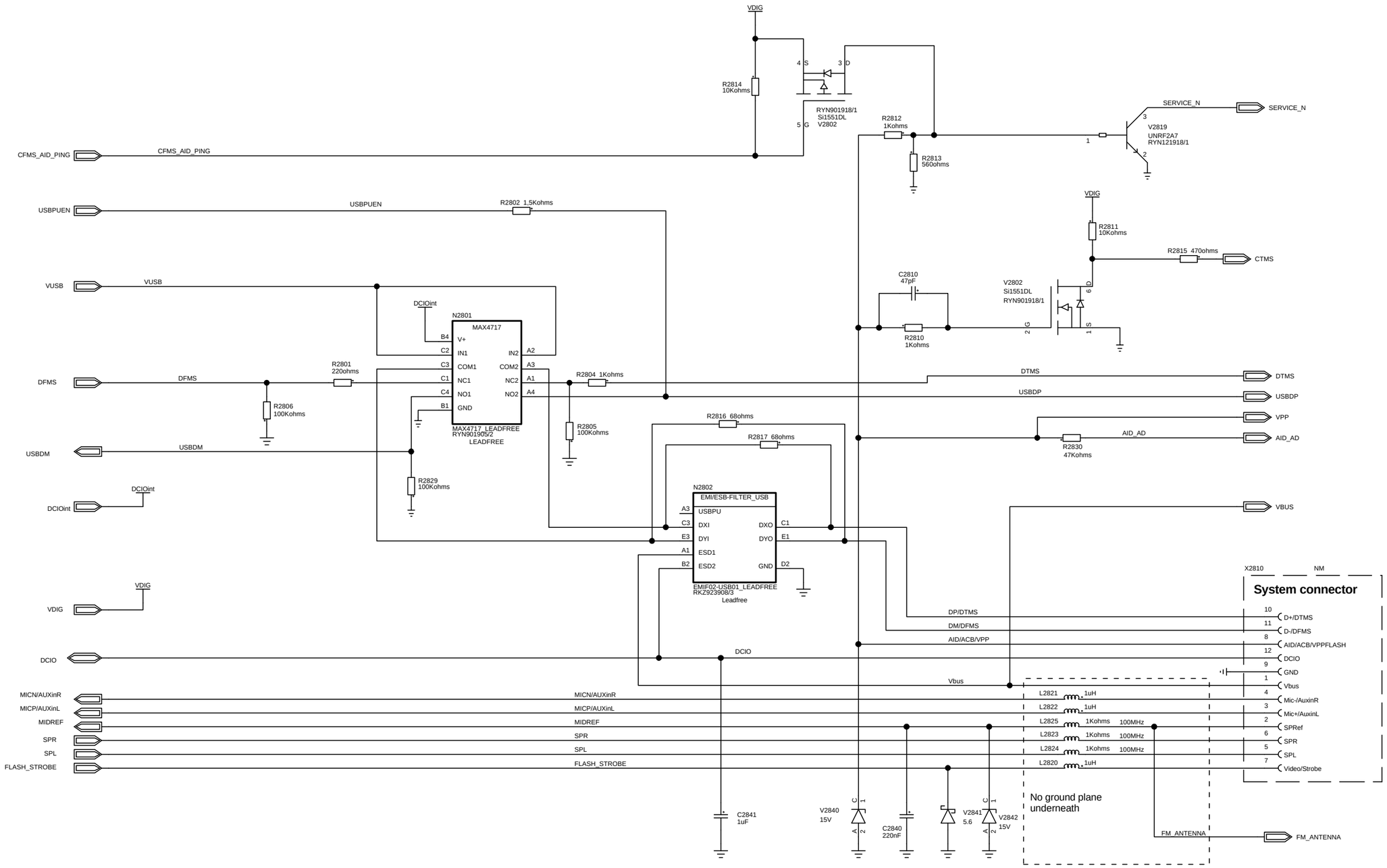
VDIG
R2814
10Kohms
RYN901918/1
Si1551DL
V2802
R2812
1Kohms
R2813
560ohms
SERVICE_N
V2819
UNRF2A7
RYN121918/1
CFMS_AID_PING
USBPUEN
R2802 1,5Kohms
R2811
10Kohms
R2815 470ohms
CTMS
C2810
47pF
V2802
Si1551DL
RYN901918/1
R2810
1Kohms
VUSB
DCIOint
N2801
MAX4717
V+
IN1
COM1
NC1
NO1
GND
IN2
COM2
NC2
NO2
MAX4717 LEADFREE
RYN901905/2
LEADFREE
R2801
220ohms
R2804 1Kohms
DFMS
R2806
100Kohms
R2805
100Kohms
DTMS
USBDP
VPP
AID_AD
R2830
47Kohms
R2816 68ohms
R2817 68ohms
USBDM
R2829
100Kohms
N2802
EMI/ESB-FILTER_USB
USBPU
DXI
DYI
ESD1
ESD2
DXO
DYO
GND
EMIF02-USB01_LEADFREE
RKZ923908/3
Leadfree
VBUS
VDIG
X2810
NM
System connector
DP/DTMS
DM/DFMS
AID/ACB/VPP
D+/DTMS
D-/DFMS
AID/ACB/VPPFLASH
DCIO
GND
Vbus
Mic-/AuxinR
Mic+/AuxinL
SPRef
SPR
SPL
Video/Strobe
MICN/AUXinR
MICP/AUXinL
MIDREF
FLASH_STROBE
L2821 1uH
L2822 1uH
L2825 1Kohms 100MHz
L2823 1Kohms 100MHz
L2824 1Kohms 100MHz
L2820 1uH
C2841
1uF
V2840
15V
C2840
220nF
V2841
5.6
V2842
15V
No ground plane
underneath
FM_ANTENNA

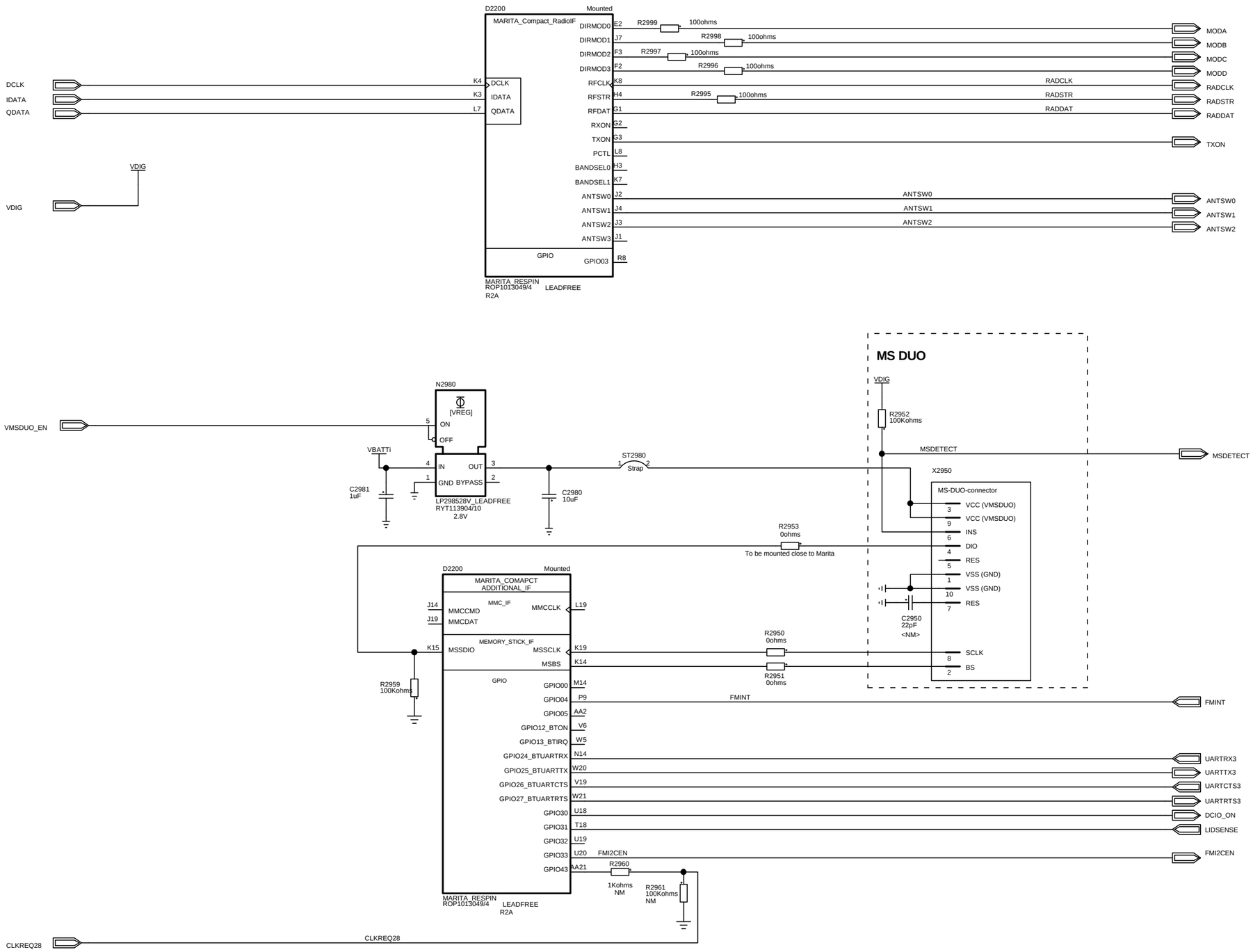
D2200
Mounted
MARITA_Compact_RadioIF
DIRMOD0 E2
DIRMOD1 J7
DIRMOD2 F3
DIRMOD3 F2
RFCLK K8
RFSTR H4
RFDAT G1
RXON G2
TXON G3
PCTL L8
BANDSEL0 H3
BANDSEL1 K7
ANTSW0 J2
ANTSW1 J4
ANTSW2 J3
ANTSW3 J1
GPIO
GPIO03 R8
MARITA_RESPIN
ROP1013049/4
LEADFREE
R2A
DCLK K4
IDATA K3
QDATA L7
R2999 100ohms
R2998 100ohms
R2997 100ohms
R2996 100ohms
R2995 100ohms
RADCLK
RADSTR
RADDAT
ANTSW0
ANTSW1
ANTSW2
MODA
MODB
MODC
MODD
RADCLK
RADSTR
RADDAT
TXON
ANTSW0
ANTSW1
ANTSW2
DCLK
IDATA
QDATA
VDIG
VDIG
MS DUO
VDIG
R2952
100Kohms
MSDETECT
MSDETECT
X2950
MS-DUO-connector
VCC (VMSDUO) 3
VCC (VMSDUO) 9
INS 6
DIO 4
RES 5
VSS (GND) 1
VSS (GND) 10
RES 7
SCLK 8
BS 2
C2950
22pF
<NM>
N2980
[VREG]
ON 5
OFF
IN 4
OUT 3
GND 1
BYPASS 2
LP298528V_LEADFREE
RYT113904/10
2.8V
VMSDUO_EN
VBATTi
C2981
1uF
C2980
10uF
ST2980
Strap
R2953
0ohms
To be mounted close to Marita
D2200
Mounted
MARITA_COMAPCT
ADDITIONAL_IF
MMC_IF
MMCCMD J14
MMCDAT J19
MMCCLK L19
MEMORY_STICK_IF
MSSDIO K15
MSSCLK K19
MSBS K14
GPIO
GPIO00 M14
GPIO04 P9
GPIO05 AA2
GPIO12_BTON V6
GPIO13_BTIRQ W5
GPIO24_BTUARTRX N14
GPIO25_BTUARTTX W20
GPIO26_BTUARTCTS V19
GPIO27_BTUARTRTS W21
GPIO30 U18
GPIO31 T18
GPIO32 U19
GPIO33 U20
GPIO43 AA21
MARITA_RESPIN
ROP1013049/4
LEADFREE
R2A
R2959
100Kohms
R2950
0ohms
R2951
0ohms
FMINT
FMINT
UARTRX3
UARTTX3
UARTCTS3
UARTRTS3
DCIO_ON
LIDSENSE
FMI2CEN
FMI2CEN
R2960
1Kohms
NM
R2961
100Kohms
NM
CLKREQ28
CLKREQ28