ORDER NO. HAD84062763C8

Service Manual

FM/AM Stereo Receiver

Receiver

SA-120

Color

(K) · · · · Black Type
(S) · · · · Silver Type

Color	Area
(K),(S)	[EX] · · · · Scandinavia and Switzerland
(K),(S)	[EH] · · · · Holland
(S)	[XA] · · · · Asia, Oceania, Africa and Middle Near East
(K),(S)	[XL] · · · · Australia
(S)	[XM] · · · · Latin America

Please use this manual together with the service manual for Model No. SA-120[M], Order No. HAD84022713C1

English

SPECIFICACIONES

(DIN 45 500)

■ AMPLIFIER SECTION

1 kHz continuous power output	
both channels driven	2 × 35W (8Ω)
Total harmonic distortion	
half power at 1 kHz	0.07% (8Ω)
Intermodulation distortion	
rated power at 60 Hz: 7 kHz=4:1, SMPTE, 8Ω	0.5%
Power bandwidth	
both channels driven, −3 dB	10 Hz~30 kHz (8Ω)
Damping factor	30 (8Ω)
Input sensitivity and impedance	
PHONO	2.5 mV/47kΩ
CD/VIDEO/AUX, TAPE	150 mV/18kΩ
PHONO maximum input voltage (1 kHz, RMS)	130 mV
S/N	
rated power (8Ω)	
PHONO	68 dB (IHF, A: 71 dB)
CD/VIDEO/AUX, TAPE	88 dB (IHF, A: 95 dB)
Frequency response	
PHONO	RIAA standard curve ±0.8 dB (30 Hz~15 kHz)
CD/VIDEO/AUX, TAPE	5 Hz~70 kHz (−3 dB)
Tone controls	
BASS	50 Hz, +10 dB~ −10 dB
TREBLE	20 kHz, +10 dB~ −10 dB
Output voltage	
REC OUT	150 mV
Channel balance, CD/VIDEO/AUX 250 Hz~6,300 Hz	±1 dB
Channel separation, CD/VIDEO/AUX	55 dB
Headphones output level and impedance	390 mV/330Ω
Load impedance	
MAIN or REMOTE	8Ω~16Ω
MAIN and REMOTE	8Ω~16Ω

■ FM TUNER SECTION

Frequency range	87.50~108.00 MHz
Sensitivity	
S/N 30 dB	1.9 μV (300Ω), 1.3 μV (75Ω)
S/N 26 dB	1.7 μV (300Ω), 1.2 μV (75Ω)
S/N 20 dB	1.5 μV (300Ω), 0.9 μV (75Ω)
IHF usable sensitivity	1.9 μV (IHF '58)
IHF 46 dB stereo quieting sensitivity	22 μV/75Ω
Total harmonic distortion	
MONO	0.15%
STEREO	0.3%
S/N	
MONO	60 dB (76 dB, IHF)
STEREO	58 dB (70 dB, IHF)
Frequency response	20 Hz~15 kHz, +1 dB~ −2 dB
Alternate channel selectivity ±400 kHz	60 dB
Capture ratio	1 dB
Image rejection at 98 MHz	40 dB
IF rejection at 98 MHz	60 dB
Spurious response rejection at 98 MHz	70 dB
AM suppression	50 dB
Stereo separation	
1 kHz	40 dB
10 kHz	30 dB
Carrier leak	
19 kHz	−33 dB (−35 dB, IHF)
38 kHz	−50 dB (−50 dB, IHF)
Channel balance (250 Hz~6,300 Hz)	±1.5 dB
Limiting point	1.2 μV
Bandwidth	
IF amplifier	180 kHz
FM demodulator	1,000 kHz
Antenna terminals	300Ω (balanced) 75Ω (unbalanced)

Technics

Matsushita Electric Trading Co., Ltd.
P.O. Box 288, Central Osaka Japan

■ AM TUNER SECTION

Frequency range	525~1,605 kHz
Sensitivity (S/N 20 dB)	20 μV, 300 μV/m
Selectivity	27 dB
Image rejection at 999 kHz	40 dB
IF rejection at 999 kHz	55 dB

■ GENERAL

Power consumption	180W
Power supply	
For United Kingdom and Australia	AC 50 Hz/60 Hz, 240V
For continental Europe	AC 50 Hz/60 Hz, 220V
For others	AC 50 Hz/60 Hz, 110V/120V/220V/240V
Dimensions (W×H×D)	430 × 97 × 249 mm (16-15/16" × 3-13/16" × 9-13/16")
Weight	5.0 kg (11.0 lb.)

Specifications are subject to change without notice for further improvent.

Deutsh

TECHNISCHE DATEN

(DIN 45 500)

■ VERSTÄRKERTEIL

Dauerton-Ausgangsleistung bei 1 kHz	
beide Kanäle ausgesteuert	2 × 35W (8 Ω)
Gesamtklirrfaktor	
halbe Nennleistung bei 1 kHz	0,07% (8 Ω)
Intermodulationsfaktor	
Nennleistung bei 60 Hz: 7 kHz = 4:1, nach SMPTE, 8 Ω	0,5%
Leistungsbandbreite	
beide Kanäle ausgesteuert bei −3 dB	10 Hz ~ 30 kHz (8 Ω)
Dämpfungsfaktor	30 (8 Ω)
Eingangsempfindlichkeit und -impedanz	
Phono	2,5 mV/47 kΩ
CD/VIDEO/AUX, TAPE	150 mV/18 kΩ
Maximale TA-Eingangsspannung (1 kHz, eff.)	130 mV
Geräuschabstand	
Nennleistung (8 Ω)	
Phono	68 dB (nach IHF, A: 71 dB)
CD/VIDEO/AUX, TAPE	88 dB (nach IHF, A: 95 dB)
Frequenzgang	
Phono	RIAA-Standardkurve ±0,8 dB (30 Hz ~ 15 kHz)
CD/VIDEO/AUX, TAPE	5 Hz ~ 70 kHz (−3 dB)
Klangregler	
Baßregler (BASS)	50 Hz, +10 dB ~ −10 dB
Höhenregler (TREBLE)	20 kHz, +10 dB ~ −10 dB
Ausgangsspannung	
Aufnahmeausgang (REC OUT)	150 mV
Kanalabweichung (CD/VIDEO/AUX, 250 Hz ~ 6300 Hz)	±1 dB
Übersprechdämpfung (CD/VIDEO/AUX)	55 dB
Kopfhörerpegel und -impedanz	390 mV/330 Ω
Lautsprecherimpedanz	
MAIN oder REMOTE	8 Ω ~ 16 Ω
MAIN und REMOTE	8 Ω ~ 16 Ω

■ UKW-TUNERTEIL

Wellenbereich	87,50 ~ 108,00 MHz
Eingangsempfindlichkeit	
S/R 30 dB	1,9 μV (300 Ω), 1,3 μV (75 Ω)
S/R 26 dB	1,7 μV (300 Ω), 1,2 μV (75 Ω)
S/R 20 dB	1,5 μV (300 Ω), 0,9 μV (75 Ω)
Nutzempfindlichkeit nach IHF	1,9 μV (nach IHF '58)
Stereoumschaltschwelle bei 46 dB nach IHF	22 μV/75 Ω
Gesamtklirrfaktor	
Mono	0,15%
Stereo	0,3%
Geräuschabstand	
Mono	60 dB (76 dB nach IHF)
Stereo	58 dB (70 dB nach IHF)
Frequenzgang	20 Hz ~ 15 kHz (+1 dB ~ −2 dB)
Trennschärfe bei Störsender ±400 kHz	60 dB
Einfangverhältnis	1 dB
Spiegelfrequenz-Dämpfung bei 98 MHz	40 dB
ZF-Dämpfung bei 98 MHz	60 dB
Ansprechdämpfung auf Nebenfrequenzen bei 98 MHz	70 dB
MW-Unterdrückung	50 dB
Übersprechdämpfung	
1 kHz	40 dB
10 kHz	30 dB
Trägerrest	
19 kHz	−33 dB (−35 dB nach IHF)
38 kHz	−50 dB (−50 dB nach IHF)
Kanalabweichung (250 Hz ~ 6300 Hz)	±1,5 dB
Begrenzereinsatz	1,2 μV
Bandbreite	
ZF-Verstärker	180 kHz
UKW-Demodulator	1000 kHz
Antennenanschluß	300 Ω (symmetrisch) 75 Ω (unsymmetrisch)

■ MW-TUNERTEIL

Wellenbereiche	525 ~ 1605 kHz
Eingangsempfindlichkeit (S/R 20 dB)	20 μV, 300 μV/m
Trennschärfe	27 dB
Spiegelfrequenz-Dämpfung bei 999 kHz	40 dB
ZF-Dämpfung bei 999 kHz	55 dB

■ ALLGEMEINE DATEN

Leistungsaufnahme	180 W
Netzspannung	
Für Kontinentaleuropa	Wechselstrom 50 Hz/60 Hz, 220V
Für andere Länder	Wechselstrom 50 Hz/60 Hz, 110V/120V/220V/240V
Abmessungen (B×H×T)	430 × 97 × 249 mm
Gewicht	5,0 kg

Spezifikationen können infolge von Verbesser ungen ohne Ankündigung geändert werden.

Français

CARACTERISTIQUES

(DIN 45 500)

■ SECTION AMPLIFICATEUR

Puissance de sortie continue à 1 kHz	
les deux canaux en circuit	2 × 35W (8Ω)
Distorsion harmonique totale	
à demi-puissance (1 kHz)	0,07% (8Ω)
Distorsion d'intermodulation	
à puissance nominale à 60 Hz: 7 kHz=4:1, SMPTE, 8Ω	0,5%
Réponse de fréquences	
les deux canaux en circuit, −3 dB	10 Hz~30 kHz (8Ω)
Coefficient d'amortissement	30 (8Ω)
Sensibilité et impédance d'entrée	
PHONO	2,5 mV/47kΩ
CD/VIDEO/AUX, TAPE	150 mV/18kΩ
PHONO (tension d'entrée maximum, 1 kHz RMS)	130 mV
Signal/Bruit	
à puissance nominale (8Ω)	
PHONO	68 dB (IHF, A: 71 dB)
CD/VIDEO/AUX, BANDE (CD/VIDEO/AUX, TAPE)	88 dB (IHF, A: 95 dB)
Réponse de fréquence	
PHONO	Courbe nominale RIAA ±0,8 dB (30 Hz~15 kHz)
CD/VIDEO/AUX, BANDE (CD/VIDEO/AUX, TAPE)	5 Hz~70 kHz (−3 dB)
Réglage de la tonalité	
BASSES (BASS)	50 Hz, +10 dB~ −10 dB
AIGUS (TREBLE)	20 kHz, +10 dB~ −10 dB
Tension de sortie	
SORTIE ENREGISTREMENT (REC OUT)	150 mV
Equilibrage des canaux, CD/VIDEO/AUX 250 Hz~6 300 Hz	±1 dB
Séparation des canaux, CD/VIDEO/AUX	55 dB
Niveau de sortie des casques et impédance	390 mV/330Ω
Impédance de charge	
PRINCIPALE ou AUXILIAIRE (MAIN or REMOTE)	8Ω~16Ω
PRINCIPALE et AUXILIAIRE (MAIN and REMOTE)	8Ω~16Ω

■ SECTION SYNTONISATEUR FM

Gamme de fréquence	87,50~108,00 MHz
Sensibilité	
S/B 30 dB	1,9 μV (300Ω), 1,3 μV (75Ω)
S/B 26 dB	1,7 μV (300Ω), 1,2 μV (75Ω)
S/B 20 dB	1,5 μV (300Ω), 0,9 μV (75Ω)
Sensibilité utilisable IHF	1,9 μV (IHF '58)
Sensibilité stéréo au seuil de 46 dB, IHF	22 μV/75Ω
Distorsion harmonique totale	
MONO	0,15%
STEREO	0,3%
Signal/Bruit	
MONO	60 dB (76 dB, IHF)
STEREO	58 dB (70 dB, IHF)
Réponse de fréquence	20 Hz~15 kHz, +1 dB~ −2 dB
Sélectivité alternée par canal ±400 kHz	60 dB
Taux de capture	1 dB
Rejection d'image à 98 MHz	40 dB
Rejection FI à 98 MHz	60 dB
Rejection de réponse parasite à 98 MHz	70 dB
Suppression AM	50 dB
Séparation stéréophonique	
1 kHz	40 dB
10 kHz	30 dB
Fuite de porteuse	
19 kHz	−33 dB (−35 dB, IHF)
38 kHz	−50 dB (−50 dB, IHF)
Equilibrage de canaux (250 Hz~6,300 Hz)	±1,5 dB
Point de limite	1,2 μV
Largeur de bande	
Amplificateur FI	180 kHz
Démodulateur FM	1000 kHz
Bornes d'antenne	300Ω (symétrique) 75Ω (asymétrique)

■ SECTION SYNTONISATEUR AM

Gamme de fréquence	525~1605 kHz
Sensibilité (S/B 20 dB)	20 μV, 300 μV/m
Sélectivité	27 dB
Réjection d'image à 999 kHz	40 dB
Réjection FI à 999 kHz	55 dB

■ DIVERS

Consommation	180W
Alimentation	
Pour l'Europe	CA 50 Hz/60 Hz, 220V
Autres	CA 50 Hz/60 Hz, 110V/120V/220V/240V
Dimensions (L×H×Pr)	430 × 97 × 249 mm
Poids	5,0 kg

Sujet à changement sans prearis.

Español

ESPECIFICACIONES

(DIN 45 500)

■ SECCION AMPLIFICADOR

Potencia continua de 1 kHz	
en ambos canales	2 × 35W (8Ω)
Distorsión armónica total	
mitad de potencia a 1 kHz	0,07% (8Ω)
Distorsión por intermodulación	
potencia de régimen a 60 Hz: 7 kHz=4:1, SMPTE, 8Ω	0,5%
Ancho de banda de potencia	
con ambos canales, −3 dB	10 Hz~30 kHz (8Ω)
Factor de amortiguamiento	30 (8Ω)
Sensibilidad e impedancia de entrada	
TOCADISC. (PHONO)	2,5 mV/47kΩ
CD/VIDEO/AUX., TAPE (CD/VIDEO/AUX, TAPE)	150 mV/18kΩ
Voltaje máximo de entrada de PHONO (1 kHz, RMS)	130 mV
Relación de señal a ruido	
potencia de régimen (8Ω)	
TOCADISC. (PHONO)	68 dB (IHF, A: 71 dB)
CD/VIDEO/AUX., GRAB. (CD/VIDEO/AUX, TAPE)	88 dB (IHF, A: 95 dB)
Respuesta de frecuencia	
TOCADISC. (PHONO)	curva RIAA estándar ±0,8 dB (30 Hz~15 kHz)
CD/VIDEO/AUX., GRAB. (CD/VIDEO/AUX, TAPE)	5 Hz~70 kHz (−3 dB)
Controles de tono	
BAJOS (BASS)	50 Hz, +10 dB~ −10 dB
AGUDOS (TREBLE)	20 kHz, +10 dB~ −10 dB
Voltaje de salida	
SAL. GRAB. (REC OUT)	150 mV
Equilibrio de canales, CD/VIDEO/AUX 250 Hz~6 300 Hz	±1 dB
Separación de canales, CD/VIDEO/AUX	55 dB
Impedancia y nivel de salida de los auriculares	390 mV/330Ω
Impedancia de carga	
MAIN o REMOTE	8Ω~16Ω
MAIN y REMOTE	8Ω~16Ω

■ SECCION PARA SINTONIZADOR FM

Gama de frecuencias	87,50~108,00 MHz
Sensibilidad	
Señal a ruido 30 dB	1,9 μV (300Ω), 1,3 μV (75Ω)
Señal a ruido 26 dB	1,7 μV (300Ω), 1,2 μV (75Ω)
Señal a ruido 20 dB	1,5 μV (300Ω), 0,9 μV (75Ω)
Sensibilidad utilizable IHF	1,9 μV (IHF '58)
Sensibilidad de acallamiento estéreo de 46 dB IHF	22 μV/75Ω
Distorsión armónica total	
MONO. (MONO)	0,15%
ESTEREO (STEREO)	0,3%
Relación de señal a ruido	
MONO. (MONO)	60 dB (76 dB, IHF)
ESTEREO (STEREO)	58 dB (70 dB, IHF)
Respuesta de frecuencia	20 Hz~15 kHz, +1 dB~ −2 dB
Selectividad alternada de canal ±400 kHz	60 dB
Relación de captura	1 dB
Rechazo de imagen a 98 MHz	40 dB
Rechazo de F.I. a 98 MHz	60 dB
Rechazo de respuesta espuria a 98 MHz	70 dB
Supresión AM	50 dB
Separación estereofónica	
1 kHz	40 dB
10 kHz	30 dB
Fuga de onda portadora	
19 kHz	−33 dB (−35 dB, IHF)
38 kHz	−50 dB (−50 dB, IHF)
Equilibrio de canales 250 Hz~6 300 Hz	±1,5 dB
Punto de límite	1,2 μV
Ancho de banda	
Amplificador FI	180 kHz
Demodulador FM	1000 kHz
Bornes de antena	300Ω (equilibrado) 75Ω (no equilibrado)

■ SECCION PARA SINTONIZADOR AM

Gama de frecuencias	525~1605 kHz
Sensibilidad (Relación de señal a ruido de 20 dB)	20 μV, 300 μV/m
Selectividad	27 dB
Rechazo de imagen a 999 kHz	40 dB
Rechazo de F.I. a 999 kHz	55 dB

■ GENERAL

Consumo de energía	180W
Alimentación de energía	
Para Europa continental	CA 50 Hz/60 Hz, 220V
Para otros paises	CA 50 Hz/60 Hz, 110V/120V/220V/240V
Dimensiones (An.×Al.×Prof.)	430 × 97 × 249 mm
Peso	5,0 kg

Estas especificaciones están sujetas a cualquier cambio sin previo eviso.

LOCATION OF CONTROLS

- **Change of the Rear panel**

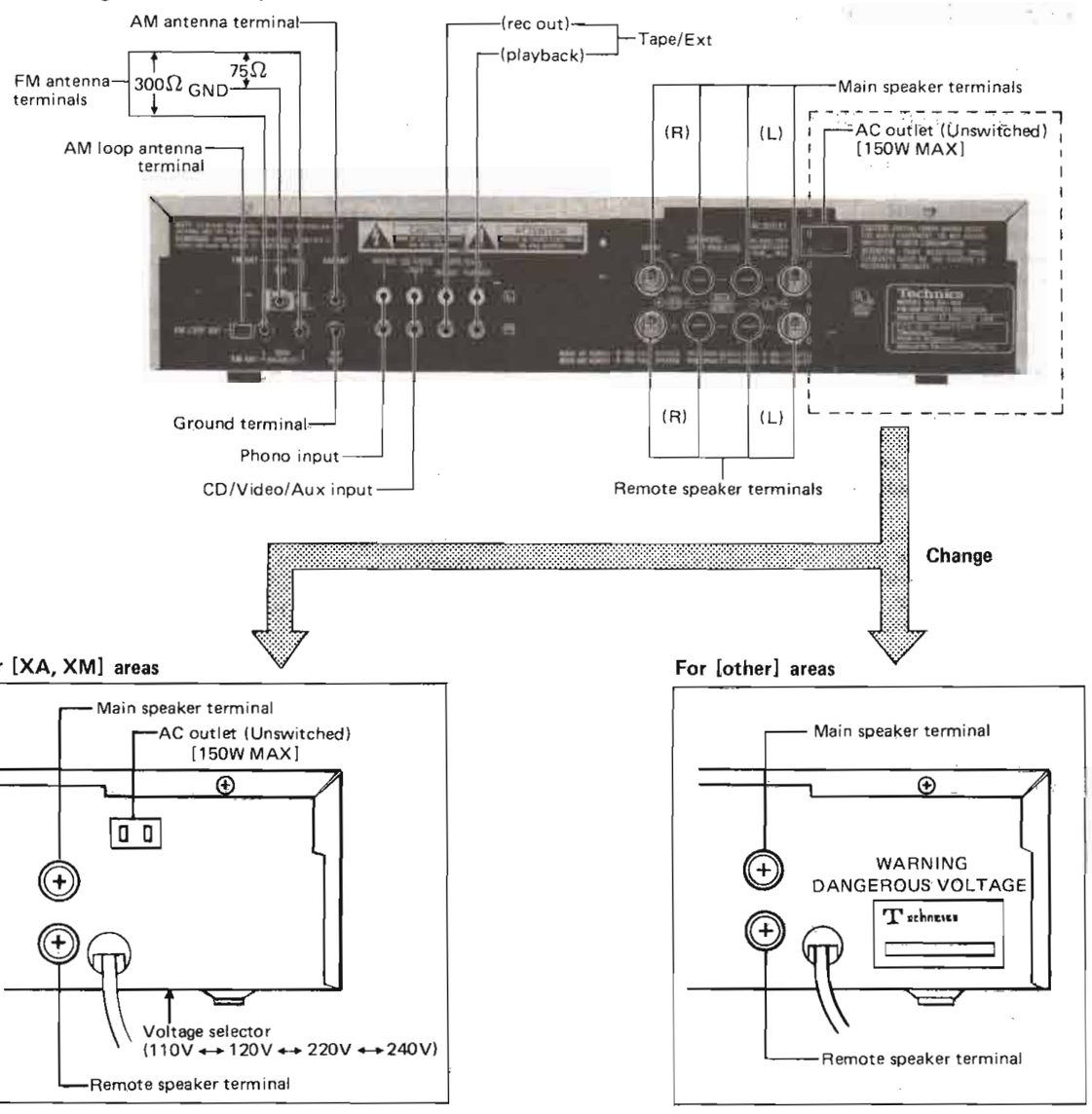

- The power supply for this unit varies depending upon the areas. Also, the parts used for power supply are different. So, refer to the circuit diagram and the replacement parts list.
* [XA, XM] areas is provided with voltage selector and AC outlets.
* 240V (50/60Hz) for Australia.
* 220V (50/60Hz) for Continental Europe.
* 110V/120V/220V/240V (50/60Hz) for other [XA, XM] areas.
* Phono input capacitance is about 150pF.

BEFORE REPAIR AND ADJUSTMENT

1. Turn off the power supply and short-circuit of power supply capacitors (C701, C702, 4700μF) at resistance (about 10Ω, 5W) in order to discharge the charged voltage. Do not short between C701 and C702 by screwdriver. It may damage the component.
2. Before turning on the power supply after completion of repair, slowly apply the primary voltage by using a power supply voltage controller to make sure that the consumed current is free of abnormality. The consumed current at 60Hz/50Hz in no signal mode is shown below with respect to supply voltage 110V/120V/220V/240V.

Power supply voltage		AC110V	AC120V	AC220V	AC240V
Consumed current	50/60Hz	100 ~ 300 mA	100 ~ 300 mA	50 ~ 150 mA	50 ~ 150 mA

MESSUNGEN UND JUSTIERUNGEN

Anmerkung: Die AM OSC-Spule (L201) und AM ZFT (T202) sind bereits justiert und benötigen Keine Justierung.

AM (MW)-EINSTELLUNG

- **Stellungen und zu benutzende Geräte**
1. Elektronische Voltmeter für Wechselstrom (VTVM).
2. AM (MW)-Meßsender (AM-SG)
3. Bereichsschalter . . . . . AM (MW/LW Abgleich)
4. Die Netzspannung auf ihren Sollwert einstellen.
5. Der Ausgang des Meßsenders darf nicht höher sein als unbedingt notwendig für eine gute ablesung.
6. Einen nichtmetallischen Schraubenzieher für die Einstellungen verwenden.

Nr.	AM (MW) MESSENDER ANSCHLUSS	AM (MW) MESSENDER FREQUENZ	SKALENZEIGEREINSTELLUNG DES TUNER	VORBEREITUNG	ABGLEICHSPUNKTE	ABGLEICHSVERFAHREN
			MW-HF-ABGLEICH		* Bandwahlschalter in die "MW"-position stellen.	
1	AM-MO über 200 pF-Kondensator an den AM-Antennenanschluß anschließen, wie in Abb. 10 gezeigt. (Schwacher Eingang.)	600kHz (400Hz Modulat., 30%)	600kHz	Wechselstrom Voltmeter order Oszilloskop über den Lautsprecher schließen.	L205 (MW Ant. Spule) L206 (MW Osc. Spule)	• Auf max. Ausgang abgleiche.
2		1500kHz (400Hz Modulat., 30%)	1500kHz	Wechselstrom Voltmeter order Oszilloskop über den Lautsprecher schließen.	CT204 (MW Osc. Trimmer) CT203 (MW Ant. Trimmer)	• Auf max. Ausgang abgleichen. • Schritt (1) und (2) sind zu wiederholen.

FM (UKW)-EINSTELLUNG

- **Stellungen und zu benutzenden Geräte**
1. UKW-Meßsender (FM-SG).
2. Oszilloskop
3. Elektronische Voltmeter für Wechsel- und Gleichstrom (VTVM).
4. Signalfrequenzmesser (meßar für 19kHz und 108MHz).
5. Den Eingangswähler auf die "FM" position stellen.
6. Den UKW-Betriebsart-Wahlschalter in die position "off/FM mono" stellen.
7. Die anderen Einstellungen sind gleich wie beider MW-position.

* TP201 mit einer Kurzschlußbrücke an TP202 Kurzschließen(nur während der UKW-HF-Justierung), und diese Kurzschlußbrücke für alle anderen Justierungen entfernen.
* **Vorbereitung des UKW-Meßoszillators (UKW-MO)**
- Die Normal-Eingangs eistung dieses Gerätes beträgt 60 dB (1 mV), 400Hz, 100% Modulation. (Wegen der Dämpfung bei Verwendung von Koaxialkabeln, muß die MO-Ausgangsleistung 6 dB oder mehr betragen; d.h. wenn die Eingangsleistung 60 dB beträgt, muß der MO-Ausgang 66 dB betragen.)

Nr.						
			UKW-ZF-ABGLEICH			
3	FM-SG an den FM-Antennenanschluß entspreched Abb. 11. (60 dB an den Antennenanschluß legen.)	100MHz (100% Mod. with 400Hz)	100MHz	Ein Gleichstrom voltmeter zwischen TP201 (+) und TP202 (–) über eine Drosselspule verbinden (siehe Abb. 11)	T201 (Diskriminator FT)	• Den Kern von T201 so justieren, daß die gemessene Spannung im signallosen Modus 0mV im 150mV Bereich beträgt.
			UKW-HF-ABGLEICH	* TP201 mit einer Kurzschlußbrücke an TP202 Kurzschließen.		
4	FM-SG an den FM-Antennenanschluß entspreched Abb. 11. (60 dB an den Antennenanschluß legen.)	90MHz (400Hz Modulat., 100%) Schwacher Eingang	90MHz	Oszilloskop über den Lautsprecher schließen.	L204 (Osc. Spule) L202 (HF DET Spule)	• Einen schwachen Eingang geben, bei dem Geräusch in der Ausgangswellenform enthalten wird. • So einstellen, daß die Ausgangswellenform vertikal symmertrisch wird. (Abb. 13) • Dei Einstellung von (4) und (5) wieder nolen, bis die Frequenz mit der Skala übereinstimmt.
5		106MHz (400Hz Modulat., 100%) Schwacher Eingang)	106MHz	Oszilloskop über den Lautsprecher schließen.	CT202 (OCS. Trimmer)	

UKW-STEREO-DEKODER-ABGLEICH

Nr.	UNTER VERWENDUNG EINES ZÄHLERS	ALTERNATIVE-MEß METHODE
6	1. Unmoduliers Mono-Signal 100MHz in das Gerät speisen. 2. FM muting/mode-Schalter auf "on/FM auto" stellen. 3. Zähler über einen Widerstand 100k ohm an TP301 schließen. (Vgl. Abb. 12) 4. **VR301** auf 19kHz ± 30Hz einstellen.	1. Stereosignal entweder von einem Stereogenerator, oder einem Sender einspeisen. 2. **VR301** so einstellen, bis die Stereolampe auf leuchtet. Schleifer von **VR301** sichern, wie in Abb. 14 gezeigt.

- **Prüfpunkte**
Überlastungs-Detektorschaltung
(1) 4Ω -Last an den Lautsprecheranschluß anschließen.
(2) 1kHz-Signal vom Niederfrequenzoszillator an das Gerät anlegen und den Lautstärkeregler so einstellen, daß die Ausgangsspannung 5V beträgt.
(3) 3,3Ω-(2W)-Last an den Lautsprecheranschluß anschließen.
(4) Überprüfen, daß keine Ausgangsleistung ausgegeben wird.
* **Falls die Schutzschaltung wegen Überlastung ausschaltet, werden die Schaltung und die Last nur dann in den normalen Zustand zurückversetzt, wenn der Netzschalter zuerst aus- und dann wieder eingeschaltet wird.**

■ MESURAGES ET RÉGLAGES

Nota: La bobine de l'oscillateur de la modulation d'amplitude (L201) et le transformateur de fréquence intermédiaire de modulation d'amplitude (T202) ont déjà été ajustés et ne nécessitent plus de réglage.

RÉGLAGE DE AM

- **Réglage et équipement utilisé**
1. Voltmètres électronique de courant alternatif et de courant continu (VTVM).
2. Générateur du signal AM (AM-SG).
3. Sèlecteur de gamme . . . . . AM (Alignement MW/LW)
4. Conserver la tension du secteur à la tension nominale.
5. Le signal du générateur ne doit pas étre plus élevé qu'il n'est nécessaire à obtenir une lecture en sortie.
6. Utiliser un tournevis non-métallique pour la réglage.

Nº	AM GENERATEUR BRANCHEMENT	AM GENERATEUR FREQUENCE	AIGUILLE SUR LE CADRAN	PREPARATIONS	ELEMENTS REGLES	PROCEDURE DE REGLAGE
	RÉGLAGE DE RF-MW (PO) * Régler le commutateur de gammes d'ondes sur la position "MW".					
1	Raccorder le générateur de signaux AM (modulation d'amplitude) à la borne d'antenne AM par l'intermédiaire d'un condensateur de 200 pF, en se référant à la Fig. 10. (Entrée faible)	600kHz (modulé à 30% par 400Hz)	600kHz	Branchez un c.a. voltmétre électronique ou nu oscilloscope sur les bornes de haut-parleur.	L205 (Bobine ANT MW) L206 (Bobine OSC MW)	• Réglez au maximum de signal de sortie.
2		1500kHz (modulé à 30% par 400Hz)	1500kHz	Branchez un c.a. voltmétre électronique ou nu oscilloscope sur les bornes de haut-parleur.	CT204 (Trimmer OSC MW) CT203 (Trimmer ANT MW)	• Réglez au maximum de signal de sortie. • Recommencez les étapes (1) et (2).

RÉGLAGE DE FM

- **Réglage et équipement untilisé.**
1. Générateur du signal FM (FM-SG).
2. Oscilloscope.
3. Voltmètres électronique de courant alternatif et de courant continu (VTVM).
4. Compteur de fréquence (19kHz et 108MHz mesurable).
5. Sélecteur . . . . . FM (Alignement FM)
6. Commutateur de silencieux /mode . . . . . off/FM mono.
7. Les autres réglages sont les mêmes que pour la mise au point de l'amplitude modulée (AM).

* Court-circuiter entre TP201 et TP202 avec un fil de connexion seulement pendant le réglage FM-RF (Modulation de fréquence Haute fréquence) et s'assurer d'ouvrir le circuit pendant un réglage autre que FM-RF.

* **Préparatif du générateur de signaux à Modulation de Fréquence (FM-SG)**

L'entrée normale de l'appareil est de 60dB (1 mV), 400 Hz, modulation de 100% , (Du fait de l'atténuation, utiliser des câbles coaxiaus. La sortie du générateur de signaux devra être de plus de 60 dB. C'est-à-dire que lorsque l'entrée est de 60 dB, la sortie du générateur de signaux devra être de 66 dB).

Nº						
	RÉGLAGE DE FI-FM					
3	Raccorder de générateur de signaux FM à la borne d'antenne FM en se référant à la Fig. 11. (Appliquer 60 dB à la borne d'antenne.)	100MHz (100% Mod. with 400Hz)	100MHz	Brancher le voltmétre électronique à C.C. aux bornes TP201 (+) TP202 (−). (Voir la fig 11)	T201 (Transfo FI discri.)	• Régler le noyau T201 de telle sorte que le voltage mesuré dans le mode sans signal, soti de 0mV dans la gamme des 150mV.
	RÉGLAGE DE RF-FM * Court-circuiter entre TP201 et TP202 avec un fil de connexion.					
4	Raccorder de générateur de signaux FM à la borne d'antenne FM en se référant à la Fig. 11. (Appliquer 60 dB à la borne d'antenne.)	90MHz (modulè à 100% par 400Hz) Entrée faible	90MHz	Branchez nu oscilloscope sur les bornes de haut-parleur.	L204 (Bobine OSC) L202 (Bobine DET)	• Appliquer une entrée faible de telle sorte que le parasite soit compris dans la forme de l'onde de sortie. • Faire le réglage de telle sorte que la forme de l'onde de sortie soit verticalement symétrique. (Fig. 13) • Refaire les réglages (4) et (5) jusqu'à ce que la fréquence corresponde correctement avec l'échells du cadran.
5		106MHz (Modulé à 100% par 400Hz) Entrée faible	106MHz	Branchez nu oscilloscope sur les bornes de haut-parleur.	CT202 (Trimmer OSC)	

RÉGLAGE PILOTE MULTIPLEX FM

Nº	AVEC UN ERÉQUENCEMÉNTRE	PAR UN OUTRE SYSTÉME
6	1. Signal mono 100MHz non modulé appliqué à l'appareil. 2. Commutateur de silencieux sur "on/FM auto". 3. Branchez le fréquencemètre sur TP301 à travers une. (voir Fig. 12) 4. Régler **VR301** sur 19kHz±30Hz.	1. Appliquez à l'appareil un signal stéréo provenant d'un générateur ou de la réception d'un émetteur. 2. Régler **VR301** jusqu à ce que l'indicateur de stéréophonic s'allume. Collez le curseur le **VR301** comme indiqué sur la fig. 14.

- **Points de vérification**

Circuit de détection de surcharge

(1) Raccorder une charge de 4Ω à la borne du haut-parleur.
(2) Ajouter un signal de 1kHz de l'oscillateur à basse fréquence à l'appareil et ajuster la manette de réglage du volume sonore de telle sorte que la tension de sortie soit de 5 volts.
(3) Raccorder une charge de 3,3Ω (2W) à la borne du hautparleur.
(4) S'assurer qu'aucune puissance de sortie ne soit fournie.

* **Si le circuit de protection est mis hors circuit du fait d'une surcharge, le circuit et la charge ne pourront rétablir leurs conditions normales à moins que l'alimentation ne soit mise une fois hors circuit et à nouveau mise en marche.**

■ MEDICIONES Y AJUSTE

Nota: La bobina de OSC AM (L201) y IFT AM (T202) ha sido ya ajustada y no requiere ajuste.

AJUSTE DE AM

* **Puesta y Uso de equido**
1. Voltimetros electronicos de CA y CC (VTVA).
2. Generador de señales AM (AM-SG)
3. Poner selector FM-AM en positión "AM".
4. Mantener voltaje de linea a voltaje nominal.
5. La salida de generador de señales no debe ser mayor que la necesaria para obtener una lectura de salida.
6. Para el ajuste use un destornillador no metálico.

Nº.	AM GENERADOR DE SEÑALES CONEXION	AM GENERADOR DE SEÑALES FRECUENCIA	PAESTA DE CUADRANTE	PREPARACIONES	PIEZAS AJUSTADAS	PROCEDIMIENTO DE AJUSTE
	AJUSTE RF-AM					
1	Conectar AM-SG a terminal de antena AM a través de capacitor 200pF refiriendo a Fig. 10 (Entrada débil)	600kHz (mod. 30% con 400Hz)	600kHz	Conectar VTVM de CA u osciloscopio a terminales de "SPEAKER" (altavoz).	L205 (Bobina ANT AM) L206 (Bobina OSC AM)	1. Ajustar para salida máxima.
2		1500kHz (Mod. 30% con 400Hz)	1500kHz	Conectar VTVM de CA u osciloscopio a terminales de "SPEAKER" (altavoz).	CT204 (Trimer de ANT AM) CT203 (Trimer de ANT AM)	1. Adjustar par salida máxima. 2. Repetir pasos (1) y (2) hasta que la frecuencia se adapte correctamente a la escala del cuadrante.

AJUSTE DE FM

* **Equipo usado**
1. Generador de señales FM (FM-SG)
2. Osciloscopio
3. Voltimetros electrónicos de CA y CC (VTVM).
4. Frequencimetro (19kHz y 108MHz medibles).
5. Poner selector FM-AM en posicion "FM".
6. Interruptor silenciador FM/modalidad FM ... off/mono FM
7. Otras puestas son las mismas que en ajuste AM.

* Cortocircuite entre TP201 y TP202 mediante hilo de puente sólo durante ajuste de FM-RF, y asegúrese de abrir el circuito durante ajuste otro que FM-RF.

* **Preparación de generador de señales FM (FM-SG)**
1. La entrada standard del aparato es 60dB (1mV), 400Hz, modulación 100% (Debido a atenuación, usando cables coaxiales La salida SG ha de ser 6dB más. Es decir, cuando la entrada 60dB, la salida de SG ha de ser 66dB.)

Nº.	FM GENERADOR DE SEÑALES CONEXION	FM GENERADOR DE SEÑALES FRECUENCIA	PAESTA DE CUADRANTE	PREPARACIONES	PIEZAS AJUSTADAS	PROCEDIMIENTO DE AJUSTE
	AJUSTE IF-FM					
3	Conectar SG-FM a terminal de antenna FM refiriendo a Fig. 11. (Aplicar 60dB a terminal de antena)	100MHz (Mod. 100% con 400Hz)	100MHz	Connector VTVM CC entre terminal TP201 y TP202 a través de bobina de choque. (Referira Fig. 11).	T201 (Discri. IFT)	1. Ajustar núcleo de T201 de manera que voltaje medido en modalidad de señal se 0mV en gama de 150mV.
	AJUSTE RF-FM * Cortocircuite entre TP201 y TP202 mediante hiro de puente.					
4	Conectar SG-FM a terminal de antenna FM refiriendo a Fig. 11. (Aplicar 60dB a terminal de antena)	90MHz (Mod. 100% con 400Hz) (entrada débil)	90MHz	Conectar osciloscopio a terminal "speaker" (altavoz)	L204 (Bobina OSC FM) L202 (Bobina DET RF)	• Añadir entrada débil de manera que ruido se incluya en la forma de onda de salida. • Hacer el ajuste de manera que la forma de onda de salida sea verticalmente simétrica. (Fig. 13). • Repetir los pasos (4) y (5) hasta que la frecuencia se adapte correctamente a la escala del cuadrante.
5		106MHz (Mod. 100% (con 400Hz) (entrada débil)	106MHz	Conectar osciloscopio a terminal "speaker" (altavoz)	CT202 (Trimer de OSC)	

AJUSTE DE V.C.O. MPX de FM

Nº	USANDO UN FREQUENCIMETRO	USANDO SISTEMA ALTERNATIVO
6	1. Señal mono no modulada de 100.10MHz 60dB aplicada al aparato. 2. Interruptor de modalidad/sinlenciador FM a "auto FM". 3. Conectar frecuéncimetro a TP301 a través de resistor (100kΩ). (Vea la Fig. 12.) 4. Ajustar VR301 a 19kHz ± 30Hz.	1. Aplicar una señal estereofónica al aparato o recibir una emisión estereofónica. 2. Ajustar VR301 y fijar el contacto deslizante de VR301 en el medio de la gama-ON del indicador estereofónico. (Vea la Fig. 14.)

- **Puntos de comprobación**

Circuito detector de sobrecarga

(1) Conectar carga 4 a terminal de altavoz.
(2) Añadir señal de 1kHz del osciladorde baja frecuancia al aparato y ajustar la perilla de control de volumen de sonido de manera que el voltage de salida sea 5 voltios.
(3) Conectar carga 3,3Ω (2W) a terminal de altavoz.
(4) Asegurarse de que no se desarrolla salida.

* **Si el circuito de protección se pone en OFF debido a sobrecarga, el circuito y la carga no restaurarán su condición normal a no ser que se ponga en OFF una vez la fuente de alimentación y se ponga en ON otra vez.**

SCHEMATIC DIAGRAM

- Change of power supply

For [M] area

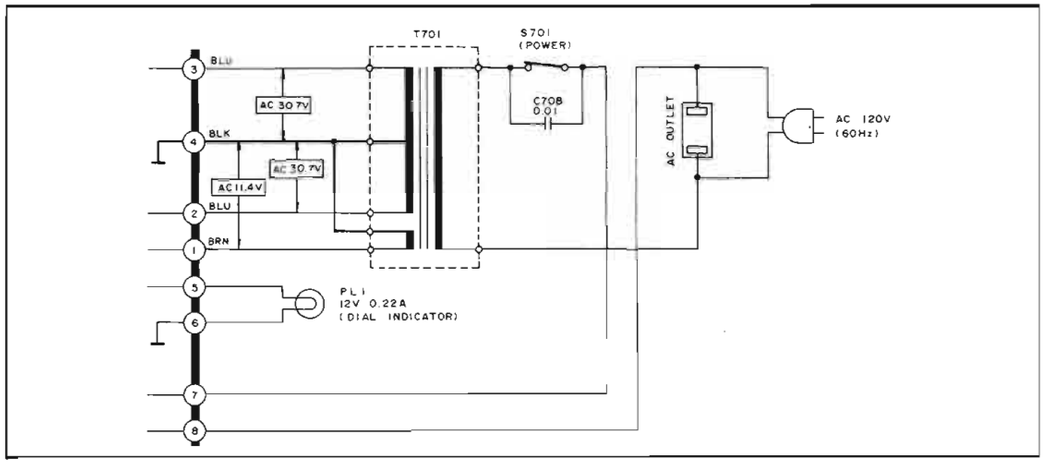

Change

For [XA, XM] areas

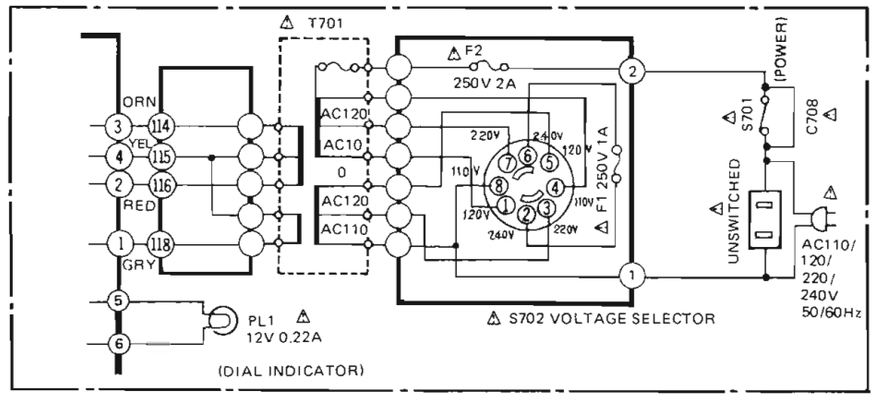

For [other] areas

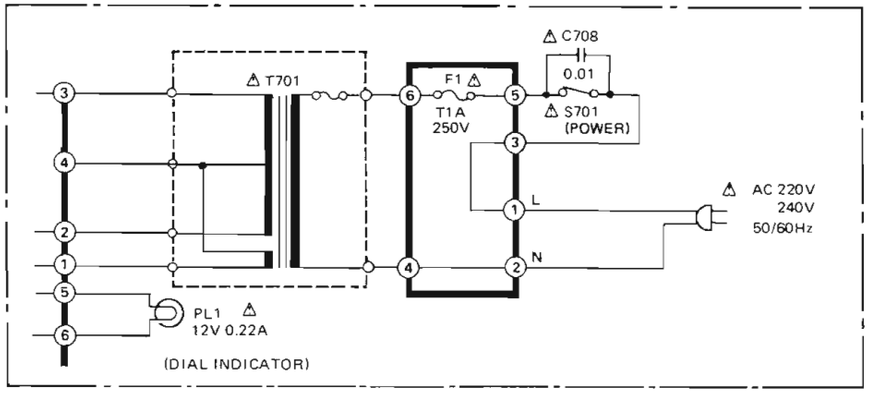

Important safety notice:

Components identified by ⚠ mark have special characteristics important for safety. When replacing any of these components use only manufacturer's specified parts.

- Change of the terminal

For [M] area

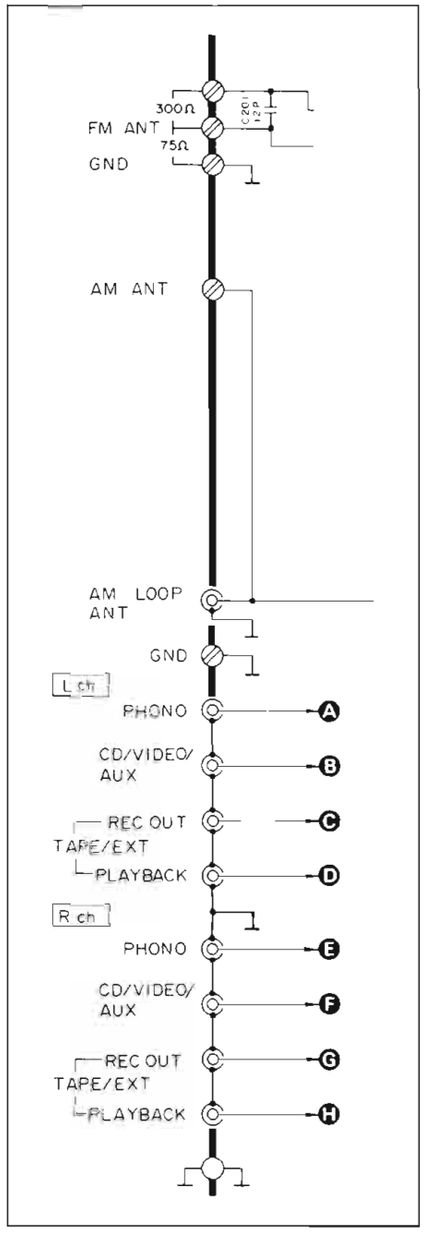

Change

For [XL] area

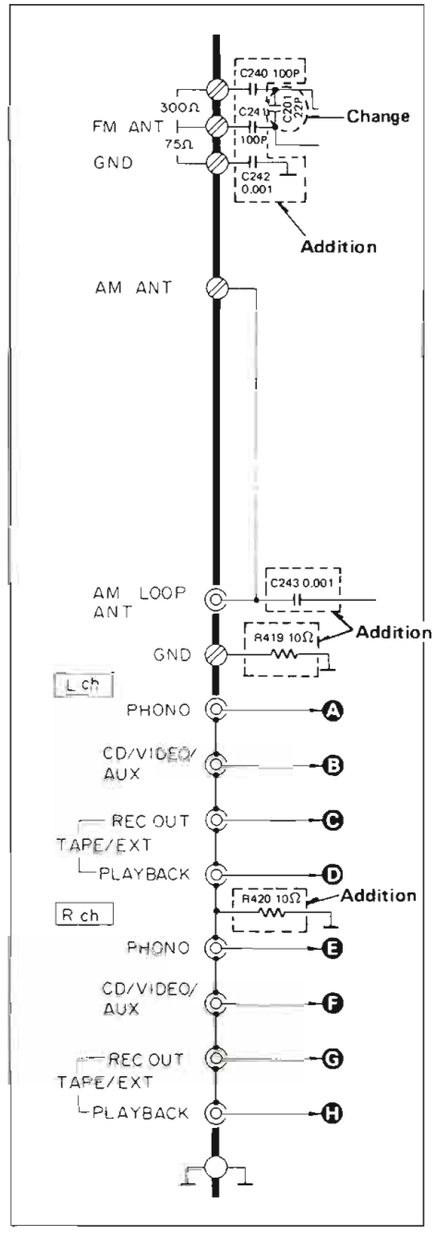

- Change of the resistors (R251, 252)

For [M] area

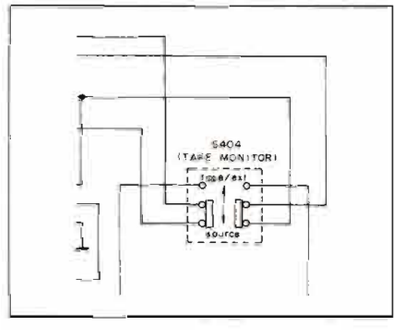

Change

For [EX,EH,XA,XL,XM] areas

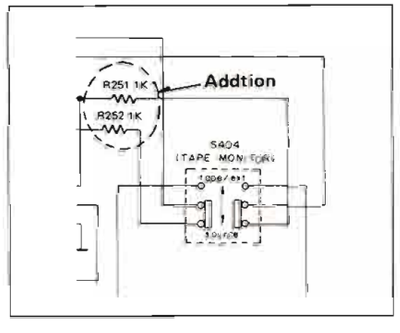

- **Change of the capacitors**

For [M] area

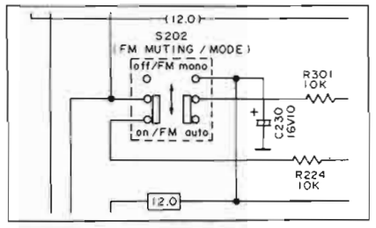

Change

For [EX,EH,XA,XL,XM] areas

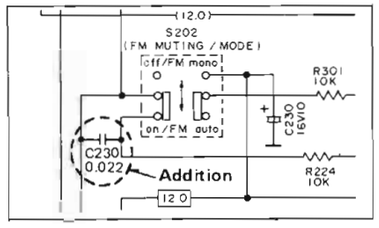

For [M] area

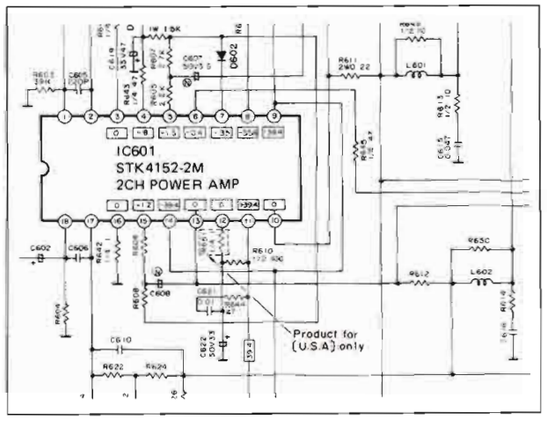

Change

For [EX,EH,XA,XL,XM] areas

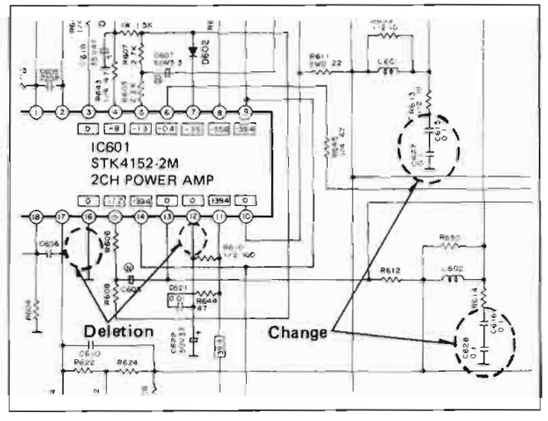

- **Change of the replacement parts list**

CHANGE

Ref. No.	Change of Part No. SA-120 [M]	→ SA-120 [EX,EH, XA, XL, XM]	Part Name & Description
TRANSFORMERS			
T701	SLT5M373	SLT5M383	⚠ [EX, EH]
		SLT5M385	⚠ [XL]
		SLT5M387	⚠ [XA, XM]
FUSE			
F1	XBA1F30NU14	XBA2C10TR0	⚠
F2	Addition	XBA2C20TR0	⚠ [XA, XM] only
SWITCHES			
S702	Addition	ESE37219	⚠ [XA, XM] only
RESISTORS			
R307, 308	ERD25FJ332	ERD25FJ222	Carbon, 1/4W 2.2KΩ Ⓢ
R311	ERD25TJ274	ERD25TJ334	Carbon, 1/4W 330KΩ Ⓢ
R251, 252	Addition	ERD25FJ102	Carbon, 1/4W 1KΩ Ⓢ
R419, 420	Addition	ERD25FJ100	Carbon, 1/4W, 10Ω Ⓢ [XL] only
R642	ERD25FJ1R0	Deration	
R651	ERD25FJ1R0	Deration	
CAPACITORS			
C201	ECCD1H120KC	ECCD1H220KC	Ceramic, 50V, 22PF Ⓢ
C230	Addition	ECKD1H223ZF	Ceramic, 50V, 0.022μF Ⓢ
C240, 241	Addition	ECKDHS101MB	Ceramic, AC400V, 100pF, [XL] only
C242, 243	Addition	ECKDHS102MD	Ceramic, AC400V, 0.001μF, [XL] only
C245	Addition	ECKD1H102ZF	Ceramic, 50V, 0.01μF Ⓢ
C615, 616 627, 628	ECKD1H473ZF	ECQM1H104KV	Polyester, 50V, 0.1μF
C701, 702	ECETS45V472U	ECETS45V472U	45V, 4700μF [XA,XM] only
		ECET42V472Z	42V, 4700μF [Other]
C703	ECKD2H103PE	ECKD2H103PE	DC500V, 0.01μF [XA,XL,XM]
		ECQE1104KN	DC100V, 0.1μF [EX,EH]

Ref. No.	Change of Part No. SA-120 [M]	→ SA-120 [EX,EH, XA, XL, XM]	Color	Part Name & Description
CABINET and CHASSIS PARTS				
2	SGWA120-SM	SGWA120-SE	○	Front Panel, Ass'y
		SGWA120-KE	Ⓚ	
3	SGU333-13	SGU333-13	○	Dial Scale
		SGU333-14	Ⓚ	
5	SGX7657	SGX7657	○	Front Sub Panel
		SGX7657-2	Ⓚ	
6	SBD69-2T	SBD69-2T	○	Knob, Tone
		SBD69-1T	Ⓚ	
8	SHS1068-1	SHG6363		Spacer, Button
20	SHR411	XTB3+8G		Screw, Tapping, ⊕ 3x8
21	SBD77T	SBD77T	○	Knob, Volume
		SBD77-1T	Ⓚ	
25	SBC483-6T	SBC483-6T	○	Button, Speaker
		SBC483-8T	Ⓚ	
33	SKC1352S1	SKCA121-SM	○	Cabinet, Ass'y
		SKCA121-KC	Ⓚ	
34	SKUA120-SM	SKUA120-SE		[EX, EH, XL] Bottom Board
		SKUA120-SX		[XA,XM]
35	SJF8035-8N	SJF8035-8N		[EX,EH,XA,XM] Terminal Board
		SJF8035-9N		[XL] only
37	SGP6130A	SGP6130-2A		[EX, EH] Rear Panel
		SGP6130-3A		[XA, XM]
		SGP6130-4A		[XL]
38	SJS9221	SJS9221		[XA,XM] only ⚠ Socket
		Deration		[EX, EH, XL]
39	RHR111	SHR127		[EX,EH,XA,XM] Bushing
		SHR131		[XL] only

Ref. No.	Change of Part No. SA-120 [M]	→ SA-120 [EX,EH, XA, XL, XM]	Color	Part Name & Description	
40	RJA9Y	SJA138-3		[EX,EH,XA,XM]	AC Cord ⚠
		QFC1207MA		[XL] only	
41	SJT345	SJT347		Holder, Fuse	
43	Addition	SMN1823		[EX,EH,XL] only	Bracket
44	Addition	SMX435		[EX,EH,XL] only	Insulation Cover
SCREWS					
N2	XTB3+8BFYR	XTB3+8BFYR		[EX,EH,XA,XM]	Tapping, ⊕ 3x8
		XTBS3+8FYR1		[XL] only	Tapping with Detent, ⊕ 3x8
N8	SNE2095-4	SNE2095-4	Ⓒ		
		SNE2095-5	Ⓚ		
N9	XTB3+8BFN	XTB3+8BFN	Ⓒ	Tapping, ⊕ 3x8	
		XTB3+8BFZ	Ⓚ		
N16	Addition	XSN3+8BNS		[XA, XM] only	⊕ 3x8
N17	Addition	XTBS3+8BFZ1		[EX,EH,XL] only	Tapping with Detent, ⊕ 3x8
N18	Addition	XTW3+8H		[EX,EH,XL] only	Tapping, ⊕ 3x8
WASHERS					
N20	Addition	XWC3BFN	Ⓒ	[XL] only	External Toothed Lock, φ3
		XWC3BFZ	Ⓚ	[XL] only	External Toothed Lock, φ3

Ref. No.	Change of Part No. SA-120 [M]	→ SA-120 [EX,EH, XA, XL, XM]	Color	Part Name & Description	
N21	Addition	XWG3		[XA, XM] only	Plain, φ3
N22	Addition	XWA3B		[XA, XM] only	Spring, φ3
ACCESSORIES					
A6	SQF12046	SQF12083		[EX, XL]	Instruction Book
		SQF12084		[XA, XM]	
		SQF12085		[EX]	
A7	Addition	SJP5213-1		[XA, XM] only	Plug ⚠
PACKING PARTS					
P1	SPP699	SPP699	Ⓒ	Polyethylene Bag	
		SPP649	Ⓚ		
P3	SPS3515-3	SPS3515-3		[EX, EH, XL]	Pad, Left Side
		SPS3515-4		[XA, XM]	
P4	SPS3517-2	SPS3517-2		[EX,EH,XA,XM]	Pad, Right Side
		SPS3517-3		[XL] only	
P5	SPG4811	SPG4874		[EX, EH]	Carton Box
		SPG4875		[XA, XM]	
		SPG4876		[XL]	
P6	Addition	SGK1413	Ⓚ	Label, (Black Type only)	

■ REPLACEMENT PARTS LIST

Notes:

1. Part numbers are indicated on most mechanical parts. Please use this part number for parts order.
2. Important safety notice: Components identified by mark havespecial character characteristics important for safety. When replacing any of these components, use only manufacturer's specified parts.
3. Ⓚ —marked parts are used for black only, while ○ —marked parts are for silver type only.
4. Part other than Ⓚ — and ○ —marked are used for both black and silver type.
5. Bracketed indications in Ref. No. columns specify the area. Parts without these indications can be used for all areas.
6. The " Ⓢ " mark is service standard parts and may differ from production parts.
7. The parenthesized numbers in the column of description stand for the quantity per set.

Areas

- [EX] is available in Scandinavia and Switzerland.
- [EH] is available in Holland.
- [XA] is available in Asia, Oceania, Africa and Middle Near East.
- [XL] is available in Australia.
- [XM] is available in Latin America.

Black type model No. SA-120(K)

Ref. No.	Part No.	Part Name & Description
INTEGRATED CIRCUITS		
IC201	AN7273A	FM IF Det. & AM Convertor
IC301	SVIUPC1161C3	MPX
IC401	AN6553F	Equalizer
IC601 ⚠	STK4152-2M	Power
TRANSISTORS		
Q201	2SK241-GR	FM-RF Amp.
Q202 Ⓢ	2SC1047-D	Mixer
Q203 Ⓢ	2SC1675-L	FM OSC
Q204, 205 Ⓢ	2SC829-C	FM-IF Amp.
Q206, 207, 604, 702 Ⓢ	2SC828AS	LED Drive, Muting Regulator
Q601, 602	2SA921-R	Over Load Det.
Q603 Ⓢ	2SA564AR	
Q701	2SD1265-O	Regulator

Ref. No.	Part No.	Part Name & Description
DIODES		
D201 Ⓢ	1S2687AA	FM AFC
D202	MA27W-A	
D203	LN446YP	L. E. D. (Tuning)
D301	LN846RP	L. E. D. (Stero)
D302, 602~606 Ⓢ	MA162A	Switching
D601 Ⓢ	SVDRD8.2EB	Zener, 8.2V
D607 Ⓢ ⚠	SVDSR1K2	Rectifier
D701~704 ⚠	SVDS2V20	Rectifier
D705	MA1160M	Zener, 16V
D706	MA1062M	Zener, 6.2V
COILS		
L201	SLA4N39	FM Antenna
L202	SLD4P71-P	FM Detector
L203	SLQZ12G1-D	Choke

Ref. No.	Part No.	Part Name & Description
COILS		
L204	SL04P121-P	FM Oscillator
L205	SLA2C9-P	AM Antenna
L206	SL02C33-P	AM Oscillator
L601, 602	SLQY07G-30	Choke
TRANSFORMERS		
T201	SLI4C539-P	FM IFT
T202	SLI2C139-M	AM IFT
T701 (EX, EH) ⚠	SLT5M383	Power Source
T701 (XA, XM) ⚠	SLT5M387	Power Source
T701 (XL) ⚠	SLT5M385	Power Source

Ref. No.	Part No.	Part Name & Description
CERAMIC FILTERS		
CF201,202	SVFE107MS2-A	FM, 10.7MHz (Red)
	SVFE107MS2-B	FM, 10.675MHz (Blue)
	SVFE107MS2-C	FM, 10.725MHz (Orange)
	SVFE107MS2-D	FM, 10.650MHz (Black)
	SVFE107MS2-E	FM, 10.750MHz (White)
(Use pair ranks as same as CF201 and CF202)		
CF203	SVFSFU450B3	AM, 450KHz
VARIABLE RESISTORS		
VR301	EVN75AA00B53	VCO Adjustment, 5kΩ(B)
VR501	EWE00605A15S	Volume Control, 100kΩ(A)
VR502	EVD00305G15S	Balance Control, 100kΩ(G)
VR503,504	EWD00205C15S	Tone Control, 100kΩ(C)
VARIABLE CAPACITORS		
CT202	ECV1ZW10X32E	Trimmer, FM OSC
CT203	ECRHA007A11	Trimmer, AM Antenna
CT204	ECRHA010A11	Trimmer, AM OSC
CV201~204	SVCCB41T914	Tuning Gang
COMPONENT COMBINATIONS		
Z301,302	EXRP181K473C	180pF, 47kΩ
LAMP		
PL1 ⚠	XAMR78S250	12V,0.22A
FUSE		
F1 ⚠	XBA2C10TRO	250V, T1A
F2(XA,XM)only ⚠	XBA2C20TRO	250V, T2A
SWITCHES		
S201	SSH1151	Band Selector (FM/AM)
S202,404	SSH1031	Mode, Tape Monitor
S401,402,403	SSH3069	Input Selector
S601	SSH1149	Speaker(Main)
S602	SSH1073	Speaker(Remote)
S701 ⚠	SSH1071	Power Source
S702 ⚠ (XA,XM)only	ESE37219	Voltage Selector
CABINET and CHASSIS PARTS		
1	SUS305	Bracket (1)
2 ○	SGWA120-SE	Front Panel, Ass'y (Silver Type) (1)
2 Ⓚ	SGWA120-KE	Front Panel, Ass'y (Black Type) (1)
3 ○	SGU333-13	Dial Scale (Silver Type) (1)
3 Ⓚ	SGU333-14	Dial Scale (Black Type) (1)
4	SBN1091	Knob, Tuning (1)
5 ○	SGX7657	Front Sub Pane (Silver Type) (1)
5 Ⓚ	SGX7657-2	Front Sub Pane (Black Type) (1)
6 ○	SBD69-2T	Knob, Tone (Silver Type) (3)
6 Ⓚ	SBD69-1T	Knob, Tone (Black Type) (3)
7	SBC627	Button, Power Switch (1)
8	SHG6363	Spacer, Button (1)

Ref. No.	Part No.	Part Name & Description
CABINET and CHASSIS PARTS		
9	SUS257	Spring, Button (8)
10	SBC583-1T	Button,Input Selector (3)
11	SBC483-7T	Button, Band Selector (1)
12	SUR152M	Bracket, Tuning Shaft (1)
13	SHR5253	Spacer, Drum (1)
14	SDD105	Drum, Dial (1)
15	SUS295-1	Spring, Dial Drum (1)
16	SDZ051-2	Cord, Dial (1.8m)
17	SDT8095-1	Tuning Shaft (1)
18	SDR31	Roller, Dial (4)
19	SGX7463-3	Ornament, Volume (1)
20	SHR411	Lock Pin (2)
21 ○	SBD77T	Knob, Volume (Silver Type) (1)
21 Ⓚ	SBD77-1T	Knob, Volume (Black Type) (1)
22	SBZ657-1	Slider (1)
23	SBC423T	Button (2)
24	SHR9727	Sheet (1)
25 ○	SBC483-6T	Button, Speaker (Silver Type) (2)
25 Ⓚ	SBC483-8T	Button, Speaker (Black Type) (2)
26	SUG181	Guide, Pointer (1)
27	SGX7461-3	Ornament (1)
28	SBZ663-1	Slider (3)
29	SHP59	Spacer, Pointer (1)
30	SDP1167-1	Dial, Pointer (1)
31	SJJ71B	Jack, Headphne (1)
32	SUW1989	Bracket (1)
33 ○	SKCA121-SM	Cabinet (Silver Type) (1)
33 Ⓚ	SKCA121-KC	Cabinet (Black Type) (1)
34(XA,XM) only	SKUA120-SX	Bottom Board (1)
34 other areas	SKUA120-SE	Bottom Board (1)
(34-1	SKL245-2	Foot (4)
35(XL)only	SJF8035-9N	Terminal Board (1)
35 other areas	SJF8035-8N	Terminal Board (1)
36	SJF4815-2	Terminal Board (1)
37(EX,EH)	SGP6130-2A	Rear Panel (1)
37(XA,XM)	SGP6130-3A	Rear Panel (1)
37(XL)	SGP6130-4A	Rear Panel (1)
38(XA,XM)only ⚠	SJS9221	Socket, AC Outlet (1)
39(XL)only	SHR131	Bushing, AC Cord (1)
39 other areas	SHR127	Bushing, AC Cord (1)
40(XL)only ⚠	QFC1207MA	AC Cord (1)
40 other areas ⚠	SJA138-3	AC Cord (1)
41		Holder, Fuse (2)
42	SJS5327	Socket (1)
43(EX,EH,XL) only	SMN1823	Bracket, P.C.B (1)
44(EX,EH,XL) only	SMX435	Insulation Cover (1)
SCREWS		
N1	XTBS3+8BFZ1	Tapping with Detent,⊕3×8 (1)
N2(XL)	XTBS3+8BFYR1	Tapping,⊕3×8 (8)
N2 other areas	XTBS3+8BFYR	Tapping with Detent,⊕3×8 (8)

Ref. No.	Part No.	Part Name & Description
SCREWS		
N3 Ⓢ	XTN3+8B	Tapping,⊕3×8 (1)
N4 Ⓢ	XTB3+8BFZ	Tapping,⊕3×8 (7)
N5	XSN26+5FZ	⊕2.6×5 (1)
N6 Ⓢ	XSN3+8BVS	⊕3×8 (2)
N7 Ⓢ	XTB3+16BFN	Tapping,⊕3×16 (2)
N8 ○	SNE2095-4	(Silver Type) (4)
N8 Ⓚ	SNE2095-5	(Black Type) (4)
N9 Ⓢ ○	XTB3+8BFN	Tapping,⊕3×8(Silver Type) (2)
N9 Ⓢ Ⓚ	XTB3+8BFZ	Tapping,⊕3×8(Black Type) (2)
N16(XA,XM) only Ⓢ	XSN3+8BNS	⊕3×8 (1)
N17(EX,EH,XL) only	XTBS3+8BFZ1	Tapping with Detent,⊕3×8 (2)
N18(EX,EH,XL) only	XTW3+8H	Tapping,⊕3×8 (1)
N19	XTB3+8G	Tapping,⊕3×8 (1)
WASHERS		
N10	RNW150-2	(8)
N11 Ⓢ	XWD11B	External Toothed Lock, φ11 (1)
N12 Ⓢ	XWG3	Plain, φ3 (2)
N13 Ⓢ	XWA26BFZ	Spring, φ2.6 (1)
N14 Ⓢ	XWC3B	External Toothed Lock, φ3 (2)
N20(XL)only Ⓢ ○	XWC3BFN	External Toothed Lock, φ3 (2) (Silver Type)
N20(XL)only Ⓢ Ⓚ	XWC3BFZ	External Toothed Lock, φ3 (2) (Black Type)
N21(XA,XM) only Ⓢ	XWG3	Plain, φ3 (1)
N22(XA,XM) only Ⓢ	XWA3B	Spring, φ3 (1)
NUT		
N15 Ⓢ	XNS11	φ11 (1)
ACCESSORIES		
A1	SSA269	Cord, FM Antenna (1)
A2	SSA902	Loop Antenna (1)
A3	SMA231	Holder (1)
A4	SMA233-1	Holder (1)
A5	XTN3+10AFZ	Screw, Loop Antenna Holder (2)
A6(EH,XL)	SQF12083	Instruction Book(1)
A6(XA,XM)	SQF12084	Instruction Book(1)
A6(EX)	SQF12085	Instruction Book(1)
A7(XA,XM) only ⚠	SJP5213-1	Plug Adaptor (1)
PACKING PARTS		
P1 ○	SPP699	Polyethylene Bag (Silver Type) (1)
P1 Ⓚ	SPP649	Polyethylene Bag (Black Type) (1)
P2	SPS4039	Pad, Front Side (1)
P3(XA,XM) only	SPS3515-4	Pad, Left Side (1)
P3 other areas	SPS3515-3	Pad, Left Side (1)
P4(XL)only	SPS3517-3	Pad, Right Side (1)
P4 other areas	SPS3517-2	Pad, Right Side (1)
P5(EX,EH)	SPG4874	Carton Box (1)
P5(XA,XM)	SPG4875	Carton Box (1)
P5(XL)	SPG4876	Carton Box (1)
P6 Ⓚ	SGK1413	Label,(Black Type only) (2)

CHANGE

• Change of the exploded view

For [M] area

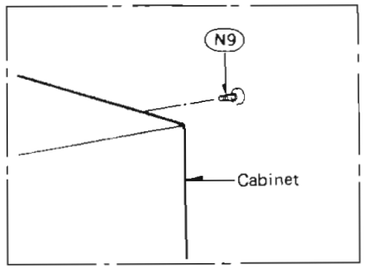

Change

For [XL] area

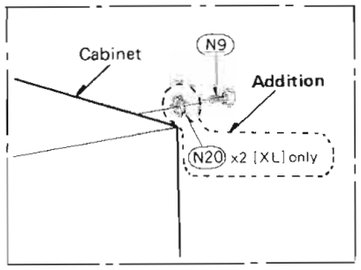

For [M] area

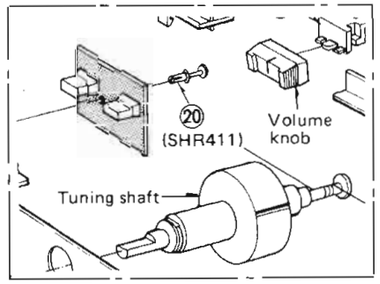

Change

For [EX,EH,XA,XL,XM] areas

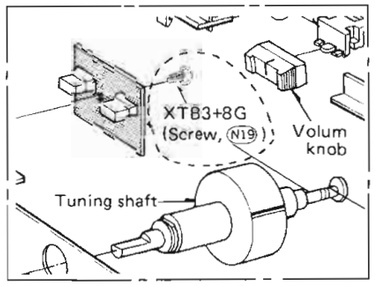

For [M] area

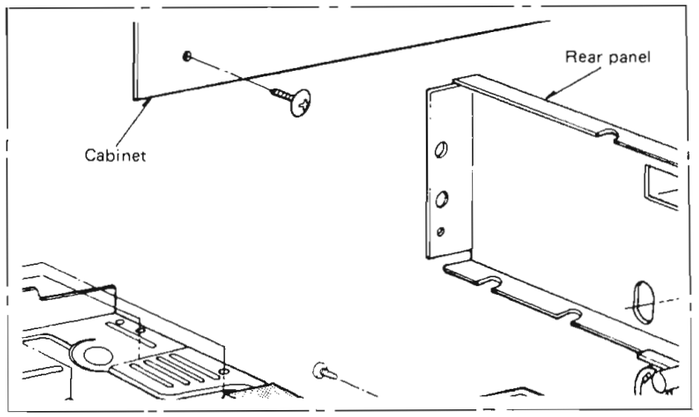

Change

For [EX, EH, XA, XL, XM] areas

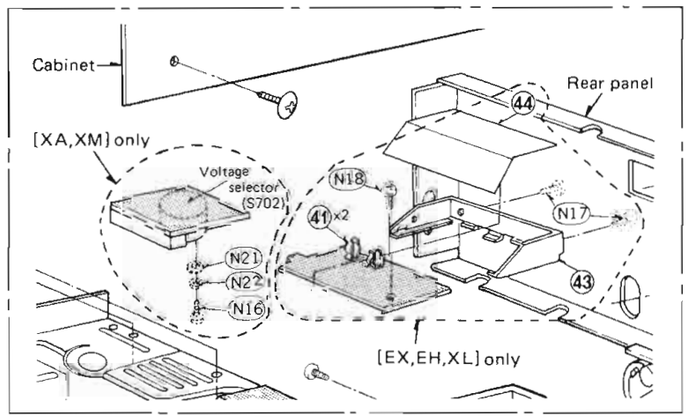

Printed in Japan
840604300 Ⓚ SH/TN

ORDER NO. HAD84022713C1

Service Manual

FM/AM Stereo Receiver

SA-120

[M], [MC]

Areas

* [M] is available in the U.S.A.
* [MC] is available in Canada.

Specifications

(Specifications are subject to change without notice for further improvement.)
(Weights and dimensions shown are approximate.)

(IHF '78)

■ AMPLIFIER SECTION

Rated minimum sine wave RMS power output
40 Hz~20 kHz both channels driven
0.5% total harmonic distortion
35W per channel (8 ohms)

1 kHz continuous power output both channels driven 0.5% total harmonic distortion	38W per channel (8 ohms)
Dynamic headroom	1.0 dB (8 ohms)
Total harmonic distortion	
rated power at 40 Hz~20 kHz	0.5% (8 ohms)
half power at 1 kHz	0.07% (8 ohms)
SMPTE intermodulation distortion	0.5% (8 ohms)
Frequency response	
PHONO	RIAA standard curve ±0.8 dB
TAPE/AUX	5 Hz~70 kHz, −3 dB
Input sensitivity	
PHONO	0.45 mV (2.5 mV, IHF '66)
TAPE/AUX	25 mV (150 mV, IHF '66)
S/N (IHF, A)	
PHONO	73 dB (71 dB, IHF '66)
TAPE/AUX	82 dB (95 dB, IHF '66)
Maximum input voltage	
PHONO	120 mV (130 mV, 1 kHz)
Input impedance	
PHONO	47 kilohms
TAPE/AUX	18 kilohms
Tone controls	
BASS	50 Hz, +10 dB~ −10 dB
TREBLE	20 kHz, +10 dB~ −10 dB
Loudness control (volume at −30 dB) (built-in)	50 Hz, +5 dB
Low frequency damping factor	30 (8 ohms)
Load impedance	
MAIN or REMOTE	8~16 ohms
MAIN and REMOTE	8~16 ohms

■ FM TUNER SECTION

Frequency range	88~108 MHz
Sensitivity	10.8 dBf (1.9 μV, IHF '58)
50 dB quieting sensitivity	
MONO	16.1 dBf (3.5 μV IHF '58)
STEREO	38.3 dBf (45 μV IHF '58)
Total harmonic distortion	
100 Hz	0.15% (MONO), 0.3% (STEREO)
1 kHz	0.15% (MONO), 0.3% (STEREO)
6 kHz	0.3% (MONO), 0.4% (STEREO)
S/N	
MONO	76 dB
STEREO	70 dB
Frequency response	20 Hz~15 kHz, +1 dB, −2 dB
Alternate channel selectivity	60 dB
Capture ratio	1 dB
Image rejection at 98 MHz	40 dB
IF rejection at 98 MHz	60 dB
Spurious response rejection at 98 MHz	70 dB
AM suppression	50 dB
Stereo separation	
1 kHz	40 dB
10 kHz	30 dB
Carrier leak	
19 kHz	−35 dB
38 kHz	−50 dB
Antenna terminals	300 ohms (balanced) 75 ohms (unbalanced)

Technics

Matsushita Engineering and Service Company
50 Meadowland Parkway,
Secaucus,
New Jersey 07094

Panasonic Hawaii, Inc.
91-238 Kauhi St., Ewa Beach
P.O. Box 774
Honolulu, Hawaii 96808-0774

Matsushita Electric of Canada Limited
5770 Ambler Drive, Mississauga,
Ontario, L4W 2T3

Panasonic Sales Company Division of Matsushita Electric of Puerto Rico, Inc.
Ave. 65 De Infanteria, KM 9.7
Victoria Industrial Park
Carolina, Puerto Rico 00630

■ AM TUNER SECTION

Frequency range	525~1605 kHz
Sensitivity	20 μV, 300 μV/m
Selectivity	27 dB
Image rejection at 1000 kHz	40 dB
IF rejection at 1000 kHz	55 dB

■ GENERAL

Power consumption	150W
Power supply	AC 120V, 60 Hz
Dimensions (W×H×D)	430 × 97 × 249 mm (16-15/16" x 3-13/16" x 9-13/16")
Weight (for USA)	4.9 kg (10.8 lb.)
(for Canada)	5 kg (11 lb.)

■ CONTENTS

	Page
PROTECTION CIRCUITRY	2
BEFORE REPAIR AND ADJUSTMENT	2
SAFETY PRECAUTION	3
HOW TO USE THE AM LOOP ANTENNA	3
LOCATION OF CONTROLS	4
DISASSEMBLY INSTRUCTIONS	5, 6
DIAL CORD INSTALLATION GUIDE	6
MEASUREMENTS AND ADJUSTMENTS	7, 8
CIRCUIT BOARDS AND WIRING CONNECTION DIAGRAM	9, 10
RESISTORS & CAPACITORS	11
BLOCK DIAGRAM	12, 13
SCHEMATIC DIAGRAM	14 ~ 19
TERMINAL GUIDE OF TRANSISTORS, DIODES AND IC'S	19
REPLACEMENT PARTS LIST	20
EXPLODED VIEW	21, 22

■ PROTECTION CIRCUITRY

The protection circuitry may have operated if either of the following conditions is noticed:

- No sound is heard when the power is turned on.
- Sound stops during a performance.

The function of this circuitry is to prevent circuitry damage if, for example, the positive and negative speaker connection wires are "shorted", or if speaker systems with an impedance less than the indicated rated impedance of this unit are used.

If this occurs, follow the procedure outlines below:

1. Turn off the power.
2. Determine the cause of the problem and correct it.
3. Turn on the power once again after one minute.

Note

When the protection circuitry functions, the unit will not operate unless the power is first turned off and then on again.

■ BEFORE REPAIR AND ADJUSTMENT

1. Turn off the power supply and short-circuit of power supply capacitors (C701 and C702, 4700μF) at resistance (about 10Ω, 5W) in order to discharge the charged voltage. Do not short between C701 and C702 by screwdriver. It may damage the component.
2. Before turning on the power supply after completion of repair, slowly apply the primary voltage by using a power supply voltage controller to make sure that the consumed current at 120V, 60Hz in no-signal mode is 150 ~ 400mA.

■ SAFETY PRECAUTION

1. Before servicing, unplug the power cord to prevent an electric shock.
2. When replacing parts, use only manufacturer's recommended components for safety.
3. Check the condition of the power cord. Replace if wear or damage is evident.
4. After servicing, be sure to restore the lead dress, insulation barriers, insulation papers, shields, etc.
5. Before returning the serviced equipment to the customer, be sure to make the following insulation resistance test to prevent the customer from being exposed to a shock hazard.

• INSULATION RESISTANCE TEST

1. Unplug the power cord and short the two prongs of the plug with a jumper wire.
2. Turn on the power switch.
3. Measure the resistance value with ohmmeter between the jumpered AC plug and each exposed metal cabinet part, such as screwheads antenna, control shafts, handle brackets, etc. Equipment with antenna terminals should read between 3MΩ and 5.2MΩ to all exposed parts. (Fig. A) Equipment without antenna terminals should read approximately infinity to all exposed parts. (Fig. B)

Note: Some exposed parts may be isolated from the chassis by design. These will read infinity.

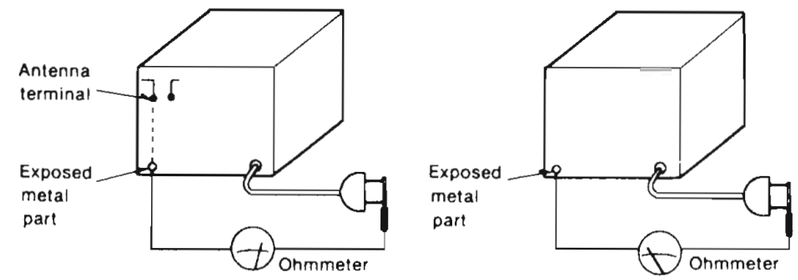

(Fig. A) Resistance = 3MΩ—5.2MΩ

(Fig. B) Resistance = Approx ∞

4. If the measurement is outside the specified limits, there is a possibility of a shock hazard. The equipment should be repaired and rechecked before it is returned to the customer.

■ HOW TO USE THE AM LOOP ANTENNA

This unit includes an AM loop antenna. No outdoor antenna is necessary unless the broadcast signals in your area are especially weak. (Connect the loop antenna even if an outdoor antenna is used; if it is not connected, AM reception will not be possible.)

Pay attention to the following points when attaching the antenna.
1) Do not attach it horizontally (to do so would impair reception).
2) Do not attach it close to metal surfaces (to do so would result in noise).
3) Do not attach it close to power cords, speaker wires, etc. (to do so would result in noise).
4) Do not attach it close to a tape deck (when the tape deck is being used, chirping or beeping sounds may be received).

Steps

1. Connect the AM loop antenna to the AM antenna terminals located on the rear panel of the unit.
2. Find the height and direction of the antenna where reception is best and then fix it vertically to the wall, rack, etc.

1) When attaching the antenna to a wall, column or rack.

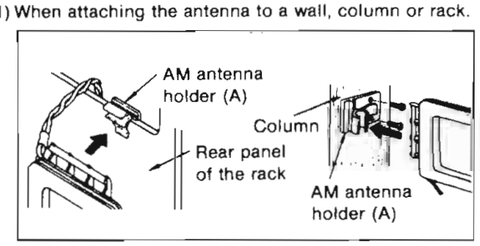

2) When attaching the antenna to the unit.

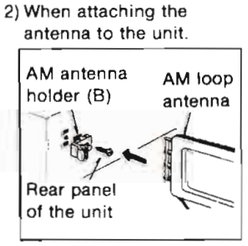

Note:
The installation of the antenna to the unit may cause impaired reception or result in signal noise. If possible, attach the antenna to the rack, a wall, or a column.

3. Move the antenna toward the right or left to find the point of best reception.

■ LOCATION OF CONTROLS

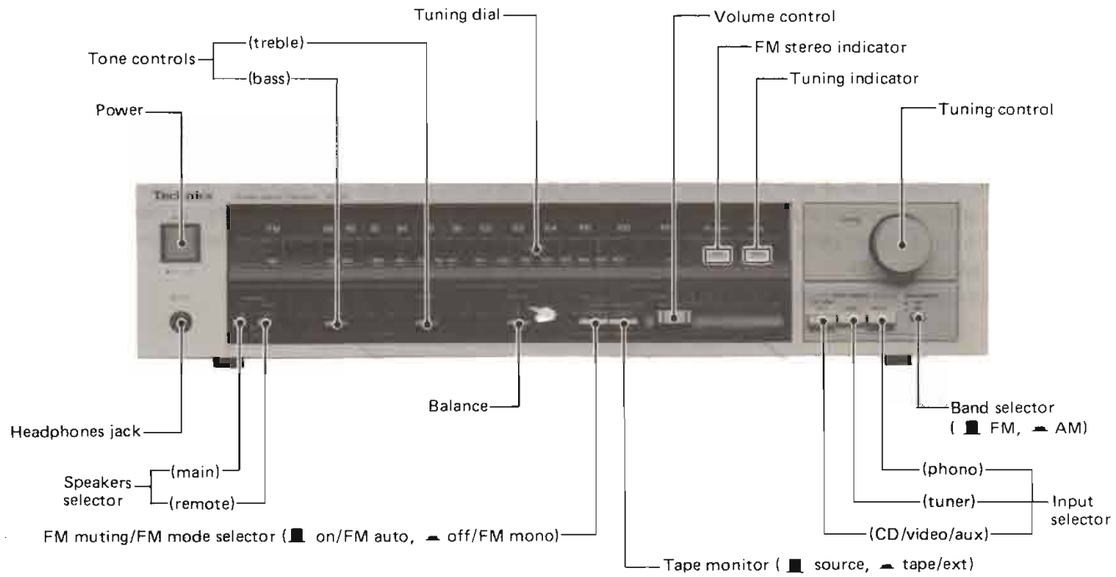

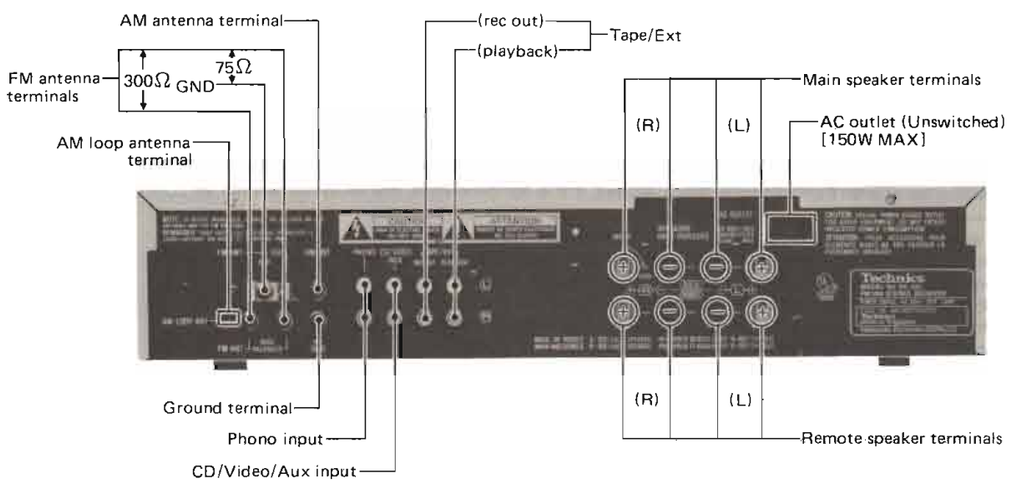

- Phono input capacitance is about 150pF.
- Series connection method is employed for the main and remote speaker connections of this set. Therefore, if both speaker changeover switches (main and remote) are turned "on" with the speaker unit connected only to main or remote speaker terminal, then no output signal will be delivered from the speaker unit.

■ DISASSEMBLY INSTRUCTIONS

• How to remove the cabinet

1. Remove the 6 setscrews (Fig. 1: ❶~❻) of the cabinet.

• How to remove the bottom board

1. Remove the cabinet.
2. Remove the 10 setscrews (Fig. 2 : ❼ ~ ⓰) of the bottom board.

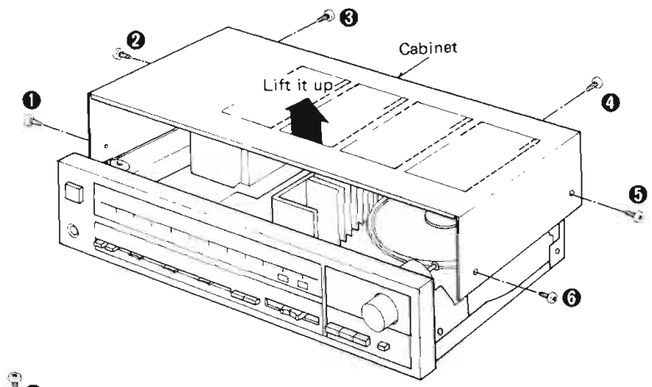

Fig. 1

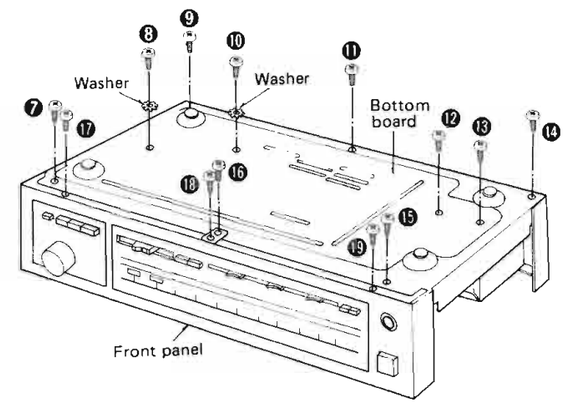

Fig. 2

• How to remove the front panel

1. Remove the cabinet.
2. Remove the 3 setscrews (Fig. 2: ⓱ ~ ⓳) of the front panel.
3. The claws projected (at 5 portions) from the front panel are engaged with the front sub-panel. Disengage the claws from by screwdriver or the like to remove the front sub-panel. (See Fig. 3)

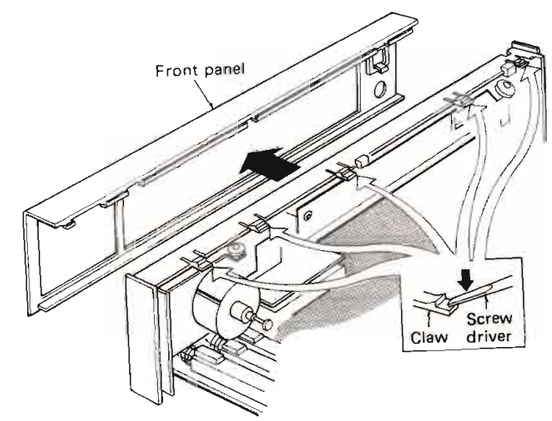

Fig. 3

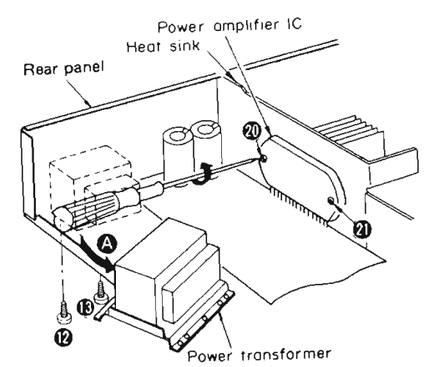

Fig. 4

• How to remove the power amplifier IC

1. Remove the cabinet and bottom board.
2. Remove the 2 setscrews (Fig. 4 : ⓬, ⓭) to detach the power transformer from rear panel in the direction of arrow Ⓐ.
3. Unsolder of power amplifier IC.
4. Remove the 2 setscrews (Fig. 4 : ⓴, ㉑) used to secure the power amplifier IC on the heat sink, and then pull the power amplifier IC.
5. When mounting the power amplifier IC, apply silicone compound (SZZOL15) to the rear side of power amplifier IC, and then follow the steps 1 ~ 4 reversely.

- **How to remove the slide volume.**

1. Remove the cabinet and bottom board.
2. Set the dial to the start position (minimum frequency), then stick a cellophane tape to the contact Ⓑ of dial cord (Fig. 5) so that the dial drum will not come loose from the dial cord.
3. Remove the 1 setscrew (Fig. 5 : ㉒) from the dial drum.
4. Remove the dial cord from the pulley. (Fig. 5 : Ⓒ)
5. Remove the 3 setscrews (Fig. 6 : ㉓ ~ ㉕) and 1 connector (Fig. 6: ㉖)
6. Remove the front panel in the direction of the arrow as in Fig 7.
7. The claws projected (at 4 portions) from the slide volume printed circuit board are engaged with the slide volume. Disengage the claws from by screw driver or the like to remove the slide volume case. (Fig. 8)
8. Unsolder the slide volume.

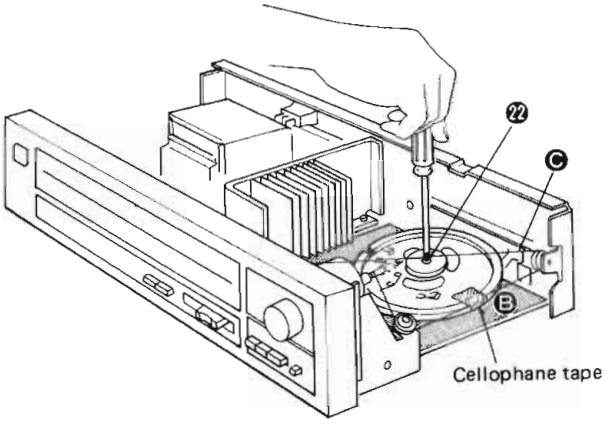

Fig. 5

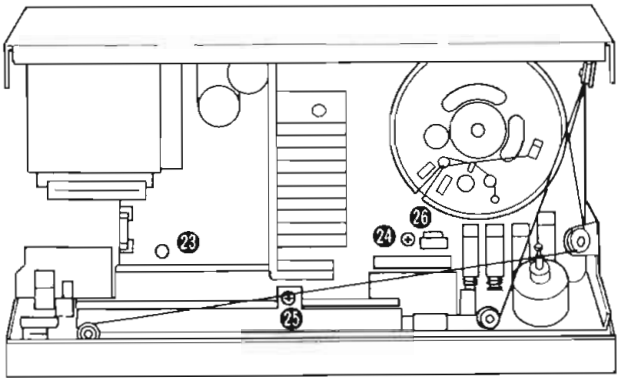

Fig. 6

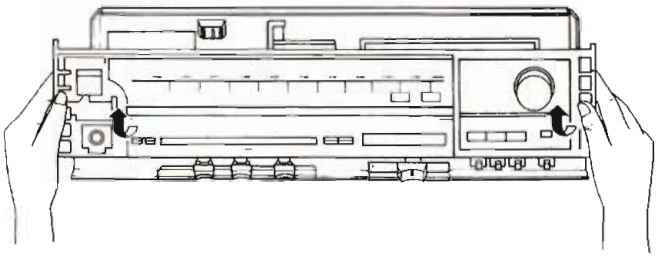

Fig. 7

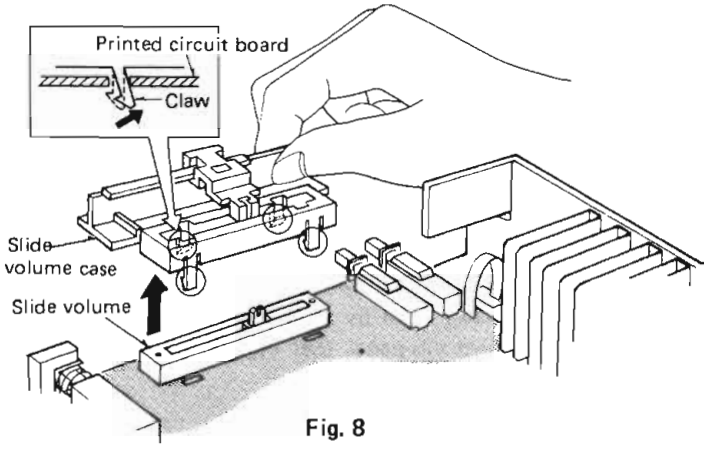

Fig. 8

■ DIAL CORD INSTALLATION GUIDE

- **When setting the cord, follow the procedure given below**

1. The cord should be at least 180 cm long.
2. Completely turn the tuning gang (variable capacitor) counterclockwise. (Variable capacity : max. Frequency; min.)
3. Make a knot at the cord and as shouwn in Fig. 9
4. Set the spring to the knot, and set the cord in the order of 1 – 10.

Note: At step 7, pull the cord strongly, slacken the spring up to the mark of the durm, then go to steps 9 – 10 to set the cord.

5. Fix the cord terminal with adhesive.
6. Cut off the cord about 5 mm at its either end.

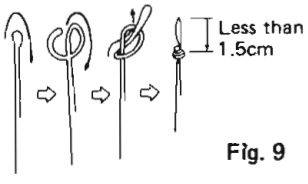

Fig. 9

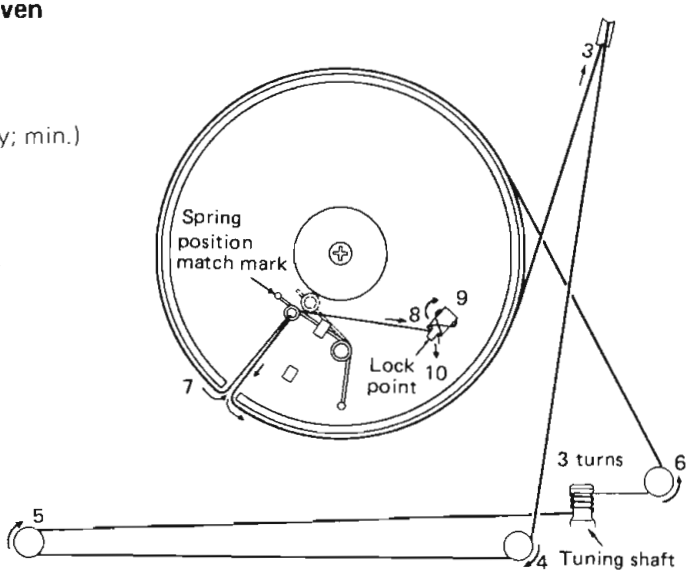

■ MEASUREMENTS AND ADJUSTMENTS

Note: AM OSC Coil (L201) and AM IFT (T202) have been already adjusted, and require no adjustment.

AM ADJUSTMENT

• Setting and Equipment used
1. AC electronic voltmeters (VTVM)
2. AM signal generator (AM-SG)
3. Set Band selector to "AM" position.
4. Maintain line voltage at 120 volts.
5. Output of signal generator should be no higher than necessary to obtain an output reading.
6. Use a non-metal screwdriver for the adjustment.

Step No.	AM SIGNAL GENERATOR CONNECTION	AM SIGNAL GENERATOR FREQUENCY	DIAL SETTING	PREPARATIONS	PARTS ADJUSTED	ADJUSTING PROCEDURE
	AM-RF ADJUSTMENT					
1	Connect AM-SG to AM antenna terminal through 200pF capacitor referring to Fig. 10. (Weak input)	600kHz (30% Mod. with 400Hz)	600kHz	Connect AC VTVM or scope to "speaker" terminal of the set.	L205 (ANT Coil) L206 (OSC Coil)	1. Adjust for maximum output.
2		1500kHz (30% Mod. with 400Hz)	1500kHz	Connect AC VTVM or scope to "speaker" terminal of the set.	CT204 (OSC Trimmer) CT203 (ANT Trimmer)	1. Adjust for maximum output. 2. Repeat steps (1) and (2).

FM ADJUSTMENT

• Setting and Equipment used
1. FM signal generator (FM-SG)
2. Oscilloscope.
3. DC electronic voltmeters (VTVM).
4. Frequency counter (19kHz and 108MHz measurable).
5. Set band selector to "FM" position.
6. FM muting/FM mode switch ... off/FM mono.
7. Other setting are the same as in AM adjustment.

• FM signal generator (FM-SG)
1. The standard input of the set is 60dB (1mV), 400Hz 100% modulation (Because of attenuation, using coaxial cables, SG output must be 6dB plus. That is, when input is 60dB, SG output is to be 66dB.)

Step No.	FM SIGNAL GENERATOR CONNECTION	FM SIGNAL GENERATOR FREQUENCY	DIAL SETTING	PREPARATIONS	PARTS ADJUSTED	ADJUSTING PROCEDURE
	FM IF ADJUSTMENT					
3	Connect FM-SG to FM antenna terminal referring to Fig. 11 (Apply 60dB to antenna terminal)	100MHz (100% Mod. with 400Hz)	100MHz	Connect DC VTVM to between TP201 and TP202 through choke coil (Refer to Fig. 11.)	T201 (Discri. IFT)	1. Adjust T201 core so that voltage measured in signal mode is 0mV in 150mV range.
	FM-RF ADJUSTMENT * Connect TP201 and TP202					
4	Connect FM-SG to FM antenna terminal referring to Fig. 11 (Apply 60dB to antenna terminal)	90MHz (100% Mod. with 400Hz) weak input	90 MHz	Connect scope to "speaker" terminal	L204 (OSC Coil) L202 (RF DET Coil)	• Add weak input so that noise is included in the output waveform. • Make the adjustment so that the output wave form is vertically symmetrical. (Fig. 13) • Repeat the steps (4) and (5) until the frequency correctly matches the dial scale.
5		106MHz (100% Mod. with 400Hz) weak input.	106 MHz	Connect scope to "speaker" terminal	CT202 (OSC Trimmer)	

FM MPX V.C.O. ADJUSTMENT

Step No.	USING A FREQUENCY COUNTER	USING ALTERNATE SYSTEM
6	1. 100MHz 60dB Non-modulated mono signal applied to set. 2. FM muting/FM mode switch to "on/FM auto". 3. Connect frequency counter to TP301 through resistor (100kΩ). 4. Adjust VR301 to 19kHz ± 30 Hz. (Fig. 12)	1. Apply stereo signal from generator or stereo station to tuner. 2. Adjust **VR301** until stereo indicator lights up. Cement arm of **VR301** as shown in Fig. 14.

• Check points

Overload detection circuit

① Connect 4Ω load to speaker terminal.
② Add 1kHz signal from the audio frequency oscillator to the set and adjust the sound volume control knob so that the output voltage is 5 volts.
③ Connect 3.3Ω (2W) load to speaker terminal.
④ Make sure that relay in the set is OFF and no output is delivered.

*** If protection circuit turns OFF due to overload, the circuit and load will not restore their normal conditions unless power supply is once turned OFF and again turned ON.**

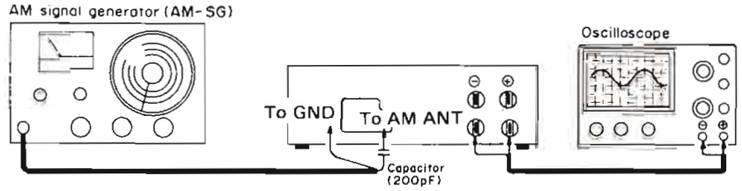

Fig. 10

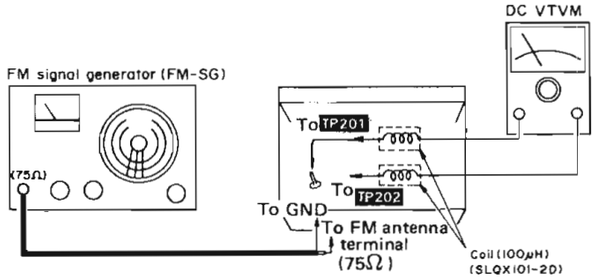

Fig. 11

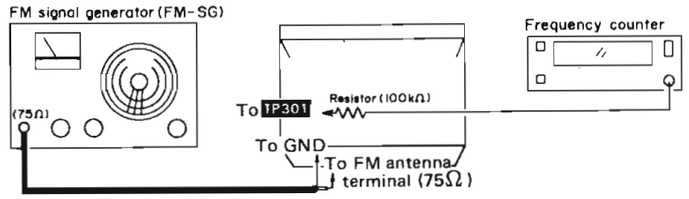

Fig. 12

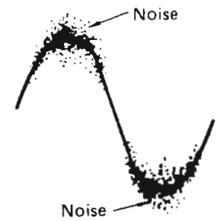

AF output wave form

Fig. 13

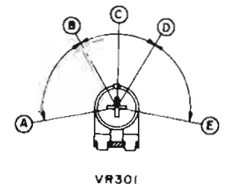

A–B, D–E Stereo OFF Position.
B–D Stereo ON Position. (indicator Lighting)
C Adjust Point of Pilot Circuit.

Fig. 14

• Adjustment points

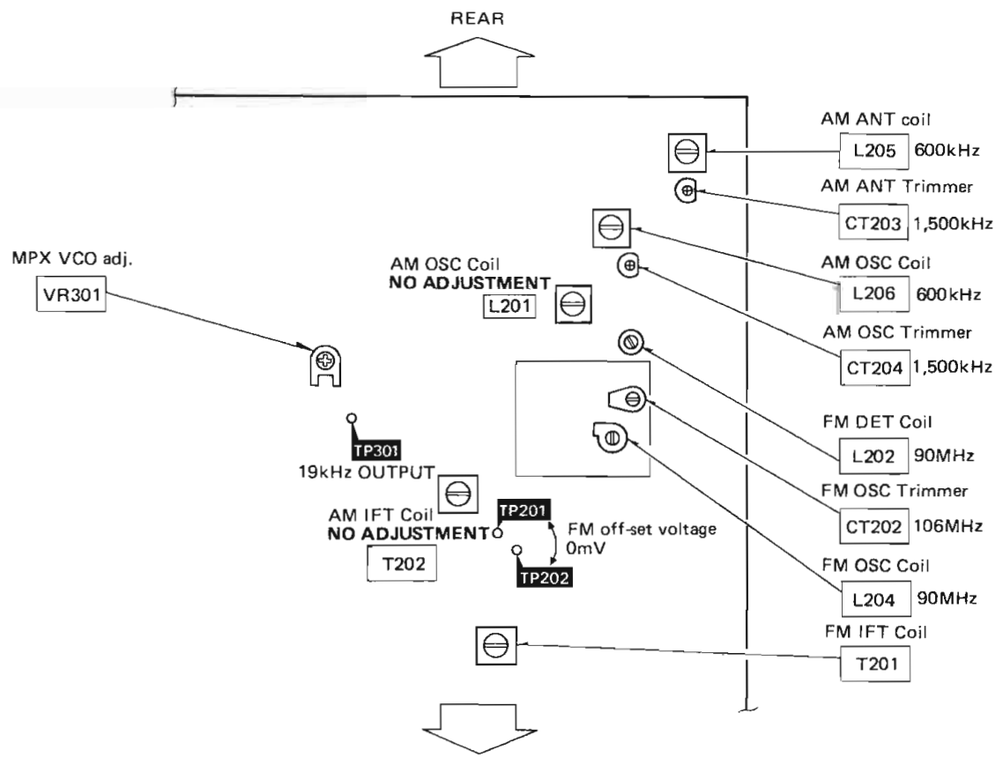

■ CIRCUIT BOARDS AND WIRING CONNECTION DIAGRAM

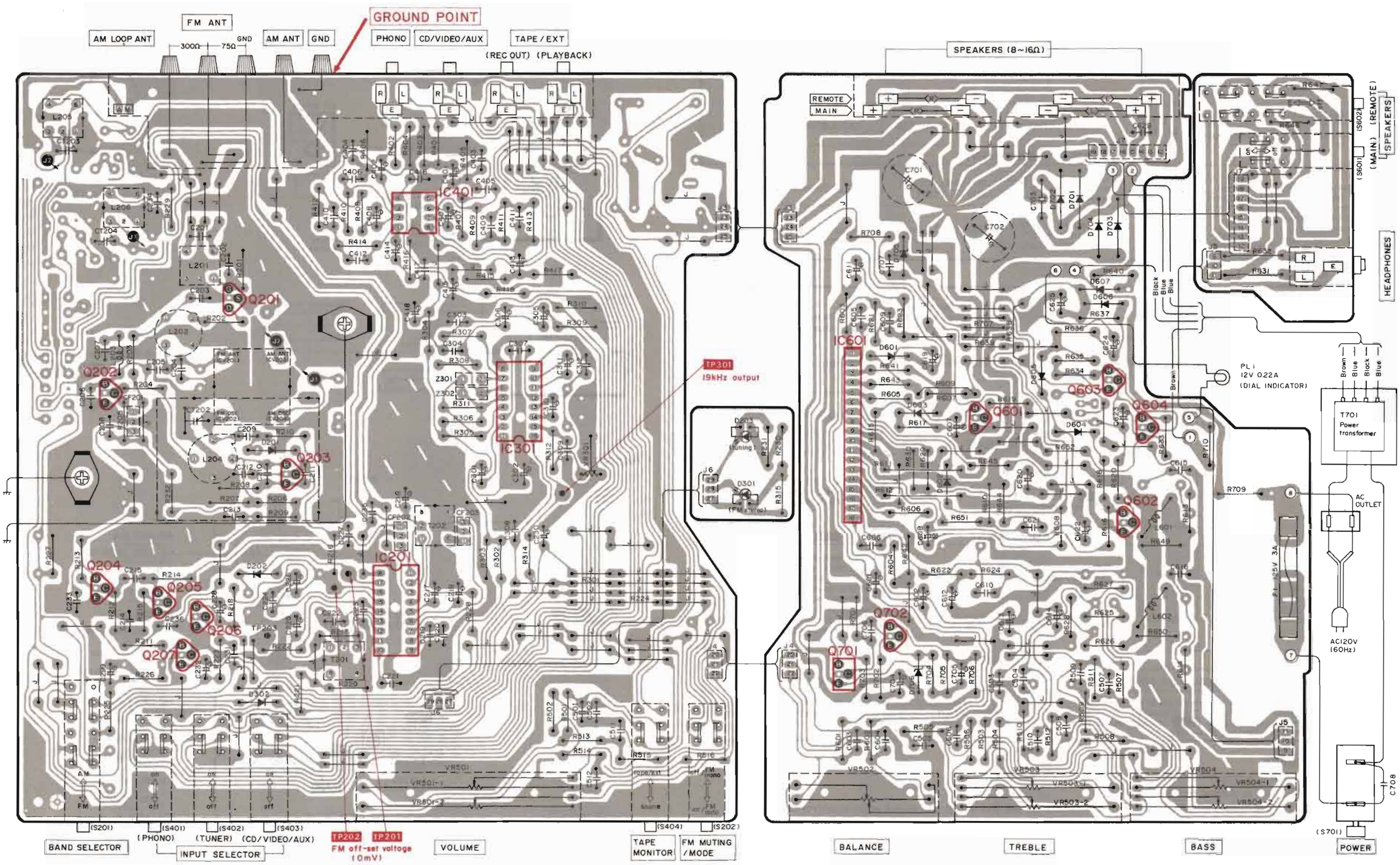

■ RESISTORS & CAPACITORS

Notes:
1. Part numbers are indicated on most mechanical parts. Please use this part number for parts orders.
2. Important safety notice: Components identified by ⚠ mark have special characteristics important for safety. When replacing any of these components use only manufacturer's specified parts.
3. The "Ⓢ" mark is service standard parts and may differ from production parts.
4. The unit of resistance is Ω. (ohm) K=1000Ω, M=1000kΩ.
5. The unit of capacitance is μF. (microfarad) P=10^{-6}μF.

Numbering System of Resistor

Example

ERD	25	F	J	101
Type	Wattage	Shape	Tolerance	Value

Resistor Type	Wattage	Tolerance
ERD : Carbon	25 : 1/4W	J : ±5%
ERX : Metal Film	S1 : 1/2W	K : ±10%
ERF : Metal Oxide	1 : 1W	
ERC : Solide	2 : 2W	
	12 : 1/2W	

Numbering System of Capacitor

Example

ECKD	1H	102	M	D
Type	Voltage	Value	Tolerance	Peculiarity
ECEA	50	M	R47	R
Type	Voltage	Peculiarity use	Value	Special use

Capacitor Type	Voltage: ECEA Type	Voltage: Others	Tolerance
ECEA : Electrolytic	1A : 10V	1H : 50V DC	C : ±0.25pF
ECCD : Ceramic	1C : 16V	KC : 400V AC	J : ±5%
ECKD : Ceramic	1E : 25V	2H : 500V DC	K : ±10%
ECQM : Polyester	45 : 45V		Z : +80%, −20%
ECQP : Polypropylene	1H : 50V		P : +100%, −0%
ECET : Electrolytic	50 : 50V		
	25 : 25V		
	1J : 63V		

Ref. No.		Part No.	Value
RESISTORS			
R201	Ⓢ	ERD25FJ102	1K
R202	Ⓢ	ERD25FJ220	22
R203	Ⓢ	ERD25FJ221	220
R204	Ⓢ	ERD25TJ474	470K
R205	Ⓢ	ERD25FJ471	470
R206	Ⓢ	ERD25TJ123	12K
R207	Ⓢ	ERD25FJ822	8.2K
R208	Ⓢ	ERD25FJ102	1K
R209	Ⓢ	ERD25FJ562	5.6K
R210	Ⓢ	ERD25TJ224	220K
R211	Ⓢ	ERD25FJ472	4.7K
R212	Ⓢ	ERD25FJ152	1.5K
R213	Ⓢ	ERD25TJ564	560K
R214	Ⓢ	ERD25TJ684	680K
R215	Ⓢ	ERD25FJ471	470
R216	Ⓢ	ERD25TJ824	820K
R217	Ⓢ	ERD25FJ152	1.5K
R218	Ⓢ	ERD25FJ122	1.2K
R220	Ⓢ	ERD25FJ102	1K
R221	Ⓢ	ERD25FJ331	330
R222	Ⓢ	ERD25FJ103	10K
R223	Ⓢ	ERD25FJ562	5.6K
R224	Ⓢ	ERD25FJ103	10K
R225, 226	Ⓢ	ERD25FJ472	4.7K
R227	Ⓢ	ERD25TJ154	150K
R228	Ⓢ	ERD25FJ122	1.2K
R229	Ⓢ	ERD25FJ821	820
R230	Ⓢ	ERD25FJ471	470
R231	Ⓢ	ERD25FJ102	1K
R232	Ⓢ	ERD25FJ151	150
R301, 302	Ⓢ	ERD25FJ103	10K
R303	Ⓢ	ERD25TJ104	100K
R304	Ⓢ	ERD25FJ470	47
R305, 306	Ⓢ	ERD25TJ223	22K
R307, 308	Ⓢ	ERD25FJ332	3.3K
R309, 310	Ⓢ	ERD25TJ333	33K
R311	Ⓢ	ERD25TJ274	270K
R312	Ⓢ	ERD25TJ153	15K
R314	Ⓢ	ERD25FJ561	560
R315	Ⓢ	ERD25FJ102	1K
R401, 402	Ⓢ	ERD25FJ391	390
R403, 404	Ⓢ	ERD25TJ224	220K
R405, 406	Ⓢ	ERD25TJ563	56K
R407, 408	Ⓢ	ERD25FJ271	270
R409, 410	Ⓢ	ERD25FJ680	68
R411, 412	Ⓢ	ERD25TJ184	180K
R413, 414	Ⓢ	ERD25TJ123	12K
R415, 416	Ⓢ	ERD25TJ563	56K

Ref. No.		Part No.	Value
RESISTORS			
R417, 418	Ⓢ	ERD25FJ102	1K
R501, 502	Ⓢ	ERD25FJ222	2.2K
R503, 504	Ⓢ	ERD25FJ222	2.2K
R505, 506	Ⓢ	ERD25FJ561	560
R507, 508	Ⓢ	ERD25TJ183	18K
R509, 510	Ⓢ	ERD25FJ222	2.2K
R511, 512	Ⓢ	ERD25TJ124	120K
R513, 514	Ⓢ	ERD25TJ823	82K
R515, 516	Ⓢ	ERD25TJ473	47K
R601, 602	Ⓢ	ERD25FJ102	1K
R603, 604	Ⓢ	ERD25TJ393	39K
R605, 606	Ⓢ	ERD25FJ222	2.2K
R607, 608	Ⓢ ⚠	ERD25FJ272	2.7K
R609	Ⓢ ⚠	ERG1ANJ152	1.5K
R610	⚠	ERDS1FJ101	100
R611, 612	Ⓢ	ERX2ANJR22	0.22
R613, 614	⚠	ERDS1FJ100	10
R615, 616	Ⓢ ⚠	ERD25FJ222	2.2K
R617, 618	Ⓢ	ERD25TJ153	15K
R619, 620	Ⓢ	ERD25TJ123	12K
R621, 622	Ⓢ	ERD25TJ123	12K
R623, 624	Ⓢ	ERD25TJ473	47K
R625, 626	Ⓢ ⚠	ERD25TJ153	15K
R627, 628	Ⓢ	ERD25FJ102	1K
R629	Ⓢ	ERD25FJ102	1K
R630	Ⓢ ⚠	ERD25TJ223	22K
R631, 632	Ⓢ	ERG1ANJ331	330
R633	Ⓢ	ERD25FJ562	5.6K
R634	Ⓢ	ERD25TJ123	12K
R635	Ⓢ	ERD25TJ473	47K
R636	Ⓢ	ERD25TJ154	150K
R637	Ⓢ	ERD25TJ104	100K
R638	Ⓢ	ERG1ANJ152	1.5K
R639	Ⓢ	ERD25TJ184	180K
R640, 641	Ⓢ ⚠	ERD25FJ470	47
R642	Ⓢ ⚠	ERD25FJ1R0	1.0
R643	Ⓢ ⚠	ERD25FJ470	47
R644	Ⓢ ⚠	ERD25FJ470	47
R645	Ⓢ ⚠	ERD25FJ470	47
R647, 648	Ⓢ	ERD25TJ104	100K
R649, 650	⚠	ERDS1FJ100	10
R651	⚠	ERD25FJ1R0	1.0
(M)only			
R652	⚠	ERDS1FJ101	100
(M)only			
R701	⚠	ERDS1FJ270	27
R702	Ⓢ	ERD25FJ821	820
R703	⚠	ERDS1FJ152	1.5K

Ref. No.		Part No.	Value
RESISTORS			
R704	Ⓢ	ERD25FJ681	680
R705	Ⓢ	ERD25FJ272	2.7K
R706	Ⓢ	ERD25FJ392	3.9K
R707	⚠	ERDS1FJ152	1.5K
R708	Ⓢ	ERD25FJ221	220
R709	Ⓢ ⚠	ERC12GK335	3.3M
R710(M)only		ERD25FAJ2R2	2.2
CAPACITORS			
C201	Ⓢ	ECCD1H120KC	12P
C202	Ⓢ	ECCD1H180KC	18P
C203	Ⓢ	ECCD1H1032F	0.01
C204	Ⓢ	ECCD1H220KC	22P
C205	Ⓢ	ECCD1H030CC	3P
C206	Ⓢ	ECCD1H070CC	7P
C207	Ⓢ	ECCD1H181K	180P
C208	Ⓢ	ECKD1H103ZF	0.01
C209	Ⓢ	ECCD1H080CC	8P
C210	Ⓢ	ECCD1H390KC	39P
C211	Ⓢ	ECCD1H100KC	10P
C212	Ⓢ	ECKD1H1022F	0.001
C213, 214	Ⓢ	ECKD1H103ZF	0.01
C215	Ⓢ	ECCD1H151K	150P
C216	Ⓢ	ECEA1HS100	10
C217	Ⓢ	ECEA1AS101	100
C218	Ⓢ	ECEA25Z4R7	4.7
C219, 220	Ⓢ	ECKD1H2232F	0.022
C221		ECQM1H333KV	0.033
C222	Ⓢ	ECCD1H101K	100P
C223, 224	Ⓢ	ECKD1H2232F	0.022
C225	Ⓢ	ECEA1AS470	47
C226	Ⓢ	ECEA50Z1	1
C227	Ⓢ	ECKD1H2232F	0.022
C228	Ⓢ	ECEA1HS100	10
C230	Ⓢ	ECEA1HS100	10
C231		ECQM1H183KV	0.018
C232	Ⓢ	ECEA50ZR2	2.2
C233	Ⓢ	ECCD1H270KC	27P
C234	Ⓢ	ECKD1H2232F	0.022
C235	Ⓢ	ECCD1H330KC	33P
C236	Ⓢ	ECKD1H2232F	0.022
C299	Ⓢ	ECEA1HS100	10
C301	Ⓢ	ECEA50Z1	1
C302	Ⓢ	ECEA1ES101	100
C303, 304		ECQM1H223KV	0.022
C305, 306	Ⓢ	ECEA25Z4R7	4.7
C307		ECQM1H473KV	0.047
C308	Ⓢ	ECKD1H1032F	0.01

Ref. No.		Part No.	Value
CAPACITORS			
C309		ECQP1471JZ	470P
C310	Ⓢ	ECEA50ZR47	0.47
C311	Ⓢ	ECEA50Z1	1
C312	Ⓢ	ECKD1H1032F	0.01
C401, 402	Ⓢ	ECEA50Z3R3	3.3
C403, 404	Ⓢ	ECCD1H101K	100P
C405, 406	Ⓢ	ECKD1H471KB	470P
C407, 408	Ⓢ	ECEA1CS330	33
C409, 410		ECQM1H223KV	0.022
C411, 412		ECQM1H682KV	0.0068
C413, 414	Ⓢ	ECEA50Z1	1
C415	Ⓢ	ECEA1CS330	33
C416	Ⓢ	ECKD1H472F	0.047
C417	Ⓢ	ECKD1H1032F	0.01
C418	Ⓢ	ECEA1CS330	33
C501, 502	Ⓢ	ECKD1H331KB	330P
C503, 504		ECQM1H222KV	0.0022
C505, 506		ECQM1H223KV	0.022
C507, 508		ECQM1H183KV	0.018
C509, 510		ECQM1H104KV	0.1
C511, 512		ECQM1H333KV	0.033
C601, 602	Ⓢ	ECEA50Z2R2	2.2
C603, 604	Ⓢ	ECCD1H101K	100P
C605, 606	Ⓢ	ECKD1H221KB	220P
C607, 608	Ⓢ	ECEA1HN3R3S	3.3
C609, 610	Ⓢ	ECCD1H050CC	5P
C611, 612	Ⓢ	ECEA1AS470	47
C613, 614	Ⓢ	ECEA1HS100	10
C615, 616 (M)	Ⓢ	ECKD1H472ZF	0.047
C615, 616 (MC)		ECQM1H104KV	0.1
C619	Ⓢ	ECEA1AS470	47
C620	Ⓢ	ECEA1HS101	100
C621	Ⓢ	ECKD1H1032F	0.01
C622	Ⓢ	ECEA1JS330	33
C623	Ⓢ	ECEA1HS100	10
C624, 625	Ⓢ	ECEA1JS330	33
C627, 628 (MC)only		ECQM1H104KV	0.1
C701, 702	⚠	ECETS45V472U	4700
C703	Ⓢ ⚠	ECKD2H103PE	0.01
C704	Ⓢ	ECEA1ES101	100
C705	Ⓢ	ECEA1HS100	10
C706, 707	Ⓢ	ECKD1H1032F	0.01
C708	⚠	ECKDKC103PF2	0.01

■ BLOCK DIAGRAM

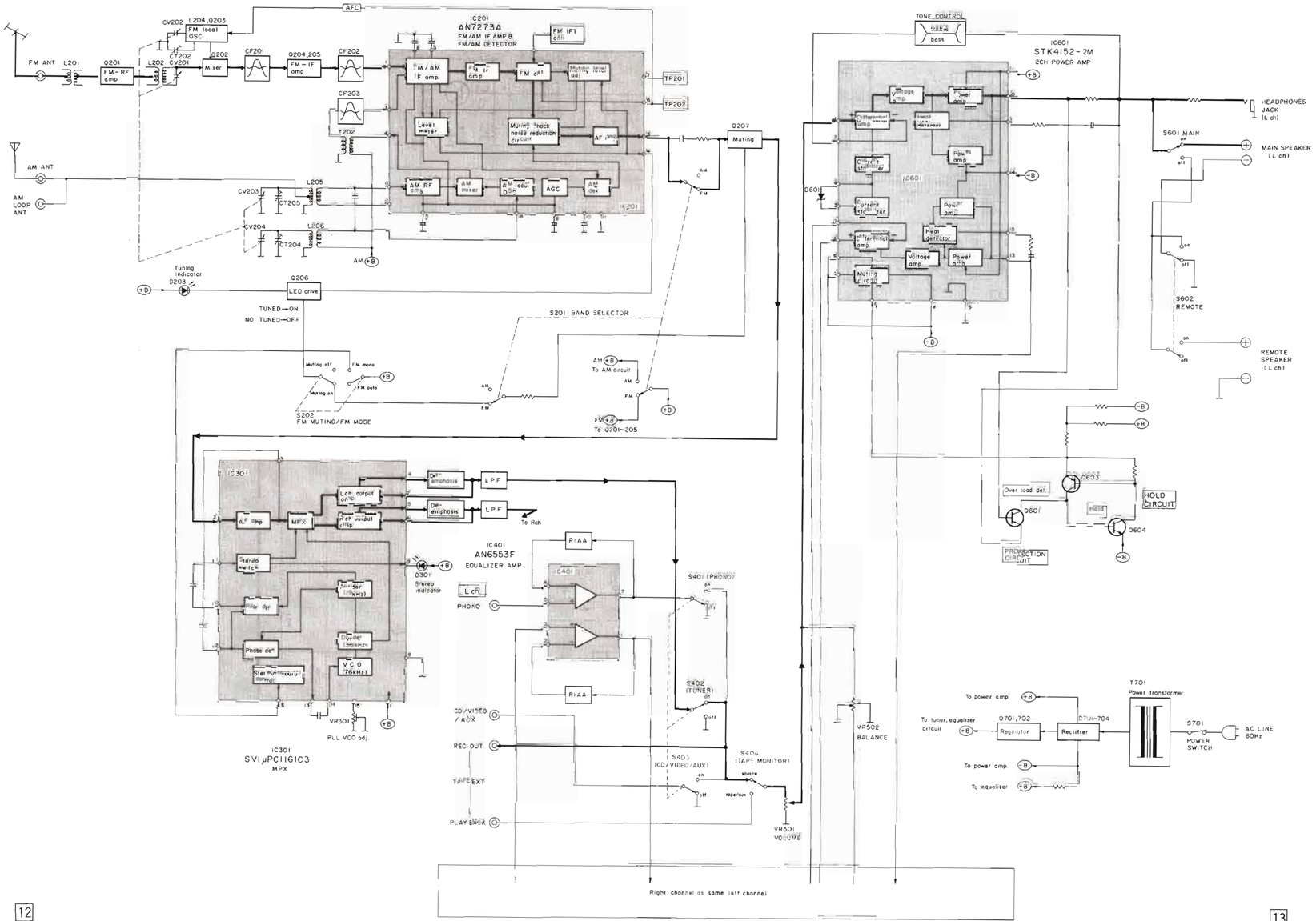

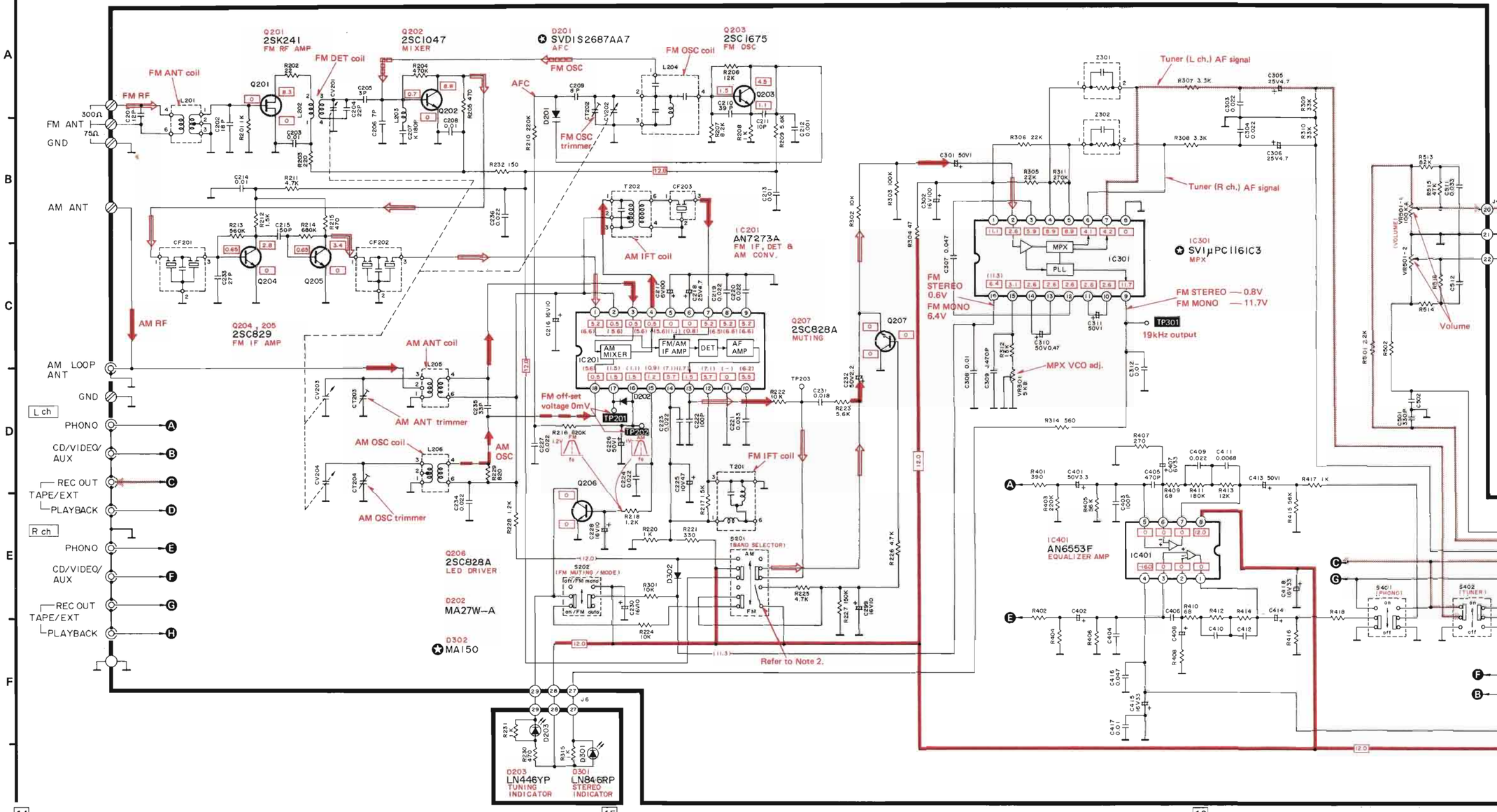

SCHEMATIC DIAGRAM

(This schematic diagram may be modified at any time with the development of new technology.)

- **The part No. of transistors, IC and diodes mentioned in the schematic diagram stand for production part No. with ✪ mark, the production part No. are different from the replacement part No. Therefore, when placing an order for replacement part please use the part No. in the replacement part list.**

Note 1:

1. **S201** : Band selector switch in **"FM"** position. (■ FM, ▬ AM)
2. **S202** : FM muting/mode switch in **"on/FM auto"** position. (■ on/FM auto, ▬ off/FM mono)
3. **S401 ~ S403** : Input selector switch in **"tuner"** position. (S401: phono, S402: tuner, S403: CD/video/aux)
4. **S404** : Tape monitor switch in **"source"** position. (■ source, ▬ tape/aux)
5. **S601** : Main speaker switch in **"on"** position. (■ off, ▬ on)
6. **S602** : Remote speaker switch in **"off"** position. (■ off, ▬ on)
7. **S701** : Power source switch in **"on"** position.
8. Indicated voltage values are the standard values for the unit measured by the DC electronic circuit tester (high impedance) with the chassis taken as standard.

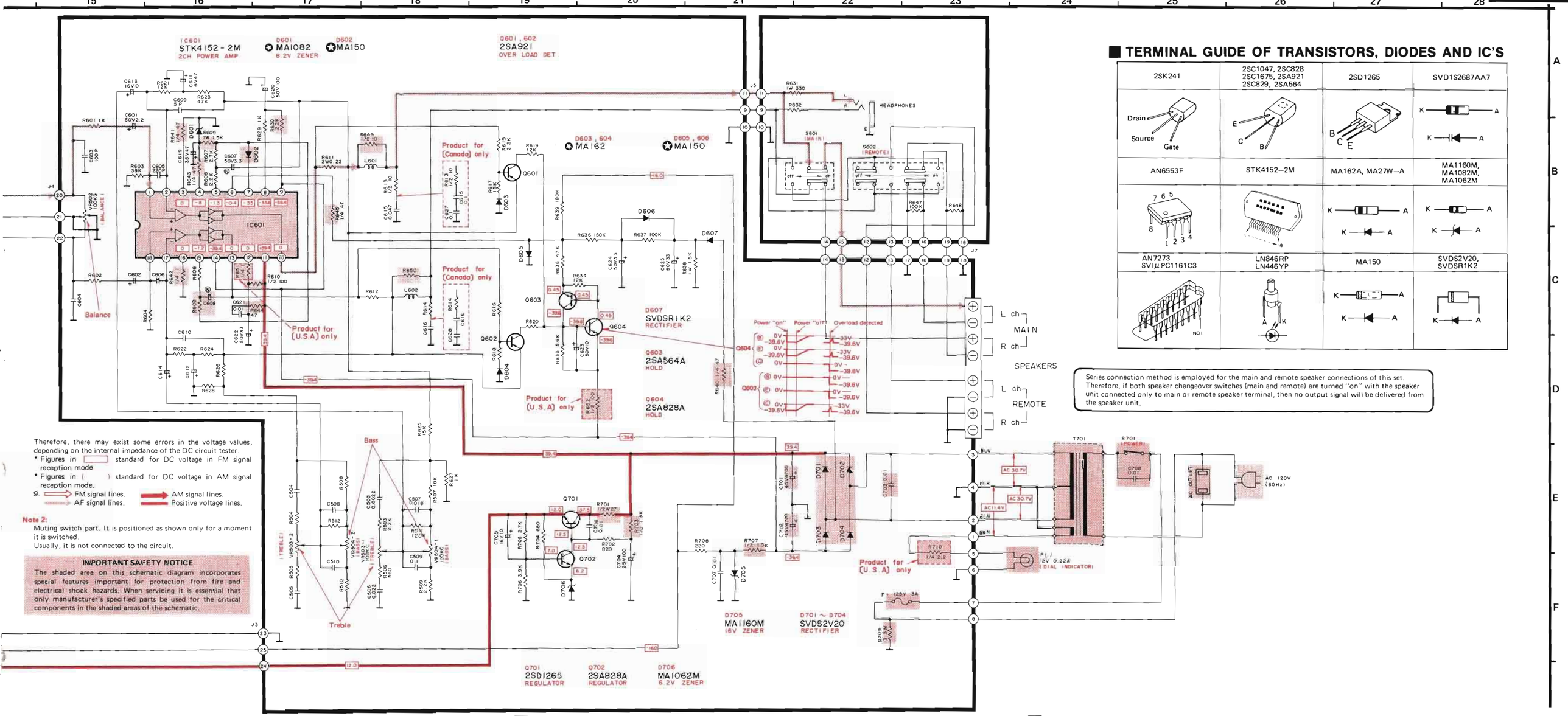

Therefore, there may exist some errors in the voltage values, depending on the internal impedance of the DC circuit tester.

* Figures in [ ] standard for DC voltage in FM signal reception mode
* Figures in ( ) standard for DC voltage in AM signal reception mode.

9. FM signal lines. AM signal lines.
AF signal lines. Positive voltage lines.

Note 2:
Muting switch part. It is positioned as shown only for a moment it is switched.
Usually, it is not connected to the circuit.

IMPORTANT SAFETY NOTICE
The shaded area on this schematic diagram incorporates special features important for protection from fire and electrical shock hazards. When servicing it is essential that only manufacturer's specified parts be used for the critical components in the shaded areas of the schematic.

TERMINAL GUIDE OF TRANSISTORS, DIODES AND IC'S

2SK241	2SC1047, 2SC828 2SC1675, 2SA921 2SC829, 2SA564	2SD1265	SVD1S2687AA7
Drain, Source, Gate	E, C, B	B, C, E	K, A
AN6553F	STK4152–2M	MA162A, MA27W–A	MA1160M, MA1082M, MA1062M
7 6 5, 8, 1 2 3 4		K, A	K, A
AN7273 SVIμPC1161C3	LN846RP LN446YP	MA150	SVDS2V20, SVDSR1K2
NO1	A, K	K, A	K, A

Series connection method is employed for the main and remote speaker connections of this set. Therefore, if both speaker changeover switches (main and remote) are turned "on" with the speaker unit connected only to main or remote speaker terminal, then no output signal will be delivered from the speaker unit.

REPLACEMENT PARTS LIST

Notes:
1. Part numbers are indicated on most mechanical parts. Please use this part numbe for parts orders.
2. Important safety notice:
   Components identified by ⚠ mark have special characteristics important for safety.
   When replacing any of these components use only manufacturer's specjfied parts.
3. The "Ⓢ" mark is service standard parts and many differ from production parts.
4. The parenthesized numbers in the column of description stand for the quantity per set.
5. Bracketed indications in Ref. No. columns specify the areas. Parts without these indications can be used for all areas.

Areas
* [M] is available in the U.S.A.
* [MC] is available in Canada.

Ref. No.	Part No.	Part Name & Description
INTEGRATED CIRCUITS		
IC201	AN7273A	FM IF Det. & AM Convertor
IC301	SVIUPC1161C3	MPX
IC401	AN6553F	Equalizer
IC601 ⚠	STK4152−2M	Power
TRANSISTORS		
Q201	2SK241−GR	FM-RF Amp.
Q202 Ⓢ	2SC1047−D	Mixer
Q203 Ⓢ	2SC1675−L	FM OSC
Q204,205 Ⓢ	2SC829−C	FM-IF Amp.
Q206,207, 604,702 Ⓢ	2SC828AS	LED Drive, Muting, Regulator, Hold
Q601,602	2SA921−R	Over Load Det.
Q603 Ⓢ	2SA564AR	Hold
Q701	2SD1265−O	Regulator
DIODES		
D201 Ⓢ	1S2687AA	FM AFC
D202	MA27W−A	
D203	LN446YP	L. E. D.(Tuning)
D301	LN846RP	L. E. D. (Stereo)
D302, 602~606 Ⓢ	MA162A	Switching
D601 Ⓢ	SVDRD8.2EB	Zener, 8.2V
D607 Ⓢ ⚠	SVDSR1K2	Rectifier
D701~704 ⚠	SVDS2V20	Rectifier
D705	MA1160M	Zener, 16V
D706	MA1062M	Zener, 6.2V
COILS		
L201	SLA4N39	FM Antenna
L202	SLD4P71−P	FM Detector
L203	SLQZ12G1−D	Choke
L204	SL04P121−P	FM Oscillator
L205	SLA2C9−P	AM Antenna
L206	SL02C33−P	AM Oscillator
L601,602	SLQY07G−30	Choke
TRANSFORMERS		
T201	SLI4C539−P	FM IFT
T202	SLI2C139−M	AM IFT
T701 ⚠	SLT5M373	Power Source
CERAMIC FILTERS		
CF201,202	SVFE107MS2−A	FM, 10.7MHz (Red)
	SVFE107MS2−B	FM, 10.675MHz (Blue)
	SVFE107MS2−C	FM, 10.725MHz (Orange)
	SVFE107MS2−D	FM, 10.650MHz (Black)
	SVFE107MS2−E	FM, 10.750MHz (White)
(Use pair ranks as same as CF201 and CF202)		
CF203	SVFSFU450B3	AM, 450KHz
VARIABLE RESISTORS		
VR301	EVN75AA00B53	VCO Adjustment, 5kΩ(B)
VR501	EWE00605A15S	Volume Control, 100kΩ(A)
VR502	EVD00305G15S	Balance Control, 100kΩ(G)
VR503,504	EWD00205C15S	Tone Control, 100kΩ(C)

Ref. No.	Part No.	Part Name & Description
VARIABLE CAPACITORS		
CT202	ECV1ZW10X32E	Trimmer, FM OSC
CT203	ECRHA007A11	Trimmer, AM Antenna
CT204	ECRHA010A11	Trimmer, AM OSC
CV201~204	SVCCB41T914	Tuning Gang
COMPONENT COMBINATIONS		
Z301,302	EXRP181K473C	180pF, 47kΩ
LAMP		
PL1 ⚠	XAMR78S250	12V,0.22A
FUSE		
F1 ⚠	XBA1F30NU14	Power Source, 125V, 3A
SWITCHES		
S201	SSH1151	Band Selector (FM/AM)
S202,403	SSH1031	Mode, Tape Monitor
S401,402,404	SSH3069	Input Selector
S601	SSH1149	Speaker(Main)
S602	SSH1073	Speaker(Remote)
S701 ⚠	SSH1071	Power Source
CABINET and CHASSIS PARTS		
1	SUS305	Bracket (1)
2	SGWA120−SM	Front Panel, Ass'y (1)
3	SGU333−13	Dial Scale (1)
4	SBN1091	Knob, Tuning (1)
5	SGX7657	Front Sub Panel (1)
6	SBD69−2T	Knob, Tone Selector (3)
7	SBC627	Button, Power Switch (1)
8	SHS1068−1	Spacer, Button (1)
9	SUS257	Spring, Button (8)
10	SBC583−1T	Button, Input Selector (3)
11	SBC483−7T	Button, Band Selector (1)
12	SUR152M	Bracket, Tuning Shaft (1)
13	SHR5253	Spacer, Drum (1)
14	SDD105	Drum, Dial (1)
15	SUS295−1	Spring, Dial Drum (1)
16	SDZ051−2	Cord (1.8m)
17	SDT8095−1	Tuning Shaft (1)
18	SDR31	Roller, Dial (4)
19	SGX7463−3	Ornament, Volume (1)
20	SHR411	Lock Pin (3)
21	SBD77T	Knob, Volume (1)
22	SBZ657−1	Slider (1)
23	SBC423T	Button (2)
24	SHR9727	Sheet (1)
25	SBC483−6T	Button, Speaker (2)
26	SUG181	Guide, Pointer (1)
27	SGX7461−3	Ornament, Tone, Balance (1)
28	SBZ663−1	Slider (3)
29	SHP59	Spacer, Pointer (1)
30	SDP1167−1	Dial Pointer (1)
31	SJJ71B	Jack, Headphone (1)
32	SUW1989	Bracket (1)
33	SKC1352S1	Cabinet (1)
34	SKUA120−SM	Bottom Board (1)

Ref. No.	Part No.	Part Name & Description
CABINET and CHASSIS PARTS		
[34−1	[SKL245−2	Foot (4)
35	SJF8035−8N	Terminal Board (1)
36	SJF4815−2	Terminal Board, Speaker (1)
37[M]	SGP6130A	Rear Panel (1)
37[MC]	SGP6130−1A	Rear Panel (1)
38[M]	SJS9221	Socket, AC Outlet (1)
38[MC]	SJS9223	Socket, AC Outlet (1)
39[M]	RHR111	Bushing, AC Cord (1)
39[MC]	SHR129	Bushing, AC Cord (1)
40[M] Ⓢ	RJA9Y	AC Cord (1)
40[MC]	SJA109	AC Cord (1)
41	SJT345	Holder (2)
42	SJS5327	Socket (1)
SCREWS		
N1	XTBS3+8BFZ1	Tapping with Detent, ⊕3×8 (10)
N2	XTB3+8BFYR	Tapping, ⊕3×8 (9)
N3 Ⓢ	XTN3+8B	Tapping, ⊕3×8 (1)
N4 Ⓢ	XTB3+8BFZ	Tapping, ⊕3×8 (6)
N5	XSN26+5FZ	⊕2.6×5 (1)
N6 Ⓢ Ⓢ	XSN3+8BVS	⊕3×8 (2)
N7 Ⓢ	XTB3+16BFN	Tapping, ⊕3×16 (2)
N8	SNE2095−4	(4)
N9 Ⓢ	XTB3+8BFN	Tapping, ⊕3×8 (2)
N10	RNW150−2	(8)
WASHERS		
N11 Ⓢ	XWD11B	External Tooted Lock, φ11 (1)
N12 Ⓢ Ⓢ	XWG3	Plain, φ3 (2)
N13 Ⓢ	XWA26BFZ	Spring, φ2.6 (1)
N14 Ⓢ	XWC3B	External Toothed Lock, φ3 (1)
NUT		
N15 Ⓢ	XNS11	φ11 (1)
ACCESSORIES		
A1	SSA269	Cord, FM Antenna (1)
A2	SSA902	Loop Antenna (1)
A3	SMA231	Holder (1)
A4	SMA233−1	Holder (1)
A5	XTN3+10AFZ	Screw, Loop Antenna Holder (2)
A6[M]	SQF12046	Instruction Book (1)
A6[MC]	SQF12047	Instruction Book (1)
PACKING PARTS		
P1	SPP699	Polyethylene Bag (1)
P2	SPS4039	Pad, Front Side (1)
P3	SPS3515−3	Pad, Left Side (1)
P4	SPS3517−2	Pad, Right Side (1)
P5[M]	SPG4811	Carton Box (1)
P5[MC]	SPG4812	Carton Box (1)

EXPLODED VIEW

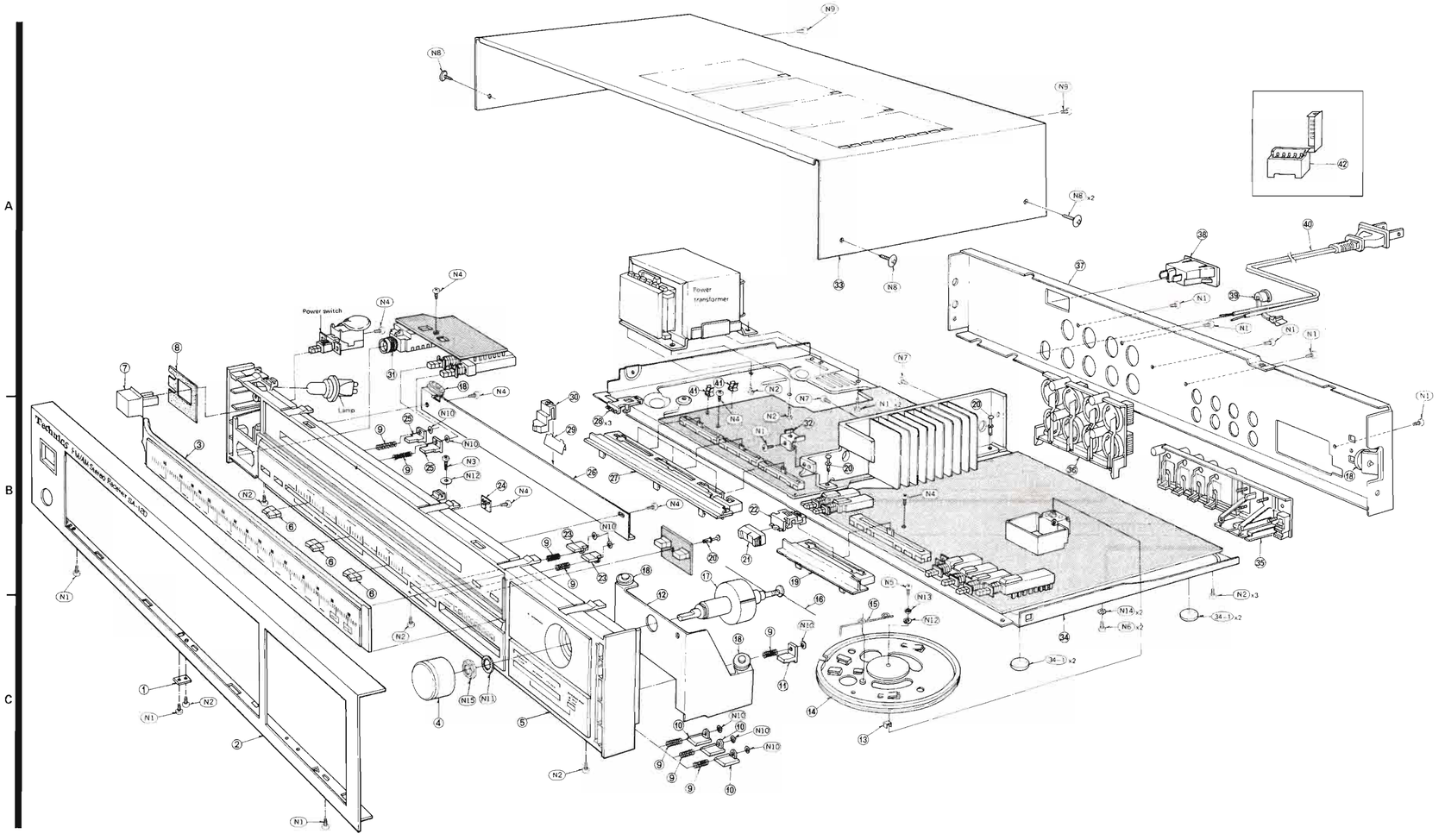

Printed in Japan
840204350 Ⓢ SH/TN
840404340
840604300