■ PRINTED CIRCUIT BOARD

Earth (Ground) Lines

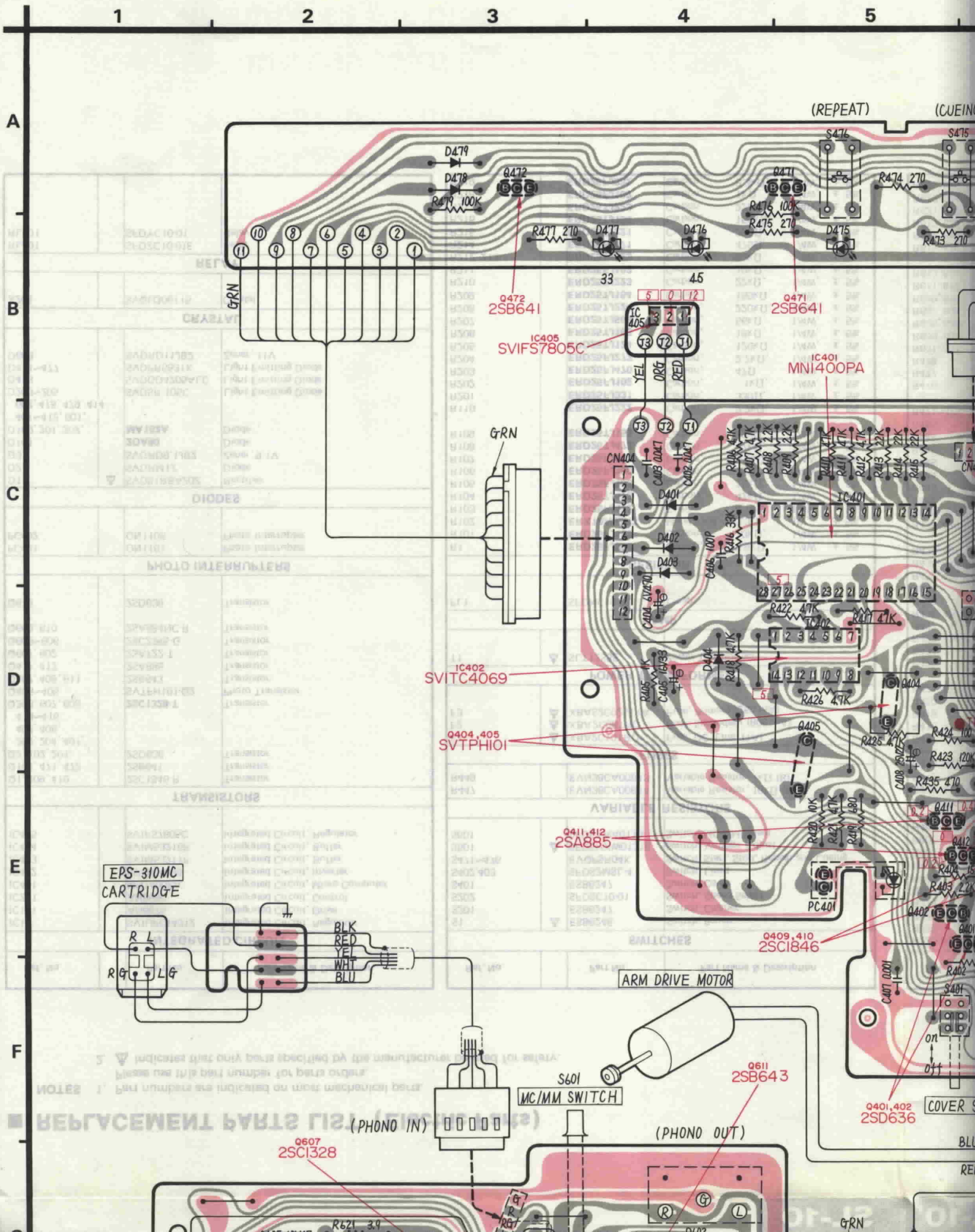

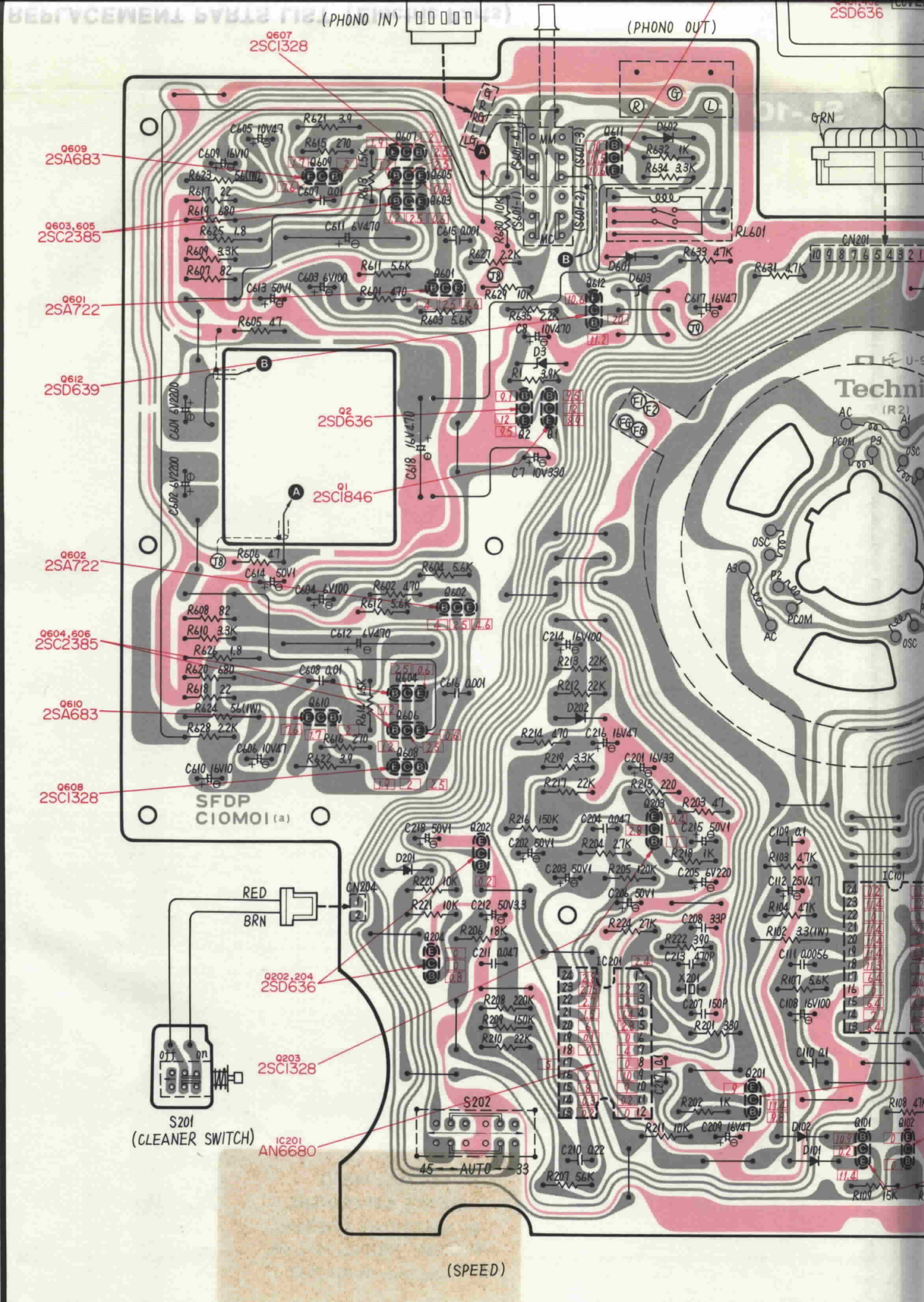
(PHONO IN)
(PHONO OUT)
Q607
2SC1328
Q609
2SA683
Q603,605
2SC2385
Q601
2SA722
Q612
2SD639
Q2
2SD636
Q1
2SC1846
Q602
2SA722
Q604,606
2SC2385
Q610
2SA683
Q608
2SC1328
Q202,204
2SD636
Q203
2SC1328
IC201
AN6680
S201
(CLEANER SWITCH)
RED
BRN
GRN
RL601
CN201
CN204
IC101
S202
45 — AUTO — 33
(SPEED)
SFDP
C10M01 (a)
Techni
G
H
I
J
K
L
M

(Ground) Lines

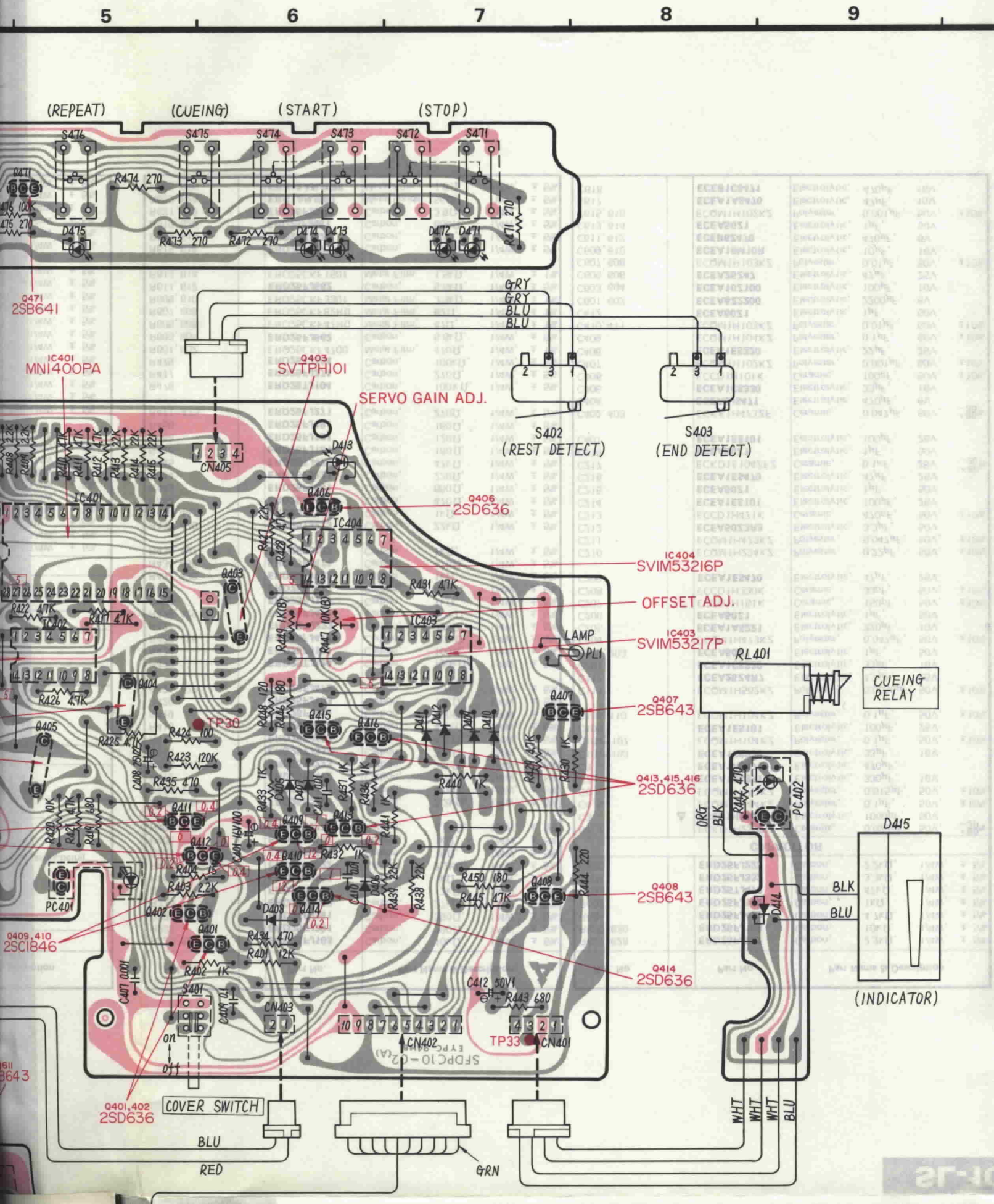

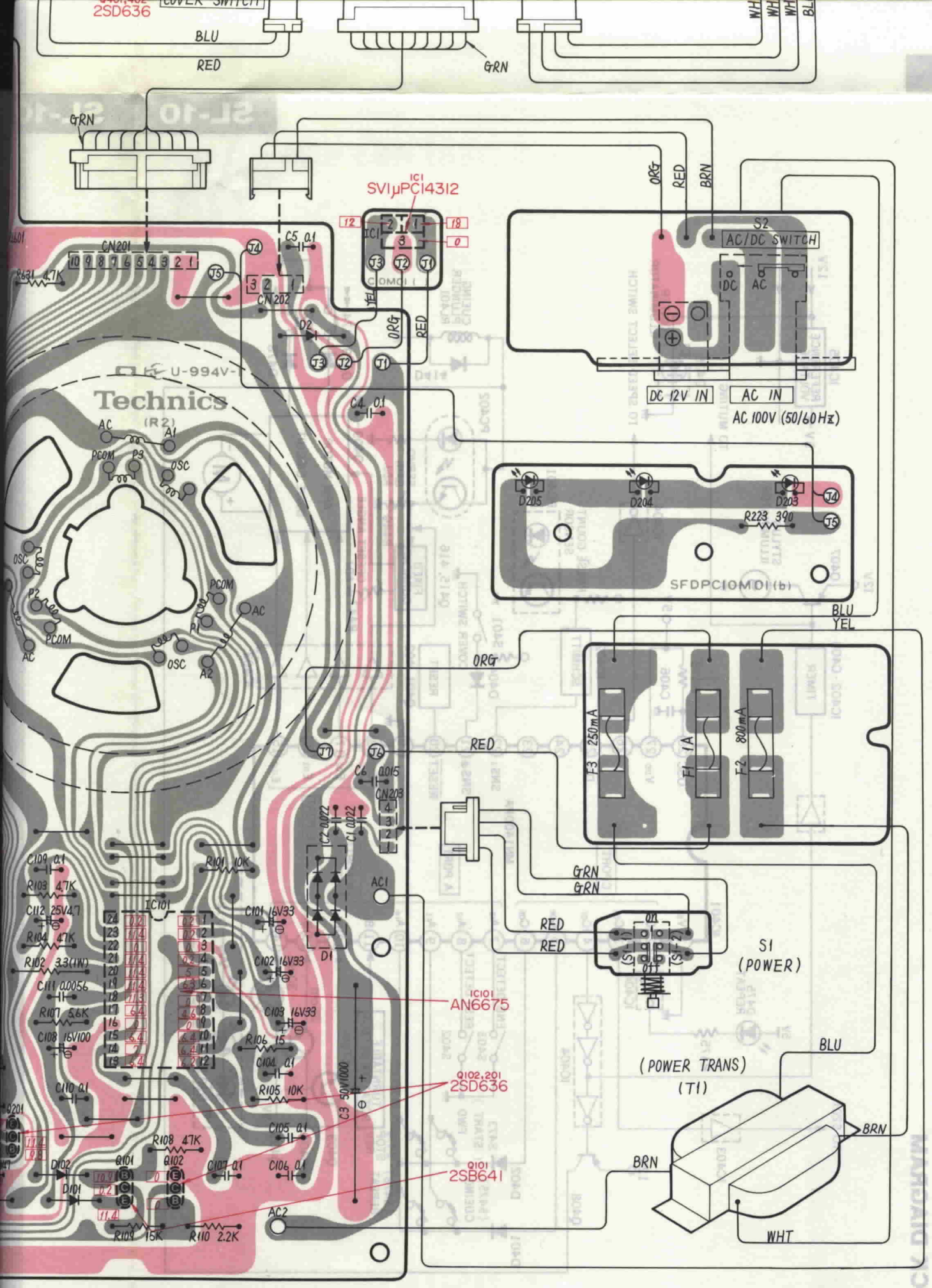
2SD636
COVER SWITCH
BLU
RED
GRN
GRN
IC1
SV1μPC14312
CN201
CN202
CN203
C5 0.1
C4 0.1
C6 0.015
R631 4.7K
D2
U-994V-
Technics
(R2)
AC
A1
PCOM
P3
OSC
P2
P1
A2
ORG
RED
YEL
BLU
BRN
WHT
S2
AC/DC SWITCH
DC
AC
DC 12V IN
AC IN
AC 100V (50/60Hz)
D205
D204
D203
R223 390
SFDPC10MDI(b)
F3 250mA
F1 1A
F2 800mA
GRN
RED
S1
(POWER)
(POWER TRANS)
(T1)
AC1
AC2
D1
C2 0.022
C1 0.022
C3 50V1000
IC101
AN6675
Q102,201
2SD636
Q101
2SB641
Q101
Q102
D101
D102
R108 47K
R109 15K
R110 2.2K
R105 10K
R106 15
R101 10K
R102 3.3(1W)
R103 4.7K
R104 47K
R107 5.6K
C109 0.1
C112 25V4.7
C111 0.0056
C108 16V100
C110 0.1
C101 16V33
C102 16V33
C103 16V33
C104 0.1
C105 0.1
C106 0.1
C107 0.1

■ SCHEMATIC DIAGRAM

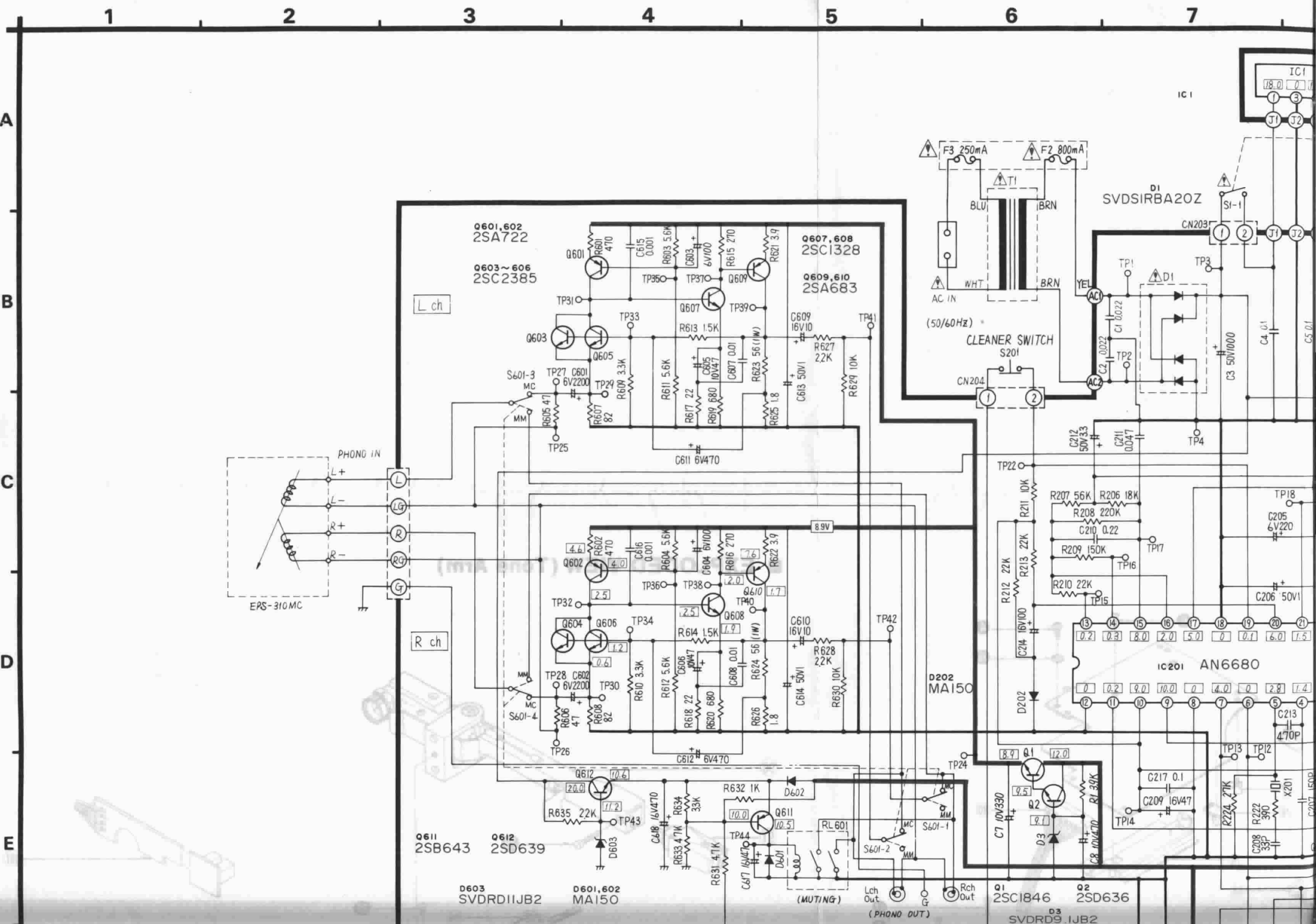

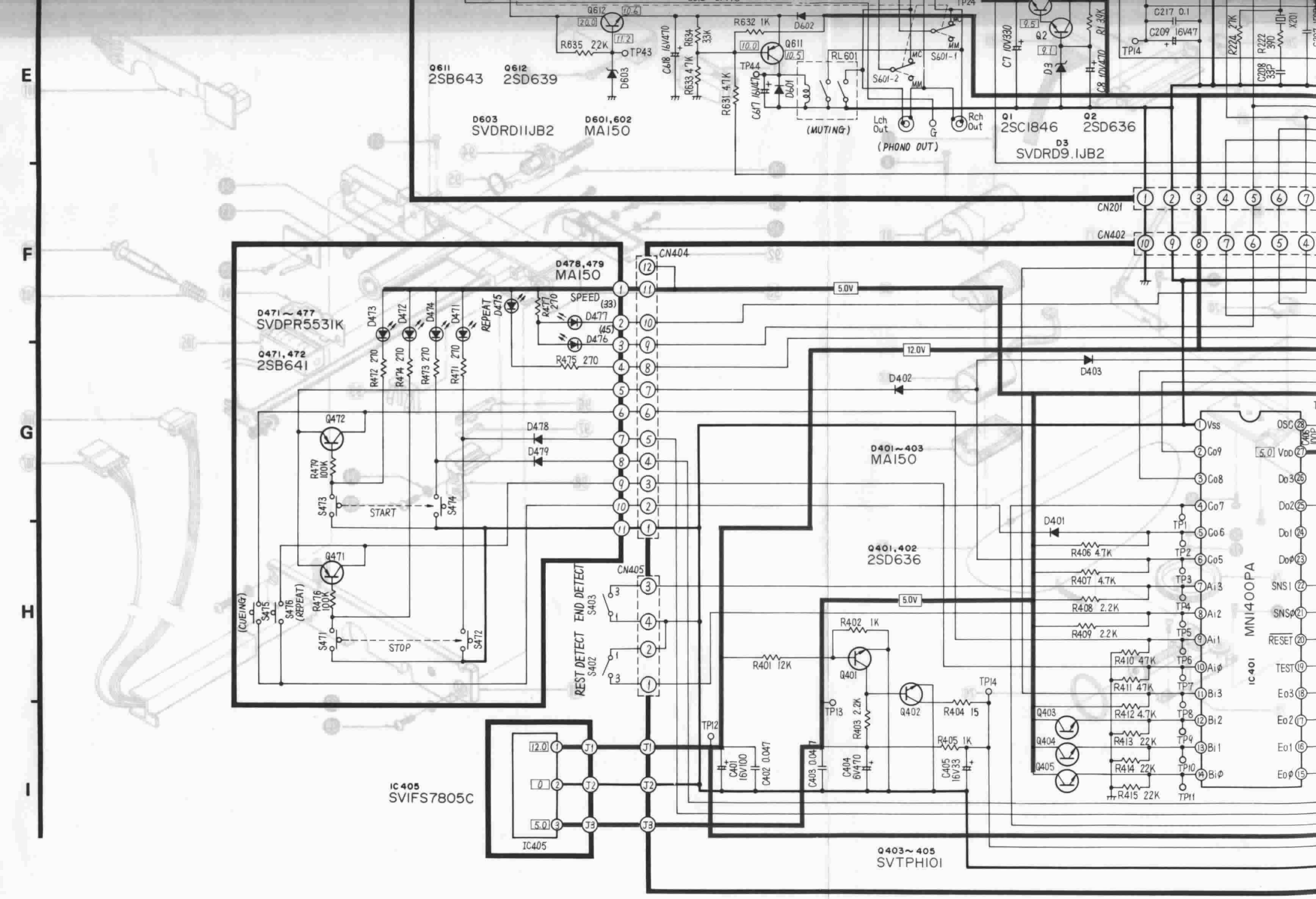
Q611
2SB643
Q612
2SD639
D603
SVDRD11JB2
D601,602
MA150
(MUTING)
(PHONO OUT)
Lch Out
Rch Out
Q1
2SC1846
Q2
2SD636
D3
SVDRD9.1JB2
CN201
CN402
CN404
CN405
D478,479
MA150
D471~477
SVDPR5531K
Q471,472
2SB641
SPEED
REPEAT
START
STOP
(CUEING)
(REPEAT)
END DETECT
REST DETECT
S403
S402
D401~403
MA150
Q401,402
2SD636
IC405
SVIFS7805C
Q403~405
SVTPH101
IC401
MN14OOPA
5.0V
12.0V

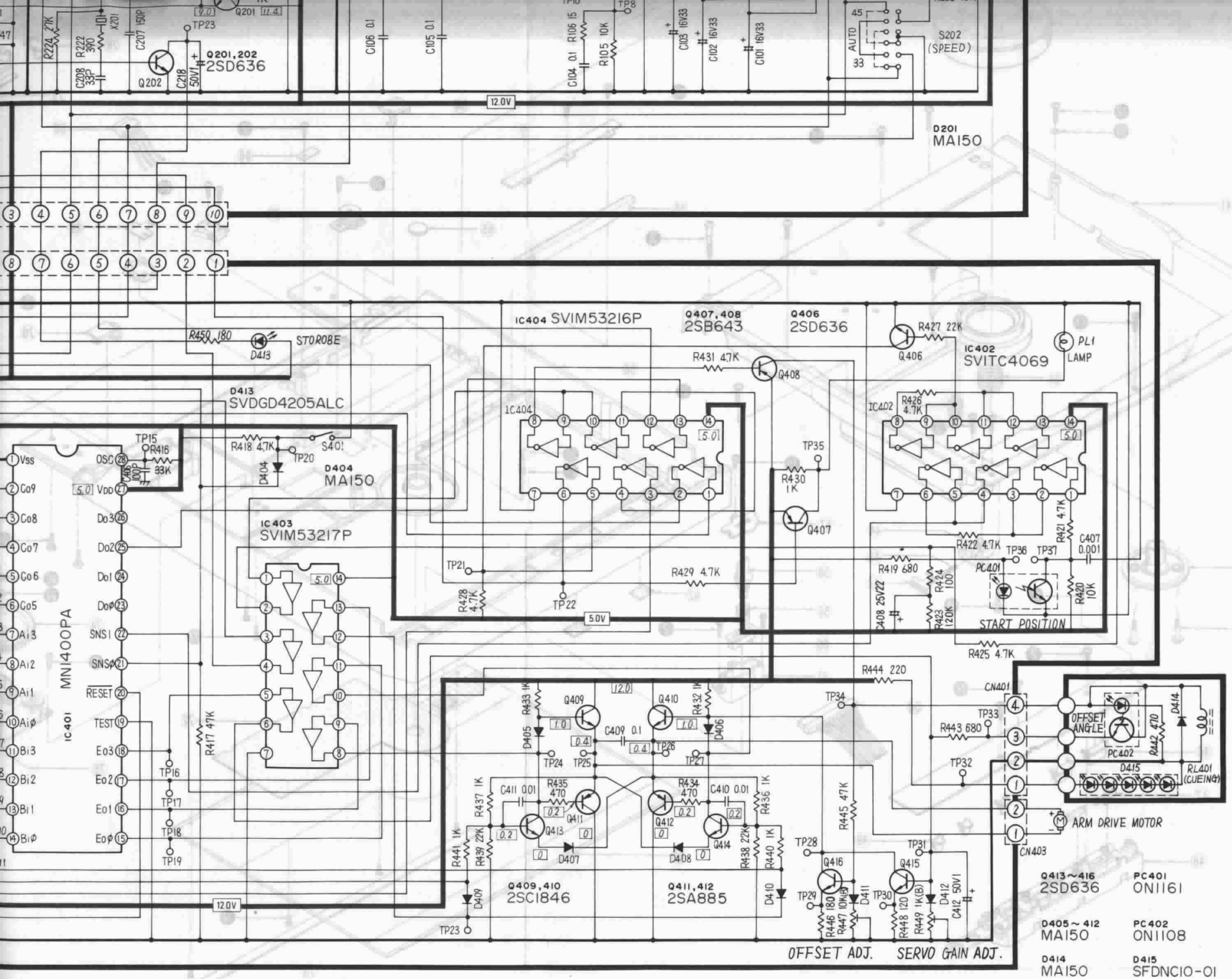
Q201,202
2SD636
Q202
TP23
R224 27K
R222 390
C207 150P
C208 33P
C218 50V1
X201
C106 0.1
C105 0.1
C104 0.1
R106 15
R105 10K
TP8
C103 16V33
C102 16V33
C101 16V33
S202
(SPEED)
AUTO
12.0V
D201
MA150
R450 180
D413
STROBE
D413
SVDGD4205ALC
IC404 SVIM53216P
Q407,408
2SB643
Q406
2SD636
R427 22K
Q406
IC402
SVITC4069
PL1
LAMP
R431 4.7K
Q408
IC404
IC402
R426 4.7K
TP15
R416 33K
R418 4.7K
TP20
S401
D404
MA150
IC403
SVIM53217P
TP35
R430 1K
Q407
R421 4.7K
R422 4.7K
C407 0.001
TP36
TP37
R419 680
PC401
R424 100
R420 10K
C408 25V22
R423 120K
START POSITION
R425 4.7K
TP21
R429 4.7K
R428 4.7K
TP22
5.0V
IC401
MN1400PA
Vss
Co9
Co8
Co7
Co6
Co5
Ai3
Ai2
Ai1
Aiφ
Bi3
Bi2
Bi1
Biφ
OSC
VDD
Do3
Do2
Do1
Doφ
SNS1
SNSφ
RESET
TEST
Eo3
Eo2
Eo1
Eoφ
R417 47K
TP16
TP17
TP18
TP19
R444 220
TP34
TP33
R443 680
TP32
CN401
CN403
OFFSET ANGLE
PC402
R442 470
D414
D415
RL401
(CUEING)
ARM DRIVE MOTOR
R433 1K
Q409
Q410
R432 1K
D405
D406
C409 0.1
TP24
TP25
TP26
TP27
R437 1K
C411 0.01
R435 470
Q411
Q413
D407
R434 470
C410 0.01
Q412
Q414
D408
R436 1K
R441 1K
R439 22K
D409
R438 22K
R440 1K
D410
R445 47K
TP28
TP29
TP30
TP31
Q416
Q415
R446 180
R447 10K(B)
D411
R448 120
R449 1K(B)
D412
C412 50V1
Q409,410
2SC1846
Q411,412
2SA885
OFFSET ADJ.
SERVO GAIN ADJ.
Q413~416
2SD636
PC401
ON1161
D405~412
MA150
PC402
ON1108
D414
MA150
D415
SFDNC10-01

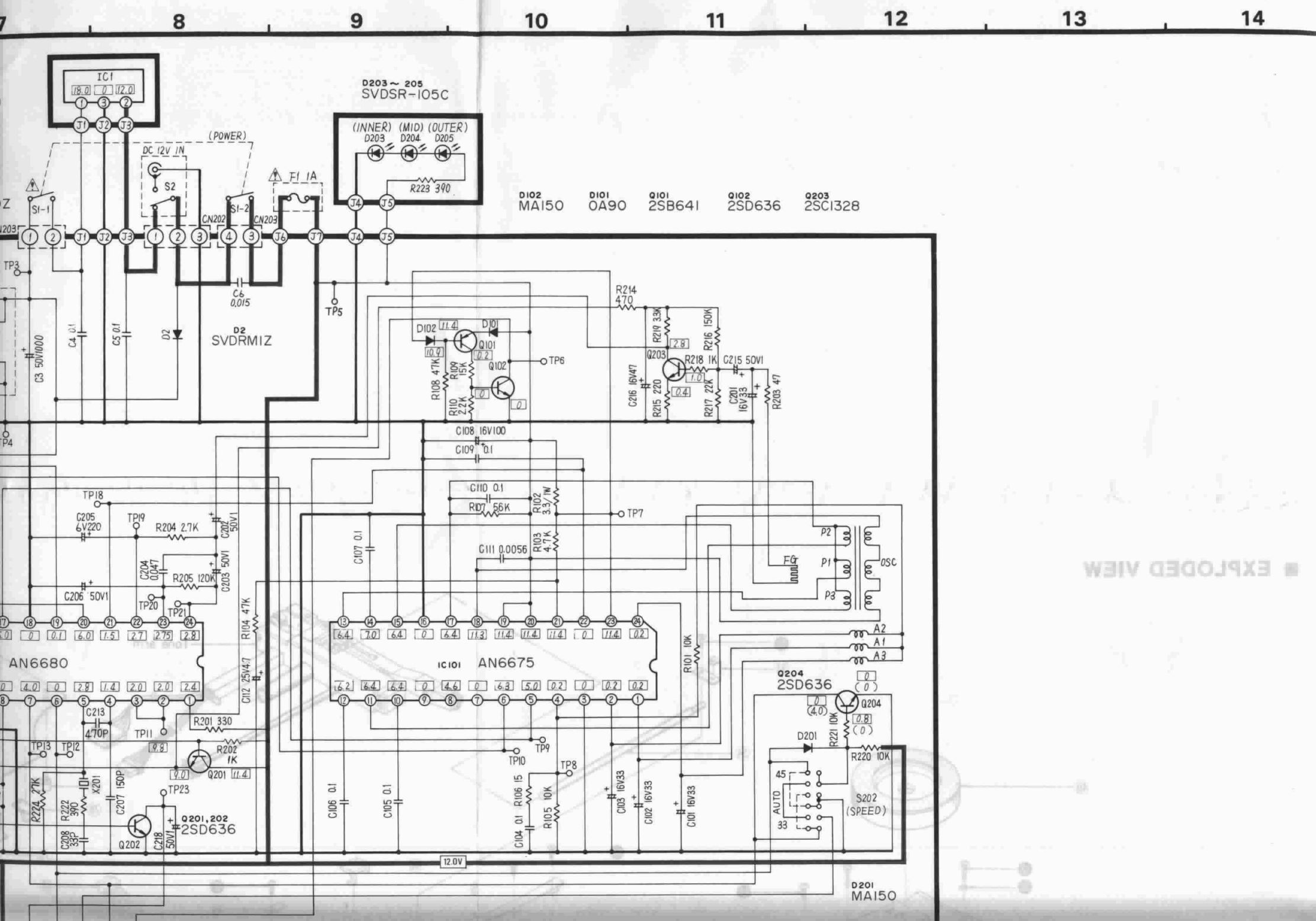
7
8
9
10
11
12
13
14
IC1
(POWER)
DC 12V IN
S2
S1-1
S1-2
CN202
CN203
F1 1A
D203~205
SVDSR-105C
(INNER) (MID) (OUTER)
D203 D204 D205
R223 390
D102
MA150
D101
OA90
Q101
2SB641
Q102
2SD636
Q203
2SC1328
TP3
TP4
TP5
TP6
TP7
TP8
TP9
TP10
TP11
TP12
TP13
TP18
TP19
TP20
TP21
TP23
C6 0.015
D2
SVDRM1Z
C3 50V1000
C4 0.1
C5 0.1
R214 470
R219 3.3K
R216 150K
R218 1K
C215 50V1
C216 16V47
R215 220
R217 22K
C201 16V33
R203 47
R108 47K
R109 15K
R110 2.2K
C108 16V100
C109 0.1
C110 0.1
R107 56K
R102 3.3/1W
R103 4.7K
C111 0.0056
C107 0.1
C205 6V220
R204 2.7K
C202 50V1
C204 0.047
C203 50V1
R205 120K
C206 50V1
R104 47K
C112 25V4.7
AN6680
C213 470P
R201 330
R202 1K
Q201
Q201,202
2SD636
Q202
R224 27K
R222 390
X201
C207 150P
C208 33P
C218 50V1
IC101 AN6675
R101 10K
C106 0.1
C105 0.1
R106 15
R105 10K
C104 0.1
C103 16V33
C102 16V33
C101 16V33
P2
P1
P3
FG
OSC
A2
A1
A3
Q204
2SD636
R221 10K
R220 10K
D201
S202
(SPEED)
AUTO
45
33
12.0V
D201
MA150

■ CONTENTS

LOCATION OF CONTROLS . . . . . 3 ~ 4
FEATURES 5
DISASSEMBLY INSTRUCTION . . . . . 6 ~ 9
ADJUSTMENT . . . . . 10 ~ 12
JUSTIERUNG (Tonarm). . . . . 13 ~ 14
REGLAGES (Bras acoustique) . . . . . 15 ~ 16
BLOCK DIAGRAM. . . . . 17 ~ 18
EXPODED VIEW 19, 20, 22, 23, 24
REPLACEMENT PARTS LIST 20, 21
EXPLODED VIEW . . . . . 22 ~ 24
SCHEMATIC DIAGRAM . . . . . 25 ~ 28
PRINTED CIRCUIT BOARD . . . . . 29 ~ 30
REPLACEMENT PARTS LIST (Electric parts) 31, 32
BLOCK DIAGRAM. 33

■ LOCATION OF CONTROLS

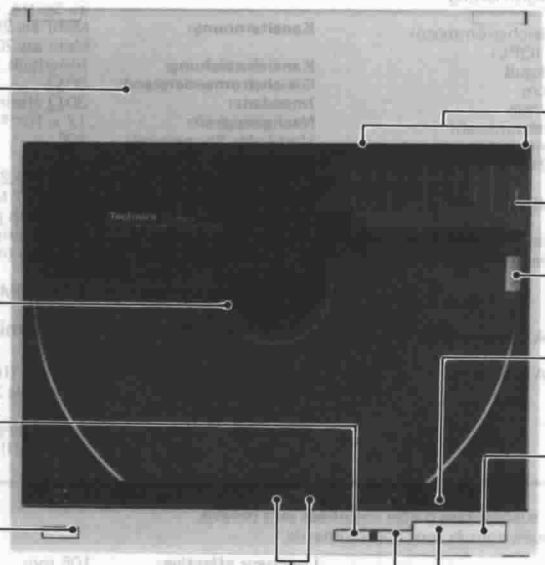

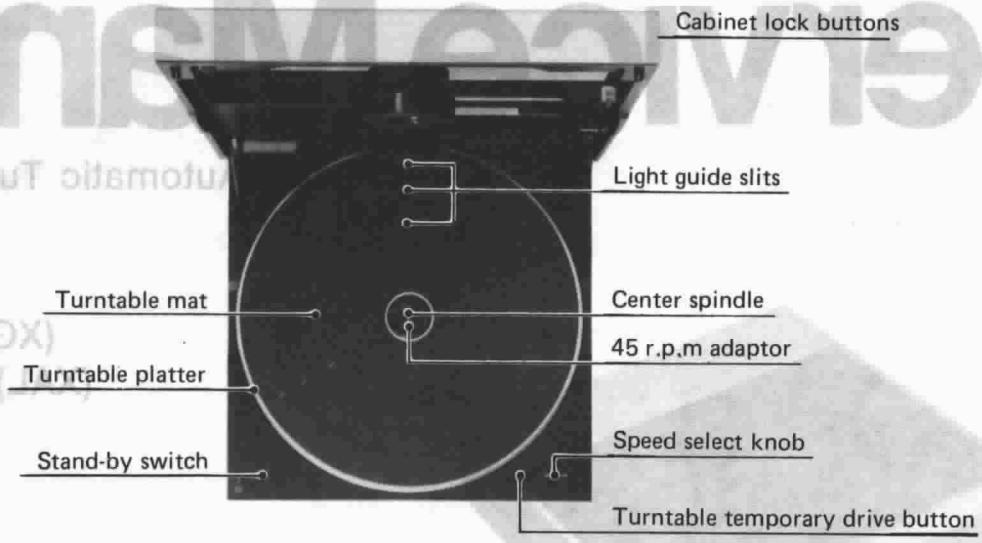
Cabinet lock buttons
Light guide slits
Turntable mat
Center spindle
45 r.p.m adaptor
Turntable platter
Speed select knob
Stand-by switch
Turntable temporary drive button

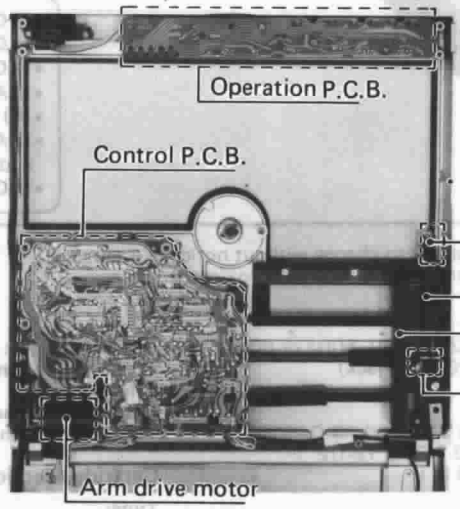
Operation P.C.B.
Control P.C.B.
Cartridge
Tonearm
Arm base
Arm lift
Arm drive motor

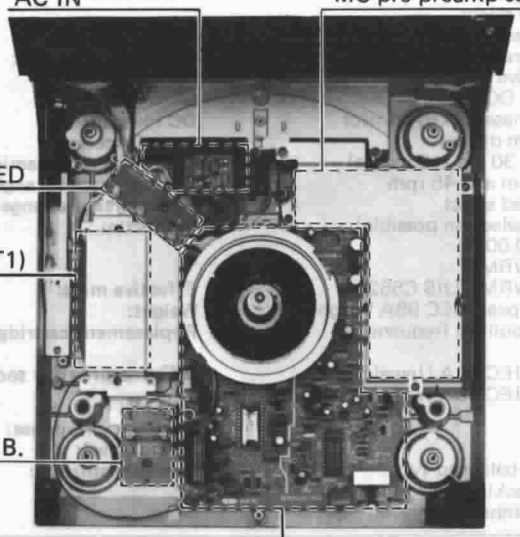
DC IN
AC IN
Terminal
MC pre-preamp section
Size detection LED
Power transformer (T1)
Fuse P.C.B.
Drive P.C.B.

■ FEATURES

The world's first high-performance DD turntable with the compact dimensions of an LP record jacket.

The SL-10 cabinet is made of die-cast aluminum and divided into upper and lower halves having extremely precise dimensions. The upper half contains the linear tracking tonearm and drive mechanism (with micro-computer and optical sensor) while the lower half contains Technics' original integral rotorplatter DD motor and its drive and servo-control circuitry.

The width and depth of the unit's dimensions are exactly the same as those of a standard LP record jacket, so the turntable takes up minimum space.

Just put on a record and press the start button.

Thanks to the optical sensor and microcomputer, both record size and record speed are detected automatically so all you have to do is press the start button to begin play. At the end of the record, the tonearm automatically rises and returns to the start position.

When there is no record on the turntable, the tonearm does not move, so there is no danger of harming the stylus accidentally.

Complete multi-function control capability.

Besides the simple, basic operating procedure described above, you also have complete manual control over all tonearm and turntable functions.

Dynamic balanced linear tracking tonearm employs optical sensor and groove deflection angle detection for extremely stable and accurate tracking.

The linear tracking tonearm moves across the record surface in the same way as the cutter head used to make the record in the first place. Therefore there is virtually no tracking error or skating force.

Located by the stylus is an optical sensor that detects tracking conditions by means of groove deflection angle. Based on this information, tonearm movement is controlled so as to maintain optimum tracking at all times. Because the tonearm is dynamically balanced, the turntable can be played flat or leaned.

A precision coreless DC motor is used for tonearm drive to assure quiet and accurate control.

The coreless DC motor and slide bearing of minimum friction assure extremely precise tonearm movement.

A 4-point pivot bearing gimbal suspension developed by Technics reduces friction and raises sensitivity while contributing to smooth tracing ability.

Equipped with a high performance MC cartridge employing pure boron pipe cantilever and coreless twin ring coil for excellent mechanical performance characteristics and exceedingly faithful musical reproduction.

This cartridge employs the same pure boron pipe cantilever originally developed by Technics for the 305MC cartridge. Besides this world's first, the cartridge also features coreless twin-ring construction to significantly reduce effective mass while raising output.

Built-in pre-preamp for MC cartridge with convenient MM/MC cartridge select button.

Other advanced features:

- Technics' original integral rotor-platter structure combines motor rotor and platter for more stable performance.
- Full cycle detection FG servo with quartz phase locked control assures unbeatable rotational accuracy.
- Dial scale and tonearm LED indicator on outside of upper cabinet make it easy to check on tonearm position.
- Record stabilizer and stroboscope built-in.
- 45 rpm single-play adaptor is located in turntable platter for pop-up convenience.
- Underside of unit employs damping material to absorb external vibrations and prevent acoustic breakthrough.
- Can be run on either AC or DC (12V) current. DC adaptor optionally available for car battery use.

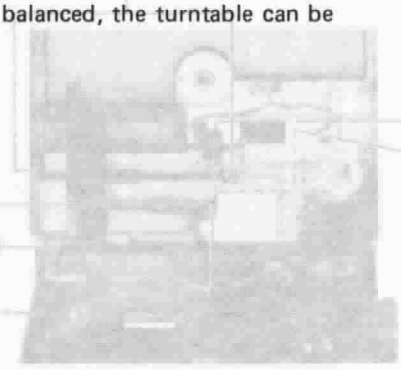

■ DISASSEMBLY INSTRUCTIONS

How to remove the cartridge

1. Turn off the stand-by switch.
2. Open the upper cabinet all the way.
3. Slide the arm lock over so it locks the tonearm in place. **(See Fig. 1)**
4. Use the accessory screwdriver to unscrew the cartridge. (As shown in the diagram, loosen the screw until the cartridge can be freely removed.) **(See Fig. 2)**
5. Pull of the cartridge. **(See Fig. 3)**

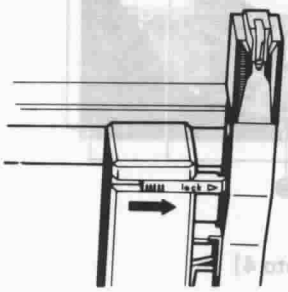

[Fig. 1]

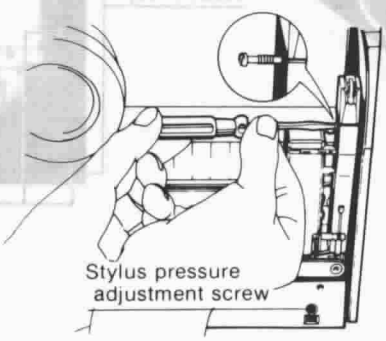

[Fig. 2]

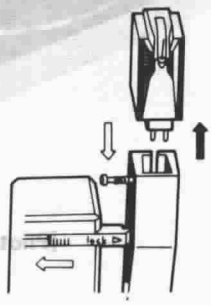

[Fig. 3]

How to remove the turntable

1. Don't rotate the turntable with a hand then remove the 45 Adaptor by turned counterclockwise. **(See Photo 1)**
2. Remove 1 nut Ⓐ and 1 washer Ⓑ of turntable.
3. Install 2 setscrews for center hole of turntable, then glip up can be replaced. **(See Photo 2)**
   Note: Turntable screw is used as long about 30 mm.

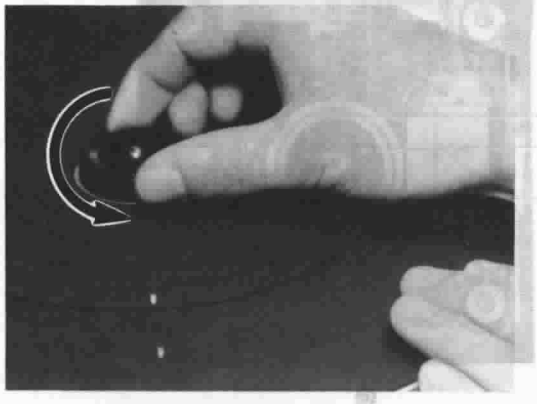

[Photo 1]

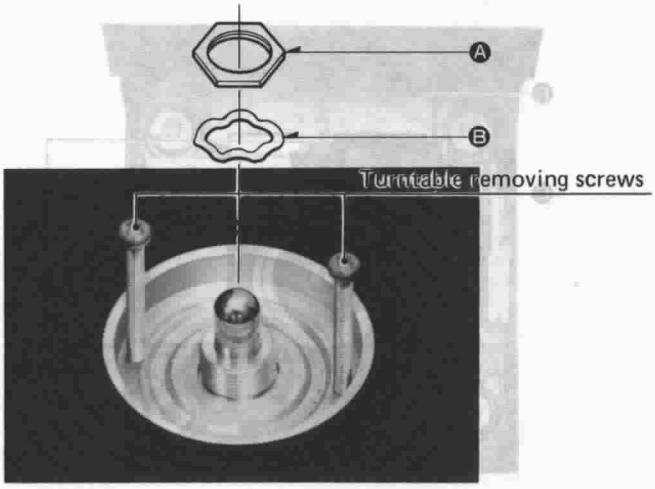

[Photo 2]

How to remove the lower cover

1. Open the upper cabinet, then remove the stay by pulling it out toward you.
2. Remove the turntable.
3. Remove 4 rubber cap and 9 setscrews Ⓒ of the lower cover. The lower cover can be remove. **(See photo 3, 4)**

[Photo 3]

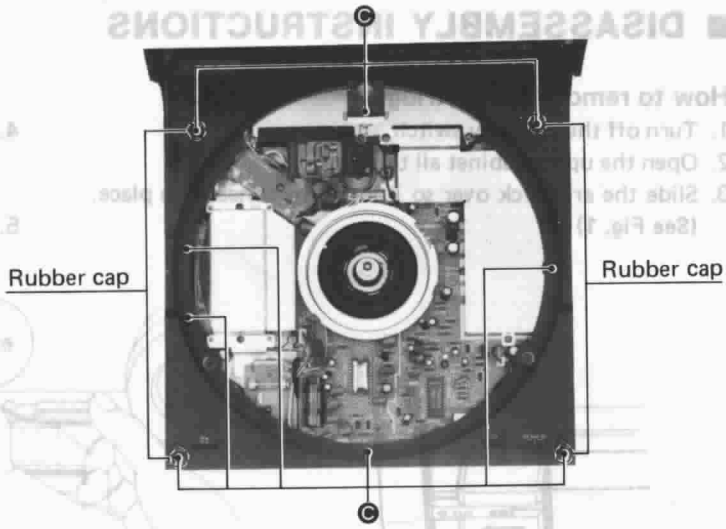

[Photo 4]

How to remove drive P.C.B.

1. Remove the lower cover.
2. Remove 4 setscrews Ⓓ of the shield cover.
3. Remove 1 setscrew Ⓔ of the LED P.C.B. and 1 setscrew Ⓕ of the IC1. **(See Photo 5)**
4. Remove 5 setscrews Ⓖ of the drive P.C.B. and 3 setscrews Ⓗ of the stater cover.
5. Remove 3 connectors Ⓘ then drive P.C.B.can be remove. **(See Photo 6)**

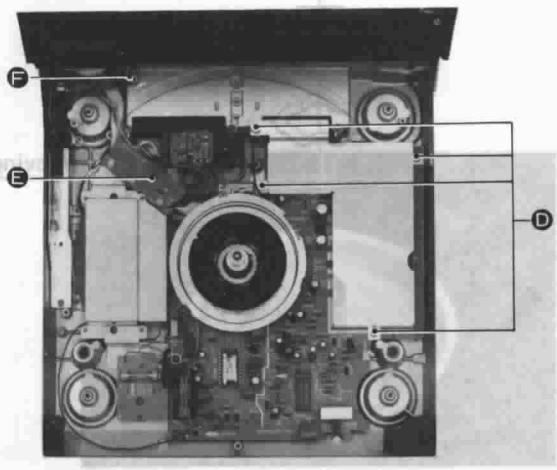

[Photo 5]

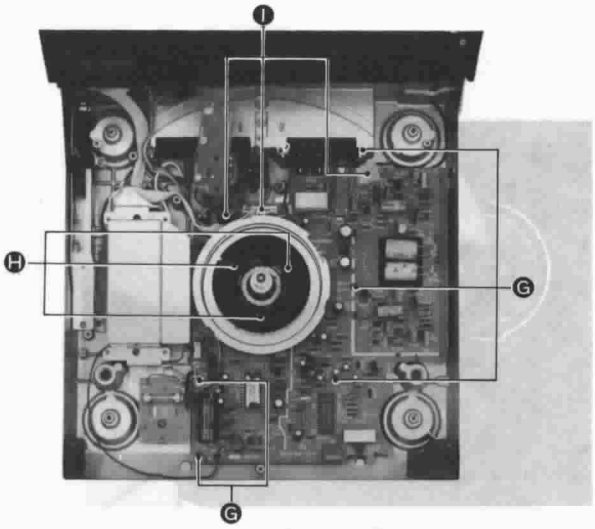

[Photo 6]

How to remove stater frame ass'y

1. Remove the drive P.C.B.
2. Disconnect 18 soldered parts Ⓙ of the stater frame coil and 4 soldered parts Ⓛ of the F.G detector coil. Then remove 3 setscrews Ⓚ of the stater frame coil. The F.G detector coil and stater frame coil can be remove. **(See Fig. 4)**

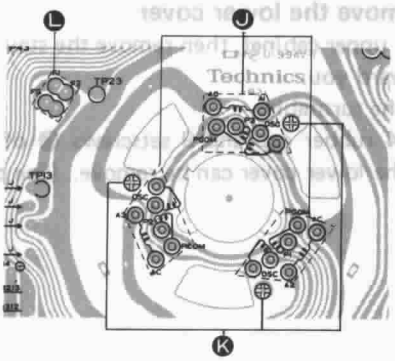

[Fig. 4]

■ DISASSEMBLY INSTRUCTIONS

How to remove the cartridge

1. Turn off the stand-by switch.
2. Open the upper cabinet all the way.
3. Slide the arm lock over so it locks the tonearm in place. **(See Fig. 1)**
4. Use the accessory screwdriver to unscrew the cartridge. (As shown in the diagram, loosen the screw until the cartridge can be freely removed.) **(See Fig. 2)**
5. Pull of the cartridge. **(See Fig. 3)**

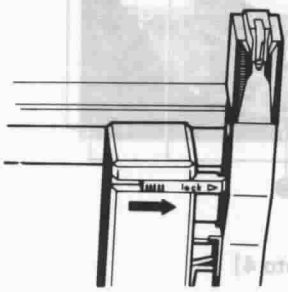

[Fig. 1]

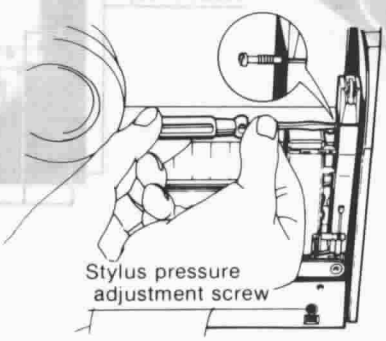

[Fig. 2]

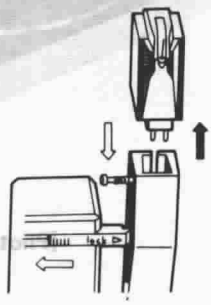

[Fig. 3]

How to remove the turntable

1. Don't rotate the turntable with a hand then remove the 45 Adaptor by turned counterclockwise. **(See Photo 1)**
2. Remove 1 nut Ⓐ and 1 washer Ⓑ of turntable.
3. Install 2 setscrews for center hole of turntable, then glip up can be replaced. **(See Photo 2)**
   Note: Turntable screw is used as long about 30 mm.

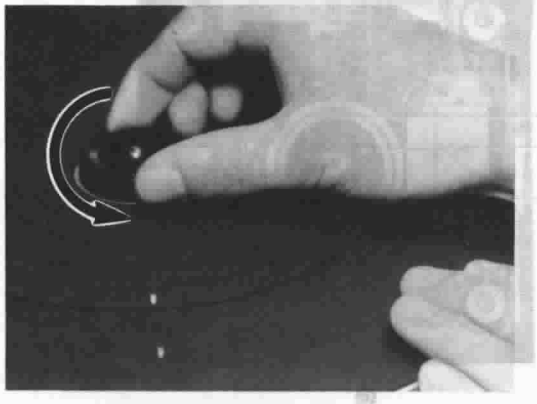

[Photo 1]

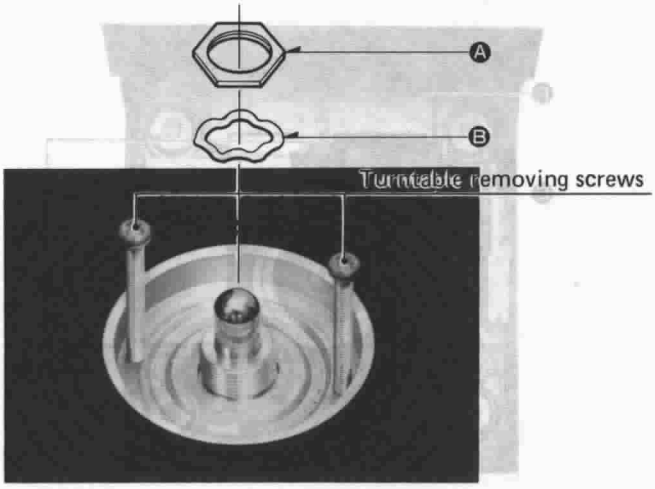

[Photo 2]

How to remove the lower cover

1. Open the upper cabinet, then remove the stay by pulling it out toward you.
2. Remove the turntable.
3. Remove 4 rubber cap and 9 setscrews Ⓒ of the lower cover. The lower cover can be remove. **(See photo 3, 4)**

How to remove the upper cover

1. Remove the cartridge.
2. Remove the stay.
3. Open the upper cabinet. Remove 12 setscrews Ⓜ of the upper cover.
   Note: Push the cover switch Ⓝ, then remove the upper cover. **(See Photo 7)**

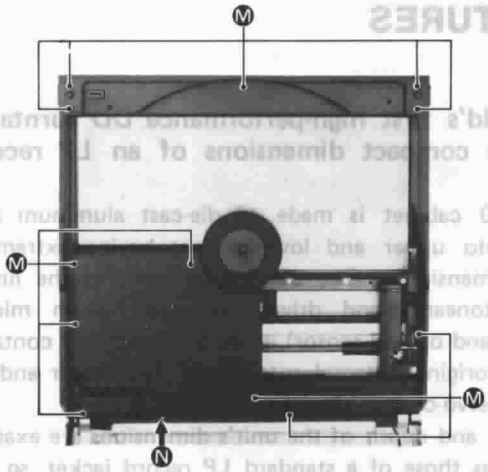

[Photo 7]

How to remove the control P.C.B. and the operation P.C.B.

1. Remove the upper cover.
2. Remove 1 setscrew Ⓞ of the control P.C.B. and 3 setscrews Ⓟ of the operation P.C.B.
3. Remove 1 connector Ⓠ of the limit switch and 1 setscrew Ⓡ of the IC405. The control P.C.B. and operation P.C.B. can be remove. **(See Photo 8)**

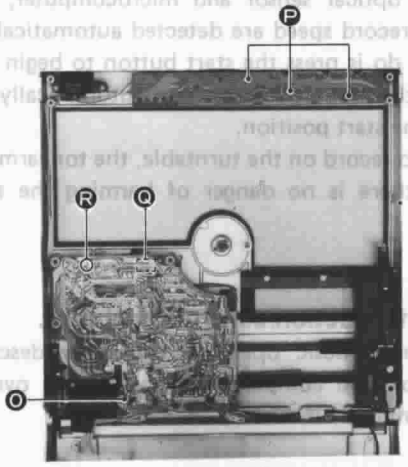

[Photo 8]

How to remove the tone arm

1. Remove the lower cover.
2. Remove the shield cover.
3. Remove 1 connector Ⓣ of the tone arm. **(See Photo 9).**
4. Remove the cartridge.
5. Remove the upper cover.
6. Remove the control P.C.B.
7. Remove 1 connector Ⓤ of the control P.C.B., then remove bushing and remove 1 connector Ⓣ of the control P.C.B.
8. Remove the rope bracket. **(See Fig. 5)**
9. Remove 2 setscrews Ⓥ of the tone arm. **(See Photo 9)**

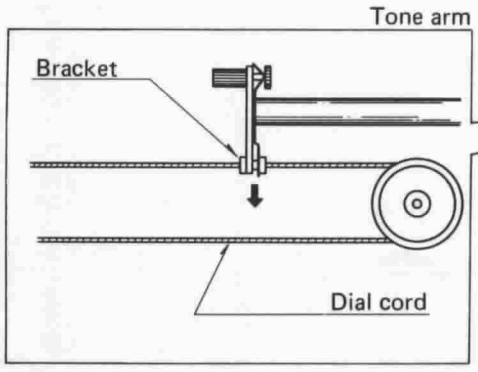

[Fig. 5]

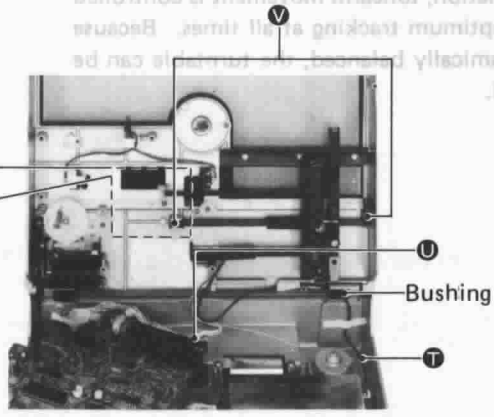

[Photo 9]

How to remove the upper cover

1. Remove the cartridge.
2. Remove the stay.
3. Open the upper cabinet. Remove 12 setscrews Ⓜ of the upper cover.
   Note: Push the cover switch Ⓝ, then remove the upper cover. **(See Photo 7)**

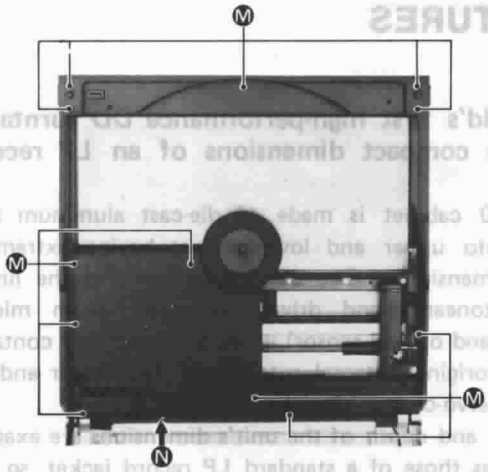

[Photo 7]

How to remove the control P.C.B. and the operation P.C.B.

1. Remove the upper cover.
2. Remove 1 setscrew Ⓞ of the control P.C.B. and 3 setscrews Ⓟ of the operation P.C.B.
3. Remove 1 connector Ⓠ of the limit switch and 1 setscrew Ⓡ of the IC405. The control P.C.B. and operation P.C.B. can be remove. **(See Photo 8)**

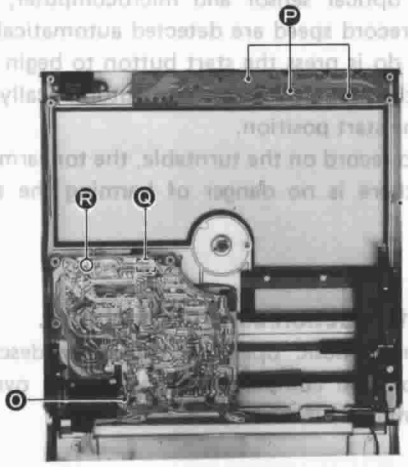

[Photo 8]

How to remove the tone arm

1. Remove the lower cover.
2. Remove the shield cover.
3. Remove 1 connector Ⓣ of the tone arm. **(See Photo 9).**
4. Remove the cartridge.
5. Remove the upper cover.
6. Remove the control P.C.B.
7. Remove 1 connector Ⓤ of the control P.C.B., then remove bushing and remove 1 connector Ⓣ of the control P.C.B.
8. Remove the rope bracket. **(See Fig. 5)**
9. Remove 2 setscrews Ⓥ of the tone arm. **(See Photo 9)**

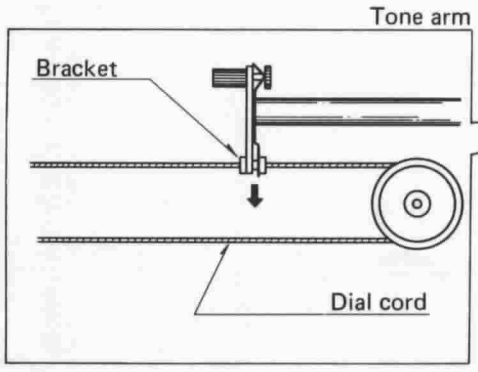

[Fig. 5]

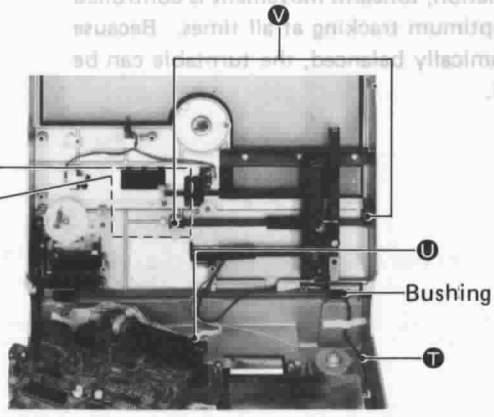

[Photo 9]

■ DISASSEMBLY INSTRUCTIONS

How to remove the cartridge

1. Turn off the stand-by switch.
2. Open the upper cabinet all the way.
3. Slide the arm lock over so it locks the tonearm in place. **(See Fig. 1)**
4. Use the accessory screwdriver to unscrew the cartridge. (As shown in the diagram, loosen the screw until the cartridge can be freely removed.) **(See Fig. 2)**
5. Pull of the cartridge. **(See Fig. 3)**

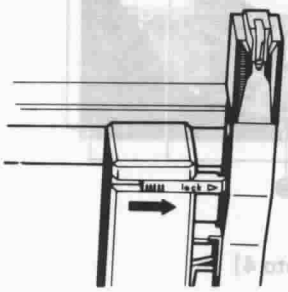

[Fig. 1]

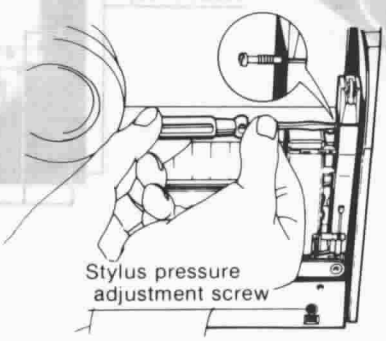

[Fig. 2]

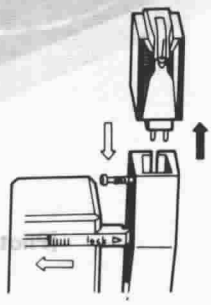

[Fig. 3]

How to remove the turntable

1. Don't rotate the turntable with a hand then remove the 45 Adaptor by turned counterclockwise. **(See Photo 1)**
2. Remove 1 nut Ⓐ and 1 washer Ⓑ of turntable.
3. Install 2 setscrews for center hole of turntable, then glip up can be replaced. **(See Photo 2)**
   Note: Turntable screw is used as long about 30 mm.

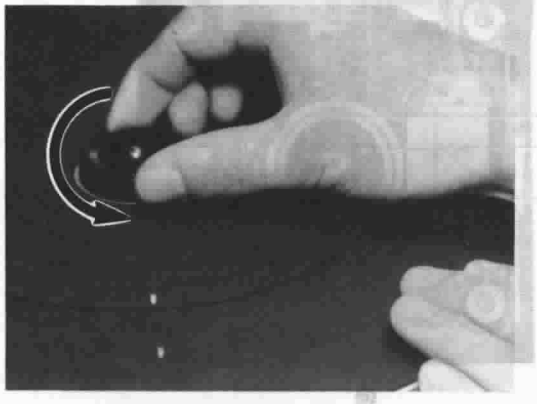

[Photo 1]

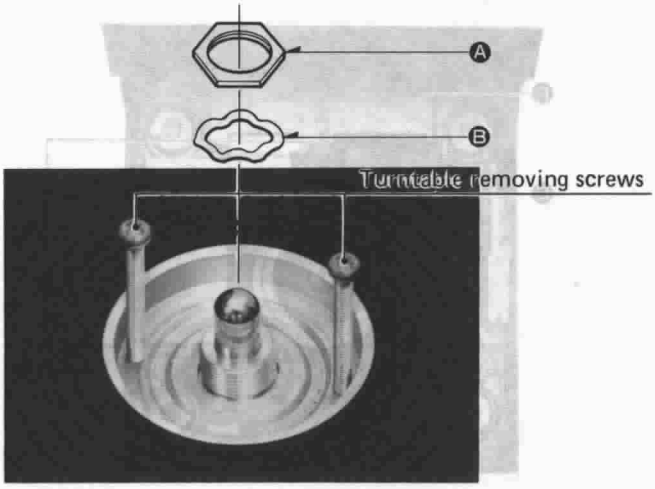

[Photo 2]

How to remove the lower cover

1. Open the upper cabinet, then remove the stay by pulling it out toward you.
2. Remove the turntable.
3. Remove 4 rubber cap and 9 setscrews Ⓒ of the lower cover. The lower cover can be remove. **(See photo 3, 4)**

[Photo 3]

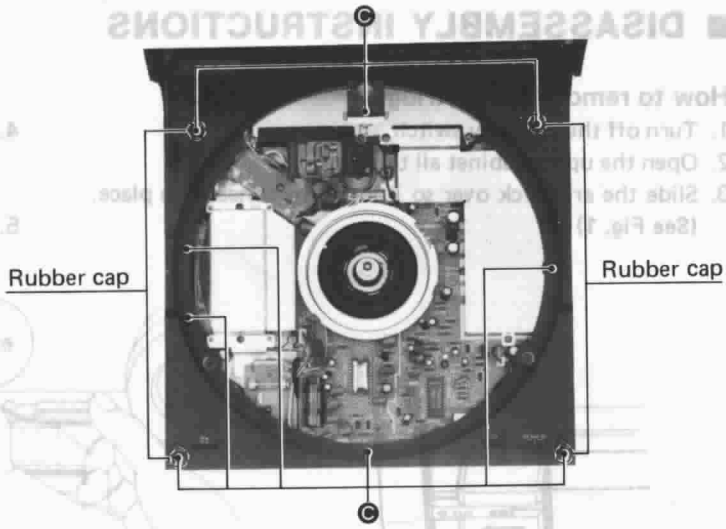

[Photo 4]

How to remove drive P.C.B.

1. Remove the lower cover.
2. Remove 4 setscrews Ⓓ of the shield cover.
3. Remove 1 setscrew Ⓔ of the LED P.C.B. and 1 setscrew Ⓕ of the IC1. **(See Photo 5)**
4. Remove 5 setscrews Ⓖ of the drive P.C.B. and 3 setscrews Ⓗ of the stater cover.
5. Remove 3 connectors Ⓘ then drive P.C.B.can be remove. **(See Photo 6)**

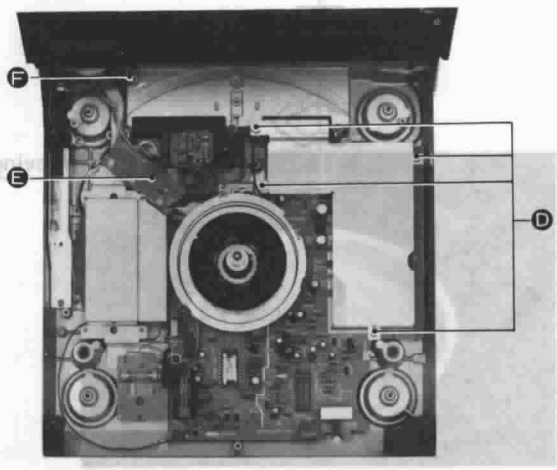

[Photo 5]

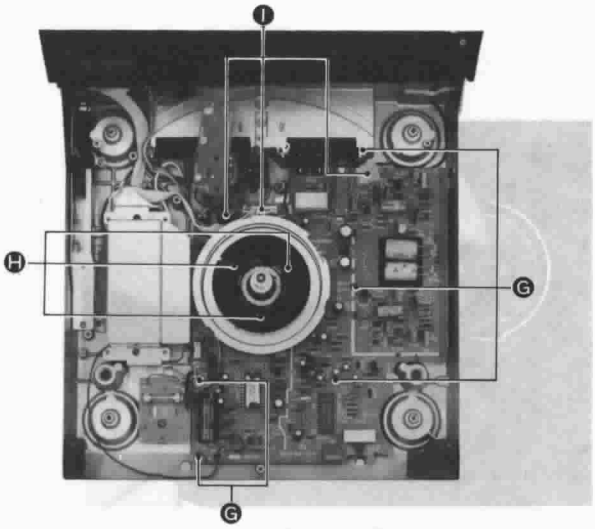

[Photo 6]

How to remove stater frame ass'y

1. Remove the drive P.C.B.
2. Disconnect 18 soldered parts Ⓙ of the stater frame coil and 4 soldered parts Ⓛ of the F.G detector coil. Then remove 3 setscrews Ⓚ of the stater frame coil. The F.G detector coil and stater frame coil can be remove. **(See Fig. 4)**

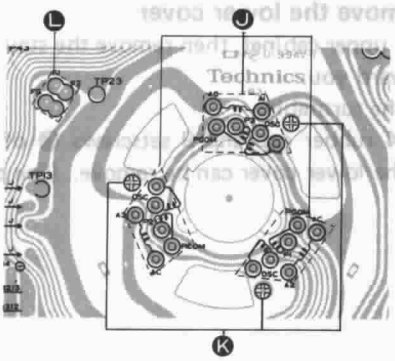

[Fig. 4]

How to remove the upper cover

1. Remove the cartridge.
2. Remove the stay.
3. Open the upper cabinet. Remove 12 setscrews Ⓜ of the upper cover.
   Note: Push the cover switch Ⓝ, then remove the upper cover. **(See Photo 7)**

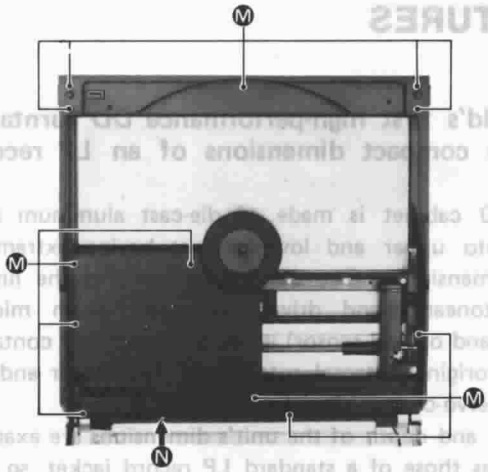

[Photo 7]

How to remove the control P.C.B. and the operation P.C.B.

1. Remove the upper cover.
2. Remove 1 setscrew Ⓞ of the control P.C.B. and 3 setscrews Ⓟ of the operation P.C.B.
3. Remove 1 connector Ⓠ of the limit switch and 1 setscrew Ⓡ of the IC405. The control P.C.B. and operation P.C.B. can be remove. **(See Photo 8)**

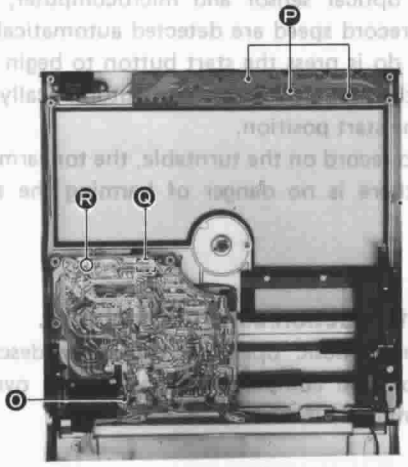

[Photo 8]

How to remove the tone arm

1. Remove the lower cover.
2. Remove the shield cover.
3. Remove 1 connector Ⓣ of the tone arm. **(See Photo 9).**
4. Remove the cartridge.
5. Remove the upper cover.
6. Remove the control P.C.B.
7. Remove 1 connector Ⓤ of the control P.C.B., then remove bushing and remove 1 connector Ⓣ of the control P.C.B.
8. Remove the rope bracket. **(See Fig. 5)**
9. Remove 2 setscrews Ⓥ of the tone arm. **(See Photo 9)**

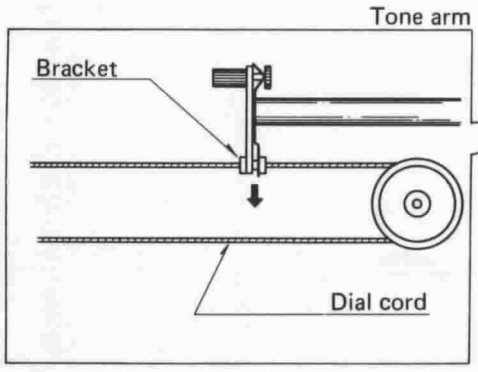

[Fig. 5]

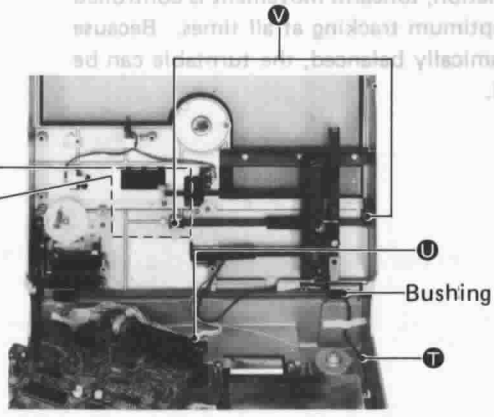

[Photo 9]

■ DISASSEMBLY INSTRUCTIONS

How to remove the cartridge

1. Turn off the stand-by switch.
2. Open the upper cabinet all the way.
3. Slide the arm lock over so it locks the tonearm in place. **(See Fig. 1)**
4. Use the accessory screwdriver to unscrew the cartridge. (As shown in the diagram, loosen the screw until the cartridge can be freely removed.) **(See Fig. 2)**
5. Pull of the cartridge. **(See Fig. 3)**

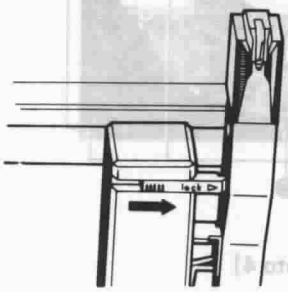

[Fig. 1]

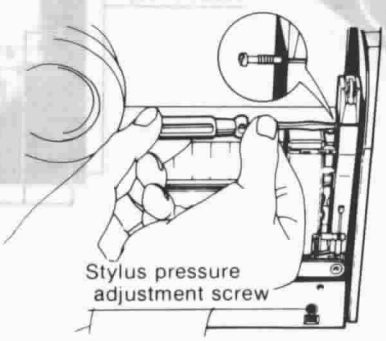

[Fig. 2]

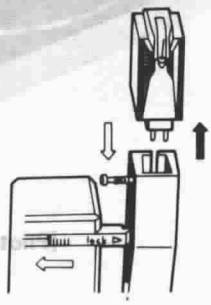

[Fig. 3]

How to remove the turntable

1. Don't rotate the turntable with a hand then remove the 45 Adaptor by turned counterclockwise. **(See Photo 1)**
2. Remove 1 nut Ⓐ and 1 washer Ⓑ of turntable.
3. Install 2 setscrews for center hole of turntable, then glip up can be replaced. **(See Photo 2)**
   Note: Turntable screw is used as long about 30 mm.

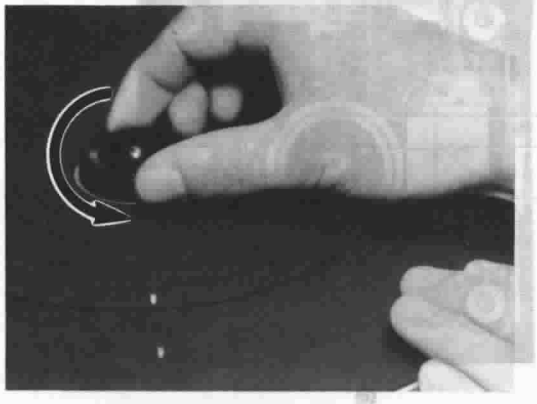

[Photo 1]

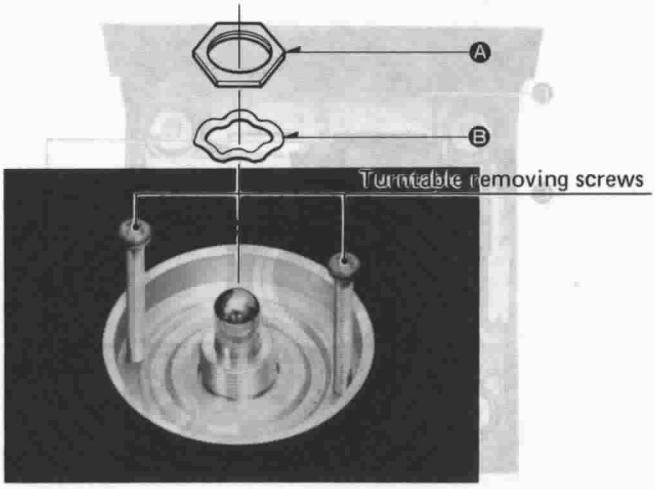

[Photo 2]

How to remove the lower cover

1. Open the upper cabinet, then remove the stay by pulling it out toward you.
2. Remove the turntable.
3. Remove 4 rubber cap and 9 setscrews Ⓒ of the lower cover. The lower cover can be remove. **(See photo 3, 4)**

[Photo 3]

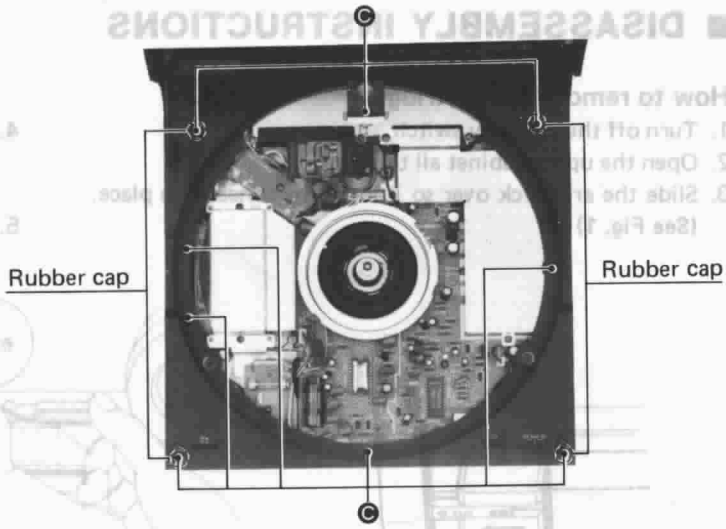

[Photo 4]

How to remove drive P.C.B.

1. Remove the lower cover.
2. Remove 4 setscrews Ⓓ of the shield cover.
3. Remove 1 setscrew Ⓔ of the LED P.C.B. and 1 setscrew Ⓕ of the IC1. **(See Photo 5)**
4. Remove 5 setscrews Ⓖ of the drive P.C.B. and 3 setscrews Ⓗ of the stater cover.
5. Remove 3 connectors Ⓘ then drive P.C.B.can be remove. **(See Photo 6)**

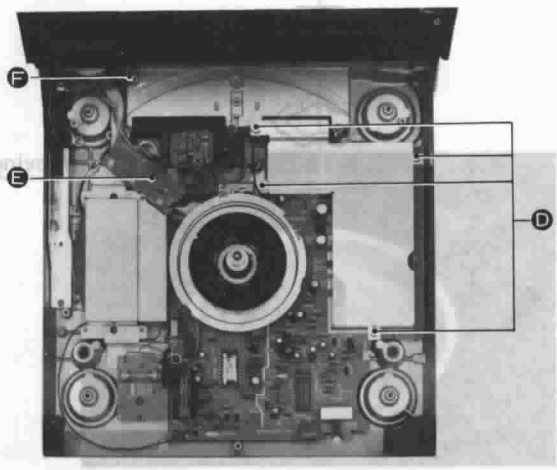

[Photo 5]

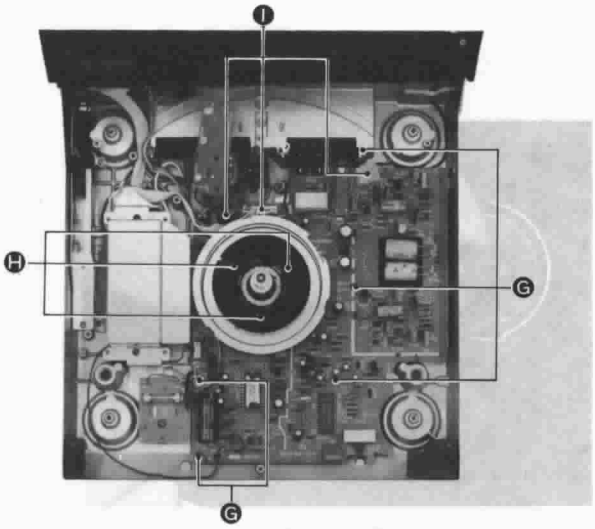

[Photo 6]

How to remove stater frame ass'y

1. Remove the drive P.C.B.
2. Disconnect 18 soldered parts Ⓙ of the stater frame coil and 4 soldered parts Ⓛ of the F.G detector coil. Then remove 3 setscrews Ⓚ of the stater frame coil. The F.G detector coil and stater frame coil can be remove. **(See Fig. 4)**

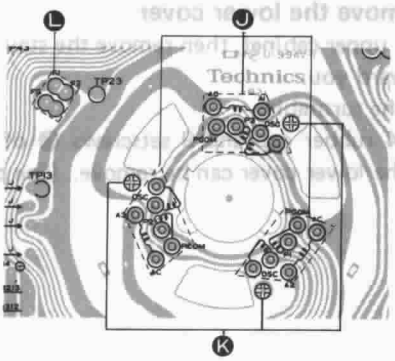

[Fig. 4]

How to remove the dust cover

1. Brake the seal using with a screw driver. **(See Photo 10)**

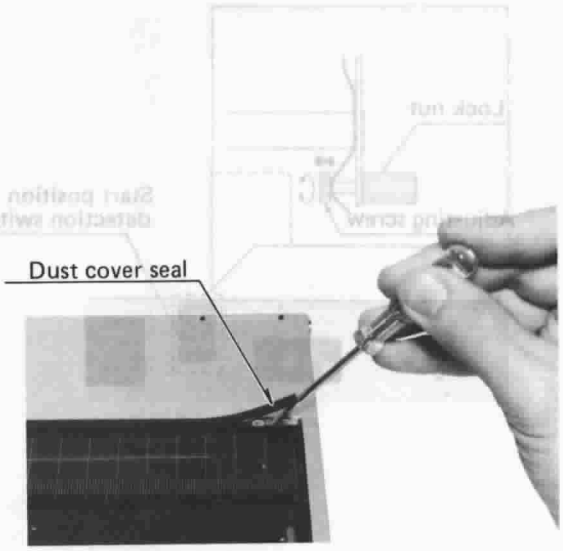

[Photo 10]

2. Remove 4 setscrews Ⓦ of the dust cover. The dust cover and the dust cover cushion can be remove. **(See Photo 11)**

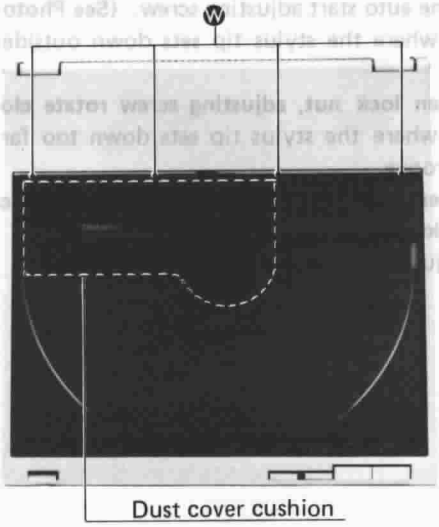

[Photo 11]

How to install the dial cord

1. Install the spring to Gear drum.
2. Direct the cord in the order from 1 to 5. **(See Fig. 6)**
3. Turn the worm Gear, Install the bracket to the arm. **(See Fig. 7)**

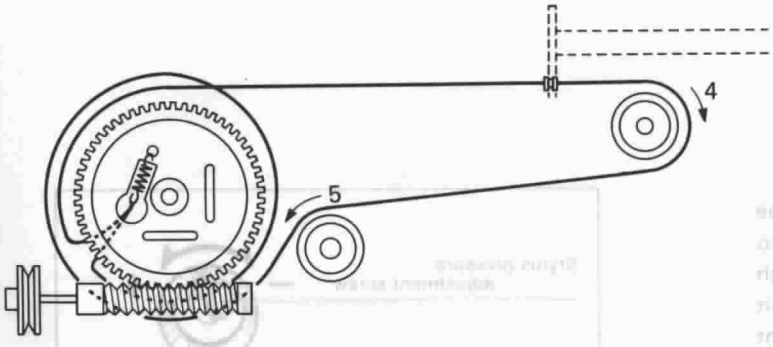

[Fig. 6]

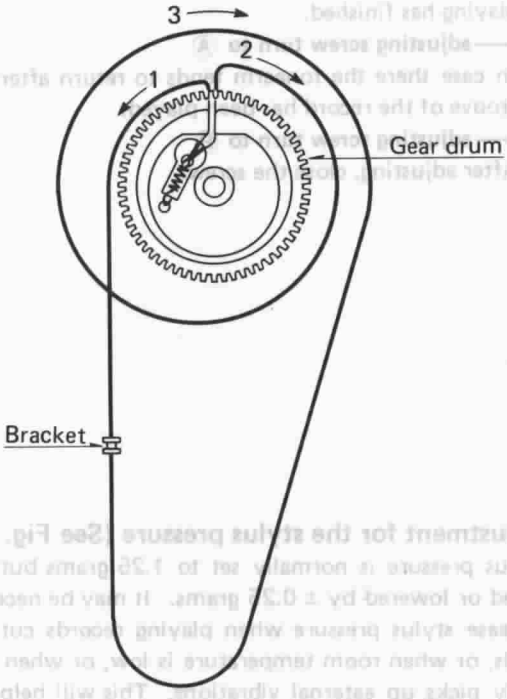

[Fig. 7]

■ ADJUSTMENT ENGLISH

Adjustment for automatic start position

(Adjustment by 30 cm record)

1. Remove the dust cover.
2. Confirm the arm position (start position)
3. Adjust the auto start adjusting screw. **(See Photo 12)**
   In case where the stylus tip sets down outside of the record.
   ——loosen lock nut, adjusting screw rotate clockwise.
   In case where the stylus tip sets down too far in the record groove.
   ——loosen lock nut, adjusting screw rotate counter-clockwise.
4. After adjusting, close the lock nut and fix it.

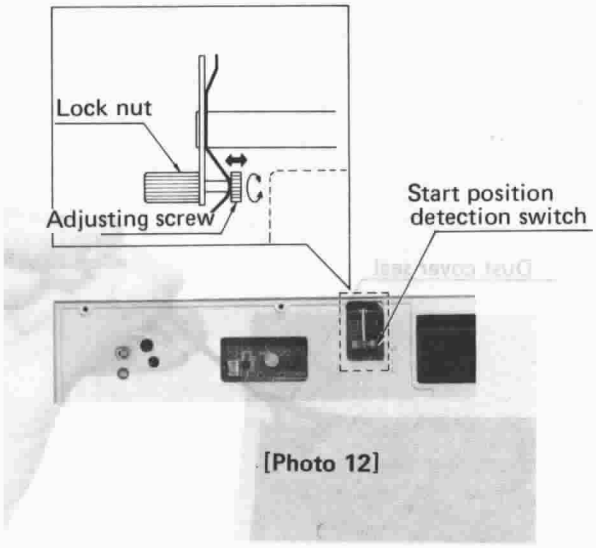

[Photo 12]

Adjustment for automatic return position

(Adjustment by 17cm record)

1. Remove the dust cover.
2. Adjust the switch position to Ⓐ or Ⓑ using a screw driver. **(See Photo 13)**
   In case where the tonearm tends to return before the playing has finished.
   ——adjusting screw turn to Ⓐ
   In case there the tonearm tends to return after the last groove of the record has been played.
   ——adjusting screw turn to Ⓑ
3. After adjusting, close the screw.

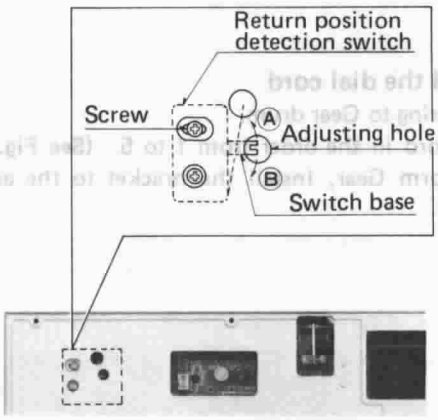

[Photo 13]

Adjustment for the stylus pressure (See Fig. 8)

Stylus pressure is normally set to 1.25 grams but may be raised or lowered by ± 0.25 grams. It may be necessary to increase stylus pressure when playing records cut at high levels, or when room temperature is low, or when the unit easily picks up eaternal vibrations. This will help prevent distortion and groove-skipping. To adjust sylus pressure, turn either way, as shown in the diagram. The screw is coupled to the graduated ring.

Note: Do not turn the stylus pressure adjustment. Screw further than the set limits (1.5g ~ 1.0g)

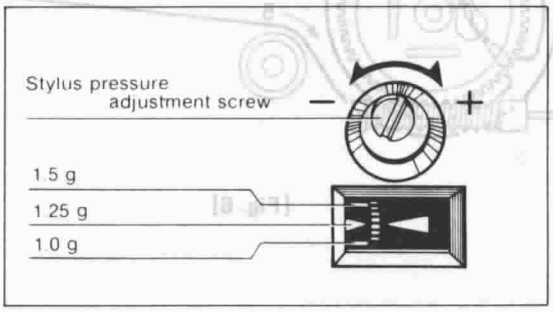

[Fig. 8]

Adjustment for tone arm

- Adjustment point

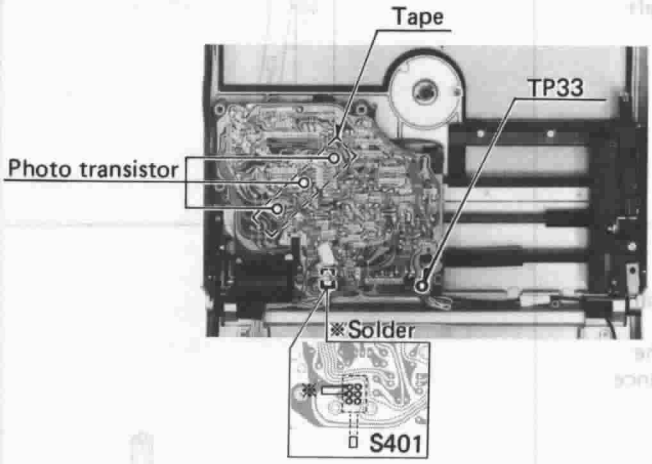

[Photo 14]

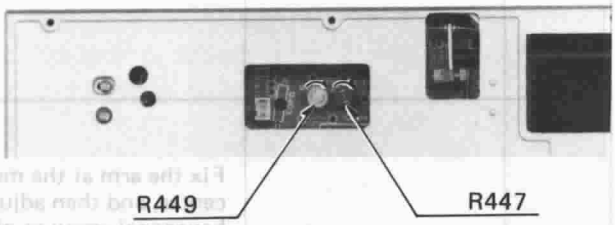

[Photo 15]

After replacement of tonearm parts, be sure to make the adjustment according to the following procedure.

- Preparations for adjustment

1. Fully open the upper cabinet and solder the cover switch (S401) terminals. **(See Photo 14)**
2. With the upper cover opened, set the power switch to "ON" and cover the photo transistor with tape, then turn on the start button.
3. Make sure that the turntable rotates and the arm stops at the 30 cm record start position and the cueing down.
4. Completely turn the semi-fixed volume R447 and R449 clockwise (Temporary adj.)

- Tools and instruments necessary for adjustment

1. Screw driver
2. Hexagon wrench (1.5M)
3. DC VTVM or circuit tester.

Step	Item	Description	Adjusting method
1	Mechanical center adjustment of arm	Fix the arm in V-groove of cueing lever, and then turn the adjusting screw of cueing lever so that the arm base is paralleled with the arm. Note: Check the parallelism visually.	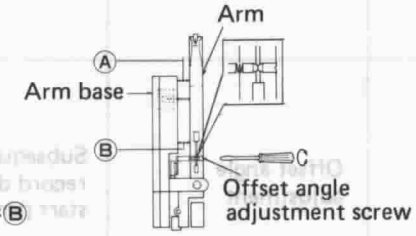
2	Maximum sensitivity adjustment of servo circuit	After finishing the preparatory steps 1 ~ 4. connect the DC VTVM (or circuit tester) between **TP33** and earth. Fully swing the arm to the right by hand, then read the voltage. (*1) • About 7.6V	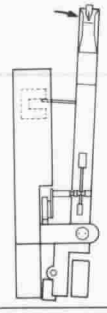

3	Minimum sensitivity adjustment of servo circuit	Fully swing the arm to the left by hand, then read the voltage. (*2) About 0.4V	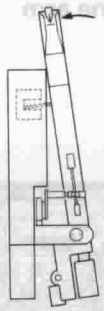
4	Electrical center adjustment of arm	Fix the arm at the mechanical center, and then adjust the hexagonal screw to obtain the central voltage of the difference between *1 and *2. Turning the screw clockwise . . . . . **decreases the voltage** Turning it counterclockwise . . . . **increases the voltage** The voltage must be adjusted as follows $\frac{(\overset{*1}{7.6\text{ V}} - \overset{*2}{0.4\text{V}})}{2} + 0.4\text{V} = 4.0\text{V}$ Note: *1 and *2 vary depending on the set.	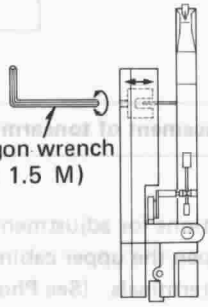
5	Servo sensitivity adjustment	After the above adjustment, connect the 2-pin connector between **TP30** and earth in the adjusting hole	Turn **R449** counter clockwise so that the VTVM (or circuit tester) indicates **0.72V.**
6	Offset angle adjustment	Subsequently, put a 1 mm pitch record disc on the turntable to start performance.	Turn **R447** counterclockwise so that the VTVM (or circuit tester) indicates **0.6V.**

■ JUSTIERUNG (Tonarm) DEUTSCH

Nehmen Sie die Neueinstellungen nach Auswechseln des Tonarms gemäß den folgenden Vorgängen vor.

- Varbereitungen für Einstellungen

1. Öffnen Sie die Oberabdeckung völling, und verlöten Sie die Ausgangsanschlüsse des Abdeckungsschalters (S401) um diesen Schalter eingeschaltet zu halten und normalen Betrieb zu ermöglichen. **(Siehe Foto 14)**
2. Stellen Sie den Netzschalter bei geöffneter Abdeckung auf die "ON" (EIN) Position, decken Sie die Photodiode mit Tape ab und drücken Sie den Startknopf.
3. Versichern Sie sich, daß sich der Plattenteller dreht, der Tonarm au der Anfangsposition für 30 cm Schallplatten anhält und der Ablifthebei sich herunterbewegt.
4. Drehen Sie die halbeinstellbaren Widerstände R447 und R449 bis zum Anschlag im Uhrzeigersim. (Vorläufige Einstellung)

- Notwendige Werkzeuge und Geräte für die Einstellungvorgänge

1. Schlitzschraubenzieher (–)
2. Sechseckiger Bolzenschlüssel (1.5M)
3. Gleichstromvoltmeter oder Tester

Schritt	Einstellgegenstand	Beschreibung	Einstellmethode
1	Mechanische Mitteleinstellung des Tonarms	Legen Sie den Tonarm in die V-Rille des Ablifthebels ein, und dre hen Sie die Einstellschraube des Ablifthebels bis die Armgrundlage gleichlaufend (parallel) mit dem Tonarm eingestellt ist. **Anmerkung:** Führen Sie Sichtprüfungen der Parallelität aus.	Tonarm Ⓐ Arm grundlage Ⓑ C Ⓐ = Ⓑ
2	Einstellung auf maximale Empfindlichkeit des Servo-Kreises	Verbinden Sie das Gleichstromvoltmeter (order Tester) zwischen **TP33** und Erde, nachdem die vorbereitenden Schritte 1 bis 4 ausgeführt worden sind. (*1) Ungefähr 7.6 Volt.	

3	Einstellung auf minimale Empfindlichkeit des Servo-Kreises	Bewegen Sie den Tonarm mit der Hand völlig nach Rechts (bis zum Anschlag), und lesen Sie dann die angezeigte Spannung ab. (*2) ·Ungefähr 0.4Volt	
4	Elektrische Mitteleinstellung des Tonarms	Bringen Sie den Tonarm auf Seine mechanische Mittelposition, und adjustieren Sie die Sechseckige Schraube um eine Mittelspannung Zwischen den Unterschieden von *1 und *2 zu erhalten. Drehen der Schraube im Uhrzeigersinn . . . . . **verringert die Spannung.** Drehen der Schraube entgegen dem Uhrzeigersinn . . . . . **erhöht die Spannung.** Die Spannung muß wie folgt eingestellt werden. $\frac{\overset{*1}{7{,}6V} - \overset{*2}{0{,}4V}}{2} + 0{,}4V = 4{,}0$ Volt Anmarkung: *1 und *2 sind, vom Gerätetyp abhängig, unterschied lich.	Sechseckiger Bolzenschlüssel (x 1.5M)
5	Einstellung der Servo-Empfindlichkeit	Nach Austührung der vorstehenden Einstellungen, verbinden Sie das 2-Stift Verbindungsstück mit **TP30** und Erde im Adjustierloch.	Drehen Sie **R449** entgegen dem Uhrzeigersinn um die, auf dem Röhren-voltmeter (order tester) angezeigte Spannung, auf **0,72V** kommen zu lassen
6	Einstellung des Reibungswinkels	Legen Sie eine 1-mm Abstimmschallplatte auf den Plattenteller um mit dem Abspielvorgang zu beginnen.	Drehen Sie den Wiederstand **R447** entgegen dem Uhrzeigersinn um auf dem Röhrevoltmeter (order tester) **0,6V.** anzeigen zu lassen.

■ REGLAGES (Bras acoustique) FRANCAIS

Après le remplacement des pièces du bras acoustique, S'assurer d'effectuer le réglage en fonction du procdé suivant.

- Préparations pour le réglage

1. Ouvrir entièrement le couvercle supérieur et souder les bornes du commutateur (S401) du couvercle **(Photographie 14)**
2. Quand le couvercle supérieur est ouvert, placer le commutateur d'alimentation sur la position "ON" et couvrir la diode photoélectrique à l'aide de Une vande adhésive pur allumer le bouton de départ.
3. S'assurer que le plateau tourne et que le bras s'arrête sur la position de départ d'un disque de 33 tours et que le levier de mise en pile se baisse.
4. Tourner entièrement à droite les R447 et R449 semi-fixes de volume. (Réglage provisoire).

- Outils et appareils nécessdires au réglage

1. Tournevis à tête palte
2. Clé hexagonale (1.5 M)
3. DC VTVM ou testeur

Etape	Article	Description	Méthode de réglage
1	Réglage du centre méchanique du bras	Fixer le bras dans le sillon en V du levier de mise en pile et tourner la vis de véglage du levier de mise en pile de telle sorte que la bras du bras soit paralléle au bras. Note: Vérifier le parallélism à l'oeil.	Bras Base du bras Ⓐ Ⓑ C Ⓐ=Ⓑ
2	Réglage de la sensibilite maximale du circuit servo	Après la fin des étapes préparatoires 1 à 4, brancher le DC VTVM (ou le testeur) entre **TP33** et la terre. Porter le bras entièrement à droite à la main, et lire la tension. (*1) •Environ 7.6V	

3	Réglage de ls sensibilite minimal du circuit servo	Porter le bras à gauche à la tension. (*2) •Environ 0.4V	
4	Réglage du centre électrique du bras	Placer le bras au centre mécanique et régler la vis à tête hexanonale pour obtenir la tension centrale de la différence entre *1 et *2 **Tourner la vis de réglage à doite pour réduire la tension.** **Tourner la vis de réglage à gauche pour augmenter la tension.** La tension doit être réglée de la façon suivante. $\frac{{}^{*1}7.6V - {}^{*2}0.4V}{2} + 0.4V = 4.0V$ Note: *1 et *2 varient en fonction de l'appariel.	Clé nehagonale (x 1.5M)
5	Réglage de la sensibilité du servo	Après réglage ci-dessus, brancher le connecteur à deux broches entre **TP30** et la terre dans le trou de réglage.	Tourner la **R449** à gauche de telle sorte que le VTVM (ou le testeur) indique **0.72V.**
6	Réglage de l'angle de compensation	Placer un disque d'un pas de 1 mm sur le plateau pour démarrer la lecture.	Tourner la **R447** à gauche de telle sorte que le VTVM (ou le testeur) indique **0,6V.**

■ BLOCK DIAGRAM

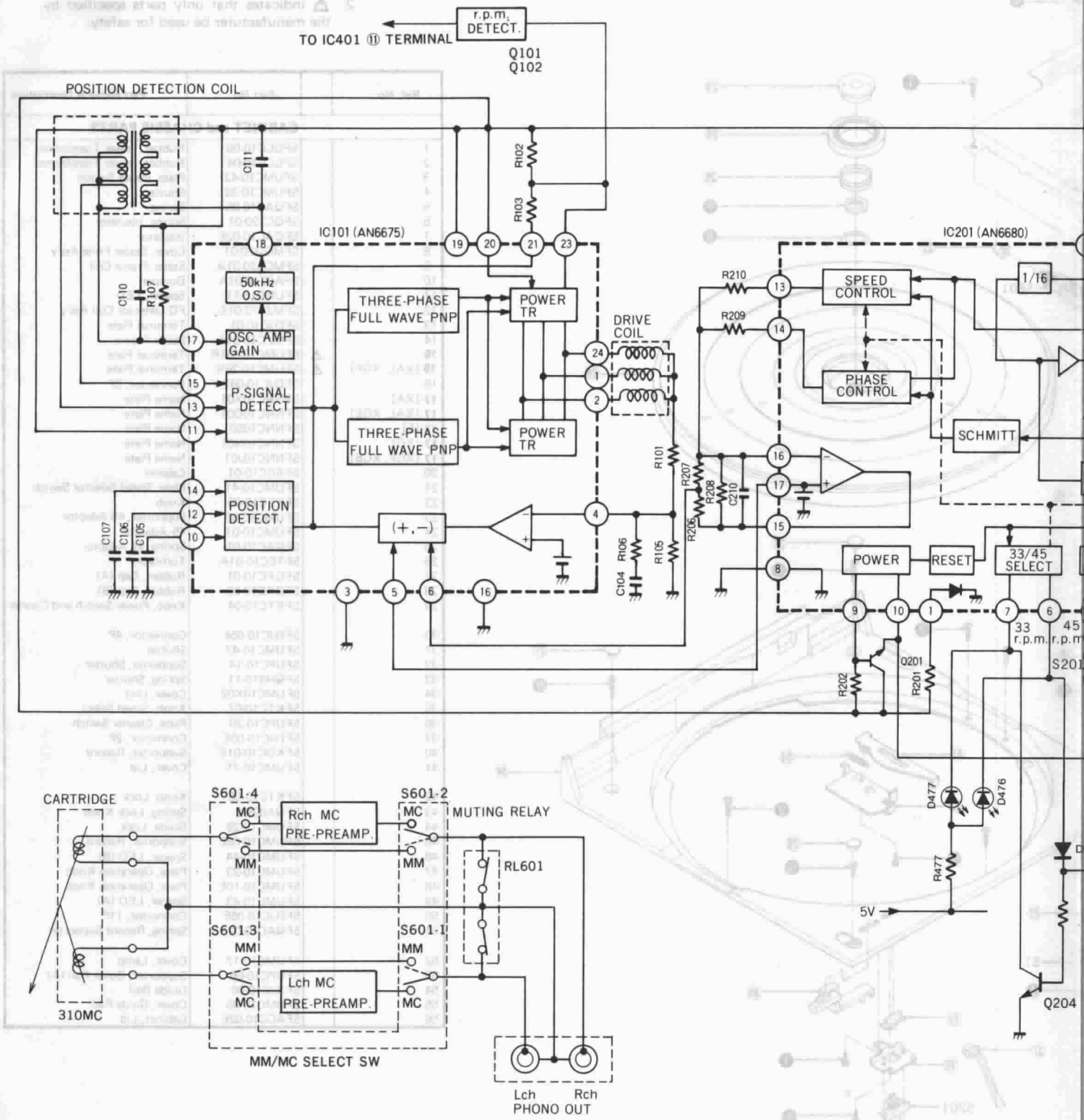

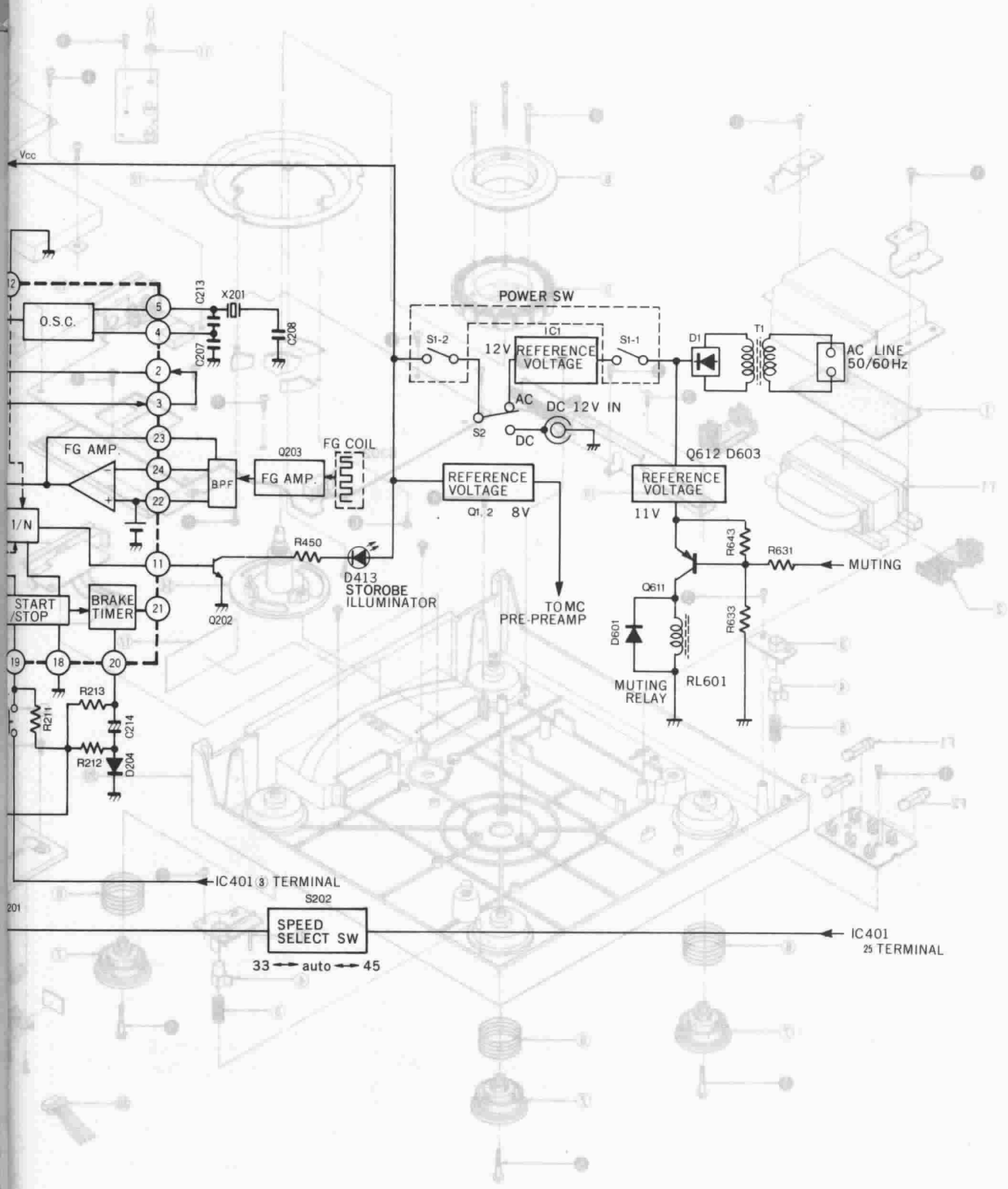
Vcc
O.S.C.
C213
X201
C208
C207
POWER SW
S1-2
IC1
12V
REFERENCE VOLTAGE
S1-1
D1
T1
AC LINE 50/60Hz
AC
DC 12V IN
S2
DC
FG AMP.
Q203
FG COIL
BPF
FG AMP.
REFERENCE VOLTAGE
Q1, 2 8V
Q612 D603
REFERENCE VOLTAGE
11V
R643
R631
MUTING
1/N
R450
D413
STOROBE ILLUMINATOR
START /STOP
BRAKE TIMER
Q202
TO MC PRE-PREAMP
Q611
D601
R633
MUTING RELAY
RL601
R213
R211
C214
R212
D204
IC401 ③ TERMINAL
S202
SPEED SELECT SW
33 auto 45
IC401 25 TERMINAL

■ EXPODED VIEW

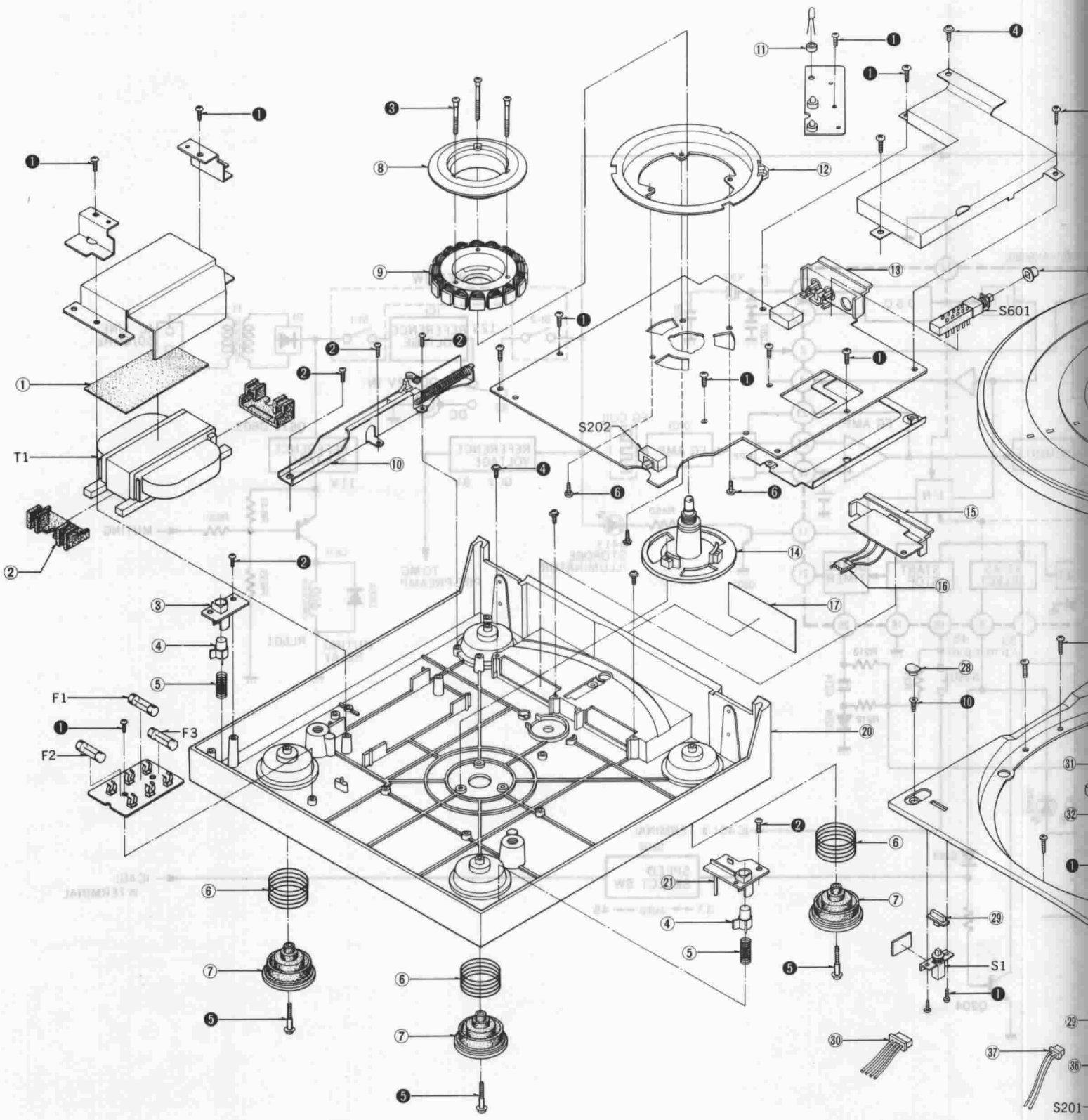

Technische Daten

Änderungen der technischen Daten vorbehalten.
Die angegebenen Gewichts- und Abmessungsdaten sind circa Werte.

Allgemein Daten

Stromversorgung: ~110-120/220-240 V, 50/60 Hz Wechselstrom
12V Gleichstrom (Ausgestattet mit Gleichstrom-Eingangsbuchse)
Leistungsaufnahme. 20 W (Wechselstrom)
6W (Gleichstrom)
Abmessungen (B x H x T) 31,5 x 8,8 x 31,5 cm
Gewicht. 6,5 kg

Plattenspieler

Typ: Quarz-Direktantrieb
Automatischer Plattenspieler
Auto-Start/Auto-Zuführung
Rückführautomatik
Stop-Automatik
Wiederhol-Betrieb
Automatische Drehzahlwahl
Automatische Plattengrößewahl
2-Geschwindig-keiten-Suchfunktionen
Plattenpräsenz-Registrierung
Antrieb: Direktantrieb
Motor: Kollektorloser Gleichstrommotor
Antriebsregel-Methode: Quarz-Steuerung (QPL)
Plattenteller: Aluminium-Druckguß
Durchmesser 30 cm
Plattenteller-Drehzahlen: 33-1/3 und 45 U/min
Automatische Drehzahlwahl
(manuelle Wahl möglich)
Drehzahlabweichung: Innerhalb ±0,002%
Gleichlaufschwankungen: 0,012% WRMS*
0,025% WRMS (JIS C5521)
±0,035% Spitze
(IEC 98A bewertet)

* Gemessen anhand von Signalen vom eingebauten Frequenzgenerator des Motorbauteils.

Rumple-Fremdspannungsabstand: –56 dB (IEC 98A unbewertet)
Rumpel-Geräuschspannungsabstand: –78 dB (IEC 98A bewertet)

Tonarm

Typ: Dynamisch ausbalancierter Tangential-Tonarm mit Kardanaufhängung mit 4-Punkt- Drehlager
Effektive Länge: 105 mm
Spurfehlwinkel: Innerhalb±0,1°
Effektive Masse: 9 g (einschließlich Tonabnehmer)
Resonanzfrequenz: 12 Hz
Tonarm-Antriebsmotor: Kernloser Gleichstrommotor

Tonabnehmer

Typ: Dynamischer Stereo-Tonabnehmer (MC), Kernloser Doppelringspulen-Typ
Nadelträger: Röhre aus reinem Bor
Dämpfer: TTDD (Technics Temperature Defense Damper)
Frequenzgang: 10 Hz bis 60 kHz
10 Hz bis 10 kHz ±0,5 dB
Ausgangsspannung: 0,2 mV bei 1 kHz
5 cm/s. Null-zu-Spitze, lateral
[0,56 mV bei 1 kHz 10 cm/s. Null-zu-Spitze, 45° (DIN 45 500)]
Kanalternnung: Mehr als 25 dB bei 1 kHz
Mehr als 20 dB bei 10 kHz
Kanalabweichung: Innerhalb 1 dB bei 1 kHz
Gleichstromwiderstand: 30 Ω
Impedanz: 30 Ω (Reiner Widerstand)
Nachgiebigkeit: 12 x 10^{-6} cm/dyn bei 100 Hz
Vertikaler Spurwinkel: 20°
Auflagekraft-Einstellbereich: 1,25 ± 0,25 g (12,5 ± 2,5 mN)
Nadelspitze: 0,2 x 0,7 Mil (5 x 18 μm)
Elliptisch geschliffene Blockdiamantspitze
Effektive Masse: 0,23 mg (nur Tonabnehmer)
Gewicht: 6,0 g
Ersatz-Tonabnehmer EPS-310MC

Vor-Vorverstärkerteil für dynamischen Tonabnehmer (MC)

Rumpelabstand: –70 dB (IHF A)
Frequenzgang: 20 Hz bis 20 kHz ±0,5 dB
Ausgangspegel: 2,5 mV
Gesamtklirrfaktor: 0,02% (angeschlossen an Technics SU-70AII)

Spécifications

Les spécifications sont susceptibles d'être modifiées sans préavis.
Le poids et les dimensions donnés sont approximatifs.

Généralités

Alimentation: Alternatif 110-120/220-240V, 50 ou 60 Hz
12V C.C. (Equipé d'un jack d'entrée C.C.)
Consommation: 20 W (C.A.)
6 W (C.C.)
Dimensions: (L x H x P): 31,5 x 8,8 x 31,5 cm
Poids: 6,5 kg

Platine de lecture

Type: Entraînement direct à quartz
Platine automatique
Départ automatique/Entrée automatique
Retour automatique
Arrêt automatique
Audition répétée
Sélecteur de vitesse automatique
Sélecteur de dimension automatique
Pose et relevage lent/rapide (fonction exploratrice à 2 vitesses)
Détection de la présence d'un disque
Système d'entraînement: Entraînement direct
Moteur: Moteur C.C. sans balai
Groupe de réglage: Réglage d'accrochage de phase par quartz
Plateau de lecture: Aluminium moulé sous pression
Diamètre 30 cm
Vitesses de rotation: 33-1/3 et 45 t/p.m
Sélecteur de vitesse automatique (sélection manuelle possible)
Déviation de la vitesse: En deçà de ±0,002%
Pleurage et scintillement: 0,012% de valeur efficace*
0,025% de valeur efficace (JIS C5521)
±0,035% de crête (IEC 98A Pondéré)

* Mesuré par l'obtention d'un signal provenant du générateur de fréquences incorporé de l'ensemble du moteur.

Ronflement: –56 dB (IEC 98A Non pondéré)
–78 dB (IEC 98A Pondéré)

Bras de lecture

Type: Bras de lecture d'alignement linéaire de type à équilibre dynamique avec suspension à la cardan à 4 pivots.
Longueur effective: 105 mm
Angle d'erreur de piste: En deçà de ±0,1°
Masse réele: 9 g (y compris la celluel pick-up)
Fréquence de résonance: 12 Hz
Moteur d'entraînement du bras de lecture: Moteur C.C. sans noyau

Cellule pick-up

Type: Cellule pick-up stéréo à bobine mobile (MC)
Type de bobine à enroulement toroïdal jumelé sans noyau
Porte-à-faux: Tube à bore pur
Amortisseur: TTDD (Technics Temperature Defense Damper)
Réponse en fréquence: 10 Hz à 60 kHz
10 Hz à 10 kHz ±0,5 dB
Tension de sortie: 0,2 mV à 1 kHz; 5 cm/s., zéro à vitesse latérale de crête
(0,56 mV à 1 kHz; 10 cm/s., zéro à vitesse 45° de crête [DIN 45 500])
Séparation de canal: Plus de 25 dB à 1 kHz
Plus de 20 dB à 10 kHz
Equilibrage des canaux: En deçá de 1 dB à 1 kHz
Résistance C.C.: 30 Ω
Impédance: 30 Ω (Résistance pure)
Elasticité (dynamique): 12 x 10^{-6} cm/dyne à 100 Hz
Angle d'alignement vertical 20°
Plage de la force verticale: 1,25 ± 0,25 gramme (12,5 ± 2,5mN)
Extrémité de la pointe de lecture: 0,2 x 0,7 mil (5 x 18 μm)
Forme elliptique
Ensemble d'une pointe en diamant
Masse réelle: 0,23 mg
Poids: 6,0 grammes (cellule seule)
Remplacement de la celluel: EPS-310MC

Section du pré-préamplificateur MC

Ronflement: –70 dB (IHF A).
Réponse en fréquence: 20 Hz à 20 kHz ±0,5 dB
Niveau de sortie: 2,5 mV
Distorsion globale: 0,02% (connectée à SU-70AII de Technics).

■ REPLACEMENT PARTS LIST

Notes: 1. Part numbers are indicated on most mechanical parts.
Please use this part number for parts orders.
2. ⚠ indicates that only parts specified by the manufacturer be used for safety.

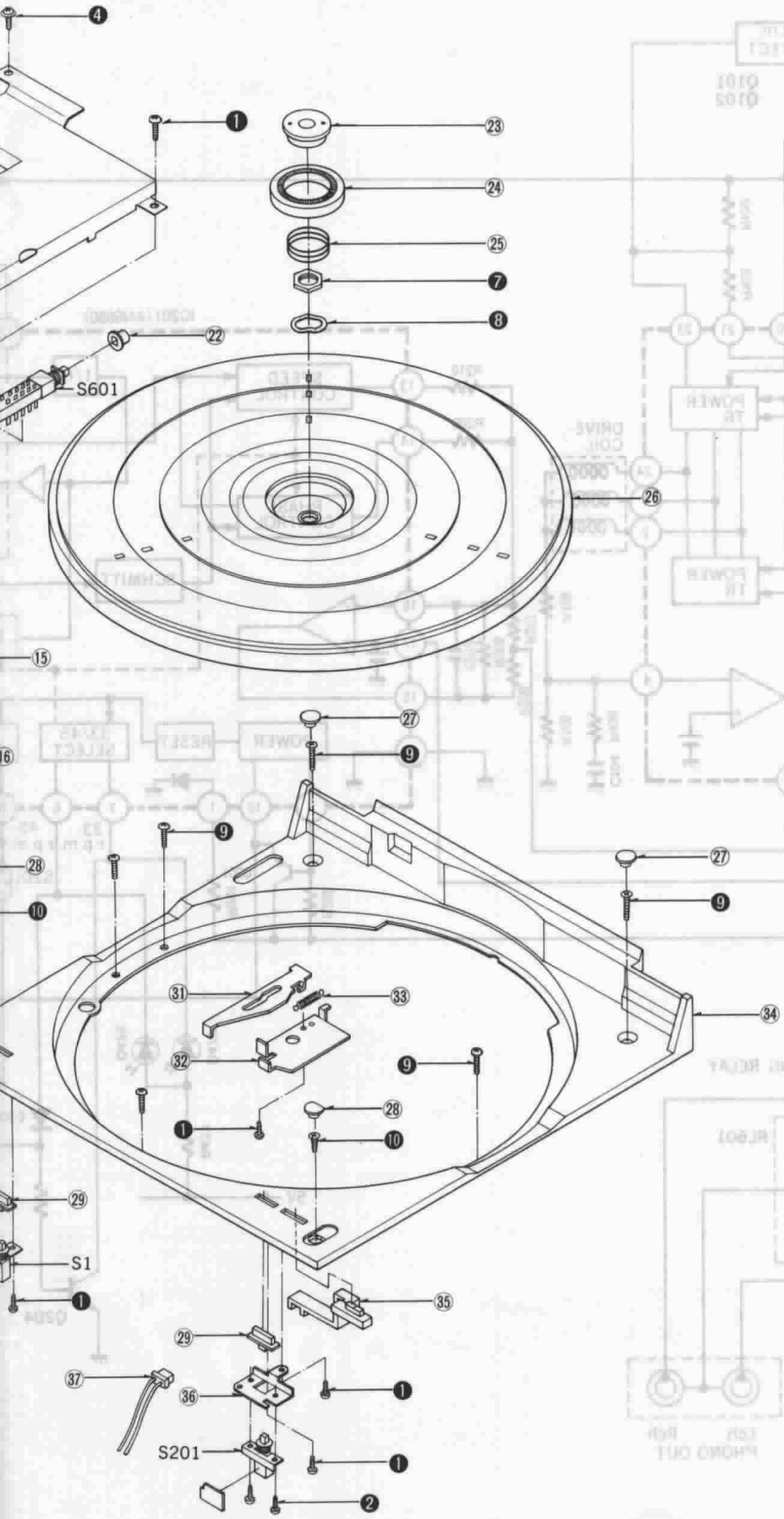

Ref. No.		Part No.	Part Name & Description
		CABINET and CHASSIS PARTS	
1		SFGCC10-09	Rubber, Power Transformer
2		SFGCC10-04	Rubber, Power Transformer
3		SFUMC10-42	Plate, Power Switch
4		SFUMC10-36	Shutter
5		SFQAC10-05	Spring
6		SFQC320-01	Spring, Insulator
7		SFGAC10-02E	Insulator
8		SFMGQ20-01	Cover, Stater Frme Ass'y
9		SFMG520-31A	Stater Frame Coil
10		SFASC10-01A	Dumper
11		SFUM015-11	Spacer, LED
12		SFMZ172-01E	FG Detector Coil Ass'y
13		SFDJC10-01	Terminal Plate
14		SFMZC10-01A	Stater Frame
15	⚠	SFUMC10X01R	Terminal Plate
15 [XAL, XGF]	⚠	SFUMC10-26R	Terminal Plate
16		SFDJC10-04E	Connector, 3P
17 [XA]		SFNNC10X01	Name Plate
17 [XAL, XGE]		SFNNC10G01	Name Plate
17 [E]		SFNNC10S01	Name Plate
17 [XG]		SFNNC10N01	Name Plate
17 [XGF, XGB]		SFNNC10J01	Name Plate
20		SFACC10-01	Cabinet
21		SFUMC10-41	Plate, Speed Selector Switch
22		SFKTC10-05	Knob
23		SFUMC10-02	Supporter, 45 Adaptor
24		SFUMC10-01	45 Adaptor
25		SFQAC10-01	Spring, 45 Adaptor
26		SFTEC10-01A	Turntable
27		SFGKC10-01	Rubber, Cap (A)
28		SFGKC10-02	Rubber, Cap (B)
29		SFKTC10-04	Knob, Power Switch and Cleaner
30		SFDJC10-05E	Connector, 4P
31		SFUMC10-47	Shutter
32		SFUPC10-14	Supporter, Shutter
33		SFQH910-11	Spring, Shutter
34		SFUMC10X02	Cover, Unit
35		SFKTC10-07	Knob, Speed Select
36		SFUPC10-20	Plate, Cleaner Switch
37		SFDJC10-03E	Connector, 2P
40		SFKDC10-01E	Supporter, Record
41		SFUMC10-11	Cover, Lid
42		SFKTC10-06	Knob, Lock
43		SFQA829-2	Spring, Lock Knob
44		SFUMC10-28	Guide, Lock
45		SFUMC10-08E	Supporter, Record
46		SFUMC10-44	Spacer, LED (B)
47		SFUMC10-23	Plate, Operation Knob
48		SFUMC10-10E	Plate, Operation Knob
49		SFUMC10-43	Spacer, LED (A)
50		SFDJC10-06E	Connector, 11P
51		SFQAC10-02	Spring, Record Supporter
52		SFUMC10-17	Cover, Lamp
53		SFUPC10-06	Supporter, Guide Rail (A)
54		SFXJC10-06	Guide Rail
55		SFUMC10-30	Cover, Guide Rail
56		SFACC10-02E	Cabinet, Lid

Ref. No.		Part No.	Part Name & Description
57		SFUMC10-31	Supporter, Power Switch
58		SFUMC10-24	Plate, Power Switch
59		SFQAC10-06	Spring, Power Switch
60		SFKTC10-01	Knob, Power Siwtch
61		SFUMC10-09	Supporter, Power Siwtch
62		SFGCC10-03	Cushion, Dust Cover
63		SFADC10X01	Dust Cover
64		SFUMC10-35	Bushing (R)
65		SFXWC10-03	Spacer
66		SFUPC10-05	Supporter, Guide Rail (B)
67		SFUPC10-23A	Plate, Pulley
68		SFDJC10-02E	Connector, 4P
69		SFUPC10-01	Plate, Return Switch
70		SFUMC10-34	Bushing (L)
71		SFASC10-02A	Stay Ass'y
72		SFGCC10-02	Cushion, Dust Cover (A)
73		SFKKC10-01	Supporter, Dust Cover
74		SFUMC10-05	Drum, Arm Drive
75		SFUPC10-02A	Plate, Arm Drive
76		SFGBC10-01	Belt, Arm Drive
77		SFUMC10-39	Holder, Lmap
78		SFUMC10-48	Holder, LED
79		SFUMC10-18	Cover, Wire
80		SFDJ10-07E	Connector, 10P
81		SFUMC10-06	Cover, Motor
82		SFGCC10-01	Rubber, Motor
83		SFMHC10-01E	Motor, Arm Drive
84		SFUZC10-01E	Lope
TONE ARM PARTS			
90		SFPAM01001A	Tone Arm
91		EPS-310MC	Cartridge
92		SFDNC10-01	Pointer
93		SFPKD01001E	Arm Base
94		SFUPC10-16A	Lift Ass'y
95		SFQSC10-01	Spring, Lift
96		SFKTC10-08	Knob, Lock
97		SFQPC10-02	Spacer, Lock Knob
98		SFUMC10-38	Supporter, Lock Knob
99		SFQPC10-01	Spacer, Operation
100		SFPKD01002A	Cover, Arm Base
101		SFDPC10-06	Plate, Arm
102		SFDZC10-01E	Plunge, Ass'y
103		SFDJC10-08E	Connector, Arm
104		SFDHC10-01E	Connector, Phono
SCREWS, WASHERS and CIRCLIPS			
❶		**XTV3+8BFN**	Screw
❷		**XTN3+6B**	Screw
❸		SFXGC10-03	Screw
❹		SFPEV17202	Screw
❺		SFXGQ20-01	Screw
❻		**XTN26+6B**	Screw
❼		**XNS12**	Nut

Ref. No.		Part No.	Part Name & Description
❽		SFXWC10-01	Washer
❾		**XTN3+20BFZ**	Screw
❿		**XTN3+10BFZ**	Screw
⓫		**XTN3+8BFZ**	Screw
⓬		**XSN3+6**	Screw
⓭		**XWA3B**	Washer
⓮		SFXGC10-05	Screw
⓯		SFXGC10-02	Screw
⓰		**XTN3+12B**	Screw
⓱		XTS26+5JFC	Screw
⓲		**XTV3+6BFN**	Screw
㉑		SFXWC10-04	Washer
㉒		XYN23+C10BN	Screw
㉓		XYN23+C12BN	Screw
㉔		**XTB3+6BFN**	Screw
㉕		**XUC3FT**	Circlip
㉖		SFXW551D2	Wahser
㉗		**XWC3B**	Washer
㉘		SFPEV01001	Screw
㉙		XYN2+C5FZ	Screw
㉚		**XSN2+4BV**	Screw
㉛		**XWE2BW**	Washer
㉜		**XSN3+6BVS**	Screw
㉝		**XWA3BFZ**	Washer
㉞		**XTN2+4B**	Screw
㉟		XXA3D4FZ	Screw
ACCESSORIES			
A1 [XA, XAL, XG, XGF, XGB]		SFNUC10X01	Instruction Book
A1 [XGE]		SFNUC10G01	Instruction Book
A1 [E]		SFNUC10S01	Instruction Book
A2 [XA] only		SFDKI19118	2P Plug
A3		SFCZB30001	Brush
A4		SFCFB20502	Screw Driver
A5 [XA, E, XG, XGF, XGB]	⚠	RJA20Z	AC Cord
A5 [XAL]	⚠	RJA26Z	AC Cord
A5 [XGE]	⚠	RJA43Z	AC Cord
A6		SFWZC10M01	Sheet, for 25.30cm Record
A7		SFWZC10M02	Sheet, for 17cm Record
A8		SFDHC10-02	Phono Cord
PACKINGS			
P1		SFHPC10M02	Carton, Outer
P1 [XGF] only		SFHPC10C02	Carton, Outer
P2		SFHPC10-01	Carton, Inner
P2 [XGF] only		SFHPC10C01	Carton, Inner
P3		SFHHC10-01	Pad, Unit
P4		SFHSC10-03	Spacer, Corner (A)
P5		SFHSC10-04	Spacer, Corner (B)
P6		SFHSC10-02	Spacer, Arm
P7		SFHZC10-03	Sheet, Arm Spacer
P8		SFHSC10-01	Spacer, Turntable
P9		XSN4D20FYBS	Screw
P10		XWE4D8BW	Washer
P11		SFYF45A50	Polyethylene Bag, Unit
P12		SPP189	Polyethylene Bag, Cord
P13		SPB1083	Polyethylene Bag, Accessory
P14		SFHZC10-01	Handle

Areas

* (XA) is available in Asia, Latin America, Middle East and Africa.
* (XAL) is available in Australia.
* (XG) is available in European.
* (XGF) is available in France.
* (XGB) is available in Belugium.
* (XGE) is available in United Kingdom.
* (E) is available in Scandinavia.

■ EXPLODED VIEW

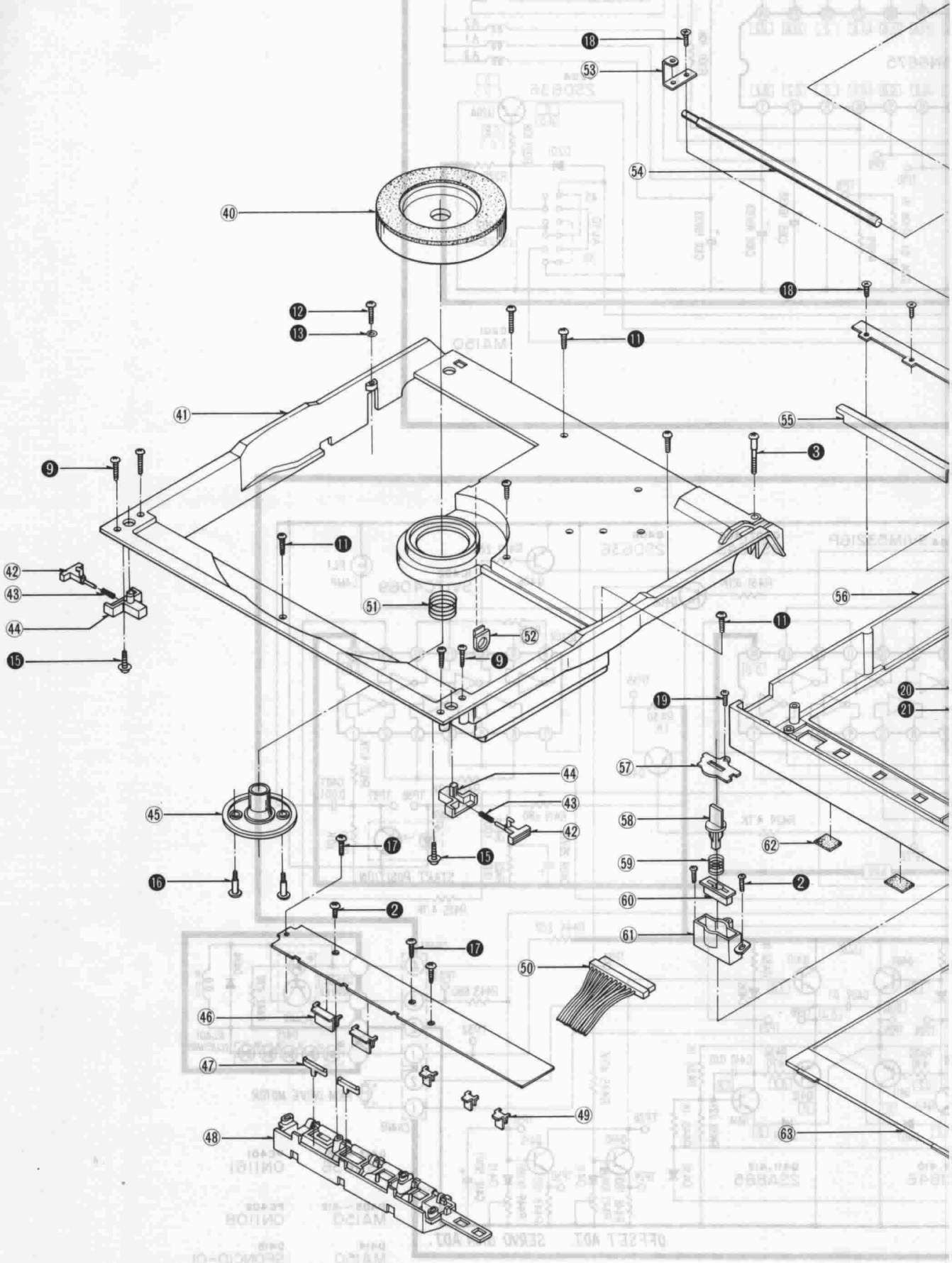

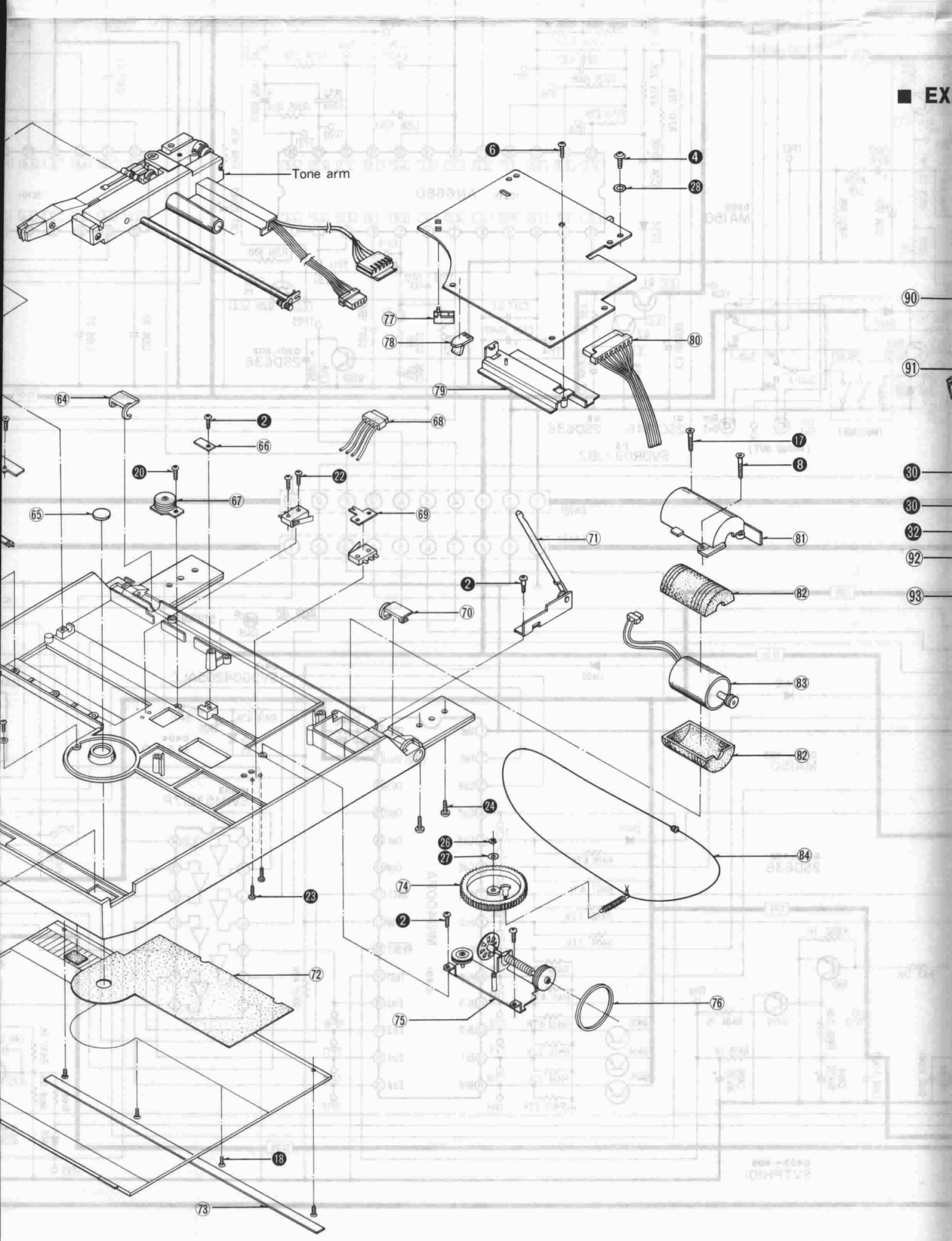
Tone arm
6
4
28
77
78
80
79
64
2
66
68
17
8
20
22
67
65
69
71
81
2
82
70
83
82
24
26
27
84
74
23
2
72
76
75
18
73
90
91
30
30
32
92
93

■ EXPLODED VIEW (Tone Arm)

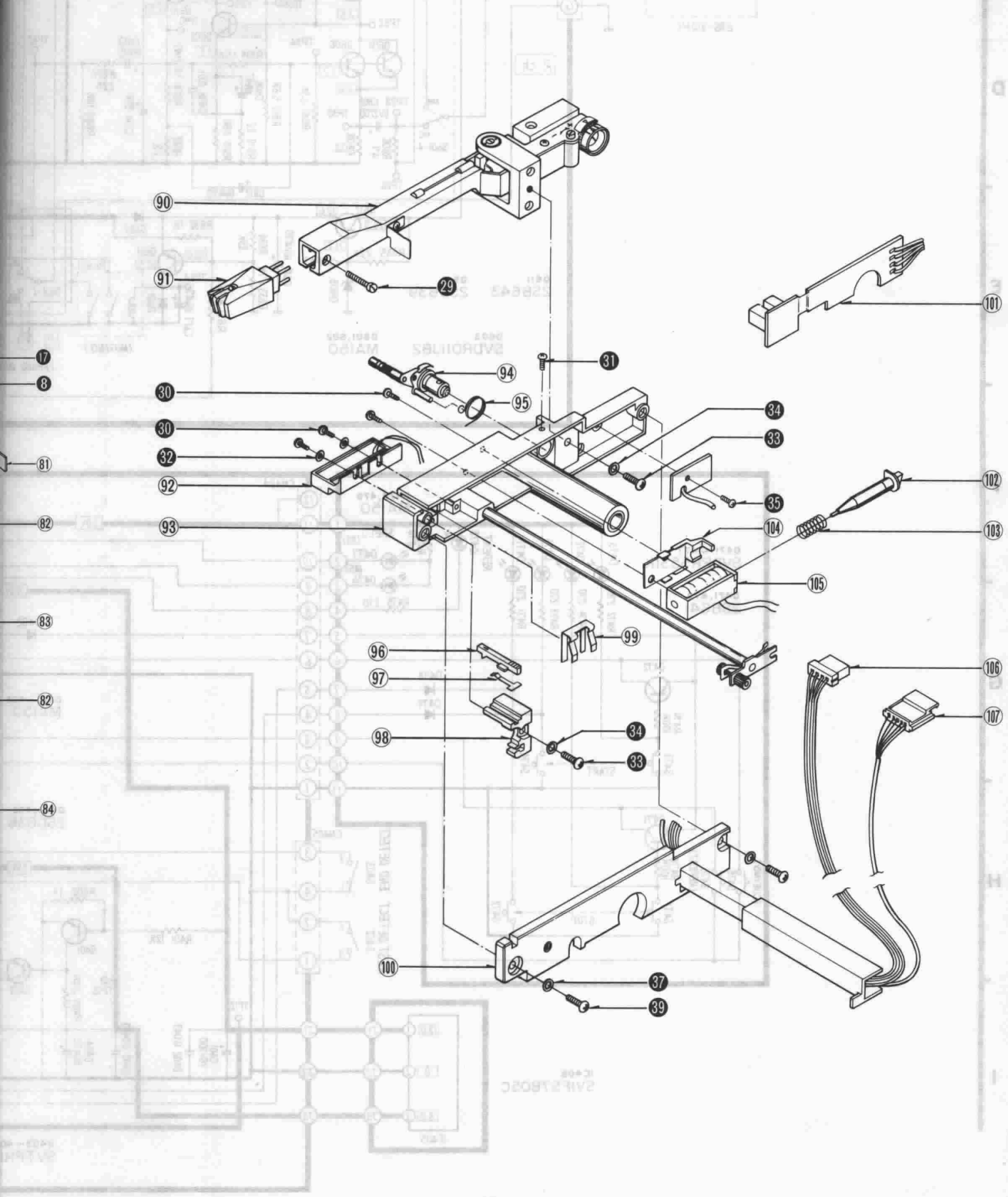

■ REPLACEMENT PARTS LIST (Electric Parts)

NOTES 1. Part numbers are indicated on most mechanical parts.
Please use this part number for parts orders.
2. ⚠ indicates that only parts specified by the manufacturer be used for safety.

Ref. No.		Part No.	Part Name & Description
INTEGRATED CIRCUIT			
IC1		SVIUPC14312	Integrated Circuit, Regulator
IC101		AN6675	Integrated Circuit, Drive
IC201		AN6680	Integrated Circuit, Control
IC401		MN1400PA	Integrated Circuit, Micro Computer
IC402		SVITC4069	Integrated Circuit, Inverter
IC403		SVIM53217P	Integrated Circuit, Buffer
IC404		SVIM53216P	Integrated Circuit, Buffer
IC405		SVIFS7805C	Integrated Circuit, Regulator
TRANSISTORS			
Q1, 409, 410		2SC1846-R	Transistor
Q101, 471, 472		2SB641	Transistor
Q2, 102, 201, 202, 204, 401, 402, 406, 413~416		2SD636	Transistor
Q203, 607, 608		**2SC1328-T**	Transistor
Q403~405		SVTPH101-Q2	Photo Transistor
Q407, 408, 611		2SB643	Transistor
Q411, 412		2SA885	Transistor
Q601, 602		2SA722-T	Transistor
Q603~606		2SC2385-G	Transistor
Q609, 610		2SA684NC-R	Transistor
Q612		2SD639	Transistor
PHOTO INTERRUPTERS			
PC401		ON1161	Photo Interrupter
PC402		ON1108	Photo Interrupter
DIODES			
D1	⚠	SVDS1RBA20Z	Rectifier
D2		SVDRM1Z	Diode
D3		SVDRD9.1JB2	Zener, 9.1V
D101		**2OA90**	Diode
D102, 201, 202, 401~412, 601, 602, 478, 479, 414		**MA162A**	Diode
D203~205		SVDSR-105C	Light Emitting Diode
D413		SVDGD4205ALC	Light Emitting Diode
D471~477		SVDPR5531K	Light Emitting Diode
D603		SVDRD11JB2	Zener, 11V
CRYSTAL			
X201		SVQU306115	Crystal
RELAY			
RL401		SFDZC10-01E	Relay
RL601		SFDYC10-01	Relay

Ref. No.		Part No.	Part Name & Description
SWITCHES			
S1	⚠	ESB6248	Switch, Power
S201		ESB6247	Switch, Cleaner
S202		SFDSC10-01	Switch, Speed Select
S401		ESB6247	Switch, Cover
S402,403		SFDS2MSL-4	Switch, Limit
S471~476		EVQP5R04K	Switch, Start, Stop, Repeat and Cueing
S501	⚠	SFDSHXW01318	Switch, Voltage Adjust
S601		SFDSTWA0118	Switch, MC-MM Select
VARIABLE RESISTORS			
R447		EVN38CA00B14	Variable Resistor, 10kΩ (B)
R449		EVN38CA00B13	Variable Resistor, 1kΩ (B)
FUSES			
F1	⚠	XBA2C10TRO	Fuse, DC Line (1A)
F2	⚠	XBA2C08TRO	Fuse, Secondary (800 mA)
F3	⚠	XBAS2C025T1A	Fuse, Primary (250 mA)
POWER TRANSFORMER			
T1	⚠	SLT12S5E	Power Transformer
LAMP			
PL1		SFDNC10-02	Lmap
RESISTOR			
R1		**ERD25FJ392**	Carbon, 3.9kΩ, 1/4W, ± 5%
R101		**ERD25FJ103**	Carbon, 10kΩ, 1/4W, ± 5%
R102		**ERX1ANJ3R3**	Metal Film, 3.3Ω, 1W, ± 5%
R103		**ERD25FJ472**	Carbon, 4.7kΩ, 1/4W, ± 5%
R104		**ERD25TJ473**	Carbon, 47kΩ, 1/4W, ± 5%
R105		**ERD25FJ103**	Carbon, 10kΩ, 1/4W, ± 5%
R106		**ERD25FJ150**	Carbon, 15Ω, 1/4W, ± 5%
R107		**ERD25FJ562**	Carbon, 5.6kΩ, 1/4W, ± 5%
R108		**ERD25TJ473**	Carbon, 47kΩ, 1/4W, ± 5%
R109		**ERD25TJ153**	Carbon, 15kΩ, 1/4W, ± 5%
R110		**ERD25FJ222**	Carbon, 2.2kΩ, 1/4W, ± 5%
R201		**ERD25FJ331**	Carbon, 330Ω, 1/4W, ± 5%
R202		**ERD25FJ102**	Carbon, 1kΩ, 1/4W, ± 5%
R203		**ERD25FJ470**	Carbon, 47Ω, 1/4W, ± 5%
R204		**ERD25FJ272**	Carbon, 2.7kΩ, 1/4W, ± 5%
R205		**ERD25TJ124**	Carbon, 120kΩ, 1/4W, ± 5%
R206		**ERD25TJ183**	Carbon, 18kΩ, 1/4W, ± 5%
R207		**ERD25TJ563**	Carbon, 56kΩ, 1/4W, ± 5%
R208		**ERD25TJ224**	Carbon, 220kΩ, 1/4W, ± 5%
R209		**ERD25TJ154**	Carbon, 150kΩ, 1/4W, ± 5%
R210		**ERD25TJ223**	Carbon, 22kΩ, 1/4W, ± 5%
R211		**ERD25FJ103**	Carbon, 10kΩ, 1/4W, ± 5%
R212, 213		**ERD25TJ223**	Carbon, 22kΩ, 1/4W, ± 5%
R214		**ERD25FJ471**	Carbon, 470Ω, 1/4W, ± 5%
R215		**ERD25FJ221**	Carbon, 220Ω, 1/4W, ± 5%
R216		**ERD25TJ154**	Carbon, 150kΩ, 1/4W, ± 5%
R217		**ERD25TJ223**	Carbon, 22kΩ, 1/4W, ± 5%
R218		**ERD25FJ102**	Carbon, 1kΩ, 1/4W, ± 5%
R219		**ERD25FJ332**	Carbon, 3.3kΩ, 1/4W, ± 5%

Ref. No.		Part No.	Part Name & Description			
R220, 221		**ERD25FJ103**	Carbon,	10kΩ,	1/4W,	± 5%
R222		**ERD25FJ391**	Carbon,	390Ω,	1/4W,	± 5%
R223		**ERD25FJ391**	Carbon,	390Ω,	1/4W,	± 5%
R224		**ERD25TJ273**	Carbon,	27kΩ,	1/4W,	± 5%
R401		**ERD25TJ123**	Carbon,	12kΩ,	1/4W,	± 5%
R402		**ERD25FJ102**	Carbon,	1kΩ,	1/4W,	± 5%
R403		**ERD25FJ222**	Carbon,	2.2kΩ,	1/4W,	± 5%
R404		**ERD25FJ150**	Carbon,	15Ω,	1/4W,	± 5%
R405		**ERD25FJ102**	Carbon,	1kΩ,	1/4W,	± 5%
R406, 407		**ERD25FJ472**	Carbon,	4.7kΩ,	1/4W,	± 5%
R408, 409		**ERD25FJ222**	Carbon,	2.2kΩ,	1/4W,	± 5%
R410, 411		**ERD25TJ473**	Carbon,	47kΩ,	1/4W,	± 5%
R412		**ERD25FJ472**	Carbon,	4.7kΩ,	1/4W,	± 5%
R413~415		**ERD25TJ223**	Carbon,	22kΩ,	1/4W,	± 5%
R416		**ERD25TJ333**	Carbon,	33kΩ,	1/4W,	± 5%
R417		**ERD25TJ473**	Carbon,	47kΩ,	1/4W,	± 5%
R418		**ERD25FJ472**	Carbon,	4.7kΩ,	1/4W,	± 5%
R419		**ERD25FJ681**	Carbon,	680Ω,	1/4W,	± 5%
R420		**ERD25FJ103**	Carbon,	10kΩ,	1/4W,	± 5%
R421, 422		**ERD25FJ472**	Carbon,	4.7kΩ,	1/4W,	± 5%
R423		**ERD25TJ124**	Carbon,	120kΩ,	1/4W,	± 5%
R424		**ERD25FJ101**	Carbon,	100Ω,	1/4W,	± 5%
R425, 426		**ERD25FJ472**	Carbon,	4.7kΩ,	1/4W,	± 5%
R427		**ERD25TJ223**	Carbon,	22kΩ,	1/4W,	± 5%
R428, 429		**ERD25FJ472**	Carbon,	4.7kΩ,	1/4W,	± 5%
R430		**ERD25FJ102**	Carbon,	1kΩ,	1/4W,	± 5%
R431		**ERD25FJ472**	Carbon,	4.7kΩ,	1/4W,	± 5%
R432, 433		**ERD25FJ102**	Carbon,	1kΩ,	1/4W,	± 5%
R434, 435		**ERD25FJ471**	Carbon,	470Ω,	1/4W,	± 5%
R436, 437		**ERD25FJ102**	Carbon,	1kΩ,	1/4W,	± 5%
R438, 439		**ERD25TJ223**	Carbon,	22kΩ,	1/4W,	± 5%
R440, 441		**ERD25FJ102**	Carbon,	1kΩ,	1/4W,	± 5%
R442		**ERD25FJ471**	Carbon,	470Ω,	1/4W,	± 5%
R443		**ERD25FJ681**	Carbon,	680Ω,	1/4W,	± 5%
R444		**ERD25FJ221**	Carbon,	220Ω,	1/4W,	± 5%
R445		**ERD25TJ473**	Carbon,	47kΩ,	1/4W,	± 5%
R446		**ERD25FJ181**	Carbon,	180Ω,	1/4W,	± 5%
R448		**ERD25FJ121**	Carbon,	120Ω,	1/4W,	± 5%
R450		**ERD25FJ181**	Carbon,	180Ω,	1/4W,	± 5%
R471~475		**ERD25FJ271**	Carbon,	270Ω,	1/4W,	± 5%
R476		**ERD25TJ104**	Carbon,	100kΩ,	1/4W,	± 5%
R477		**ERD25FJ271**	Carbon,	270Ω,	1/4W,	± 5%
R479		**ERD25TJ104**	Carbon,	100kΩ,	1/4W,	± 5%
R601, 602		ERQ25CKF4700	Metal Film,	470Ω,	1/4W,	± 1%
R603, 604		**ERD25FJ562**	Carbon,	5.6kΩ,	1/4W,	± 5%
R605, 606		ERO25CKF47R0	Metal Film,	47Ω,	1/4W,	± 1%
R607, 608		ERO25CKF82R0	Metal Film,	82Ω,	1/4W,	± 1%
R609, 610		ERO25CKF3301	Metal Film,	3.3kΩ	1/4W,	± 1%
R611, 612		**ERD25FJ562**	Carbon,	5.6kΩ,	1/4W,	± 5%
R613, 614		ERO25CKF1501	Metal Film,	1.5kΩ,	1/4W,	± 1%
R615, 616		**ERD25FJ271**	Carbon,	270Ω,	1/4W,	± 5%
R617, 618		**ERD25FJ220**	Carbon,	22Ω,	1/4W	± 5%
R619, 620		**ERD25FJ681**	Carbon,	680Ω,	1/4W,	± 5%
R621, 622		**ERD25FJ3R9**	Carbon,	3.9Ω,	1/4W,	± 5%
R623, 624		**ERG1ANJ560**	Metal Oxide,	56Ω,	1W,	± 5%
R625, 626		**ERX12ANJ1R8**	Metal Film,	1.8Ω,	1/2W,	± 5%

Ref. No.		Part No.	Part Name & Description			
R627, 628		**ERD25FJ222**	Carbon,	2.2kΩ,	1/4W,	± 5%
R629, 630		**ERD25FJ103**	Carbon,	10kΩ,	1/4W,	± 5%
R631		**ERD25FJ472**	Carbon,	4.7kΩ,	1/4W,	± 5%
R632		**ERD25FJ102**	Carbon,	1kΩ,	1/4W,	± 5%
R633		**ERD25TJ473**	Carbon,	47kΩ,	1/4W,	± 5%
R634		**ERD25FJ332**	Carbon,	3.3kΩ,	1/4W,	± 5%
R635		**ERD25FJ222**	Carbon,	2.2kΩ,	1/4W,	± 5%
CAPACITOR						
C1, 2		ECKD1H223PF	Ceramic,	0.022μF,	50V,	+80% −20%
C3	⚠	**ECEB1HS102**	Electrolytic,	1000μF,	50V	
C4, 5		ECQM1H104KZ	Polyester,	0.1μF,	50V,	±10%
C6		ECQM1H153KZ	Polyester,	0.015μF,	50V,	±10%
C7		**ECEA1CS331**	Electrolytic,	330μF,	16V	
C8		**ECEA1AS471**	Electrolytic,	470μF,		
C101~103		**ECEA1CS330**	Eelctrolytic,	33μF,	16V	
C104~107		ECQM1H104KZ	Polyester,	0.1μF,	50V,	±10%
C108		**ECEA1ES101**	Electrolytic,	100μF,	25V	
C109, 110		ECQM1H104KZ	Polyester,	0.1μF,	50V,	±10%
C111		ECQM1H562KZ	Polyester,	0.0056μF,	50V,	±10%
C112		**ECEA25Z4R7**	Electrolytic,	4.7μF,	25V	
C201		**ECEA1CS330**	Electrolytic,	33μF,	16V	
C202, 203		**ECEA50Z1**	Electrolytic,	1μF,	50V	
C204		ECQM1H473KZ	Polyester,	0.047μF,	50V	±10%
C205		**ECEA1AS221**	Electrolytic,	220μF,	10V	
C206		**ECEA50Z1**	Electrolytic,	1μF,	50V	
C207		ECCD1H151K	Ceramic,	150pF,	50V,	±10%
C208		ECCD1H330K	Ceramic,	33pF,	50V,	±10%
C209		**ECEA1ES470**	Electrolytic,	47μF,	25V	
C210		ECQM1H224KZ	Polyester,	0.22μF,	50V,	±10%
C211		ECQM1H473KZ	Polyester,	0.047μF,	50V,	±10%
C212		**ECEA50Z3R3**	Electrolytic,	3.3μF,	50V	
C213		ECCD1H471K	Ceramic,	470pF,	50V,	±10%
C214		**ECEA1ES101**	Electrolytic,	100μF,	25V	
C215		**ECEA50Z1**	Electrolytic,	1μF,	50V	
C216		**ECEA1ES470**	Electrolytic,	47μF,	25V	
C217		ECKD1E104ZFZ	Ceramic,	0.1μF,	25V,	+80% −20%
C218		**ECEA50Z1**	Electrolytic,	1μF,	50V	
C401		**ECEA1ES101**	Eelctrolytic,	100μF,	25V	
C402, 403		ECKF1H473ZF	Ceramic,	0.047μF,	50V,	+80% −20%
C404		**ECEA0JS471**	Electrolytic,	470μF,	6V,	
C405		**ECEA1CS330**	Electrolytic,	33μF,	16V	
C406		ECCD1H101K	Ceramic,	100pF,	50V,	±10%
C407		ECQM1H102KZ	Polyester,	0.001μF,	50V,	±10%
C408		**ECEA1ES220**	Electrolytic,	22μF,	25V	
C409		ECQM1H104KZ	Polyester,	0.1μF,	50V,	±10%
C410, 411		ECQM1H103KZ	Polyester,	0.01μF,	50V,	±10%
C412		**ECEA50Z1**	Electrolytic,	1μF,	50V	
C601, 602		**ECEA6Z2200**	Electrolytic,	2200μF,	6V	
C603, 604		**ECEA10Z100**	Electrolytic,	100μF,	10V	
C605, 606		**ECEA25Z47**	Electrolytic,	47μF,	25V	
C607, 608		ECQM1H103KZ	Polyester,	0.01μF,	50V,	±10%
C609, 610		**ECEA16M10R**	Electrolytic,	10μF,	16V	
C611, 612		**ECEB6Z470**	Electrolytic,	470μF,	6V	
C613, 614		**ECEA50Z1**	Electrolytic,	1μF,	50V	
C615, 616		ECQM1H102KZ	Polyester,	0.001μF,	50V,	±10%
C617		**ECEA1AS470**	Electrolytic,	47μF,	10V	
C618		**ECEB1CS471**	Electrolytic,	470μF,	16V	

■ BLOCK DIAGRAM

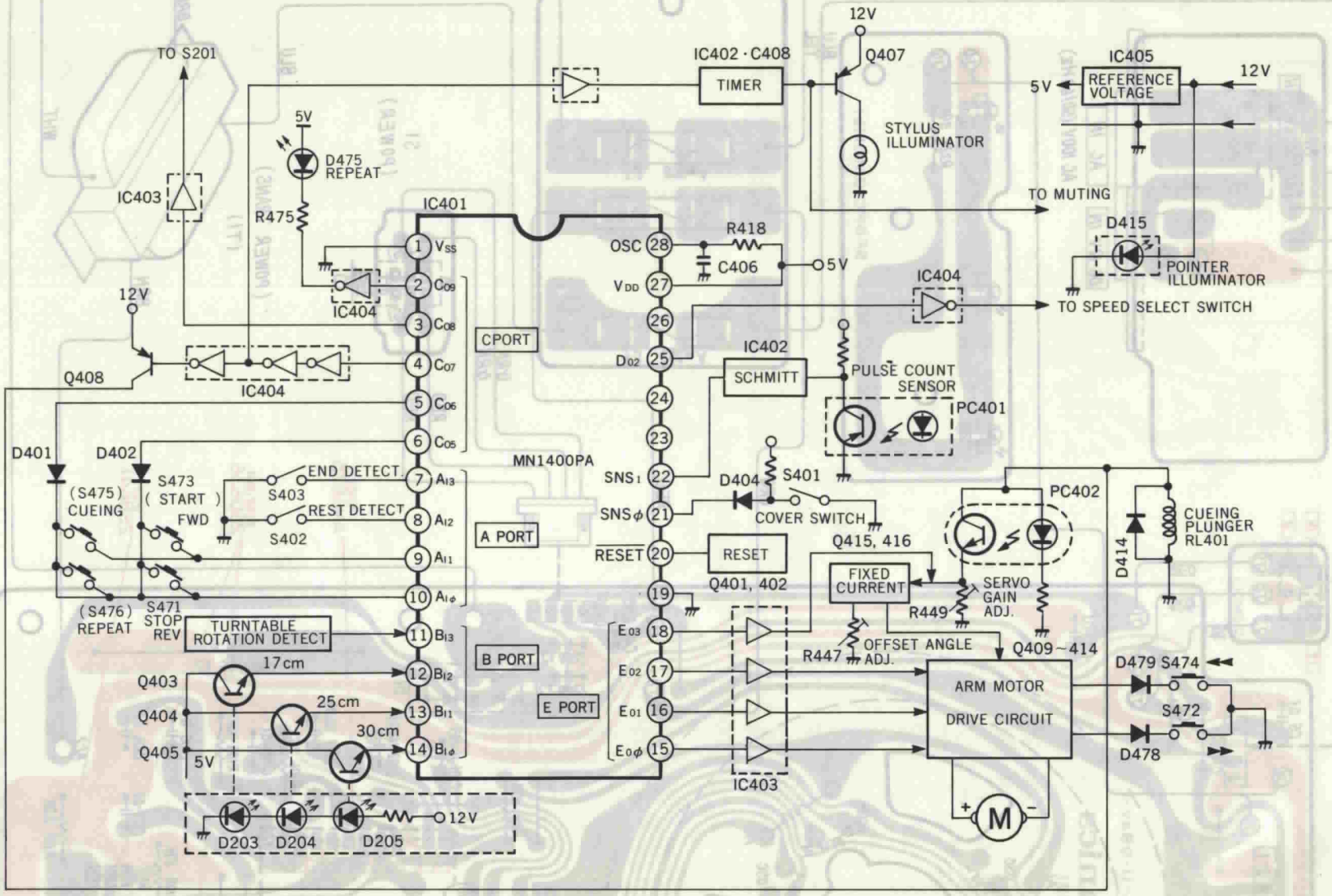

■ TERMINAL GUIDE OF TRANSISTOR AND IC

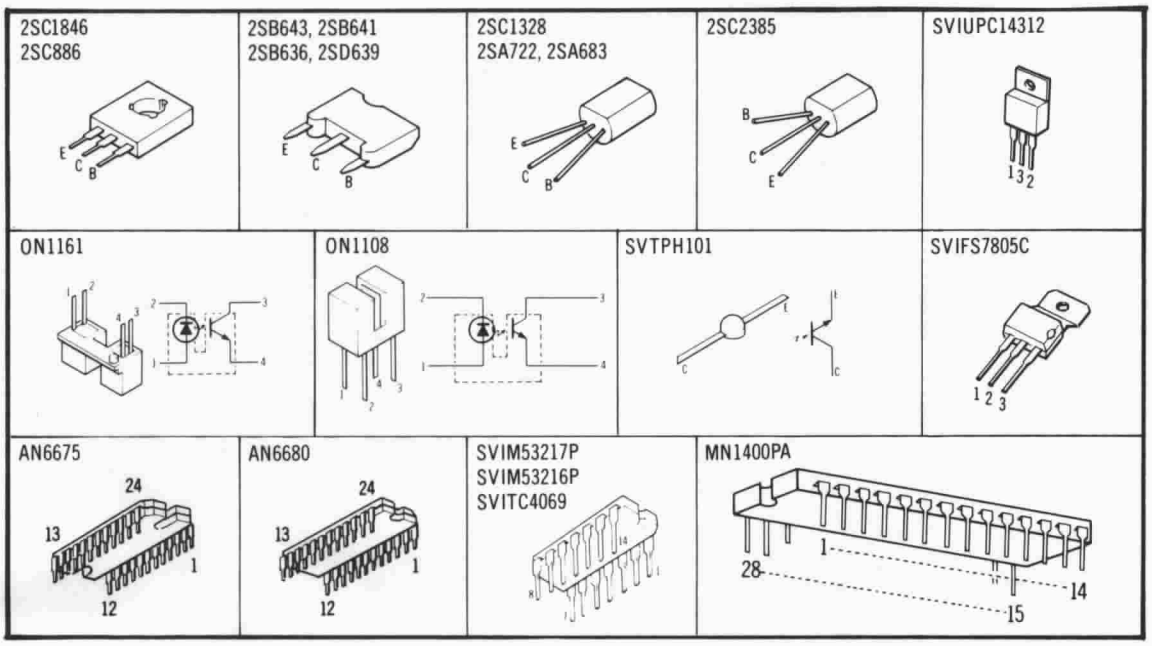

NOTES:

1. **S1-1, 1-2**: Stand-by Switch in "**ON**" position.
2. **S2**: AC-DC Select Switch in "**AC**" position.
3. **S201**: Cleaner ( ) switch in "**ON**" position. (not push condition)
4. **S202**: Speed Select Switch in "**AUTO**" position.
5. **S401**: Cover Switch in "**ON**" position. (push condition)
6. **S402**: Start position Switch in "**OFF**" position. (not push condition)
7. **S403**: Return position Switch in "**OFF**" position. (not push condition)
8. **S471, 472**: Stop Switch in "**OFF**" position. (not push condition)
9. **S473, 474**: Start switch in "**OFF**" position. (not push condition)
10. **S475**: Cueing switch in "**OFF**" position (not push condition)
11. **S476**: Repeat switch in "**OFF**" position (not push condition)
12. **S601-1 ~ 601-4**: MC-MM Select switch in "**MC**" position. (MC MM)
13. **S701**: Power source switch in "**220-240V**" position.
14. ▭ Indicated voltage values are the standard values for the unit measured by the DC electronic circuit tester (high impedance) with the chassis taken as standard. Therefore, there may exist some errors in the voltage values, depending on the internal impedance of the DC circuit tester.
15. This schematic diagram may be modified at any time with the development of new technology.
16. ⚠ indicates that only parts specified by the manufacture be used for safety.

■ BLOCK DIAGRAM OF IC

IC201 (AN6680)

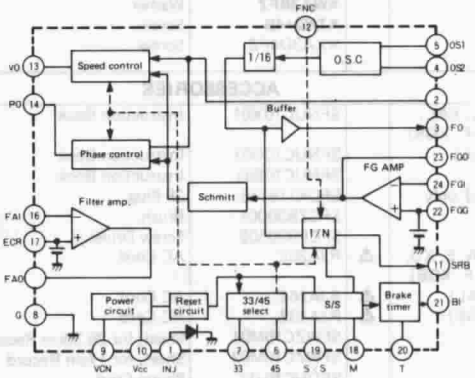

IC101 (AN6675)

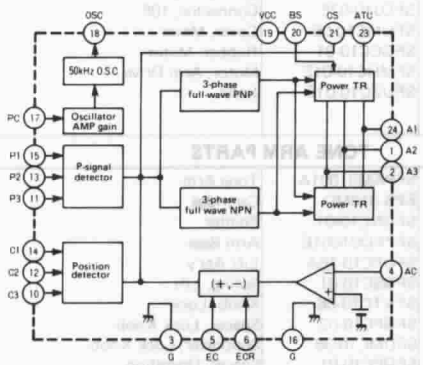

■ REFERENCE VOLTAGE OF WAVEFORM AT EACH IC

This indicated voltage values and waveform are measured by oscilloscope at 33 rpm rotation.

IC101 (AN6675)

	Start	Stop		Start	Stop		Start	Stop
①	4.0V		⑨	0V	0V			
②		0.2V	⑩	6.4V	6.4V	⑱	22.0V	Same as at

NOTES:

1. **S1-1, 1-2**: Stand-by Switch in "**ON**" position.
2. **S2**: AC-DC Select Switch in "**AC**" position.
3. **S201**: Cleaner ( ) switch in "**ON**" position. (not push condition)
4. **S202**: Speed Select Switch in "**AUTO**" position.
5. **S401**: Cover Switch in "**ON**" position. (push condition)
6. **S402**: Start position Switch in "**OFF**" position. (not push condition)
7. **S403**: Return position Switch in "**OFF**" position, (not push condition)
8. **S471, 472**: Stop Switch in "**OFF**" position. (not push condition)
9. **S473, 474**: Start switch in "**OFF**" position. (not push condition)
10. **S475**: Cueing switch in "**OFF**" position (not push condition)
11. **S476**: Repeat switch in "**OFF**" position (not push condition)
12. **S601-1 ~ 601-4**: MC-MM Select switch in "**MC**" position. (MC MM)
13. **S701**: Power source switch in "**220-240V**" position.
14. ▭ Indicated voltage values are the standard values for the unit measured by the DC electronic circuit tester (high impedance) with the chassis taken as standard. Therefore, there may exist some errors in the voltage values, depending on the internal impedance of the DC circuit tester.
15. This schematic diagram may be modified at any time with the development of new technology.
16. ⚠ indicates that only parts specified by the manufacture be used for safety.

■ BLOCK DIAGRAM OF IC

IC201 (AN6680)

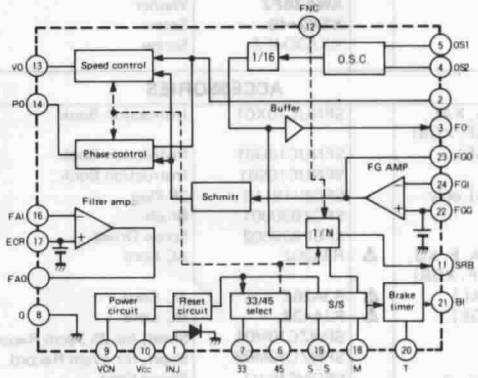

IC101 (AN6675)

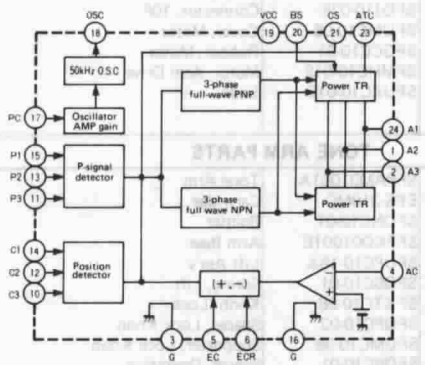

■ REFERENCE VOLTAGE OF WAVEFORM AT EACH IC

This indicated voltage values and waveform are measured by oscilloscope at 33 rpm rotation.

IC101 (AN6675)

	Start	Stop		Start	Stop		Start	Stop
① ② ㉔	4.0V, 12.0V, 0	0.2V	⑨	0V	0V	⑱	22.0V, 0	Same as at left
			⑩	6.4V	6.4V			
			⑪ ⑬ ⑮	50kHz, 2.5V, 7.0V, 0	Same as at left	⑲		
③	0V	0V				⑳	11.4V	11.4V
④	2.7V	0.2V						
⑤	5.0V	5.0V	⑫	6.4V	6.2V	㉑		
⑥	5.0V	6.3V	⑭	6.6V	7.0V	㉒	0V	0V
⑦	0V	0V	⑯	0V	0V	㉓	11.4V	11.4V
⑧	4.6V	4.6V	⑰	6.4V	6.4V			

IC201 (AN6680)

	Start	Stop		Start	Stop		Start	Stop
①	2.5V	2.4V	⑦	0V	4.0V	⑮	5.0V	8.0V
② ③	4μs, 4.0V, 0	Same as at left	⑧	0V	0V	⑯	5.0V	2.0V
			⑨	10.0V	10.0V	⑰	5.0V	5.0V
			⑩	9.0V	9.0V	⑱	0V	0V
④	0.25μs, 2.6V, 0.8V, 0	Same as at left	⑪	10ms, 1.0V, 0	Same as at left	⑲	6.8V	0.2V
						⑳	0.4V	6.0V
						㉑	1.6V	1.5V
						㉒	2.9V	2.7V
			⑫	0V	0V	㉓	20ms, 2.5V, 4.5V, 0	2.8V
⑤	0.25μs, 3.8V, 2.0V, 0	Same as at left	⑬	4.8V	0.2V			
			⑭	20ms, 5.0V	20ms, 0	㉔	2.8V	2.8V
⑥	3.5V	0V						