ORDER NO. SD7811-1470

Service Manual

ST-8044/K

FM/AM Stereo Tuner

ST-8044

(E), (EG), (X), (XA), (XAL), (XGH)

ST-8044K

(E), (EG), (X), (XA), (XAL), (XGH), (EB)

ST-8044

ST-8044K

* The models ST-8044 (E, EG) and ST-8044K (E, EG) are available in Scandinavia and European only.
* The models ST-8044 (X, XA) and ST-8044K (X, XA) are available in Asia, Latin America, Middle East and Africa only.
* The models ST-8044 (XAL)and ST-8044K (XAL) are available in Australia only.
* The models ST-8044 (XGH) and ST-8044K (XGH) are available in Holland only.
* The mode: ST-8044K (EB) is available in Belgium only.

TECHNICAL SPECIFICATIONS

Specifications are subject to change without notice for further improvement.

[DIN 45 500]

FM TUNER SECTION

Frequency range		88 ~ 108 MHz
Antenna terminals		300Ω (balanced), 75Ω (unbalanced)
Sensitivity (±40 kHz deviation)		
S/N 30 dB		1.9μV (300Ω), 1.3μV (75Ω)
S/N 26 dB		1.7μV (300Ω), 1.2μV (75Ω)
S/N 20 dB		1.5μV (300Ω), 0.9μV (75Ω)
IHF usable sensitivity		1.9μV (IHF '58)
IHF S/N 46 dB stereo quieting sensitivity		25μV (75Ω)
Total harmonic distortion	MONO	0.15%
	STEREO	0.3%
S/N (±40 kHz deviation)	MONO	68 dB (IHF: 75 dB)
	STEREO	65 dB (IHF: 70 dB)
Frequency response		20 Hz ~ 15 kHz, +0.5 dB, −1.5 dB
Alternate channel selectivity		75 dB
Capture ratio		1.0 dB
Image rejection at 98 MHz		55 dB
IF rejection at 98 MHz		95 dB
Spurious response rejection at 98 MHz		50 dB
AM suppression		55 dB
Stereo separation	1 kHz	45 dB, 10 kHz 35 dB
Leak carrier	19 kHz	−35 dB (−40 dB, IHF)
	38 kHz	−48 dB (−40 dB, IHF)
Limiting point		1.2μV
Bandwidth	IF amplifier	180 kHz
	FM demodulator	1000 kHz
Channel balance (250 Hz ~ 6300 Hz)		±1.5 dB

AM TUNER SECTION

Frequency range	525 ~ 1605 kHz
Sensitivity (S/N 20 dB)	30μV, 250μV/m
Selectivity	30 dB
Image rejection at 1000 kHz	50 dB
IF rejection at 1000 kHz	40 dB

GENERAL

Output voltage	0.6V
Power consumption	16W
Power supply (50 Hz/60 Hz)	110V/120V/220V/240V
Dimensions (W x H x D)	430 x 142 x 254 mm (16⅞" x 5⅝" x 10")
Weight	4.2 kg (9.3 lb.)

Technics

Matsushita Electric Trading Co., Ltd.
P.O. Box 288, Central Osaka Japan

TECHNISCHE DATEN

Spezifikationen können infolge von Verbesserungen ohne Ankündigung geändert werden.

[DIN 45 500]

UKW-TUNERTEIL

Frequenzgang		88 ~ 108 MHz
Antennenanschluss		300Ω (symmetrisch), 75Ω (unsymmetrisch)
Empfindlichkeit (±40 kHz Hub)		
30 dB Rauschabstand		1,9μV (300Ω), 1,3μV (75Ω)
26 dB Rauschabstand		1,7μV (300Ω), 1,2μV (75Ω)
20 dB Rauschabstand		1,5μV (300Ω), 0,9μV (75Ω)
Empfindlichkeit nach IHF		1,9μV (IHF '58)
46 dB Rauschabstand utilisable Empfindlichkeit nach IHF		25μV (75Ω), STEREO
Klirrfaktor	MONO	0,15%
	STEREO	0,3%
Rauschabstand (±40 kHz Hub)		
	MONO	68 dB (IHF: 75 dB)
	STEREO	65 dB (IHF: 70 dB)
Frequenzgang		20 Hz ~ 15 kHz, +0,5 dB, −1,5 dB
Selektivität		75 dB
Gleichwellen-Selektion		1,0 dB
Spiegelfrequenzunterdrückung bei 98 MHz		55 dB
ZF-Festigkeit bei 98 MHz		85 dB
Unselektivität-Dämpfung bei 98 MHz		80 dB
AM-Unterdrückung		55 dB
Kanaltrennung	1kHz	45 dB, 10 kHz 35 dB
Hilfsträgerdämpfung (Pilotton)		
	19 kHz	−35 dB (−40 dB, IHF)
	38 kHz	−48 dB (−40 dB, IHF)
Begrenzungseinsatz		1,2μV
Bandbreite	ZF-Verstärker	180 kHz
	Ratiodetektor	1000 kHz
Kanalabweichung (250 Hz ~6300 Hz)		±1,5 dB

AM-TUNERTEIL

Frequenzgang	525 ~ 1605 kHz
Empfindlichkeit (20 dB Rauschabstand)	30μV, 250μV/m
Selektivität	30 dB
Spiegelfrequenz-Selektion bei 1000 kHz	50 dB
ZF-Festigkeit bei 1000 kHz	40 dB

ALLGEMEINE DATEN

Ausgangssapannung	0,6V
Leistungsaufnahme	16W
Netzspannung (50 Hz/60 Hz)	110V/120V/220V/240V
Abmessungen (B x H x T)	430 x 142 x 254 mm
Gewicht	4,2 kg

CARACTERISTIQUES TECHNIQUES

Sujet à changement sans préaris.

[DIN 45 500]

PARTIE TUNER FM

Gamme reçue		88 ~ 108 MHz
Impédance d'antenne		300Ω (symétrique) 75Ω (asymétrique)
Sensibilité (±40 kHz déviation)		
Signal/bruit 30 dB		1,9μV (300Ω), 1,3μV (75Ω)
Signal/bruit 26 dB		1,7μV (300Ω), 1,2μV (75Ω)
Signal/bruit 20 dB		1,5μV (300Ω), 0,9μV (75Ω)
IHF Sensibilité		1,9μV (IHF '58)
IHF Sensibilité pour S/B 46 dB		25μV (75Ω), STÉREO
Distorsion harmonique total		
	MONO	0,15%
	STEREO	0,3%
Signal/bruit (±40 kHz déviation)	MONO	68 dB (IHF: 75 dB)
	STEREO	65 dB (IHF: 70 dB)
Réponse de fréquence		20 Hz ~ 15 kHz, +0,5dB, −1,5 dB
Sélectvité en canaux alternés		75 dB
Taux de capture		1,0 dB
Réjection de fréquence image à 98 MHz		55 dB
Réjection FI à 98 MHz		85 dB
Réjection de réception non sélective à 98 MHz		80 dB
Suppression AM		55 dB
Séparation stéréophonique	1 kHz	45 dB, 10 kHz 35 dB
Courant porteur de dispersion	19 kHz	−35 dB (−40 dB, IHF)
	38 kHz	−48 dB (−40 dB, IHF)
Point limite		1,2μV
Largeur de bande	Amplificateur FI	180 kHz
	Démodulateur FM	1000 kHz
Equilibrage de canaux (250 Hz ~ 6300 Hz)		±1,5dB

PARTIE TUNER AM

Gamme reçue	525 ~ 1605 kHz
Sensibilité (Rapport S/B 20 dB)	30μV, 250μV/m
Sélectivité	30 dB
Réjection de fréquence image à 1000 kHz	50 dB
Réjection FI à 1000 kHz	40 dB

GENERALITES

Tention de sortie	0,6V
Consommation	16W
Alimentation (50 Hz/60 Hz)	110V/120V/220V/240V
Dimensions (L x H x P)	430 x 142 x 254 mm
Poids	4,2 kg

■ CONTENTS

LOCATION OF CONTROLS . . . 3
DIAL CORD INSTALLATION GUIDE . . . 4
ALIGNMENT POINTS . . . 4
ALIGNMENT INSTRUCTIONS (ENGLISH) . . . 5
ANWEISUNGEN FÜR ABGLEICHUNG (DEUTSCH) . . . 6
INSTRUCTIONS D'ALIGNEMENT (FRANÇAIS) . . . 7
TO REMOVE CABINET AND BOTTOM BOARD . . . 8
BLOCK DIAGRAM . . . 8
REPLACEMENT PARTS LIST (Electric Parts) . . . 9 ~ 10
PRINTED CIRCUIT BOARD WIRING VIEW . . . 11 ~ 12
SCHEMATIC DIAGRAM . . . 13 ~ 15
BLOCK DIAGRAM OF IC . . . 15
EXPLODED VIEWS . . . 16 ~ 17
REPLACEMENT PARTS LIST (Cablinet & Chassis Parts) . . . 18
REPLACEMENT PARTS LIST (Accessories & Packing Parts) . . . 19
CHANGE OF PARTS LIST . . . ST-8044K . . . 19
ACCESSORIES . . . 19
PACKINGS . . . 20
NEW INDICATION MARK . . . 20

■ LOCATION OF CONTROLS

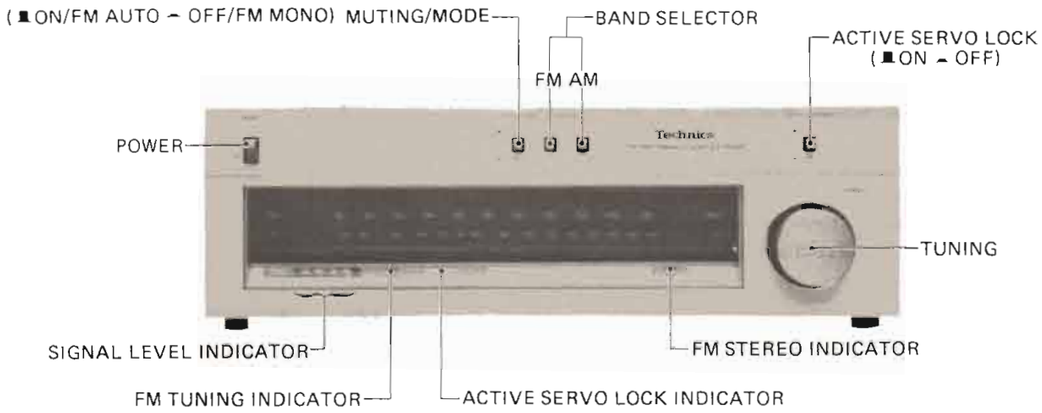

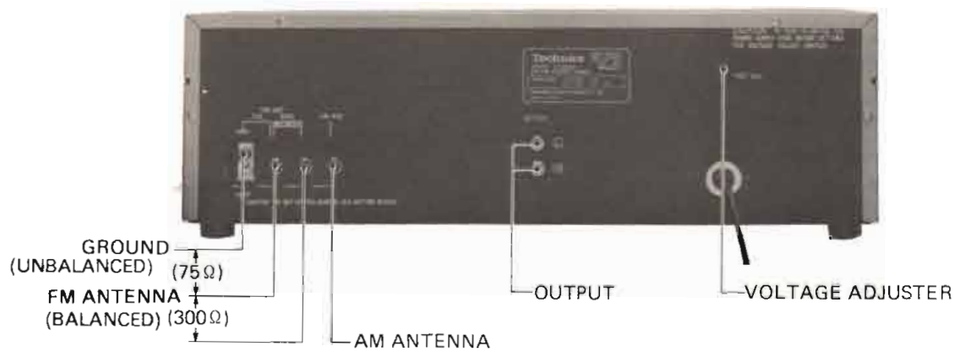

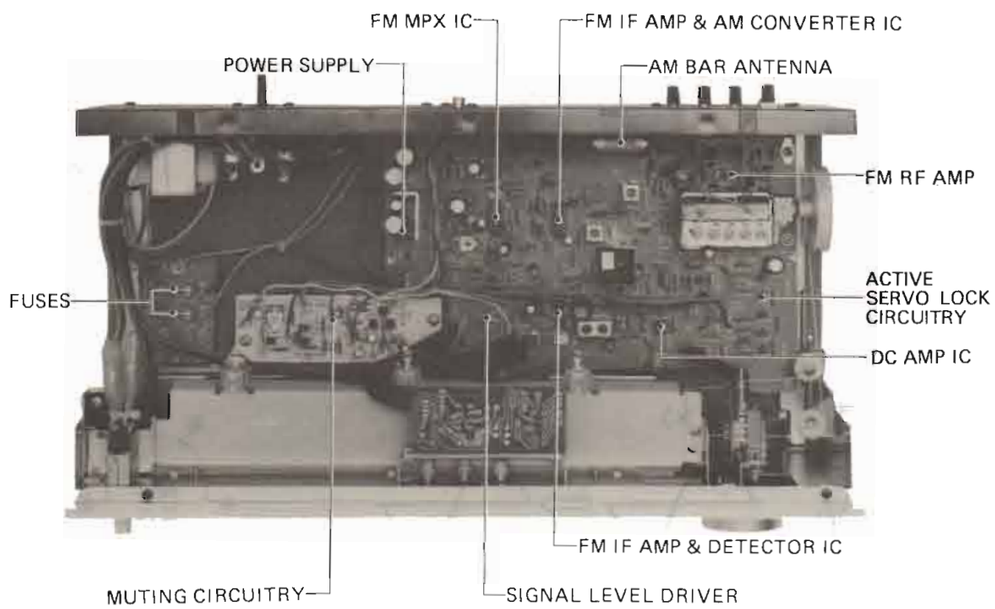

■ ALIGNMENT INSTRUCTIONS — ENGLISH

Notes:
1. Band selector switch..... { AM (AM Alignment) / FM (FM Alignment)
2. FM muting & mode switch .... off/mono
3. Active servo lock switch..... off
4. Maintain line voltage at rated voltage.
5. 300Ω FM dummy antenna ..... Refer to fig. 1
6. Output of signal generator should be no higher than necessary to obtain an output reading.

	AM/FM SIGNAL GENERATOR CONNECTION	AM/FM SIGNAL GENERATOR FREQUENCY	DIAL SETTING	INDICATOR (VTVM or SCOPE)	ADJUSTMENT POINTS	REMARKS
	AM ALIGNMENT					
1	High side through 0.001μF to **AM** antenna trimmer terminal. Common to chassis.	450kHz (30% Mod.) with 400 Hz) (For United Kingodom to 470kHz)	Point of non-inter-ference	Connect AC VTVM or scope to "OUTPUT" terminals.	T201 (1st IFT) Z201 (2nd IFT)	Adjust for maximum output.
2	Fashion loop of several turns of wire and radiate signal into loop of tuner	600kHz (30% Mod.) with 400Hz)	600kHz	Connect AC VTVM or scope to "OUTPUT" terminals.	L202 (OSC Coil) L201 (ANT Coil)	Adjust for maximum output, Adjust L201 by moving coil bobbin along ferrite core.
3	Fashion loop of several turns of wire and radiate signal into loop of tuner	1500kHz (30% Mod.) with 400Hz)	1500kHz	Connect AC VTVM or scope to "OUTPUT" terminal.	CT202 (OSC Trimmer) CT201 (ANT Trimmer)	Adjust for maximum output. Repeat steps (2) and (3).
	FM IF ALIGNMENT					
4		No-Signal	Point of non-inter-ference	Connect DC VTVM to R110 resistor. (Refer to fig. 2)	T101 (DISCRI IFT) A	•FM muting/mode switch to "on/auto" position. •Adjust T101 (A) core so that voltage measured in signal mode is 0V in 300mV range.
	FM RF ALIGNMENT					
5	Connect to FM 300Ω antenna terminal through 300Ω FM dummy antenna.	90MHz (100% Mod.) with 400Hz) weak input	90MHz	Connect scope to "OUTPUT" terminal.	L5 (OSC Coil) L3 (RF DET Coil) L1 (ANT Coil)	•Add weak input so that noise is included in the output wave form. •Make the adjustment so that the output wave form is vertically symmetrical. (Fig. 3) •Repeat the steps 5 and 6 until the frequency correctly matches the dial scale.
6		106MHz (100% Mod. with 400Hz) weak input	106MHz	Connect scope to "OUTPUT" terminal.	CT3 (OSC Trimmer) CT2 (RF DET Trimmer) CT1 (ANT Trimmer)	
	FM MONO DISTORTION ALIGNMENT					
7	Connect to FM 300Ω antenna terminal through 300Ω FM dummy antenna.	100MHz (100% Mod. with 400Hz)	100MHz	Connect distortin meter to "OUTPUT" terminals.	T101 (DISCRI IFT) B	•Set the FM muting/mode switch to "on/auto" and then check step 4 in no signal mode. •If it is deflected, re-adjust A (primary side) of T101. •Adjust T101 (B) core so that distortion of right and left channels are minimized.
	FM MUTING LEVEL ALIGNMENT (other products for [X, XA])					
8	Connect to FM 300Ω antenna terminal through 300Ω FM dummy antenna. Apply 16 dB (6.3μV) to tuner	100MHz (100% Mod. with 400Hz)	100MHz	Connect AC VTVM or scope to "OUTPUT" terminals.	VR150 (MUTING LEVEL)	•FM muting/mode switch to "on/auto". •Adjust so that output can be obtained.
	FM MUTING LEVEL ALIGNMENT (Only product for [X, XA])					
9	Connect to FM 300Ω antenna terminal through 300Ω FM dummy antenna. Apply 10dB (3.2μV) to tuner.	100MHz (100% Mod. with 400Hz)	100MHz	Connect AC VTVM or scope to "OUTPUT" terminals.	VR150 (MUTING LEVEL)	•FM muting/mode switch to "on/auto". •Adjust so that output can be obtained.

FM MPX PILOT ALIGNMENT

	Using a frequency counter	Using alternate system
10	1 100MHz Non-modulated mono signal applied to set. 2 FM muting/mode switch to "on" 3 Connect frequency counter to **TP401** through resistor (100kΩ). 4 Adjust **VR401** to 19kHz, ±30Hz.	1 Apply stereo signal from generator or stereo station to tuner. 2 Adjust **VR401** until stereo indicator lights up. Cement arm of **VR401** as shown in fig. 4.

SEPARATION ALIGNMENT

	PREPARATIONS	ADJUSTING PROCEDURE
11	1 Add 100MHz, 1kHz, 30% pilot 10% modulation, 60dB stereo signal to the tuner. 2 Connect AC VTVM or scope to output terminal through low pass filter (fc = 15 ~ 19kHz).	1 FM muting/mode switch to "on/auto". 2 Adjust **VR402** so that **R** output is minimized when stereo modulator is in **L** (Lch. modulation) mode and that **L** output is minimized in **R** mode.

■ ANWEISUNGEN FÜR ABGLEICHUNG — DEUTSCH

(Für Deutschland)

Anmerkungen:
1. Bereichsschalter ..... { AM (AM Abgleich) / FM (FM Abgleich)
2. FM Muting/Mode Schalter .. off/mono
3. Active servo lock-Schalter .. off
4. Netzspannung auf ihren Sollwert halten.
5. UKW-Kunstantenne, 300 ohm ..... Vgl. Abb. 1.
6. Der Ausgang des Meßsenders darf nicht höher sein als unbedingt notwendig für eine gute Ablesung.

	AM/UKW MESSENDER ANSCHLUSS	AM/UKW MESSENDER FREQUENZ	SKALENZEIGEREINSTELLUNG DES TUNER	ANZEIGEGERÄT (Röhrenvoltmeter oder Oszillograph ozw. Klirrfaktor-Meßgerät)	ABGLEICHSPUNKTE	BEMERKUNGEN
	AM-ABGLEICH					
1	Heißes Ende des Meßsenders uber einen 0.001μF Kondensator an den AM Antenneneingang schließen. Kaltes Ende an Masse	450kHz (400Hz Modulat., 30%)	Kein Empfang	Wechselstrom Röhrenvoltmeter oder Oszillograph über den Ausgang "OUTPUT" schließen.	T201 (1. IFT) (A) T201 (2. IFT)	Auf max. Ausgang abgleichen.
2	Das Meßsendersignal induktiv in den Tuner speisen. Hierzu behelfsmäßig eine Rahmenantenne fertigen und an den Eingang schließen.	600kHz (400Hz Modulat., 30%)	600kHz	Wechselstrom Röhrenvoltmeter oder Oszillograph über den Ausgang "OUTPUT" schleißen.	L203 (Osc. Spule) L201 (Ant. Spule)	Auf max. Ausgang abgleichen. L201 wird abgeglichen, indem die Spule am Ferritstab entlang-geschoben wird.
3	Das Meßsendersignal induktiv in den Tuner speisen. Hierzu behelfsmäßig eine Rahmenantenne fertigen und an den Eingang schließen.	1500kHz (400Hz Modulat., 30%)	1500kHz	Wechselstrom Röhrenvoltmeter oder Oszillograph über den Ausgang "OUTPUT" scheißen.	CT202 (Osc. Trimmer) CT201 (Ant. Trimmer)	Auf max. Ausgang abgleichen. Schritt (2) und (3) sing zu wiederholen.
	UKW ZF-ABGLEICH					
4		Kein Signal	Kein Empfang	Gleichspannungsmesser über den Ausgang R110 widerstand schließen. (Vgl. Abb. 2)	T101 (Diskriminator IFT) A	•FM muting/mode-Schalter auf "on/auto". •Den Kern von T101 (A) so justieren, daß die gemessene Spannung im signallosen Modus 0V im 300mV Bereich beträgt.
	UKW-HF-ABGLEICH					
5	Meßsender über eine Kunstantenne an den UKW-Antenneneingang schließen.	87.5MHz (400Hz Modulat., 100%	87.5MHz (Frequenz min.	Oszillograph über den Ausgang "OUTPUT" schließen.	L5 (Osc. Spule)	•Einen schwachen Eingang geben, bei den Geräusch in der Ausgangswellen-form enthalten wird. •So einstellen, daß die Ausgangswellenform vertikal symmetrisch wird. (Abb. 3) •Die Einstellung von 5, 6 und 7 wiederholen, bis die Frequenz mit der Skala übereinstimmt.
6	Meßsender über eine Kunstantenne an den UKW-Antenneneingang schließen.	90MHz (400Hz Modulat., 100%)	90MHz	Oszillograph über den Ausgang "OUTPUT" schließen.	L3 (Det. Spule) L1 (Ant. Spule)	
7	Meßsender über eine Kunstantenne an den UKW-Antenneneingang schließen.	106MHz (400Hz Modulat.,	106MHz	Oszillograph über den Ausgang "OUTPUT" schließen.	CT3 (Osc. Trimmer) CT2 (Det. Trimmer) CT1 (Ant. Trimmer)	
	ABGLEICH AUF MIN. VERZERRUNG IN STELLUNG UKW-MONO					
8	Meßsender über eine Kunstantenne an den UKW-Antenneneingang schließen.	100MHz (400Hz Modulat., 100%)	100MHz	Klirrfaktor-Meßbrücke über den Ausgang "OUTPUT" schließen.	T101 (Diskriminator IFT) (B)	•FM muting/mode-Schalter auf "on/auto" stellen, dann in signalloser Mode den Schritt 4 feststellen. •Wenn Abweichung vorliegt, A (primäre Seite) von T101 wieder einstellen. •T101 (B) Kern für minimale Verzerrung der rechten und linken Kanäle justieren.
	UKW-UKW-MUTING-ABGLEICH					
9	Meßsender über eine Kunstantenne an den UKW-Antenneneingang schließen. Meßsender auf 16 dB (6.3μV) einstellen.	100MHz (400Hz Modulat., 100%)	100MHz	Wechselstrom Röhrenvoltmeter oder Oszillograph über den Ausgang "OUTPUT" schließen.	VR150	•FM muting/mode-Schalter auf "on/auto". •So einstellen, daß ein Ausgang zu vernehmen ist.

UKW-STEREO-DEKODER-ABGLEICH

	Unter Verwendung eines Zählers	Alternativ-Meßmethode
10	1. Unmoduliertes Mono-Signal 100MHz in das Gerät speisen. 2. FM muting/mode-Schalter auf "on/auto" stellen. 3. Zähler über einen Widerstand 100K ohm an **TP401** schließen. 4. **VR401** auf 19kHz ±30Hz einstellen.	1. Stereosignal entweder von einem Stereogenerator oder einem Sender einspeisen. 2. **VR401** so einstellen, bis die Stereolampe auf leuchtet. Schleifer von **VR401** sichern, wie in Abb. 4 gezeigt.

KANALTRENNUNG-ABGLEICH

11	1. Das Gerät auf 100MHz, 1kHz 30%, Pilot 10% Modulation, 60dB Stereosignal einstellen. 2. Wechselstrom-Röhrenvoltmeter oder Oszillograph durch Tiefpaß filter (fc = 15 ~ 19kHz) an Ausgangsanschlüsse des Gerätes anschließen.	3. FM muting/mode-Schalter auf "on/auto". 4. **VR402** auf minimale Anzeige des **R**-Ausgangs bei Stereo-modulator in **L**-(L-Kanalmodulation) Modus, und auf minimale Anzeige des **L**-Ausgangs in **R**-Modus abgleichen.

■ DIAL CORD INSTALLATION GUIDE

- For threading a fresh cord, proceed as follows.
  1. Prepare a fresh cord more than 180 cm (70-15/16") in length.
  2. Bring the variable capacitor into a state where the drum is completely turned to the right (maximum capacity and lowest frequency for the variable capacitor).
  3. Direct the cord in the order from 1 to 9.
  4. Stretch the cord in such a tension as the spring length is elongated by 1.5 times that of the original state.
  5. Fix the knot of the cord with the bond.

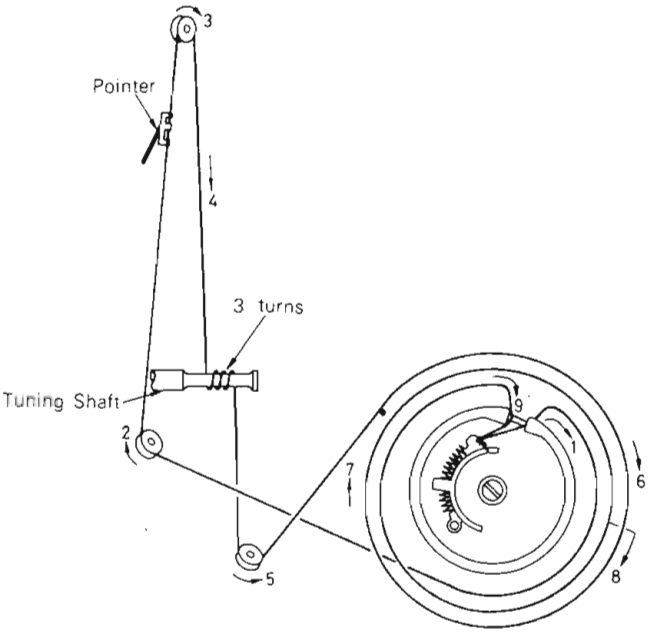

■ ALIGNMENT POINTS

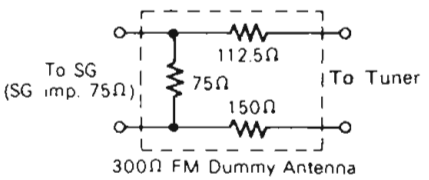

Fig. 1

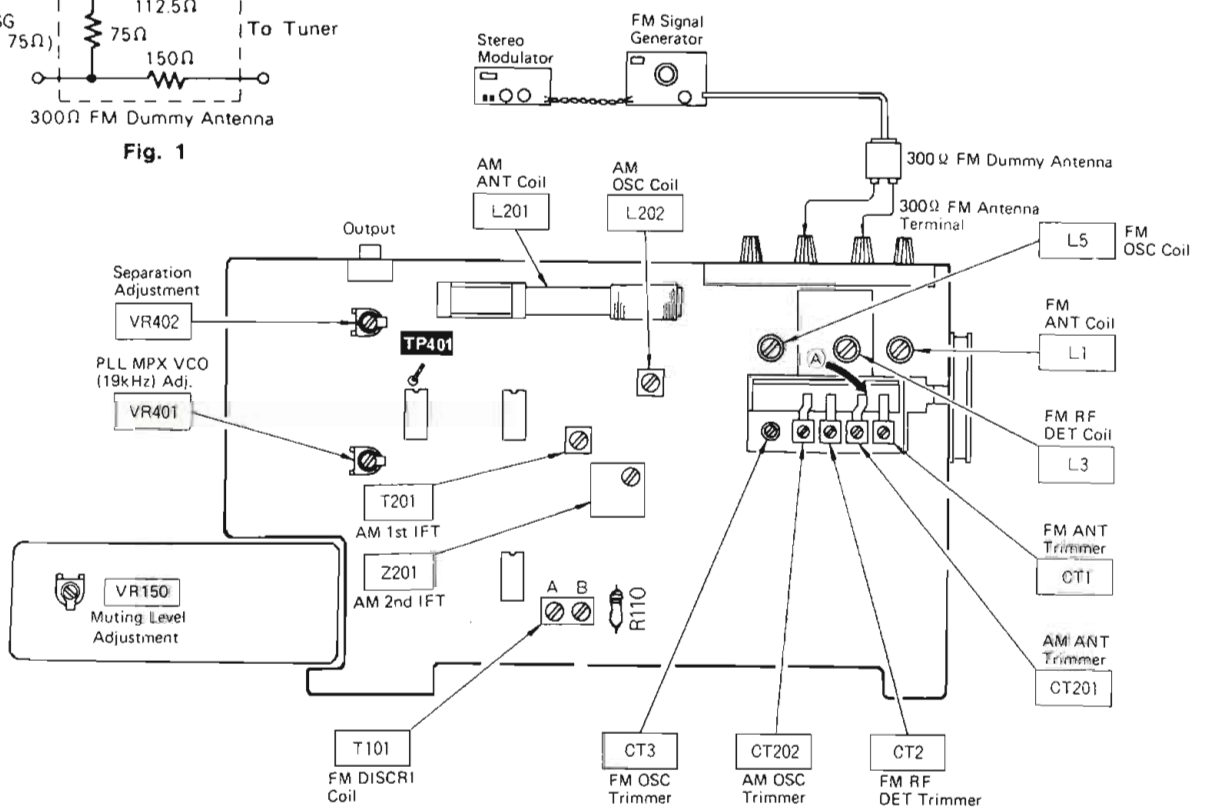

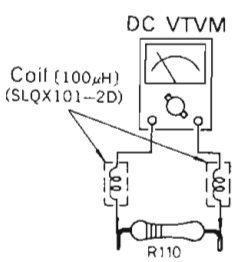

Fig. 2

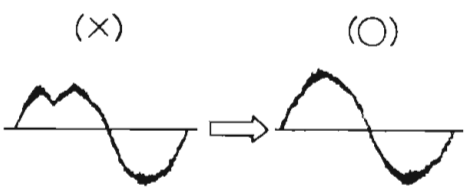

AF OUTPUT WAVE FORM

Fig. 3

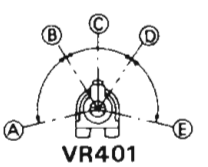

VR401

A – B, D – E: Stereo OFF Position.
B – D: Stereo ON Position (Indicator Lighting).
C: Adjust Point of Pilot Circuit.

Fig. 4

■ INSTRUCTIONS D'ALIGNEMENT — FRANÇAIS

Notes:
1. Sèlecteur de gamme ..... { AM (Alignement AM) / FM (Alignement FM)
2. Commutateur de silencieux/mode ..... off/mono
3. Commutateur de servo-verrouillage .... off
4. Conserver la tension du secteur à la tension nominale.
5. Antenne fictive FM 300Ω ..... Voir fig. 1.
6. Le signal du générateur ne doit pas être plus élevé qu'il n'est nécessaire à obtenir une lecture en sortie.

	AM/FM GENERATEUR		AIGUILLE SUR LE CADRAN	INDICATEUR (VOLTMETRE ELECTRONIQUE OSCILLOSCOPE OU DISTORSIONMETRE)	POINTS DE REGLAGE	OBSERVATIONS
	BRANCHEMENT	FREQUENCE				
	ALIGNEMENT AM					
1	Côté chaud, à travers 0.001μF, sur le trimmer de l'antenne AM, commum an shâssis	455kHz (modulé à 30% par 400Hz)	Point sans signal	C.A. voltmètre électronique ou oscilloscope sur prise de sortie de l'appareil.	T201 (1 transfo FI) Z201 (2 transfo FI)	Réglez au maximum de signal de sortie.
2	Faire une boucle de quelgues tours et rayonner le signal dans le cadre du l'ampli-tuner.	600kHz (modulé à 30% par 400Hz)	600kHz	C.A. voltmètre electronique ou oscilloscope sur prise de sortie de l'appareil.	L202 (bobine OSC) L201 (bobine ANT)	Réglez au maximum de signal de sortie. Réglez L201 en déplasant la bobine le long du noyau de ferrite.
3	Faire une boucle de quelgues tours et rayonner le signal dans le cadre du l'ampli-tuner.	1500kHz (modulé à 30% per 400Hz)	1500kHz	C.A. voltmètre électronique ou oscilloscope sur prise de sortie de l'appareil.	CT202 (trimmer OSC) CT201 (trimmer ANT)	Réglez au maximum de signal de sortie. Recommencez les étapes (2) et (3).
	ALIGNEMENT FI-FM					
4		Sans signal	Point sans signal	C.C. voltmètre sur prise R110 résistance. (Voir fig. 2)	T101 (A) (transfo FI discri)	•Commutateur de silencieux sur "on/auto". •Régler le noyau T101 (A) de telle sorte que le voltage mesuré dans le mode sans signal, soit de 0V dans la gamme des 300mV.
	ALIGNEMENT RF-FM					
5	Branchez sur la prise d'antenne FM à traves une antenne fictive FM	90MHz (modulé à 100% par 400Hz)	98MHz	Oscilloscope sur prise de sortie du tuner.	L5 (bobine OSC) L3 (bobine DET) L1 (bobine ANT)	•Appliquer une entrée faible de telle sorte que le parasite soit compris dans la forme de l'onde de sortie. •Faire le réglage de telle sorte que la forme de l'onde de sortie soit verticalement symétrique. (Voir fig. 3) •Refaire les réglages 5 et 6 jusqu'à ce que la fréquence corresponde correctement avec l'échells du cadran.
6	Branchez sur la prise d'antenne FM à travers une antenne fictive FM.	106MHz (modulé à 100% par 400Hz)	106MHz	Oscilloscope sur prise de sortie du tuner.	CT3 (trimmer OSC) CT2 (trimmer DET) CT1 (trimmer ANT)	
	REGLAGE DE LA DISTORSION FM EN MONO					
7	Branchez sur la prise d'antenne FM à travers une antenne fictive FM.	100MHz (modulé à 100% par 400Hz)	100MHz	Distorsiomètre sur prise de sortie du tuner.	T101 (Transfo FI discri.) (B)	•Placer la commutateur Sourdine FM/Mode sur "on/auto" et vérifier l'étape 4 dans un mode sans signal. •S'il est déplacé, re-régler A (côté primaire) de T101. •Régler le noyou T101 (B) de telle sorte que la distorsion des canaux droit et gauche soit la plus faible.
	REGLAGE DU SEUIL DU SILENCIEUX D'ACCORD					
8	Branchez sur la prise d'antenne FM à travers une antenne fictive FM. Niveau de sortie du générateur 16 dB (6.3μV).	100MHz (modulé à 100% par 400Hz)	100MHz	C.A. voltmètre électronique ou oscilloscope sur prise de sortie de l'appareil.	VR150	•Commutateur de silencieux sur "on/auto" •Régler pour obtenir une lecture en sortie.

ALIGNEMENT DU PILOTE MULTIPLEX FM

	Avec un fréquencemètre	Par un outre système
9	1. Signal mono 100MHz non modulé appliqué à l'appareil. 2. Commutateur de silencieux sur "on/auto". 3. Branchez le fréquencemètre sur **TP401** à travers une résistance de 100kΩ. 4. Régler **VR401** sur 19kHz ±30Hz.	1. Appliquez à l'appareil un signal stéréo provenant d'un gégérateur ou de la réception d'un émetteur. 2. Régler **VR401** jusqu'à ce que l'indicateur de stéréophonic s'allume. Collez le curseur de **VR401** comme indiqué sur la fig. 4.

REGLAGE DE LA SEPARATION DES CANAUX

	Préparations	Procédure de réglage
10	1. Ajouter 100MHz, 1kHz, Modulation, pilote 10%, signal stéréophonique 60dB, à lapparell. 2. Brancher un voltmètre électronique C.A. ou un oscilloscope aux bornes de sortie, par l'intermédiaire du filtre passe-bas (fc = 15 ~19kHz).	1. Commutateur de silencieux sur "on/auto". 2. Régler **VR402** de telle sorte que la sortie droite soit minimale quand la commande d'accord stéréophonique est dans le mode gauche (modulation du canal gauche) et que la sortie gauche soit minimale dans mode droit.

■ TO REMOVE CABINET AND BOTTOM BOARD

- **To remove cabinet**
  1. Remove the 4 screws. (nos. ① ~ ④ screws in fig. 5).
  2. Remove the 4 screws. (nos. ⑤ ~ ⑧ screws in fig. 6).
  3. Sliding it toward Ⓐ direction and lifting it upward as shown in fig. 5.
  4. When the cabinet is installed, insert the lug of cabinet into the space between the front panel and chassis as shown in fig. 7.

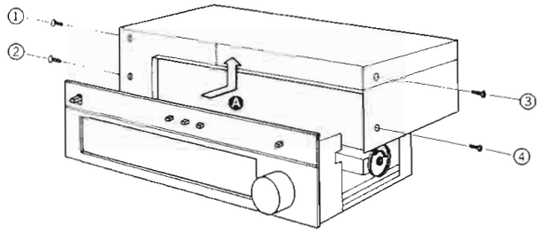

Fig. 5

- **To remove bottom board**
  1. Remove the 3 screws. (nos. ⑨ ~ ⑪ screws in fig. 8).
  2. Remove the 4 feet screws. (nos. ⑫ ~ ⑮ screws in fig. 8).
  3. Remove bottom board.

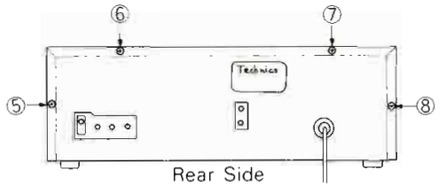

Fig. 6

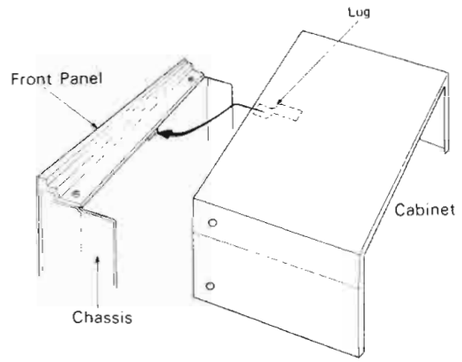

Fig. 7

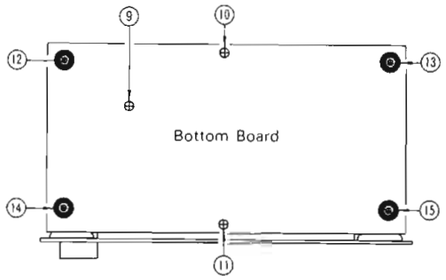

Fig. 8

■ BLOCK DIAGRAM

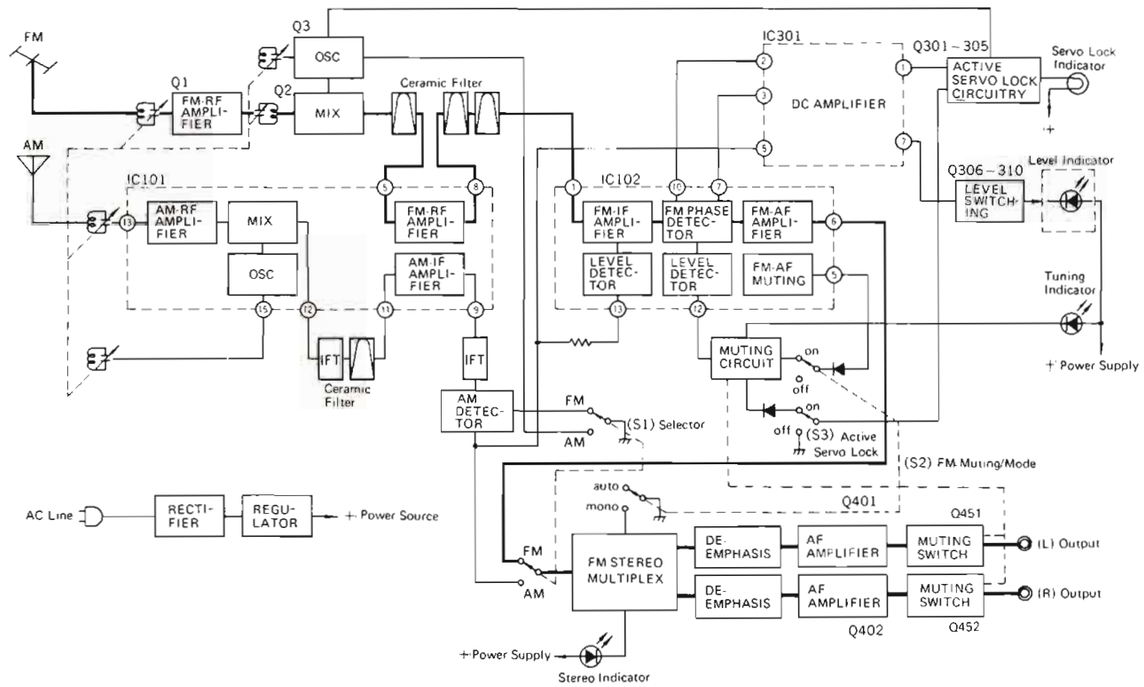

■ REPLACEMENT PARTS LIST ····· Electric Parts

NOTES: 1. Part numbers are indicated on most mechanical parts. Please use this part number for parts orders.
2. ⚠ indicates that only parts specified by the manufacturer be used for safety.

Ref. No.		Part No.	Part Name & Description
			RESISTORS
R1		**ERD25TJ104**	Carbon, 100kΩ, 1/4W, ±5%
R2	⚠	ERD25FJ101	Carbon, 100Ω, 1/4W, ±5%
R3		**ERD25TJ562**	Carbon, 5.6kΩ, 1/4W, ±5%
R4		**ERD25TJ333**	Carbon, 33kΩ, 1/4W, ±5%
R5		**ERD25TJ561**	Carbon, 560Ω, 1/4W, ±5%
R6		**ERD25TJ222**	Carbon, 2.2kΩ, 1/4W, ±5%
R7		**ERD25TJ123**	Carbon, 12kΩ, 1/4W, ±5%
R8		**ERD25TJ333**	Carbon, 33kΩ, 1/4W, ±5%
R9		**ERD25TJ222**	Carbon, 2.2kΩ, 1/4W, ±5%
R10		**ERD25TJ471**	Carbon, 470Ω, 1/4W, ±5%
R11		**ERD25TJ104**	Carbon, 100kΩ, 1/4W, ±5%
R101		**ERD25TJ102**	Carbon, 1kΩ, 1/4W, ±5%
R102, 103		**ERD25TJ331**	Carbon, 330Ω, 1/4W, ±5%
R104		**ERD25TJ331**	Carbon, 330Ω, 1/4W, ±5%
R105		**ERD25TJ682**	Carbon, 6.8kΩ, 1/4W, ±5%
R106		**ERD25TJ221**	Carbon, 220Ω, 1/4W, ±5%
R107	⚠	ERD25FJ470	Carbon, 47Ω, 1/4W, ±5%
R108		**ERD25TJ392**	Carbon, 3.9kΩ, 1/4W, ±5%
R109		**ERD25TJ562**	Carbon, 5.6kΩ, 1/4W, ±5%
R110		**ERD25TJ103**	Carbon, 10kΩ, 1/4W, ±5%
R111		**ERD25TJ272**	Carbon, 2.7kΩ, 1/4W, ±5%
R112		**ERD25TJ104**	Carbon, 100kΩ, 1/4W, ±5%
R113		**ERD25TJ103**	Carbon, 10kΩ, 1/4W, ±5%
R114		**ERD25TJ223**	Carbon, 22kΩ, 1/4W, ±5%
R115		**ERD25TJ104**	Carbon, 100kΩ, 1/4W, ±5%
R117		**ERD25TJ271**	Carbon, 270Ω, 1/4W, ±5%
R118		**ERD25TJ104**	Carbon, 100kΩ, 1/4W, ±5%
R119		**ERD25TJ102**	Carbon, 1kΩ, 1/4W, ±5%
R120		**ERD25TJ103**	Carbon, 10kΩ, 1/4W, ±5%
R121, 122		**ERD25TJ333**	Carbon, 33kΩ, 1/4W, ±5%
R150		**ERD25TJ333**	Carbon, 33kΩ, 1/4W, ±5%
R151		**ERD25TJ104**	Carbon, 100kΩ, 1/4W, ±5%
R152		**ERD25TJ333**	Carbon, 33kΩ, 1/4W, ±5%
R153		**ERD25TJ224**	Carbon, 220kΩ, 1/4W, ±5%
R154		**ERD25TJ103**	Carbon, 10kΩ, 1/4W, ±5%
R155		**ERD25TJ102**	Carbon, 1kΩ, 1/4W, ±5%
R156		**ERD25TJ103**	Carbon, 10kΩ, 1/4W, ±5%
R158		**ERD25TJ393**	Carbon, 39kΩ, 1/4W, ±5%
R159		**ERD25TJ154**	Carbon, 150kΩ, 1/4W, ±5%
R201		**ERD25TJ152**	Carbon, 1.5kΩ, 1/4W, ±5%
R202		**ERD25TJ472**	Carbon, 4.7kΩ, 1/4W, ±5%
R203		**ERD25TJ151**	Carbon, 150Ω, 1/4W, ±5%
R204		**ERD25TJ152**	Carbon, 1.5kΩ, 1/4W, ±5%
R205		**ERD25TJ333**	Carbon, 33kΩ, 1/4W, ±5%
R206		**ERD25TJ334**	Carbon, 330kΩ, 1/4W, ±5%
R207		**ERD25TJ682**	Carbon, 6.8kΩ, 1/4W, ±5%
R208		**ERD25TJ104**	Carbon, 100kΩ, 1/4W, ±5%
R209		**ERD25TJ123**	Carbon, 12kΩ, 1/4W, ±5%
R301		**ERD25TJ223**	Carbon, 22kΩ, 1/4W, ±5%
R302		**ERD25TJ684**	Carbon, 680kΩ, 1/4W, ±5%
R303, 304		**ERD25TJ154**	Carbon, 150kΩ, 1/4W, ±5%
R305		**ERD25TJ683**	Carbon, 68kΩ, 1/4W, ±5%
R306		**ERD25TJ682**	Carbon, 6.8kΩ, 1/4W, ±5%
R307		**ERD25TJ333**	Carbon, 33kΩ, 1/4W, ±5%
R308		**ERD25TJ100**	Carbon, 10Ω, 1/4W, ±5%
R309		**ERD25TJ473**	Carbon, 47kΩ, 1/4W, ±5%
R310		**ERD25TJ223**	Carbon, 22kΩ, 1/4W, ±5%
R311		**ERD25TJ272**	Carbon, 2.7kΩ, 1/4W, ±5%
R312		**ERD25TJ104**	Carbon, 100kΩ, 1/4W, ±5%
R313		**ERD25TJ472**	Carbon, 4.7kΩ, 1/4W, ±5%
R314		**ERD25TJ154**	Carbon, 150kΩ, 1/4W, ±5%
R315		**ERD25TJ223**	Carbon, 22kΩ, 1/4W, ±5%
R316, 317		**ERD25TJ103**	Carbon, 10kΩ, 1/4W, ±5%
R318, 319		**ERD25TJ103**	Carbon, 10kΩ, 1/4W, ±5%
R320		**ERD25TJ103**	Carbon, 10kΩ, 1/4W, ±5%
R321		**ERD25TJ153**	Carbon, 15kΩ, 1/4W, ±5%
R322		**ERD25TJ183**	Carbon, 18kΩ, 1/4W, ±5%
R323		**ERD25TJ223**	Carbon, 22kΩ, 1/4W, ±5%
R324		**ERD25TJ273**	Carbon, 27kΩ, 1/4W, ±5%
R325		**ERD25TJ333**	Carbon, 33kΩ, 1/4W, ±5%
R326		**ERD25TJ391**	Carbon, 390Ω, 1/4W, ±5%
R327, 328		**ERD25TJ331**	Carbon, 330Ω, 1/4W, ±5%
R329		**ERD25TJ271**	Carbon, 270Ω, 1/4W, ±5%
R330		**ERD25TJ221**	Carbon, 220Ω, 1/4W, ±5%
R332		**ERD25TJ103**	Carbon, 10kΩ, 1/4W, ±5%
R335		**ERD25TJ333**	Carbon, 33kΩ, 1/4W, ±5%
R401	⚠	ERD25FJ101	Carbon, 100Ω, 1/4W, ±5%
R402		**ERD25TJ104**	Carbon, 100kΩ, 1/4W, ±5%
R403		**ERD25TJ153**	Carbon, 15kΩ, 1/4W, ±5%
R404		**ERD25TJ102**	Carbon, 1kΩ, 1/4W, ±5%
R405		**ERD25TJ182**	Carbon, 1.8kΩ, 1/4W, ±5%
R406		**ERD25TJ151**	Carbon, 150Ω, 1/4W, ±5%
R407		**ERD25TJ102**	Carbon, 1kΩ, 1/4W, ±5%
R408, 409		**ERD25TJ392**	Carbon, 3.9kΩ, 1/4W, ±5%
R410, 411		**ERD25TJ103**	Carbon, 10kΩ, 1/4W, ±5%
R412, 413		**ERD25TJ103**	Carbon, 10kΩ, 1/4W, ±5%
R414, 415		**ERD25TJ821**	Carbon, 820Ω, 1/4W, ±5%
R416, 417		**ERD25TJ332**	Carbon, 3.3kΩ, 1/4W, ±5%
R450		**ERD25TJ223**	Carbon, 22kΩ, 1/4W, ±5%
R451		**ERD25TJ104**	Carbon, 100kΩ, 1/4W, ±5%
R452, 453		**ERD25TJ224**	Carbon, 220kΩ, 1/4W, ±5%
R454, 455		**ERD25TJ224**	Carbon, 220kΩ, 1/4W, ±5%
R501	⚠	ERD25FJ6R8	Carbon, 6.8Ω, 1/4W, ±5%

Ref. No.		Part No.	Part Name & Description
			CAPACITORS
C1		ECCD1H100K	Ceramic, 10pF, 50V, ±10%
C1 (XAL)only	⚠	ECKDHS101MB	Ceramic, 100pF, 400VAC, ±20%
C2		ECCD1H120KC	Ceramic, 12pF, 50V, ±10%
C3		ECCD1H100K	Ceramic, 10pF, 50V, ±10%
C4		ECCD1H120KC	Ceramic, 12pF, 50V, ±10%
C5		ECKD1H102MDA	Ceramic, 0.001μF, 50V, ±20%
C6		ECCD1H040CC	Ceramic, 4pF, 50V, ±0.25pF
C7		ECCD1H020CC	Ceramic, 2pF, 50V, ±0.25pF
C8		ECCD1H181K	Ceramic, 180pF, 50V, ±10%
C12		ECCD1H070DC	Ceramic, 7pF, 50V, ±0.5pF
C13		**ECEA1ES470**	Electrolytic, 47μF, 25V,
C14		ECCD1H390KC	Ceramic, 39pF, 50V, ±10%
C15		ECCD1H150KC	Ceramic, 15pF, 50V, ±10%
C17		ECKD1H102MDL	Ceramic, 0.001μF, 50V, ±20%
C21		ECCD1H100K	Ceramic, 10pF, 50V, ±10%
C21 (XAL)only	⚠	ECKDHS101MB	Ceramic, 100pF, 400VAC, ±20%
C22		ECCD1H070DC	Ceramic, 7pF, 50V, ±0.5pF
C23		ECCD1H181K	Ceramic, 180pF, 50V, ±10%
C25		ECCD1H070DR	Ceramic, 7pF, 50V, ±0.5pF
C26		ECKD1H102MDL	Ceramic, 0.001μF, 50V, ±20%
C27		ECCD1H181K	Ceramic, 180pF, 50V, ±10%
C101		ECQM1H223KZ	Polyester, 0.022μF, 50V, ±10%
C102, 103		ECKD1H223ZF	Ceramic, 0.022μF, 50V, +80% −20%
C104, 105		ECKD1H103ZF	Ceramic, 0.01μF, 50V, +80% −20%
C106		ECKD1H223ZF	Ceramic, 0.022μF, 50V, +80% −20%
C107		**ECEA1CS221**	Electrolytic, 220μF, 16V
C108		ECQM1H473KZ	Polyester, 0.047μF, 50V, ±10%
C110		**ECEA1JS4R7**	Electrolytic, 4.7μF, 63V
C111		ECCD1H101K	Ceramic, 100pF, 50V, ±10%
C112		**ECEA50ZR47**	Electrolytic, 0.47μF, 50V
C113		**ECEA1HS100**	Electrolytic, 10μF, 50V
C114, 115		ECQM1H223KZ	Polyester 0.022μF, 50V, ±10%
C116		**ECEA1ES101**	Electrolytic, 100μF, 25V
C117		ECKD1H223ZF	Ceramic, 0.022μF, 50V, +80% −20%
C150		ECKD1H103MD	Ceramic, 0.01μF, 50V, ±20%
C151		**ECEA50ZR47**	Electrolytic, 0.47μF, 50V
C152		**ECEA50Z1**	Electrolytic, 1μF, 50V
C154		**ECEA50Z3R3**	Electrolytic, 3.3μF, 50V
C201		ECKD1H103MD	Ceramic, 0.01μF, 50V, ±20%
C203		ECKD1H103MD	Ceramic, 0.01μF, 50V, ±20%
C204		ECQS05361JZ	Polystyrene, 360pF, 50V, ±5%
C205		ECCD1H100KC	Ceramic, 10pF, 50V, ±10%
C206		**ECEA1JS4R7**	Electrolytic, 4.7μF, 63V
C207		**ECEA1CS330**	Electrolytic, 33μF, 16V
C208		ECQM1H333KZ	Polyester, 0.033μF, 50V, ±10%
C209		ECCD1H150KC	Ceramic, 15pF, 50V, ±10%
C212 (XAL)only	⚠	ECKDHS102MD	Ceramic, 0.001μF, 400VAC, ±20%
C301		**ECEA1HS100**	Electrolytic, 10μF, 50V
C302		**ECEA0JS471**	Electrolytic, 470μF, 6.3V
C303		ECKD1H223ZF	Ceramic, 0.022μF, 50V, +80% −20%
C304		**ECEA25Z4R7**	Electrolytic, 4.7μF, 25V

Ref. No.		Part No.	Part Name & Description
C350		ECCD1H181K	Ceramic, 180pF, 50V, ±10%
C401		**ECEA1ES470**	Electrolytic, 47μF, 25V
C402		**ECEA1HS100**	Electrolytic, 10μF, 50V
C403		ECQM1H473KZ	Polyester, 0.047μF, 50V, ±10%
C404		ECQS1471JZ	Polystyrene, 470pF, 125V, ±5%
C405		**ECEA50ZR47**	Electrolytic, 0.47μF, 50V
C406		**ECEA50ZR22**	Electrolytic, 0.22μF, 50V
C407		ECEA50MR47S	Electrolytic, 0.47μF, 50V
C408, 409		ECQM1H123KZ	Polyester, 0.012μF, 50V, ±10%
C410, 411		ECQM1H272KZ	Polyester, 0.0027μF, 50V, ±10%
C412, 413		ECKD1H471KB	Ceramic, 470pF, 50V, ±10%

Ref. No.		Part No.	Part Name & Description
C414, 415		ECQM1H272KZ	Polyester, 0.0027μF, 50V, ±10%
C418		**ECEA1CS471**	Electrolytic, 470μF, 16V
C419		**ECEA1AS221**	Electrolytic, 220μF, 10V
C420		ECKD1H102ZF	Ceramic, 0.001μF, 50V, +80% −20%
C450		**ECEA25Z4R7**	Electrolytic, 4.7μF, 25V
C451, 452		**ECEA50ZR33**	Electrolytic, 0.33μF, 50V
C453, 454		**ECEA50Z3R3**	Electrolytic, 3.3μF, 50V
C501, 502		**ECEA1CS102**	Electrolytic, 1000μF, 16V
C504		**ECEA1AS102**	Electrolytic, 1000μF, 10V
C505		**ECEA1AS221**	Electrolytic, 220μF, 10V
C506, 507	⚠	ECKDHS103SE2	Ceramic, 0.01μF, 400VAC, +50% −20%

Ref. No.		Part No.	Part Name & Description
			INTEGRATED CIRCUITS
IC101		AN217P-BB	IC, FM IF Amplifier & AM Converter
IC102		AN377N	IC, FM IF Amplifier & Detector
IC301		SVINJM4558D	IC, DC Amplifier
IC401		AN363N	IC, FM Multiplex
IC501		SVIFS7812C	IC, Regulator
			TRANSISTORS
Q1		2SK49-H2	Transistor, FM RF Amplifier (FET)
Q2		**2SC1047-C**	Transistor, FM Mixer (Use in ranks C or D)
Q3		2SC1675-L1	Transistor, FM Local Oscillator (Use in ranks L1 or L2)
Q101, 102, 301~305		**2SC1328-T**	Transistor, Muting, Servo Lock Circuitry (Use in ranks S, T or U)
Q306~310		2SC1684-R	Transistor, Level Indicator Switching
Q151, 152, 153		**2SC1328-T**	Transistor, Muting Switching (Use in ranks S, T or U)
Q401, 402		**2SA902S-F**	Transistor, AF Amplifier (Use in ranks F or G)
Q450		**2SA666AI-R**	Transistor, Muting Switching (Use in ranks Q, R or S)
Q451, 452		**2SC1328-T**	Transistor, Muting Switching (Use in ranks S, T or U)
			DIODES
D1		SVD1S2687AA	Diode, Variable Capacitance
D101,150,151, 201, 302, 303, 450, 451, 503		MA150	Diode, Servo Lock & Muting Switching
D303, 304, 305, 306, 307, 308, 401		LN21CP	Light Emitting Diode, Stereo, Tuning & Signal Level Indicator
D301		OA90	Diode, Servo Lock Circuitry Switching
D501	⚠	SVDMI51U	Rectifier
D502	⚠	**SM112**	Rectifier
D504		SVDMZ2406B	Diode, 6V Zener
			COILS and TRANSFORMERS
L1		SLA4P25	Coil, FM Antenna
L2		**RLQY10S2**	Coil, Choke
L3		SLD4P21-P	Coil, FM RF Detector
L4		**RLQY15G5**	Coil, Choke
L5		SLD4P43-P	Coil, FM Oscillator (with C9, C10, C11)
L6		**RLQY25S2**	Coil, Choke
L101		SLQX180-2	Coil, Choke
L201		SLF2C15-Y	Coil, AM Antenna
L202		SLO229-P	Coil, AM Oscillator
L501		SLQX101-2D	Coil, Choke
T101		SLI4D513-Z	Transformer, FM Discriminator
T201		SLI2C125-P	Transformer, AM IF
T501	⚠	SLT5J73	Transformer, Power Source

Ref. No.		Part No.	Part Name & Description
			CERAMIC FILTERS
CF101, 102		SVFE107MS8A	Ceramic Filter, Red, 10.7MHz
		SVFE107MS8B	Ceramic Filter, Blue, 10.67MHz
		SVFE107MS8C	Ceramic Filter, Orange, 10.73MHz
		SVFE107MS8D	Ceramic Filter, Black, 10.64MHz
		SVFE107MS8E	Ceramic Filter, White, 10.76MHz
CF103		SVFE107MA8A	Ceramic Filter, Red, 10.7MHz
		SVFE107MA8B	Ceramic Filter, Blue, 10.67MHz
		SVFE107MA8C	Ceramic Filter, Orange, 10.73MHz
		SVFE107MA8D	Ceramic Filter, Black, 10.64MHz
		SVFE107MA8E	Ceramic Filter, White, 10.76MHz
			(Use pair ranks as same as CF101, 102 and CF103)
CF201		SVFSFU450B	Ceramic Filter, AM 450kHz
			COMPONENT COMBINATIONS
Z1		EXRP103P102C	Component Combination, 1kΩ & 0.01μF
Z101		EXF3SL04C	Component Combination, 0.01μF (X3)
Z201		SLI9F101-Z	Component Combination, AM IFT & Detector
Z501, 502		EXRFS203ZS	Component Combination, 0.01μF (X2)
			VARIABLE RESISTORS
VR150		**EVLS3AA00B15**	Muting Level Adjustment, 100kΩ (B)
VR401		EVTS3MA00B14	PLL VCO Adjustment, 10kΩ (B)
VR402		**EVLS3AA00B14**	Separation Adjustment, 10kΩ (B)
			VARIABLE CAPACITORS
CV1, 2, 3, 201, 202 (CT1, 2, 3, 201, 202)		ECV5MD34X71G	Tuning Gang, FM & AM (with Trimmer)
			FUSES
F1	⚠	XBA2C10TRO	Fuse, T1A (250V)
F2	⚠	XBA2C04TRO	Fuse, T400mA (250V)
			LAMPS
PL1		XAMR38S200B	Lamp, Servo Lock Indicator (6.3V 40mA)
PL2, 3, 4	⚠	XAMR53S	Lamp, Dial Light (6.3V 0.25A)
			SWITCHES
S1, 2		SSH357	Switch, Band Selector & Muting/Mode
S3		SSH105	Switch, Active Servo Lock
S4	⚠	ESL2182	Switch, Power Source
S5	⚠	ESE372	Switch, Voltage Adjuster

■ PRINTED CIRCUIT BOARD WIRING VIEW

Ground (Earth) Line

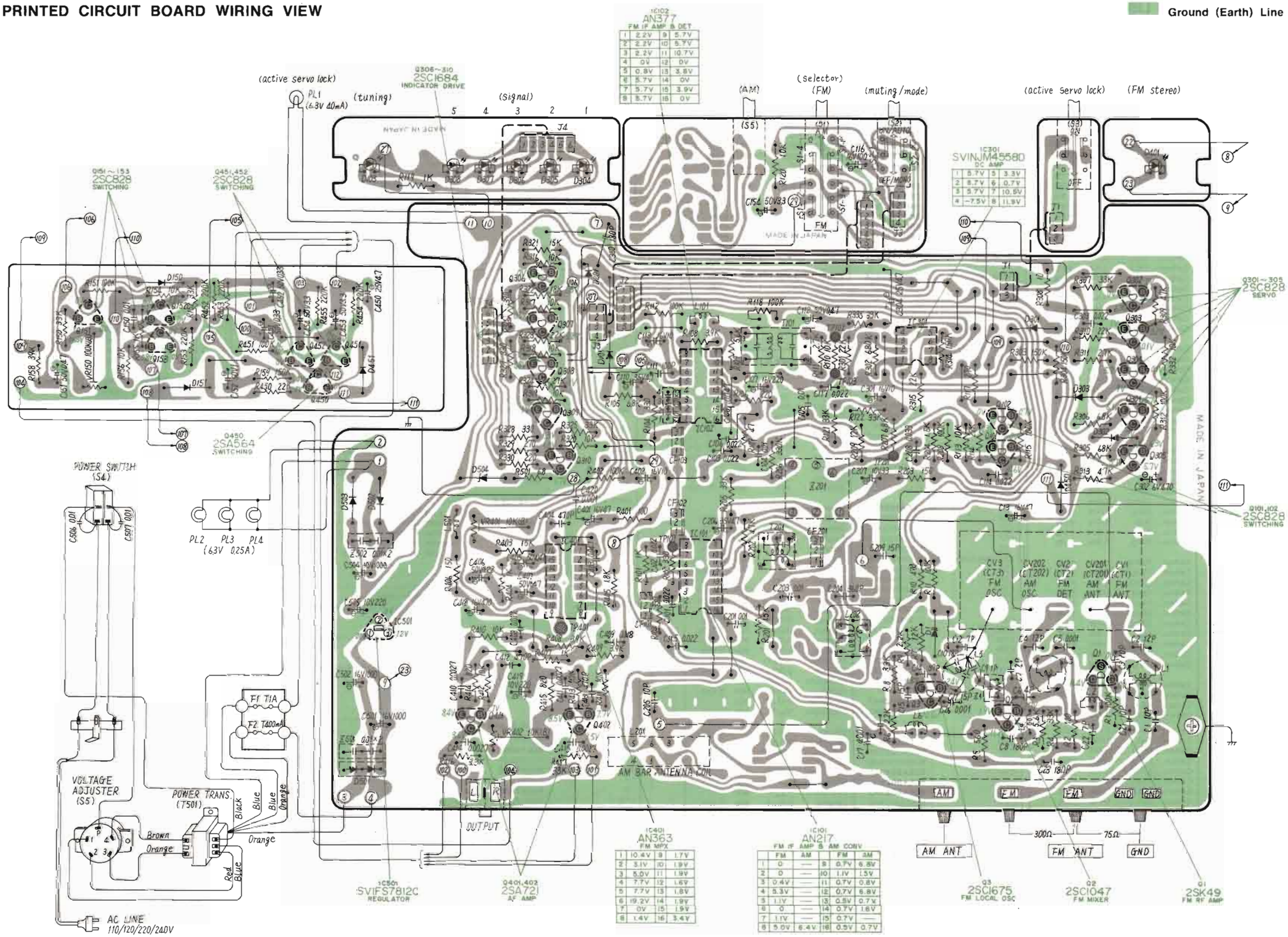

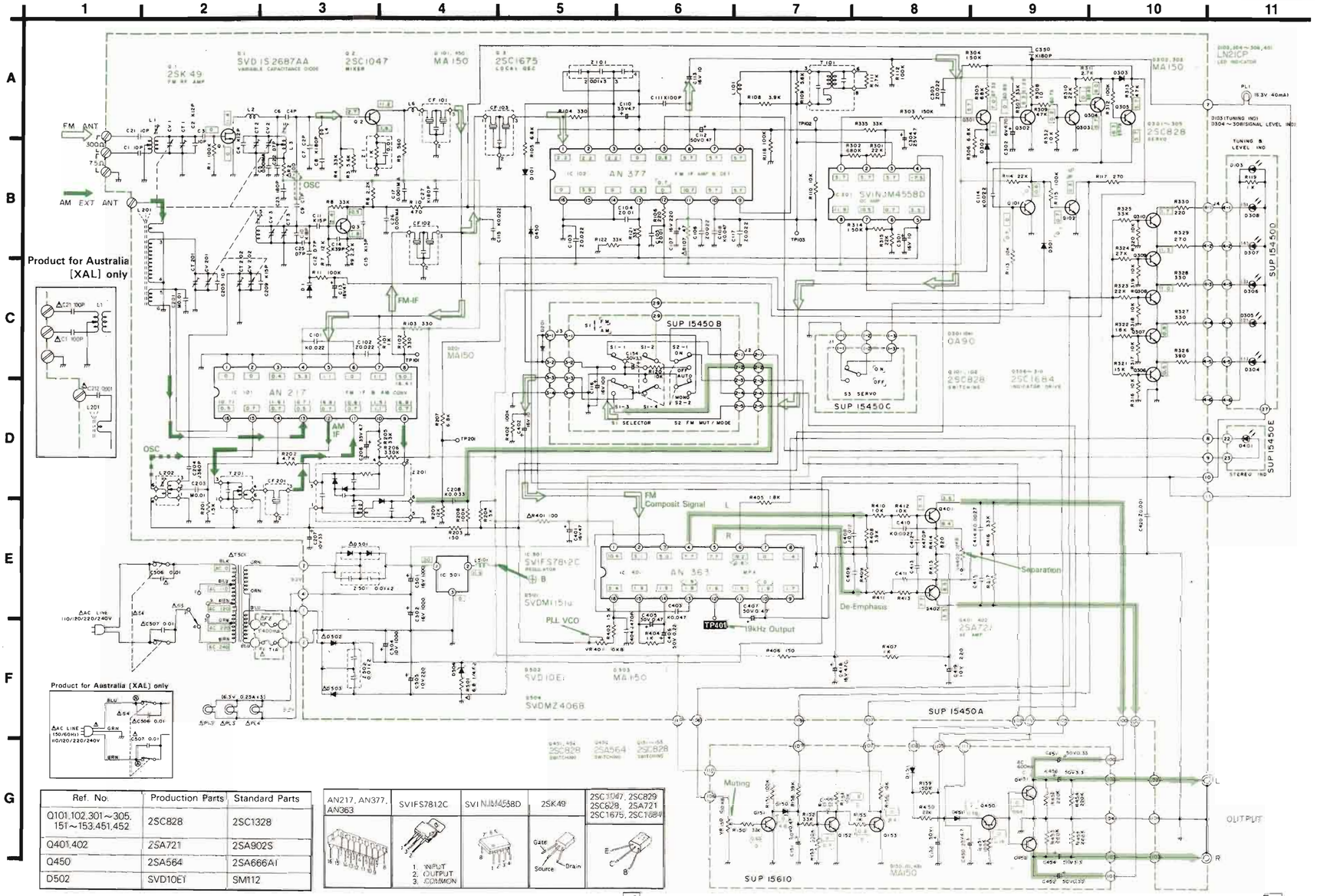

Ref. No.	Production Parts	Standard Parts
Q101,102,301~305, 151~153,451,452	2SC828	2SC1328
Q401,402	2SA721	2SA902S
Q450	2SA564	2SA666AI
D502	SVD10ET	SM112

■ SCHEMATIC DIAGRAM

- This schematic diagram may be modified at any time with the development of new technology.

Notes:

1. **S1-1 ~ S1-4** : Selector switch in "**FM**" position.
2. **S2-1, S2-2** : FM muting/mode switch in "**on/auto**" position.
3. **S3** : Active servo lock switch in "**on**" position.
4. **S4** : Power source switch in "**on**" position.
5. **S5** : Voltage adjuster switch in "**240V**" position.
6. Indicated voltage are the standard values for the unit neasured by the DC electronic circuit tester (high-impedance) with the chassis taken as standard. Therefore, there may exist some errors in the voltage values, depending on the internal impedance of the DC circuit tester.
   - Figures in [ ] stand for DC voltage in FM (60dB signal reception) mode.
   - Figures in ( ) stand for DC voltage in AM mode.
   - Figures in < > stand for DC voltage in FM stereo signal reception mode.
   - Figures in { } stand for DC voltage in servo lock circuit operation.
   - Figures in ⟨ ⟩ stand for DC voltage in FM (no signal) muting to on mode.
7. ⚠ indicates that only parts specified by the manufacturer be used for safety.
8. Signal lines ⇨ FM ⇨ AM ⇨ AF
9. To represent transistors, **Q** is used instead of **TR**. (Ex. TR1 → Q1)

■ BLOCK DIAGRAM OF IC

- This is the basic block diagram of the inside circuit of IC. In an actual circuit, there may be sometimes idle terminals or some different functions other than the basic circuit.

IC101 (AN217)
FM IF Amplifier & AM Converter

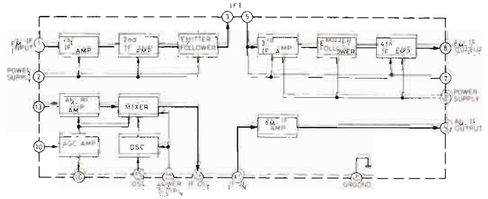

IC401 (AN363)
FM Multiplex

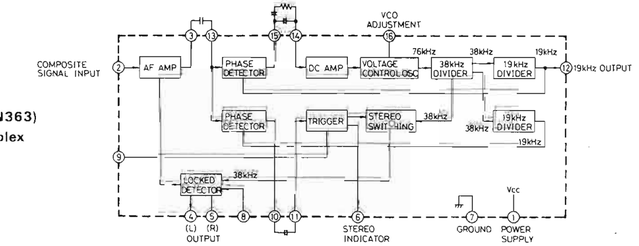

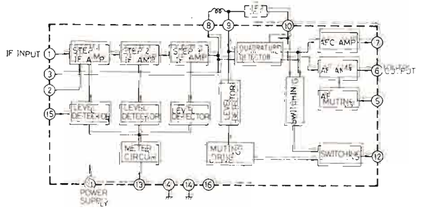

IC102 (AN377)
FM IF Amplifier & Detector

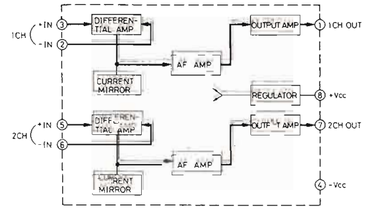

IC301 (SVINJM4558D)
DC Amplifier

■ EXPLODED VIEW

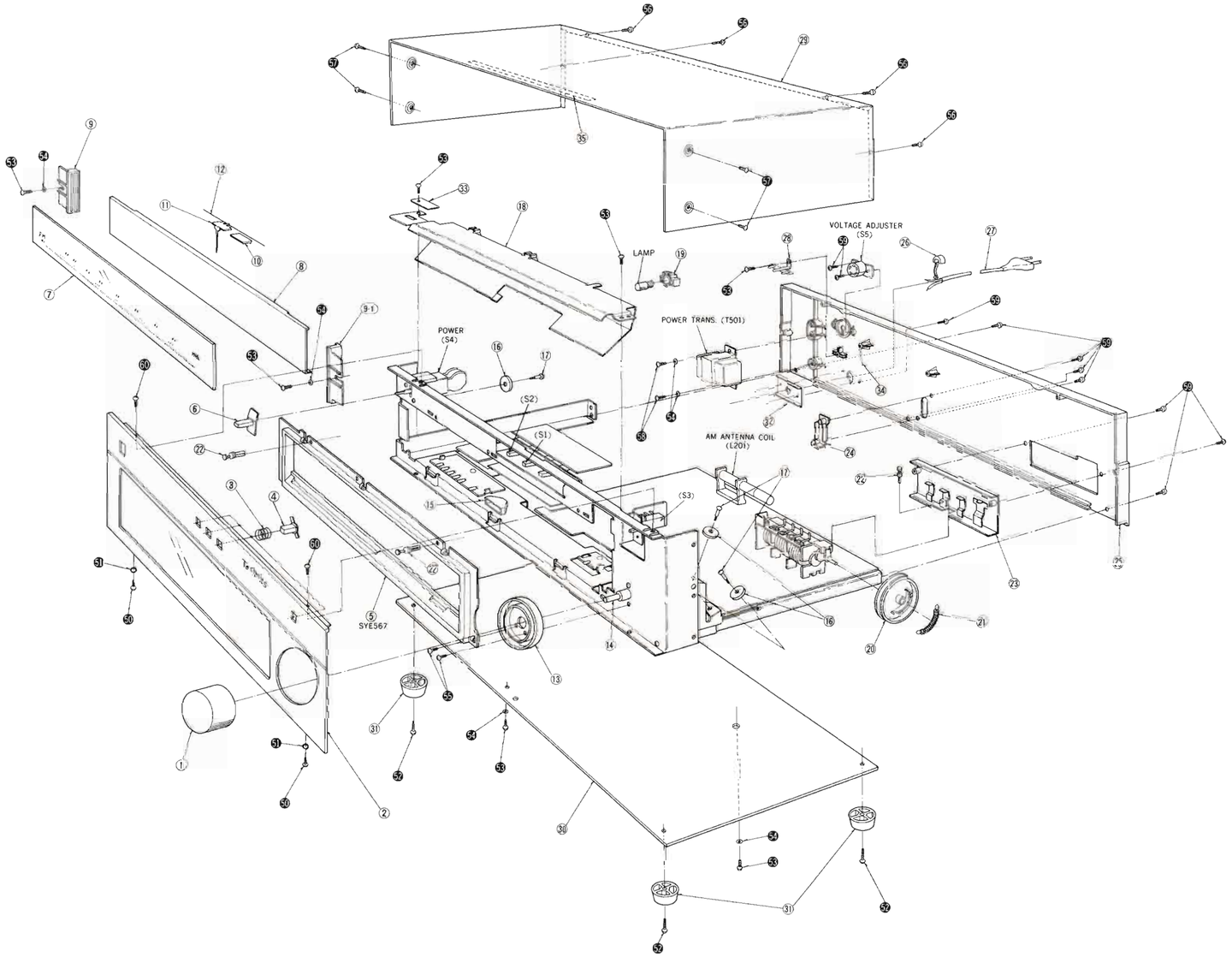

■ REPLACEMENT PARTS LIST ··· Cabinet & Chassis Parts

NOTES: 1 Part numbers are indicated on most mechanical parts. Please use this part number for parts orders.
2 ⚠ indicates that only parts specified by the manufacturer be used for safety.

Ref. No.		Part No.	Part Name & Description
		CABINET and CHASSIS PARTS	
1		SBN819	Knob, Tuning Control
2		SGWT8044N	Panel, Front (Pearl Silver)
3		SUS123-1	Spring, Push Switches
4		SBC197	Button, Push Switches
5		SYE567-1	Ornament, Dial Scale
6		SBD19	Knob, Power Source Switch
7		SKD3610	Scale, Dial
8		SDH475-1	Reflector Plate, Dial Light
9		SGX6609	Mounting, Dial Scale (Left Side)
9-1		SGX6609-1	Mounting, Dial Scale (Right Side)
10		SHP35	Paper, Dial Pointer Slide
11		SDP1131	Pointer, Dial
12		SDZ051-2	Cord, Dial 180cm(70-15/16")
13		SGX6613	Ornament, Tuning Knob
14		SDT8057	Shaft, Tuning Ass'y (w/flywheel)
15		SHG1483	Bracket, Servo Lock Indicator Lamp
16		**RDR8-1**	Pulley, Dial Cord
17		SHD3X1F	Shaft, Pulley
18		SMP269	Cover, Dial Light
19		SJS2103	Socket, Dial Lamps
20		SDD47-1	Drum, Variable Capacitor
21		SDSA4121	Spring, Dial Cord
22		SHR401-1	Latch, Antenna Terminal & Scale Ornament M'tg
23		SJF4419-2	Terminal, FM/AM Antenna
24		SJF3223	Terminal, Output
25 (E)only		SGP1630-1A	Rear Panel
25 (X,XA,XAL)		SGP1630-1B	Rear Panel
25 (XGH,EG, EB)		SGPT8044D	Rear Panel, SGP1630-1A with Name Plate (SGT18090)
26		SHR127	Bushing, AC Cord
26 (XAL)only		SHR131	Bushing, AC Cord
27		RJA23ZC	AC Cord, Power Source
27 (XAL)only	⚠	QFC1207M	AC Cord, Power Source
28	⚠	SJR205	Terminal, AC Cord
29		SKA10410	Cabinet
30		SKU731	Bottom Board
31		SKLA7-1	Foot, Bottom Board
32		SGP9015-2	Plate, AC Cord M'tg
32 (XAL)only		SGP9015-3	Plate, AC Cord M'tg
33		SHR5023	Rubber
34		SXE513-1	Clamper, Lead Wire
35		SHS6111	Cloth, Cabinet
		SCREWS and WASHERS	
50		XTB3+8BFZ	Screw, Front Panel M'tg (Lower Side)
51		XWC3BFZ	Washer, Front Panel Lower Screws
52		XTB3+16B	Screw, Feet M'tg
53		XTB3+8B	Screw, Bottom Board, Lamp Cover, & Scale Mounting M'tg
54		XWG3	Washer
55		XTB3+10BFZ	Screw, Tuning Knob Ornament M'tg
56		XTB3+8BFN	Screw, Cabinet M'tg
57		XTB4+8FFN	Screw, Cabinet M'tg
58		XTB3+10B	Screw, Power Transformer M'tg
59		XTB3+10BFZ	Screw, Rear Panel & Voltage Adjuster M'tg
60		XTB3+8FFZ	Screw, Front Panel M'tg(Upper Side)

(E) and (EG) are available in Scandinavia and European only.
(X) and (XA) are available in Asia, Latin America, Middle East and Africa only.
(XAL) is available in Australia only.
(XGH) is available in Holland only.
(EB) is available in Belgium only.

■ REPLACEMENT PARTS LIST ··· Accessories & Packing Parts

Ref. No.		Part No.	Part Name & Description
ACCESSORIES			
A1		SSA253	Cord, FM Indoor Antenna
A2		SJP2129-5	Cord, Connection Shield
A3 [X,XA]only	⚠	SJP5213-1	Plug Adapter, Power Source
PACKING PARTS			
P1		SPP575	Polyethylene Bag
P2		SPS1825	Pad, Left Side
P2 [XAL]only		SPS1825-1	Pad, Left Side
P3		SPS1827	Pad, Right Side
P3 [XAL]only		SPS1827-1	Pad, Right Side
P4 [E]		SPG1803	Carton Box
P4 [EG,EB,XGH]		SPG1805	Carton Box
P4 [X,XA]		SPG1861	Carton Box
P4 [XAL]		SPG1863	Carton Box
P5		SQF10057	Instructions Book, Printed Matter

■ CHANGE OF PARTS LIST

ST-8044K (E), (EG), (X), (XA), (XAL), (EB), (XGH)

Note: This parts list included only the changes of the model ST-8044 parts list.

Ref. No.	Change of Part No. ST-8044	➡ ST-8044K	Part Name & Description
CABINET and CHASSIS PARTS			
1	SBN819	SBN819-1	Knob, Tuning Control
2	SGWT8044N	SGWT8044KD	Panel, Front (Black)
5	SYE567-1	SYE567-2	Ornament, Dial Scale
6	SBD19	SBD19-1	Knob, Power Source Switch
7	SKD3610	SKD3611	Scale, Dial
25	SGP1630-1A [E]	SGP1630-1C [E]	Rear Panel
	SGP1630-1B [X, XA, XAL]	SGPT8044KX [X, XA, XAL]	Rear Panel, SGP1630-1B with Name Plate (SGT19990)
	SGPT8044D [XGH, EG, EB]	SGPT8044KD [XGH, EG, EB]	Rear Panel, SGP1630-1C with Name Plate (SGT19570)
29	SKA10410	SKA10417	Cabinet
56	XTB3+8BFN	XTB3+8BFZ	Screw, Cabinet M'tg
57	XTB4+8FFN	XTB4+8FFZ	Screw, Cabinet M'tg
PACKING PARTS			
P4	SPG1803 [E]	SPG1957 [E]	Carton Box
	SPG1805 [EG, EB, XGH]	SPG1959 [EG, EB, XGH, X, XA]	Carton Box
	SPG1861 [X, XA]		
	SPG1863 [XAL]	SPG2033 [XAL]	Carton Box

■ ACCESSORIES

A1 (SSA253)

A2 (SJP2129-5)

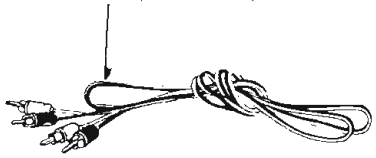

A3 (SJP5213-1)

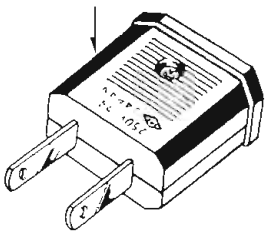

■ PACKINGS

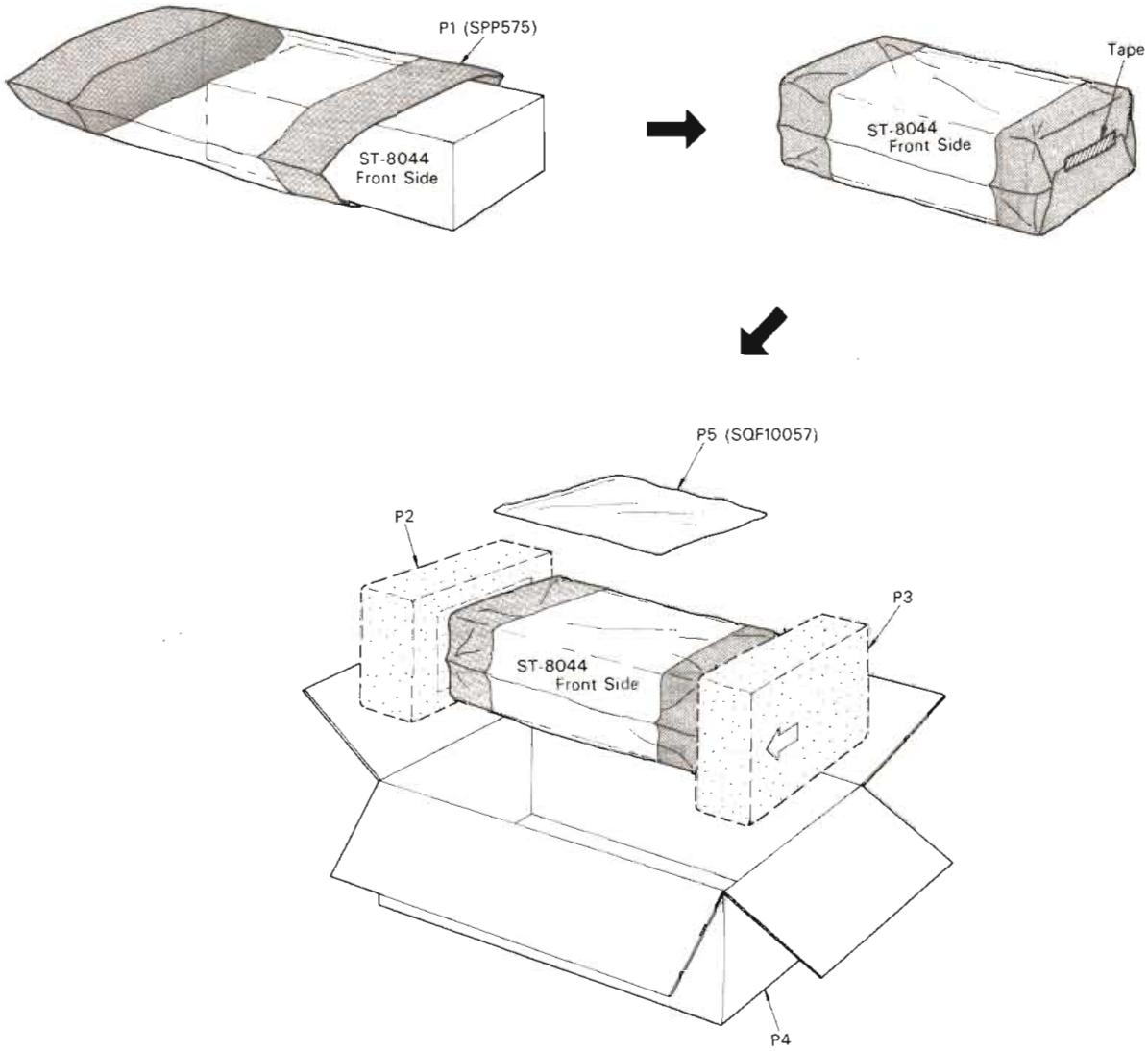

■ NEW INDICATION MARK

The **S** mark has been used for the indication of specified parts for an assurance of safety, but it has been changed to ⚠ mark. When replacing parts, be sure to use parts with correct numbers with reference to the circuit drawing or the repair parts list.

S → ⚠ (new mark)

Printed in Japan
78114500 Ⓚ K.K.