SONY

VIDEOCASSETTE RECORDER

UVW-1800
UVW-1800P

VIDEOCASSETTE PLAYER

UVW-1600
UVW-1600P

SERVICE MANUAL

Volume 2 1st Edition (Revised 1)

BETACAM SP

このマニュアルは，既存の印刷物を電子データに変換したものです。その際，印刷上必要であった空白ページをすべて削除しました。これにより，ページナンバーが抜けているところがありますが，情報の欠落ではありません。あらかじめご了承ください。

This manual used to be printed on paper but is now in electronic form. All blank pages in the printed version have been eliminated in the electronic version to facilitate printing at service stations. Hence, although some pages may appear to be missing, no service information has been omitted.

Introducing this manual

This manual is the Service Manual Vol. 2 of the video cassette recorder model UVW-1800/1800P and the video cassette player model UVW-1600/1600P . This manual contains block diagrams, board layouts, schematic diagrams, parts lists.

Contains

The sections covered in the manual are summarized below to give you a general understanding of the manual.

Related manuals

In addition to this Service Manual Vol. 2, the following manuals are provided.

- **Operation Manual (Supplied with equipment)**
  Explains how to operate this equipment.

- **Installation Manual (Not supplied with equipment)**
  Contains rack mount information necessary for installation of the equipment, the connector information necessary for connecting the unit with peripherals and others.

- **Service Manual Vol. 1 (Not supplied with equipment)**
  Contains the maintenance information and servicing information necessary for parts replacement and adjustment.

目次

TABLE OF CONTENTS

Volume 1

14. BLOCK DIAGRAMS

15. BOARD LAYOUTS

16. SCHEMATIC DIAGRAMS

17. SEMICONDUCTOR PIN ASSIGNMENTS

18. SPARE PARTS AND OPTIONAL FIXTURES

SECTION 14
BLOCK DIAGRAMS

14-1 (1)

OVERALL (1/2)

OVERALL (1/2)

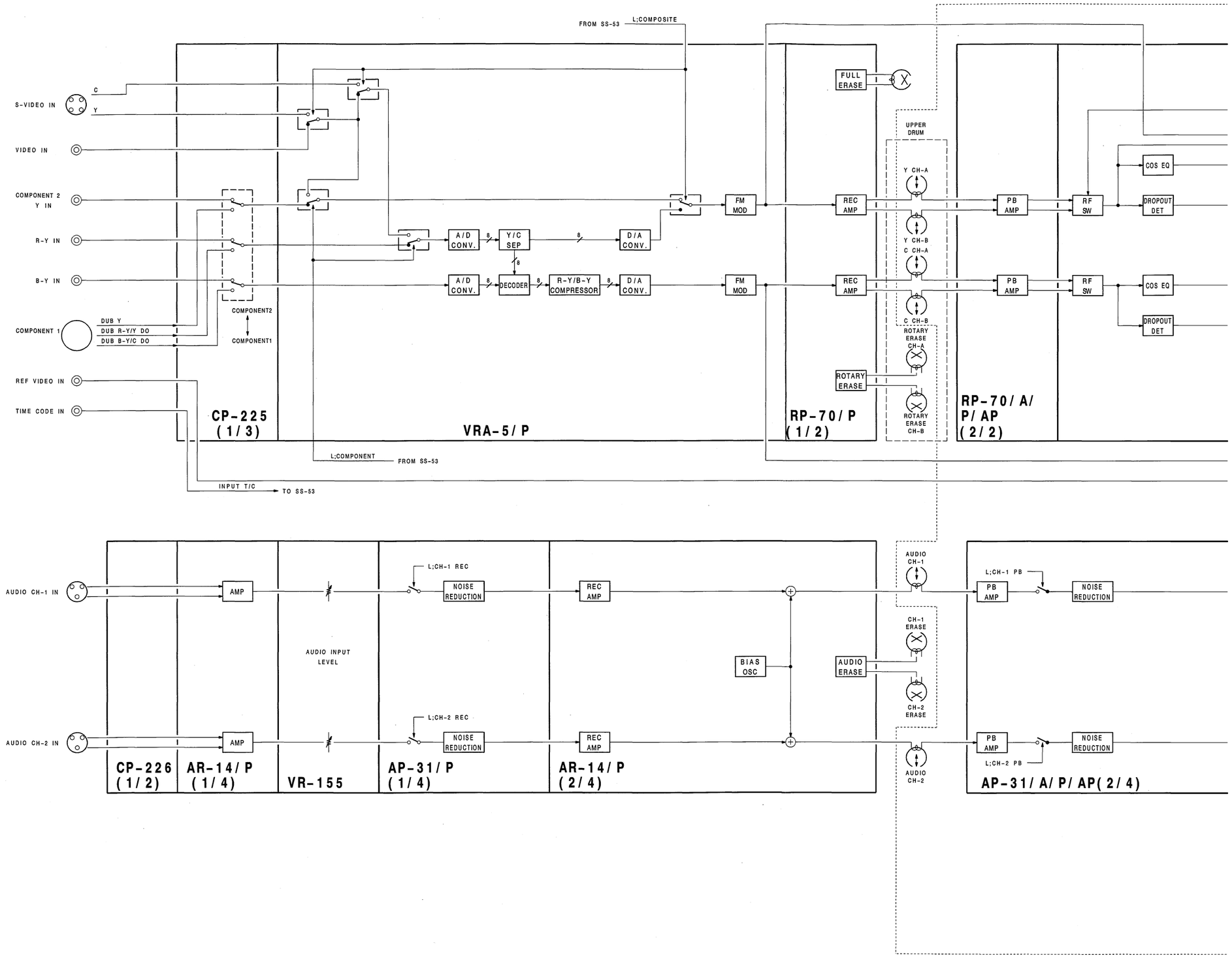

14-1 (2)

 OVERALL (1/2)

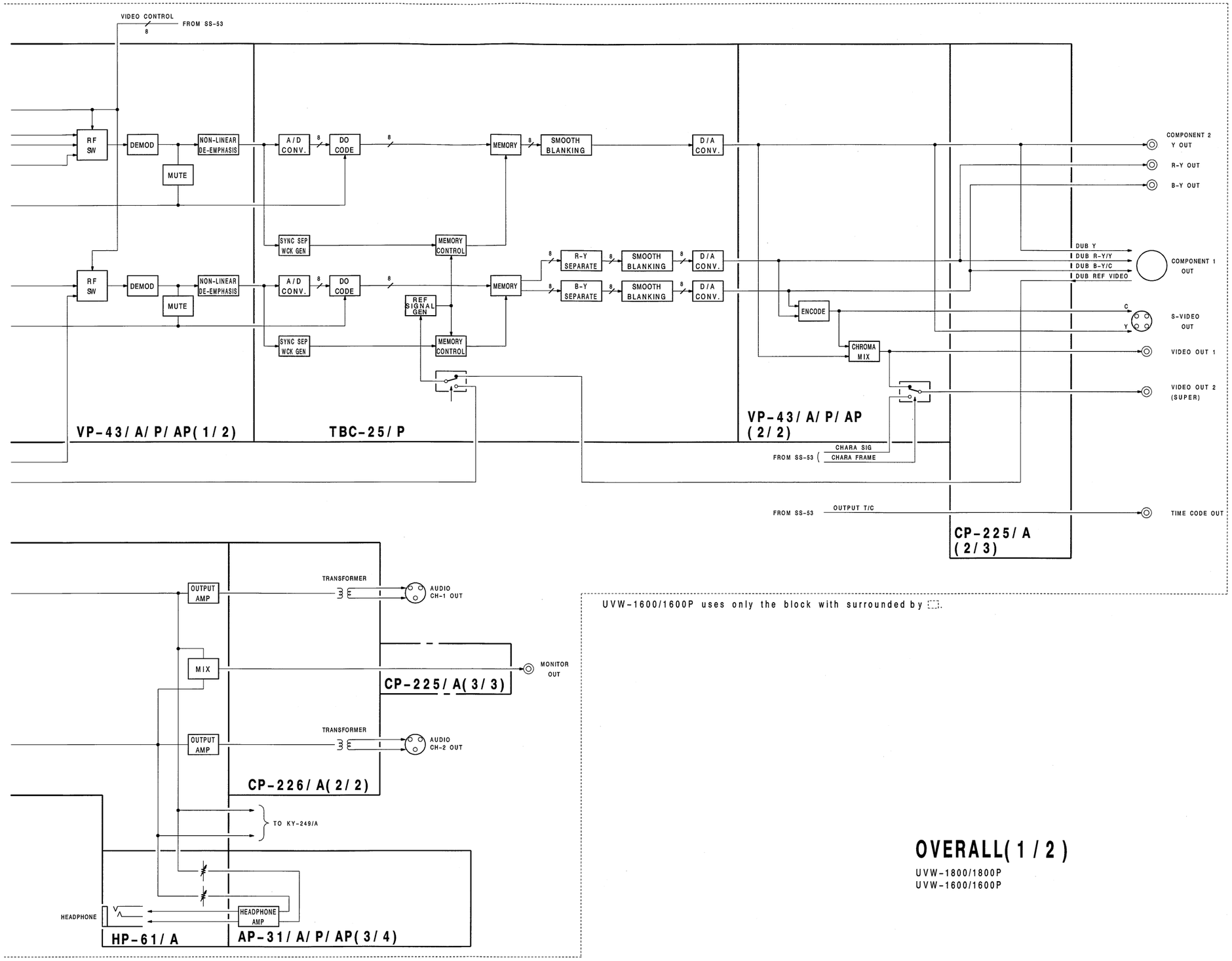

UVW-1600/1600P uses only the block with surrounded by ⬚.

OVERALL(1/2)

UVW-1800/1800P
UVW-1600/1600P

 14-1 (3)

 OVERALL (2/2)

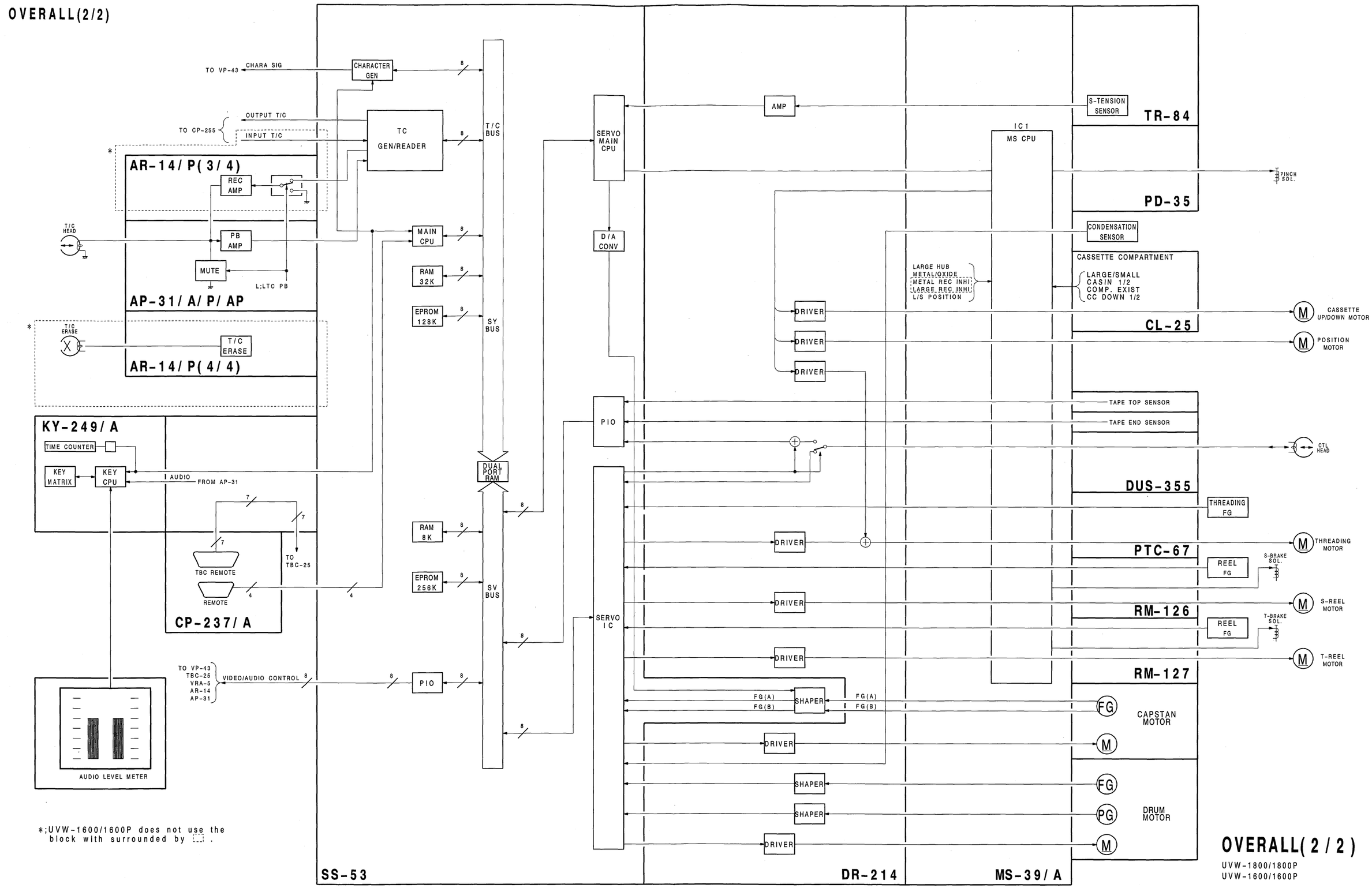

 14-2

CTDM, DEC

For J,UC

① TP101 REC/EE
(COMPOSITE)

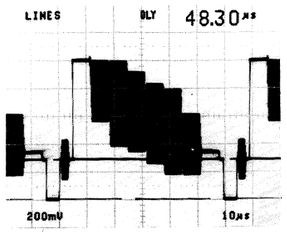

① TP101 REC/EE
(COMPONENT)

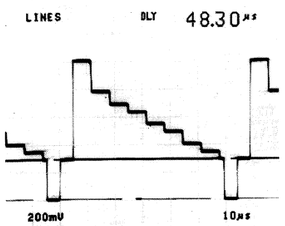

② TP201 REC/EE
(COMPOSITE)

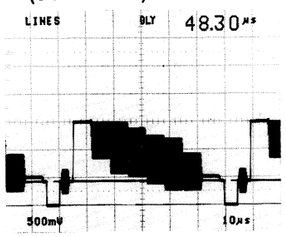

② TP201 REC/EE
(COMPONENT)

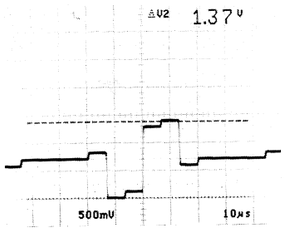

③ TP202 REC/EE
(COMPONENT)

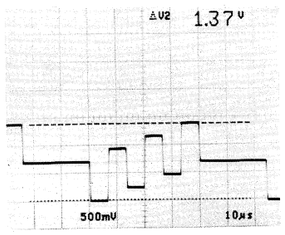

④ TP305 REC/EE

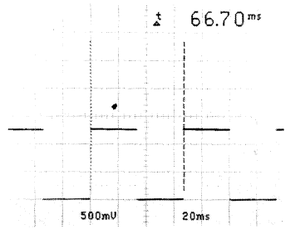

⑤ TP502 REC/EE

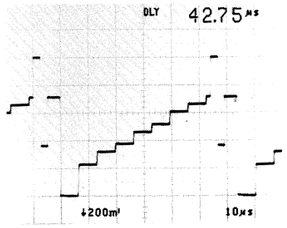

⑥ TP602 REC/EE

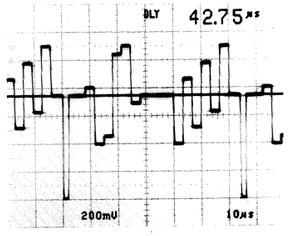

⑦ TP503 REC/EE
TP603 REC/EE

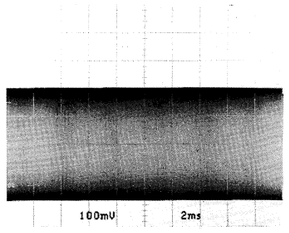

For EK

① TP101 REC/EE
(COMPOSITE)

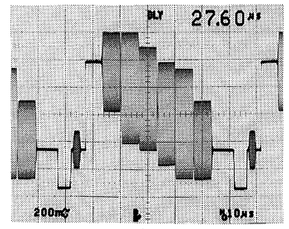

① TP101 REC/EE
(COMPONENT)

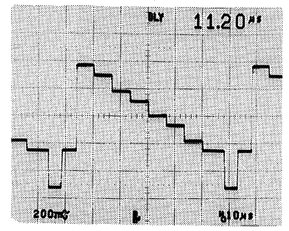

② TP201 REC/EE
(COMPOSITE)

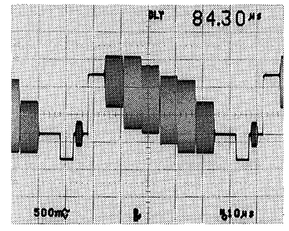

② TP201 REC/EE
(COMPONENT)

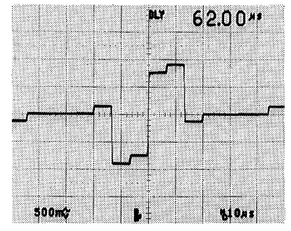

③ TP202 REC/EE
(COMPONENT)

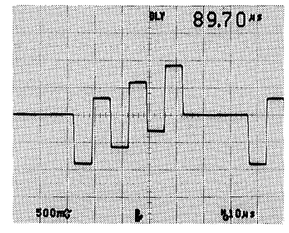

④ TP305 REC/EE

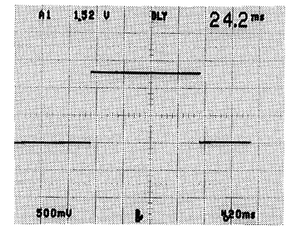

⑤ TP502 REC/EE

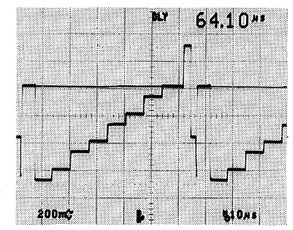

⑥ TP602 REC/EE

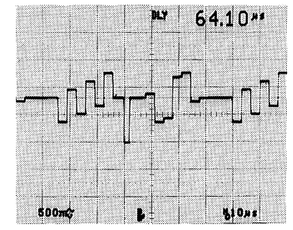

⑦ TP503 REC/EE
TP603 REC/EE

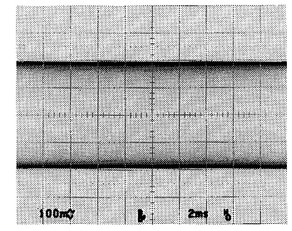

14-4

Y/C REC PROCESS(DECODE,MOD.),CTDM

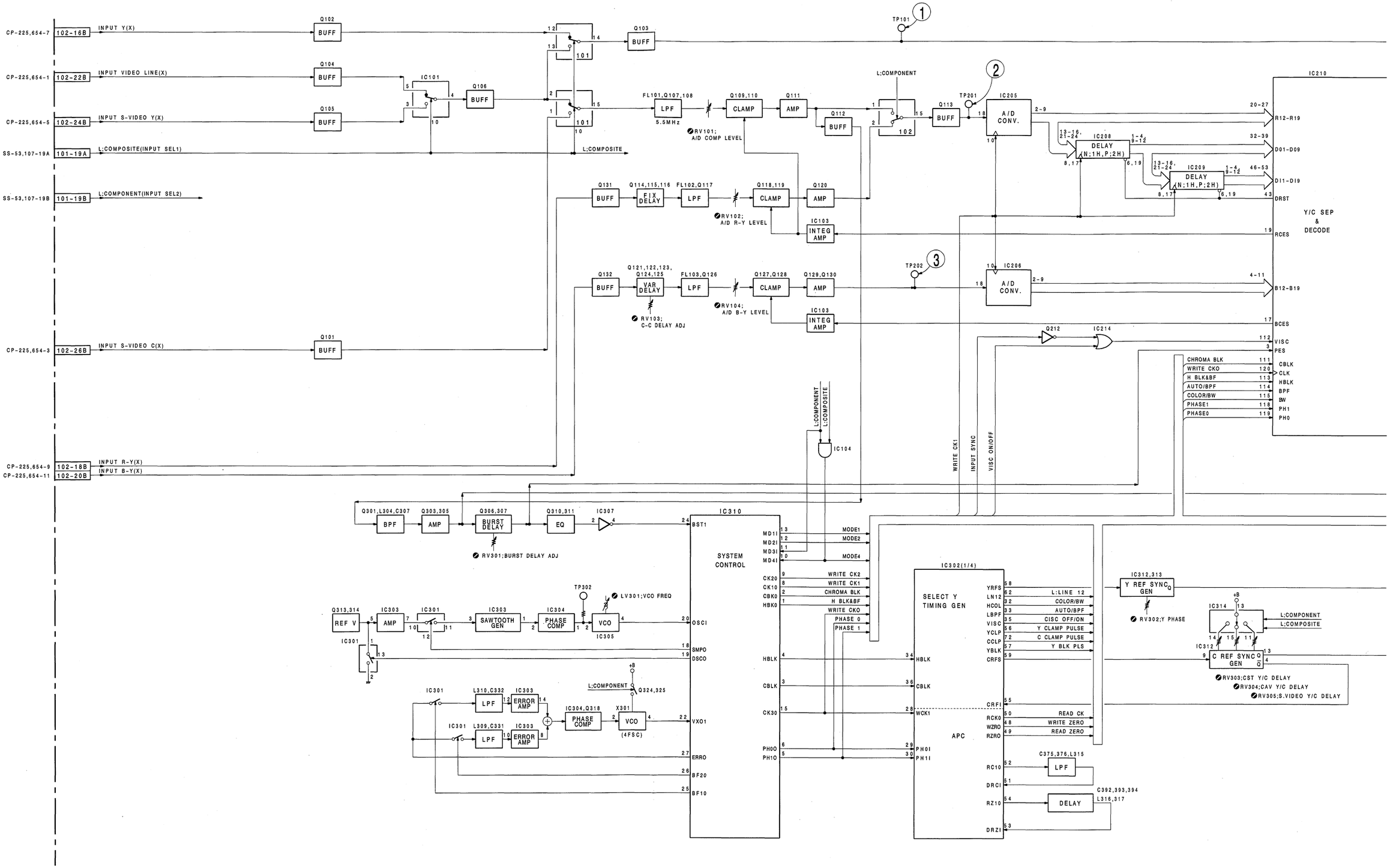

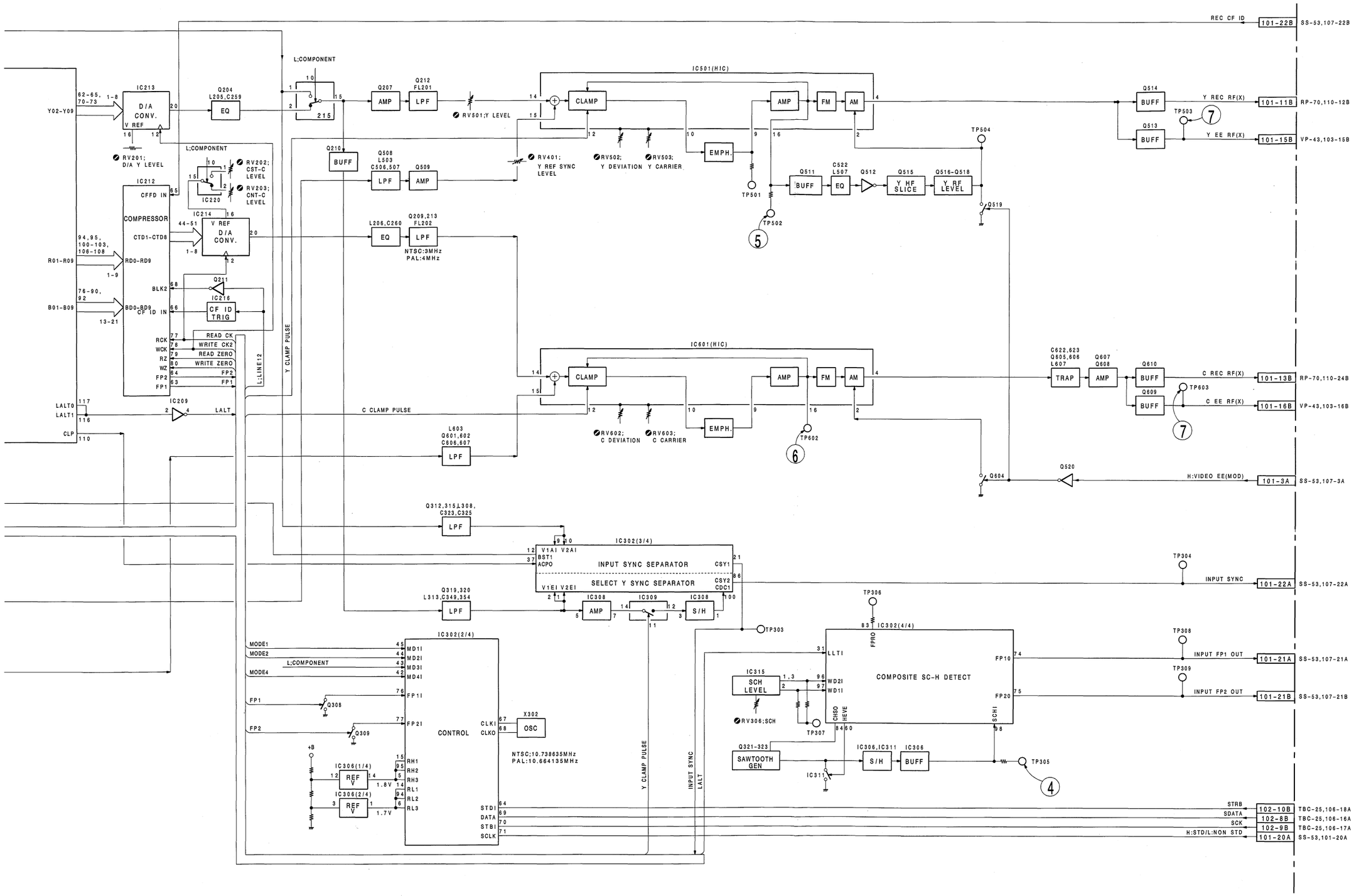

VRA-5/P

UVW-1800/1800P

RF REC/PB AMPLIFIER,ROTARY ERASE OSCILLATOR

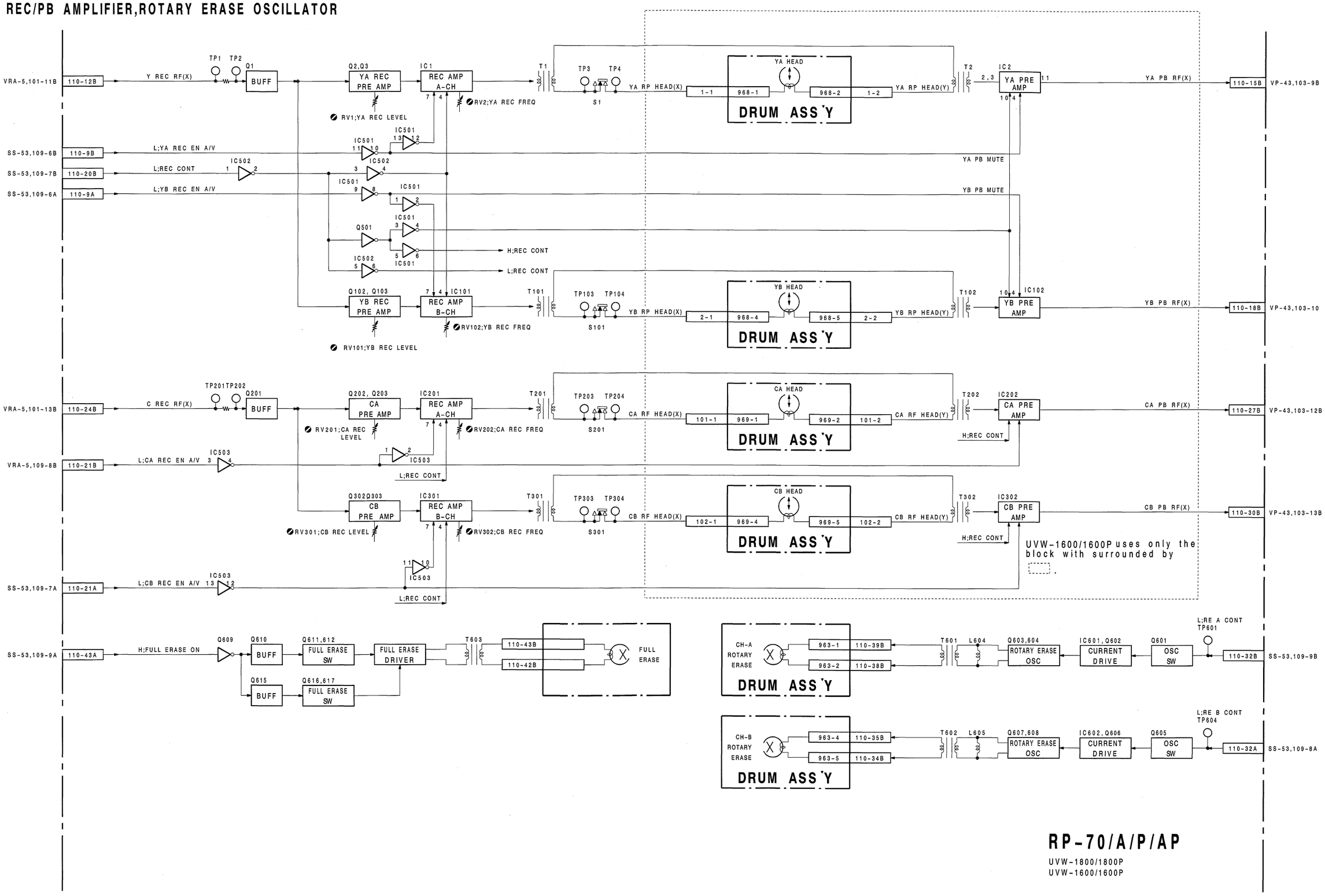

For J,UC

① TP201 PB

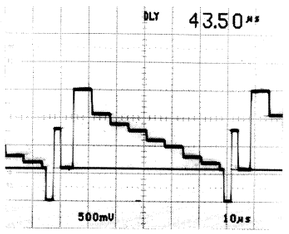

② TP401 PB

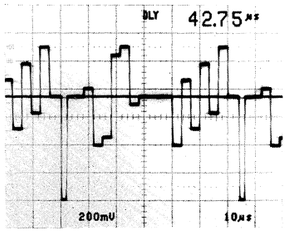

For EK

① TP201 PB

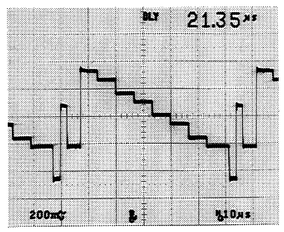

② TP401 PB

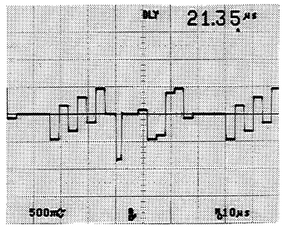

PB RF EQ,DEMODULATOR

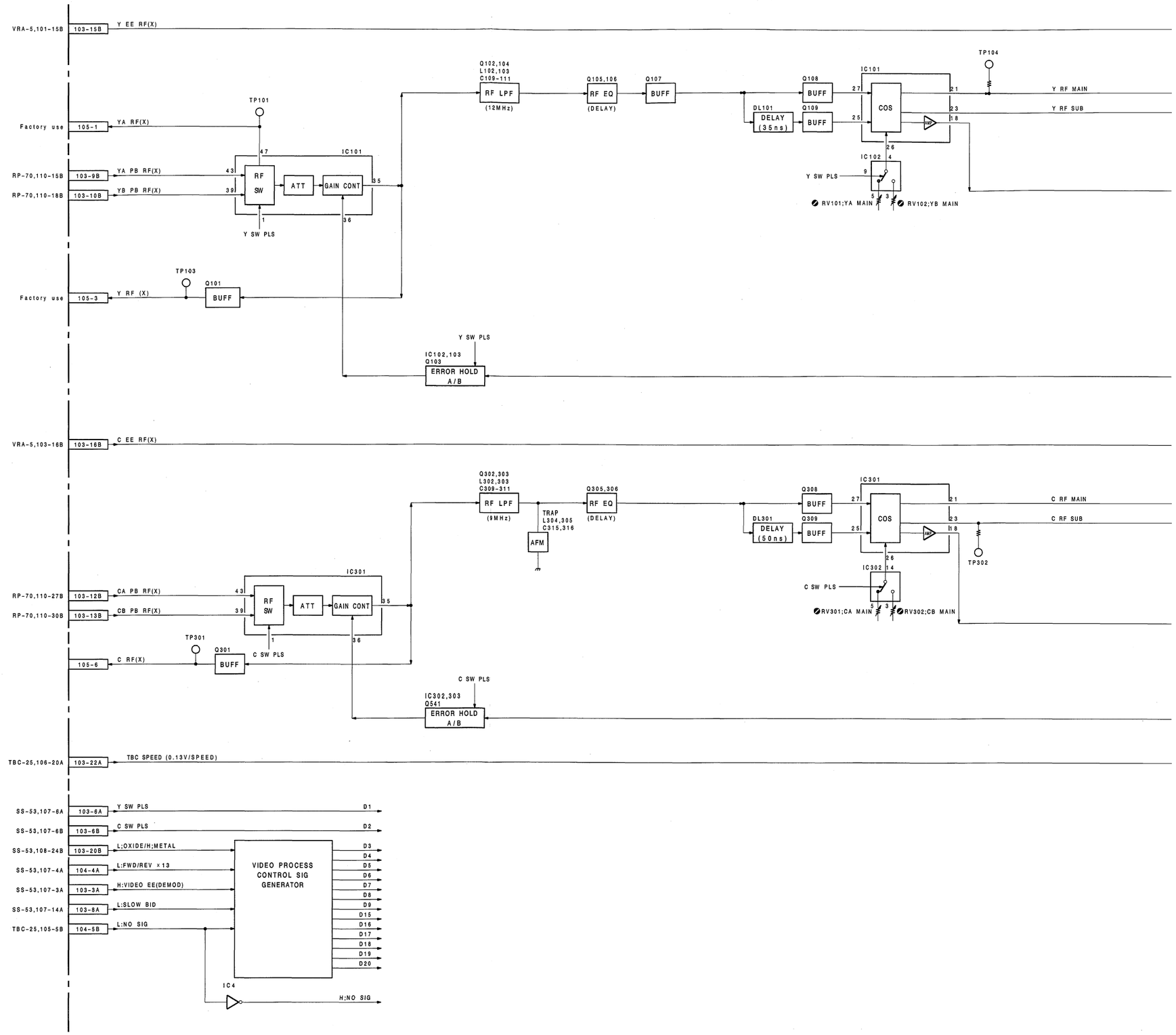

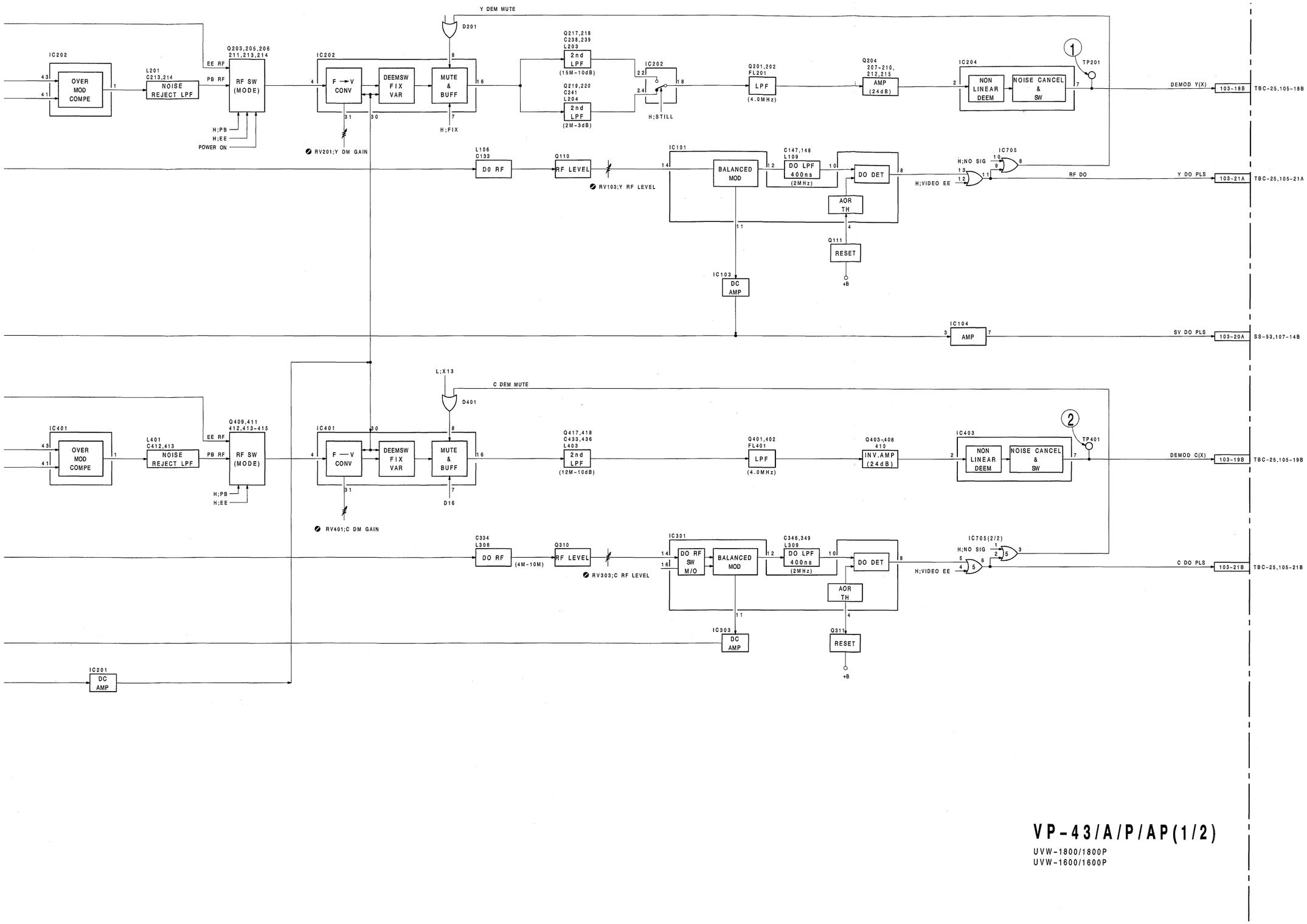

VP-43/A/P/AP(1/2)

UVW-1800/1800P
UVW-1600/1600P

14-9 (2)

ENCODE,OUTPUT DRIVER

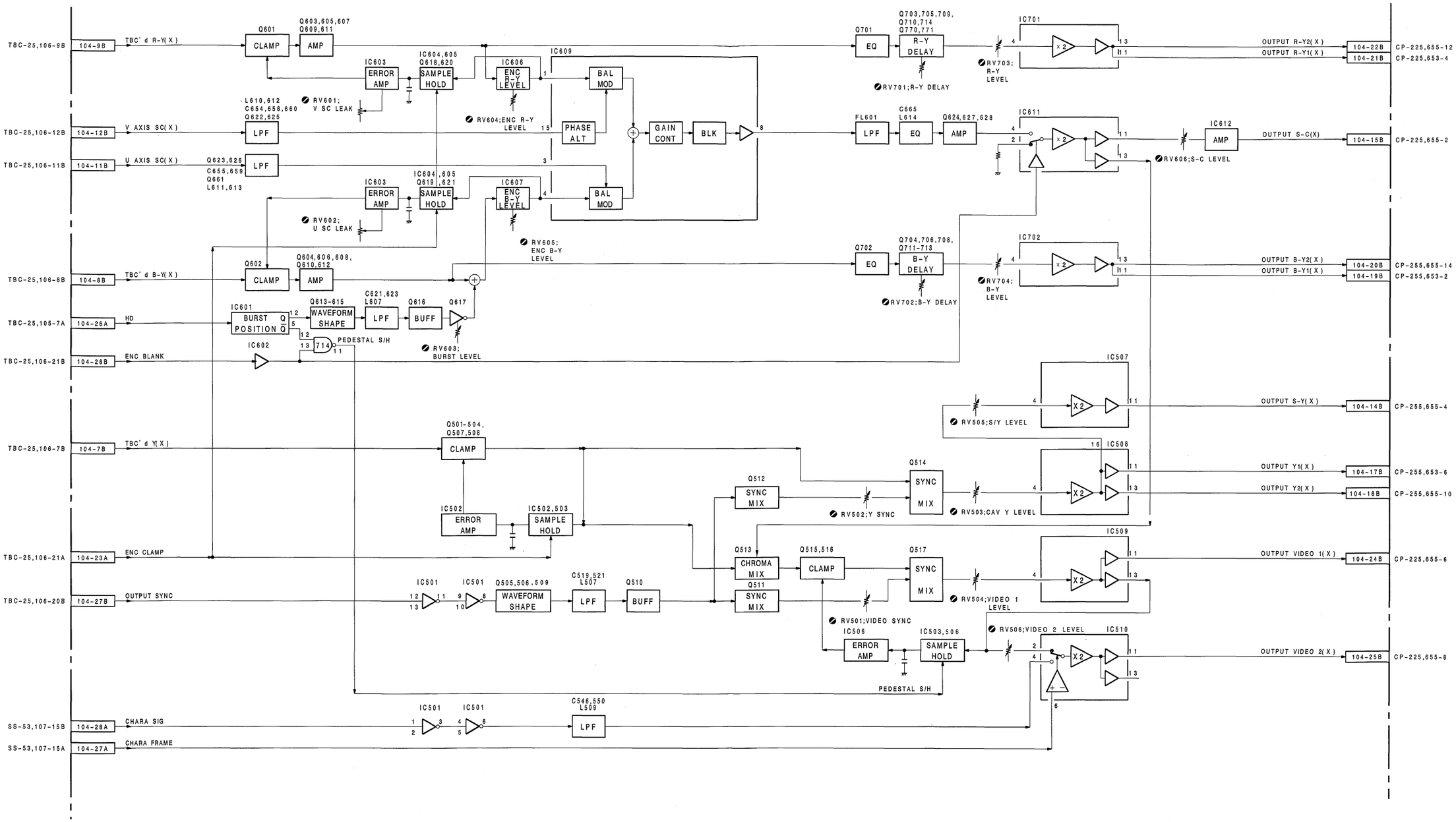

VP-43/A/P/AP(2/2)

UVW-1800/1800P
UVW-1600/1600P

 TBC, CTDM (1)

For J,UC

① TP101 PB

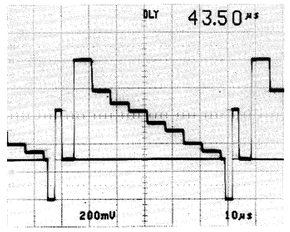

⑥ TP303 PB

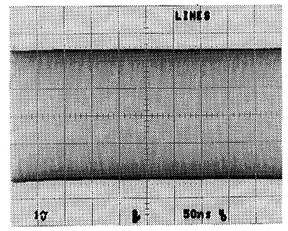

② TP201 PB

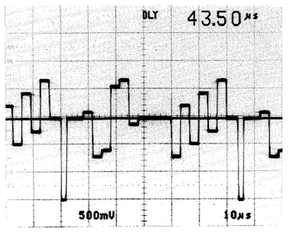

⑦ TP402 PB

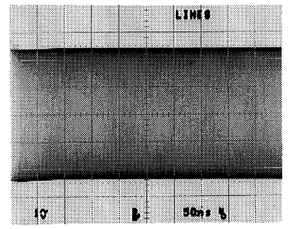

③ TP500 PB

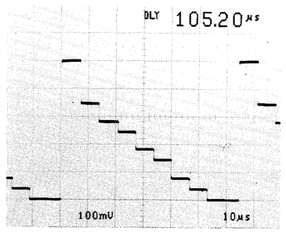

④ TP501 PB

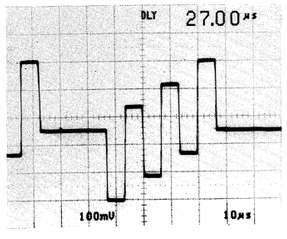

⑤ TP502 PB

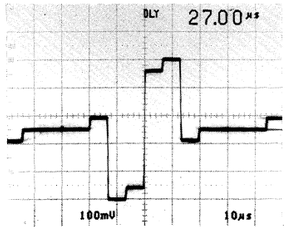

For EK

① TP101 PB

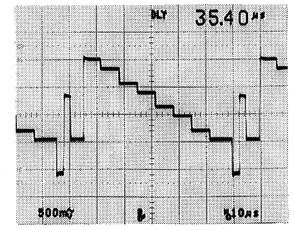

⑥ TP303 PB

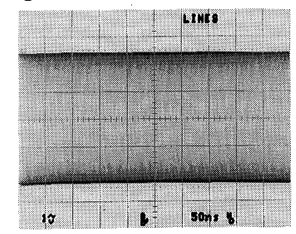

② TP201 PB

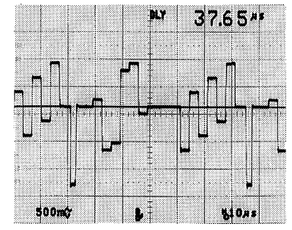

⑦ TP402 PB

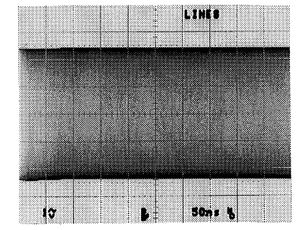

③ TP500 PB

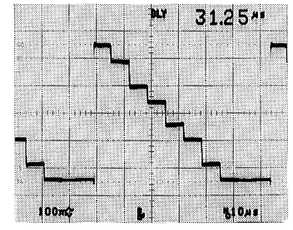

④ TP501 PB

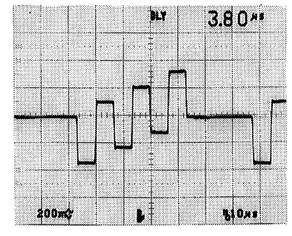

⑤ TP502 PB

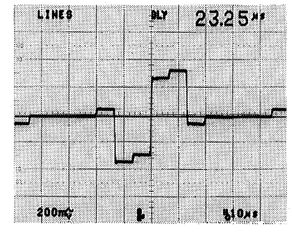

 14-12

TIME BASE CORRECTOR,CTDM(EXPAND)

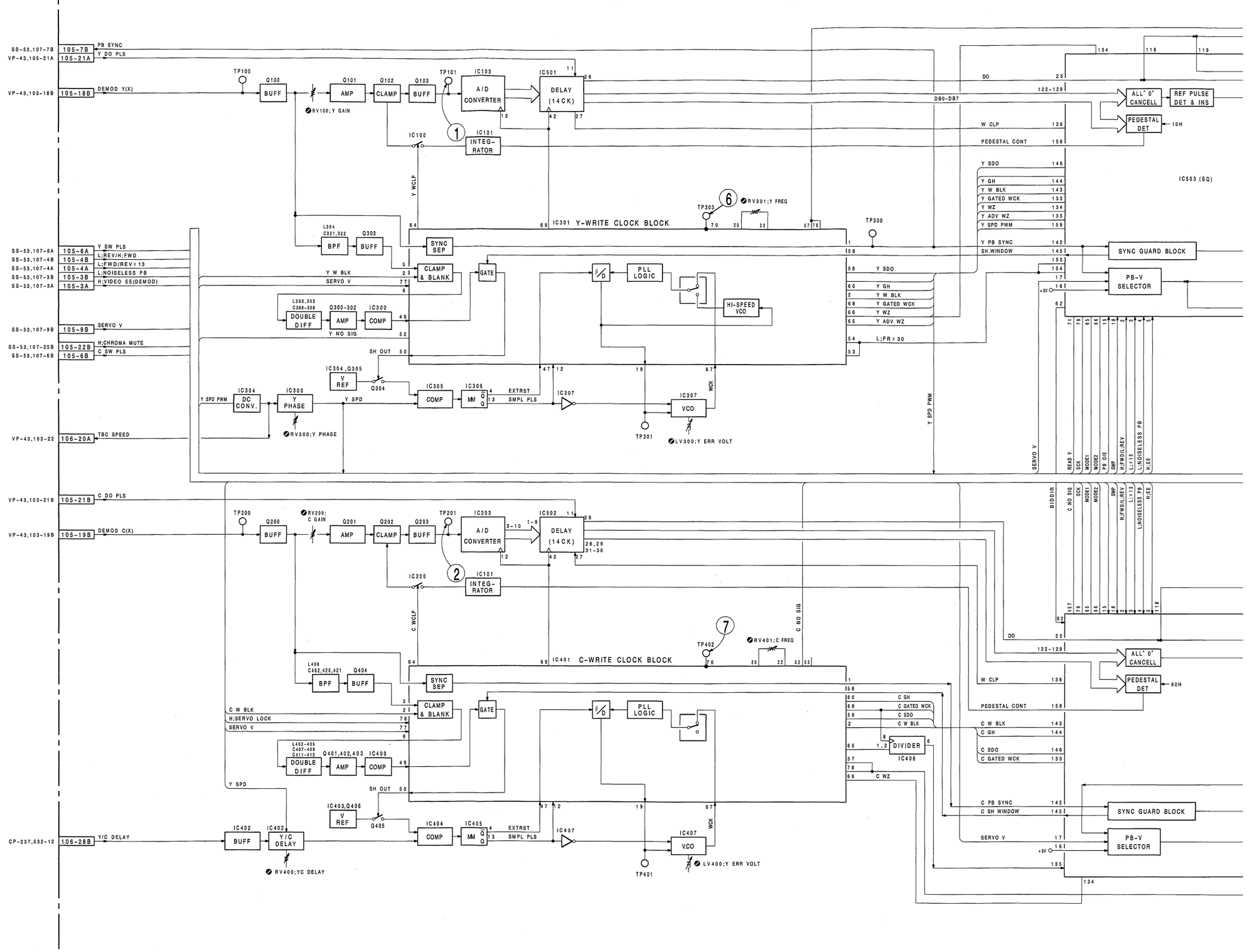

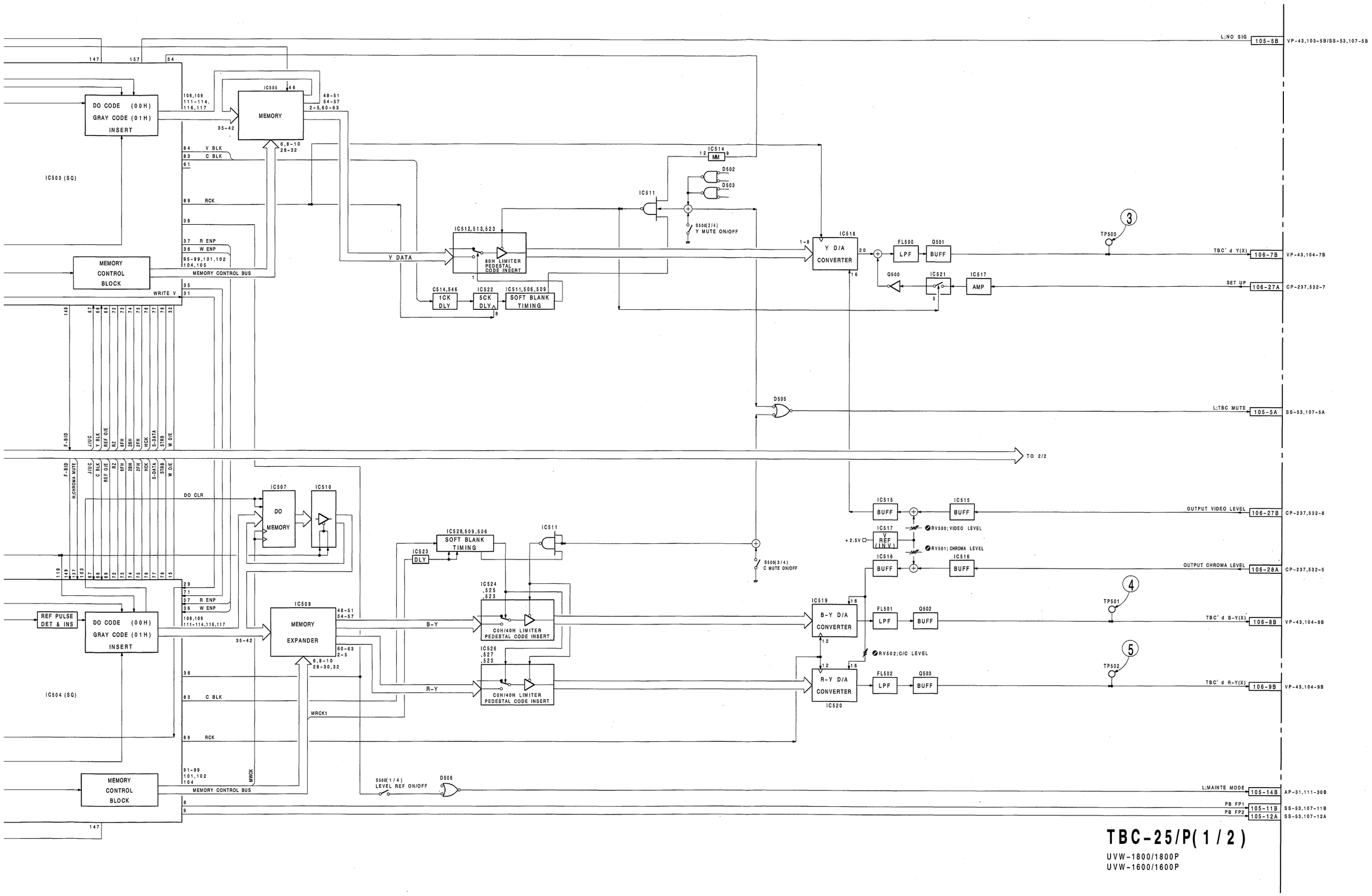
DO CODE (00H)
GRAY CODE (01H)
INSERT
IC503 (SQ)
MEMORY
IC505
MEMORY CONTROL BLOCK
MEMORY CONTROL BUS
V BLK
C BLK
RCK
R ENP
W ENP
WRITE V
Y DATA
IC512,513,523
80H LIMITER
PEDESTAL
CODE INSERT
C514,546
1CK DLY
IC522
5CK DLY
IC511,506,509
SOFT BLANK TIMING
IC514
MM
D502
D503
IC511
S500(2/4)
Y MUTE ON/OFF
IC518
Y D/A CONVERTER
FL500
LPF
Q501
BUFF
Q500
IC521
IC517
AMP
TP500
L;NO SIG
105-5B
VP-43,103-5B/SS-53,107-5B
TBC' d Y(X)
106-7B
VP-43,104-7B
SET UP
106-27A
CP-237,532-7
D505
L;TBC MUTE
105-5A
SS-53,107-5A
TO 2/2
F-BID
H;CHROMA MUTE
J/UC
Y BLK
REF O/E
RZ
6FH
2BH
2FH
HCK
S-DATA
STRB
W O/E
DO CLR
IC507
IC510
DO MEMORY
IC528,509,506
SOFT BLANK TIMING
IC523
DLY
IC511
S500(3/4)
C MUTE ON/OFF
IC515
BUFF
IC517
V REF (INV)
+2.5V
RV500;VIDEO LEVEL
RV501;CHROMA LEVEL
IC516
OUTPUT VIDEO LEVEL
106-27B
CP-237,532-8
OUTPUT CHROMA LEVEL
106-28A
CP-237,532-5
REF PULSE DET & INS
DO CODE (00H)
GRAY CODE (01H)
INSERT
IC504 (SQ)
IC508
MEMORY EXPANDER
IC524,525,523
IC526,527,523
COH/40H LIMITER
PEDESTAL CODE INSERT
B-Y
R-Y
IC519
B-Y D/A CONVERTER
IC520
R-Y D/A CONVERTER
FL501
Q502
FL502
Q503
RV502;C/C LEVEL
TP501
TP502
TBC' d B-Y(X)
106-8B
VP-43,104-8B
TBC' d R-Y(X)
106-9B
VP-43,104-9B
MRCK1
MWCK
S500(1/4)
LEVEL REF ON/OFF
D506
L;MAINTE MODE
105-14B
AP-31,111-30B
PB FP1
105-11B
SS-53,107-11B
PB FP2
105-12A
SS-53,107-12A
TBC-25/P(1/2)
UVW-1800/1800P
UVW-1600/1600P

14-13 (2)

TIME BASE CORRECTOR

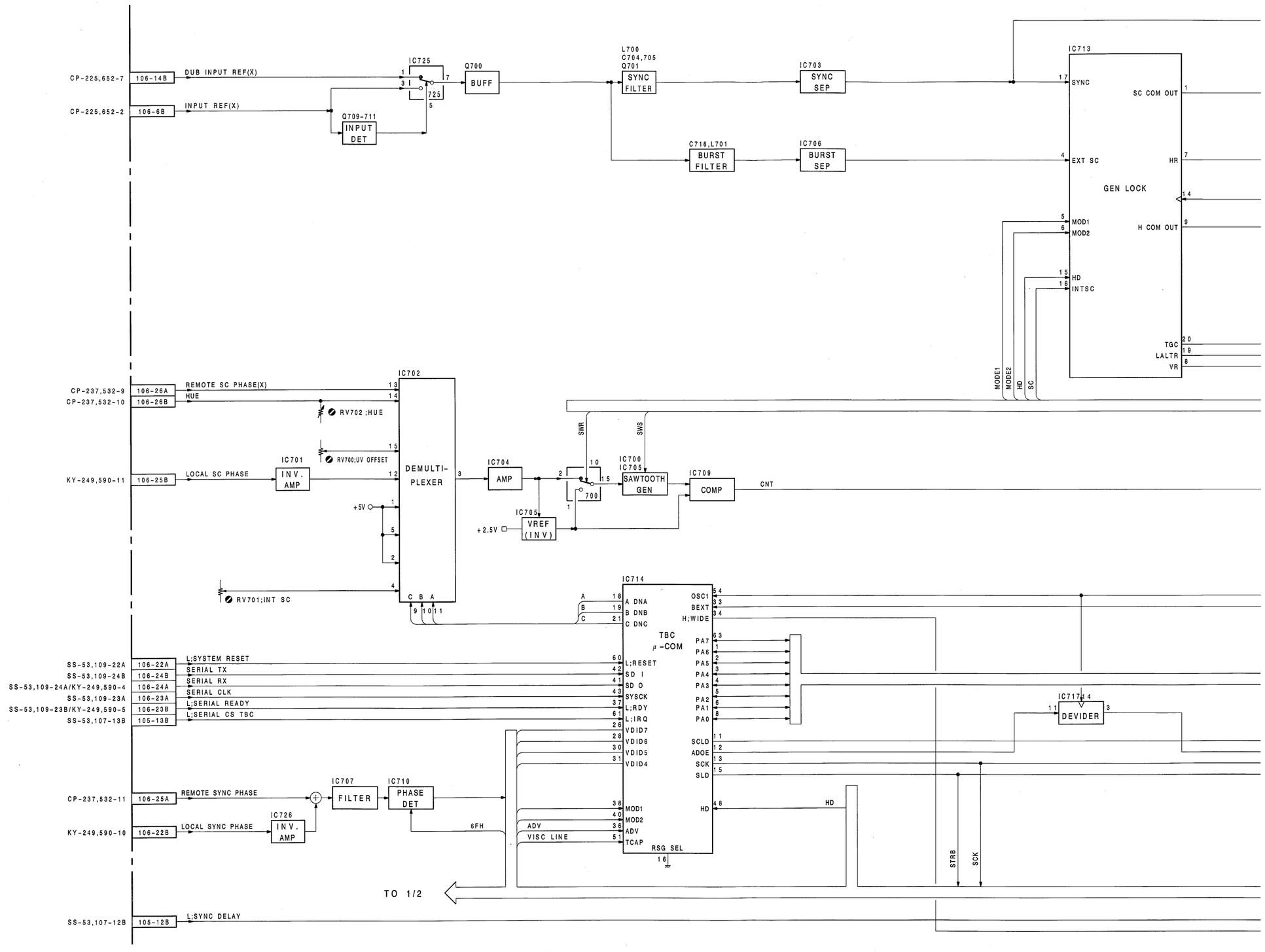

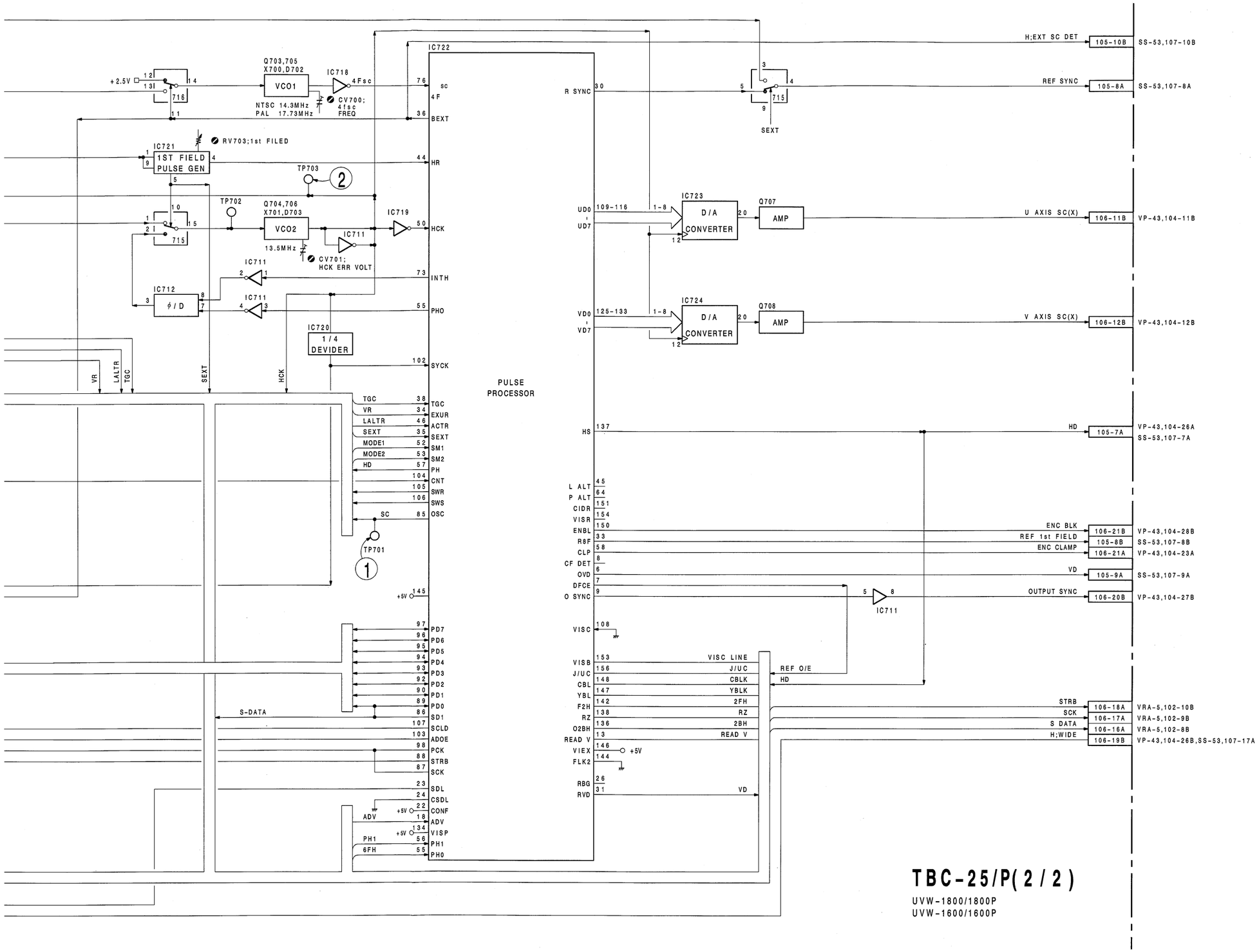

For J,UC

① TP701 PB

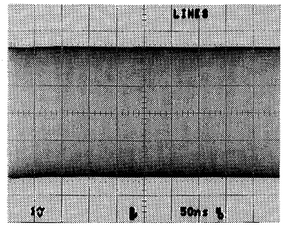

② TP703 PB

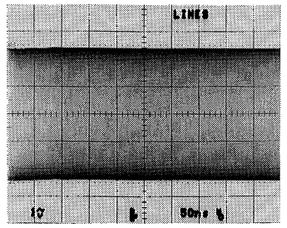

For EK

① TP701 PB

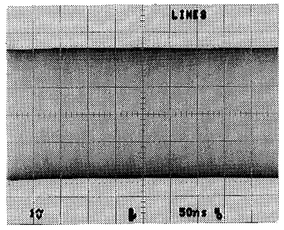

② TP703 PB

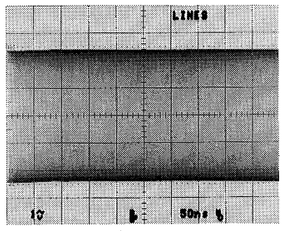

Page 14-15 is missing.

14-14 (2)

 AUDIO (1)

AUDIO PB,IN/OUT,LEC PB

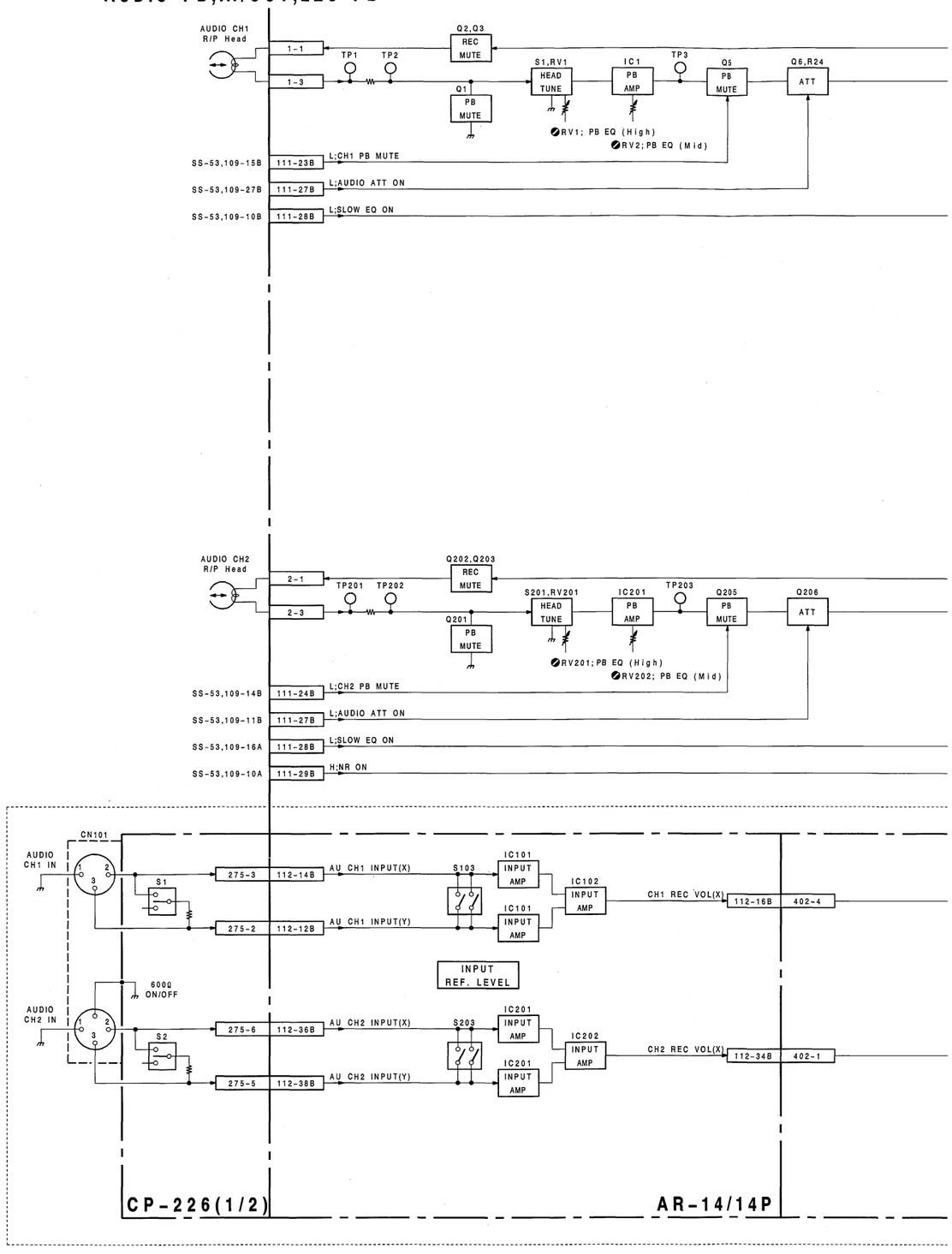

 14-17 (1)

 AUDIO (1)

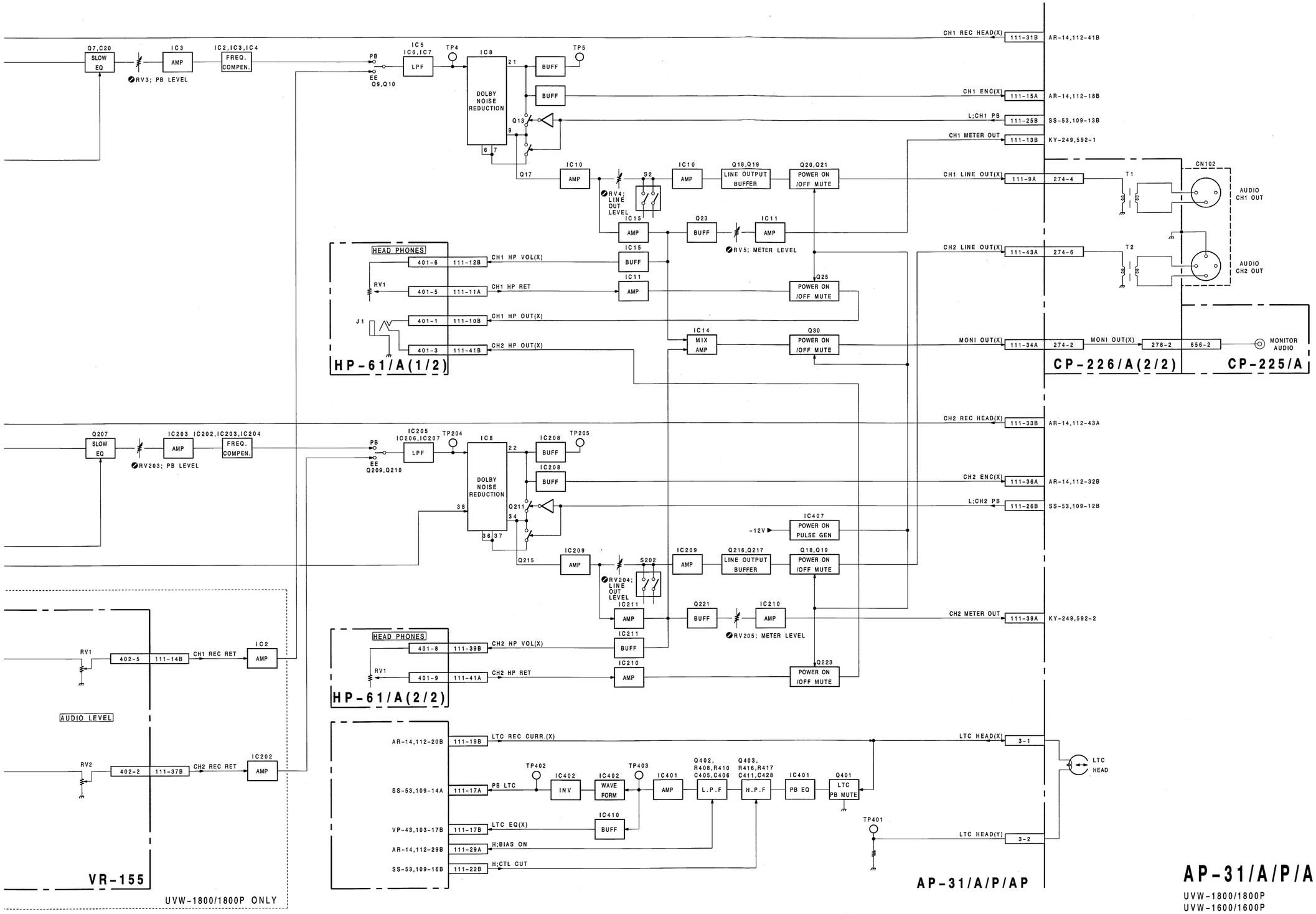

AP-31/A/P/AP

UVW-1800/1800P
UVW-1600/1600P

 14-17 (2)

 AUDIO (2)

AUDIO ERASE/BIAS OSC,MODE CONTROL,LTC REC,CROSSTALK CANCEL

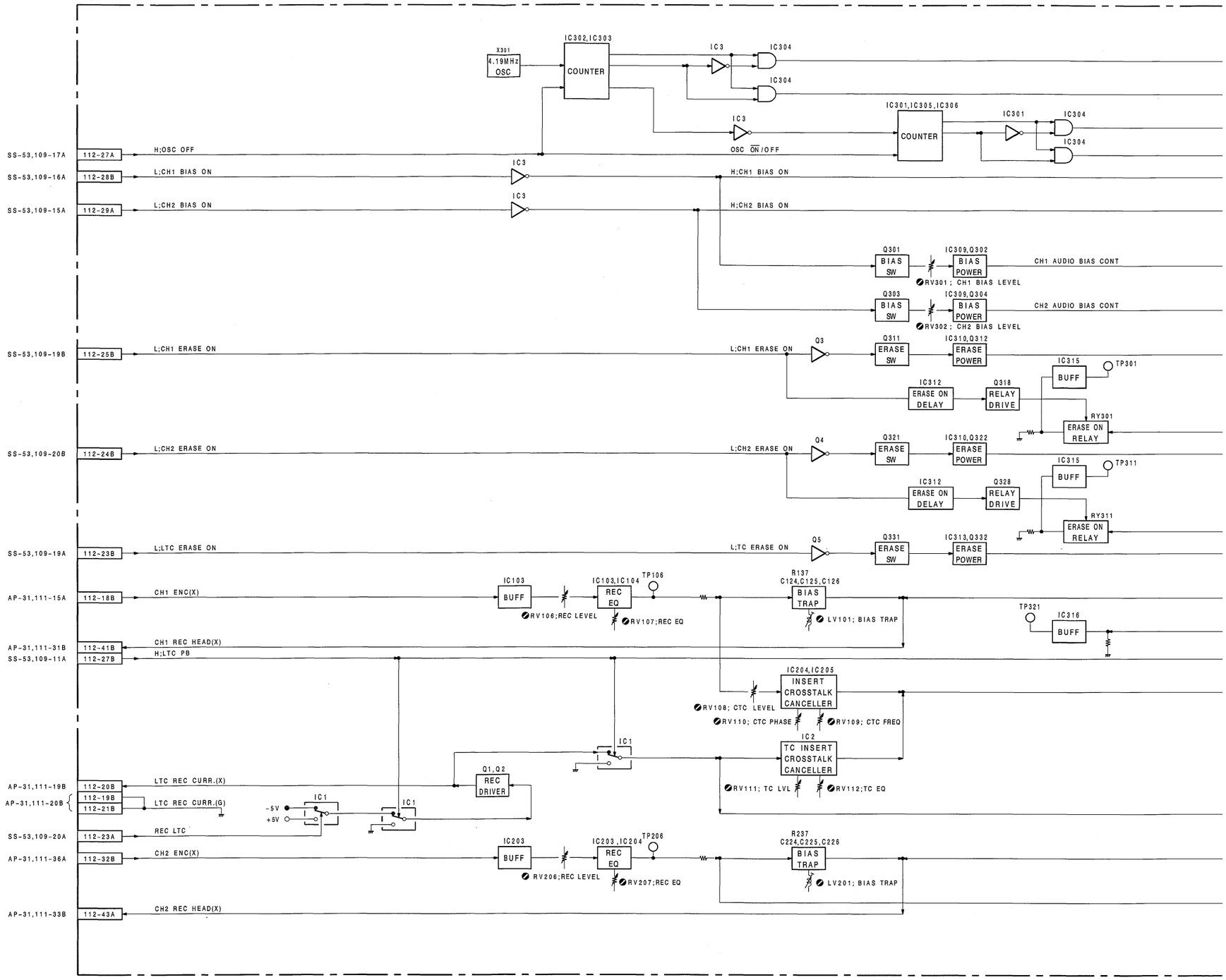

 14-18 (1)

 AUDIO (2)

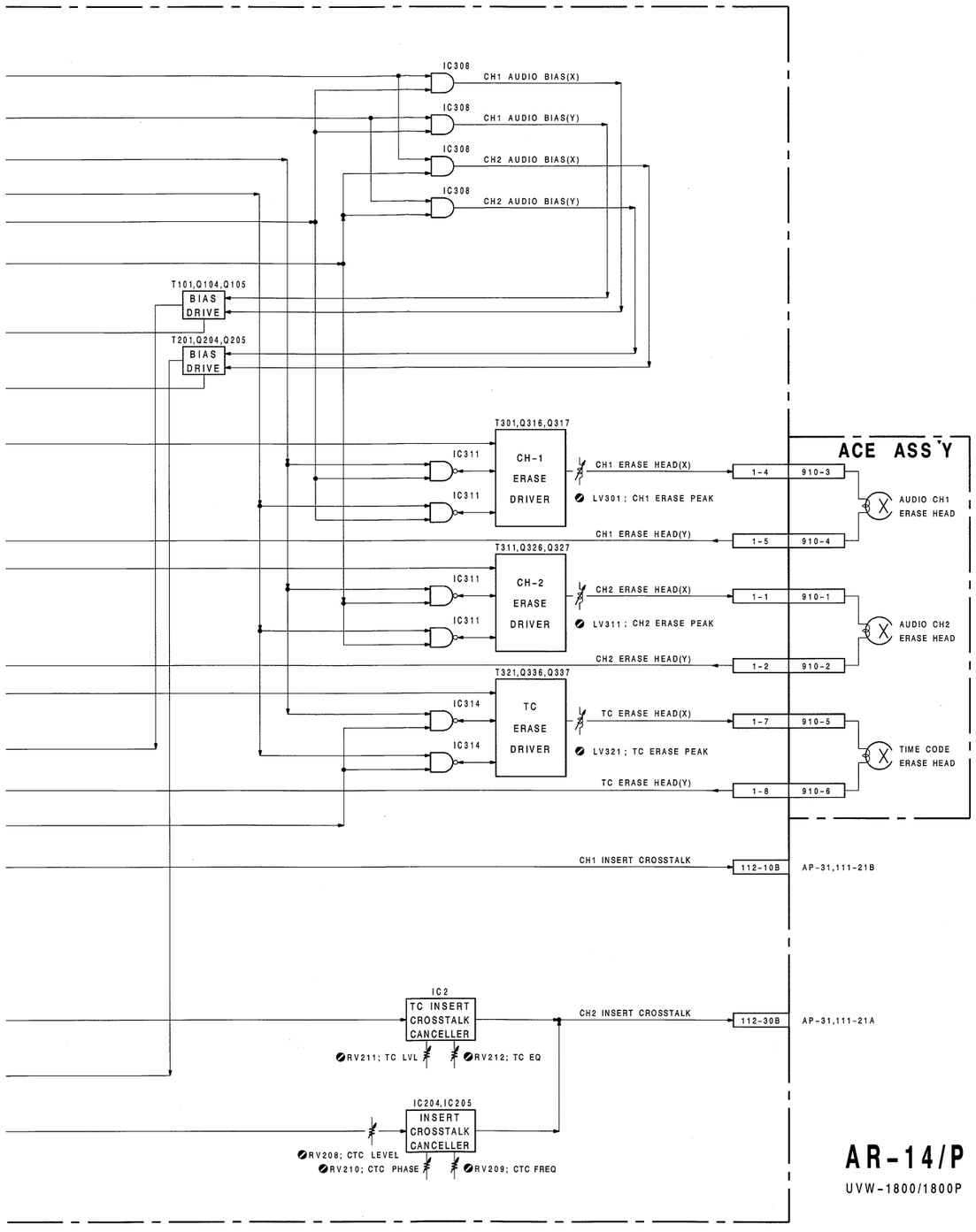

 14-18 (2)

 SYSTEM CONTROL

SYSTEM CONTROL BLOCK

For J,UC

① TP219 EE/REC/PB

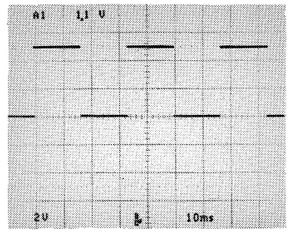

② TP225 PB

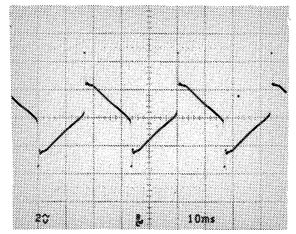

For EK

① TP219 EE/REC/PB

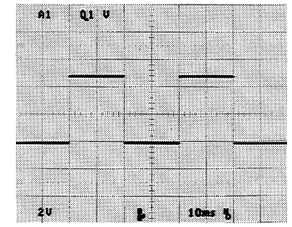

② TP225 PB

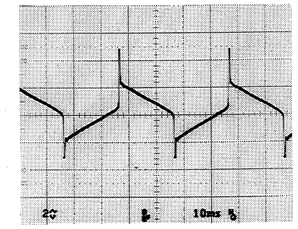

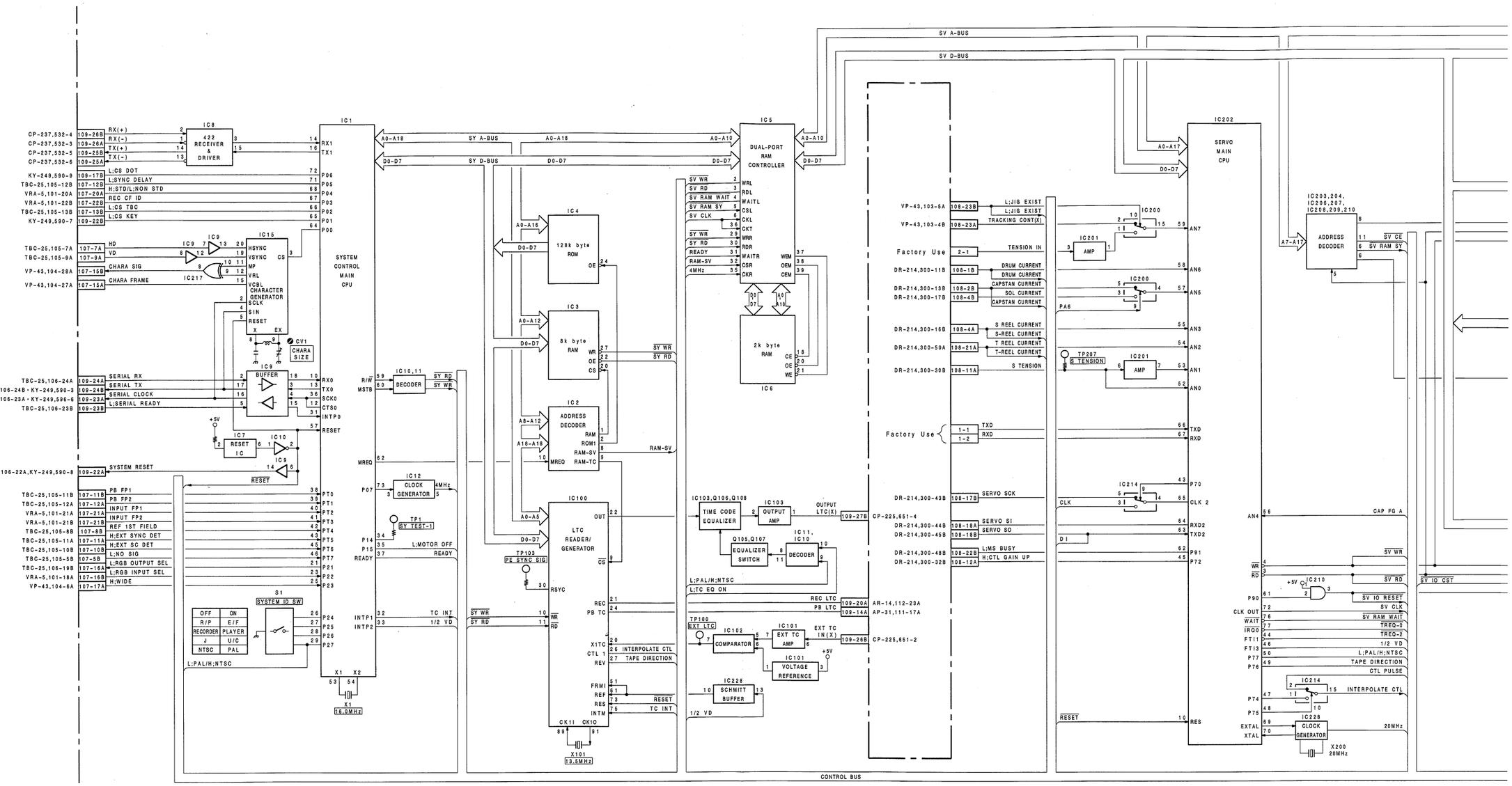

Page 14-20 is missing.

 14-21 (1)

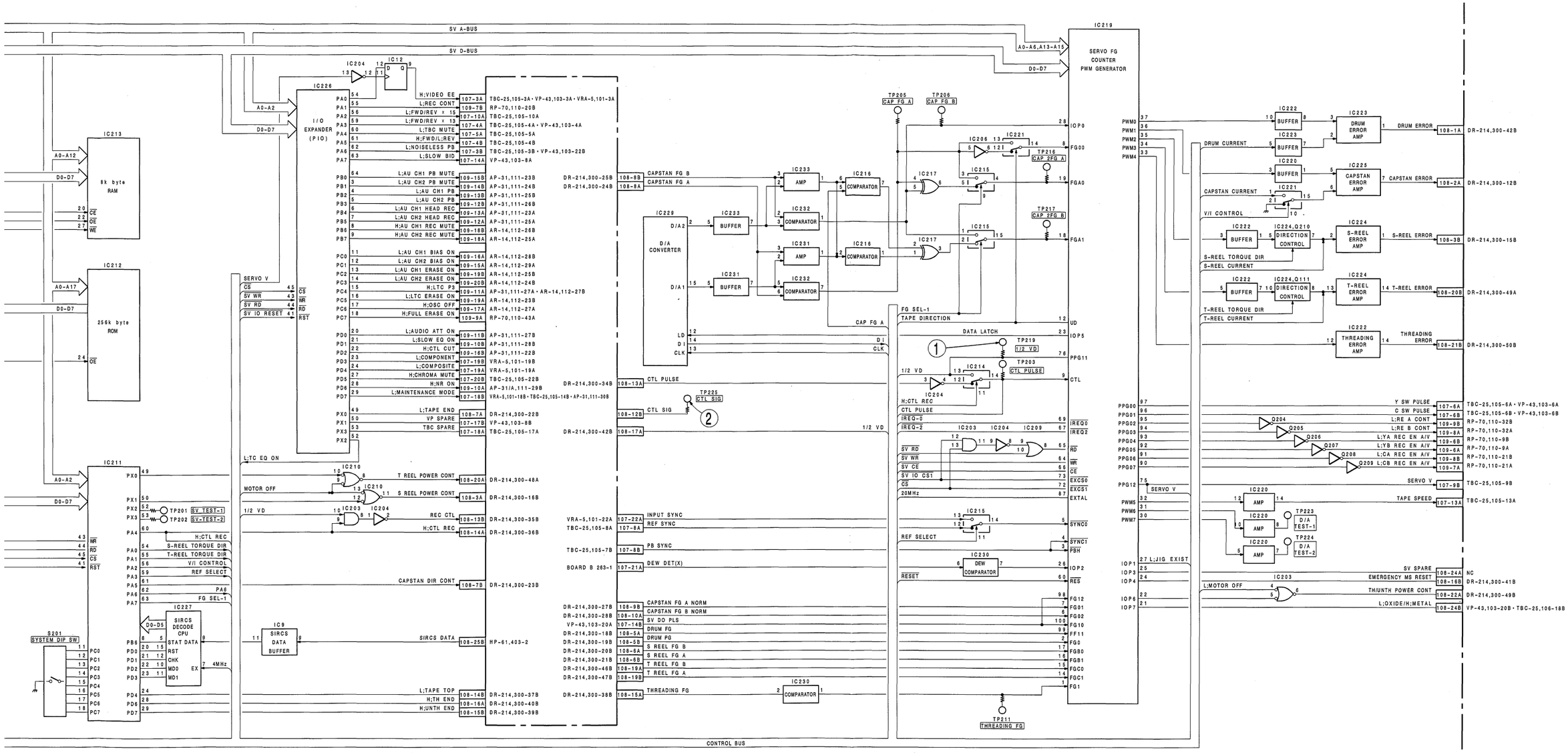
SV A-BUS
SV D-BUS
CONTROL BUS
IC213
8k byte RAM
IC212
256k byte ROM
IC211
IC226
I/O EXPANDER (PIO)
IC227
SIRCS DECODE CPU
IC9
SIRCS DATA BUFFER
S201
SYSTEM DIP SW
IC229
D/A CONVERTER
IC219
SERVO FG COUNTER PWM GENERATOR
IC230
DEW COMPARATOR
IC211
TP211
THREADING FG
TP225
CTL SIG
TP203
CTL PULSE
TP219
1/2 VD
TP205
CAP FG A
TP206
CAP FG B
TP216
CAP 2FG A
TP217
CAP 2FG B
TP201
SV_TEST-1
TP202
SV-TEST-2
TP223
D/A TEST-1
TP224
D/A TEST-2
DRUM ERROR AMP
CAPSTAN ERROR AMP
S-REEL ERROR AMP
T-REEL ERROR AMP
THREADING ERROR AMP
DIRECTION CONTROL
DRUM ERROR
CAPSTAN ERROR
S-REEL ERROR
T-REEL ERROR
THREADING ERROR
DRUM CURRENT
CAPSTAN CURRENT
V/I CONTROL
S-REEL TORQUE DIR
S-REEL CURRENT
T-REEL TORQUE DIR
T-REEL CURRENT
Y SW PULSE
C SW PULSE
SERVO V
TAPE SPEED
SV SPARE
EMERGENCY MS RESET
TH/UNTH POWER CONT
L;OXIDE/H;METAL
L;MOTOR OFF
L;JIG EXIST
CAPSTAN FG B
CAPSTAN FG A
CAPSTAN FG A NORM
CAPSTAN FG B NORM
SV DO PLS
DRUM FG
DRUM PG
S REEL FG B
S REEL FG A
T REEL FG B
T REEL FG A
THREADING FG
INPUT SYNC
REF SYNC
PB SYNC
DEW DET(X)
CAPSTAN DIR CONT
SIRCS DATA
T REEL POWER CONT
S REEL POWER CONT
REC CTL
H;CTL REC
REF SELECT
FG SEL-1
TAPE DIRECTION
DATA LATCH
H;CTL REC
CTL PULSE
1/2 VD
RESET
H;VIDEO EE
L;REC CONT
L;FWD/REV x 15
L;FWD/REV x 13
L;TBC MUTE
H;FWD/L;REV
L;NOISELESS PB
L;SLOW BID
L;AU CH1 PB MUTE
L;AU CH2 PB MUTE
L;AU CH1 PB
L;AU CH2 PB
L;AU CH1 HEAD REC
L;AU CH2 HEAD REC
H;AU CH1 REC MUTE
H;AU CH2 REC MUTE
L;AU CH1 BIAS ON
L;AU CH2 BIAS ON
L;AU CH1 ERASE ON
L;AU CH2 ERASE ON
H;LTC P3
L;LTC ERASE ON
H;OSC OFF
H;FULL ERASE ON
L;AUDIO ATT ON
L;SLOW EQ ON
H;CTL CUT
L;COMPONENT
L;COMPOSITE
H;CHROMA MUTE
H;NR ON
L;MAINTENANCE MODE
L;TAPE END
VP SPARE
TBC SPARE
L;TAPE TOP
H;TH END
H;UNTH END
TBC-25,105-3A・VP-43,103-3A・VRA-5,101-3A
RP-70,110-20B
TBC-25,105-10A
TBC-25,105-4A・VP-43,103-4A
TBC-25,105-5A
TBC-25,105-4B
TBC-25,105-3B・VP-43,103-22B
VP-43,103-8A
AP-31,111-23B
AP-31,111-24B
AP-31,111-25B
AP-31,111-26B
AP-31,111-23A
AP-31,111-25A
AR-14,112-26B
AR-14,112-25A
AR-14,112-26B
AR-14,112-29A
AR-14,112-25B
AR-14,112-24B
AP-31,111-27A・AR-14,112-27B
AR-14,112-23B
AR-14,112-27A
RP-70,110-43A
AP-31,111-27B
AP-31,111-28B
AP-31,111-22B
VRA-5,101-19B
VRA-5,101-19A
TBC-25,105-22B
AP-31/A,111-29B
VRA-5,101-18B・TBC-25,105-14B・AP-31,111-30B
DR-214,300-22B
VP-43,103-8B
TBC-25,105-17A
DR-214,300-48A
DR-214,300-16B
DR-214,300-35B
DR-214,300-36B
DR-214,300-23B
HP-61,403-2
DR-214,300-37B
DR-214,300-40B
DR-214,300-39B
DR-214,300-25B
DR-214,300-24B
DR-214,300-34B
DR-214,300-42B
VRA-5,101-22A
TBC-25,105-8A
TBC-25,105-7B
BOARD B 263-1
DR-214,300-27B
DR-214,300-28B
VP-43,103-20A
DR-214,300-18B
DR-214,300-19B
DR-214,300-20B
DR-214,300-21B
DR-214,300-46B
DR-214,300-47B
DR-214,300-38B
DR-214,300-1A
DR-214,300-12B
DR-214,300-15B
DR-214,300-49A
DR-214,300-50B
DR-214,300-6A
DR-214,300-6B
RP-70,110-32B
RP-70,110-32A
RP-70,110-9B
RP-70,110-9A
RP-70,110-21B
RP-70,110-21A
TBC-25,105-9B
DR-214,300-13A
NC
DR-214,300-41B
DR-214,300-49B
VP-43,103-20B・TBC-25,106-18B

SERVO(1)

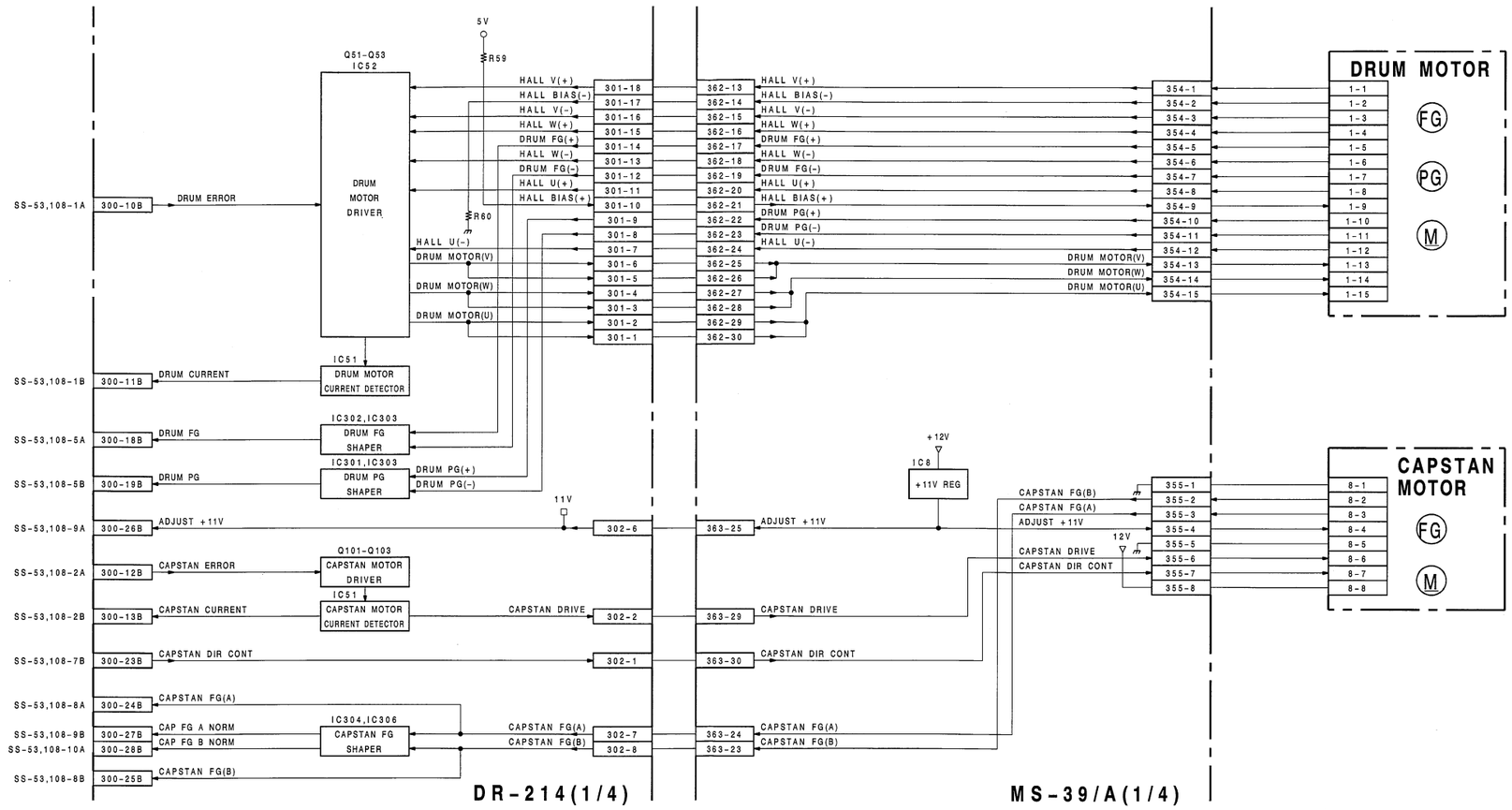

DR-214
MS-39/A(1/4)

UVW-1800/1800P
UVW-1600/1600P

 SERVO (1)

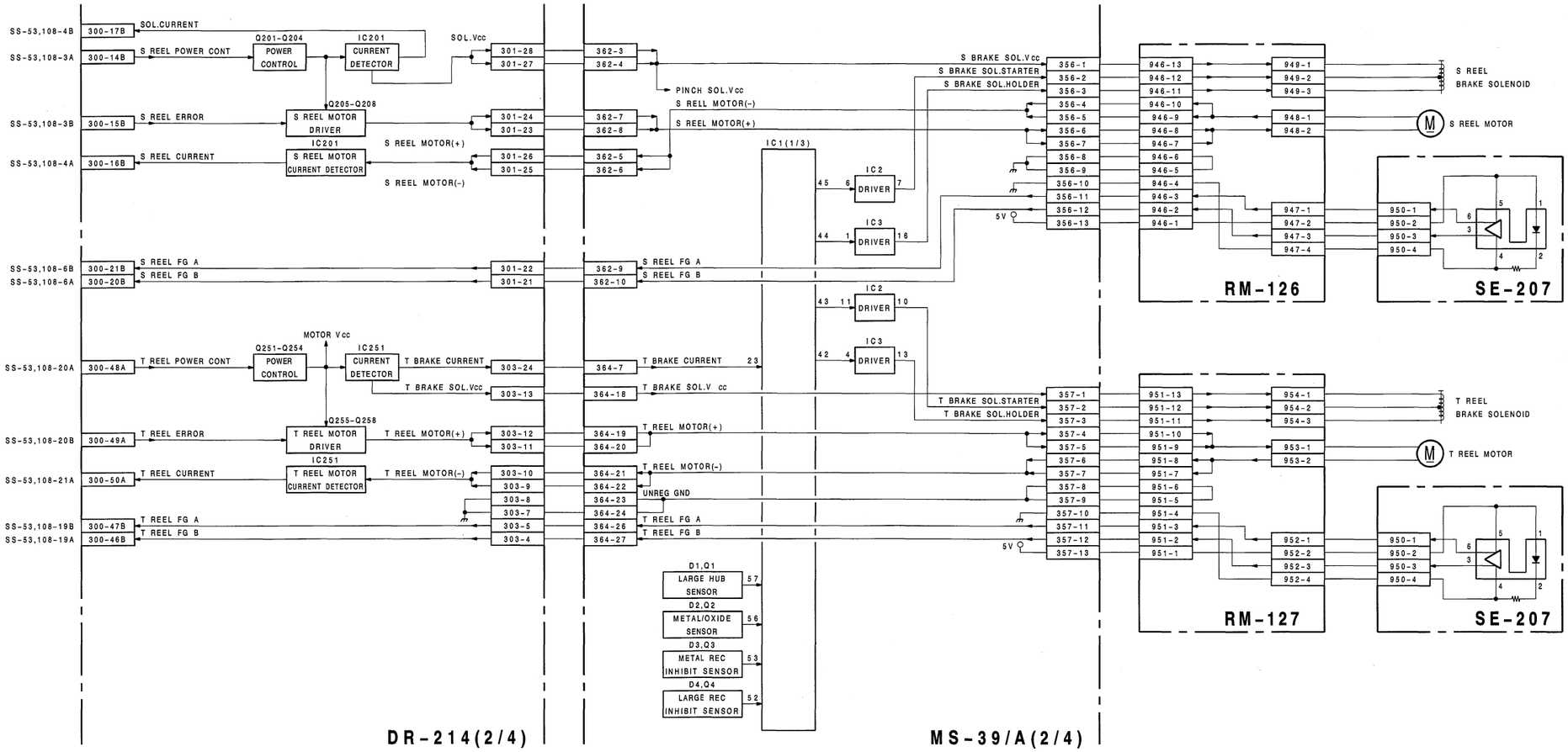

DR-214
MS-39/A(2/4)

UVW-1800/1800P
UVW-1600/1600P

 14-22 (2)

 SERVO (2)

SERVO(2)

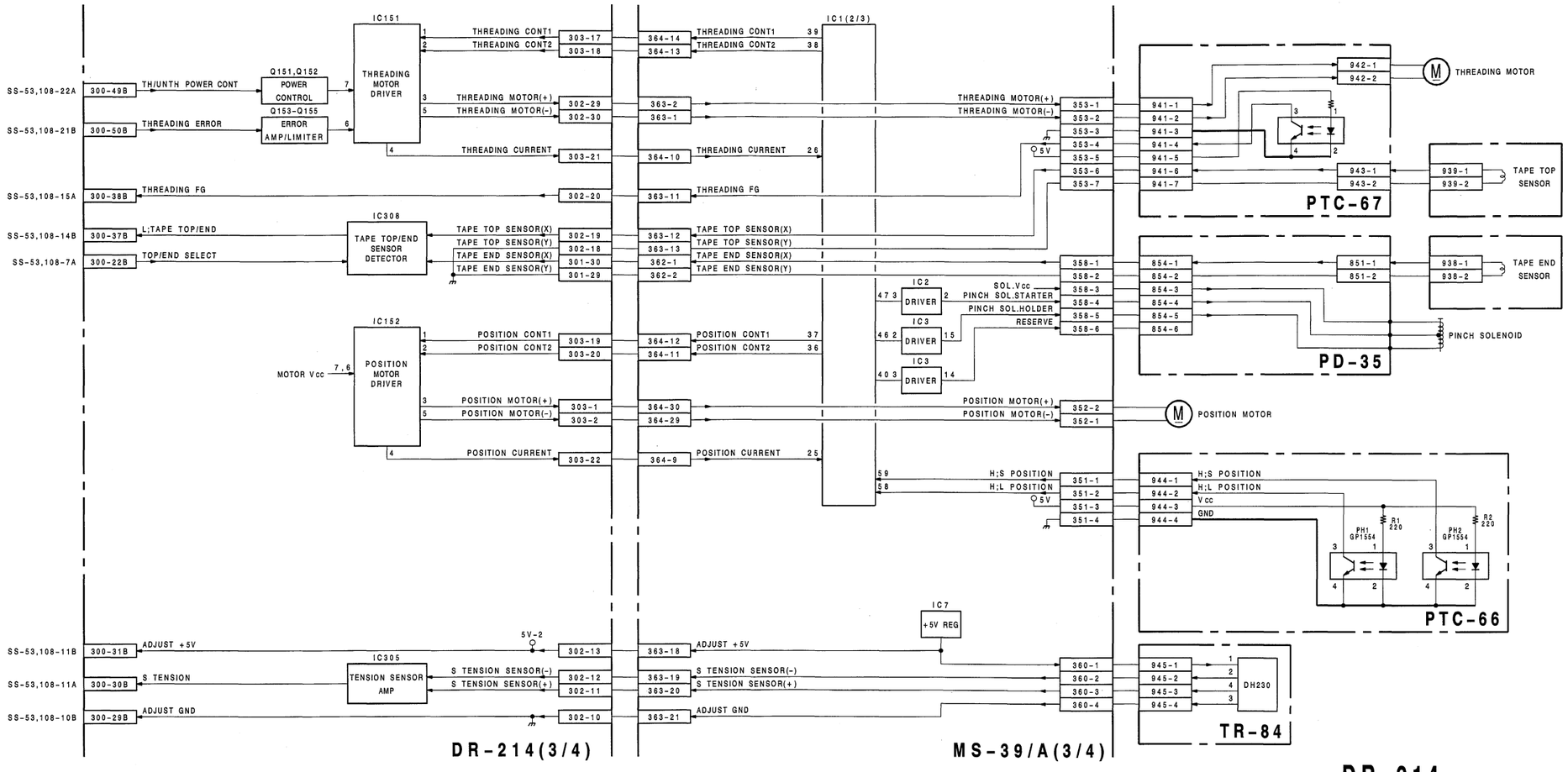

DR-214
MS-39/A(3/4)

UVW-1800/1800P
UVW-1600/1600P

 14-23 (1)

 SERVO (2)

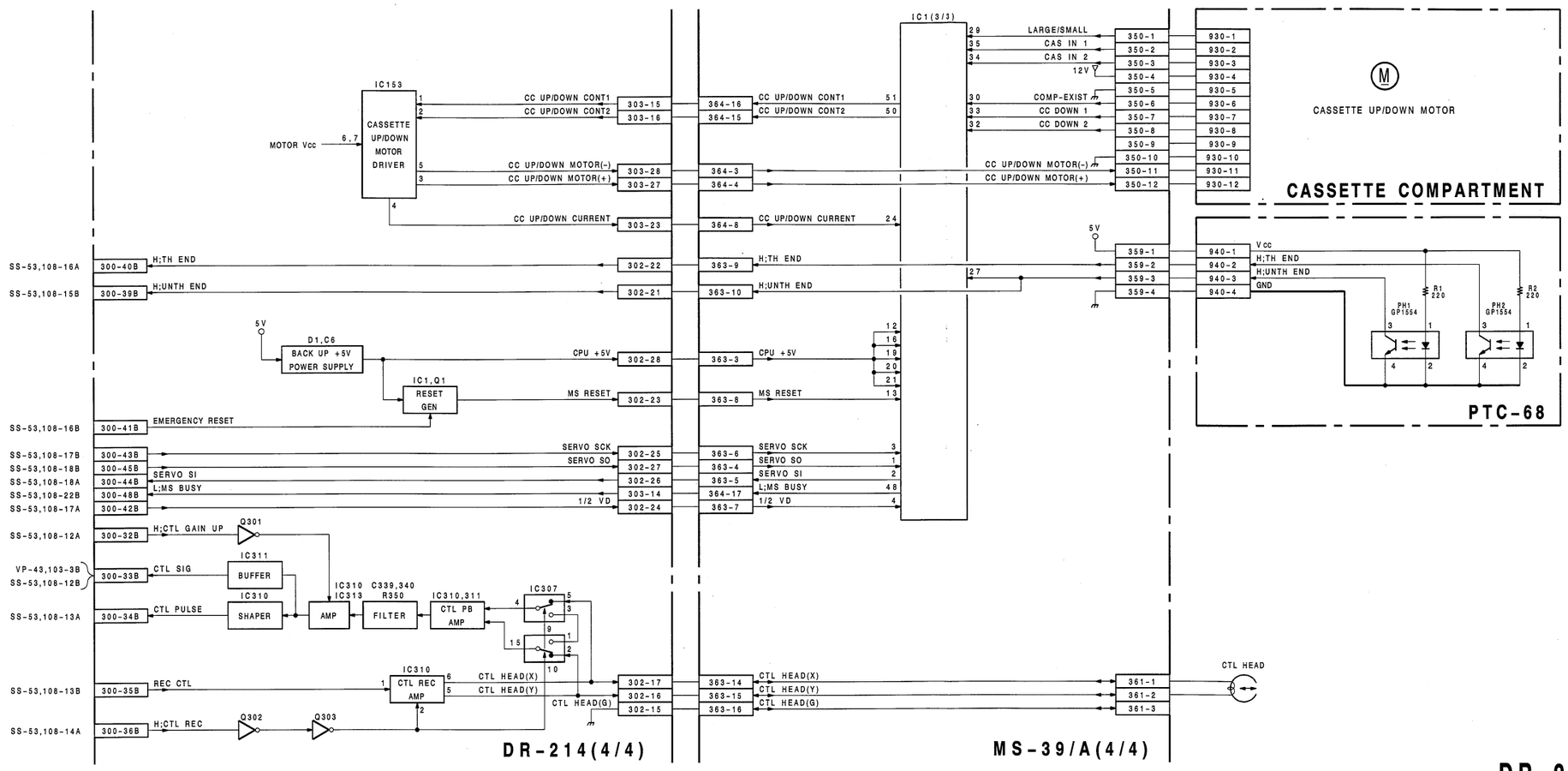

DR-214
MS-39/A(4/4)

UVW-1800/1800P
UVW-1600/1600P

 14-23 (2)

POWER SUPPLY

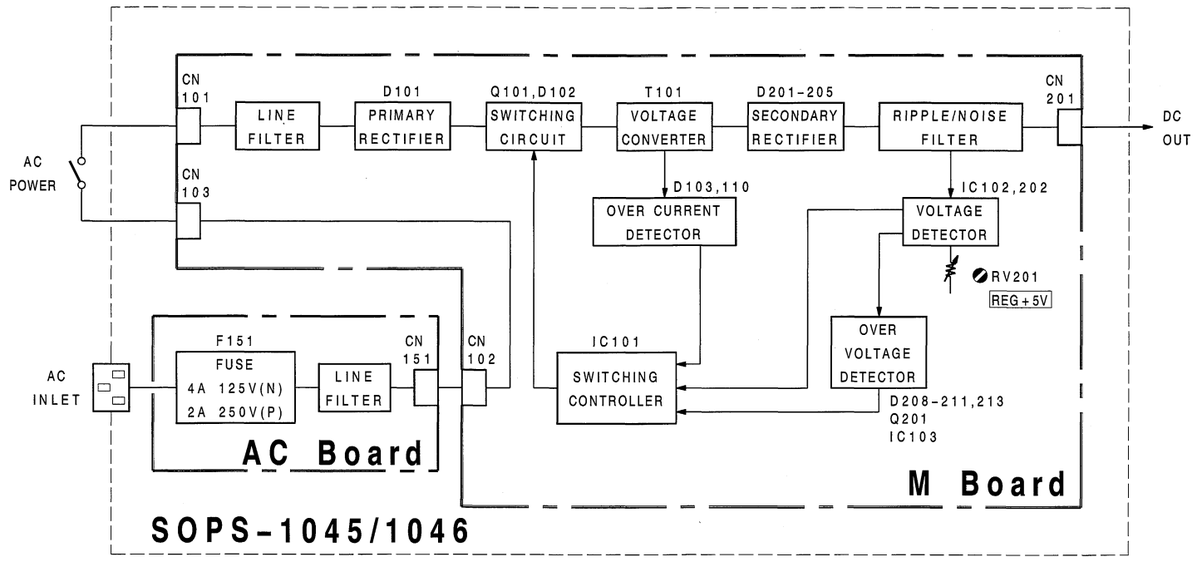

SOPS-1045(1800/1600)
SOPS-1046(1800P/1600P)

UVW-1800/1800P
UVW-1600/1600P

SECTION 15
BOARD LAYOUTS

BOARD LAYOUT INDEX

15-1

CIRCUIT FUNCTION

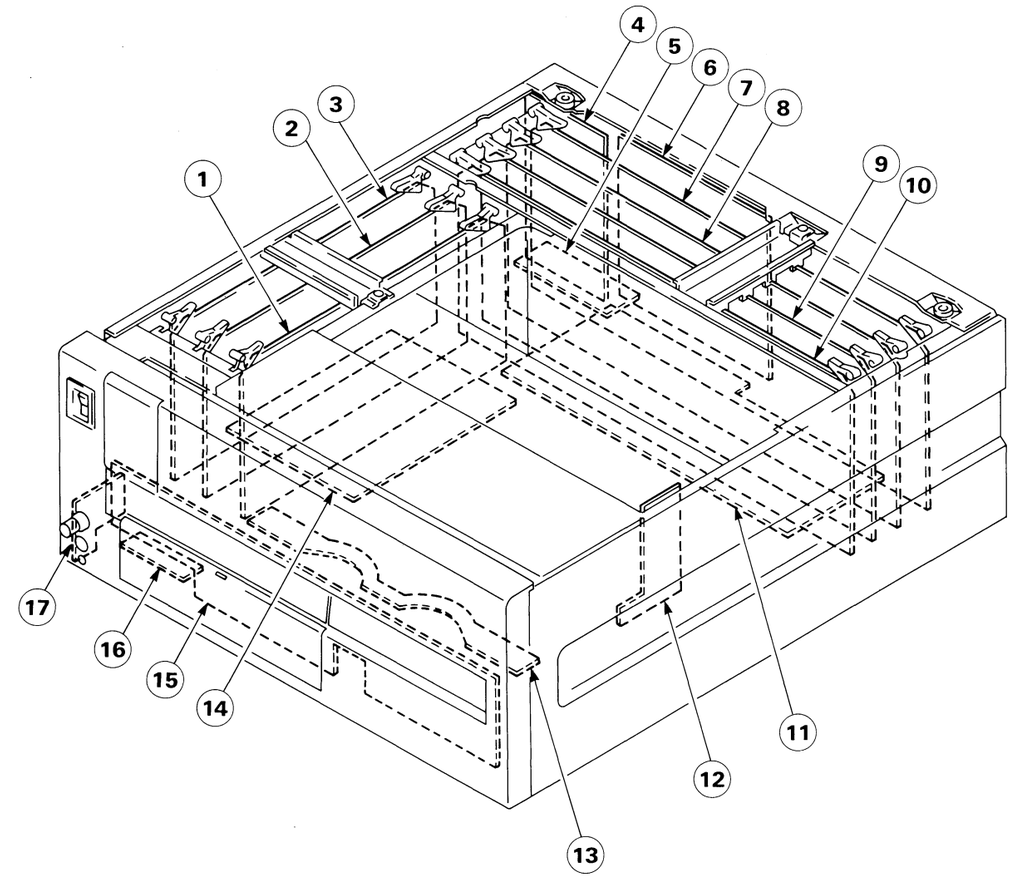

①	RP-70/P BOARD(UVW-1800/P)	; RF REC/PB AMP.,ROTARY ERASE OSC.,FULL ERASE OSC.
	RP-70A/AP BOARD(UVW-1600/P)	; RF PB AMP.
②	AP-31/P BOARD(UVW-1800/P)	; AUDIO/TC PB AMP.,METER DRIVER
	AP-31A/AP BOARD(UVW-1600/P)	; AUDIO/TC PB AMP.,METER DRIVER
③	AR-14/P BOARD(UVW-1800/P)	; AUDIO/TC REC AMP.,AUDIO/TC ERASE OSC.,AUDIO BIAS DRIVER
④	CP-226 BOARD(UVW-1800/P : FOR UC, EK)	; AUDIO INPUT/OUTPUT CONNECTOR, OUTPUT TRANSFORMER
	CP-226J BOARD(UVW-1800 : FOR J)	; AUDIO INPUT/OUTPUT CONNECTOR, OUTPUT TRANSFORMER
	CP-226A BOARD(UVW-1600/P : FOR UC, EK)	; AUDIO OUTPUT CONNECTOR,OUTPUT TRANSFORMER
	CP-226AJ BOARD(UVW-1600 : FOR J)	; AUDIO OUTPUT CONNECTOR,OUTPUT TRANSFORMER
⑤	CP-237 BOARD(UVW-1800/P)	; TBC/9P REMOTE CONNECTOR
	CP-237A BOARD(UVW-1600/P)	; TBC/9P REMOTE CONNECTOR
⑥	CP-225 BOARD(UVW-1800/P)	; VIDEO INPUT/OUTPUT CONNECTOR
	CP-225A BOARD(UVW-1600/P)	; VIDEO OUTPUT CONNECTOR
⑦	VRA-5/P BOARD(UVW-1800/P)	; Y/C REC PROCESS(DECODE,MOD),CTDM(COMPAND)

15-3 (1)

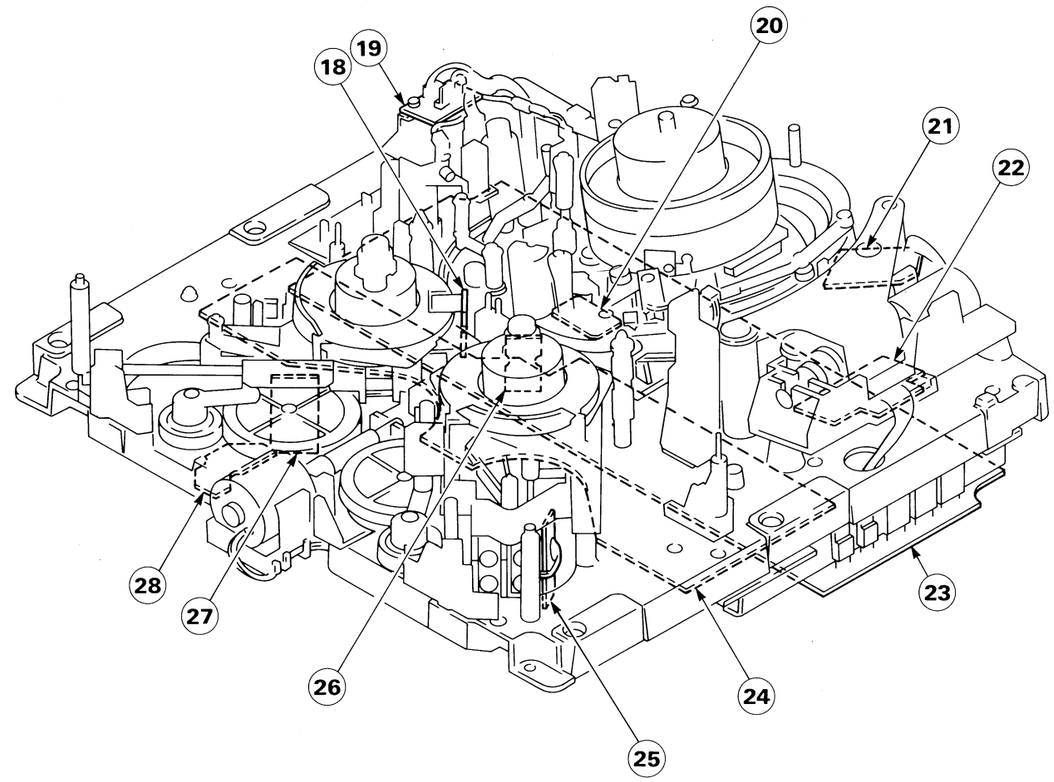

⑧ VP-43/P BOARD(UVW-1800/P) ; Y/C PB PROCESS(PB RF EQ,DEMOD.,Y-RF ENVELOPE DET),VIDEO OUTPUT DRIVER, ENCODE, SYNC/CHARA MIX

VP-43A/AP BOARD(UVW-1600/P) ; Y/C PB PROCESS(PB RF EQ,DEMOD.,Y-RF ENVELOPE DET),VIDEO OUTPUT DRIVER, ENCODE, SYNC/CHARA MIX

⑨ TBC-25/P BOARD ; TIME BASE CORRECTOR,CTDM(EXPAND)

⑩ SS-53 BOARD ; SYSTEM CONTROL,SERVO SYSTEM MAIN,TIME CODE GENERATOR/READER, CHARACTER GENERATOR

⑪ MB-470/P BOARD(UVW-1800/P) ; MOTHER BOARD

MB-470A/AP BOARD(UVW-1600/P) ; MOTHER BOARD

⑫ CL-25 BOARD (CASSETTE COMPARTMENT) ; CASSETTE LOADING BEGIN/NEAR-END SENSOR

⑬ PC-62 BOARD (CASSETTE COMPARTMENT) ; CASSETTE IN/LARGE CASSETTE SENSOR

⑭ MB-471 BOARD(UVW-1800/P) ; MOTHER BOARD

MB-471A BOARD(UVW-1600/P) ; MOTHER BOARD

⑮ KY-249 BOARD(UVW-1800/P) ; FUNCTION KEY

KY-249A BOARD(UVW-1600/P) ; FUNCTION KEY

⑯ VR-155 BOARD (UVW-1800/P) ; AUDIO REC LEVEL

⑰ HP-61 BOARD(UVW-1800/P) ; HEADPHONES JACK/VOLUME CONTROL

HP-61A BOARD(UVW-1600/P) ; HEADPHONES JACK/VOLUME CONTROL

⑱ SE-207 BOARD(S SIDE) ; REEL FG

⑲ PD-35 BOARD ; PINCH SOLENOID

⑳ TR-84 BOARD ; S-TENSION SENSOR

㉑ PTC-68 BOARD ; THREAD END/UNTHREAD END SENSOR

㉒ PTC-67 BOARD ; THREADING FG/MOTOR

㉓ DR-214 BOARD ; MOTOR DRIVER,TENSION SENS. AMP., DRUM FG/PG AMP., CAPSTAN FG AMP., CTL, REC/PB AMP.

㉔ MS-39 BOARD(UVW-1800/P) ; CASSETTE INFORMATION,SOLENOID DRIVER,MECHA. CONTROL MPU,DATA STORAGE

MS-39A BOARD(UVW-1600/P) ; CASSETTE INFORMATION,SOLENOID DRIVER,MECHA. CONTROL MPU,DATA STORAGE

㉕ RM-127 BOARD ; T-REEL MOTOR

㉖ SE-207 BOARD(T SIDE) ; REEL FG

㉗ RM-126 BOARD ; S-REEL MOTOR

㉘ PTC-66 BOARD ; REEL POSITION SENSOR

15-3 (2)

AP-31/31P ; AUDIO/TC PB AMP., METER DRIVER

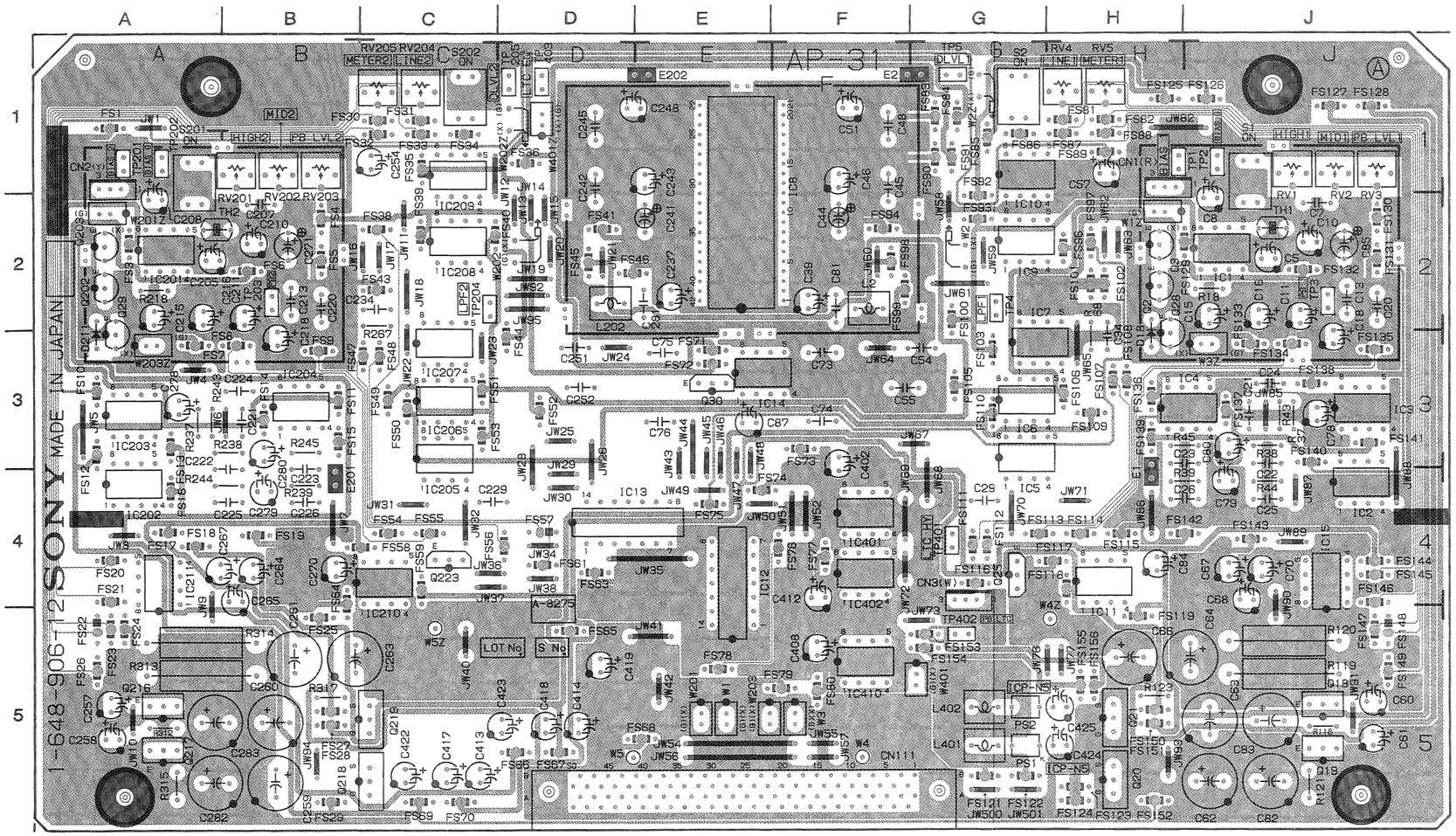

AP-31 1-648-906-12 A SIDE

UVW-1800 (J) ; Serial No. 10901 and higher
UVW-1800 (UC) ; Serial No. 13931 and higher
UVW-1800P(EK) ; Serial No. 14141 and higher

AP-31 (1-648-906-12)

CN1	H-1	FS40		C-2
CN2	A-1	FS41		D-2
CN3	G-4	FS43		C-2
CN111	E-5	FS44	P	D-2
		FS44	N	D-3
✱D1	J-2	FS45		D-2
✱D2	H-3	FS46		D-2
✱D3	H-4	FS47		C-3
✱D5	G-3	FS48		C-3
✱D6	G-3	FS49		C-3
✱D7	J-5	FS50		C-3
✱D8	H-5	FS51		C-3
✱D10	G-5	FS52		D-3
✱D11	E-3	FS53		C-3
✱D12	F-3	FS54		C-4
✱D13	F-3	FS55		C-4
✱D15	E-3	FS56		D-4
✱D16	E-3	FS57		D-4
✱D17	J-2	FS58		C-4
✱D18	H-3	FS59		C-4
✱D201	A-2	FS61		D-4
✱D202	C-3	FS63		D-4
✱D203	C-4	FS64		B-4
✱D204	D-3	FS65		D-5
✱D205	D-3	FS66		D-5
✱D206	A-5	FS67		D-5
✱D207	B-5	FS68		E-5
✱D209	C-4	FS69		C-5
✱D210	B-2	FS70		C-5
D211	A-3	FS71		E-3
✱D401	F-3	FS72		E-3
✱D403	F-5	FS73		F-3
✱D500	D-5	FS74		E-4
		FS75		E-4
E1	H-4	FS76		F-4
E2	G-1	FS77		F-4
E201	B-4	FS78		E-5
E202	E-1	FS79		F-5
		FS80		F-5
FS1	A-1	FS81		H-1
FS3	A-2	FS82		H-1
FS4	B-2	FS83		G-1
FS5	B-2	FS84		G-1
FS6	B-2	FS85		G-1
FS7	A-3	FS86		G-1
FS8	B-3	FS87		H-1
FS9	B-3	FS88		H-1
FS10	A-3	FS89		H-1
FS11	B-3	FS90		G-1
FS12	A-3	FS91		G-1
FS13	A-3	FS92		G-2
FS14	B-3	FS93		G-2
FS15	B-3	FS94		F-2
FS16	A-4	FS96		H-2
FS17	A-4	FS97		H-2
FS18	A-4	FS98		F-2
FS19	B-4	FS99		F-2
FS20	A-4	FS100		G-2
FS21	A-4	FS101		H-2
FS22	A-5	FS102		H-2
FS23	A-5	FS103		G-3
FS24	A-5	FS105		G-3
FS25	B-5	FS106		H-3
FS26	A-5	FS107		H-3
FS27	B-5	FS108		H-3
FS28	B-5	FS109		H-3
FS29	B-5	FS110		G-3
FS30	C-1	FS111		G-4
FS31	C-1	FS112		G-4
FS32	C-1	FS113		G-4
FS33	C-1	FS114		H-4
FS34	C-1	FS115		H-4
FS35	C-1	FS116		G-4
FS36	D-1	FS117		H-4
FS38	C-2	FS118		H-4
FS39	C-2	FS119		H-5

✱ : B SIDE
P : UVW-1800P ONLY
N : UVW-1800 ONLY

FS121	G-5	✱Q1	H-1		S202	C-1
FS122	G-5	Q2	H-2			
FS123	H-5	Q3	H-2		TH1	J-2
FS124	H-5	✱Q4	J-2		TH2	A-2
FS125	H-1	✱Q5	J-2			
FS126	J-1	✱Q6	J-2		TP1	H-1
FS127	J-1	✱Q7	J-2		TP2	J-1
FS128	J-1	✱Q8	H-3		TP3	J-2
FS129 P	H-2	✱Q9	H-4		TP4	G-2
FS129 N	J-2	✱Q10	H-4		TP5	G-1
FS130	J-2	✱Q11	C-2		TP201	A-1
FS131	J-2	✱Q12	E-2		TP202	A-1
FS132	J-2	✱Q13	E-1		TP203	B-2
FS133	J-3	✱Q14	G-3		TP204	C-2
FS134	J-3	✱Q15	F-3		TP205	D-1
FS135	J-3	✱Q16	F-3		TP401	G-4
FS136	H-3	✱Q17	F-2		TP402	G-5
FS137	J-3	Q18	J-5		TP403	D-1
FS138	J-3	Q19	J-5			
FS139	H-3	Q20	H-5			
FS140	J-3	Q21	H-5			
FS141	J-3	✱Q22	J-4			
FS142	J-4	✱Q23	H-4			
FS143	J-4	Q25	G-4			
FS144	J-4	✱Q26	P E-3			
FS145	J-4	✱Q26	N E-4			
FS146	J-4	✱Q27	D-4			
FS147	J-5	Q28	H-3			
FS148	J-5	Q29	A-3			
FS149	J-5	Q30	E-3			
FS150	H-5	✱Q34	J-2			
FS151	H-5	✱Q35	J-2			
FS152	H-5	✱Q36	J-2			
FS153	G-5	✱Q201	A-1			
FS154	G-5	Q202	A-2			
FS155	H-5	Q203	A-2			
FS156	H-5	✱Q204	B-2			
		✱Q205	A-2			
IC1	J-2	✱Q206	A-2			
IC2	J-4	✱Q207	B-2			
IC3	J-3	✱Q208	C-3			
IC4	H-3	✱Q209	B-4			
IC5	G-4	✱Q210	B-4			
IC6	G-3	✱Q211	E-1			
IC7	G-3	✱Q212	D-3			
IC8	F-2	✱Q213	D-3			
IC9	G-2	✱Q214	D-3			
IC10	G-2	✱Q215	E-2			
IC11	H-4	Q216	A-5			
IC12	E-5	Q217	A-5			
IC13	D-4	Q218	C-5			
IC14	E-3	Q219	C-5			
IC15	J-4	✱Q220	B-4			
IC201	A-2	✱Q221	B-4			
IC202	A-4	Q223	C-4			
IC203	A-3	✱Q224	B-2			
IC204	B-3	✱Q225	B-2			
IC205	C-4	✱Q226	B-2			
IC206	C-3	✱Q401	G-4			
IC207	C-3	✱Q402	F-5			
IC208	C-2	✱Q403	F-3			
IC209	C-2					
IC210	C-4	RV1	J-1			
IC211	A-4	RV2	J-1			
IC401	F-4	RV3	J-1			
IC402	F-4	RV4	H-1			
✱IC405	C-5	RV5	H-1			
✱IC406	D-5	RV201	B-1			
✱IC407	D-5	RV202	B-1			
✱IC408	C-5	RV203	B-1			
✱IC409	D-5	RV204	C-1			
IC410	F-5	RV205	C-1			
PS1	G-5	S1	J-1			
PS2	G-5	S2	G-1			
		S201	A-1			

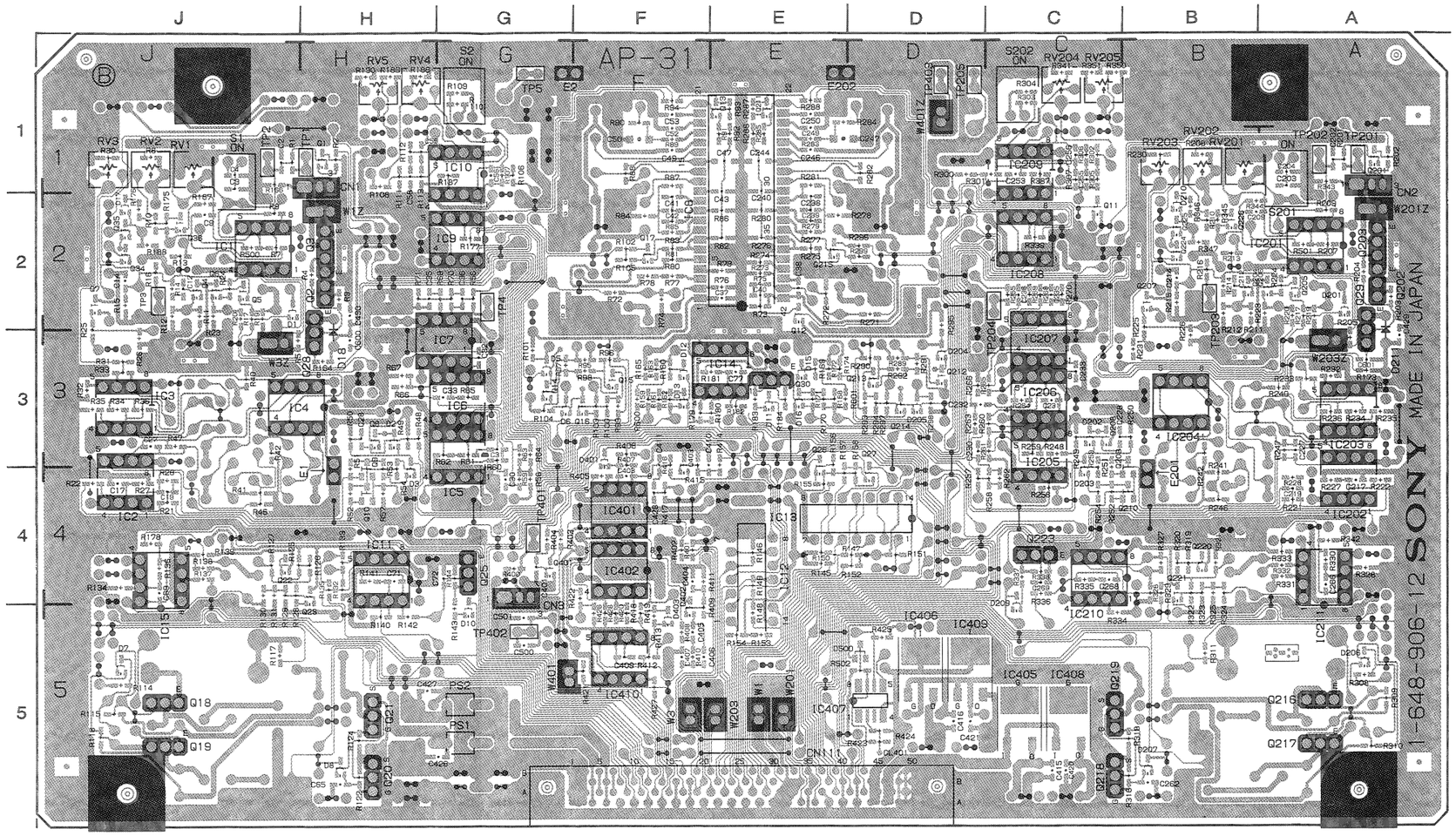

AP-31 1-648-906-12 B SIDE

AP-31A/31AP ; AUDIO/TC PB AMP., METER DRIVER

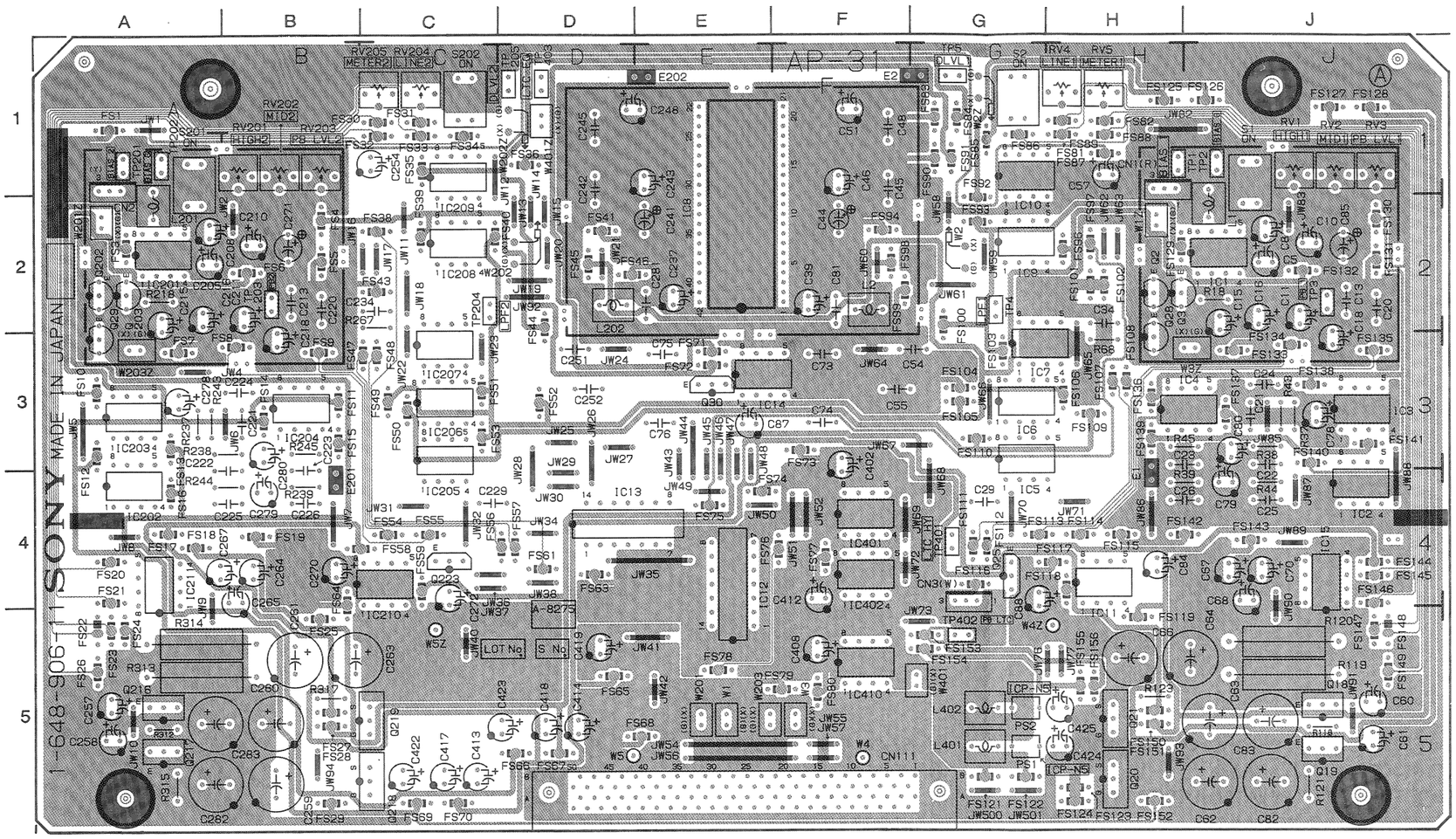

AP-31 1-648-906-11 A SIDE

UVW-1800 (J) ; Serial No. 10001 through 10900
UVW-1800 (UC) ; Serial No. 10001 through 13930
UVW-1800P(EK) ; Serial No. 10001 through 14140

AP-31(1-648-906-11)

CN1	H-1	FS40	C-2
CN2	A-1	FS41	D-2
CN3	G-4	FS43	C-2
CN111	E-5	FS44	D-2
		FS45	D-2
✱D1	J-2	FS46	D-2
✱D2	H-3	FS47	C-3
✱D3	H-4	FS48	C-3
✱D5	G-3	FS49	C-3
✱D6	G-3	FS50	C-3
✱D7	J-5	FS51	C-3
✱D8	H-5	FS52	D-3
✱D10	G-5	FS53	C-3
✱D11	E-3	FS54	C-4
✱D12	F-3	FS55	C-4
✱D13	F-3	FS56	D-4
✱D15	E-3	FS57	D-4
✱D16	E-3	FS58	C-4
✱D17	J-2	FS59	C-4
✱D18	H-2	FS61	D-4
✱D201	A-2	FS63	D-4
✱D202	C-3	FS64	B-4
✱D203	C-4	FS65	D-5
✱D204	D-3	FS66	D-5
✱D205	D-3	FS67	D-5
✱D206	A-5	FS68	E-5
✱D207	B-5	FS69	C-5
✱D209	C-4	FS70	C-5
✱D210	B-2	FS71	E-3
✱D211	A-3	FS72	E-3
✱D401	F-3	FS73	F-3
✱D403	F-5	FS74	E-4
✱D500	D-5	FS75	E-4
		FS76	F-4
E1	H-4	FS77	F-4
E2	G-1	FS78	E-5
E201	B-4	FS79	F-5
E202	E-1	FS80	F-5
		FS81	H-1
FS1	A-1	FS82	H-1
FS3	A-2	FS83	G-1
FS4	B-2	FS84	G-1
FS5	B-2	FS85	G-1
FS6	B-2	FS86	G-1
FS7	A-3	FS87	H-1
FS8	B-3	FS88	H-1
FS9	B-3	FS89	H-1
FS10	A-3	FS90	G-1
FS11	B-3	FS91	G-1
FS12	A-3	FS92	G-2
FS13	A-3	FS93	G-2
FS14	B-3	FS94	F-2
FS15	B-3	FS96	H-2
FS16	A-4	FS97	H-2
FS17	A-4	FS98	F-2
FS18	A-4	FS99	F-2
FS19	B-4	FS100	G-2
FS20	A-4	FS101	H-2
FS21	A-4	FS102	H-2
FS22	A-5	FS103	G-3
FS23	A-5	FS104	G-3
FS24	A-5	FS105	G-3
FS25	B-5	FS106	H-3
FS26	A-5	FS107	H-3
FS27	B-5	FS108	H-3
FS28	B-5	FS109	H-3
FS29	B-5	FS110	G-3
FS30	C-1	FS111	G-4
FS31	C-1	FS112	G-4
FS32	C-1	FS113	G-4
FS33	C-1	FS114	H-4
FS34	C-1	FS115	H-4
FS35	C-1	FS116	G-4
FS36	D-1	FS117	H-4
FS38	C-2	FS118	H-4
FS39	C-2	FS119	H-5

✱ : B SIDE

FS121	G-5	Q2	H-2	✱TH1	J-2
FS122	G-5	Q3	H-2	✱TH2	B-2
FS123	H-5	✱Q4	J-2		
FS124	H-5	✱Q5	J-2	TP1	H-1
FS125	H-1	✱Q6	J-2	TP2	J-1
FS126	J-1	✱Q7	J-2	TP3	J-2
FS127	J-1	✱Q8	H-3	TP4	G-2
FS128	J-1	✱Q9	H-4	TP5	G-1
FS129	H-2	✱Q10	H-4	TP201	A-1
FS130	J-2	✱Q11	C-2	TP202	A-1
FS131	J-2	✱Q12	E-2	TP203	B-2
FS132	J-2	✱Q13	E-1	TP204	C-2
FS133	J-3	✱Q14	G-3	TP205	D-1
FS134	J-3	✱Q15	F-3	TP401	G-4
FS135	J-3	✱Q16	F-3	TP402	G-5
FS136	H-3	✱Q17	F-2	TP403	D-1
FS137	J-3	Q18	J-5		
FS138	J-3	Q19	J-5		
FS139	H-3	Q20	H-5		
FS140	J-3	Q21	H-5		
FS141	J-3	✱Q22	J-4		
FS142	J-4	✱Q23	H-4		
FS143	J-4	Q25	G-4		
FS144	J-4	✱Q26	E-3		
FS145	J-4	✱Q27	D-4		
FS146	J-4	Q28	H-3		
FS147	J-5	Q29	A-3		
FS148	J-5	Q30	E-3		
FS149	J-5	✱Q34	J-2		
FS150	H-5	✱Q35	J-2		
FS151	H-5	✱Q36	J-2		
FS152	H-5	✱Q201	A-1		
FS153	G-5	Q202	A-2		
FS154	G-5	Q203	A-2		
FS155	H-5	✱Q204	B-2		
FS156	H-5	✱Q205	A-2		
		✱Q206	A-2		
IC1	J-2	✱Q207	B-2		
IC2	J-4	✱Q208	C-3		
IC3	J-3	✱Q209	B-4		
IC4	H-3	✱Q210	B-4		
IC5	G-4	✱Q211	E-1		
IC6	G-3	✱Q212	D-3		
IC7	G-3	✱Q213	D-3		
IC8	F-2	✱Q214	D-3		
IC9	G-2	✱Q215	E-2		
IC10	G-2	Q216	A-5		
IC11	H-4	Q217	A-5		
IC12	E-5	Q218	C-5		
IC13	D-4	Q219	C-5		
IC14	E-3	✱Q220	B-4		
IC15	J-4	✱Q221	B-4		
IC201	A-2	Q223	C-4		
IC202	A-4	✱Q224	B-2		
IC203	A-3	✱Q225	B-2		
IC204	B-3	✱Q226	B-2		
IC205	C-4	✱Q401	G-4		
IC206	C-3	✱Q402	F-5		
IC207	C-3	✱Q403	F-3		
IC208	C-2				
IC209	C-2	RV1	J-1		
IC210	C-4	RV2	J-1		
IC211	A-4	RV3	J-1		
IC401	F-4	RV4	H-1		
IC402	F-4	RV5	H-1		
✱IC405	C-5	RV201	B-1		
✱IC406	D-5	RV202	B-1		
✱IC407	D-5	RV203	B-1		
✱IC408	C-5	RV204	C-1		
✱IC409	D-5	RV205	C-1		
IC410	F-5				
		S1	J-1		
PS1	G-5	S2	G-1		
PS2	G-5	S201	A-1		
		S202	C-1		
✱Q1	H-1				

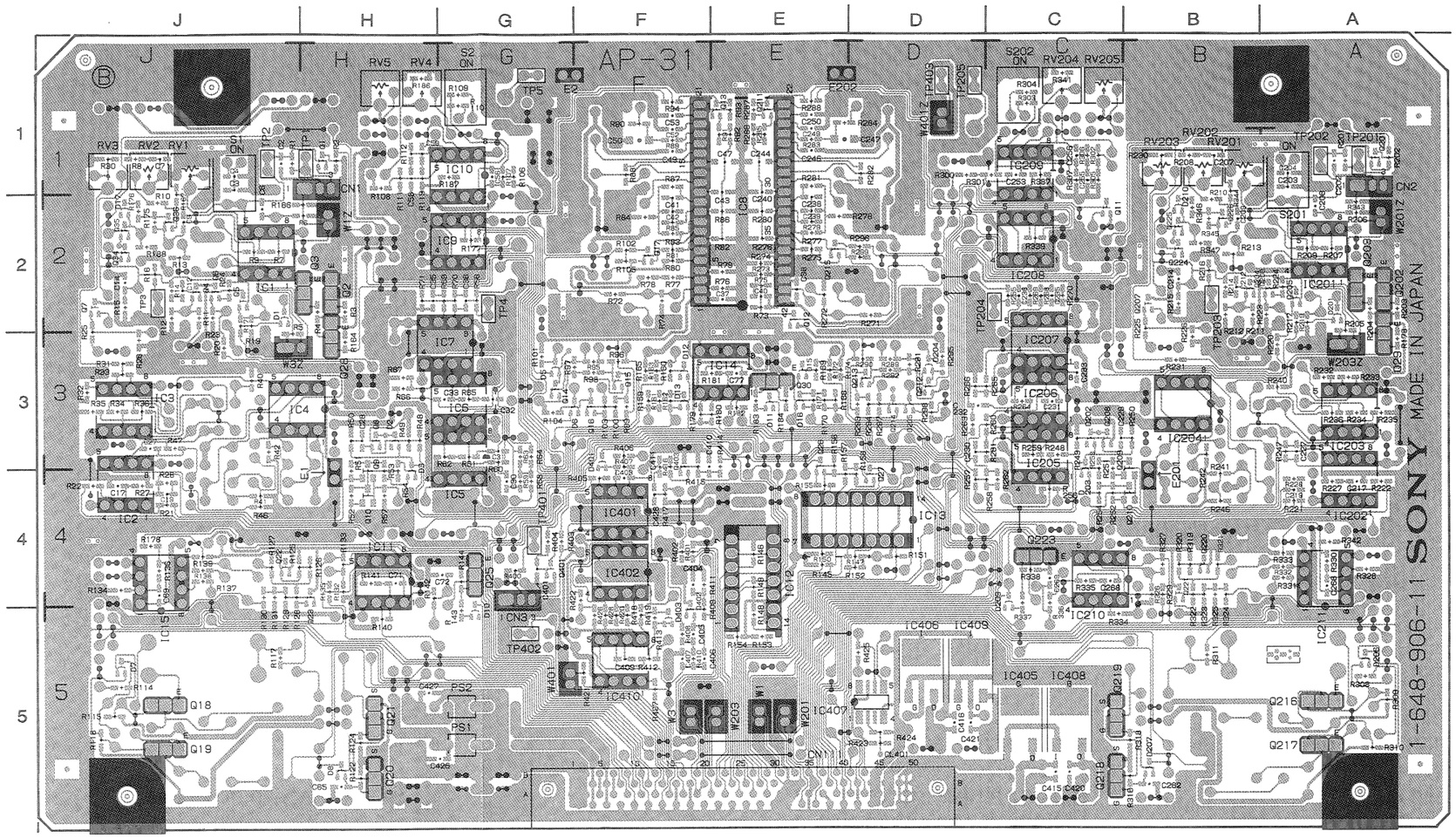

AP-31 1-648-906-11 B SIDE

AP-31A/31AP ; AUDIO/TC PB AMP., METER DRIVER

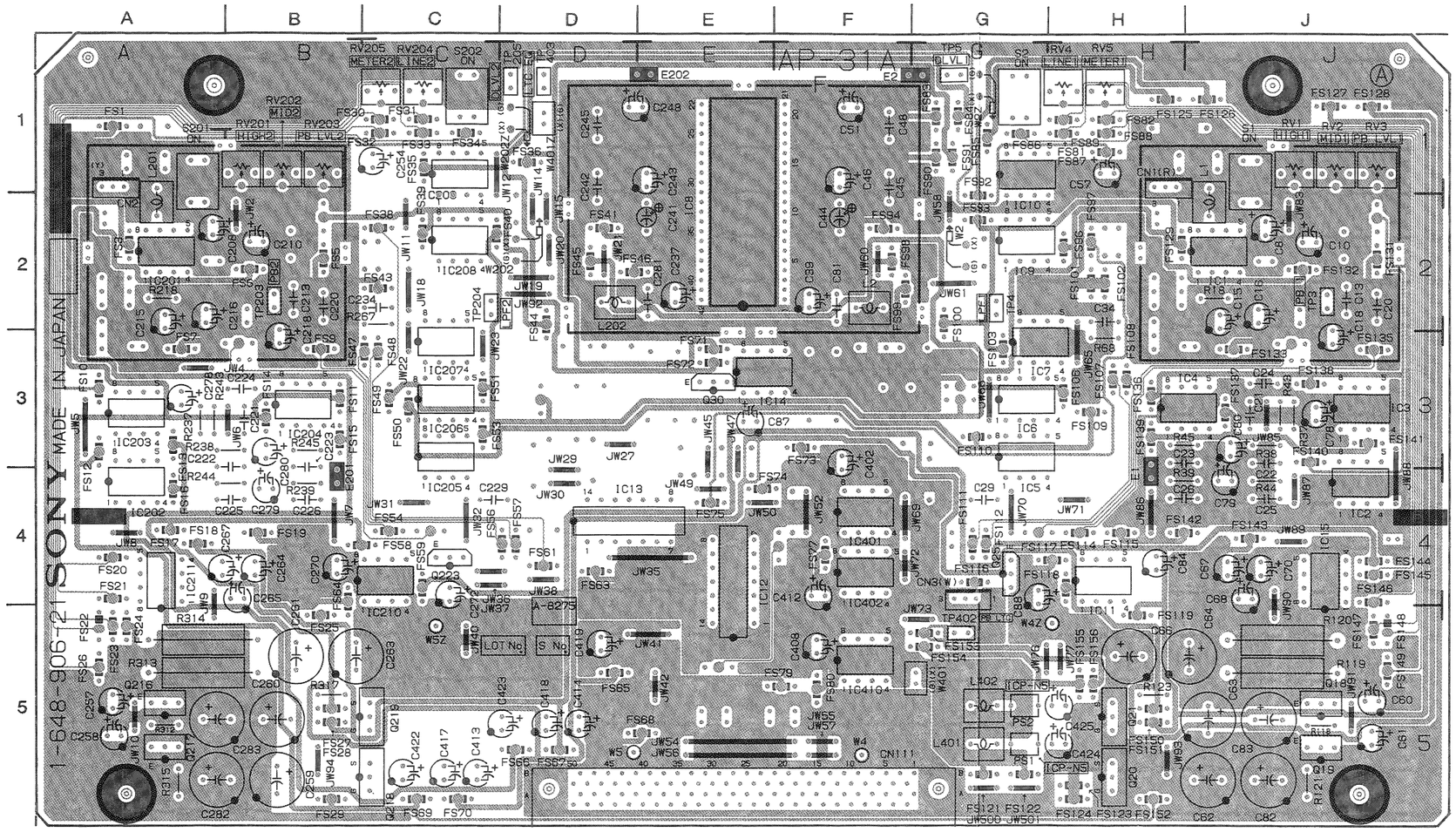

AP-31A 1-648-906-21, 22 A SIDE

AP-31A (1-648-906-21, 22)

CN1	H-1	FS63	D-4
CN2	A-1	FS64	B-4
CN3	G-4	FS65	D-5
CN111	E-5	FS66	D-5
		FS67	D-5
✱D1	J-2	FS68	E-5
✱D7	J-5	FS69	C-5
✱D8	H-5	FS70	C-5
✱D10	G-5	FS71	E-3
✱D11	E-3	FS72	E-3
✱D201	A-2	FS73	F-3
✱D206	A-5	FS74	E-4
✱D207	B-5	FS75	E-4
✱D209	C-4	FS77	F-4
✱D401	F-3	FS79	F-5
✱D403	F-5	FS80	F-5
✱D500 P	D-5	FS81	H-1
		FS82	H-1
E1	H-4	FS83	G-1
E2	G-1	FS84	G-1
E201	B-4	FS85	G-1
E202	E-1	FS86	G-1
		FS87	H-1
FS1	A-1	FS88	H-1
FS3	A-2	FS89	H-1
FS5	B-2	FS90	G-1
FS6	B-2	FS91	G-1
FS7	A-3	FS92	G-2
FS9	B-3	FS93	G-2
FS10	A-3	FS94	F-2
FS11	B-3	FS96	H-2
FS12	A-3	FS97	H-2
FS13	A-3	FS98	F-2
FS14	B-3	FS99	F-2
FS15	B-3	FS100	G-2
FS16	A-4	FS101	H-2
FS17	A-4	FS102	H-2
FS18	A-4	FS103	G-3
FS19	B-4	FS106	H-3
FS20	A-4	FS107	H-3
FS21	A-4	FS108	H-3
FS22	A-5	FS109	H-3
FS23	A-5	FS110	G-3
FS24	A-5	FS111	G-4
FS25	B-5	FS112	G-4
FS26	A-5	FS114	H-4
FS27	B-5	FS115	H-4
FS28	B-5	FS116	G-4
FS29	B-5	FS117	H-4
FS30	C-1	FS118	H-4
FS31	C-1	FS119	H-5
FS32	C-1	FS121	G-5
FS33	C-1	FS122	G-5
FS34	C-1	FS123	H-5
FS35	C-1	FS124	H-5
FS36	D-1	FS125	H-1
FS38	C-2	FS126	J-1
FS39	C-2	FS127	J-1
FS40	C-2	FS128	J-1
FS41	D-2	FS129	H-2
FS43	C-2	FS131	J-2
FS44	D-2	FS132	J-2
FS45	D-2	FS133	J-3
FS46	D-2	FS135	J-3
FS47	C-3	FS136	H-3
FS48	C-3	FS137	J-3
FS49	C-3	FS138	J-3
FS50	C-3	FS139	H-3
FS51	C-3	FS140	J-3
FS53	C-3	FS141	J-3
FS54	C-4	FS142	J-4
FS56	D-4	FS143	J-4
FS57	D-4	FS144	J-4
FS58	C-4	FS145	J-4
FS59	C-4	FS146	J-4
FS61	D-4	FS147	J-5

✱ : B SIDE
P : UVW-1600P ONLY
N : UVW-1600 ONLY

 AP-31A/31AP

FS148	J-5	RV1	J-1
FS149	J-5	RV2	J-1
FS150	H-5	RV3	J-1
FS151	H-5	RV4	H-1
FS152	H-5	RV5	H-1
FS153	G-5	RV201	B-1
FS154	G-5	RV202	B-1
FS155	H-5	RV203	B-1
FS156	H-5	RV204	C-1
		RV205	C-1
IC1	J-2		
IC2	J-4	S1	J-1
IC3	J-3	S2	G-1
IC4	H-3	S201	A-1
IC5	G-4	S202	C-1
IC6	G-3		
IC7	G-3	✱TH1	J-2
IC8	F-2	✱TH2	B-2
IC9	G-2		
IC10	G-2	TP3	J-2
IC11	H-4	TP4	G-2
IC12	E-5	TP5	G-1
IC13	D-4	TP203	B-2
IC14	E-3	TP204	C-2
IC15	J-4	TP205	D-1
IC201	A-2	TP402	G-5
IC202	A-4	TP403	D-1
IC203	A-3		
IC204	B-3		
IC205	C-4		
IC206	C-3		
IC207	C-3		
IC208	C-2		
IC209	C-2		
IC210	C-4		
IC211	A-4		
IC401	F-4		
IC402	F-4		
✱IC405	C-5		
✱IC406	D-5		
✱IC407	D-5		
✱IC408	C-5		
✱IC409	D-5		
IC410	F-5		
PS1	G-5		
PS2	G-5		
✱Q5	J-2		
✱Q6	J-2		
✱Q7	J-2		
✱Q9	H-4		
✱Q11	C-2		
✱Q12	E-2		
✱Q13	E-1		
Q18	J-5		
Q19	J-5		
Q20	H-5		
Q21	H-5		
✱Q22	J-4		
✱Q23	H-4		
Q25	G-4		
Q30	E-3		
✱Q205	A-2		
✱Q206	A-2		
✱Q207	B-2		
✱Q209	B-4		
✱Q211	E-1		
Q216	A-5		
Q217	A-5		
Q218	C-5		
Q219	C-5		
✱Q220	B-4		
✱Q221	B-4		
Q223	C-4		
✱Q403	F-3		

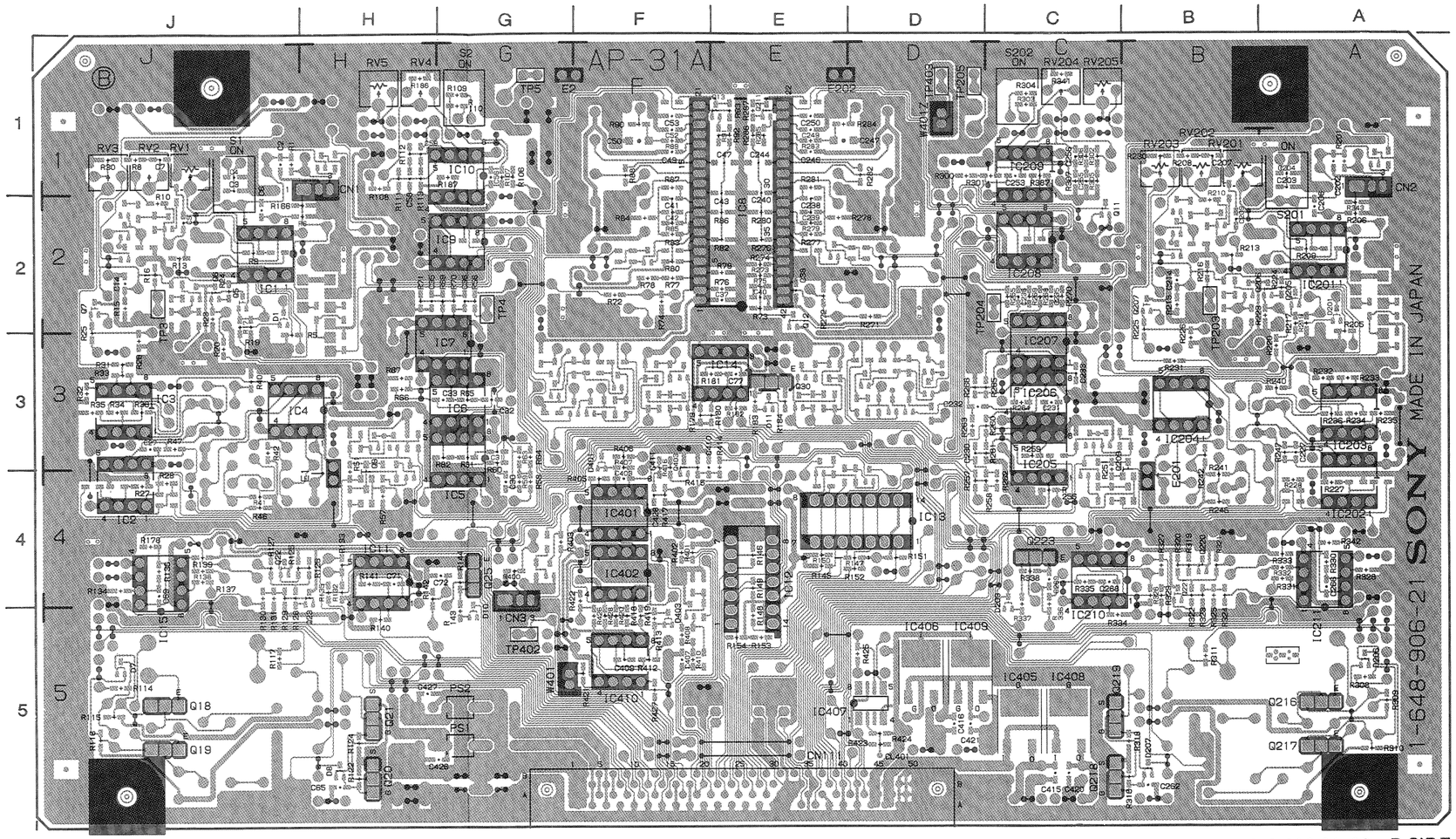

AP-31A 1-648-906-21, 22 B SIDE

 15-6 (2)

AR-14/14P ; AUDIO/TC REC AMP., AUDIO/TC ERASE OSC., AUDIO BIAS DRIVER

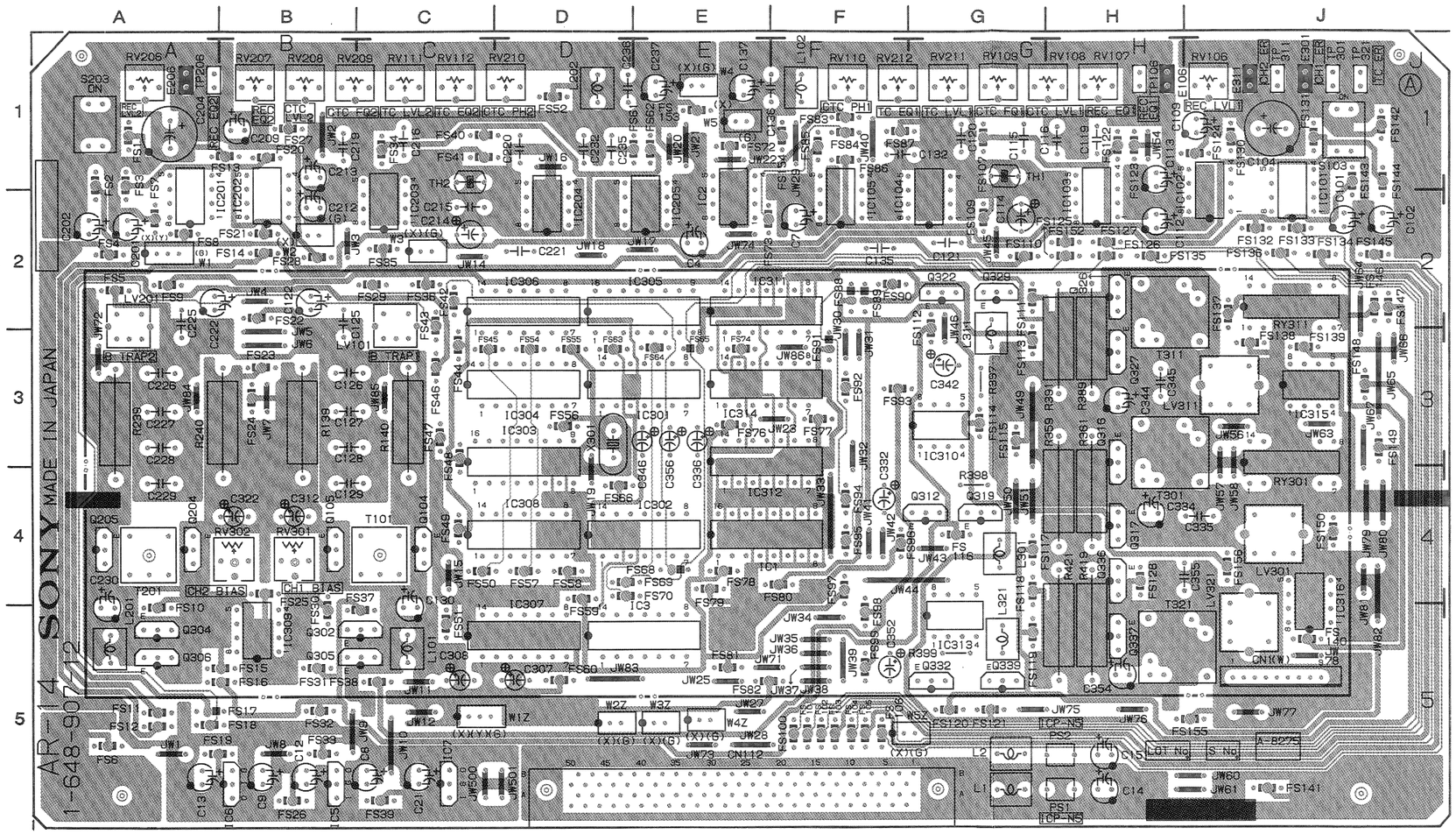

AR-14 1-648-907-12 A SIDE

UVW-1800 (J) ; Serial No. 10901 and higher
UVW-1800 (UC) ; Serial No. 13931 and higher
UVW-1800P(EK) ; Serial No. 14141 and higher

AR-14 (1-648-907-12)

CN1	J-5	FS44	C-3
CN112	E-5	FS45	C-3
		FS46	C-3
✱D1	D-5	FS47	C-3
✱D101	J-2	FS48	C-3
✱D102	J-1	FS49	C-4
✱D103	C-3	FS50	C-4
✱D201	A-2	FS51	C-5
✱D202	A-1	FS52	D-1
✱D203	A-3	FS54	D-3
✱D301	C-5	FS55	D-3
✱D302	D-4	FS56	D-3
✱D303	B-3	FS57	D-4
✱D304	B-5	FS58	D-4
✱D305	B-3	FS59	D-4
✱D306	A-5	FS60	D-5
✱D311	G-4	FS61	D-1
✱D312	G-4	FS62	E-1
✱D313	J-3	FS63	D-3
✱D314	F-3	FS64	E-3
✱D321	G-3	FS65	E-3
✱D322	G-3	FS66	D-4
✱D323	J-2	FS68	E-4
✱D324	E-4	FS69	D-4
✱D331	G-5	FS70	D-4
✱D332	G-5	FS72	E-1
✱D334	E-4	FS73	E-2
		FS74	E-3
E106	H-1	FS76	E-3
E206	A-1	FS77	F-3
E301	J-1	FS78	E-4
E311	J-1	FS79	E-4
		FS80	F-4
FS1	A-1	FS81	E-5
FS2	A-1	FS82	E-5
FS3	A-1	FS83	F-1
FS4	A-2	FS84	F-1
FS5	A-2	FS85	F-1
FS6	A-5	FS86	F-1
FS7	A-2	FS87	F-1
FS8	A-2	FS88	F-2
FS9	A-2	FS89	F-2
FS10	A-5	FS90	F-2
FS11	A-5	FS91	F-3
FS12	A-5	FS92	F-3
FS13	B-1	FS93	F-3
FS14	B-2	FS94	F-4
FS15	B-5	FS95	F-4
FS16	B-5	FS96	F-4
FS17	A-5	FS97	F-4
FS18	A-5	FS98	F-5
FS19	A-5	FS99	F-5
FS20	B-1	FS100	F-5
FS21	B-2	FS101	F-5
FS22	B-2	FS102	F-5
FS23	B-3	FS103	F-5
FS24	B-3	FS104	F-5
FS25	B-4	FS105	F-5
FS26	B-5	FS106	F-5
FS27	B-1	FS107	G-1
FS28	B-2	FS108	G-1
FS29	C-2	FS109	G-2
FS30	B-5	FS110	G-2
FS31	B-5	FS111	G-2
FS32	B-5	FS112	G-2
FS33	B-5	FS113	G-3
FS34	C-1	FS114	G-3
FS35	C-2	FS115	G-3
FS36	C-2	FS116	G-4
FS37	C-5	FS117	G-4
FS38	C-5	FS118	G-4
FS39	C-5	FS119	G-5
FS40	C-1	FS120	G-5
FS41	C-1	FS121	G-5
FS42	C-2	FS122	H-1
FS43	C-2	FS123	H-1

✱ : B SIDE

FS124	J-1	✱Q3	E-5
FS125	H-2	✱Q4	E-5
FS126	H-2	✱Q5	F-5
FS127	H-2	✱Q101	G-1
FS128	H-4	✱Q102	E-4
FS130	J-1	✱Q103	G-2
FS131	J-1	Q104	C-4
FS132	J-2	Q105	B-4
FS133	J-2	✱Q201	C-1
FS134	J-2	✱Q202	E-4
FS135	H-2	✱Q203	C-1
FS136	J-2	Q204	A-4
FS137	J-2	Q205	A-4
FS138	J-3	✱Q301	B-3
FS139	J-3	Q302	C-5
FS140	J-5	✱Q303	B-3
FS141	J-5	Q304	A-5
FS142	J-1	Q305	C-5
FS143	J-1	Q306	A-5
FS144	J-1	✱Q311	F-3
FS145	J-2	Q312	G-4
FS146	J-2	✱Q313	F-2
FS147	J-2	✱Q314	H-4
FS148	J-3	✱Q315	H-4
FS149	J-3	Q316	H-3
FS150	J-4	Q317	H-4
FS152	H-2	✱Q318	J-3
FS153	E-1	Q319	G-4
FS154	F-1	✱Q321	G-3
FS155	J-5	Q322	G-2
FS156	J-4	✱Q323	E-3
		✱Q324	H-2
IC1	E-4	✱Q325	H-3
IC2	E-2	Q326	H-2
IC3	D-5	Q327	H-3
IC5	B-5	✱Q328	J-2
IC6	B-5	Q329	G-2
IC7	C-5	✱Q331	F-5
IC101	J-2	Q332	G-5
IC102	J-2	✱Q333	F-3
IC103	H-2	✱Q334	H-4
IC104	G-2	✱Q335	H-5
IC105	F-2	Q336	H-4
IC201	A-2	Q337	H-5
IC202	B-2	Q339	G-5
IC203	C-2		
IC204	D-2	RV106	J-1
IC205	E-2	RV107	H-1
IC301	D-3	RV108	H-1
IC302	D-4	RV109	G-1
IC303	C-4	RV110	F-1
IC304	C-3	RV111	C-1
IC305	D-3	RV112	C-1
IC306	C-3	RV206	A-1
IC307	C-5	RV207	B-1
IC308	C-4	RV208	B-1
IC309	B-5	RV209	B-1
IC310	G-3	RV210	D-1
IC311	E-3	RV211	G-1
IC312	E-4	RV212	F-1
IC313	G-5	RV301	B-4
IC314	E-3	RV302	B-4
IC315	J-3		
IC316	J-5	RY301	J-3
		RY311	J-2
LV101	C-2		
LV201	A-2	S103	J-1
LV301	J-4	S203	A-1
LV311	J-3		
LV321	J-5	TP106	H-1
		TP206	A-1
PS1	H-5	TP301	J-1
PS2	H-5	TP311	J-1
		TP321	J-1
✱Q1	E-5		
✱Q2	E-5	X301	D-3

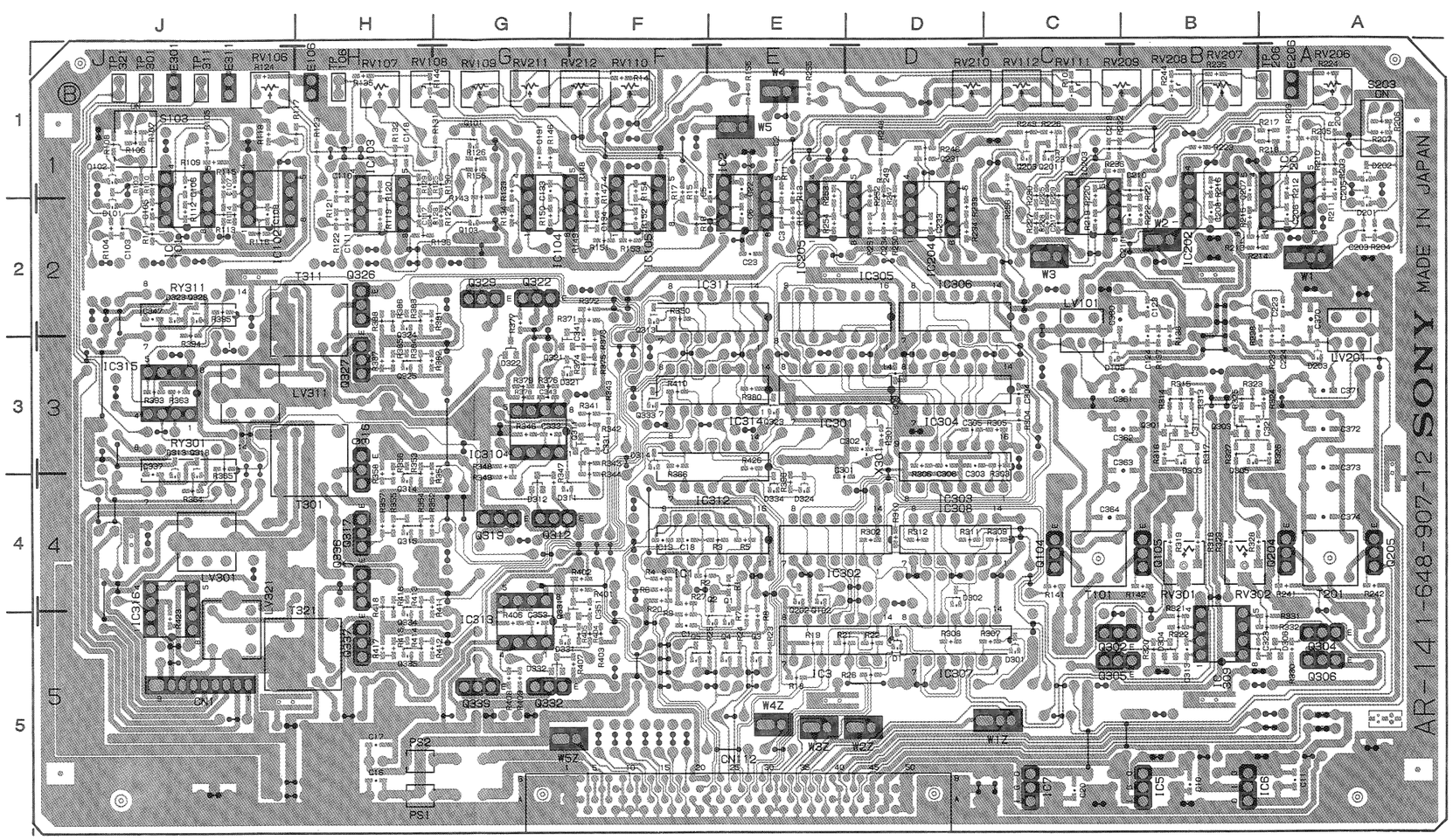

AR-14 1-648-907-12 B SIDE

AR-14/14P ; AUDIO/TC REC AMP., AUDIO/TC ERASE OSC., AUDIO BIAS DRIVER

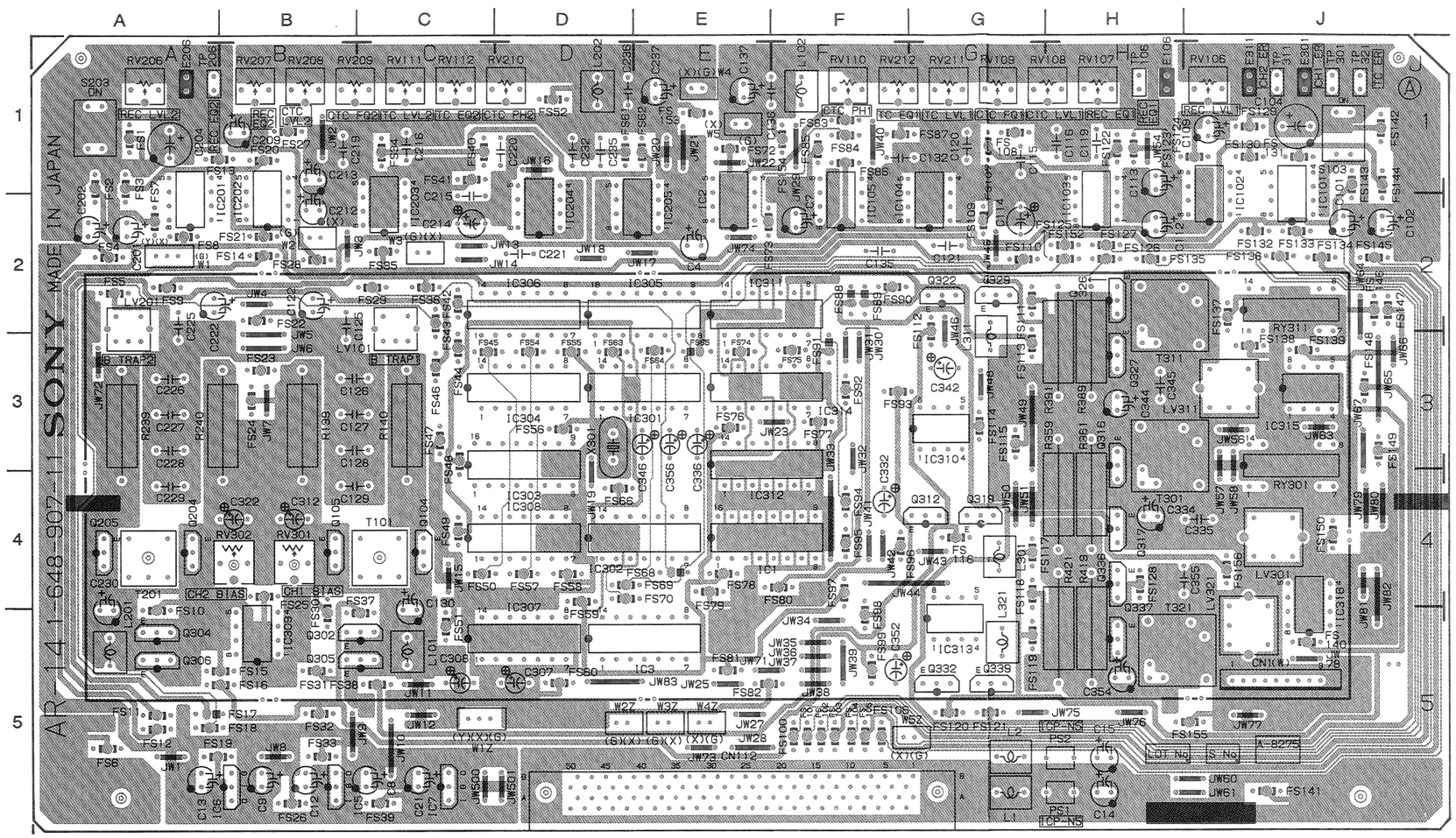

AR-14 1-648-907-11 A SIDE

UVW-1800 (J) ; Serial No. 10001 through 10900
UVW-1800 (UC) ; Serial No. 10001 through 13930
UVW-1800P(EK) ; Serial No. 10001 through 14140

AR-14 (1-648-907-11)

CN1	J-5	FS44	C-3
CN112	E-5	FS45	C-3
		FS46	C-3
✱D1	D-5	FS47	C-3
✱D101	J-2	FS48	C-3
✱D102	J-1	FS49	C-4
✱D103	C-3	FS50	C-4
✱D201	A-2	FS51	C-5
✱D202	A-1	FS52	D-1
✱D203	A-3	FS54	D-3
✱D301	C-5	FS55	D-3
✱D302	D-4	FS56	D-3
✱D303	B-3	FS57	D-4
✱D304	B-5	FS58	D-4
✱D305	B-3	FS59	D-4
✱D306	A-5	FS60	D-5
✱D311	G-4	FS61	D-1
✱D312	G-4	FS62	E-1
✱D313	J-3	FS63	D-3
✱D314	F-3	FS64	E-3
✱D321	G-3	FS65	E-3
✱D322	G-3	FS66	D-4
✱D323	J-2	FS68	E-4
✱D324	E-4	FS69	D-4
✱D331	G-5	FS70	D-4
✱D332	G-5	FS72	E-1
✱D334	E-4	FS73	E-2
		FS74	E-3
E106	H-1	FS75	F-3
E206	A-1	FS76	E-3
E301	J-1	FS77	F-3
E311	J-1	FS78	E-4
		FS79	E-4
FS1	A-1	FS80	F-4
FS2	A-1	FS81	E-5
FS3	A-1	FS82	E-5
FS4	A-2	FS83	F-1
FS5	A-2	FS84	F-1
FS6	A-5	FS85	F-1
FS7	A-2	FS86	F-1
FS8	A-2	FS87	F-1
FS9	A-2	FS88	F-2
FS10	A-5	FS89	F-2
FS11	A-5	FS90	F-2
FS12	A-5	FS91	F-3
FS13	B-1	FS92	F-3
FS14	B-2	FS93	F-3
FS15	B-5	FS94	F-4
FS16	B-5	FS95	F-4
FS17	A-5	FS96	F-4
FS18	A-5	FS97	F-4
FS19	A-5	FS98	F-5
FS20	B-1	FS99	F-5
FS21	B-2	FS100	F-5
FS22	B-2	FS101	F-5
FS23	B-3	FS102	F-5
FS24	B-3	FS103	F-5
FS25	B-4	FS104	F-5
FS26	B-5	FS105	F-5
FS27	B-1	FS106	F-5
FS28	B-2	FS107	G-1
FS29	C-2	FS108	G-1
FS30	B-5	FS109	G-2
FS31	B-5	FS110	G-2
FS32	B-5	FS111	G-2
FS33	B-5	FS112	G-2
FS34	C-1	FS113	G-3
FS35	C-2	FS114	G-3
FS36	C-2	FS115	G-3
FS37	C-5	FS116	G-4
FS38	C-5	FS117	G-4
FS39	C-5	FS118	G-4
FS40	C-1	FS119	G-5
FS41	C-1	FS120	G-5
FS42	C-2	FS121	G-5
FS43	C-2	FS122	H-1

✱ : B SIDE

FS123	H-1	✱Q1	E-5	TP301	J-1
FS124	J-1	✱Q2	E-5	TP311	J-1
FS125	H-2	✱Q3	E-5	TP321	J-1
FS126	H-2	✱Q4	E-5		
FS127	H-2	✱Q5	F-5	X301	D-3
FS128	H-4	✱Q101	G-1		
FS129	J-1	✱Q102	E-4		
FS130	J-1	✱Q103	G-2		
FS131	J-1	Q104	C-4		
FS132	J-2	Q105	B-4		
FS133	J-2	✱Q201	C-1		
FS134	J-2	✱Q202	E-4		
FS135	H-2	✱Q203	C-1		
FS136	J-2	Q204	A-4		
FS137	J-2	Q205	A-4		
FS138	J-3	✱Q301	B-3		
FS139	J-3	Q302	C-5		
FS140	J-5	✱Q303	B-3		
FS141	J-5	Q304	A-5		
FS142	J-1	Q305	C-5		
FS143	J-1	Q306	A-5		
FS144	J-1	✱Q311	F-3		
FS145	J-2	Q312	G-4		
FS146	J-2	✱Q313	F-2		
FS147	J-2	✱Q314	H-4		
FS148	J-3	✱Q315	H-4		
FS149	J-3	Q316	H-3		
FS150	J-4	Q317	H-4		
FS152	H-2	✱Q318	J-3		
FS153	E-1	Q319	G-4		
FS154	F-1	✱Q321	G-3		
FS155	J-5	Q322	G-2		
FS156	J-4	✱Q323	E-3		
		✱Q324	H-2		
IC1	E-4	✱Q325	H-3		
IC2	E-2	Q326	H-2		
IC3	D-5	Q327	H-3		
IC5	B-5	✱Q328	J-2		
IC6	B-5	Q329	G-2		
IC7	C-5	✱Q331	F-5		
IC101	J-2	Q332	G-5		
IC102	J-2	✱Q333	F-3		
IC103	H-2	✱Q334	H-4		
IC104	G-2	✱Q335	H-5		
IC105	F-2	Q336	H-4		
IC201	A-2	Q337	H-5		
IC202	B-2	Q339	G-5		
IC203	C-2				
IC204	D-2	RV106	J-1		
IC205	E-2	RV107	H-1		
IC301	D-3	RV108	H-1		
IC302	D-4	RV109	G-1		
IC303	C-4	RV110	F-1		
IC304	C-3	RV111	C-1		
IC305	D-3	RV112	C-1		
IC306	C-3	RV206	A-1		
IC307	C-5	RV207	B-1		
IC308	C-4	RV208	B-1		
IC309	B-5	RV209	B-1		
IC310	G-3	RV210	D-1		
IC311	E-3	RV211	G-1		
IC312	E-4	RV212	F-1		
IC313	G-5	RV301	B-4		
IC314	E-3	RV302	B-4		
IC315	J-3				
IC316	J-5	RY301	J-3		
		RY311	J-2		
LV101	C-2				
LV201	A-2	S103	J-1		
LV301	J-4	S203	A-1		
LV311	J-3				
LV321	J-5	✱TH1	G-2		
		✱TH2	C-2		
PS1	H-5				
PS2	H-5	TP106	H-1		
		TP206	A-1		

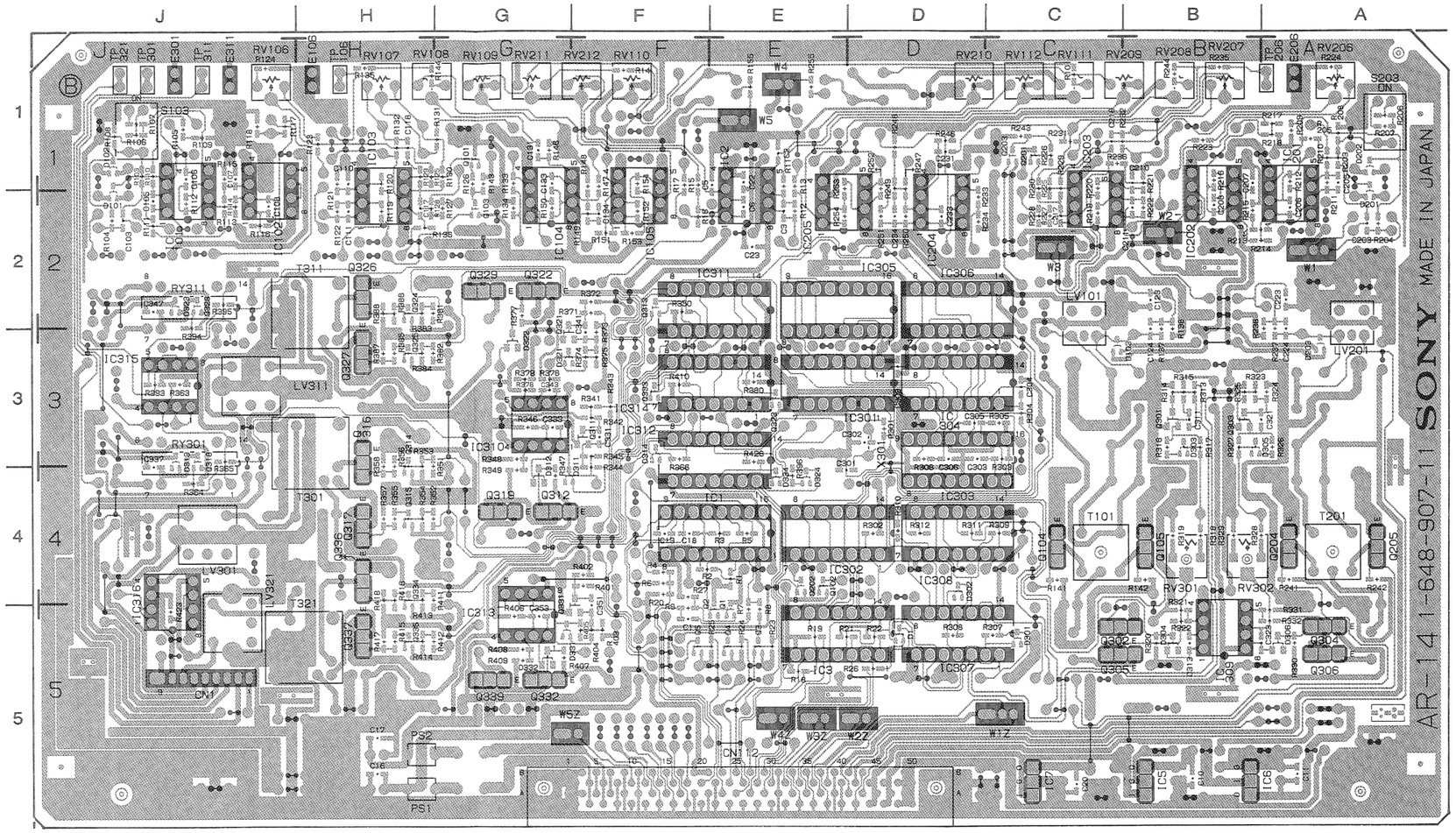

AR-14 1-648-907-11 B SIDE

CP-225; VIDEO INPUT/OUTPUT CONNECTOR

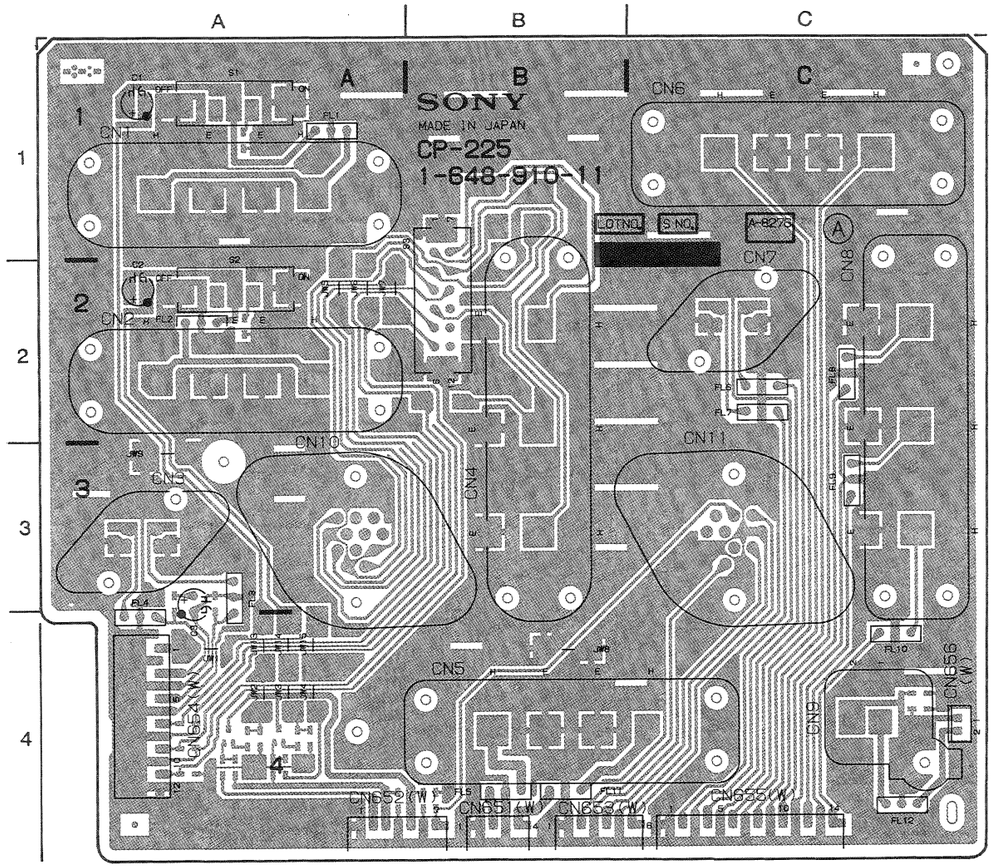

CP-225 1-648-910-11, 12 A SIDE

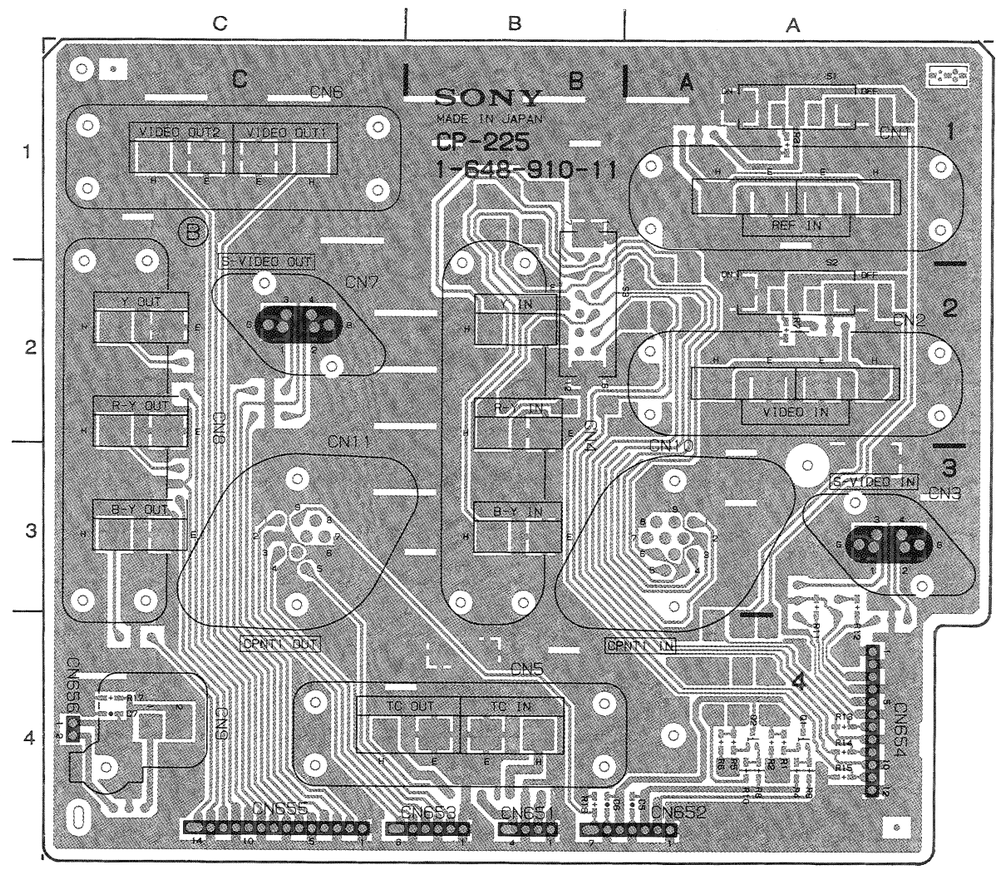

CP-225 1-648-910-11, 12 B SIDE

CP-225A; VIDEO OUTPUT CONNECTOR

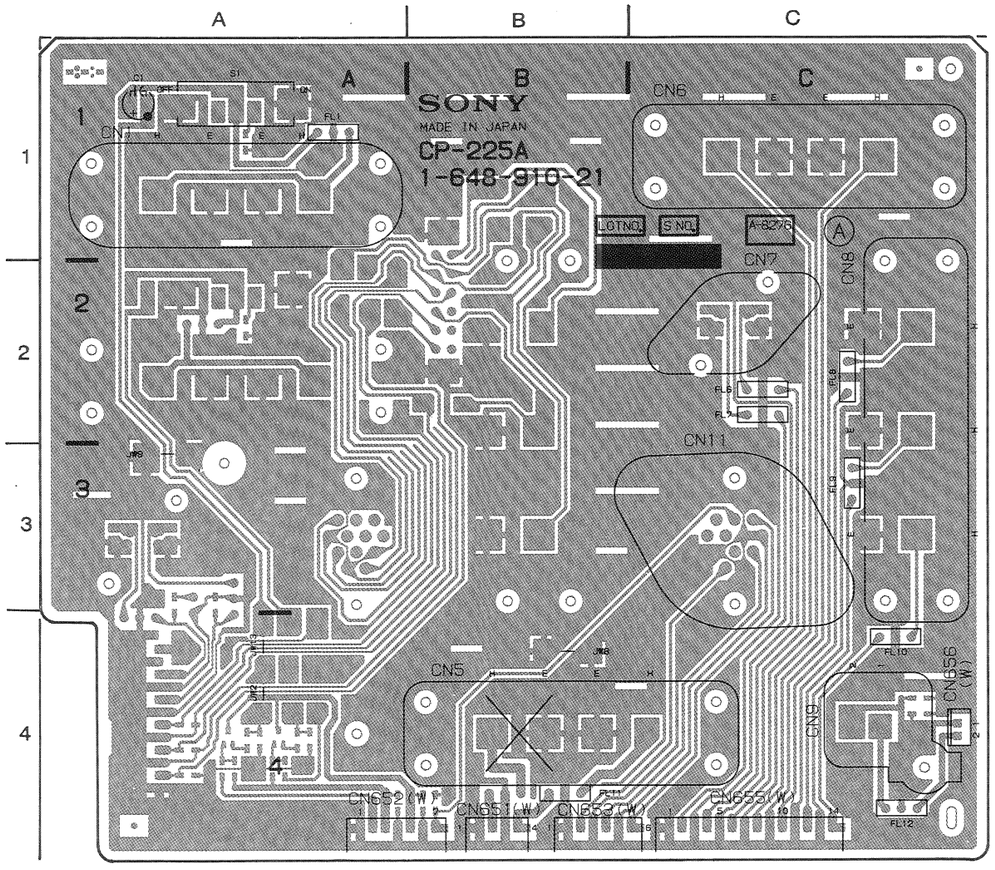

CP-225A 1-648-910-21, 22 A SIDE

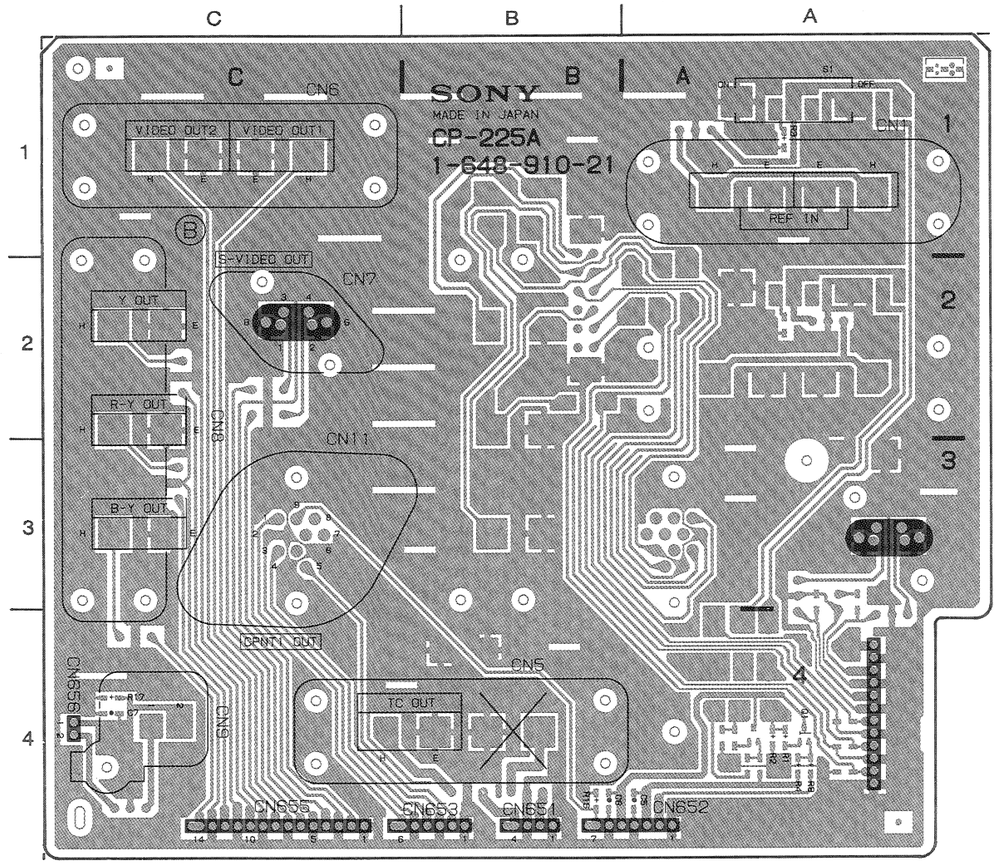

CP-225A 1-648-910-21, 22 B SIDE

CP-226 ; AUDIO INPUT/OUTPUT CONNECTOR, OUTPUT TRANSFORMER (FOR UC, EK)
CP-226J ; AUDIO INPUT/OUTPUT CONNECTOR, OUTPUT TRANSFORMER (FOR J)
CP-226A ; AUDIO OUTPUT CONNECTOR, OUTPUT TRANSFORMER (FOR UC, EK)
CP-226AJ ; AUDIO OUTPUT CONNECTOR, OUTPUT TRANSFORMER (FOR J)

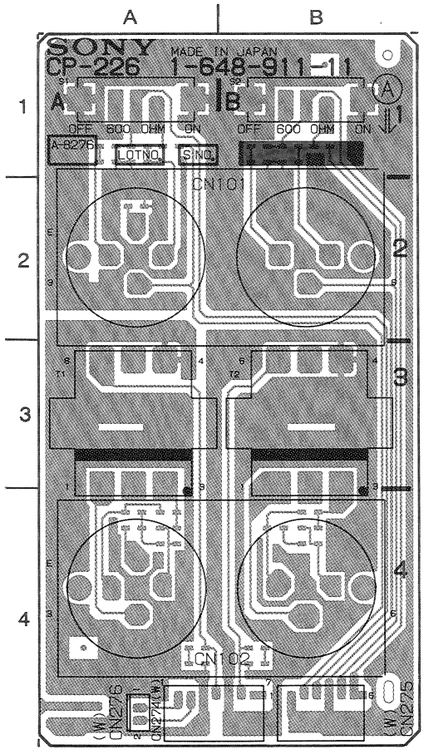

CP-226/226J 1-648-911-11, 12 A SIDE

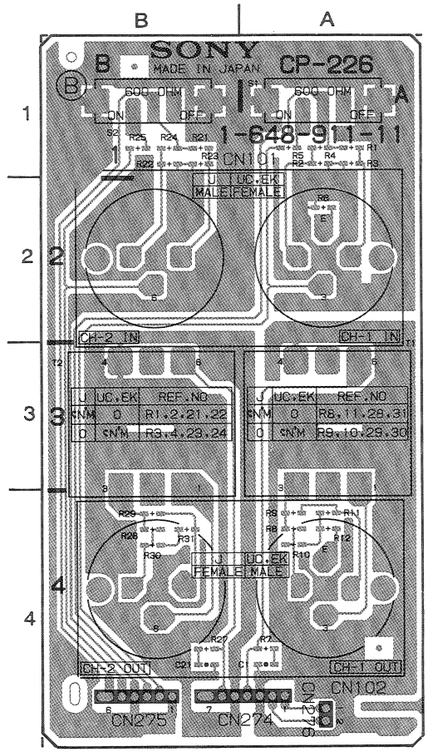

CP-226/226J 1-648-911-11, 12 B SIDE

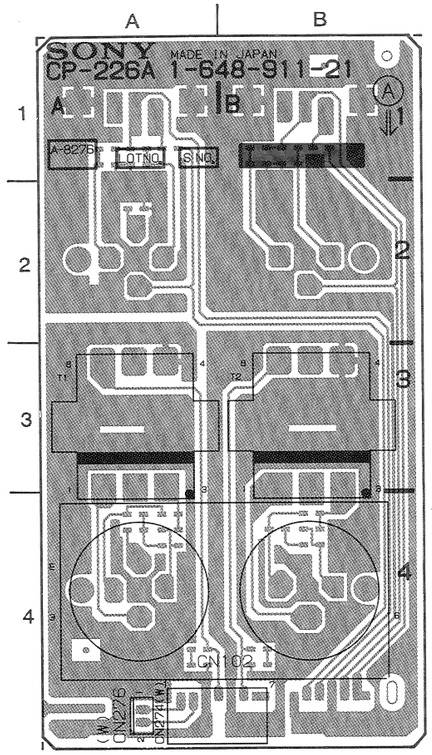

CP-226A/226AJ 1-648-911-21, 22 A SIDE

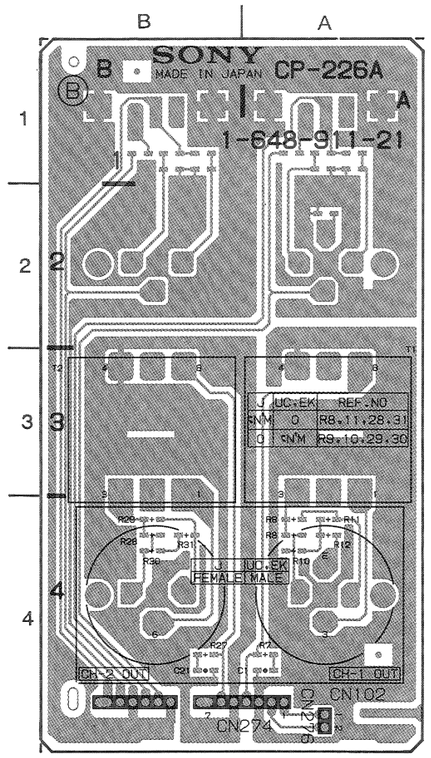

CP-226A/226AJ 1-648-911-21, 22 B SIDE

CP-237 ; TBC/9P REMOTE CONNECTOR
CP-237A ; TBC/9P REMOTE CONNECTOR

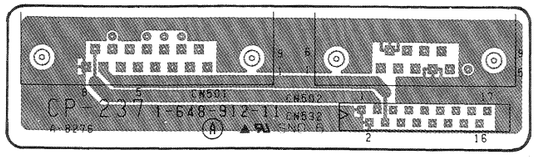

CP-237 1-648-912-11, 12 A SIDE

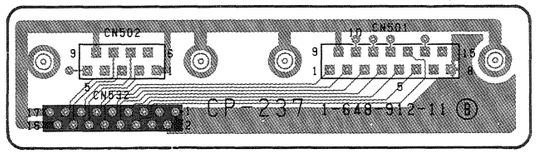

CP-237 1-648-912-11, 12 B SIDE

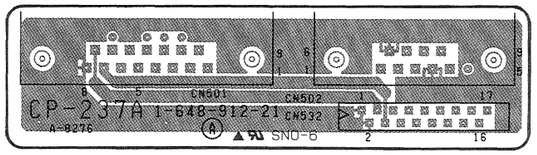

CP-237A 1-648-912-21 A SIDE

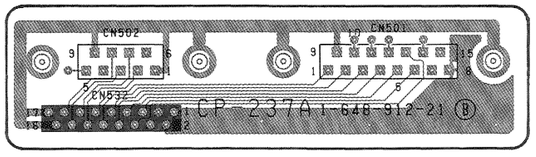

CP-237A 1-648-912-21 B SIDE

DR-214 ; MOTOR DRIVER, TENSION SENS. AMP., DRUM FG/PG AMP., CAPSTAN FG AMP., CTL REC/PB AMP.

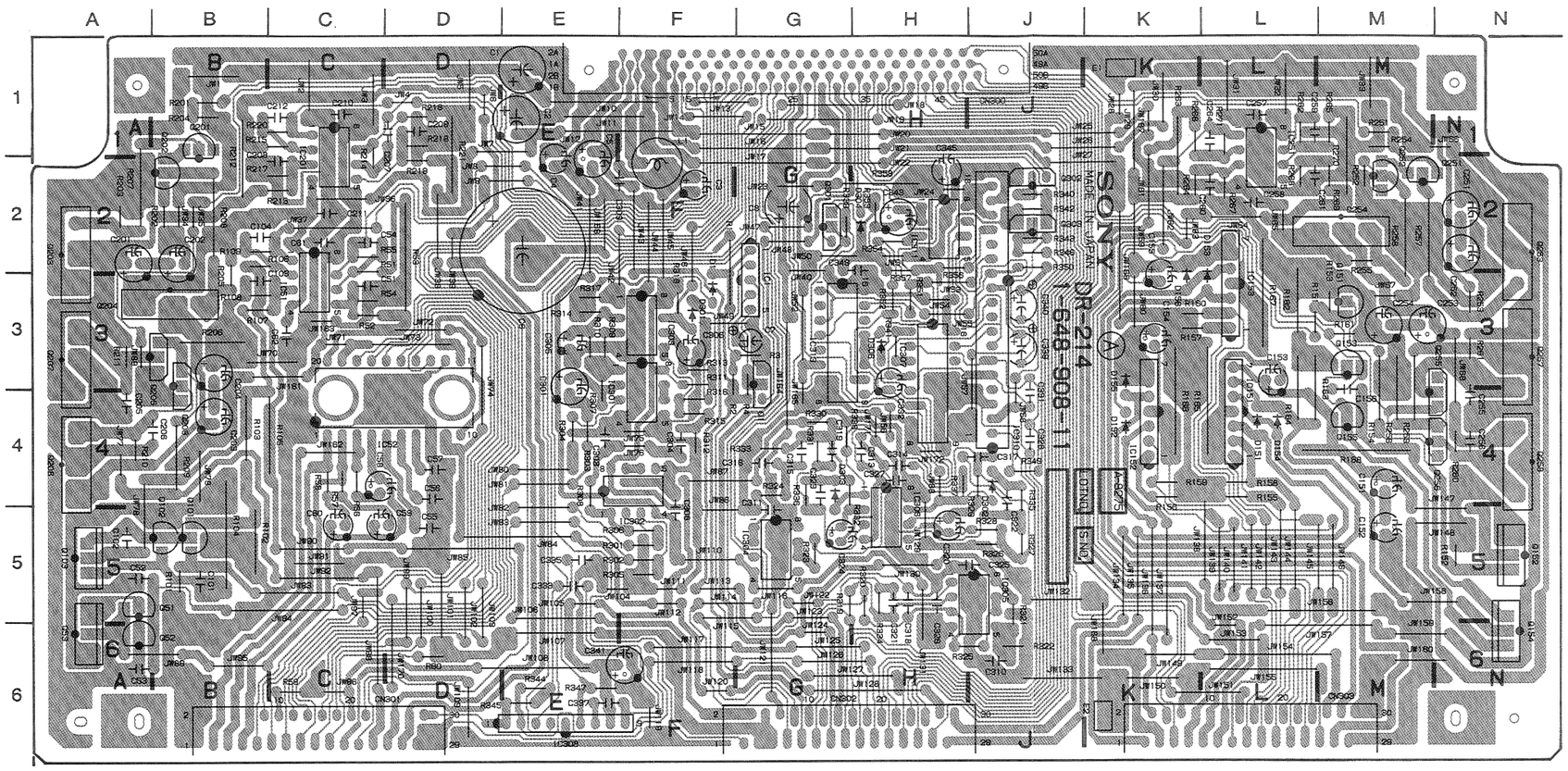

DR-214 1-648-908-11, 12 A SIDE

DR-214 (1-648-908-11, 12)

CN300	H-1
CN301	C-5
CN302	H-5
CN303	L-5
D1	G-2
D151	L-3
D152	K-3
D153	L-2
D154	M-3
D155	K-3
D156	L-2
D301	G-2
D302	J-4
D303	H-4
D304	H-2
D306	H-3
E1	K-1
E2	K-5
IC1	G-2
IC51	C-2
IC52	D-3
IC151	L-4
IC152	L-4
IC153	L-2
IC201	C-1
IC251	L-1
IC301	F-3
IC302	F-4
IC303	F-2
IC304	G-4
IC305	J-5
IC306	H-4
IC307	J-2
IC308	E-5
IC310	J-3
IC311	J-1
IC313	H-2
Q1	G-3
Q51	B-5
Q52	B-5
Q53	B-5
Q101	B-4
Q102	B-4
Q103	B-4
Q151	M-2
Q152	N-4
Q153	M-3
Q154	N-5
Q155	M-3
Q201	B-1
Q202	B-1
Q203	B-2
Q204	B-2
Q205	B-3
Q206	B-3
Q207	B-3
Q208	B-4
Q251	N-1
Q252	N-1
Q253	N-2
Q254	M-2
Q255	N-3
Q256	N-3
Q257	N-3
Q258	N-4
Q301	H-2
Q302	K-1
Q303	K-2

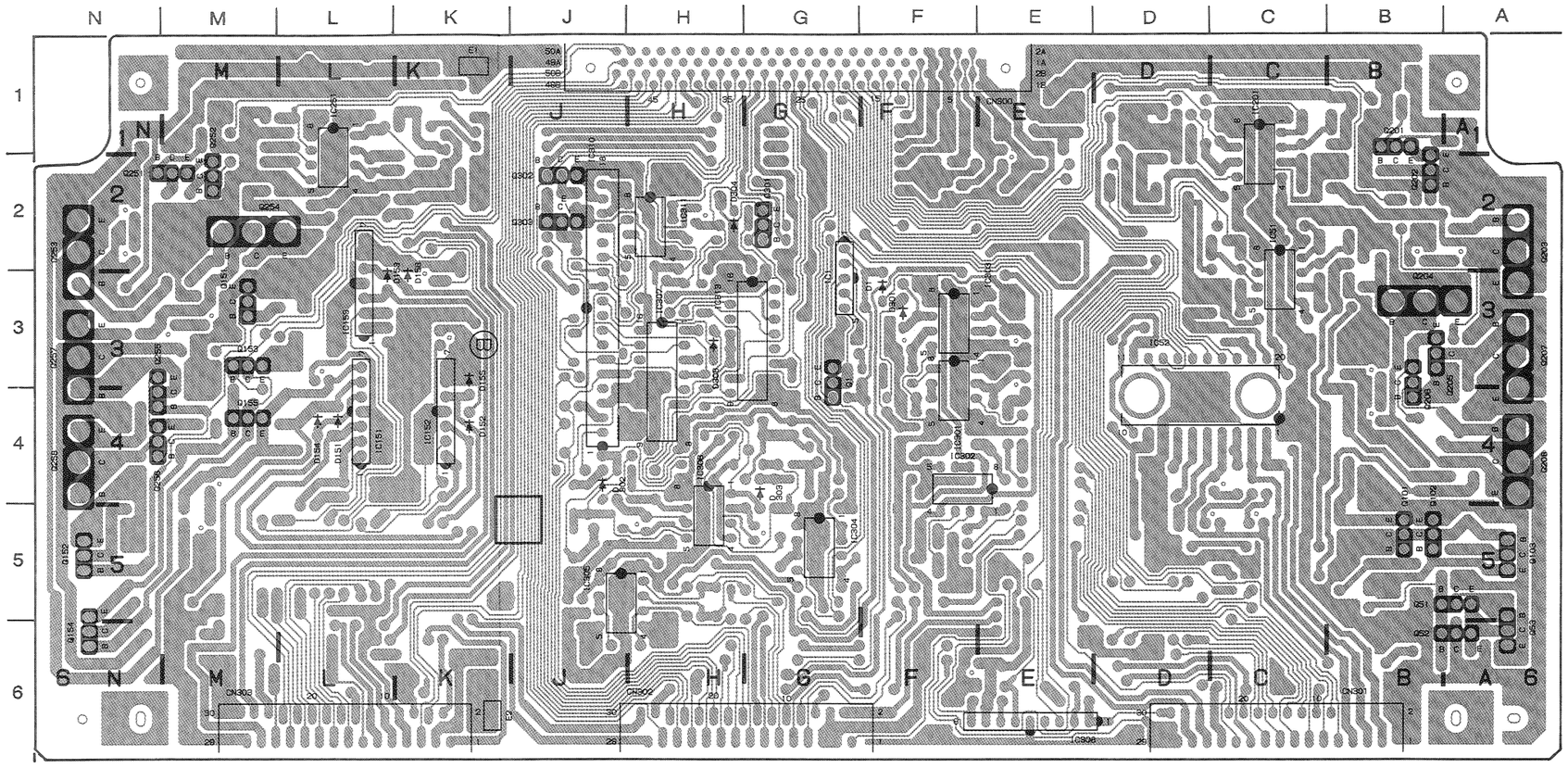

DR-214 1-648-908-11, 12 B SIDE

KY-249; FUNCTION KEY

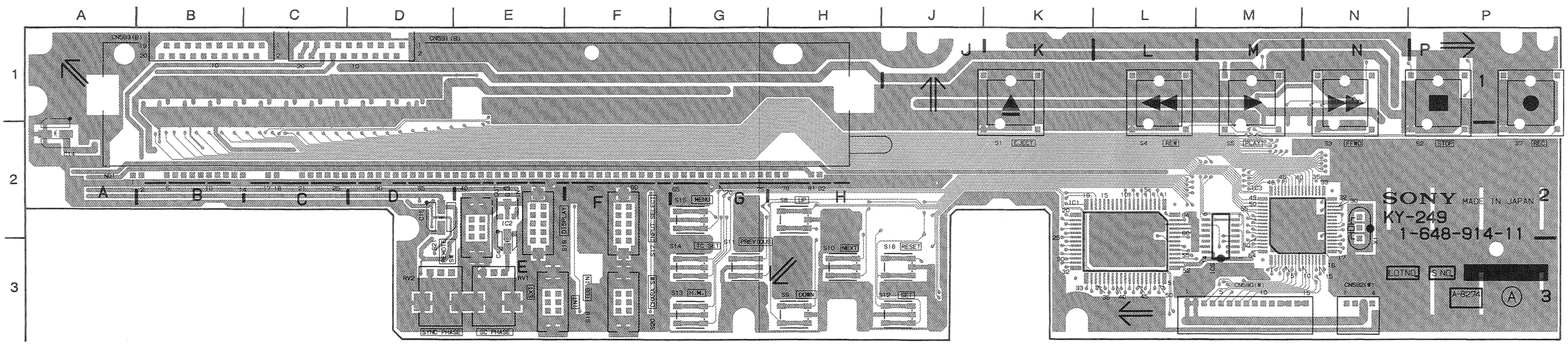

KY-249 1-648-914-11 A SIDE

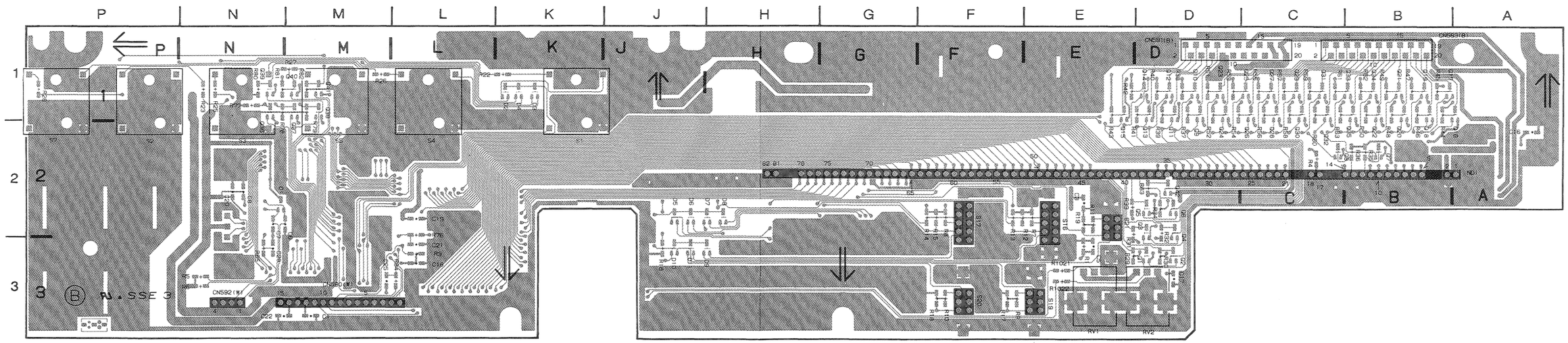

KY-249 1-648-914-11 B SIDE

KY-249(1-648-914-11)

CN590	M-3	S8	H-2
CN591	D-1	S9	H-3
CN592	N-3	S10	H-3
CN593	B-1	S11	G-3
		S12	J-3
✱D1	N-2	S13	G-3
✱D2	K-1	S14	G-3
✱D3	K-1	S15	G-2
✱D4	K-1	S16	E-2
✱D5	J-2	S17	F-2
✱D6	J-2	S18	J-3
✱D7	H-2	S19	E-3
✱D8	H-2	S20	F-3
✱D9	H-3	S21	E-2
✱D10	J-3		
✱D11	J-3	X1	N-2
IC1	L-3		
IC2	E-2		
IC3	M-2		
IC6	M-3		
ND1	E-2		
✱Q1	D-3		
✱Q2	D-3		
✱Q3	D-2		
✱Q4	D-2		
✱Q5	D-2		
✱Q6	D-2		
✱Q7	B-2		
✱Q8	C-2		
✱Q9	D-1		
✱Q10	D-1		
✱Q11	D-1		
✱Q12	D-1		
✱Q13	D-1		
✱Q14	D-1		
✱Q15	E-1		
✱Q16	A-1		
✱Q17	B-1		
✱Q18	B-1		
✱Q19	B-1		
✱Q20	B-1		
✱Q21	B-1		
✱Q22	B-1		
✱Q23	D-1		
✱Q24	D-1		
✱Q25	C-1		
✱Q26	C-1		
✱Q27	C-1		
✱Q28	C-1		
✱Q29	C-1		
✱Q30	C-1		
✱Q31	C-1		
✱Q32	C-1		
✱Q33	B-1		
✱Q34	B-1		
✱Q35	B-1		
✱Q36	N-1		
✱Q37	M-1		
✱Q38	M-1		
✱Q39	N-1		
✱Q40	M-1		
✱Q41	M-1		
✱Q42	D-2		
RV1	E-3		
RV2	D-3		
S1	K-1		
S2	P-1		
S3	N-1		
S4	L-1		
S5	M-1		
S7	P-1		

✱: B SIDE

KY-249A; FUNCTION KEY

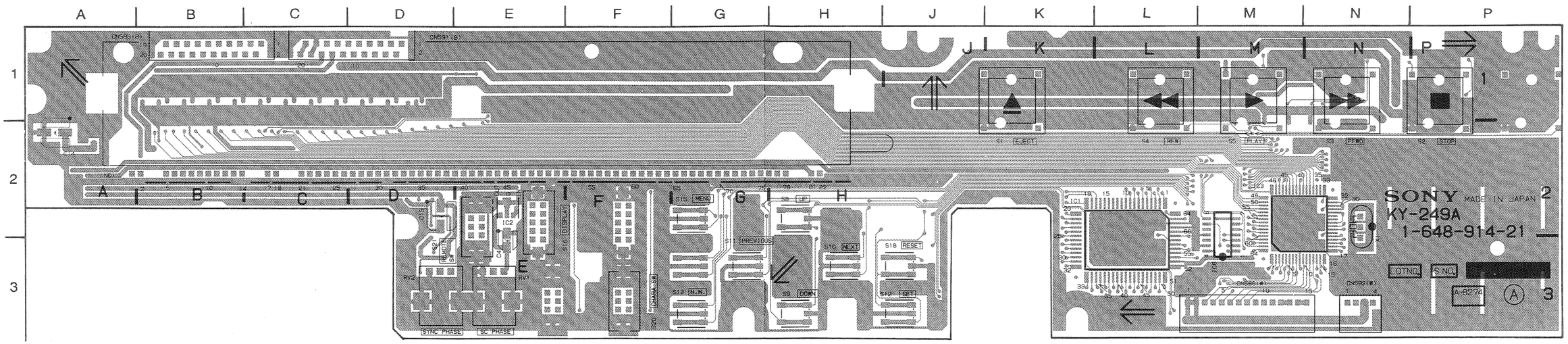

KY-249A 1-648-914-21 A SIDE

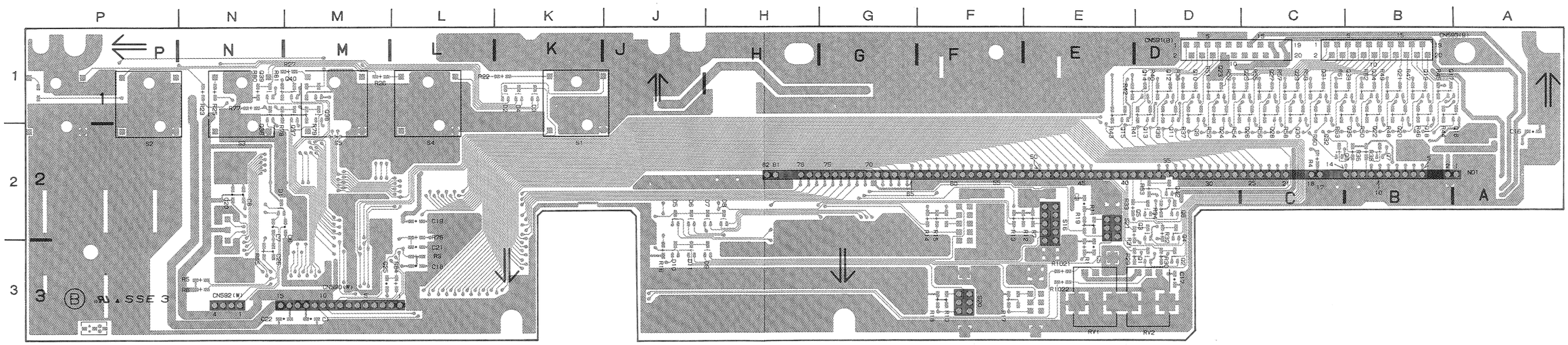

KY-249A 1-648-914-21 B SIDE

KY-249A(1-648-914-21)

CN590	M-3	S10	H-3
CN591	D-1	S11	G-3
CN592	N-3	S12	J-3
CN593	B-1	S13	G-3
		S15	G-2
✱D1	N-2	S16	E-2
✱D2	K-1	S18	J-3
✱D3	K-1	S20	F-3
✱D4	K-1	S21	E-2
✱D5	J-2		
✱D6	J-2	X1	N-2
✱D7	H-2		
✱D8	H-2		
✱D9	H-3		
✱D10	J-3		
✱D11	J-3		
IC1	L-3		
IC2	E-2		
IC3	M-2		
IC6	M-3		
ND1	E-2		
✱Q1	D-3		
✱Q2	D-3		
✱Q3	D-2		
Q4	D-2		
✱Q5	D-2		
✱Q6	D-2		
✱Q7	B-2		
✱Q8	C-2		
✱Q9	D-1		
✱Q10	D-1		
✱Q11	D-1		
✱Q12	D-1		
✱Q13	D-1		
✱Q14	D-1		
✱Q15	E-1		
✱Q16	A-1		
✱Q17	B-1		
✱Q18	B-1		
✱Q19	B-1		
✱Q20	B-1		
✱Q21	B-1		
✱Q22	B-1		
✱Q23	D-1		
✱Q24	D-1		
✱Q25	C-1		
✱Q26	C-1		
✱Q27	C-1		
✱Q28	C-1		
✱Q29	C-1		
✱Q30	C-1		
✱Q31	C-1		
✱Q32	C-1		
✱Q33	B-1		
✱Q34	B-1		
✱Q35	B-1		
✱Q36	N-1		
✱Q37	M-1		
✱Q38	M-1		
✱Q39	N-1		
✱Q40	M-1		
✱Q42	D-2		
RV1	E-3		
RV2	D-3		
S1	K-1		
S2	P-1		
S3	N-1		
S4	L-1		
S5	M-1		
S8	H-2		
S9	H-3		

✱: B SIDE

MS-39/39A ; CASSETTE INFORMATION, SOLENOID DRIVER, MECHA. CONTROL MPU, DATA STORAGE

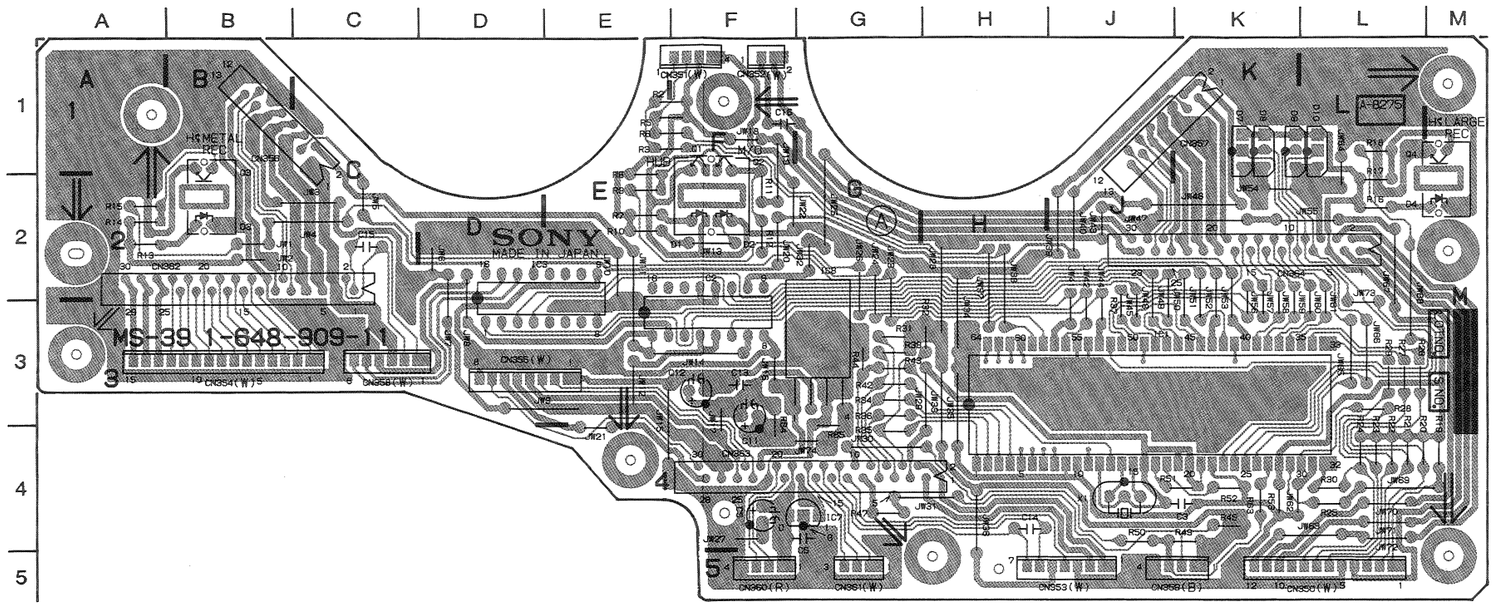

MS-39/39A 1-648-909-11, 12 A SIDE

MS-39/39A (1-648-909-11, 12)

CN350	L-5
CN351	F-1
CN352	F-1
CN353	J-5
CN354	B-3
CN355	D-3
CN356	B-1
CN357	J-1
CN358	C-3
CN359	K-5
CN360	F-5
CN361	G-5
CN362	B-2
CN363	G-4
CN364	K-2
D1	F-2
D2	F-2
D3	B-2
D4	M-2
D7	K-1
D8	K-1
D9	K-1
D10	L-1
IC1	H-4
IC2	E-3
IC3	D-3
IC7	G-4
IC8	G-3
Q1	F-1
Q2	F-1
Q3	B-1
Q4	M-1
X1	J-4

__: UVW-1800/1800P ONLY

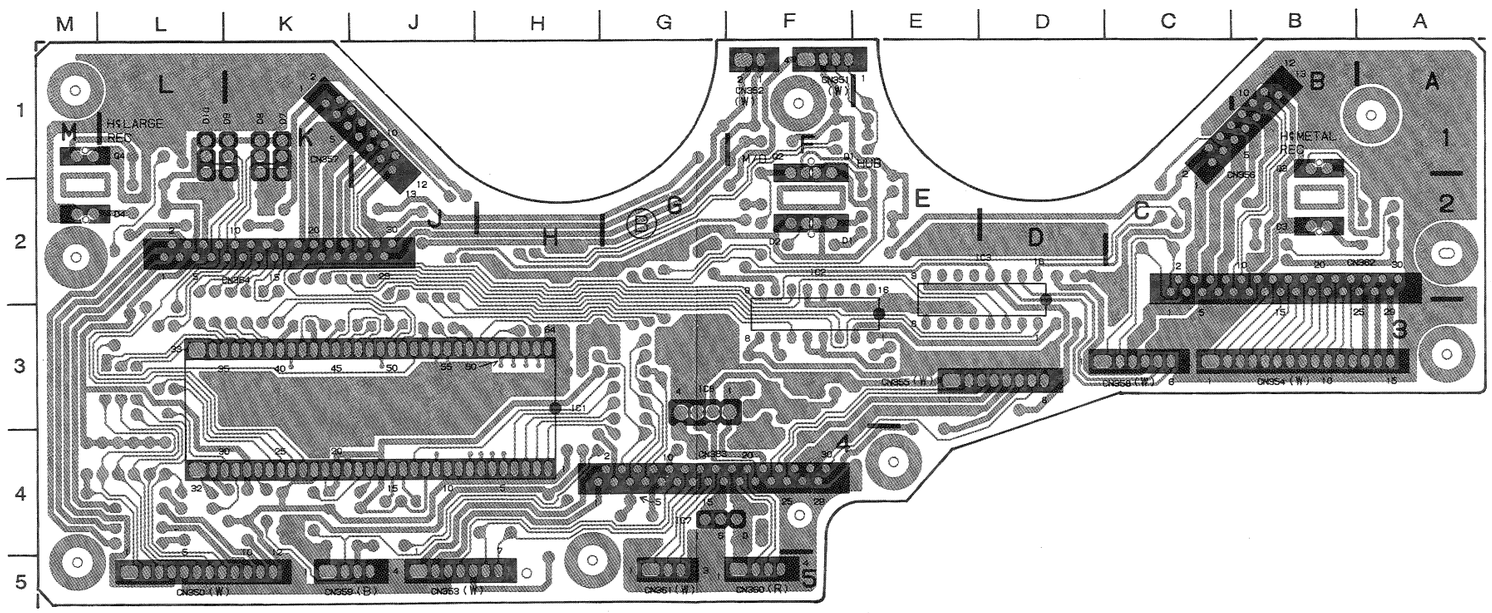

MS-39/39A 1-648-909-11, 12 B SIDE

RP-70/70P ; RF REC/PB AMP., ROTARY ERASE OSC., FULL ERASE OSC.

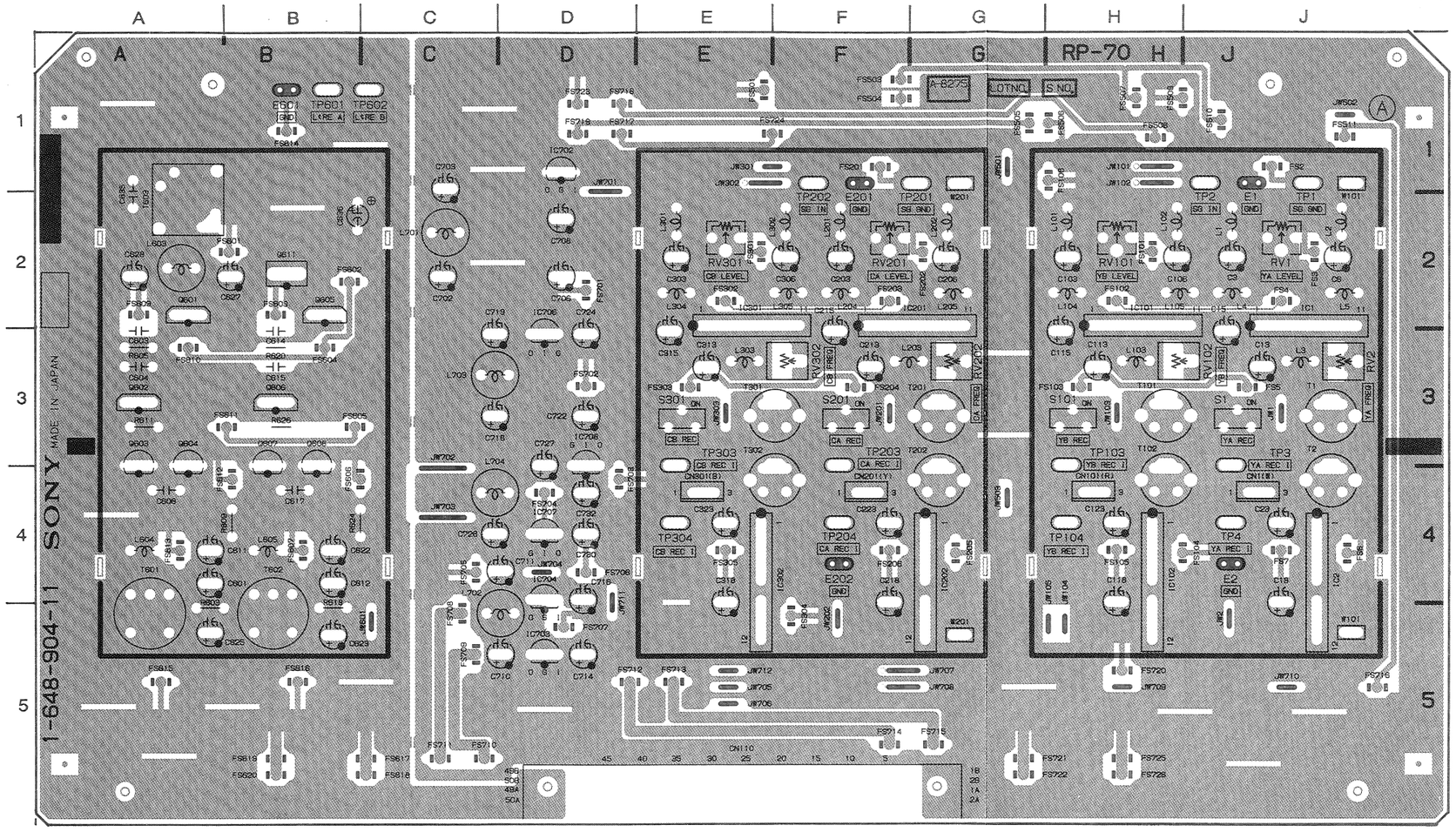

RP-70 1-648-904-11 A SIDE

RP-70(1-648-904-11)

CN1	J-4	FS708	C-5	RV202	G-3
CN101	H-4	FS709	C-5	RV301	E-2
CN110	E-5	FS710	C-5	RV302	F-3
CN201	F-4	FS711	C-5		
CN301	E-4	FS712	D-5	S1	J-3
		FS713	E-5	S101	H-3
✱D701	D-2	FS714	F-5	S201	F-3
✱D702	D-5	FS715	G-5	S301	E-3
✱D703	D-3	FS716	J-5		
✱D704	D-4	FS717	D-1	TP1	J-1
		FS718	D-1	TP2	J-1
E1	J-1	FS719	D-1	TP3	J-3
E2	J-4	FS720	H-5	TP4	J-4
E201	F-1	FS721	G-5	TP103	H-3
E202	F-4	FS722	G-5	TP104	H-4
E601	B-1	FS723	D-1	TP201	G-1
		FS724	E-1	TP202	F-1
FS2	J-1	FS725	H-5	TP203	F-3
FS3	J-2	FS726	H-5	TP204	F-4
FS4	J-2			TP303	E-3
FS5	J-3	IC1	J-2	TP304	E-4
FS6	J-4	IC2	J-4	TP601	B-1
FS7	J-4	IC101	H-2	TP602	C-1
FS101	H-2	IC102	H-4		
FS102	H-2	IC201	F-2		
FS103	H-3	IC202	G-4		
FS104	H-4	IC301	E-2		
FS105	H-4	IC302	E-4		
FS106	H-1	✱IC501	H-1		
FS201	F-1	✱IC502	G-1		
FS202	G-2	✱IC503	F-1		
FS203	F-2	✱IC601	A-3		
FS204	F-3	✱IC602	B-3		
FS205	G-4	✱IC701	D-2		
FS206	F-4	IC702	D-1		
FS301	E-2	IC703	D-5		
FS302	E-2	IC704	D-4		
FS303	E-3	✱IC705	D-3		
FS304	F-5	IC706	D-3		
FS305	E-4	IC707	D-4		
FS501	E-1	IC708	D-3		
FS503	F-1				
FS504	F-1	✱Q1	J-1		
FS505	G-1	✱Q2	J-2		
FS506	H-1	✱Q3	J-2		
FS507	H-1	✱Q102	H-2		
FS508	H-1	✱Q103	H-2		
FS509	H-1	✱Q201	F-1		
FS510	J-1	✱Q202	F-2		
FS511	J-1	✱Q203	F-2		
FS601	B-2	✱Q302	E-2		
FS602	B-2	✱Q303	E-2		
FS603	B-2	✱Q501	H-1		
FS604	B-3	Q601	A-2		
FS605	B-3	Q602	A-3		
FS606	B-4	Q603	A-3		
FS607	B-4	Q604	A-3		
FS609	A-2	Q605	B-2		
FS610	A-3	Q606	B-3		
FS611	B-3	Q607	B-3		
FS612	B-4	Q608	B-3		
FS613	A-4	✱Q609	B-2		
FS614	B-1	✱Q610	B-2		
FS615	A-5	Q611	B-2		
FS616	B-5	✱Q612	B-2		
FS617	C-5	✱Q613	B-1		
FS618	C-5	✱Q614	B-1		
FS619	B-5	✱Q615	B-2		
FS620	B-5	✱Q616	B-2		
FS701	D-2	✱Q617	B-2		
FS702	D-3				
FS703	D-4	RV1	J-2		
FS704	D-4	RV2	J-3		
FS705	C-4	RV101	H-2		
FS706	D-4	RV102	H-3		
FS707	D-5	RV201	F-2		

✱ : B SIDE

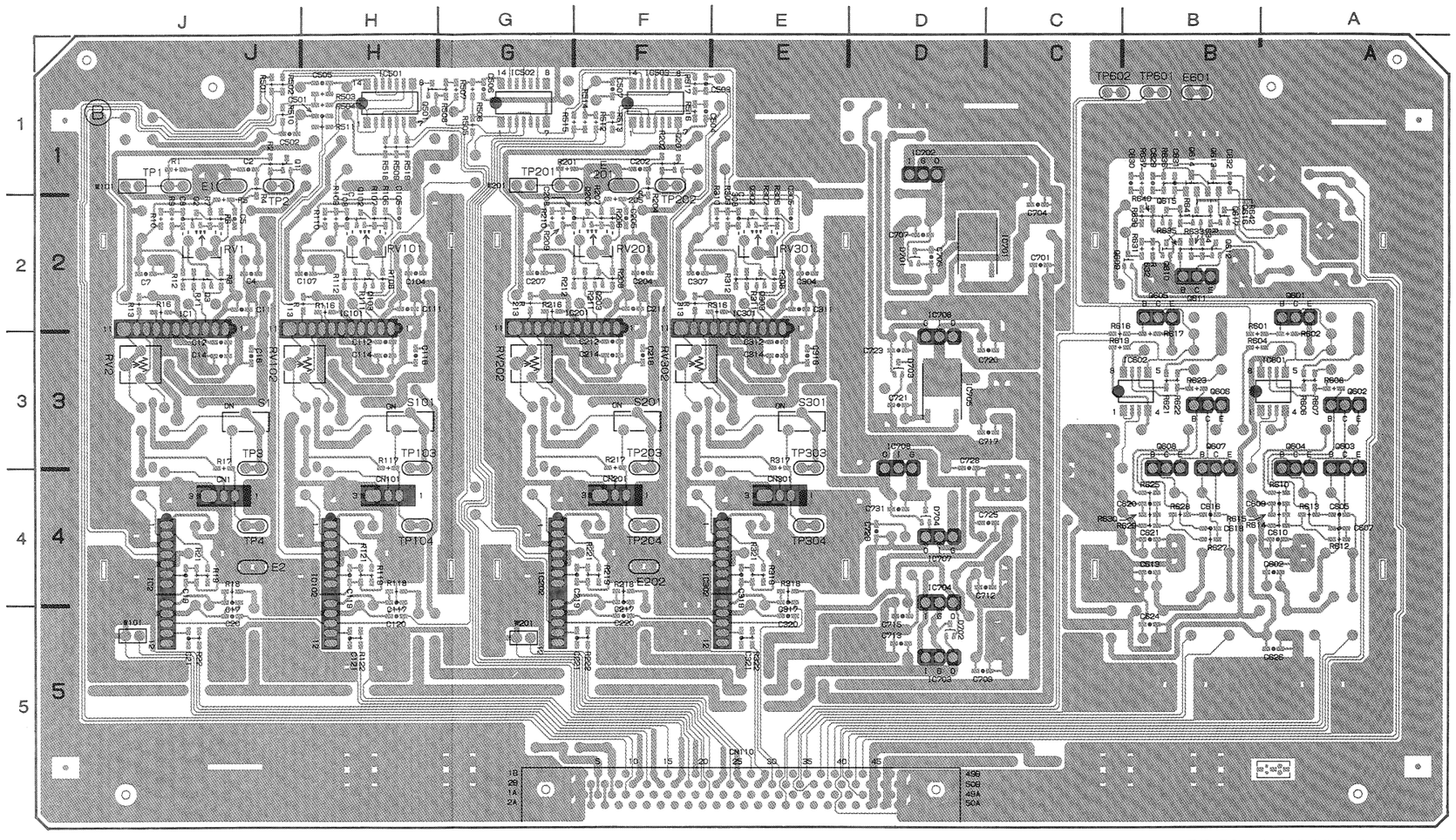

RP-70 1-648-904-11 B SIDE

15-26 (2)

RP-70A/70AP ; RF PB AMP.

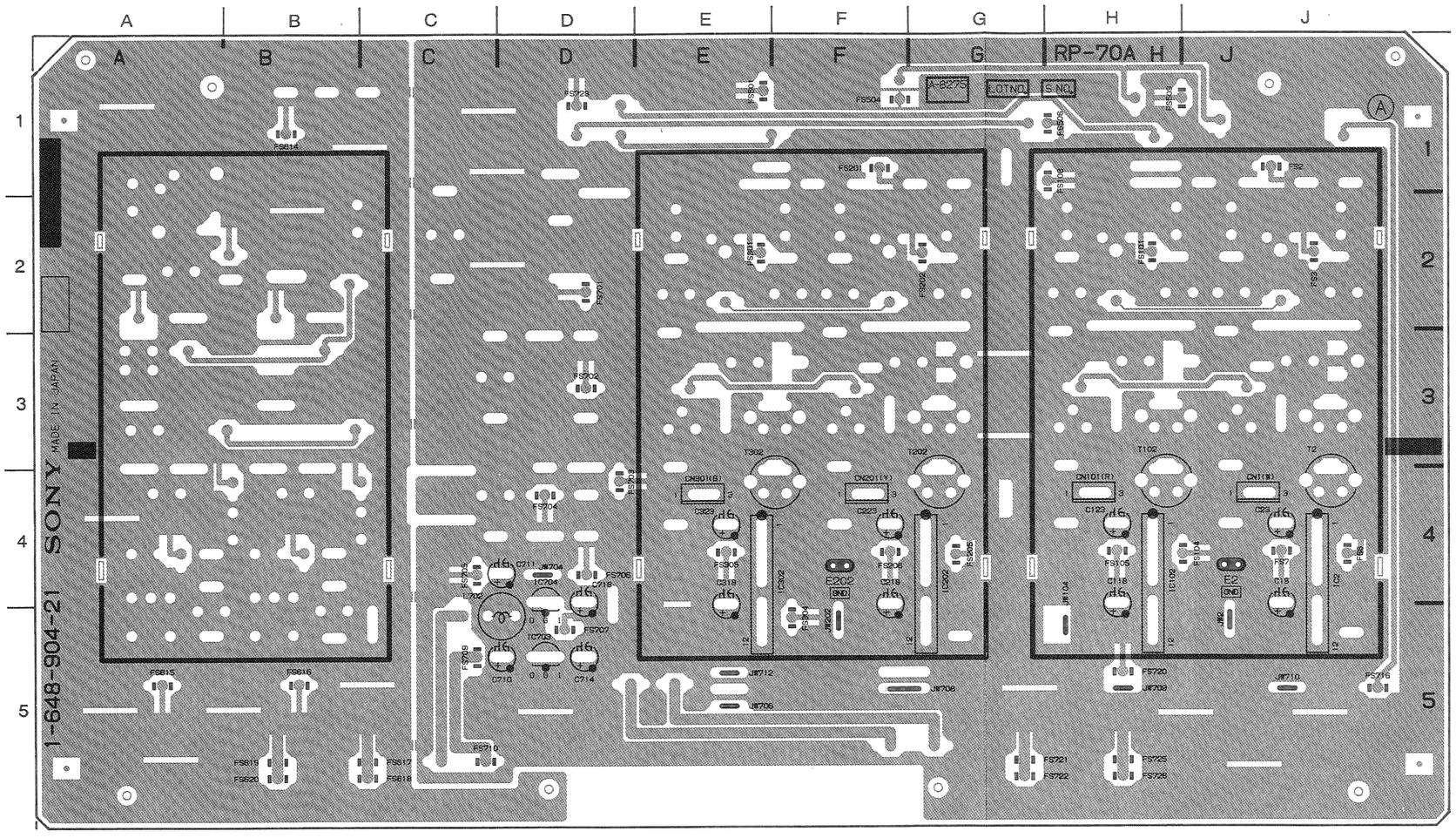

RP-70A 1-648-904-21 A SIDE

RP-70A(1-648-904-21)

CN1	J-4
CN101	H-4
CN110	E-5
CN201	F-4
CN301	E-4
✱D702	D-5
E2	J-4
E202	F-4
FS2	J-1
FS3	J-2
FS6	J-4
FS7	J-4
FS101	H-2
FS104	H-4
FS105	H-4
FS106	H-1
FS201	F-1
FS202	G-2
FS205	G-4
FS206	F-4
FS301	E-2
FS304	F-5
FS305	E-4
FS501	E-1
FS504	F-1
FS506	H-1
FS509	H-1
FS614	B-1
FS615	A-5
FS616	B-5
FS617	C-5
FS618	C-5
FS619	B-5
FS620	B-5
FS701	D-2
FS702	D-3
FS703	D-4
FS704	D-4
FS705	C-4
FS706	D-4
FS707	D-5
FS709	C-5
FS710	C-5
FS716	J-5
FS720	H-5
FS721	G-5
FS722	G-5
FS723	D-1
FS725	H-5
FS726	H-5
IC2	J-4
IC102	H-4
IC202	G-4
IC302	E-4
IC703	D-5
IC704	D-4

✱ : B SIDE

 RP-70A/70AP

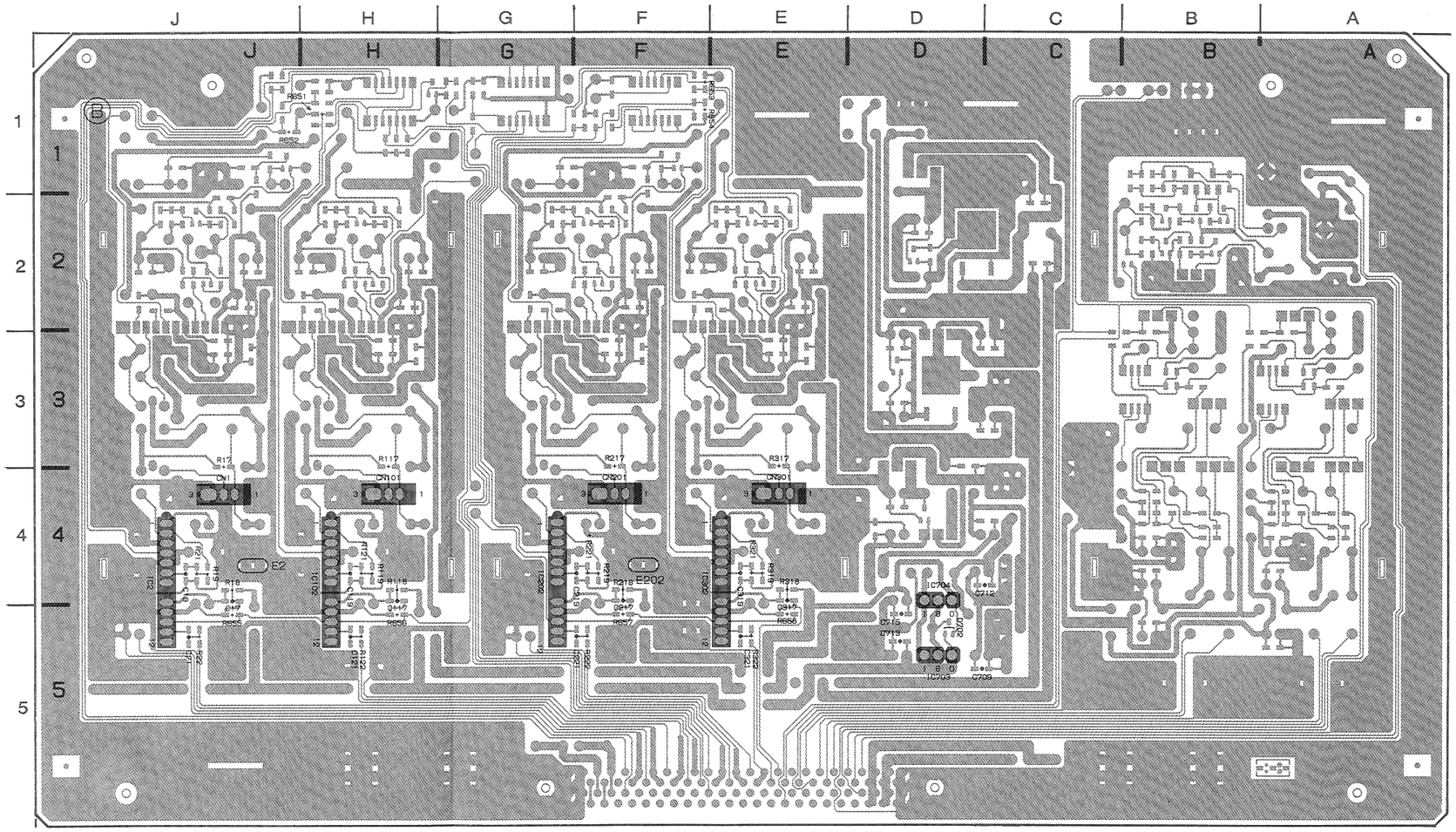

RP-70A 1-648-904-21 B SIDE

 15-28 (2)

SS-53 ; SYSTEM CONTROL, SERVO SYSTEM MAIN, TIME CODE GENERATOR/READER, CHARACTER GENERATOR

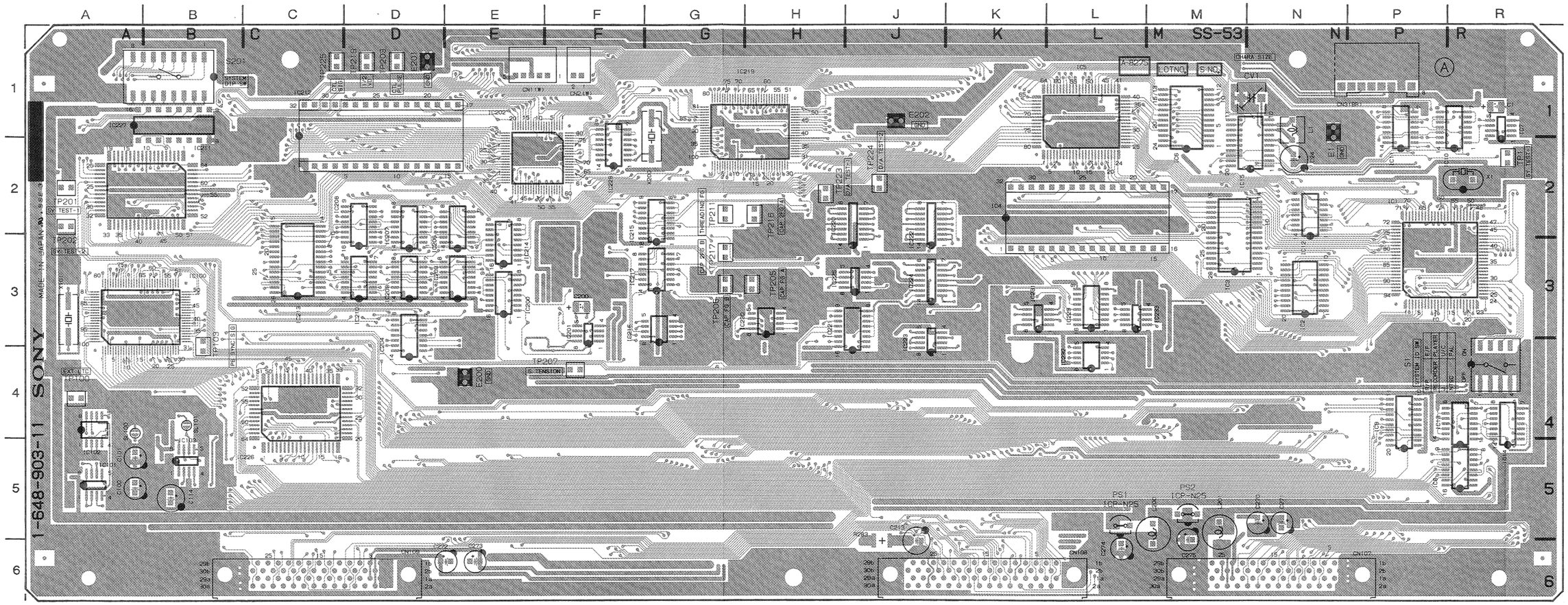

SS-53 1-648-903-11 A SIDE

SS-53(1-648-903-11)

CNI4	K-3	IC223	J-4
CNI212	C-2	IC224	J-3
		IC225	J-3
CN1	E-1	IC226	C-4
CN2	F-1	IC227	A-2
CN3	P-1	IC228	F-2
CN107	N-6	IC229	L-3
CN108	K-6	IC230	H-3
CN109	C-6	IC231	L-3
		IC232	L-4
CV1	N-1	IC233	M-3
✱D100	A-5	PS1	L-5
✱D101	A-5	PS2	M-5
✱D102	A-5		
✱D103	A-5	✱Q105	B-5
✱D104	A-5	✱Q106	B-5
✱D105	B-4	✱Q107	B-4
✱D200	E-3	✱Q108	B-5
✱D201	E-3	✱Q204	D-5
✱D202	E-3	✱Q205	D-5
✱D203	E-3	✱Q206	D-5
✱D204	E-3	✱Q207	D-5
✱D205	E-2	✱Q208	D-5
✱D206	F-3	✱Q209	D-5
✱D207	F-3	✱Q210	J-3
✱D208	E-3	✱Q211	J-3
✱D210	G-4		
✱D211	E-2	✱RB1	P-3
✱D213	E-3	✱RB2	R-2
✱D214	J-6	✱RB201	E-1
✱D215	J-5	✱RB202	B-1
		✱RB203	K-4
E1	N-1		
E200	E-4	S1	R-4
E201	D-1	S201	B-1
E202	J-1		
		TP1	R-2
IC1	P-3	TP100	A-4
IC2	N-3	TP103	B-4
IC3	N-3	TP201	A-2
IC4	K-3	TP202	A-2
IC5	L-1	TP203	D-1
IC6	M-2	TP205	H-3
IC7	R-1	TP206	G-3
IC8	R-5	TP207	F-4
IC9	P-5	TP211	G-2
IC10	R-2	TP216	H-2
IC11	P-2	TP217	G-3
IC12	N-2	TP219	D-1
IC15	N-2	TP223	H-2
IC100	A-3	TP224	J-2
IC101	A-5	TP225	C-1
IC102	A-5		
IC103	B-5	X1	R-2
IC200	E-3	X101	A-3
IC201	F-4	X200	G-1
IC202	E-2		
IC203	E-3		
IC204	D-4		
IC206	E-3		
IC207	D-3		
IC208	D-3		
IC209	D-3		
IC210	D-3		
IC211	B-2		
IC212	C-2		
IC213	C-3		
IC214	E-3		
IC215	G-3		
IC216	G-3		
IC217	G-3		
IC219	H-1		
IC220	J-3		
IC221	J-4		
IC222	J-3		

✱ : B SIDE

SS-53 ; SYSTEM CONTROL, SERVO SYSTEM MAIN, TIME CODE GENERATOR/READER, CHARACTER GENERATOR

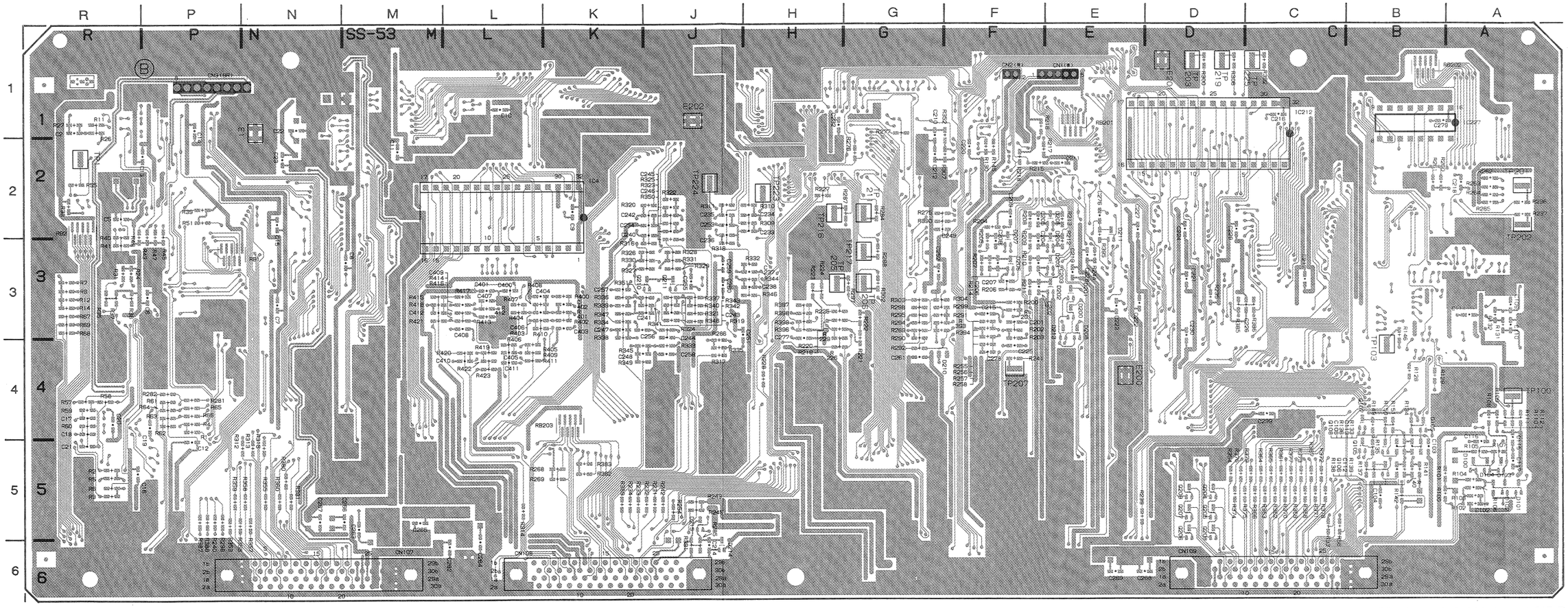

SS-53 1-648-903-11 B SIDE

SS-53(1-648-903-11)

CNI4	K-3	IC223	J-4
CNI212	C-2	IC224	J-3
		IC225	J-3
CN1	E-1	IC226	C-4
CN2	F-1	IC227	A-2
CN3	P-1	IC228	F-2
CN107	N-6	IC229	L-3
CN108	K-6	IC230	H-3
CN109	C-6	IC231	L-3
		IC232	L-4
CV1	N-1	IC233	M-3
✱D100	A-5	PS1	L-5
✱D101	A-5	PS2	M-5
✱D102	A-5		
✱D103	A-5	✱Q105	B-5
✱D104	A-5	✱Q106	B-5
✱D105	B-4	✱Q107	B-4
✱D200	E-3	✱Q108	B-5
✱D201	E-3	✱Q204	D-5
✱D202	E-3	✱Q205	D-5
✱D203	E-3	✱Q206	D-5
✱D204	E-3	✱Q207	D-5
✱D205	E-2	✱Q208	D-5
✱D206	F-3	✱Q209	D-5
✱D207	F-3	✱Q210	J-3
✱D208	E-3	✱Q211	J-3
✱D210	G-4		
✱D211	E-2	✱RB1	P-3
✱D213	E-3	✱RB2	R-2
✱D214	J-6	✱RB201	E-1
✱D215	J-5	✱RB202	B-1
		✱RB203	K-4
E1	N-1		
E200	E-4	S1	R-4
E201	D-1	S201	B-1
E202	J-1		
		TP1	R-2
IC1	P-3	TP100	A-4
IC2	N-3	TP103	B-4
IC3	N-3	TP201	A-2
IC4	K-3	TP202	A-2
IC5	L-1	TP203	D-1
IC6	M-2	TP205	H-3
IC7	R-1	TP206	G-3
IC8	R-5	TP207	F-4
IC9	P-5	TP211	G-2
IC10	R-2	TP216	H-2
IC11	P-2	TP217	G-3
IC12	N-2	TP219	D-1
IC15	N-2	TP223	H-2
IC100	A-3	TP224	J-2
IC101	A-5	TP225	C-1
IC102	A-5		
IC103	B-5	X1	R-2
IC200	E-3	X101	A-3
IC201	F-4	X200	G-1
IC202	E-2		
IC203	E-3		
IC204	D-4		
IC206	E-3		
IC207	D-3		
IC208	D-3		
IC209	D-3		
IC210	D-3		
IC211	B-2		
IC212	C-2		
IC213	C-3		
IC214	E-3		
IC215	G-3		
IC216	G-3		
IC217	G-3		
IC219	H-1		
IC220	J-3		
IC221	J-4		
IC222	J-3		

✱: B SIDE

TBC-25/25P ; TIME BASE CORRECTOR, CTDM(EXPAND)

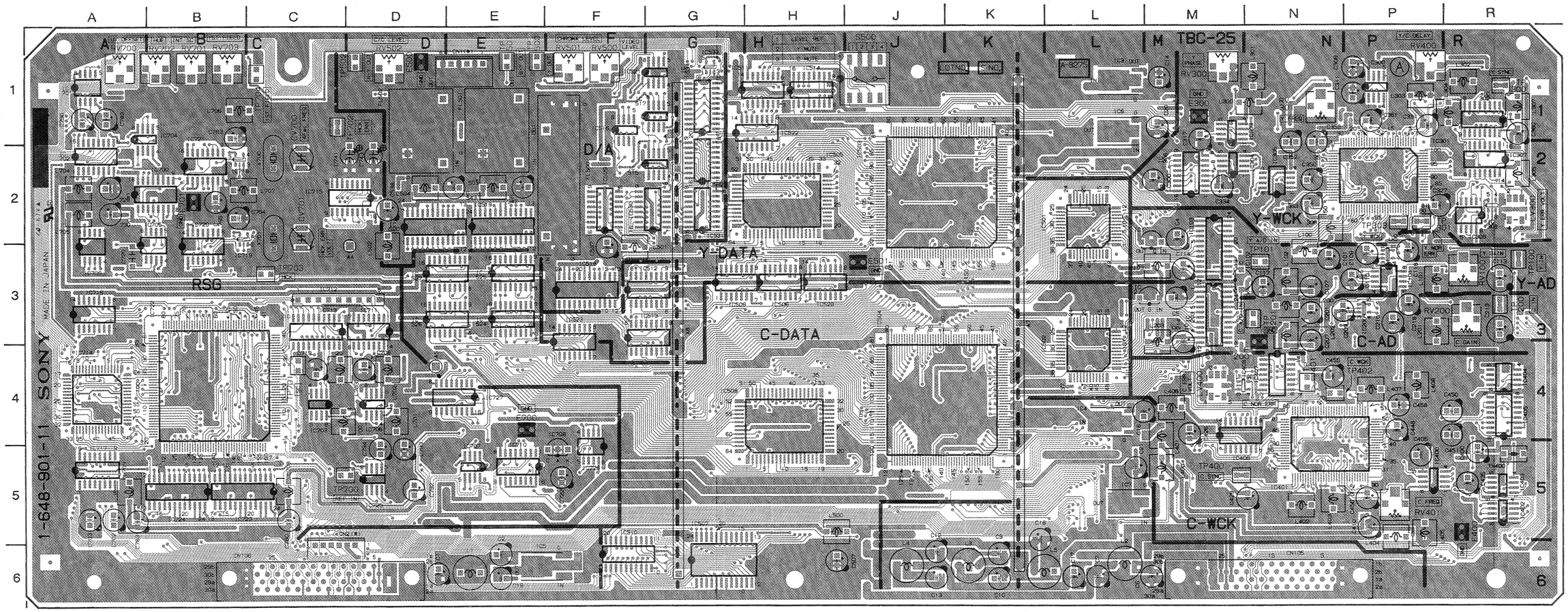

TBC-25 1-648-901-11, 12 A SIDE

TBC-25 (1-648-901-11, 12)

	CN1		E-1		IC404		R-4		✱Q101		R-3		TP702		C-1
	CN2		C-6		IC405		R-4		✱Q102		P-3		TP703		C-3
	CN105		N-6		IC406		M-5		✱Q103		P-3		TP704		C-1
	CN106		C-6		IC407		N-4		✱Q104		R-3				
					IC408		M-4		✱Q200		R-3		X700		C-2
	CV700		C-2	○	IC409	N	N-5		✱Q201		R-3		X701		C-2
	CV701		C-2		IC501		L-2		✱Q202		P-3				
					IC502		L-4		✱Q203		P-3				
	✱D1		M-2		IC503		J-2		✱Q300		P-1				
	✱D2		M-3		IC504		J-4		✱Q301		P-1				
	✱D100		M-3		IC505		H-2		✱Q302		P-1				
	✱D101		N-3		IC506		H-3		✱Q303		P-1				
	✱D102		R-3		IC507		G-6		✱Q304		N-2				
	✱D200		M-3		IC508		H-4		✱Q305		N-2				
	✱D301		N-2		IC509		G-3		✱Q306		R-2				
	✱D302		R-2		IC510		F-6		✱Q400		P-5				
	✱D303		R-2		IC511		H-1		✱Q401		P-5				
	✱D304		R-2		IC512		F-3		✱Q402		R-5				
	✱D305	P	P-2		IC513		F-4		✱Q403		P-5				
	✱D401		P-4		IC514		H-1		✱Q404		M-4				
	✱D402		N-4		IC515		G-2		✱Q405		R-4				
	✱D403		M-4		IC516		F-1		✱Q406		R-5				
	✱D404		M-4		IC517		G-1		✱Q407		N-4				
	✱D502		K-2		IC518		F-3		✱Q500		F-2				
	✱D503		K-2		IC519		E-2		✱Q501		F-1				
	✱D504		G-1		IC520		D-2		✱Q502		E-1				
	✱D505		G-1		IC521		G-1		✱Q503		D-1				
△	✱D506		M-5		IC522		G-2		✱Q700		C-5				
○	✱D506	P	M-5		IC523		F-4		✱Q701		C-4				
○	✱D506	N	L-5		IC524		E-3		✱Q702		A-2				
	✱D701		A-2		IC525		E-3		✱Q703		C-1				
	✱D702		C-2		IC526		D-3		✱Q704		C-2				
	✱D703		C-2		IC527		D-3		✱Q705		C-2				
					IC528		H-3		✱Q706		C-2				
	E200		N-3		IC529	N	F-2		✱Q707		C-5				
	E300		M-1		IC530	N	G-2		✱Q708		B-5				
	E400		R-5		IC531	N	G-2		✱Q709		D-5				
	E500		D-1		IC532	N	G-2		✱Q710		D-5				
	E501		J-3		IC533	N	G-1		✱Q711		D-5				
	E700		E-4		IC534	N	G-1								
	E701		B-2		IC700		A-2		RV100		R-3				
					IC701		A-1		RV200		R-3				
	FL500		F-2		IC702		A-2		RV300		M-1				
	FL501		E-1		IC703		C-4		RV301		N-1				
	FL502		D-1		IC704		A-2		RV400		P-1				
					IC705		A-3		RV401		P-5				
	IC1		M-2		IC706		D-4		RV500		F-1				
	IC2		M-3		IC707		E-5		RV501		F-1				
	IC3		L-1		IC708		F-5		RV502		D-1				
	IC4		L-4		IC709		A-3		RV700		A-1				
	IC5		E-6		IC710		E-5		RV701		B-1				
	IC6		L-1		IC711		D-3		RV702		B-1				
	IC7		L-5		IC712		C-3		RV703		B-1				
	IC100		P-3		IC713		C-3								
	IC101		P-3		IC714		A-4		S500		J-1				
	IC102		M-3		IC715		D-2								
	IC103		M-2		IC716		A-3		TH400		R-5				
	IC200		P-3		IC717		A-5	○	✱TH701	P	A-1				
	IC203		M-3		IC718		B-2								
	IC300		P-1		IC719		B-2		TP100		R-3				
	IC301		P-2		IC720		B-3		TP101		N-3				
	IC302		R-1		IC721		B-2		TP200		R-3				
	IC303		M-1		IC722		B-4		TP201		N-3				
	IC304		M-2		IC723		C-5		TP300		R-1				
	IC305		N-2		IC724		B-5		TP301		P-2				
	IC306		M-2		IC725		D-5		TP303		P-2				
	IC307		R-2		IC726		F-4		TP400		M-5				
	IC308		R-2		IC727	N	E-4		TP401		N-4				
	IC309	P	R-2	○	IC728		B-3		TP402		N-4				
○	IC310		N-2						TP500		E-1				
	IC400		R-5		LV300		R-2		TP501		E-1				
	IC401		N-5		LV400		M-4		TP502		D-1				
	IC402		R-5						TP700		C-5				
	IC403		R-5		✱Q100		R-3		TP701		C-4				

✱ : B SIDE
N : UVW-1800/1600 ONLY
P : UVW-1800P/1600P ONLY
△ : 1-648-901-11 ONLY
○ : 1-648-901-12 ONLY

TBC-25/25P ; TIME BASE CORRECTOR, CTDM(EXPAND)

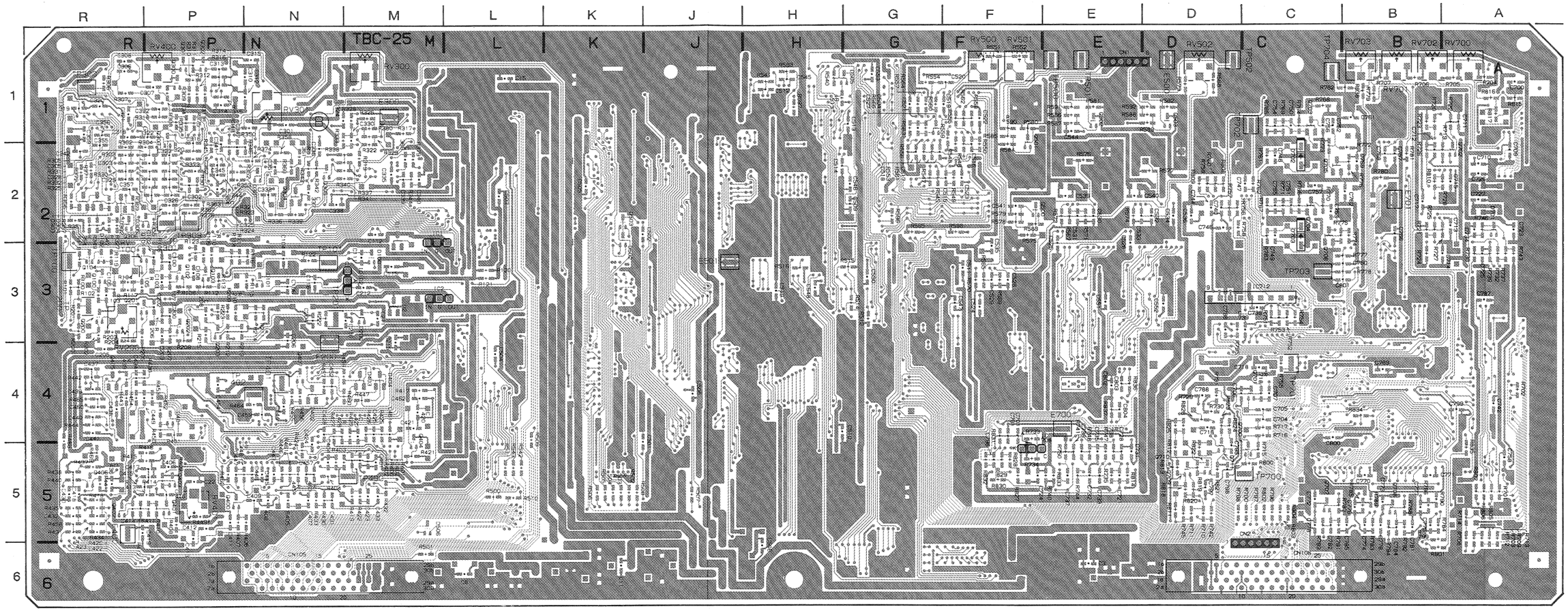

TBC-25 1-648-901-11, 12 B SIDE

TBC-25 (1-648-901-11, 12)

	CN1		E-1		IC404		R-4		✱Q101		R-3		TP702		C-1
	CN2		C-6		IC405		R-4		✱Q102		P-3		TP703		C-3
	CN105		N-6		IC406		M-5		✱Q103		P-3		TP704		C-1
	CN106		C-6		IC407		N-4		✱Q104		R-3				
					IC408		M-4		✱Q200		R-3		X700		C-2
	CV700		C-2	○	IC409	N	N-5		✱Q201		R-3		X701		C-2
	CV701		C-2		IC501		L-2		✱Q202		P-3				
					IC502		L-4		✱Q203		P-3				
	✱D1		M-2		IC503		J-2		✱Q300		P-1				
	✱D2		M-3		IC504		J-4		✱Q301		P-1				
	✱D100		M-3		IC505		H-2		✱Q302		P-1				
	✱D101		N-3		IC506		H-3		✱Q303		P-1				
	✱D102		R-3		IC507		G-6		✱Q304		N-2				
	✱D200		M-3		IC508		H-4		✱Q305		N-2				
	✱D301		N-2		IC509		G-3		✱Q306		R-2				
	✱D302		R-2		IC510		F-6		✱Q400		P-5				
	✱D303		R-2		IC511		H-1		✱Q401		P-5				
	✱D304		R-2		IC512		F-3		✱Q402		R-5				
	✱D305	P	P-2		IC513		F-4		✱Q403		P-5				
	✱D401		P-4		IC514		H-1		✱Q404		M-4				
	✱D402		N-4		IC515		G-2		✱Q405		R-4				
	✱D403		M-4		IC516		F-1		✱Q406		R-5				
	✱D404		M-4		IC517		G-1		✱Q407		N-4				
	✱D502		K-2		IC518		F-3		✱Q500		F-2				
	✱D503		K-2		IC519		E-2		✱Q501		F-1				
	✱D504		G-1		IC520		D-2		✱Q502		E-1				
	✱D505		G-1		IC521		G-1		✱Q503		D-1				
△	✱D506		M-5		IC522		G-2		✱Q700		C-5				
○	✱D506	P	M-5		IC523		F-4		✱Q701		C-4				
○	✱D506	N	L-5		IC524		E-3		✱Q702		A-2				
	✱D701		A-2		IC525		E-3		✱Q703		C-1				
	✱D702		C-2		IC526		D-3		✱Q704		C-2				
	✱D703		C-2		IC527		D-3		✱Q705		C-2				
					IC528		H-3		✱Q706		C-2				
	E200		N-3		IC529	N	F-2		✱Q707		C-5				
	E300		M-1		IC530	N	G-2		✱Q708		B-5				
	E400		R-5		IC531	N	G-2		✱Q709		D-5				
	E500		D-1		IC532	N	G-2		✱Q710		D-5				
	E501		J-3		IC533	N	G-1		✱Q711		D-5				
	E700		E-4		IC534	N	G-1								
	E701		B-2		IC700		A-2			RV100		R-3			
					IC701		A-1			RV200		R-3			
	FL500		F-2		IC702		A-2			RV300		M-1			
	FL501		E-1		IC703		C-4			RV301		N-1			
	FL502		D-1		IC704		A-2			RV400		P-1			
					IC705		A-3			RV401		P-5			
	IC1		M-2		IC706		D-4			RV500		F-1			
	IC2		M-3		IC707		E-5			RV501		F-1			
	IC3		L-1		IC708		F-5			RV502		D-1			
	IC4		L-4		IC709		A-3			RV700		A-1			
	IC5		E-6		IC710		E-5			RV701		B-1			
	IC6		L-1		IC711		D-3			RV702		B-1			
	IC7		L-5		IC712		C-3			RV703		B-1			
	IC100		P-3		IC713		C-3								
	IC101		P-3		IC714		A-4			S500		J-1			
	IC102		M-3		IC715		D-2								
	IC103		M-2		IC716		A-3			TH400		R-5			
	IC200		P-3		IC717		A-5		○	✱TH701	P	A-1			
	IC203		M-3		IC718		B-2								
	IC300		P-1		IC719		B-2			TP100		R-3			
	IC301		P-2		IC720		B-3			TP101		N-3			
	IC302		R-1		IC721		B-2			TP200		R-3			
	IC303		M-1		IC722		B-4			TP201		N-3			
	IC304		M-2		IC723		C-5			TP300		R-1			
	IC305		N-2		IC724		B-5			TP301		P-2			
	IC306		M-2		IC725		D-5			TP303		P-2			
	IC307		R-2		IC726		F-4			TP400		M-5			
	IC308		R-2		IC727	N	E-4			TP401		N-4			
	IC309	P	R-2	○	IC728		B-3			TP402		N-4			
○	IC310		N-2							TP500		E-1			
	IC400		R-5		LV300		R-2			TP501		E-1			
	IC401		N-5		LV400		M-4			TP502		D-1			
	IC402		R-5							TP700		C-5			
	IC403		R-5		✱Q100		R-3			TP701		C-4			

✱ : B SIDE
N : UVW-1800/1600 ONLY
P : UVW-1800P/1600P ONLY
△ : 1-648-901-11 ONLY
○ : 1-648-901-12 ONLY

VP-43/43A/43P/43AP ; Y/C PB PROCESS(PB RF EQ, DEMOD., Y-RF ENVELOPE DET), VIDEO OUTPUT DRIVER, ENCODE, SYNC/CHARA MIX

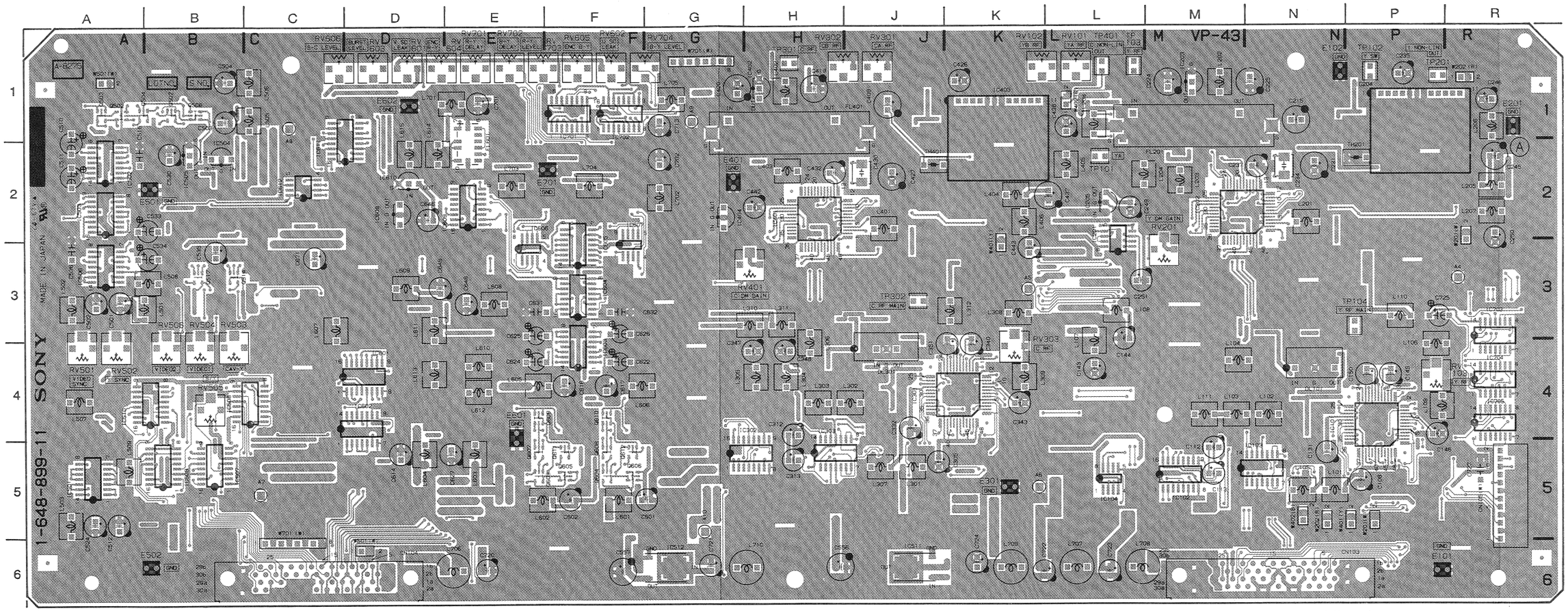

VP-43/43A 1-648-899-11, 12 A SIDE

 VP-43/43A/43P/43AP

VP-43/43A(1-648-899-11, 12)

CN103	N-6	IC702	F-1	Q508	B-1	RV701	E-1
CN104	C-6	IC703	R-4	✱Q509	A-4	RV702	E-1
CN105	R-5	IC704	R-4	✱Q510	A-4	RV703	E-1
		IC705	R-4	✱Q511	A-4	RV704	G-1
DL101	N-4			✱Q512	A-4		
DL301	J-4	✱Q101	N-5	✱Q513	B-2	TH201	P-2
		✱Q102	N-4	Q514	B-3	TH401	J-2
✱D201	N-2	✱Q103	N-5	✱Q515	B-2		
✱D401	J-2	✱Q104	N-4	✱Q516	B-2	◎ TH601	D-2
✱D501	A-2	✱Q105	N-4	Q517	B-3	●✱TH601	D-1
✱D502	B-2	✱Q106	N-3	✱Q601	F-5		
✱D503	B-3	✱Q107	N-3	✱Q602	F-5	TP101	L-2
✱D504	B-4	✱Q108	N-4	Q603	E-5	TP102	P-1
✱D601	D-2	✱Q109	N-4	Q604	F-5	TP103	L-1
△✱D602	E-2	✱Q110	P-4	Q605	F-5	TP104	P-3
✱D701	R-4	✱Q111	P-5	Q606	F-5	TP201	P-1
		✱Q112	P-5	Q607	E-5	TP301	H-1
E101	P-6	✱Q201	M-2	Q608	F-5	TP302	J-3
E102	N-1	✱Q202	N-1	Q609	E-4	TP401	L-1
E201	R-1	✱Q203	P-2	Q610	F-4		
E301	K-5	✱Q204	N-2	Q611	F-5		
E401	G-2	✱Q205	P-2	Q612	F-5		
E501	B-2	✱Q206	P-2	✱Q613	D-4		
E502	B-6	✱Q207	N-2	✱Q614	D-3		
E601	E-4	✱Q208	N-1	✱Q615	D-3		
E602	D-1	✱Q209	N-1	✱Q616	C-3		
E701	F-2	✱Q210	N-1	✱Q617	C-3		
		✱Q211	P-2	✱Q618	F-2		
FL201	M-1	✱Q212	P-1	✱Q619	F-2		
FL401	H-1	✱Q213	R-2	✱Q620	F-3		
FL601	E-2	✱Q214	R-2	✱Q621	F-3		
		✱Q215	P-1	✱Q622	E-3		
IC101	P-4	✱Q216	N-2	✱Q623	D-3		
IC102	M-5	✱Q217	M-2	✱Q624	D-1		
IC103	N-5	✱Q218	M-2	✱Q625	E-4		
IC104	L-5	✱Q219	M-2	✱Q626	D-4		
IC201	L-3	✱Q220	M-2	✱Q627	D-1		
IC202	M-2	✱Q301	J-4	✱Q628	D-1		
IC203	M-1	✱Q302	J-4	✱Q701	E-2		
IC204	P-1	✱Q303	H-4	✱Q702	F-2		
IC205	L-2	✱Q304	H-5	✱Q703	E-2		
IC301	K-4	✱Q305	H-4	✱Q704	F-2		
IC302	G-5	✱Q306	H-3	✱Q705	E-2		
IC303	H-5	✱Q307	J-3	✱Q706	F-2		
IC401	H-2	✱Q308	J-4	✱Q707	E-1		
IC402	H-1	✱Q309	J-4	✱Q708	F-1		
IC403	K-1	✱Q310	K-3	✱Q709	F-2		
IC404	G-2	✱Q311	K-5	✱Q710	F-1		
IC501	A-5	✱Q401	H-2	✱Q711	F-2		
IC502	A-2	✱Q402	J-1	✱Q712	F-2		
IC503	A-2	✱Q403	J-1	✱Q713	F-1		
IC504	B-2	✱Q404	J-2	✱Q714	E-1		
IC505	B-2	✱Q405	J-1				
IC506	A-3	✱Q406	J-1	RV101	L-1		
IC507	B-5	✱Q407	J-1	RV102	K-1		
IC508	C-4	✱Q408	J-1	RV103	P-4		
IC509	B-5	✱Q409	J-2	RV201	M-3		
IC510	B-4	✱Q410	J-1	RV301	J-1		
IC511	J-6	✱Q411	J-2	RV302	H-1		
IC512	G-6	✱Q412	J-2	RV303	K-4		
IC601	D-4	✱Q413	K-2	RV401	H-3		
IC602	D-4	✱Q414	K-2	RV501	A-4		
IC603	F-4	✱Q415	K-2	RV502	A-4		
IC604	F-3	✱Q416	J-2	RV503	B-4		
IC605	F-3	✱Q417	H-2	RV504	B-4		
IC606	E-3	✱Q418	H-2	RV505	B-4		
IC607	F-3	✱Q501	A-1	RV506	B-4		
IC608	D-2	Q502	A-1	RV601	D-1		
IC609	E-2	Q503	A-1	RV602	F-1		
IC610	D-2	Q504	A-1	RV603	D-1		
IC611	D-2	✱Q505	A-5	RV604	D-1		
IC612	C-2	✱Q506	A-4	RV605	F-1		
IC701	F-1	Q507	B-1	RV606	C-1		

✱ : B SIDE
_ : UVW-1800/1800P ONLY
N : UVW-1800/1600 ONLY
△ : 1-648-899-11 ONLY
◎ : UVW-1800 (1-648-899-12) ONLY
● : UVW-1800P/1600/1600P (1-648-899-12) ONLY

 15-38 (2)

VP-43/43A/43P/43AP ; Y/C PB PROCESS(PB RF EQ, DEMOD., Y-RF ENVELOPE DET), VIDEO OUTPUT DRIVER, ENCODE, SYNC/CHARA MIX

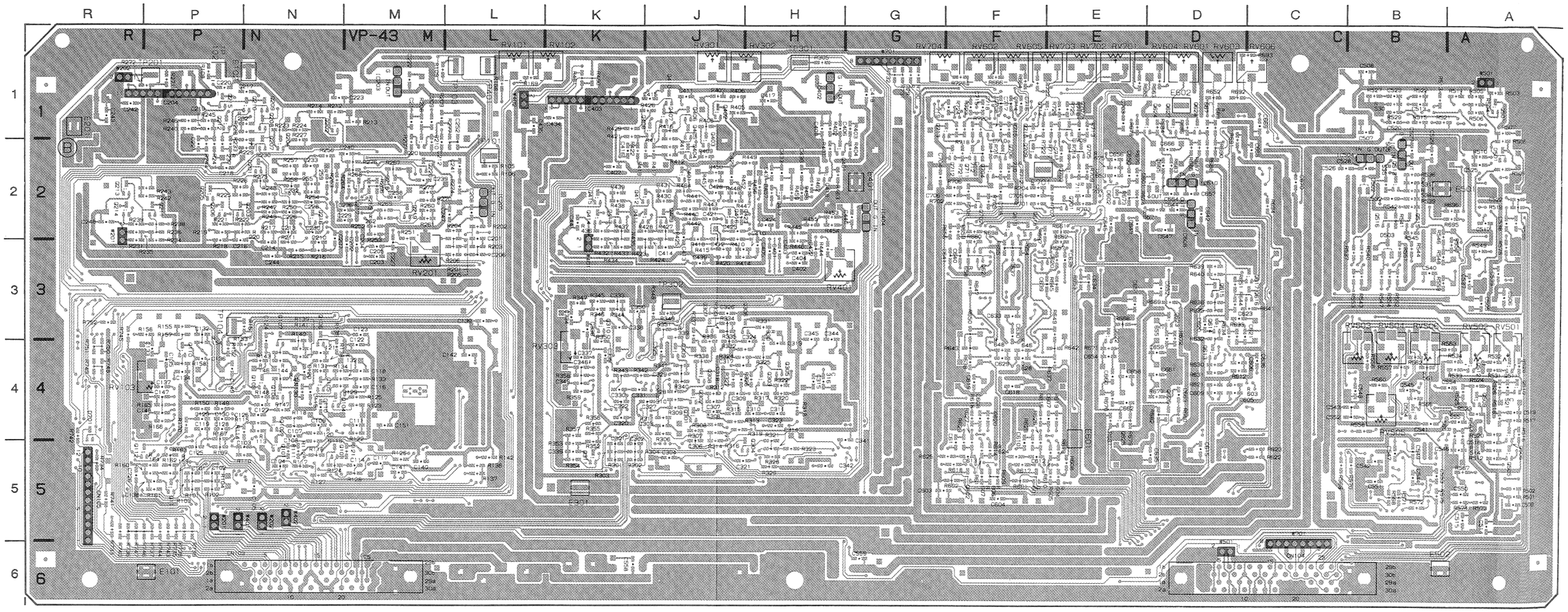

VP-43/43A 1-648-899-11, 12 B SIDE

 VP-43/43A/43P/43AP

VP-43/43A(1-648-899-11, 12)

CN103	N-6	IC702	F-1	Q508	B-1	RV701	E-1
CN104	C-6	IC703	R-4	✱Q509	A-4	RV702	E-1
CN105	R-5	IC704	R-4	✱Q510	A-4	RV703	E-1
		IC705	R-4	✱Q511	A-4	RV704	G-1
DL101	N-4			✱Q512	A-4		
DL301	J-4	✱Q101	N-5	✱Q513	B-2	TH201	P-2
		✱Q102	N-4	Q514	B-3	TH401	J-2
✱D201	N-2	✱Q103	N-5	✱Q515	B-2		
✱D401	J-2	✱Q104	N-4	✱Q516	B-2	◎ TH601	D-2
✱D501	A-2	✱Q105	N-4	Q517	B-3	●✱TH601	D-1
✱D502	B-2	✱Q106	N-3	✱Q601	F-5		
✱D503	B-3	✱Q107	N-3	✱Q602	F-5	TP101	L-2
✱D504	B-4	✱Q108	N-4	Q603	E-5	TP102	P-1
✱D601	D-2	✱Q109	N-4	Q604	F-5	TP103	L-1
△✱D602	E-2	✱Q110	P-4	Q605	F-5	TP104	P-3
✱D701	R-4	✱Q111	P-5	Q606	F-5	TP201	P-1
		✱Q112	P-5	Q607	E-5	TP301	H-1
E101	P-6	✱Q201	M-2	Q608	F-5	TP302	J-3
E102	N-1	✱Q202	N-1	Q609	E-4	TP401	L-1
E201	R-1	✱Q203	P-2	Q610	F-4		
E301	K-5	✱Q204	N-2	Q611	F-5		
E401	G-2	✱Q205	P-2	Q612	F-5		
E501	B-2	✱Q206	P-2	✱Q613	D-4		
E502	B-6	✱Q207	N-2	✱Q614	D-3		
E601	E-4	✱Q208	N-1	✱Q615	D-3		
E602	D-1	✱Q209	N-1	✱Q616	C-3		
E701	F-2	✱Q210	N-1	✱Q617	C-3		
		✱Q211	P-2	✱Q618	F-2		
FL201	M-1	✱Q212	P-1	✱Q619	F-2		
FL401	H-1	✱Q213	R-2	✱Q620	F-3		
FL601	E-2	✱Q214	R-2	✱Q621	F-3		
		✱Q215	P-1	✱Q622	E-3		
IC101	P-4	✱Q216	N-2	✱Q623	D-3		
IC102	M-5	✱Q217	M-2	✱Q624	D-1		
IC103	N-5	✱Q218	M-2	✱Q625	E-4		
IC104	L-5	✱Q219	M-2	✱Q626	D-4		
IC201	L-3	✱Q220	M-2	✱Q627	D-1		
IC202	M-2	✱Q301	J-4	✱Q628	D-1		
IC203	M-1	✱Q302	J-4	✱Q701	E-2		
IC204	P-1	✱Q303	H-4	✱Q702	F-2		
IC205	L-2	✱Q304	H-5	✱Q703	E-2		
IC301	K-4	✱Q305	H-4	✱Q704	F-2		
IC302	G-5	✱Q306	H-3	✱Q705	E-2		
IC303	H-5	✱Q307	J-3	✱Q706	F-2		
IC401	H-2	✱Q308	J-4	✱Q707	E-1		
IC402	H-1	✱Q309	J-4	✱Q708	F-1		
IC403	K-1	✱Q310	K-3	✱Q709	F-2		
IC404	G-2	✱Q311	K-5	✱Q710	F-1		
IC501	A-5	✱Q401	H-2	✱Q711	F-2		
IC502	A-2	✱Q402	J-1	✱Q712	F-2		
IC503	A-2	✱Q403	J-1	✱Q713	F-1		
IC504	B-2	✱Q404	J-2	✱Q714	E-1		
IC505	B-2	✱Q405	J-1				
IC506	A-3	✱Q406	J-1	RV101	L-1		
IC507	B-5	✱Q407	J-1	RV102	K-1		
IC508	C-4	✱Q408	J-1	RV103	P-4		
IC509	B-5	✱Q409	J-2	RV201	M-3		
IC510	B-4	✱Q410	J-1	RV301	J-1		
IC511	J-6	✱Q411	J-2	RV302	H-1		
IC512	G-6	✱Q412	J-2	RV303	K-4		
IC601	D-4	✱Q413	K-2	RV401	H-3		
IC602	D-4	✱Q414	K-2	RV501	A-4		
IC603	F-4	✱Q415	K-2	RV502	A-4		
IC604	F-3	✱Q416	J-2	RV503	B-4		
IC605	F-3	✱Q417	H-2	RV504	B-4		
IC606	E-3	✱Q418	H-2	RV505	B-4		
IC607	F-3	✱Q501	A-1	RV506	B-4		
IC608	D-2	Q502	A-1	RV601	D-1		
IC609	E-2	Q503	A-1	RV602	F-1		
IC610	D-2	Q504	A-1	RV603	D-1		
IC611	D-2	✱Q505	A-5	RV604	D-1		
IC612	C-2	✱Q506	A-4	RV605	F-1		
IC701	F-1	Q507	B-1	RV606	C-1		

✱ : B SIDE
__ : UVW-1800/1800P ONLY
N̄ : UVW-1800/1600 ONLY
△ : 1-648-899-11 ONLY
◎ : UVW-1800 (1-648-899-12) ONLY
● : UVW-1800P/1600/1600P (1-648-899-12) ONLY

 15-40 (2)

VRA-5/5P ; Y/C REC PROCESS(DECODE, MOD), CTDM(COMPAND)

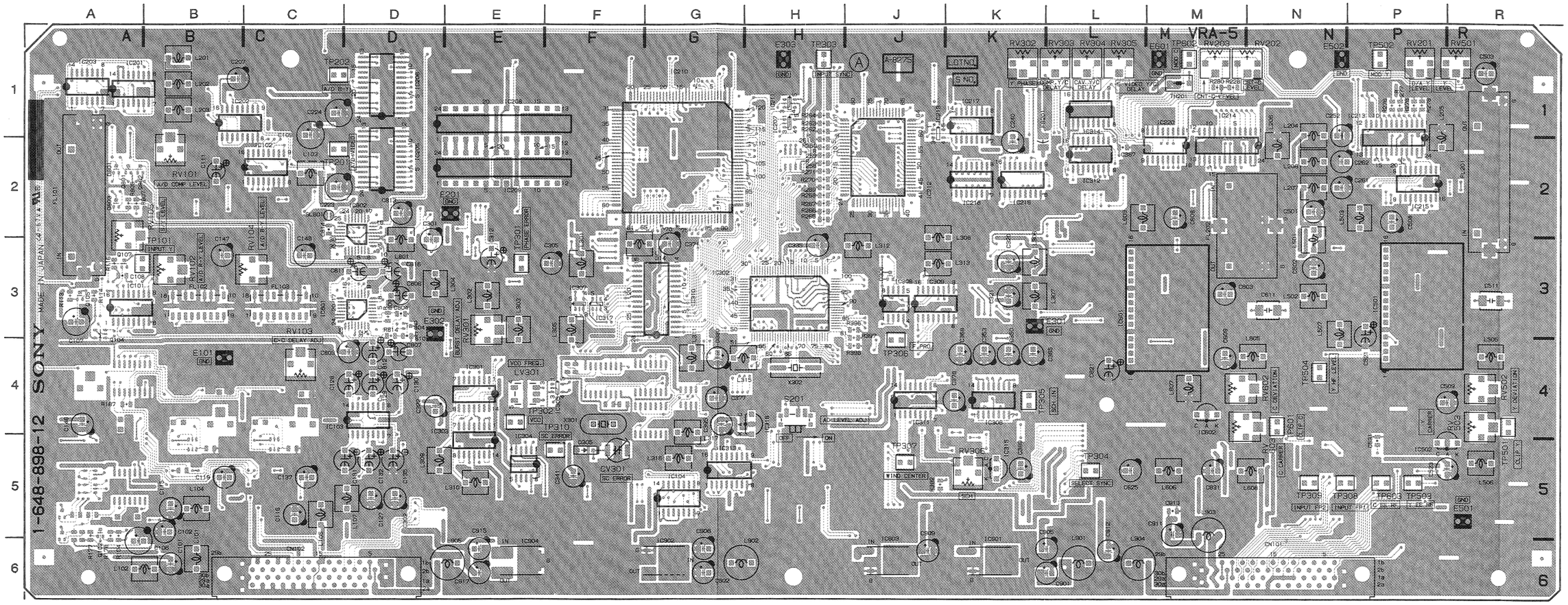

VRA-5 1-648-898-12 A SIDE

UVW-1800 (J)	**; Serial No. 10901 and higher**
UVW-1800 (UC)	**; Serial No. 13931 and higher**
UVW-1800P(EK)	**; Serial No. 14141 and higher**

VRA-5 (1-648-898-12)

CN101		N-6	IC601		L-4	✱Q325		F-4
CN102		C-6	IC602		M-4	✱Q508		N-2
			IC801	N	D-3	✱Q509		P-2
CV301		F-5	IC802	N	D-2	✱Q510		R-4
			IC901		K-6	✱Q511		N-3
✱D101		B-3	IC902		G-6	✱Q512		P-4
✱D102		C-3	IC903		J-6	✱Q513		P-4
✱D109		D-4	IC904		E-6	✱Q514		P-4
✱D202		H-4				✱Q515		P-4
✱D301		E-3	LV301		E-4	✱Q516		N-4
✱D302	P	F-4				✱Q517		N-4
✱D303		F-4	✱Q101		A-3	✱Q518		P-4
D305		F-5	Q102		A-5	✱Q519		P-5
D306		J-3	✱Q103		A-3	✱Q520		P-5
✱D307	P	E-3	Q104		A-3	✱Q601		L-2
D801	N	A-2	Q105		A-3	✱Q602		M-2
			✱Q106		A-3	✱Q603		N-4
E101		B-4	Q107		A-3	✱Q604		M-4
E201		E-2	✱Q108		A-1	✱Q605		M-4
E301		K-3	✱Q109		B-2	✱Q606		L-4
E302		D-3	✱Q110		B-2	✱Q607		M-4
E303		H-1	✱Q111		B-1	✱Q608		L-4
E501		R-5	✱Q112		C-1	✱Q609		M-5
E502		N-1	✱Q113		C-2	✱Q610		M-5
E601		M-1	✱Q114		B-4	Q801	N	A-2
			✱Q115		B-4	Q802	N	A-2
FB201		K-2	✱Q116		B-3	Q803	N	A-2
			✱Q117		B-3	Q804	N	D-3
FL101		A-2	✱Q118		B-3			
FL102		B-3	✱Q119		B-3	RV101		B-2
FL103		C-3	✱Q120		B-2	RV102		B-3
FL201		R-2	✱Q121		C-4	RV103		C-4
FL202		N-2	✱Q122		C-4	RV104		C-3
			✱Q123		C-4	RV105		A-2
IC101		A-3	✱Q124		C-3	RV201		P-1
IC102		C-2	✱Q125		C-3	RV202		N-1
IC103		D-4	✱Q126		C-3	RV203		M-1
IC104		G-5	✱Q127		C-3	RV301		E-3
IC201		A-1	✱Q128		C-3	RV302		K-1
IC202		B-1	✱Q129		C-2	RV303		L-1
IC203		A-1	✱Q130		C-2	RV304		L-1
IC205		D-2	✱Q131		B-5	RV305		L-1
IC206		D-1	✱Q132		C-5	RV306		K-5
IC207		H-1	✱Q133		A-2	RV501		R-1
IC208		E-2	✱Q201		C-1	RV502		R-4
IC209		E-2	✱Q202		H-1	RV503		R-4
IC210		G-2	✱Q203		H-4	RV602		M-4
IC211		H-1	✱Q204		P-2	RV603		M-4
IC212		J-2	✱Q207		R-2			
IC213		P-1	✱Q209		N-2	S201		H-4
IC214		N-1	✱Q210		R-2			
IC215		P-2	✱Q211		K-2	TH201	N	M-1
IC216		K-2	✱Q212		R-1			
IC217	N	K-2	✱Q213		M-3	TP101		A-3
IC218		K-2	✱Q301		D-3	TP201		C-2
IC219	N	J-1	✱Q303		E-3	TP202		C-1
IC220		M-1	✱Q305		E-3	TP301		E-3
IC301		E-4	✱Q306		E-3	TP302		E-4
IC302		H-3	✱Q307		E-3	TP303		H-1
IC303		E-4	✱Q308		J-4	TP304		L-5
IC304		E-5	✱Q309		J-4	TP305		K-4
IC305		F-4	✱Q310		F-3	TP306		J-4
IC306		K-4	✱Q311		F-3	TP307		J-5
IC307		F-3	✱Q312		K-3	TP308		N-5
IC308		J-3	✱Q313		E-4	TP309		N-5
IC309		J-3	✱Q314		E-4	TP310		F-5
IC310		G-3	✱Q315		J-3	TP501		R-4
IC311		J-4	✱Q316		F-5	TP502		P-1
IC312		L-2	✱Q317		F-5	TP503		P-5
IC313		G-5	✱Q318		E-5	TP504		N-4
IC314		L-1	✱Q319		K-3	TP601		N-4
IC315		K-5	✱Q320		J-3	TP602		M-1
IC316		H-4	✱Q321		J-4	TP603		P-5
IC317		F-3	✱Q322		J-4			
IC501		P-4	✱Q323		J-4	X301		F-4
IC502		R-5	✱Q324		F-4	X302		H-4

✱ : B SIDE
N : UVW-1800 ONLY
P : UVW-1800P ONLY

VRA-5/5P ; Y/C REC PROCESS(DECODE, MOD), CTDM(COMPAND)

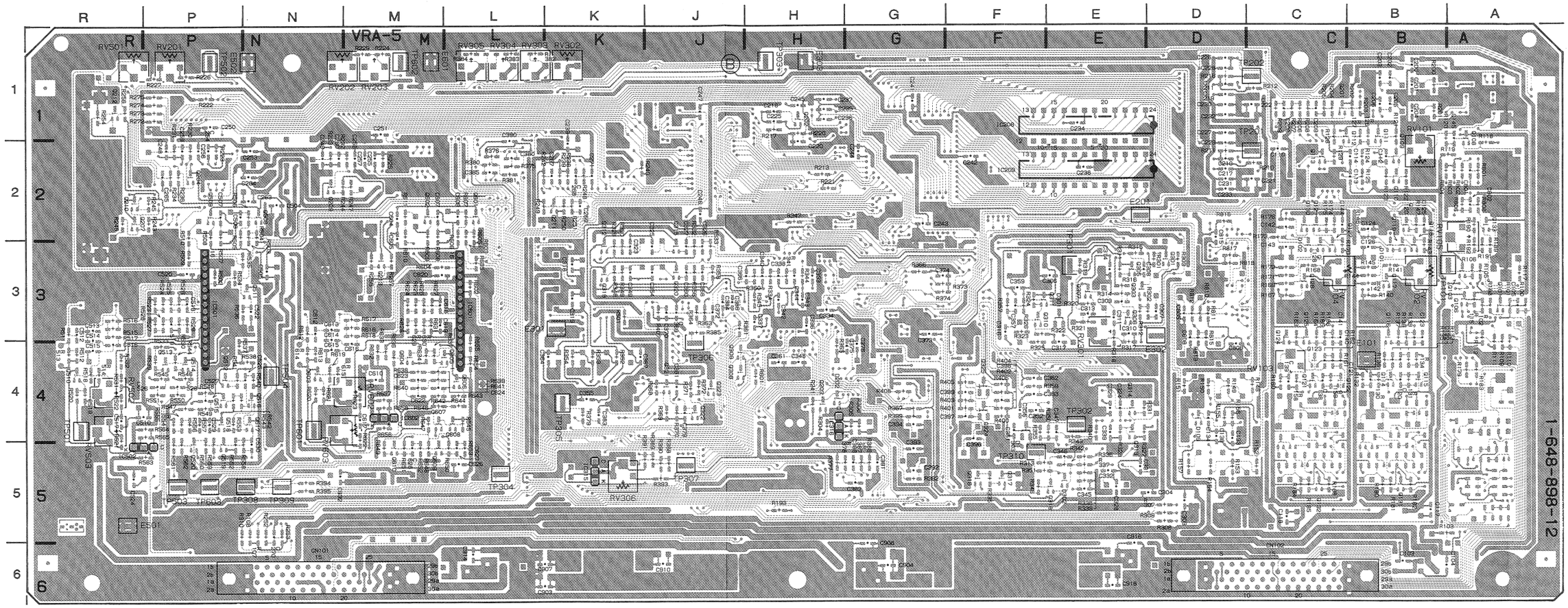

VRA-5 1-648-898-12 B SIDE

UVW-1800 (J) ; Serial No. 10901 and higher
UVW-1800 (UC) ; Serial No. 13931 and higher
UVW-1800P(EK) ; Serial No. 14141 and higher

 VRA-5/5P

VRA-5 (1-648-898-12)

CN101		N-6	IC601		L-4	✱Q325		F-4
CN102		C-6	IC602		M-4	✱Q508		N-2
			IC801	N	D-3	✱Q509		P-2
CV301		F-5	IC802	N	D-2	✱Q510		R-4
			IC901		K-6	✱Q511		N-3
✱D101		B-3	IC902		G-6	✱Q512		P-4
✱D102		C-3	IC903		J-6	✱Q513		P-4
✱D109		D-4	IC904		E-6	✱Q514		P-4
✱D202		H-4				✱Q515		P-4
✱D301		E-3	LV301		E-4	✱Q516		N-4
✱D302	P	F-4				✱Q517		N-4
✱D303		F-4	✱Q101		A-3	✱Q518		P-4
D305		F-5	Q102		A-5	✱Q519		P-5
D306		J-3	✱Q103		A-3	✱Q520		P-5
✱D307	P	E-3	Q104		A-3	✱Q601		L-2
D801	N	A-2	Q105		A-3	✱Q602		M-2
			✱Q106		A-3	✱Q603		N-4
E101		B-4	Q107		A-3	✱Q604		M-4
E201		E-2	✱Q108		A-1	✱Q605		M-4
E301		K-3	✱Q109		B-2	✱Q606		L-4
E302		D-3	✱Q110		B-2	✱Q607		M-4
E303		H-1	✱Q111		B-1	✱Q608		L-4
E501		R-5	✱Q112		C-1	✱Q609		M-5
E502		N-1	✱Q113		C-2	✱Q610		M-5
E601		M-1	✱Q114		B-4	Q801	N	A-2
			✱Q115		B-4	Q802	N	A-2
FB201		K-2	✱Q116		B-3	Q803	N	A-2
			✱Q117		B-3	Q804	N	D-3
FL101		A-2	✱Q118		B-3			
FL102		B-3	✱Q119		B-3	RV101		B-2
FL103		C-3	✱Q120		B-2	RV102		B-3
FL201		R-2	✱Q121		C-4	RV103		C-4
FL202		N-2	✱Q122		C-4	RV104		C-3
			✱Q123		C-4	RV105		A-2
IC101		A-3	✱Q124		C-3	RV201		P-1
IC102		C-2	✱Q125		C-3	RV202		N-1
IC103		D-4	✱Q126		C-3	RV203		M-1
IC104		G-5	✱Q127		C-3	RV301		E-3
IC201		A-1	✱Q128		C-3	RV302		K-1
IC202		B-1	✱Q129		C-2	RV303		L-1
IC203		A-1	✱Q130		C-2	RV304		L-1
IC205		D-2	✱Q131		B-5	RV305		L-1
IC206		D-1	✱Q132		C-5	RV306		K-5
IC207		H-1	✱Q133		A-2	RV501		R-1
IC208		E-2	✱Q201		C-1	RV502		R-4
IC209		E-2	✱Q202		H-1	RV503		R-4
IC210		G-2	✱Q203		H-4	RV602		M-4
IC211		H-1	✱Q204		P-2	RV603		M-4
IC212		J-2	✱Q207		R-2			
IC213		P-1	✱Q209		N-2	S201		H-4
IC214		N-1	✱Q210		R-2			
IC215		P-2	✱Q211		K-2	TH201	N	M-1
IC216		K-2	✱Q212		R-1			
IC217	N	K-2	✱Q213		M-3	TP101		A-3
IC218		K-2	✱Q301		D-3	TP201		C-2
IC219	N	J-1	✱Q303		E-3	TP202		C-1
IC220		M-1	✱Q305		E-3	TP301		E-3
IC301		E-4	✱Q306		E-3	TP302		E-4
IC302		H-3	✱Q307		E-3	TP303		H-1
IC303		E-4	✱Q308		J-4	TP304		L-5
IC304		E-5	✱Q309		J-4	TP305		K-4
IC305		F-4	✱Q310		F-3	TP306		J-4
IC306		K-4	✱Q311		F-3	TP307		J-5
IC307		F-3	✱Q312		K-3	TP308		N-5
IC308		J-3	✱Q313		E-4	TP309		N-5
IC309		J-3	✱Q314		E-4	TP310		F-5
IC310		G-3	✱Q315		J-3	TP501		R-4
IC311		J-4	✱Q316		F-5	TP502		P-1
IC312		L-2	✱Q317		F-5	TP503		P-5
IC313		G-5	✱Q318		E-5	TP504		N-4
IC314		L-1	✱Q319		K-3	TP601		N-4
IC315		K-5	✱Q320		J-3	TP602		M-1
IC316		H-4	✱Q321		J-4	TP603		P-5
IC317		F-3	✱Q322		J-4			
IC501		P-4	✱Q323		J-4	X301		F-4
IC502		R-5	✱Q324		F-4	X302		H-4

✱ : B SIDE
N : UVW-1800 ONLY
P : UVW-1800P ONLY

 15-44 (b2)

VRA-5/5P ; Y/C REC PROCESS(DECODE, MOD), CTDM(COMPAND)

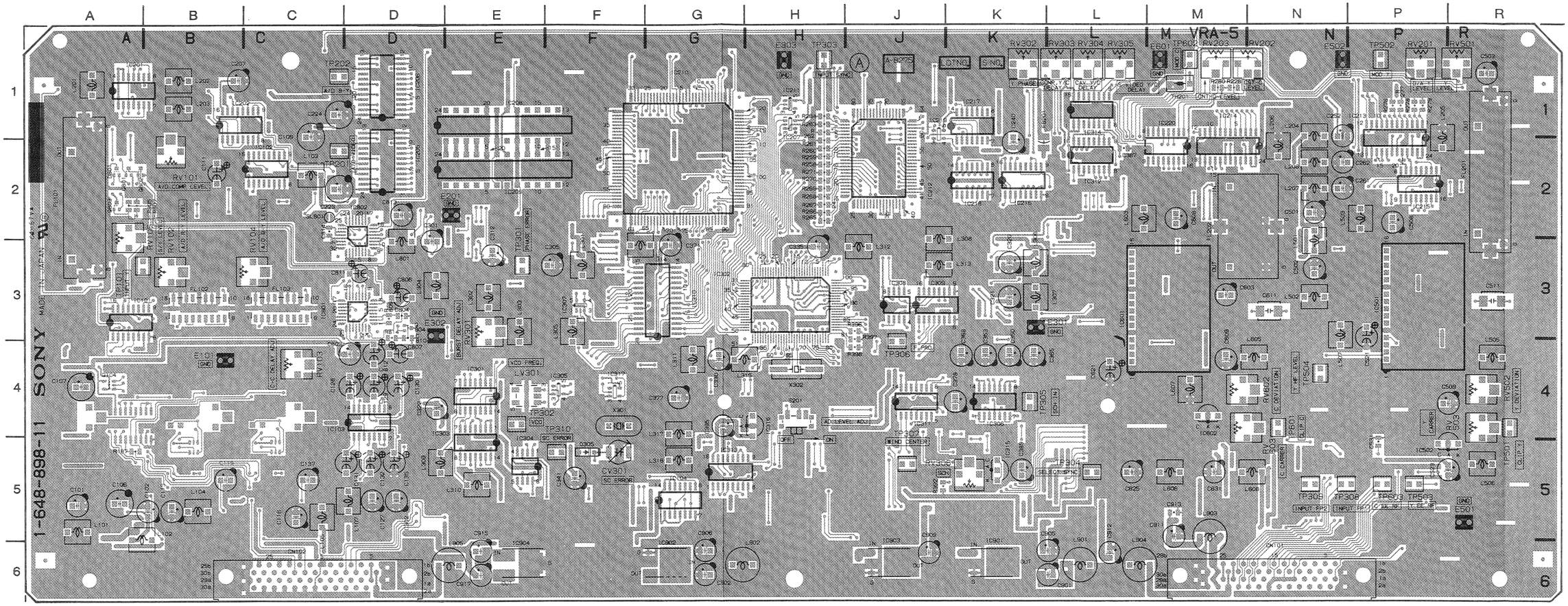

VRA-5 1-648-898-11 A SIDE

UVW-1800 (J)	; Serial No. 10001 through 10900
UVW-1800 (UC)	; Serial No. 10001 through 13930
UVW-1800P(EK)	; Serial No. 10001 through 14140

VRA-5 (1-648-898-11)

CN101		N-6	IC801	N	D-3	✱Q509		P-2
CN102		C-6	IC802	N	D-2	✱Q510		R-4
			IC901		K-6	✱Q511		N-3
CV301		F-5	IC902		G-6	✱Q512		P-4
			IC903		J-6	✱Q513		P-4
✱D101		B-3	IC904		E-6	✱Q514		P-4
✱D102		C-3				✱Q515		P-4
✱D109		D-4	LV301		E-4	✱Q516		N-4
✱D202		H-4				✱Q517		N-4
✱D301		E-3	✱Q101		A-3	✱Q518		P-4
✱D302	P	F-4	✱Q102		A-5	✱Q519		P-5
✱D303		F-4	✱Q103		A-3	✱Q520		P-5
D305		F-5	Q104		A-4	✱Q601		L-2
D306	P	J-3	✱Q105		A-4	✱Q602		M-2
D801	N	A-2	✱Q106		A-3	✱Q603		N-4
			✱Q107		A-3	✱Q604		M-4
E101		B-4	✱Q108		A-1	✱Q605		M-4
E201		E-2	✱Q109		B-2	✱Q606		L-4
E301		K-3	✱Q110		B-2	✱Q607		M-4
E302		D-3	✱Q111		B-1	✱Q608		L-4
E303		H-1	✱Q112		C-1	✱Q609		M-5
E501		R-5	✱Q113		C-2	✱Q610		M-5
E502		N-1	✱Q114		B-4	Q801	N	A-2
E601		M-1	✱Q115		B-4	Q802	N	A-2
			✱Q116		B-3	Q803	N	A-2
FB201		K-2	✱Q117		B-3	Q804	N	D-3
			✱Q118		B-3			
FL101		A-2	✱Q119		B-3	RV101		B-2
FL102		B-3	✱Q120		B-2	RV102		B-3
FL103		C-3	✱Q121		C-4	RV103		C-4
FL201		R-2	✱Q122		C-4	RV104		C-3
FL202		N-2	✱Q123		C-4	RV105		A-2
			✱Q124		C-3	RV201		P-1
IC101		A-3	✱Q125		C-3	RV202		N-1
IC102		C-2	✱Q126		C-3	RV203		M-1
IC103		D-4	✱Q127		C-3	RV301		E-3
IC104		G-5	✱Q128		C-3	RV302		K-1
IC201		A-1	✱Q129		C-2	RV303		L-1
IC202		B-1	✱Q130		C-2	RV304		L-1
IC205		D-2	✱Q131		B-5	RV305		L-1
IC206		D-1	✱Q132		C-5	RV306		K-5
IC207		H-1	✱Q133		A-2	RV501		R-1
IC208		E-2	✱Q201		C-1	RV502		R-4
IC209		E-2	✱Q202		H-1	RV503		R-4
IC210		G-2	✱Q203		H-4	RV602		M-4
IC211		H-1	✱Q204		P-2	RV603		M-4
IC212		J-2	✱Q207		R-2			
IC213		P-1	✱Q209		N-2	S201		H-4
IC214		N-1	✱Q210		R-2			
IC215		P-2	✱Q211		K-2	TH201		M-1
IC216		K-2	✱Q212		R-1			
IC217	N	K-2	✱Q213		M-3	TP101		A-3
IC218		K-2	✱Q301		D-3	TP201		C-2
IC219	N	J-1	✱Q303		E-3	TP202		C-1
IC220		M-1	✱Q305		E-3	TP301		E-3
IC301		E-4	✱Q306		E-3	TP302		E-4
IC302		H-3	✱Q307		E-3	TP303		H-1
IC303		E-4	✱Q308		J-4	TP304		L-5
IC304		E-5	✱Q309		J-4	TP305		K-4
IC305		F-4	✱Q310		F-3	TP306		J-4
IC306		K-4	✱Q311		F-3	TP307		J-5
IC307		F-3	✱Q312		K-3	TP308		N-5
IC308		J-3	✱Q313		E-4	TP309		N-5
IC309		J-3	✱Q314		E-4	TP310		F-5
IC310		G-3	✱Q315		J-3	TP501		R-4
IC311		J-4	✱Q316		F-5	TP502		P-1
IC312		L-2	✱Q317		F-5	TP503		P-5
IC313		G-5	✱Q318		E-5	TP504		N-4
IC314		L-1	✱Q319		K-3	TP601		N-4
IC315		K-5	✱Q320		J-3	TP602		M-1
IC316		H-4	✱Q321		J-4	TP603		P-5
IC317		F-4	✱Q322		J-4			
IC501		P-4	✱Q323		J-4	X301		F-4
IC502		R-5	✱Q324		F-4	X302		H-4
IC601		L-4	✱Q325		F-4			
IC602		M-4	✱Q508		N-2			

✱ : B SIDE
N : UVW-1800 ONLY
P : UVW-1800P ONLY

VRA-5/5P ; Y/C REC PROCESS(DECODE, MOD), CTDM(COMPAND)

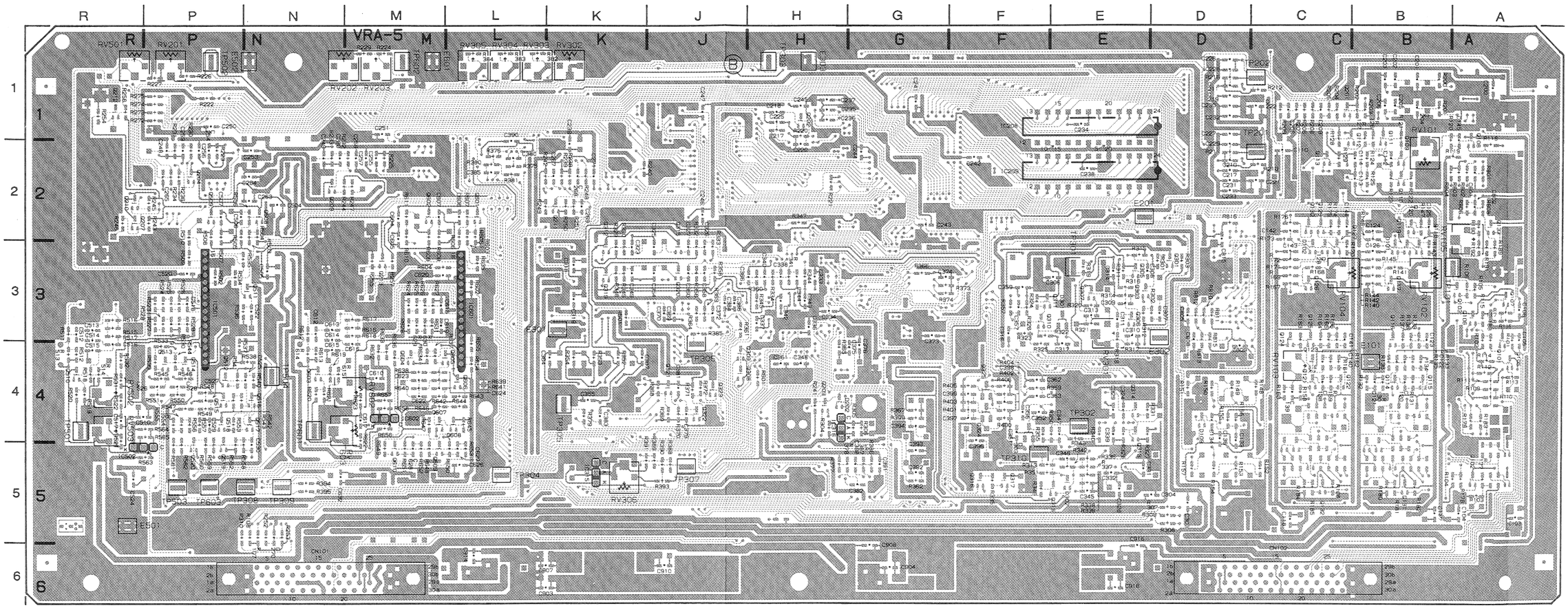

UVW-1800 (J)	**; Serial No. 10001 through 10900**
UVW-1800 (UC)	**; Serial No. 10001 through 13930**
UVW-1800P(EK)	**; Serial No. 10001 through 14140**

VRA-5 (1-648-898-11)

CN101		N-6	IC801	N	D-3	✱Q509		P-2
CN102		C-6	IC802	N	D-2	✱Q510		R-4
			IC901		K-6	✱Q511		N-3
CV301		F-5	IC902		G-6	✱Q512		P-4
			IC903		J-6	✱Q513		P-4
✱D101		B-3	IC904		E-6	✱Q514		P-4
✱D102		C-3				✱Q515		P-4
✱D109		D-4	LV301		E-4	✱Q516		N-4
✱D202		H-4				✱Q517		N-4
✱D301		E-3	✱Q101		A-3	✱Q518		P-4
✱D302	P	F-4	✱Q102		A-5	✱Q519		P-5
✱D303		F-4	✱Q103		A-3	✱Q520		P-5
D305		F-5	Q104		A-4	✱Q601		L-2
D306	P	J-3	✱Q105		A-4	✱Q602		M-2
D801	N	A-2	✱Q106		A-3	✱Q603		N-4
			✱Q107		A-3	✱Q604		M-4
E101		B-4	✱Q108		A-1	✱Q605		M-4
E201		E-2	✱Q109		B-2	✱Q606		L-4
E301		K-3	✱Q110		B-2	✱Q607		M-4
E302		D-3	✱Q111		B-1	✱Q608		L-4
E303		H-1	✱Q112		C-1	✱Q609		M-5
E501		R-5	✱Q113		C-2	✱Q610		M-5
E502		N-1	✱Q114		B-4	Q801	N	A-2
E601		M-1	✱Q115		B-4	Q802	N	A-2
			✱Q116		B-3	Q803	N	A-2
FB201		K-2	✱Q117		B-3	Q804	N	D-3
			✱Q118		B-3			
FL101		A-2	✱Q119		B-3	RV101		B-2
FL102		B-3	✱Q120		B-2	RV102		B-3
FL103		C-3	✱Q121		C-4	RV103		C-4
FL201		R-2	✱Q122		C-4	RV104		C-3
FL202		N-2	✱Q123		C-4	RV105		A-2
			✱Q124		C-3	RV201		P-1
IC101		A-3	✱Q125		C-3	RV202		N-1
IC102		C-2	✱Q126		C-3	RV203		M-1
IC103		D-4	✱Q127		C-3	RV301		E-3
IC104		G-5	✱Q128		C-3	RV302		K-1
IC201		A-1	✱Q129		C-2	RV303		L-1
IC202		B-1	✱Q130		C-2	RV304		L-1
IC205		D-2	✱Q131		B-5	RV305		L-1
IC206		D-1	✱Q132		C-5	RV306		K-5
IC207		H-1	✱Q133		A-2	RV501		R-1
IC208		E-2	✱Q201		C-1	RV502		R-4
IC209		E-2	✱Q202		H-1	RV503		R-4
IC210		G-2	✱Q203		H-4	RV602		M-4
IC211		H-1	✱Q204		P-2	RV603		M-4
IC212		J-2	✱Q207		R-2			
IC213		P-1	✱Q209		N-2	S201		H-4
IC214		N-1	✱Q210		R-2			
IC215		P-2	✱Q211		K-2	TH201		M-1
IC216		K-2	✱Q212		R-1			
IC217	N	K-2	✱Q213		M-3	TP101		A-3
IC218		K-2	✱Q301		D-3	TP201		C-2
IC219	N	J-1	✱Q303		E-3	TP202		C-1
IC220		M-1	✱Q305		E-3	TP301		E-3
IC301		E-4	✱Q306		E-3	TP302		E-4
IC302		H-3	✱Q307		E-3	TP303		H-1
IC303		E-4	✱Q308		J-4	TP304		L-5
IC304		E-5	✱Q309		J-4	TP305		K-4
IC305		F-4	✱Q310		F-3	TP306		J-4
IC306		K-4	✱Q311		F-3	TP307		J-5
IC307		F-3	✱Q312		K-3	TP308		N-5
IC308		J-3	✱Q313		E-4	TP309		N-5
IC309		J-3	✱Q314		E-4	TP310		F-5
IC310		G-3	✱Q315		J-3	TP501		R-4
IC311		J-4	✱Q316		F-5	TP502		P-1
IC312		L-2	✱Q317		F-5	TP503		P-5
IC313		G-5	✱Q318		E-5	TP504		N-4
IC314		L-1	✱Q319		K-3	TP601		N-4
IC315		K-5	✱Q320		J-3	TP602		M-1
IC316		H-4	✱Q321		J-4	TP603		P-5
IC317		F-4	✱Q322		J-4			
IC501		P-4	✱Q323		J-4	X301		F-4
IC502		R-5	✱Q324		F-4	X302		H-4
IC601		L-4	✱Q325		F-4			
IC602		M-4	✱Q508		N-2			

✱ : B SIDE
N : UVW-1800 ONLY
P : UVW-1800P ONLY

CL-25 ; CASSETTE LOADING BEGIN/NEAR-END SENSOR
HP-61 ; HEADPHONES JACK/VOLUME CONTROL
HP-61A ; HEADPHONES JACK/VOLUME CONTROL
PC-62 ; CASSETTE IN/LARGE CASSETTE SENSOR
PD-35 ; PINCH SOLENOID

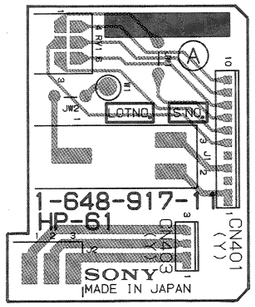

HP-61 1-648-917-11, 12 A SIDE

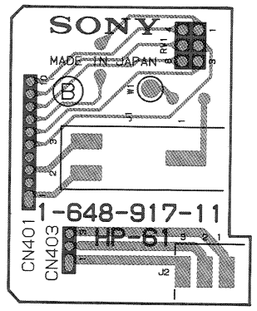

HP-61 1-648-917-11, 12 B SIDE

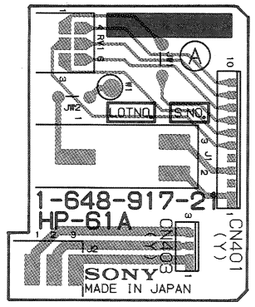

HP-61A 1-648-917-21 A SIDE

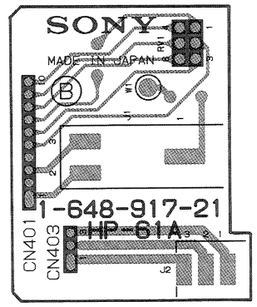

HP-61A 1-648-917-21 B SIDE

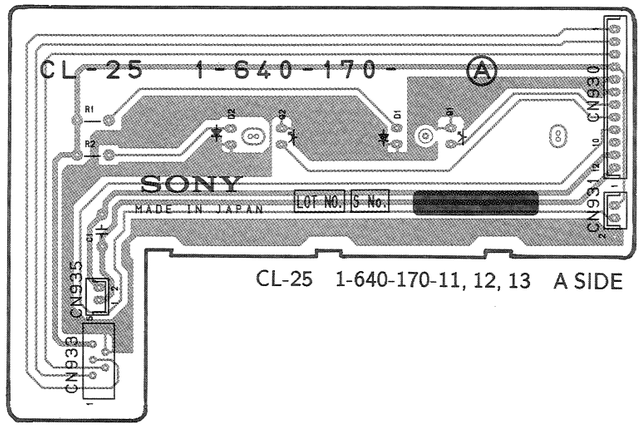

CL-25 1-640-170-11, 12, 13 A SIDE

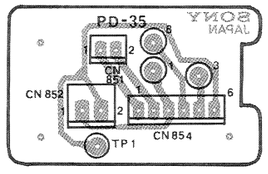

PD-35 1-622-596-11 A SIDE

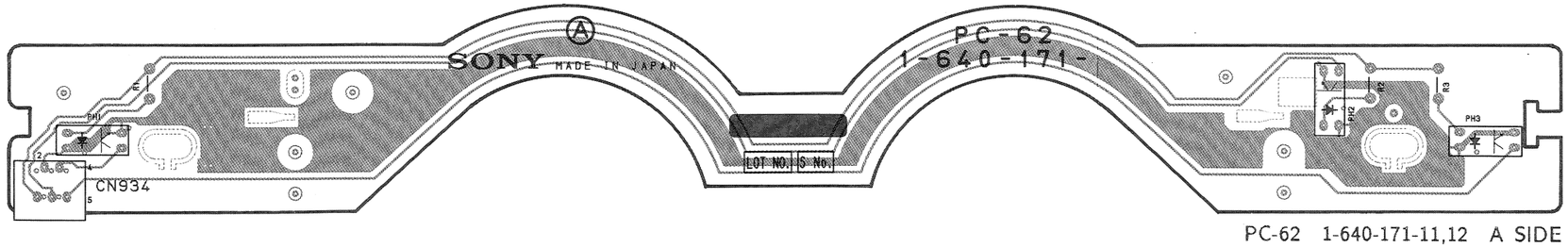

PC-62 1-640-171-11,12 A SIDE

PTC-66 ; REEL POSITION
PTC-67 ; THREADING FG/MOTOR
PTC-68 ; THREAD END/UNTHREAD END SENSOR
RM-126 ; S-REEL MOTOR
RM-127 ; T-REEL MOTOR
SE-207 ; REEL FG
TR-84 ; S-TENSION SENSOR
VR-155 ; AUDIO REC LEVEL

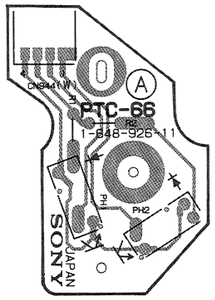

PTC-66 1-648-926-11, 12 A SIDE

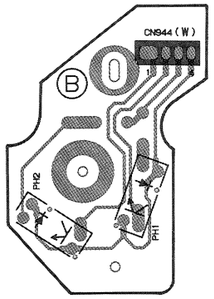

PTC-66 1-648-926-11, 12 B SIDE

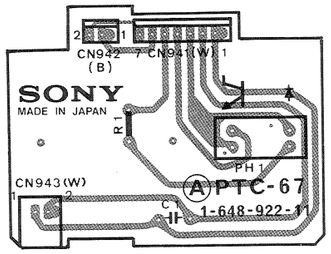

PTC-67 1-648-922-11 A SIDE

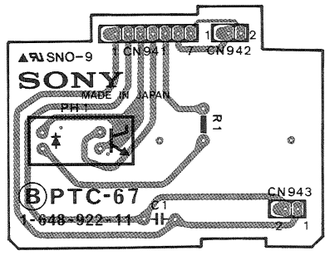

PTC-67 1-648-922-11 B SIDE

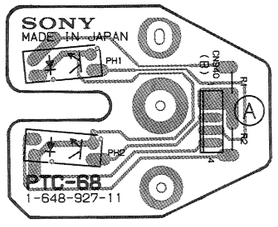

PTC-68 1-648-927-11, 12 A SIDE

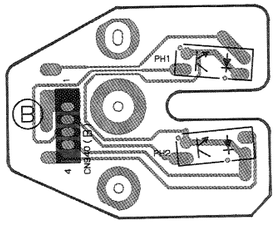

PTC-68 1-648-927-11, 12 B SIDE

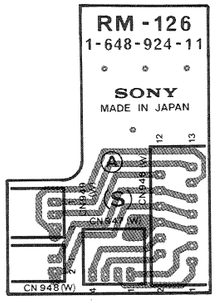

RM-126 1-648-924-11 A SIDE

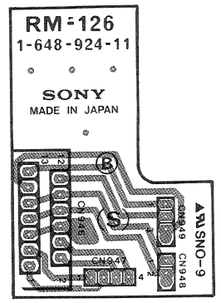

RM-126 1-648-924-11 B SIDE

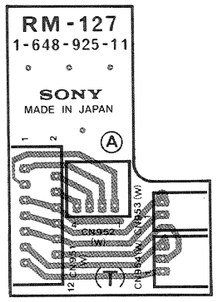

RM-127 1-648-925-11 A SIDE

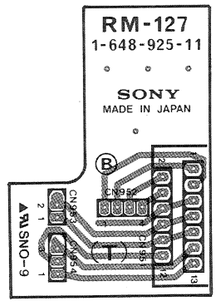

RM-127 1-648-925-11 B SIDE

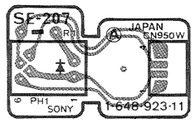

SE-207 1-648-923-11 A SIDE

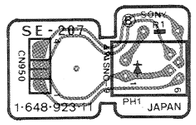

SE-207 1-648-923-11 B SIDE

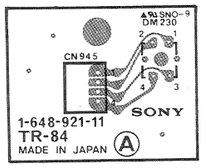

TR-84 1-648-921-11 A SIDE

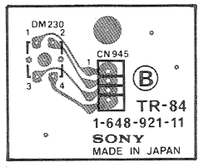

TR-84 1-648-921-11 B SIDE

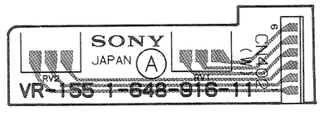

VR-155 1-648-916-11 A SIDE

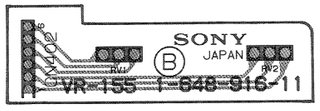

VR-155 1-648-916-11 B SIDE

SOPS-1045AC ; POWER SUPPLY(SWITCHING REGULATOR) (FOR J, UC)
SOPS-1045M ; POWER SUPPLY(SWITCHING REGULATOR) (FOR J, UC)
SOPS-1046M ; POWER SUPPLY(SWITCHING REGULATOR) (FOR EK)

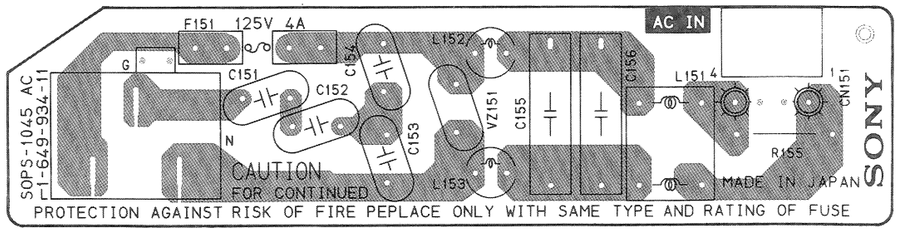

SOPS-1045 AC 1-649-934-11 A SIDE

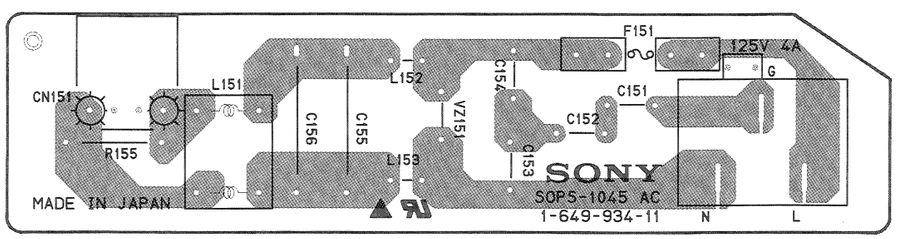

SOPS-1045 AC 1-649-934-11 B SIDE

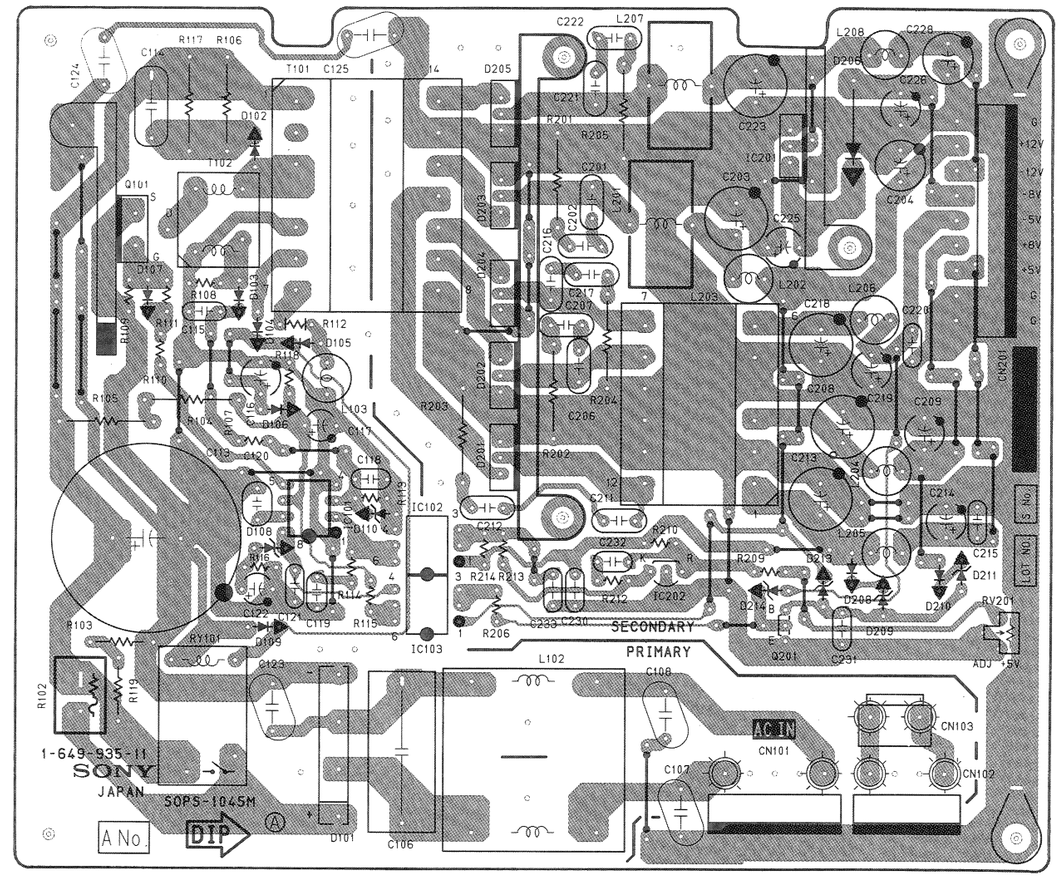

SOPS-1045 M, SOPS-1046 M A SIDE

MB-470/470P ; MOTHER BOARD

MB-470 (1-648-918-12)

CN101	M-2
CN102	B-2
CN103	M-3
CN104	B-3
CN105	M-4
CN106	B-4
CN107	M-5
CN108	J-5
CN109	B-5
CN200	F-1
CN201	D-6
CN211	J-2
CN214	J-6
CN231	B-6
CN232	A-1
CN235	A-3
CN262	E-3
CN266	D-1
CN267	E-1
CN268	C-1
CN269	D-1
CN271	E-1
IC1	C-1
IC2	C-1

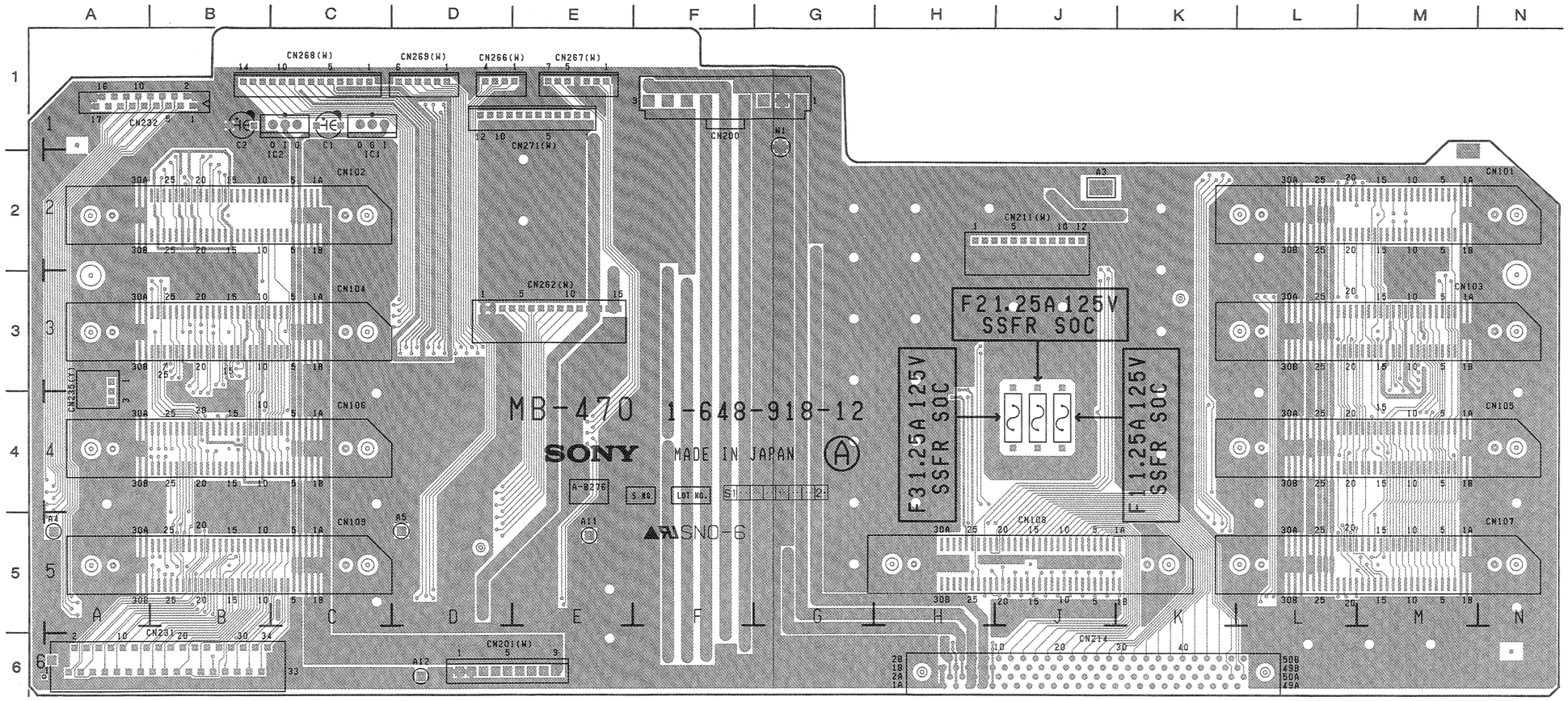

MB-470 1-648-918-12 A SIDE

UVW-1800 (J) ; Serial No. 10901 and higher
UVW-1800 (UC) ; Serial No. 13931 and higher
UVW-1800P(EK) ; Serial No. 14141 and higher

MB-470/470P ; MOTHER BOARD

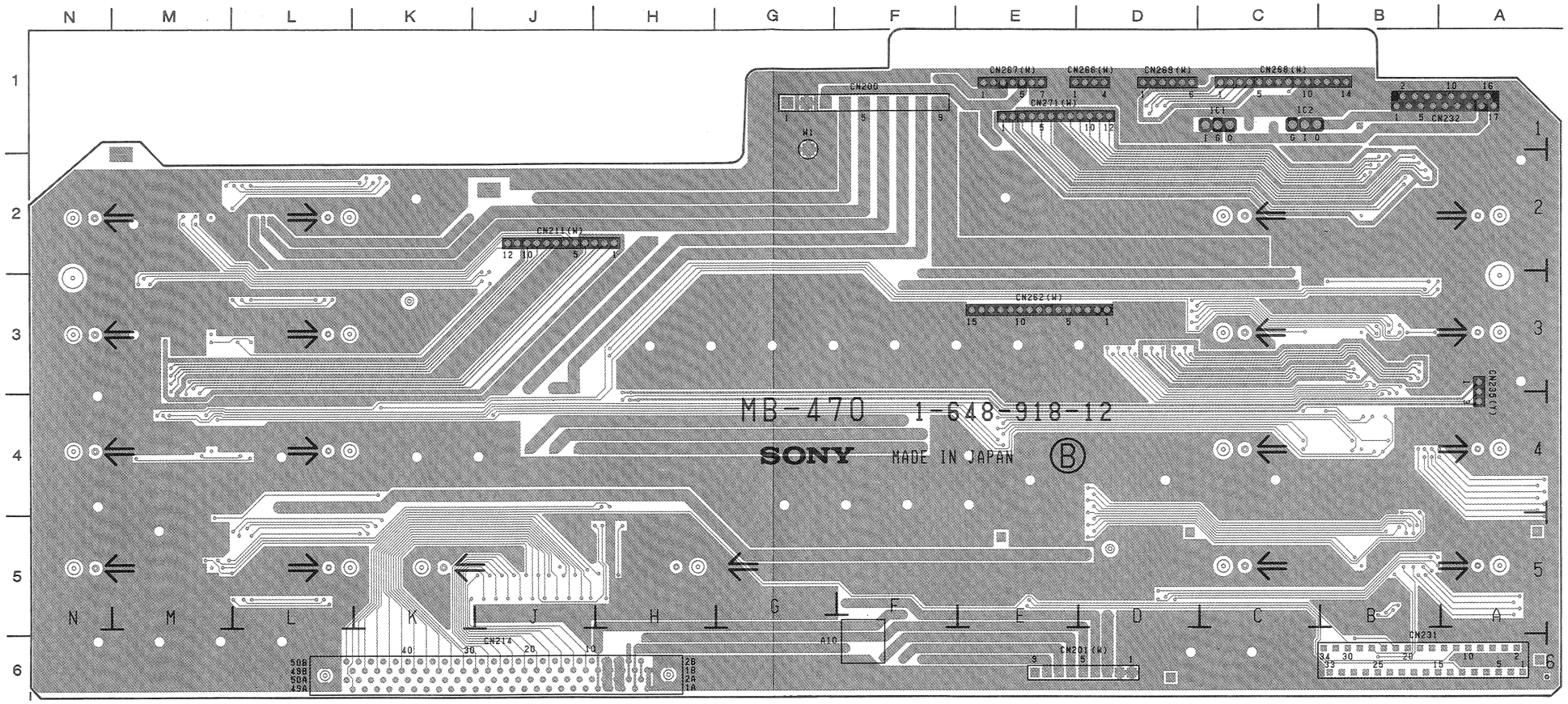

MB-470 1-648-918-12 B SIDE

MB-470 (1-648-918-12)

CN101	M-2
CN102	B-2
CN103	M-3
CN104	B-3
CN105	M-4
CN106	B-4
CN107	M-5
CN108	J-5
CN109	B-5
CN200	F-1
CN201	D-6
CN211	J-2
CN214	J-6
CN231	B-6
CN232	A-1
CN235	A-3
CN262	E-3
CN266	D-1
CN267	E-1
CN268	C-1
CN269	D-1
CN271	E-1
IC1	C-1
IC2	C-1

UVW-1800 (J) ; Serial No. 10901 and higher
UVW-1800 (UC) ; Serial No. 13931 and higher
UVW-1800P(EK) ; Serial No. 14141 and higher

MB-470/470P ; MOTHER BOARD

MB-470(1-648-918-11)

CN101	M-2
CN102	B-2
CN103	M-3
CN104	B-3
CN105	M-4
CN106	B-4
CN107	M-5
CN108	J-5
CN109	B-5
CN200	F-1
CN201	D-6
CN211	J-2
CN214	J-6
CN231	B-6
CN232	A-1
CN235	A-3
CN262	E-3
CN266	D-1
CN267	E-1
CN268	C-1
CN269	D-1
CN271	E-1
IC1	C-1
IC2	C-1

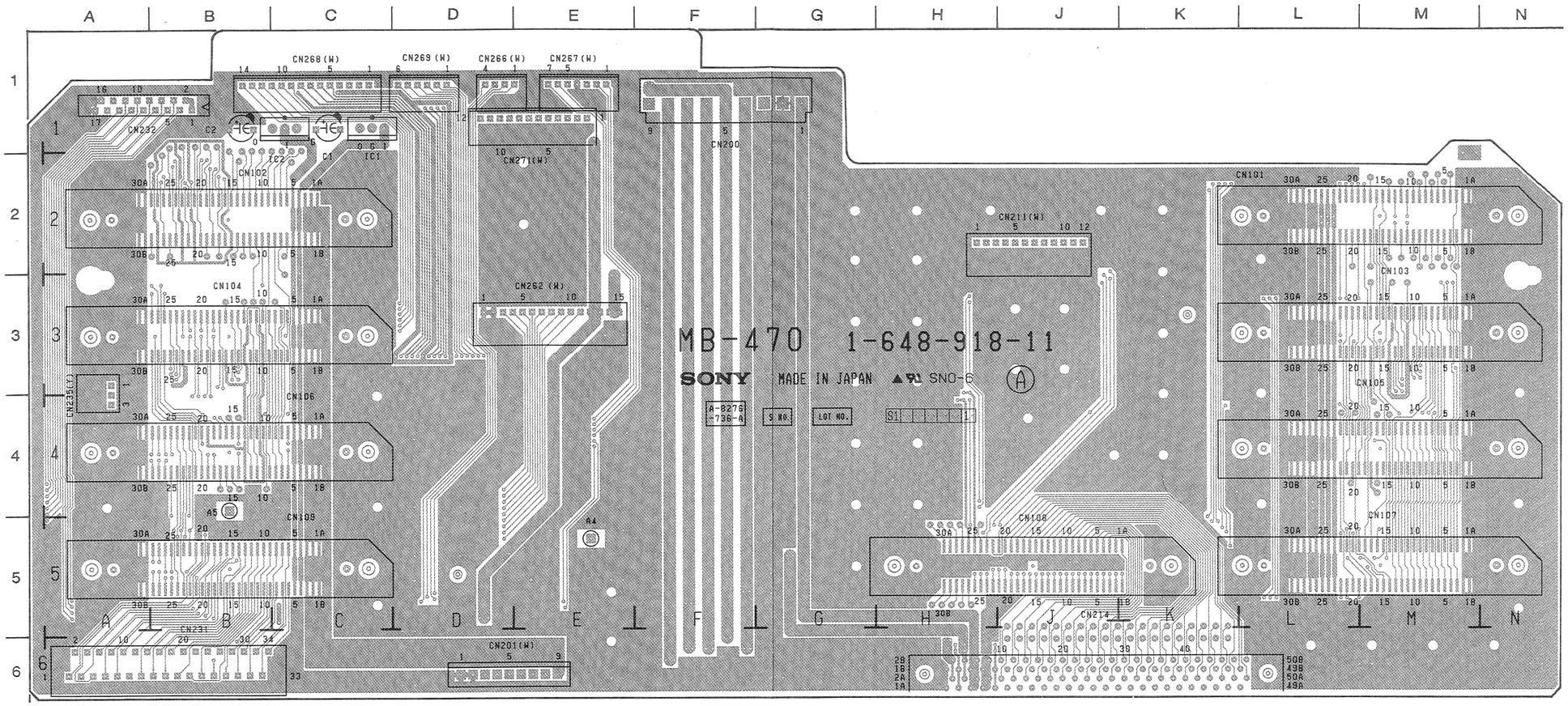

MB-470 1-648-918-11 A SIDE

UVW-1800 (J) ; Serial No. 10001 through 10900
UVW-1800 (UC) ; Serial No. 10001 through 13930
UVW-1800P(EK) ; Serial No. 10001 through 14140

MB-470/470P ; MOTHER BOARD

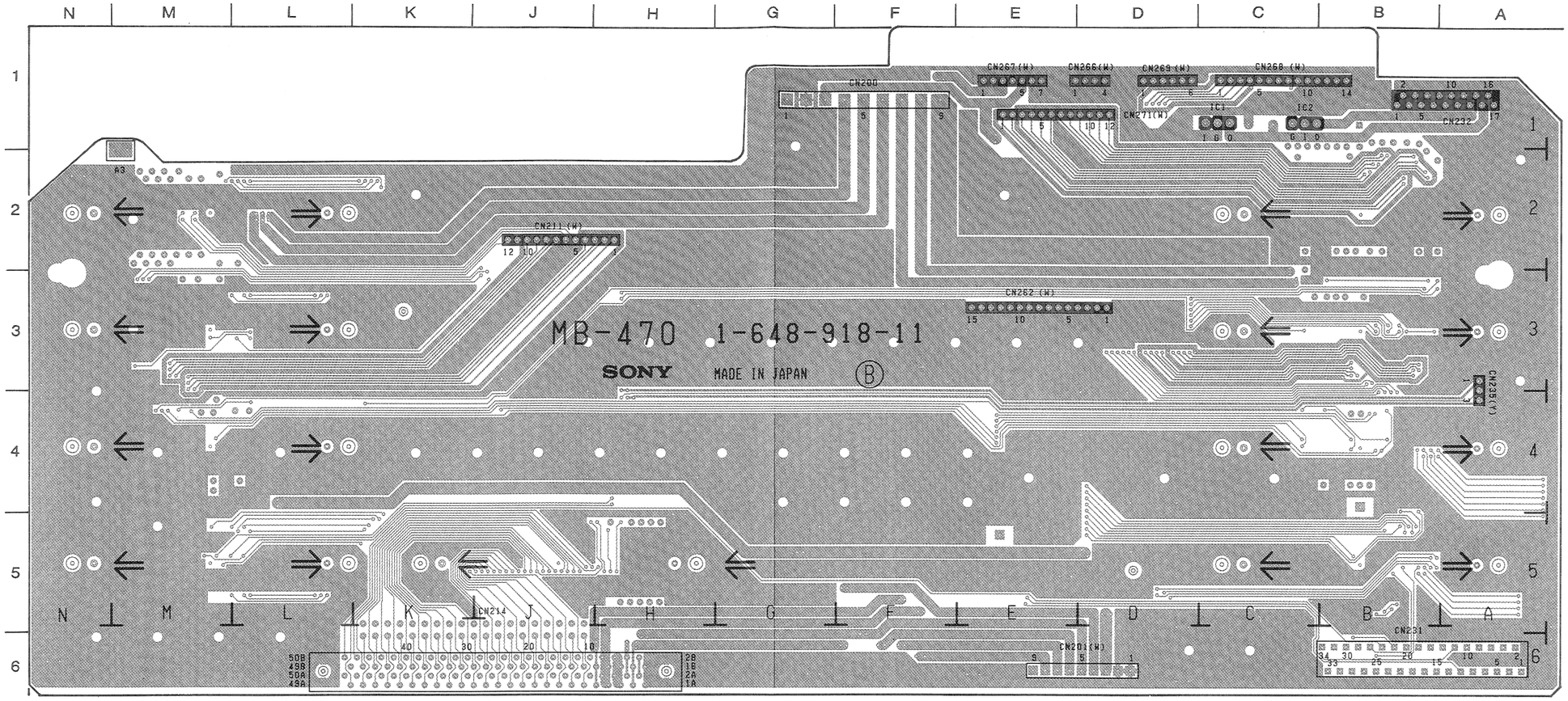

MB-470 1-648-918-11 B SIDE

MB-470(1-648-918-11)

CN101	M-2
CN102	B-2
CN103	M-3
CN104	B-3
CN105	M-4
CN106	B-4
CN107	M-5
CN108	J-5
CN109	B-5
CN200	F-1
CN201	D-6
CN211	J-2
CN214	J-6
CN231	B-6
CN232	A-1
CN235	A-3
CN262	E-3
CN266	D-1
CN267	E-1
CN268	C-1
CN269	D-1
CN271	E-1
IC1	C-1
IC2	C-1

UVW-1800 (J) ; Serial No. 10001 through 10900
UVW-1800 (UC) ; Serial No. 10001 through 13930
UVW-1800P(EK) ; Serial No. 10001 through 14140

MB-470A/470AP ; MOTHER BOARD

MB-470A (1-648-918-22)

CN103	M-3
CN104	B-3
CN105	M-4
CN106	B-4
CN107	M-5
CN108	J-5
CN109	B-5
CN200	F-1
CN201	D-6
CN211	J-2
CN214	J-6
CN231	B-6
CN232	A-1
CN235	A-3
CN262	E-3
CN266	D-1
CN267	E-1
CN268	C-1
CN269	D-1
IC1	C-1
IC2	C-1

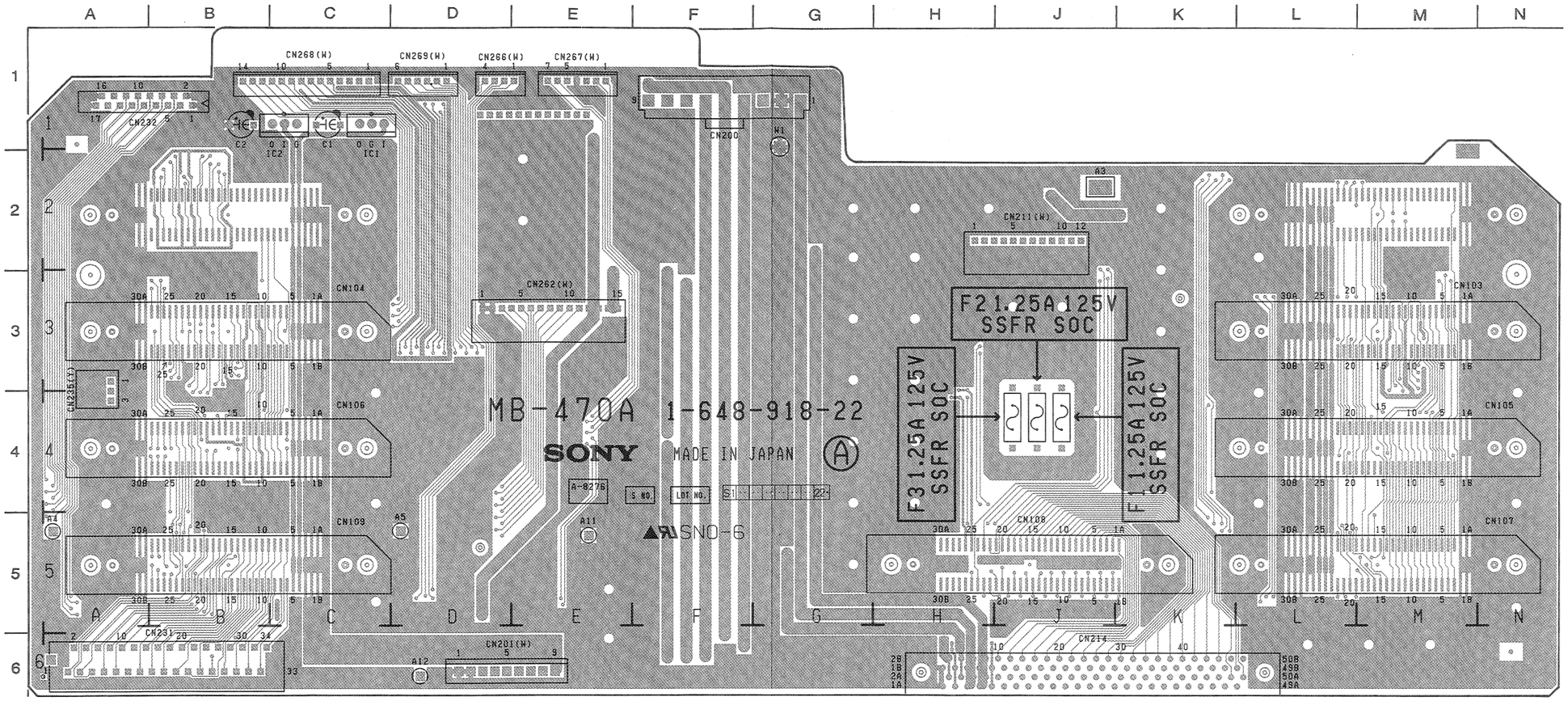

MB-470A 1-648-918-22 A SIDE

UVW-1600 (J) ; Serial No. 10601 and higher
UVW-1600 (UC) ; Serial No. 12901 and higher
UVW-1600P(EK) ; Serial No. 13781 and higher

MB-470A/470AP ; MOTHER BOARD

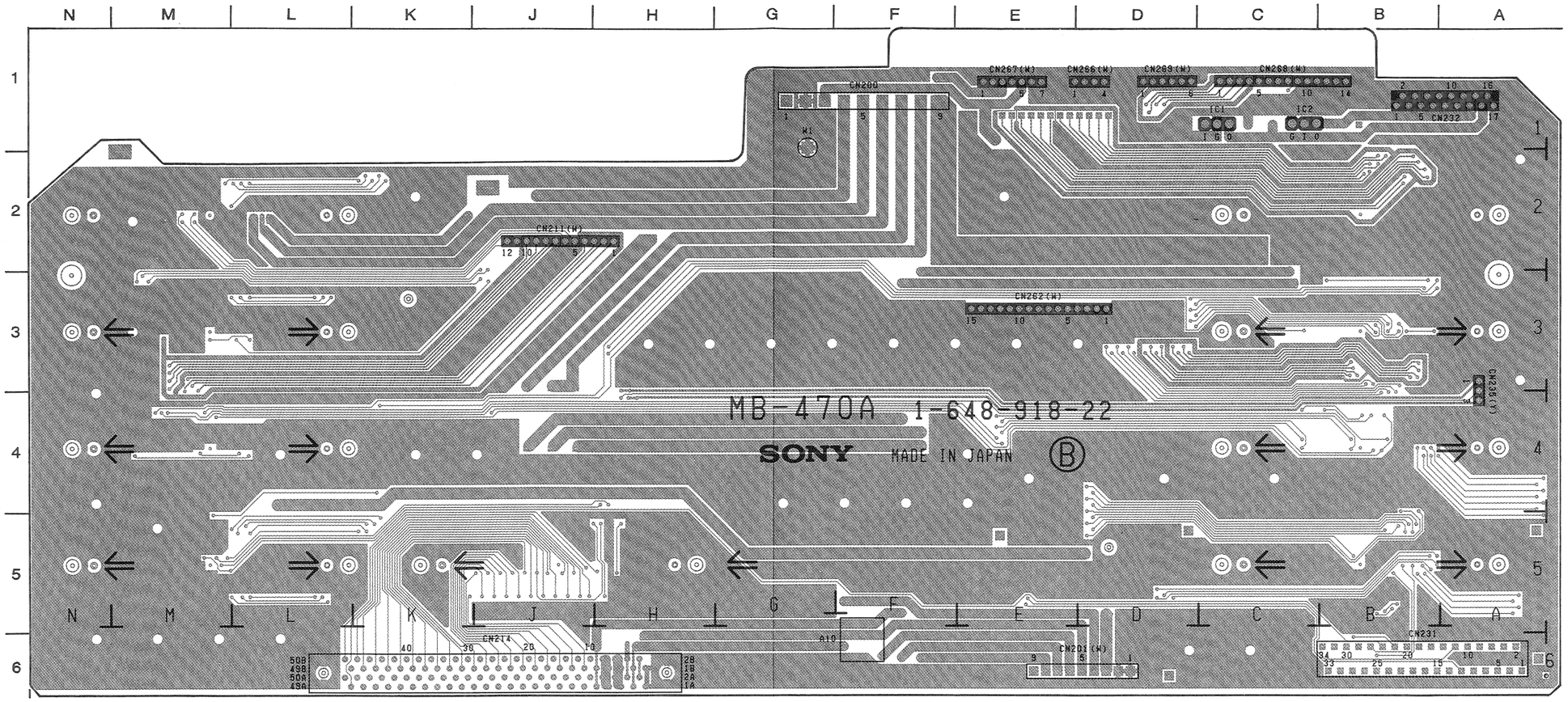

MB-470A 1-648-918-22 B SIDE

MB-470A (1-648-918-22)

CN103	M-3
CN104	B-3
CN105	M-4
CN106	B-4
CN107	M-5
CN108	J-5
CN109	B-5
CN200	F-1
CN201	D-6
CN211	J-2
CN214	J-6
CN231	B-6
CN232	A-1
CN235	A-3
CN262	E-3
CN266	D-1
CN267	E-1
CN268	C-1
CN269	D-1
IC1	C-1
IC2	C-1

UVW-1600 (J) ; Serial No. 10601 and higher
UVW-1600 (UC) ; Serial No. 12901 and higher
UVW-1600P(EK) ; Serial No. 13781 and higher

MB-470A/470AP ; MOTHER BOARD

MB-470A(1-648-918-21)

CN103	M-3
CN104	B-3
CN105	M-4
CN106	B-4
CN107	M-5
CN108	J-5
CN109	B-5
CN200	F-1
CN201	D-6
CN211	J-2
CN214	J-6
CN231	B-6
CN232	A-1
CN235	A-3
CN262	E-3
CN266	D-1
CN267	E-1
CN268	C-1
CN269	D-1
IC1	C-1
IC2	C-1

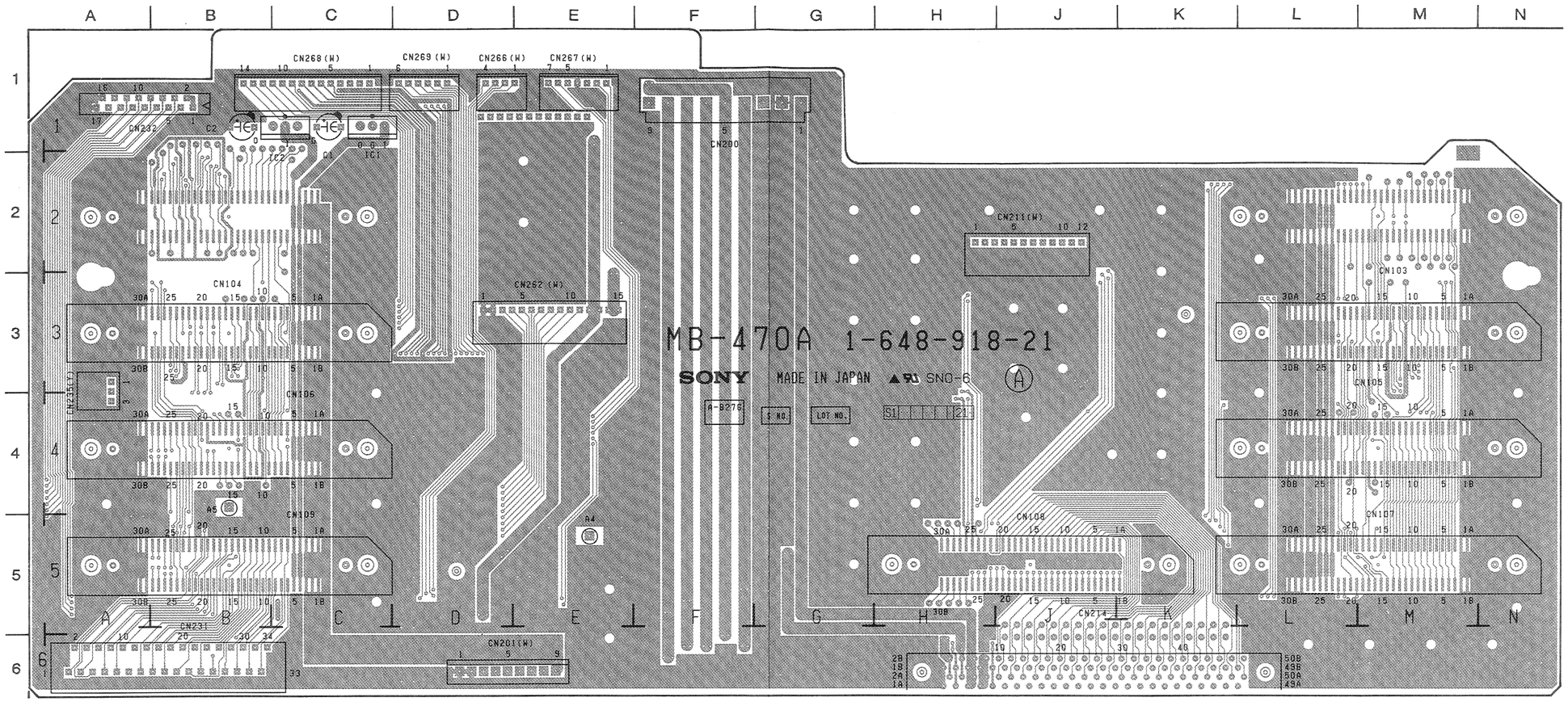

MB-470A 1-648-918-21 A SIDE

UVW-1600 (J) ; Serial No. 10001 through 10600
UVW-1600 (UC) ; Serial No. 10001 through 12900
UVW-1600P(EK) ; Serial No. 10001 through 13780

MB-470A/470AP ; MOTHER BOARD

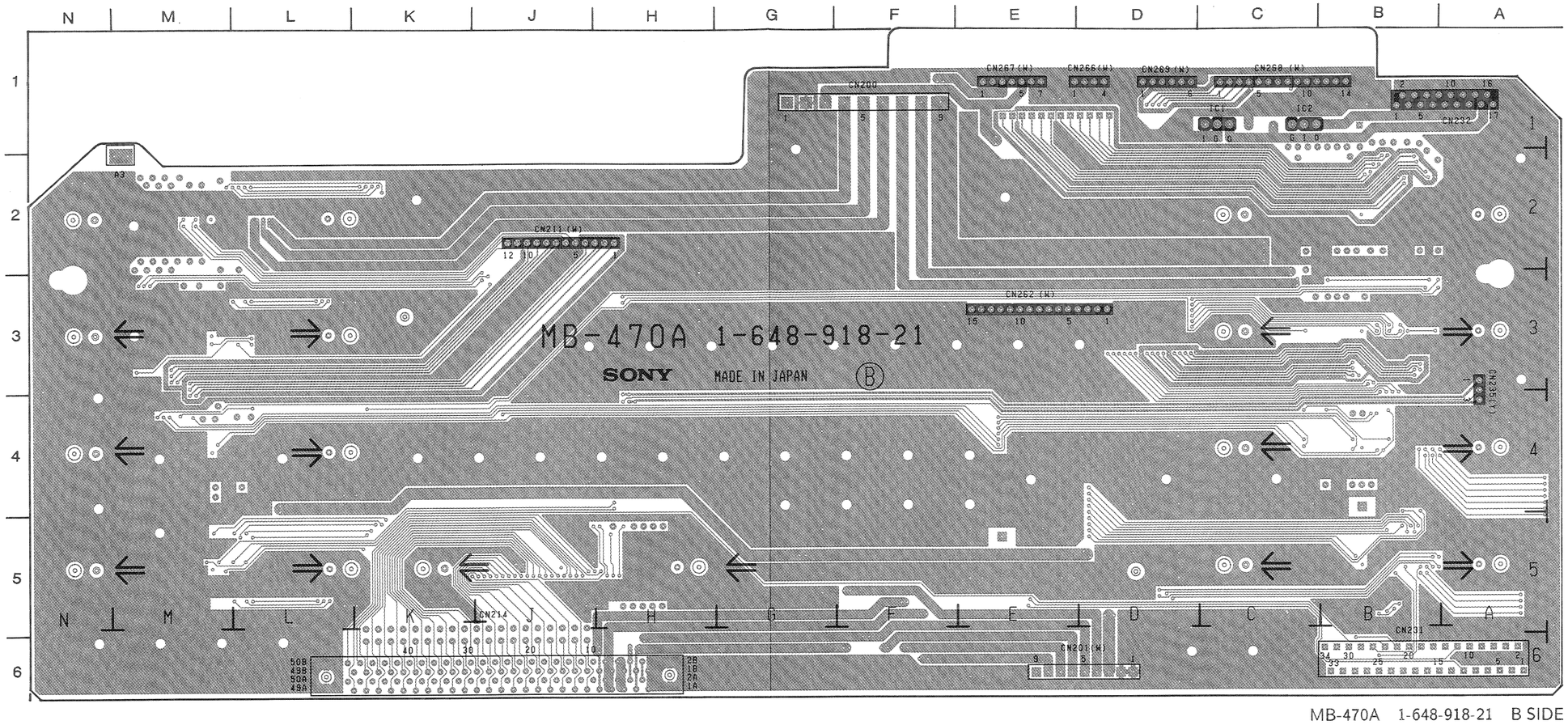

MB-470A 1-648-918-21 B SIDE

MB-470A(1-648-918-21)

CN103	M-3
CN104	B-3
CN105	M-4
CN106	B-4
CN107	M-5
CN108	J-5
CN109	B-5
CN200	F-1
CN201	D-6
CN211	J-2
CN214	J-6
CN231	B-6
CN232	A-1
CN235	A-3
CN262	E-3
CN266	D-1
CN267	E-1
CN268	C-1
CN269	D-1
IC1	C-1
IC2	C-1

UVW-1600 (J) ; Serial No. 10001 through 10600
UVW-1600 (UC) ; Serial No. 10001 through 12900
UVW-1600P(EK) ; Serial No. 10001 through 13780

MB-471 ; MOTHER BOARD

MB-471 (1-648-919-12)

CN110	C-4
CN111	C-3
CN112	C-1
CN251	E-4
CN261	F-4
CN263	A-3
CN264	A-3
CN265	B-4
CN274	F-1
CN275	F-1
CN276	A-1
CN277	A-2
CN278	A-2
CN281	F-3

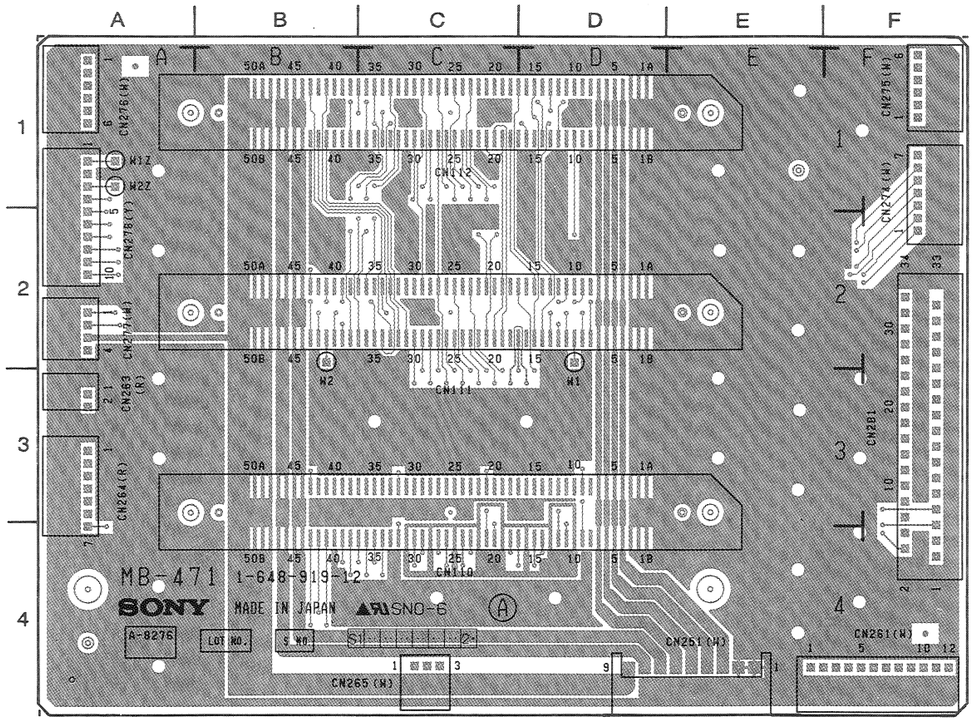

MB-471 1-648-919-12 A SIDE

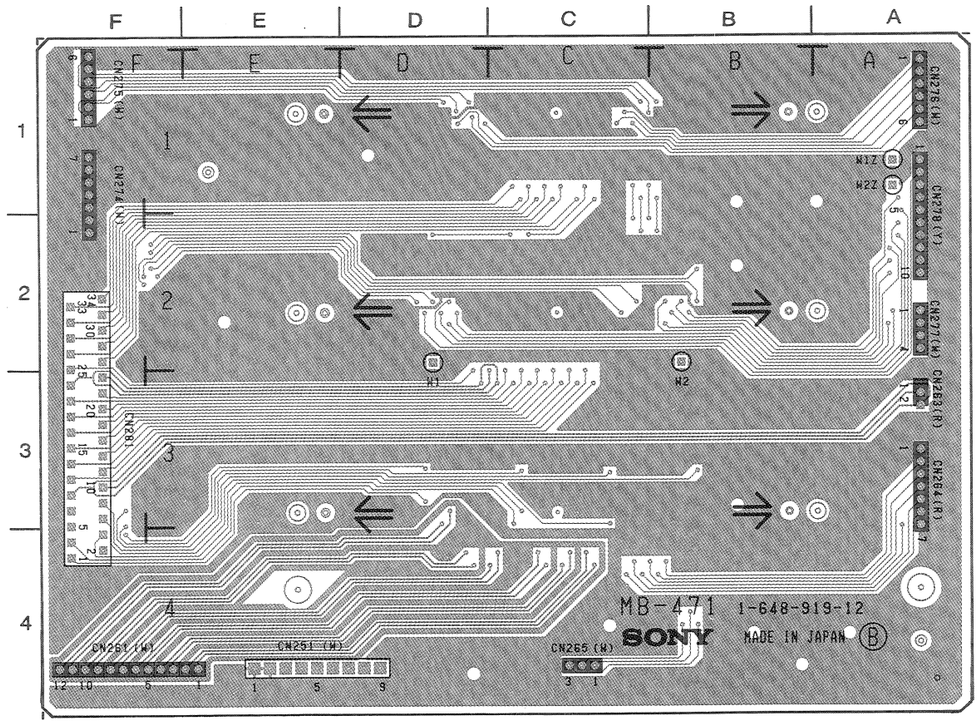

MB-471 1-648-919-12 B SIDE

UVW-1800 (J) ; Serial No. 10901 and higher
UVW-1800 (UC) ; Serial No. 13931 and higher
UVW-1800P(EK) ; Serial No. 14141 and higher

MB-471; MOTHER BOARD

MB-471(1-648-919-11)

CN110	C-4
CN111	C-3
CN112	C-1
CN251	E-4
CN261	F-4
CN263	A-3
CN264	A-3
CN265	B-4
CN274	F-1
CN275	F-1
CN276	A-1
CN277	A-2
CN278	A-2
CN281	F-3

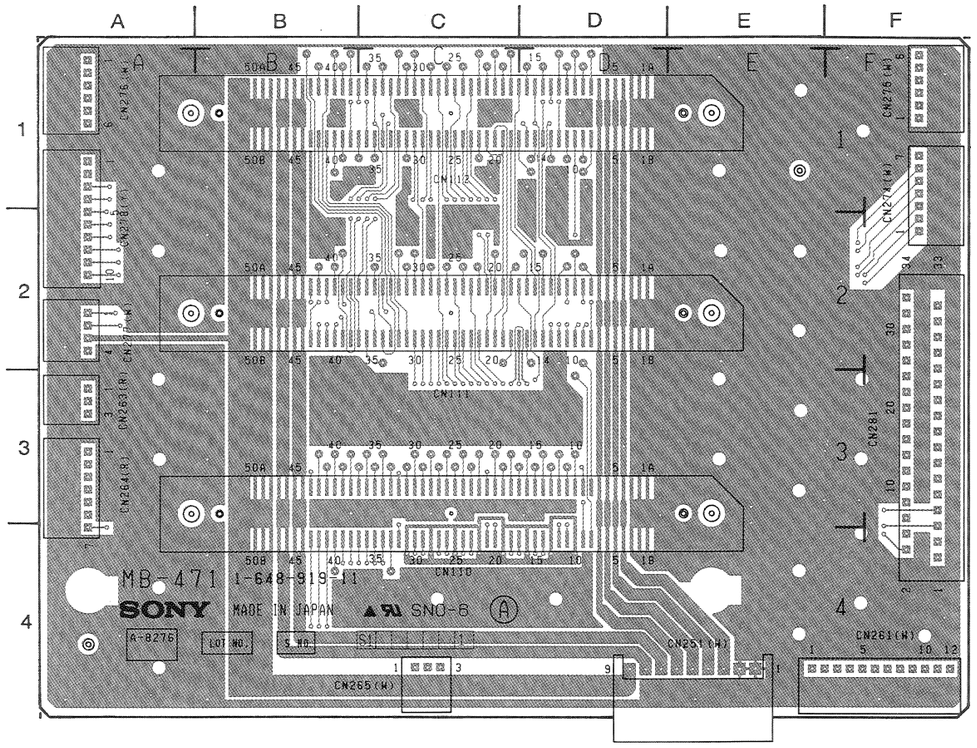

MB-471 1-648-919-11 A SIDE

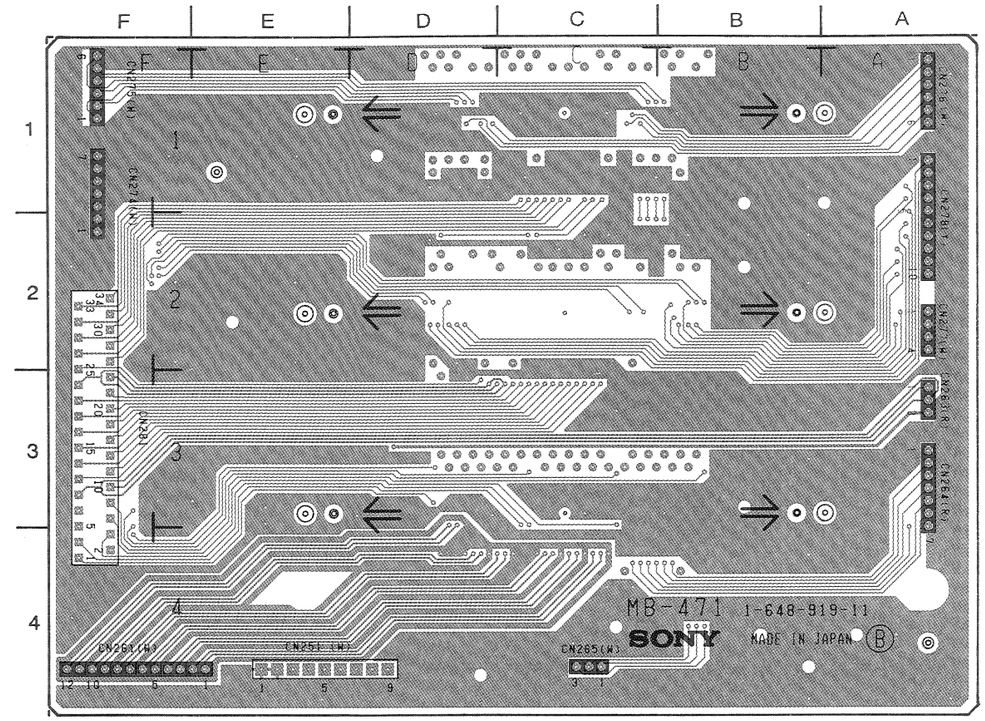

MB-471 1-648-919-11 B SIDE

UVW-1800 (J) ; Serial No. 10001 through 10900
UVW-1800 (UC) ; Serial No. 10001 through 13930
UVW-1800P(EK) ; Serial No. 10001 through 14140

MB-471A ; MOTHER BOARD

MB-471A (1-648-919-22)

CN110	C-4
CN111	C-3
CN251	E-4
CN261	F-4
CN263	A-3
CN274	F-1
CN277	A-2
CN278	A-2
CN281	F-3

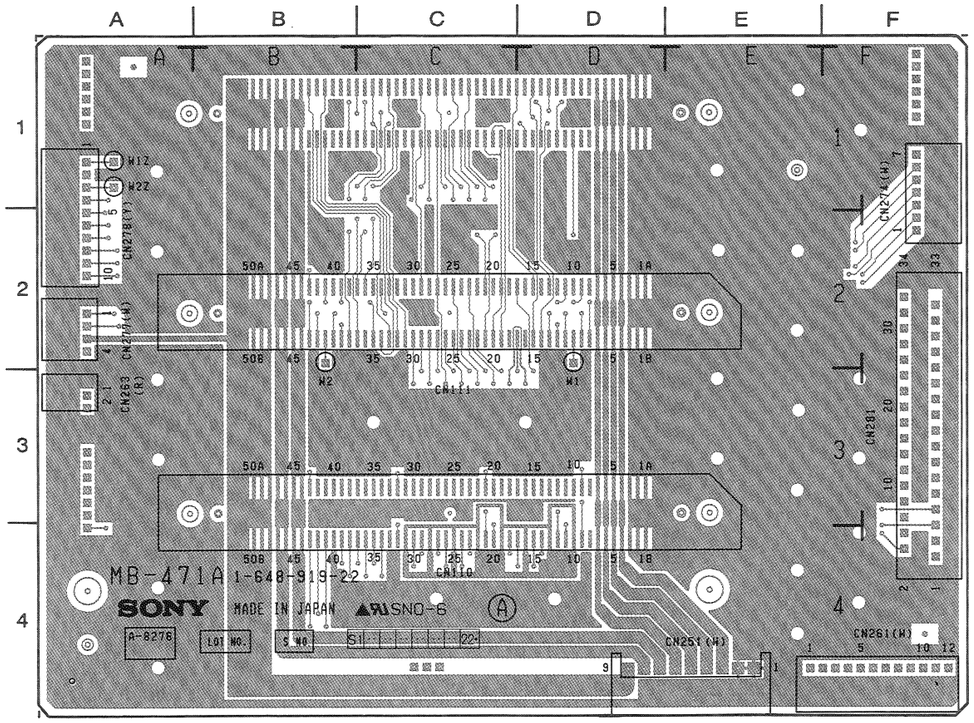

MB-471A 1-648-919-22 A SIDE

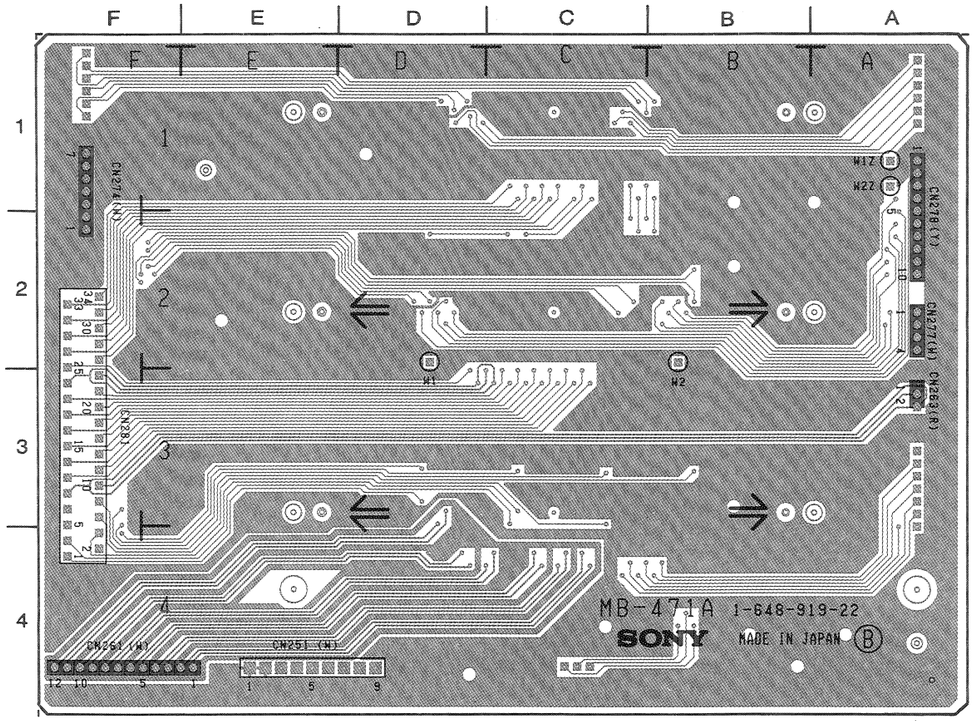

MB-471A 1-648-919-22 B SIDE

UVW-1600 (J) ; Serial No. 10601 and higher
UVW-1600 (UC) ; Serial No. 12901 and higher
UVW-1600P(EK) ; Serial No. 13781 and higher

MB-471A; MOTHER BOARD

MB-471A(1-648-919-21)

CN110	C-4
CN111	C-3
CN251	E-4
CN261	F-4
CN263	A-3
CN274	F-1
CN277	A-2
CN278	A-2
CN281	F-3

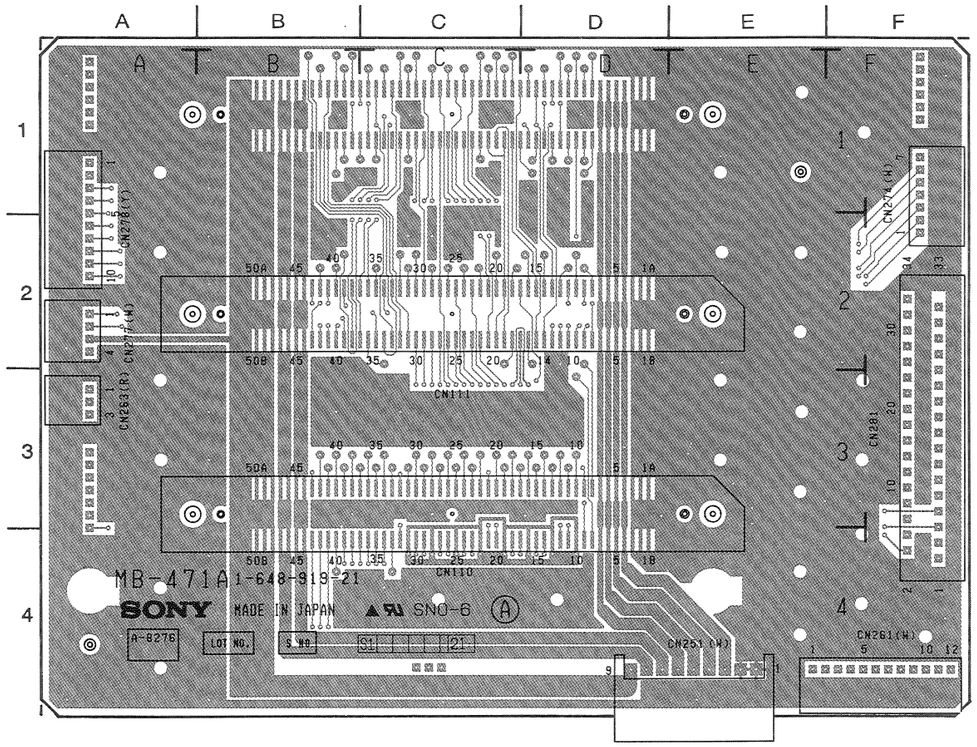

MB-471A 1-648-919-21 A SIDE

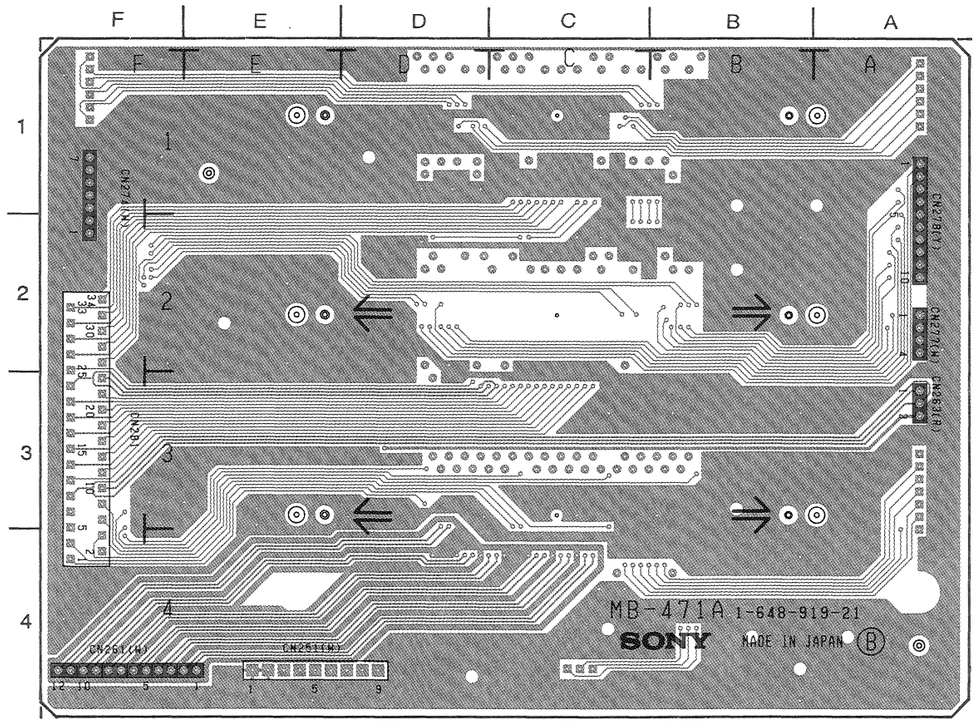

MB-471A 1-648-919-21 B SIDE

UVW-1600 (J) ; Serial No. 10001 through 10600
UVW-1600 (UC) ; Serial No. 10001 through 12900
UVW-1600P(EK) ; Serial No. 10001 through 13780

SECTION 16
SCHEMATIC DIAGRAMS

SCHEMATIC DIAGRAM INDEX

NOTE; The ⚠ -marked components are critical to safety.
Replace only with same components as specified.

16-1 (1)

CIRCUIT FUNCTION

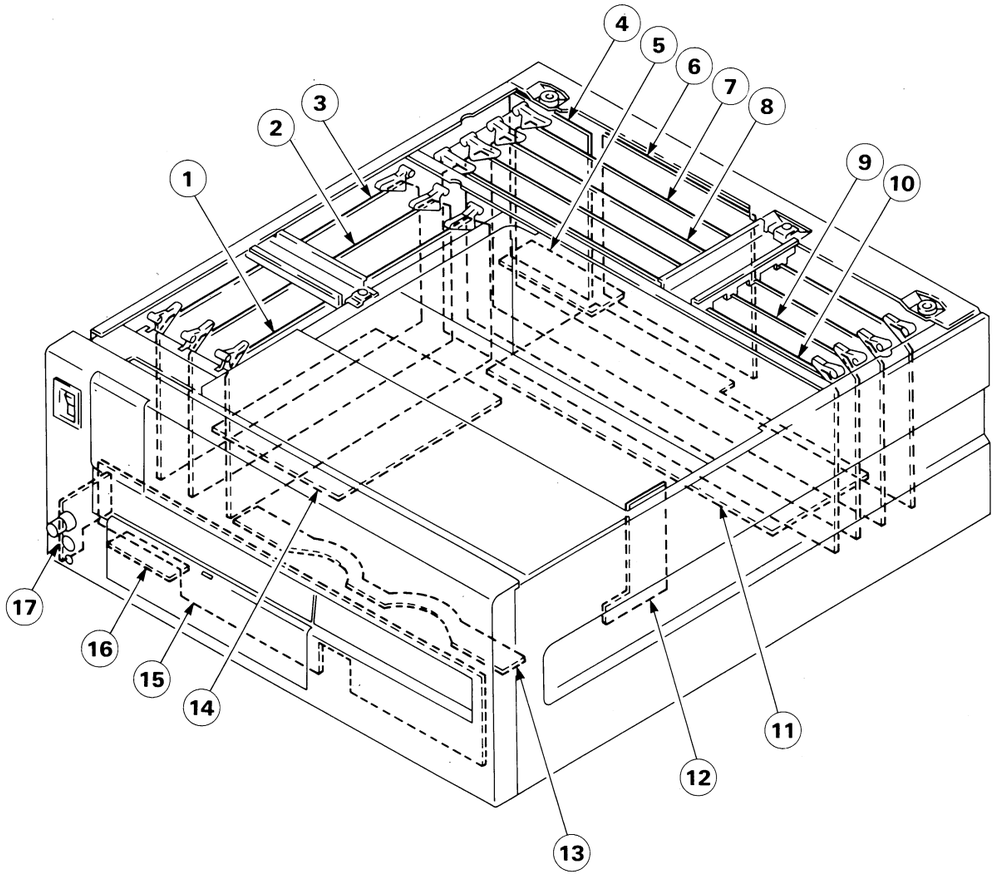

①	RP-70/P BOARD(UVW-1800/P)	; RF REC/PB AMP.,ROTARY ERASE OSC.,FULL ERASE OSC.
	RP-70A/AP BOARD(UVW-1600/P)	; RF PB AMP.
②	AP-31/P BOARD(UVW-1800/P)	; AUDIO/TC PB AMP.,METER DRIVER
	AP-31A/AP BOARD(UVW-1600/P)	; AUDIO/TC PB AMP.,METER DRIVER
③	AR-14/P BOARD(UVW-1800/P)	; AUDIO/TC REC AMP.,AUDIO/TC ERASE OSC.,AUDIO BIAS DRIVER
④	CP-226 BOARD(UVW-1800/P : FOR UC, EK)	; AUDIO INPUT/OUTPUT CONNECTOR, OUTPUT TRANSFORMER
	CP-226J BOARD(UVW-1800 : FOR J)	; AUDIO INPUT/OUTPUT CONNECTOR, OUTPUT TRANSFORMER
	CP-226A BOARD(UVW-1600/P : FOR UC, EK)	; AUDIO OUTPUT CONNECTOR,OUTPUT TRANSFORMER
	CP-226AJ BOARD(UVW-1600 : FOR J)	; AUDIO OUTPUT CONNECTOR,OUTPUT TRANSFORMER
⑤	CP-237 BOARD(UVW-1800/P)	; TBC/9P REMOTE CONNECTOR
	CP-237A BOARD(UVW-1600/P)	; TBC/9P REMOTE CONNECTOR
⑥	CP-225 BOARD(UVW-1800/P)	; VIDEO INPUT/OUTPUT CONNECTOR
	CP-225A BOARD(UVW-1600/P)	; VIDEO OUTPUT CONNECTOR
⑦	VRA-5/P BOARD(UVW-1800/P)	; Y/C REC PROCESS(DECODE,MOD),CTDM(COMPAND)

⑧	VP-43/P BOARD(UVW-1800/P)	; Y/C PB PROCESS(PB RF EQ,DEMOD.,Y-RF ENVELOPE DET),VIDEO OUTPUT DRIVER, ENCODE, SYNC/CHARA MIX
	VP-43A/AP BOARD(UVW-1600/P)	; Y/C PB PROCESS(PB RF EQ,DEMOD.,Y-RF ENVELOPE DET),VIDEO OUTPUT DRIVER, ENCODE, SYNC/CHARA MIX
⑨	TBC-25/P BOARD	; TIME BASE CORRECTOR,CTDM(EXPAND)
⑩	SS-53 BOARD	; SYSTEM CONTROL,SERVO SYSTEM MAIN,TIME CODE GENERATOR/READER, CHARACTER GENERATOR
⑪	MB-470/P BOARD(UVW-1800/P)	; MOTHER BOARD
	MB-470A/AP BOARD(UVW-1600/P)	; MOTHER BOARD
⑫	CL-25 BOARD (CASSETTE COMPARTMENT)	; CASSETTE LOADING BEGIN/NEAR-END SENSOR
⑬	PC-62 BOARD (CASSETTE COMPARTMENT)	; CASSETTE IN/LARGE CASSETTE SENSOR
⑭	MB-471 BOARD(UVW-1800/P)	; MOTHER BOARD
	MB-471A BOARD(UVW-1600/P)	; MOTHER BOARD
⑮	KY-249 BOARD(UVW-1800/P)	; FUNCTION KEY
	KY-249A BOARD(UVW-1600/P)	; FUNCTION KEY
⑯	VR-155 BOARD (UVW-1800/P)	; AUDIO REC LEVEL
⑰	HP-61 BOARD(UVW-1800/P)	; HEADPHONES JACK/VOLUME CONTROL
	HP-61A BOARD(UVW-1600/P)	; HEADPHONES JACK/VOLUME CONTROL

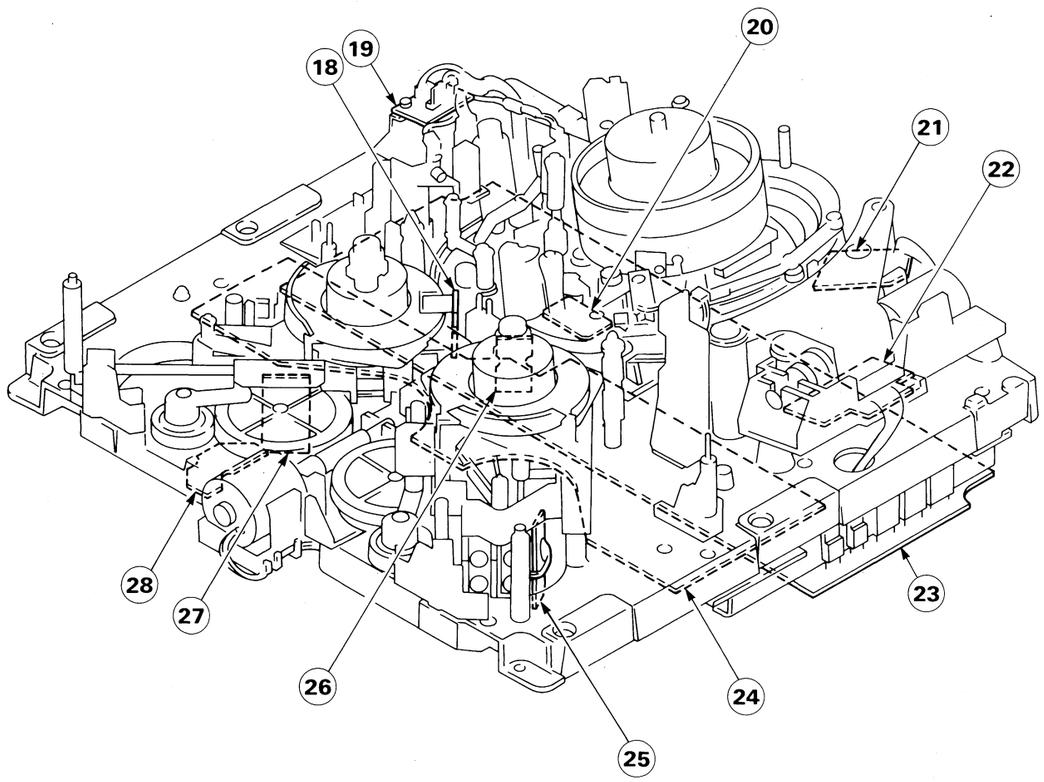

⑱ SE-207 BOARD(S SIDE) ; REEL FG
⑲ PD-35 BOARD ; PINCH SOLENOID
⑳ TR-84 BOARD ; S-TENSION SENSOR
㉑ PTC-68 BOARD ; THREAD END/UNTHREAD END SENSOR
㉒ PTC-67 BOARD ; THREADING FG/MOTOR
㉓ DR-214 BOARD ; MOTOR DRIVER,TENSION SENS. AMP., DRUM FG/PG AMP., CAPSTAN FG AMP., CTL, REC/PB AMP.
㉔ MS-39 BOARD(UVW-1800/P) ; CASSETTE INFORMATION,SOLENOID DRIVER,MECHA. CONTROL MPU,DATA STORAGE
MS-39A BOARD(UVW-1600/P) ; CASSETTE INFORMATION,SOLENOID DRIVER,MECHA. CONTROL MPU,DATA STORAGE
㉕ RM-127 BOARD ; T-REEL MOTOR
㉖ SE-207 BOARD(T SIDE) ; REEL FG
㉗ RM-126 BOARD ; S-REEL MOTOR
㉘ PTC-66 BOARD ; REEL POSITION SENSOR

AP-31 (1-648-906-12)

CN1	H-1	FS40		C-2	FS121		G-5	✱Q1		H-1	S202	C-1
CN2	A-1	FS41		D-2	FS122		G-5	Q2		H-2		
CN3	G-4	FS43		C-2	FS123		H-5	Q3		H-2	TH1	J-2
CN111	E-5	FS44	P	D-2	FS124		H-5	✱Q4		J-2	TH2	A-2
		FS44	N	D-3	FS125		H-1	✱Q5		J-2		
✱D1	J-2	FS45		D-2	FS126		J-1	✱Q6		J-2	TP1	H-1
✱D2	H-3	FS46		D-2	FS127		J-1	✱Q7		J-2	TP2	J-1
✱D3	H-4	FS47		C-3	FS128		J-1	✱Q8		H-3	TP3	J-2
✱D5	G-3	FS48		C-3	FS129	P	H-2	✱Q9		H-4	TP4	G-2
✱D6	G-3	FS49		C-3	FS129	N	J-2	✱Q10		H-4	TP5	G-1
✱D7	J-5	FS50		C-3	FS130		J-2	✱Q11		C-2	TP201	A-1
✱D8	H-5	FS51		C-3	FS131		J-2	✱Q12		E-2	TP202	A-1
✱D10	G-5	FS52		D-3	FS132		J-2	✱Q13		E-1	TP203	B-2
✱D11	E-3	FS53		C-3	FS133		J-3	✱Q14		G-3	TP204	C-2
✱D12	F-3	FS54		C-4	FS134		J-3	✱Q15		F-3	TP205	D-1
✱D13	F-3	FS55		C-4	FS135		J-3	✱Q16		F-3	TP401	G-4
✱D15	E-3	FS56		D-4	FS136		H-3	✱Q17		F-2	TP402	G-5
✱D16	E-3	FS57		D-4	FS137		J-3	Q18		J-5	TP403	D-1
✱D17	J-2	FS58		C-4	FS138		J-3	Q19		J-5		
✱D18	H-3	FS59		C-4	FS139		H-3	Q20		H-5		
✱D201	A-2	FS61		D-4	FS140		J-3	Q21		H-5		
✱D202	C-3	FS63		D-4	FS141		J-3	✱Q22		J-4		
✱D203	C-4	FS64		B-4	FS142		J-4	✱Q23		H-4		
✱D204	D-3	FS65		D-5	FS143		J-4	Q25		G-4		
✱D205	D-3	FS66		D-5	FS144		J-4	✱Q26	P	E-3		
✱D206	A-5	FS67		D-5	FS145		J-4	✱Q26	N	E-4		
✱D207	B-5	FS68		E-5	FS146		J-4	✱Q27		D-4		
✱D209	C-4	FS69		C-5	FS147		J-5	Q28		H-3		
✱D210	B-2	FS70		C-5	FS148		J-5	Q29		A-3		
D211	A-3	FS71		E-3	FS149		J-5	Q30		E-3		
✱D401	F-3	FS72		E-3	FS150		H-5	✱Q34		J-2		
✱D403	F-5	FS73		F-3	FS151		H-5	✱Q35		J-2		
✱D500	D-5	FS74		E-4	FS152		H-5	✱Q36		J-2		
		FS75		E-4	FS153		G-5	✱Q201		A-1		
E1	H-4	FS76		F-4	FS154		G-5	Q202		A-2		
E2	G-1	FS77		F-4	FS155		H-5	Q203		A-2		
E201	B-4	FS78		E-5	FS156		H-5	✱Q204		B-2		
E202	E-1	FS79		F-5				✱Q205		A-2		
		FS80		F-5	IC1		J-2	✱Q206		A-2		
FS1	A-1	FS81		H-1	IC2		J-4	✱Q207		B-2		
FS3	A-2	FS82		H-1	IC3		J-3	✱Q208		C-3		
FS4	B-2	FS83		G-1	IC4		H-3	✱Q209		B-4		
FS5	B-2	FS84		G-1	IC5		G-4	✱Q210		B-4		
FS6	B-2	FS85		G-1	IC6		G-3	✱Q211		E-1		
FS7	A-3	FS86		G-1	IC7		G-3	✱Q212		D-3		
FS8	B-3	FS87		H-1	IC8		F-2	✱Q213		D-3		
FS9	B-3	FS88		H-1	IC9		G-2	✱Q214		D-3		
FS10	A-3	FS89		H-1	IC10		G-2	✱Q215		E-2		
FS11	B-3	FS90		G-1	IC11		H-4	Q216		A-5		
FS12	A-3	FS91		G-1	IC12		E-5	Q217		A-5		
FS13	A-3	FS92		G-2	IC13		D-4	Q218		C-5		
FS14	B-3	FS93		G-2	IC14		E-3	Q219		C-5		
FS15	B-3	FS94		F-2	IC15		J-4	✱Q220		B-4		
FS16	A-4	FS96		H-2	IC201		A-2	✱Q221		B-4		
FS17	A-4	FS97		H-2	IC202		A-4	Q223		C-4		
FS18	A-4	FS98		F-2	IC203		A-3	✱Q224		B-2		
FS19	B-4	FS99		F-2	IC204		B-3	✱Q225		B-2		
FS20	A-4	FS100		G-2	IC205		C-4	✱Q226		B-2		
FS21	A-4	FS101		H-2	IC206		C-3	✱Q401		G-4		
FS22	A-5	FS102		H-2	IC207		C-3	✱Q402		F-5		
FS23	A-5	FS103		G-3	IC208		C-2	✱Q403		F-3		
FS24	A-5	FS105		G-3	IC209		C-2					
FS25	B-5	FS106		H-3	IC210		C-4	RV1		J-1		
FS26	A-5	FS107		H-3	IC211		A-4	RV2		J-1		
FS27	B-5	FS108		H-3	IC401		F-4	RV3		J-1		
FS28	B-5	FS109		H-3	IC402		F-4	RV4		H-1		
FS29	B-5	FS110		G-3	✱IC405		C-5	RV5		H-1		
FS30	C-1	FS111		G-4	✱IC406		D-5	RV201		B-1		
FS31	C-1	FS112		G-4	✱IC407		D-5	RV202		B-1		
FS32	C-1	FS113		G-4	✱IC408		C-5	RV203		B-1		
FS33	C-1	FS114		H-4	✱IC409		D-5	RV204		C-1		
FS34	C-1	FS115		H-4	IC410		F-5	RV205		C-1		
FS35	C-1	FS116		G-4								
FS36	D-1	FS117		H-4	PS1		G-5	S1		J-1		
FS38	C-2	FS118		H-4	PS2		G-5	S2		G-1		
FS39	C-2	FS119		H-5				S201		A-1		

✱ : B SIDE
P : UVW-1800P ONLY
N : UVW-1800 ONLY

 AP-31/31P (1/3)

UVW-1800 (J) ;Serial No.10901 and higher
UVW-1800 (UC);Serial No.13931 and higher
UVW-1800P(EK);Serial No.14141 and higher

AP-31/31P(1/3);CH-1 PB EQ/NR,LINE/METER/HP DRIVE

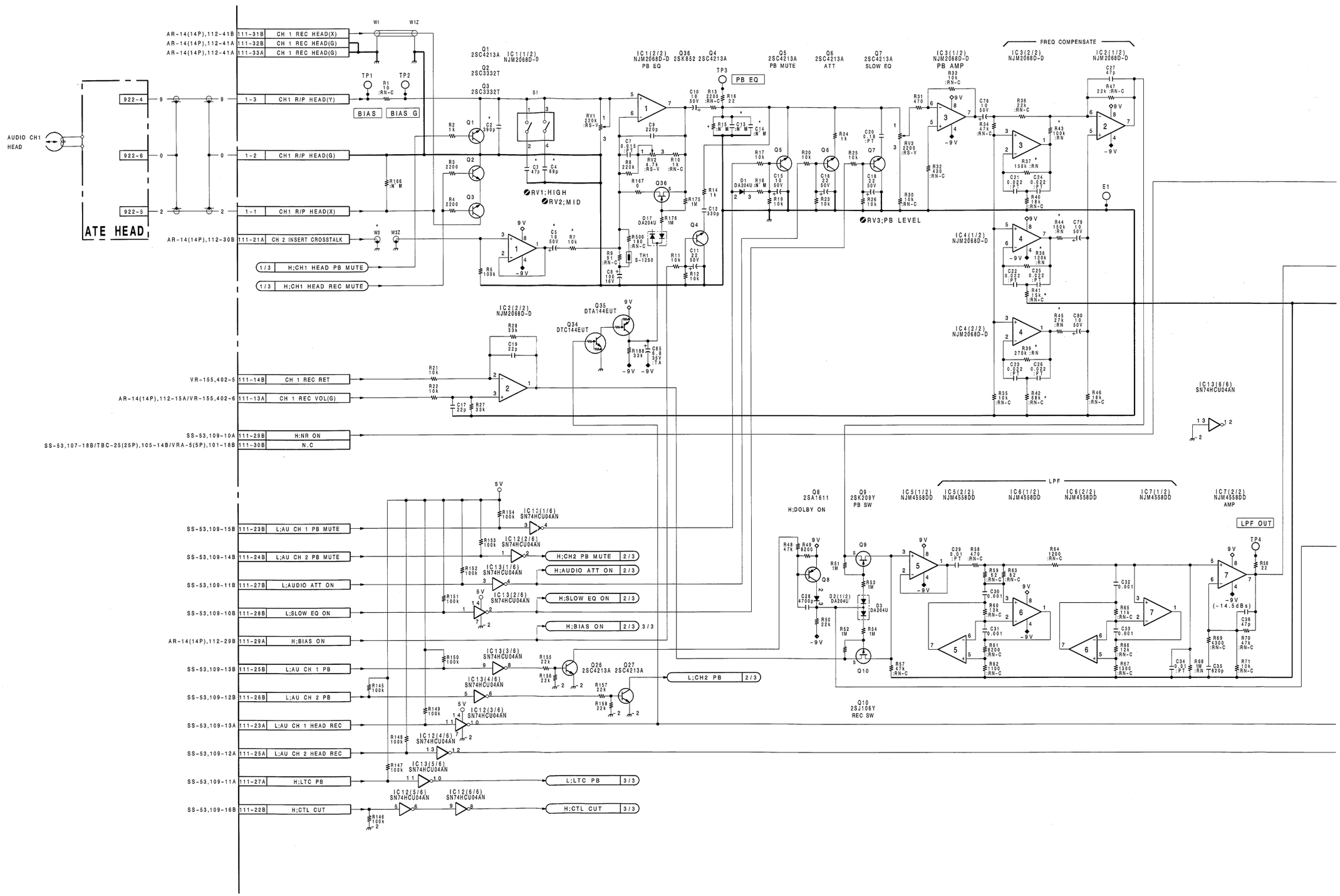

 16-5 (b1)

 AP-31/31P (1/3)

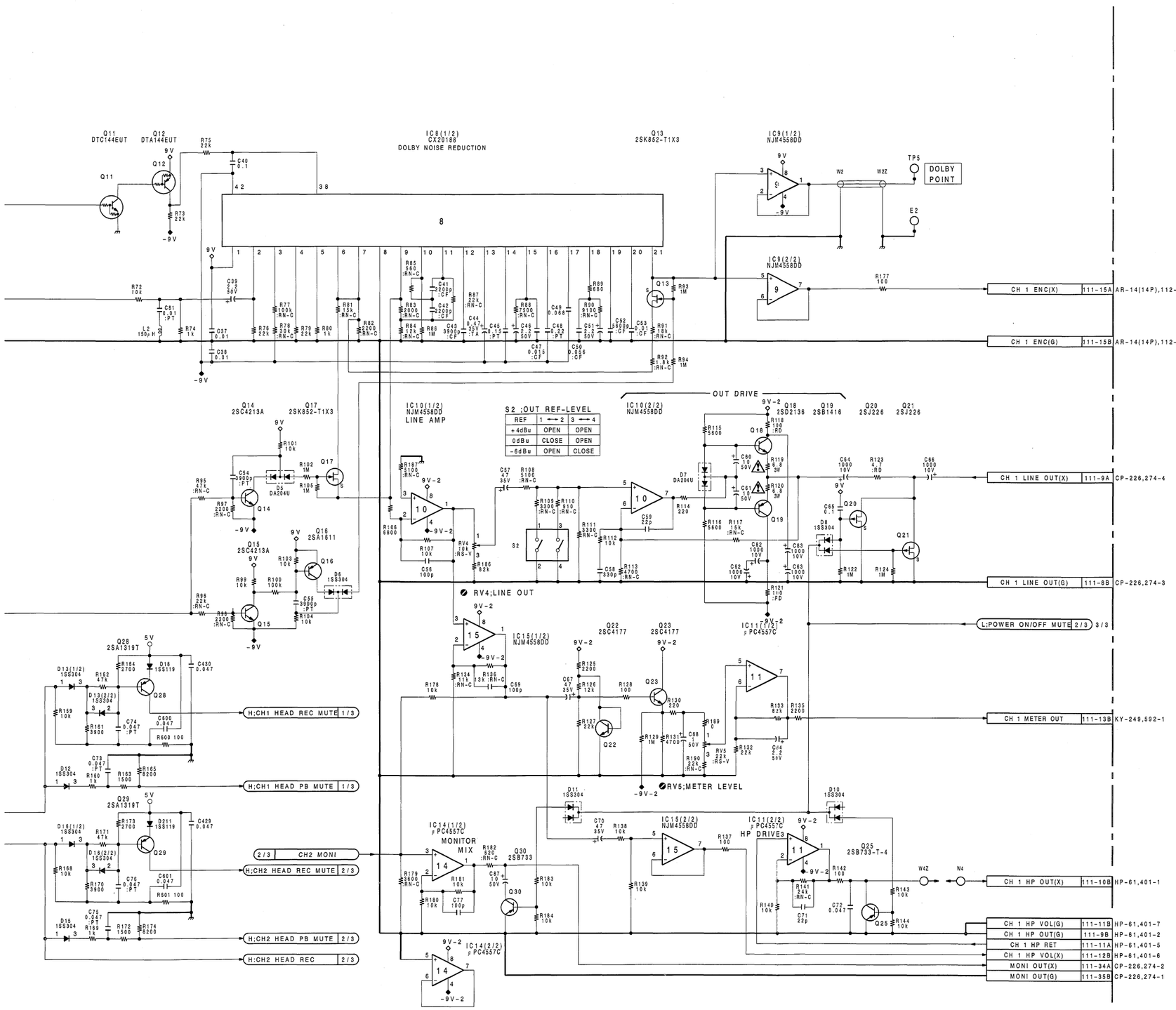

S2 ;OUT REF-LEVEL

REF	1 — 2	3 — 4
+4dBu	OPEN	OPEN
0dBu	CLOSE	OPEN
-6dBu	OPEN	CLOSE

✱	UVW-1800	
	J,UC	EK
C2	390P	470P
C3	47P	47P
C4	68P	22P
C5	10/50V	10/50V
C13	N'M	6800P(:PT)
C14	N'M	3300P
R7	10K	10K
R15	N'M	▲10K
R37	Δ150K	Δ270K
R38	Δ120K	Δ120K
R39	Δ270K	Δ270K
R41	▲15K	▲56K
R42	▲68K	▲100K
R43	Δ100K	N'M
R44	Δ150K	Δ 1M
R45	Δ 27K	Δ 22K
W3	1-952-673-11	1-952-673-11

Δ =:RN ▲ =:RN-C

AP-31/31P BOARD (1/3)

BOARD NO.1-648-906-12
UVW-1800 (J) ;#10901-
UVW-1800 (UC);#13931-
UVW-1800P(EK);#14141-

AP-31 (1-648-906-12)

	CN1	H-1	FS40		C-2	FS121		G-5	✱Q1		H-1	S202	C-1
	CN2	A-1	FS41		D-2	FS122		G-5	Q2		H-2		
	CN3	G-4	FS43		C-2	FS123		H-5	Q3		H-2	TH1	J-2
	CN111	E-5	FS44	P	D-2	FS124		H-5	✱Q4		J-2	TH2	A-2
			FS44	N	D-3	FS125		H-1	✱Q5		J-2		
	✱D1	J-2	FS45		D-2	FS126		J-1	✱Q6		J-2	TP1	H-1
	✱D2	H-3	FS46		D-2	FS127		J-1	✱Q7		J-2	TP2	J-1
	✱D3	H-4	FS47		C-3	FS128		J-1	✱Q8		H-3	TP3	J-2
	✱D5	G-3	FS48		C-3	FS129	P	H-2	✱Q9		H-4	TP4	G-2
	✱D6	G-3	FS49		C-3	FS129	N	J-2	✱Q10		H-4	TP5	G-1
	✱D7	J-5	FS50		C-3	FS130		J-2	✱Q11		C-2	TP201	A-1
	✱D8	H-5	FS51		C-3	FS131		J-2	✱Q12		E-2	TP202	A-1
	✱D10	G-5	FS52		D-3	FS132		J-2	✱Q13		E-1	TP203	B-2
	✱D11	E-3	FS53		C-3	FS133		J-3	✱Q14		G-3	TP204	C-2
	✱D12	F-3	FS54		C-4	FS134		J-3	✱Q15		F-3	TP205	D-1
	✱D13	F-3	FS55		C-4	FS135		J-3	✱Q16		F-3	TP401	G-4
	✱D15	E-3	FS56		D-4	FS136		H-3	✱Q17		F-2	TP402	G-5
	✱D16	E-3	FS57		D-4	FS137		J-3	Q18		J-5	TP403	D-1
	✱D17	J-2	FS58		C-4	FS138		J-3	Q19		J-5		
	✱D18	H-3	FS59		C-4	FS139		H-3	Q20		H-5		
	✱D201	A-2	FS61		D-4	FS140		J-3	Q21		H-5		
	✱D202	C-3	FS63		D-4	FS141		J-3	✱Q22		J-4		
	✱D203	C-4	FS64		B-4	FS142		J-4	✱Q23		H-4		
	✱D204	D-3	FS65		D-5	FS143		J-4	Q25		G-4		
	✱D205	D-3	FS66		D-5	FS144		J-4	✱Q26	P	E-3		
	✱D206	A-5	FS67		D-5	FS145		J-4	✱Q26	N	E-4		
	✱D207	B-5	FS68		E-5	FS146		J-4	✱Q27		D-4		
	✱D209	C-4	FS69		C-5	FS147		J-5	Q28		H-3		
	✱D210	B-2	FS70		C-5	FS148		J-5	Q29		A-3		
	D211	A-3	FS71		E-3	FS149		J-5	Q30		E-3		
	✱D401	F-3	FS72		E-3	FS150		H-5	✱Q34		J-2		
	✱D403	F-5	FS73		F-3	FS151		H-5	✱Q35		J-2		
	✱D500	D-5	FS74		E-4	FS152		H-5	✱Q36		J-2		
			FS75		E-4	FS153		G-5	✱Q201		A-1		
	E1	H-4	FS76		F-4	FS154		G-5	Q202		A-2		
	E2	G-1	FS77		F-4	FS155		H-5	Q203		A-2		
	E201	B-4	FS78		E-5	FS156		H-5	✱Q204		B-2		
	E202	E-1	FS79		F-5				✱Q205		A-2		
			FS80		F-5	IC1		J-2	✱Q206		A-2		
	FS1	A-1	FS81		H-1	IC2		J-4	✱Q207		B-2		
	FS3	A-2	FS82		H-1	IC3		J-3	✱Q208		C-3		
	FS4	B-2	FS83		G-1	IC4		H-3	✱Q209		B-4		
	FS5	B-2	FS84		G-1	IC5		G-4	✱Q210		B-4		
	FS6	B-2	FS85		G-1	IC6		G-3	✱Q211		E-1		
	FS7	A-3	FS86		G-1	IC7		G-3	✱Q212		D-3		
	FS8	B-3	FS87		H-1	IC8		F-2	✱Q213		D-3		
	FS9	B-3	FS88		H-1	IC9		G-2	✱Q214		D-3		
	FS10	A-3	FS89		H-1	IC10		G-2	✱Q215		E-2		
	FS11	B-3	FS90		G-1	IC11		H-4	Q216		A-5		
	FS12	A-3	FS91		G-1	IC12		E-5	Q217		A-5		
	FS13	A-3	FS92		G-2	IC13		D-4	Q218		C-5		
	FS14	B-3	FS93		G-2	IC14		E-3	Q219		C-5		
	FS15	B-3	FS94		F-2	IC15		J-4	✱Q220		B-4		
	FS16	A-4	FS96		H-2	IC201		A-2	✱Q221		B-4		
	FS17	A-4	FS97		H-2	IC202		A-4	Q223		C-4		
	FS18	A-4	FS98		F-2	IC203		A-3	✱Q224		B-2		
	FS19	B-4	FS99		F-2	IC204		B-3	✱Q225		B-2		
	FS20	A-4	FS100		G-2	IC205		C-4	✱Q226		B-2		
	FS21	A-4	FS101		H-2	IC206		C-3	✱Q401		G-4		
	FS22	A-5	FS102		H-2	IC207		C-3	✱Q402		F-5		
	FS23	A-5	FS103		G-3	IC208		C-2	✱Q403		F-3		
	FS24	A-5	FS105		G-3	IC209		C-2					
	FS25	B-5	FS106		H-3	IC210		C-4	RV1		J-1		
	FS26	A-5	FS107		H-3	IC211		A-4	RV2		J-1		
	FS27	B-5	FS108		H-3	IC401		F-4	RV3		J-1		
	FS28	B-5	FS109		H-3	IC402		F-4	RV4		H-1		
	FS29	B-5	FS110		G-3	✱IC405		C-5	RV5		H-1		
	FS30	C-1	FS111		G-4	✱IC406		D-5	RV201		B-1		
	FS31	C-1	FS112		G-4	✱IC407		D-5	RV202		B-1		
	FS32	C-1	FS113		G-4	✱IC408		C-5	RV203		B-1		
	FS33	C-1	FS114		H-4	✱IC409		D-5	RV204		C-1		
	FS34	C-1	FS115		H-4	IC410		F-5	RV205		C-1		
	FS35	C-1	FS116		G-4								
	FS36	D-1	FS117		H-4	PS1		G-5	S1		J-1		
	FS38	C-2	FS118		H-4	PS2		G-5	S2		G-1		
	FS39	C-2	FS119		H-5				S201		A-1		

✱ : B SIDE
P : UVW-1800P ONLY
N : UVW-1800 ONLY

UVW-1800 (J) ;Serial No.10901 and higher
UVW-1800 (UC);Serial No.13931 and higher
UVW-1800P(EK);Serial No.14141 and higher

AP-31/31P(2/3);CH-2 PB EQ/NR,LINE/METER/HP DRIVE

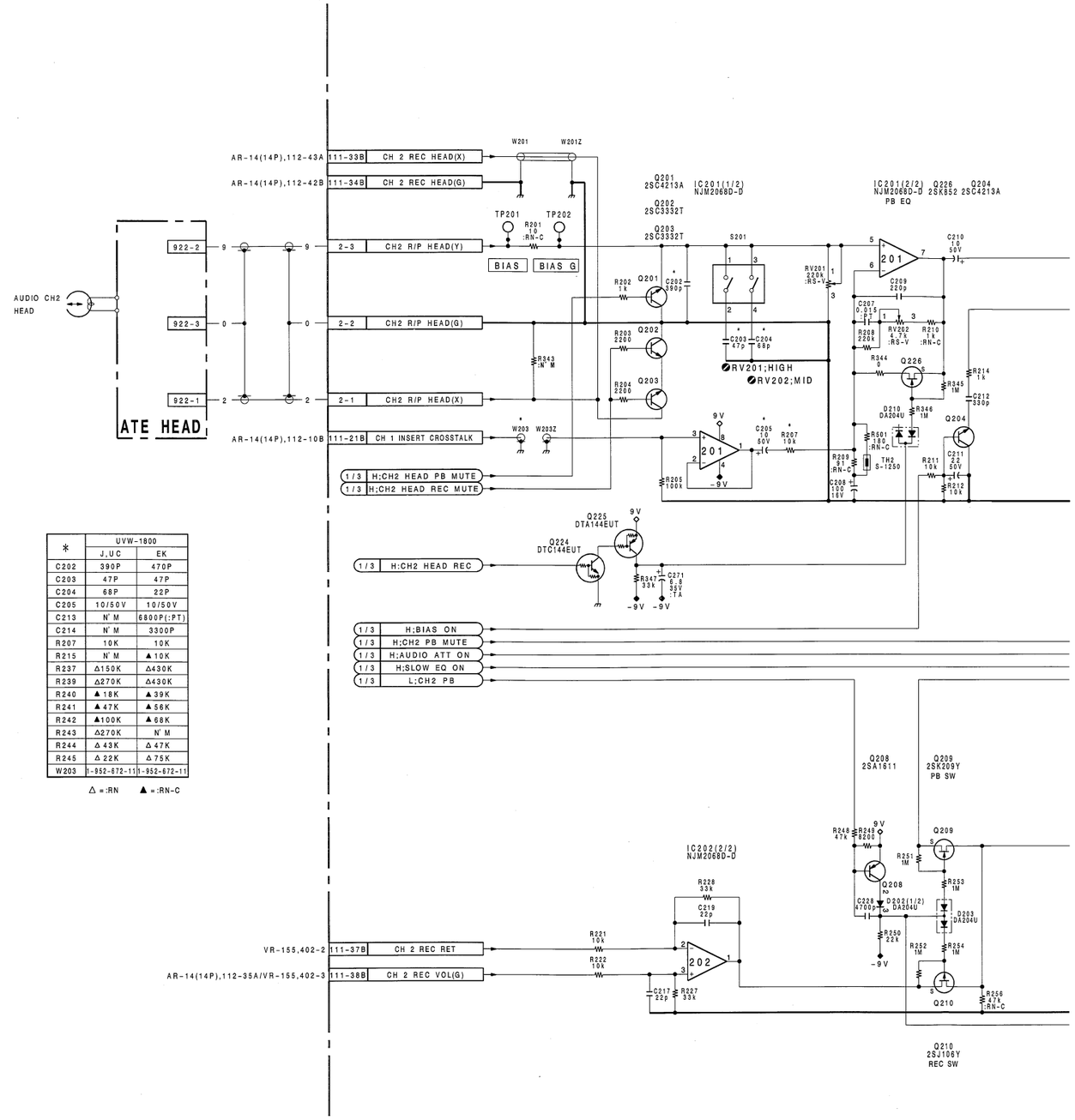

✱	UVW-1800	
	J,UC	EK
C202	390P	470P
C203	47P	47P
C204	68P	22P
C205	10/50V	10/50V
C213	N'M	6800P(:PT)
C214	N'M	3300P
R207	10K	10K
R215	N'M	▲10K
R237	Δ150K	Δ430K
R239	Δ270K	Δ430K
R240	▲18K	▲39K
R241	▲47K	▲56K
R242	▲100K	▲68K
R243	Δ270K	N'M
R244	Δ43K	Δ47K
R245	Δ22K	Δ75K
W203	1-952-672-11	1-952-672-11

Δ =:RN ▲ =:RN-C

 AP-31/31P (2/3)

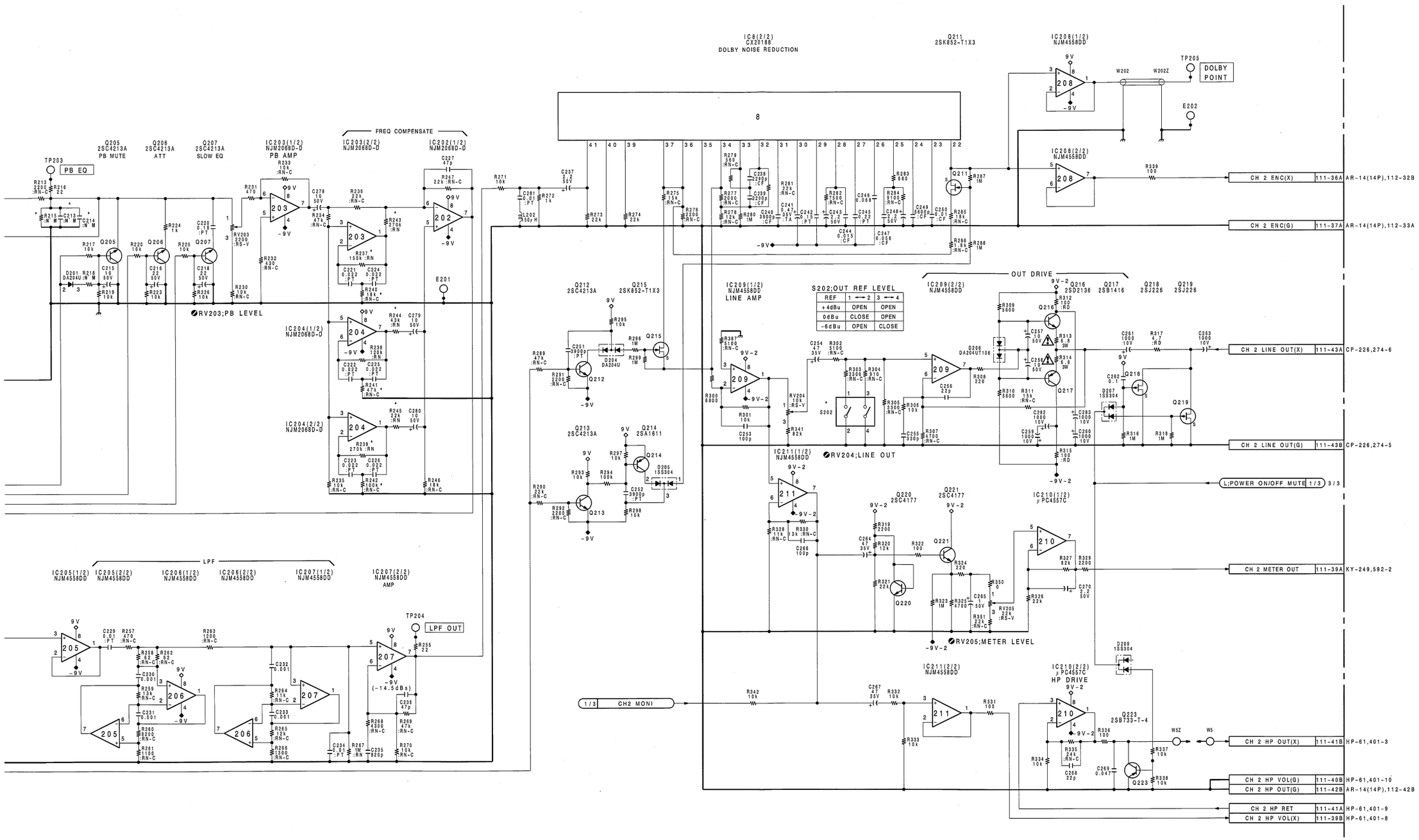

AP-31/31P BOARD (2/3)

BOARD NO.1-648-906-12
UVW-1800 (J) ;#10901-
UVW-1800 (UC);#13931-
UVW-1800P(EK);#14141-

 AP-31/31P

AP-31 (1-648-906-12)

CN1	H-1	FS40	C-2	FS121	G-5	✱Q1	H-1	S202	C-1
CN2	A-1	FS41	D-2	FS122	G-5	Q2	H-2		
CN3	G-4	FS43	C-2	FS123	H-5	Q3	H-2	TH1	J-2
CN111	E-5	FS44 P	D-2	FS124	H-5	✱Q4	J-2	TH2	A-2
		FS44 N	D-3	FS125	H-1	✱Q5	J-2		
✱D1	J-2	FS45	D-2	FS126	J-1	✱Q6	J-2	TP1	H-1
✱D2	H-3	FS46	D-2	FS127	J-1	✱Q7	J-2	TP2	J-1
✱D3	H-4	FS47	C-3	FS128	J-1	✱Q8	H-3	TP3	J-2
✱D5	G-3	FS48	C-3	FS129 P	H-2	✱Q9	H-4	TP4	G-2
✱D6	G-3	FS49	C-3	FS129 N	J-2	✱Q10	H-4	TP5	G-1
✱D7	J-5	FS50	C-3	FS130	J-2	✱Q11	C-2	TP201	A-1
✱D8	H-5	FS51	C-3	FS131	J-2	✱Q12	E-2	TP202	A-1
✱D10	G-5	FS52	D-3	FS132	J-2	✱Q13	E-1	TP203	B-2
✱D11	E-3	FS53	C-3	FS133	J-3	✱Q14	G-3	TP204	C-2
✱D12	F-3	FS54	C-4	FS134	J-3	✱Q15	F-3	TP205	D-1
✱D13	F-3	FS55	C-4	FS135	J-3	✱Q16	F-3	TP401	G-4
✱D15	E-3	FS56	D-4	FS136	H-3	✱Q17	F-2	TP402	G-5
✱D16	E-3	FS57	D-4	FS137	J-3	Q18	J-5	TP403	D-1
✱D17	J-2	FS58	C-4	FS138	J-3	Q19	J-5		
✱D18	H-3	FS59	C-4	FS139	H-3	Q20	H-5		
✱D201	A-2	FS61	D-4	FS140	J-3	Q21	H-5		
✱D202	C-3	FS63	D-4	FS141	J-3	✱Q22	J-4		
✱D203	C-4	FS64	B-4	FS142	J-4	✱Q23	H-4		
✱D204	D-3	FS65	D-5	FS143	J-4	Q25	G-4		
✱D205	D-3	FS66	D-5	FS144	J-4	✱Q26 P	E-3		
✱D206	A-5	FS67	D-5	FS145	J-4	✱Q26 N	E-4		
✱D207	B-5	FS68	E-5	FS146	J-4	✱Q27	D-4		
✱D209	C-4	FS69	C-5	FS147	J-5	Q28	H-3		
✱D210	B-2	FS70	C-5	FS148	J-5	Q29	A-3		
D211	A-3	FS71	E-3	FS149	J-5	Q30	E-3		
✱D401	F-3	FS72	E-3	FS150	H-5	✱Q34	J-2		
✱D403	F-5	FS73	F-3	FS151	H-5	✱Q35	J-2		
✱D500	D-5	FS74	E-4	FS152	H-5	✱Q36	J-2		
		FS75	E-4	FS153	G-5	✱Q201	A-1		
E1	H-4	FS76	F-4	FS154	G-5	Q202	A-2		
E2	G-1	FS77	F-4	FS155	H-5	Q203	A-2		
E201	B-4	FS78	E-5	FS156	H-5	✱Q204	B-2		
E202	E-1	FS79	F-5			✱Q205	A-2		
		FS80	F-5	IC1	J-2	✱Q206	A-2		
FS1	A-1	FS81	H-1	IC2	J-4	✱Q207	B-2		
FS3	A-2	FS82	H-1	IC3	J-3	✱Q208	C-3		
FS4	B-2	FS83	G-1	IC4	H-3	✱Q209	B-4		
FS5	B-2	FS84	G-1	IC5	G-4	✱Q210	B-4		
FS6	B-2	FS85	G-1	IC6	G-3	✱Q211	E-1		
FS7	A-3	FS86	G-1	IC7	G-3	✱Q212	D-3		
FS8	B-3	FS87	H-1	IC8	F-2	✱Q213	D-3		
FS9	B-3	FS88	H-1	IC9	G-2	✱Q214	D-3		
FS10	A-3	FS89	H-1	IC10	G-2	✱Q215	E-2		
FS11	B-3	FS90	G-1	IC11	H-4	Q216	A-5		
FS12	A-3	FS91	G-1	IC12	E-5	Q217	A-5		
FS13	A-3	FS92	G-2	IC13	D-4	Q218	C-5		
FS14	B-3	FS93	G-2	IC14	E-3	Q219	C-5		
FS15	B-3	FS94	F-2	IC15	J-4	✱Q220	B-4		
FS16	A-4	FS96	H-2	IC201	A-2	✱Q221	B-4		
FS17	A-4	FS97	H-2	IC202	A-4	Q223	C-4		
FS18	A-4	FS98	F-2	IC203	A-3	✱Q224	B-2		
FS19	B-4	FS99	F-2	IC204	B-3	✱Q225	B-2		
FS20	A-4	FS100	G-2	IC205	C-4	✱Q226	B-2		
FS21	A-4	FS101	H-2	IC206	C-3	✱Q401	G-4		
FS22	A-5	FS102	H-2	IC207	C-3	✱Q402	F-5		
FS23	A-5	FS103	G-3	IC208	C-2	✱Q403	F-3		
FS24	A-5	FS105	G-3	IC209	C-2				
FS25	B-5	FS106	H-3	IC210	C-4	RV1	J-1		
FS26	A-5	FS107	H-3	IC211	A-4	RV2	J-1		
FS27	B-5	FS108	H-3	IC401	F-4	RV3	J-1		
FS28	B-5	FS109	H-3	IC402	F-4	RV4	H-1		
FS29	B-5	FS110	G-3	✱IC405	C-5	RV5	H-1		
FS30	C-1	FS111	G-4	✱IC406	D-5	RV201	B-1		
FS31	C-1	FS112	G-4	✱IC407	D-5	RV202	B-1		
FS32	C-1	FS113	G-4	✱IC408	C-5	RV203	B-1		
FS33	C-1	FS114	H-4	✱IC409	D-5	RV204	C-1		
FS34	C-1	FS115	H-4	IC410	F-5	RV205	C-1		
FS35	C-1	FS116	G-4						
FS36	D-1	FS117	H-4	PS1	G-5	S1	J-1		
FS38	C-2	FS118	H-4	PS2	G-5	S2	G-1		
FS39	C-2	FS119	H-5			S201	A-1		

✱ : B SIDE
P : UVW-1800P ONLY
N : UVW-1800 ONLY

 16-12 (b)

 AP-31/31P (3/3)

UVW-1800 (J) ;Serial No.10901 and higher
UVW-1800 (UC);Serial No.13931 and higher
UVW-1800P(EK);Serial No.14141 and higher

AP-31/31P(3/3);LTC PB

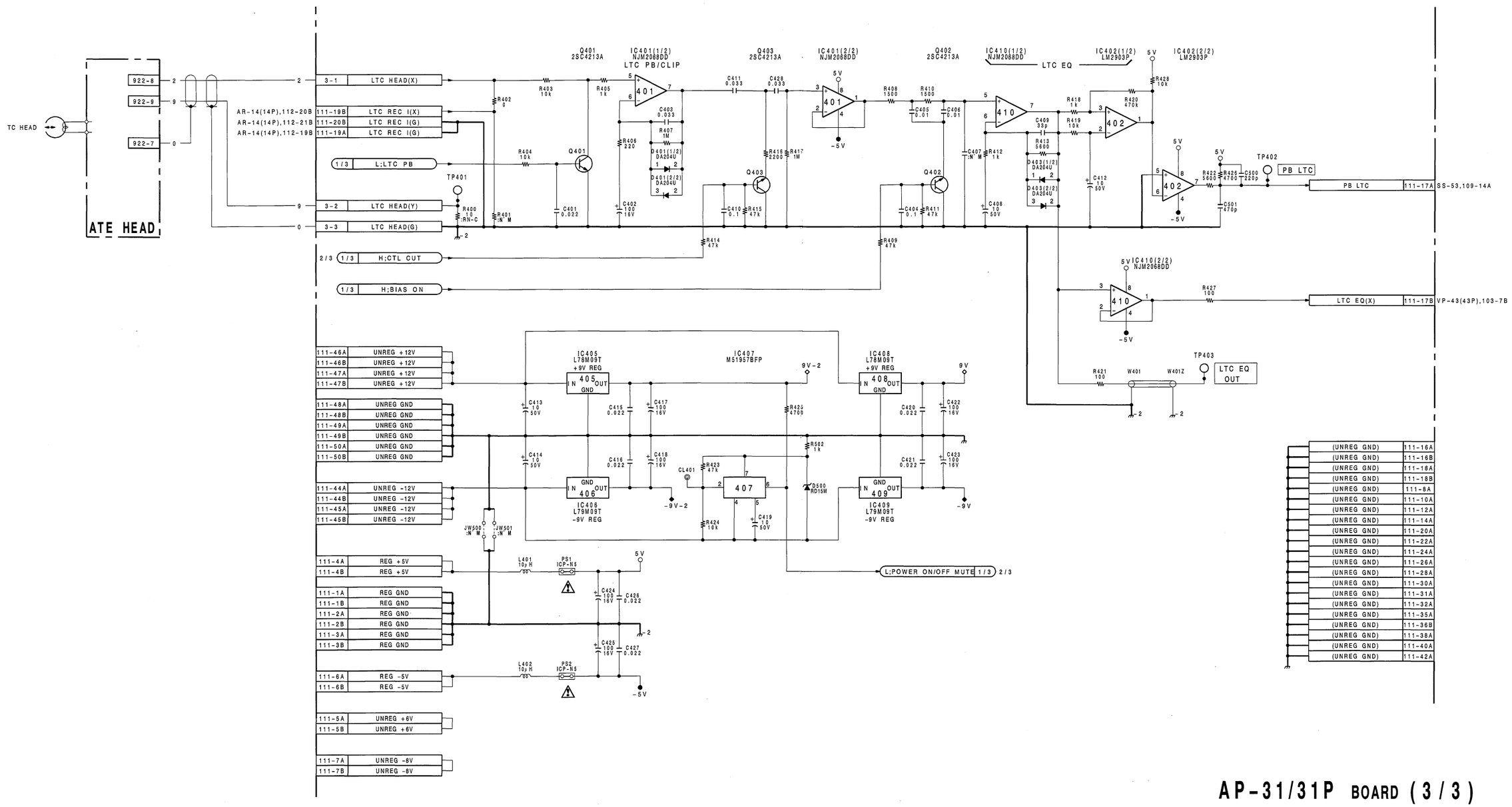

AP-31/31P BOARD (3/3)

BOARD NO.1-648-906-12
UVW-1800 (J) ;#10901-
UVW-1800 (UC);#13931-
UVW-1800P(EK);#14141-

 16-13 (b)

 AP-31/31P

AP-31 (1-648-906-11)

CN1	H-1	FS40	C-2	FS121	G-5	Q2	H-2	✱TH1	J-2
CN2	A-1	FS41	D-2	FS122	G-5	Q3	H-2	✱TH2	B-2
CN3	G-4	FS43	C-2	FS123	H-5	✱Q4	J-2		
CN111	E-5	FS44	D-2	FS124	H-5	✱Q5	J-2	TP1	H-1
		FS45	D-2	FS125	H-1	✱Q6	J-2	TP2	J-1
✱D1	J-2	FS46	D-2	FS126	J-1	✱Q7	J-2	TP3	J-2
✱D2	H-3	FS47	C-3	FS127	J-1	✱Q8	H-3	TP4	G-2
✱D3	H-4	FS48	C-3	FS128	J-1	✱Q9	H-4	TP5	G-1
✱D5	G-3	FS49	C-3	FS129	H-2	✱Q10	H-4	TP201	A-1
✱D6	G-3	FS50	C-3	FS130	J-2	✱Q11	C-2	TP202	A-1
✱D7	J-5	FS51	C-3	FS131	J-2	✱Q12	E-2	TP203	B-2
✱D8	H-5	FS52	D-3	FS132	J-2	✱Q13	E-1	TP204	C-2
✱D10	G-5	FS53	C-3	FS133	J-3	✱Q14	G-3	TP205	D-1
✱D11	E-3	FS54	C-4	FS134	J-3	✱Q15	F-3	TP401	G-4
✱D12	F-3	FS55	C-4	FS135	J-3	✱Q16	F-3	TP402	G-5
✱D13	F-3	FS56	D-4	FS136	H-3	✱Q17	F-2	TP403	D-1
✱D15	E-3	FS57	D-4	FS137	J-3	Q18	J-5		
✱D16	E-3	FS58	C-4	FS138	J-3	Q19	J-5		
✱D17	J-2	FS59	C-4	FS139	H-3	Q20	H-5		
✱D18	H-2	FS61	D-4	FS140	J-3	Q21	H-5		
✱D201	A-2	FS63	D-4	FS141	J-3	✱Q22	J-4		
✱D202	C-3	FS64	B-4	FS142	J-4	✱Q23	H-4		
✱D203	C-4	FS65	D-5	FS143	J-4	Q25	G-4		
✱D204	D-3	FS66	D-5	FS144	J-4	✱Q26	E-3		
✱D205	D-3	FS67	D-5	FS145	J-4	✱Q27	D-4		
✱D206	A-5	FS68	E-5	FS146	J-4	Q28	H-3		
✱D207	B-5	FS69	C-5	FS147	J-5	Q29	A-3		
✱D209	C-4	FS70	C-5	FS148	J-5	Q30	E-3		
✱D210	B-2	FS71	E-3	FS149	J-5	✱Q34	J-2		
✱D211	A-3	FS72	E-3	FS150	H-5	✱Q35	J-2		
✱D401	F-3	FS73	F-3	FS151	H-5	✱Q36	J-2		
✱D403	F-5	FS74	E-4	FS152	H-5	✱Q201	A-1		
✱D500 P	D-5	FS75	E-4	FS153	G-5	Q202	A-2		
		FS76	F-4	FS154	G-5	Q203	A-2		
E1	H-4	FS77	F-4	FS155	H-5	✱Q204	B-2		
E2	G-1	FS78	E-5	FS156	H-5	✱Q205	A-2		
E201	B-4	FS79	F-5			✱Q206	A-2		
E202	E-1	FS80	F-5	IC1	J-2	✱Q207	B-2		
		FS81	H-1	IC2	J-4	✱Q208	C-3		
FS1	A-1	FS82	H-1	IC3	J-3	✱Q209	B-4		
FS3	A-2	FS83	G-1	IC4	H-3	✱Q210	B-4		
FS4	B-2	FS84	G-1	IC5	G-4	✱Q211	E-1		
FS5	B-2	FS85	G-1	IC6	G-3	✱Q212	D-3		
FS6	B-2	FS86	G-1	IC7	G-3	✱Q213	D-3		
FS7	A-3	FS87	H-1	IC8	F-2	✱Q214	D-3		
FS8	B-3	FS88	H-1	IC9	G-2	✱Q215	E-2		
FS9	B-3	FS89	H-1	IC10	G-2	Q216	A-5		
FS10	A-3	FS90	G-1	IC11	H-4	Q217	A-5		
FS11	B-3	FS91	G-1	IC12	E-5	Q218	C-5		
FS12	A-3	FS92	G-2	IC13	D-4	Q219	C-5		
FS13	A-3	FS93	G-2	IC14	E-3	✱Q220	B-4		
FS14	B-3	FS94	F-2	IC15	J-4	✱Q221	B-4		
FS15	B-3	FS96	H-2	IC201	A-2	Q223	C-4		
FS16	A-4	FS97	H-2	IC202	A-4	✱Q224	B-2		
FS17	A-4	FS98	F-2	IC203	A-3	✱Q225	B-2		
FS18	A-4	FS99	F-2	IC204	B-3	✱Q226	B-2		
FS19	B-4	FS100	G-2	IC205	C-4	✱Q401	G-4		
FS20	A-4	FS101	H-2	IC206	C-3	✱Q402	F-5		
FS21	A-4	FS102	H-2	IC207	C-3	✱Q403	F-3		
FS22	A-5	FS103	G-3	IC208	C-2				
FS23	A-5	FS104	G-3	IC209	C-2	RV1	J-1		
FS24	A-5	FS105	G-3	IC210	C-4	RV2	J-1		
FS25	B-5	FS106	H-3	IC211	A-4	RV3	J-1		
FS26	A-5	FS107	H-3	IC401	F-4	RV4	H-1		
FS27	B-5	FS108	H-3	IC402	F-4	RV5	H-1		
FS28	B-5	FS109	H-3	✱IC405	C-5	RV201	B-1		
FS29	B-5	FS110	G-3	✱IC406	D-5	RV202	B-1		
FS30	C-1	FS111	G-4	✱IC407	D-5	RV203	B-1		
FS31	C-1	FS112	G-4	✱IC408	C-5	RV204	C-1		
FS32	C-1	FS113	G-4	✱IC409	D-5	RV205	C-1		
FS33	C-1	FS114	H-4	IC410	F-5				
FS34	C-1	FS115	H-4			S1	J-1		
FS35	C-1	FS116	G-4	PS1	G-5	S2	G-1		
FS36	D-1	FS117	H-4	PS2	G-5	S201	A-1		
FS38	C-2	FS118	H-4			S202	C-1		
FS39	C-2	FS119	H-5	✱Q1	H-1				

✱ : B SIDE

P : UVW-1800P ONLY

 16-4 (a)

 AP-31/31P (1/3)

UVW-1800 (J) ;Serial No.10001 through 10900
UVW-1800 (UC);Serial No.10001 through 13930
UVW-1800P(EK);Serial No.10001 through 14140

AP-31/31P(1/3);CH-1 PB EQ/NR,LINE/METER/HP DRIVE

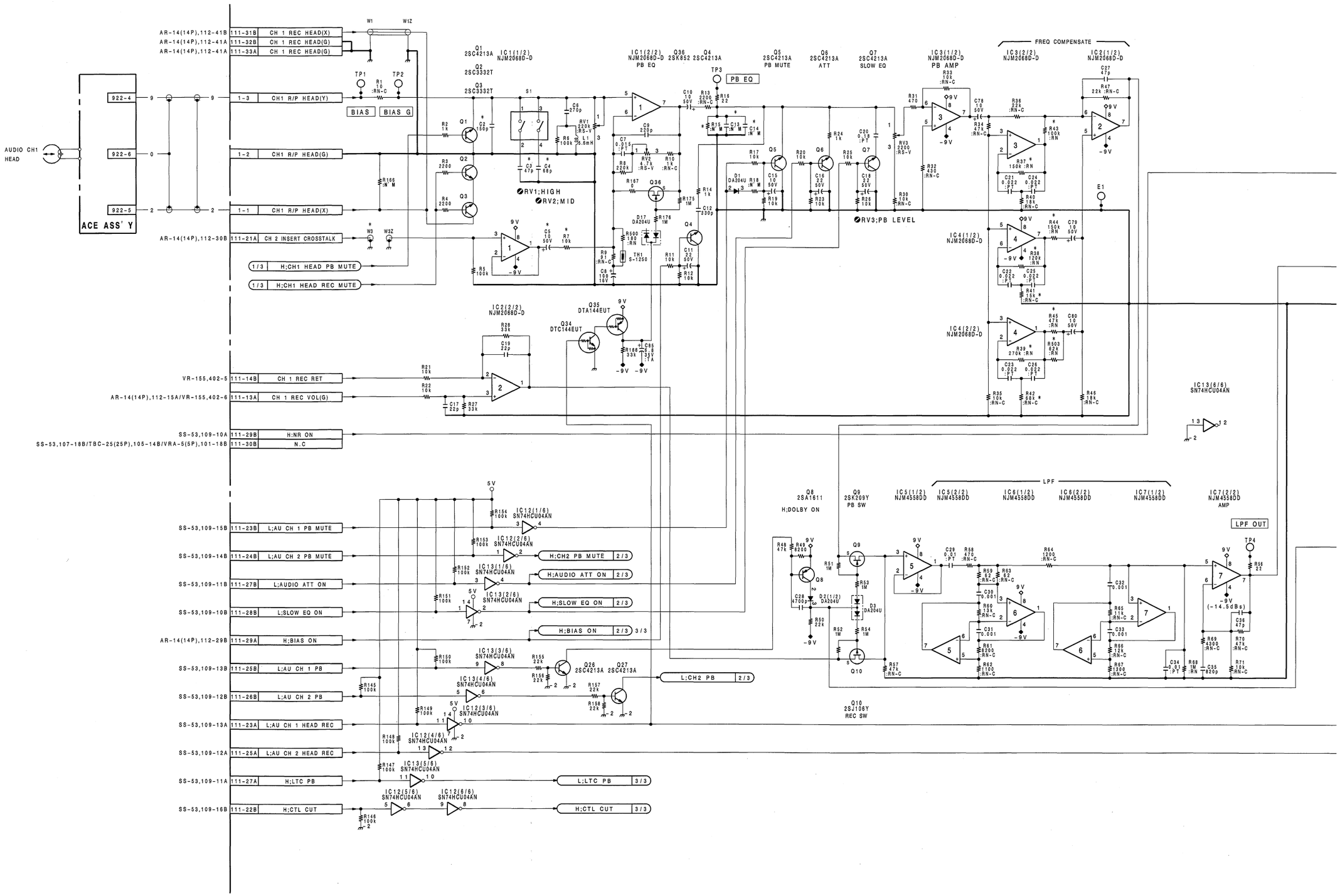

 16-5 (a1)

 AP-31/31P (1/3)

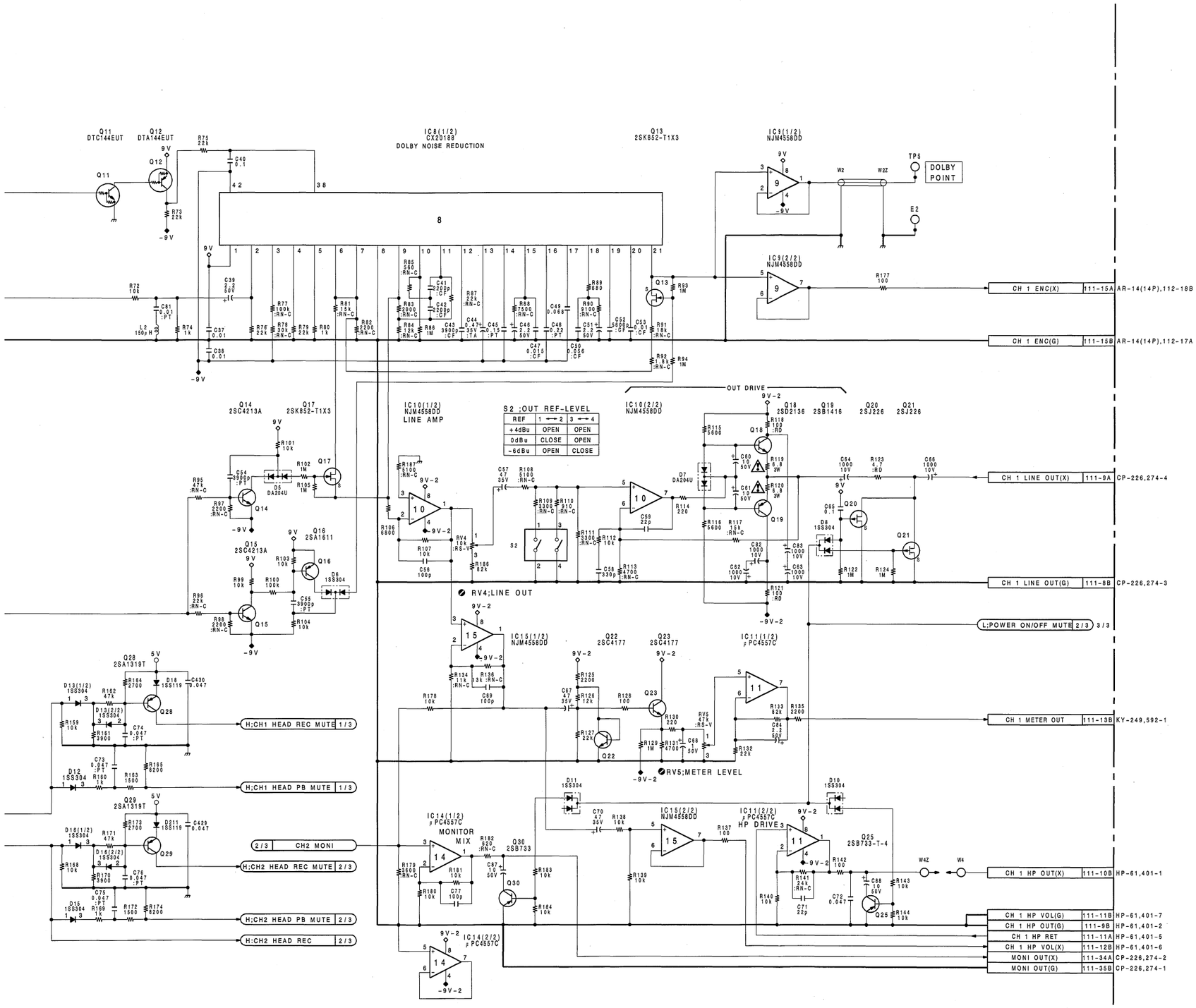

*	UVW-1800	
	J,UC	EK
C2	150P	470P
C3	47P	47P
C4	68P	22P
C5	10/50V	10/50V
C13	N'M	6800P
C14	N'M	3300P
R7	10K	10K
R15	N'M	▲10K
R37	Δ150K	Δ270K
R38	Δ120K	Δ120K
R39	Δ270K	Δ270K
R41	▲15K	▲56K
R42	▲68K	▲100K
R43	Δ100K	N'M
R44	Δ150K	Δ 1M
R45	Δ47K	Δ22K
R503	Δ62K	N'M
W3	1-952-673-11	1-952-673-11

Δ =:RN ▲ =:RN-C

AP-31/31P BOARD (1/3)

BOARD NO.1-648-906-11
UVW-1800 (J) ;#10001-10900
UVW-1800 (UC);#10001-13930
UVW-1800P(EK);#10001-14140

AP-31 (1-648-906-11)

CN1	H-1	FS40	C-2	FS121	G-5	Q2	H-2	✱TH1	J-2
CN2	A-1	FS41	D-2	FS122	G-5	Q3	H-2	✱TH2	B-2
CN3	G-4	FS43	C-2	FS123	H-5	✱Q4	J-2		
CN111	E-5	FS44	D-2	FS124	H-5	✱Q5	J-2	TP1	H-1
		FS45	D-2	FS125	H-1	✱Q6	J-2	TP2	J-1
✱D1	J-2	FS46	D-2	FS126	J-1	✱Q7	J-2	TP3	J-2
✱D2	H-3	FS47	C-3	FS127	J-1	✱Q8	H-3	TP4	G-2
✱D3	H-4	FS48	C-3	FS128	J-1	✱Q9	H-4	TP5	G-1
✱D5	G-3	FS49	C-3	FS129	H-2	✱Q10	H-4	TP201	A-1
✱D6	G-3	FS50	C-3	FS130	J-2	✱Q11	C-2	TP202	A-1
✱D7	J-5	FS51	C-3	FS131	J-2	✱Q12	E-2	TP203	B-2
✱D8	H-5	FS52	D-3	FS132	J-2	✱Q13	E-1	TP204	C-2
✱D10	G-5	FS53	C-3	FS133	J-3	✱Q14	G-3	TP205	D-1
✱D11	E-3	FS54	C-4	FS134	J-3	✱Q15	F-3	TP401	G-4
✱D12	F-3	FS55	C-4	FS135	J-3	✱Q16	F-3	TP402	G-5
✱D13	F-3	FS56	D-4	FS136	H-3	✱Q17	F-2	TP403	D-1
✱D15	E-3	FS57	D-4	FS137	J-3	Q18	J-5		
✱D16	E-3	FS58	C-4	FS138	J-3	Q19	J-5		
✱D17	J-2	FS59	C-4	FS139	H-3	Q20	H-5		
✱D18	H-2	FS61	D-4	FS140	J-3	Q21	H-5		
✱D201	A-2	FS63	D-4	FS141	J-3	✱Q22	J-4		
✱D202	C-3	FS64	B-4	FS142	J-4	✱Q23	H-4		
✱D203	C-4	FS65	D-5	FS143	J-4	Q25	G-4		
✱D204	D-3	FS66	D-5	FS144	J-4	✱Q26	E-3		
✱D205	D-3	FS67	D-5	FS145	J-4	✱Q27	D-4		
✱D206	A-5	FS68	E-5	FS146	J-4	Q28	H-3		
✱D207	B-5	FS69	C-5	FS147	J-5	Q29	A-3		
✱D209	C-4	FS70	C-5	FS148	J-5	Q30	E-3		
✱D210	B-2	FS71	E-3	FS149	J-5	✱Q34	J-2		
✱D211	A-3	FS72	E-3	FS150	H-5	✱Q35	J-2		
✱D401	F-3	FS73	F-3	FS151	H-5	✱Q36	J-2		
✱D403	F-5	FS74	E-4	FS152	H-5	✱Q201	A-1		
✱D500 P	D-5	FS75	E-4	FS153	G-5	Q202	A-2		
		FS76	F-4	FS154	G-5	Q203	A-2		
E1	H-4	FS77	F-4	FS155	H-5	✱Q204	B-2		
E2	G-1	FS78	E-5	FS156	H-5	✱Q205	A-2		
E201	B-4	FS79	F-5			✱Q206	A-2		
E202	E-1	FS80	F-5	IC1	J-2	✱Q207	B-2		
		FS81	H-1	IC2	J-4	✱Q208	C-3		
FS1	A-1	FS82	H-1	IC3	J-3	✱Q209	B-4		
FS3	A-2	FS83	G-1	IC4	H-3	✱Q210	B-4		
FS4	B-2	FS84	G-1	IC5	G-4	✱Q211	E-1		
FS5	B-2	FS85	G-1	IC6	G-3	✱Q212	D-3		
FS6	B-2	FS86	G-1	IC7	G-3	✱Q213	D-3		
FS7	A-3	FS87	H-1	IC8	F-2	✱Q214	D-3		
FS8	B-3	FS88	H-1	IC9	G-2	✱Q215	E-2		
FS9	B-3	FS89	H-1	IC10	G-2	Q216	A-5		
FS10	A-3	FS90	G-1	IC11	H-4	Q217	A-5		
FS11	B-3	FS91	G-1	IC12	E-5	Q218	C-5		
FS12	A-3	FS92	G-2	IC13	D-4	Q219	C-5		
FS13	A-3	FS93	G-2	IC14	E-3	✱Q220	B-4		
FS14	B-3	FS94	F-2	IC15	J-4	✱Q221	B-4		
FS15	B-3	FS96	H-2	IC201	A-2	Q223	C-4		
FS16	A-4	FS97	H-2	IC202	A-4	✱Q224	B-2		
FS17	A-4	FS98	F-2	IC203	A-3	✱Q225	B-2		
FS18	A-4	FS99	F-2	IC204	B-3	✱Q226	B-2		
FS19	B-4	FS100	G-2	IC205	C-4	✱Q401	G-4		
FS20	A-4	FS101	H-2	IC206	C-3	✱Q402	F-5		
FS21	A-4	FS102	H-2	IC207	C-3	✱Q403	F-3		
FS22	A-5	FS103	G-3	IC208	C-2				
FS23	A-5	FS104	G-3	IC209	C-2	RV1	J-1		
FS24	A-5	FS105	G-3	IC210	C-4	RV2	J-1		
FS25	B-5	FS106	H-3	IC211	A-4	RV3	J-1		
FS26	A-5	FS107	H-3	IC401	F-4	RV4	H-1		
FS27	B-5	FS108	H-3	IC402	F-4	RV5	H-1		
FS28	B-5	FS109	H-3	✱IC405	C-5	RV201	B-1		
FS29	B-5	FS110	G-3	✱IC406	D-5	RV202	B-1		
FS30	C-1	FS111	G-4	✱IC407	D-5	RV203	B-1		
FS31	C-1	FS112	G-4	✱IC408	C-5	RV204	C-1		
FS32	C-1	FS113	G-4	✱IC409	D-5	RV205	C-1		
FS33	C-1	FS114	H-4	IC410	F-5				
FS34	C-1	FS115	H-4			S1	J-1		
FS35	C-1	FS116	G-4	PS1	G-5	S2	G-1		
FS36	D-1	FS117	H-4	PS2	G-5	S201	A-1		
FS38	C-2	FS118	H-4			S202	C-1		
FS39	C-2	FS119	H-5	✱Q1	H-1				

✱ : B SIDE

P : UVW-1800P ONLY

UVW-1800 (J) ;Serial No.10001 through 10900
UVW-1800 (UC);Serial No.10001 through 13930
UVW-1800P(EK);Serial No.10001 through 14140

AP-31/31P(2/3);CH-2 PB EQ/NR,LINE/METER/HP DRIVE

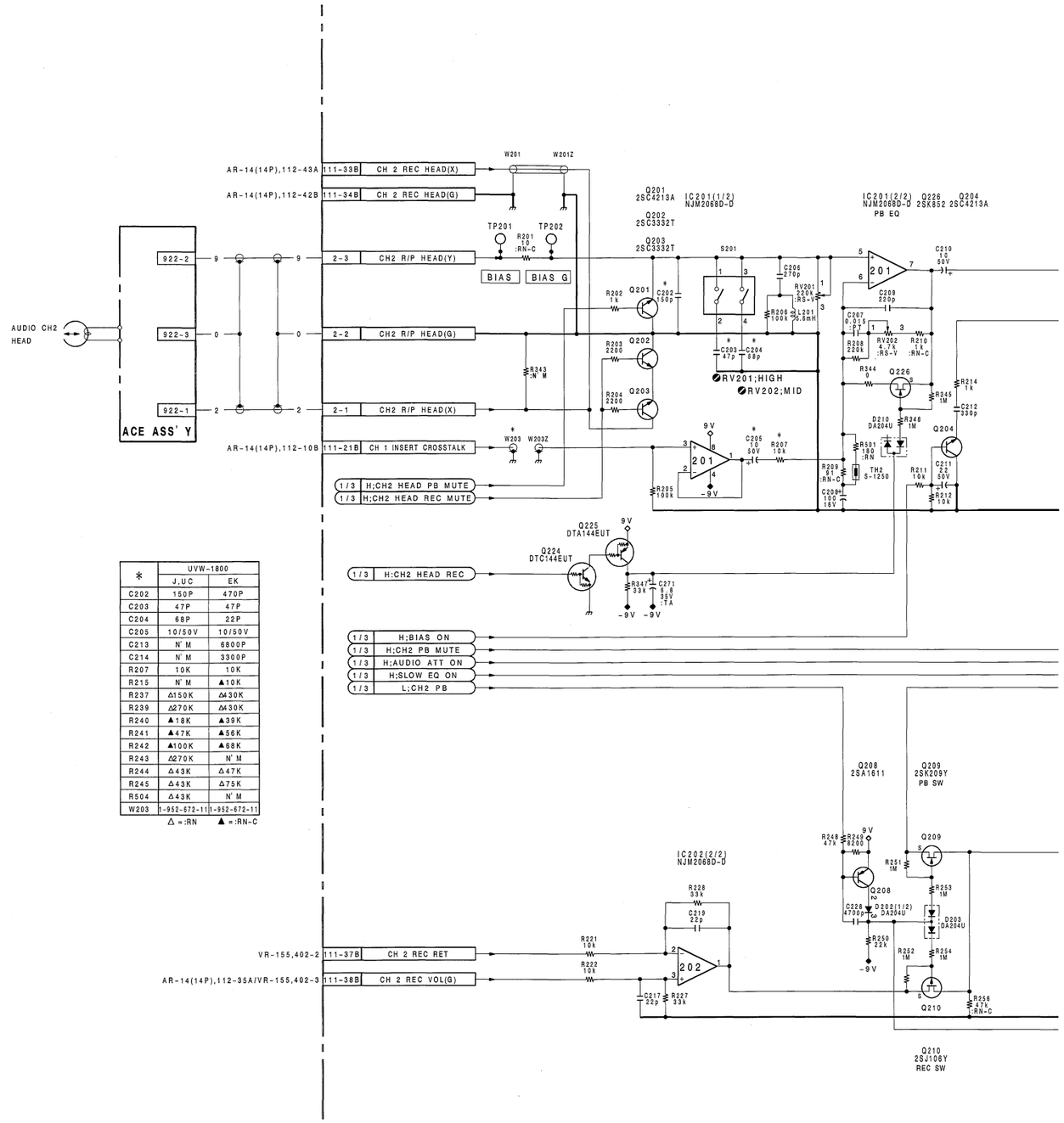

✱	UVW-1800	
	J,UC	EK
C202	150P	470P
C203	47P	47P
C204	68P	22P
C205	10/50V	10/50V
C213	N' M	6800P
C214	N' M	3300P
R207	10K	10K
R215	N' M	▲10K
R237	△150K	△430K
R239	△270K	△430K
R240	▲18K	▲39K
R241	▲47K	▲56K
R242	▲100K	▲68K
R243	△270K	N' M
R244	△43K	△47K
R245	△43K	△75K
R504	△43K	N' M
W203	1-952-672-11	1-952-672-11

△ =:RN ▲ =:RN-C

 AP-31/31P (2/3)

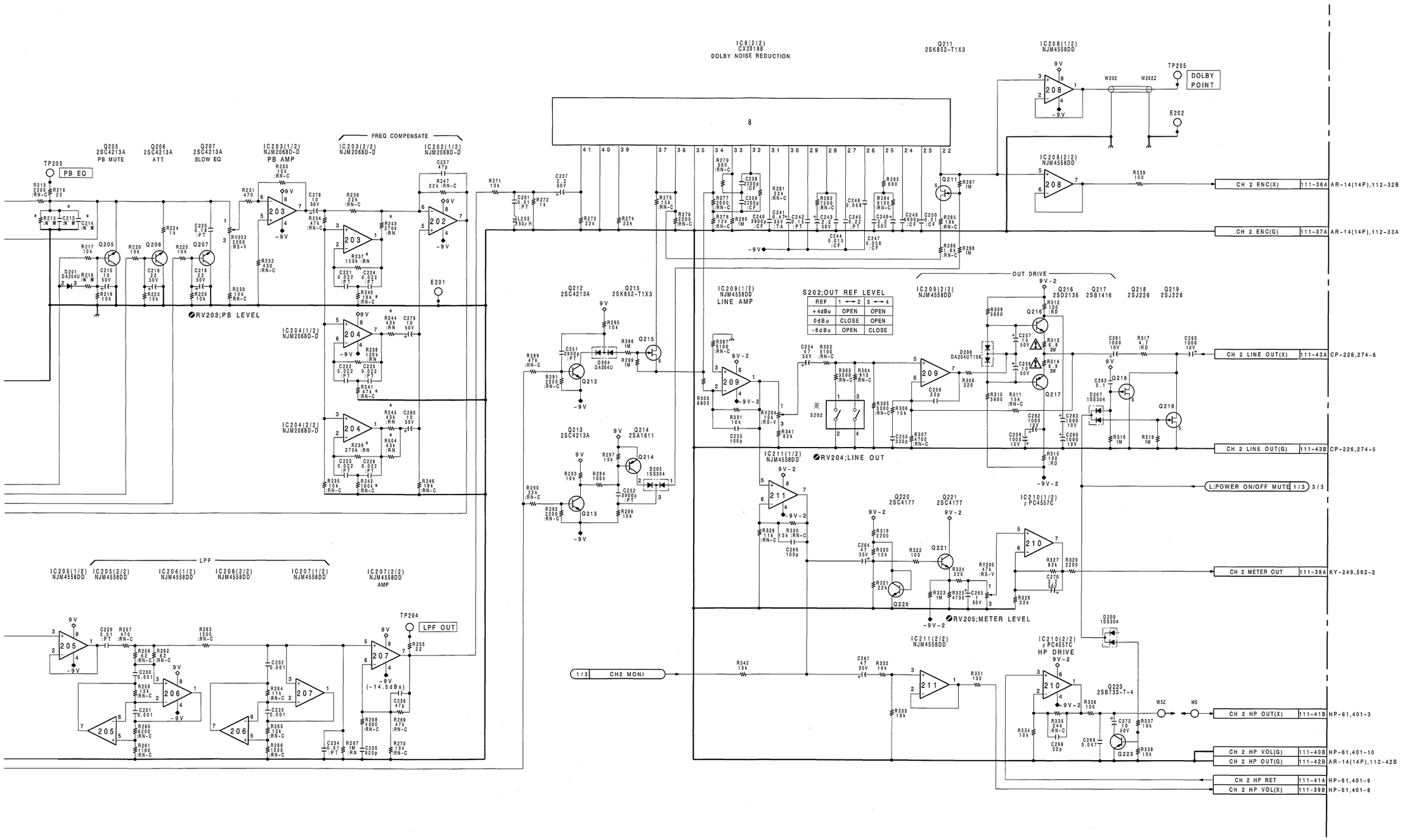

AP-31/31P BOARD (2/3)

BOARD NO.1-648-906-11
UVW-1800 (J) ;#10001-10900
UVW-1800 (UC);#10001-13930
UVW-1800P(EK);#10001-14140

 AP-31/31P

AP-31 (1-648-906-11)

CN1	H-1	FS40	C-2	FS121	G-5	Q2	H-2	✱TH1	J-2
CN2	A-1	FS41	D-2	FS122	G-5	Q3	H-2	✱TH2	B-2
CN3	G-4	FS43	C-2	FS123	H-5	✱Q4	J-2		
CN111	E-5	FS44	D-2	FS124	H-5	✱Q5	J-2	TP1	H-1
		FS45	D-2	FS125	H-1	✱Q6	J-2	TP2	J-1
✱D1	J-2	FS46	D-2	FS126	J-1	✱Q7	J-2	TP3	J-2
✱D2	H-3	FS47	C-3	FS127	J-1	✱Q8	H-3	TP4	G-2
✱D3	H-4	FS48	C-3	FS128	J-1	✱Q9	H-4	TP5	G-1
✱D5	G-3	FS49	C-3	FS129	H-2	✱Q10	H-4	TP201	A-1
✱D6	G-3	FS50	C-3	FS130	J-2	✱Q11	C-2	TP202	A-1
✱D7	J-5	FS51	C-3	FS131	J-2	✱Q12	E-2	TP203	B-2
✱D8	H-5	FS52	D-3	FS132	J-2	✱Q13	E-1	TP204	C-2
✱D10	G-5	FS53	C-3	FS133	J-3	✱Q14	G-3	TP205	D-1
✱D11	E-3	FS54	C-4	FS134	J-3	✱Q15	F-3	TP401	G-4
✱D12	F-3	FS55	C-4	FS135	J-3	✱Q16	F-3	TP402	G-5
✱D13	F-3	FS56	D-4	FS136	H-3	✱Q17	F-2	TP403	D-1
✱D15	E-3	FS57	D-4	FS137	J-3	Q18	J-5		
✱D16	E-3	FS58	C-4	FS138	J-3	Q19	J-5		
✱D17	J-2	FS59	C-4	FS139	H-3	Q20	H-5		
✱D18	H-2	FS61	D-4	FS140	J-3	Q21	H-5		
✱D201	A-2	FS63	D-4	FS141	J-3	✱Q22	J-4		
✱D202	C-3	FS64	B-4	FS142	J-4	✱Q23	H-4		
✱D203	C-4	FS65	D-5	FS143	J-4	Q25	G-4		
✱D204	D-3	FS66	D-5	FS144	J-4	✱Q26	E-3		
✱D205	D-3	FS67	D-5	FS145	J-4	✱Q27	D-4		
✱D206	A-5	FS68	E-5	FS146	J-4	Q28	H-3		
✱D207	B-5	FS69	C-5	FS147	J-5	Q29	A-3		
✱D209	C-4	FS70	C-5	FS148	J-5	Q30	E-3		
✱D210	B-2	FS71	E-3	FS149	J-5	✱Q34	J-2		
✱D211	A-3	FS72	E-3	FS150	H-5	✱Q35	J-2		
✱D401	F-3	FS73	F-3	FS151	H-5	✱Q36	J-2		
✱D403	F-5	FS74	E-4	FS152	H-5	✱Q201	A-1		
✱D500 P	D-5	FS75	E-4	FS153	G-5	Q202	A-2		
		FS76	F-4	FS154	G-5	Q203	A-2		
E1	H-4	FS77	F-4	FS155	H-5	✱Q204	B-2		
E2	G-1	FS78	E-5	FS156	H-5	✱Q205	A-2		
E201	B-4	FS79	F-5			✱Q206	A-2		
E202	E-1	FS80	F-5	IC1	J-2	✱Q207	B-2		
		FS81	H-1	IC2	J-4	✱Q208	C-3		
FS1	A-1	FS82	H-1	IC3	J-3	✱Q209	B-4		
FS3	A-2	FS83	G-1	IC4	H-3	✱Q210	B-4		
FS4	B-2	FS84	G-1	IC5	G-4	✱Q211	E-1		
FS5	B-2	FS85	G-1	IC6	G-3	✱Q212	D-3		
FS6	B-2	FS86	G-1	IC7	G-3	✱Q213	D-3		
FS7	A-3	FS87	H-1	IC8	F-2	✱Q214	D-3		
FS8	B-3	FS88	H-1	IC9	G-2	✱Q215	E-2		
FS9	B-3	FS89	H-1	IC10	G-2	Q216	A-5		
FS10	A-3	FS90	G-1	IC11	H-4	Q217	A-5		
FS11	B-3	FS91	G-1	IC12	E-5	Q218	C-5		
FS12	A-3	FS92	G-2	IC13	D-4	Q219	C-5		
FS13	A-3	FS93	G-2	IC14	E-3	✱Q220	B-4		
FS14	B-3	FS94	F-2	IC15	J-4	✱Q221	B-4		
FS15	B-3	FS96	H-2	IC201	A-2	Q223	C-4		
FS16	A-4	FS97	H-2	IC202	A-4	✱Q224	B-2		
FS17	A-4	FS98	F-2	IC203	A-3	✱Q225	B-2		
FS18	A-4	FS99	F-2	IC204	B-3	✱Q226	B-2		
FS19	B-4	FS100	G-2	IC205	C-4	✱Q401	G-4		
FS20	A-4	FS101	H-2	IC206	C-3	✱Q402	F-5		
FS21	A-4	FS102	H-2	IC207	C-3	✱Q403	F-3		
FS22	A-5	FS103	G-3	IC208	C-2				
FS23	A-5	FS104	G-3	IC209	C-2	RV1	J-1		
FS24	A-5	FS105	G-3	IC210	C-4	RV2	J-1		
FS25	B-5	FS106	H-3	IC211	A-4	RV3	J-1		
FS26	A-5	FS107	H-3	IC401	F-4	RV4	H-1		
FS27	B-5	FS108	H-3	IC402	F-4	RV5	H-1		
FS28	B-5	FS109	H-3	✱IC405	C-5	RV201	B-1		
FS29	B-5	FS110	G-3	✱IC406	D-5	RV202	B-1		
FS30	C-1	FS111	G-4	✱IC407	D-5	RV203	B-1		
FS31	C-1	FS112	G-4	✱IC408	C-5	RV204	C-1		
FS32	C-1	FS113	G-4	✱IC409	D-5	RV205	C-1		
FS33	C-1	FS114	H-4	IC410	F-5				
FS34	C-1	FS115	H-4			S1	J-1		
FS35	C-1	FS116	G-4	PS1	G-5	S2	G-1		
FS36	D-1	FS117	H-4	PS2	G-5	S201	A-1		
FS38	C-2	FS118	H-4			S202	C-1		
FS39	C-2	FS119	H-5	✱Q1	H-1				

✱ : B SIDE

P : UVW-1800P ONLY

 16-12 (a)

 AP-31/31P (3/3)

UVW-1800 (J) ;Serial No.10001 through 10900
UVW-1800 (UC);Serial No.10001 through 13930
UVW-1800P(EK);Serial No.10001 through 14140

AP-31/31P(3/3);LTC PB

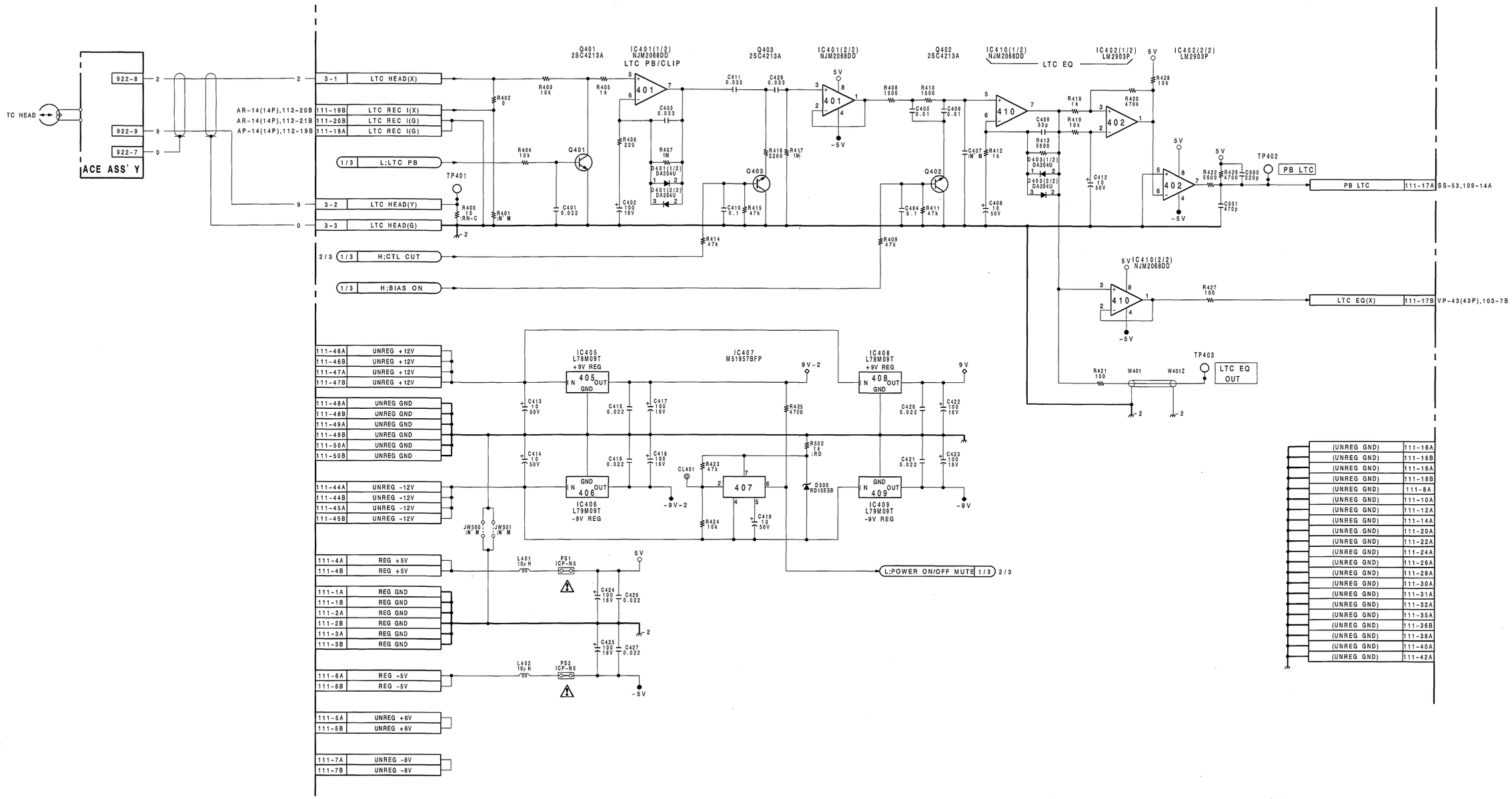

AP-31/31P BOARD (3/3)

BOARD NO.1-648-906-11
UVW-1800 (J) ;#10001-10900
UVW-1800 (UC);#10001-13930
UVW-1800P(EK);#10001-14140

 16-13 (a)

AP-31A (1-648-906-21, 22)

CN1	H-1	FS63	D-4	FS148	J-5	RV1	J-1
CN2	A-1	FS64	B-4	FS149	J-5	RV2	J-1
CN3	G-4	FS65	D-5	FS150	H-5	RV3	J-1
CN111	E-5	FS66	D-5	FS151	H-5	RV4	H-1
		FS67	D-5	FS152	H-5	RV5	H-1
✱D1	J-2	FS68	E-5	FS153	G-5	RV201	B-1
✱D7	J-5	FS69	C-5	FS154	G-5	RV202	B-1
✱D8	H-5	FS70	C-5	FS155	H-5	RV203	B-1
✱D10	G-5	FS71	E-3	FS156	H-5	RV204	C-1
✱D11	E-3	FS72	E-3			RV205	C-1
✱D201	A-2	FS73	F-3	IC1	J-2		
✱D206	A-5	FS74	E-4	IC2	J-4	S1	J-1
✱D207	B-5	FS75	E-4	IC3	J-3	S2	G-1
✱D209	C-4	FS77	F-4	IC4	H-3	S201	A-1
✱D401	F-3	FS79	F-5	IC5	G-4	S202	C-1
✱D403	F-5	FS80	F-5	IC6	G-3		
✱D500 P	D-5	FS81	H-1	IC7	G-3	✱TH1	J-2
		FS82	H-1	IC8	F-2	✱TH2	B-2
E1	H-4	FS83	G-1	IC9	G-2		
E2	G-1	FS84	G-1	IC10	G-2	TP3	J-2
E201	B-4	FS85	G-1	IC11	H-4	TP4	G-2
E202	E-1	FS86	G-1	IC12	E-5	TP5	G-1
		FS87	H-1	IC13	D-4	TP203	B-2
FS1	A-1	FS88	H-1	IC14	E-3	TP204	C-2
FS3	A-2	FS89	H-1	IC15	J-4	TP205	D-1
FS5	B-2	FS90	G-1	IC201	A-2	TP402	G-5
FS6	B-2	FS91	G-1	IC202	A-4	TP403	D-1
FS7	A-3	FS92	G-2	IC203	A-3		
FS9	B-3	FS93	G-2	IC204	B-3		
FS10	A-3	FS94	F-2	IC205	C-4		
FS11	B-3	FS96	H-2	IC206	C-3		
FS12	A-3	FS97	H-2	IC207	C-3		
FS13	A-3	FS98	F-2	IC208	C-2		
FS14	B-3	FS99	F-2	IC209	C-2		
FS15	B-3	FS100	G-2	IC210	C-4		
FS16	A-4	FS101	H-2	IC211	A-4		
FS17	A-4	FS102	H-2	IC401	F-4		
FS18	A-4	FS103	G-3	IC402	F-4		
FS19	B-4	FS106	H-3	✱IC405	C-5		
FS20	A-4	FS107	H-3	✱IC406	D-5		
FS21	A-4	FS108	H-3	✱IC407	D-5		
FS22	A-5	FS109	H-3	✱IC408	C-5		
FS23	A-5	FS110	G-3	✱IC409	D-5		
FS24	A-5	FS111	G-4	IC410	F-5		
FS25	B-5	FS112	G-4				
FS26	A-5	FS114	H-4	PS1	G-5		
FS27	B-5	FS115	H-4	PS2	G-5		
FS28	B-5	FS116	G-4				
FS29	B-5	FS117	H-4	✱Q5	J-2		
FS30	C-1	FS118	H-4	✱Q6	J-2		
FS31	C-1	FS119	H-5	✱Q7	J-2		
FS32	C-1	FS121	G-5	✱Q9	H-4		
FS33	C-1	FS122	G-5	✱Q11	C-2		
FS34	C-1	FS123	H-5	✱Q12	E-2		
FS35	C-1	FS124	H-5	✱Q13	E-1		
FS36	D-1	FS125	H-1	Q18	J-5		
FS38	C-2	FS126	J-1	Q19	J-5		
FS39	C-2	FS127	J-1	Q20	H-5		
FS40	C-2	FS128	J-1	Q21	H-5		
FS41	D-2	FS129	H-2	✱Q22	J-4		
FS43	C-2	FS131	J-2	✱Q23	H-4		
FS44	D-2	FS132	J-2	Q25	G-4		
FS45	D-2	FS133	J-3	Q30	E-3		
FS46	D-2	FS135	J-3	✱Q205	A-2		
FS47	C-3	FS136	H-3	✱Q206	A-2		
FS48	C-3	FS137	J-3	✱Q207	B-2		
FS49	C-3	FS138	J-3	✱Q209	B-4		
FS50	C-3	FS139	H-3	✱Q211	E-1		
FS51	C-3	FS140	J-3	Q216	A-5		
FS53	C-3	FS141	J-3	Q217	A-5		
FS54	C-4	FS142	J-4	Q218	C-5		
FS56	D-4	FS143	J-4	Q219	C-5		
FS57	D-4	FS144	J-4	✱Q220	B-4		
FS58	C-4	FS145	J-4	✱Q221	B-4		
FS59	C-4	FS146	J-4	Q223	C-4		
FS61	D-4	FS147	J-5	✱Q403	F-3		

✱ : B SIDE
P : UVW-1600P ONLY
N : UVW-1600 ONLY

 AP-31A/31AP (1/3)

UVW-1600 (J) ;Serial No.10601 and higher
UVW-1600 (UC);Serial No.12901 and higher
UVW-1600P(EK);Serial No.13781 and higher

AP-31A/31AP(1/3);CH-1 PB EQ/NR,LINE/METER/HP DRIVE

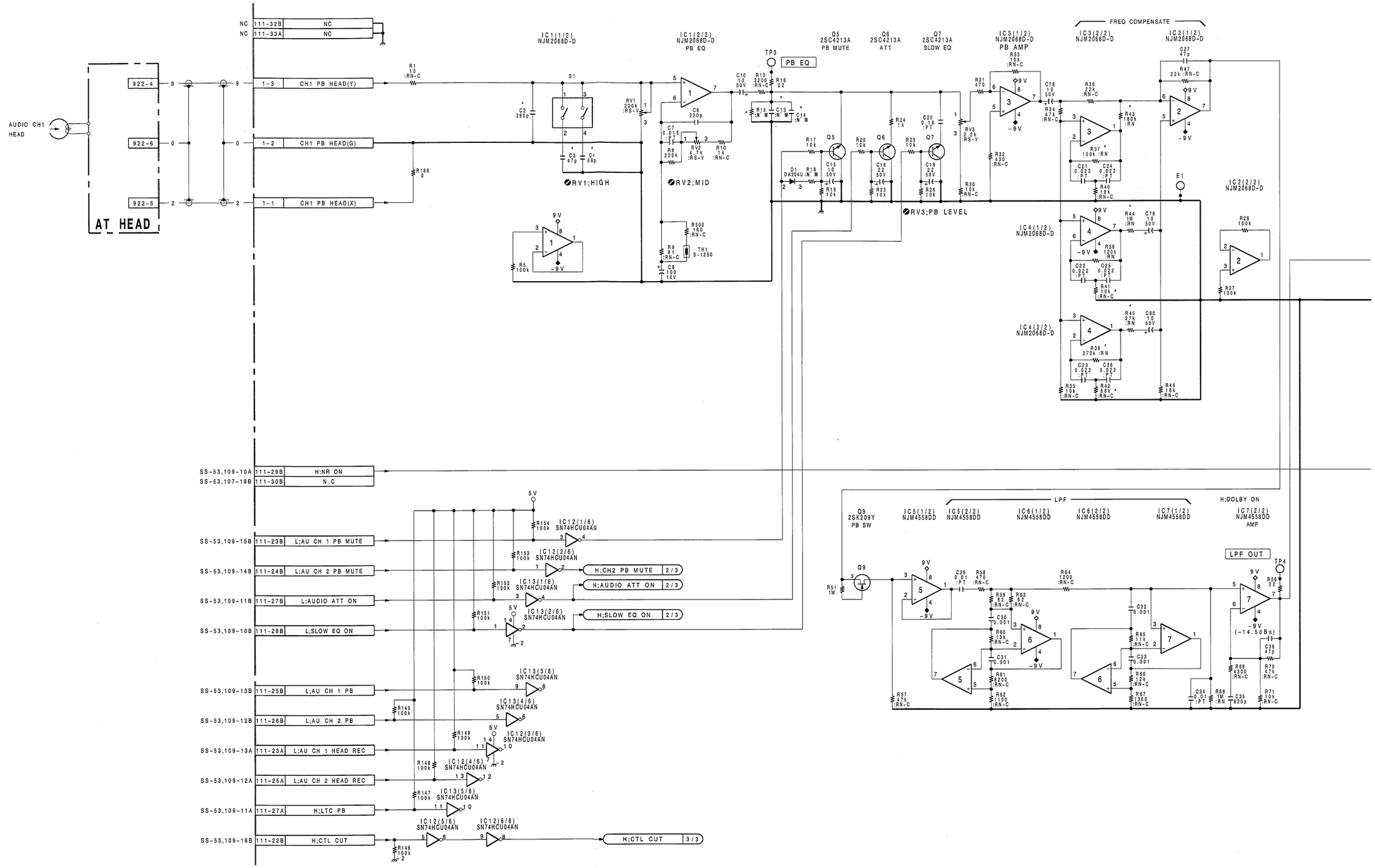

 16-17 (b1)

 AP-31A/31AP (1/3)

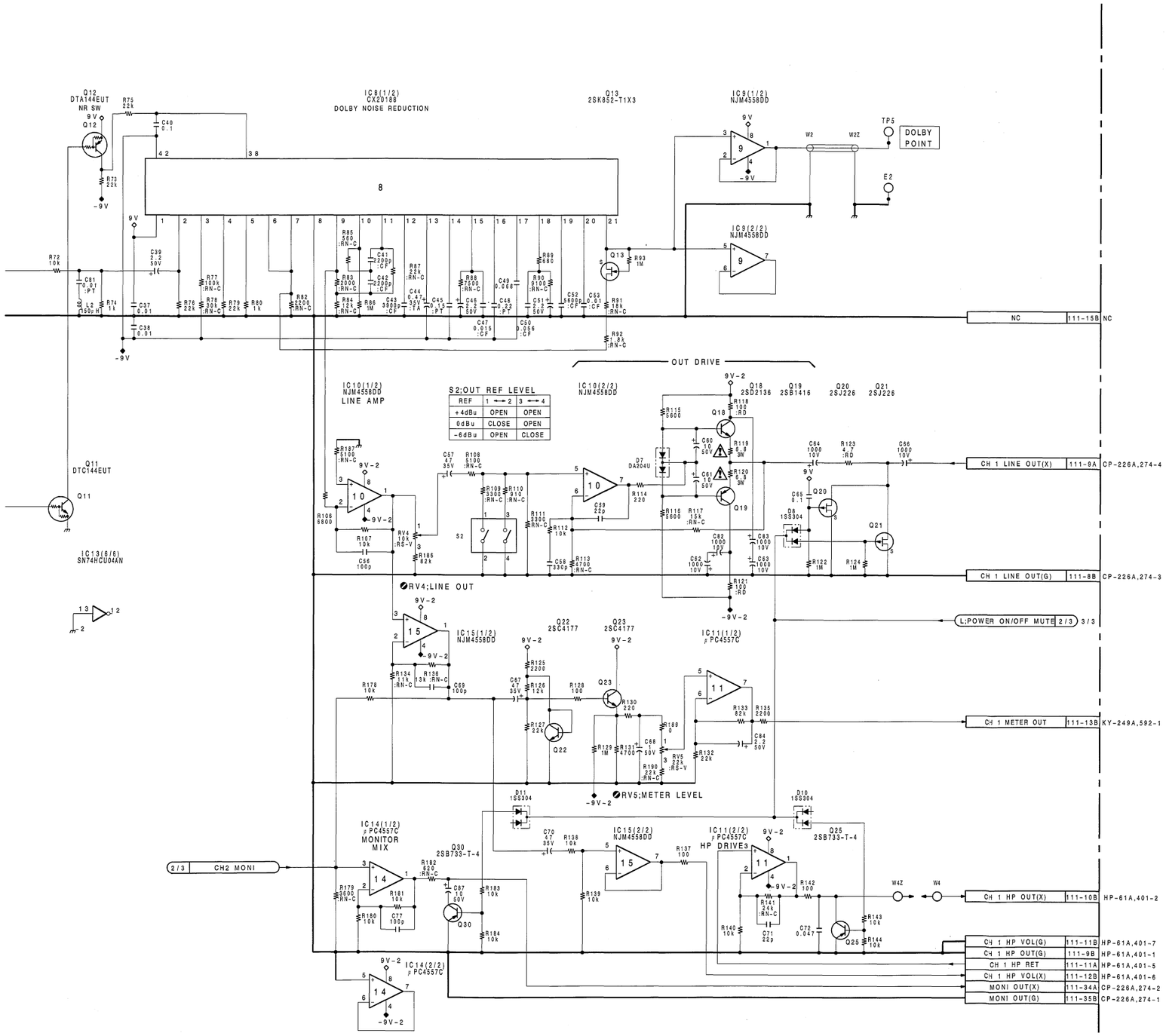

S2;OUT REF LEVEL

REF	1 ←→ 2	3 ←→ 4
+4dBu	OPEN	OPEN
0dBu	CLOSE	OPEN
-6dBu	OPEN	CLOSE

*	J,UC	EK
C2	390P	470P
C3	47P	47P
C4	68P	22P
C13	N'M	6800P(:PT)
C14	N'M	3300P
R15	N'M	▲10K
R37	Δ150K	Δ270K
R39	Δ270K	Δ430K
R41	▲10K	▲12K
R42	▲68K	▲68K
R43	Δ180K	N'M
R44	Δ 1M	Δ270K
R45	Δ27K	Δ56K

Δ =:RN ▲ =:RN-C

AP-31A/31AP BOARD (1/3)

BOARD NO.1-648-906-22
UVW-1600 (J) ;#10601-
UVW-1600 (UC);#12901-
UVW-1600P(EK);#13781-

16-17 (b2)

I J K L M N O P

AP-31A (1-648-906-21, 22)

	CN1	H-1	FS63	D-4	FS148	J-5	RV1	J-1
	CN2	A-1	FS64	B-4	FS149	J-5	RV2	J-1
	CN3	G-4	FS65	D-5	FS150	H-5	RV3	J-1
	CN111	E-5	FS66	D-5	FS151	H-5	RV4	H-1
			FS67	D-5	FS152	H-5	RV5	H-1
	✱D1	J-2	FS68	E-5	FS153	G-5	RV201	B-1
	✱D7	J-5	FS69	C-5	FS154	G-5	RV202	B-1
	✱D8	H-5	FS70	C-5	FS155	H-5	RV203	B-1
	✱D10	G-5	FS71	E-3	FS156	H-5	RV204	C-1
	✱D11	E-3	FS72	E-3			RV205	C-1
	✱D201	A-2	FS73	F-3	IC1	J-2		
	✱D206	A-5	FS74	E-4	IC2	J-4	S1	J-1
	✱D207	B-5	FS75	E-4	IC3	J-3	S2	G-1
	✱D209	C-4	FS77	F-4	IC4	H-3	S201	A-1
	✱D401	F-3	FS79	F-5	IC5	G-4	S202	C-1
	✱D403	F-5	FS80	F-5	IC6	G-3		
	✱D500	P D-5	FS81	H-1	IC7	G-3	✱TH1	J-2
			FS82	H-1	IC8	F-2	✱TH2	B-2
	E1	H-4	FS83	G-1	IC9	G-2		
	E2	G-1	FS84	G-1	IC10	G-2	TP3	J-2
	E201	B-4	FS85	G-1	IC11	H-4	TP4	G-2
	E202	E-1	FS86	G-1	IC12	E-5	TP5	G-1
			FS87	H-1	IC13	D-4	TP203	B-2
	FS1	A-1	FS88	H-1	IC14	E-3	TP204	C-2
	FS3	A-2	FS89	H-1	IC15	J-4	TP205	D-1
	FS5	B-2	FS90	G-1	IC201	A-2	TP402	G-5
	FS6	B-2	FS91	G-1	IC202	A-4	TP403	D-1
	FS7	A-3	FS92	G-2	IC203	A-3		
	FS9	B-3	FS93	G-2	IC204	B-3		
	FS10	A-3	FS94	F-2	IC205	C-4		
	FS11	B-3	FS96	H-2	IC206	C-3		
	FS12	A-3	FS97	H-2	IC207	C-3		
	FS13	A-3	FS98	F-2	IC208	C-2		
	FS14	B-3	FS99	F-2	IC209	C-2		
	FS15	B-3	FS100	G-2	IC210	C-4		
	FS16	A-4	FS101	H-2	IC211	A-4		
	FS17	A-4	FS102	H-2	IC401	F-4		
	FS18	A-4	FS103	G-3	IC402	F-4		
	FS19	B-4	FS106	H-3	✱IC405	C-5		
	FS20	A-4	FS107	H-3	✱IC406	D-5		
	FS21	A-4	FS108	H-3	✱IC407	D-5		
	FS22	A-5	FS109	H-3	✱IC408	C-5		
	FS23	A-5	FS110	G-3	✱IC409	D-5		
	FS24	A-5	FS111	G-4	IC410	F-5		
	FS25	B-5	FS112	G-4				
	FS26	A-5	FS114	H-4	PS1	G-5		
	FS27	B-5	FS115	H-4	PS2	G-5		
	FS28	B-5	FS116	G-4				
	FS29	B-5	FS117	H-4	✱Q5	J-2		
	FS30	C-1	FS118	H-4	✱Q6	J-2		
	FS31	C-1	FS119	H-5	✱Q7	J-2		
	FS32	C-1	FS121	G-5	✱Q9	H-4		
	FS33	C-1	FS122	G-5	✱Q11	C-2		
	FS34	C-1	FS123	H-5	✱Q12	E-2		
	FS35	C-1	FS124	H-5	✱Q13	E-1		
	FS36	D-1	FS125	H-1	Q18	J-5		
	FS38	C-2	FS126	J-1	Q19	J-5		
	FS39	C-2	FS127	J-1	Q20	H-5		
	FS40	C-2	FS128	J-1	Q21	H-5		
	FS41	D-2	FS129	H-2	✱Q22	J-4		
	FS43	C-2	FS131	J-2	✱Q23	H-4		
	FS44	D-2	FS132	J-2	Q25	G-4		
	FS45	D-2	FS133	J-3	Q30	E-3		
	FS46	D-2	FS135	J-3	✱Q205	A-2		
	FS47	C-3	FS136	H-3	✱Q206	A-2		
	FS48	C-3	FS137	J-3	✱Q207	B-2		
	FS49	C-3	FS138	J-3	✱Q209	B-4		
	FS50	C-3	FS139	H-3	✱Q211	E-1		
	FS51	C-3	FS140	J-3	Q216	A-5		
	FS53	C-3	FS141	J-3	Q217	A-5		
	FS54	C-4	FS142	J-4	Q218	C-5		
	FS56	D-4	FS143	J-4	Q219	C-5		
	FS57	D-4	FS144	J-4	✱Q220	B-4		
	FS58	C-4	FS145	J-4	✱Q221	B-4		
	FS59	C-4	FS146	J-4	Q223	C-4		
	FS61	D-4	FS147	J-5	✱Q403	F-3		

✱ : B SIDE
P : UVW-1600P ONLY
N : UVW-1600 ONLY

UVW-1600 (J) ;Serial No.10601 and higher
UVW-1600 (UC);Serial No.12901 and higher
UVW-1600P(EK);Serial No.13781 and higher

AP-31A/31AP(2/3);CH-2 PB EQ/NR,LINE/METER/HP DRIVE

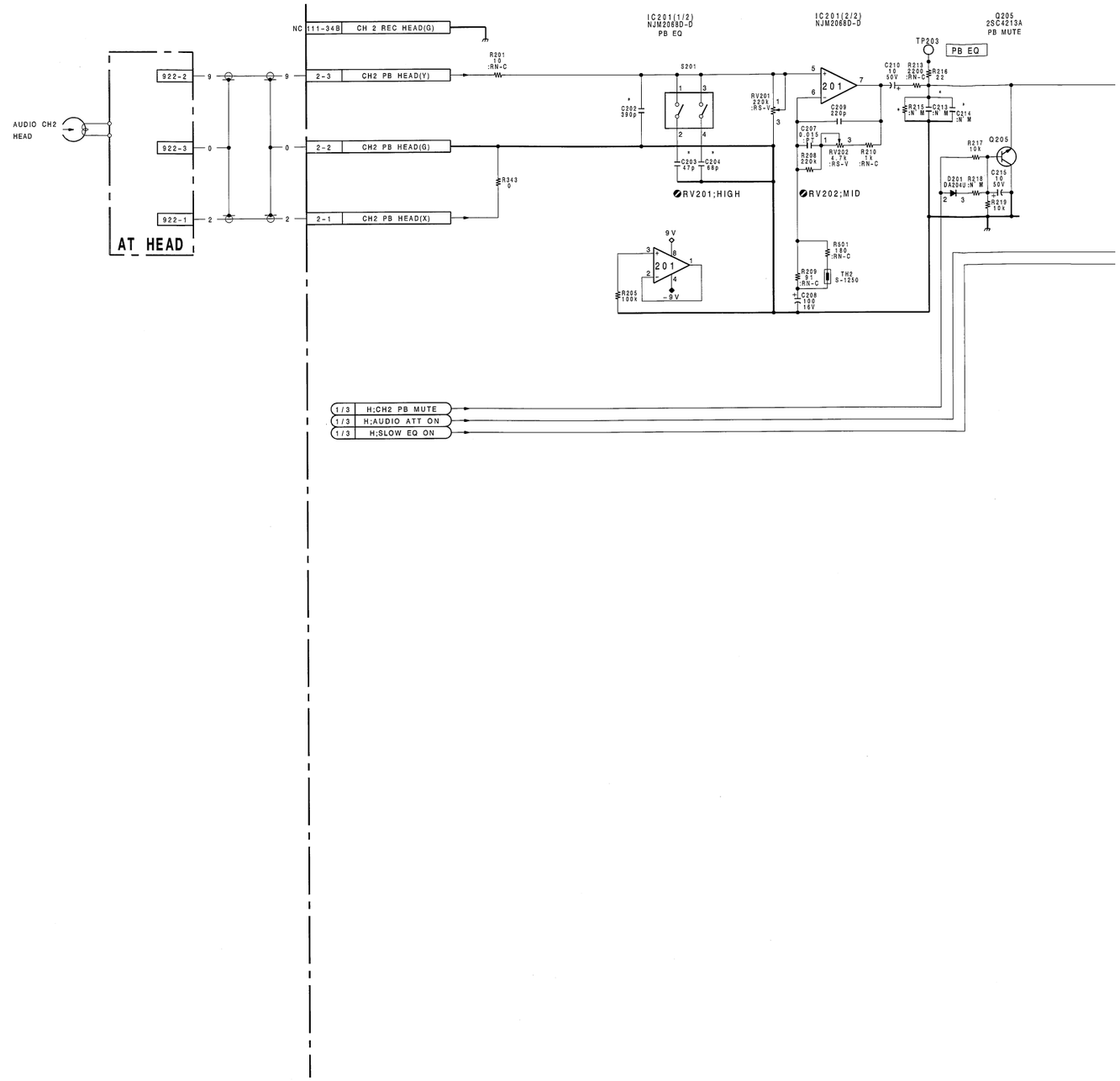

 AP-31A/31AP (2/3)

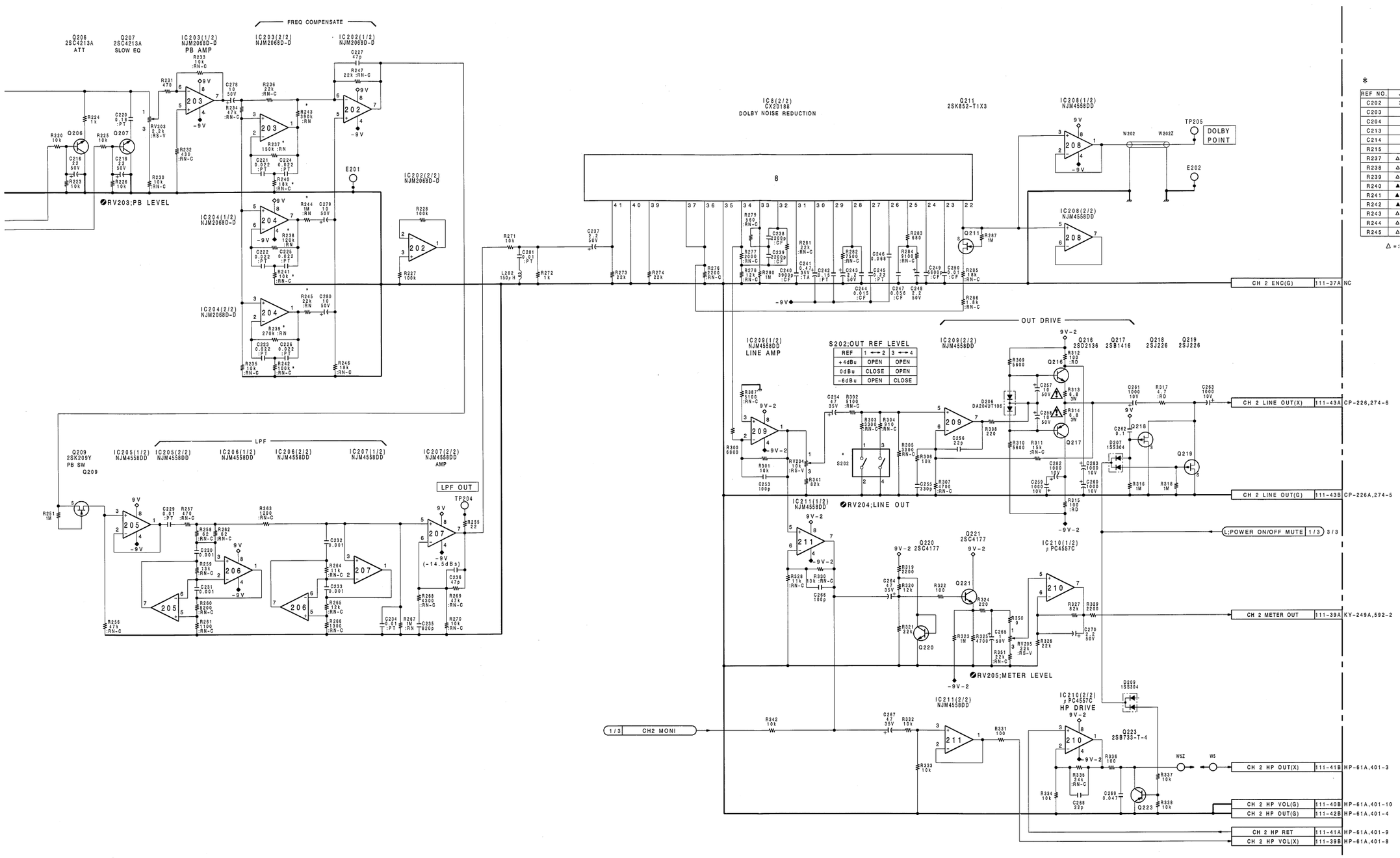

*

REF NO.	J,UC	EK
C202	390P	470P
C203	47P	47P
C204	68P	22P
C213	N' M	6800P(:PT)
C214	N' M	3300P
R215	N' M	▲10K
R237	△150K	△430K
R238	△120K	△430K
R239	△270K	△430K
R240	▲18K	▲39K
R241	▲10K	▲18K
R242	▲100K	▲68K
R243	△390K	N' M
R244	△ 1M	△560K
R245	△22K	75K

△ =:RN ▲ =:RN-C

REF	1 ←→ 2	3 ←→ 4
+4dBu	OPEN	OPEN
0dBu	CLOSE	OPEN
-6dBu	OPEN	CLOSE

AP-31A/31AP BOARD (2/3)

BOARD NO.1-648-906-22
UVW-1600 (J) ;#10601-
UVW-1600 (UC);#12901-
UVW-1600P(EK);#13781-

16-21 (b2)

I J K L M N O P

AP-31A (1-648-906-21, 22)

CN1	H-1	FS63	D-4	FS148	J-5	RV1	J-1
CN2	A-1	FS64	B-4	FS149	J-5	RV2	J-1
CN3	G-4	FS65	D-5	FS150	H-5	RV3	J-1
CN111	E-5	FS66	D-5	FS151	H-5	RV4	H-1
		FS67	D-5	FS152	H-5	RV5	H-1
✱D1	J-2	FS68	E-5	FS153	G-5	RV201	B-1
✱D7	J-5	FS69	C-5	FS154	G-5	RV202	B-1
✱D8	H-5	FS70	C-5	FS155	H-5	RV203	B-1
✱D10	G-5	FS71	E-3	FS156	H-5	RV204	C-1
✱D11	E-3	FS72	E-3			RV205	C-1
✱D201	A-2	FS73	F-3	IC1	J-2		
✱D206	A-5	FS74	E-4	IC2	J-4	S1	J-1
✱D207	B-5	FS75	E-4	IC3	J-3	S2	G-1
✱D209	C-4	FS77	F-4	IC4	H-3	S201	A-1
✱D401	F-3	FS79	F-5	IC5	G-4	S202	C-1
✱D403	F-5	FS80	F-5	IC6	G-3		
✱D500 P	D-5	FS81	H-1	IC7	G-3	✱TH1	J-2
		FS82	H-1	IC8	F-2	✱TH2	B-2
E1	H-4	FS83	G-1	IC9	G-2		
E2	G-1	FS84	G-1	IC10	G-2	TP3	J-2
E201	B-4	FS85	G-1	IC11	H-4	TP4	G-2
E202	E-1	FS86	G-1	IC12	E-5	TP5	G-1
		FS87	H-1	IC13	D-4	TP203	B-2
FS1	A-1	FS88	H-1	IC14	E-3	TP204	C-2
FS3	A-2	FS89	H-1	IC15	J-4	TP205	D-1
FS5	B-2	FS90	G-1	IC201	A-2	TP402	G-5
FS6	B-2	FS91	G-1	IC202	A-4	TP403	D-1
FS7	A-3	FS92	G-2	IC203	A-3		
FS9	B-3	FS93	G-2	IC204	B-3		
FS10	A-3	FS94	F-2	IC205	C-4		
FS11	B-3	FS96	H-2	IC206	C-3		
FS12	A-3	FS97	H-2	IC207	C-3		
FS13	A-3	FS98	F-2	IC208	C-2		
FS14	B-3	FS99	F-2	IC209	C-2		
FS15	B-3	FS100	G-2	IC210	C-4		
FS16	A-4	FS101	H-2	IC211	A-4		
FS17	A-4	FS102	H-2	IC401	F-4		
FS18	A-4	FS103	G-3	IC402	F-4		
FS19	B-4	FS106	H-3	✱IC405	C-5		
FS20	A-4	FS107	H-3	✱IC406	D-5		
FS21	A-4	FS108	H-3	✱IC407	D-5		
FS22	A-5	FS109	H-3	✱IC408	C-5		
FS23	A-5	FS110	G-3	✱IC409	D-5		
FS24	A-5	FS111	G-4	IC410	F-5		
FS25	B-5	FS112	G-4				
FS26	A-5	FS114	H-4	PS1	G-5		
FS27	B-5	FS115	H-4	PS2	G-5		
FS28	B-5	FS116	G-4				
FS29	B-5	FS117	H-4	✱Q5	J-2		
FS30	C-1	FS118	H-4	✱Q6	J-2		
FS31	C-1	FS119	H-5	✱Q7	J-2		
FS32	C-1	FS121	G-5	✱Q9	H-4		
FS33	C-1	FS122	G-5	✱Q11	C-2		
FS34	C-1	FS123	H-5	✱Q12	E-2		
FS35	C-1	FS124	H-5	✱Q13	E-1		
FS36	D-1	FS125	H-1	Q18	J-5		
FS38	C-2	FS126	J-1	Q19	J-5		
FS39	C-2	FS127	J-1	Q20	H-5		
FS40	C-2	FS128	J-1	Q21	H-5		
FS41	D-2	FS129	H-2	✱Q22	J-4		
FS43	C-2	FS131	J-2	✱Q23	H-4		
FS44	D-2	FS132	J-2	Q25	G-4		
FS45	D-2	FS133	J-3	Q30	E-3		
FS46	D-2	FS135	J-3	✱Q205	A-2		
FS47	C-3	FS136	H-3	✱Q206	A-2		
FS48	C-3	FS137	J-3	✱Q207	B-2		
FS49	C-3	FS138	J-3	✱Q209	B-4		
FS50	C-3	FS139	H-3	✱Q211	E-1		
FS51	C-3	FS140	J-3	Q216	A-5		
FS53	C-3	FS141	J-3	Q217	A-5		
FS54	C-4	FS142	J-4	Q218	C-5		
FS56	D-4	FS143	J-4	Q219	C-5		
FS57	D-4	FS144	J-4	✱Q220	B-4		
FS58	C-4	FS145	J-4	✱Q221	B-4		
FS59	C-4	FS146	J-4	Q223	C-4		
FS61	D-4	FS147	J-5	✱Q403	F-3		

✱ : B SIDE
P : UVW-1600P ONLY
N : UVW-1600 ONLY

16-24 (b)

 AP-31A/31AP (3/3)

UVW-1600 (J) ;Serial No.10601 and higher
UVW-1600 (UC);Serial No.12901 and higher
UVW-1600P(EK);Serial No.13781 and higher

AP-31A/31AP(3/3);LTC PB

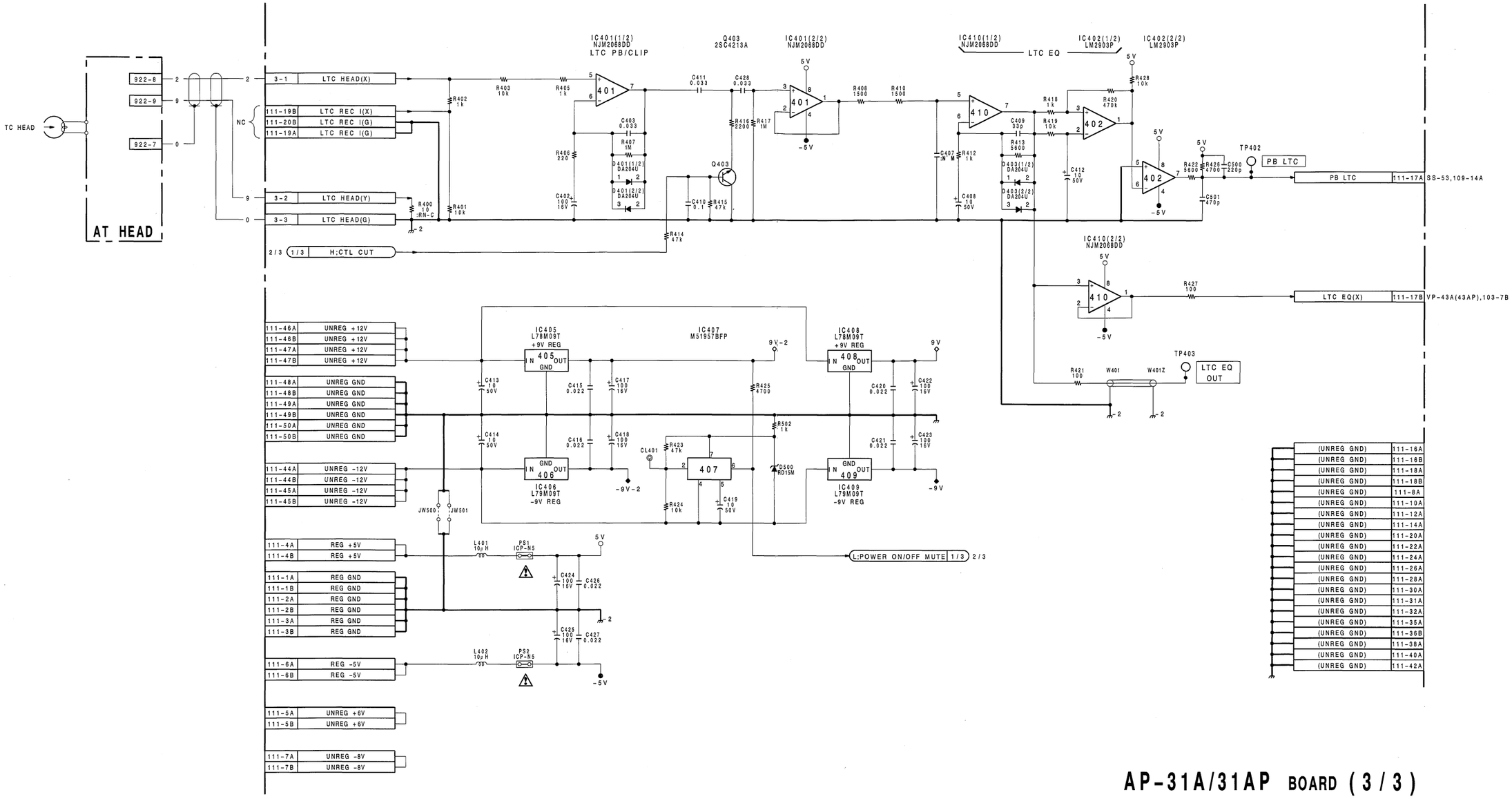

AP-31A/31AP BOARD (3/3)

BOARD NO.1-648-906-22
UVW-1600 (J) ;#10601-
UVW-1600 (UC);#12901-
UVW-1600P(EK);#13781-

 16-25 (b)

 AP-31A/31AP

AP-31A (1-648-906-21, 22)

CN1	H-1	FS63	D-4	FS148	J-5	RV1	J-1
CN2	A-1	FS64	B-4	FS149	J-5	RV2	J-1
CN3	G-4	FS65	D-5	FS150	H-5	RV3	J-1
CN111	E-5	FS66	D-5	FS151	H-5	RV4	H-1
		FS67	D-5	FS152	H-5	RV5	H-1
✱D1	J-2	FS68	E-5	FS153	G-5	RV201	B-1
✱D7	J-5	FS69	C-5	FS154	G-5	RV202	B-1
✱D8	H-5	FS70	C-5	FS155	H-5	RV203	B-1
✱D10	G-5	FS71	E-3	FS156	H-5	RV204	C-1
✱D11	E-3	FS72	E-3			RV205	C-1
✱D201	A-2	FS73	F-3	IC1	J-2		
✱D206	A-5	FS74	E-4	IC2	J-4	S1	J-1
✱D207	B-5	FS75	E-4	IC3	J-3	S2	G-1
✱D209	C-4	FS77	F-4	IC4	H-3	S201	A-1
✱D401	F-3	FS79	F-5	IC5	G-4	S202	C-1
✱D403	F-5	FS80	F-5	IC6	G-3		
✱D500 P	D-5	FS81	H-1	IC7	G-3	✱TH1	J-2
		FS82	H-1	IC8	F-2	✱TH2	B-2
E1	H-4	FS83	G-1	IC9	G-2		
E2	G-1	FS84	G-1	IC10	G-2	TP3	J-2
E201	B-4	FS85	G-1	IC11	H-4	TP4	G-2
E202	E-1	FS86	G-1	IC12	E-5	TP5	G-1
		FS87	H-1	IC13	D-4	TP203	B-2
FS1	A-1	FS88	H-1	IC14	E-3	TP204	C-2
FS3	A-2	FS89	H-1	IC15	J-4	TP205	D-1
FS5	B-2	FS90	G-1	IC201	A-2	TP402	G-5
FS6	B-2	FS91	G-1	IC202	A-4	TP403	D-1
FS7	A-3	FS92	G-2	IC203	A-3		
FS9	B-3	FS93	G-2	IC204	B-3		
FS10	A-3	FS94	F-2	IC205	C-4		
FS11	B-3	FS96	H-2	IC206	C-3		
FS12	A-3	FS97	H-2	IC207	C-3		
FS13	A-3	FS98	F-2	IC208	C-2		
FS14	B-3	FS99	F-2	IC209	C-2		
FS15	B-3	FS100	G-2	IC210	C-4		
FS16	A-4	FS101	H-2	IC211	A-4		
FS17	A-4	FS102	H-2	IC401	F-4		
FS18	A-4	FS103	G-3	IC402	F-4		
FS19	B-4	FS106	H-3	✱IC405	C-5		
FS20	A-4	FS107	H-3	✱IC406	D-5		
FS21	A-4	FS108	H-3	✱IC407	D-5		
FS22	A-5	FS109	H-3	✱IC408	C-5		
FS23	A-5	FS110	G-3	✱IC409	D-5		
FS24	A-5	FS111	G-4	IC410	F-5		
FS25	B-5	FS112	G-4				
FS26	A-5	FS114	H-4	PS1	G-5		
FS27	B-5	FS115	H-4	PS2	G-5		
FS28	B-5	FS116	G-4				
FS29	B-5	FS117	H-4	✱Q5	J-2		
FS30	C-1	FS118	H-4	✱Q6	J-2		
FS31	C-1	FS119	H-5	✱Q7	J-2		
FS32	C-1	FS121	G-5	✱Q9	H-4		
FS33	C-1	FS122	G-5	✱Q11	C-2		
FS34	C-1	FS123	H-5	✱Q12	E-2		
FS35	C-1	FS124	H-5	✱Q13	E-1		
FS36	D-1	FS125	H-1	Q18	J-5		
FS38	C-2	FS126	J-1	Q19	J-5		
FS39	C-2	FS127	J-1	Q20	H-5		
FS40	C-2	FS128	J-1	Q21	H-5		
FS41	D-2	FS129	H-2	✱Q22	J-4		
FS43	C-2	FS131	J-2	✱Q23	H-4		
FS44	D-2	FS132	J-2	Q25	G-4		
FS45	D-2	FS133	J-3	Q30	E-3		
FS46	D-2	FS135	J-3	✱Q205	A-2		
FS47	C-3	FS136	H-3	✱Q206	A-2		
FS48	C-3	FS137	J-3	✱Q207	B-2		
FS49	C-3	FS138	J-3	✱Q209	B-4		
FS50	C-3	FS139	H-3	✱Q211	E-1		
FS51	C-3	FS140	J-3	Q216	A-5		
FS53	C-3	FS141	J-3	Q217	A-5		
FS54	C-4	FS142	J-4	Q218	C-5		
FS56	D-4	FS143	J-4	Q219	C-5		
FS57	D-4	FS144	J-4	✱Q220	B-4		
FS58	C-4	FS145	J-4	✱Q221	B-4		
FS59	C-4	FS146	J-4	Q223	C-4		
FS61	D-4	FS147	J-5	✱Q403	F-3		

✱ : B SIDE
P : UVW-1600P ONLY
N : UVW-1600 ONLY

 16-16 (a)

 AP-31A/31AP (1/3)

UVW-1600 (J) ;Serial No.10001 through 10600
UVW-1600 (UC);Serial No.10001 through 12900
UVW-1600P(EK);Serial No.10001 through 13780

AP-31A/31AP(1/3);CH-1 PB EQ/NR,LINE/METER/HP DRIVE

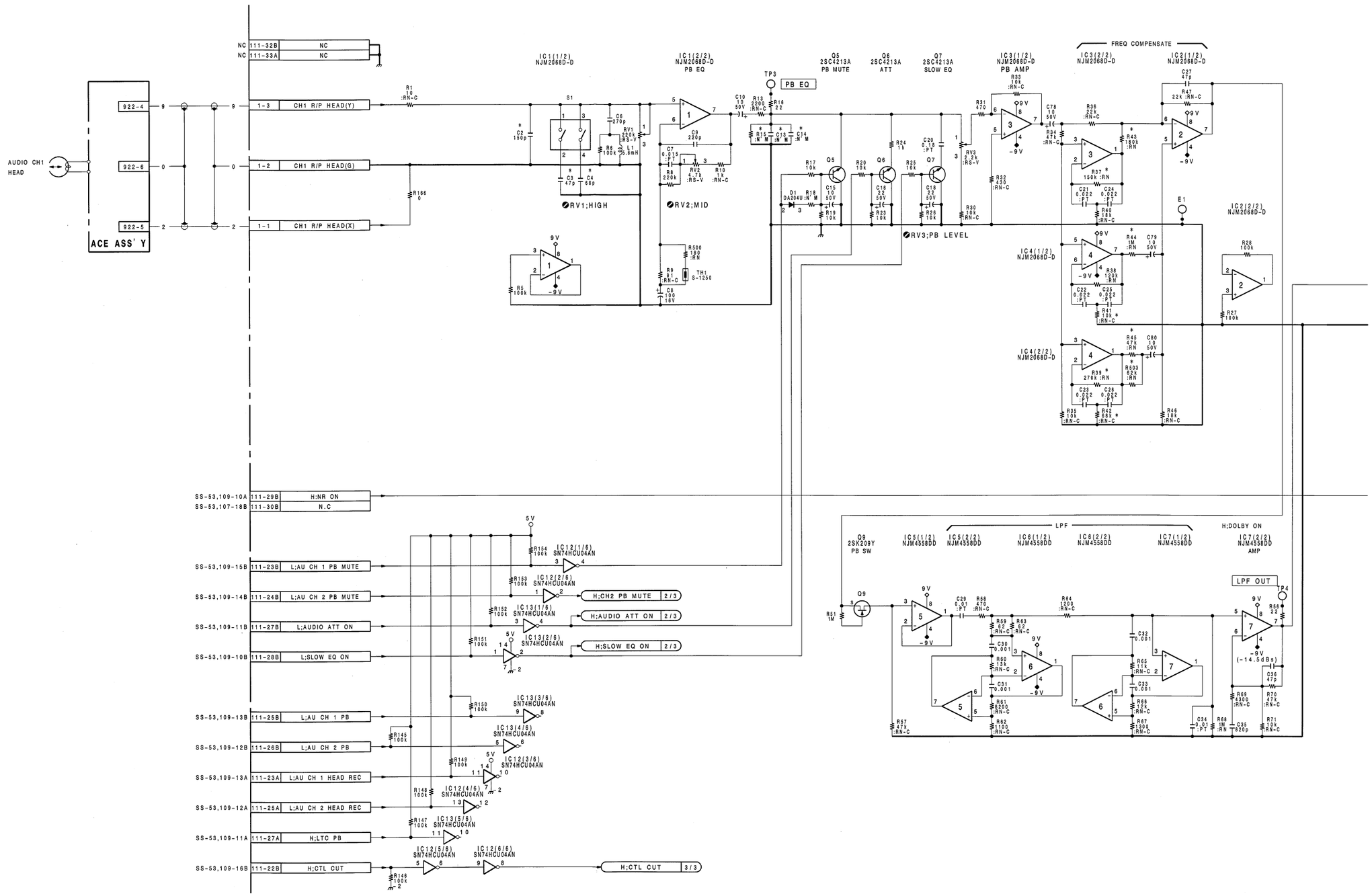

 16-17 (a1)

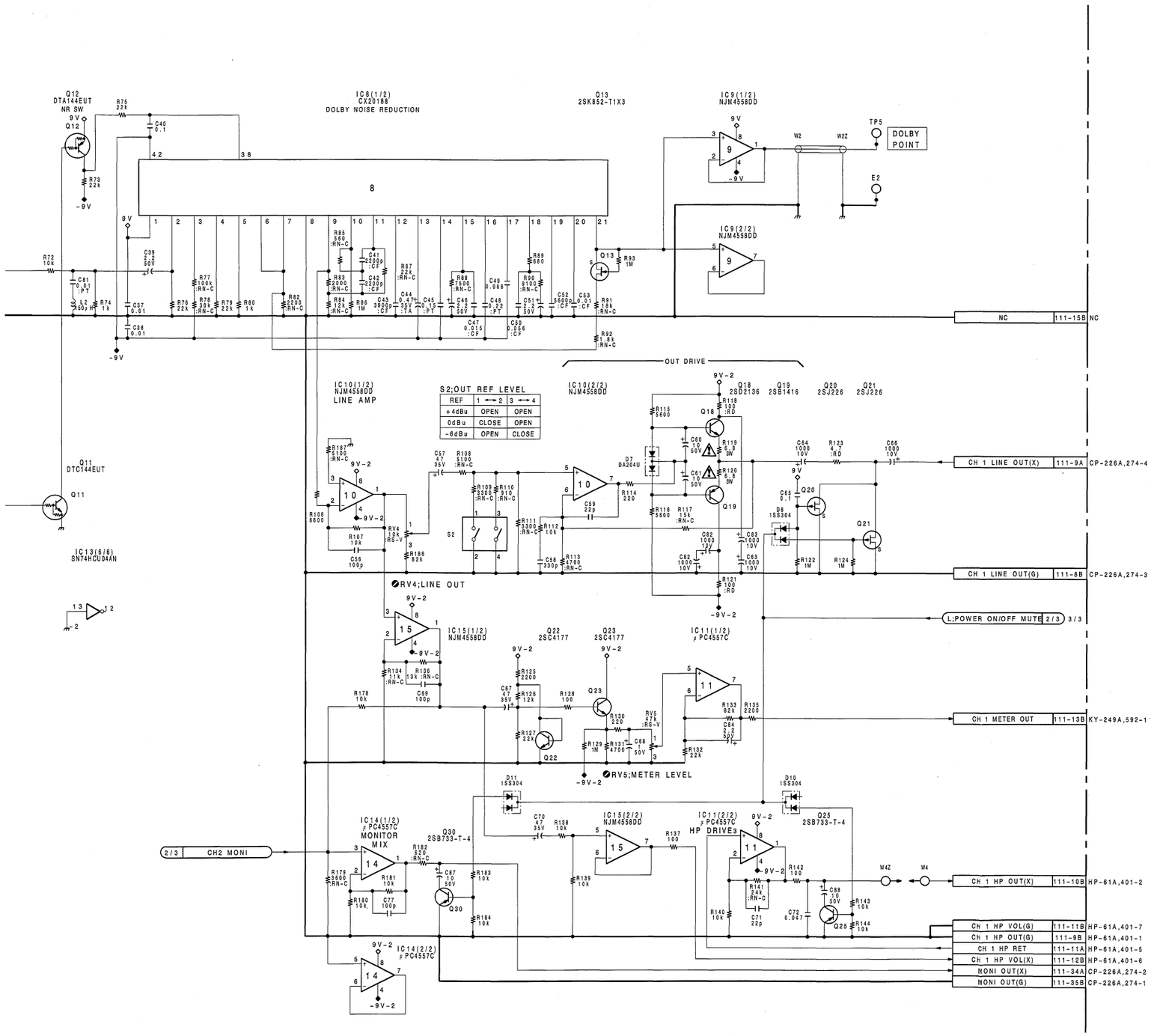

S2;OUT REF LEVEL

REF	1 ⟷ 2	3 ⟷ 4
+4dBu	OPEN	OPEN
0dBu	CLOSE	OPEN
-6dBu	OPEN	CLOSE

*	J,UC	EK
C2	150P	470P
C3	47P	47P
C4	68P	22P
C13	N' M	6800P
C14	N' M	3300P
R15	N' M	▲10K
R37	Δ150K	Δ270K
R39	Δ270K	Δ430K
R41	▲10K	▲12K
R42	▲68K	▲68K
R43	Δ180K	N' M
R44	Δ 1M	Δ270K
R45	Δ47K	Δ56K
R503	Δ62K	N' M

Δ =:RN ▲ =:RN-C

AP-31A/31AP BOARD (1/3)

BOARD NO.1-648-906-21
UVW-1600 (J) ;#10001-10600
UVW-1600 (UC);#10001-12900
UVW-1600P(EK);#10001-13780

AP-31A (1-648-906-21, 22)

CN1	H-1	FS63	D-4	FS148	J-5	RV1	J-1
CN2	A-1	FS64	B-4	FS149	J-5	RV2	J-1
CN3	G-4	FS65	D-5	FS150	H-5	RV3	J-1
CN111	E-5	FS66	D-5	FS151	H-5	RV4	H-1
		FS67	D-5	FS152	H-5	RV5	H-1
✱D1	J-2	FS68	E-5	FS153	G-5	RV201	B-1
✱D7	J-5	FS69	C-5	FS154	G-5	RV202	B-1
✱D8	H-5	FS70	C-5	FS155	H-5	RV203	B-1
✱D10	G-5	FS71	E-3	FS156	H-5	RV204	C-1
✱D11	E-3	FS72	E-3			RV205	C-1
✱D201	A-2	FS73	F-3	IC1	J-2		
✱D206	A-5	FS74	E-4	IC2	J-4	S1	J-1
✱D207	B-5	FS75	E-4	IC3	J-3	S2	G-1
✱D209	C-4	FS77	F-4	IC4	H-3	S201	A-1
✱D401	F-3	FS79	F-5	IC5	G-4	S202	C-1
✱D403	F-5	FS80	F-5	IC6	G-3		
✱D500 P	D-5	FS81	H-1	IC7	G-3	✱TH1	J-2
		FS82	H-1	IC8	F-2	✱TH2	B-2
E1	H-4	FS83	G-1	IC9	G-2		
E2	G-1	FS84	G-1	IC10	G-2	TP3	J-2
E201	B-4	FS85	G-1	IC11	H-4	TP4	G-2
E202	E-1	FS86	G-1	IC12	E-5	TP5	G-1
		FS87	H-1	IC13	D-4	TP203	B-2
FS1	A-1	FS88	H-1	IC14	E-3	TP204	C-2
FS3	A-2	FS89	H-1	IC15	J-4	TP205	D-1
FS5	B-2	FS90	G-1	IC201	A-2	TP402	G-5
FS6	B-2	FS91	G-1	IC202	A-4	TP403	D-1
FS7	A-3	FS92	G-2	IC203	A-3		
FS9	B-3	FS93	G-2	IC204	B-3		
FS10	A-3	FS94	F-2	IC205	C-4		
FS11	B-3	FS96	H-2	IC206	C-3		
FS12	A-3	FS97	H-2	IC207	C-3		
FS13	A-3	FS98	F-2	IC208	C-2		
FS14	B-3	FS99	F-2	IC209	C-2		
FS15	B-3	FS100	G-2	IC210	C-4		
FS16	A-4	FS101	H-2	IC211	A-4		
FS17	A-4	FS102	H-2	IC401	F-4		
FS18	A-4	FS103	G-3	IC402	F-4		
FS19	B-4	FS106	H-3	✱IC405	C-5		
FS20	A-4	FS107	H-3	✱IC406	D-5		
FS21	A-4	FS108	H-3	✱IC407	D-5		
FS22	A-5	FS109	H-3	✱IC408	C-5		
FS23	A-5	FS110	G-3	✱IC409	D-5		
FS24	A-5	FS111	G-4	IC410	F-5		
FS25	B-5	FS112	G-4				
FS26	A-5	FS114	H-4	PS1	G-5		
FS27	B-5	FS115	H-4	PS2	G-5		
FS28	B-5	FS116	G-4				
FS29	B-5	FS117	H-4	✱Q5	J-2		
FS30	C-1	FS118	H-4	✱Q6	J-2		
FS31	C-1	FS119	H-5	✱Q7	J-2		
FS32	C-1	FS121	G-5	✱Q9	H-4		
FS33	C-1	FS122	G-5	✱Q11	C-2		
FS34	C-1	FS123	H-5	✱Q12	E-2		
FS35	C-1	FS124	H-5	✱Q13	E-1		
FS36	D-1	FS125	H-1	Q18	J-5		
FS38	C-2	FS126	J-1	Q19	J-5		
FS39	C-2	FS127	J-1	Q20	H-5		
FS40	C-2	FS128	J-1	Q21	H-5		
FS41	D-2	FS129	H-2	✱Q22	J-4		
FS43	C-2	FS131	J-2	✱Q23	H-4		
FS44	D-2	FS132	J-2	Q25	G-4		
FS45	D-2	FS133	J-3	Q30	E-3		
FS46	D-2	FS135	J-3	✱Q205	A-2		
FS47	C-3	FS136	H-3	✱Q206	A-2		
FS48	C-3	FS137	J-3	✱Q207	B-2		
FS49	C-3	FS138	J-3	✱Q209	B-4		
FS50	C-3	FS139	H-3	✱Q211	E-1		
FS51	C-3	FS140	J-3	Q216	A-5		
FS53	C-3	FS141	J-3	Q217	A-5		
FS54	C-4	FS142	J-4	Q218	C-5		
FS56	D-4	FS143	J-4	Q219	C-5		
FS57	D-4	FS144	J-4	✱Q220	B-4		
FS58	C-4	FS145	J-4	✱Q221	B-4		
FS59	C-4	FS146	J-4	Q223	C-4		
FS61	D-4	FS147	J-5	✱Q403	F-3		

✱ : B SIDE
P : UVW-1600P ONLY
N : UVW-1600 ONLY

UVW-1600 (J) ;Serial No.10001 through 10600
UVW-1600 (UC);Serial No.10001 through 12900
UVW-1600P(EK);Serial No.10001 through 13780

AP-31A/31AP(2/3):CH-2 PB EQ/NR.LINE/METER/HP DRIVE

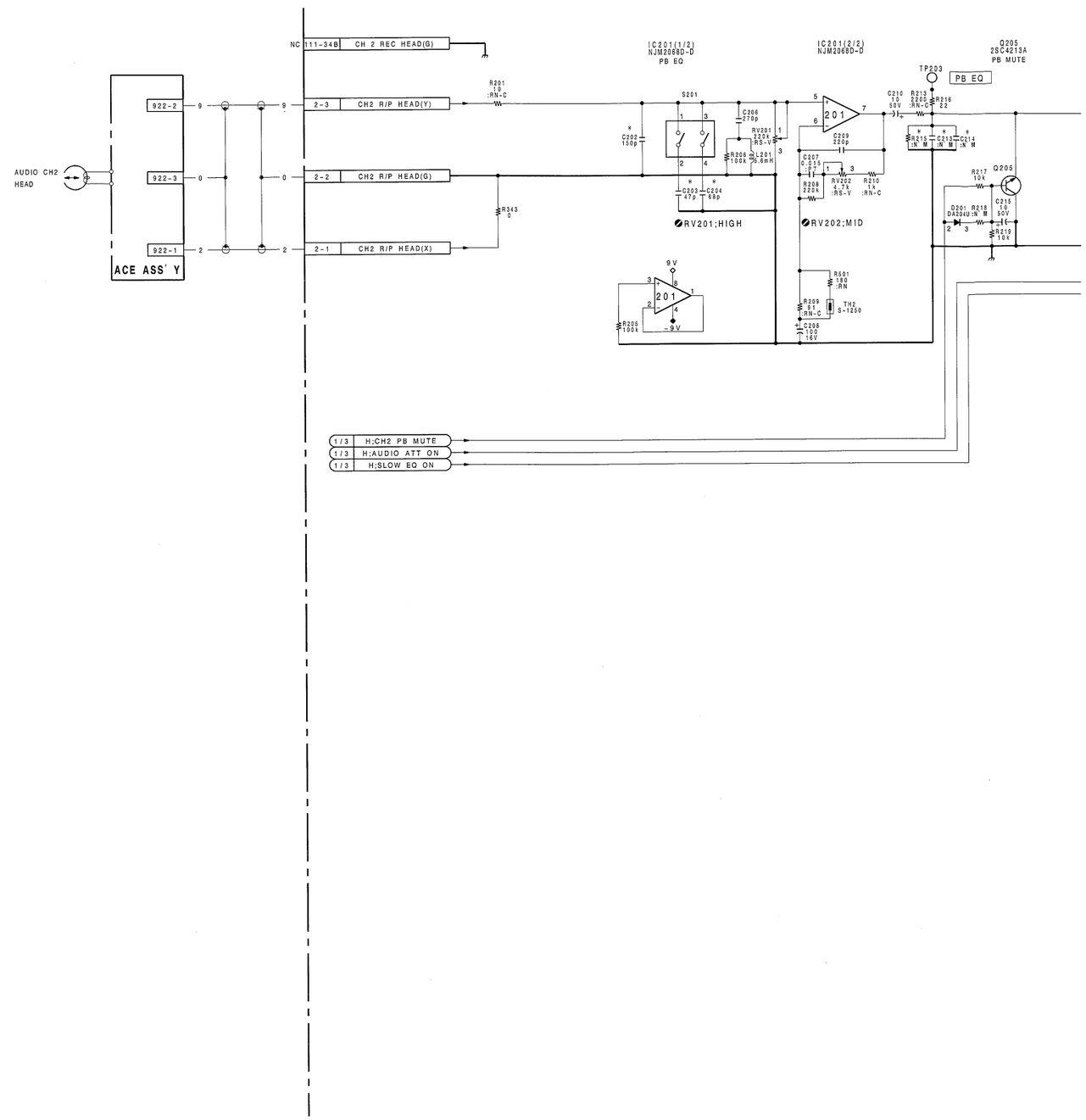

 AP-31A/31AP (2/3)

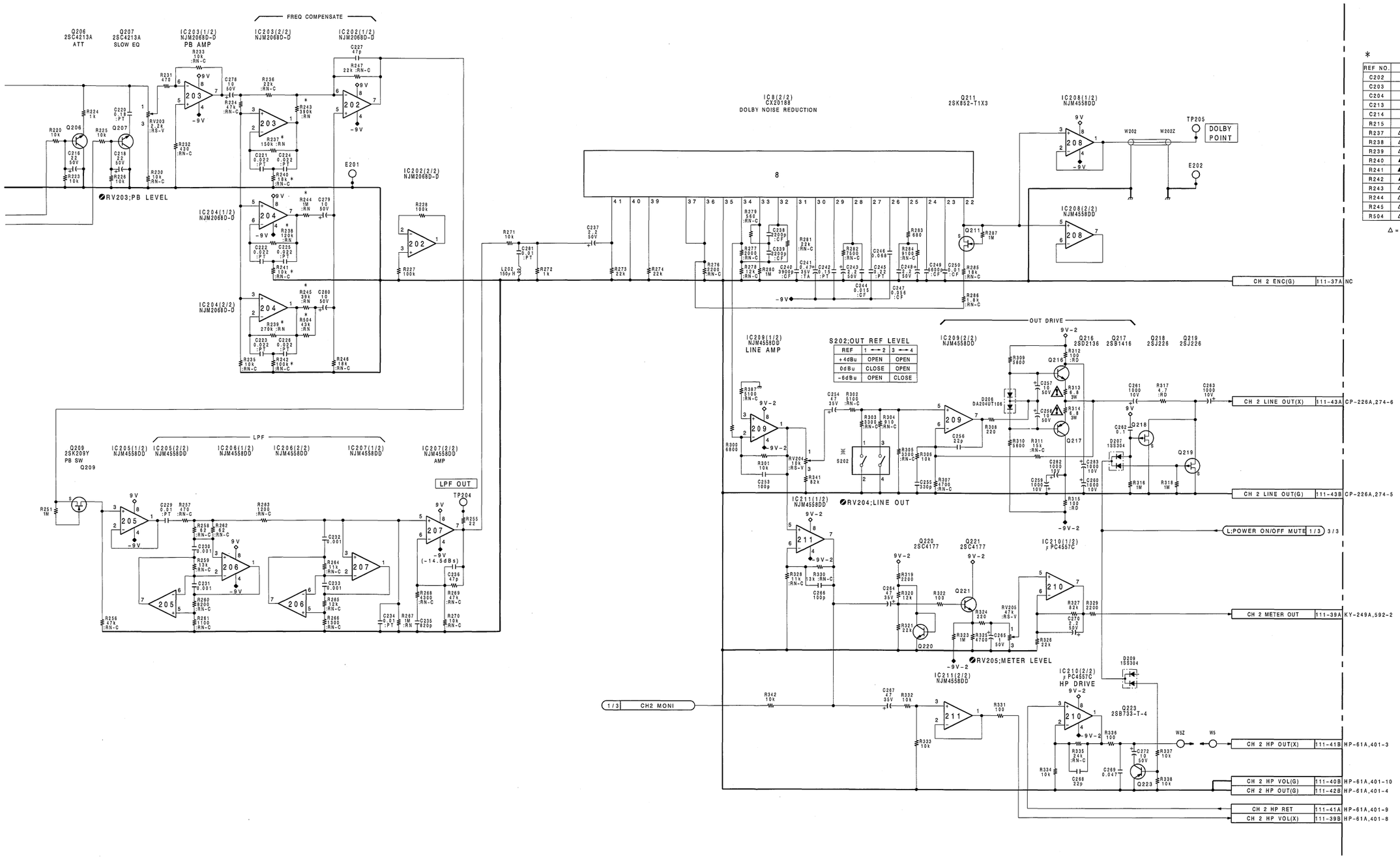

*

REF NO.	J,UC	EK
C202	150P	470P
C203	47P	47P
C204	68P	22P
C213	N' M	6800P
C214	N' M	3300P
R215	N' M	▲10K
R237	△150K	△430K
R238	△120K	△430K
R239	△270K	△430K
R240	▲18K	▲39K
R241	▲10K	▲18K
R242	▲100K	▲68K
R243	△390K	N' M
R244	△ 1M	△560K
R245	△39K	△75K
R504	△43K	N' M

△ =:RN ▲ =:RN-C

AP-31A/31AP BOARD (2/3)

BOARD NO.1-648-906-21
UVW-1600 (J) ;#10001-10600
UVW-1600 (UC);#10001-12900
UVW-1600P(EK);#10001-13780

UVW-1800/1600
UVW-1800P/1600P

16-21 (a2) 16-21 (a2)

I J K L M N O P

AP-31A (1-648-906-21, 22)

CN1	H-1	FS63	D-4	FS148	J-5	RV1	J-1
CN2	A-1	FS64	B-4	FS149	J-5	RV2	J-1
CN3	G-4	FS65	D-5	FS150	H-5	RV3	J-1
CN111	E-5	FS66	D-5	FS151	H-5	RV4	H-1
		FS67	D-5	FS152	H-5	RV5	H-1
✱D1	J-2	FS68	E-5	FS153	G-5	RV201	B-1
✱D7	J-5	FS69	C-5	FS154	G-5	RV202	B-1
✱D8	H-5	FS70	C-5	FS155	H-5	RV203	B-1
✱D10	G-5	FS71	E-3	FS156	H-5	RV204	C-1
✱D11	E-3	FS72	E-3			RV205	C-1
✱D201	A-2	FS73	F-3	IC1	J-2		
✱D206	A-5	FS74	E-4	IC2	J-4	S1	J-1
✱D207	B-5	FS75	E-4	IC3	J-3	S2	G-1
✱D209	C-4	FS77	F-4	IC4	H-3	S201	A-1
✱D401	F-3	FS79	F-5	IC5	G-4	S202	C-1
✱D403	F-5	FS80	F-5	IC6	G-3		
✱D500 P	D-5	FS81	H-1	IC7	G-3	✱TH1	J-2
		FS82	H-1	IC8	F-2	✱TH2	B-2
E1	H-4	FS83	G-1	IC9	G-2		
E2	G-1	FS84	G-1	IC10	G-2	TP3	J-2
E201	B-4	FS85	G-1	IC11	H-4	TP4	G-2
E202	E-1	FS86	G-1	IC12	E-5	TP5	G-1
		FS87	H-1	IC13	D-4	TP203	B-2
FS1	A-1	FS88	H-1	IC14	E-3	TP204	C-2
FS3	A-2	FS89	H-1	IC15	J-4	TP205	D-1
FS5	B-2	FS90	G-1	IC201	A-2	TP402	G-5
FS6	B-2	FS91	G-1	IC202	A-4	TP403	D-1
FS7	A-3	FS92	G-2	IC203	A-3		
FS9	B-3	FS93	G-2	IC204	B-3		
FS10	A-3	FS94	F-2	IC205	C-4		
FS11	B-3	FS96	H-2	IC206	C-3		
FS12	A-3	FS97	H-2	IC207	C-3		
FS13	A-3	FS98	F-2	IC208	C-2		
FS14	B-3	FS99	F-2	IC209	C-2		
FS15	B-3	FS100	G-2	IC210	C-4		
FS16	A-4	FS101	H-2	IC211	A-4		
FS17	A-4	FS102	H-2	IC401	F-4		
FS18	A-4	FS103	G-3	IC402	F-4		
FS19	B-4	FS106	H-3	✱IC405	C-5		
FS20	A-4	FS107	H-3	✱IC406	D-5		
FS21	A-4	FS108	H-3	✱IC407	D-5		
FS22	A-5	FS109	H-3	✱IC408	C-5		
FS23	A-5	FS110	G-3	✱IC409	D-5		
FS24	A-5	FS111	G-4	IC410	F-5		
FS25	B-5	FS112	G-4				
FS26	A-5	FS114	H-4	PS1	G-5		
FS27	B-5	FS115	H-4	PS2	G-5		
FS28	B-5	FS116	G-4				
FS29	B-5	FS117	H-4	✱Q5	J-2		
FS30	C-1	FS118	H-4	✱Q6	J-2		
FS31	C-1	FS119	H-5	✱Q7	J-2		
FS32	C-1	FS121	G-5	✱Q9	H-4		
FS33	C-1	FS122	G-5	✱Q11	C-2		
FS34	C-1	FS123	H-5	✱Q12	E-2		
FS35	C-1	FS124	H-5	✱Q13	E-1		
FS36	D-1	FS125	H-1	Q18	J-5		
FS38	C-2	FS126	J-1	Q19	J-5		
FS39	C-2	FS127	J-1	Q20	H-5		
FS40	C-2	FS128	J-1	Q21	H-5		
FS41	D-2	FS129	H-2	✱Q22	J-4		
FS43	C-2	FS131	J-2	✱Q23	H-4		
FS44	D-2	FS132	J-2	Q25	G-4		
FS45	D-2	FS133	J-3	Q30	E-3		
FS46	D-2	FS135	J-3	✱Q205	A-2		
FS47	C-3	FS136	H-3	✱Q206	A-2		
FS48	C-3	FS137	J-3	✱Q207	B-2		
FS49	C-3	FS138	J-3	✱Q209	B-4		
FS50	C-3	FS139	H-3	✱Q211	E-1		
FS51	C-3	FS140	J-3	Q216	A-5		
FS53	C-3	FS141	J-3	Q217	A-5		
FS54	C-4	FS142	J-4	Q218	C-5		
FS56	D-4	FS143	J-4	Q219	C-5		
FS57	D-4	FS144	J-4	✱Q220	B-4		
FS58	C-4	FS145	J-4	✱Q221	B-4		
FS59	C-4	FS146	J-4	Q223	C-4		
FS61	D-4	FS147	J-5	✱Q403	F-3		

✱ : B SIDE
P : UVW-1600P ONLY
N : UVW-1600 ONLY

 AP-31A/31AP (3/3)

UVW-1600 (J) ;Serial No.10001 through 10600
UVW-1600 (UC);Serial No.10001 through 12900
UVW-1600P(EK);Serial No.10001 through 13780

AP-31A/31AP(3/3);LTC PB

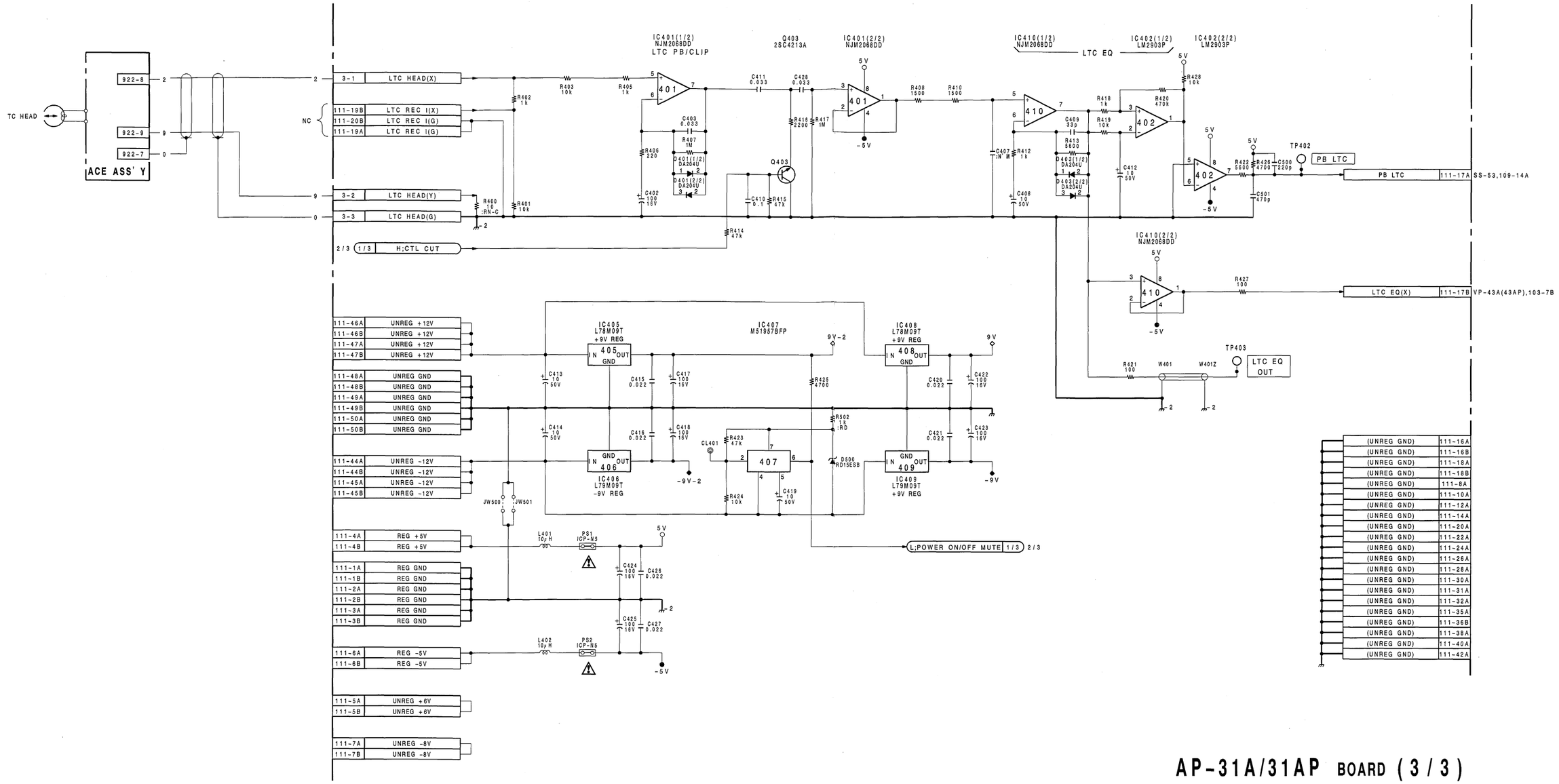

AP-31A/31AP BOARD (3/3)

BOARD NO.1-648-906-21
UVW-1600 (J) ;#10001-10600
UVW-1600 (UC);#10001-12900
UVW-1600P(EK);#10001-13780

 16-25 (a)

 AR-14/14P

AR-14 (1-648-907-12)

CN1	J-5	FS44	C-3	FS124	J-1	✱Q3	E-5
CN112	E-5	FS45	C-3	FS125	H-2	✱Q4	E-5
		FS46	C-3	FS126	H-2	✱Q5	F-5
✱D1	D-5	FS47	C-3	FS127	H-2	✱Q101	G-1
✱D101	J-2	FS48	C-3	FS128	H-4	✱Q102	E-4
✱D102	J-1	FS49	C-4	FS130	J-1	✱Q103	G-2
✱D103	C-3	FS50	C-4	FS131	J-1	Q104	C-4
✱D201	A-2	FS51	C-5	FS132	J-2	Q105	B-4
✱D202	A-1	FS52	D-1	FS133	J-2	✱Q201	C-1
✱D203	A-3	FS54	D-3	FS134	J-2	✱Q202	E-4
✱D301	C-5	FS55	D-3	FS135	H-2	✱Q203	C-1
✱D302	D-4	FS56	D-3	FS136	J-2	Q204	A-4
✱D303	B-3	FS57	D-4	FS137	J-2	Q205	A-4
✱D304	B-5	FS58	D-4	FS138	J-3	✱Q301	B-3
✱D305	B-3	FS59	D-4	FS139	J-3	Q302	C-5
✱D306	A-5	FS60	D-5	FS140	J-5	✱Q303	B-3
✱D311	G-4	FS61	D-1	FS141	J-5	Q304	A-5
✱D312	G-4	FS62	E-1	FS142	J-1	Q305	C-5
✱D313	J-3	FS63	D-3	FS143	J-1	Q306	A-5
✱D314	F-3	FS64	E-3	FS144	J-1	✱Q311	F-3
✱D321	G-3	FS65	E-3	FS145	J-2	Q312	G-4
✱D322	G-3	FS66	D-4	FS146	J-2	✱Q313	F-2
✱D323	J-2	FS68	E-4	FS147	J-2	✱Q314	H-4
✱D324	E-4	FS69	D-4	FS148	J-3	✱Q315	H-4
✱D331	G-5	FS70	D-4	FS149	J-3	Q316	H-3
✱D332	G-5	FS72	E-1	FS150	J-4	Q317	H-4
✱D334	E-4	FS73	E-2	FS152	H-2	✱Q318	J-3
		FS74	E-3	FS153	E-1	Q319	G-4
E106	H-1	FS76	E-3	FS154	F-1	✱Q321	G-3
E206	A-1	FS77	F-3	FS155	J-5	Q322	G-2
E301	J-1	FS78	E-4	FS156	J-4	✱Q323	E-3
E311	J-1	FS79	E-4			✱Q324	H-2
		FS80	F-4	IC1	E-4	✱Q325	H-3
FS1	A-1	FS81	E-5	IC2	E-2	Q326	H-2
FS2	A-1	FS82	E-5	IC3	D-5	Q327	H-3
FS3	A-1	FS83	F-1	IC5	B-5	✱Q328	J-2
FS4	A-2	FS84	F-1	IC6	B-5	Q329	G-2
FS5	A-2	FS85	F-1	IC7	C-5	✱Q331	F-5
FS6	A-5	FS86	F-1	IC101	J-2	Q332	G-5
FS7	A-2	FS87	F-1	IC102	J-2	✱Q333	F-3
FS8	A-2	FS88	F-2	IC103	H-2	✱Q334	H-4
FS9	A-2	FS89	F-2	IC104	G-2	✱Q335	H-5
FS10	A-5	FS90	F-2	IC105	F-2	Q336	H-4
FS11	A-5	FS91	F-3	IC201	A-2	Q337	H-5
FS12	A-5	FS92	F-3	IC202	B-2	Q339	G-5
FS13	B-1	FS93	F-3	IC203	C-2		
FS14	B-2	FS94	F-4	IC204	D-2	RV106	J-1
FS15	B-5	FS95	F-4	IC205	E-2	RV107	H-1
FS16	B-5	FS96	F-4	IC301	D-3	RV108	H-1
FS17	A-5	FS97	F-4	IC302	D-4	RV109	G-1
FS18	A-5	FS98	F-5	IC303	C-4	RV110	F-1
FS19	A-5	FS99	F-5	IC304	C-3	RV111	C-1
FS20	B-1	FS100	F-5	IC305	D-3	RV112	C-1
FS21	B-2	FS101	F-5	IC306	C-3	RV206	A-1
FS22	B-2	FS102	F-5	IC307	C-5	RV207	B-1
FS23	B-3	FS103	F-5	IC308	C-4	RV208	B-1
FS24	B-3	FS104	F-5	IC309	B-5	RV209	B-1
FS25	B-4	FS105	F-5	IC310	G-3	RV210	D-1
FS26	B-5	FS106	F-5	IC311	E-3	RV211	G-1
FS27	B-1	FS107	G-1	IC312	E-4	RV212	F-1
FS28	B-2	FS108	G-1	IC313	G-5	RV301	B-4
FS29	C-2	FS109	G-2	IC314	E-3	RV302	B-4
FS30	B-5	FS110	G-2	IC315	J-3		
FS31	B-5	FS111	G-2	IC316	J-5	RY301	J-3
FS32	B-5	FS112	G-2			RY311	J-2
FS33	B-5	FS113	G-3	LV101	C-2		
FS34	C-1	FS114	G-3	LV201	A-2	S103	J-1
FS35	C-2	FS115	G-3	LV301	J-4	S203	A-1
FS36	C-2	FS116	G-4	LV311	J-3		
FS37	C-5	FS117	G-4	LV321	J-5	TP106	H-1
FS38	C-5	FS118	G-4			TP206	A-1
FS39	C-5	FS119	G-5	PS1	H-5	TP301	J-1
FS40	C-1	FS120	G-5	PS2	H-5	TP311	J-1
FS41	C-1	FS121	G-5			TP321	J-1
FS42	C-2	FS122	H-1	✱Q1	E-5		
FS43	C-2	FS123	H-1	✱Q2	E-5	X301	D-3

✱ : B SIDE

 16-28 (b)

 AR-14/14P (1/4)

UVW-1800 (J) ;Serial No.10901 and higher
UVW-1800 (UC);Serial No.13931 and higher
UVW-1800P(EK);Serial No.14141 and higher

AR-14/14P(1/4);LTC REC/CANCEL CROSSTALK SIG.

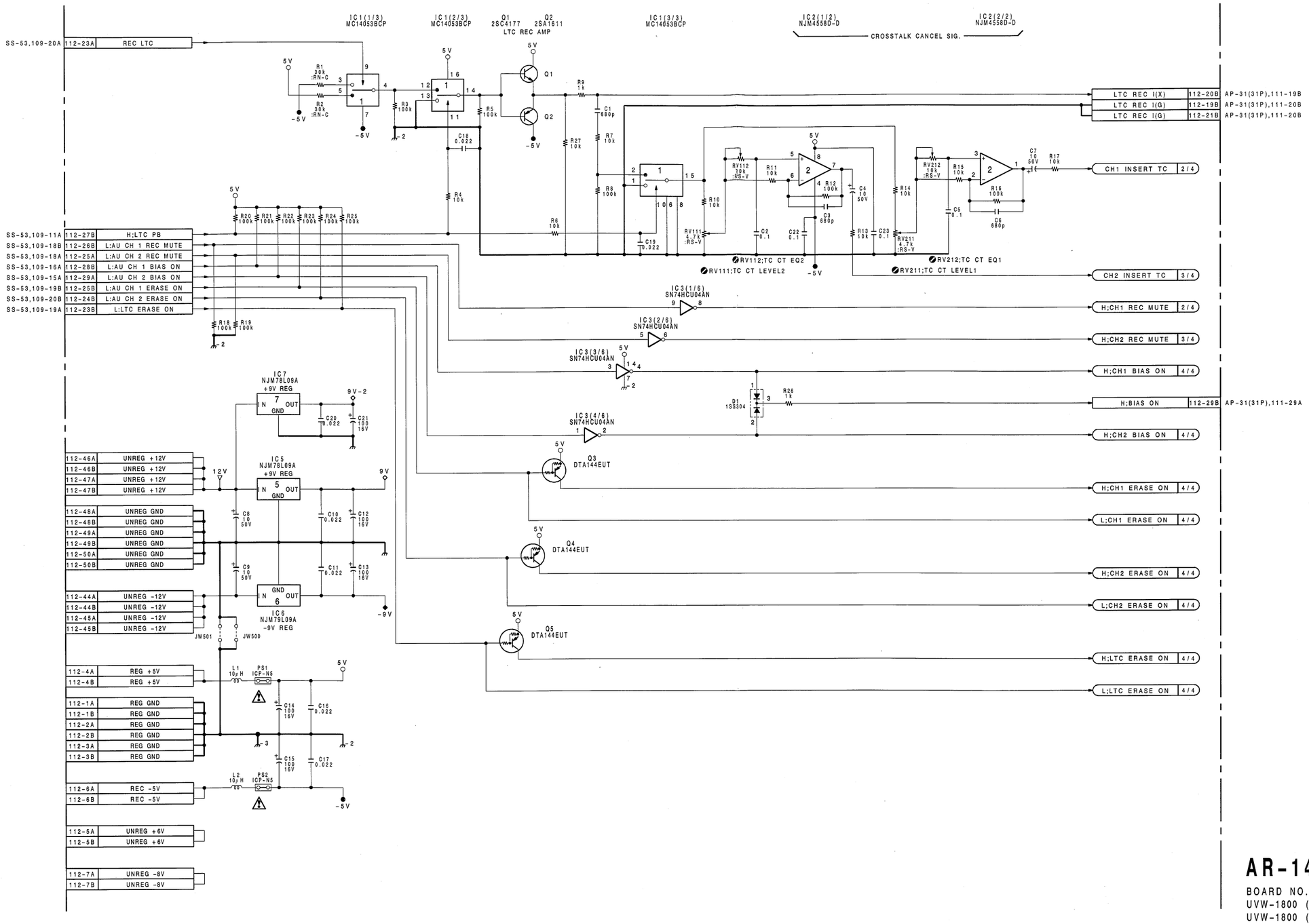

AR-14/14P BOARD (1/4)

BOARD NO.1-648-907-12
UVW-1800 (J) ;#10901-
UVW-1800 (UC);#13931-
UVW-1800P(EK);#14141-

 AR-14/14P

AR-14 (1-648-907-12)

CN1	J-5	FS44	C-3	FS124	J-1	✱Q3	E-5
CN112	E-5	FS45	C-3	FS125	H-2	✱Q4	E-5
		FS46	C-3	FS126	H-2	✱Q5	F-5
✱D1	D-5	FS47	C-3	FS127	H-2	✱Q101	G-1
✱D101	J-2	FS48	C-3	FS128	H-4	✱Q102	E-4
✱D102	J-1	FS49	C-4	FS130	J-1	✱Q103	G-2
✱D103	C-3	FS50	C-4	FS131	J-1	Q104	C-4
✱D201	A-2	FS51	C-5	FS132	J-2	Q105	B-4
✱D202	A-1	FS52	D-1	FS133	J-2	✱Q201	C-1
✱D203	A-3	FS54	D-3	FS134	J-2	✱Q202	E-4
✱D301	C-5	FS55	D-3	FS135	H-2	✱Q203	C-1
✱D302	D-4	FS56	D-3	FS136	J-2	Q204	A-4
✱D303	B-3	FS57	D-4	FS137	J-2	Q205	A-4
✱D304	B-5	FS58	D-4	FS138	J-3	✱Q301	B-3
✱D305	B-3	FS59	D-4	FS139	J-3	Q302	C-5
✱D306	A-5	FS60	D-5	FS140	J-5	✱Q303	B-3
✱D311	G-4	FS61	D-1	FS141	J-5	Q304	A-5
✱D312	G-4	FS62	E-1	FS142	J-1	Q305	C-5
✱D313	J-3	FS63	D-3	FS143	J-1	Q306	A-5
✱D314	F-3	FS64	E-3	FS144	J-1	✱Q311	F-3
✱D321	G-3	FS65	E-3	FS145	J-2	Q312	G-4
✱D322	G-3	FS66	D-4	FS146	J-2	✱Q313	F-2
✱D323	J-2	FS68	E-4	FS147	J-2	✱Q314	H-4
✱D324	E-4	FS69	D-4	FS148	J-3	✱Q315	H-4
✱D331	G-5	FS70	D-4	FS149	J-3	Q316	H-3
✱D332	G-5	FS72	E-1	FS150	J-4	Q317	H-4
✱D334	E-4	FS73	E-2	FS152	H-2	✱Q318	J-3
		FS74	E-3	FS153	E-1	Q319	G-4
E106	H-1	FS76	E-3	FS154	F-1	✱Q321	G-3
E206	A-1	FS77	F-3	FS155	J-5	Q322	G-2
E301	J-1	FS78	E-4	FS156	J-4	✱Q323	E-3
E311	J-1	FS79	E-4			✱Q324	H-2
		FS80	F-4	IC1	E-4	✱Q325	H-3
FS1	A-1	FS81	E-5	IC2	E-2	Q326	H-2
FS2	A-1	FS82	E-5	IC3	D-5	Q327	H-3
FS3	A-1	FS83	F-1	IC5	B-5	✱Q328	J-2
FS4	A-2	FS84	F-1	IC6	B-5	Q329	G-2
FS5	A-2	FS85	F-1	IC7	C-5	✱Q331	F-5
FS6	A-5	FS86	F-1	IC101	J-2	Q332	G-5
FS7	A-2	FS87	F-1	IC102	J-2	✱Q333	F-3
FS8	A-2	FS88	F-2	IC103	H-2	✱Q334	H-4
FS9	A-2	FS89	F-2	IC104	G-2	✱Q335	H-5
FS10	A-5	FS90	F-2	IC105	F-2	Q336	H-4
FS11	A-5	FS91	F-3	IC201	A-2	Q337	H-5
FS12	A-5	FS92	F-3	IC202	B-2	Q339	G-5
FS13	B-1	FS93	F-3	IC203	C-2		
FS14	B-2	FS94	F-4	IC204	D-2	RV106	J-1
FS15	B-5	FS95	F-4	IC205	E-2	RV107	H-1
FS16	B-5	FS96	F-4	IC301	D-3	RV108	H-1
FS17	A-5	FS97	F-4	IC302	D-4	RV109	G-1
FS18	A-5	FS98	F-5	IC303	C-4	RV110	F-1
FS19	A-5	FS99	F-5	IC304	C-3	RV111	C-1
FS20	B-1	FS100	F-5	IC305	D-3	RV112	C-1
FS21	B-2	FS101	F-5	IC306	C-3	RV206	A-1
FS22	B-2	FS102	F-5	IC307	C-5	RV207	B-1
FS23	B-3	FS103	F-5	IC308	C-4	RV208	B-1
FS24	B-3	FS104	F-5	IC309	B-5	RV209	B-1
FS25	B-4	FS105	F-5	IC310	G-3	RV210	D-1
FS26	B-5	FS106	F-5	IC311	E-3	RV211	G-1
FS27	B-1	FS107	G-1	IC312	E-4	RV212	F-1
FS28	B-2	FS108	G-1	IC313	G-5	RV301	B-4
FS29	C-2	FS109	G-2	IC314	E-3	RV302	B-4
FS30	B-5	FS110	G-2	IC315	J-3		
FS31	B-5	FS111	G-2	IC316	J-5	RY301	J-3
FS32	B-5	FS112	G-2			RY311	J-2
FS33	B-5	FS113	G-3	LV101	C-2		
FS34	C-1	FS114	G-3	LV201	A-2	S103	J-1
FS35	C-2	FS115	G-3	LV301	J-4	S203	A-1
FS36	C-2	FS116	G-4	LV311	J-3		
FS37	C-5	FS117	G-4	LV321	J-5	TP106	H-1
FS38	C-5	FS118	G-4			TP206	A-1
FS39	C-5	FS119	G-5	PS1	H-5	TP301	J-1
FS40	C-1	FS120	G-5	PS2	H-5	TP311	J-1
FS41	C-1	FS121	G-5			TP321	J-1
FS42	C-2	FS122	H-1	✱Q1	E-5		
FS43	C-2	FS123	H-1	✱Q2	E-5	X301	D-3

✱ : B SIDE

 16-32 (b)

 AR-14/14P (2/4)

UVW-1800 (J) ;Serial No.10901 and higher
UVW-1800 (UC);Serial No.13931 and higher
UVW-1800P(EK);Serial No.14141 and higher

AR-14/14P(2/4);CH-1 REC/BIAS DRIVE,CH-1 CANCEL CROSSTALK SIG.

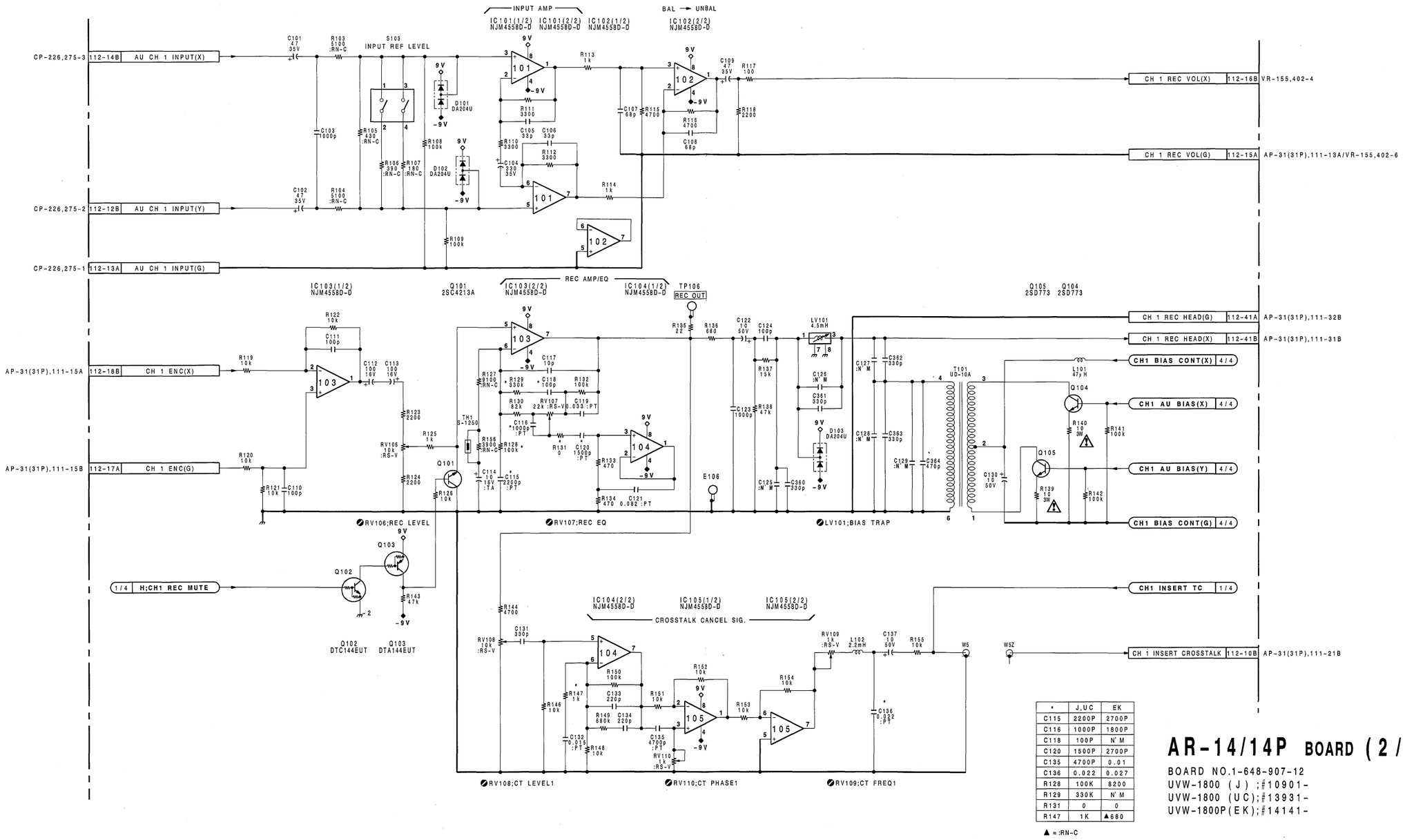

*	J,UC	EK
C115	2200P	2700P
C116	1000P	1800P
C118	100P	N'M
C120	1500P	2700P
C135	4700P	0.01
C136	0.022	0.027
R128	100K	8200
R129	330K	N'M
R131	0	0
R147	1K	▲680

▲ = :RN-C

AR-14/14P BOARD (2/4)

BOARD NO.1-648-907-12
UVW-1800 (J) ;#10901-
UVW-1800 (UC);#13931-
UVW-1800P(EK);#14141-

 AR-14/14P

AR-14 (1-648-907-12)

CN1	J-5	FS44	C-3	FS124	J-1	✱Q3	E-5
CN112	E-5	FS45	C-3	FS125	H-2	✱Q4	E-5
		FS46	C-3	FS126	H-2	✱Q5	F-5
✱D1	D-5	FS47	C-3	FS127	H-2	✱Q101	G-1
✱D101	J-2	FS48	C-3	FS128	H-4	✱Q102	E-4
✱D102	J-1	FS49	C-4	FS130	J-1	✱Q103	G-2
✱D103	C-3	FS50	C-4	FS131	J-1	Q104	C-4
✱D201	A-2	FS51	C-5	FS132	J-2	Q105	B-4
✱D202	A-1	FS52	D-1	FS133	J-2	✱Q201	C-1
✱D203	A-3	FS54	D-3	FS134	J-2	✱Q202	E-4
✱D301	C-5	FS55	D-3	FS135	H-2	✱Q203	C-1
✱D302	D-4	FS56	D-3	FS136	J-2	Q204	A-4
✱D303	B-3	FS57	D-4	FS137	J-2	Q205	A-4
✱D304	B-5	FS58	D-4	FS138	J-3	✱Q301	B-3
✱D305	B-3	FS59	D-4	FS139	J-3	Q302	C-5
✱D306	A-5	FS60	D-5	FS140	J-5	✱Q303	B-3
✱D311	G-4	FS61	D-1	FS141	J-5	Q304	A-5
✱D312	G-4	FS62	E-1	FS142	J-1	Q305	C-5
✱D313	J-3	FS63	D-3	FS143	J-1	Q306	A-5
✱D314	F-3	FS64	E-3	FS144	J-1	✱Q311	F-3
✱D321	G-3	FS65	E-3	FS145	J-2	Q312	G-4
✱D322	G-3	FS66	D-4	FS146	J-2	✱Q313	F-2
✱D323	J-2	FS68	E-4	FS147	J-2	✱Q314	H-4
✱D324	E-4	FS69	D-4	FS148	J-3	✱Q315	H-4
✱D331	G-5	FS70	D-4	FS149	J-3	Q316	H-3
✱D332	G-5	FS72	E-1	FS150	J-4	Q317	H-4
✱D334	E-4	FS73	E-2	FS152	H-2	✱Q318	J-3
		FS74	E-3	FS153	E-1	Q319	G-4
E106	H-1	FS76	E-3	FS154	F-1	✱Q321	G-3
E206	A-1	FS77	F-3	FS155	J-5	Q322	G-2
E301	J-1	FS78	E-4	FS156	J-4	✱Q323	E-3
E311	J-1	FS79	E-4			✱Q324	H-2
		FS80	F-4	IC1	E-4	✱Q325	H-3
FS1	A-1	FS81	E-5	IC2	E-2	Q326	H-2
FS2	A-1	FS82	E-5	IC3	D-5	Q327	H-3
FS3	A-1	FS83	F-1	IC5	B-5	✱Q328	J-2
FS4	A-2	FS84	F-1	IC6	B-5	Q329	G-2
FS5	A-2	FS85	F-1	IC7	C-5	✱Q331	F-5
FS6	A-5	FS86	F-1	IC101	J-2	Q332	G-5
FS7	A-2	FS87	F-1	IC102	J-2	✱Q333	F-3
FS8	A-2	FS88	F-2	IC103	H-2	✱Q334	H-4
FS9	A-2	FS89	F-2	IC104	G-2	✱Q335	H-5
FS10	A-5	FS90	F-2	IC105	F-2	Q336	H-4
FS11	A-5	FS91	F-3	IC201	A-2	Q337	H-5
FS12	A-5	FS92	F-3	IC202	B-2	Q339	G-5
FS13	B-1	FS93	F-3	IC203	C-2		
FS14	B-2	FS94	F-4	IC204	D-2	RV106	J-1
FS15	B-5	FS95	F-4	IC205	E-2	RV107	H-1
FS16	B-5	FS96	F-4	IC301	D-3	RV108	H-1
FS17	A-5	FS97	F-4	IC302	D-4	RV109	G-1
FS18	A-5	FS98	F-5	IC303	C-4	RV110	F-1
FS19	A-5	FS99	F-5	IC304	C-3	RV111	C-1
FS20	B-1	FS100	F-5	IC305	D-3	RV112	C-1
FS21	B-2	FS101	F-5	IC306	C-3	RV206	A-1
FS22	B-2	FS102	F-5	IC307	C-5	RV207	B-1
FS23	B-3	FS103	F-5	IC308	C-4	RV208	B-1
FS24	B-3	FS104	F-5	IC309	B-5	RV209	B-1
FS25	B-4	FS105	F-5	IC310	G-3	RV210	D-1
FS26	B-5	FS106	F-5	IC311	E-3	RV211	G-1
FS27	B-1	FS107	G-1	IC312	E-4	RV212	F-1
FS28	B-2	FS108	G-1	IC313	G-5	RV301	B-4
FS29	C-2	FS109	G-2	IC314	E-3	RV302	B-4
FS30	B-5	FS110	G-2	IC315	J-3		
FS31	B-5	FS111	G-2	IC316	J-5	RY301	J-3
FS32	B-5	FS112	G-2			RY311	J-2
FS33	B-5	FS113	G-3	LV101	C-2		
FS34	C-1	FS114	G-3	LV201	A-2	S103	J-1
FS35	C-2	FS115	G-3	LV301	J-4	S203	A-1
FS36	C-2	FS116	G-4	LV311	J-3		
FS37	C-5	FS117	G-4	LV321	J-5	TP106	H-1
FS38	C-5	FS118	G-4			TP206	A-1
FS39	C-5	FS119	G-5	PS1	H-5	TP301	J-1
FS40	C-1	FS120	G-5	PS2	H-5	TP311	J-1
FS41	C-1	FS121	G-5			TP321	J-1
FS42	C-2	FS122	H-1	✱Q1	E-5		
FS43	C-2	FS123	H-1	✱Q2	E-5	X301	D-3

✱ : B SIDE

 16-36 (b)

 AR-14/14P (3/4)

UVW-1800 (J) ;Serial No.10901 and higher
UVW-1800 (UC);Serial No.13931 and higher
UVW-1800P(EK);Serial No.14141 and higher

AR-14/14P(3/4);CH-2 REC/BIAS DRIVE,CH-2 CANCEL CROSSTALK SIG.

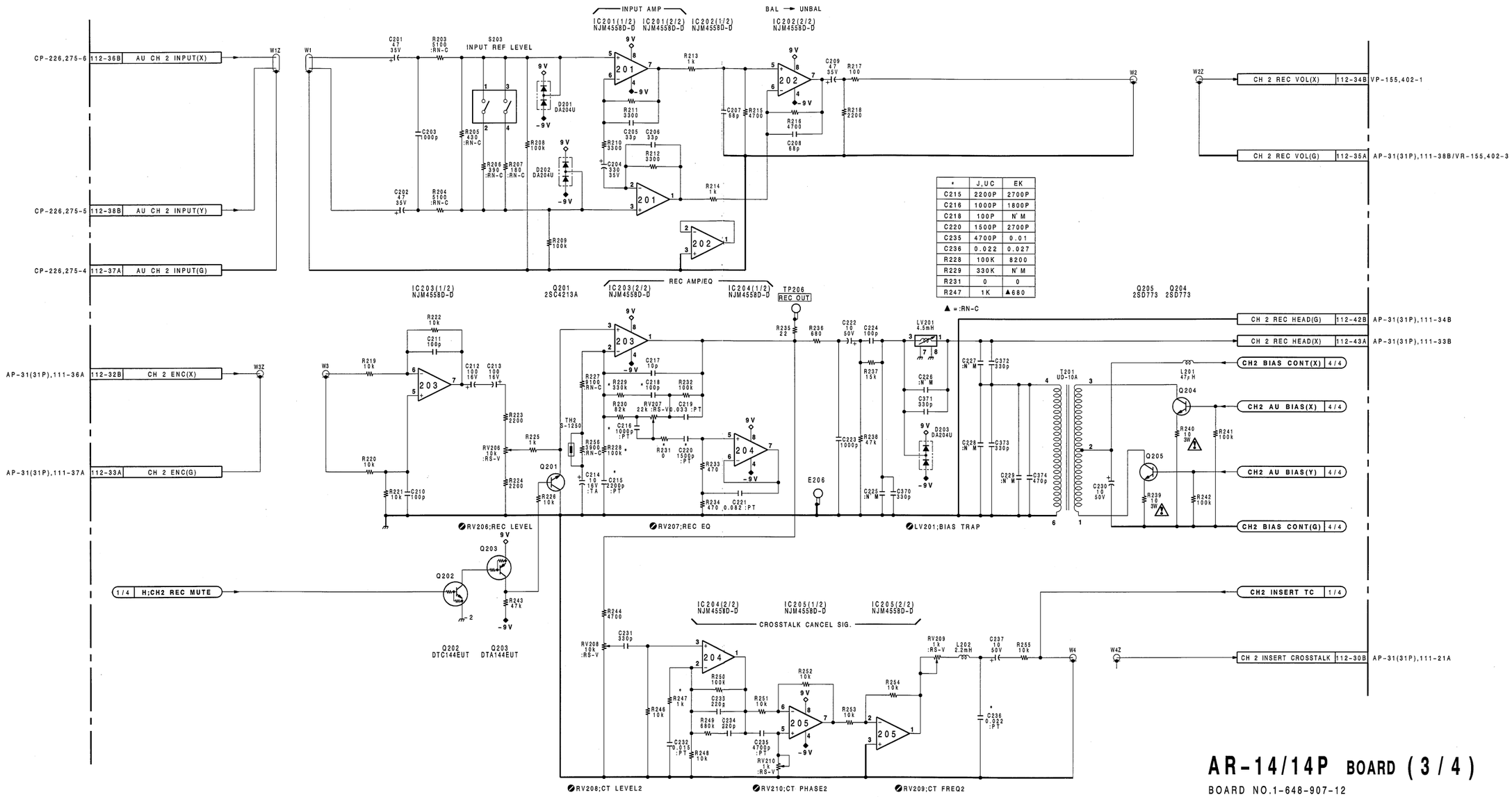

*	J,UC	EK
C215	2200P	2700P
C216	1000P	1800P
C218	100P	N' M
C220	1500P	2700P
C235	4700P	0.01
C236	0.022	0.027
R228	100K	8200
R229	330K	N' M
R231	0	0
R247	1K	▲680

AR-14/14P BOARD (3/4)

BOARD NO.1-648-907-12
UVW-1800 (J) ;#10901-
UVW-1800 (UC);#13931-
UVW-1800P(EK);#14141-

AR-14 (1-648-907-12)

CN1	J-5	FS44	C-3	FS124	J-1	✱Q3	E-5
CN112	E-5	FS45	C-3	FS125	H-2	✱Q4	E-5
		FS46	C-3	FS126	H-2	✱Q5	F-5
✱D1	D-5	FS47	C-3	FS127	H-2	✱Q101	G-1
✱D101	J-2	FS48	C-3	FS128	H-4	✱Q102	E-4
✱D102	J-1	FS49	C-4	FS130	J-1	✱Q103	G-2
✱D103	C-3	FS50	C-4	FS131	J-1	Q104	C-4
✱D201	A-2	FS51	C-5	FS132	J-2	Q105	B-4
✱D202	A-1	FS52	D-1	FS133	J-2	✱Q201	C-1
✱D203	A-3	FS54	D-3	FS134	J-2	✱Q202	E-4
✱D301	C-5	FS55	D-3	FS135	H-2	✱Q203	C-1
✱D302	D-4	FS56	D-3	FS136	J-2	Q204	A-4
✱D303	B-3	FS57	D-4	FS137	J-2	Q205	A-4
✱D304	B-5	FS58	D-4	FS138	J-3	✱Q301	B-3
✱D305	B-3	FS59	D-4	FS139	J-3	Q302	C-5
✱D306	A-5	FS60	D-5	FS140	J-5	✱Q303	B-3
✱D311	G-4	FS61	D-1	FS141	J-5	Q304	A-5
✱D312	G-4	FS62	E-1	FS142	J-1	Q305	C-5
✱D313	J-3	FS63	D-3	FS143	J-1	Q306	A-5
✱D314	F-3	FS64	E-3	FS144	J-1	✱Q311	F-3
✱D321	G-3	FS65	E-3	FS145	J-2	Q312	G-4
✱D322	G-3	FS66	D-4	FS146	J-2	✱Q313	F-2
✱D323	J-2	FS68	E-4	FS147	J-2	✱Q314	H-4
✱D324	E-4	FS69	D-4	FS148	J-3	✱Q315	H-4
✱D331	G-5	FS70	D-4	FS149	J-3	Q316	H-3
✱D332	G-5	FS72	E-1	FS150	J-4	Q317	H-4
✱D334	E-4	FS73	E-2	FS152	H-2	✱Q318	J-3
		FS74	E-3	FS153	E-1	Q319	G-4
E106	H-1	FS76	E-3	FS154	F-1	✱Q321	G-3
E206	A-1	FS77	F-3	FS155	J-5	Q322	G-2
E301	J-1	FS78	E-4	FS156	J-4	✱Q323	E-3
E311	J-1	FS79	E-4			✱Q324	H-2
		FS80	F-4	IC1	E-4	✱Q325	H-3
FS1	A-1	FS81	E-5	IC2	E-2	Q326	H-2
FS2	A-1	FS82	E-5	IC3	D-5	Q327	H-3
FS3	A-1	FS83	F-1	IC5	B-5	✱Q328	J-2
FS4	A-2	FS84	F-1	IC6	B-5	Q329	G-2
FS5	A-2	FS85	F-1	IC7	C-5	✱Q331	F-5
FS6	A-5	FS86	F-1	IC101	J-2	Q332	G-5
FS7	A-2	FS87	F-1	IC102	J-2	✱Q333	F-3
FS8	A-2	FS88	F-2	IC103	H-2	✱Q334	H-4
FS9	A-2	FS89	F-2	IC104	G-2	✱Q335	H-5
FS10	A-5	FS90	F-2	IC105	F-2	Q336	H-4
FS11	A-5	FS91	F-3	IC201	A-2	Q337	H-5
FS12	A-5	FS92	F-3	IC202	B-2	Q339	G-5
FS13	B-1	FS93	F-3	IC203	C-2		
FS14	B-2	FS94	F-4	IC204	D-2	RV106	J-1
FS15	B-5	FS95	F-4	IC205	E-2	RV107	H-1
FS16	B-5	FS96	F-4	IC301	D-3	RV108	H-1
FS17	A-5	FS97	F-4	IC302	D-4	RV109	G-1
FS18	A-5	FS98	F-5	IC303	C-4	RV110	F-1
FS19	A-5	FS99	F-5	IC304	C-3	RV111	C-1
FS20	B-1	FS100	F-5	IC305	D-3	RV112	C-1
FS21	B-2	FS101	F-5	IC306	C-3	RV206	A-1
FS22	B-2	FS102	F-5	IC307	C-5	RV207	B-1
FS23	B-3	FS103	F-5	IC308	C-4	RV208	B-1
FS24	B-3	FS104	F-5	IC309	B-5	RV209	B-1
FS25	B-4	FS105	F-5	IC310	G-3	RV210	D-1
FS26	B-5	FS106	F-5	IC311	E-3	RV211	G-1
FS27	B-1	FS107	G-1	IC312	E-4	RV212	F-1
FS28	B-2	FS108	G-1	IC313	G-5	RV301	B-4
FS29	C-2	FS109	G-2	IC314	E-3	RV302	B-4
FS30	B-5	FS110	G-2	IC315	J-3		
FS31	B-5	FS111	G-2	IC316	J-5	RY301	J-3
FS32	B-5	FS112	G-2			RY311	J-2
FS33	B-5	FS113	G-3	LV101	C-2		
FS34	C-1	FS114	G-3	LV201	A-2	S103	J-1
FS35	C-2	FS115	G-3	LV301	J-4	S203	A-1
FS36	C-2	FS116	G-4	LV311	J-3		
FS37	C-5	FS117	G-4	LV321	J-5	TP106	H-1
FS38	C-5	FS118	G-4			TP206	A-1
FS39	C-5	FS119	G-5	PS1	H-5	TP301	J-1
FS40	C-1	FS120	G-5	PS2	H-5	TP311	J-1
FS41	C-1	FS121	G-5			TP321	J-1
FS42	C-2	FS122	H-1	✱Q1	E-5		
FS43	C-2	FS123	H-1	✱Q2	E-5	X301	D-3

✱ : B SIDE

UVW-1800 (J) ;Serial No.10901 and higher
UVW-1800 (UC);Serial No.13931 and higher
UVW-1800P(EK);Serial No.14141 and higher

AR-14/14P(4/4) ;BIAS/ERASE OSC,AU/TC ERASE DRIVE

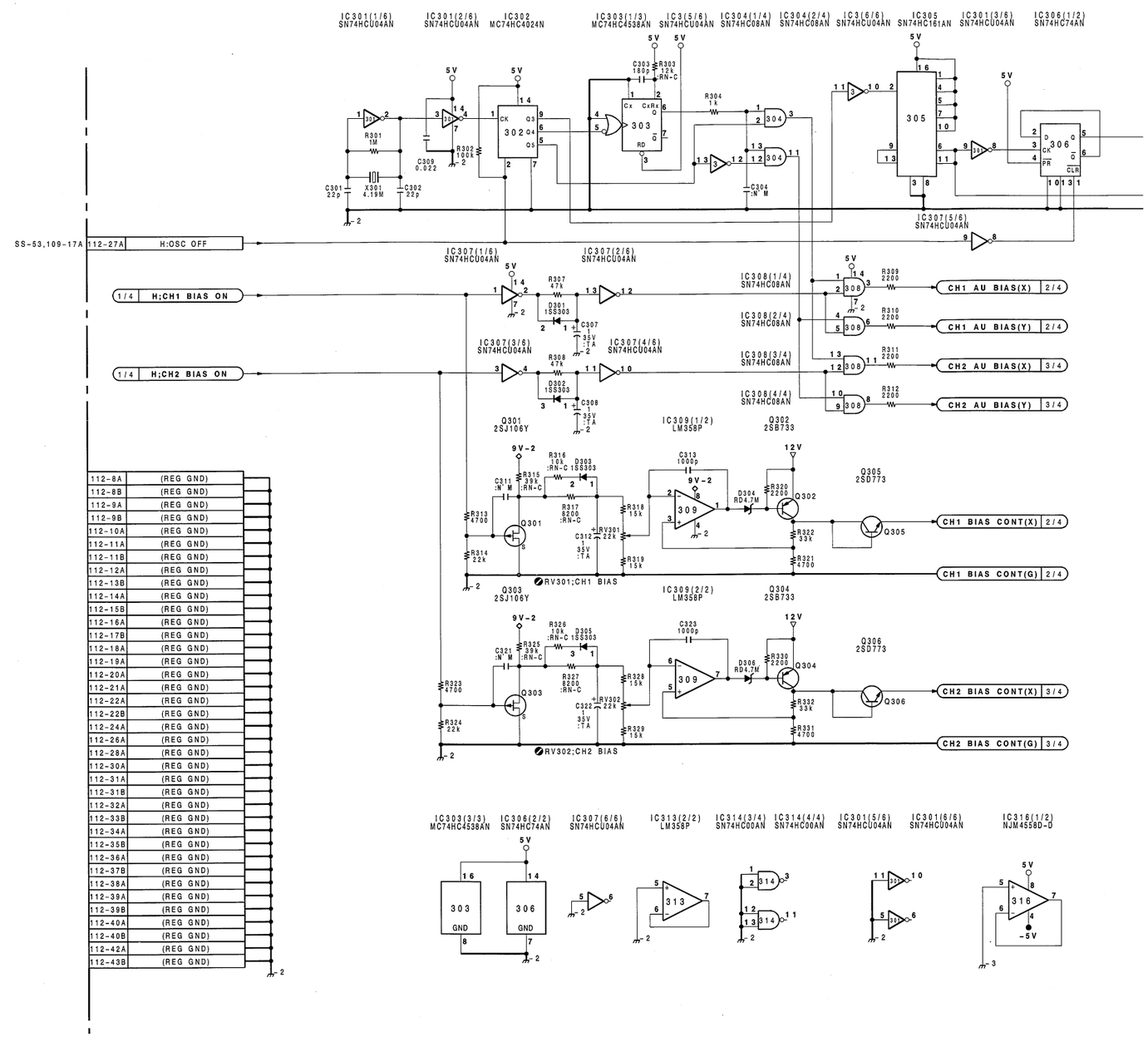

 AR-14/14P (4/4)

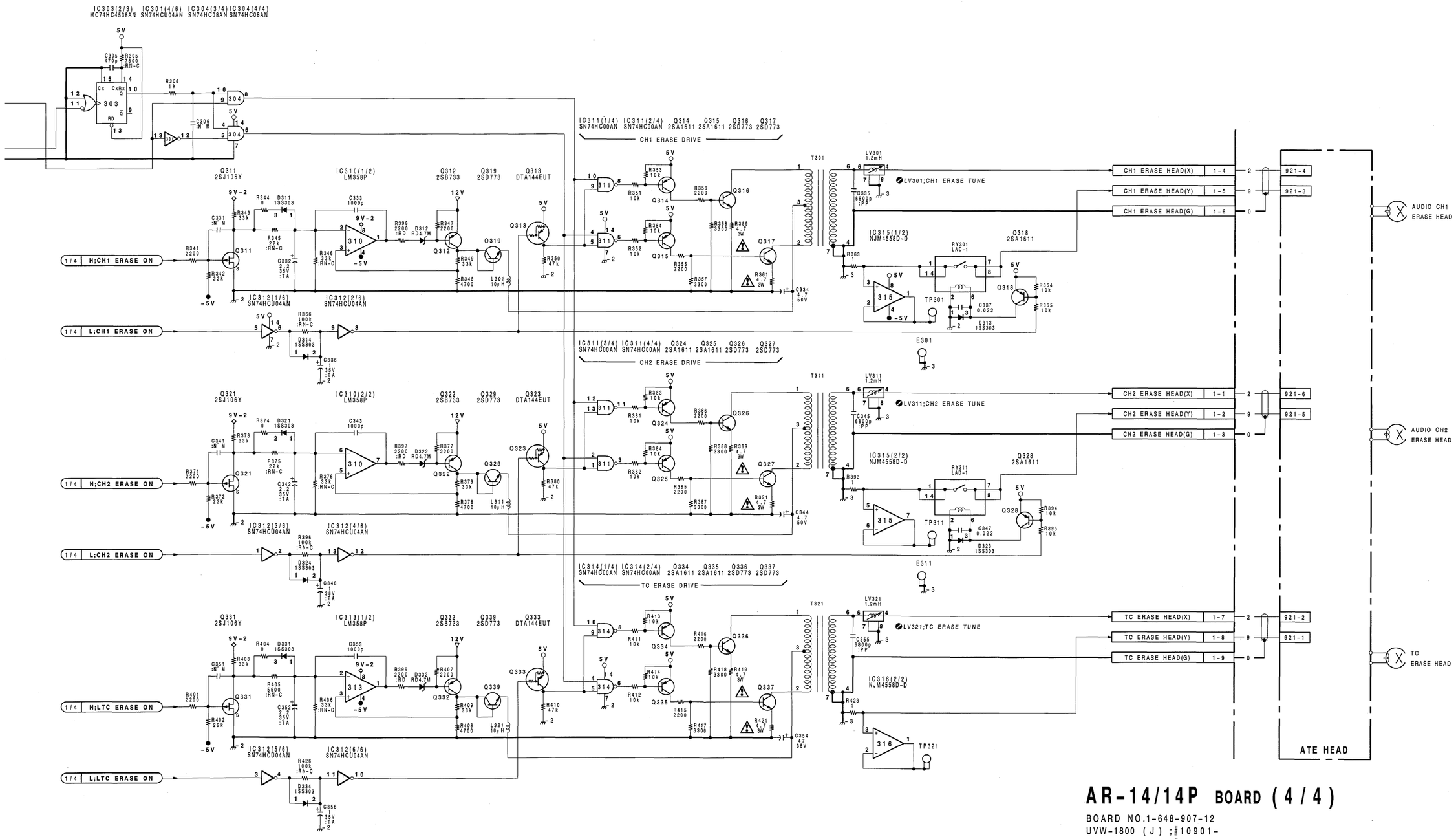

AR-14/14P BOARD (4/4)

BOARD NO.1-648-907-12
UVW-1800 (J);#10901-
UVW-1800 (UC);#13931-
UVW-1800P(EK);#14141-

16-41 (b2)

 AR-14/14P

AR-14 (1-648-907-11)

CN1	J-5	FS44	C-3	FS123	H-1	✱Q1	E-5	TP301	J-1
CN112	E-5	FS45	C-3	FS124	J-1	✱Q2	E-5	TP311	J-1
		FS46	C-3	FS125	H-2	✱Q3	E-5	TP321	J-1
✱D1	D-5	FS47	C-3	FS126	H-2	✱Q4	E-5		
✱D101	J-2	FS48	C-3	FS127	H-2	✱Q5	F-5	X301	D-3
✱D102	J-1	FS49	C-4	FS128	H-4	✱Q101	G-1		
✱D103	C-3	FS50	C-4	FS129	J-1	✱Q102	E-4		
✱D201	A-2	FS51	C-5	FS130	J-1	✱Q103	G-2		
✱D202	A-1	FS52	D-1	FS131	J-1	Q104	C-4		
✱D203	A-3	FS54	D-3	FS132	J-2	Q105	B-4		
✱D301	C-5	FS55	D-3	FS133	J-2	✱Q201	C-1		
✱D302	D-4	FS56	D-3	FS134	J-2	✱Q202	E-4		
✱D303	B-3	FS57	D-4	FS135	H-2	✱Q203	C-1		
✱D304	B-5	FS58	D-4	FS136	J-2	Q204	A-4		
✱D305	B-3	FS59	D-4	FS137	J-2	Q205	A-4		
✱D306	A-5	FS60	D-5	FS138	J-3	✱Q301	B-3		
✱D311	G-4	FS61	D-1	FS139	J-3	Q302	C-5		
✱D312	G-4	FS62	E-1	FS140	J-5	✱Q303	B-3		
✱D313	J-3	FS63	D-3	FS141	J-5	Q304	A-5		
✱D314	F-3	FS64	E-3	FS142	J-1	Q305	C-5		
✱D321	G-3	FS65	E-3	FS143	J-1	Q306	A-5		
✱D322	G-3	FS66	D-4	FS144	J-1	✱Q311	F-3		
✱D323	J-2	FS68	E-4	FS145	J-2	Q312	G-4		
✱D324	E-4	FS69	D-4	FS146	J-2	✱Q313	F-2		
✱D331	G-5	FS70	D-4	FS147	J-2	✱Q314	H-4		
✱D332	G-5	FS72	E-1	FS148	J-3	✱Q315	H-4		
✱D334	E-4	FS73	E-2	FS149	J-3	Q316	H-3		
		FS74	E-3	FS150	J-4	Q317	H-4		
E106	H-1	FS75	F-3	FS152	H-2	✱Q318	J-3		
E206	A-1	FS76	E-3	FS153	E-1	Q319	G-4		
E301	J-1	FS77	F-3	FS154	F-1	✱Q321	G-3		
E311	J-1	FS78	E-4	FS155	J-5	Q322	G-2		
		FS79	E-4	FS156	J-4	✱Q323	E-3		
FS1	A-1	FS80	F-4			✱Q324	H-2		
FS2	A-1	FS81	E-5	IC1	E-4	✱Q325	H-3		
FS3	A-1	FS82	E-5	IC2	E-2	Q326	H-2		
FS4	A-2	FS83	F-1	IC3	D-5	Q327	H-3		
FS5	A-2	FS84	F-1	IC5	B-5	✱Q328	J-2		
FS6	A-5	FS85	F-1	IC6	B-5	Q329	G-2		
FS7	A-2	FS86	F-1	IC7	C-5	✱Q331	F-5		
FS8	A-2	FS87	F-1	IC101	J-2	Q332	G-5		
FS9	A-2	FS88	F-2	IC102	J-2	✱Q333	F-3		
FS10	A-5	FS89	F-2	IC103	H-2	✱Q334	H-4		
FS11	A-5	FS90	F-2	IC104	G-2	✱Q335	H-5		
FS12	A-5	FS91	F-3	IC105	F-2	Q336	H-4		
FS13	B-1	FS92	F-3	IC201	A-2	Q337	H-5		
FS14	B-2	FS93	F-3	IC202	B-2	Q339	G-5		
FS15	B-5	FS94	F-4	IC203	C-2				
FS16	B-5	FS95	F-4	IC204	D-2	RV106	J-1		
FS17	A-5	FS96	F-4	IC205	E-2	RV107	H-1		
FS18	A-5	FS97	F-4	IC301	D-3	RV108	H-1		
FS19	A-5	FS98	F-5	IC302	D-4	RV109	G-1		
FS20	B-1	FS99	F-5	IC303	C-4	RV110	F-1		
FS21	B-2	FS100	F-5	IC304	C-3	RV111	C-1		
FS22	B-2	FS101	F-5	IC305	D-3	RV112	C-1		
FS23	B-3	FS102	F-5	IC306	C-3	RV206	A-1		
FS24	B-3	FS103	F-5	IC307	C-5	RV207	B-1		
FS25	B-4	FS104	F-5	IC308	C-4	RV208	B-1		
FS26	B-5	FS105	F-5	IC309	B-5	RV209	B-1		
FS27	B-1	FS106	F-5	IC310	G-3	RV210	D-1		
FS28	B-2	FS107	G-1	IC311	E-3	RV211	G-1		
FS29	C-2	FS108	G-1	IC312	E-4	RV212	F-1		
FS30	B-5	FS109	G-2	IC313	G-5	RV301	B-4		
FS31	B-5	FS110	G-2	IC314	E-3	RV302	B-4		
FS32	B-5	FS111	G-2	IC315	J-3				
FS33	B-5	FS112	G-2	IC316	J-5	RY301	J-3		
FS34	C-1	FS113	G-3			RY311	J-2		
FS35	C-2	FS114	G-3	LV101	C-2				
FS36	C-2	FS115	G-3	LV201	A-2	S103	J-1		
FS37	C-5	FS116	G-4	LV301	J-4	S203	A-1		
FS38	C-5	FS117	G-4	LV311	J-3				
FS39	C-5	FS118	G-4	LV321	J-5	✱TH1	G-2		
FS40	C-1	FS119	G-5			✱TH2	C-2		
FS41	C-1	FS120	G-5	PS1	H-5				
FS42	C-2	FS121	G-5	PS2	H-5	TP106	H-1		
FS43	C-2	FS122	H-1			TP206	A-1		

✱ : B SIDE

 16-28 (a)

 AR-14/14P (1/4)

UVW-1800 (J) ;Serial No.10001 through 10900
UVW-1800 (UC);Serial No.10001 through 13930
UVW-1800P(EK);Serial No.10001 through 14140

AR-14/14P(1/4);LTC REC/CANCEL CROSSTALK SIG.

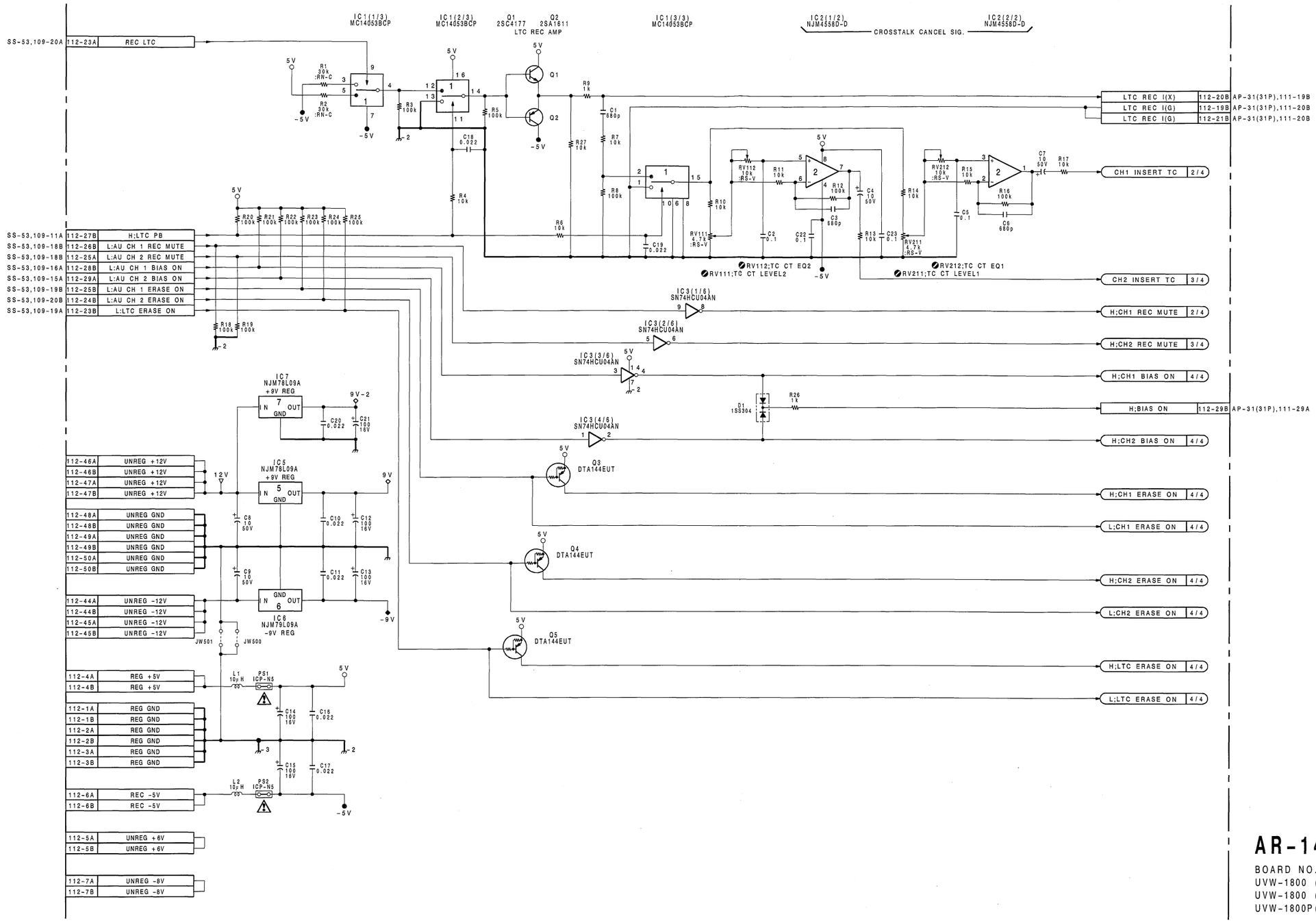

AR-14/14P BOARD (1/4)

BOARD NO.1-648-907-11
UVW-1800 (J) ;#10001-10900
UVW-1800 (UC);#10001-13930
UVW-1800P(EK);#10001-14140

 AR-14/14P

AR-14 (1-648-907-11)

CN1	J-5	FS44	C-3	FS123	H-1	✱Q1	E-5	TP301	J-1
CN112	E-5	FS45	C-3	FS124	J-1	✱Q2	E-5	TP311	J-1
		FS46	C-3	FS125	H-2	✱Q3	E-5	TP321	J-1
✱D1	D-5	FS47	C-3	FS126	H-2	✱Q4	E-5		
✱D101	J-2	FS48	C-3	FS127	H-2	✱Q5	F-5	X301	D-3
✱D102	J-1	FS49	C-4	FS128	H-4	✱Q101	G-1		
✱D103	C-3	FS50	C-4	FS129	J-1	✱Q102	E-4		
✱D201	A-2	FS51	C-5	FS130	J-1	✱Q103	G-2		
✱D202	A-1	FS52	D-1	FS131	J-1	Q104	C-4		
✱D203	A-3	FS54	D-3	FS132	J-2	Q105	B-4		
✱D301	C-5	FS55	D-3	FS133	J-2	✱Q201	C-1		
✱D302	D-4	FS56	D-3	FS134	J-2	✱Q202	E-4		
✱D303	B-3	FS57	D-4	FS135	H-2	✱Q203	C-1		
✱D304	B-5	FS58	D-4	FS136	J-2	Q204	A-4		
✱D305	B-3	FS59	D-4	FS137	J-2	Q205	A-4		
✱D306	A-5	FS60	D-5	FS138	J-3	✱Q301	B-3		
✱D311	G-4	FS61	D-1	FS139	J-3	Q302	C-5		
✱D312	G-4	FS62	E-1	FS140	J-5	✱Q303	B-3		
✱D313	J-3	FS63	D-3	FS141	J-5	Q304	A-5		
✱D314	F-3	FS64	E-3	FS142	J-1	Q305	C-5		
✱D321	G-3	FS65	E-3	FS143	J-1	Q306	A-5		
✱D322	G-3	FS66	D-4	FS144	J-1	✱Q311	F-3		
✱D323	J-2	FS68	E-4	FS145	J-2	Q312	G-4		
✱D324	E-4	FS69	D-4	FS146	J-2	✱Q313	F-2		
✱D331	G-5	FS70	D-4	FS147	J-2	✱Q314	H-4		
✱D332	G-5	FS72	E-1	FS148	J-3	✱Q315	H-4		
✱D334	E-4	FS73	E-2	FS149	J-3	Q316	H-3		
		FS74	E-3	FS150	J-4	Q317	H-4		
E106	H-1	FS75	F-3	FS152	H-2	✱Q318	J-3		
E206	A-1	FS76	E-3	FS153	E-1	Q319	G-4		
E301	J-1	FS77	F-3	FS154	F-1	✱Q321	G-3		
E311	J-1	FS78	E-4	FS155	J-5	Q322	G-2		
		FS79	E-4	FS156	J-4	✱Q323	E-3		
FS1	A-1	FS80	F-4			✱Q324	H-2		
FS2	A-1	FS81	E-5	IC1	E-4	✱Q325	H-3		
FS3	A-1	FS82	E-5	IC2	E-2	Q326	H-2		
FS4	A-2	FS83	F-1	IC3	D-5	Q327	H-3		
FS5	A-2	FS84	F-1	IC5	B-5	✱Q328	J-2		
FS6	A-5	FS85	F-1	IC6	B-5	Q329	G-2		
FS7	A-2	FS86	F-1	IC7	C-5	✱Q331	F-5		
FS8	A-2	FS87	F-1	IC101	J-2	Q332	G-5		
FS9	A-2	FS88	F-2	IC102	J-2	✱Q333	F-3		
FS10	A-5	FS89	F-2	IC103	H-2	✱Q334	H-4		
FS11	A-5	FS90	F-2	IC104	G-2	✱Q335	H-5		
FS12	A-5	FS91	F-3	IC105	F-2	Q336	H-4		
FS13	B-1	FS92	F-3	IC201	A-2	Q337	H-5		
FS14	B-2	FS93	F-3	IC202	B-2	Q339	G-5		
FS15	B-5	FS94	F-4	IC203	C-2				
FS16	B-5	FS95	F-4	IC204	D-2	RV106	J-1		
FS17	A-5	FS96	F-4	IC205	E-2	RV107	H-1		
FS18	A-5	FS97	F-4	IC301	D-3	RV108	H-1		
FS19	A-5	FS98	F-5	IC302	D-4	RV109	G-1		
FS20	B-1	FS99	F-5	IC303	C-4	RV110	F-1		
FS21	B-2	FS100	F-5	IC304	C-3	RV111	C-1		
FS22	B-2	FS101	F-5	IC305	D-3	RV112	C-1		
FS23	B-3	FS102	F-5	IC306	C-3	RV206	A-1		
FS24	B-3	FS103	F-5	IC307	C-5	RV207	B-1		
FS25	B-4	FS104	F-5	IC308	C-4	RV208	B-1		
FS26	B-5	FS105	F-5	IC309	B-5	RV209	B-1		
FS27	B-1	FS106	F-5	IC310	G-3	RV210	D-1		
FS28	B-2	FS107	G-1	IC311	E-3	RV211	G-1		
FS29	C-2	FS108	G-1	IC312	E-4	RV212	F-1		
FS30	B-5	FS109	G-2	IC313	G-5	RV301	B-4		
FS31	B-5	FS110	G-2	IC314	E-3	RV302	B-4		
FS32	B-5	FS111	G-2	IC315	J-3				
FS33	B-5	FS112	G-2	IC316	J-5	RY301	J-3		
FS34	C-1	FS113	G-3			RY311	J-2		
FS35	C-2	FS114	G-3	LV101	C-2				
FS36	C-2	FS115	G-3	LV201	A-2	S103	J-1		
FS37	C-5	FS116	G-4	LV301	J-4	S203	A-1		
FS38	C-5	FS117	G-4	LV311	J-3				
FS39	C-5	FS118	G-4	LV321	J-5	✱TH1	G-2		
FS40	C-1	FS119	G-5			✱TH2	C-2		
FS41	C-1	FS120	G-5	PS1	H-5				
FS42	C-2	FS121	G-5	PS2	H-5	TP106	H-1		
FS43	C-2	FS122	H-1			TP206	A-1		

✱ : B SIDE

 16-32 (a)

 AR-14/14P (2/4)

UVW-1800 (J) ;Serial No.10001 through 10900
UVW-1800 (UC);Serial No.10001 through 13930
UVW-1800P(EK);Serial No.10001 through 14140

AR-14/14P(2/4);CH-1 REC/BIAS DRIVE,CH-1 CANCEL CROSSTALK SIG.

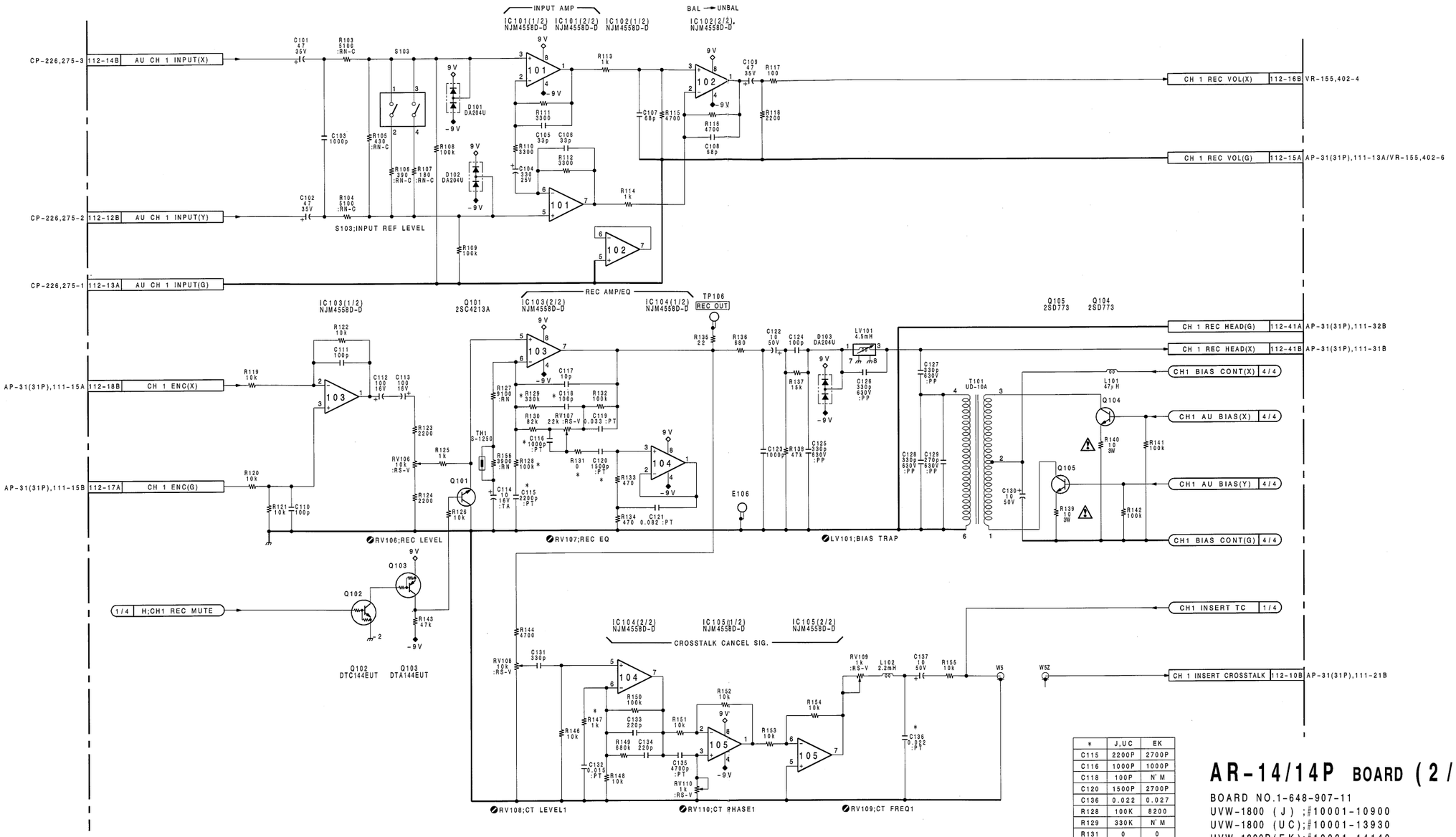

*	J,UC	EK
C115	2200P	2700P
C116	1000P	1000P
C118	100P	N' M
C120	1500P	2700P
C136	0.022	0.027
R128	100K	8200
R129	330K	N' M
R131	0	0
R147	1K	▲680

▲ =:RN-C

AR-14/14P BOARD (2/4)

BOARD NO.1-648-907-11
UVW-1800 (J) ;#10001-10900
UVW-1800 (UC);#10001-13930
UVW-1800P(EK);#10001-14140

 16-33 (a)

 AR-14/14P

AR-14 (1-648-907-11)

CN1	J-5	FS44	C-3	FS123	H-1	✱Q1	E-5	TP301	J-1
CN112	E-5	FS45	C-3	FS124	J-1	✱Q2	E-5	TP311	J-1
		FS46	C-3	FS125	H-2	✱Q3	E-5	TP321	J-1
✱D1	D-5	FS47	C-3	FS126	H-2	✱Q4	E-5		
✱D101	J-2	FS48	C-3	FS127	H-2	✱Q5	F-5	X301	D-3
✱D102	J-1	FS49	C-4	FS128	H-4	✱Q101	G-1		
✱D103	C-3	FS50	C-4	FS129	J-1	✱Q102	E-4		
✱D201	A-2	FS51	C-5	FS130	J-1	✱Q103	G-2		
✱D202	A-1	FS52	D-1	FS131	J-1	Q104	C-4		
✱D203	A-3	FS54	D-3	FS132	J-2	Q105	B-4		
✱D301	C-5	FS55	D-3	FS133	J-2	✱Q201	C-1		
✱D302	D-4	FS56	D-3	FS134	J-2	✱Q202	E-4		
✱D303	B-3	FS57	D-4	FS135	H-2	✱Q203	C-1		
✱D304	B-5	FS58	D-4	FS136	J-2	Q204	A-4		
✱D305	B-3	FS59	D-4	FS137	J-2	Q205	A-4		
✱D306	A-5	FS60	D-5	FS138	J-3	✱Q301	B-3		
✱D311	G-4	FS61	D-1	FS139	J-3	Q302	C-5		
✱D312	G-4	FS62	E-1	FS140	J-5	✱Q303	B-3		
✱D313	J-3	FS63	D-3	FS141	J-5	Q304	A-5		
✱D314	F-3	FS64	E-3	FS142	J-1	Q305	C-5		
✱D321	G-3	FS65	E-3	FS143	J-1	Q306	A-5		
✱D322	G-3	FS66	D-4	FS144	J-1	✱Q311	F-3		
✱D323	J-2	FS68	E-4	FS145	J-2	Q312	G-4		
✱D324	E-4	FS69	D-4	FS146	J-2	✱Q313	F-2		
✱D331	G-5	FS70	D-4	FS147	J-2	✱Q314	H-4		
✱D332	G-5	FS72	E-1	FS148	J-3	✱Q315	H-4		
✱D334	E-4	FS73	E-2	FS149	J-3	Q316	H-3		
		FS74	E-3	FS150	J-4	Q317	H-4		
E106	H-1	FS75	F-3	FS152	H-2	✱Q318	J-3		
E206	A-1	FS76	E-3	FS153	E-1	Q319	G-4		
E301	J-1	FS77	F-3	FS154	F-1	✱Q321	G-3		
E311	J-1	FS78	E-4	FS155	J-5	Q322	G-2		
		FS79	E-4	FS156	J-4	✱Q323	E-3		
FS1	A-1	FS80	F-4			✱Q324	H-2		
FS2	A-1	FS81	E-5	IC1	E-4	✱Q325	H-3		
FS3	A-1	FS82	E-5	IC2	E-2	Q326	H-2		
FS4	A-2	FS83	F-1	IC3	D-5	Q327	H-3		
FS5	A-2	FS84	F-1	IC5	B-5	✱Q328	J-2		
FS6	A-5	FS85	F-1	IC6	B-5	Q329	G-2		
FS7	A-2	FS86	F-1	IC7	C-5	✱Q331	F-5		
FS8	A-2	FS87	F-1	IC101	J-2	Q332	G-5		
FS9	A-2	FS88	F-2	IC102	J-2	✱Q333	F-3		
FS10	A-5	FS89	F-2	IC103	H-2	✱Q334	H-4		
FS11	A-5	FS90	F-2	IC104	G-2	✱Q335	H-5		
FS12	A-5	FS91	F-3	IC105	F-2	Q336	H-4		
FS13	B-1	FS92	F-3	IC201	A-2	Q337	H-5		
FS14	B-2	FS93	F-3	IC202	B-2	Q339	G-5		
FS15	B-5	FS94	F-4	IC203	C-2				
FS16	B-5	FS95	F-4	IC204	D-2	RV106	J-1		
FS17	A-5	FS96	F-4	IC205	E-2	RV107	H-1		
FS18	A-5	FS97	F-4	IC301	D-3	RV108	H-1		
FS19	A-5	FS98	F-5	IC302	D-4	RV109	G-1		
FS20	B-1	FS99	F-5	IC303	C-4	RV110	F-1		
FS21	B-2	FS100	F-5	IC304	C-3	RV111	C-1		
FS22	B-2	FS101	F-5	IC305	D-3	RV112	C-1		
FS23	B-3	FS102	F-5	IC306	C-3	RV206	A-1		
FS24	B-3	FS103	F-5	IC307	C-5	RV207	B-1		
FS25	B-4	FS104	F-5	IC308	C-4	RV208	B-1		
FS26	B-5	FS105	F-5	IC309	B-5	RV209	B-1		
FS27	B-1	FS106	F-5	IC310	G-3	RV210	D-1		
FS28	B-2	FS107	G-1	IC311	E-3	RV211	G-1		
FS29	C-2	FS108	G-1	IC312	E-4	RV212	F-1		
FS30	B-5	FS109	G-2	IC313	G-5	RV301	B-4		
FS31	B-5	FS110	G-2	IC314	E-3	RV302	B-4		
FS32	B-5	FS111	G-2	IC315	J-3				
FS33	B-5	FS112	G-2	IC316	J-5	RY301	J-3		
FS34	C-1	FS113	G-3			RY311	J-2		
FS35	C-2	FS114	G-3	LV101	C-2				
FS36	C-2	FS115	G-3	LV201	A-2	S103	J-1		
FS37	C-5	FS116	G-4	LV301	J-4	S203	A-1		
FS38	C-5	FS117	G-4	LV311	J-3				
FS39	C-5	FS118	G-4	LV321	J-5	✱TH1	G-2		
FS40	C-1	FS119	G-5			✱TH2	C-2		
FS41	C-1	FS120	G-5	PS1	H-5				
FS42	C-2	FS121	G-5	PS2	H-5	TP106	H-1		
FS43	C-2	FS122	H-1			TP206	A-1		

✱ : B SIDE

 16-36 (a)

 AR-14/14P (3/4)

UVW-1800 (J) ;Serial No.10001 through 10900
UVW-1800 (UC);Serial No.10001 through 13930
UVW-1800P(EK);Serial No.10001 through 14140

AR-14/14P(3/4);CH-2 REC/BIAS DRIVE,CH-2 CANCEL CROSSTALK SIG.

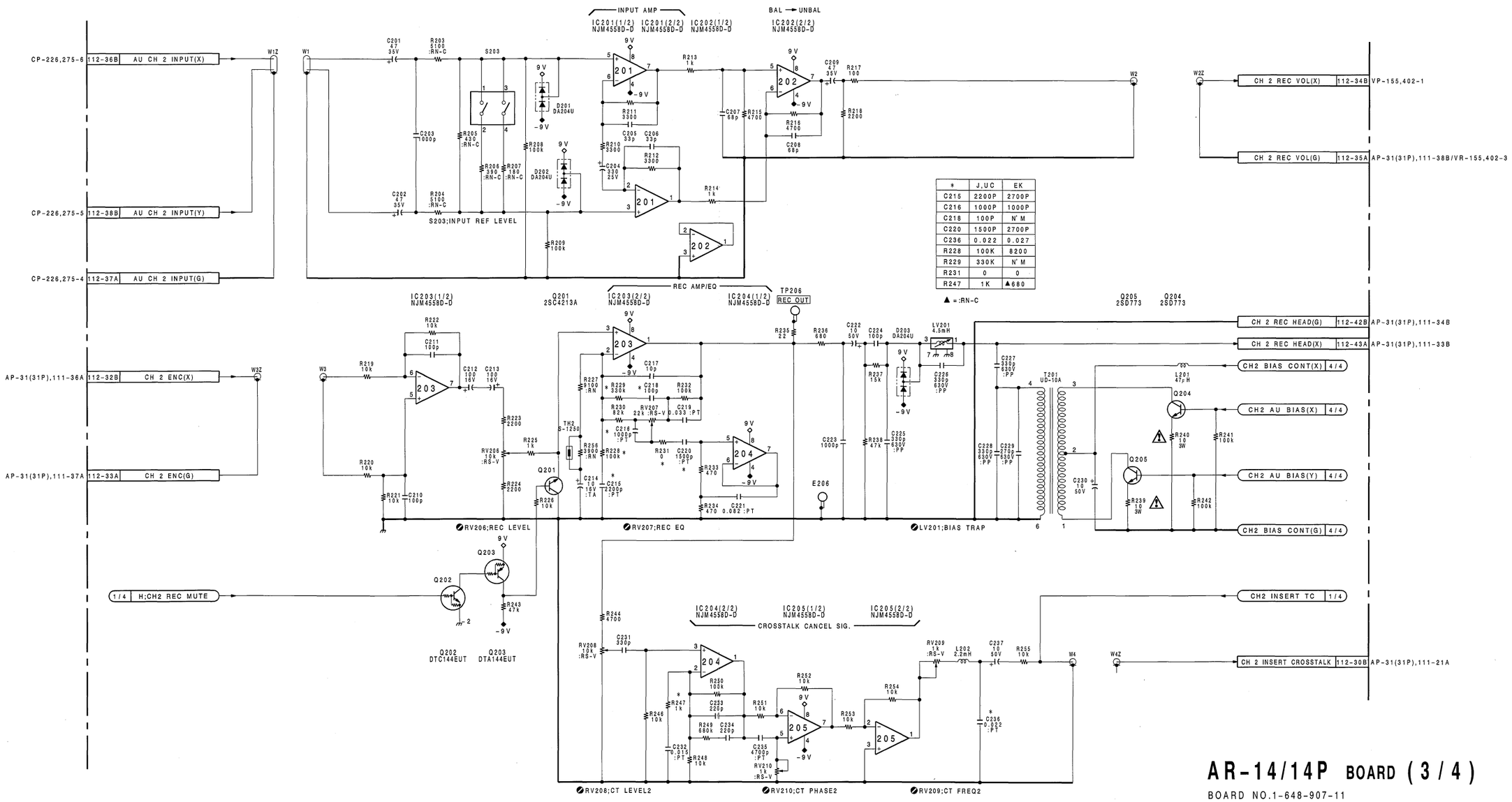

*	J,UC	EK
C215	2200P	2700P
C216	1000P	1000P
C218	100P	N'M
C220	1500P	2700P
C236	0.022	0.027
R228	100K	8200
R229	330K	N'M
R231	0	0
R247	1K	▲680

▲ =:RN-C

AR-14/14P BOARD (3/4)

BOARD NO.1-648-907-11
UVW-1800 (J) ;#10001-10900
UVW-1800 (UC);#10001-13930
UVW-1800P(EK);#10001-14140

AR-14 (1-648-907-11)

CN1	J-5	FS44	C-3	FS123	H-1	✱Q1	E-5	TP301	J-1
CN112	E-5	FS45	C-3	FS124	J-1	✱Q2	E-5	TP311	J-1
		FS46	C-3	FS125	H-2	✱Q3	E-5	TP321	J-1
✱D1	D-5	FS47	C-3	FS126	H-2	✱Q4	E-5		
✱D101	J-2	FS48	C-3	FS127	H-2	✱Q5	F-5	X301	D-3
✱D102	J-1	FS49	C-4	FS128	H-4	✱Q101	G-1		
✱D103	C-3	FS50	C-4	FS129	J-1	✱Q102	E-4		
✱D201	A-2	FS51	C-5	FS130	J-1	✱Q103	G-2		
✱D202	A-1	FS52	D-1	FS131	J-1	Q104	C-4		
✱D203	A-3	FS54	D-3	FS132	J-2	Q105	B-4		
✱D301	C-5	FS55	D-3	FS133	J-2	✱Q201	C-1		
✱D302	D-4	FS56	D-3	FS134	J-2	✱Q202	E-4		
✱D303	B-3	FS57	D-4	FS135	H-2	✱Q203	C-1		
✱D304	B-5	FS58	D-4	FS136	J-2	Q204	A-4		
✱D305	B-3	FS59	D-4	FS137	J-2	Q205	A-4		
✱D306	A-5	FS60	D-5	FS138	J-3	✱Q301	B-3		
✱D311	G-4	FS61	D-1	FS139	J-3	Q302	C-5		
✱D312	G-4	FS62	E-1	FS140	J-5	✱Q303	B-3		
✱D313	J-3	FS63	D-3	FS141	J-5	Q304	A-5		
✱D314	F-3	FS64	E-3	FS142	J-1	Q305	C-5		
✱D321	G-3	FS65	E-3	FS143	J-1	Q306	A-5		
✱D322	G-3	FS66	D-4	FS144	J-1	✱Q311	F-3		
✱D323	J-2	FS68	E-4	FS145	J-2	Q312	G-4		
✱D324	E-4	FS69	D-4	FS146	J-2	✱Q313	F-2		
✱D331	G-5	FS70	D-4	FS147	J-2	✱Q314	H-4		
✱D332	G-5	FS72	E-1	FS148	J-3	✱Q315	H-4		
✱D334	E-4	FS73	E-2	FS149	J-3	Q316	H-3		
		FS74	E-3	FS150	J-4	Q317	H-4		
E106	H-1	FS75	F-3	FS152	H-2	✱Q318	J-3		
E206	A-1	FS76	E-3	FS153	E-1	Q319	G-4		
E301	J-1	FS77	F-3	FS154	F-1	✱Q321	G-3		
E311	J-1	FS78	E-4	FS155	J-5	Q322	G-2		
		FS79	E-4	FS156	J-4	✱Q323	E-3		
FS1	A-1	FS80	F-4			✱Q324	H-2		
FS2	A-1	FS81	E-5	IC1	E-4	✱Q325	H-3		
FS3	A-1	FS82	E-5	IC2	E-2	Q326	H-2		
FS4	A-2	FS83	F-1	IC3	D-5	Q327	H-3		
FS5	A-2	FS84	F-1	IC5	B-5	✱Q328	J-2		
FS6	A-5	FS85	F-1	IC6	B-5	Q329	G-2		
FS7	A-2	FS86	F-1	IC7	C-5	✱Q331	F-5		
FS8	A-2	FS87	F-1	IC101	J-2	Q332	G-5		
FS9	A-2	FS88	F-2	IC102	J-2	✱Q333	F-3		
FS10	A-5	FS89	F-2	IC103	H-2	✱Q334	H-4		
FS11	A-5	FS90	F-2	IC104	G-2	✱Q335	H-5		
FS12	A-5	FS91	F-3	IC105	F-2	Q336	H-4		
FS13	B-1	FS92	F-3	IC201	A-2	Q337	H-5		
FS14	B-2	FS93	F-3	IC202	B-2	Q339	G-5		
FS15	B-5	FS94	F-4	IC203	C-2				
FS16	B-5	FS95	F-4	IC204	D-2	RV106	J-1		
FS17	A-5	FS96	F-4	IC205	E-2	RV107	H-1		
FS18	A-5	FS97	F-4	IC301	D-3	RV108	H-1		
FS19	A-5	FS98	F-5	IC302	D-4	RV109	G-1		
FS20	B-1	FS99	F-5	IC303	C-4	RV110	F-1		
FS21	B-2	FS100	F-5	IC304	C-3	RV111	C-1		
FS22	B-2	FS101	F-5	IC305	D-3	RV112	C-1		
FS23	B-3	FS102	F-5	IC306	C-3	RV206	A-1		
FS24	B-3	FS103	F-5	IC307	C-5	RV207	B-1		
FS25	B-4	FS104	F-5	IC308	C-4	RV208	B-1		
FS26	B-5	FS105	F-5	IC309	B-5	RV209	B-1		
FS27	B-1	FS106	F-5	IC310	G-3	RV210	D-1		
FS28	B-2	FS107	G-1	IC311	E-3	RV211	G-1		
FS29	C-2	FS108	G-1	IC312	E-4	RV212	F-1		
FS30	B-5	FS109	G-2	IC313	G-5	RV301	B-4		
FS31	B-5	FS110	G-2	IC314	E-3	RV302	B-4		
FS32	B-5	FS111	G-2	IC315	J-3				
FS33	B-5	FS112	G-2	IC316	J-5	RY301	J-3		
FS34	C-1	FS113	G-3			RY311	J-2		
FS35	C-2	FS114	G-3	LV101	C-2				
FS36	C-2	FS115	G-3	LV201	A-2	S103	J-1		
FS37	C-5	FS116	G-4	LV301	J-4	S203	A-1		
FS38	C-5	FS117	G-4	LV311	J-3				
FS39	C-5	FS118	G-4	LV321	J-5	✱TH1	G-2		
FS40	C-1	FS119	G-5			✱TH2	C-2		
FS41	C-1	FS120	G-5	PS1	H-5				
FS42	C-2	FS121	G-5	PS2	H-5	TP106	H-1		
FS43	C-2	FS122	H-1			TP206	A-1		

✱ : B SIDE

UVW-1800 (J) ;Serial No.10001 through 10900
UVW-1800 (UC);Serial No.10001 through 13930
UVW-1800P(EK);Serial No.10001 through 14140

AR-14/14P(4/4) ;BIAS/ERASE OSC,AU/TC ERASE DRIVE

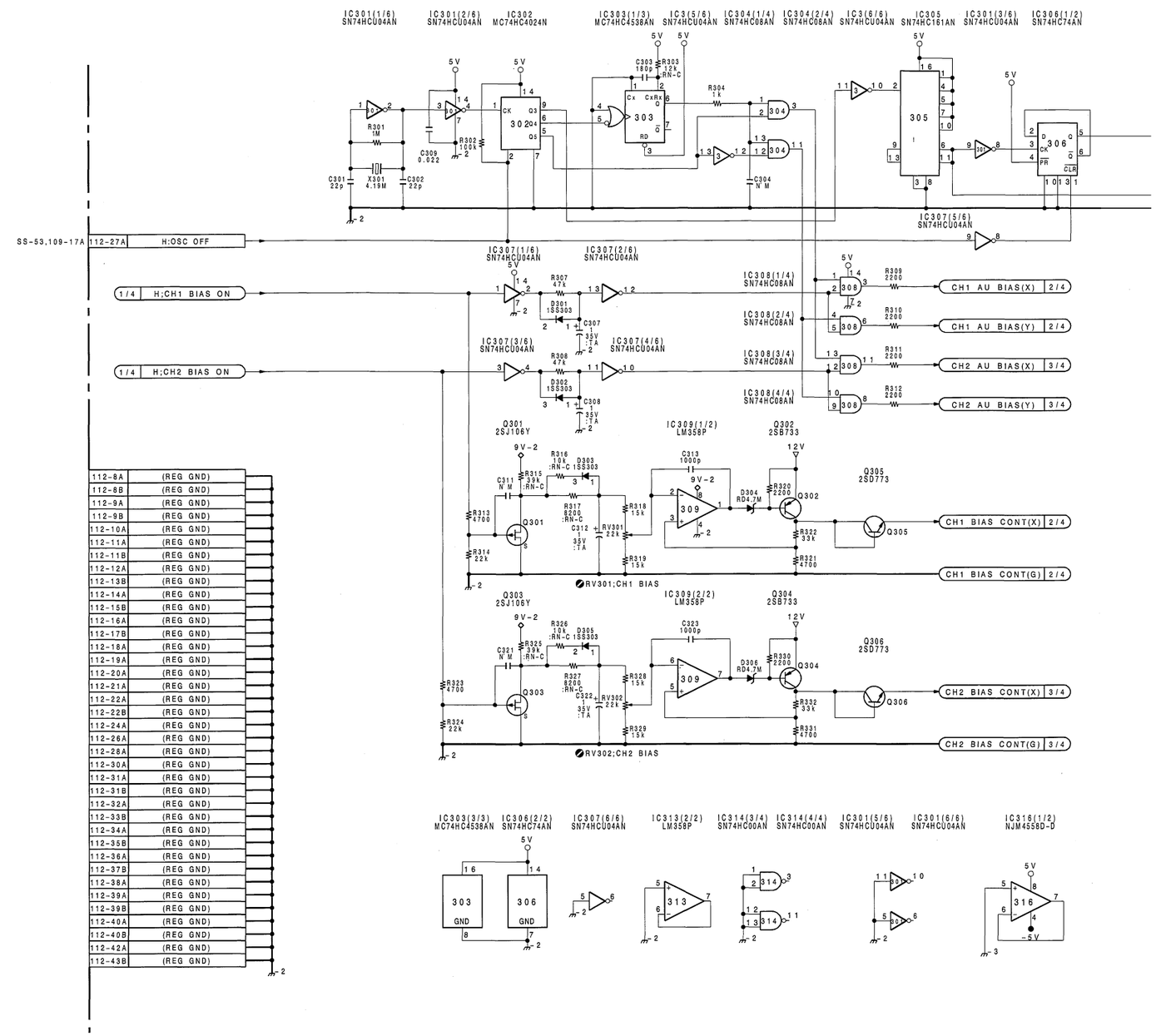

 AR-14/14P (4/4)

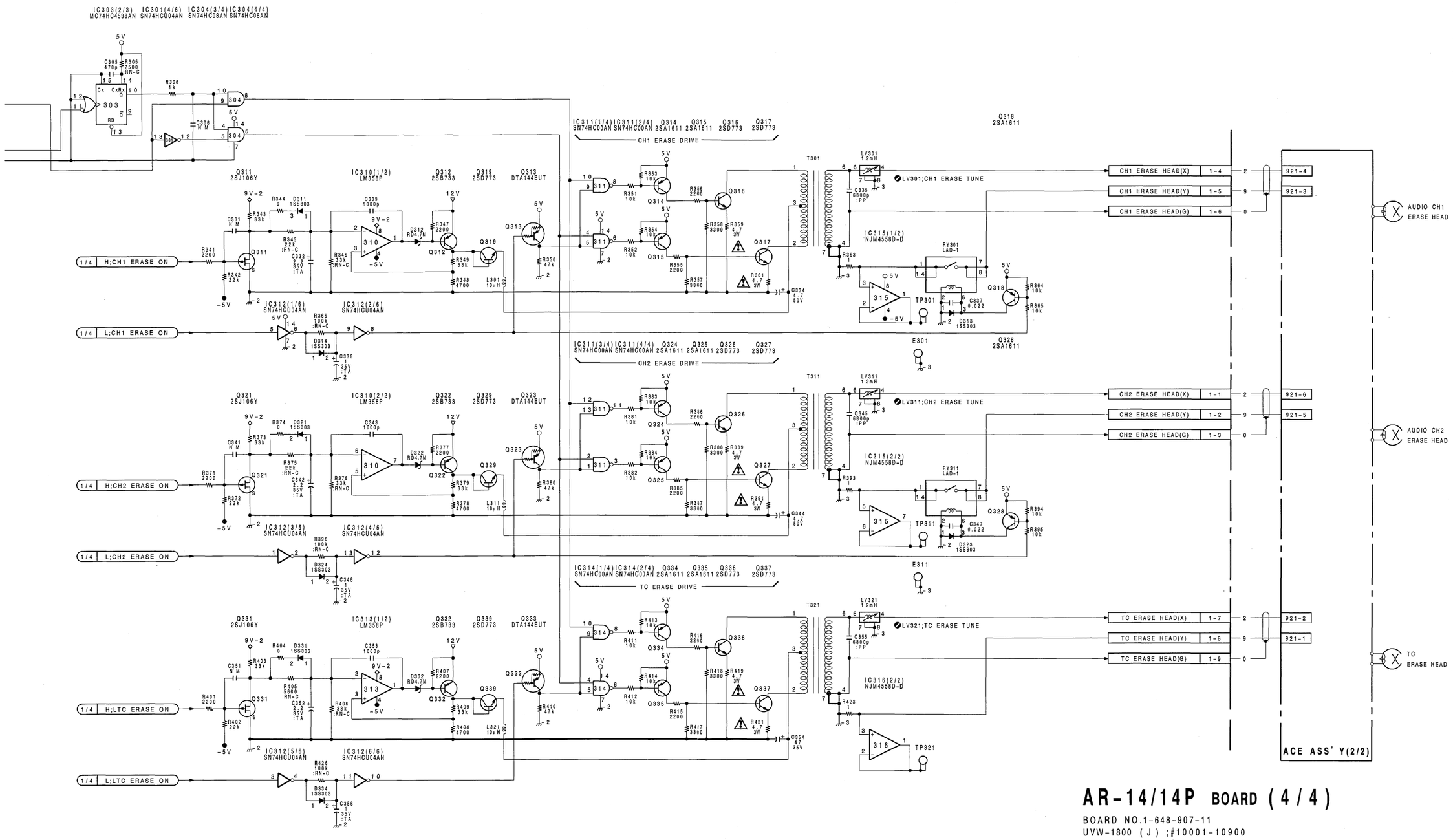

AR-14/14P BOARD (4/4)

BOARD NO.1-648-907-11
UVW-1800 (J) ;#10001-10900
UVW-1800 (UC);#10001-13930
UVW-1800P(EK);#10001-14140

UVW-1800 (J) ;Serial No.10901 and higher
UVW-1800 (UC);Serial No.13931 and higher
UVW-1800P(EK);Serial No.14141 and higher
UVW-1600 (J) ;Serial No.10601 and higher
UVW-1600 (UC);Serial No.12901 and higher
UVW-1600P(EK);Serial No.13781 and higher

CP-225 ;VIDEO INPUT/OUTPUT CONNECTOR
CP-225A;VIDEO OUTPUT CONNECTOR

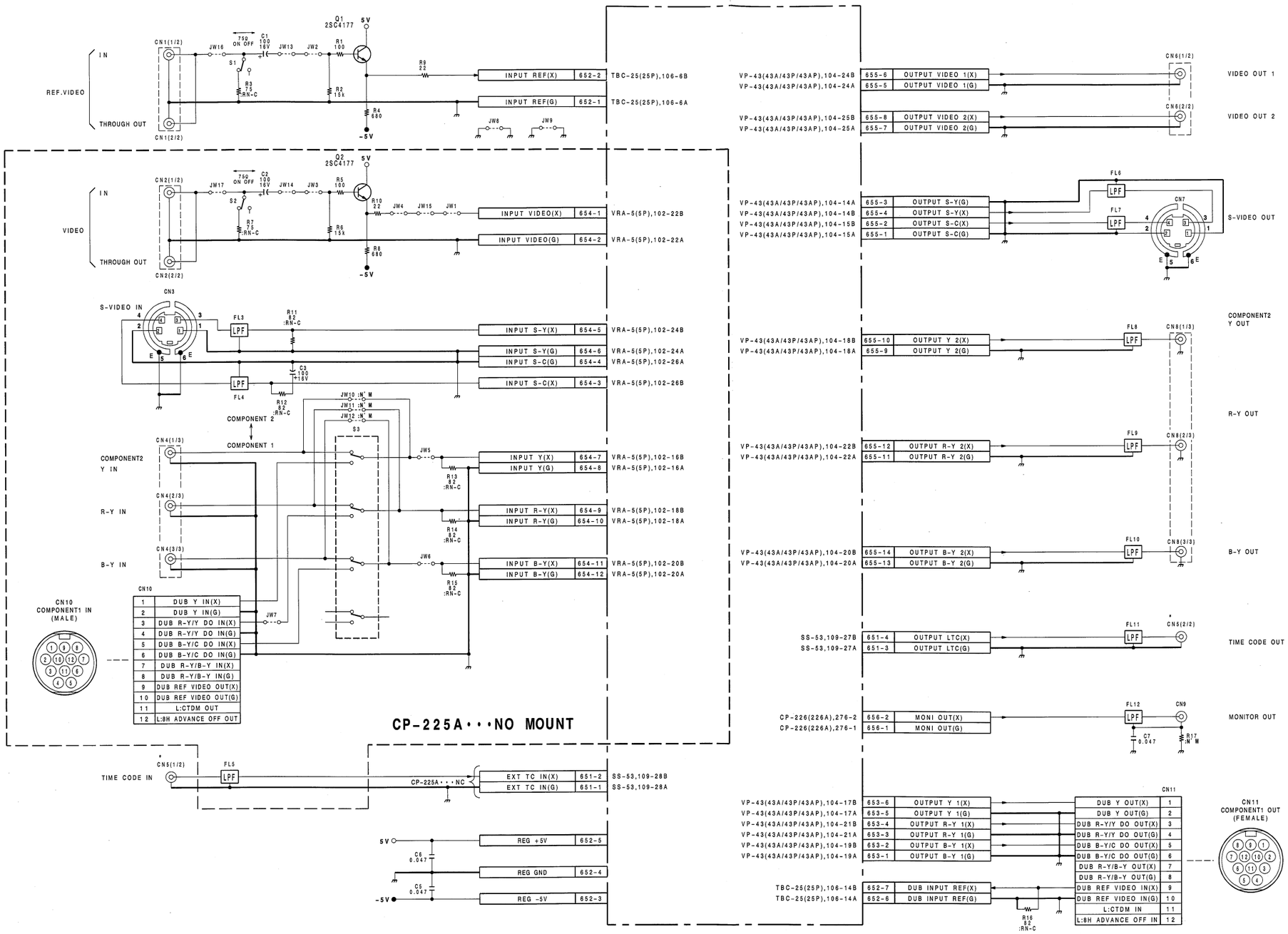

REF NO.	CP-225	CP-225A
CN5	1-573-582-11	1-573-583-11

CP-225/225A BOARD

BOARD NO.1-648-910-12,22
UVW-1800 (J) ;#10901-
UVW-1800 (UC);#13931-
UVW-1800P(EK);#14141-
UVW-1600 (J) ;#10601-
UVW-1600 (UC);#12901-
UVW-1600P(EK);#13781-

UVW-1800 (J) ;Serial No.10001 through 10900
UVW-1800 (UC);Serial No.10001 through 13930
UVW-1800P(EK);Serial No.10001 through 14140
UVW-1600 (J) ;Serial No.10001 through 10600
UVW-1600 (UC);Serial No.10001 through 12900
UVW-1600P(EK);Serial No.10001 through 13780

CP-225 ;VIDEO INPUT/OUTPUT CONNECTOR
CP-225A;VIDEO OUTPUT CONNECTOR

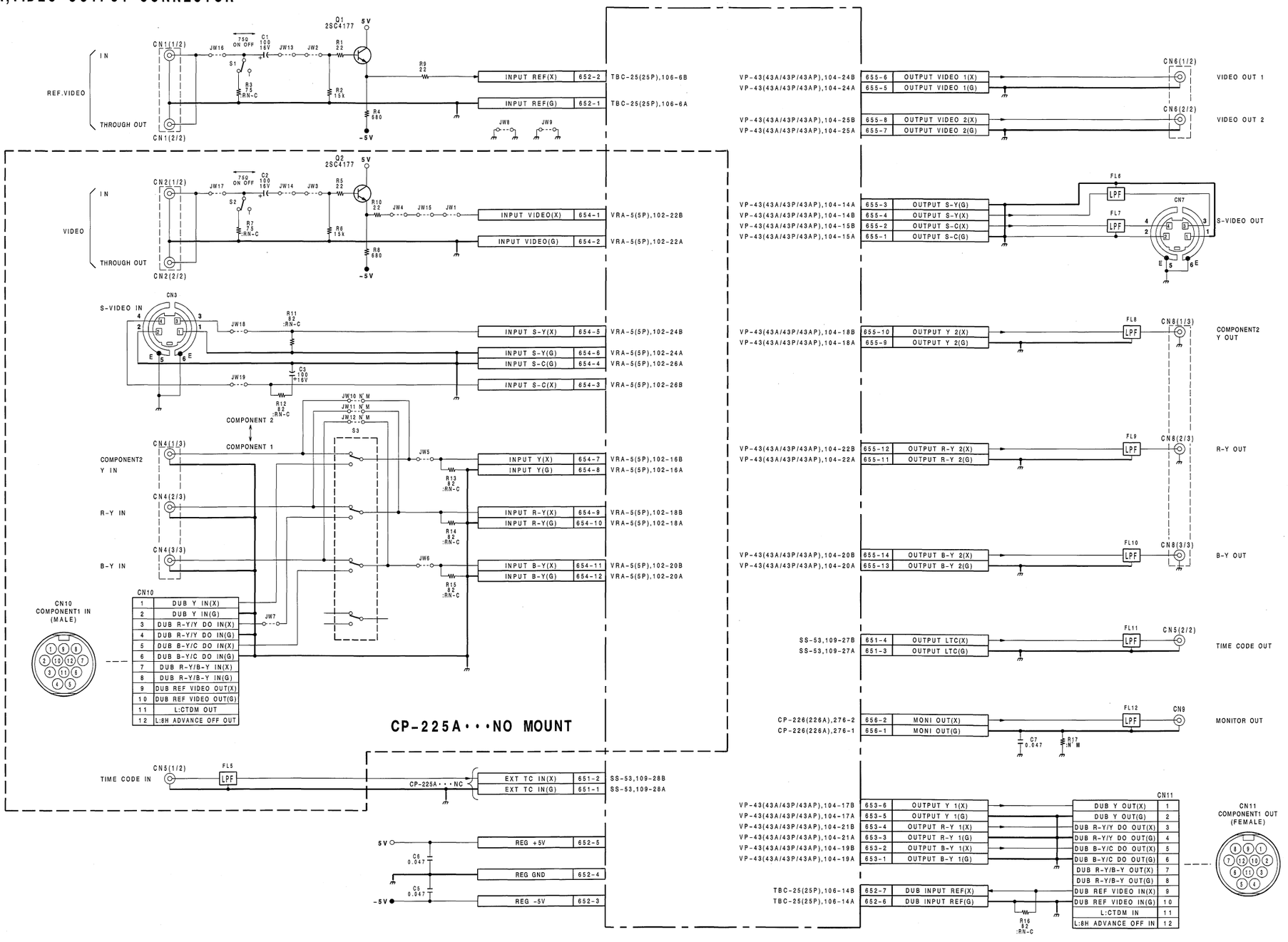

CP-225/225A BOARD

BOARD NO.1-648-910-11,21
UVW-1800 (J) ;#10001-10900
UVW-1800 (UC);#10001-13930
UVW-1800P(EK);#10001-14140
UVW-1600 (J) ;#10001-10600
UVW-1600 (UC);#10001-12900
UVW-1600P(EK);#10001-13780

 CP-226/226A/226J/226AJ

```
UVW-1800 (J) ;Serial No.10901 and higher
UVW-1800 (UC);Serial No.13931 and higher
UVW-1800P(EK);Serial No.14141 and higher
UVW-1600 (J) ;Serial No.10601 and higher
UVW-1600 (UC);Serial No.12901 and higher
UVW-1600P(EK);Serial No.13781 and higher
```

CP-226/226J ;AUDIO INPUT/OUTPUT CONNECTOR,OUTPUT TRANSFORMER
CP-226A/226AJ ;AUDIO OUTPUT CONNECTOR,OUTPUT TRANSFORMER

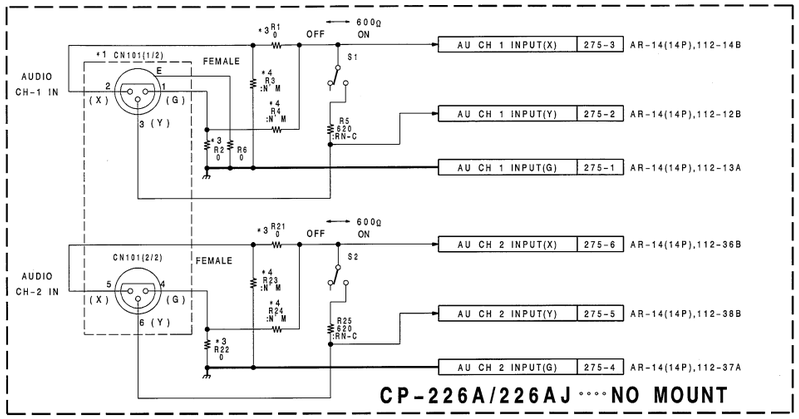

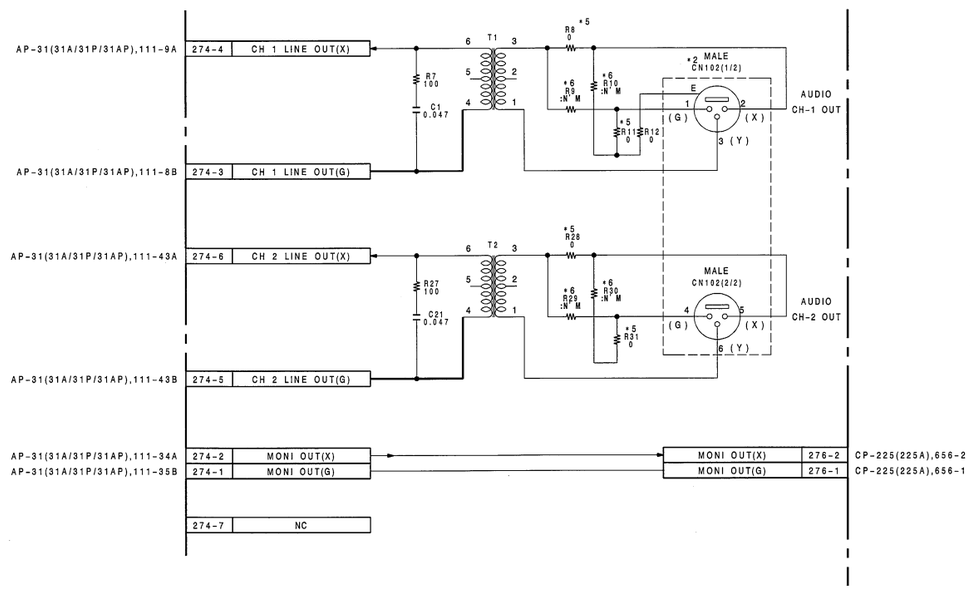

CP-226/226J

	REF.No	UC,EK	J
*1	CN101	FEMALE	MALE
*2	CN102	MALE	FEMALE
*3	R1,2,21,22	0	:N' M
*4	R3,4,23,24	:N' M	0
*5	R8,11,28,31	0	:N' M
*6	R9,10,29,30	:N' M	0

CP-226A/226AJ

	REF.No	UC,EK	J
*2	CN102	MALE	FEMALE
*5	R8,11,28,31	0	:N' M
*6	R9,10,29,30	:N' M	0

CP-226/226A/226J/226AJ BOARD

BOARD NO.1-648-911-12,22
UVW-1800 (J) ;#10901-
UVW-1800 (UC);#13931-
UVW-1800P(EK);#14141-
UVW-1600 (J) ;#10601-
UVW-1600 (UC);#12901-
UVW-1600P(EK);#13781-

 16-45 (b)

UVW-1800 (J) ;Serial No.10001 through 10900
UVW-1800 (UC);Serial No.10001 through 13930
UVW-1800P(EK);Serial No.10001 through 14140
UVW-1600 (J) ;Serial No.10001 through 10600
UVW-1600 (UC);Serial No.10001 through 12900
UVW-1600P(EK);Serial No.10001 through 13780

CP-226/226J ;AUDIO INPUT/OUTPUT CONNECTOR,OUTPUT TRANSFORMER
CP-226A/226AJ ;AUDIO OUTPUT CONNECTOR,OUTPUT TRANSFORMER

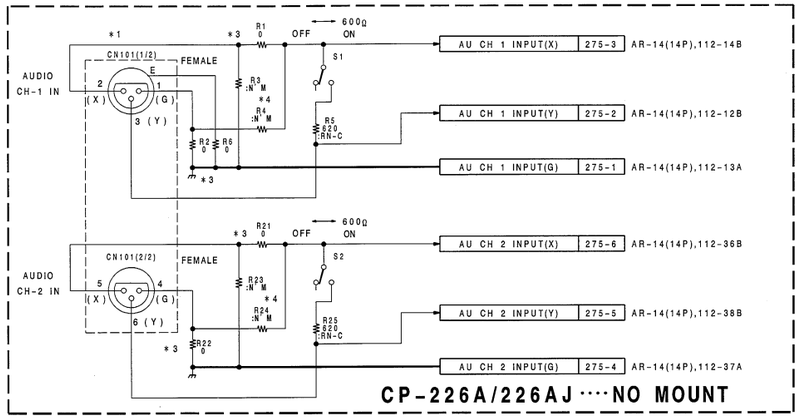

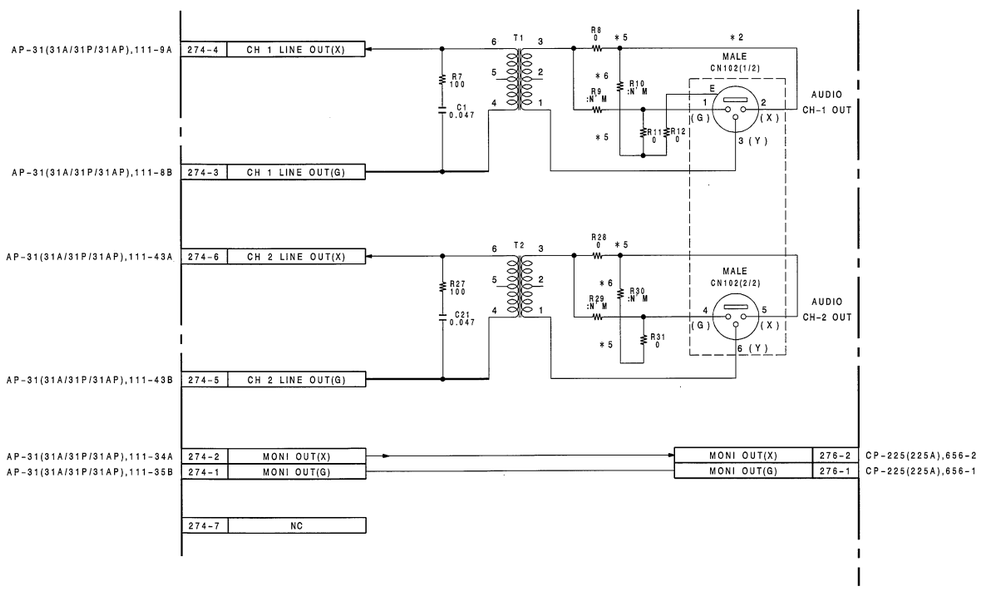

CP-226/226J

	REF.No	UC,EK	J
*1	CN101	FEMALE	MALE
*2	CN102	MALE	FEMALE
*3	R1,2,21,22	0	:N' M
*4	R3,4,23,24	:N' M	0
*5	R8,11,28,31	0	:N' M
*6	R9,10,29,30	:N' M	0

CP-226A/226AJ

	REF.No	UC,EK	J
*2	CN102	MALE	FEMALE
*5	R8,11,28,31	0	:N' M
*6	R9,10,29,30	:N' M	0

CP-226/226A/226J/226AJ BOARD

BOARD NO.1-648-911-11,21
UVW-1800 (J) ;#10001-10900
UVW-1800 (UC);#10001-13930
UVW-1800P(EK);#10001-14140
UVW-1600 (J) ;#10001-10600
UVW-1600 (UC);#10001-12900
UVW-1600P(EK);#10001-13780

DR-214 (1-648-908-11, 12)

CN300 H-1
CN301 C-5
CN302 H-5
CN303 L-5

D1 G-2
D151 L-3
D152 K-3
D153 L-2
D154 M-3
D155 K-3
D156 L-2
D301 G-2
D302 J-4
D303 H-4
D304 H-2
D306 H-3

E1 K-1
E2 K-5

IC1 G-2
IC51 C-2
IC52 D-3
IC151 L-4
IC152 L-4
IC153 L-2
IC201 C-1
IC251 L-1
IC301 F-3
IC302 F-4
IC303 F-2
IC304 G-4
IC305 J-5
IC306 H-4
IC307 J-2
IC308 E-5
IC310 J-3
IC311 J-1
IC313 H-2

Q1 G-3
Q51 B-5
Q52 B-5
Q53 B-5
Q101 B-4
Q102 B-4
Q103 B-4
Q151 M-2
Q152 N-4
Q153 M-3
Q154 N-5
Q155 M-3
Q201 B-1
Q202 B-1
Q203 B-2
Q204 B-2
Q205 B-3
Q206 B-3
Q207 B-3
Q208 B-4
Q251 N-1
Q252 N-1
Q253 N-2
Q254 M-2
Q255 N-3
Q256 N-3
Q257 N-3
Q258 N-4
Q301 H-2
Q302 K-1
Q303 K-2

UVW-1800 (J) ;Serial No.10901 and higher
UVW-1800 (UC);Serial No.13931 and higher
UVW-1800P(EK);Serial No.14141 and higher
UVW-1600 (J) ;Serial No.10601 and higher
UVW-1600 (UC);Serial No.12901 and higher
UVW-1600P(EK);Serial No.13781 and higher

DR-214(1/2);DRUM/CAP/THREAD/REEL POS./CC/REEL MOTOR DRIVE

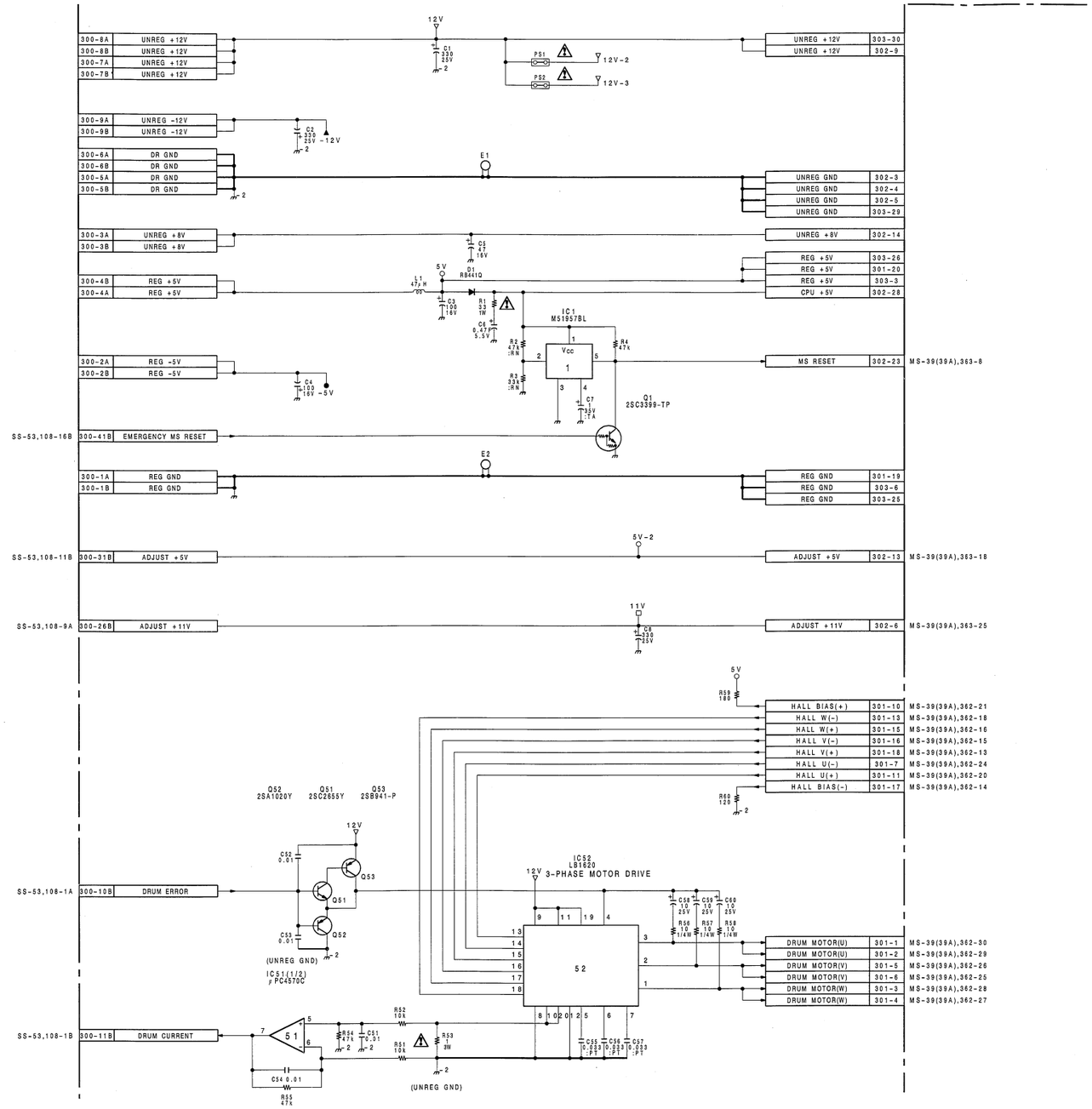

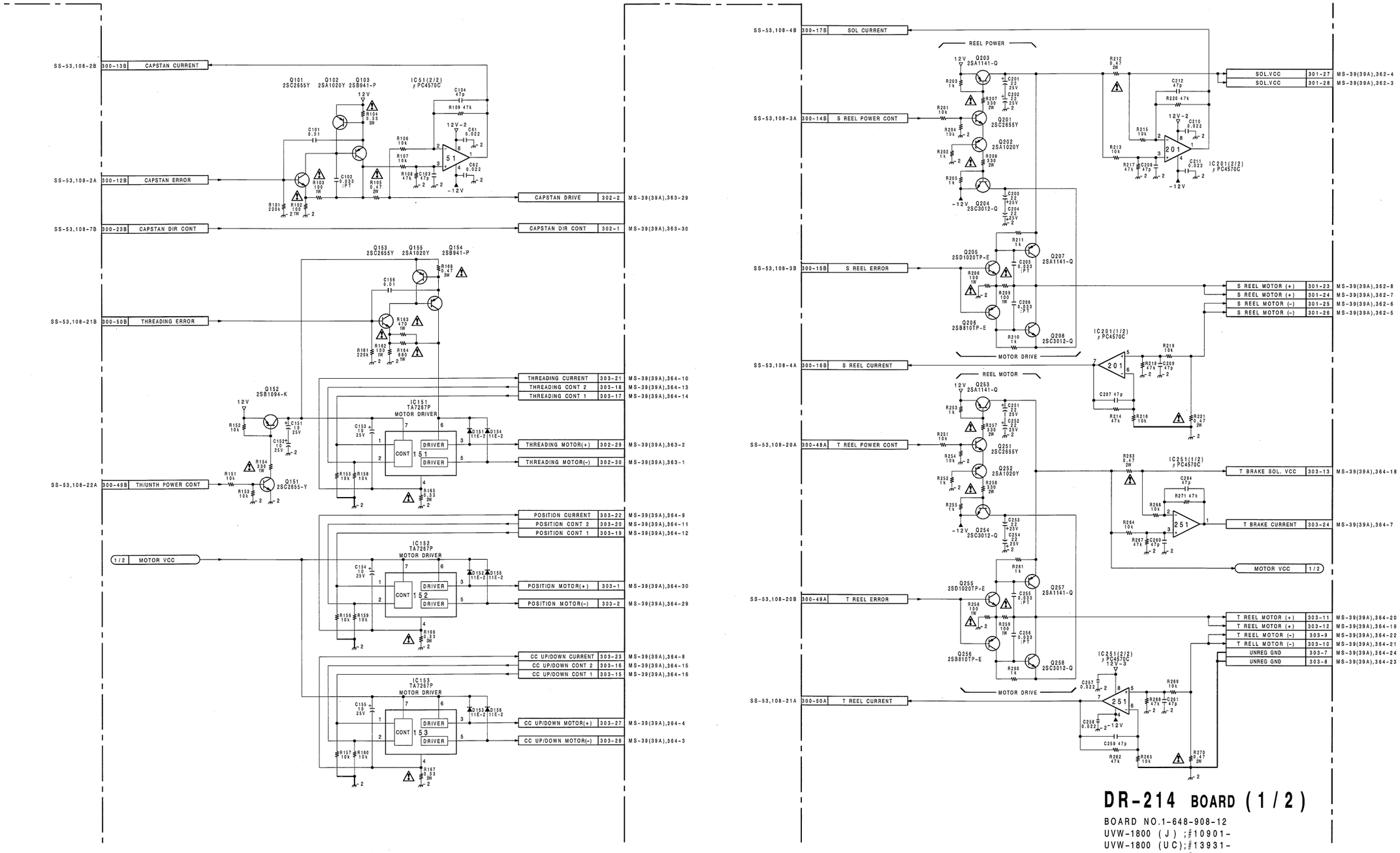
SS-53,108-2B 300-13B CAPSTAN CURRENT
SS-53,108-2A 300-12B CAPSTAN ERROR
SS-53,108-7B 300-23B CAPSTAN DIR CONT
CAPSTAN DRIVE 302-2 MS-39(39A),363-29
CAPSTAN DIR CONT 302-1 MS-39(39A),363-30
SS-53,108-21B 300-50B THREADING ERROR
THREADING CURRENT 303-21 MS-39(39A),364-10
THREADING CONT 2 303-18 MS-39(39A),364-13
THREADING CONT 1 303-17 MS-39(39A),364-14
THREADING MOTOR(+) 302-29 MS-39(39A),363-2
THREADING MOTOR(-) 302-30 MS-39(39A),363-1
SS-53,108-22A 300-49B TH/UNTH POWER CONT
1/2 MOTOR VCC
POSITION CURRENT 303-22 MS-39(39A),364-9
POSITION CONT 2 303-20 MS-39(39A),364-11
POSITION CONT 1 303-19 MS-39(39A),364-12
POSITION MOTOR(+) 303-1 MS-39(39A),364-30
POSITION MOTOR(-) 303-2 MS-39(39A),364-29
CC UP/DOWN CURRENT 303-23 MS-39(39A),364-8
CC UP/DOWN CONT 2 303-16 MS-39(39A),364-15
CC UP/DOWN CONT 1 303-15 MS-39(39A),364-16
CC UP/DOWN MOTOR(+) 303-27 MS-39(39A),364-4
CC UP/DOWN MOTOR(-) 303-28 MS-39(39A),364-3
IC151 TA7267P MOTOR DRIVER
IC152 TA7267P MOTOR DRIVER
IC153 TA7267P MOTOR DRIVER
IC51(2/2) μPC4570C
SS-53,108-4B 300-17B SOL CURRENT
REEL POWER
SS-53,108-3A 300-14B S REEL POWER CONT
SS-53,108-3B 300-15B S REEL ERROR
MOTOR DRIVE
SS-53,108-4A 300-16B S REEL CURRENT
REEL MOTOR
SS-53,108-20A 300-48A T REEL POWER CONT
SS-53,108-20B 300-49A T REEL ERROR
SS-53,108-21A 300-50A T REEL CURRENT
SOL.VCC 301-27 MS-39(39A),362-4
SOL.VCC 301-28 MS-39(39A),362-3
S REEL MOTOR (+) 301-23 MS-39(39A),362-8
S REEL MOTOR (+) 301-24 MS-39(39A),362-7
S REEL MOTOR (-) 301-25 MS-39(39A),362-6
S REEL MOTOR (-) 301-26 MS-39(39A),362-5
T BRAKE SOL. VCC 303-13 MS-39(39A),364-18
T BRAKE CURRENT 303-24 MS-39(39A),364-7
MOTOR VCC 1/2
T REEL MOTOR (+) 303-11 MS-39(39A),364-20
T REEL MOTOR (+) 303-12 MS-39(39A),364-19
T REEL MOTOR (-) 303-9 MS-39(39A),364-22
T RELL MOTOR (-) 303-10 MS-39(39A),364-21
UNREG GND 303-7 MS-39(39A),364-24
UNREG GND 303-8 MS-39(39A),364-23
IC201(2/2) μPC4570C
IC201(1/2) μPC4570C
IC251(1/2) μPC4570C
IC251(2/2) μPC4570C 12V-3
DR-214 BOARD (1/2)
BOARD NO.1-648-908-12
UVW-1800 (J) ;#10901-
UVW-1800 (UC);#13931-
UVW-1800P(EK);#14141-
UVW-1600 (J) ;#10601-
UVW-1600 (UC);#12901-
UVW-1600P(EK);#13781-

DR-214 (1-648-908-11, 12)

CN300 H-1
CN301 C-5
CN302 H-5
CN303 L-5

D1 G-2
D151 L-3
D152 K-3
D153 L-2
D154 M-3
D155 K-3
D156 L-2
D301 G-2
D302 J-4
D303 H-4
D304 H-2
D306 H-3

E1 K-1
E2 K-5

IC1 G-2
IC51 C-2
IC52 D-3
IC151 L-4
IC152 L-4
IC153 L-2
IC201 C-1
IC251 L-1
IC301 F-3
IC302 F-4
IC303 F-2
IC304 G-4
IC305 J-5
IC306 H-4
IC307 J-2
IC308 E-5
IC310 J-3
IC311 J-1
IC313 H-2

Q1 G-3
Q51 B-5
Q52 B-5
Q53 B-5
Q101 B-4
Q102 B-4
Q103 B-4
Q151 M-2
Q152 N-4
Q153 M-3
Q154 N-5
Q155 M-3
Q201 B-1
Q202 B-1
Q203 B-2
Q204 B-2
Q205 B-3
Q206 B-3
Q207 B-3
Q208 B-4
Q251 N-1
Q252 N-1
Q253 N-2
Q254 M-2
Q255 N-3
Q256 N-3
Q257 N-3
Q258 N-4
Q301 H-2
Q302 K-1
Q303 K-2

UVW-1800 (J) ;Serial No.10901 and higher
UVW-1800 (UC);Serial No.13931 and higher
UVW-1800P(EK);Serial No.14141 and higher
UVW-1600 (J) ;Serial No.10601 and higher
UVW-1600 (UC);Serial No.12901 and higher
UVW-1600P(EK);Serial No.13781 and higher

DR-214(2/2);CTL REC/PB,DRUM PG/FG AMP.,CAPSTAN FG AMP.,TENSION AMP.,TAPE TOP/END DETECT

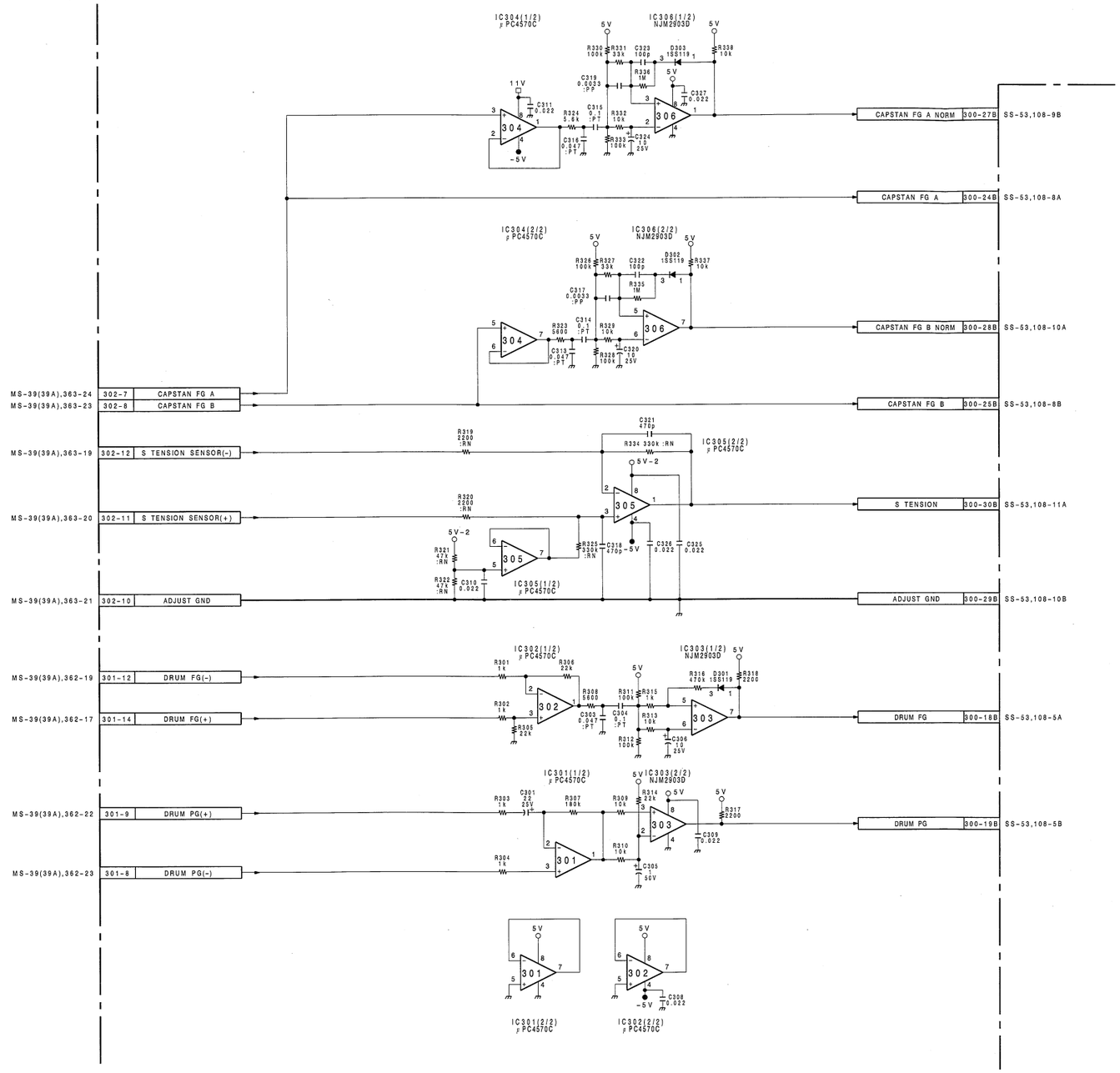

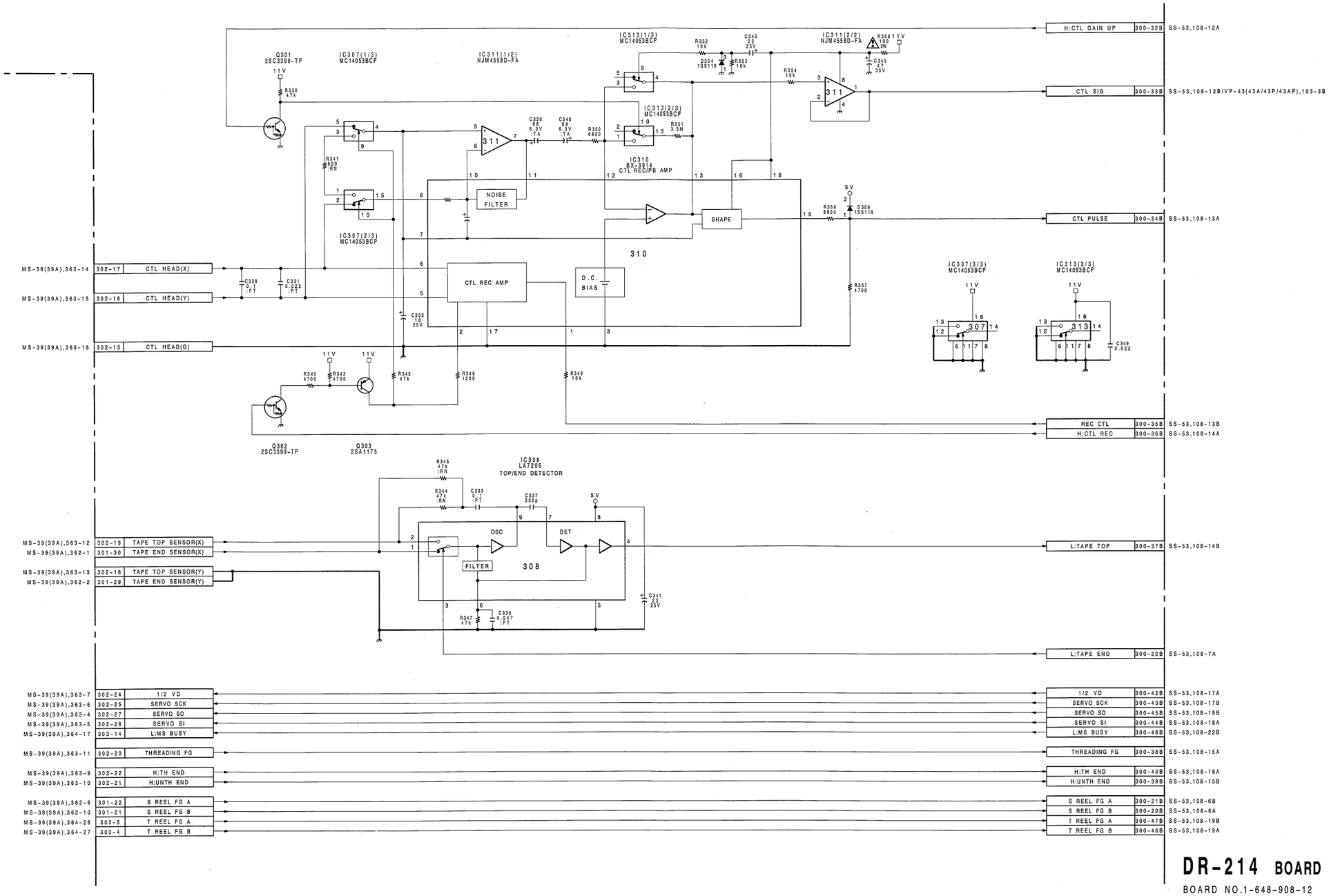

DR-214 BOARD (2/2)

BOARD NO.1-648-908-12
UVW-1800 (J) ;#10901-
UVW-1800 (UC);#13931-
UVW-1800P(EK);#14141-
UVW-1600 (J) ;#10601-
UVW-1600 (UC);#12901-
UVW-1600P(EK);#13781-

DR-214 (1-648-908-11, 12)

CN300	H-1
CN301	C-5
CN302	H-5
CN303	L-5
D1	G-2
D151	L-3
D152	K-3
D153	L-2
D154	M-3
D155	K-3
D156	L-2
D301	G-2
D302	J-4
D303	H-4
D304	H-2
D306	H-3
E1	K-1
E2	K-5
IC1	G-2
IC51	C-2
IC52	D-3
IC151	L-4
IC152	L-4
IC153	L-2
IC201	C-1
IC251	L-1
IC301	F-3
IC302	F-4
IC303	F-2
IC304	G-4
IC305	J-5
IC306	H-4
IC307	J-2
IC308	E-5
IC310	J-3
IC311	J-1
IC313	H-2
Q1	G-3
Q51	B-5
Q52	B-5
Q53	B-5
Q101	B-4
Q102	B-4
Q103	B-4
Q151	M-2
Q152	N-4
Q153	M-3
Q154	N-5
Q155	M-3
Q201	B-1
Q202	B-1
Q203	B-2
Q204	B-2
Q205	B-3
Q206	B-3
Q207	B-3
Q208	B-4
Q251	N-1
Q252	N-1
Q253	N-2
Q254	M-2
Q255	N-3
Q256	N-3
Q257	N-3
Q258	N-4
Q301	H-2
Q302	K-1
Q303	K-2

UVW-1800 (J) ;Serial No.10001 through 10900
UVW-1800 (UC);Serial No.10001 through 13930
UVW-1800P(EK);Serial No.10001 through 14140
UVW-1600 (J) ;Serial No.10001 through 10600
UVW-1600 (UC);Serial No.10001 through 12900
UVW-1600P(EK);Serial No.10001 through 13780

DR-214(1/2);DRUM/CAP/THREAD/REEL POS./CC/REEL MOTOR DRIVE

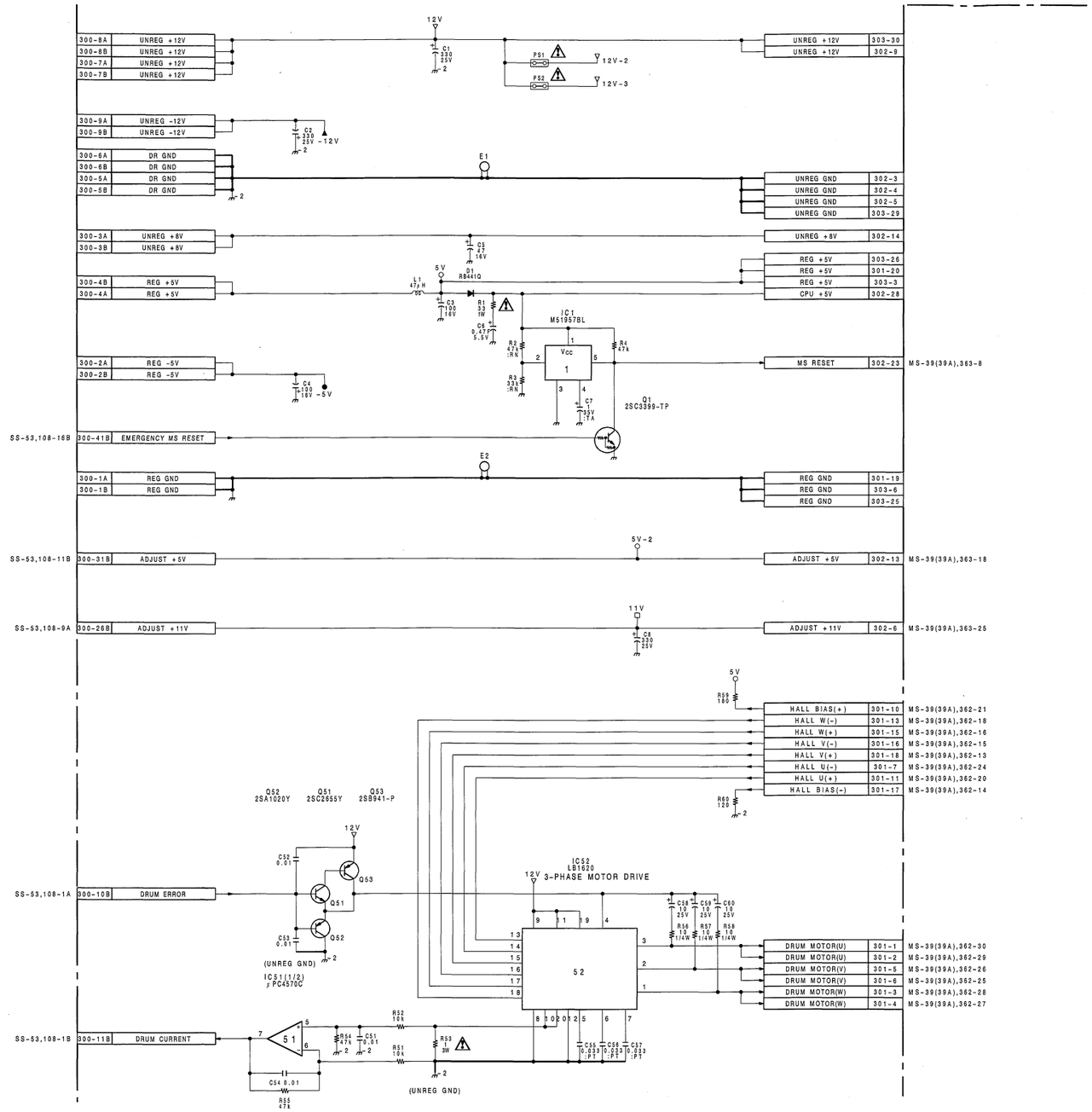

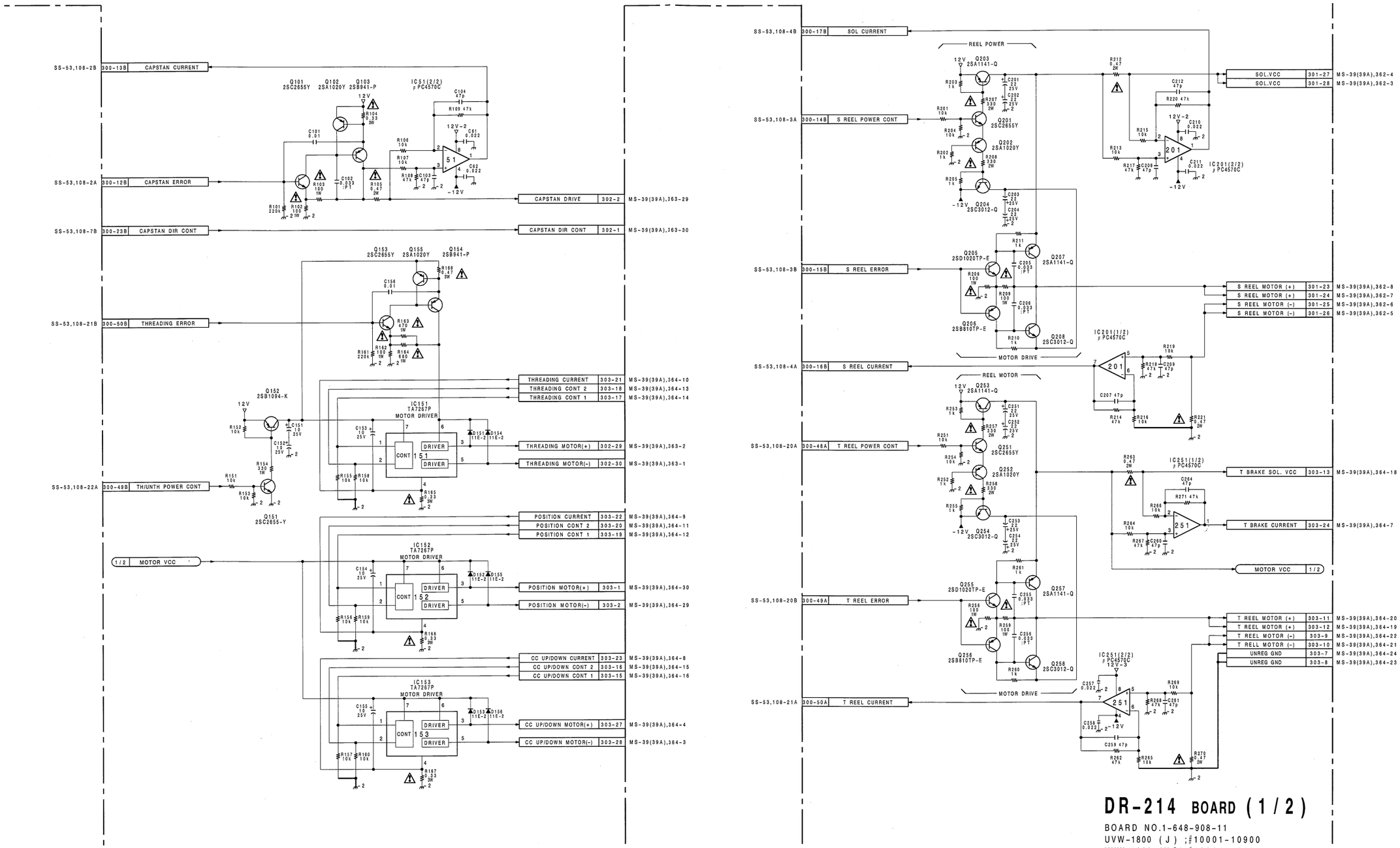

DR-214 BOARD (1/2)

BOARD NO.1-648-908-11
UVW-1800 (J) ;#10001-10900
UVW-1800 (UC);#10001-13930
UVW-1800P(EK);#10001-14140
UVW-1600 (J) ;#10001-10600
UVW-1600 (UC);#10001-12900
UVW-1600P(EK);#10001-13780

DR-214 (1-648-908-11, 12)

CN300 H-1
CN301 C-5
CN302 H-5
CN303 L-5

D1 G-2
D151 L-3
D152 K-3
D153 L-2
D154 M-3
D155 K-3
D156 L-2
D301 G-2
D302 J-4
D303 H-4
D304 H-2
D306 H-3

E1 K-1
E2 K-5

IC1 G-2
IC51 C-2
IC52 D-3
IC151 L-4
IC152 L-4
IC153 L-2
IC201 C-1
IC251 L-1
IC301 F-3
IC302 F-4
IC303 F-2
IC304 G-4
IC305 J-5
IC306 H-4
IC307 J-2
IC308 E-5
IC310 J-3
IC311 J-1
IC313 H-2

Q1 G-3
Q51 B-5
Q52 B-5
Q53 B-5
Q101 B-4
Q102 B-4
Q103 B-4
Q151 M-2
Q152 N-4
Q153 M-3
Q154 N-5
Q155 M-3
Q201 B-1
Q202 B-1
Q203 B-2
Q204 B-2
Q205 B-3
Q206 B-3
Q207 B-3
Q208 B-4
Q251 N-1
Q252 N-1
Q253 N-2
Q254 M-2
Q255 N-3
Q256 N-3
Q257 N-3
Q258 N-4
Q301 H-2
Q302 K-1
Q303 K-2

UVW-1800 (J) ;Serial No.10001 through 10900
UVW-1800 (UC);Serial No.10001 through 13930
UVW-1800P(EK);Serial No.10001 through 14140
UVW-1600 (J) ;Serial No.10001 through 10600
UVW-1600 (UC);Serial No.10001 through 12900
UVW-1600P(EK);Serial No.10001 through 13780

DR-214(2/2);CTL REC/PB,DRUM PG/FG AMP.,CAPSTAN FG AMP.,TENSION AMP.,TAPE TOP/END DETECT

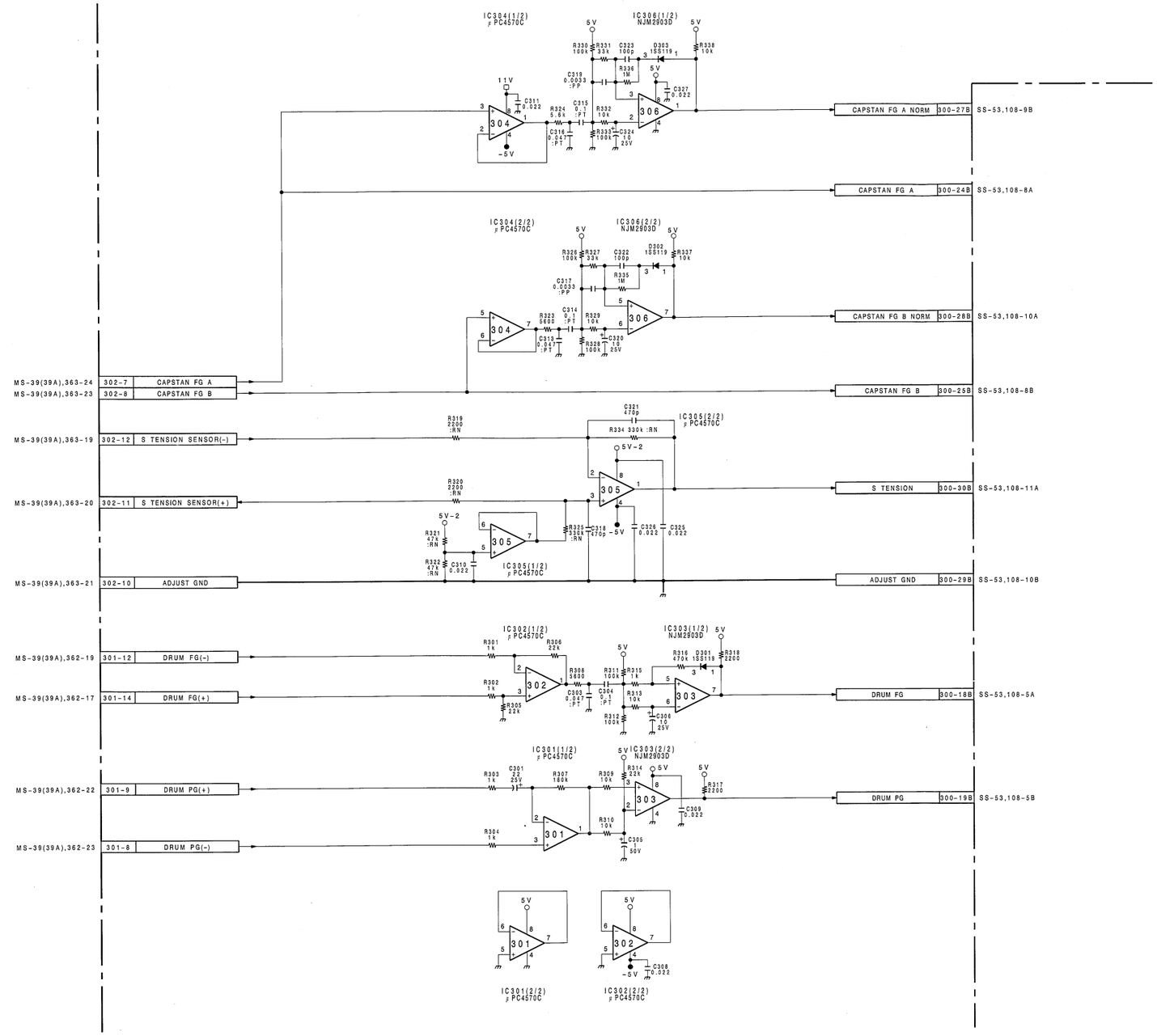

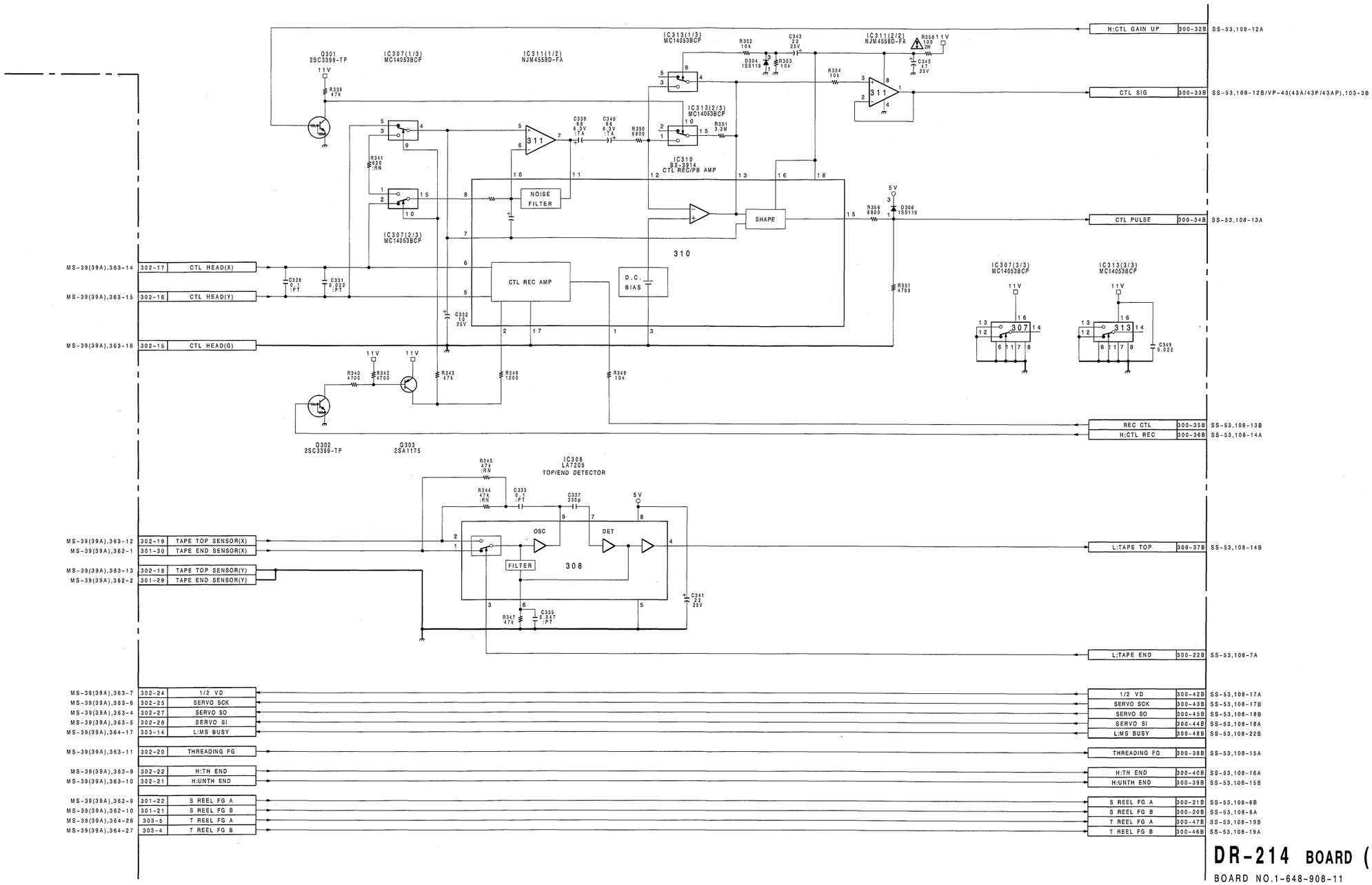

DR-214 BOARD (2/2)

BOARD NO.1-648-908-11
UVW-1800 (J) ;#10001-10900
UVW-1800 (UC);#10001-13930
UVW-1800P(EK);#10001-14140
UVW-1600 (J) ;#10001-10600
UVW-1600 (UC);#10001-12900
UVW-1600P(EK);#10001-13780

KY-249;FUNCTION KEY

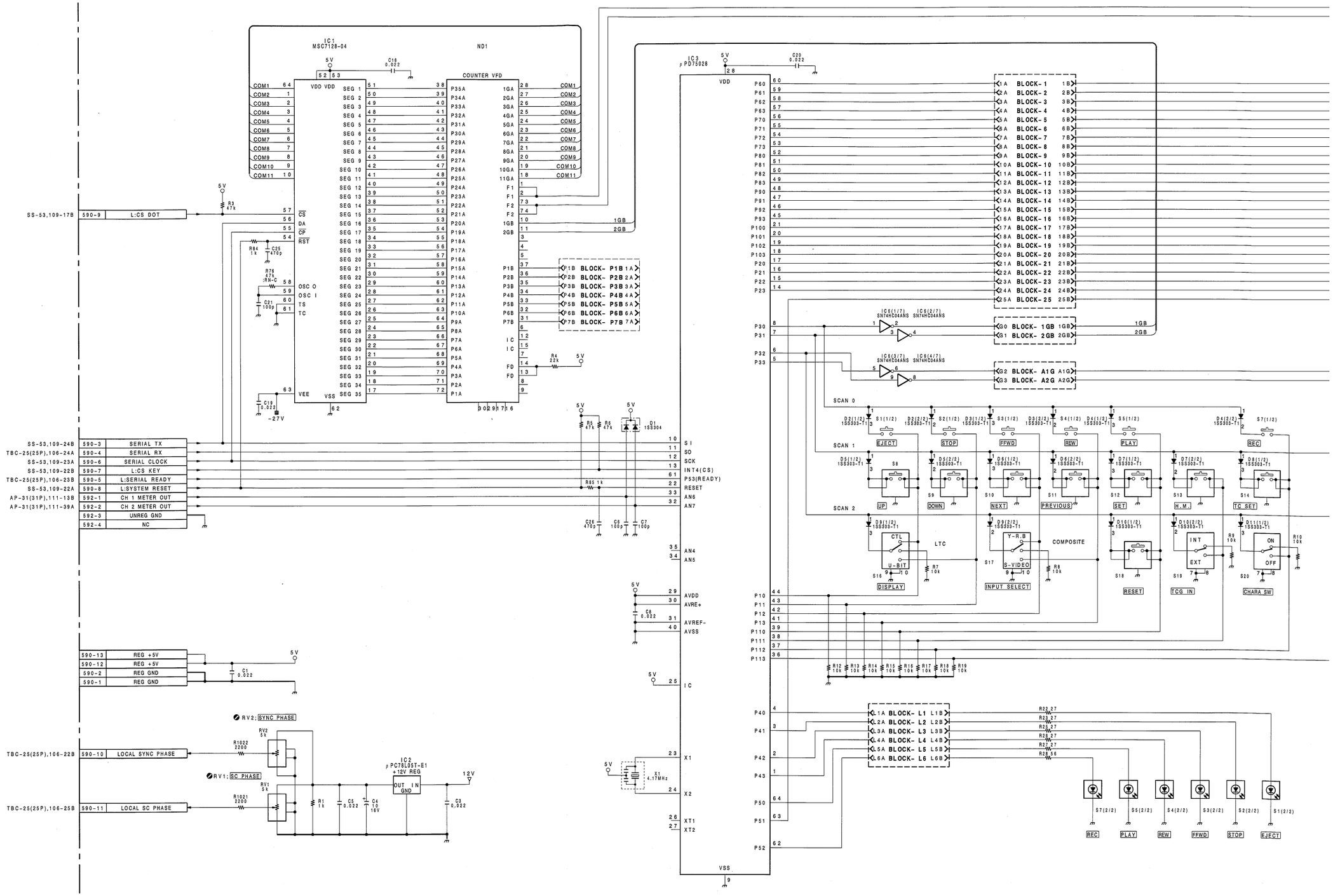

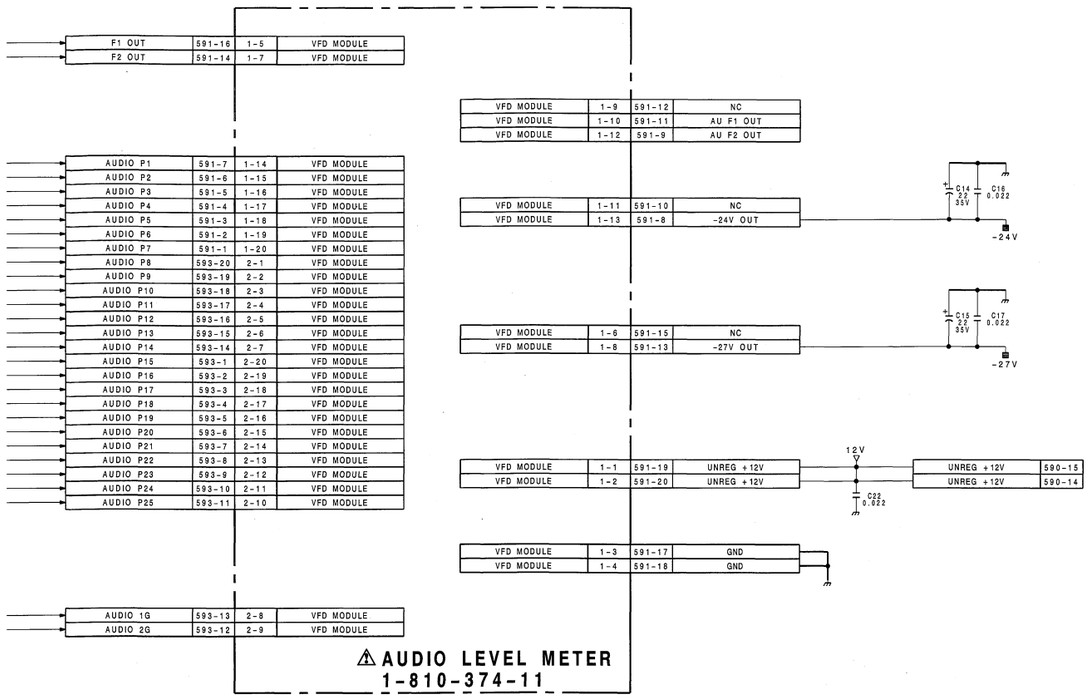

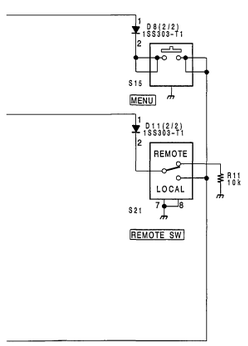

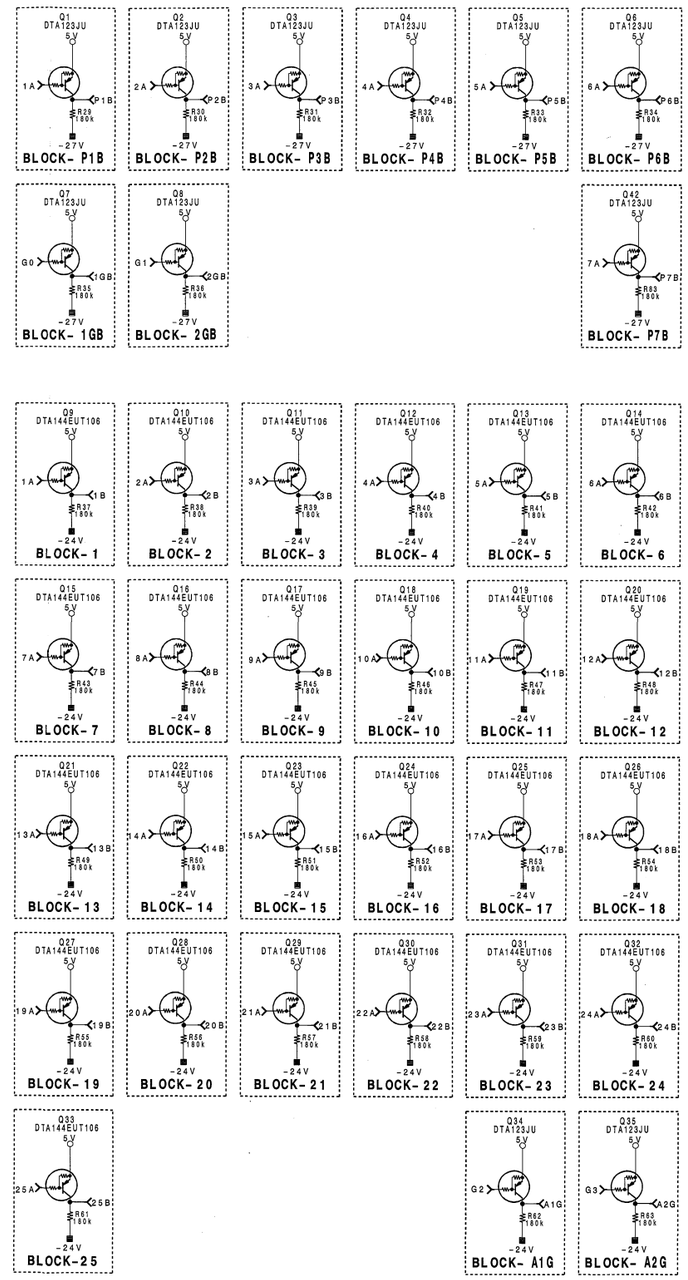

KY-249(1-648-914-11)

CN590	M-3	S8	H-2
CN591	D-1	S9	H-3
CN592	N-3	S10	H-3
CN593	B-1	S11	G-3
		S12	J-3
✱D1	N-2	S13	G-3
✱D2	K-1	S14	G-3
✱D3	K-1	S15	G-2
✱D4	K-1	S16	E-2
✱D5	J-2	S17	F-2
✱D6	J-2	S18	J-3
✱D7	H-2	S19	E-3
✱D8	H-2	S20	F-3
✱D9	H-3	S21	E-2
✱D10	J-3		
✱D11	J-3	X1	N-2
IC1	L-3		
IC2	E-2		
IC3	M-2		
IC6	M-3		
ND1	E-2		
✱Q1	D-3		
✱Q2	D-3		
✱Q3	D-2		
✱Q4	D-2		
✱Q5	D-2		
✱Q6	D-2		
✱Q7	B-2		
✱Q8	C-2		
✱Q9	D-1		
✱Q10	D-1		
✱Q11	D-1		
✱Q12	D-1		
✱Q13	D-1		
✱Q14	D-1		
✱Q15	E-1		
✱Q16	A-1		
✱Q17	B-1		
✱Q18	B-1		
✱Q19	B-1		
✱Q20	B-1		
✱Q21	B-1		
✱Q22	B-1		
✱Q23	D-1		
✱Q24	D-1		
✱Q25	C-1		
✱Q26	C-1		
✱Q27	C-1		
✱Q28	C-1		
✱Q29	C-1		
✱Q30	C-1		
✱Q31	C-1		
✱Q32	C-1		
✱Q33	B-1		
✱Q34	B-1		
✱Q35	B-1		
✱Q36	N-1		
✱Q37	M-1		
✱Q38	M-1		
✱Q39	N-1		
✱Q40	M-1		
✱Q41	M-1		
✱Q42	D-2		
RV1	E-3		
RV2	D-3		
S1	K-1		
S2	P-1		
S3	N-1		
S4	L-1		
S5	M-1		
S7	P-1		

✱ : B SIDE

KY-249 BOARD

BOARD NO.1-648-914-11
UVW-1800 (J) ;#10001-
UVW-1800 (UC);#10001-
UVW-1800P(EK);#10001-

KY-249A;FUNCTION KEY

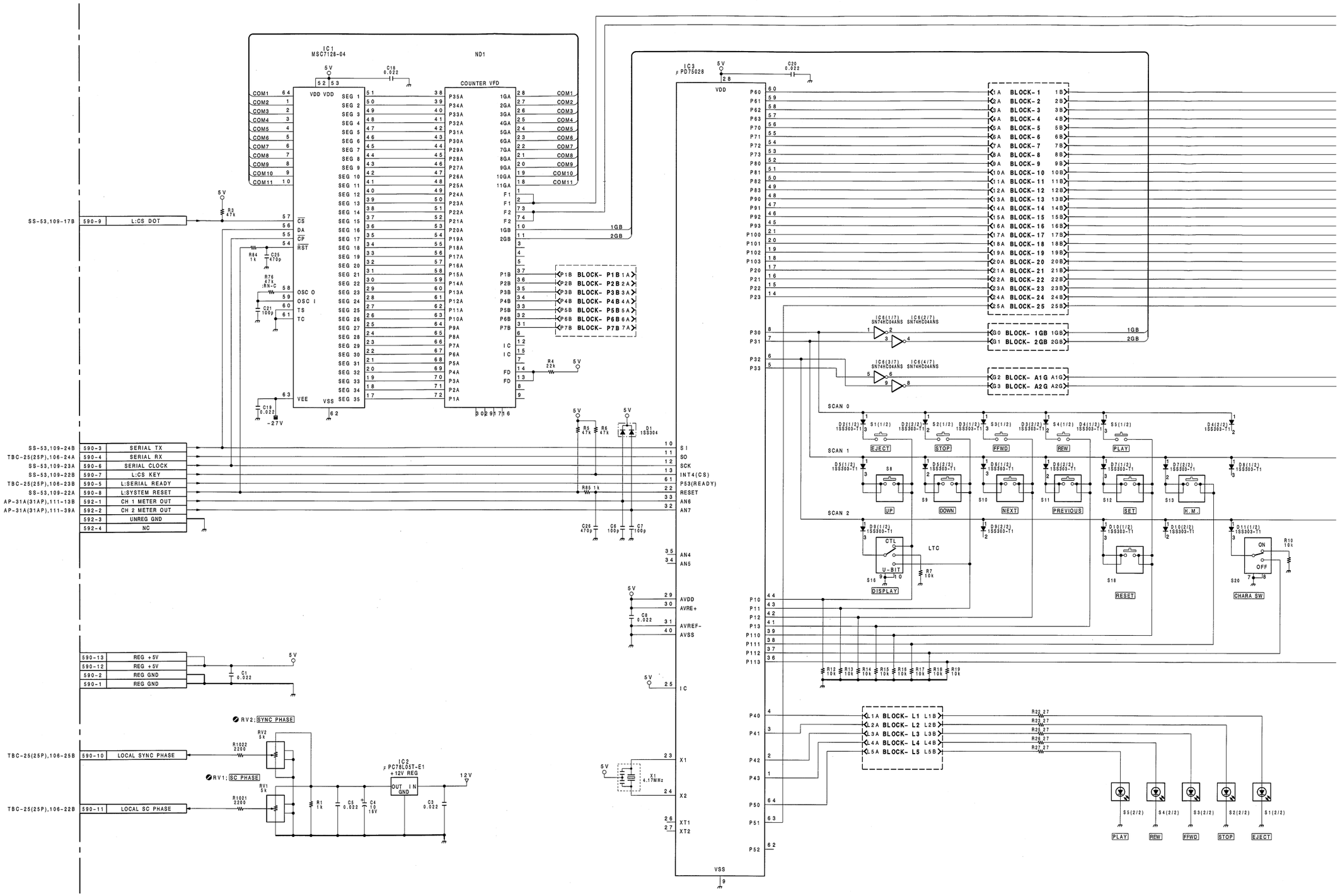

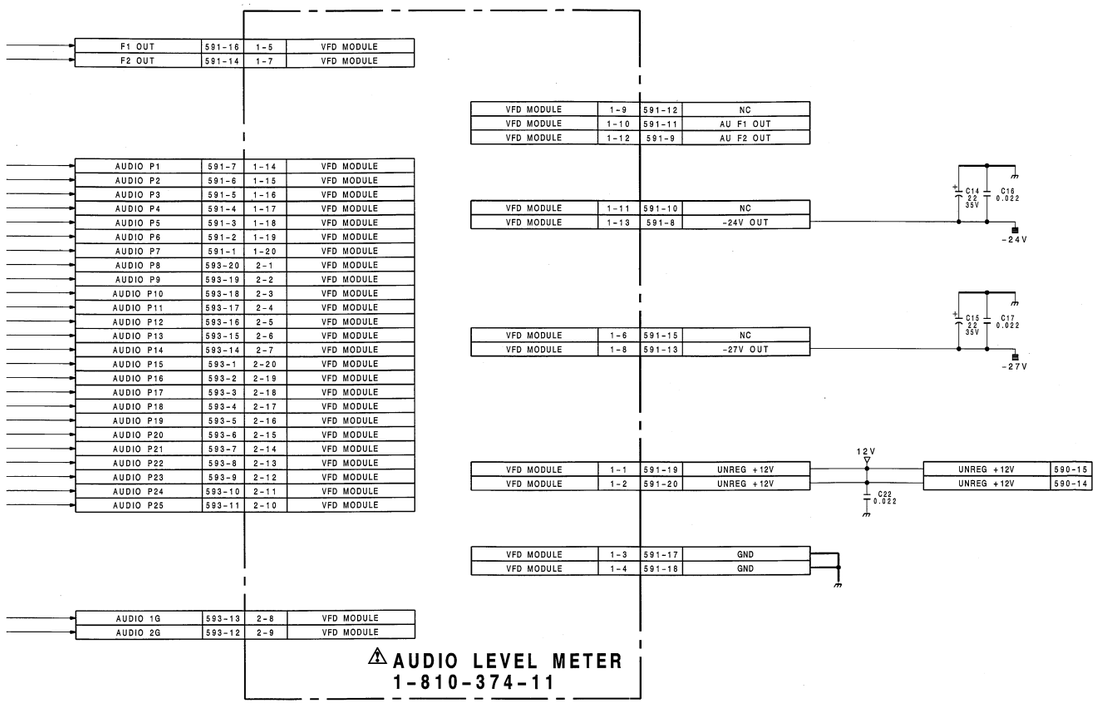

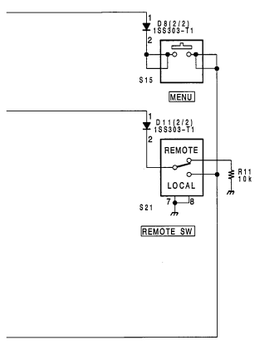

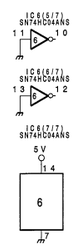

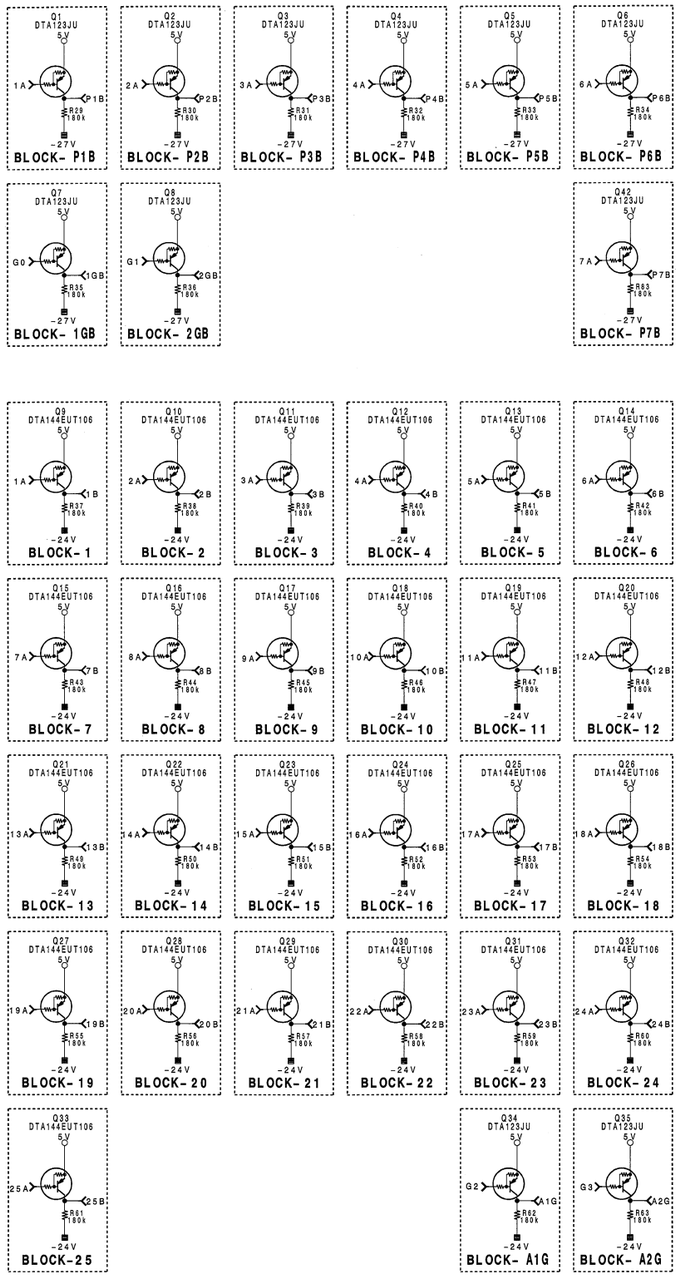

KY-249A(1-648-914-21)

CN590	M-3	S10	H-3
CN591	D-1	S11	G-3
CN592	N-3	S12	J-3
CN593	B-1	S13	G-3
		S15	G-2
✱D1	N-2	S16	E-2
✱D2	K-1	S18	J-3
✱D3	K-1	S20	F-3
✱D4	K-1	S21	E-2
✱D5	J-2		
✱D6	J-2	X1	N-2
✱D7	H-2		
✱D8	H-2		
✱D9	H-3		
✱D10	J-3		
✱D11	J-3		
IC1	L-3		
IC2	E-2		
IC3	M-2		
IC6	M-3		
ND1	E-2		
✱Q1	D-3		
✱Q2	D-3		
✱Q3	D-2		
Q4	D-2		
✱Q5	D-2		
✱Q6	D-2		
✱Q7	B-2		
✱Q8	C-2		
✱Q9	D-1		
✱Q10	D-1		
✱Q11	D-1		
✱Q12	D-1		
✱Q13	D-1		
✱Q14	D-1		
✱Q15	E-1		
✱Q16	A-1		
✱Q17	B-1		
✱Q18	B-1		
✱Q19	B-1		
✱Q20	B-1		
✱Q21	B-1		
✱Q22	B-1		
✱Q23	D-1		
✱Q24	D-1		
✱Q25	C-1		
✱Q26	C-1		
✱Q27	C-1		
✱Q28	C-1		
✱Q29	C-1		
✱Q30	C-1		
✱Q31	C-1		
✱Q32	C-1		
✱Q33	B-1		
✱Q34	B-1		
✱Q35	B-1		
✱Q36	N-1		
✱Q37	M-1		
✱Q38	M-1		
✱Q39	N-1		
✱Q40	M-1		
✱Q42	D-2		
RV1	E-3		
RV2	D-3		
S1	K-1		
S2	P-1		
S3	N-1		
S4	L-1		
S5	M-1		
S8	H-2		
S9	H-3		

✱ : B SIDE

KY-249A BOARD

BOARD NO.1-648-914-21
UVW-1600 (J) ;#10001-
UVW-1600 (UC);#10001-
UVW-1600P(EK);#10001-

UVW-1800 (J) ;Serial No.10901 and higher
UVW-1800 (UC);Serial No.13931 and higher
UVW-1800P(EK);Serial No.14141 and higher
UVW-1600 (J) ;Serial No.10601 and higher
UVW-1600 (UC);Serial No.12901 and higher
UVW-1600P(EK);Serial No.13781 and higher

MS-39/39A (1-648-909-11, 12)

CN350 L-5
CN351 F-1
CN352 F-1
CN353 J-5
CN354 B-3
CN355 D-3
CN356 B-1
CN357 J-1
CN358 C-3
CN359 K-5
CN360 F-5
CN361 G-5
CN362 B-2
CN363 G-4
CN364 K-2

D1 F-2
D2 F-2
D3 B-2
D4 M-2
D7 K-1
D8 K-1
D9 K-1
D10 L-1

IC1 H-4
IC2 E-3
IC3 D-3
IC7 G-4
IC8 G-3

Q1 F-1
Q2 F-1
Q3 B-1
Q4 M-1

X1 J-4

__: UVW-1800/1800P ONLY

MS-39/39A;CASSETTE INFORMATION,SOLENOID DRIVER,MECHA.CONTROL MPU,DATA STRAGE

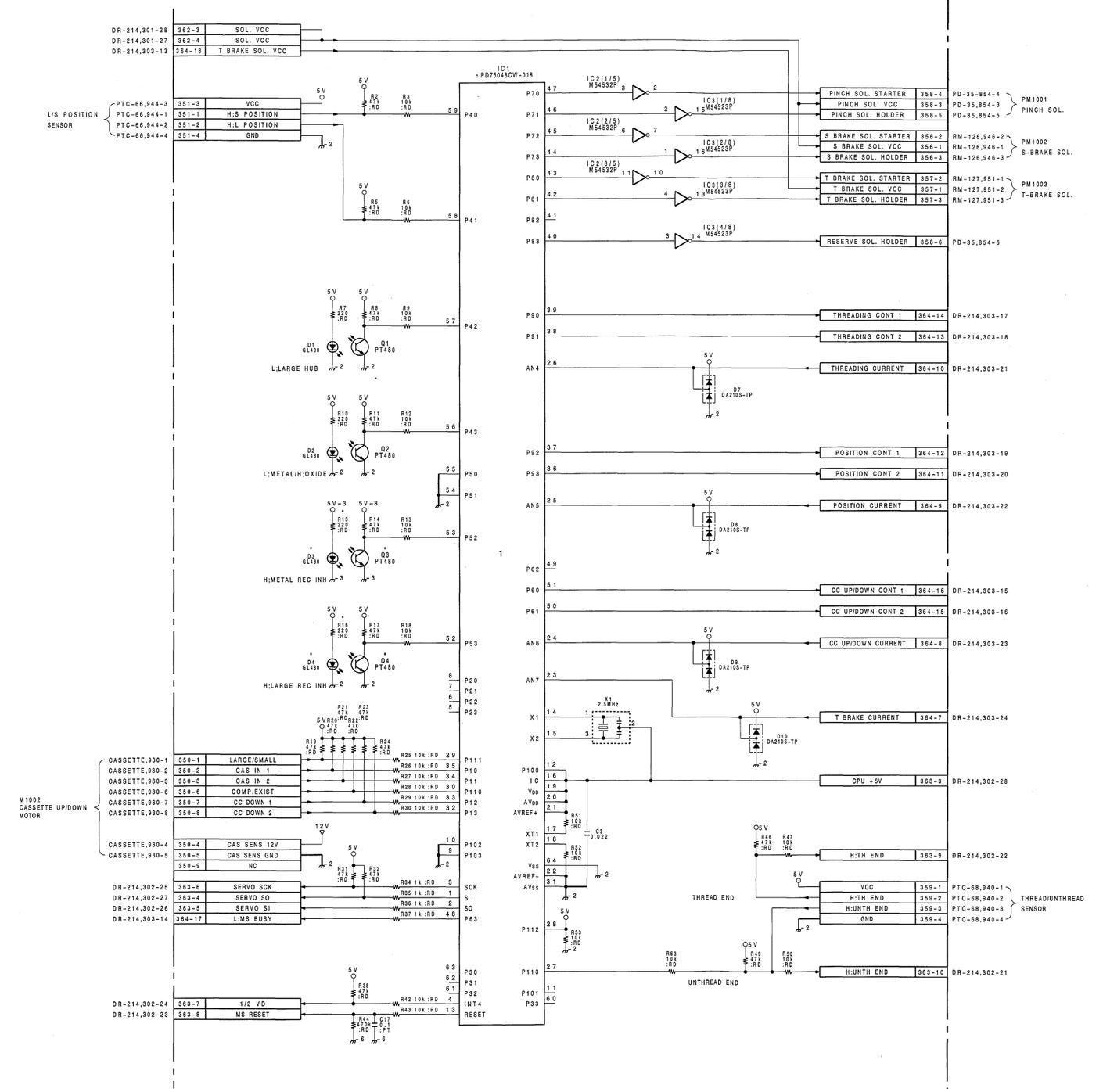

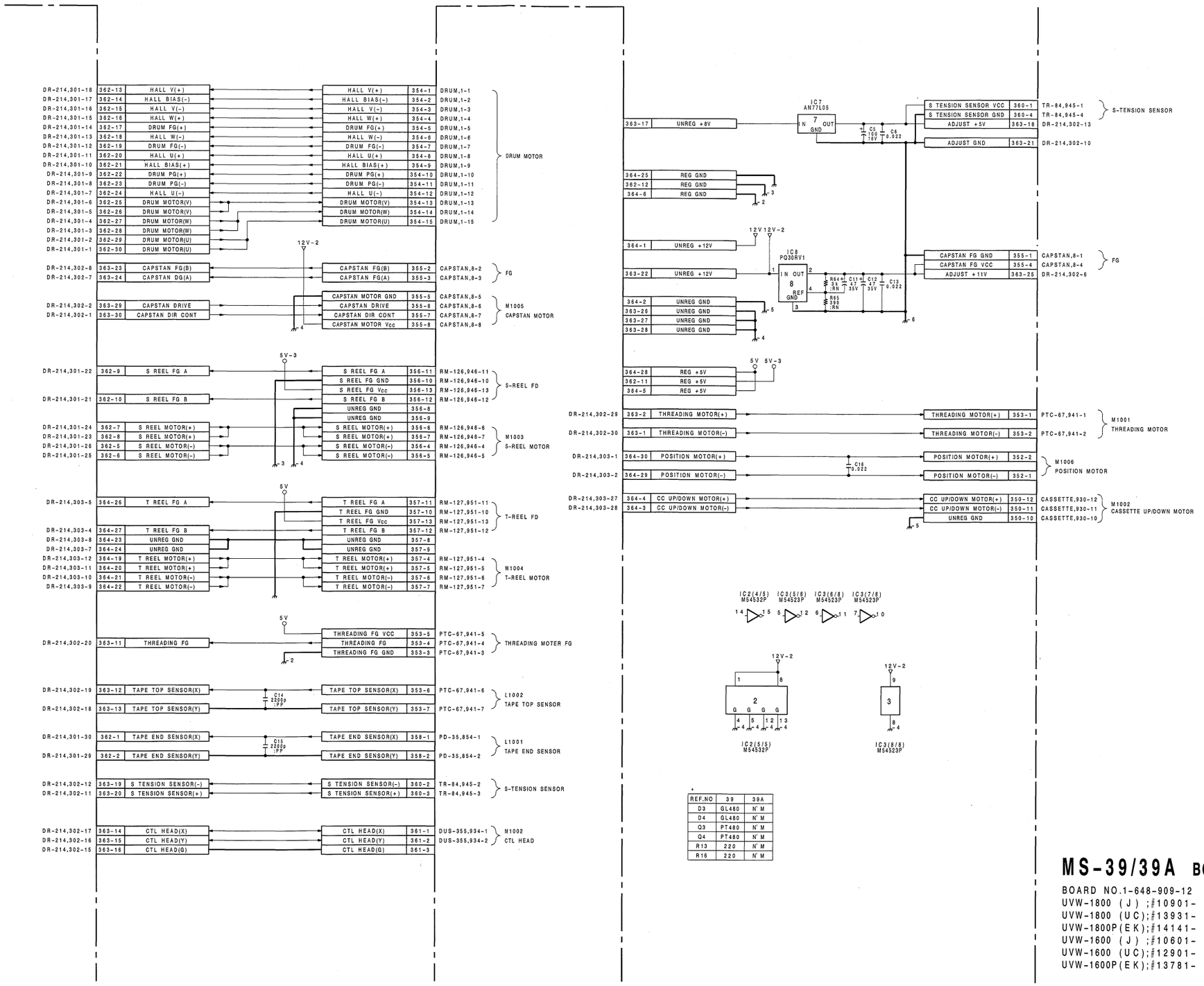

REF.NO	39	39A
D3	GL480	N'M
D4	GL480	N'M
Q3	PT480	N'M
Q4	PT480	N'M
R13	220	N'M
R16	220	N'M

MS-39/39A BOARD

BOARD NO.1-648-909-12
UVW-1800 (J) ;#10901-
UVW-1800 (UC);#13931-
UVW-1800P(EK);#14141-
UVW-1600 (J) ;#10601-
UVW-1600 (UC);#12901-
UVW-1600P(EK);#13781-

UVW-1800 (J) ;Serial No.10001 through 10900
UVW-1800 (UC);Serial No.10001 through 13930
UVW-1800P(EK);Serial No.10001 through 14140
UVW-1600 (J) ;Serial No.10001 through 10600
UVW-1600 (UC);Serial No.10001 through 12900
UVW-1600P(EK);Serial No.10001 through 13780

MS-39/39A (1-648-909-11, 12)

CN350 L-5
CN351 F-1
CN352 F-1
CN353 J-5
CN354 B-3
CN355 D-3
CN356 B-1
CN357 J-1
CN358 C-3
CN359 K-5
CN360 F-5
CN361 G-5
CN362 B-2
CN363 G-4
CN364 K-2

D1 F-2
D2 F-2
D3 B-2
D4 M-2
D7 K-1
D8 K-1
D9 K-1
D10 L-1

IC1 H-4
IC2 E-3
IC3 D-3
IC7 G-4
IC8 G-3

Q1 F-1
Q2 F-1
Q3 B-1
Q4 M-1

X1 J-4

__: UVW-1800/1800P ONLY

MS-39/39A;CASSETTE INFORMATION,SOLENOID DRIVER,MECHA.CONTROL MPU,DATA STRAGE

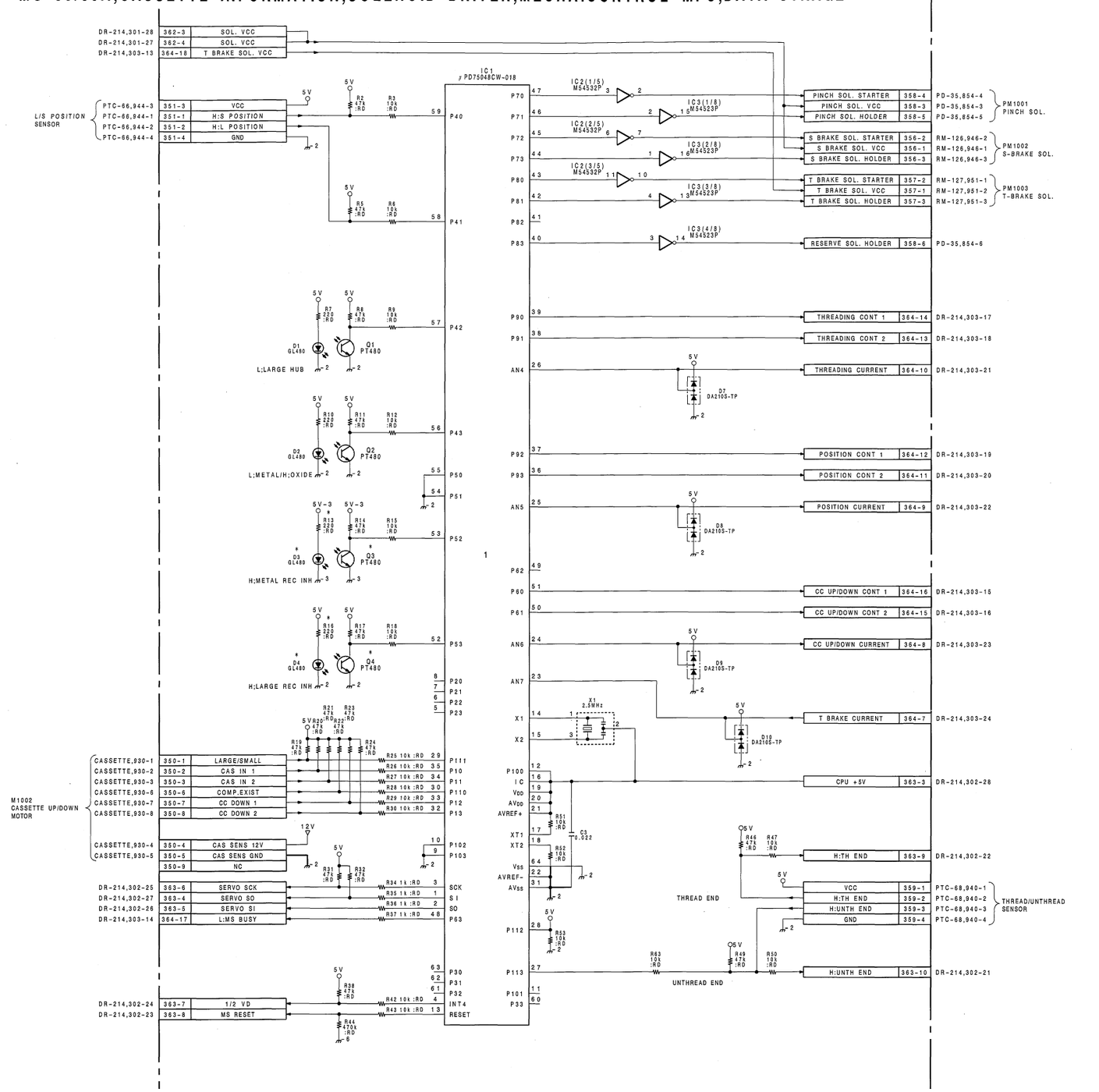

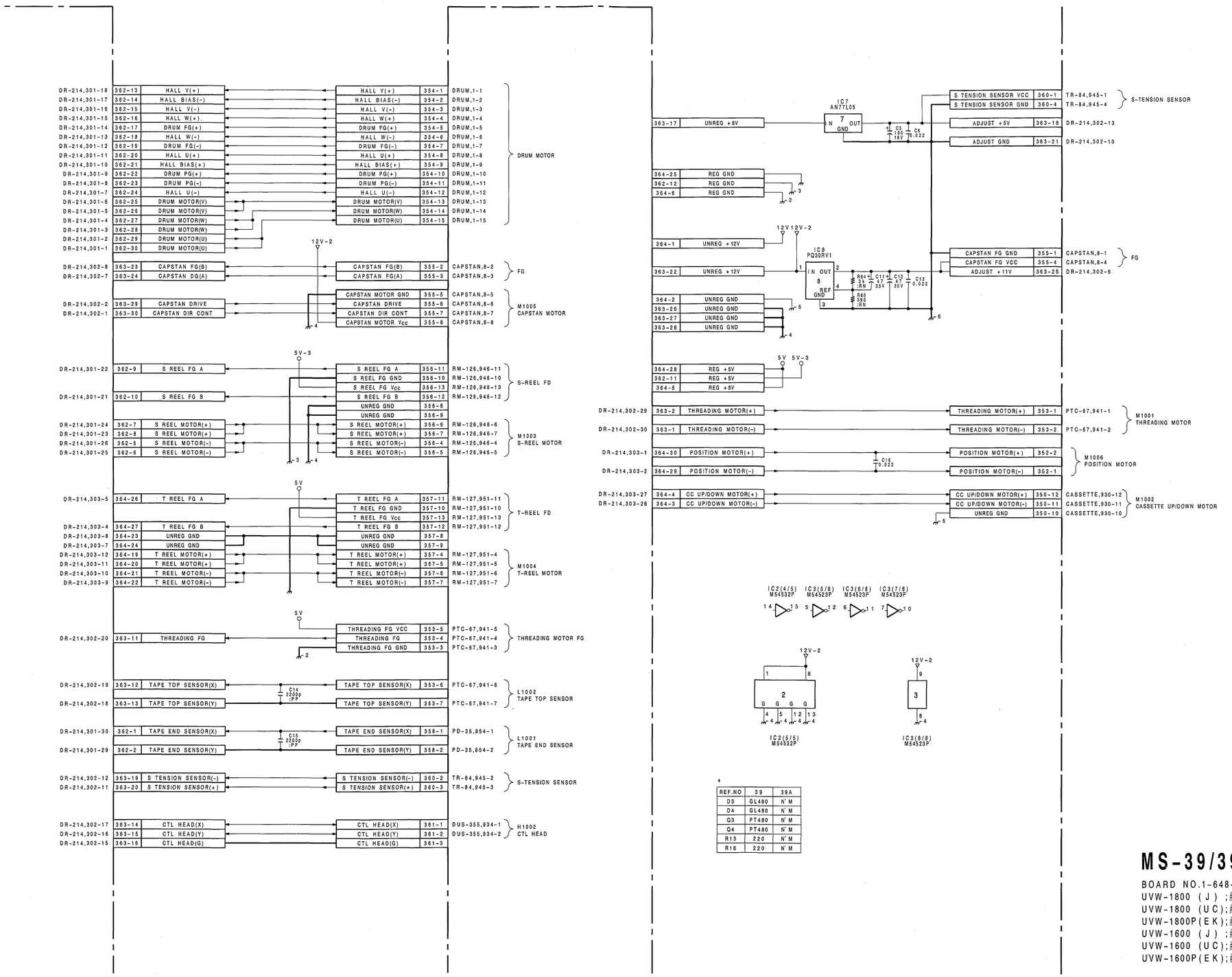

*

REF.NO	39	39A
D3	GL480	N' M
D4	GL480	N' M
Q3	PT480	N' M
Q4	PT480	N' M
R13	220	N' M
R16	220	N' M

MS-39/39A BOARD

BOARD NO.1-648-909-11
UVW-1800 (J) ;#10001-10900
UVW-1800 (UC);#10001-13930
UVW-1800P(EK);#10001-14140
UVW-1600 (J) ;#10001-10600
UVW-1600 (UC);#10001-12900
UVW-1600P(EK);#10001-13780

 RP-70/70A/70P/70AP

RP-70 (1-648-904-11)

CN1	J-4	FS708	C-5	RV202	G-3
CN101	H-4	FS709	C-5	RV301	E-2
CN110	E-5	FS710	C-5	RV302	F-3
CN201	F-4	FS711	C-5		
CN301	E-4	FS712	D-5	S1	J-3
		FS713	E-5	S101	H-3
✱D701	D-2	FS714	F-5	S201	F-3
✱D702	D-5	FS715	G-5	S301	E-3
✱D703	D-3	FS716	J-5		
✱D704	D-4	FS717	D-1	TP1	J-1
		FS718	D-1	TP2	J-1
E1	J-1	FS719	D-1	TP3	J-3
E2	J-4	FS720	H-5	TP4	J-4
E201	F-1	FS721	G-5	TP103	H-3
E202	F-4	FS722	G-5	TP104	H-4
E601	B-1	FS723	D-1	TP201	G-1
		FS724	E-1	TP202	F-1
FS2	J-1	FS725	H-5	TP203	F-3
FS3	J-2	FS726	H-5	TP204	F-4
FS4	J-2			TP303	E-3
FS5	J-3	IC1	J-2	TP304	E-4
FS6	J-4	IC2	J-4	TP601	B-1
FS7	J-4	IC101	H-2	TP602	C-1
FS101	H-2	IC102	H-4		
FS102	H-2	IC201	F-2		
FS103	H-3	IC202	G-4		
FS104	H-4	IC301	E-2		
FS105	H-4	IC302	E-4		
FS106	H-1	✱IC501	H-1		
FS201	F-1	✱IC502	G-1		
FS202	G-2	✱IC503	F-1		
FS203	F-2	✱IC601	A-3		
FS204	F-3	✱IC602	B-3		
FS205	G-4	✱IC701	D-2		
FS206	F-4	IC702	D-1		
FS301	E-2	IC703	D-5		
FS302	E-2	IC704	D-4		
FS303	E-3	✱IC705	D-3		
FS304	F-5	IC706	D-3		
FS305	E-4	IC707	D-4		
FS501	E-1	IC708	D-3		
FS503	F-1				
FS504	F-1	✱Q1	J-1		
FS505	G-1	✱Q2	J-2		
FS506	H-1	✱Q3	J-2		
FS507	H-1	✱Q102	H-2		
FS508	H-1	✱Q103	H-2		
FS509	H-1	✱Q201	F-1		
FS510	J-1	✱Q202	F-2		
FS511	J-1	✱Q203	F-2		
FS601	B-2	✱Q302	E-2		
FS602	B-2	✱Q303	E-2		
FS603	B-2	✱Q501	H-1		
FS604	B-3	Q601	A-2		
FS605	B-3	Q602	A-3		
FS606	B-4	Q603	A-3		
FS607	B-4	Q604	A-3		
FS609	A-2	Q605	B-2		
FS610	A-3	Q606	B-3		
FS611	B-3	Q607	B-3		
FS612	B-4	Q608	B-3		
FS613	A-4	✱Q609	B-2		
FS614	B-1	✱Q610	B-2		
FS615	A-5	Q611	B-2		
FS616	B-5	✱Q612	B-2		
FS617	C-5	✱Q613	B-1		
FS618	C-5	✱Q614	B-1		
FS619	B-5	✱Q615	B-2		
FS620	B-5	✱Q616	B-2		
FS701	D-2	✱Q617	B-2		
FS702	D-3				
FS703	D-4	RV1	J-2		
FS704	D-4	RV2	J-3		
FS705	C-4	RV101	H-2		
FS706	D-4	RV102	H-3		
FS707	D-5	RV201	F-2		

✱ : B SIDE

RP-70A (1-648-904-21)

CN1	J-4
CN101	H-4
CN110	E-5
CN201	F-4
CN301	E-4
✱D702	D-5
E2	J-4
E202	F-4
FS2	J-1
FS3	J-2
FS6	J-4
FS7	J-4
FS101	H-2
FS104	H-4
FS105	H-4
FS106	H-1
FS201	F-1
FS202	G-2
FS205	G-4
FS206	F-4
FS301	E-2
FS304	F-5
FS305	E-4
FS501	E-1
FS504	F-1
FS506	H-1
FS509	H-1
FS614	B-1
FS615	A-5
FS616	B-5
FS617	C-5
FS618	C-5
FS619	B-5
FS620	B-5
FS701	D-2
FS702	D-3
FS703	D-4
FS704	D-4
FS705	C-4
FS706	D-4
FS707	D-5
FS709	C-5
FS710	C-5
FS716	J-5
FS720	H-5
FS721	G-5
FS722	G-5
FS723	D-1
FS725	H-5
FS726	H-5
IC2	J-4
IC102	H-4
IC202	G-4
IC302	E-4
IC703	D-5
IC704	D-4

✱ : B SIDE

 16-68

 RP-70/70A/70P/70AP (1/2)

RP-70/70P(1/2) ;Y RF REC/PB
RP-70A/70AP(1/2);Y RF PB

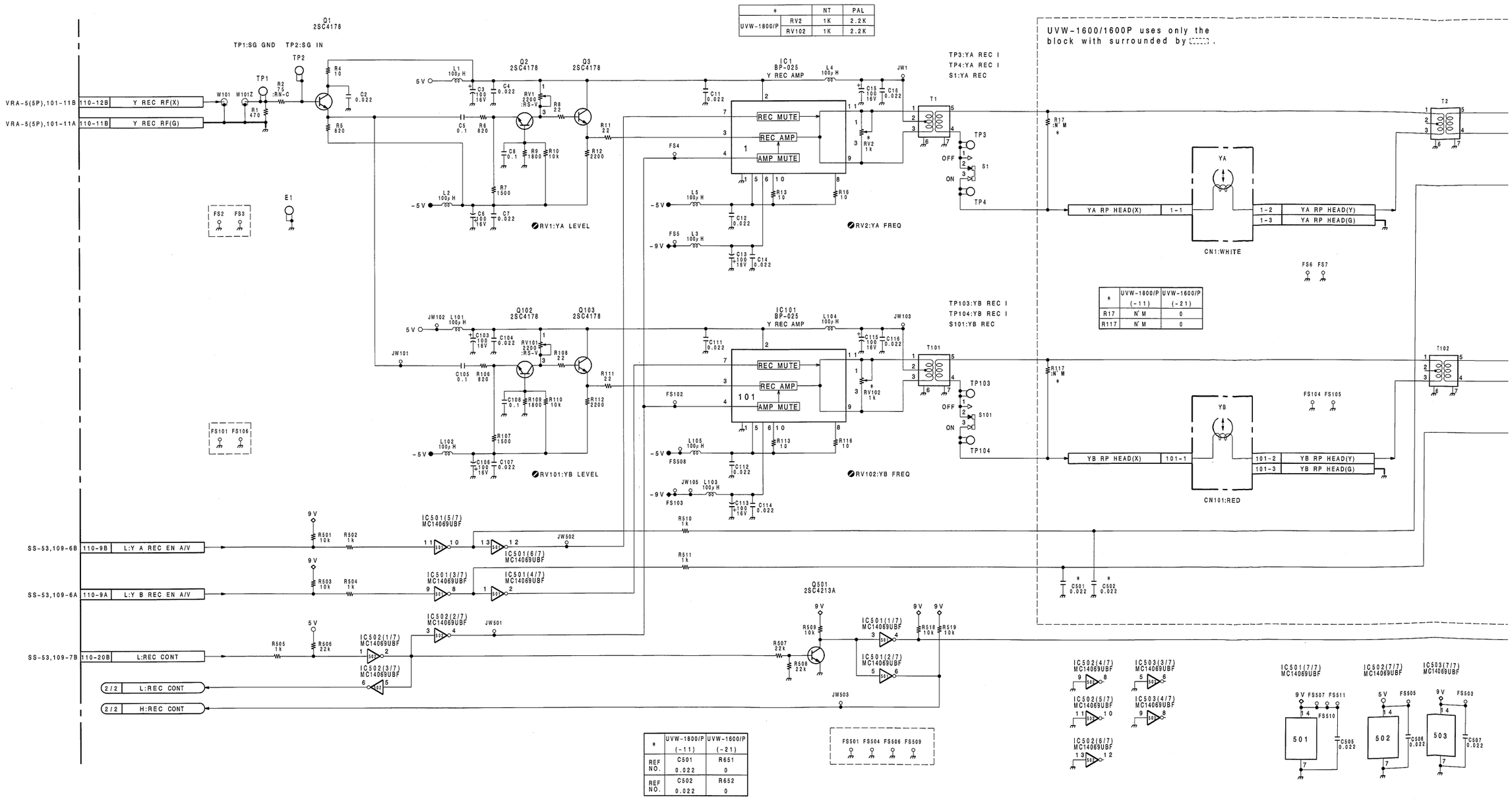

*		NT	PAL
UVW-1800/P	RV2	1K	2.2K
	RV102	1K	2.2K

*	UVW-1800/P (-11)	UVW-1600/P (-21)
R17	N'M	0
R117	N'M	0

*	UVW-1800/P (-11)	UVW-1600/P (-21)
REF NO.	C501 0.022	R651 0
REF NO.	C502 0.022	R652 0

 16-69 (1)

 RP-70/70A/70P/70AP (1/2)

*	70N	70P	70AP
R19	▲33K	▲82K	▲47K
R119	▲33K	▲82K	▲47K

▲= RN-C

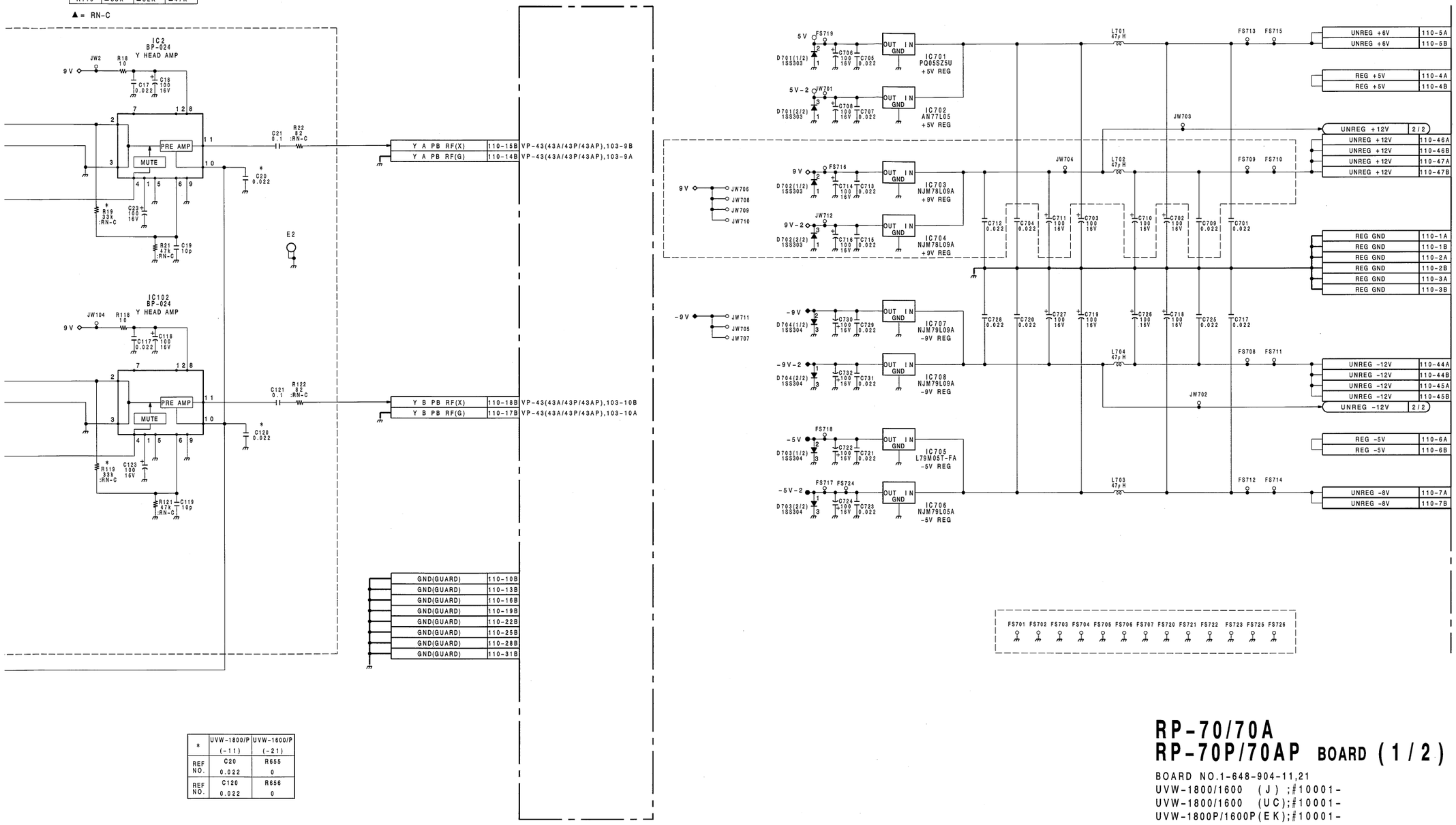

*	UVW-1800/P (-11)	UVW-1600/P (-21)
REF NO.	C20 0.022	R655 0
REF NO.	C120 0.022	R656 0

RP-70/70A
RP-70P/70AP BOARD (1/2)

BOARD NO.1-648-904-11,21
UVW-1800/1600 (J);#10001-
UVW-1800/1600 (UC);#10001-
UVW-1800P/1600P(EK);#10001-

16-69 (2)

RP-70 (1-648-904-11)

CN1	J-4	FS708	C-5	RV202	G-3
CN101	H-4	FS709	C-5	RV301	E-2
CN110	E-5	FS710	C-5	RV302	F-3
CN201	F-4	FS711	C-5		
CN301	E-4	FS712	D-5	S1	J-3
		FS713	E-5	S101	H-3
✱D701	D-2	FS714	F-5	S201	F-3
✱D702	D-5	FS715	G-5	S301	E-3
✱D703	D-3	FS716	J-5		
✱D704	D-4	FS717	D-1	TP1	J-1
		FS718	D-1	TP2	J-1
E1	J-1	FS719	D-1	TP3	J-3
E2	J-4	FS720	H-5	TP4	J-4
E201	F-1	FS721	G-5	TP103	H-3
E202	F-4	FS722	G-5	TP104	H-4
E601	B-1	FS723	D-1	TP201	G-1
		FS724	E-1	TP202	F-1
FS2	J-1	FS725	H-5	TP203	F-3
FS3	J-2	FS726	H-5	TP204	F-4
FS4	J-2			TP303	E-3
FS5	J-3	IC1	J-2	TP304	E-4
FS6	J-4	IC2	J-4	TP601	B-1
FS7	J-4	IC101	H-2	TP602	C-1
FS101	H-2	IC102	H-4		
FS102	H-2	IC201	F-2		
FS103	H-3	IC202	G-4		
FS104	H-4	IC301	E-2		
FS105	H-4	IC302	E-4		
FS106	H-1	✱IC501	H-1		
FS201	F-1	✱IC502	G-1		
FS202	G-2	✱IC503	F-1		
FS203	F-2	✱IC601	A-3		
FS204	F-3	✱IC602	B-3		
FS205	G-4	✱IC701	D-2		
FS206	F-4	IC702	D-1		
FS301	E-2	IC703	D-5		
FS302	E-2	IC704	D-4		
FS303	E-3	✱IC705	D-3		
FS304	F-5	IC706	D-3		
FS305	E-4	IC707	D-4		
FS501	E-1	IC708	D-3		
FS503	F-1				
FS504	F-1	✱Q1	J-1		
FS505	G-1	✱Q2	J-2		
FS506	H-1	✱Q3	J-2		
FS507	H-1	✱Q102	H-2		
FS508	H-1	✱Q103	H-2		
FS509	H-1	✱Q201	F-1		
FS510	J-1	✱Q202	F-2		
FS511	J-1	✱Q203	F-2		
FS601	B-2	✱Q302	E-2		
FS602	B-2	✱Q303	E-2		
FS603	B-2	✱Q501	H-1		
FS604	B-3	Q601	A-2		
FS605	B-3	Q602	A-3		
FS606	B-4	Q603	A-3		
FS607	B-4	Q604	A-3		
FS609	A-2	Q605	B-2		
FS610	A-3	Q606	B-3		
FS611	B-3	Q607	B-3		
FS612	B-4	Q608	B-3		
FS613	A-4	✱Q609	B-2		
FS614	B-1	✱Q610	B-2		
FS615	A-5	Q611	B-2		
FS616	B-5	✱Q612	B-2		
FS617	C-5	✱Q613	B-1		
FS618	C-5	✱Q614	B-1		
FS619	B-5	✱Q615	B-2		
FS620	B-5	✱Q616	B-2		
FS701	D-2	✱Q617	B-2		
FS702	D-3				
FS703	D-4	RV1	J-2		
FS704	D-4	RV2	J-3		
FS705	C-4	RV101	H-2		
FS706	D-4	RV102	H-3		
FS707	D-5	RV201	F-2		

✱ : B SIDE

RP-70A (1-648-904-21)

CN1	J-4
CN101	H-4
CN110	E-5
CN201	F-4
CN301	E-4
✱D702	D-5
E2	J-4
E202	F-4
FS2	J-1
FS3	J-2
FS6	J-4
FS7	J-4
FS101	H-2
FS104	H-4
FS105	H-4
FS106	H-1
FS201	F-1
FS202	G-2
FS205	G-4
FS206	F-4
FS301	E-2
FS304	F-5
FS305	E-4
FS501	E-1
FS504	F-1
FS506	H-1
FS509	H-1
FS614	B-1
FS615	A-5
FS616	B-5
FS617	C-5
FS618	C-5
FS619	B-5
FS620	B-5
FS701	D-2
FS702	D-3
FS703	D-4
FS704	D-4
FS705	C-4
FS706	D-4
FS707	D-5
FS709	C-5
FS710	C-5
FS716	J-5
FS720	H-5
FS721	G-5
FS722	G-5
FS723	D-1
FS725	H-5
FS726	H-5
IC2	J-4
IC102	H-4
IC202	G-4
IC302	E-4
IC703	D-5
IC704	D-4

✱ : B SIDE

 RP-70/70A/70P/70AP (2/2)

RP-70/70P(2/2) ;C RF REC/PB,ROTARY/FULL ERASE OSC
RP-70A/70AP(2/2);C RF PB

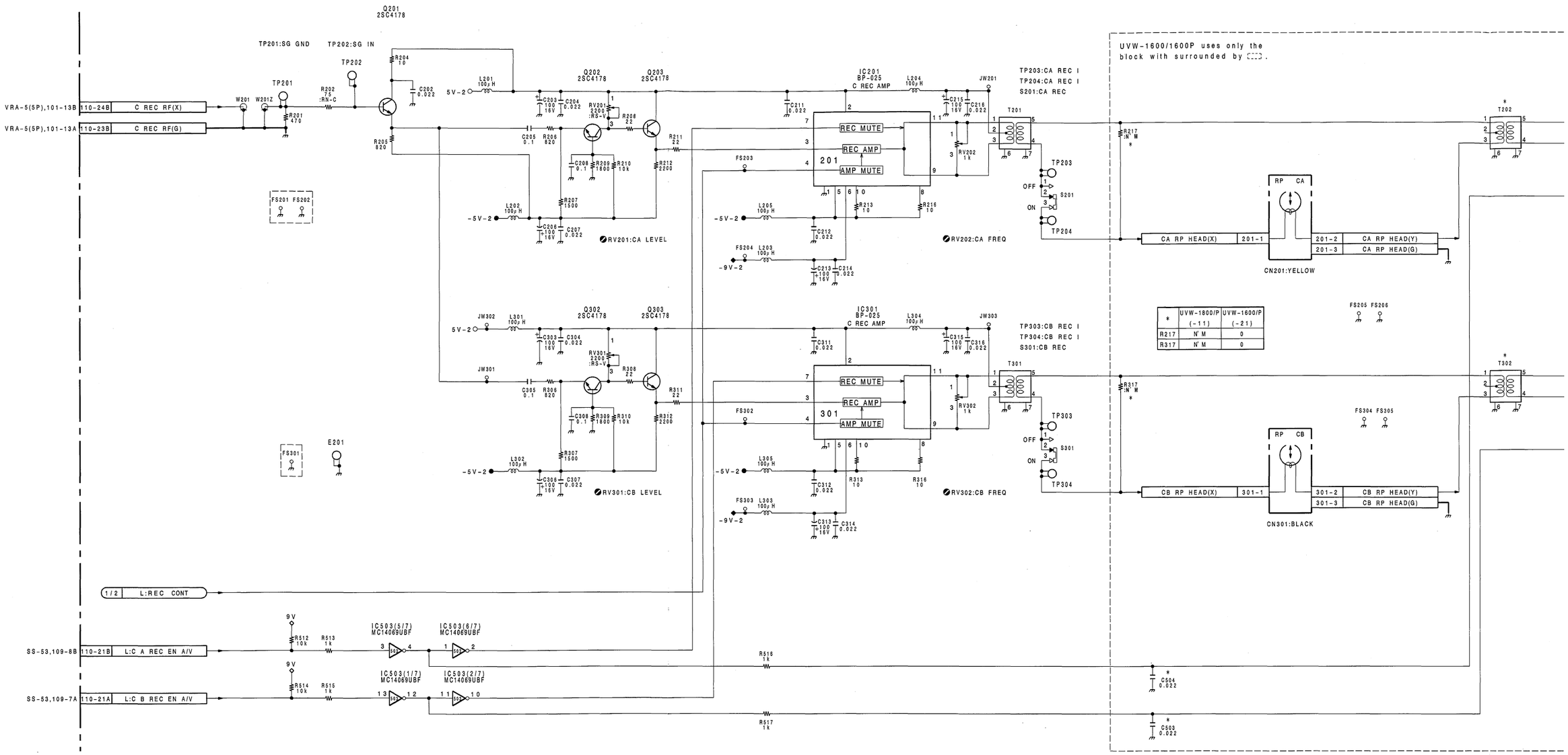

*	UVW-1800/P (-11)	UVW-1600/P (-21)
R217	N'M	0
R317	N'M	0

*	UVW-1800/P (-11)	UVW-1600/P (-21)
REF NO.	C503 0.022	R653 0
REF NO.	C504 0.022	R654 0

※	NTSC	PAL
T202	1-423-657-11	1-423-658-11
T302	1-423-657-11	1-423-658-11

 16-73 (1)

 RP-70/70A/70P/70AP (2/2)

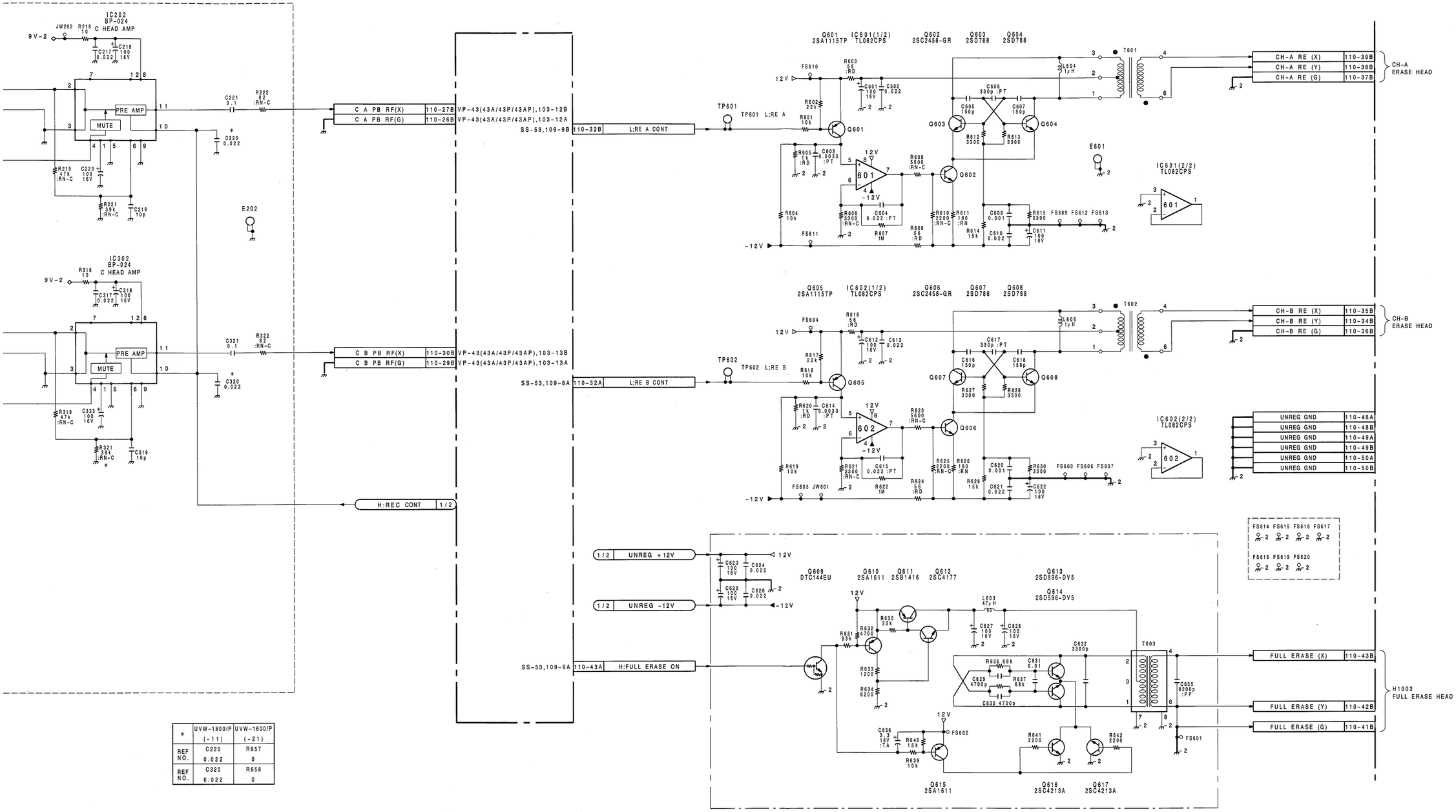

*	UVW-1800/P (-11)	UVW-1600/P (-21)
REF NO.	C220 0.022	R657 0
REF NO.	C320 0.022	R658 0

RP-70/70A
RP-70P/70AP BOARD (2/2)

BOARD NO.1-648-904-11,21
UVW-1800/1600 (J);#10001-
UVW-1800/1600 (UC);#10001-
UVW-1800P/1600P(EK);#10001-

16-73 (2)

SS-53(1/4);SYSCON MAIN

SS-53(1-648-903-11)

CNI4	K-3	IC223	J-4
CNI212	C-2	IC224	J-3
		IC225	J-3
CN1	E-1	IC226	C-4
CN2	F-1	IC227	A-2
CN3	P-1	IC228	F-2
CN107	N-6	IC229	L-3
CN108	K-6	IC230	H-3
CN109	C-6	IC231	L-3
		IC232	L-4
CV1	N-1	IC233	M-3
✱D100	A-5	PS1	L-5
✱D101	A-5	PS2	M-5
✱D102	A-5		
✱D103	A-5	✱Q105	B-5
✱D104	A-5	✱Q106	B-5
✱D105	B-4	✱Q107	B-4
✱D200	E-3	✱Q108	B-5
✱D201	E-3	✱Q204	D-5
✱D202	E-3	✱Q205	D-5
✱D203	E-3	✱Q206	D-5
✱D204	E-3	✱Q207	D-5
✱D205	E-2	✱Q208	D-5
✱D206	F-3	✱Q209	D-5
✱D207	F-3	✱Q210	J-3
✱D208	E-3	✱Q211	J-3
✱D210	G-4		
✱D211	E-2	✱RB1	P-3
✱D213	E-3	✱RB2	R-2
✱D214	J-6	✱RB201	E-1
✱D215	J-5	✱RB202	B-1
		✱RB203	K-4
E1	N-1		
E200	E-4	S1	R-4
E201	D-1	S201	B-1
E202	J-1		
		TP1	R-2
IC1	P-3	TP100	A-4
IC2	N-3	TP103	B-4
IC3	N-3	TP201	A-2
IC4	K-3	TP202	A-2
IC5	L-1	TP203	D-1
IC6	M-2	TP205	H-3
IC7	R-1	TP206	G-3
IC8	R-5	TP207	F-4
IC9	P-5	TP211	G-2
IC10	R-2	TP216	H-2
IC11	P-2	TP217	G-3
IC12	N-2	TP219	D-1
IC15	N-2	TP223	H-2
IC100	A-3	TP224	J-2
IC101	A-5	TP225	C-1
IC102	A-5		
IC103	B-5	X1	R-2
IC200	E-3	X101	A-3
IC201	F-4	X200	G-1
IC202	E-2		
IC203	E-3		
IC204	D-4		
IC206	E-3		
IC207	D-3		
IC208	D-3		
IC209	D-3		
IC210	D-3		
IC211	B-2		
IC212	C-2		
IC213	C-3		
IC214	E-3		
IC215	G-3		
IC216	G-3		
IC217	G-3		
IC219	H-1		
IC220	J-3		
IC221	J-4		
IC222	J-3		

✱ : B SIDE

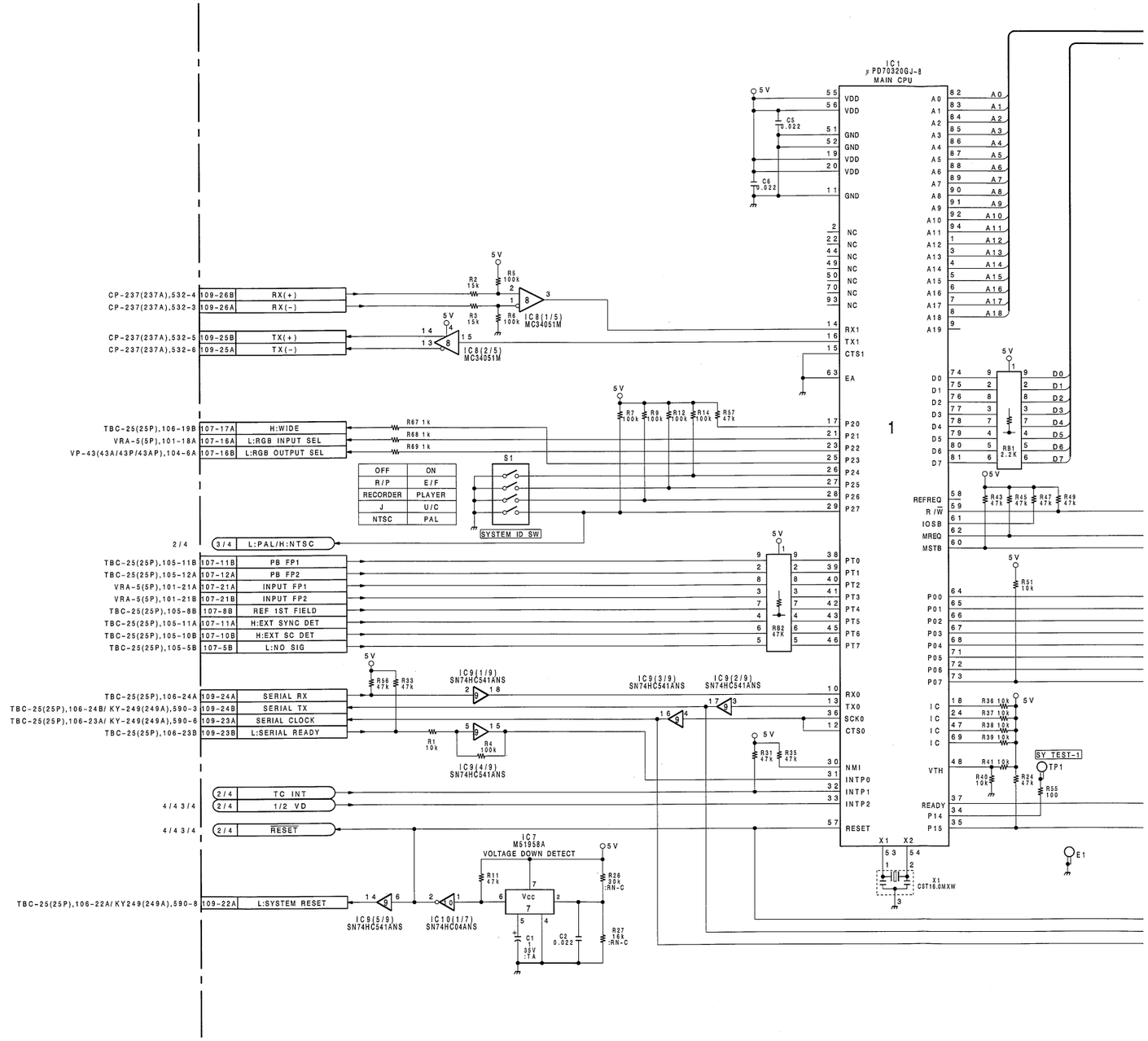

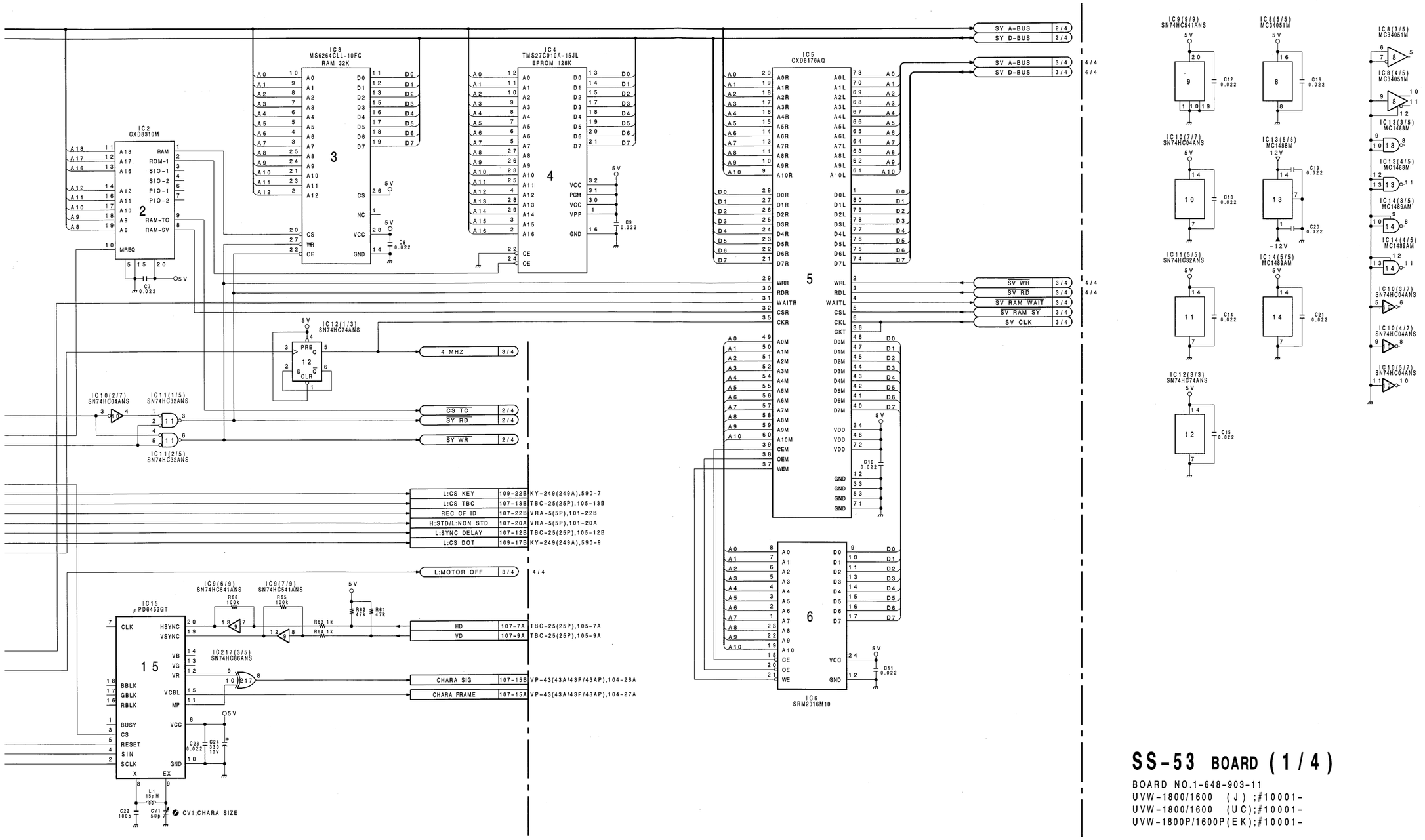

SS-53 BOARD (1/4)

BOARD NO.1-648-903-11
UVW-1800/1600 (J);#10001-
UVW-1800/1600 (UC);#10001-
UVW-1800P/1600P(EK);#10001-

SS-53(1-648-903-11)

CNI4	K-3	IC223	J-4
CNI212	C-2	IC224	J-3
		IC225	J-3
CN1	E-1	IC226	C-4
CN2	F-1	IC227	A-2
CN3	P-1	IC228	F-2
CN107	N-6	IC229	L-3
CN108	K-6	IC230	H-3
CN109	C-6	IC231	L-3
		IC232	L-4
CV1	N-1	IC233	M-3
✱D100	A-5	PS1	L-5
✱D101	A-5	PS2	M-5
✱D102	A-5		
✱D103	A-5	✱Q105	B-5
✱D104	A-5	✱Q106	B-5
✱D105	B-4	✱Q107	B-4
✱D200	E-3	✱Q108	B-5
✱D201	E-3	✱Q204	D-5
✱D202	E-3	✱Q205	D-5
✱D203	E-3	✱Q206	D-5
✱D204	E-3	✱Q207	D-5
✱D205	E-2	✱Q208	D-5
✱D206	F-3	✱Q209	D-5
✱D207	F-3	✱Q210	J-3
✱D208	E-3	✱Q211	J-3
✱D210	G-4		
✱D211	E-2	✱RB1	P-3
✱D213	E-3	✱RB2	R-2
✱D214	J-6	✱RB201	E-1
✱D215	J-5	✱RB202	B-1
		✱RB203	K-4
E1	N-1		
E200	E-4	S1	R-4
E201	D-1	S201	B-1
E202	J-1		
		TP1	R-2
IC1	P-3	TP100	A-4
IC2	N-3	TP103	B-4
IC3	N-3	TP201	A-2
IC4	K-3	TP202	A-2
IC5	L-1	TP203	D-1
IC6	M-2	TP205	H-3
IC7	R-1	TP206	G-3
IC8	R-5	TP207	F-4
IC9	P-5	TP211	G-2
IC10	R-2	TP216	H-2
IC11	P-2	TP217	G-3
IC12	N-2	TP219	D-1
IC15	N-2	TP223	H-2
IC100	A-3	TP224	J-2
IC101	A-5	TP225	C-1
IC102	A-5		
IC103	B-5	X1	R-2
IC200	E-3	X101	A-3
IC201	F-4	X200	G-1
IC202	E-2		
IC203	E-3		
IC204	D-4		
IC206	E-3		
IC207	D-3		
IC208	D-3		
IC209	D-3		
IC210	D-3		
IC211	B-2		
IC212	C-2		
IC213	C-3		
IC214	E-3		
IC215	G-3		
IC216	G-3		
IC217	G-3		
IC219	H-1		
IC220	J-3		
IC221	J-4		
IC222	J-3		

✱ : B SIDE

 SS-53 (2/4)

SS-53(2/4);TC GENERATOR/READER

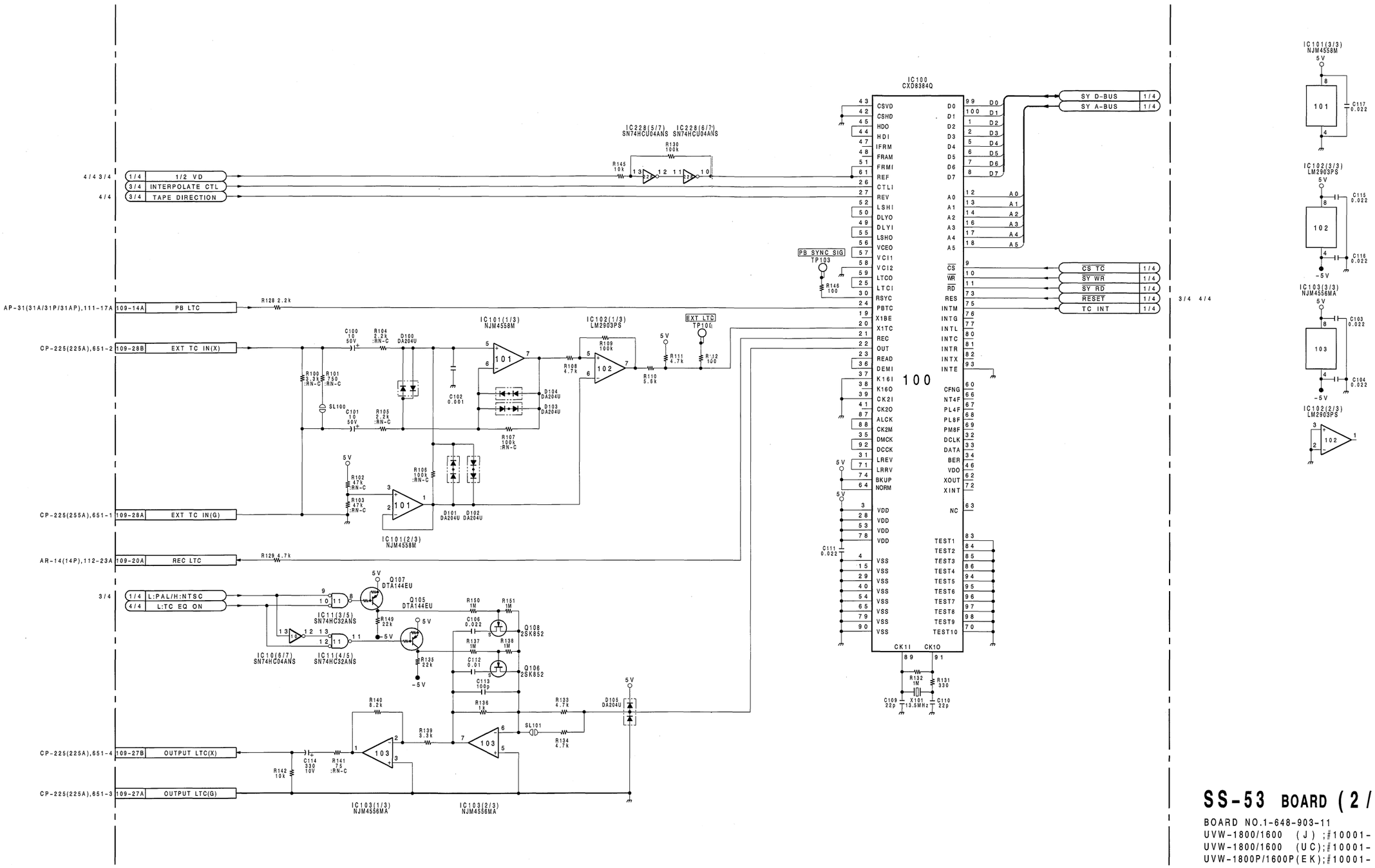

SS-53 BOARD (2/4)

BOARD NO.1-648-903-11
UVW-1800/1600 (J);#10001-
UVW-1800/1600 (UC);#10001-
UVW-1800P/1600P(EK);#10001-

16-81

SS-53(1-648-903-11)

1	CNI4	K-3	IC223	J-4
	CNI212	C-2	IC224	J-3
			IC225	J-3
	CN1	E-1	IC226	C-4
	CN2	F-1	IC227	A-2
	CN3	P-1	IC228	F-2
	CN107	N-6	IC229	L-3
	CN108	K-6	IC230	H-3
	CN109	C-6	IC231	L-3
			IC232	L-4
	CV1	N-1	IC233	M-3
	✱D100	A-5	PS1	L-5
	✱D101	A-5	PS2	M-5
	✱D102	A-5		
	✱D103	A-5	✱Q105	B-5
	✱D104	A-5	✱Q106	B-5
	✱D105	B-4	✱Q107	B-4
	✱D200	E-3	✱Q108	B-5
2	✱D201	E-3	✱Q204	D-5
	✱D202	E-3	✱Q205	D-5
	✱D203	E-3	✱Q206	D-5
	✱D204	E-3	✱Q207	D-5
	✱D205	E-2	✱Q208	D-5
	✱D206	F-3	✱Q209	D-5
	✱D207	F-3	✱Q210	J-3
	✱D208	E-3	✱Q211	J-3
	✱D210	G-4		
	✱D211	E-2	✱RB1	P-3
	✱D213	E-3	✱RB2	R-2
	✱D214	J-6	✱RB201	E-1
	✱D215	J-5	✱RB202	B-1
			✱RB203	K-4
	E1	N-1		
	E200	E-4	S1	R-4
	E201	D-1	S201	B-1
	E202	J-1		
			TP1	R-2
3	IC1	P-3	TP100	A-4
	IC2	N-3	TP103	B-4
	IC3	N-3	TP201	A-2
	IC4	K-3	TP202	A-2
	IC5	L-1	TP203	D-1
	IC6	M-2	TP205	H-3
	IC7	R-1	TP206	G-3
	IC8	R-5	TP207	F-4
	IC9	P-5	TP211	G-2
	IC10	R-2	TP216	H-2
	IC11	P-2	TP217	G-3
	IC12	N-2	TP219	D-1
	IC15	N-2	TP223	H-2
	IC100	A-3	TP224	J-2
	IC101	A-5	TP225	C-1
	IC102	A-5		
	IC103	B-5	X1	R-2
	IC200	E-3	X101	A-3
4	IC201	F-4	X200	G-1
	IC202	E-2		
	IC203	E-3		
	IC204	D-4		
	IC206	E-3		
	IC207	D-3		
	IC208	D-3		
	IC209	D-3		
	IC210	D-3		
	IC211	B-2		
	IC212	C-2		
	IC213	C-3		
	IC214	E-3		
	IC215	G-3		
	IC216	G-3		
	IC217	G-3		
	IC219	H-1		
	IC220	J-3		
	IC221	J-4		
5	IC222	J-3		

✱ : B SIDE

SS-53(3/4);SERVO MAIN

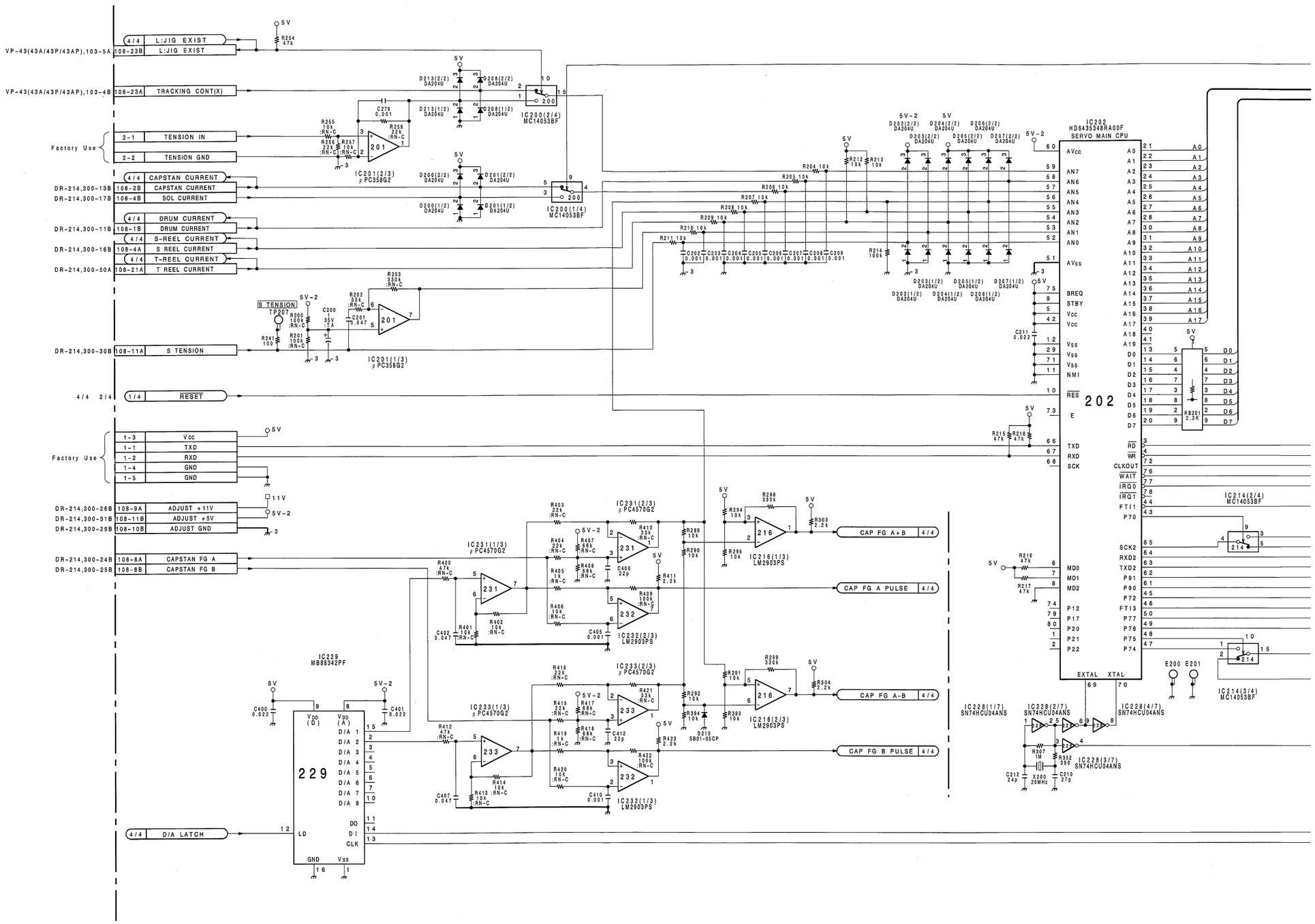

A B C D E F G H

 SS-53 (3/4)

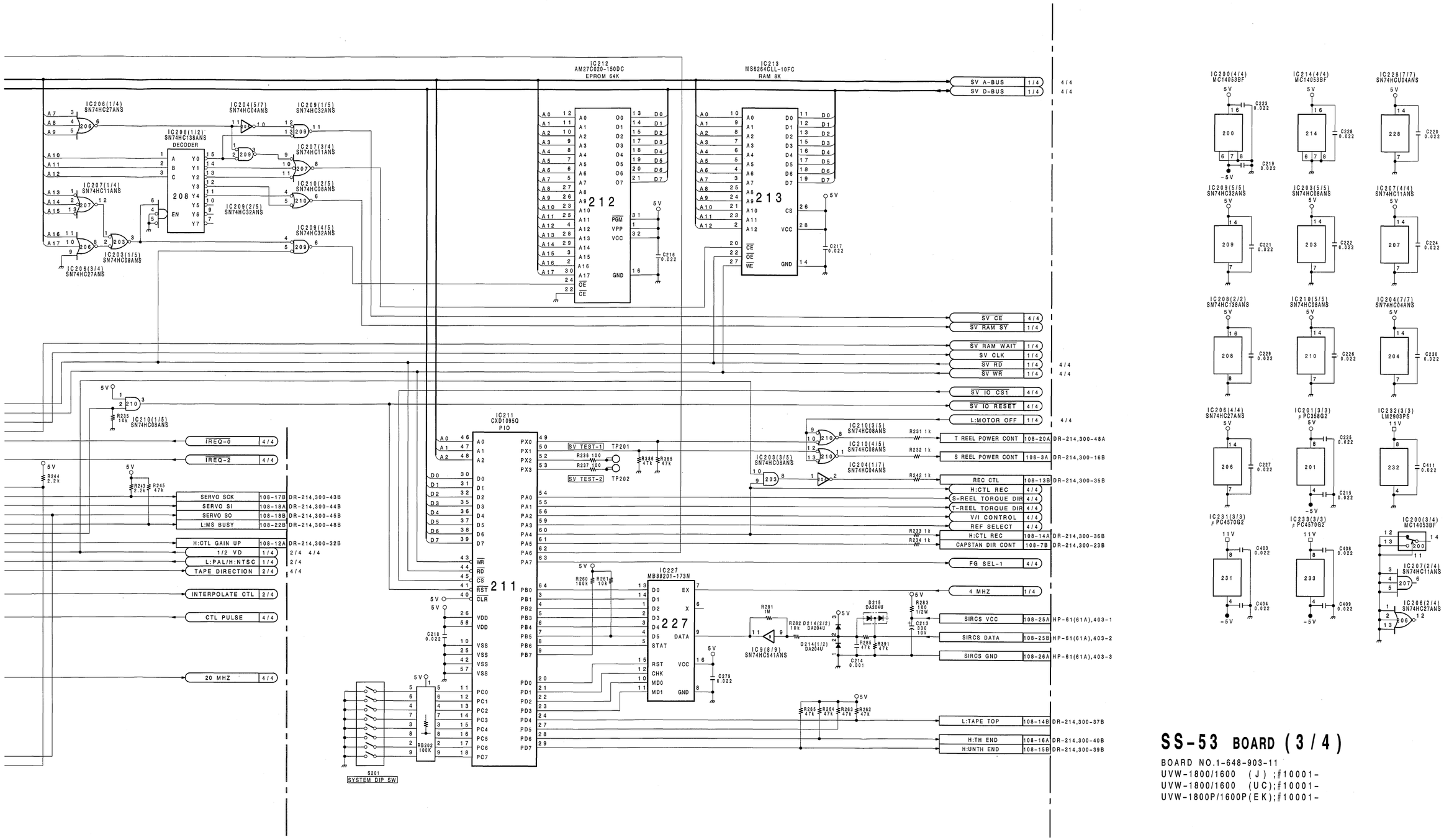

SS-53 BOARD (3/4)

BOARD NO.1-648-903-11
UVW-1800/1600 (J);#10001-
UVW-1800/1600 (UC);#10001-
UVW-1800P/1600P(EK);#10001-

SS-53(1-648-903-11)

CNI4	K-3	IC223	J-4
CNI212	C-2	IC224	J-3
		IC225	J-3
CN1	E-1	IC226	C-4
CN2	F-1	IC227	A-2
CN3	P-1	IC228	F-2
CN107	N-6	IC229	L-3
CN108	K-6	IC230	H-3
CN109	C-6	IC231	L-3
		IC232	L-4
CV1	N-1	IC233	M-3
✱D100	A-5	PS1	L-5
✱D101	A-5	PS2	M-5
✱D102	A-5		
✱D103	A-5	✱Q105	B-5
✱D104	A-5	✱Q106	B-5
✱D105	B-4	✱Q107	B-4
✱D200	E-3	✱Q108	B-5
✱D201	E-3	✱Q204	D-5
✱D202	E-3	✱Q205	D-5
✱D203	E-3	✱Q206	D-5
✱D204	E-3	✱Q207	D-5
✱D205	E-2	✱Q208	D-5
✱D206	F-3	✱Q209	D-5
✱D207	F-3	✱Q210	J-3
✱D208	E-3	✱Q211	J-3
✱D210	G-4		
✱D211	E-2	✱RB1	P-3
✱D213	E-3	✱RB2	R-2
✱D214	J-6	✱RB201	E-1
✱D215	J-5	✱RB202	B-1
		✱RB203	K-4
E1	N-1		
E200	E-4	S1	R-4
E201	D-1	S201	B-1
E202	J-1		
		TP1	R-2
IC1	P-3	TP100	A-4
IC2	N-3	TP103	B-4
IC3	N-3	TP201	A-2
IC4	K-3	TP202	A-2
IC5	L-1	TP203	D-1
IC6	M-2	TP205	H-3
IC7	R-1	TP206	G-3
IC8	R-5	TP207	F-4
IC9	P-5	TP211	G-2
IC10	R-2	TP216	H-2
IC11	P-2	TP217	G-3
IC12	N-2	TP219	D-1
IC15	N-2	TP223	H-2
IC100	A-3	TP224	J-2
IC101	A-5	TP225	C-1
IC102	A-5		
IC103	B-5	X1	R-2
IC200	E-3	X101	A-3
IC201	F-4	X200	G-1
IC202	E-2		
IC203	E-3		
IC204	D-4		
IC206	E-3		
IC207	D-3		
IC208	D-3		
IC209	D-3		
IC210	D-3		
IC211	B-2		
IC212	C-2		
IC213	C-3		
IC214	E-3		
IC215	G-3		
IC216	G-3		
IC217	G-3		
IC219	H-1		
IC220	J-3		
IC221	J-4		
IC222	J-3		

✱ : B SIDE

For J,UC

① TP219 EE/REC/PB

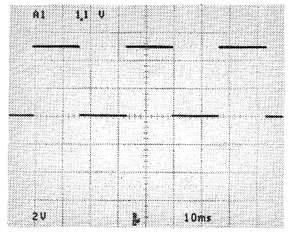

② TP225 PB

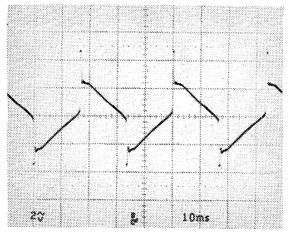

For EK

① TP219 EE/REC/PB

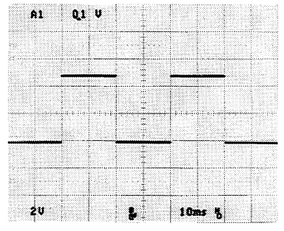

② TP225 PB

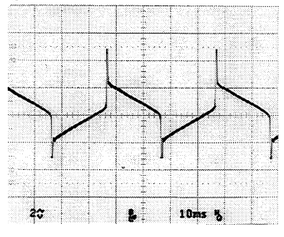

SS-53(4/4);SERVO

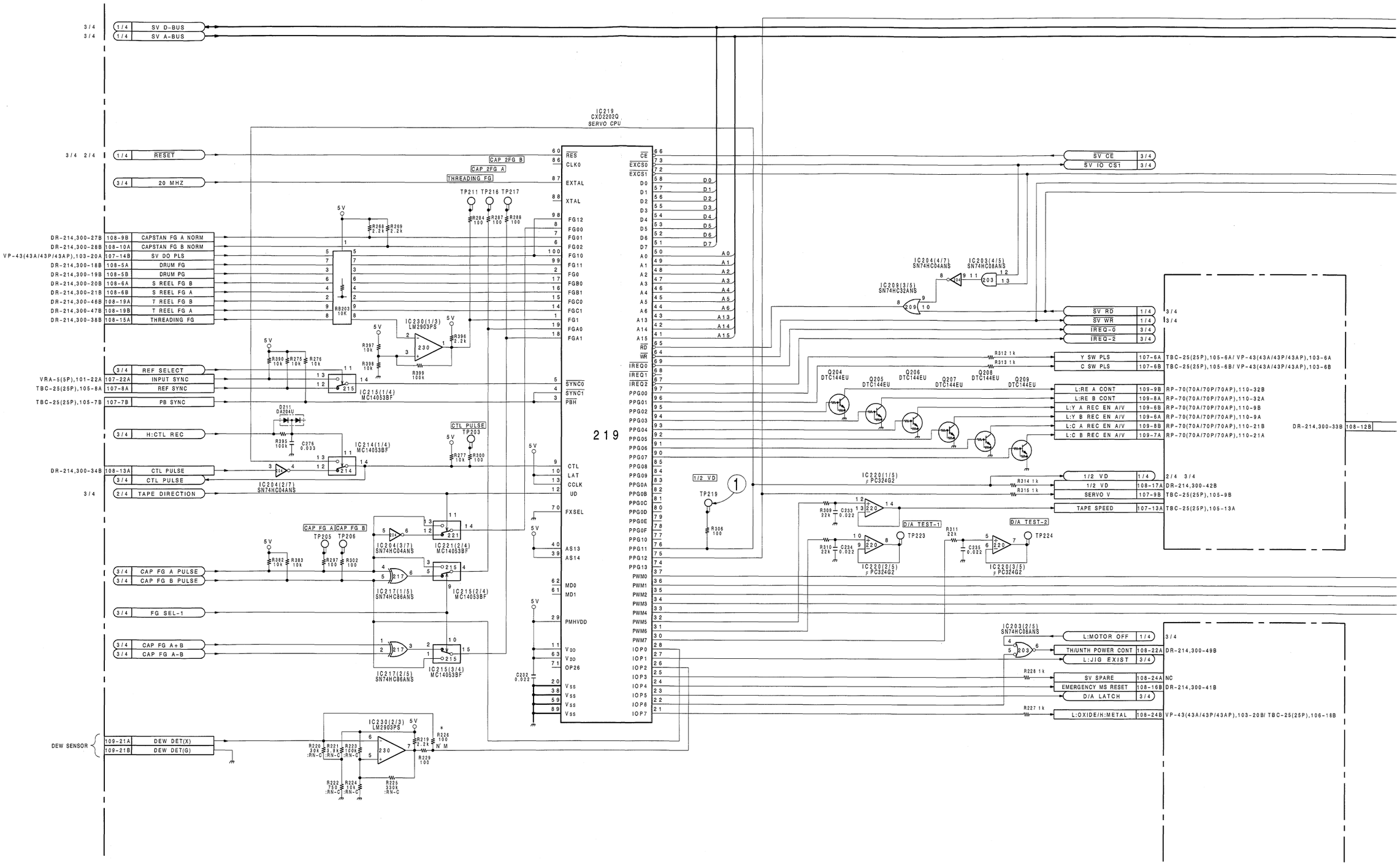

 SS-53 (4/4)

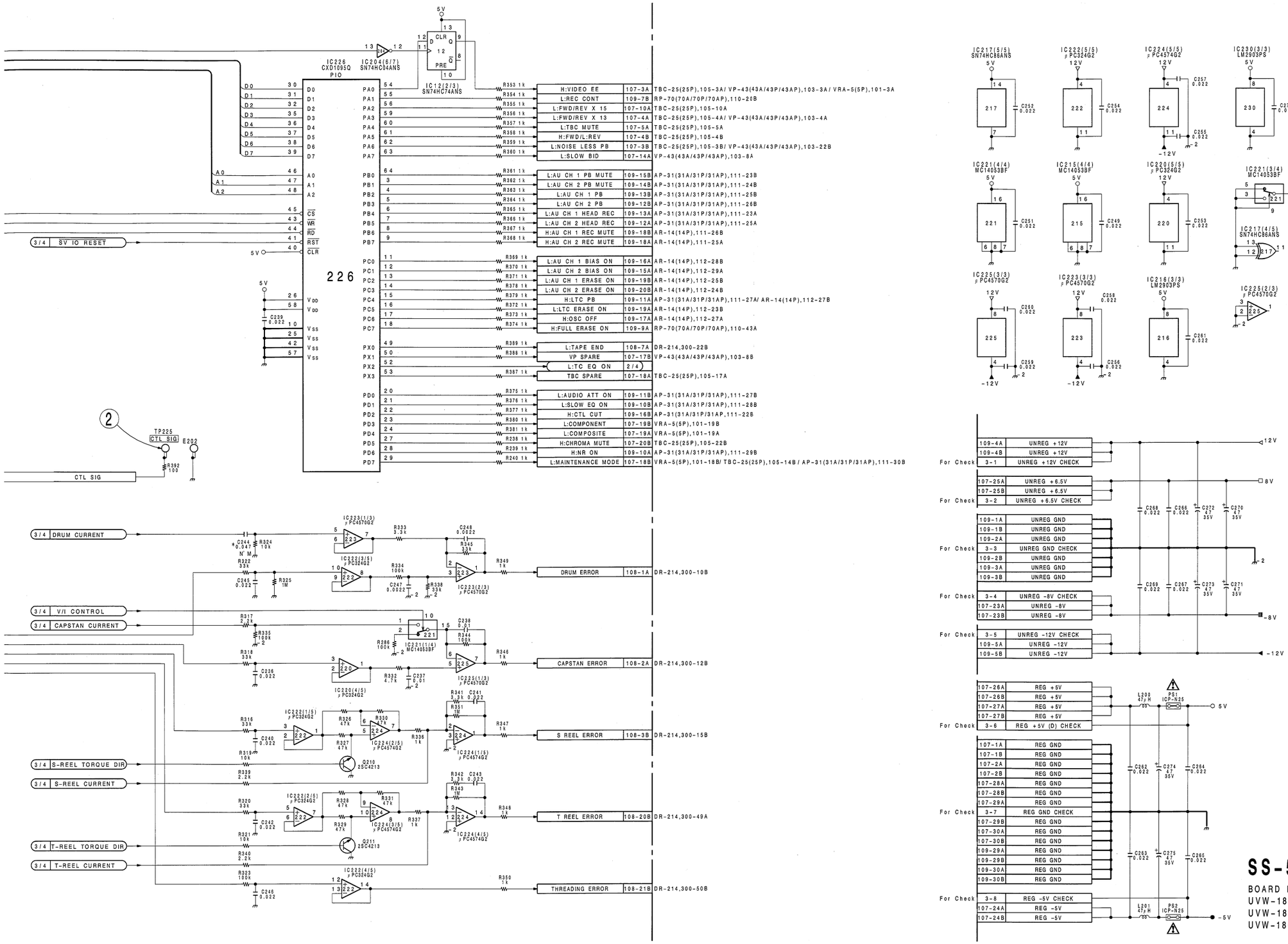

16-89 (2)

TBC-25 (1-648-901-11, 12)

	CN1		E-1		IC404		R-4		✱Q101		R-3
	CN2		C-6		IC405		R-4		✱Q102		P-3
	CN105		N-6		IC406		M-5		✱Q103		P-3
	CN106		C-6		IC407		N-4		✱Q104		R-3
					IC408		M-4		✱Q200		R-3
	CV700		C-2	○	IC409	N	N-5		✱Q201		R-3
	CV701		C-2		IC501		L-2		✱Q202		P-3
					IC502		L-4		✱Q203		P-3
	✱D1		M-2		IC503		J-2		✱Q300		P-1
	✱D2		M-3		IC504		J-4		✱Q301		P-1
	✱D100		M-3		IC505		H-2		✱Q302		P-1
	✱D101		N-3		IC506		H-3		✱Q303		P-1
	✱D102		R-3		IC507		G-6		✱Q304		N-2
	✱D200		M-3		IC508		H-4		✱Q305		N-2
	✱D301		N-2		IC509		G-3		✱Q306		R-2
	✱D302		R-2		IC510		F-6		✱Q400		P-5
	✱D303		R-2		IC511		H-1		✱Q401		P-5
	✱D304		R-2		IC512		F-3		✱Q402		R-5
	✱D305	P	P-2		IC513		F-4		✱Q403		P-5
	✱D401		P-4		IC514		H-1		✱Q404		M-4
	✱D402		N-4		IC515		G-2		✱Q405		R-4
	✱D403		M-4		IC516		F-1		✱Q406		R-5
	✱D404		M-4		IC517		G-1		✱Q407		N-4
	✱D502		K-2		IC518		F-3		✱Q500		F-2
	✱D503		K-2		IC519		E-2		✱Q501		F-1
	✱D504		G-1		IC520		D-2		✱Q502		E-1
	✱D505		G-1		IC521		G-1		✱Q503		D-1
△	✱D506		M-5		IC522		G-2		✱Q700		C-5
○	✱D506	P	M-5		IC523		F-4		✱Q701		C-4
○	✱D506	N	L-5		IC524		E-3		✱Q702		A-2
	✱D701		A-2		IC525		E-3		✱Q703		C-1
	✱D702		C-2		IC526		D-3		✱Q704		C-2
	✱D703		C-2		IC527		D-3		✱Q705		C-2
					IC528		H-3		✱Q706		C-2
	E200		N-3		IC529	N	F-2		✱Q707		C-5
	E300		M-1		IC530	N	G-2		✱Q708		B-5
	E400		R-5		IC531	N	G-2		✱Q709		D-5
	E500		D-1		IC532	N	G-2		✱Q710		D-5
	E501		J-3		IC533	N	G-1		✱Q711		D-5
	E700		E-4		IC534	N	G-1				
	E701		B-2		IC700		A-2		RV100		R-3
					IC701		A-1		RV200		R-3
	FL500		F-2		IC702		A-2		RV300		M-1
	FL501		E-1		IC703		C-4		RV301		N-1
	FL502		D-1		IC704		A-2		RV400		P-1
					IC705		A-3		RV401		P-5
	IC1		M-2		IC706		D-4		RV500		F-1
	IC2		M-3		IC707		E-5		RV501		F-1
	IC3		L-1		IC708		F-5		RV502		D-1
	IC4		L-4		IC709		A-3		RV700		A-1
	IC5		E-6		IC710		E-5		RV701		B-1
	IC6		L-1		IC711		D-3		RV702		B-1
	IC7		L-5		IC712		C-3		RV703		B-1
	IC100		P-3		IC713		C-3				
	IC101		P-3		IC714		A-4		S500		J-1
	IC102		M-3		IC715		D-2				
	IC103		M-2		IC716		A-3		TH400		R-5
	IC200		P-3		IC717		A-5	○	✱TH701	P	A-1
	IC203		M-3		IC718		B-2				
	IC300		P-1		IC719		B-2		TP100		R-3
	IC301		P-2		IC720		B-3		TP101		N-3
	IC302		R-1		IC721		B-2		TP200		R-3
	IC303		M-1		IC722		B-4		TP201		N-3
	IC304		M-2		IC723		C-5		TP300		R-1
	IC305		N-2		IC724		B-5		TP301		P-2
	IC306		M-2		IC725		D-5		TP303		P-2
	IC307		R-2		IC726		F-4		TP400		M-5
	IC308		R-2		IC727	N	E-4		TP401		N-4
	IC309	P	R-2	○	IC728		B-3		TP402		N-4
○	IC310		N-2						TP500		E-1
	IC400		R-5		LV300		R-2		TP501		E-1
	IC401		N-5		LV400		M-4		TP502		D-1
	IC402		R-5						TP700		C-5
	IC403		R-5		✱Q100		R-3		TP701		C-4

	TP702	C-1
	TP703	C-3
	TP704	C-1
	X700	C-2
	X701	C-2

✱ : B SIDE
N : UVW-1800/1600 ONLY
P : UVW-1800P/1600P ONLY
△ : 1-648-901-11 ONLY
○ : 1-648-901-12 ONLY

For J,UC

① TP101 PB

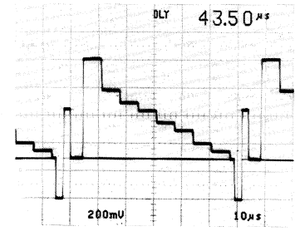

② TP201 PB

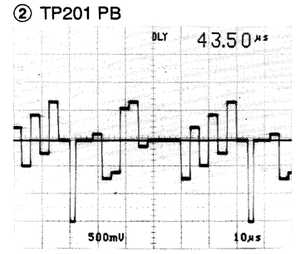

③ TP500 PB

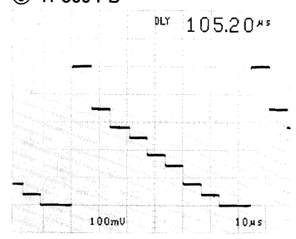

④ TP501 PB

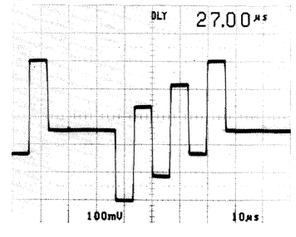

⑤ TP502 PB

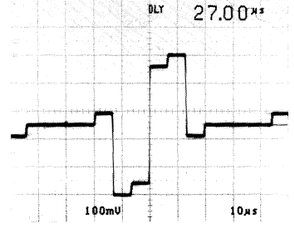

For EK

① TP101 PB

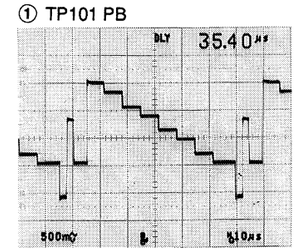

② TP201 PB

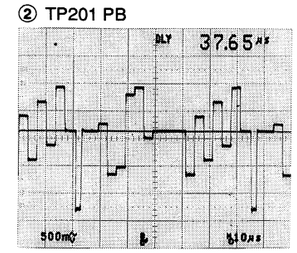

③ TP500 PB

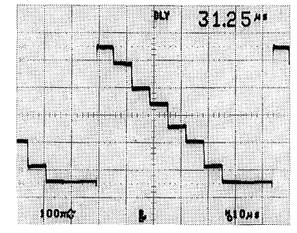

④ TP501 PB

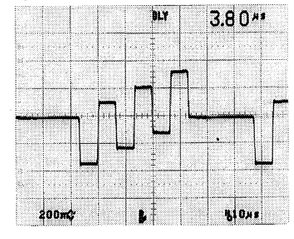

⑤ TP502 PB

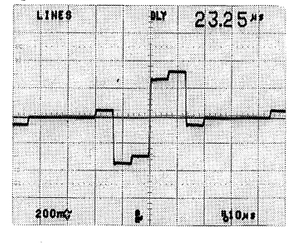

 TBC-25/25P (1/4)

UVW-1800 (J) ;Serial No.10901 and higher
UVW-1800 (UC);Serial No.13931 and higher
UVW-1800P(EK);Serial No.14141 and higher
UVW-1600 (J) ;Serial No.10601 and higher
UVW-1600 (UC);Serial No.12901 and higher
UVW-1600P(EK);Serial No.13781 and higher

TBC-25/25P(1/4);A/D,MEMORY,D/A,SEQUENCER

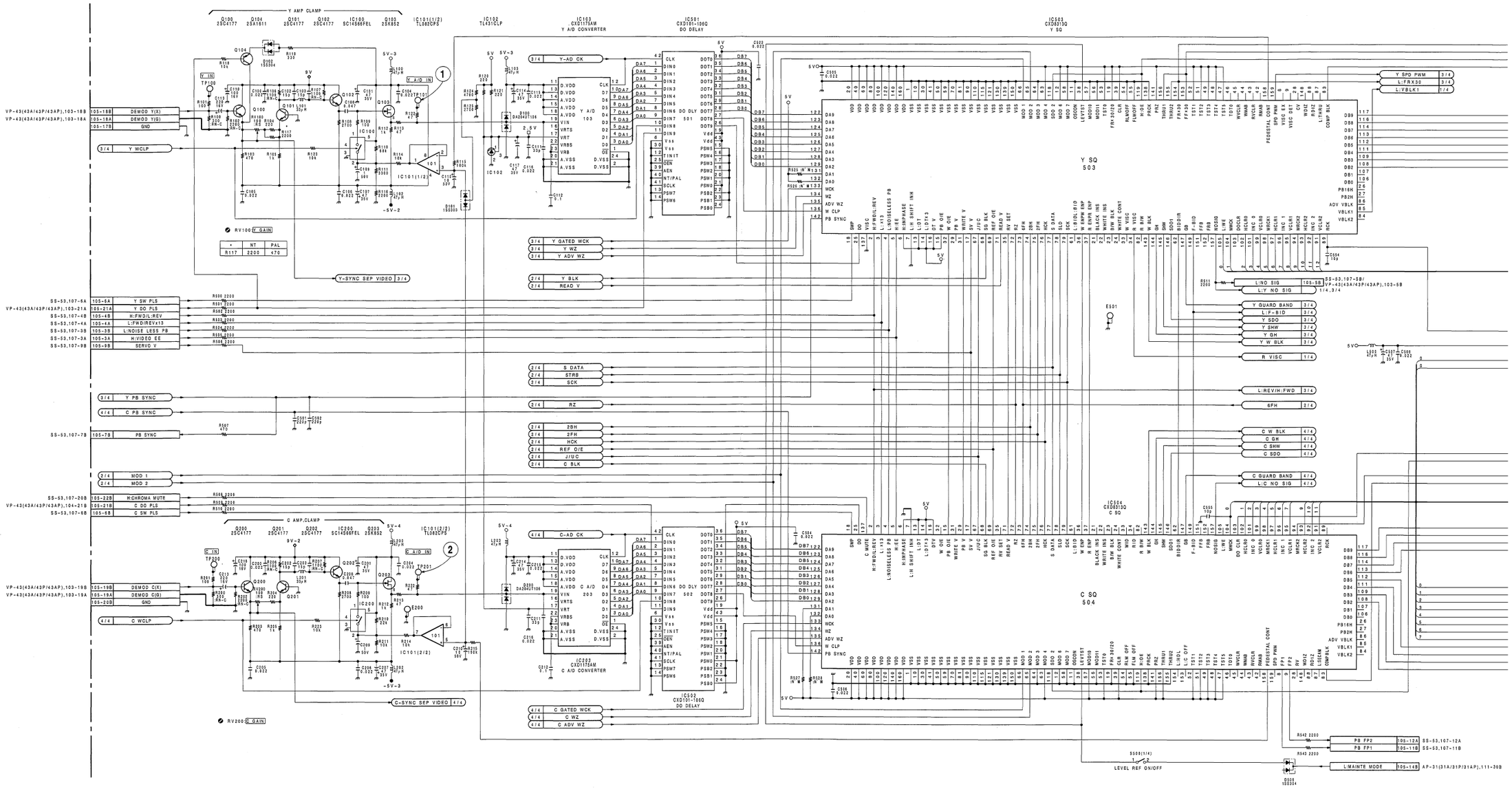

 16-93 (b1)

 TBC-25/25P (1/4)

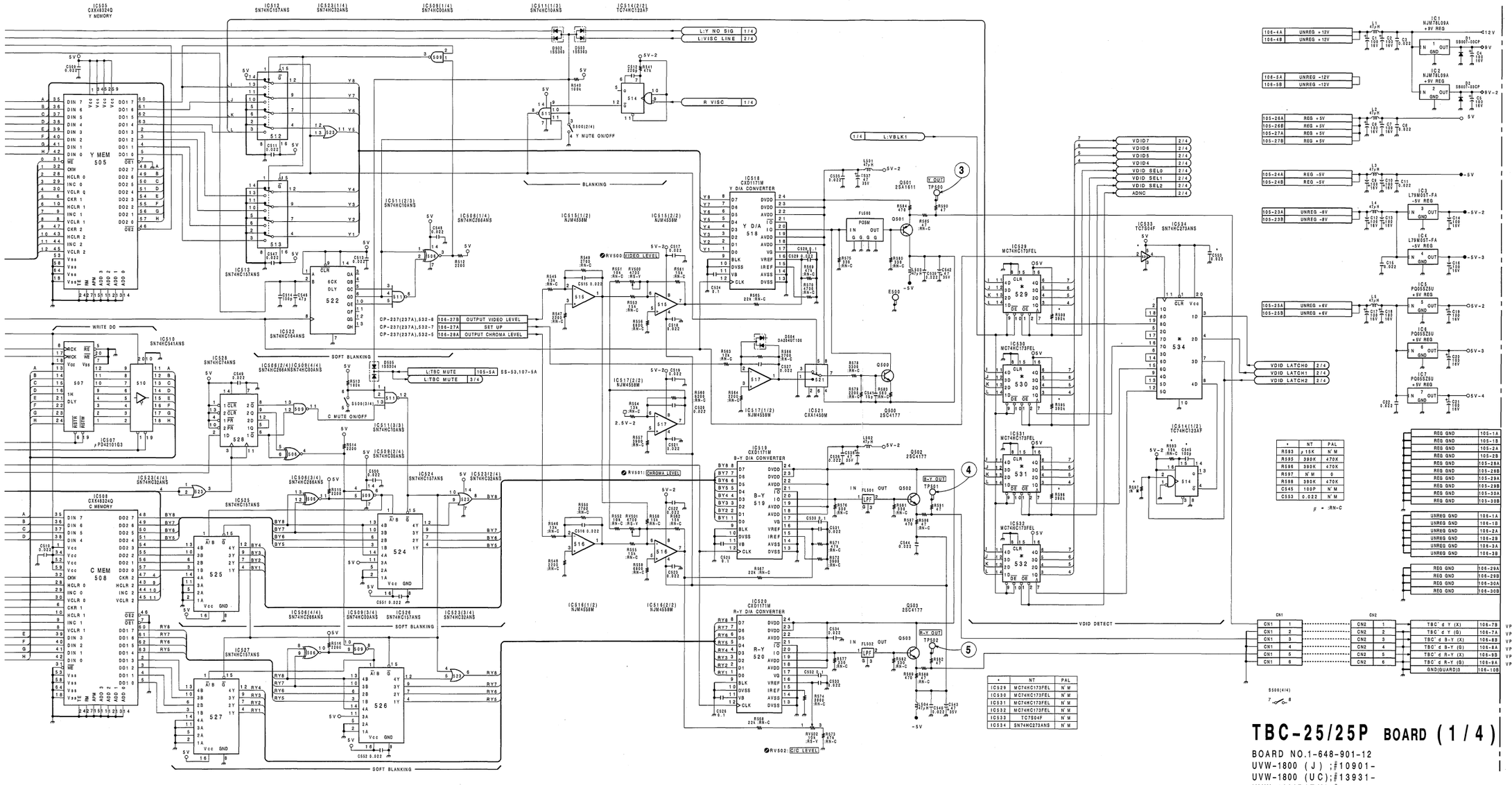

 16-93 (b2)

 TBC-25/25P

TBC-25 (1-648-901-11, 12)

	CN1		E-1		IC404		R-4	✱Q101		R-3	TP702	C-1
	CN2		C-6		IC405		R-4	✱Q102		P-3	TP703	C-3
	CN105		N-6		IC406		M-5	✱Q103		P-3	TP704	C-1
	CN106		C-6		IC407		N-4	✱Q104		R-3		
					IC408		M-4	✱Q200		R-3	X700	C-2
	CV700		C-2	○	IC409	N	N-5	✱Q201		R-3	X701	C-2
	CV701		C-2		IC501		L-2	✱Q202		P-3		
					IC502		L-4	✱Q203		P-3		
	✱D1		M-2		IC503		J-2	✱Q300		P-1		
	✱D2		M-3		IC504		J-4	✱Q301		P-1		
	✱D100		M-3		IC505		H-2	✱Q302		P-1		
	✱D101		N-3		IC506		H-3	✱Q303		P-1		
	✱D102		R-3		IC507		G-6	✱Q304		N-2		
	✱D200		M-3		IC508		H-4	✱Q305		N-2		
	✱D301		N-2		IC509		G-3	✱Q306		R-2		
	✱D302		R-2		IC510		F-6	✱Q400		P-5		
	✱D303		R-2		IC511		H-1	✱Q401		P-5		
	✱D304		R-2		IC512		F-3	✱Q402		R-5		
	✱D305	P	P-2		IC513		F-4	✱Q403		P-5		
	✱D401		P-4		IC514		H-1	✱Q404		M-4		
	✱D402		N-4		IC515		G-2	✱Q405		R-4		
	✱D403		M-4		IC516		F-1	✱Q406		R-5		
	✱D404		M-4		IC517		G-1	✱Q407		N-4		
	✱D502		K-2		IC518		F-3	✱Q500		F-2		
	✱D503		K-2		IC519		E-2	✱Q501		F-1		
	✱D504		G-1		IC520		D-2	✱Q502		E-1		
	✱D505		G-1		IC521		G-1	✱Q503		D-1		
△	✱D506		M-5		IC522		G-2	✱Q700		C-5		
○	✱D506	P	M-5		IC523		F-4	✱Q701		C-4		
○	✱D506	N	L-5		IC524		E-3	✱Q702		A-2		
	✱D701		A-2		IC525		E-3	✱Q703		C-1		
	✱D702		C-2		IC526		D-3	✱Q704		C-2		
	✱D703		C-2		IC527		D-3	✱Q705		C-2		
					IC528		H-3	✱Q706		C-2		
	E200		N-3		IC529	N	F-2	✱Q707		C-5		
	E300		M-1		IC530	N	G-2	✱Q708		B-5		
	E400		R-5		IC531	N	G-2	✱Q709		D-5		
	E500		D-1		IC532	N	G-2	✱Q710		D-5		
	E501		J-3		IC533	N	G-1	✱Q711		D-5		
	E700		E-4		IC534	N	G-1					
	E701		B-2		IC700		A-2	RV100		R-3		
					IC701		A-1	RV200		R-3		
	FL500		F-2		IC702		A-2	RV300		M-1		
	FL501		E-1		IC703		C-4	RV301		N-1		
	FL502		D-1		IC704		A-2	RV400		P-1		
					IC705		A-3	RV401		P-5		
	IC1		M-2		IC706		D-4	RV500		F-1		
	IC2		M-3		IC707		E-5	RV501		F-1		
	IC3		L-1		IC708		F-5	RV502		D-1		
	IC4		L-4		IC709		A-3	RV700		A-1		
	IC5		E-6		IC710		E-5	RV701		B-1		
	IC6		L-1		IC711		D-3	RV702		B-1		
	IC7		L-5		IC712		C-3	RV703		B-1		
	IC100		P-3		IC713		C-3					
	IC101		P-3		IC714		A-4	S500		J-1		
	IC102		M-3		IC715		D-2					
	IC103		M-2		IC716		A-3	TH400		R-5		
	IC200		P-3		IC717		A-5	○✱TH701	P	A-1		
	IC203		M-3		IC718		B-2					
	IC300		P-1		IC719		B-2	TP100		R-3		
	IC301		P-2		IC720		B-3	TP101		N-3		
	IC302		R-1		IC721		B-2	TP200		R-3		
	IC303		M-1		IC722		B-4	TP201		N-3		
	IC304		M-2		IC723		C-5	TP300		R-1		
	IC305		N-2		IC724		B-5	TP301		P-2		
	IC306		M-2		IC725		D-5	TP303		P-2		
	IC307		R-2		IC726		F-4	TP400		M-5		
	IC308		R-2		IC727	N	E-4	TP401		N-4		
	IC309	P	R-2	○	IC728		B-3	TP402		N-4		
○	IC310		N-2					TP500		E-1		
	IC400		R-5		LV300		R-2	TP501		E-1		
	IC401		N-5		LV400		M-4	TP502		D-1		
	IC402		R-5					TP700		C-5		
	IC403		R-5		✱Q100		R-3	TP701		C-4		

✱ : B SIDE
N : UVW-1800/1600 ONLY
P : UVW-1800P/1600P ONLY
△ : 1-648-901-11 ONLY
○ : 1-648-901-12 ONLY

For J,UC

① TP701 PB

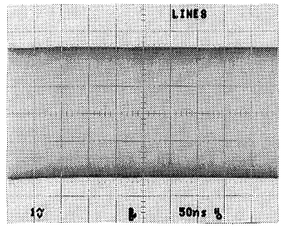

② TP703 PB

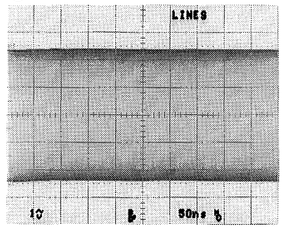

For EK

① TP701 PB

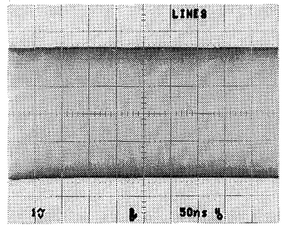

② TP703 PB

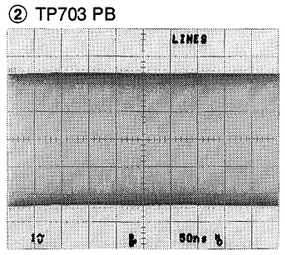

 16-96 (b)

 TBC-25/25P (2/4)

UVW-1800 (J) ;Serial No.10901 and higher
UVW-1800 (UC);Serial No.13931 and higher
UVW-1800P(EK);Serial No.14141 and higher
UVW-1600 (J) ;Serial No.10601 and higher
UVW-1600 (UC);Serial No.12901 and higher
UVW-1600P(EK);Serial No.13781 and higher

TBC-25/25P(2/4);SYNC PROCESS,TBC MPU

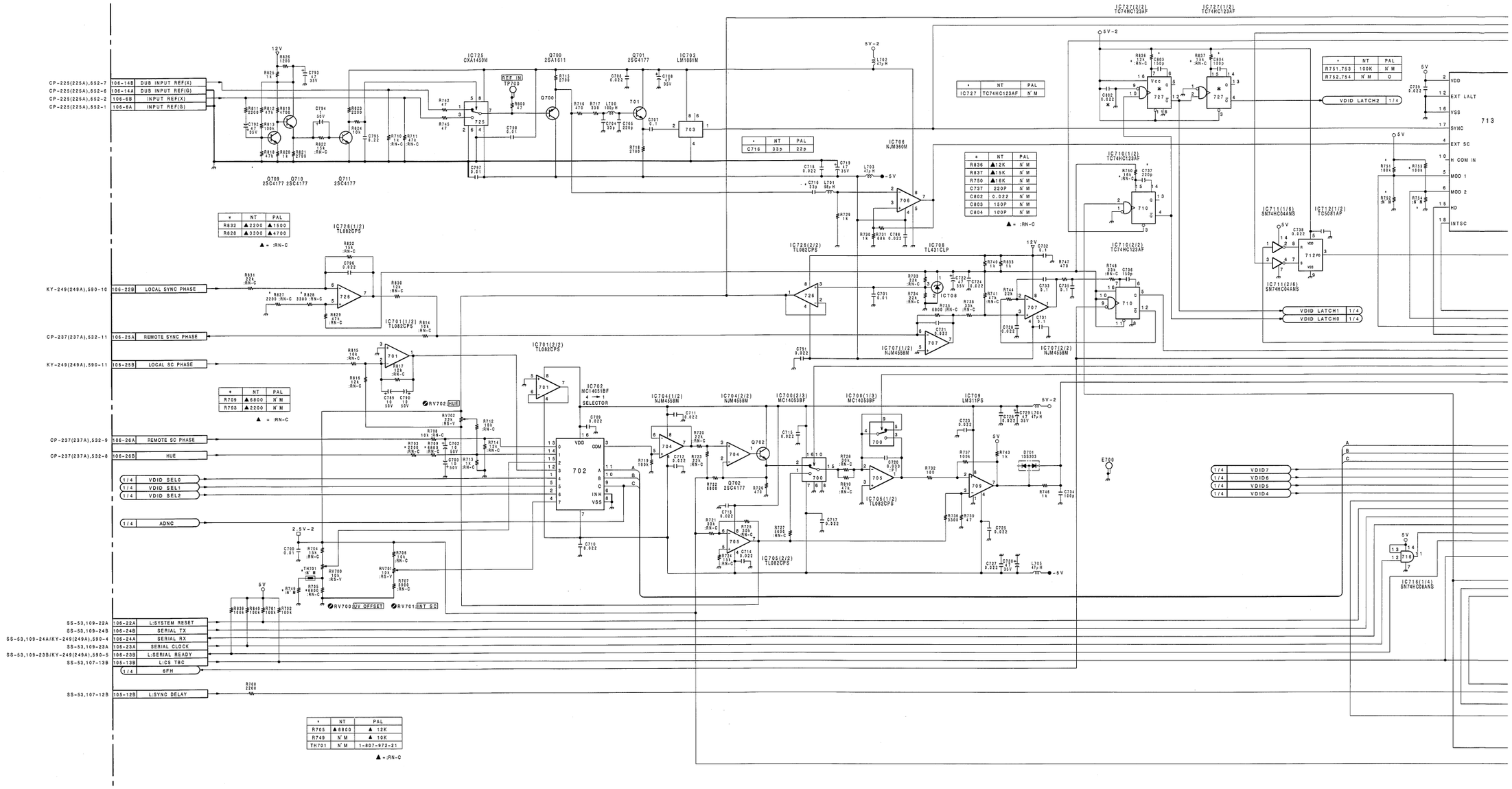

 16-97 (b1)

A B C D E F G H

 TBC-25/25P (2/4)

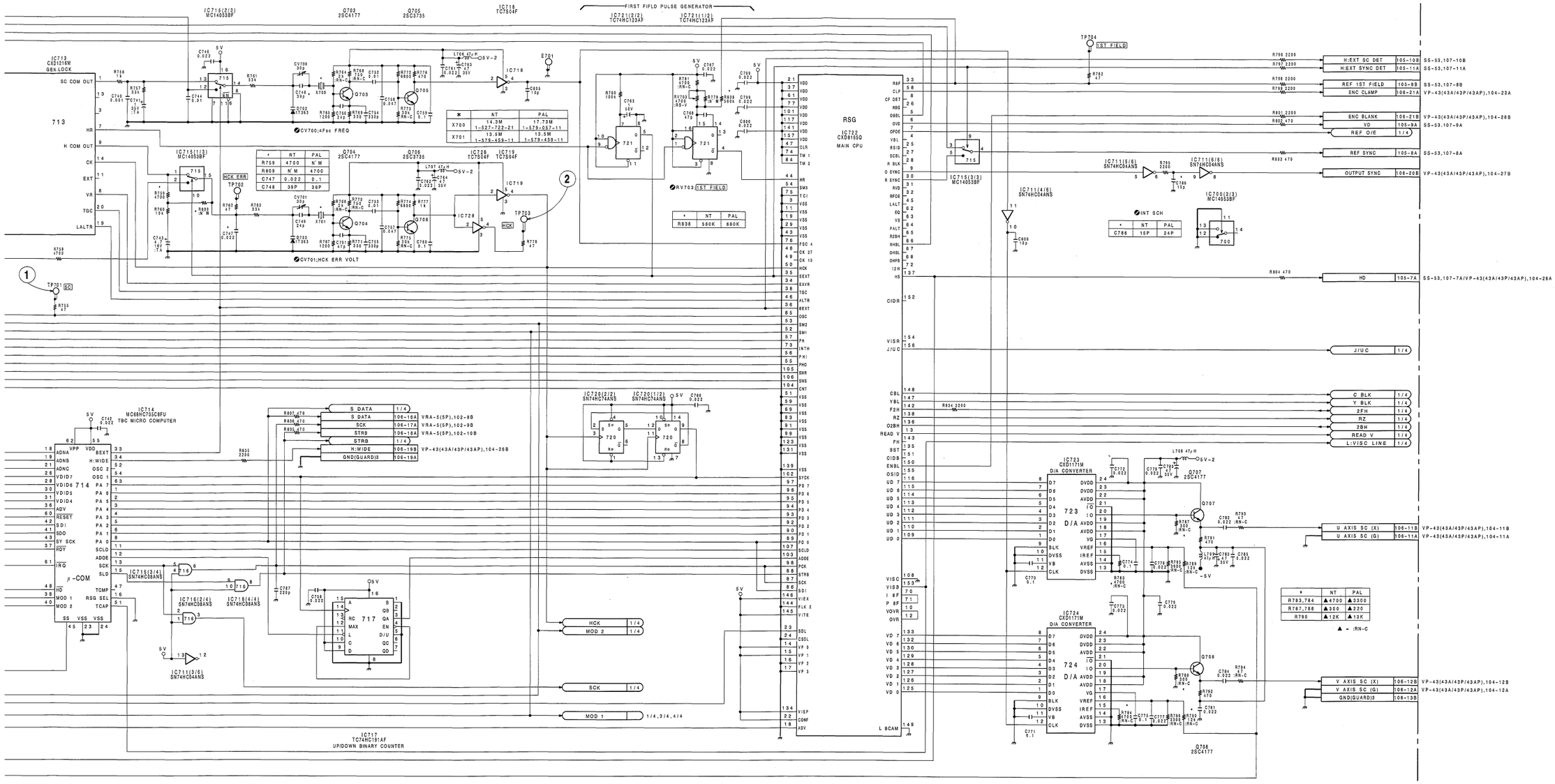

TBC-25/25P BOARD (2/4)

BOARD NO.1-648-901-12
UVW-1800 (J) ;#10901-
UVW-1800 (UC);#13931-
UVW-1800P(EK);#14141-
UVW-1600 (J) ;#10601-
UVW-1600 (UC);#12901-
UVW-1600P(EK);#13781-

16-97 (b2)

TBC-25 (1-648-901-11, 12)

	CN1	E-1		IC404		R-4	✱Q101		R-3	TP702	C-1
	CN2	C-6		IC405		R-4	✱Q102		P-3	TP703	C-3
	CN105	N-6		IC406		M-5	✱Q103		P-3	TP704	C-1
	CN106	C-6		IC407		N-4	✱Q104		R-3		
				IC408		M-4	✱Q200		R-3	X700	C-2
	CV700	C-2	○	IC409	N	N-5	✱Q201		R-3	X701	C-2
	CV701	C-2		IC501		L-2	✱Q202		P-3		
				IC502		L-4	✱Q203		P-3		
	✱D1	M-2		IC503		J-2	✱Q300		P-1		
	✱D2	M-3		IC504		J-4	✱Q301		P-1		
	✱D100	M-3		IC505		H-2	✱Q302		P-1		
	✱D101	N-3		IC506		H-3	✱Q303		P-1		
	✱D102	R-3		IC507		G-6	✱Q304		N-2		
	✱D200	M-3		IC508		H-4	✱Q305		N-2		
	✱D301	N-2		IC509		G-3	✱Q306		R-2		
	✱D302	R-2		IC510		F-6	✱Q400		P-5		
	✱D303	R-2		IC511		H-1	✱Q401		P-5		
	✱D304	R-2		IC512		F-3	✱Q402		R-5		
	✱D305	P	P-2	IC513		F-4	✱Q403		P-5		
	✱D401		P-4	IC514		H-1	✱Q404		M-4		
	✱D402		N-4	IC515		G-2	✱Q405		R-4		
	✱D403		M-4	IC516		F-1	✱Q406		R-5		
	✱D404		M-4	IC517		G-1	✱Q407		N-4		
	✱D502		K-2	IC518		F-3	✱Q500		F-2		
	✱D503		K-2	IC519		E-2	✱Q501		F-1		
	✱D504		G-1	IC520		D-2	✱Q502		E-1		
	✱D505		G-1	IC521		G-1	✱Q503		D-1		
△	✱D506		M-5	IC522		G-2	✱Q700		C-5		
○	✱D506	P	M-5	IC523		F-4	✱Q701		C-4		
○	✱D506	N	L-5	IC524		E-3	✱Q702		A-2		
	✱D701		A-2	IC525		E-3	✱Q703		C-1		
	✱D702		C-2	IC526		D-3	✱Q704		C-2		
	✱D703		C-2	IC527		D-3	✱Q705		C-2		
				IC528		H-3	✱Q706		C-2		
	E200		N-3	IC529	N	F-2	✱Q707		C-5		
	E300		M-1	IC530	N	G-2	✱Q708		B-5		
	E400		R-5	IC531	N	G-2	✱Q709		D-5		
	E500		D-1	IC532	N	G-2	✱Q710		D-5		
	E501		J-3	IC533	N	G-1	✱Q711		D-5		
	E700		E-4	IC534	N	G-1					
	E701		B-2	IC700		A-2	RV100		R-3		
				IC701		A-1	RV200		R-3		
	FL500		F-2	IC702		A-2	RV300		M-1		
	FL501		E-1	IC703		C-4	RV301		N-1		
	FL502		D-1	IC704		A-2	RV400		P-1		
				IC705		A-3	RV401		P-5		
	IC1		M-2	IC706		D-4	RV500		F-1		
	IC2		M-3	IC707		E-5	RV501		F-1		
	IC3		L-1	IC708		F-5	RV502		D-1		
	IC4		L-4	IC709		A-3	RV700		A-1		
	IC5		E-6	IC710		E-5	RV701		B-1		
	IC6		L-1	IC711		D-3	RV702		B-1		
	IC7		L-5	IC712		C-3	RV703		B-1		
	IC100		P-3	IC713		C-3					
	IC101		P-3	IC714		A-4	S500		J-1		
	IC102		M-3	IC715		D-2					
	IC103		M-2	IC716		A-3	TH400		R-5		
	IC200		P-3	IC717		A-5	○✱TH701	P	A-1		
	IC203		M-3	IC718		B-2					
	IC300		P-1	IC719		B-2	TP100		R-3		
	IC301		P-2	IC720		B-3	TP101		N-3		
	IC302		R-1	IC721		B-2	TP200		R-3		
	IC303		M-1	IC722		B-4	TP201		N-3		
	IC304		M-2	IC723		C-5	TP300		R-1		
	IC305		N-2	IC724		B-5	TP301		P-2		
	IC306		M-2	IC725		D-5	TP303		P-2		
	IC307		R-2	IC726		F-4	TP400		M-5		
	IC308		R-2	IC727	N	E-4	TP401		N-4		
	IC309	P	R-2	○ IC728		B-3	TP402		N-4		
○	IC310		N-2				TP500		E-1		
	IC400		R-5	LV300		R-2	TP501		E-1		
	IC401		N-5	LV400		M-4	TP502		D-1		
	IC402		R-5				TP700		C-5		
	IC403		R-5	✱Q100		R-3	TP701		C-4		

✱ : B SIDE
N : UVW-1800/1600 ONLY
P : UVW-1800P/1600P ONLY
△ : 1-648-901-11 ONLY
○ : 1-648-901-12 ONLY

For J,UC

① TP303 PB

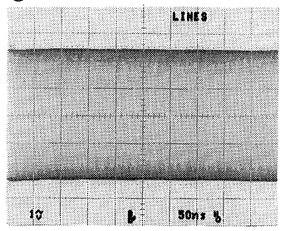

For EK

① TP303 PB

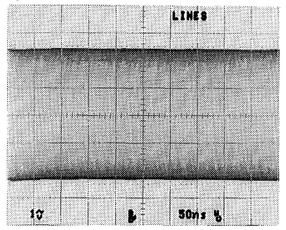

UVW-1800 (J) ;Serial No.10901 and higher
UVW-1800 (UC);Serial No.13931 and higher
UVW-1800P(EK);Serial No.14141 and higher
UVW-1600 (J) ;Serial No.10601 and higher
UVW-1600 (UC);Serial No.12901 and higher
UVW-1600P(EK);Serial No.13781 and higher

TBC-25/25P(3/4);Y WRITE CLOCK

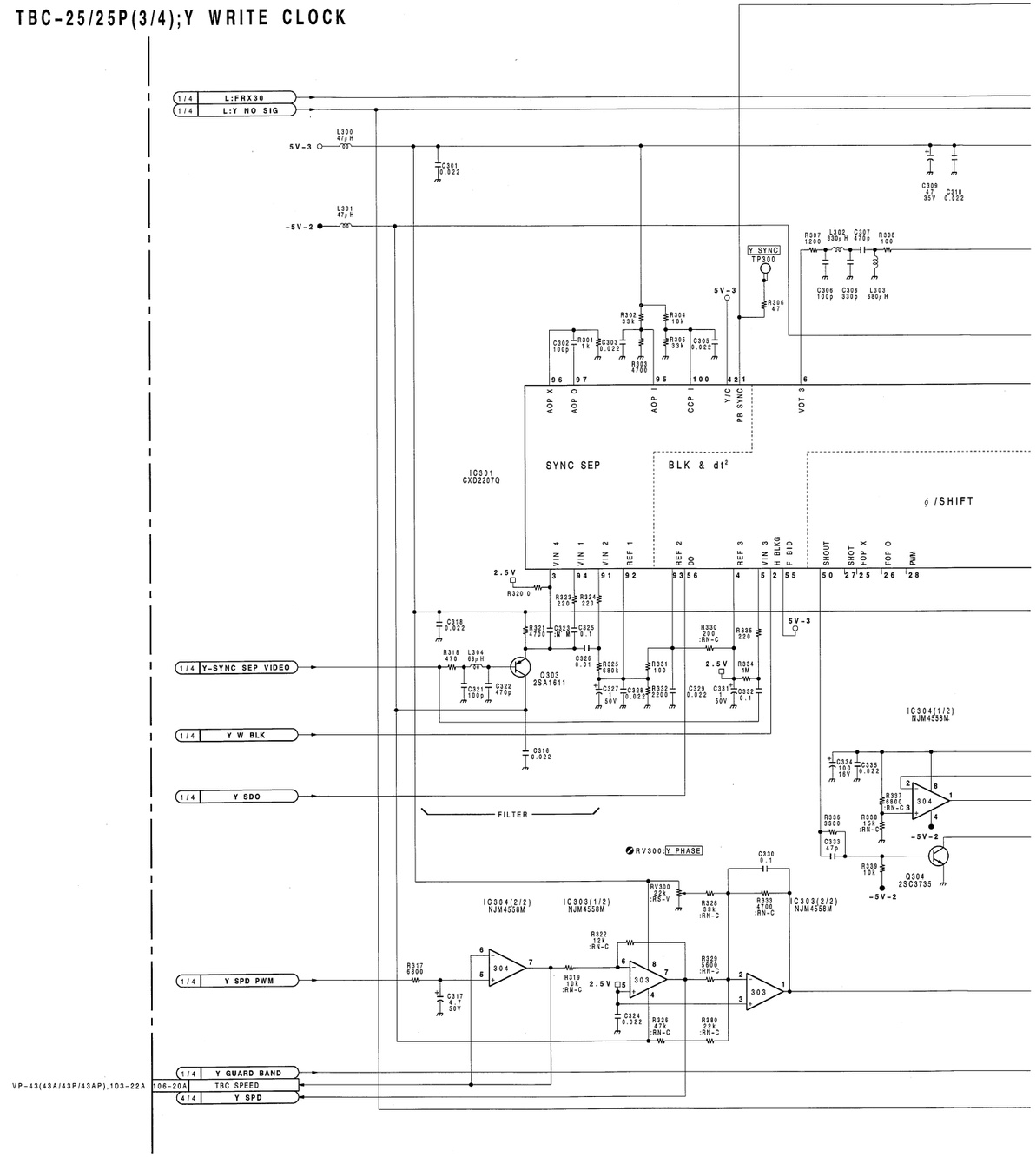

 TBC-25/25P (3/4)

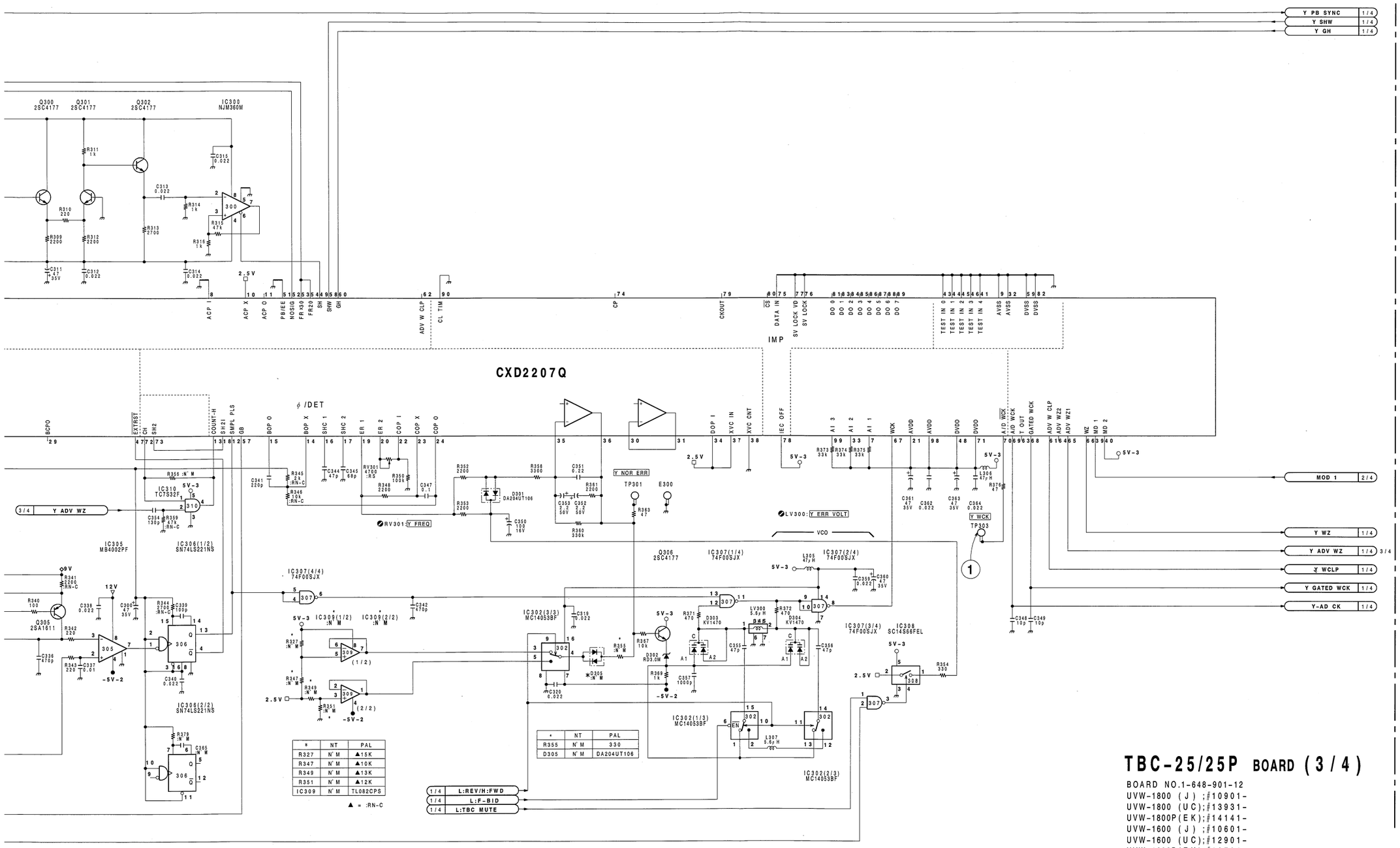
CXD2207Q
IMP
VCO
Y PB SYNC
Y SHW
Y GH
MOD 1
Y WZ
Y ADV WZ
Y WCLP
Y GATED WCK
Y-AD CK
Y ADV WZ
Y NOR ERR
Y FREQ
Y ERR VOLT
Y WCK
L:REV/H:FWD
L:F-BID
L:TBC MUTE
TBC-25/25P BOARD (3/4)
BOARD NO.1-648-901-12
UVW-1800 (J) ;#10901-
UVW-1800 (UC);#13931-
UVW-1800P(EK);#14141-
UVW-1600 (J) ;#10601-
UVW-1600 (UC);#12901-
UVW-1600P(EK);#13781-

TBC-25 (1-648-901-11, 12)

	CN1	E-1		IC404		R-4	✱Q101		R-3	TP702	C-1
	CN2	C-6		IC405		R-4	✱Q102		P-3	TP703	C-3
	CN105	N-6		IC406		M-5	✱Q103		P-3	TP704	C-1
	CN106	C-6		IC407		N-4	✱Q104		R-3		
				IC408		M-4	✱Q200		R-3	X700	C-2
	CV700	C-2	○	IC409	N	N-5	✱Q201		R-3	X701	C-2
	CV701	C-2		IC501		L-2	✱Q202		P-3		
				IC502		L-4	✱Q203		P-3		
	✱D1	M-2		IC503		J-2	✱Q300		P-1		
	✱D2	M-3		IC504		J-4	✱Q301		P-1		
	✱D100	M-3		IC505		H-2	✱Q302		P-1		
	✱D101	N-3		IC506		H-3	✱Q303		P-1		
	✱D102	R-3		IC507		G-6	✱Q304		N-2		
	✱D200	M-3		IC508		H-4	✱Q305		N-2		
	✱D301	N-2		IC509		G-3	✱Q306		R-2		
	✱D302	R-2		IC510		F-6	✱Q400		P-5		
	✱D303	R-2		IC511		H-1	✱Q401		P-5		
	✱D304	R-2		IC512		F-3	✱Q402		R-5		
	✱D305	P-2		IC513		F-4	✱Q403		P-5		
	✱D401	P-4		IC514		H-1	✱Q404		M-4		
	✱D402	N-4		IC515		G-2	✱Q405		R-4		
	✱D403	M-4		IC516		F-1	✱Q406		R-5		
	✱D404	M-4		IC517		G-1	✱Q407		N-4		
	✱D502	K-2		IC518		F-3	✱Q500		F-2		
	✱D503	K-2		IC519		E-2	✱Q501		F-1		
	✱D504	G-1		IC520		D-2	✱Q502		E-1		
	✱D505	G-1		IC521		G-1	✱Q503		D-1		
△	✱D506	M-5		IC522		G-2	✱Q700		C-5		
○	✱D506	M-5		IC523		F-4	✱Q701		C-4		
○	✱D506	L-5		IC524		E-3	✱Q702		A-2		
	✱D701	A-2		IC525		E-3	✱Q703		C-1		
	✱D702	C-2		IC526		D-3	✱Q704		C-2		
	✱D703	C-2		IC527		D-3	✱Q705		C-2		
				IC528		H-3	✱Q706		C-2		
	E200	N-3		IC529	N	F-2	✱Q707		C-5		
	E300	M-1		IC530	N	G-2	✱Q708		B-5		
	E400	R-5		IC531	N	G-2	✱Q709		D-5		
	E500	D-1		IC532	N	G-2	✱Q710		D-5		
	E501	J-3		IC533	N	G-1	✱Q711		D-5		
	E700	E-4		IC534	N	G-1					
	E701	B-2		IC700		A-2	RV100		R-3		
				IC701		A-1	RV200		R-3		
	FL500	F-2		IC702		A-2	RV300		M-1		
	FL501	E-1		IC703		C-4	RV301		N-1		
	FL502	D-1		IC704		A-2	RV400		P-1		
				IC705		A-3	RV401		P-5		
	IC1	M-2		IC706		D-4	RV500		F-1		
	IC2	M-3		IC707		E-5	RV501		F-1		
	IC3	L-1		IC708		F-5	RV502		D-1		
	IC4	L-4		IC709		A-3	RV700		A-1		
	IC5	E-6		IC710		E-5	RV701		B-1		
	IC6	L-1		IC711		D-3	RV702		B-1		
	IC7	L-5		IC712		C-3	RV703		B-1		
	IC100	P-3		IC713		C-3					
	IC101	P-3		IC714		A-4	S500		J-1		
	IC102	M-3		IC715		D-2					
	IC103	M-2		IC716		A-3	TH400		R-5		
	IC200	P-3		IC717		A-5	○✱TH701	P	A-1		
	IC203	M-3		IC718		B-2					
	IC300	P-1		IC719		B-2	TP100		R-3		
	IC301	P-2		IC720		B-3	TP101		N-3		
	IC302	R-1		IC721		B-2	TP200		R-3		
	IC303	M-1		IC722		B-4	TP201		N-3		
	IC304	M-2		IC723		C-5	TP300		R-1		
	IC305	N-2		IC724		B-5	TP301		P-2		
	IC306	M-2		IC725		D-5	TP303		P-2		
	IC307	R-2		IC726		F-4	TP400		M-5		
	IC308	R-2		IC727	N	E-4	TP401		N-4		
	IC309	P-R-2	○	IC728		B-3	TP402		N-4		
○	IC310	N-2					TP500		E-1		
	IC400	R-5		LV300		R-2	TP501		E-1		
	IC401	N-5		LV400		M-4	TP502		D-1		
	IC402	R-5					TP700		C-5		
	IC403	R-5		✱Q100		R-3	TP701		C-4		

✱ : B SIDE
N : UVW-1800/1600 ONLY
P : UVW-1800P/1600P ONLY
△ : 1-648-901-11 ONLY
○ : 1-648-901-12 ONLY

For J,UC

① TP402 PB

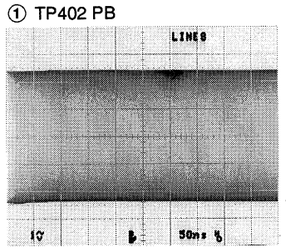

For EK

① TP402 PB

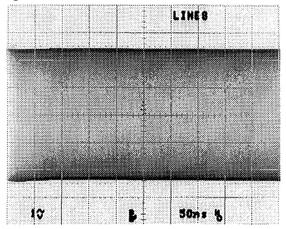

UVW-1800 (J) ;Serial No.10901 and higher
UVW-1800 (UC);Serial No.13931 and higher
UVW-1800P(EK);Serial No.14141 and higher
UVW-1600 (J) ;Serial No.10601 and higher
UVW-1600 (UC);Serial No.12901 and higher
UVW-1600P(EK);Serial No.13781 and higher

TBC-25/25P(4/4);C WRITE CLOCK

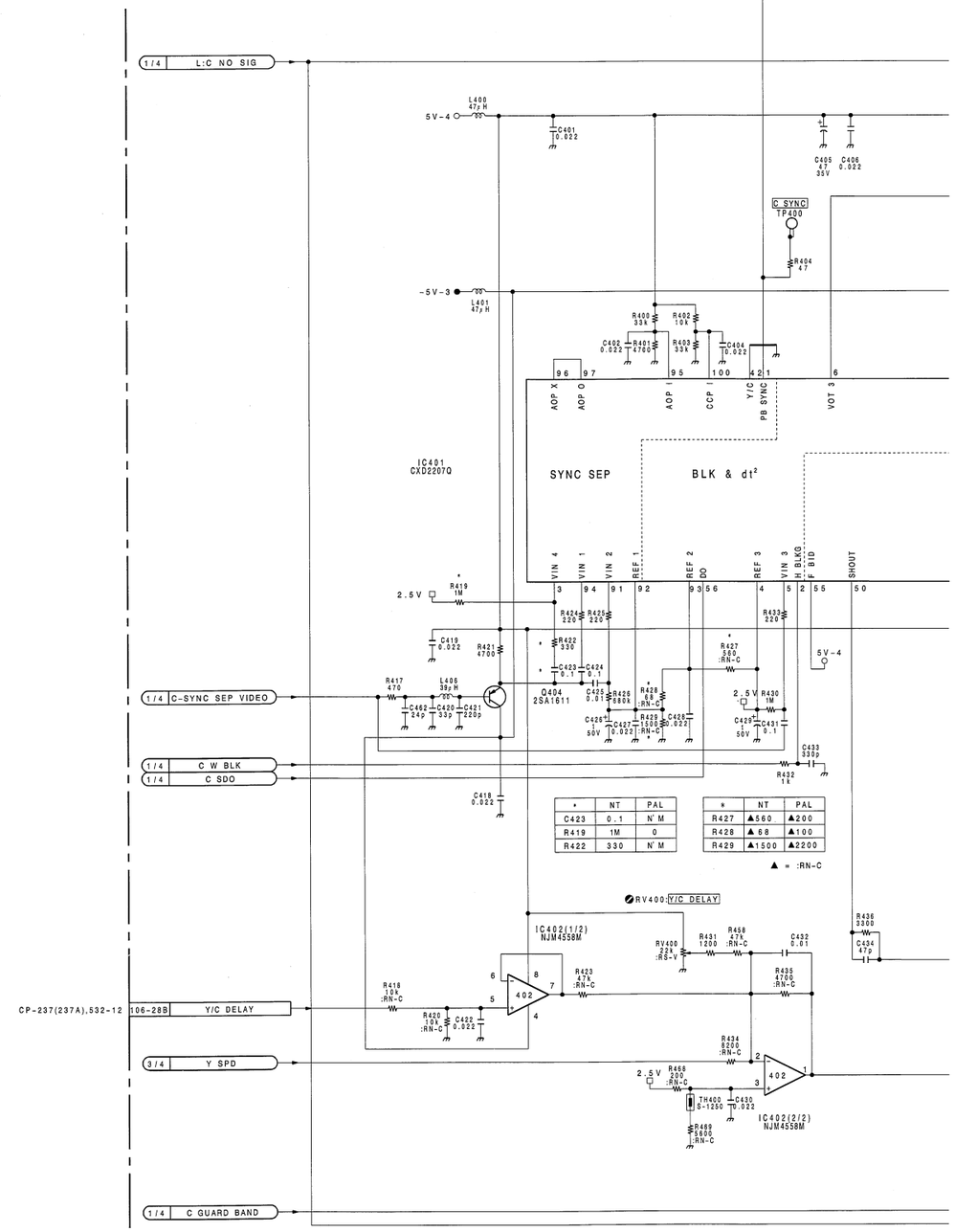

*	NT	PAL
C423	0.1	N'M
R419	1M	0
R422	330	N'M

*	NT	PAL
R427	▲560	▲200
R428	▲68	▲100
R429	▲1500	▲2200

 TBC-25/25P (4/4)

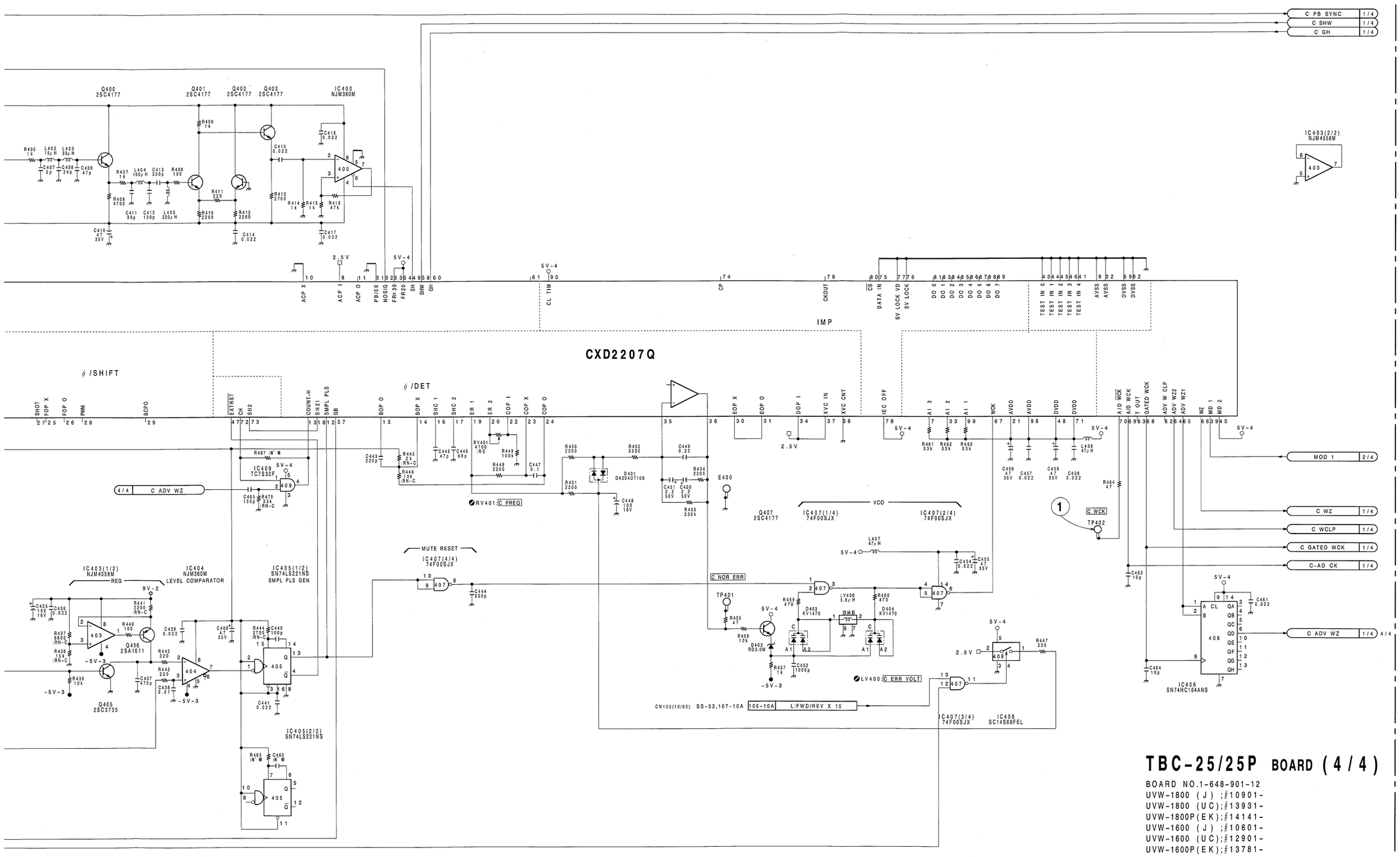

TBC-25/25P BOARD (4/4)

BOARD NO.1-648-901-12
UVW-1800 (J) ;#10901-
UVW-1800 (UC);#13931-
UVW-1800P(EK);#14141-
UVW-1600 (J) ;#10601-
UVW-1600 (UC);#12901-
UVW-1600P(EK);#13781-

TBC-25 (1-648-901-11, 12)

	CN1	E-1		IC404		R-4	✱Q101		R-3	TP702	C-1
	CN2	C-6		IC405		R-4	✱Q102		P-3	TP703	C-3
	CN105	N-6		IC406		M-5	✱Q103		P-3	TP704	C-1
	CN106	C-6		IC407		N-4	✱Q104		R-3		
				IC408		M-4	✱Q200		R-3	X700	C-2
	CV700	C-2	○	IC409	N	N-5	✱Q201		R-3	X701	C-2
	CV701	C-2		IC501		L-2	✱Q202		P-3		
				IC502		L-4	✱Q203		P-3		
	✱D1	M-2		IC503		J-2	✱Q300		P-1		
	✱D2	M-3		IC504		J-4	✱Q301		P-1		
	✱D100	M-3		IC505		H-2	✱Q302		P-1		
	✱D101	N-3		IC506		H-3	✱Q303		P-1		
	✱D102	R-3		IC507		G-6	✱Q304		N-2		
	✱D200	M-3		IC508		H-4	✱Q305		N-2		
	✱D301	N-2		IC509		G-3	✱Q306		R-2		
	✱D302	R-2		IC510		F-6	✱Q400		P-5		
	✱D303	R-2		IC511		H-1	✱Q401		P-5		
	✱D304	R-2		IC512		F-3	✱Q402		R-5		
	✱D305	P	P-2	IC513		F-4	✱Q403		P-5		
	✱D401		P-4	IC514		H-1	✱Q404		M-4		
	✱D402		N-4	IC515		G-2	✱Q405		R-4		
	✱D403		M-4	IC516		F-1	✱Q406		R-5		
	✱D404		M-4	IC517		G-1	✱Q407		N-4		
	✱D502		K-2	IC518		F-3	✱Q500		F-2		
	✱D503		K-2	IC519		E-2	✱Q501		F-1		
	✱D504		G-1	IC520		D-2	✱Q502		E-1		
	✱D505		G-1	IC521		G-1	✱Q503		D-1		
△	✱D506		M-5	IC522		G-2	✱Q700		C-5		
○	✱D506	P	M-5	IC523		F-4	✱Q701		C-4		
○	✱D506	N	L-5	IC524		E-3	✱Q702		A-2		
	✱D701		A-2	IC525		E-3	✱Q703		C-1		
	✱D702		C-2	IC526		D-3	✱Q704		C-2		
	✱D703		C-2	IC527		D-3	✱Q705		C-2		
				IC528		H-3	✱Q706		C-2		
	E200		N-3	IC529	N	F-2	✱Q707		C-5		
	E300		M-1	IC530	N	G-2	✱Q708		B-5		
	E400		R-5	IC531	N	G-2	✱Q709		D-5		
	E500		D-1	IC532	N	G-2	✱Q710		D-5		
	E501		J-3	IC533	N	G-1	✱Q711		D-5		
	E700		E-4	IC534	N	G-1					
	E701		B-2	IC700		A-2	RV100		R-3		
				IC701		A-1	RV200		R-3		
	FL500		F-2	IC702		A-2	RV300		M-1		
	FL501		E-1	IC703		C-4	RV301		N-1		
	FL502		D-1	IC704		A-2	RV400		P-1		
				IC705		A-3	RV401		P-5		
	IC1		M-2	IC706		D-4	RV500		F-1		
	IC2		M-3	IC707		E-5	RV501		F-1		
	IC3		L-1	IC708		F-5	RV502		D-1		
	IC4		L-4	IC709		A-3	RV700		A-1		
	IC5		E-6	IC710		E-5	RV701		B-1		
	IC6		L-1	IC711		D-3	RV702		B-1		
	IC7		L-5	IC712		C-3	RV703		B-1		
	IC100		P-3	IC713		C-3					
	IC101		P-3	IC714		A-4	S500		J-1		
	IC102		M-3	IC715		D-2					
	IC103		M-2	IC716		A-3	TH400		R-5		
	IC200		P-3	IC717		A-5	○✱TH701	P	A-1		
	IC203		M-3	IC718		B-2					
	IC300		P-1	IC719		B-2	TP100		R-3		
	IC301		P-2	IC720		B-3	TP101		N-3		
	IC302		R-1	IC721		B-2	TP200		R-3		
	IC303		M-1	IC722		B-4	TP201		N-3		
	IC304		M-2	IC723		C-5	TP300		R-1		
	IC305		N-2	IC724		B-5	TP301		P-2		
	IC306		M-2	IC725		D-5	TP303		P-2		
	IC307		R-2	IC726		F-4	TP400		M-5		
	IC308		R-2	IC727	N	E-4	TP401		N-4		
	IC309	P	R-2	○ IC728		B-3	TP402		N-4		
○	IC310		N-2				TP500		E-1		
	IC400		R-5	LV300		R-2	TP501		E-1		
	IC401		N-5	LV400		M-4	TP502		D-1		
	IC402		R-5				TP700		C-5		
	IC403		R-5	✱Q100		R-3	TP701		C-4		

✱ : B SIDE
N : UVW-1800/1600 ONLY
P : UVW-1800P/1600P ONLY
△ : 1-648-901-11 ONLY
○ : 1-648-901-12 ONLY

For J,UC

① TP101 PB

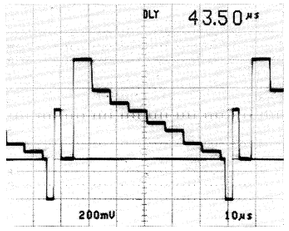

② TP201 PB

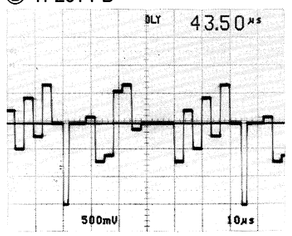

③ TP500 PB

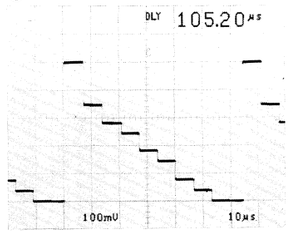

④ TP501 PB

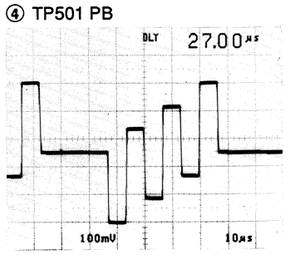

⑤ TP502 PB

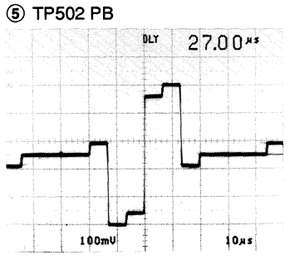

For EK

① TP101 PB

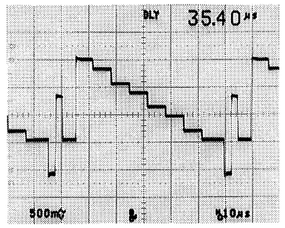

② TP201 PB

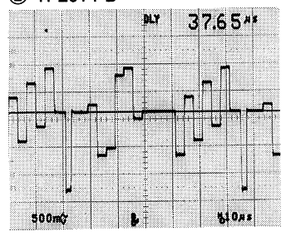

③ TP500 PB

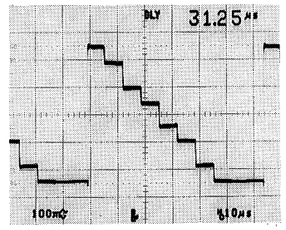

④ TP501 PB

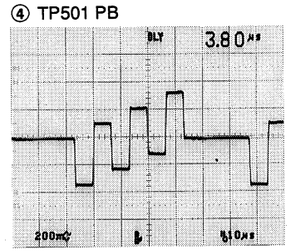

⑤ TP502 PB

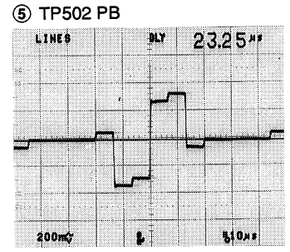

 TBC-25/25P (1/4)

UVW-1800 (J) ;Serial No.10001 through 10900
UVW-1800 (UC);Serial No.10001 through 13930
UVW-1800P(EK);Serial No.10001 through 14140
UVW-1600 (J) ;Serial No.10001 through 10600
UVW-1600 (UC);Serial No.10001 through 12900
UVW-1600P(EK);Serial No.10001 through 13780

TBC-25/25P(1/4);A/D,MEMORY,D/A,SEQUENCER

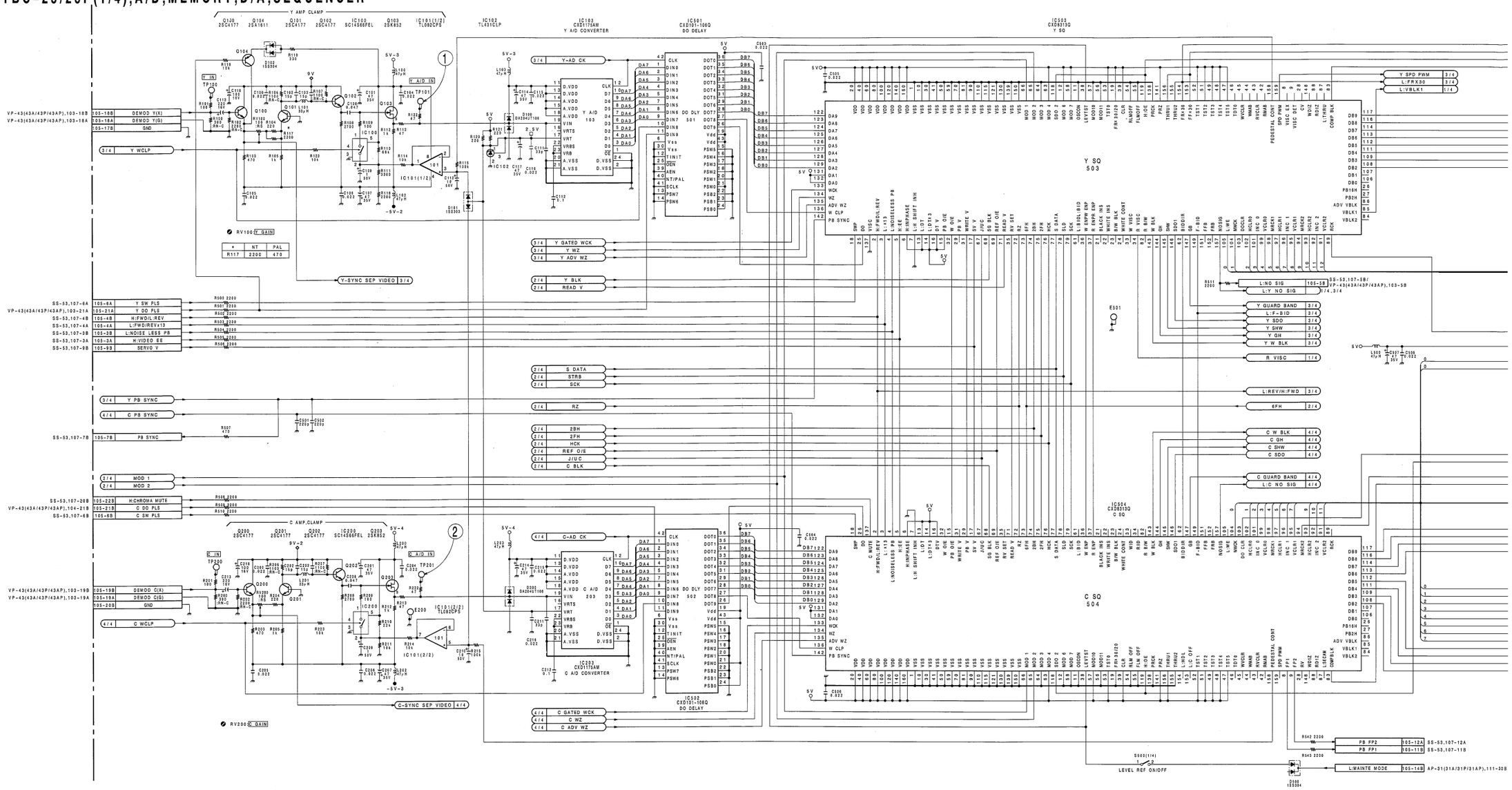

 16-93 (a1)

 TBC-25/25P (1/4)

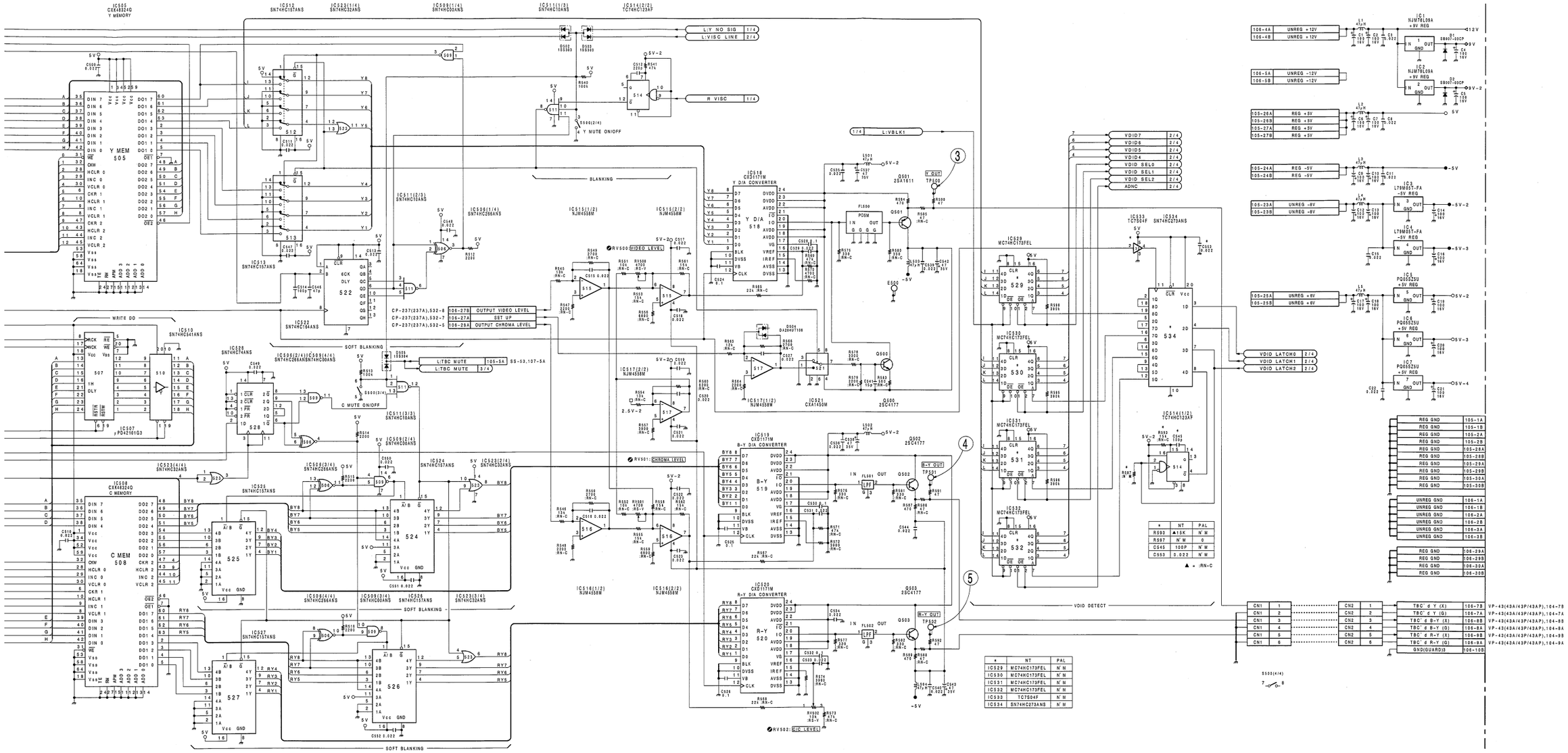

*	NT	PAL
R593	▲15K	N'M
R597	N'M	0
C545	100P	N'M
C553	0.022	N'M

▲ = :RN-C

*	NT	PAL
IC529	MC74HC173FEL	N'M
IC530	MC74HC173FEL	N'M
IC531	MC74HC173FEL	N'M
IC532	MC74HC173FEL	N'M
IC533	TC7S04F	N'M
IC534	SN74HC273ANS	N'M

TBC-25/25P BOARD (1/4)

BOARD NO.1-648-901-11
UVW-1800 (J) ;#10001-10900
UVW-1800 (UC);#10001-13930
UVW-1800P(EK);#10001-14140
UVW-1600 (J) ;#10001-10600
UVW-1600 (UC);#10001-12900
UVW-1600P(EK);#10001-13780

TBC-25 (1-648-901-11, 12)

	CN1		E-1		IC404		R-4		✱Q101		R-3		TP702		C-1
	CN2		C-6		IC405		R-4		✱Q102		P-3		TP703		C-3
	CN105		N-6		IC406		M-5		✱Q103		P-3		TP704		C-1
	CN106		C-6		IC407		N-4		✱Q104		R-3				
					IC408		M-4		✱Q200		R-3		X700		C-2
	CV700		C-2	○	IC409	N	N-5		✱Q201		R-3		X701		C-2
	CV701		C-2		IC501		L-2		✱Q202		P-3				
					IC502		L-4		✱Q203		P-3				
	✱D1		M-2		IC503		J-2		✱Q300		P-1				
	✱D2		M-3		IC504		J-4		✱Q301		P-1				
	✱D100		M-3		IC505		H-2		✱Q302		P-1				
	✱D101		N-3		IC506		H-3		✱Q303		P-1				
	✱D102		R-3		IC507		G-6		✱Q304		N-2				
	✱D200		M-3		IC508		H-4		✱Q305		N-2				
	✱D301		N-2		IC509		G-3		✱Q306		R-2				
	✱D302		R-2		IC510		F-6		✱Q400		P-5				
	✱D303		R-2		IC511		H-1		✱Q401		P-5				
	✱D304		R-2		IC512		F-3		✱Q402		R-5				
	✱D305	P	P-2		IC513		F-4		✱Q403		P-5				
	✱D401		P-4		IC514		H-1		✱Q404		M-4				
	✱D402		N-4		IC515		G-2		✱Q405		R-4				
	✱D403		M-4		IC516		F-1		✱Q406		R-5				
	✱D404		M-4		IC517		G-1		✱Q407		N-4				
	✱D502		K-2		IC518		F-3		✱Q500		F-2				
	✱D503		K-2		IC519		E-2		✱Q501		F-1				
	✱D504		G-1		IC520		D-2		✱Q502		E-1				
	✱D505		G-1		IC521		G-1		✱Q503		D-1				
△	✱D506		M-5		IC522		G-2		✱Q700		C-5				
○	✱D506	P	M-5		IC523		F-4		✱Q701		C-4				
○	✱D506	N	L-5		IC524		E-3		✱Q702		A-2				
	✱D701		A-2		IC525		E-3		✱Q703		C-1				
	✱D702		C-2		IC526		D-3		✱Q704		C-2				
	✱D703		C-2		IC527		D-3		✱Q705		C-2				
					IC528		H-3		✱Q706		C-2				
	E200		N-3		IC529	N	F-2		✱Q707		C-5				
	E300		M-1		IC530	N	G-2		✱Q708		B-5				
	E400		R-5		IC531	N	G-2		✱Q709		D-5				
	E500		D-1		IC532	N	G-2		✱Q710		D-5				
	E501		J-3		IC533	N	G-1		✱Q711		D-5				
	E700		E-4		IC534	N	G-1								
	E701		B-2		IC700		A-2		RV100		R-3				
					IC701		A-1		RV200		R-3				
	FL500		F-2		IC702		A-2		RV300		M-1				
	FL501		E-1		IC703		C-4		RV301		N-1				
	FL502		D-1		IC704		A-2		RV400		P-1				
					IC705		A-3		RV401		P-5				
	IC1		M-2		IC706		D-4		RV500		F-1				
	IC2		M-3		IC707		E-5		RV501		F-1				
	IC3		L-1		IC708		F-5		RV502		D-1				
	IC4		L-4		IC709		A-3		RV700		A-1				
	IC5		E-6		IC710		E-5		RV701		B-1				
	IC6		L-1		IC711		D-3		RV702		B-1				
	IC7		L-5		IC712		C-3		RV703		B-1				
	IC100		P-3		IC713		C-3								
	IC101		P-3		IC714		A-4		S500		J-1				
	IC102		M-3		IC715		D-2								
	IC103		M-2		IC716		A-3		TH400		R-5				
	IC200		P-3		IC717		A-5	○	✱TH701	P	A-1				
	IC203		M-3		IC718		B-2								
	IC300		P-1		IC719		B-2		TP100		R-3				
	IC301		P-2		IC720		B-3		TP101		N-3				
	IC302		R-1		IC721		B-2		TP200		R-3				
	IC303		M-1		IC722		B-4		TP201		N-3				
	IC304		M-2		IC723		C-5		TP300		R-1				
	IC305		N-2		IC724		B-5		TP301		P-2				
	IC306		M-2		IC725		D-5		TP303		P-2				
	IC307		R-2		IC726		F-4		TP400		M-5				
	IC308		R-2		IC727	N	E-4		TP401		N-4				
	IC309	P	R-2	○	IC728		B-3		TP402		N-4				
○	IC310		N-2						TP500		E-1				
	IC400		R-5		LV300		R-2		TP501		E-1				
	IC401		N-5		LV400		M-4		TP502		D-1				
	IC402		R-5						TP700		C-5				
	IC403		R-5		✱Q100		R-3		TP701		C-4				

✱ : B SIDE
N : UVW-1800/1600 ONLY
P : UVW-1800P/1600P ONLY
△ : 1-648-901-11 ONLY
○ : 1-648-901-12 ONLY

For J,UC

① TP701 PB

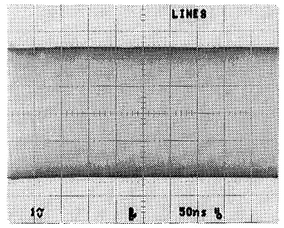

② TP703 PB

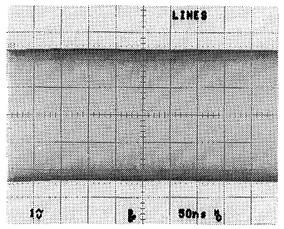

For EK

① TP701 PB

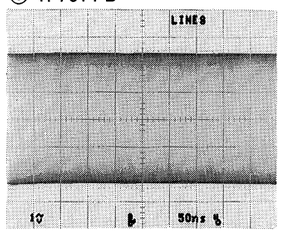

② TP703 PB

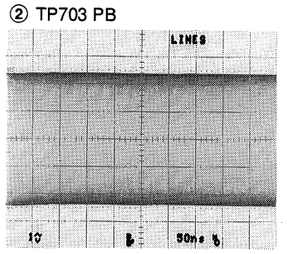

 TBC-25/25P (2/4)

UVW-1800 (J) ;Serial No.10001 through 10900
UVW-1800 (UC);Serial No.10001 through 13930
UVW-1800P(EK);Serial No.10001 through 14140
UVW-1600 (J) ;Serial No.10001 through 10600
UVW-1600 (UC);Serial No.10001 through 12900
UVW-1600P(EK);Serial No.10001 through 13780

TBC-25/25P(2/4);SYNC PROCESS,TBC MPU

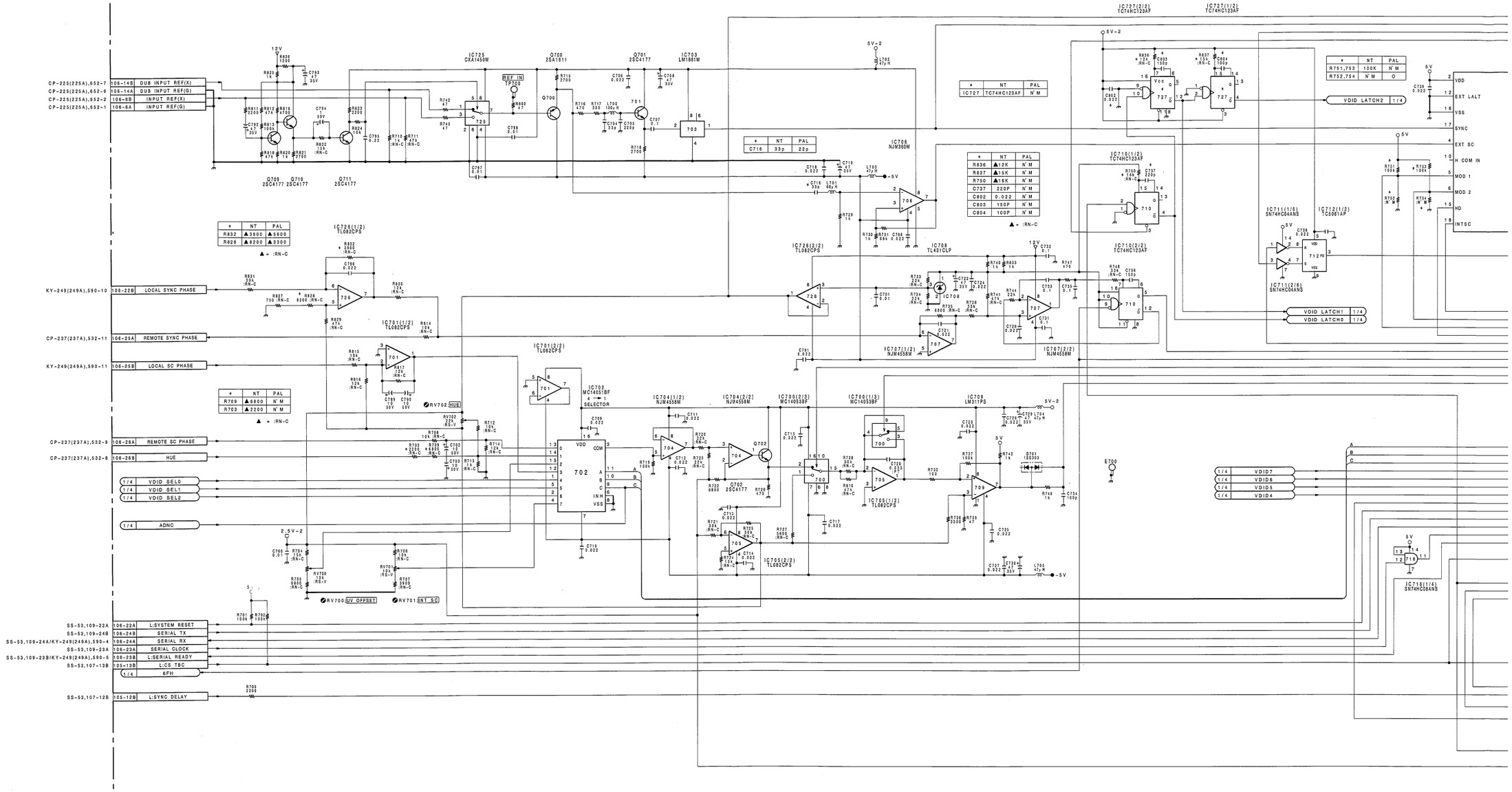

 16-97 (a1)

A B C D E F G H

 TBC-25/25P (2/4)

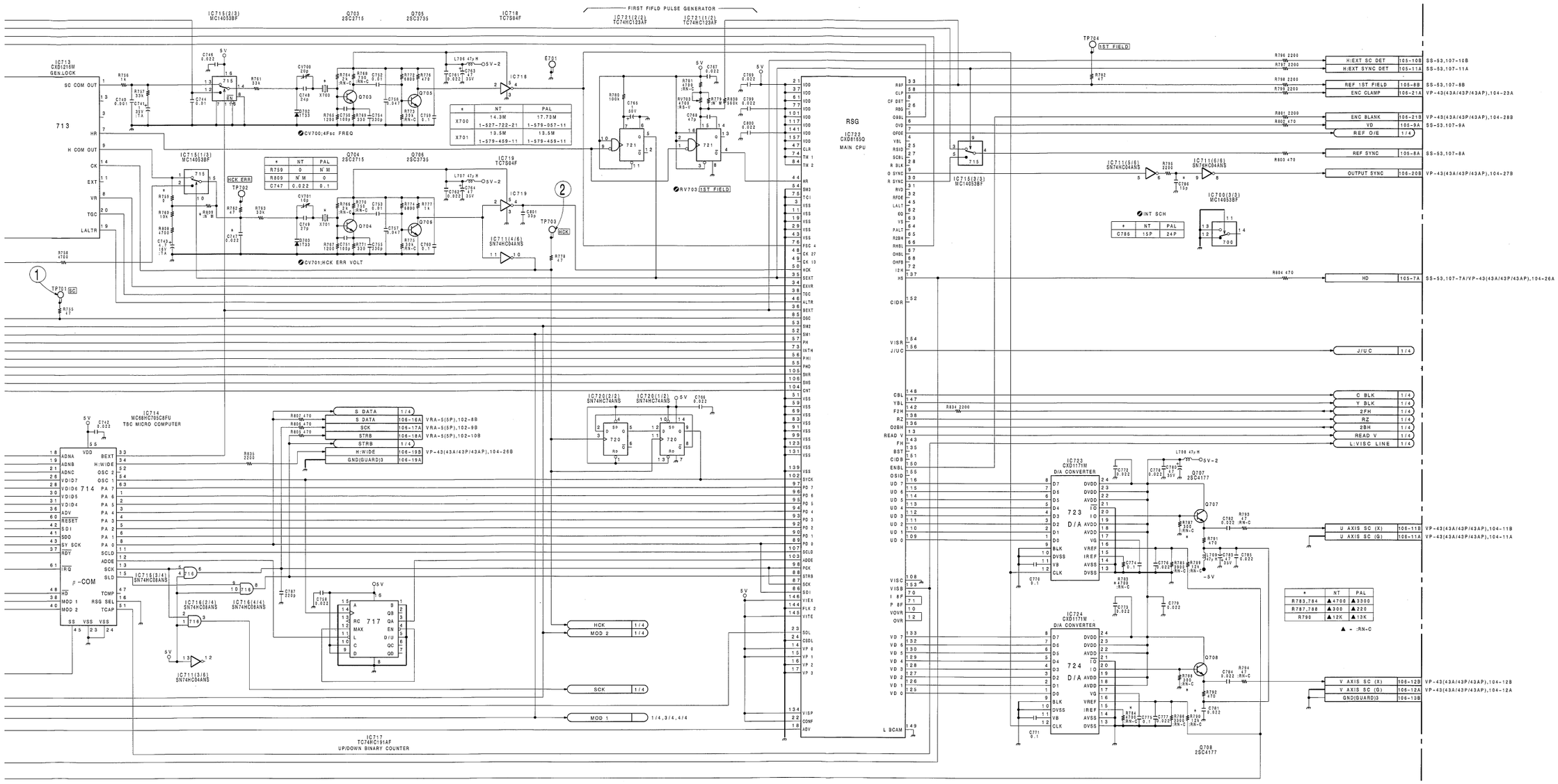

TBC-25/25P BOARD (2/4)

BOARD NO.1-648-901-11
UVW-1800 (J) ;#10001-10900
UVW-1800 (UC);#10001-13930
UVW-1800P(EK);#10001-14140
UVW-1600 (J) ;#10001-10600
UVW-1600 (UC);#10001-12900
UVW-1600P(EK);#10001-13780

16-97 (a2)

TBC-25 (1-648-901-11, 12)

	CN1	E-1		IC404		R-4	✱Q101		R-3	TP702	C-1
	CN2	C-6		IC405		R-4	✱Q102		P-3	TP703	C-3
	CN105	N-6		IC406		M-5	✱Q103		P-3	TP704	C-1
	CN106	C-6		IC407		N-4	✱Q104		R-3		
				IC408		M-4	✱Q200		R-3	X700	C-2
	CV700	C-2	○	IC409	N	N-5	✱Q201		R-3	X701	C-2
	CV701	C-2		IC501		L-2	✱Q202		P-3		
				IC502		L-4	✱Q203		P-3		
	✱D1	M-2		IC503		J-2	✱Q300		P-1		
	✱D2	M-3		IC504		J-4	✱Q301		P-1		
	✱D100	M-3		IC505		H-2	✱Q302		P-1		
	✱D101	N-3		IC506		H-3	✱Q303		P-1		
	✱D102	R-3		IC507		G-6	✱Q304		N-2		
	✱D200	M-3		IC508		H-4	✱Q305		N-2		
	✱D301	N-2		IC509		G-3	✱Q306		R-2		
	✱D302	R-2		IC510		F-6	✱Q400		P-5		
	✱D303	R-2		IC511		H-1	✱Q401		P-5		
	✱D304	R-2		IC512		F-3	✱Q402		R-5		
	✱D305	P	P-2	IC513		F-4	✱Q403		P-5		
	✱D401		P-4	IC514		H-1	✱Q404		M-4		
	✱D402		N-4	IC515		G-2	✱Q405		R-4		
	✱D403		M-4	IC516		F-1	✱Q406		R-5		
	✱D404		M-4	IC517		G-1	✱Q407		N-4		
	✱D502		K-2	IC518		F-3	✱Q500		F-2		
	✱D503		K-2	IC519		E-2	✱Q501		F-1		
	✱D504		G-1	IC520		D-2	✱Q502		E-1		
	✱D505		G-1	IC521		G-1	✱Q503		D-1		
△	✱D506		M-5	IC522		G-2	✱Q700		C-5		
○	✱D506	P	M-5	IC523		F-4	✱Q701		C-4		
○	✱D506	N	L-5	IC524		E-3	✱Q702		A-2		
	✱D701		A-2	IC525		E-3	✱Q703		C-1		
	✱D702		C-2	IC526		D-3	✱Q704		C-2		
	✱D703		C-2	IC527		D-3	✱Q705		C-2		
				IC528		H-3	✱Q706		C-2		
	E200		N-3	IC529	N	F-2	✱Q707		C-5		
	E300		M-1	IC530	N	G-2	✱Q708		B-5		
	E400		R-5	IC531	N	G-2	✱Q709		D-5		
	E500		D-1	IC532	N	G-2	✱Q710		D-5		
	E501		J-3	IC533	N	G-1	✱Q711		D-5		
	E700		E-4	IC534	N	G-1					
	E701		B-2	IC700		A-2	RV100		R-3		
				IC701		A-1	RV200		R-3		
	FL500		F-2	IC702		A-2	RV300		M-1		
	FL501		E-1	IC703		C-4	RV301		N-1		
	FL502		D-1	IC704		A-2	RV400		P-1		
				IC705		A-3	RV401		P-5		
	IC1		M-2	IC706		D-4	RV500		F-1		
	IC2		M-3	IC707		E-5	RV501		F-1		
	IC3		L-1	IC708		F-5	RV502		D-1		
	IC4		L-4	IC709		A-3	RV700		A-1		
	IC5		E-6	IC710		E-5	RV701		B-1		
	IC6		L-1	IC711		D-3	RV702		B-1		
	IC7		L-5	IC712		C-3	RV703		B-1		
	IC100		P-3	IC713		C-3					
	IC101		P-3	IC714		A-4	S500		J-1		
	IC102		M-3	IC715		D-2					
	IC103		M-2	IC716		A-3	TH400		R-5		
	IC200		P-3	IC717		A-5	○✱TH701	P	A-1		
	IC203		M-3	IC718		B-2					
	IC300		P-1	IC719		B-2	TP100		R-3		
	IC301		P-2	IC720		B-3	TP101		N-3		
	IC302		R-1	IC721		B-2	TP200		R-3		
	IC303		M-1	IC722		B-4	TP201		N-3		
	IC304		M-2	IC723		C-5	TP300		R-1		
	IC305		N-2	IC724		B-5	TP301		P-2		
	IC306		M-2	IC725		D-5	TP303		P-2		
	IC307		R-2	IC726		F-4	TP400		M-5		
	IC308		R-2	IC727	N	E-4	TP401		N-4		
	IC309	P	R-2	○ IC728		B-3	TP402		N-4		
○	IC310		N-2				TP500		E-1		
	IC400		R-5	LV300		R-2	TP501		E-1		
	IC401		N-5	LV400		M-4	TP502		D-1		
	IC402		R-5				TP700		C-5		
	IC403		R-5	✱Q100		R-3	TP701		C-4		

✱ : B SIDE
N : UVW-1800/1600 ONLY
P : UVW-1800P/1600P ONLY
△ : 1-648-901-11 ONLY
○ : 1-648-901-12 ONLY

For J,UC

① TP303 PB

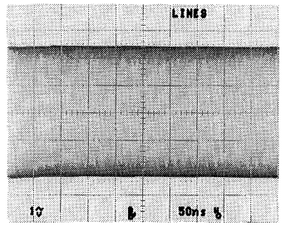

For EK

① TP303 PB

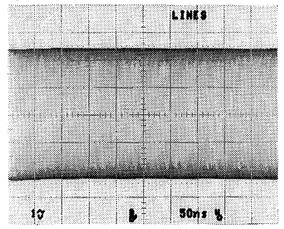

UVW-1800 (J) ;Serial No.10001 through 10900
UVW-1800 (UC);Serial No.10001 through 13930
UVW-1800P(EK);Serial No.10001 through 14140
UVW-1600 (J) ;Serial No.10001 through 10600
UVW-1600 (UC);Serial No.10001 through 12900
UVW-1600P(EK);Serial No.10001 through 13780

TBC-25/25P(3/4);Y WRITE CLOCK

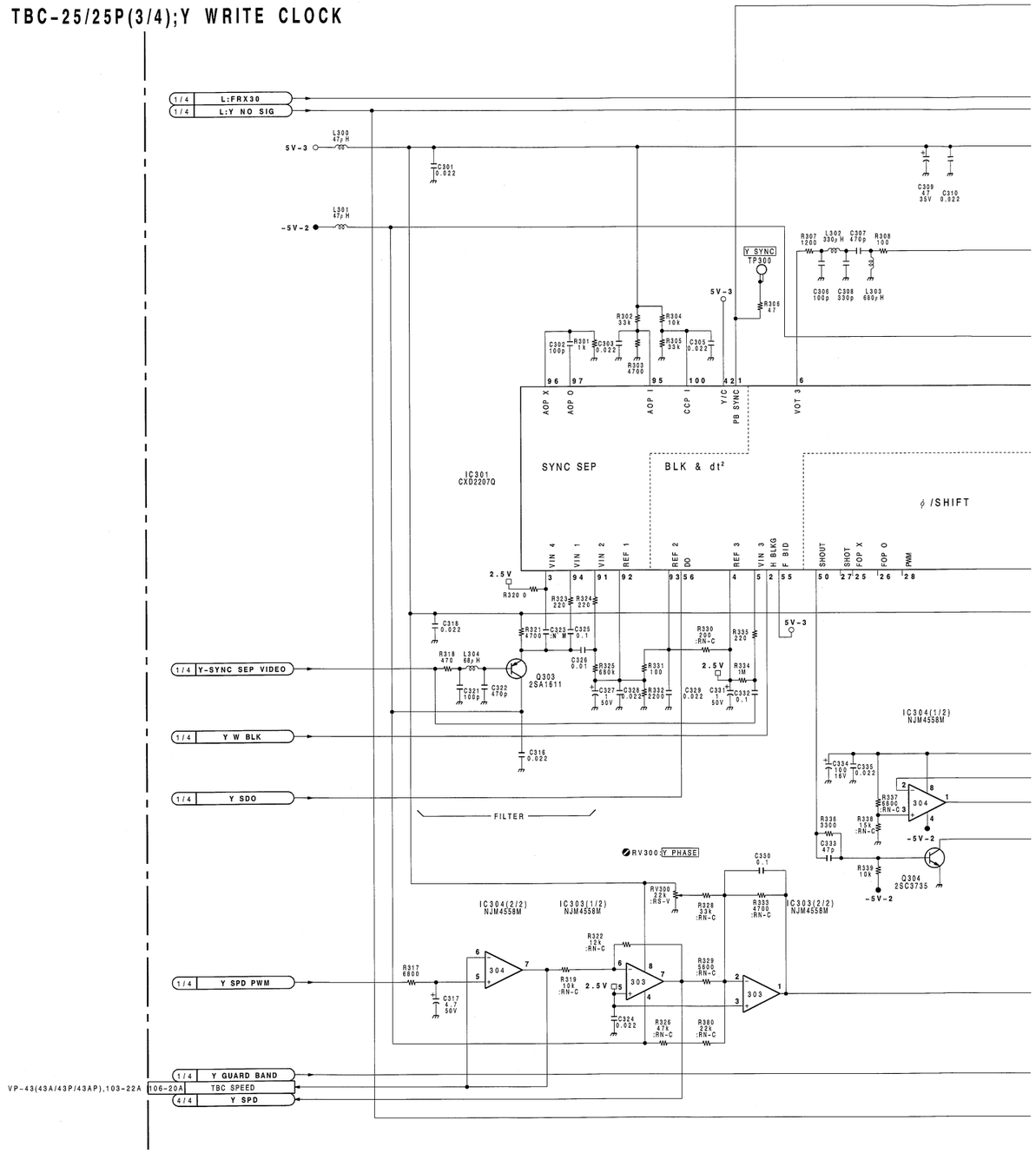

 TBC-25/25P (3/4)

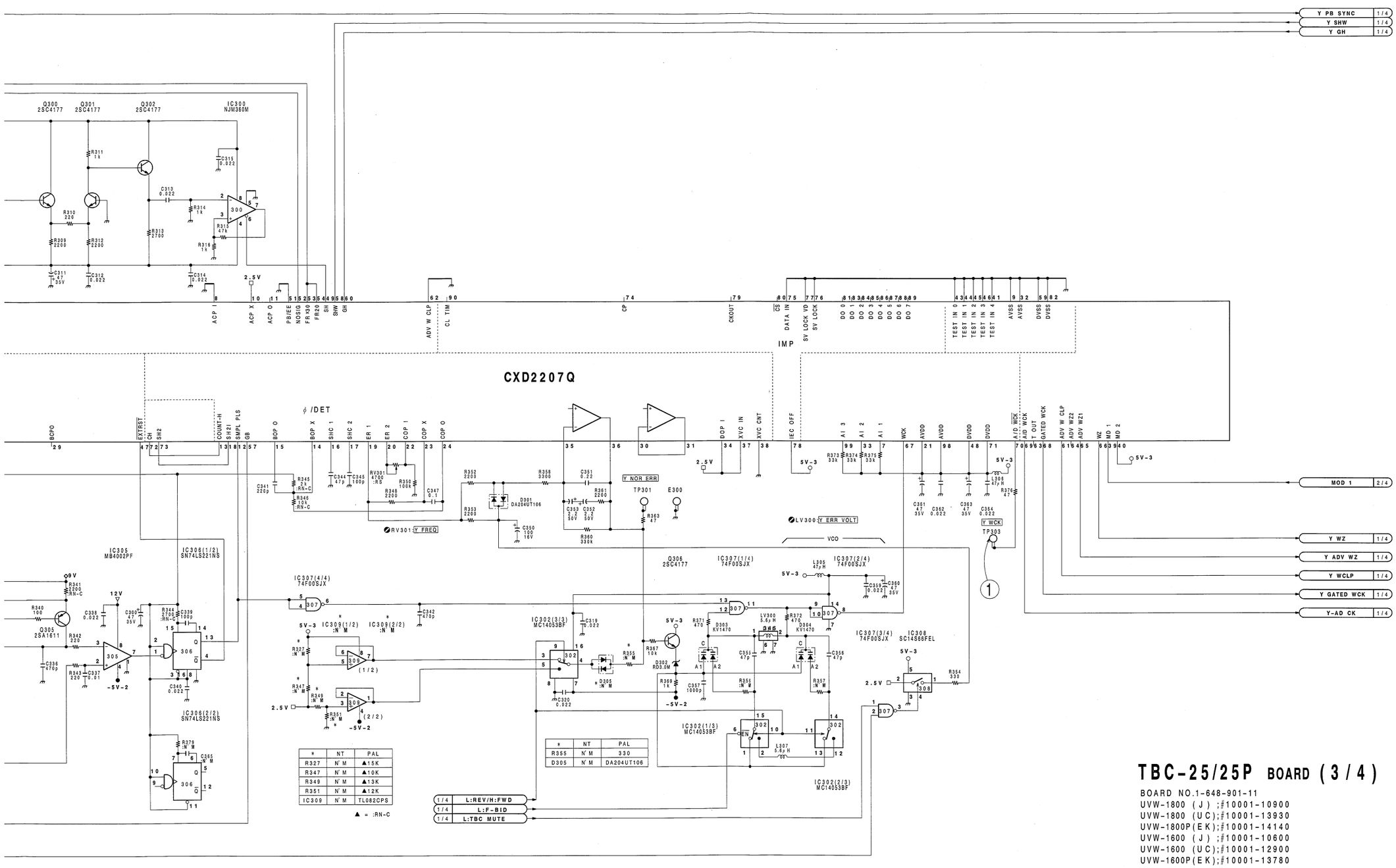

*	NT	PAL
R327	N'M	▲15K
R347	N'M	▲10K
R349	N'M	▲13K
R351	N'M	▲12K
IC309	N'M	TL082CPS

▲ = :RN-C

*	NT	PAL
R355	N'M	330
D305	N'M	DA204UT106

TBC-25 (1-648-901-11, 12)

	CN1	E-1		IC404		R-4	✱Q101		R-3	TP702	C-1
	CN2	C-6		IC405		R-4	✱Q102		P-3	TP703	C-3
	CN105	N-6		IC406		M-5	✱Q103		P-3	TP704	C-1
	CN106	C-6		IC407		N-4	✱Q104		R-3		
				IC408		M-4	✱Q200		R-3	X700	C-2
	CV700	C-2	○	IC409	N	N-5	✱Q201		R-3	X701	C-2
	CV701	C-2		IC501		L-2	✱Q202		P-3		
				IC502		L-4	✱Q203		P-3		
	✱D1	M-2		IC503		J-2	✱Q300		P-1		
	✱D2	M-3		IC504		J-4	✱Q301		P-1		
	✱D100	M-3		IC505		H-2	✱Q302		P-1		
	✱D101	N-3		IC506		H-3	✱Q303		P-1		
	✱D102	R-3		IC507		G-6	✱Q304		N-2		
	✱D200	M-3		IC508		H-4	✱Q305		N-2		
	✱D301	N-2		IC509		G-3	✱Q306		R-2		
	✱D302	R-2		IC510		F-6	✱Q400		P-5		
	✱D303	R-2		IC511		H-1	✱Q401		P-5		
	✱D304	R-2		IC512		F-3	✱Q402		R-5		
	✱D305	P	P-2	IC513		F-4	✱Q403		P-5		
	✱D401		P-4	IC514		H-1	✱Q404		M-4		
	✱D402		N-4	IC515		G-2	✱Q405		R-4		
	✱D403		M-4	IC516		F-1	✱Q406		R-5		
	✱D404		M-4	IC517		G-1	✱Q407		N-4		
	✱D502		K-2	IC518		F-3	✱Q500		F-2		
	✱D503		K-2	IC519		E-2	✱Q501		F-1		
	✱D504		G-1	IC520		D-2	✱Q502		E-1		
	✱D505		G-1	IC521		G-1	✱Q503		D-1		
△	✱D506		M-5	IC522		G-2	✱Q700		C-5		
○	✱D506	P	M-5	IC523		F-4	✱Q701		C-4		
○	✱D506	N	L-5	IC524		E-3	✱Q702		A-2		
	✱D701		A-2	IC525		E-3	✱Q703		C-1		
	✱D702		C-2	IC526		D-3	✱Q704		C-2		
	✱D703		C-2	IC527		D-3	✱Q705		C-2		
				IC528		H-3	✱Q706		C-2		
	E200		N-3	IC529	N	F-2	✱Q707		C-5		
	E300		M-1	IC530	N	G-2	✱Q708		B-5		
	E400		R-5	IC531	N	G-2	✱Q709		D-5		
	E500		D-1	IC532	N	G-2	✱Q710		D-5		
	E501		J-3	IC533	N	G-1	✱Q711		D-5		
	E700		E-4	IC534	N	G-1					
	E701		B-2	IC700		A-2	RV100		R-3		
				IC701		A-1	RV200		R-3		
	FL500		F-2	IC702		A-2	RV300		M-1		
	FL501		E-1	IC703		C-4	RV301		N-1		
	FL502		D-1	IC704		A-2	RV400		P-1		
				IC705		A-3	RV401		P-5		
	IC1		M-2	IC706		D-4	RV500		F-1		
	IC2		M-3	IC707		E-5	RV501		F-1		
	IC3		L-1	IC708		F-5	RV502		D-1		
	IC4		L-4	IC709		A-3	RV700		A-1		
	IC5		E-6	IC710		E-5	RV701		B-1		
	IC6		L-1	IC711		D-3	RV702		B-1		
	IC7		L-5	IC712		C-3	RV703		B-1		
	IC100		P-3	IC713		C-3					
	IC101		P-3	IC714		A-4	S500		J-1		
	IC102		M-3	IC715		D-2					
	IC103		M-2	IC716		A-3	TH400		R-5		
	IC200		P-3	IC717		A-5	○✱TH701	P	A-1		
	IC203		M-3	IC718		B-2					
	IC300		P-1	IC719		B-2	TP100		R-3		
	IC301		P-2	IC720		B-3	TP101		N-3		
	IC302		R-1	IC721		B-2	TP200		R-3		
	IC303		M-1	IC722		B-4	TP201		N-3		
	IC304		M-2	IC723		C-5	TP300		R-1		
	IC305		N-2	IC724		B-5	TP301		P-2		
	IC306		M-2	IC725		D-5	TP303		P-2		
	IC307		R-2	IC726		F-4	TP400		M-5		
	IC308		R-2	IC727	N	E-4	TP401		N-4		
	IC309	P	R-2	○ IC728		B-3	TP402		N-4		
○	IC310		N-2				TP500		E-1		
	IC400		R-5	LV300		R-2	TP501		E-1		
	IC401		N-5	LV400		M-4	TP502		D-1		
	IC402		R-5				TP700		C-5		
	IC403		R-5	✱Q100		R-3	TP701		C-4		

✱ : B SIDE
N : UVW-1800/1600 ONLY
P : UVW-1800P/1600P ONLY
△ : 1-648-901-11 ONLY
○ : 1-648-901-12 ONLY

For J,UC

① TP402 PB

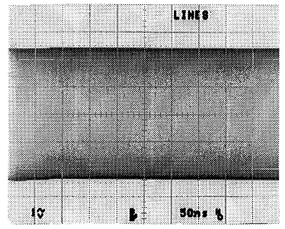

For EK

① TP402 PB

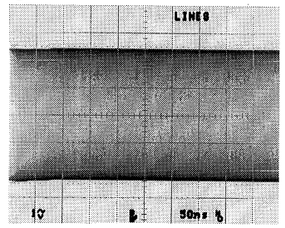

UVW-1800 (J) ;Serial No.10001 through 10900
UVW-1800 (UC);Serial No.10001 through 13930
UVW-1800P(EK);Serial No.10001 through 14140
UVW-1600 (J) ;Serial No.10001 through 10600
UVW-1600 (UC);Serial No.10001 through 12900
UVW-1600P(EK);Serial No.10001 through 13780

TBC-25/25P(4/4);C WRITE CLOCK

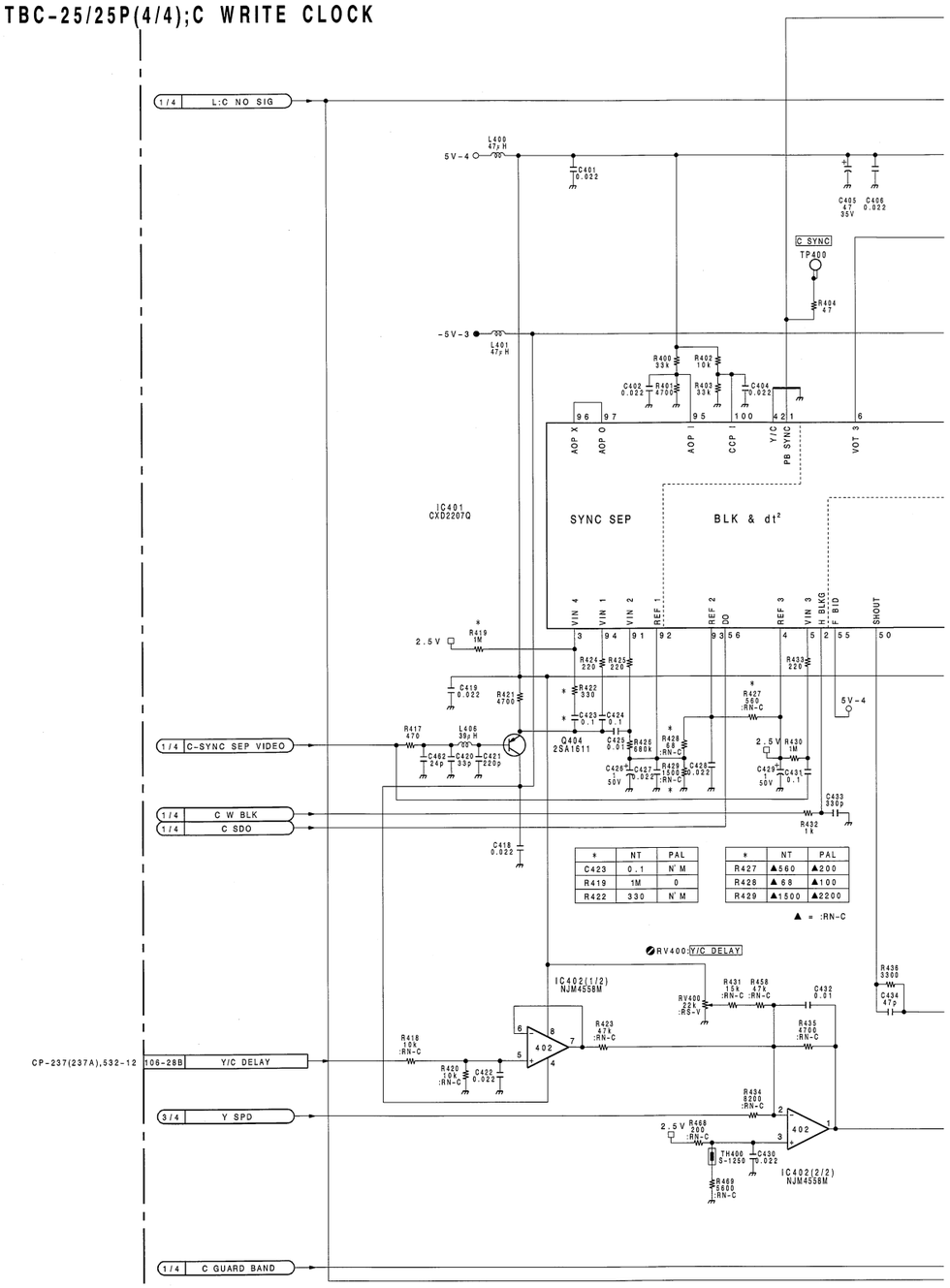

*	NT	PAL
C423	0.1	N'M
R419	1M	0
R422	330	N'M

*	NT	PAL
R427	▲560	▲200
R428	▲68	▲100
R429	▲1500	▲2200

▲ = :RN-C

 TBC-25/25P (4/4)

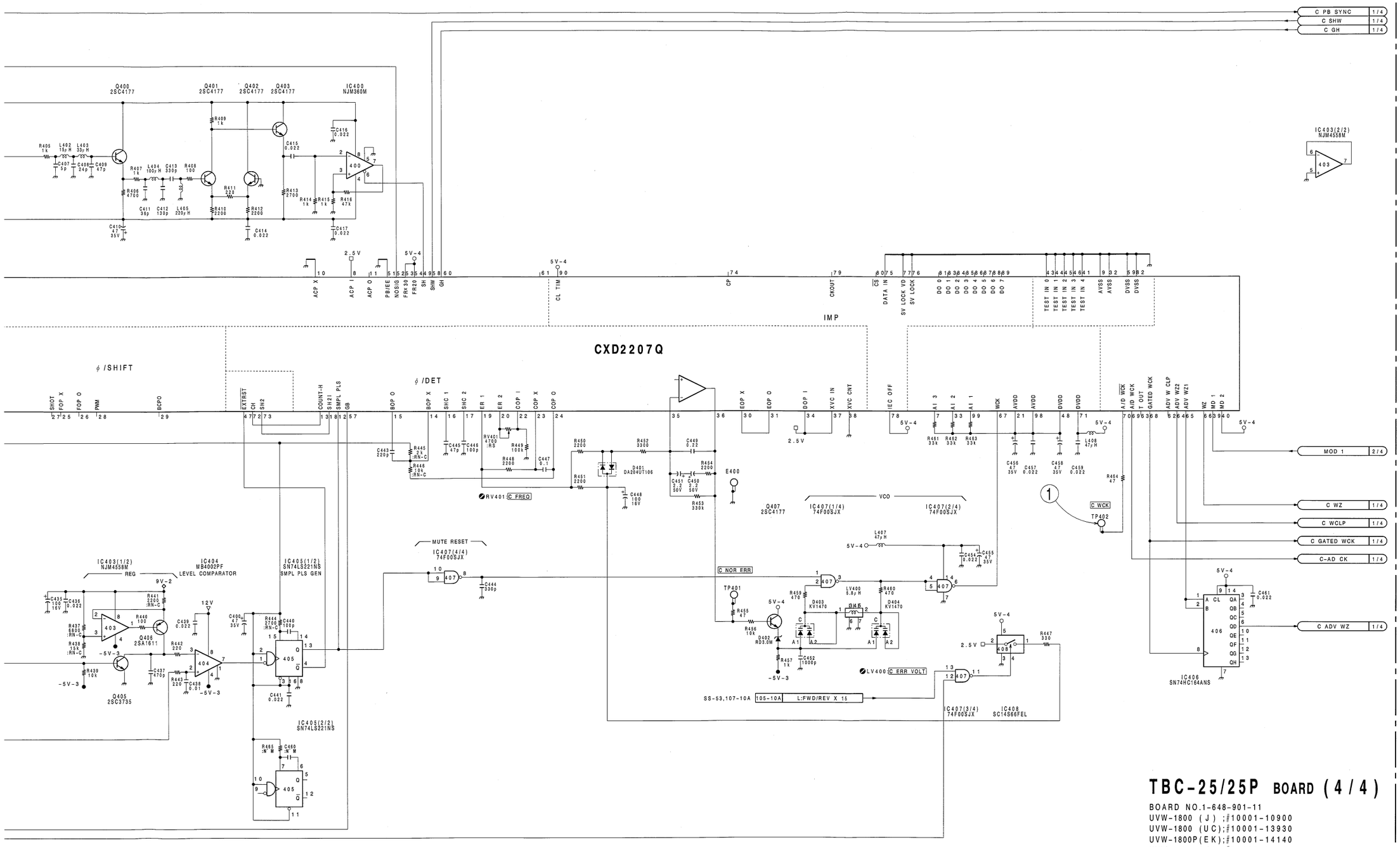

TBC-25/25P BOARD (4/4)

BOARD NO.1-648-901-11
UVW-1800 (J) ;#10001-10900
UVW-1800 (UC);#10001-13930
UVW-1800P(EK);#10001-14140
UVW-1600 (J) ;#10001-10600
UVW-1600 (UC);#10001-12900
UVW-1600P(EK);#10001-13780

VP-43/43A(1-648-899-11, 12)

CN103	N-6	IC702	F-1	Q508	B-1	RV701	E-1
CN104	C-6	IC703	R-4	✱Q509	A-4	RV702	E-1
CN105	R-5	IC704	R-4	✱Q510	A-4	RV703	E-1
		IC705	R-4	✱Q511	A-4	RV704	G-1
DL101	N-4			✱Q512	A-4		
DL301	J-4	✱Q101	N-5	✱Q513	B-2	TH201	P-2
		✱Q102	N-4	Q514	B-3	TH401	J-2
✱D201	N-2	✱Q103	N-5	✱Q515	B-2		
✱D401	J-2	✱Q104	N-4	✱Q516	B-2	◎ TH601	D-2
✱D501	A-2	✱Q105	N-4	Q517	B-3	● ✱TH601	D-1
✱D502	B-2	✱Q106	N-3	✱Q601	F-5		
✱D503	B-3	✱Q107	N-3	✱Q602	F-5	TP101	L-2
✱D504	B-4	✱Q108	N-4	Q603	E-5	TP102	P-1
✱D601	D-2	✱Q109	N-4	Q604	F-5	TP103	L-1
△ ✱D602	E-2	✱Q110	P-4	Q605	F-5	TP104	P-3
✱D701	R-4	✱Q111	P-5	Q606	F-5	TP201	P-1
		✱Q112	P-5	Q607	E-5	TP301	H-1
E101	P-6	✱Q201	M-2	Q608	F-5	TP302	J-3
E102	N-1	✱Q202	N-1	Q609	E-4	TP401	L-1
E201	R-1	✱Q203	P-2	Q610	F-4		
E301	K-5	✱Q204	N-2	Q611	F-5		
E401	G-2	✱Q205	P-2	Q612	F-5		
E501	B-2	✱Q206	P-2	✱Q613	D-4		
E502	B-6	✱Q207	N-2	✱Q614	D-3		
E601	E-4	✱Q208	N-1	✱Q615	D-3		
E602	D-1	✱Q209	N-1	✱Q616	C-3		
E701	F-2	✱Q210	N-1	✱Q617	C-3		
		✱Q211	P-2	✱Q618	F-2		
FL201	M-1	✱Q212	P-1	✱Q619	F-2		
FL401	H-1	✱Q213	R-2	✱Q620	F-3		
FL601	E-2	✱Q214	R-2	✱Q621	F-3		
		✱Q215	P-1	✱Q622	E-3		
IC101	P-4	✱Q216	N-2	✱Q623	D-3		
IC102	M-5	✱Q217	M-2	✱Q624	D-1		
IC103	N-5	✱Q218	M-2	✱Q625	E-4		
IC104	L-5	✱Q219	M-2	✱Q626	D-4		
IC201	L-3	✱Q220	M-2	✱Q627	D-1		
IC202	M-2	✱Q301	J-4	✱Q628	D-1		
IC203	M-1	✱Q302	J-4	✱Q701	E-2		
IC204	P-1	✱Q303	H-4	✱Q702	F-2		
IC205	L-2	✱Q304	H-5	✱Q703	E-2		
IC301	K-4	✱Q305	H-4	✱Q704	F-2		
IC302	G-5	✱Q306	H-3	✱Q705	E-2		
IC303	H-5	✱Q307	J-3	✱Q706	F-2		
IC401	H-2	✱Q308	J-4	✱Q707	E-1		
IC402	H-1	✱Q309	J-4	✱Q708	F-1		
IC403	K-1	✱Q310	K-3	✱Q709	F-2		
IC404	G-2	✱Q311	K-5	✱Q710	F-1		
IC501	A-5	✱Q401	H-2	✱Q711	F-2		
IC502	A-2	✱Q402	J-1	✱Q712	F-2		
IC503	A-2	✱Q403	J-1	✱Q713	F-1		
IC504	B-2	✱Q404	J-2	✱Q714	E-1		
IC505	B-2	✱Q405	J-1				
IC506	A-3	✱Q406	J-1	RV101	L-1		
IC507	B-5	✱Q407	J-1	RV102	K-1		
IC508	C-4	✱Q408	J-1	RV103	P-4		
IC509	B-5	✱Q409	J-2	RV201	M-3		
IC510	B-4	✱Q410	J-1	RV301	J-1		
IC511	J-6	✱Q411	J-2	RV302	H-1		
IC512	G-6	✱Q412	J-2	RV303	K-4		
IC601	D-4	✱Q413	K-2	RV401	H-3		
IC602	D-4	✱Q414	K-2	RV501	A-4		
IC603	F-4	✱Q415	K-2	RV502	A-4		
IC604	F-3	✱Q416	J-2	RV503	B-4		
IC605	F-3	✱Q417	H-2	RV504	B-4		
IC606	E-3	✱Q418	H-2	RV505	B-4		
IC607	F-3	✱Q501	A-1	RV506	B-4		
IC608	D-2	Q502	A-1	RV601	D-1		
IC609	E-2	Q503	A-1	RV602	F-1		
IC610	D-2	Q504	A-1	RV603	D-1		
IC611	D-2	✱Q505	A-5	RV604	D-1		
IC612	C-2	✱Q506	A-4	RV605	F-1		
IC701	F-1	Q507	B-1	RV606	C-1		

✱ : B SIDE
___ : UVW-1800/1800P ONLY
N̄ : UVW-1800/1600 ONLY
△ : 1-648-899-11 ONLY
◎ : UVW-1800 (1-648-899-12) ONLY
● : UVW-1800P/1600/1600P (1-648-899-12) ONLY

UVW-1800 (J) ;Serial No.10901 and higher
UVW-1800 (UC);Serial No.13931 and higher
UVW-1800P(EK);Serial No.14141 and higher
UVW-1600 (J) ;Serial No.10601 and higher
UVW-1600 (UC);Serial No.12901 and higher
UVW-1600P(EK);Serial No.13781 and higher

VP-43/43A/43P/43AP(1/7) ;Y RF AGC/EQ,Y DO DET.

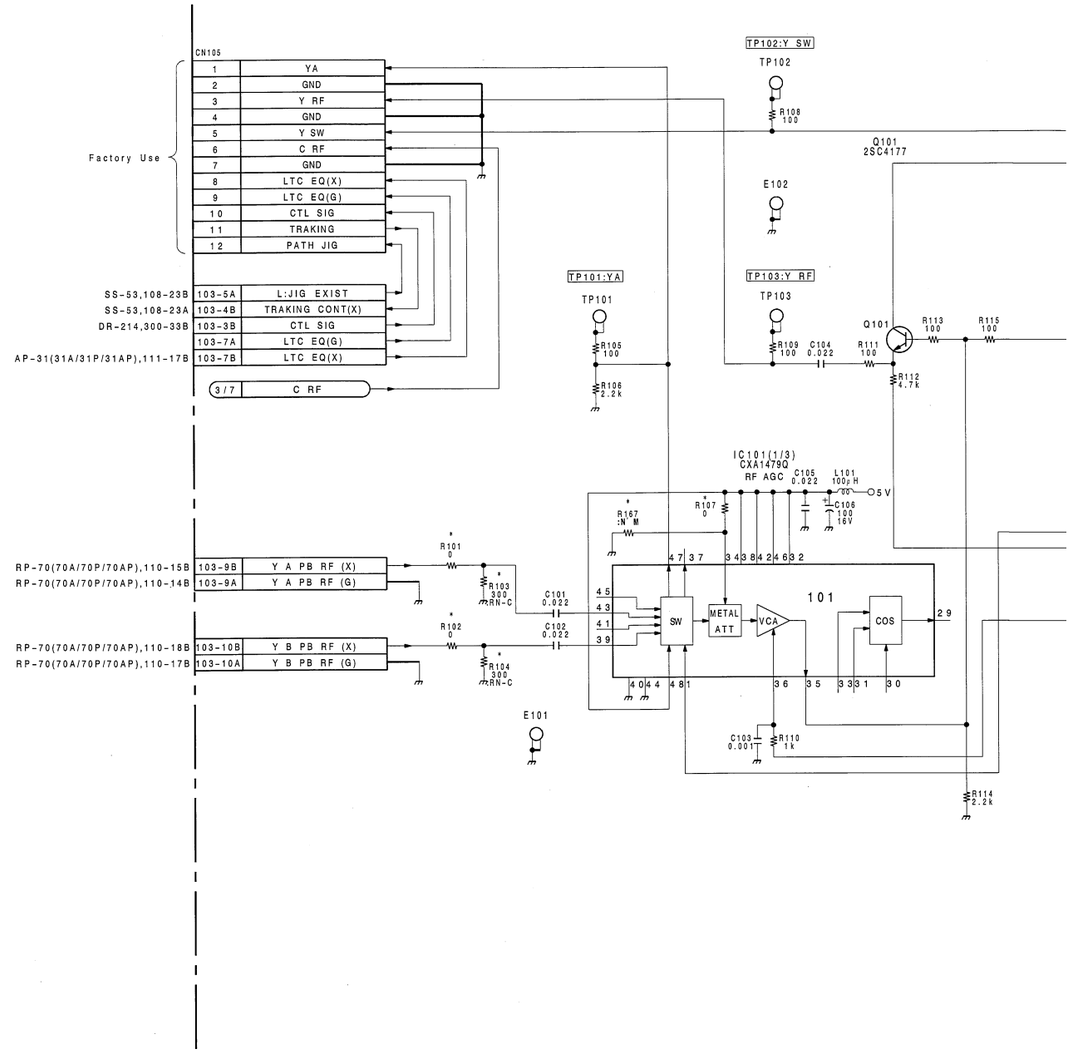

 VP-43/43A/43P/43AP (1/7)

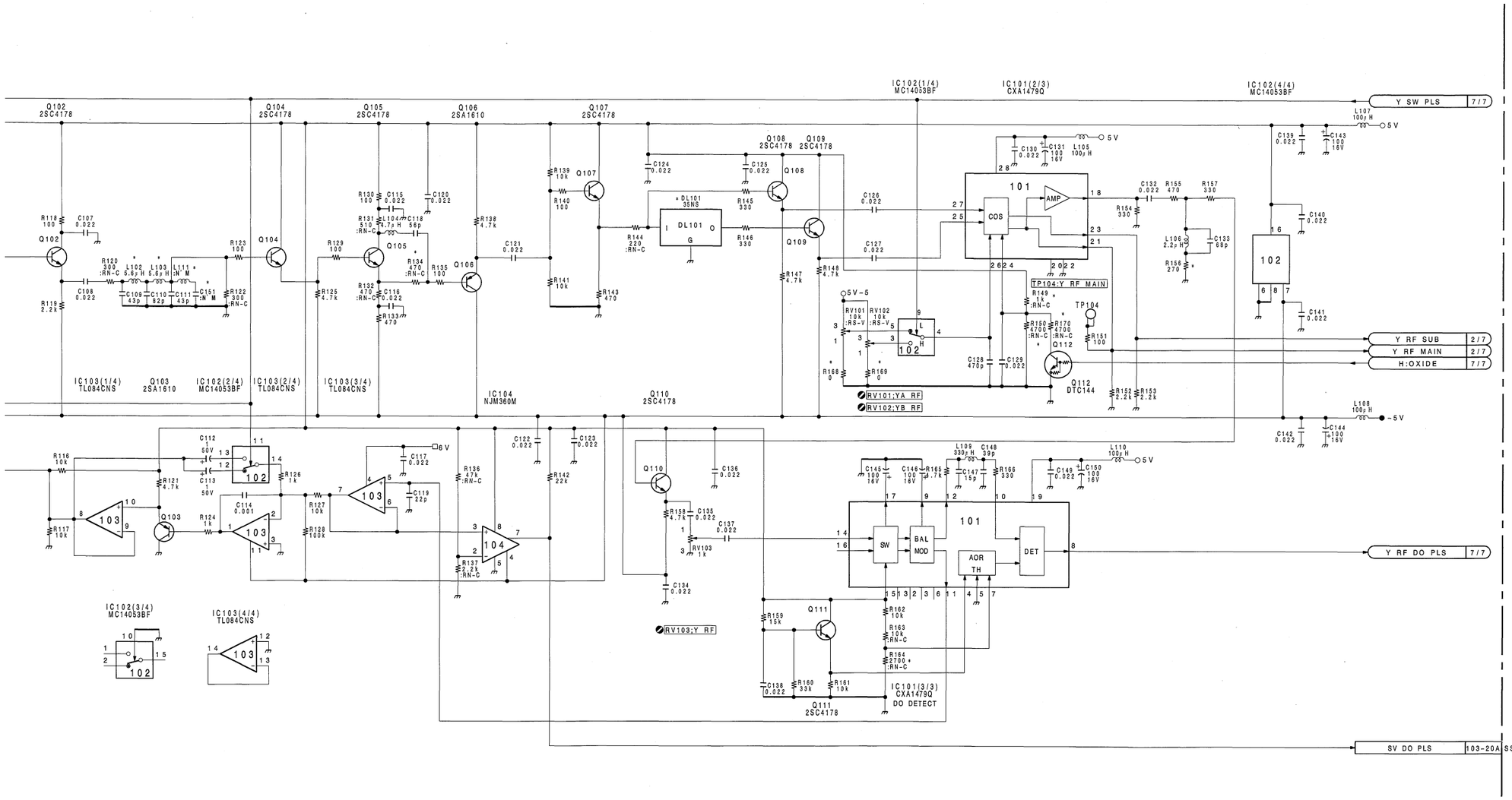

*

REF NO.	UVW-1800		UVW-1600	
	J,UC	EK	J,UC	EK
R101	0	0	▲100	▲82
R102	0	0	▲100	▲82
R103	▲300	▲300	▲200	▲220
R104	▲300	▲300	▲200	▲220
R150	▲4700	▲6800	▲6800	▲5600
R170	▲4700	10K	▲3300	10K

*

REF NO.	J,UC	EK
R107	0	N'M
R134	▲470	▲560
R149	▲1000	▲1500
R156	270	270
R164	▲2700	▲2200
R167	N'M	0
R168	0	10K
R169	0	10K
L102	5.6UH	4.7UH
L103	5.6UH	4.7UH
L111	N'M	4.7UH
C151	N'M	12P

*

REF NO.	J,UC	EK
DL101	35ns 1-415-154-31	25ns 1-415-674-11

▲ = :RN-C

VP-43/43A
VP-43P/43AP BOARD (1/7)

BOARD NO.1-648-899-12
UVW-1800 (J) ;#10901-
UVW-1800 (UC);#13931-
UVW-1800P(EK);#14141-
UVW-1600 (J) ;#10601-
UVW-1600 (UC);#12901-
UVW-1600P(EK);#13781-

16-109 (b2)

I J K L M N O P

VP-43/43A(1-648-899-11, 12)

CN103	N-6	IC702	F-1	Q508	B-1	RV701	E-1
CN104	C-6	IC703	R-4	✱Q509	A-4	RV702	E-1
CN105	R-5	IC704	R-4	✱Q510	A-4	RV703	E-1
		IC705	R-4	✱Q511	A-4	RV704	G-1
DL101	N-4			✱Q512	A-4		
DL301	J-4	✱Q101	N-5	✱Q513	B-2	TH201	P-2
		✱Q102	N-4	Q514	B-3	TH401	J-2
✱D201	N-2	✱Q103	N-5	✱Q515	B-2		
✱D401	J-2	✱Q104	N-4	✱Q516	B-2	◎ TH601	D-2
✱D501	A-2	✱Q105	N-4	Q517	B-3	● ✱TH601	D-1
✱D502	B-2	✱Q106	N-3	✱Q601	F-5		
✱D503	B-3	✱Q107	N-3	✱Q602	F-5	TP101	L-2
✱D504	B-4	✱Q108	N-4	Q603	E-5	TP102	P-1
✱D601	D-2	✱Q109	N-4	Q604	F-5	TP103	L-1
△ ✱D602	E-2	✱Q110	P-4	Q605	F-5	TP104	P-3
✱D701	R-4	✱Q111	P-5	Q606	F-5	TP201	P-1
		✱Q112	P-5	Q607	E-5	TP301	H-1
E101	P-6	✱Q201	M-2	Q608	F-5	TP302	J-3
E102	N-1	✱Q202	N-1	Q609	E-4	TP401	L-1
E201	R-1	✱Q203	P-2	Q610	F-4		
E301	K-5	✱Q204	N-2	Q611	F-5		
E401	G-2	✱Q205	P-2	Q612	F-5		
E501	B-2	✱Q206	P-2	✱Q613	D-4		
E502	B-6	✱Q207	N-2	✱Q614	D-3		
E601	E-4	✱Q208	N-1	✱Q615	D-3		
E602	D-1	✱Q209	N-1	✱Q616	C-3		
E701	F-2	✱Q210	N-1	✱Q617	C-3		
		✱Q211	P-2	✱Q618	F-2		
FL201	M-1	✱Q212	P-1	✱Q619	F-2		
FL401	H-1	✱Q213	R-2	✱Q620	F-3		
FL601	E-2	✱Q214	R-2	✱Q621	F-3		
		✱Q215	P-1	✱Q622	E-3		
IC101	P-4	✱Q216	N-2	✱Q623	D-3		
IC102	M-5	✱Q217	M-2	✱Q624	D-1		
IC103	N-5	✱Q218	M-2	✱Q625	E-4		
IC104	L-5	✱Q219	M-2	✱Q626	D-4		
IC201	L-3	✱Q220	M-2	✱Q627	D-1		
IC202	M-2	✱Q301	J-4	✱Q628	D-1		
IC203	M-1	✱Q302	J-4	✱Q701	E-2		
IC204	P-1	✱Q303	H-4	✱Q702	F-2		
IC205	L-2	✱Q304	H-5	✱Q703	E-2		
IC301	K-4	✱Q305	H-4	✱Q704	F-2		
IC302	G-5	✱Q306	H-3	✱Q705	E-2		
IC303	H-5	✱Q307	J-3	✱Q706	F-2		
IC401	H-2	✱Q308	J-4	✱Q707	E-1		
IC402	H-1	✱Q309	J-4	✱Q708	F-1		
IC403	K-1	✱Q310	K-3	✱Q709	F-2		
IC404	G-2	✱Q311	K-5	✱Q710	F-1		
IC501	A-5	✱Q401	H-2	✱Q711	F-2		
IC502	A-2	✱Q402	J-1	✱Q712	F-2		
IC503	A-2	✱Q403	J-1	✱Q713	F-1		
IC504	B-2	✱Q404	J-2	✱Q714	E-1		
IC505	B-2	✱Q405	J-1				
IC506	A-3	✱Q406	J-1	RV101	L-1		
IC507	B-5	✱Q407	J-1	RV102	K-1		
IC508	C-4	✱Q408	J-1	RV103	P-4		
IC509	B-5	✱Q409	J-2	RV201	M-3		
IC510	B-4	✱Q410	J-1	RV301	J-1		
IC511	J-6	✱Q411	J-2	RV302	H-1		
IC512	G-6	✱Q412	J-2	RV303	K-4		
IC601	D-4	✱Q413	K-2	RV401	H-3		
IC602	D-4	✱Q414	K-2	RV501	A-4		
IC603	F-4	✱Q415	K-2	RV502	A-4		
IC604	F-3	✱Q416	J-2	RV503	B-4		
IC605	F-3	✱Q417	H-2	RV504	B-4		
IC606	E-3	✱Q418	H-2	RV505	B-4		
IC607	F-3	✱Q501	A-1	RV506	B-4		
IC608	D-2	Q502	A-1	RV601	D-1		
IC609	E-2	Q503	A-1	RV602	F-1		
IC610	D-2	Q504	A-1	RV603	D-1		
IC611	D-2	✱Q505	A-5	RV604	D-1		
IC612	C-2	✱Q506	A-4	RV605	F-1		
IC701	F-1	Q507	B-1	RV606	C-1		

✱ : B SIDE
__ : UVW-1800/1800P ONLY
N̄ : UVW-1800/1600 ONLY
△ : 1-648-899-11 ONLY
◎ : UVW-1800 (1-648-899-12) ONLY
● : UVW-1800P/1600/1600P (1-648-899-12) ONLY

For J,UC

① TP201 PB

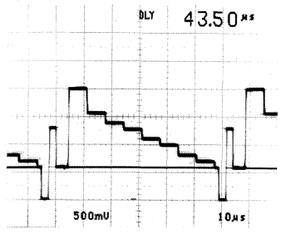

For EK

① TP201 PB

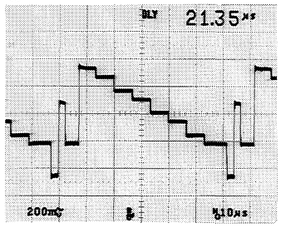

UVW-1800 (J) ;Serial No.10901 and higher
UVW-1800 (UC);Serial No.13931 and higher
UVW-1800P(EK);Serial No.14141 and higher
UVW-1600 (J) ;Serial No.10601 and higher
UVW-1600 (UC);Serial No.12901 and higher
UVW-1600P(EK);Serial No.13781 and higher

VP-43/43A/43P/43AP(2/7) ;Y OMC,Y DEM,Y NL DE-EMPH.

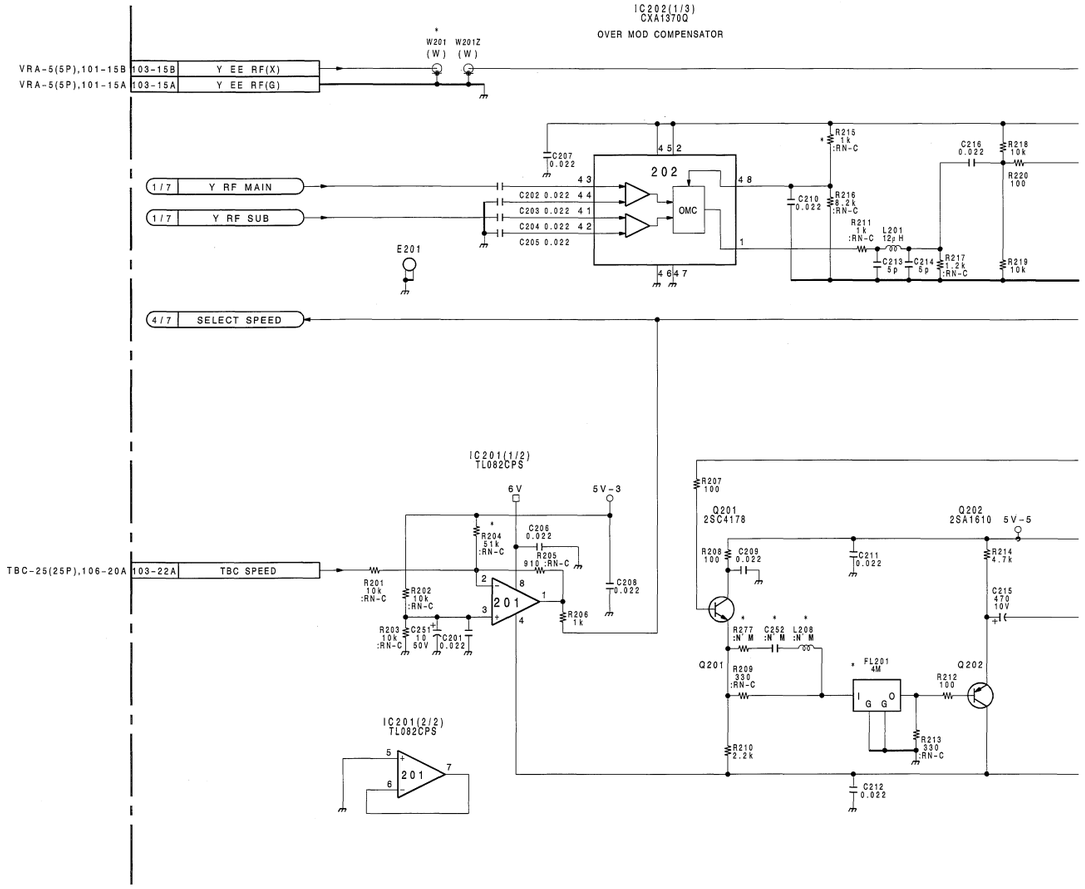

 VP-43/43A/43P/43AP (2/7)

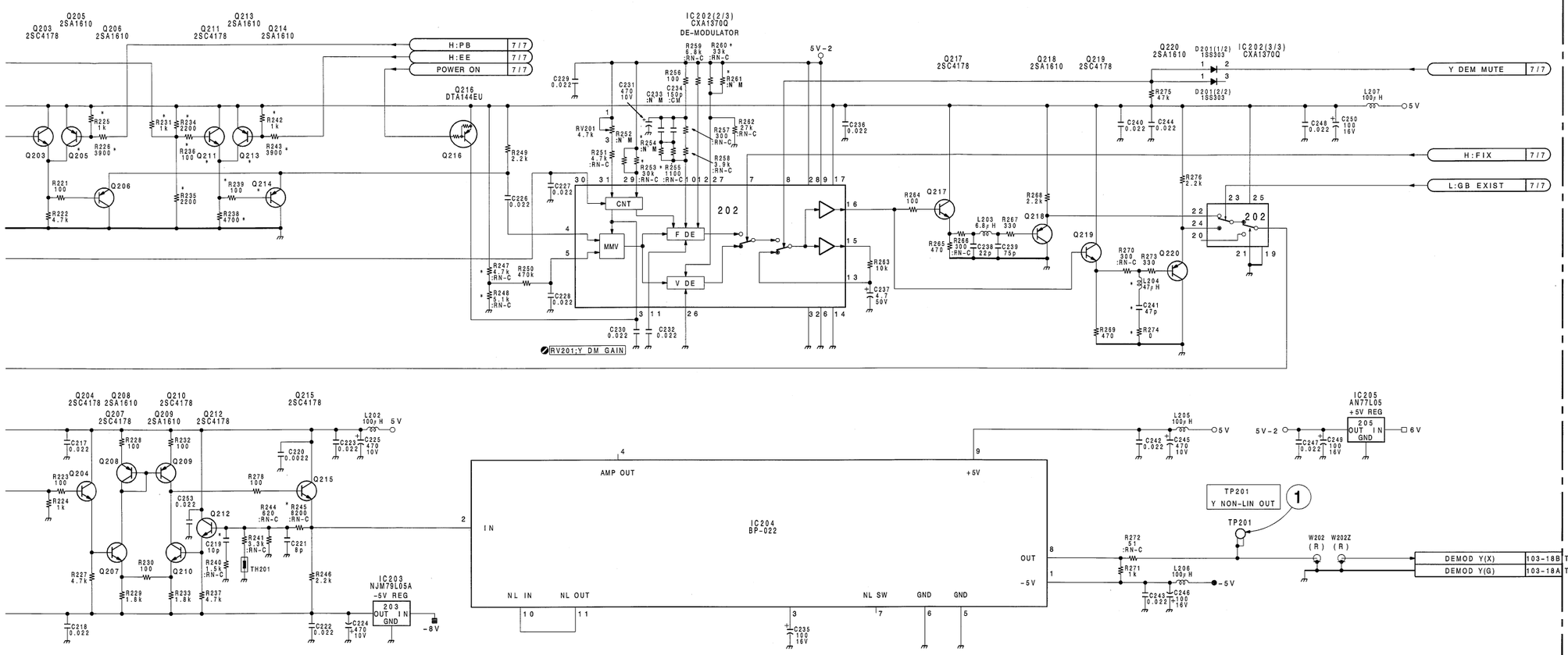

*

REF NO.	UVW-1800		UVW-1600	
	J,UC	EK	J,UC	EK
R215	▲1K	▲1500	▲1K	▲1K

*

REF NO.	UVW-1800	UVW-1600
Q205	2SA1610	N'M
Q211	2SC4178	N'M
Q213	2SA1610	N'M
Q214	2SA1610	N'M
R225	1000	N'M
R226	3900	N'M
R231	1000	N'M
R234	2200	N'M
R235	2200	N'M
R236	100	N'M
R238	4700	N'M
R239	100	N'M
R242	1000	N'M
R243	3900	N'M
W201	1-952-611-11	N'M

*

REF NO.	J,UC	EK
C219	10P	5P
C241	47P	39P
C252	N'M	47P
FL201	4M	5M
L204	47UH	33UH
L208	N'M	150UH
R204	▲51K	▲68K
R245	▲8200	▲6800
R247	▲4700	▲4700
R248	▲5100	▲5100
R253	▲30K	▲33K
R254	N'M	▲33K
R255	▲1100	▲1K
R260	▲33K	▲39K
R261	N'M	1M
R274	0	0
R277	N'M	▲6800

▲ = :RN-C

VP-43/43A
VP-43P/43AP BOARD (2/7)

BOARD NO.1-648-899-12
UVW-1800 (J) ;#10901-
UVW-1800 (UC);#13931-
UVW-1800P(EK);#14141-
UVW-1600 (J) ;#10601-
UVW-1600 (UC);#12901-
UVW-1600P(EK);#13781-

16-113 (b2)

VP-43/43A(1-648-899-11, 12)

	CN103	N-6	IC702	F-1	Q508	B-1	RV701	E-1
	CN104	C-6	IC703	R-4	✱Q509	A-4	RV702	E-1
	CN105	R-5	IC704	R-4	✱Q510	A-4	RV703	E-1
			IC705	R-4	✱Q511	A-4	RV704	G-1
	DL101	N-4			✱Q512	A-4		
	DL301	J-4	✱Q101	N-5	✱Q513	B-2	TH201	P-2
			✱Q102	N-4	Q514	B-3	TH401	J-2
	✱D201	N-2	✱Q103	N-5	✱Q515	B-2		
	✱D401	J-2	✱Q104	N-4	✱Q516	B-2	◎ TH601	D-2
	✱D501	A-2	✱Q105	N-4	Q517	B-3	●✱TH601	D-1
	✱D502	B-2	✱Q106	N-3	✱Q601	F-5		
	✱D503	B-3	✱Q107	N-3	✱Q602	F-5	TP101	L-2
	✱D504	B-4	✱Q108	N-4	Q603	E-5	TP102	P-1
	✱D601	D-2	✱Q109	N-4	Q604	F-5	TP103	L-1
	△✱D602	E-2	✱Q110	P-4	Q605	F-5	TP104	P-3
	✱D701	R-4	✱Q111	P-5	Q606	F-5	TP201	P-1
			✱Q112	P-5	Q607	E-5	TP301	H-1
	E101	P-6	✱Q201	M-2	Q608	F-5	TP302	J-3
	E102	N-1	✱Q202	N-1	Q609	E-4	TP401	L-1
	E201	R-1	✱Q203	P-2	Q610	F-4		
	E301	K-5	✱Q204	N-2	Q611	F-5		
	E401	G-2	✱Q205	P-2	Q612	F-5		
	E501	B-2	✱Q206	P-2	✱Q613	D-4		
	E502	B-6	✱Q207	N-2	✱Q614	D-3		
	E601	E-4	✱Q208	N-1	✱Q615	D-3		
	E602	D-1	✱Q209	N-1	✱Q616	C-3		
	E701	F-2	✱Q210	N-1	✱Q617	C-3		
			✱Q211	P-2	✱Q618	F-2		
	FL201	M-1	✱Q212	P-1	✱Q619	F-2		
	FL401	H-1	✱Q213	R-2	✱Q620	F-3		
	FL601	E-2	✱Q214	R-2	✱Q621	F-3		
			✱Q215	P-1	✱Q622	E-3		
	IC101	P-4	✱Q216	N-2	✱Q623	D-3		
	IC102	M-5	✱Q217	M-2	✱Q624	D-1		
	IC103	N-5	✱Q218	M-2	✱Q625	E-4		
	IC104	L-5	✱Q219	M-2	✱Q626	D-4		
	IC201	L-3	✱Q220	M-2	✱Q627	D-1		
	IC202	M-2	✱Q301	J-4	✱Q628	D-1		
	IC203	M-1	✱Q302	J-4	✱Q701	E-2		
	IC204	P-1	✱Q303	H-4	✱Q702	F-2		
	IC205	L-2	✱Q304	H-5	✱Q703	E-2		
	IC301	K-4	✱Q305	H-4	✱Q704	F-2		
	IC302	G-5	✱Q306	H-3	✱Q705	E-2		
	IC303	H-5	✱Q307	J-3	✱Q706	F-2		
	IC401	H-2	✱Q308	J-4	✱Q707	E-1		
	IC402	H-1	✱Q309	J-4	✱Q708	F-1		
	IC403	K-1	✱Q310	K-3	✱Q709	F-2		
	IC404	G-2	✱Q311	K-5	✱Q710	F-1		
	IC501	A-5	✱Q401	H-2	✱Q711	F-2		
	IC502	A-2	✱Q402	J-1	✱Q712	F-2		
	IC503	A-2	✱Q403	J-1	✱Q713	F-1		
	IC504	B-2	✱Q404	J-2	✱Q714	E-1		
	IC505	B-2	✱Q405	J-1				
	IC506	A-3	✱Q406	J-1	RV101	L-1		
	IC507	B-5	✱Q407	J-1	RV102	K-1		
	IC508	C-4	✱Q408	J-1	RV103	P-4		
	IC509	B-5	✱Q409	J-2	RV201	M-3		
	IC510	B-4	✱Q410	J-1	RV301	J-1		
	IC511	J-6	✱Q411	J-2	RV302	H-1		
	IC512	G-6	✱Q412	J-2	RV303	K-4		
	IC601	D-4	✱Q413	K-2	RV401	H-3		
	IC602	D-4	✱Q414	K-2	RV501	A-4		
	IC603	F-4	✱Q415	K-2	RV502	A-4		
	IC604	F-3	✱Q416	J-2	RV503	B-4		
	IC605	F-3	✱Q417	H-2	RV504	B-4		
	IC606	E-3	✱Q418	H-2	RV505	B-4		
	IC607	F-3	✱Q501	A-1	RV506	B-4		
	IC608	D-2	Q502	A-1	RV601	D-1		
	IC609	E-2	Q503	A-1	RV602	F-1		
	IC610	D-2	Q504	A-1	RV603	D-1		
	IC611	D-2	✱Q505	A-5	RV604	D-1		
	IC612	C-2	✱Q506	A-4	RV605	F-1		
	IC701	F-1	Q507	B-1	RV606	C-1		

✱ : B SIDE
__ : UVW-1800/1800P ONLY
N : UVW-1800/1600 ONLY
△ : 1-648-899-11 ONLY
◎ : UVW-1800 (1-648-899-12) ONLY
● : UVW-1800P/1600/1600P (1-648-899-12) ONLY

UVW-1800 (J) ;Serial No.10901 and higher
UVW-1800 (UC);Serial No.13931 and higher
UVW-1800P(EK);Serial No.14141 and higher
UVW-1600 (J) ;Serial No.10601 and higher
UVW-1600 (UC);Serial No.12901 and higher
UVW-1600P(EK);Serial No.13781 and higher

VP-43/43A/43P/43AP(3/7) ;C RF AGC/EQ,C DO DET.

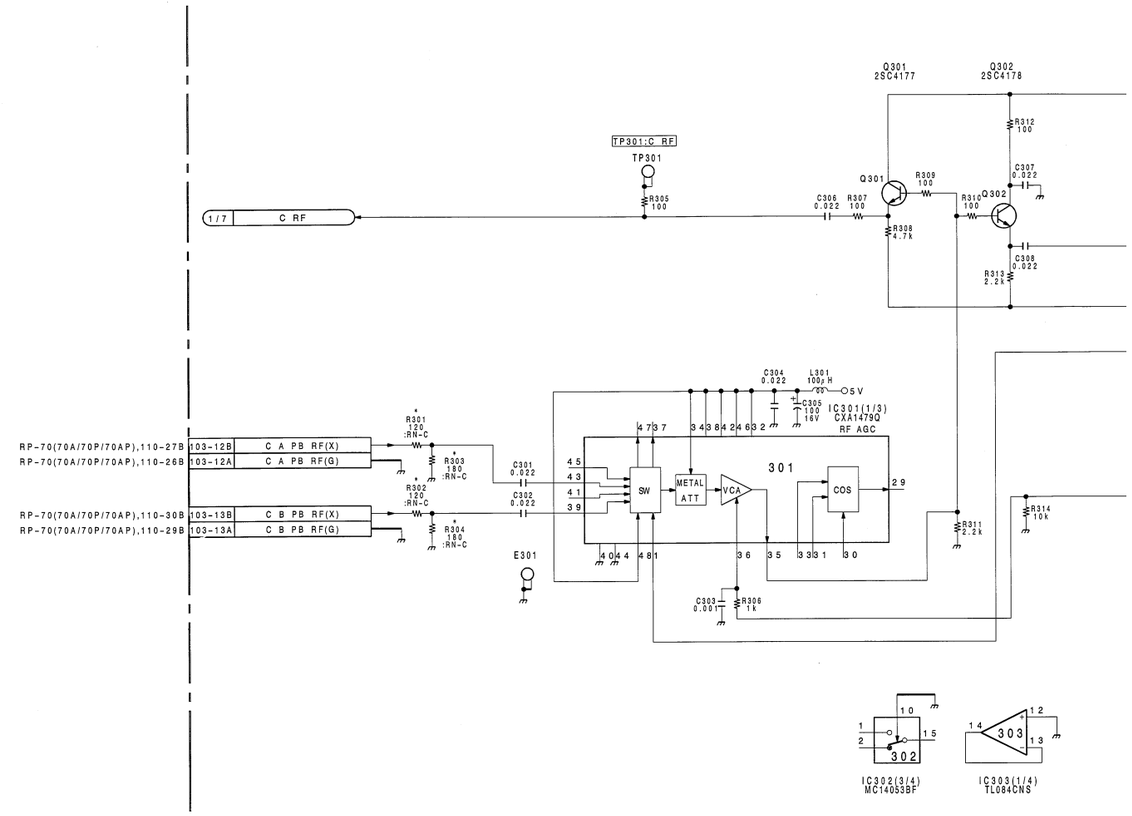

 VP-43/43A/43P/43AP (3/7)

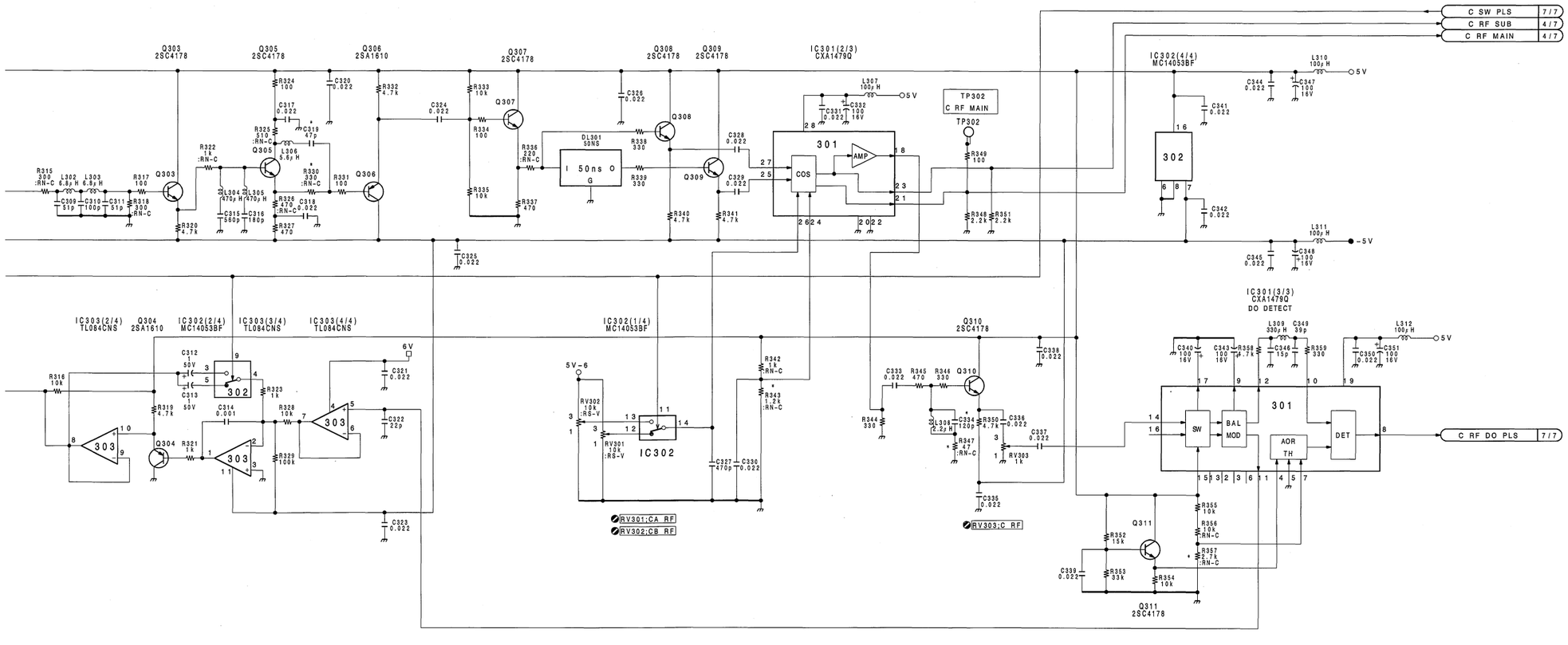

*

REF NO.	UVW-1800		UVW-1600	
	J,UC	EK	J,UC	,EK
R301	▲120	0	▲180	▲82
R302	▲120	0	▲180	▲82
R303	▲180	▲300	▲120	▲220
R304	▲180	▲300	▲120	▲220

*

REF NO	J,UC	EK
C319	47P	68P
C334	▲120P	▲100P
R330	▲330	▲470
R343	▲1200	▲1200
R347	47	47
R357	▲2700	▲2700

▲ = :RN-C

VP-43/43A
VP-43P/43AP BOARD (3/7)

BOARD NO.1-648-899-12
UVW-1800 (J) ;#10901-
UVW-1800 (UC);#13931-
UVW-1800P(EK);#14141-
UVW-1600 (J) ;#10601-
UVW-1600 (UC);#12901-
UVW-1600P(EK);#13781-

16-117 (b2)

VP-43/43A(1-648-899-11, 12)

CN103	N-6	IC702	F-1	Q508	B-1	RV701	E-1
CN104	C-6	IC703	R-4	✱Q509	A-4	RV702	E-1
CN105	R-5	IC704	R-4	✱Q510	A-4	RV703	E-1
		IC705	R-4	✱Q511	A-4	RV704	G-1
DL101	N-4			✱Q512	A-4		
DL301	J-4	✱Q101	N-5	✱Q513	B-2	TH201	P-2
		✱Q102	N-4	Q514	B-3	TH401	J-2
✱D201	N-2	✱Q103	N-5	✱Q515	B-2		
✱D401	J-2	✱Q104	N-4	✱Q516	B-2	◎ TH601	D-2
✱D501	A-2	✱Q105	N-4	Q517	B-3	● ✱TH601	D-1
✱D502	B-2	✱Q106	N-3	✱Q601	F-5		
✱D503	B-3	✱Q107	N-3	✱Q602	F-5	TP101	L-2
✱D504	B-4	✱Q108	N-4	Q603	E-5	TP102	P-1
✱D601	D-2	✱Q109	N-4	Q604	F-5	TP103	L-1
△ ✱D602	E-2	✱Q110	P-4	Q605	F-5	TP104	P-3
✱D701	R-4	✱Q111	P-5	Q606	F-5	TP201	P-1
		✱Q112	P-5	Q607	E-5	TP301	H-1
E101	P-6	✱Q201	M-2	Q608	F-5	TP302	J-3
E102	N-1	✱Q202	N-1	Q609	E-4	TP401	L-1
E201	R-1	✱Q203	P-2	Q610	F-4		
E301	K-5	✱Q204	N-2	Q611	F-5		
E401	G-2	✱Q205	P-2	Q612	F-5		
E501	B-2	✱Q206	P-2	✱Q613	D-4		
E502	B-6	✱Q207	N-2	✱Q614	D-3		
E601	E-4	✱Q208	N-1	✱Q615	D-3		
E602	D-1	✱Q209	N-1	✱Q616	C-3		
E701	F-2	✱Q210	N-1	✱Q617	C-3		
		✱Q211	P-2	✱Q618	F-2		
FL201	M-1	✱Q212	P-1	✱Q619	F-2		
FL401	H-1	✱Q213	R-2	✱Q620	F-3		
FL601	E-2	✱Q214	R-2	✱Q621	F-3		
		✱Q215	P-1	✱Q622	E-3		
IC101	P-4	✱Q216	N-2	✱Q623	D-3		
IC102	M-5	✱Q217	M-2	✱Q624	D-1		
IC103	N-5	✱Q218	M-2	✱Q625	E-4		
IC104	L-5	✱Q219	M-2	✱Q626	D-4		
IC201	L-3	✱Q220	M-2	✱Q627	D-1		
IC202	M-2	✱Q301	J-4	✱Q628	D-1		
IC203	M-1	✱Q302	J-4	✱Q701	E-2		
IC204	P-1	✱Q303	H-4	✱Q702	F-2		
IC205	L-2	✱Q304	H-5	✱Q703	E-2		
IC301	K-4	✱Q305	H-4	✱Q704	F-2		
IC302	G-5	✱Q306	H-3	✱Q705	E-2		
IC303	H-5	✱Q307	J-3	✱Q706	F-2		
IC401	H-2	✱Q308	J-4	✱Q707	E-1		
IC402	H-1	✱Q309	J-4	✱Q708	F-1		
IC403	K-1	✱Q310	K-3	✱Q709	F-2		
IC404	G-2	✱Q311	K-5	✱Q710	F-1		
IC501	A-5	✱Q401	H-2	✱Q711	F-2		
IC502	A-2	✱Q402	J-1	✱Q712	F-2		
IC503	A-2	✱Q403	J-1	✱Q713	F-1		
IC504	B-2	✱Q404	J-2	✱Q714	E-1		
IC505	B-2	✱Q405	J-1				
IC506	A-3	✱Q406	J-1	RV101	L-1		
IC507	B-5	✱Q407	J-1	RV102	K-1		
IC508	C-4	✱Q408	J-1	RV103	P-4		
IC509	B-5	✱Q409	J-2	RV201	M-3		
IC510	B-4	✱Q410	J-1	RV301	J-1		
IC511	J-6	✱Q411	J-2	RV302	H-1		
IC512	G-6	✱Q412	J-2	RV303	K-4		
IC601	D-4	✱Q413	K-2	RV401	H-3		
IC602	D-4	✱Q414	K-2	RV501	A-4		
IC603	F-4	✱Q415	K-2	RV502	A-4		
IC604	F-3	✱Q416	J-2	RV503	B-4		
IC605	F-3	✱Q417	H-2	RV504	B-4		
IC606	E-3	✱Q418	H-2	RV505	B-4		
IC607	F-3	✱Q501	A-1	RV506	B-4		
IC608	D-2	Q502	A-1	RV601	D-1		
IC609	E-2	Q503	A-1	RV602	F-1		
IC610	D-2	Q504	A-1	RV603	D-1		
IC611	D-2	✱Q505	A-5	RV604	D-1		
IC612	C-2	✱Q506	A-4	RV605	F-1		
IC701	F-1	Q507	B-1	RV606	C-1		

✱ : B SIDE
__ : UVW-1800/1800P ONLY
N̄ : UVW-1800/1600 ONLY
△ : 1-648-899-11 ONLY
◎ : UVW-1800 (1-648-899-12) ONLY
● : UVW-1800P/1600/1600P (1-648-899-12) ONLY

For J,UC

① TP401 PB

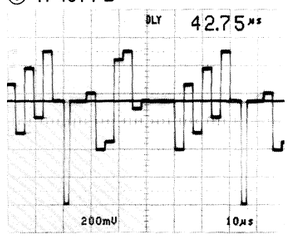

For EK

① TP401 PB

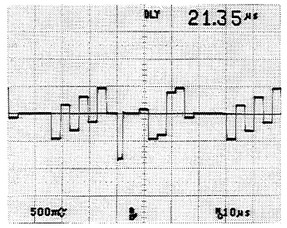

UVW-1800 (J) ;Serial No.10901 and higher
UVW-1800 (UC);Serial No.13931 and higher
UVW-1800P(EK);Serial No.14141 and higher
UVW-1600 (J) ;Serial No.10601 and higher
UVW-1600 (UC);Serial No.12901 and higher
UVW-1600P(EK);Serial No.13781 and higher

VP-43/43A/43P/43AP(4/7);C OMC,C DEM,C NL DE-EMPH.

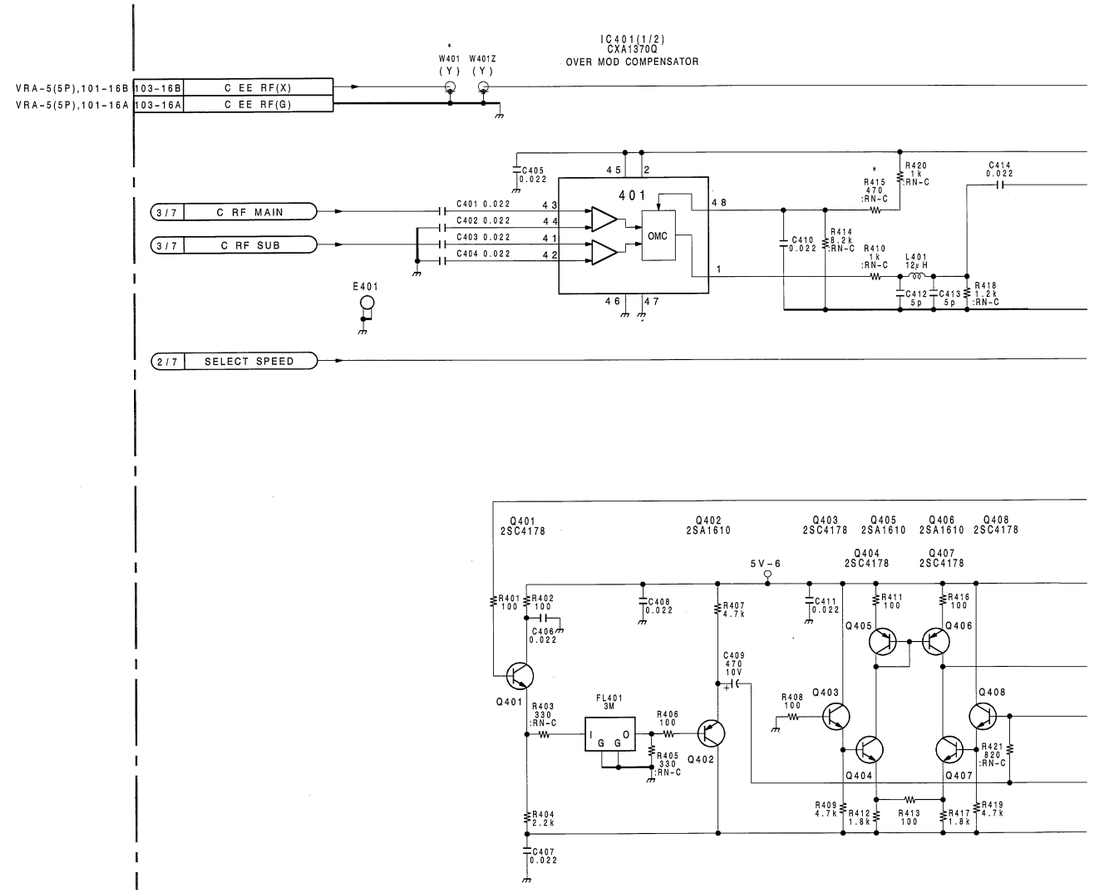

 VP-43/43A/43P/43AP (4/7)

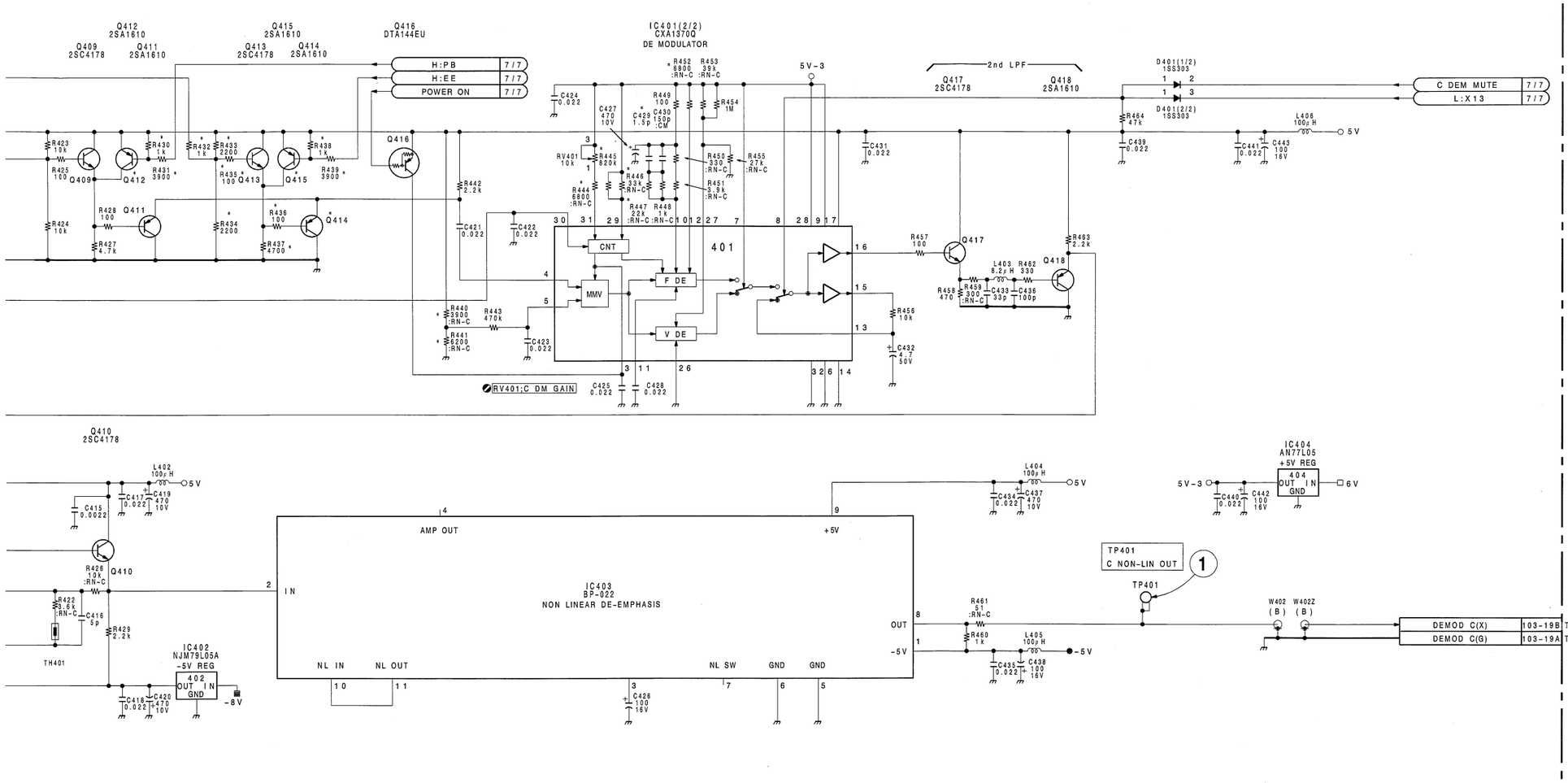

*

REF NO.	UVW-1800	UVW-1600
Q412	2SA1610	N' M
Q413	2SC4178	N' M
Q414	2SA1610	N' M
Q415	2SA1610	N' M
R430	1000	N' M
R431	3900	N' M
R432	1000	N' M
R433	2200	N' M
R434	2200	N' M
R435	100	N' M
R436	100	N' M
R437	4700	N' M
R438	1000	N' M
R439	3900	N' M
W401	1-952-613-11	N' M

*

REF NO.	J,UC	EK
C429	1.5P	5P
R415	▲470	▲470
R440	▲3900	▲4700
R441	▲6200	▲4700
R444	▲6800	▲5600
R445	820K	N' M
R446	▲33K	▲33K
R447	▲22K	▲18K
R452	▲6800	▲5600

▲ = :RN-C

VP-43/43A
VP-43P/43AP BOARD (4/7)

BOARD NO.1-648-899-12
UVW-1800 (J) ;#10901-
UVW-1800 (UC);#13931-
UVW-1800P(EK);#14141-
UVW-1600 (J) ;#10601-
UVW-1600 (UC);#12901-
UVW-1600P(EK);#13781-

 16-121 (b2)

I J K L M N O P

VP-43/43A(1-648-899-11, 12)

CN103	N-6	IC702	F-1	Q508	B-1	RV701	E-1
CN104	C-6	IC703	R-4	✱Q509	A-4	RV702	E-1
CN105	R-5	IC704	R-4	✱Q510	A-4	RV703	E-1
		IC705	R-4	✱Q511	A-4	RV704	G-1
DL101	N-4			✱Q512	A-4		
DL301	J-4	✱Q101	N-5	✱Q513	B-2	TH201	P-2
		✱Q102	N-4	Q514	B-3	TH401	J-2
✱D201	N-2	✱Q103	N-5	✱Q515	B-2		
✱D401	J-2	✱Q104	N-4	✱Q516	B-2	◎ TH601	D-2
✱D501	A-2	✱Q105	N-4	Q517	B-3	● ✱TH601	D-1
✱D502	B-2	✱Q106	N-3	✱Q601	F-5		
✱D503	B-3	✱Q107	N-3	✱Q602	F-5	TP101	L-2
✱D504	B-4	✱Q108	N-4	Q603	E-5	TP102	P-1
✱D601	D-2	✱Q109	N-4	Q604	F-5	TP103	L-1
△ ✱D602	E-2	✱Q110	P-4	Q605	F-5	TP104	P-3
✱D701	R-4	✱Q111	P-5	Q606	F-5	TP201	P-1
		✱Q112	P-5	Q607	E-5	TP301	H-1
E101	P-6	✱Q201	M-2	Q608	F-5	TP302	J-3
E102	N-1	✱Q202	N-1	Q609	E-4	TP401	L-1
E201	R-1	✱Q203	P-2	Q610	F-4		
E301	K-5	✱Q204	N-2	Q611	F-5		
E401	G-2	✱Q205	P-2	Q612	F-5		
E501	B-2	✱Q206	P-2	✱Q613	D-4		
E502	B-6	✱Q207	N-2	✱Q614	D-3		
E601	E-4	✱Q208	N-1	✱Q615	D-3		
E602	D-1	✱Q209	N-1	✱Q616	C-3		
E701	F-2	✱Q210	N-1	✱Q617	C-3		
		✱Q211	P-2	✱Q618	F-2		
FL201	M-1	✱Q212	P-1	✱Q619	F-2		
FL401	H-1	✱Q213	R-2	✱Q620	F-3		
FL601	E-2	✱Q214	R-2	✱Q621	F-3		
		✱Q215	P-1	✱Q622	E-3		
IC101	P-4	✱Q216	N-2	✱Q623	D-3		
IC102	M-5	✱Q217	M-2	✱Q624	D-1		
IC103	N-5	✱Q218	M-2	✱Q625	E-4		
IC104	L-5	✱Q219	M-2	✱Q626	D-4		
IC201	L-3	✱Q220	M-2	✱Q627	D-1		
IC202	M-2	✱Q301	J-4	✱Q628	D-1		
IC203	M-1	✱Q302	J-4	✱Q701	E-2		
IC204	P-1	✱Q303	H-4	✱Q702	F-2		
IC205	L-2	✱Q304	H-5	✱Q703	E-2		
IC301	K-4	✱Q305	H-4	✱Q704	F-2		
IC302	G-5	✱Q306	H-3	✱Q705	E-2		
IC303	H-5	✱Q307	J-3	✱Q706	F-2		
IC401	H-2	✱Q308	J-4	✱Q707	E-1		
IC402	H-1	✱Q309	J-4	✱Q708	F-1		
IC403	K-1	✱Q310	K-3	✱Q709	F-2		
IC404	G-2	✱Q311	K-5	✱Q710	F-1		
IC501	A-5	✱Q401	H-2	✱Q711	F-2		
IC502	A-2	✱Q402	J-1	✱Q712	F-2		
IC503	A-2	✱Q403	J-1	✱Q713	F-1		
IC504	B-2	✱Q404	J-2	✱Q714	E-1		
IC505	B-2	✱Q405	J-1				
IC506	A-3	✱Q406	J-1	RV101	L-1		
IC507	B-5	✱Q407	J-1	RV102	K-1		
IC508	C-4	✱Q408	J-1	RV103	P-4		
IC509	B-5	✱Q409	J-2	RV201	M-3		
IC510	B-4	✱Q410	J-1	RV301	J-1		
IC511	J-6	✱Q411	J-2	RV302	H-1		
IC512	G-6	✱Q412	J-2	RV303	K-4		
IC601	D-4	✱Q413	K-2	RV401	H-3		
IC602	D-4	✱Q414	K-2	RV501	A-4		
IC603	F-4	✱Q415	K-2	RV502	A-4		
IC604	F-3	✱Q416	J-2	RV503	B-4		
IC605	F-3	✱Q417	H-2	RV504	B-4		
IC606	E-3	✱Q418	H-2	RV505	B-4		
IC607	F-3	✱Q501	A-1	RV506	B-4		
IC608	D-2	Q502	A-1	RV601	D-1		
IC609	E-2	Q503	A-1	RV602	F-1		
IC610	D-2	Q504	A-1	RV603	D-1		
IC611	D-2	✱Q505	A-5	RV604	D-1		
IC612	C-2	✱Q506	A-4	RV605	F-1		
IC701	F-1	Q507	B-1	RV606	C-1		

✱ : B SIDE
_ : UVW-1800/1800P ONLY
N̄ : UVW-1800/1600 ONLY
△ : 1-648-899-11 ONLY
◎ : UVW-1800 (1-648-899-12) ONLY
● : UVW-1800P/1600/1600P (1-648-899-12) ONLY

UVW-1800 (J) ;Serial No.10901 and higher
UVW-1800 (UC);Serial No.13931 and higher
UVW-1800P(EK);Serial No.14141 and higher
UVW-1600 (J) ;Serial No.10601 and higher
UVW-1600 (UC);Serial No.12901 and higher
UVW-1600P(EK);Serial No.13781 and higher

VP-43/43A/43P/43AP(5/7);Y/S-Y OUT DRIVE,COMPOSITE OUT DRIVE CHARA/SYNC MIX

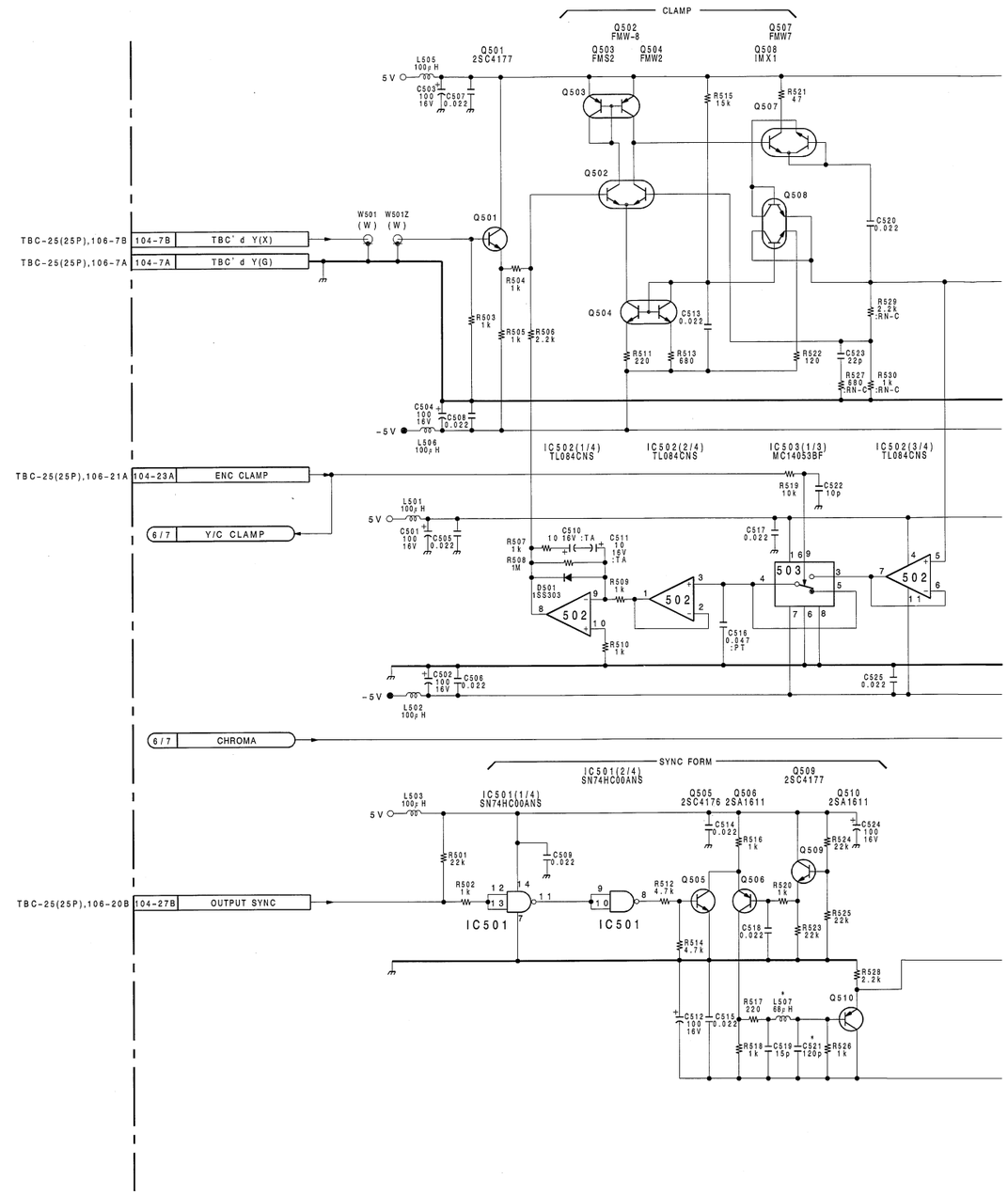

 VP-43/43A/43P/43AP (5/7)

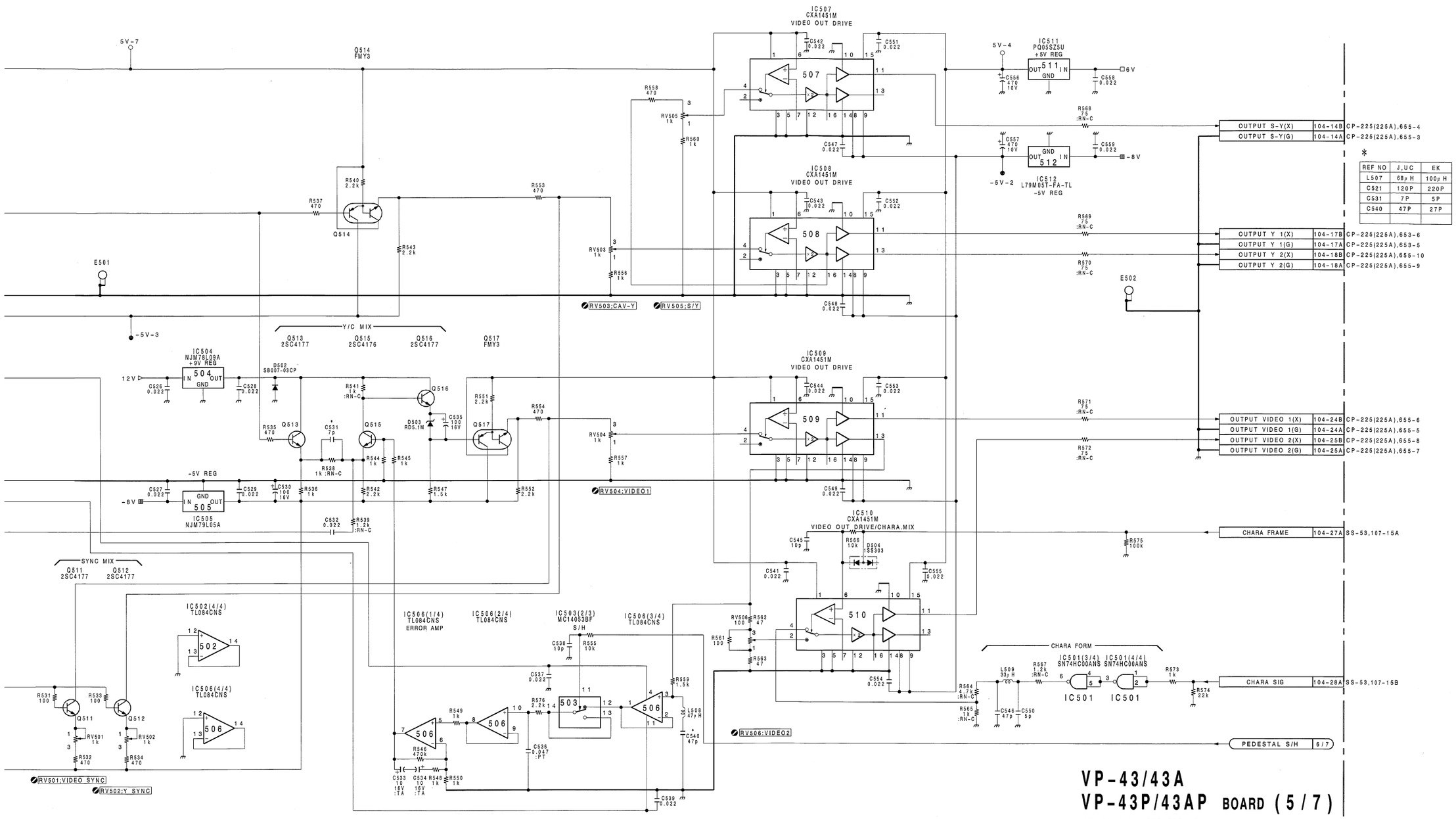

REF NO	J,UC	EK
L507	68μH	100μH
C521	120P	220P
C531	7P	5P
C540	47P	27P

 16-125 (b2)

VP-43/43A(1-648-899-11, 12)

	CN103	N-6	IC702	F-1	Q508	B-1	RV701	E-1
	CN104	C-6	IC703	R-4	✱Q509	A-4	RV702	E-1
	CN105	R-5	IC704	R-4	✱Q510	A-4	RV703	E-1
			IC705	R-4	✱Q511	A-4	RV704	G-1
	DL101	N-4			✱Q512	A-4		
	DL301	J-4	✱Q101	N-5	✱Q513	B-2	TH201	P-2
			✱Q102	N-4	Q514	B-3	TH401	J-2
	✱D201	N-2	✱Q103	N-5	✱Q515	B-2		
	✱D401	J-2	✱Q104	N-4	✱Q516	B-2	◎ TH601	D-2
	✱D501	A-2	✱Q105	N-4	Q517	B-3	●✱TH601	D-1
	✱D502	B-2	✱Q106	N-3	✱Q601	F-5		
	✱D503	B-3	✱Q107	N-3	✱Q602	F-5	TP101	L-2
	✱D504	B-4	✱Q108	N-4	Q603	E-5	TP102	P-1
	✱D601	D-2	✱Q109	N-4	Q604	F-5	TP103	L-1
	△✱D602	E-2	✱Q110	P-4	Q605	F-5	TP104	P-3
	✱D701	R-4	✱Q111	P-5	Q606	F-5	TP201	P-1
			✱Q112	P-5	Q607	E-5	TP301	H-1
	E101	P-6	✱Q201	M-2	Q608	F-5	TP302	J-3
	E102	N-1	✱Q202	N-1	Q609	E-4	TP401	L-1
	E201	R-1	✱Q203	P-2	Q610	F-4		
	E301	K-5	✱Q204	N-2	Q611	F-5		
	E401	G-2	✱Q205	P-2	Q612	F-5		
	E501	B-2	✱Q206	P-2	✱Q613	D-4		
	E502	B-6	✱Q207	N-2	✱Q614	D-3		
	E601	E-4	✱Q208	N-1	✱Q615	D-3		
	E602	D-1	✱Q209	N-1	✱Q616	C-3		
	E701	F-2	✱Q210	N-1	✱Q617	C-3		
			✱Q211	P-2	✱Q618	F-2		
	FL201	M-1	✱Q212	P-1	✱Q619	F-2		
	FL401	H-1	✱Q213	R-2	✱Q620	F-3		
	FL601	E-2	✱Q214	R-2	✱Q621	F-3		
			✱Q215	P-1	✱Q622	E-3		
	IC101	P-4	✱Q216	N-2	✱Q623	D-3		
	IC102	M-5	✱Q217	M-2	✱Q624	D-1		
	IC103	N-5	✱Q218	M-2	✱Q625	E-4		
	IC104	L-5	✱Q219	M-2	✱Q626	D-4		
	IC201	L-3	✱Q220	M-2	✱Q627	D-1		
	IC202	M-2	✱Q301	J-4	✱Q628	D-1		
	IC203	M-1	✱Q302	J-4	✱Q701	E-2		
	IC204	P-1	✱Q303	H-4	✱Q702	F-2		
	IC205	L-2	✱Q304	H-5	✱Q703	E-2		
	IC301	K-4	✱Q305	H-4	✱Q704	F-2		
	IC302	G-5	✱Q306	H-3	✱Q705	E-2		
	IC303	H-5	✱Q307	J-3	✱Q706	F-2		
	IC401	H-2	✱Q308	J-4	✱Q707	E-1		
	IC402	H-1	✱Q309	J-4	✱Q708	F-1		
	IC403	K-1	✱Q310	K-3	✱Q709	F-2		
	IC404	G-2	✱Q311	K-5	✱Q710	F-1		
	IC501	A-5	✱Q401	H-2	✱Q711	F-2		
	IC502	A-2	✱Q402	J-1	✱Q712	F-2		
	IC503	A-2	✱Q403	J-1	✱Q713	F-1		
	IC504	B-2	✱Q404	J-2	✱Q714	E-1		
	IC505	B-2	✱Q405	J-1				
	IC506	A-3	✱Q406	J-1	RV101	L-1		
	IC507	B-5	✱Q407	J-1	RV102	K-1		
	IC508	C-4	✱Q408	J-1	RV103	P-4		
	IC509	B-5	✱Q409	J-2	RV201	M-3		
	IC510	B-4	✱Q410	J-1	RV301	J-1		
	IC511	J-6	✱Q411	J-2	RV302	H-1		
	IC512	G-6	✱Q412	J-2	RV303	K-4		
	IC601	D-4	✱Q413	K-2	RV401	H-3		
	IC602	D-4	✱Q414	K-2	RV501	A-4		
	IC603	F-4	✱Q415	K-2	RV502	A-4		
	IC604	F-3	✱Q416	J-2	RV503	B-4		
	IC605	F-3	✱Q417	H-2	RV504	B-4		
	IC606	E-3	✱Q418	H-2	RV505	B-4		
	IC607	F-3	✱Q501	A-1	RV506	B-4		
	IC608	D-2	Q502	A-1	RV601	D-1		
	IC609	E-2	Q503	A-1	RV602	F-1		
	IC610	D-2	Q504	A-1	RV603	D-1		
	IC611	D-2	✱Q505	A-5	RV604	D-1		
	IC612	C-2	✱Q506	A-4	RV605	F-1		
	IC701	F-1	Q507	B-1	RV606	C-1		

✱ : B SIDE
▭ : UVW-1800/1800P ONLY
N̄ : UVW-1800/1600 ONLY
△ : 1-648-899-11 ONLY
◎ : UVW-1800 (1-648-899-12) ONLY
● : UVW-1800P/1600/1600P (1-648-899-12) ONLY

UVW-1800 (J) ;Serial No.10901 and higher
UVW-1800 (UC);Serial No.13931 and higher
UVW-1800P(EK);Serial No.14141 and higher
UVW-1600 (J) ;Serial No.10601 and higher
UVW-1600 (UC);Serial No.12901 and higher
UVW-1600P(EK);Serial No.13781 and higher

VP-43/43A/43P/43AP(6/7);ENCODE,S-C OUT DRIVE

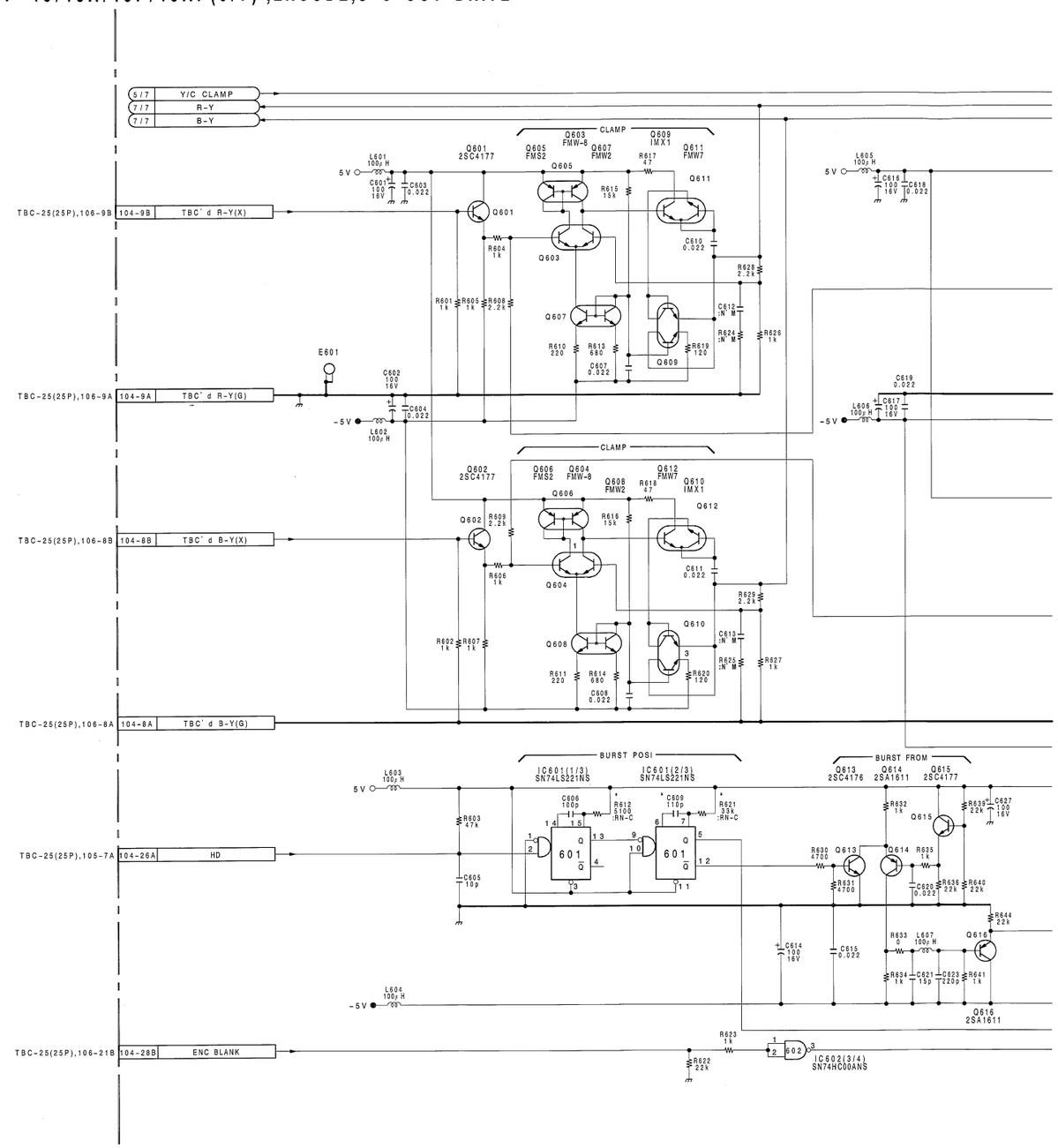

 VP-43/43A/43P/43AP (6/7)

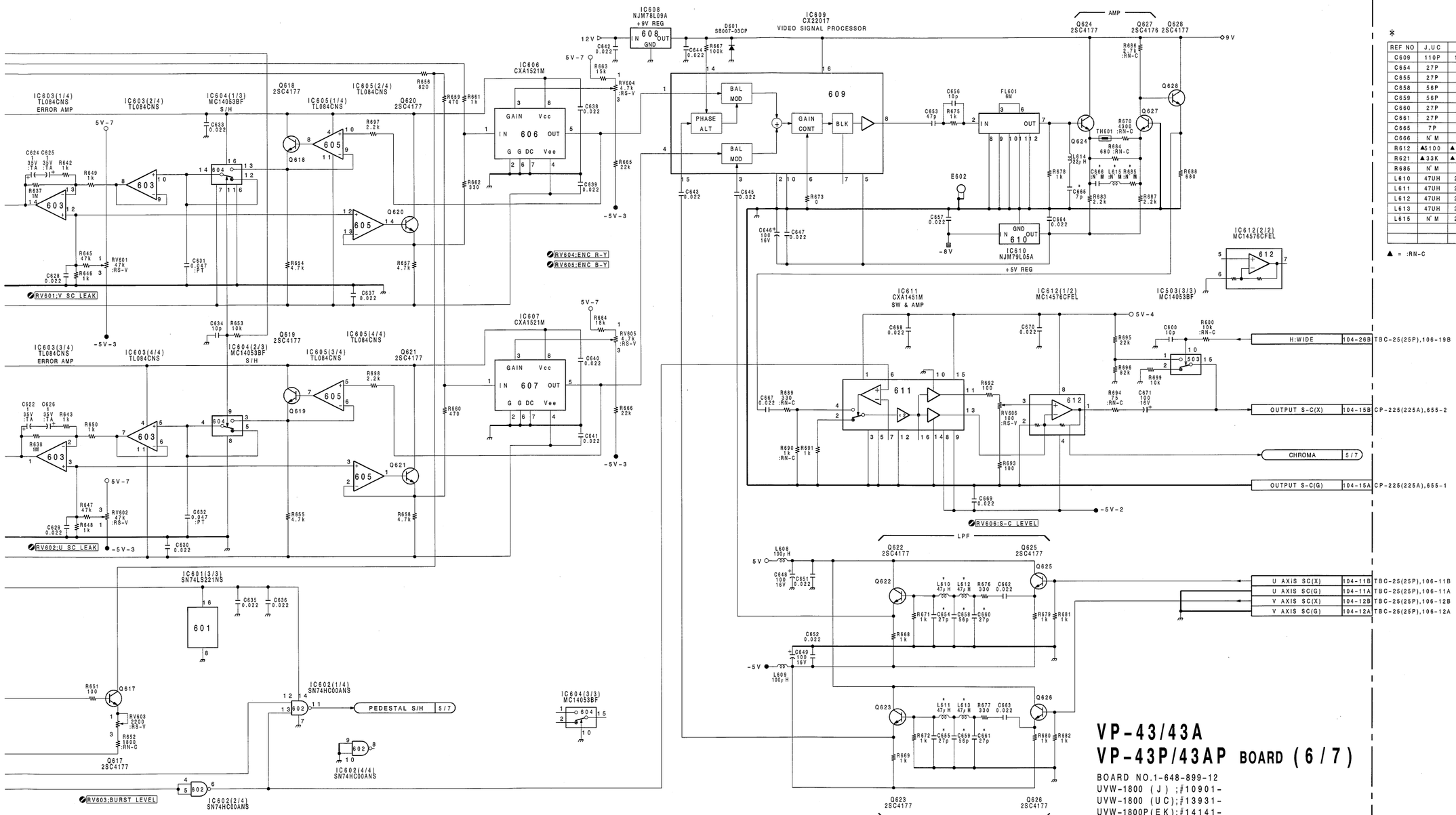

*

REF NO	J,UC	EK
C609	110P	150P
C654	27P	33P
C655	27P	33P
C658	56P	68P
C659	56P	68P
C660	27P	33P
C661	27P	33P
C665	7P	4P
C666	N'M	10P
R612	▲5100	▲10K
R621	▲33K	▲20K
R685	N'M	1K
L610	47UH	27UH
L611	47UH	27UH
L612	47UH	27UH
L613	47UH	27UH
L615	N'M	22UH

▲ = :RN-C

VP-43/43A
VP-43P/43AP BOARD (6/7)

BOARD NO.1-648-899-12
UVW-1800 (J) ;#10901-
UVW-1800 (UC);#13931-
UVW-1800P(EK);#14141-
UVW-1600 (J) ;#10601-
UVW-1600 (UC);#12901-
UVW-1600P(EK);#13781-

16-129 (b2)

 VP-43/43A/43P/43AP

VP-43/43A(1-648-899-11, 12)

CN103	N-6	IC702	F-1	Q508	B-1	RV701	E-1
CN104	C-6	IC703	R-4	✱Q509	A-4	RV702	E-1
CN105	R-5	IC704	R-4	✱Q510	A-4	RV703	E-1
		IC705	R-4	✱Q511	A-4	RV704	G-1
DL101	N-4			✱Q512	A-4		
DL301	J-4	✱Q101	N-5	✱Q513	B-2	TH201	P-2
		✱Q102	N-4	Q514	B-3	TH401	J-2
✱D201	N-2	✱Q103	N-5	✱Q515	B-2		
✱D401	J-2	✱Q104	N-4	✱Q516	B-2	◎ TH601	D-2
✱D501	A-2	✱Q105	N-4	Q517	B-3	●✱TH601	D-1
✱D502	B-2	✱Q106	N-3	✱Q601	F-5		
✱D503	B-3	✱Q107	N-3	✱Q602	F-5	TP101	L-2
✱D504	B-4	✱Q108	N-4	Q603	E-5	TP102	P-1
✱D601	D-2	✱Q109	N-4	Q604	F-5	TP103	L-1
△✱D602	E-2	✱Q110	P-4	Q605	F-5	TP104	P-3
✱D701	R-4	✱Q111	P-5	Q606	F-5	TP201	P-1
		✱Q112	P-5	Q607	E-5	TP301	H-1
E101	P-6	✱Q201	M-2	Q608	F-5	TP302	J-3
E102	N-1	✱Q202	N-1	Q609	E-4	TP401	L-1
E201	R-1	✱Q203	P-2	Q610	F-4		
E301	K-5	✱Q204	N-2	Q611	F-5		
E401	G-2	✱Q205	P-2	Q612	F-5		
E501	B-2	✱Q206	P-2	✱Q613	D-4		
E502	B-6	✱Q207	N-2	✱Q614	D-3		
E601	E-4	✱Q208	N-1	✱Q615	D-3		
E602	D-1	✱Q209	N-1	✱Q616	C-3		
E701	F-2	✱Q210	N-1	✱Q617	C-3		
		✱Q211	P-2	✱Q618	F-2		
FL201	M-1	✱Q212	P-1	✱Q619	F-2		
FL401	H-1	✱Q213	R-2	✱Q620	F-3		
FL601	E-2	✱Q214	R-2	✱Q621	F-3		
		✱Q215	P-1	✱Q622	E-3		
IC101	P-4	✱Q216	N-2	✱Q623	D-3		
IC102	M-5	✱Q217	M-2	✱Q624	D-1		
IC103	N-5	✱Q218	M-2	✱Q625	E-4		
IC104	L-5	✱Q219	M-2	✱Q626	D-4		
IC201	L-3	✱Q220	M-2	✱Q627	D-1		
IC202	M-2	✱Q301	J-4	✱Q628	D-1		
IC203	M-1	✱Q302	J-4	✱Q701	E-2		
IC204	P-1	✱Q303	H-4	✱Q702	F-2		
IC205	L-2	✱Q304	H-5	✱Q703	E-2		
IC301	K-4	✱Q305	H-4	✱Q704	F-2		
IC302	G-5	✱Q306	H-3	✱Q705	E-2		
IC303	H-5	✱Q307	J-3	✱Q706	F-2		
IC401	H-2	✱Q308	J-4	✱Q707	E-1		
IC402	H-1	✱Q309	J-4	✱Q708	F-1		
IC403	K-1	✱Q310	K-3	✱Q709	F-2		
IC404	G-2	✱Q311	K-5	✱Q710	F-1		
IC501	A-5	✱Q401	H-2	✱Q711	F-2		
IC502	A-2	✱Q402	J-1	✱Q712	F-2		
IC503	A-2	✱Q403	J-1	✱Q713	F-1		
IC504	B-2	✱Q404	J-2	✱Q714	E-1		
IC505	B-2	✱Q405	J-1				
IC506	A-3	✱Q406	J-1	RV101	L-1		
IC507	B-5	✱Q407	J-1	RV102	K-1		
IC508	C-4	✱Q408	J-1	RV103	P-4		
IC509	B-5	✱Q409	J-2	RV201	M-3		
IC510	B-4	✱Q410	J-1	RV301	J-1		
IC511	J-6	✱Q411	J-2	RV302	H-1		
IC512	G-6	✱Q412	J-2	RV303	K-4		
IC601	D-4	✱Q413	K-2	RV401	H-3		
IC602	D-4	✱Q414	K-2	RV501	A-4		
IC603	F-4	✱Q415	K-2	RV502	A-4		
IC604	F-3	✱Q416	J-2	RV503	B-4		
IC605	F-3	✱Q417	H-2	RV504	B-4		
IC606	E-3	✱Q418	H-2	RV505	B-4		
IC607	F-3	✱Q501	A-1	RV506	B-4		
IC608	D-2	Q502	A-1	RV601	D-1		
IC609	E-2	Q503	A-1	RV602	F-1		
IC610	D-2	Q504	A-1	RV603	D-1		
IC611	D-2	✱Q505	A-5	RV604	D-1		
IC612	C-2	✱Q506	A-4	RV605	F-1		
IC701	F-1	Q507	B-1	RV606	C-1		

✱ : B SIDE
_ : UVW-1800/1800P ONLY
N : UVW-1800/1600 ONLY
△ : 1-648-899-11 ONLY
◎ : UVW-1800 (1-648-899-12) ONLY
● : UVW-1800P/1600/1600P (1-648-899-12) ONLY

 16-132 (b)

 VP-43/43A/43P/43AP (7/7)

UVW-1800 (J) ;Serial No.10901 and higher
UVW-1800 (UC);Serial No.13931 and higher
UVW-1800P(EK);Serial No.14141 and higher
UVW-1600 (J) ;Serial No.10601 and higher
UVW-1600 (UC);Serial No.12901 and higher
UVW-1600P(EK);Serial No.13781 and higher

VP-43/43A/43P/43AP(7/7);R-Y/B-Y OUT DRIVE

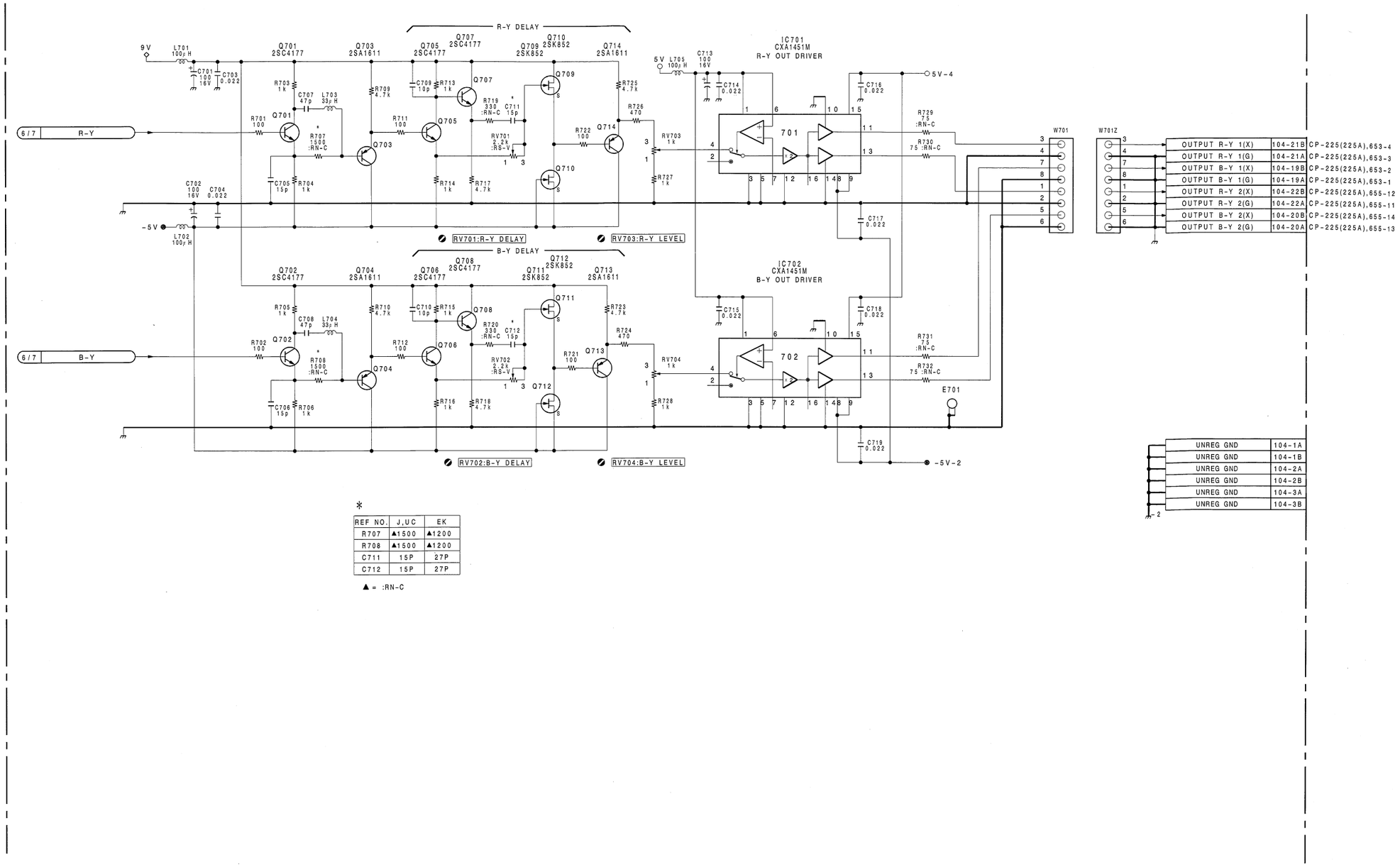

*

REF NO.	J,UC	EK
R707	▲1500	▲1200
R708	▲1500	▲1200
C711	15P	27P
C712	15P	27P

▲ = :RN-C

 16-133 (b1)

 VP-43/43A/43P/43AP (7/7)

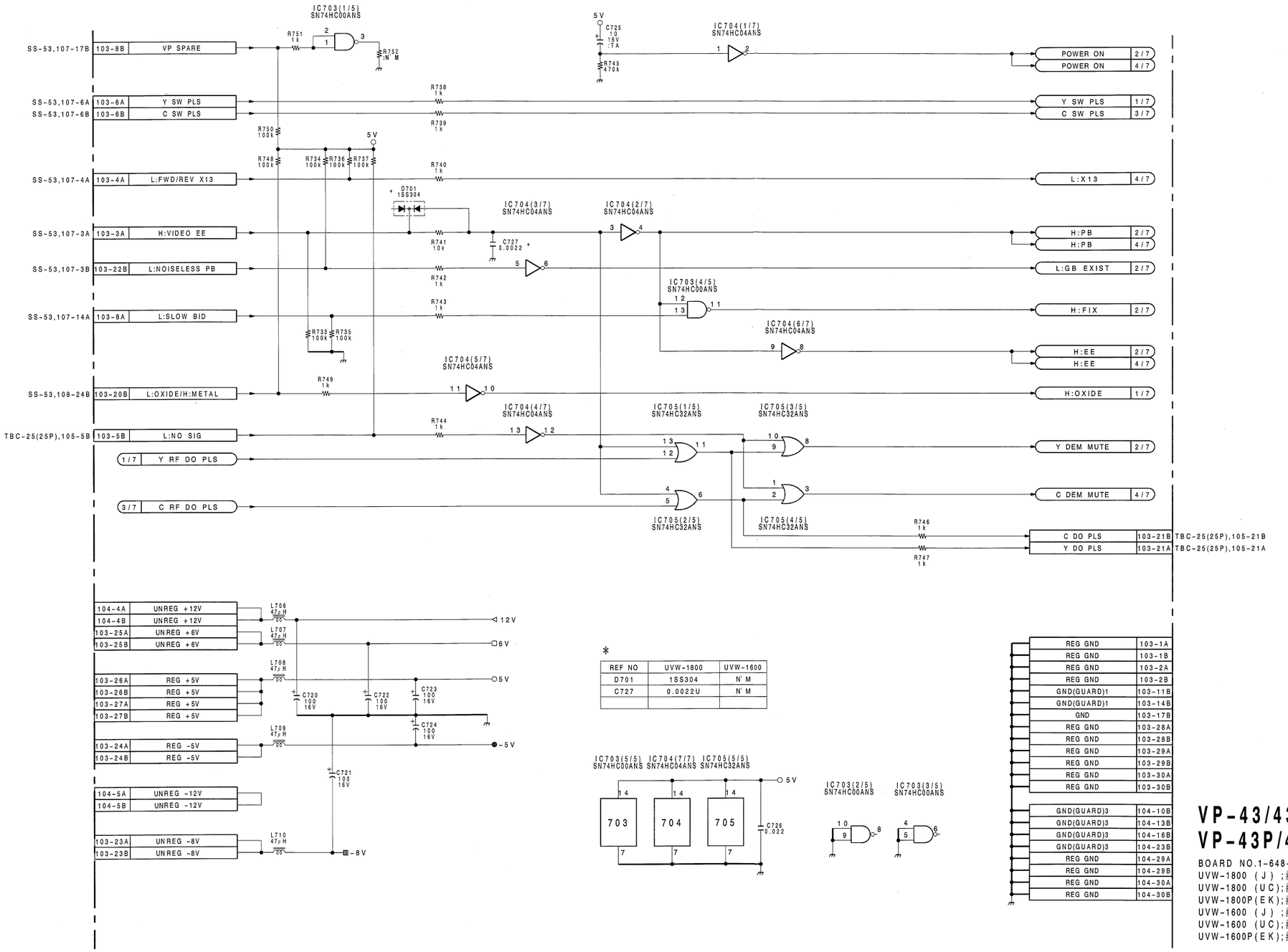

*

REF NO	UVW-1800	UVW-1600
D701	1SS304	N' M
C727	0.0022U	N' M

VP-43/43A
VP-43P/43AP BOARD (7/7)

BOARD NO.1-648-899-12
UVW-1800 (J) ;#10901-
UVW-1800 (UC);#13931-
UVW-1800P(EK);#14141-
UVW-1600 (J) ;#10601-
UVW-1600 (UC);#12901-
UVW-1600P(EK);#13781-

 16-133 (b2)

VP-43/43A(1-648-899-11, 12)

	CN103	N-6	IC702	F-1	Q508	B-1	RV701	E-1
	CN104	C-6	IC703	R-4	✱Q509	A-4	RV702	E-1
	CN105	R-5	IC704	R-4	✱Q510	A-4	RV703	E-1
			IC705	R-4	✱Q511	A-4	RV704	G-1
	DL101	N-4			✱Q512	A-4		
	DL301	J-4	✱Q101	N-5	✱Q513	B-2	TH201	P-2
			✱Q102	N-4	Q514	B-3	TH401	J-2
	✱D201	N-2	✱Q103	N-5	✱Q515	B-2		
	✱D401	J-2	✱Q104	N-4	✱Q516	B-2	◎ TH601	D-2
	✱D501	A-2	✱Q105	N-4	Q517	B-3	● ✱TH601	D-1
	✱D502	B-2	✱Q106	N-3	✱Q601	F-5		
	✱D503	B-3	✱Q107	N-3	✱Q602	F-5	TP101	L-2
	✱D504	B-4	✱Q108	N-4	Q603	E-5	TP102	P-1
	✱D601	D-2	✱Q109	N-4	Q604	F-5	TP103	L-1
	△✱D602	E-2	✱Q110	P-4	Q605	F-5	TP104	P-3
	✱D701	R-4	✱Q111	P-5	Q606	F-5	TP201	P-1
			✱Q112	P-5	Q607	E-5	TP301	H-1
	E101	P-6	✱Q201	M-2	Q608	F-5	TP302	J-3
	E102	N-1	✱Q202	N-1	Q609	E-4	TP401	L-1
	E201	R-1	✱Q203	P-2	Q610	F-4		
	E301	K-5	✱Q204	N-2	Q611	F-5		
	E401	G-2	✱Q205	P-2	Q612	F-5		
	E501	B-2	✱Q206	P-2	✱Q613	D-4		
	E502	B-6	✱Q207	N-2	✱Q614	D-3		
	E601	E-4	✱Q208	N-1	✱Q615	D-3		
	E602	D-1	✱Q209	N-1	✱Q616	C-3		
	E701	F-2	✱Q210	N-1	✱Q617	C-3		
			✱Q211	P-2	✱Q618	F-2		
	FL201	M-1	✱Q212	P-1	✱Q619	F-2		
	FL401	H-1	✱Q213	R-2	✱Q620	F-3		
	FL601	E-2	✱Q214	R-2	✱Q621	F-3		
			✱Q215	P-1	✱Q622	E-3		
	IC101	P-4	✱Q216	N-2	✱Q623	D-3		
	IC102	M-5	✱Q217	M-2	✱Q624	D-1		
	IC103	N-5	✱Q218	M-2	✱Q625	E-4		
	IC104	L-5	✱Q219	M-2	✱Q626	D-4		
	IC201	L-3	✱Q220	M-2	✱Q627	D-1		
	IC202	M-2	✱Q301	J-4	✱Q628	D-1		
	IC203	M-1	✱Q302	J-4	✱Q701	E-2		
	IC204	P-1	✱Q303	H-4	✱Q702	F-2		
	IC205	L-2	✱Q304	H-5	✱Q703	E-2		
	IC301	K-4	✱Q305	H-4	✱Q704	F-2		
	IC302	G-5	✱Q306	H-3	✱Q705	E-2		
	IC303	H-5	✱Q307	J-3	✱Q706	F-2		
	IC401	H-2	✱Q308	J-4	✱Q707	E-1		
	IC402	H-1	✱Q309	J-4	✱Q708	F-1		
	IC403	K-1	✱Q310	K-3	✱Q709	F-2		
	IC404	G-2	✱Q311	K-5	✱Q710	F-1		
	IC501	A-5	✱Q401	H-2	✱Q711	F-2		
	IC502	A-2	✱Q402	J-1	✱Q712	F-2		
	IC503	A-2	✱Q403	J-1	✱Q713	F-1		
	IC504	B-2	✱Q404	J-2	✱Q714	E-1		
	IC505	B-2	✱Q405	J-1				
	IC506	A-3	✱Q406	J-1	RV101	L-1		
	IC507	B-5	✱Q407	J-1	RV102	K-1		
	IC508	C-4	✱Q408	J-1	RV103	P-4		
	IC509	B-5	✱Q409	J-2	RV201	M-3		
	IC510	B-4	✱Q410	J-1	RV301	J-1		
	IC511	J-6	✱Q411	J-2	RV302	H-1		
	IC512	G-6	✱Q412	J-2	RV303	K-4		
	IC601	D-4	✱Q413	K-2	RV401	H-3		
	IC602	D-4	✱Q414	K-2	RV501	A-4		
	IC603	F-4	✱Q415	K-2	RV502	A-4		
	IC604	F-3	✱Q416	J-2	RV503	B-4		
	IC605	F-3	✱Q417	H-2	RV504	B-4		
	IC606	E-3	✱Q418	H-2	RV505	B-4		
	IC607	F-3	✱Q501	A-1	RV506	B-4		
	IC608	D-2	Q502	A-1	RV601	D-1		
	IC609	E-2	Q503	A-1	RV602	F-1		
	IC610	D-2	Q504	A-1	RV603	D-1		
	IC611	D-2	✱Q505	A-5	RV604	D-1		
	IC612	C-2	✱Q506	A-4	RV605	F-1		
	IC701	F-1	Q507	B-1	RV606	C-1		

✱ : B SIDE
__ : UVW-1800/1800P ONLY
N̄ : UVW-1800/1600 ONLY
△ : 1-648-899-11 ONLY
◎ : UVW-1800 (1-648-899-12) ONLY
● : UVW-1800P/1600/1600P (1-648-899-12) ONLY

UVW-1800 (J) ;Serial No.10001 through 10900
UVW-1800 (UC);Serial No.10001 through 13930
UVW-1800P(EK);Serial No.10001 through 14140
UVW-1600 (J) ;Serial No.10001 through 10600
UVW-1600 (UC);Serial No.10001 through 12900
UVW-1600P(EK);Serial No.10001 through 13780

VP-43/43A/43P/43AP(1/7) ;Y RF AGC/EQ,Y DO DET.

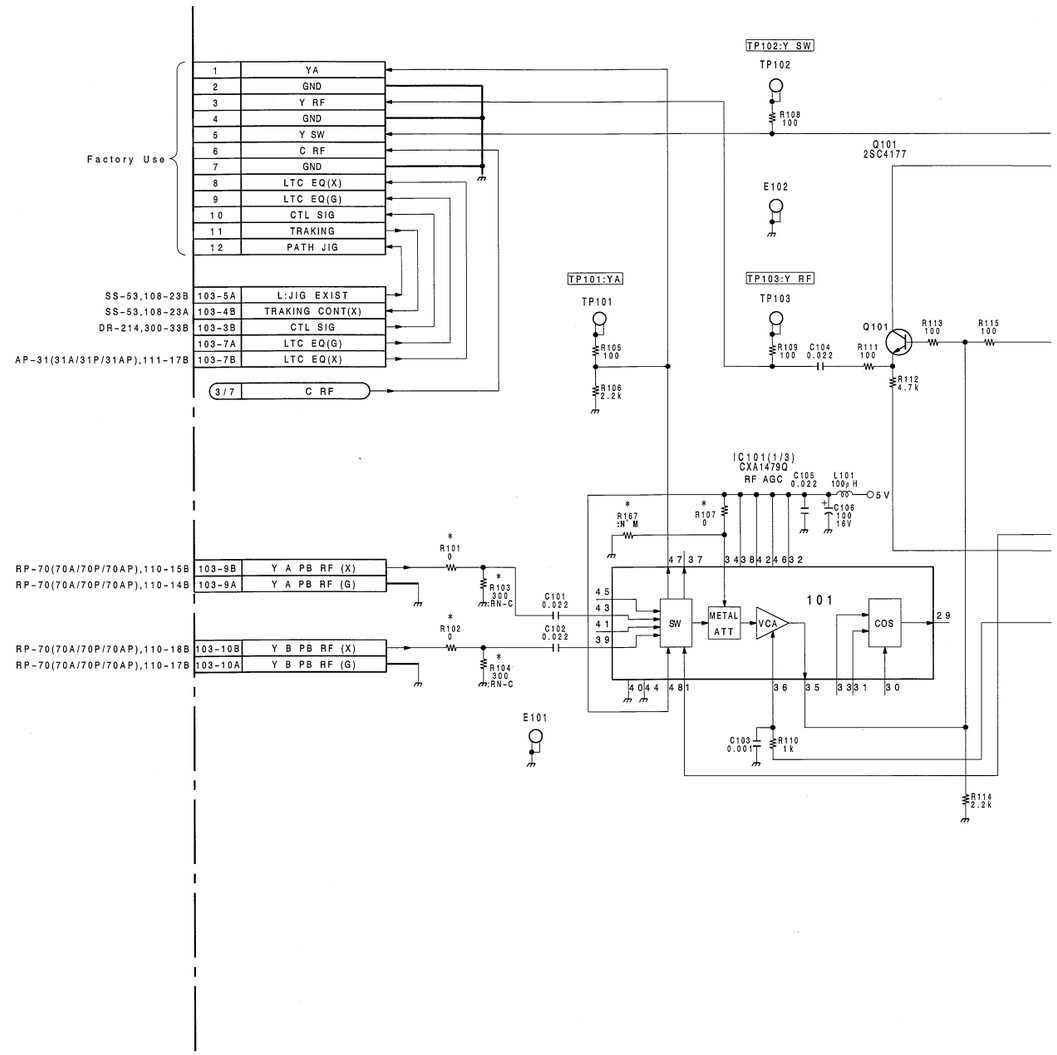

 VP-43/43A/43P/43AP (1/7)

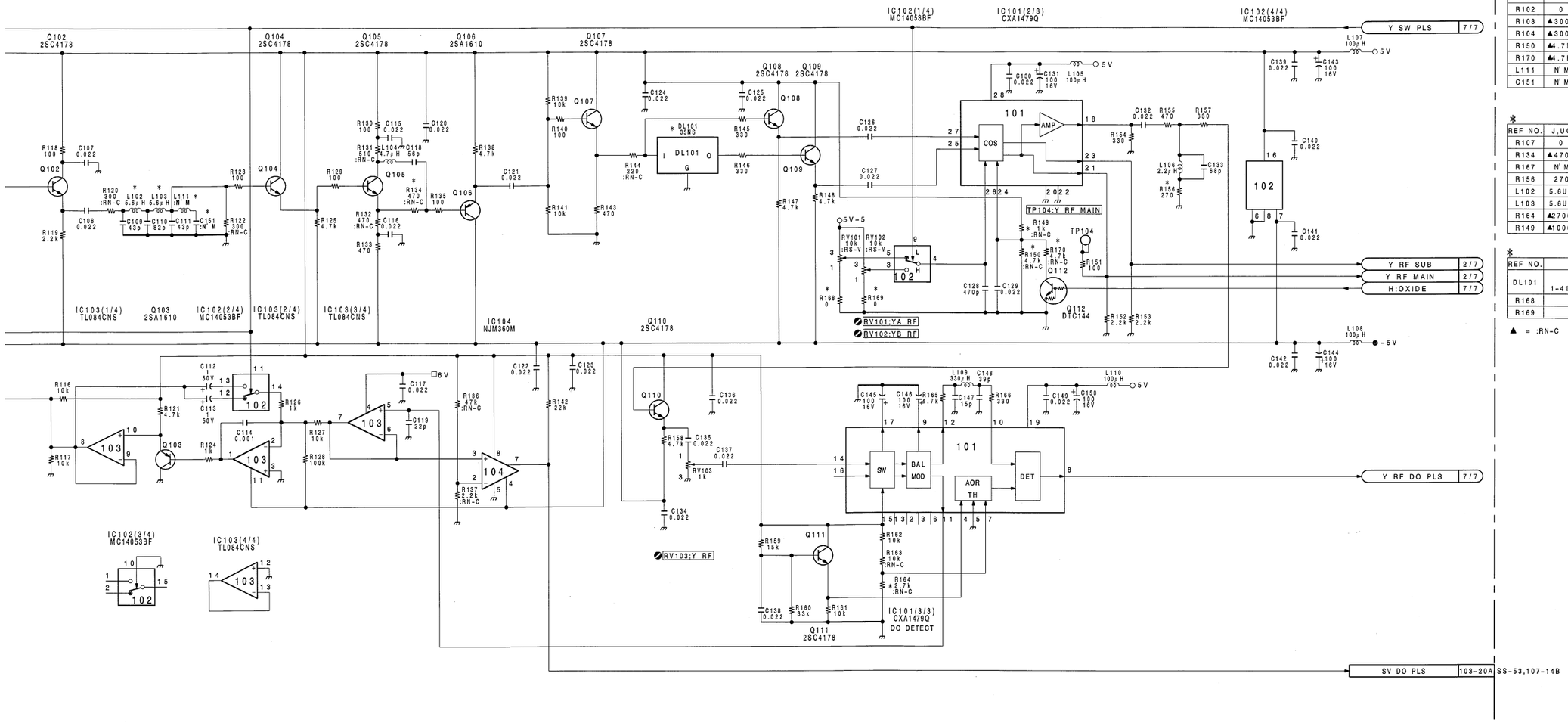

*

REF NO.	UVW-1800 J,UC	UVW-1800 EK	UVW-1600 J,UC	UVW-1600 EK
R101	0	0	▲100	▲82
R102	0	0	▲100	▲82
R103	▲300	▲300	▲200	▲220
R104	▲300	▲300	▲200	▲220
R150	▲4.7K	▲6800	▲3.3K	▲5600
R170	▲4.7K	10K	▲6.2K	10K
L111	N'M	4.7UH	5.6UH	4.7UH
C151	N'M	12P	22P	12P

*

REF NO.	J,UC	EK
R107	0	N'M
R134	▲470	▲560
R167	N'M	0
R156	270	270
L102	5.6UH	4.7UH
L103	5.6UH	4.7UH
R164	▲2700	▲2200
R149	▲1000	▲1500

*

REF NO.	J,UC	EK
DL101	35ns 1-415-154-31	25ns 1-415-674-11
R168	0	10K
R169	0	10K

▲ = :RN-C

VP-43/43A
VP-43P/43AP BOARD (1/7)

BOARD NO.1-648-899-11
UVW-1800 (J) ;#10001-10900
UVW-1800 (UC);#10001-13930
UVW-1800P(EK);#10001-14140
UVW-1600 (J) ;#10001-10600
UVW-1600 (UC);#10001-12900
UVW-1600P(EK);#10001-13780

16-109 (a2)

VP-43/43A(1-648-899-11, 12)

CN103	N-6	IC702	F-1	Q508	B-1		RV701	E-1
CN104	C-6	IC703	R-4	✱Q509	A-4		RV702	E-1
CN105	R-5	IC704	R-4	✱Q510	A-4		RV703	E-1
		IC705	R-4	✱Q511	A-4		RV704	G-1
DL101	N-4			✱Q512	A-4			
DL301	J-4	✱Q101	N-5	✱Q513	B-2		TH201	P-2
		✱Q102	N-4	Q514	B-3		TH401	J-2
✱D201	N-2	✱Q103	N-5	✱Q515	B-2			
✱D401	J-2	✱Q104	N-4	✱Q516	B-2	◎	TH601	D-2
✱D501	A-2	✱Q105	N-4	Q517	B-3	●	✱TH601	D-1
✱D502	B-2	✱Q106	N-3	✱Q601	F-5			
✱D503	B-3	✱Q107	N-3	✱Q602	F-5		TP101	L-2
✱D504	B-4	✱Q108	N-4	Q603	E-5		TP102	P-1
✱D601	D-2	✱Q109	N-4	Q604	F-5		TP103	L-1
△✱D602	E-2	✱Q110	P-4	Q605	F-5		TP104	P-3
✱D701	R-4	✱Q111	P-5	Q606	F-5		TP201	P-1
		✱Q112	P-5	Q607	E-5		TP301	H-1
E101	P-6	✱Q201	M-2	Q608	F-5		TP302	J-3
E102	N-1	✱Q202	N-1	Q609	E-4		TP401	L-1
E201	R-1	✱Q203	P-2	Q610	F-4			
E301	K-5	✱Q204	N-2	Q611	F-5			
E401	G-2	✱Q205	P-2	Q612	F-5			
E501	B-2	✱Q206	P-2	✱Q613	D-4			
E502	B-6	✱Q207	N-2	✱Q614	D-3			
E601	E-4	✱Q208	N-1	✱Q615	D-3			
E602	D-1	✱Q209	N-1	✱Q616	C-3			
E701	F-2	✱Q210	N-1	✱Q617	C-3			
		✱Q211	P-2	✱Q618	F-2			
FL201	M-1	✱Q212	P-1	✱Q619	F-2			
FL401	H-1	✱Q213	R-2	✱Q620	F-3			
FL601	E-2	✱Q214	R-2	✱Q621	F-3			
		✱Q215	P-1	✱Q622	E-3			
IC101	P-4	✱Q216	N-2	✱Q623	D-3			
IC102	M-5	✱Q217	M-2	✱Q624	D-1			
IC103	N-5	✱Q218	M-2	✱Q625	E-4			
IC104	L-5	✱Q219	M-2	✱Q626	D-4			
IC201	L-3	✱Q220	M-2	✱Q627	D-1			
IC202	M-2	✱Q301	J-4	✱Q628	D-1			
IC203	M-1	✱Q302	J-4	✱Q701	E-2			
IC204	P-1	✱Q303	H-4	✱Q702	F-2			
IC205	L-2	✱Q304	H-5	✱Q703	E-2			
IC301	K-4	✱Q305	H-4	✱Q704	F-2			
IC302	G-5	✱Q306	H-3	✱Q705	E-2			
IC303	H-5	✱Q307	J-3	✱Q706	F-2			
IC401	H-2	✱Q308	J-4	✱Q707	E-1			
IC402	H-1	✱Q309	J-4	✱Q708	F-1			
IC403	K-1	✱Q310	K-3	✱Q709	F-2			
IC404	G-2	✱Q311	K-5	✱Q710	F-1			
IC501	A-5	✱Q401	H-2	✱Q711	F-2			
IC502	A-2	✱Q402	J-1	✱Q712	F-2			
IC503	A-2	✱Q403	J-1	✱Q713	F-1			
IC504	B-2	✱Q404	J-2	✱Q714	E-1			
IC505	B-2	✱Q405	J-1					
IC506	A-3	✱Q406	J-1	RV101	L-1			
IC507	B-5	✱Q407	J-1	RV102	K-1			
IC508	C-4	✱Q408	J-1	RV103	P-4			
IC509	B-5	✱Q409	J-2	RV201	M-3			
IC510	B-4	✱Q410	J-1	RV301	J-1			
IC511	J-6	✱Q411	J-2	RV302	H-1			
IC512	G-6	✱Q412	J-2	RV303	K-4			
IC601	D-4	✱Q413	K-2	RV401	H-3			
IC602	D-4	✱Q414	K-2	RV501	A-4			
IC603	F-4	✱Q415	K-2	RV502	A-4			
IC604	F-3	✱Q416	J-2	RV503	B-4			
IC605	F-3	✱Q417	H-2	RV504	B-4			
IC606	E-3	✱Q418	H-2	RV505	B-4			
IC607	F-3	✱Q501	A-1	RV506	B-4			
IC608	D-2	Q502	A-1	RV601	D-1			
IC609	E-2	Q503	A-1	RV602	F-1			
IC610	D-2	Q504	A-1	RV603	D-1			
IC611	D-2	✱Q505	A-5	RV604	D-1			
IC612	C-2	✱Q506	A-4	RV605	F-1			
IC701	F-1	Q507	B-1	RV606	C-1			

✱ : B SIDE
▁ : UVW-1800/1800P ONLY
N̄ : UVW-1800/1600 ONLY
△ : 1-648-899-11 ONLY
◎ : UVW-1800 (1-648-899-12) ONLY
● : UVW-1800P/1600/1600P (1-648-899-12) ONLY

For J,UC

① TP201 PB

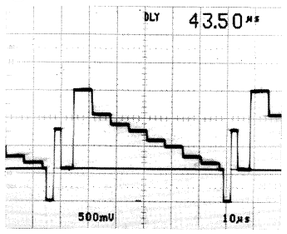

For EK

① TP201 PB

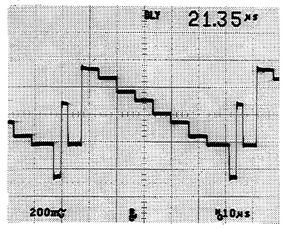

UVW-1800 (J) ;Serial No.10001 through 10900
UVW-1800 (UC);Serial No.10001 through 13930
UVW-1800P(EK);Serial No.10001 through 14140
UVW-1600 (J) ;Serial No.10001 through 10600
UVW-1600 (UC);Serial No.10001 through 12900
UVW-1600P(EK);Serial No.10001 through 13780

VP-43/43A/43P/43AP(2/7) ;Y OMC,Y DEM,Y NL DE-EMPH.

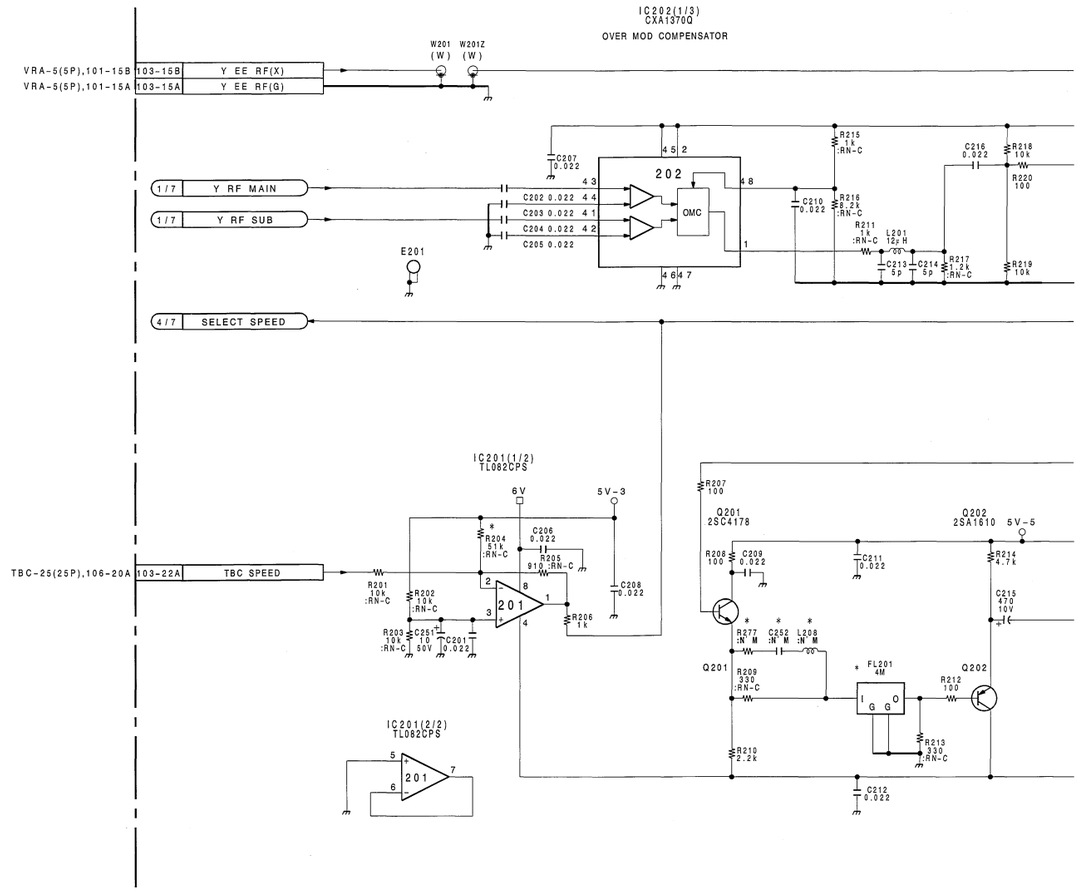

A B C D E F G H

 VP-43/43A/43P/43AP (2/7)

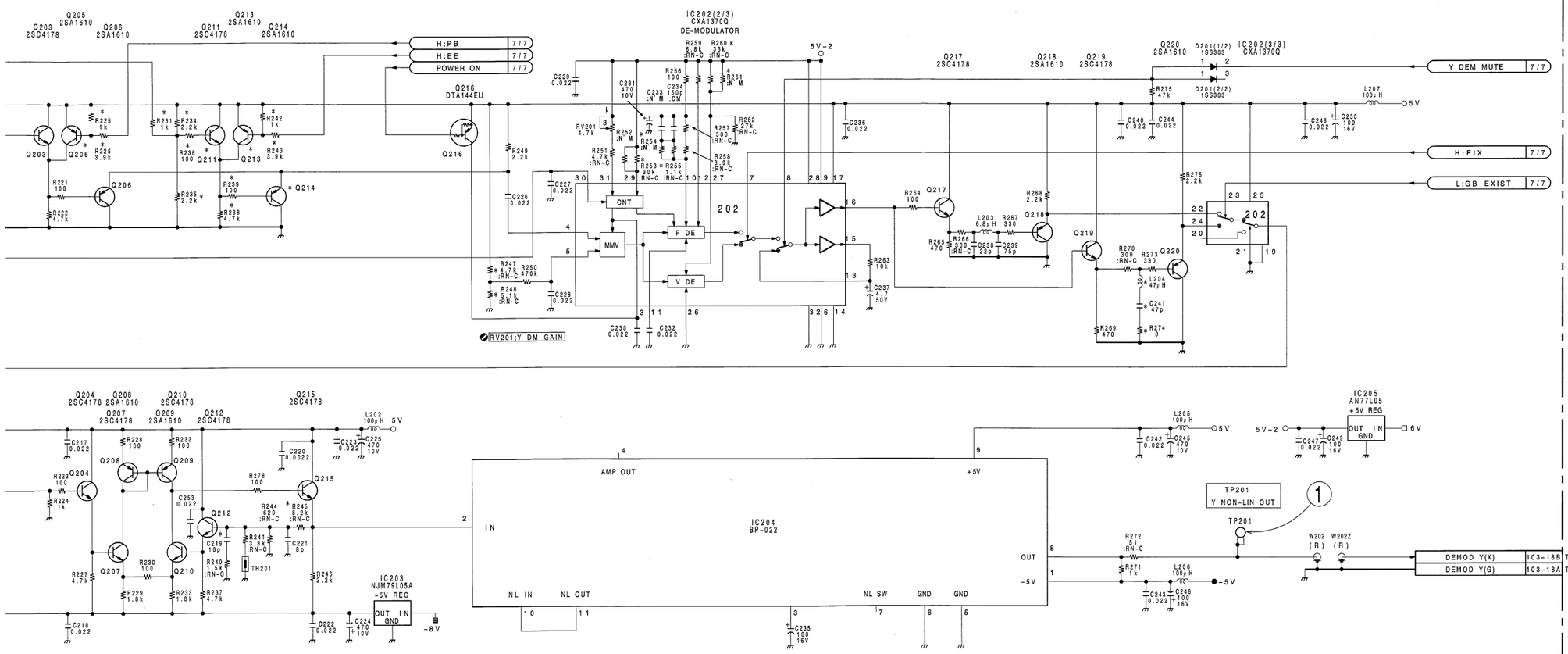

*

REF NO.	UVW-1800	UVW-1600
Q205	2SA1610	N' M
R225	1000	N' M
R226	3900	N' M
R231	1000	N' M
R234	2200	N' M
R235	2200	N' M
R236	100	N' M
Q211	2SC4178	N' M
Q213	2SA1610	N' M
Q214	2SA1610	N' M
R238	4700	N' M
R239	100	N' M
R242	1000	N' M
R243	3900	N' M

*

REF NO.	J,UC	EK
R204	▲51K	▲68K
FL201	4M	5M
R261	N' M	1M
R253	▲30K	▲33K
R255	▲1100	▲ 1K
R260	▲33K	▲39K
L204	47UH	33UH
C241	47P	39P
R274	0	0
R247	▲4700	▲4700
R248	▲5100	▲5100
R245	▲8200	▲6800
R277	N' M	▲6800
C252	N' M	47P
L208	N' M	150UH
C219	10P	5P
R254	N' M	▲33K

▲ = :RN-C

VP-43/43A
VP-43P/43AP BOARD (2/7)

BOARD NO.1-648-899-11
UVW-1800 (J) ;#10001-10900
UVW-1800 (UC);#10001-13930
UVW-1800P(EK);#10001-14140
UVW-1600 (J) ;#10001-10600
UVW-1600 (UC);#10001-12900
UVW-1600P(EK);#10001-13780

16-113 (a2)

VP-43/43A(1-648-899-11, 12)

CN103	N-6	IC702	F-1	Q508	B-1		RV701	E-1
CN104	C-6	IC703	R-4	✱Q509	A-4		RV702	E-1
CN105	R-5	IC704	R-4	✱Q510	A-4		RV703	E-1
		IC705	R-4	✱Q511	A-4		RV704	G-1
DL101	N-4			✱Q512	A-4			
DL301	J-4	✱Q101	N-5	✱Q513	B-2		TH201	P-2
		✱Q102	N-4	Q514	B-3		TH401	J-2
✱D201	N-2	✱Q103	N-5	✱Q515	B-2			
✱D401	J-2	✱Q104	N-4	✱Q516	B-2	◎	TH601	D-2
✱D501	A-2	✱Q105	N-4	Q517	B-3	●✱	TH601	D-1
✱D502	B-2	✱Q106	N-3	✱Q601	F-5			
✱D503	B-3	✱Q107	N-3	✱Q602	F-5		TP101	L-2
✱D504	B-4	✱Q108	N-4	Q603	E-5		TP102	P-1
✱D601	D-2	✱Q109	N-4	Q604	F-5		TP103	L-1
△✱D602	E-2	✱Q110	P-4	Q605	F-5		TP104	P-3
✱D701	R-4	✱Q111	P-5	Q606	F-5		TP201	P-1
		✱Q112	P-5	Q607	E-5		TP301	H-1
E101	P-6	✱Q201	M-2	Q608	F-5		TP302	J-3
E102	N-1	✱Q202	N-1	Q609	E-4		TP401	L-1
E201	R-1	✱Q203	P-2	Q610	F-4			
E301	K-5	✱Q204	N-2	Q611	F-5			
E401	G-2	✱Q205	P-2	Q612	F-5			
E501	B-2	✱Q206	P-2	✱Q613	D-4			
E502	B-6	✱Q207	N-2	✱Q614	D-3			
E601	E-4	✱Q208	N-1	✱Q615	D-3			
E602	D-1	✱Q209	N-1	✱Q616	C-3			
E701	F-2	✱Q210	N-1	✱Q617	C-3			
		✱Q211	P-2	✱Q618	F-2			
FL201	M-1	✱Q212	P-1	✱Q619	F-2			
FL401	H-1	✱Q213	R-2	✱Q620	F-3			
FL601	E-2	✱Q214	R-2	✱Q621	F-3			
		✱Q215	P-1	✱Q622	E-3			
IC101	P-4	✱Q216	N-2	✱Q623	D-3			
IC102	M-5	✱Q217	M-2	✱Q624	D-1			
IC103	N-5	✱Q218	M-2	✱Q625	E-4			
IC104	L-5	✱Q219	M-2	✱Q626	D-4			
IC201	L-3	✱Q220	M-2	✱Q627	D-1			
IC202	M-2	✱Q301	J-4	✱Q628	D-1			
IC203	M-1	✱Q302	J-4	✱Q701	E-2			
IC204	P-1	✱Q303	H-4	✱Q702	F-2			
IC205	L-2	✱Q304	H-5	✱Q703	E-2			
IC301	K-4	✱Q305	H-4	✱Q704	F-2			
IC302	G-5	✱Q306	H-3	✱Q705	E-2			
IC303	H-5	✱Q307	J-3	✱Q706	F-2			
IC401	H-2	✱Q308	J-4	✱Q707	E-1			
IC402	H-1	✱Q309	J-4	✱Q708	F-1			
IC403	K-1	✱Q310	K-3	✱Q709	F-2			
IC404	G-2	✱Q311	K-5	✱Q710	F-1			
IC501	A-5	✱Q401	H-2	✱Q711	F-2			
IC502	A-2	✱Q402	J-1	✱Q712	F-2			
IC503	A-2	✱Q403	J-1	✱Q713	F-1			
IC504	B-2	✱Q404	J-2	✱Q714	E-1			
IC505	B-2	✱Q405	J-1					
IC506	A-3	✱Q406	J-1	RV101	L-1			
IC507	B-5	✱Q407	J-1	RV102	K-1			
IC508	C-4	✱Q408	J-1	RV103	P-4			
IC509	B-5	✱Q409	J-2	RV201	M-3			
IC510	B-4	✱Q410	J-1	RV301	J-1			
IC511	J-6	✱Q411	J-2	RV302	H-1			
IC512	G-6	✱Q412	J-2	RV303	K-4			
IC601	D-4	✱Q413	K-2	RV401	H-3			
IC602	D-4	✱Q414	K-2	RV501	A-4			
IC603	F-4	✱Q415	K-2	RV502	A-4			
IC604	F-3	✱Q416	J-2	RV503	B-4			
IC605	F-3	✱Q417	H-2	RV504	B-4			
IC606	E-3	✱Q418	H-2	RV505	B-4			
IC607	F-3	✱Q501	A-1	RV506	B-4			
IC608	D-2	Q502	A-1	RV601	D-1			
IC609	E-2	Q503	A-1	RV602	F-1			
IC610	D-2	Q504	A-1	RV603	D-1			
IC611	D-2	✱Q505	A-5	RV604	D-1			
IC612	C-2	✱Q506	A-4	RV605	F-1			
IC701	F-1	Q507	B-1	RV606	C-1			

✱ : B SIDE
__ : UVW-1800/1800P ONLY
N̄ : UVW-1800/1600 ONLY
△ : 1-648-899-11 ONLY
◎ : UVW-1800 (1-648-899-12) ONLY
● : UVW-1800P/1600/1600P (1-648-899-12) ONLY

UVW-1800 (J) ;Serial No.10001 through 10900
UVW-1800 (UC);Serial No.10001 through 13930
UVW-1800P(EK);Serial No.10001 through 14140
UVW-1600 (J) ;Serial No.10001 through 10600
UVW-1600 (UC);Serial No.10001 through 12900
UVW-1600P(EK);Serial No.10001 through 13780

VP-43/43A/43P/43AP(3/7) ;C RF AGC/EQ,C DO DET.

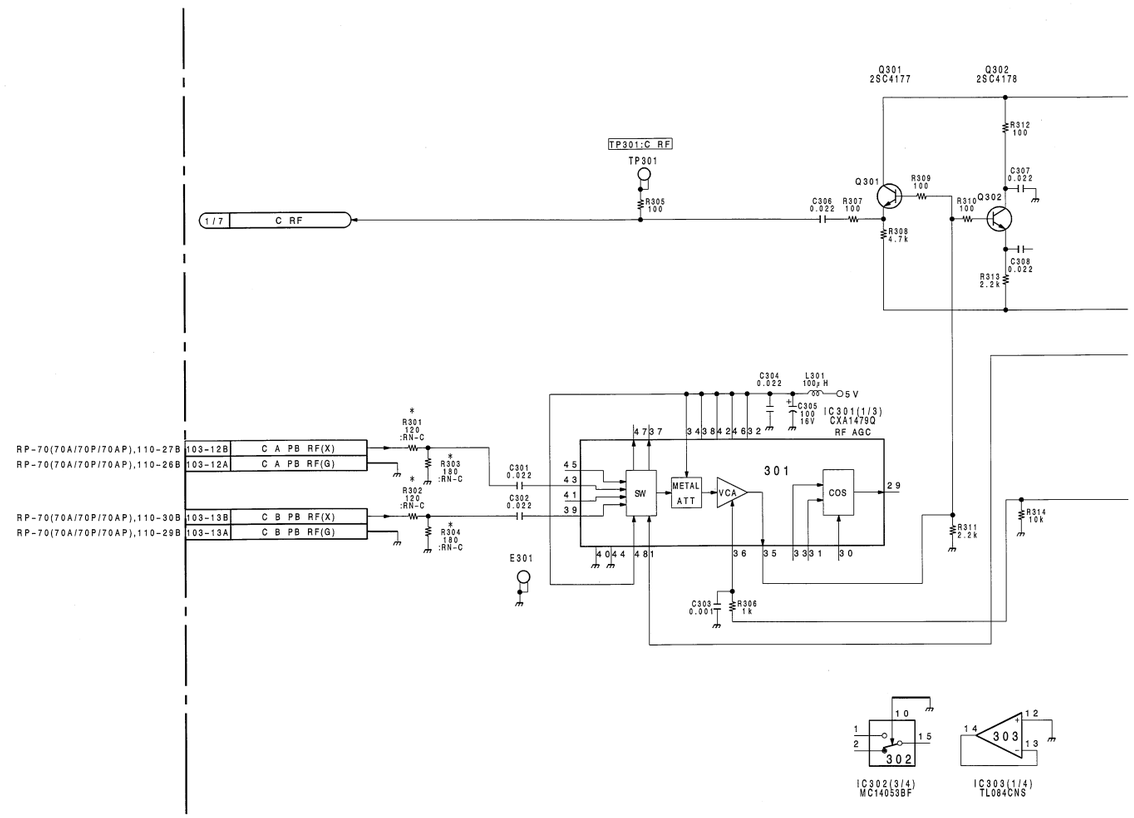

 VP-43/43A/43P/43AP (3/7)

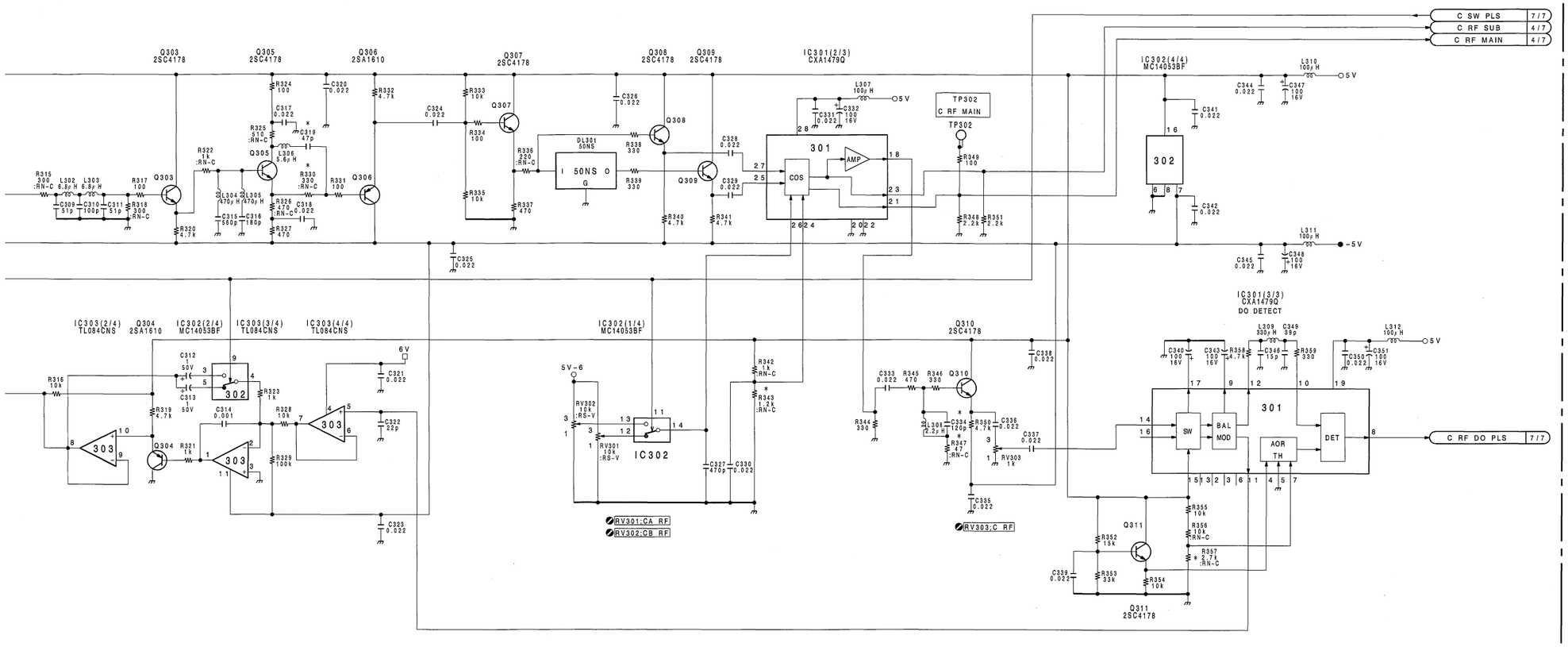

*

REF NO.	UVW-1800 J,UC	UVW-1800 EK	UVW-1600 J,UC	UVW-1600 EK
R301	▲120	0	▲180	▲82
R302	▲120	0	▲180	▲82
R303	▲180	▲300	▲120	▲220
R304	▲180	▲300	▲120	▲220

*

REF NO	J,UC	EK
C334	120P	100P
R347	▲47	▲47
R343	▲1200	▲1200
R357	▲2700	▲2700
C319	47P	68P
R330	▲330	▲470

▲ = :RN-C

VP-43/43A
VP-43P/43AP BOARD (3/7)

BOARD NO.1-648-899-11
UVW-1800 (J) ;#10001-10900
UVW-1800 (UC);#10001-13930
UVW-1800P(EK);#10001-14140
UVW-1600 (J) ;#10001-10600
UVW-1600 (UC);#10001-12900
UVW-1600P(EK);#10001-13780

16-117 (a2)

VP-43/43A(1-648-899-11, 12)

CN103	N-6	IC702	F-1	Q508	B-1	RV701	E-1
CN104	C-6	IC703	R-4	✱Q509	A-4	RV702	E-1
CN105	R-5	IC704	R-4	✱Q510	A-4	RV703	E-1
		IC705	R-4	✱Q511	A-4	RV704	G-1
DL101	N-4			✱Q512	A-4		
DL301	J-4	✱Q101	N-5	✱Q513	B-2	TH201	P-2
		✱Q102	N-4	Q514	B-3	TH401	J-2
✱D201	N-2	✱Q103	N-5	✱Q515	B-2		
✱D401	J-2	✱Q104	N-4	✱Q516	B-2	◎ TH601	D-2
✱D501	A-2	✱Q105	N-4	Q517	B-3	● ✱TH601	D-1
✱D502	B-2	✱Q106	N-3	✱Q601	F-5		
✱D503	B-3	✱Q107	N-3	✱Q602	F-5	TP101	L-2
✱D504	B-4	✱Q108	N-4	Q603	E-5	TP102	P-1
✱D601	D-2	✱Q109	N-4	Q604	F-5	TP103	L-1
△✱D602	E-2	✱Q110	P-4	Q605	F-5	TP104	P-3
✱D701	R-4	✱Q111	P-5	Q606	F-5	TP201	P-1
		✱Q112	P-5	Q607	E-5	TP301	H-1
E101	P-6	✱Q201	M-2	Q608	F-5	TP302	J-3
E102	N-1	✱Q202	N-1	Q609	E-4	TP401	L-1
E201	R-1	✱Q203	P-2	Q610	F-4		
E301	K-5	✱Q204	N-2	Q611	F-5		
E401	G-2	✱Q205	P-2	Q612	F-5		
E501	B-2	✱Q206	P-2	✱Q613	D-4		
E502	B-6	✱Q207	N-2	✱Q614	D-3		
E601	E-4	✱Q208	N-1	✱Q615	D-3		
E602	D-1	✱Q209	N-1	✱Q616	C-3		
E701	F-2	✱Q210	N-1	✱Q617	C-3		
		✱Q211	P-2	✱Q618	F-2		
FL201	M-1	✱Q212	P-1	✱Q619	F-2		
FL401	H-1	✱Q213	R-2	✱Q620	F-3		
FL601	E-2	✱Q214	R-2	✱Q621	F-3		
		✱Q215	P-1	✱Q622	E-3		
IC101	P-4	✱Q216	N-2	✱Q623	D-3		
IC102	M-5	✱Q217	M-2	✱Q624	D-1		
IC103	N-5	✱Q218	M-2	✱Q625	E-4		
IC104	L-5	✱Q219	M-2	✱Q626	D-4		
IC201	L-3	✱Q220	M-2	✱Q627	D-1		
IC202	M-2	✱Q301	J-4	✱Q628	D-1		
IC203	M-1	✱Q302	J-4	✱Q701	E-2		
IC204	P-1	✱Q303	H-4	✱Q702	F-2		
IC205	L-2	✱Q304	H-5	✱Q703	E-2		
IC301	K-4	✱Q305	H-4	✱Q704	F-2		
IC302	G-5	✱Q306	H-3	✱Q705	E-2		
IC303	H-5	✱Q307	J-3	✱Q706	F-2		
IC401	H-2	✱Q308	J-4	✱Q707	E-1		
IC402	H-1	✱Q309	J-4	✱Q708	F-1		
IC403	K-1	✱Q310	K-3	✱Q709	F-2		
IC404	G-2	✱Q311	K-5	✱Q710	F-1		
IC501	A-5	✱Q401	H-2	✱Q711	F-2		
IC502	A-2	✱Q402	J-1	✱Q712	F-2		
IC503	A-2	✱Q403	J-1	✱Q713	F-1		
IC504	B-2	✱Q404	J-2	✱Q714	E-1		
IC505	B-2	✱Q405	J-1				
IC506	A-3	✱Q406	J-1	RV101	L-1		
IC507	B-5	✱Q407	J-1	RV102	K-1		
IC508	C-4	✱Q408	J-1	RV103	P-4		
IC509	B-5	✱Q409	J-2	RV201	M-3		
IC510	B-4	✱Q410	J-1	RV301	J-1		
IC511	J-6	✱Q411	J-2	RV302	H-1		
IC512	G-6	✱Q412	J-2	RV303	K-4		
IC601	D-4	✱Q413	K-2	RV401	H-3		
IC602	D-4	✱Q414	K-2	RV501	A-4		
IC603	F-4	✱Q415	K-2	RV502	A-4		
IC604	F-3	✱Q416	J-2	RV503	B-4		
IC605	F-3	✱Q417	H-2	RV504	B-4		
IC606	E-3	✱Q418	H-2	RV505	B-4		
IC607	F-3	✱Q501	A-1	RV506	B-4		
IC608	D-2	Q502	A-1	RV601	D-1		
IC609	E-2	Q503	A-1	RV602	F-1		
IC610	D-2	Q504	A-1	RV603	D-1		
IC611	D-2	✱Q505	A-5	RV604	D-1		
IC612	C-2	✱Q506	A-4	RV605	F-1		
IC701	F-1	Q507	B-1	RV606	C-1		

✱ : B SIDE
▁ : UVW-1800/1800P ONLY
N : UVW-1800/1600 ONLY
△ : 1-648-899-11 ONLY
◎ : UVW-1800 (1-648-899-12) ONLY
● : UVW-1800P/1600/1600P (1-648-899-12) ONLY

For J,UC

① TP401 PB

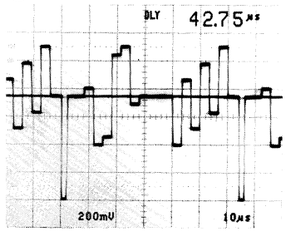

For EK

① TP401 PB

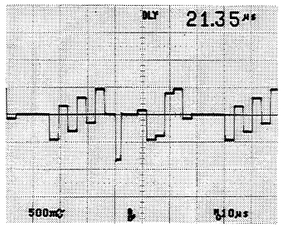

UVW-1800 (J) ;Serial No.10001 through 10900
UVW-1800 (UC);Serial No.10001 through 13930
UVW-1800P(EK);Serial No.10001 through 14140
UVW-1600 (J) ;Serial No.10001 through 10600
UVW-1600 (UC);Serial No.10001 through 12900
UVW-1600P(EK);Serial No.10001 through 13780

VP-43/43A/43P/43AP(4/7);C OMC,C DEM,C NL DE-EMPH.

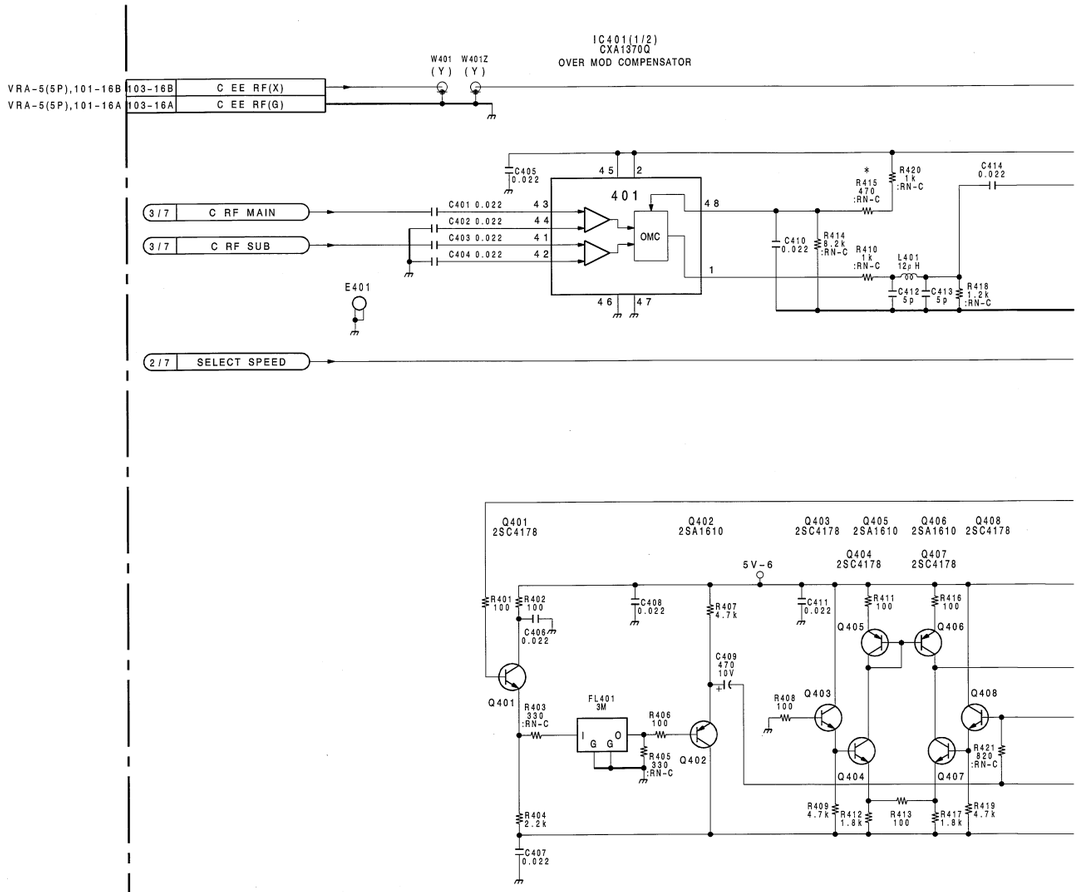

 VP-43/43A/43P/43AP (4/7)

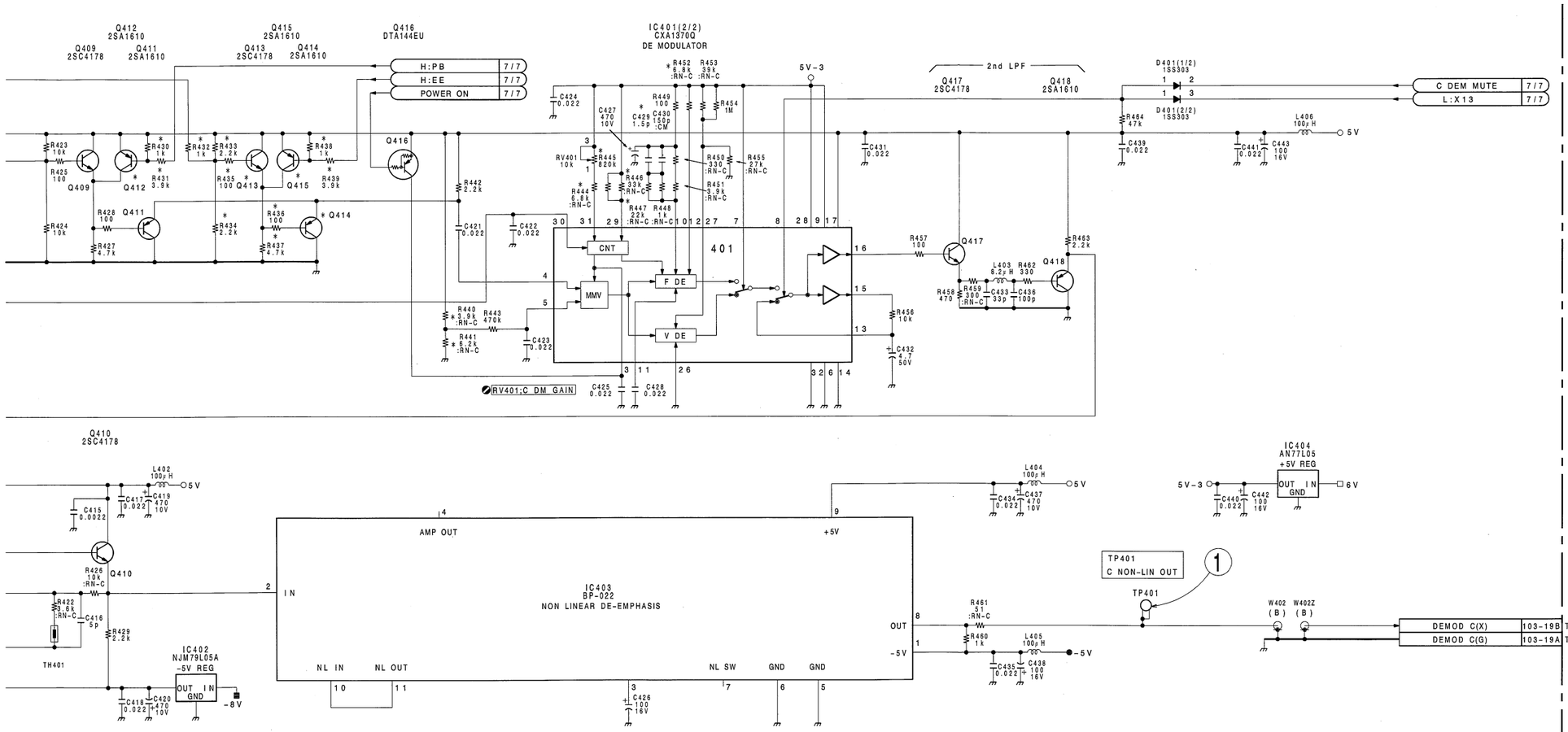

*

REF NO.	UVW-1800	UVW-1600
Q412	2SA1610	N' M
R430	1000	N' M
R431	3900	N' M
R432	1000	N' M
R433	2200	N' M
R434	2200	N' M
R435	100	N' M
Q413	2SC4178	N' M
Q414	2SA1610	N' M
Q415	2SA1610	N' M
R436	100	N' M
R437	4700	N' M
R438	1000	N' M
R439	3900	N' M

*

REF NO.	J,UC	EK
R415	▲470	▲470
R440	▲3900	▲4700
R441	▲6200	▲4700
R445	820K	N' M
R447	▲22K	▲18K
R446	▲33K	▲33K
R452	▲6800	▲5600
R444	▲6800	▲5600
C429	1.5P	5P

▲ = :RN-C

VP-43/43A
VP-43P/43AP BOARD (4/7)

BOARD NO.1-648-899-11
UVW-1800 (J) ;#10001-10900
UVW-1800 (UC);#10001-13930
UVW-1800P(EK);#10001-14140
UVW-1600 (J) ;#10001-10600
UVW-1600 (UC);#10001-12900
UVW-1600P(EK);#10001-13780

16-121 (a2)

VP-43/43A(1-648-899-11, 12)

CN103	N-6	IC702	F-1	Q508	B-1	RV701	E-1
CN104	C-6	IC703	R-4	✱Q509	A-4	RV702	E-1
CN105	R-5	IC704	R-4	✱Q510	A-4	RV703	E-1
		IC705	R-4	✱Q511	A-4	RV704	G-1
DL101	N-4			✱Q512	A-4		
DL301	J-4	✱Q101	N-5	✱Q513	B-2	TH201	P-2
		✱Q102	N-4	Q514	B-3	TH401	J-2
✱D201	N-2	✱Q103	N-5	✱Q515	B-2		
✱D401	J-2	✱Q104	N-4	✱Q516	B-2	◎ TH601	D-2
✱D501	A-2	✱Q105	N-4	Q517	B-3	● ✱TH601	D-1
✱D502	B-2	✱Q106	N-3	✱Q601	F-5		
✱D503	B-3	✱Q107	N-3	✱Q602	F-5	TP101	L-2
✱D504	B-4	✱Q108	N-4	Q603	E-5	TP102	P-1
✱D601	D-2	✱Q109	N-4	Q604	F-5	TP103	L-1
△✱D602	E-2	✱Q110	P-4	Q605	F-5	TP104	P-3
✱D701	R-4	✱Q111	P-5	Q606	F-5	TP201	P-1
		✱Q112	P-5	Q607	E-5	TP301	H-1
E101	P-6	✱Q201	M-2	Q608	F-5	TP302	J-3
E102	N-1	✱Q202	N-1	Q609	E-4	TP401	L-1
E201	R-1	✱Q203	P-2	Q610	F-4		
E301	K-5	✱Q204	N-2	Q611	F-5		
E401	G-2	✱Q205	P-2	Q612	F-5		
E501	B-2	✱Q206	P-2	✱Q613	D-4		
E502	B-6	✱Q207	N-2	✱Q614	D-3		
E601	E-4	✱Q208	N-1	✱Q615	D-3		
E602	D-1	✱Q209	N-1	✱Q616	C-3		
E701	F-2	✱Q210	N-1	✱Q617	C-3		
		✱Q211	P-2	✱Q618	F-2		
FL201	M-1	✱Q212	P-1	✱Q619	F-2		
FL401	H-1	✱Q213	R-2	✱Q620	F-3		
FL601	E-2	✱Q214	R-2	✱Q621	F-3		
		✱Q215	P-1	✱Q622	E-3		
IC101	P-4	✱Q216	N-2	✱Q623	D-3		
IC102	M-5	✱Q217	M-2	✱Q624	D-1		
IC103	N-5	✱Q218	M-2	✱Q625	E-4		
IC104	L-5	✱Q219	M-2	✱Q626	D-4		
IC201	L-3	✱Q220	M-2	✱Q627	D-1		
IC202	M-2	✱Q301	J-4	✱Q628	D-1		
IC203	M-1	✱Q302	J-4	✱Q701	E-2		
IC204	P-1	✱Q303	H-4	✱Q702	F-2		
IC205	L-2	✱Q304	H-5	✱Q703	E-2		
IC301	K-4	✱Q305	H-4	✱Q704	F-2		
IC302	G-5	✱Q306	H-3	✱Q705	E-2		
IC303	H-5	✱Q307	J-3	✱Q706	F-2		
IC401	H-2	✱Q308	J-4	✱Q707	E-1		
IC402	H-1	✱Q309	J-4	✱Q708	F-1		
IC403	K-1	✱Q310	K-3	✱Q709	F-2		
IC404	G-2	✱Q311	K-5	✱Q710	F-1		
IC501	A-5	✱Q401	H-2	✱Q711	F-2		
IC502	A-2	✱Q402	J-1	✱Q712	F-2		
IC503	A-2	✱Q403	J-1	✱Q713	F-1		
IC504	B-2	✱Q404	J-2	✱Q714	E-1		
IC505	B-2	✱Q405	J-1				
IC506	A-3	✱Q406	J-1	RV101	L-1		
IC507	B-5	✱Q407	J-1	RV102	K-1		
IC508	C-4	✱Q408	J-1	RV103	P-4		
IC509	B-5	✱Q409	J-2	RV201	M-3		
IC510	B-4	✱Q410	J-1	RV301	J-1		
IC511	J-6	✱Q411	J-2	RV302	H-1		
IC512	G-6	✱Q412	J-2	RV303	K-4		
IC601	D-4	✱Q413	K-2	RV401	H-3		
IC602	D-4	✱Q414	K-2	RV501	A-4		
IC603	F-4	✱Q415	K-2	RV502	A-4		
IC604	F-3	✱Q416	J-2	RV503	B-4		
IC605	F-3	✱Q417	H-2	RV504	B-4		
IC606	E-3	✱Q418	H-2	RV505	B-4		
IC607	F-3	✱Q501	A-1	RV506	B-4		
IC608	D-2	Q502	A-1	RV601	D-1		
IC609	E-2	Q503	A-1	RV602	F-1		
IC610	D-2	Q504	A-1	RV603	D-1		
IC611	D-2	✱Q505	A-5	RV604	D-1		
IC612	C-2	✱Q506	A-4	RV605	F-1		
IC701	F-1	Q507	B-1	RV606	C-1		

✱ : B SIDE
_ : UVW-1800/1800P ONLY
N : UVW-1800/1600 ONLY
△ : 1-648-899-11 ONLY
◎ : UVW-1800 (1-648-899-12) ONLY
● : UVW-1800P/1600/1600P (1-648-899-12) ONLY

UVW-1800 (J) ;Serial No.10001 through 10900
UVW-1800 (UC);Serial No.10001 through 13930
UVW-1800P(EK);Serial No.10001 through 14140
UVW-1600 (J) ;Serial No.10001 through 10600
UVW-1600 (UC);Serial No.10001 through 12900
UVW-1600P(EK);Serial No.10001 through 13780

VP-43/43A/43P/43AP(5/7);Y/S-Y OUT DRIVE,COMPOSITE OUT DRIVE CHARA/SYNC MIX

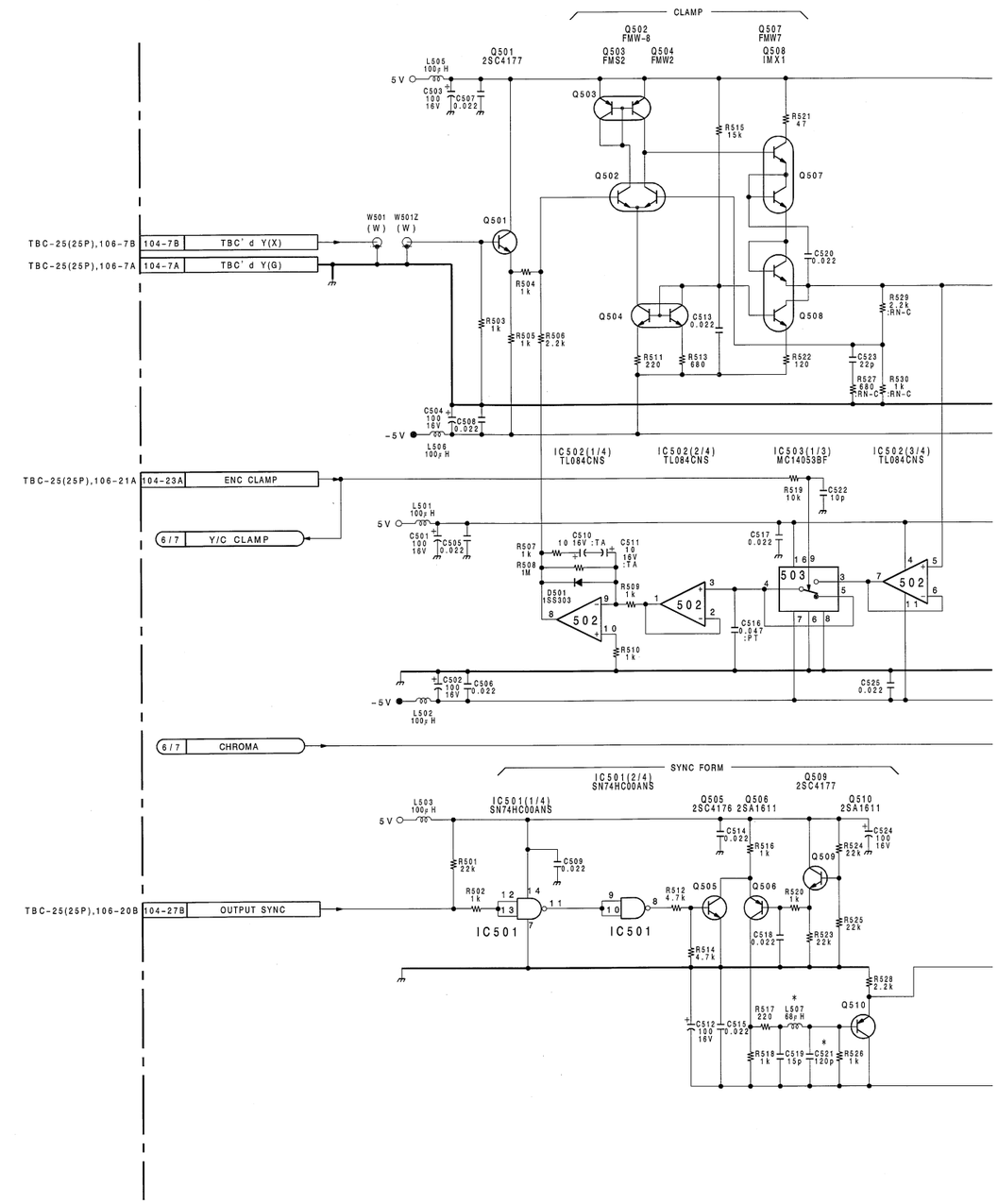

A B C D E F G H

 VP-43/43A/43P/43AP (5/7)

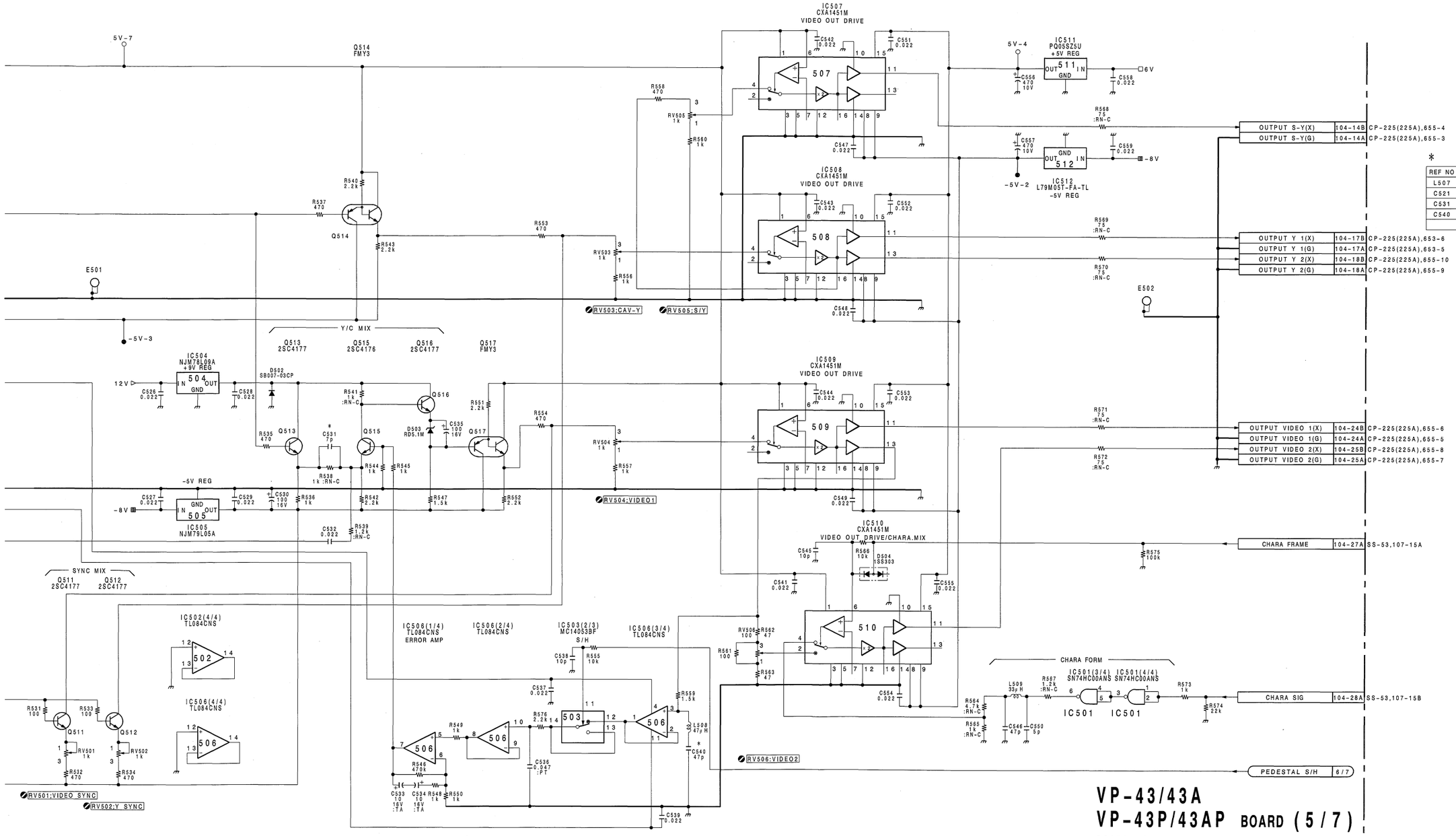

REF NO	J,UC	EK
L507	68μH	100μH
C521	120P	220P
C531	7P	5P
C540	47P	27P

16-125 (a2)

VP-43/43A(1-648-899-11, 12)

CN103	N-6	IC702	F-1	Q508	B-1	RV701	E-1
CN104	C-6	IC703	R-4	✱Q509	A-4	RV702	E-1
CN105	R-5	IC704	R-4	✱Q510	A-4	RV703	E-1
		IC705	R-4	✱Q511	A-4	RV704	G-1
DL101	N-4			✱Q512	A-4		
DL301	J-4	✱Q101	N-5	✱Q513	B-2	TH201	P-2
		✱Q102	N-4	Q514	B-3	TH401	J-2
✱D201	N-2	✱Q103	N-5	✱Q515	B-2		
✱D401	J-2	✱Q104	N-4	✱Q516	B-2	◎ TH601	D-2
✱D501	A-2	✱Q105	N-4	Q517	B-3	●✱TH601	D-1
✱D502	B-2	✱Q106	N-3	✱Q601	F-5		
✱D503	B-3	✱Q107	N-3	✱Q602	F-5	TP101	L-2
✱D504	B-4	✱Q108	N-4	Q603	E-5	TP102	P-1
✱D601	D-2	✱Q109	N-4	Q604	F-5	TP103	L-1
△✱D602	E-2	✱Q110	P-4	Q605	F-5	TP104	P-3
✱D701	R-4	✱Q111	P-5	Q606	F-5	TP201	P-1
		✱Q112	P-5	Q607	E-5	TP301	H-1
E101	P-6	✱Q201	M-2	Q608	F-5	TP302	J-3
E102	N-1	✱Q202	N-1	Q609	E-4	TP401	L-1
E201	R-1	✱Q203	P-2	Q610	F-4		
E301	K-5	✱Q204	N-2	Q611	F-5		
E401	G-2	✱Q205	P-2	Q612	F-5		
E501	B-2	✱Q206	P-2	✱Q613	D-4		
E502	B-6	✱Q207	N-2	✱Q614	D-3		
E601	E-4	✱Q208	N-1	✱Q615	D-3		
E602	D-1	✱Q209	N-1	✱Q616	C-3		
E701	F-2	✱Q210	N-1	✱Q617	C-3		
		✱Q211	P-2	✱Q618	F-2		
FL201	M-1	✱Q212	P-1	✱Q619	F-2		
FL401	H-1	✱Q213	R-2	✱Q620	F-3		
FL601	E-2	✱Q214	R-2	✱Q621	F-3		
		✱Q215	P-1	✱Q622	E-3		
IC101	P-4	✱Q216	N-2	✱Q623	D-3		
IC102	M-5	✱Q217	M-2	✱Q624	D-1		
IC103	N-5	✱Q218	M-2	✱Q625	E-4		
IC104	L-5	✱Q219	M-2	✱Q626	D-4		
IC201	L-3	✱Q220	M-2	✱Q627	D-1		
IC202	M-2	✱Q301	J-4	✱Q628	D-1		
IC203	M-1	✱Q302	J-4	✱Q701	E-2		
IC204	P-1	✱Q303	H-4	✱Q702	F-2		
IC205	L-2	✱Q304	H-5	✱Q703	E-2		
IC301	K-4	✱Q305	H-4	✱Q704	F-2		
IC302	G-5	✱Q306	H-3	✱Q705	E-2		
IC303	H-5	✱Q307	J-3	✱Q706	F-2		
IC401	H-2	✱Q308	J-4	✱Q707	E-1		
IC402	H-1	✱Q309	J-4	✱Q708	F-1		
IC403	K-1	✱Q310	K-3	✱Q709	F-2		
IC404	G-2	✱Q311	K-5	✱Q710	F-1		
IC501	A-5	✱Q401	H-2	✱Q711	F-2		
IC502	A-2	✱Q402	J-1	✱Q712	F-2		
IC503	A-2	✱Q403	J-1	✱Q713	F-1		
IC504	B-2	✱Q404	J-2	✱Q714	E-1		
IC505	B-2	✱Q405	J-1				
IC506	A-3	✱Q406	J-1	RV101	L-1		
IC507	B-5	✱Q407	J-1	RV102	K-1		
IC508	C-4	✱Q408	J-1	RV103	P-4		
IC509	B-5	✱Q409	J-2	RV201	M-3		
IC510	B-4	✱Q410	J-1	RV301	J-1		
IC511	J-6	✱Q411	J-2	RV302	H-1		
IC512	G-6	✱Q412	J-2	RV303	K-4		
IC601	D-4	✱Q413	K-2	RV401	H-3		
IC602	D-4	✱Q414	K-2	RV501	A-4		
IC603	F-4	✱Q415	K-2	RV502	A-4		
IC604	F-3	✱Q416	J-2	RV503	B-4		
IC605	F-3	✱Q417	H-2	RV504	B-4		
IC606	E-3	✱Q418	H-2	RV505	B-4		
IC607	F-3	✱Q501	A-1	RV506	B-4		
IC608	D-2	Q502	A-1	RV601	D-1		
IC609	E-2	Q503	A-1	RV602	F-1		
IC610	D-2	Q504	A-1	RV603	D-1		
IC611	D-2	✱Q505	A-5	RV604	D-1		
IC612	C-2	✱Q506	A-4	RV605	F-1		
IC701	F-1	Q507	B-1	RV606	C-1		

✱ : B SIDE
___ : UVW-1800/1800P ONLY
N̄ : UVW-1800/1600 ONLY
△ : 1-648-899-11 ONLY
◎ : UVW-1800 (1-648-899-12) ONLY
● : UVW-1800P/1600/1600P (1-648-899-12) ONLY

UVW-1800 (J) ;Serial No.10001 through 10900
UVW-1800 (UC);Serial No.10001 through 13930
UVW-1800P(EK);Serial No.10001 through 14140
UVW-1600 (J) ;Serial No.10001 through 10600
UVW-1600 (UC);Serial No.10001 through 12900
UVW-1600P(EK);Serial No.10001 through 13780

VP-43/43A/43P/43AP(6/7) ;ENCODE,S-C OUT DRIVE

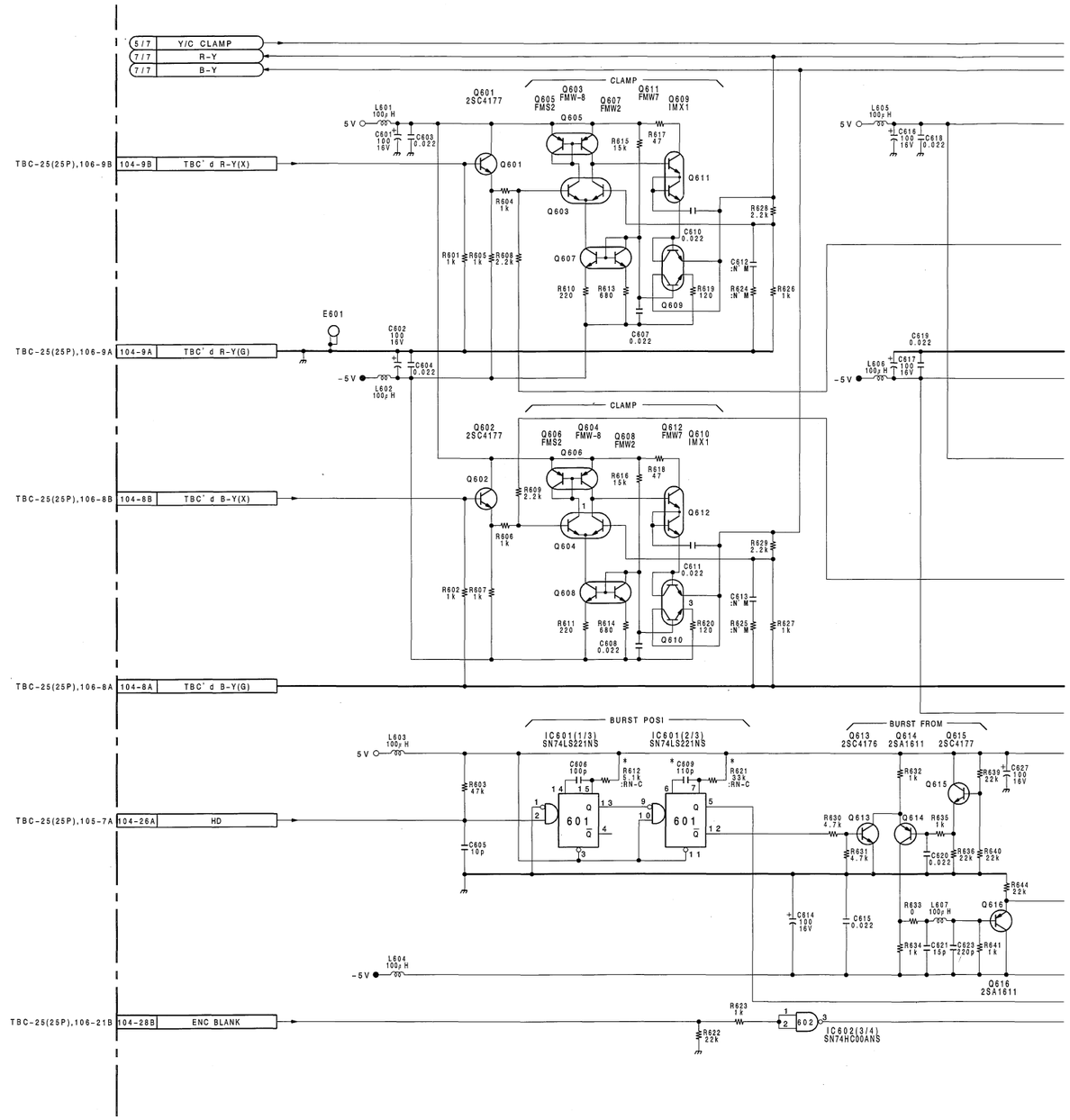

A B C D E F G H

 VP-43/43A/43P/43AP (6/7)

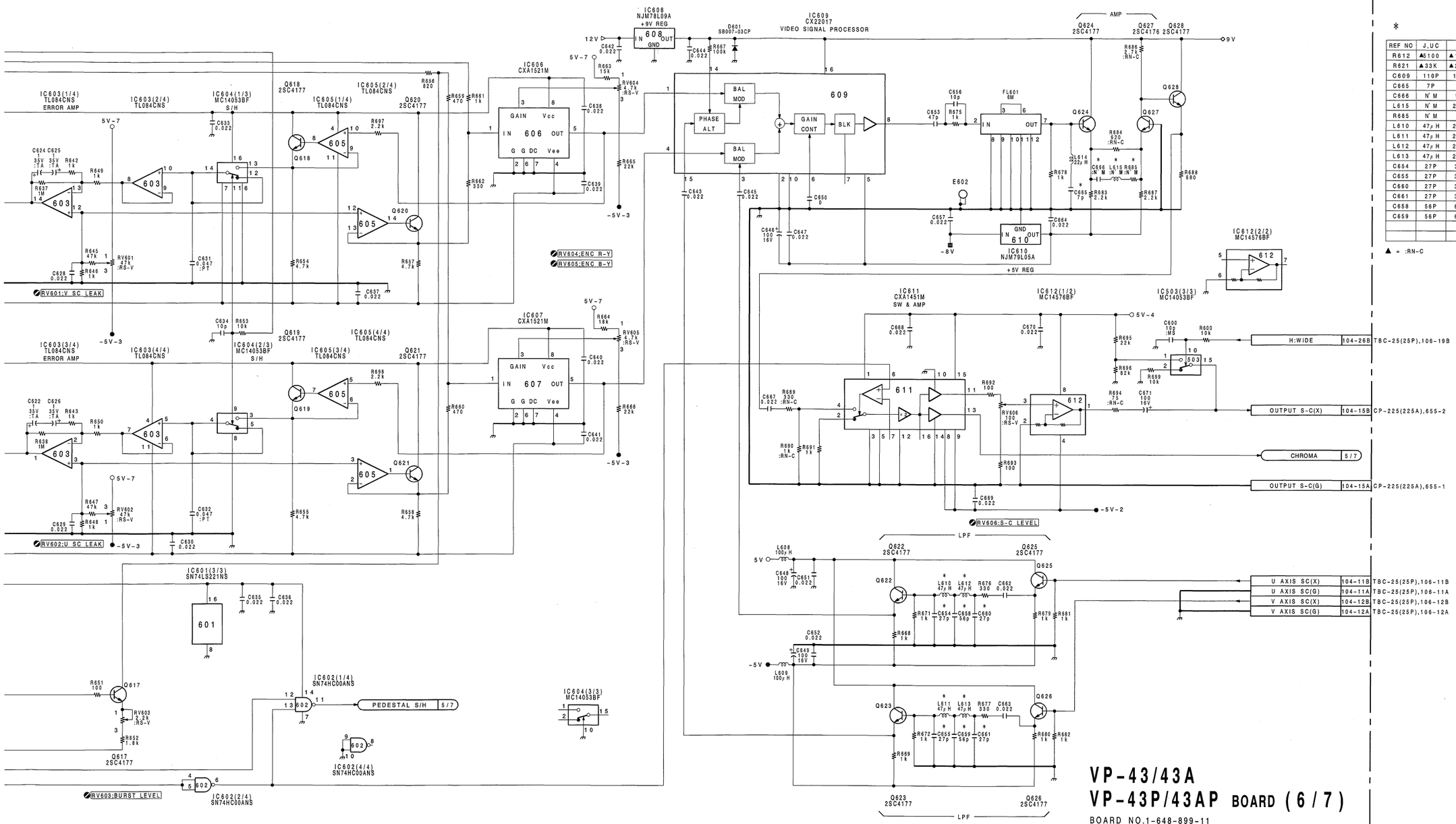

*

REF NO	J,UC	EK
R612	▲5100	▲10K
R621	▲33K	▲20K
C609	110P	150P
C665	7P	4P
C666	N'M	10P
L615	N'M	22UH
R685	N'M	1K
L610	47μH	27μH
L611	47μH	27μH
L612	47μH	27μH
L613	47μH	27μH
C654	27P	33P
C655	27P	33P
C660	27P	33P
C661	27P	33P
C658	56P	68P
C659	56P	68P

▲ = :RN-C

VP-43/43A
VP-43P/43AP BOARD (6/7)

BOARD NO.1-648-899-11
UVW-1800 (J) ;#10001-10900
UVW-1800 (UC);#10001-13930
UVW-1800P(EK);#10001-14140
UVW-1600 (J) ;#10001-10600
UVW-1600 (UC);#10001-12900
UVW-1600P(EK);#10001-13780

16-129 (a2)

 VP-43/43A/43P/43AP

VP-43/43A(1-648-899-11, 12)

CN103	N-6	IC702	F-1	Q508	B-1	RV701	E-1
CN104	C-6	IC703	R-4	✱Q509	A-4	RV702	E-1
CN105	R-5	IC704	R-4	✱Q510	A-4	RV703	E-1
		IC705	R-4	✱Q511	A-4	RV704	G-1
DL101	N-4			✱Q512	A-4		
DL301	J-4	✱Q101	N-5	✱Q513	B-2	TH201	P-2
		✱Q102	N-4	Q514	B-3	TH401	J-2
✱D201	N-2	✱Q103	N-5	✱Q515	B-2		
✱D401	J-2	✱Q104	N-4	✱Q516	B-2	◎ TH601	D-2
✱D501	A-2	✱Q105	N-4	Q517	B-3	● ✱TH601	D-1
✱D502	B-2	✱Q106	N-3	✱Q601	F-5		
✱D503	B-3	✱Q107	N-3	✱Q602	F-5	TP101	L-2
✱D504	B-4	✱Q108	N-4	Q603	E-5	TP102	P-1
✱D601	D-2	✱Q109	N-4	Q604	F-5	TP103	L-1
△ ✱D602	E-2	✱Q110	P-4	Q605	F-5	TP104	P-3
✱D701	R-4	✱Q111	P-5	Q606	F-5	TP201	P-1
		✱Q112	P-5	Q607	E-5	TP301	H-1
E101	P-6	✱Q201	M-2	Q608	F-5	TP302	J-3
E102	N-1	✱Q202	N-1	Q609	E-4	TP401	L-1
E201	R-1	✱Q203	P-2	Q610	F-4		
E301	K-5	✱Q204	N-2	Q611	F-5		
E401	G-2	✱Q205	P-2	Q612	F-5		
E501	B-2	✱Q206	P-2	✱Q613	D-4		
E502	B-6	✱Q207	N-2	✱Q614	D-3		
E601	E-4	✱Q208	N-1	✱Q615	D-3		
E602	D-1	✱Q209	N-1	✱Q616	C-3		
E701	F-2	✱Q210	N-1	✱Q617	C-3		
		✱Q211	P-2	✱Q618	F-2		
FL201	M-1	✱Q212	P-1	✱Q619	F-2		
FL401	H-1	✱Q213	R-2	✱Q620	F-3		
FL601	E-2	✱Q214	R-2	✱Q621	F-3		
		✱Q215	P-1	✱Q622	E-3		
IC101	P-4	✱Q216	N-2	✱Q623	D-3		
IC102	M-5	✱Q217	M-2	✱Q624	D-1		
IC103	N-5	✱Q218	M-2	✱Q625	E-4		
IC104	L-5	✱Q219	M-2	✱Q626	D-4		
IC201	L-3	✱Q220	M-2	✱Q627	D-1		
IC202	M-2	✱Q301	J-4	✱Q628	D-1		
IC203	M-1	✱Q302	J-4	✱Q701	E-2		
IC204	P-1	✱Q303	H-4	✱Q702	F-2		
IC205	L-2	✱Q304	H-5	✱Q703	E-2		
IC301	K-4	✱Q305	H-4	✱Q704	F-2		
IC302	G-5	✱Q306	H-3	✱Q705	E-2		
IC303	H-5	✱Q307	J-3	✱Q706	F-2		
IC401	H-2	✱Q308	J-4	✱Q707	E-1		
IC402	H-1	✱Q309	J-4	✱Q708	F-1		
IC403	K-1	✱Q310	K-3	✱Q709	F-2		
IC404	G-2	✱Q311	K-5	✱Q710	F-1		
IC501	A-5	✱Q401	H-2	✱Q711	F-2		
IC502	A-2	✱Q402	J-1	✱Q712	F-2		
IC503	A-2	✱Q403	J-1	✱Q713	F-1		
IC504	B-2	✱Q404	J-2	✱Q714	E-1		
IC505	B-2	✱Q405	J-1				
IC506	A-3	✱Q406	J-1	RV101	L-1		
IC507	B-5	✱Q407	J-1	RV102	K-1		
IC508	C-4	✱Q408	J-1	RV103	P-4		
IC509	B-5	✱Q409	J-2	RV201	M-3		
IC510	B-4	✱Q410	J-1	RV301	J-1		
IC511	J-6	✱Q411	J-2	RV302	H-1		
IC512	G-6	✱Q412	J-2	RV303	K-4		
IC601	D-4	✱Q413	K-2	RV401	H-3		
IC602	D-4	✱Q414	K-2	RV501	A-4		
IC603	F-4	✱Q415	K-2	RV502	A-4		
IC604	F-3	✱Q416	J-2	RV503	B-4		
IC605	F-3	✱Q417	H-2	RV504	B-4		
IC606	E-3	✱Q418	H-2	RV505	B-4		
IC607	F-3	✱Q501	A-1	RV506	B-4		
IC608	D-2	Q502	A-1	RV601	D-1		
IC609	E-2	Q503	A-1	RV602	F-1		
IC610	D-2	Q504	A-1	RV603	D-1		
IC611	D-2	✱Q505	A-5	RV604	D-1		
IC612	C-2	✱Q506	A-4	RV605	F-1		
IC701	F-1	Q507	B-1	RV606	C-1		

✱ : B SIDE
__ : UVW-1800/1800P ONLY
N̄ : UVW-1800/1600 ONLY
△ : 1-648-899-11 ONLY
◎ : UVW-1800 (1-648-899-12) ONLY
● : UVW-1800P/1600/1600P (1-648-899-12) ONLY

 16-132 (a)

 VP-43/43A/43P/43AP (7/7)

UVW-1800 (J) ;Serial No.10001 through 10900
UVW-1800 (UC);Serial No.10001 through 13930
UVW-1800P(EK);Serial No.10001 through 14140
UVW-1600 (J) ;Serial No.10001 through 10600
UVW-1600 (UC);Serial No.10001 through 12900
UVW-1600P(EK);Serial No.10001 through 13780

VP-43/43A/43P/43AP(7/7):R-Y/B-Y OUT DRIVE

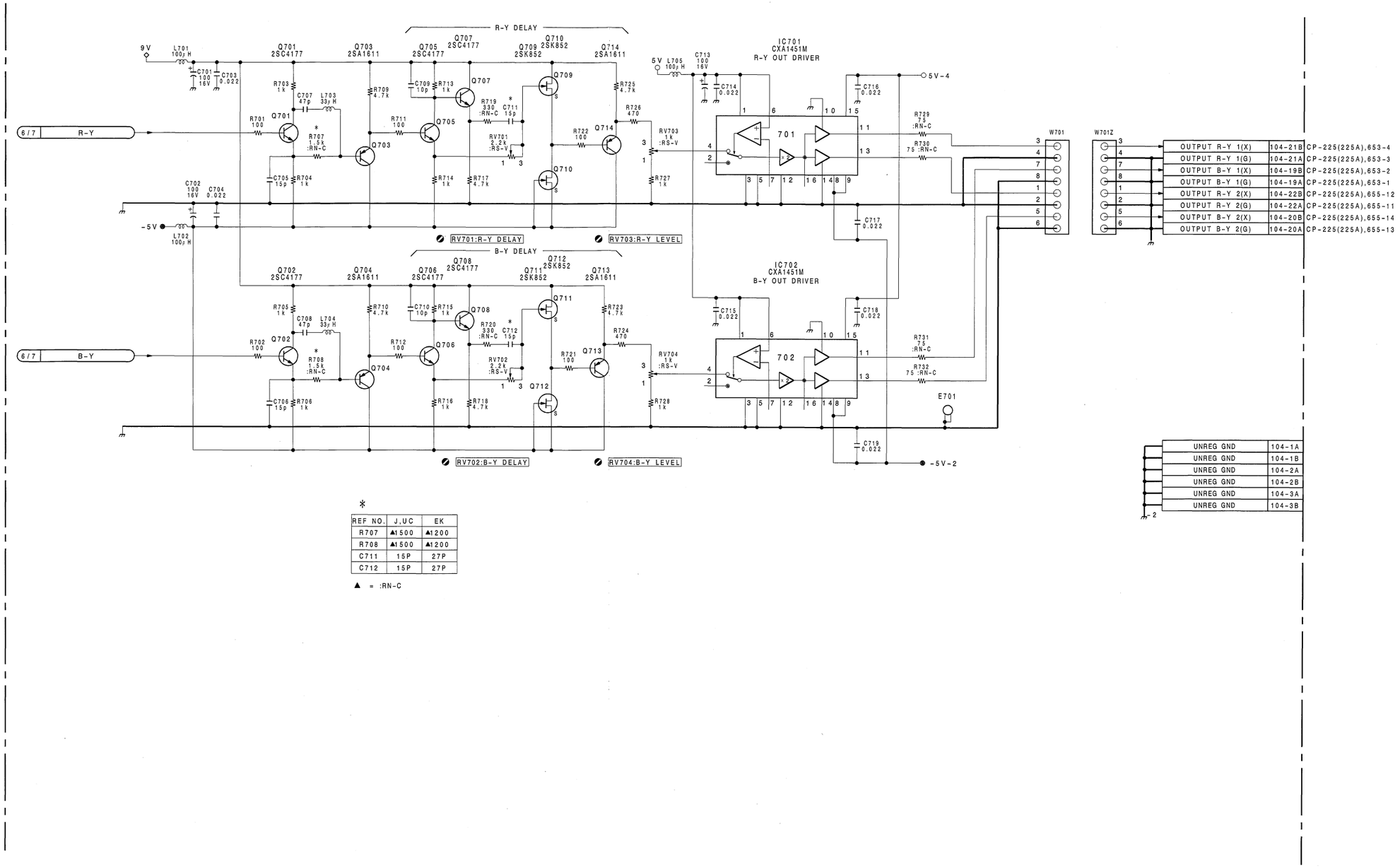

*

REF NO.	J,UC	EK
R707	▲1500	▲1200
R708	▲1500	▲1200
C711	15P	27P
C712	15P	27P

▲ = :RN-C

 16-133 (a1)

 VP-43/43A/43P/43AP (7/7)

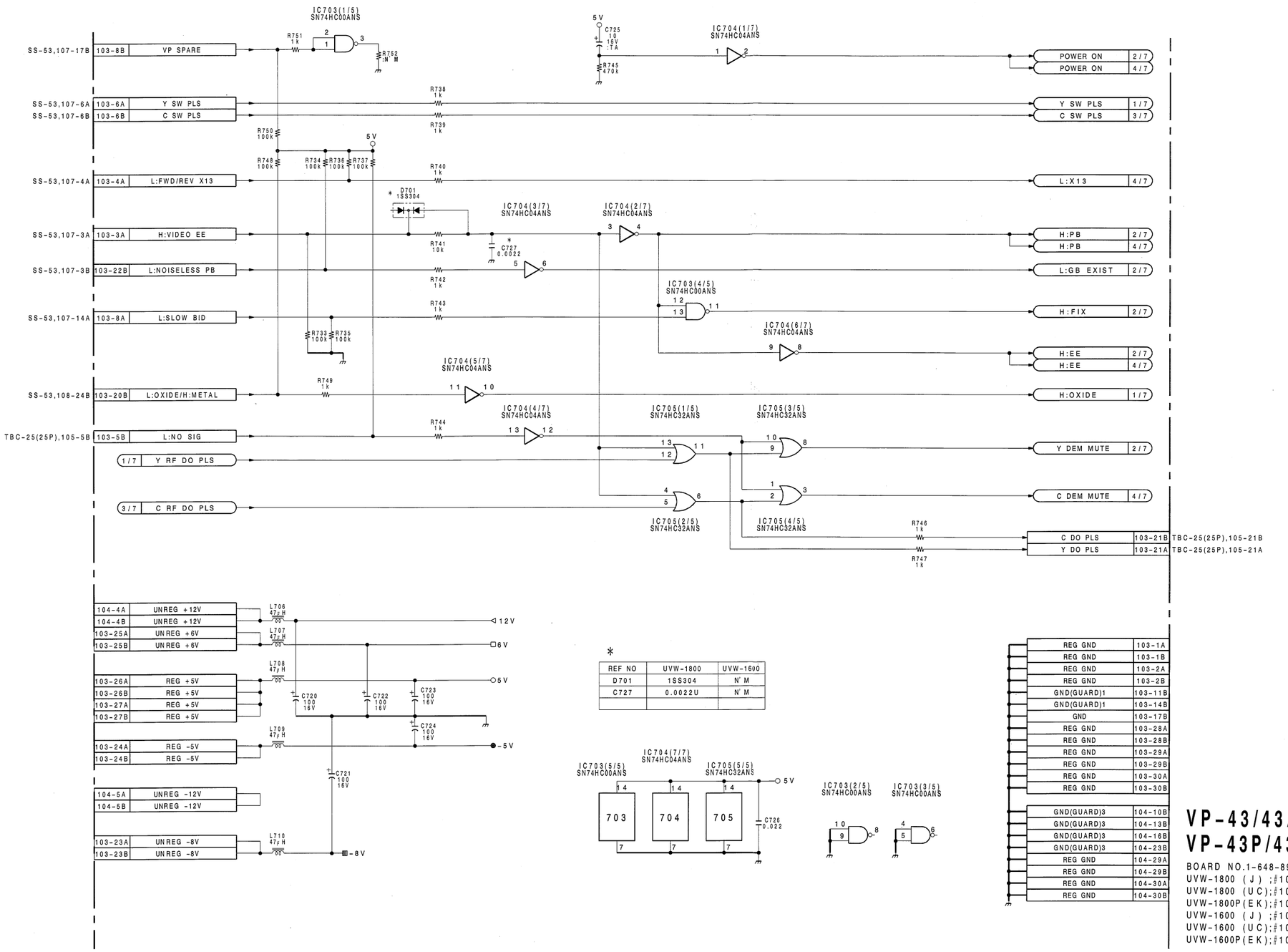

*

REF NO	UVW-1800	UVW-1600
D701	1SS304	N'M
C727	0.0022U	N'M

VP-43/43A
VP-43P/43AP BOARD (7/7)

BOARD NO.1-648-899-11
UVW-1800 (J) ;#10001-10900
UVW-1800 (UC);#10001-13930
UVW-1800P(EK);#10001-14140
UVW-1600 (J) ;#10001-10600
UVW-1600 (UC);#10001-12900
UVW-1600P(EK);#10001-13780

 16-133 (a2)

VRA-5 (1-648-898-12)

	CN101		N-6	IC601		L-4	✱Q325	F-4
	CN102		C-6	IC602		M-4	✱Q508	N-2
				IC801	N	D-3	✱Q509	P-2
	CV301		F-5	IC802	N	D-2	✱Q510	R-4
				IC901		K-6	✱Q511	N-3
	✱D101		B-3	IC902		G-6	✱Q512	P-4
	✱D102		C-3	IC903		J-6	✱Q513	P-4
	✱D109		D-4	IC904		E-6	✱Q514	P-4
	✱D202		H-4				✱Q515	P-4
	✱D301		E-3	LV301		E-4	✱Q516	N-4
	✱D302	P	F-4				✱Q517	N-4
	✱D303		F-4	✱Q101		A-3	✱Q518	P-4
	D305		F-5	Q102		A-5	✱Q519	P-5
	D306		J-3	✱Q103		A-3	✱Q520	P-5
	✱D307	P	E-3	Q104		A-3	✱Q601	L-2
	D801	N	A-2	Q105		A-3	✱Q602	M-2
				✱Q106		A-3	✱Q603	N-4
	E101		B-4	Q107		A-3	✱Q604	M-4
	E201		E-2	✱Q108		A-1	✱Q605	M-4
	E301		K-3	✱Q109		B-2	✱Q606	L-4
	E302		D-3	✱Q110		B-2	✱Q607	M-4
	E303		H-1	✱Q111		B-1	✱Q608	L-4
	E501		R-5	✱Q112		C-1	✱Q609	M-5
	E502		N-1	✱Q113		C-2	✱Q610	M-5
	E601		M-1	✱Q114		B-4	Q801	N A-2
				✱Q115		B-4	Q802	N A-2
	FB201		K-2	✱Q116		B-3	Q803	N A-2
				✱Q117		B-3	Q804	N D-3
	FL101		A-2	✱Q118		B-3		
	FL102		B-3	✱Q119		B-3	RV101	B-2
	FL103		C-3	✱Q120		B-2	RV102	B-3
	FL201		R-2	✱Q121		C-4	RV103	C-4
	FL202		N-2	✱Q122		C-4	RV104	C-3
				✱Q123		C-4	RV105	A-2
	IC101		A-3	✱Q124		C-3	RV201	P-1
	IC102		C-2	✱Q125		C-3	RV202	N-1
	IC103		D-4	✱Q126		C-3	RV203	M-1
	IC104		G-5	✱Q127		C-3	RV301	E-3
	IC201		A-1	✱Q128		C-3	RV302	K-1
	IC202		B-1	✱Q129		C-2	RV303	L-1
	IC203		A-1	✱Q130		C-2	RV304	L-1
	IC205		D-2	✱Q131		B-5	RV305	L-1
	IC206		D-1	✱Q132		C-5	RV306	K-5
	IC207		H-1	✱Q133		A-2	RV501	R-1
	IC208		E-2	✱Q201		C-1	RV502	R-4
	IC209		E-2	✱Q202		H-1	RV503	R-4
	IC210		G-2	✱Q203		H-4	RV602	M-4
	IC211		H-1	✱Q204		P-2	RV603	M-4
	IC212		J-2	✱Q207		R-2		
	IC213		P-1	✱Q209		N-2	S201	H-4
	IC214		N-1	✱Q210		R-2		
	IC215		P-2	✱Q211		K-2	TH201	N M-1
	IC216		K-2	✱Q212		R-1		
	IC217	N	K-2	✱Q213		M-3	TP101	A-3
	IC218		K-2	✱Q301		D-3	TP201	C-2
	IC219	N	J-1	✱Q303		E-3	TP202	C-1
	IC220		M-1	✱Q305		E-3	TP301	E-3
	IC301		E-4	✱Q306		E-3	TP302	E-4
	IC302		H-3	✱Q307		E-3	TP303	H-1
	IC303		E-4	✱Q308		J-4	TP304	L-5
	IC304		E-5	✱Q309		J-4	TP305	K-4
	IC305		F-4	✱Q310		F-3	TP306	J-4
	IC306		K-4	✱Q311		F-3	TP307	J-5
	IC307		F-3	✱Q312		K-3	TP308	N-5
	IC308		J-3	✱Q313		E-4	TP309	N-5
	IC309		J-3	✱Q314		E-4	TP310	F-5
	IC310		G-3	✱Q315		J-3	TP501	R-4
	IC311		J-4	✱Q316		F-5	TP502	P-1
	IC312		L-2	✱Q317		F-5	TP503	P-5
	IC313		G-5	✱Q318		E-5	TP504	N-4
	IC314		L-1	✱Q319		K-3	TP601	N-4
	IC315		K-5	✱Q320		J-3	TP602	M-1
	IC316		H-4	✱Q321		J-4	TP603	P-5
	IC317		F-3	✱Q322		J-4		
	IC501		P-4	✱Q323		J-4	X301	F-4
	IC502		R-5	✱Q324		F-4	X302	H-4

✱ : B SIDE
N : UVW-1800 ONLY
P : UVW-1800P ONLY

For J,UC

① TP101 REC/EE (COMPOSITE)

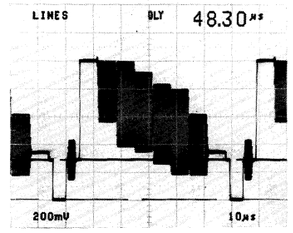

① TP101 REC/EE (COMPONENT)

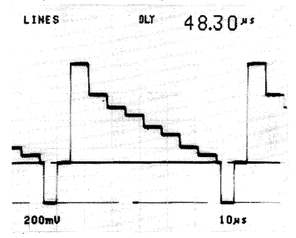

For EK

① TP101 REC/EE (COMPOSITE)

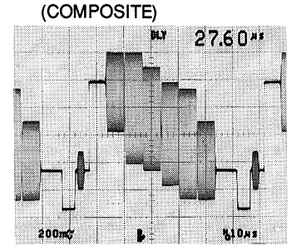

① TP101 REC/EE (COMPONENT)

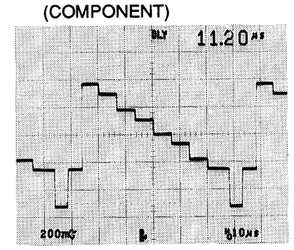

UVW-1800 (J) ;Serial No.10901 and higher
UVW-1800 (UC);Serial No.13931 and higher
UVW-1800P(EK);Serial No.14141 and higher

VRA-5/5P(1/4);INPUT PROCESS

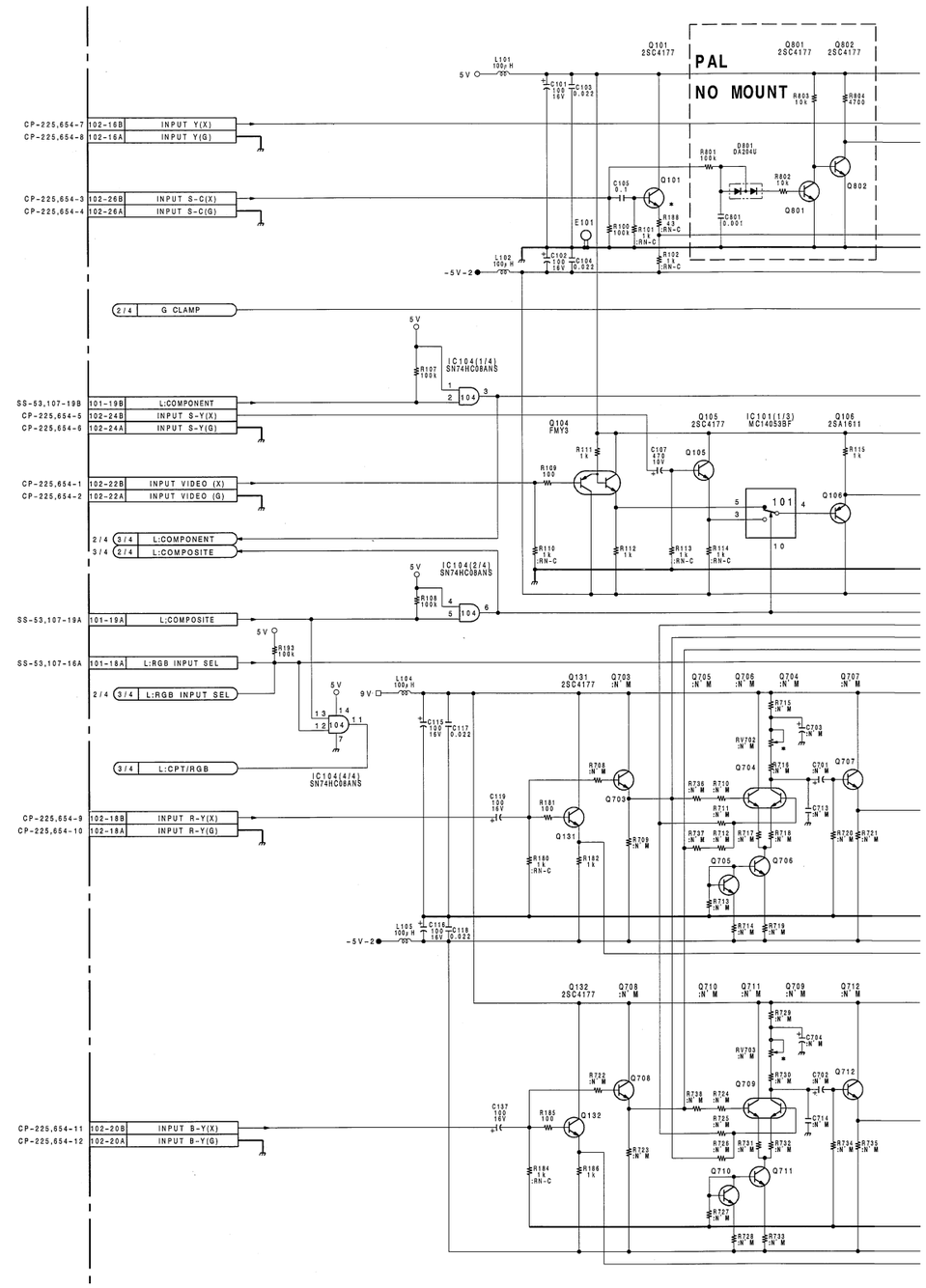

 VRA-5/5P (1/4)

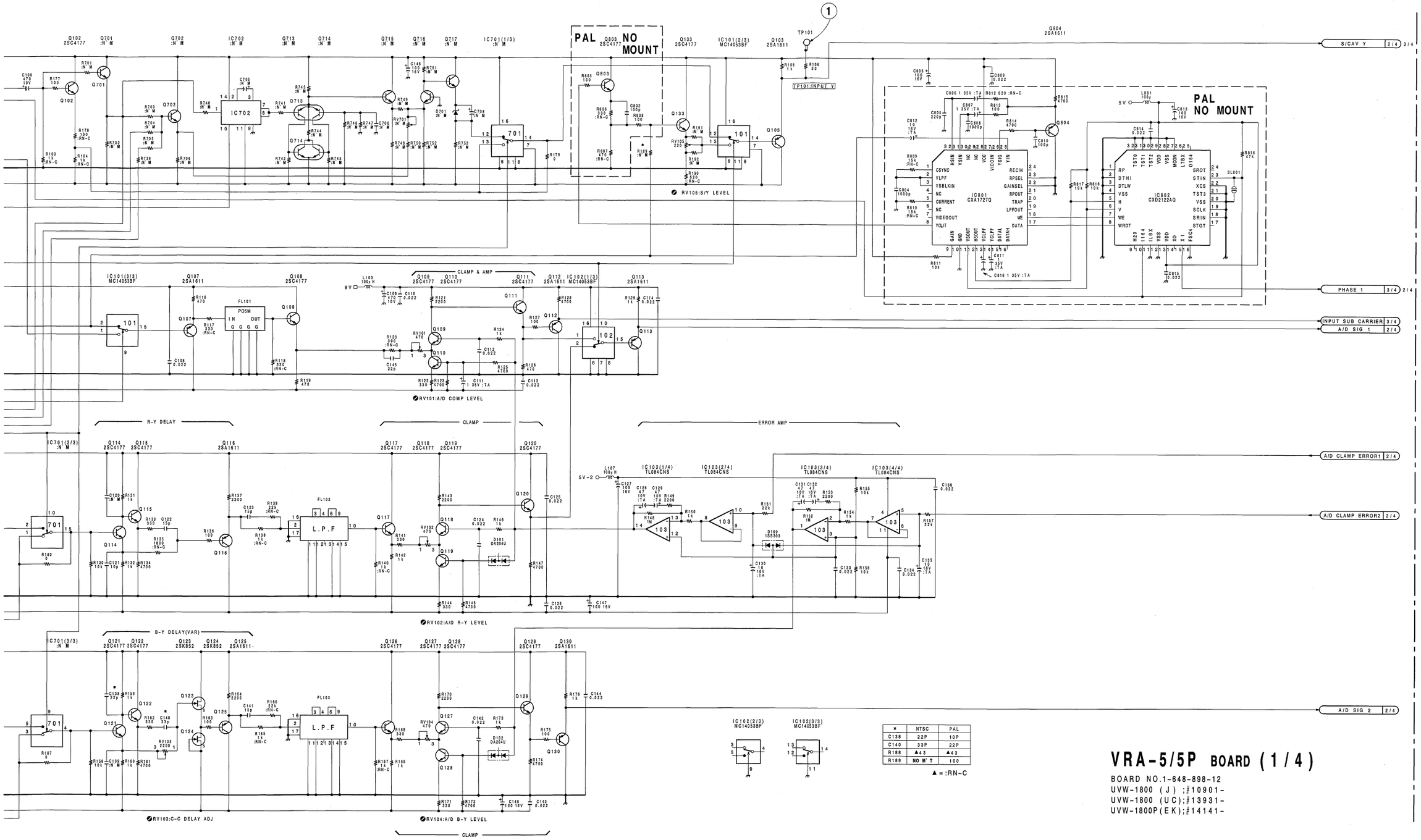

■	NTSC	PAL
C138	22P	10P
C140	33P	22P
R188	▲43	▲43
R189	NO M'T	100

▲=:RN-C

VRA-5/5P BOARD (1/4)

BOARD NO.1-648-898-12
UVW-1800 (J) ;#10901-
UVW-1800 (UC);#13931-
UVW-1800P(EK);#14141-

 VRA-5/5P

VRA-5 (1-648-898-12)

CN101		N-6	IC601		L-4	✱Q325	F-4
CN102		C-6	IC602		M-4	✱Q508	N-2
			IC801	N	D-3	✱Q509	P-2
CV301		F-5	IC802	N	D-2	✱Q510	R-4
			IC901		K-6	✱Q511	N-3
✱D101		B-3	IC902		G-6	✱Q512	P-4
✱D102		C-3	IC903		J-6	✱Q513	P-4
✱D109		D-4	IC904		E-6	✱Q514	P-4
✱D202		H-4				✱Q515	P-4
✱D301		E-3	LV301		E-4	✱Q516	N-4
✱D302	P	F-4				✱Q517	N-4
✱D303		F-4	✱Q101		A-3	✱Q518	P-4
D305		F-5	Q102		A-5	✱Q519	P-5
D306		J-3	✱Q103		A-3	✱Q520	P-5
✱D307	P	E-3	Q104		A-3	✱Q601	L-2
D801	N	A-2	Q105		A-3	✱Q602	M-2
			✱Q106		A-3	✱Q603	N-4
E101		B-4	Q107		A-3	✱Q604	M-4
E201		E-2	✱Q108		A-1	✱Q605	M-4
E301		K-3	✱Q109		B-2	✱Q606	L-4
E302		D-3	✱Q110		B-2	✱Q607	M-4
E303		H-1	✱Q111		B-1	✱Q608	L-4
E501		R-5	✱Q112		C-1	✱Q609	M-5
E502		N-1	✱Q113		C-2	✱Q610	M-5
E601		M-1	✱Q114		B-4	Q801	N A-2
			✱Q115		B-4	Q802	N A-2
FB201		K-2	✱Q116		B-3	Q803	N A-2
			✱Q117		B-3	Q804	N D-3
FL101		A-2	✱Q118		B-3		
FL102		B-3	✱Q119		B-3	RV101	B-2
FL103		C-3	✱Q120		B-2	RV102	B-3
FL201		R-2	✱Q121		C-4	RV103	C-4
FL202		N-2	✱Q122		C-4	RV104	C-3
			✱Q123		C-4	RV105	A-2
IC101		A-3	✱Q124		C-3	RV201	P-1
IC102		C-2	✱Q125		C-3	RV202	N-1
IC103		D-4	✱Q126		C-3	RV203	M-1
IC104		G-5	✱Q127		C-3	RV301	E-3
IC201		A-1	✱Q128		C-3	RV302	K-1
IC202		B-1	✱Q129		C-2	RV303	L-1
IC203		A-1	✱Q130		C-2	RV304	L-1
IC205		D-2	✱Q131		B-5	RV305	L-1
IC206		D-1	✱Q132		C-5	RV306	K-5
IC207		H-1	✱Q133		A-2	RV501	R-1
IC208		E-2	✱Q201		C-1	RV502	R-4
IC209		E-2	✱Q202		H-1	RV503	R-4
IC210		G-2	✱Q203		H-4	RV602	M-4
IC211		H-1	✱Q204		P-2	RV603	M-4
IC212		J-2	✱Q207		R-2		
IC213		P-1	✱Q209		N-2	S201	H-4
IC214		N-1	✱Q210		R-2		
IC215		P-2	✱Q211		K-2	TH201	N M-1
IC216		K-2	✱Q212		R-1		
IC217	N	K-2	✱Q213		M-3	TP101	A-3
IC218		K-2	✱Q301		D-3	TP201	C-2
IC219	N	J-1	✱Q303		E-3	TP202	C-1
IC220		M-1	✱Q305		E-3	TP301	E-3
IC301		E-4	✱Q306		E-3	TP302	E-4
IC302		H-3	✱Q307		E-3	TP303	H-1
IC303		E-4	✱Q308		J-4	TP304	L-5
IC304		E-5	✱Q309		J-4	TP305	K-4
IC305		F-4	✱Q310		F-3	TP306	J-4
IC306		K-4	✱Q311		F-3	TP307	J-5
IC307		F-3	✱Q312		K-3	TP308	N-5
IC308		J-3	✱Q313		E-4	TP309	N-5
IC309		J-3	✱Q314		E-4	TP310	F-5
IC310		G-3	✱Q315		J-3	TP501	R-4
IC311		J-4	✱Q316		F-5	TP502	P-1
IC312		L-2	✱Q317		F-5	TP503	P-5
IC313		G-5	✱Q318		E-5	TP504	N-4
IC314		L-1	✱Q319		K-3	TP601	N-4
IC315		K-5	✱Q320		J-3	TP602	M-1
IC316		H-4	✱Q321		J-4	TP603	P-5
IC317		F-3	✱Q322		J-4		
IC501		P-4	✱Q323		J-4	X301	F-4
IC502		R-5	✱Q324		F-4	X302	H-4

✱ : B SIDE
N : UVW-1800 ONLY
P : UVW-1800P ONLY

For J,UC

① TP201 REC/EE (COMPOSITE)

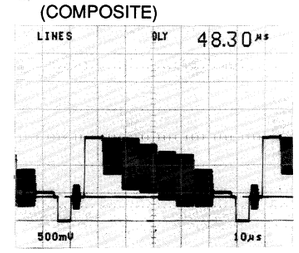

① TP201 REC/EE (COMPONENT)

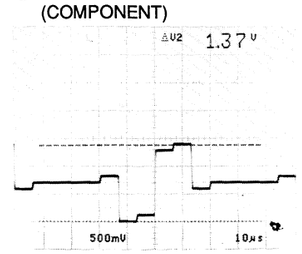

② TP202 REC/EE (COMPONENT)

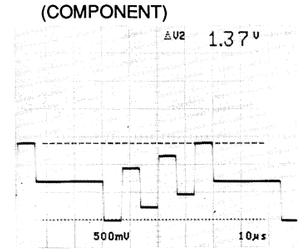

For EK

① TP201 REC/EE (COMPOSITE)

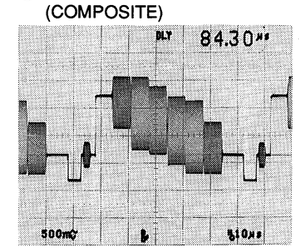

① TP201 REC/EE (COMPONENT)

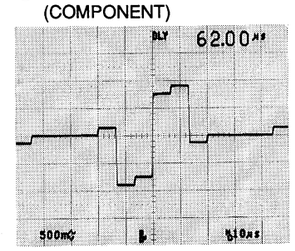

② TP202 REC/EE (COMPONENT)

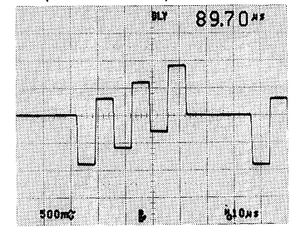

 16-140 (b)

 VRA-5/5P (2/4)

UVW-1800 (J) ;Serial No.10901 and higher
UVW-1800 (UC);Serial No.13931 and higher
UVW-1800P(EK);Serial No.14141 and higher

VRA-5/5P(2/4);A/D,Y/C SEP.,DECODE,CTDM(COMP.),D/A

*	NTSC	PAL
C201	15P	10P
C202	68P	47P
C203	68P	47P
C204	33P	27P
C205	150P	120P
C206	150P	120P
R224	▲ 15K	NO M'T
R229	▲ 6800	▲ 4700
R240	NO M'T	0
R260	NO M'T	10K
R262	10K	NO M'T
R264	NO M'T	10K
R267	NO M'T	10K
R269	10K	NO M'T
R271	NO M'T	10K
L202	33UH	22UH
L203	68UH	56UH
L206	2.2UH	1.8UH
IC208	UPD42101C-3	UPD42505C-50
IC209	UPD42101C-3	UPD42505C-50
IC217	MC74HC4002F	NO M'T
IC219	TC7S08F	NO M'T
TH201	1.25K	NO M'T

▲ = :RN-C

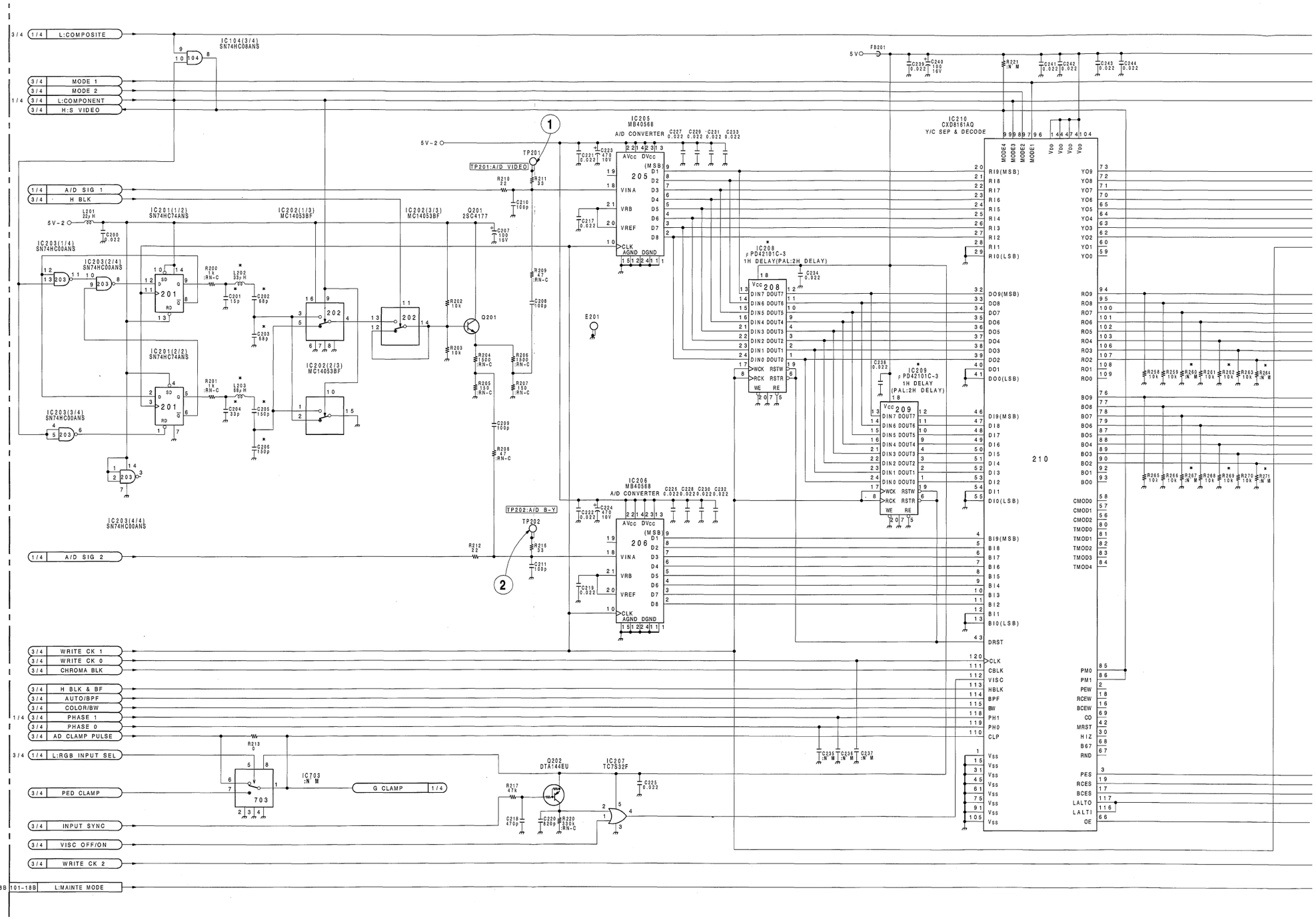

 VRA-5/5P (2/4)

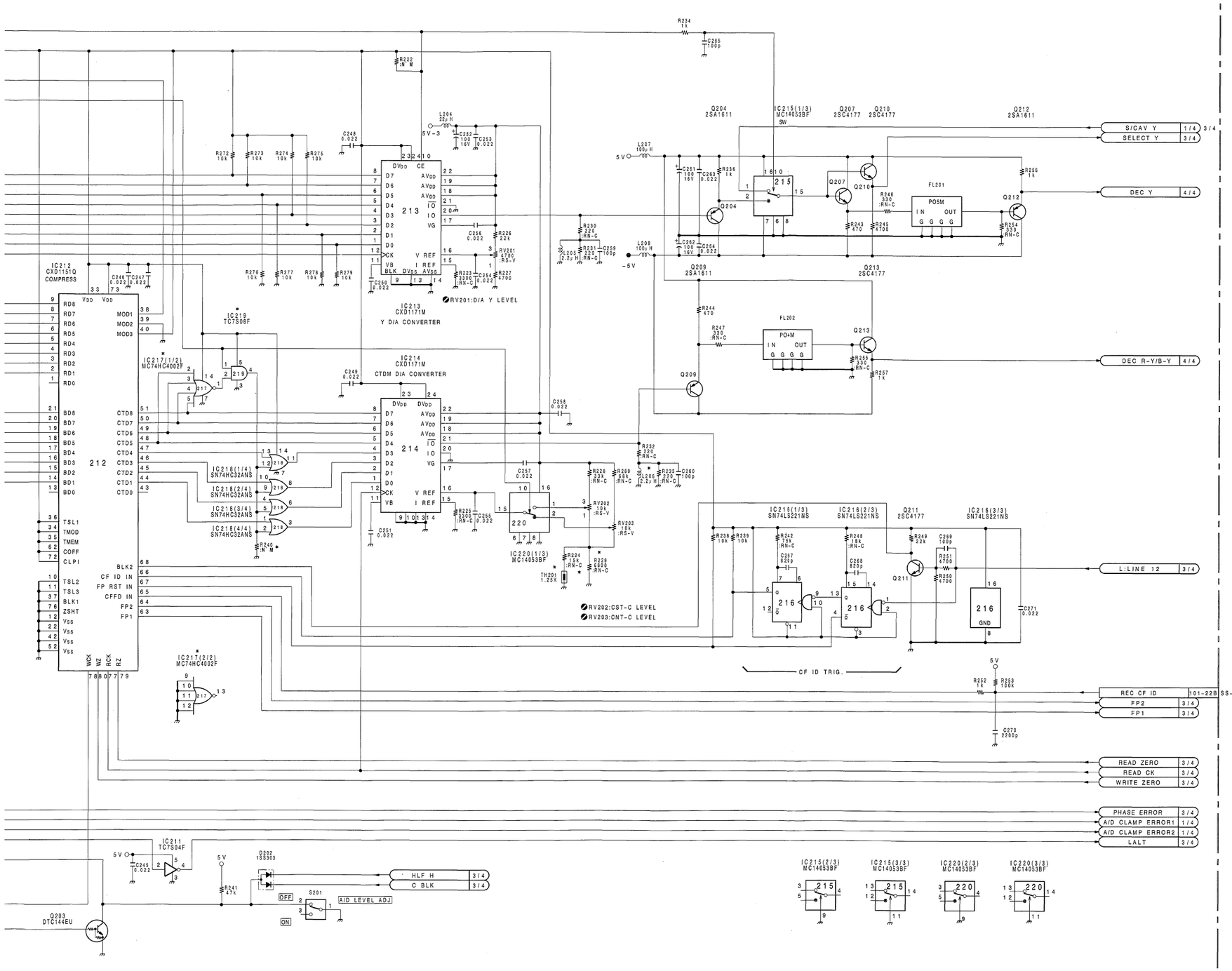

VRA-5/5P BOARD (2/4)

BOARD NO.1-648-898-12
UVW-1800 (J) ;#10901-
UVW-1800 (UC);#13931-
UVW-1800P(EK);#14141-

 16-141 (b2)

 VRA-5/5P

VRA-5 (1-648-898-12)

CN101		N-6	IC601		L-4	✱Q325		F-4
CN102		C-6	IC602		M-4	✱Q508		N-2
			IC801	N	D-3	✱Q509		P-2
CV301		F-5	IC802	N	D-2	✱Q510		R-4
			IC901		K-6	✱Q511		N-3
✱D101		B-3	IC902		G-6	✱Q512		P-4
✱D102		C-3	IC903		J-6	✱Q513		P-4
✱D109		D-4	IC904		E-6	✱Q514		P-4
✱D202		H-4				✱Q515		P-4
✱D301		E-3	LV301		E-4	✱Q516		N-4
✱D302	P	F-4				✱Q517		N-4
✱D303		F-4	✱Q101		A-3	✱Q518		P-4
D305		F-5	Q102		A-5	✱Q519		P-5
D306		J-3	✱Q103		A-3	✱Q520		P-5
✱D307	P	E-3	Q104		A-3	✱Q601		L-2
D801	N	A-2	Q105		A-3	✱Q602		M-2
			✱Q106		A-3	✱Q603		N-4
E101		B-4	Q107		A-3	✱Q604		M-4
E201		E-2	✱Q108		A-1	✱Q605		M-4
E301		K-3	✱Q109		B-2	✱Q606		L-4
E302		D-3	✱Q110		B-2	✱Q607		M-4
E303		H-1	✱Q111		B-1	✱Q608		L-4
E501		R-5	✱Q112		C-1	✱Q609		M-5
E502		N-1	✱Q113		C-2	✱Q610		M-5
E601		M-1	✱Q114		B-4	Q801	N	A-2
			✱Q115		B-4	Q802	N	A-2
FB201		K-2	✱Q116		B-3	Q803	N	A-2
			✱Q117		B-3	Q804	N	D-3
FL101		A-2	✱Q118		B-3			
FL102		B-3	✱Q119		B-3	RV101		B-2
FL103		C-3	✱Q120		B-2	RV102		B-3
FL201		R-2	✱Q121		C-4	RV103		C-4
FL202		N-2	✱Q122		C-4	RV104		C-3
			✱Q123		C-4	RV105		A-2
IC101		A-3	✱Q124		C-3	RV201		P-1
IC102		C-2	✱Q125		C-3	RV202		N-1
IC103		D-4	✱Q126		C-3	RV203		M-1
IC104		G-5	✱Q127		C-3	RV301		E-3
IC201		A-1	✱Q128		C-3	RV302		K-1
IC202		B-1	✱Q129		C-2	RV303		L-1
IC203		A-1	✱Q130		C-2	RV304		L-1
IC205		D-2	✱Q131		B-5	RV305		L-1
IC206		D-1	✱Q132		C-5	RV306		K-5
IC207		H-1	✱Q133		A-2	RV501		R-1
IC208		E-2	✱Q201		C-1	RV502		R-4
IC209		E-2	✱Q202		H-1	RV503		R-4
IC210		G-2	✱Q203		H-4	RV602		M-4
IC211		H-1	✱Q204		P-2	RV603		M-4
IC212		J-2	✱Q207		R-2			
IC213		P-1	✱Q209		N-2	S201		H-4
IC214		N-1	✱Q210		R-2			
IC215		P-2	✱Q211		K-2	TH201	N	M-1
IC216		K-2	✱Q212		R-1			
IC217	N	K-2	✱Q213		M-3	TP101		A-3
IC218		K-2	✱Q301		D-3	TP201		C-2
IC219	N	J-1	✱Q303		E-3	TP202		C-1
IC220		M-1	✱Q305		E-3	TP301		E-3
IC301		E-4	✱Q306		E-3	TP302		E-4
IC302		H-3	✱Q307		E-3	TP303		H-1
IC303		E-4	✱Q308		J-4	TP304		L-5
IC304		E-5	✱Q309		J-4	TP305		K-4
IC305		F-4	✱Q310		F-3	TP306		J-4
IC306		K-4	✱Q311		F-3	TP307		J-5
IC307		F-3	✱Q312		K-3	TP308		N-5
IC308		J-3	✱Q313		E-4	TP309		N-5
IC309		J-3	✱Q314		E-4	TP310		F-5
IC310		G-3	✱Q315		J-3	TP501		R-4
IC311		J-4	✱Q316		F-5	TP502		P-1
IC312		L-2	✱Q317		F-5	TP503		P-5
IC313		G-5	✱Q318		E-5	TP504		N-4
IC314		L-1	✱Q319		K-3	TP601		N-4
IC315		K-5	✱Q320		J-3	TP602		M-1
IC316		H-4	✱Q321		J-4	TP603		P-5
IC317		F-3	✱Q322		J-4			
IC501		P-4	✱Q323		J-4	X301		F-4
IC502		R-5	✱Q324		F-4	X302		H-4

✱ : B SIDE
N : UVW-1800 ONLY
P : UVW-1800P ONLY

For J,UC

① TP305 REC/EE

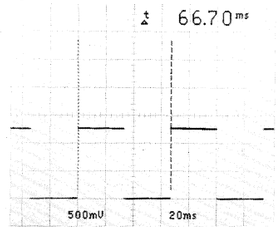

For EK

① TP305 REC/EE

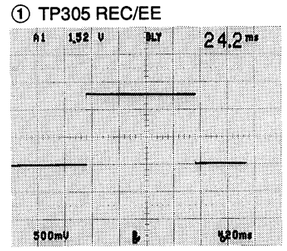

 16-144 (b)

 VRA-5/5P (3/4)

UVW-1800 (J) ;Serial No.10901 and higher
UVW-1800 (UC);Serial No.13931 and higher
UVW-1800P(EK);Serial No.14141 and higher

VRA-5/5P(3/4);Y/C REF SYNC,TIMING PULSE

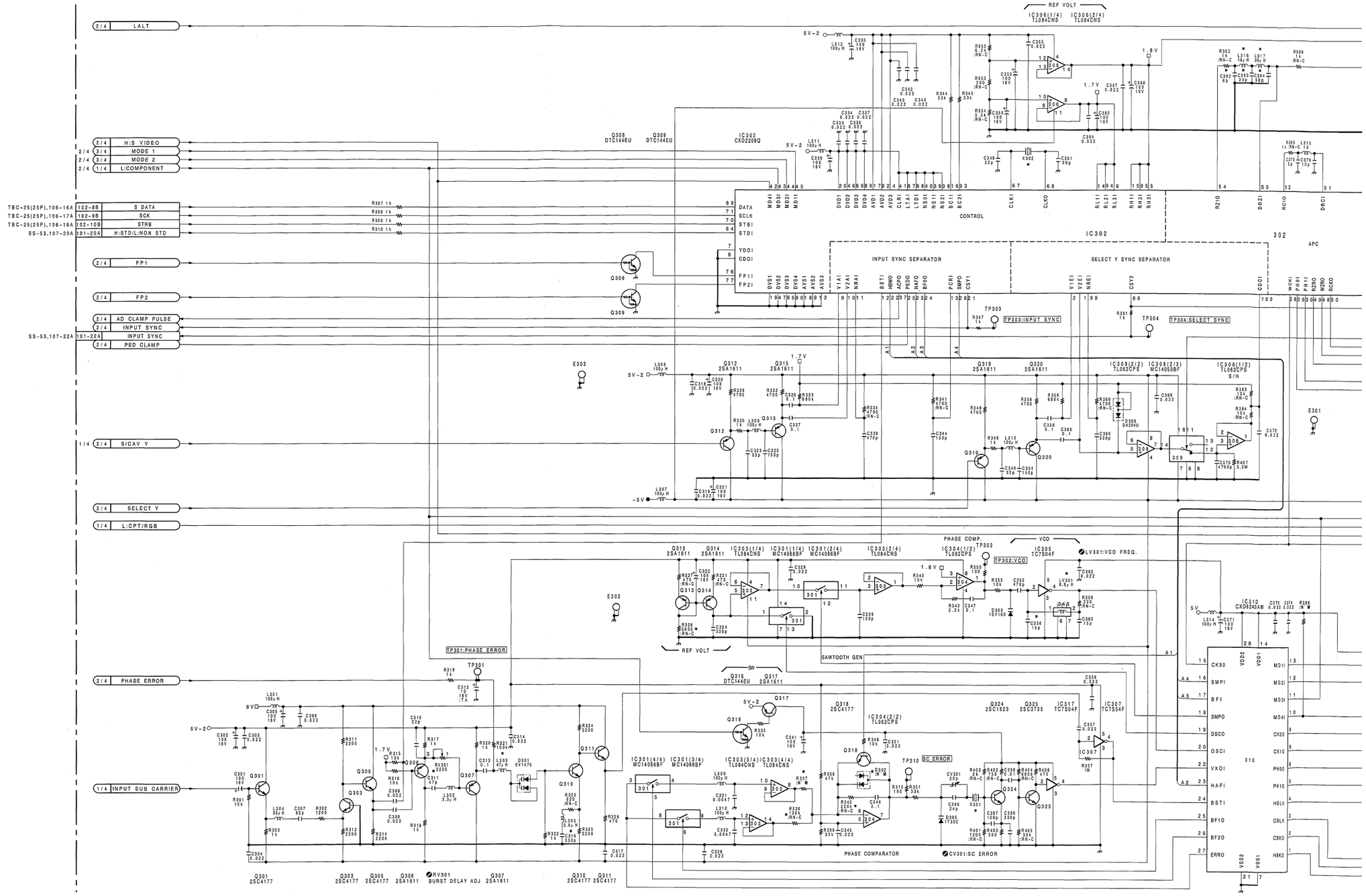

 16-145 (b1)

 VRA-5/5P (3/4)

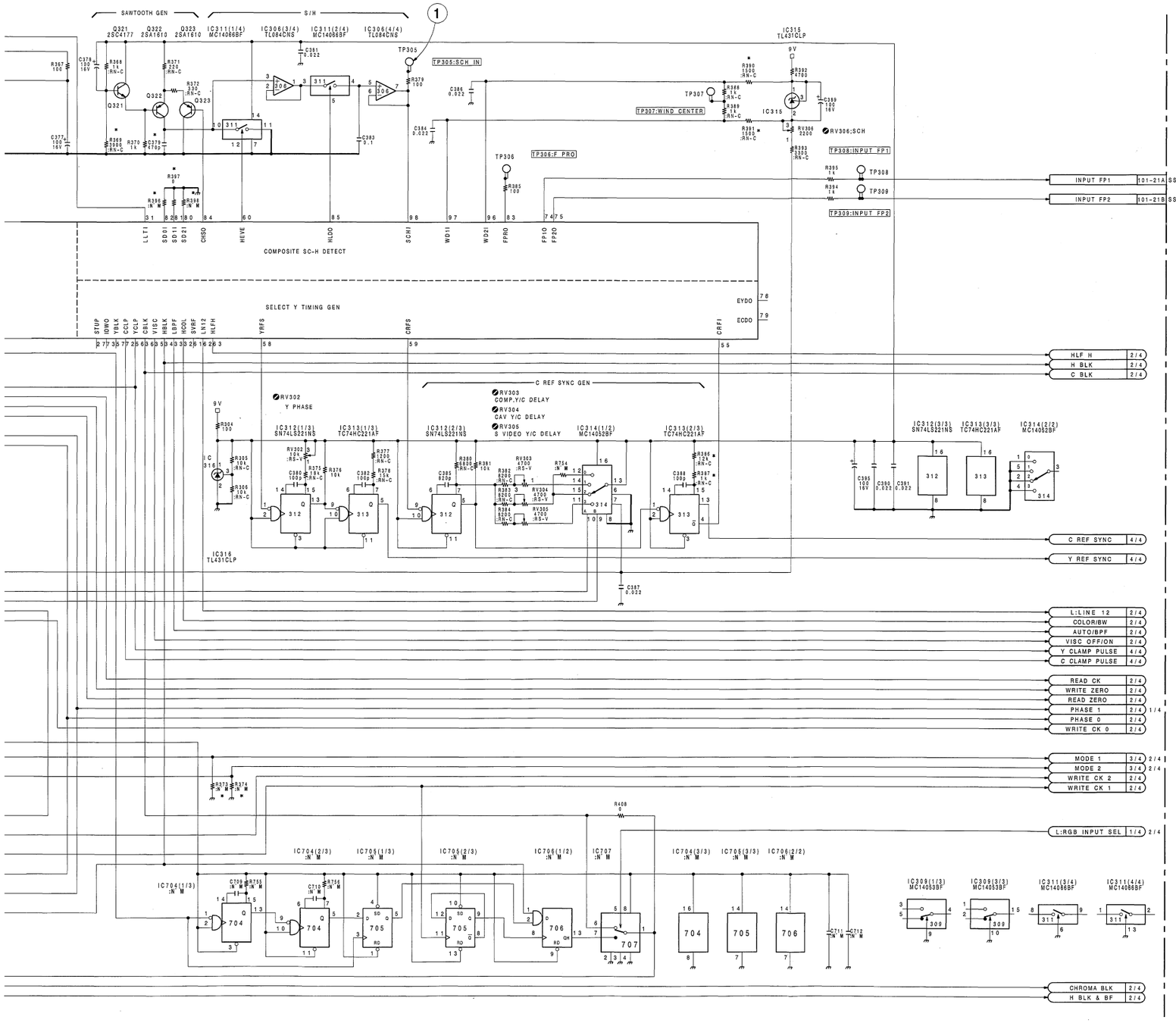

■	NTSC	PAL
C311	47P	22P
C316	330P	220P
C356	15P	6P
C379	470P	390P
C392	6P	6P
C393	24P	18P
C394	68P	39P
R328	▲ 560Ω	▲ 470Ω
R336	▲ 100K	▲ 330K
R337	NO M'T	▲ 330K
R342	▲ 220K	▲ 68K
R369	▲ 3900	▲ 3300
R373	NO M'T	0
R374	NO M'T	0
R386	▲ 12K	▲ 12K
R387	▲ 1K	▲ 1800
R390	▲ 1500	▲ 1200
R391	▲ 1500	▲ 1200
R396	NO M'T	0
R397	0	0
R398	NO M'T	NO M'T
D302	NO M'T	DA204U
L303	47UH	33UH
L316	18UH	15UH
L317	39UH	33UH
LV301	6.8UH	5.6UH

▲ = :RN-C

■	NTSC	PAL
X301	1-527-722-21	1-579-057-11
X302	10.738635MHz 1-760-109-21	10.664135MHz 1-760-183-21

VRA-5/5P BOARD (3/4)

BOARD NO.1-648-898-12
UVW-1800 (J) ;#10901-
UVW-1800 (UC);#13931-
UVW-1800P(EK);#14141-

 VRA-5/5P

VRA-5 (1-648-898-12)

CN101		N-6	IC601		L-4	✱Q325	F-4
CN102		C-6	IC602		M-4	✱Q508	N-2
			IC801	N	D-3	✱Q509	P-2
CV301		F-5	IC802	N	D-2	✱Q510	R-4
			IC901		K-6	✱Q511	N-3
✱D101		B-3	IC902		G-6	✱Q512	P-4
✱D102		C-3	IC903		J-6	✱Q513	P-4
✱D109		D-4	IC904		E-6	✱Q514	P-4
✱D202		H-4				✱Q515	P-4
✱D301		E-3	LV301		E-4	✱Q516	N-4
✱D302	P	F-4				✱Q517	N-4
✱D303		F-4	✱Q101		A-3	✱Q518	P-4
D305		F-5	Q102		A-5	✱Q519	P-5
D306		J-3	✱Q103		A-3	✱Q520	P-5
✱D307	P	E-3	Q104		A-3	✱Q601	L-2
D801	N	A-2	Q105		A-3	✱Q602	M-2
			✱Q106		A-3	✱Q603	N-4
E101		B-4	Q107		A-3	✱Q604	M-4
E201		E-2	✱Q108		A-1	✱Q605	M-4
E301		K-3	✱Q109		B-2	✱Q606	L-4
E302		D-3	✱Q110		B-2	✱Q607	M-4
E303		H-1	✱Q111		B-1	✱Q608	L-4
E501		R-5	✱Q112		C-1	✱Q609	M-5
E502		N-1	✱Q113		C-2	✱Q610	M-5
E601		M-1	✱Q114		B-4	Q801 N	A-2
			✱Q115		B-4	Q802 N	A-2
FB201		K-2	✱Q116		B-3	Q803 N	A-2
			✱Q117		B-3	Q804 N	D-3
FL101		A-2	✱Q118		B-3		
FL102		B-3	✱Q119		B-3	RV101	B-2
FL103		C-3	✱Q120		B-2	RV102	B-3
FL201		R-2	✱Q121		C-4	RV103	C-4
FL202		N-2	✱Q122		C-4	RV104	C-3
			✱Q123		C-4	RV105	A-2
IC101		A-3	✱Q124		C-3	RV201	P-1
IC102		C-2	✱Q125		C-3	RV202	N-1
IC103		D-4	✱Q126		C-3	RV203	M-1
IC104		G-5	✱Q127		C-3	RV301	E-3
IC201		A-1	✱Q128		C-3	RV302	K-1
IC202		B-1	✱Q129		C-2	RV303	L-1
IC203		A-1	✱Q130		C-2	RV304	L-1
IC205		D-2	✱Q131		B-5	RV305	L-1
IC206		D-1	✱Q132		C-5	RV306	K-5
IC207		H-1	✱Q133		A-2	RV501	R-1
IC208		E-2	✱Q201		C-1	RV502	R-4
IC209		E-2	✱Q202		H-1	RV503	R-4
IC210		G-2	✱Q203		H-4	RV602	M-4
IC211		H-1	✱Q204		P-2	RV603	M-4
IC212		J-2	✱Q207		R-2		
IC213		P-1	✱Q209		N-2	S201	H-4
IC214		N-1	✱Q210		R-2		
IC215		P-2	✱Q211		K-2	TH201 N	M-1
IC216		K-2	✱Q212		R-1		
IC217	N	K-2	✱Q213		M-3	TP101	A-3
IC218		K-2	✱Q301		D-3	TP201	C-2
IC219	N	J-1	✱Q303		E-3	TP202	C-1
IC220		M-1	✱Q305		E-3	TP301	E-3
IC301		E-4	✱Q306		E-3	TP302	E-4
IC302		H-3	✱Q307		E-3	TP303	H-1
IC303		E-4	✱Q308		J-4	TP304	L-5
IC304		E-5	✱Q309		J-4	TP305	K-4
IC305		F-4	✱Q310		F-3	TP306	J-4
IC306		K-4	✱Q311		F-3	TP307	J-5
IC307		F-3	✱Q312		K-3	TP308	N-5
IC308		J-3	✱Q313		E-4	TP309	N-5
IC309		J-3	✱Q314		E-4	TP310	F-5
IC310		G-3	✱Q315		J-3	TP501	R-4
IC311		J-4	✱Q316		F-5	TP502	P-1
IC312		L-2	✱Q317		F-5	TP503	P-5
IC313		G-5	✱Q318		E-5	TP504	N-4
IC314		L-1	✱Q319		K-3	TP601	N-4
IC315		K-5	✱Q320		J-3	TP602	M-1
IC316		H-4	✱Q321		J-4	TP603	P-5
IC317		F-3	✱Q322		J-4		
IC501		P-4	✱Q323		J-4	X301	F-4
IC502		R-5	✱Q324		F-4	X302	H-4

✱ : B SIDE
N : UVW-1800 ONLY
P : UVW-1800P ONLY

For J,UC

① TP502 REC/EE

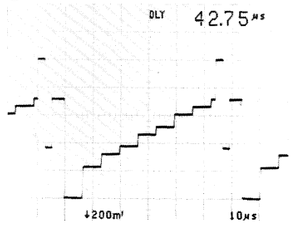

② TP602 REC/EE

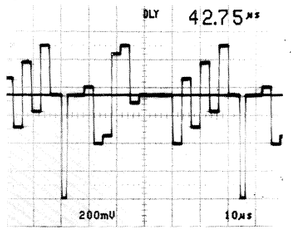

③ TP503 REC/EE
TP603 REC/EE

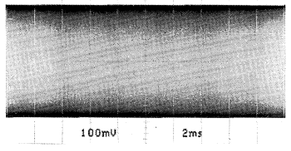

For EK

① TP502 REC/EE

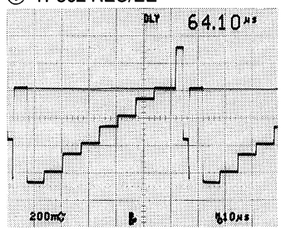

② TP602 REC/EE

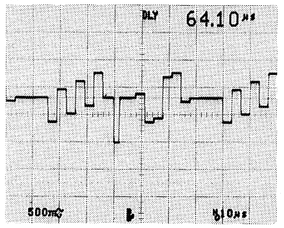

③ TP503 REC/EE
TP603 REC/EE

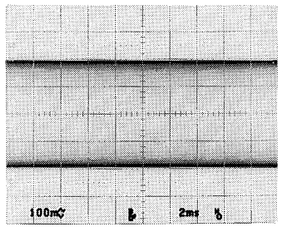

 16-148 (b)

 VRA-5/5P (4/4)

UVW-1800 (J) ;Serial No.10901 and higher
UVW-1800 (UC);Serial No.13931 and higher
UVW-1800P(EK);Serial No.14141 and higher

VRA-5/5P(4/4);Y/C MOD,Y REC HF

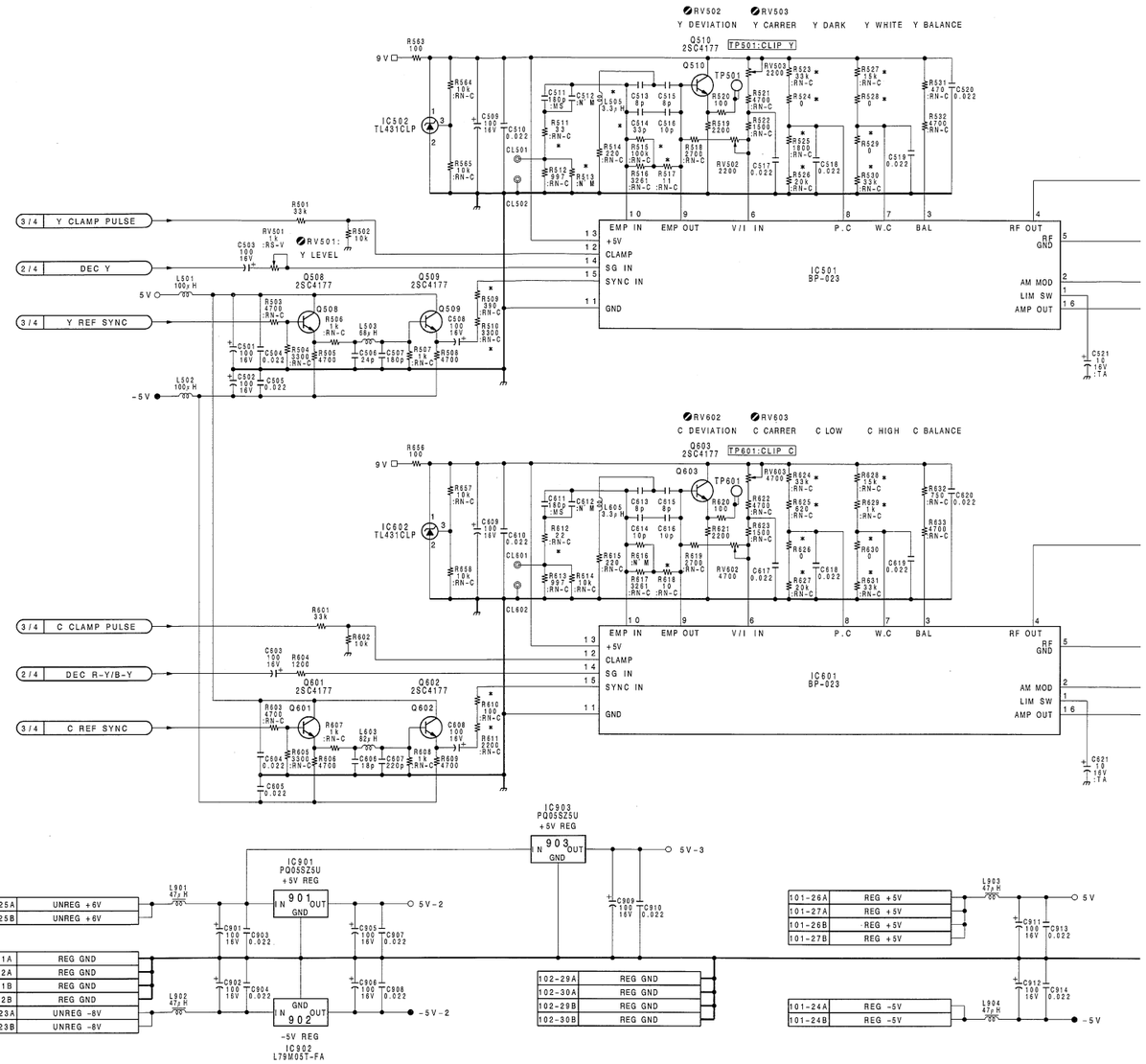

 16-149 (b1)

 VRA-5/5P (4/4)

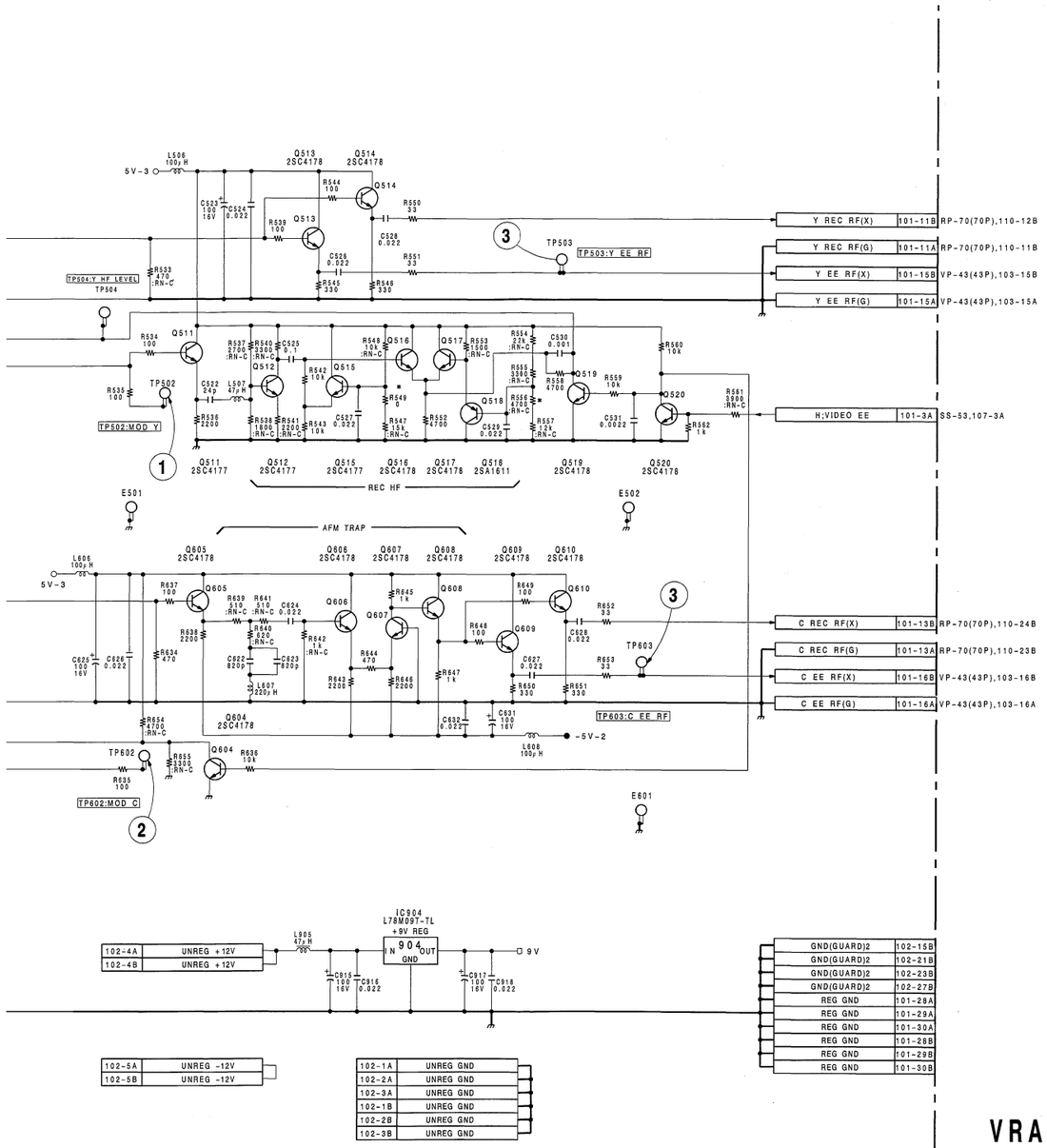

■	NTSC	PAL
C514	33P	22P
R509	▲ 390	▲ 330
R510	▲ 3300	▲ 2700
R511	▲ 33	0
R513	NO M' T	▲ 10K
R515	▲ 100K	▲ 100K
R517	▲ 11	▲ 15
R523	▲ 33K	▲ 33K
R524	0	0
R525	▲ 1800	▲ 330
R526	▲ 20K	▲ 18K
R527	▲ 15K	▲ 12K
R528	0	▲ 750
R529	0	0
R530	▲ 33K	▲ 33K
R549	0	▲ 2K
R556	▲ 4700	▲ 4300
R610	▲ 100	▲ 220
R611	▲ 2200	▲ 1K
R612	▲ 22	▲ 62
R618	▲ 10	0
R624	▲ 33K	▲ 33K
R625	▲ 620	0
R626	0	▲ 390
R627	▲ 20K	▲ 18K
R628	▲ 15K	▲ 12K
R629	▲ 1K	▲ 1K
R630	0	0
R631	▲ 33K	▲ 33K
L505	3.3UH	6.8UH

▲ = :RN-C

VRA-5/5P BOARD (4/4)

BOARD NO.1-648-898-12
UVW-1800 (J) ;#10901-
UVW-1800 (UC);#13931-
UVW-1800P(EK);#14141-

16-149 (b2)

VRA-5 (1-648-898-11)

	CN101		N-6	IC801	N	D-3	✱Q509		P-2
	CN102		C-6	IC802	N	D-2	✱Q510		R-4
				IC901		K-6	✱Q511		N-3
	CV301		F-5	IC902		G-6	✱Q512		P-4
				IC903		J-6	✱Q513		P-4
	✱D101		B-3	IC904		E-6	✱Q514		P-4
	✱D102		C-3				✱Q515		P-4
	✱D109		D-4	LV301		E-4	✱Q516		N-4
	✱D202		H-4				✱Q517		N-4
	✱D301		E-3	✱Q101		A-3	✱Q518		P-4
	✱D302	P	F-4	✱Q102		A-5	✱Q519		P-5
	✱D303		F-4	✱Q103		A-3	✱Q520		P-5
	D305		F-5	Q104		A-4	✱Q601		L-2
	D306	P	J-3	✱Q105		A-4	✱Q602		M-2
	D801	N	A-2	✱Q106		A-3	✱Q603		N-4
				✱Q107		A-3	✱Q604		M-4
	E101		B-4	✱Q108		A-1	✱Q605		M-4
	E201		E-2	✱Q109		B-2	✱Q606		L-4
	E301		K-3	✱Q110		B-2	✱Q607		M-4
	E302		D-3	✱Q111		B-1	✱Q608		L-4
	E303		H-1	✱Q112		C-1	✱Q609		M-5
	E501		R-5	✱Q113		C-2	✱Q610		M-5
	E502		N-1	✱Q114		B-4	Q801	N	A-2
	E601		M-1	✱Q115		B-4	Q802	N	A-2
				✱Q116		B-3	Q803	N	A-2
	FB201		K-2	✱Q117		B-3	Q804	N	D-3
				✱Q118		B-3			
	FL101		A-2	✱Q119		B-3	RV101		B-2
	FL102		B-3	✱Q120		B-2	RV102		B-3
	FL103		C-3	✱Q121		C-4	RV103		C-4
	FL201		R-2	✱Q122		C-4	RV104		C-3
	FL202		N-2	✱Q123		C-4	RV105		A-2
				✱Q124		C-3	RV201		P-1
	IC101		A-3	✱Q125		C-3	RV202		N-1
	IC102		C-2	✱Q126		C-3	RV203		M-1
	IC103		D-4	✱Q127		C-3	RV301		E-3
	IC104		G-5	✱Q128		C-3	RV302		K-1
	IC201		A-1	✱Q129		C-2	RV303		L-1
	IC202		B-1	✱Q130		C-2	RV304		L-1
	IC205		D-2	✱Q131		B-5	RV305		L-1
	IC206		D-1	✱Q132		C-5	RV306		K-5
	IC207		H-1	✱Q133		A-2	RV501		R-1
	IC208		E-2	✱Q201		C-1	RV502		R-4
	IC209		E-2	✱Q202		H-1	RV503		R-4
	IC210		G-2	✱Q203		H-4	RV602		M-4
	IC211		H-1	✱Q204		P-2	RV603		M-4
	IC212		J-2	✱Q207		R-2			
	IC213		P-1	✱Q209		N-2	S201		H-4
	IC214		N-1	✱Q210		R-2			
	IC215		P-2	✱Q211		K-2	TH201		M-1
	IC216		K-2	✱Q212		R-1			
	IC217	N	K-2	✱Q213		M-3	TP101		A-3
	IC218		K-2	✱Q301		D-3	TP201		C-2
	IC219	N	J-1	✱Q303		E-3	TP202		C-1
	IC220		M-1	✱Q305		E-3	TP301		E-3
	IC301		E-4	✱Q306		E-3	TP302		E-4
	IC302		H-3	✱Q307		E-3	TP303		H-1
	IC303		E-4	✱Q308		J-4	TP304		L-5
	IC304		E-5	✱Q309		J-4	TP305		K-4
	IC305		F-4	✱Q310		F-3	TP306		J-4
	IC306		K-4	✱Q311		F-3	TP307		J-5
	IC307		F-3	✱Q312		K-3	TP308		N-5
	IC308		J-3	✱Q313		E-4	TP309		N-5
	IC309		J-3	✱Q314		E-4	TP310		F-5
	IC310		G-3	✱Q315		J-3	TP501		R-4
	IC311		J-4	✱Q316		F-5	TP502		P-1
	IC312		L-2	✱Q317		F-5	TP503		P-5
	IC313		G-5	✱Q318		E-5	TP504		N-4
	IC314		L-1	✱Q319		K-3	TP601		N-4
	IC315		K-5	✱Q320		J-3	TP602		M-1
	IC316		H-4	✱Q321		J-4	TP603		P-5
	IC317		F-4	✱Q322		J-4			
	IC501		P-4	✱Q323		J-4	X301		F-4
	IC502		R-5	✱Q324		F-4	X302		H-4
	IC601		L-4	✱Q325		F-4			
	IC602		M-4	✱Q508		N-2			

✱ : B SIDE
N : UVW-1800 ONLY
P : UVW-1800P ONLY

For J,UC

① TP101 REC/EE
(COMPOSITE)

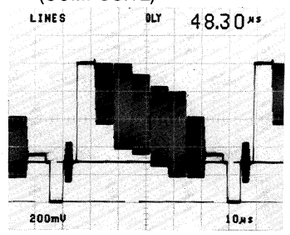

① TP101 REC/EE
(COMPONENT)

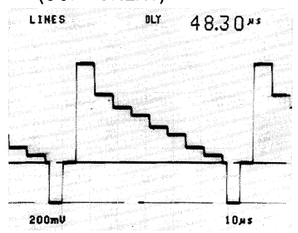

For EK

① TP101 REC/EE
(COMPOSITE)

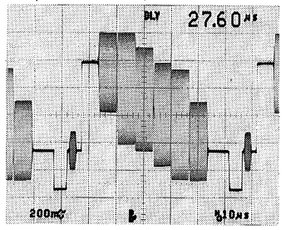

① TP101 REC/EE
(COMPONENT)

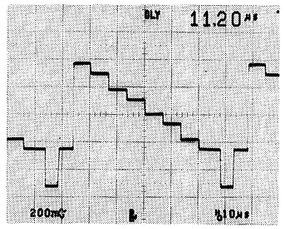

UVW-1800 (J) ;Serial No.10001 through 10900
UVW-1800 (UC);Serial No.10001 through 13930
UVW-1800P(EK);Serial No.10001 through 14140

VRA-5/5P(1/4);INPUT PROCESS

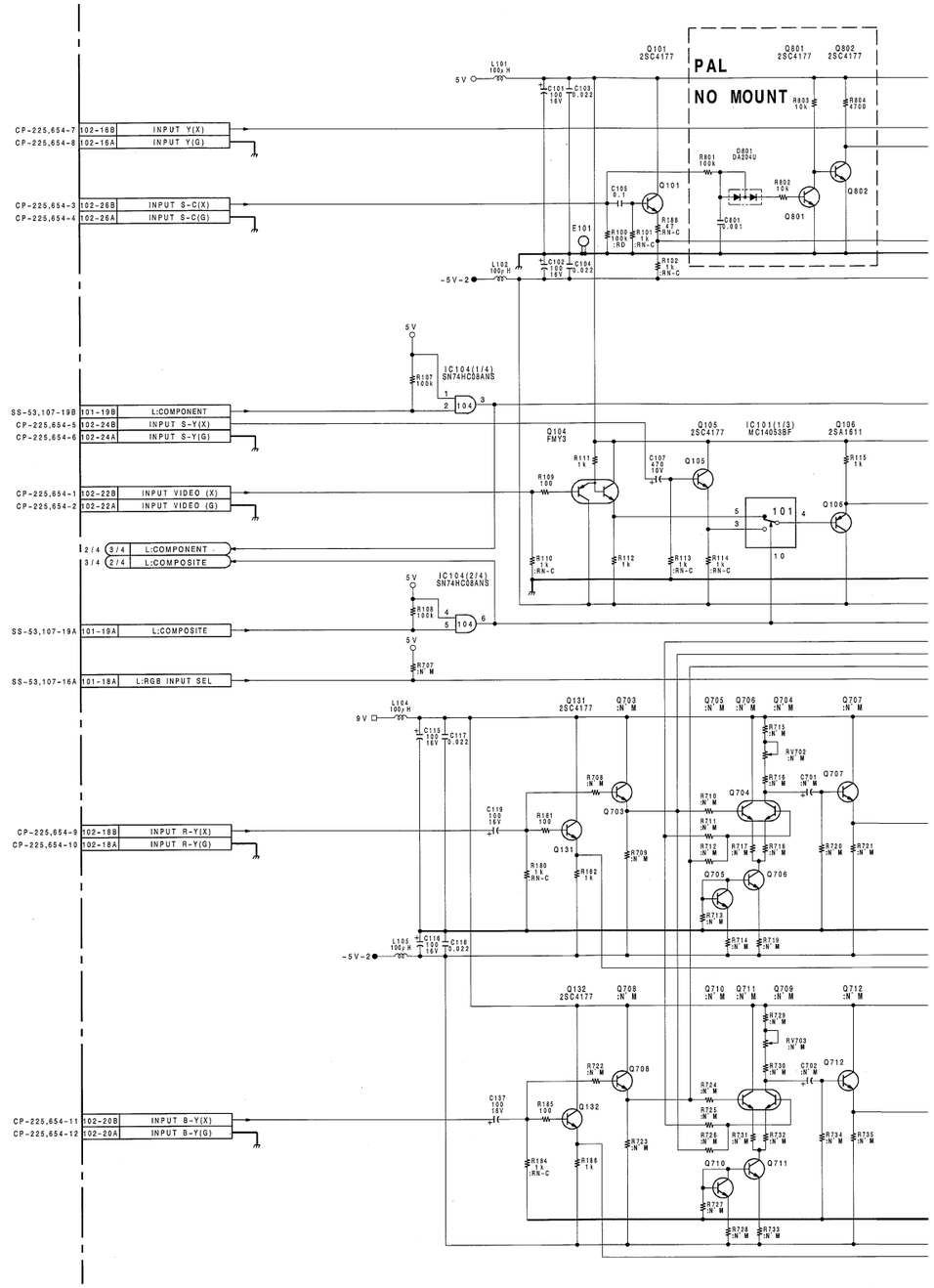

 VRA-5/5P (1/4)

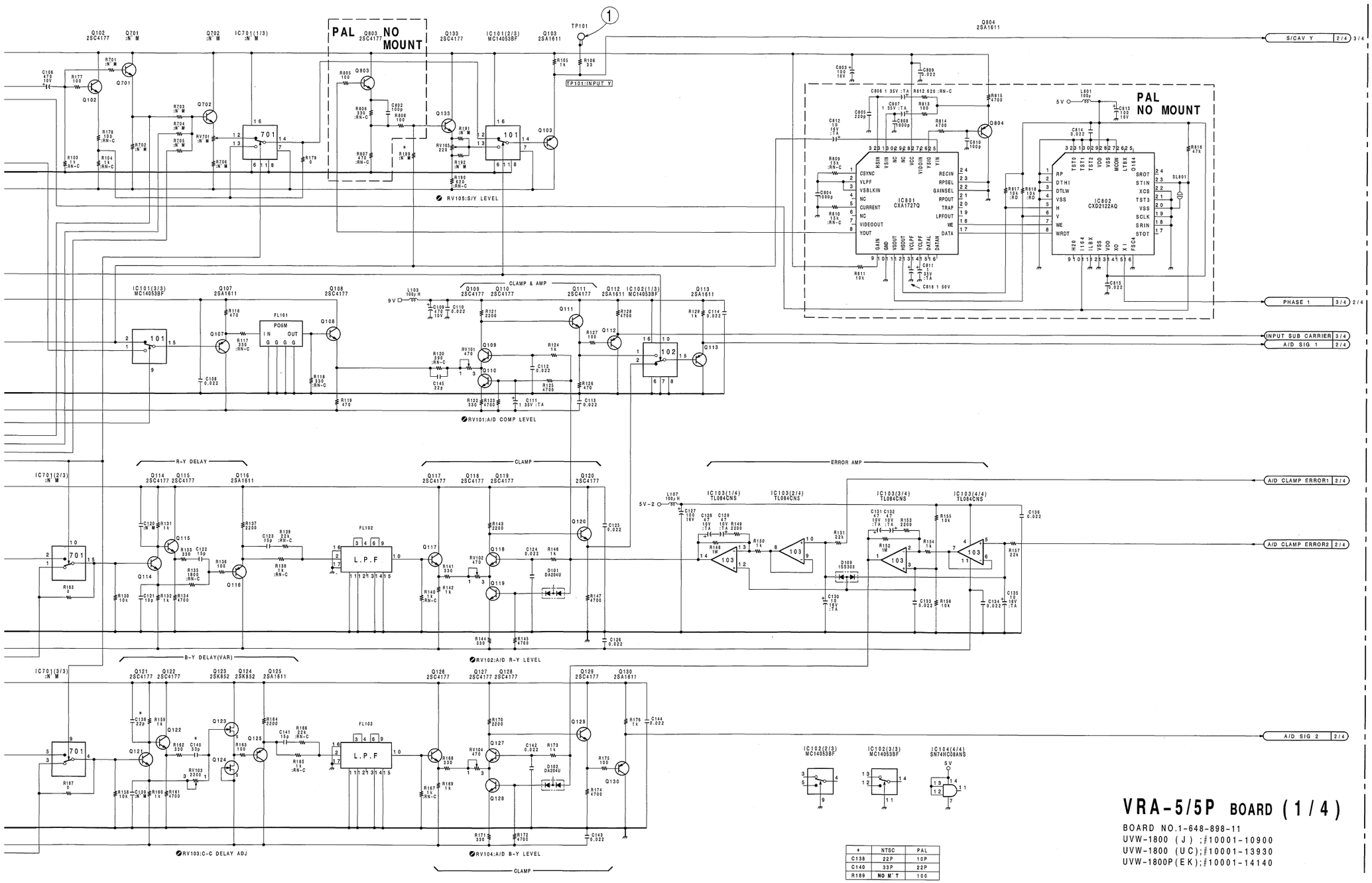

*	NTSC	PAL
C138	22P	10P
C140	33P	22P
R189	NO M'T	100

VRA-5/5P BOARD (1/4)

BOARD NO.1-648-898-11
UVW-1800 (J) ;#10001-10900
UVW-1800 (UC);#10001-13930
UVW-1800P(EK);#10001-14140

16-137 (a2)

 VRA-5/5P

VRA-5 (1-648-898-11)

CN101		N-6	IC801	N	D-3	✱Q509	P-2
CN102		C-6	IC802	N	D-2	✱Q510	R-4
			IC901		K-6	✱Q511	N-3
CV301		F-5	IC902		G-6	✱Q512	P-4
			IC903		J-6	✱Q513	P-4
✱D101		B-3	IC904		E-6	✱Q514	P-4
✱D102		C-3				✱Q515	P-4
✱D109		D-4	LV301		E-4	✱Q516	N-4
✱D202		H-4				✱Q517	N-4
✱D301		E-3	✱Q101		A-3	✱Q518	P-4
✱D302	P	F-4	✱Q102		A-5	✱Q519	P-5
✱D303		F-4	✱Q103		A-3	✱Q520	P-5
D305		F-5	Q104		A-4	✱Q601	L-2
D306	P	J-3	✱Q105		A-4	✱Q602	M-2
D801	N	A-2	✱Q106		A-3	✱Q603	N-4
			✱Q107		A-3	✱Q604	M-4
E101		B-4	✱Q108		A-1	✱Q605	M-4
E201		E-2	✱Q109		B-2	✱Q606	L-4
E301		K-3	✱Q110		B-2	✱Q607	M-4
E302		D-3	✱Q111		B-1	✱Q608	L-4
E303		H-1	✱Q112		C-1	✱Q609	M-5
E501		R-5	✱Q113		C-2	✱Q610	M-5
E502		N-1	✱Q114		B-4	Q801	N A-2
E601		M-1	✱Q115		B-4	Q802	N A-2
			✱Q116		B-3	Q803	N A-2
FB201		K-2	✱Q117		B-3	Q804	N D-3
			✱Q118		B-3		
FL101		A-2	✱Q119		B-3	RV101	B-2
FL102		B-3	✱Q120		B-2	RV102	B-3
FL103		C-3	✱Q121		C-4	RV103	C-4
FL201		R-2	✱Q122		C-4	RV104	C-3
FL202		N-2	✱Q123		C-4	RV105	A-2
			✱Q124		C-3	RV201	P-1
IC101		A-3	✱Q125		C-3	RV202	N-1
IC102		C-2	✱Q126		C-3	RV203	M-1
IC103		D-4	✱Q127		C-3	RV301	E-3
IC104		G-5	✱Q128		C-3	RV302	K-1
IC201		A-1	✱Q129		C-2	RV303	L-1
IC202		B-1	✱Q130		C-2	RV304	L-1
IC205		D-2	✱Q131		B-5	RV305	L-1
IC206		D-1	✱Q132		C-5	RV306	K-5
IC207		H-1	✱Q133		A-2	RV501	R-1
IC208		E-2	✱Q201		C-1	RV502	R-4
IC209		E-2	✱Q202		H-1	RV503	R-4
IC210		G-2	✱Q203		H-4	RV602	M-4
IC211		H-1	✱Q204		P-2	RV603	M-4
IC212		J-2	✱Q207		R-2		
IC213		P-1	✱Q209		N-2	S201	H-4
IC214		N-1	✱Q210		R-2		
IC215		P-2	✱Q211		K-2	TH201	M-1
IC216		K-2	✱Q212		R-1		
IC217	N	K-2	✱Q213		M-3	TP101	A-3
IC218		K-2	✱Q301		D-3	TP201	C-2
IC219	N	J-1	✱Q303		E-3	TP202	C-1
IC220		M-1	✱Q305		E-3	TP301	E-3
IC301		E-4	✱Q306		E-3	TP302	E-4
IC302		H-3	✱Q307		E-3	TP303	H-1
IC303		E-4	✱Q308		J-4	TP304	L-5
IC304		E-5	✱Q309		J-4	TP305	K-4
IC305		F-4	✱Q310		F-3	TP306	J-4
IC306		K-4	✱Q311		F-3	TP307	J-5
IC307		F-3	✱Q312		K-3	TP308	N-5
IC308		J-3	✱Q313		E-4	TP309	N-5
IC309		J-3	✱Q314		E-4	TP310	F-5
IC310		G-3	✱Q315		J-3	TP501	R-4
IC311		J-4	✱Q316		F-5	TP502	P-1
IC312		L-2	✱Q317		F-5	TP503	P-5
IC313		G-5	✱Q318		E-5	TP504	N-4
IC314		L-1	✱Q319		K-3	TP601	N-4
IC315		K-5	✱Q320		J-3	TP602	M-1
IC316		H-4	✱Q321		J-4	TP603	P-5
IC317		F-4	✱Q322		J-4		
IC501		P-4	✱Q323		J-4	X301	F-4
IC502		R-5	✱Q324		F-4	X302	H-4
IC601		L-4	✱Q325		F-4		
IC602		M-4	✱Q508		N-2		

✱ : B SIDE
N : UVW-1800 ONLY
P : UVW-1800P ONLY

For J,UC

① TP201 REC/EE (COMPOSITE)

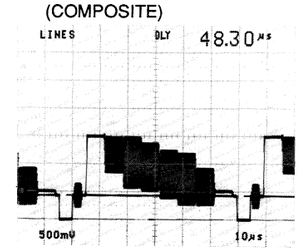

① TP201 REC/EE (COMPONENT)

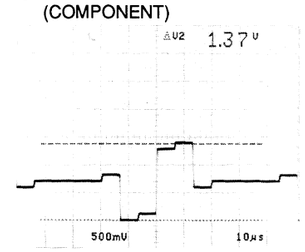

② TP202 REC/EE (COMPONENT)

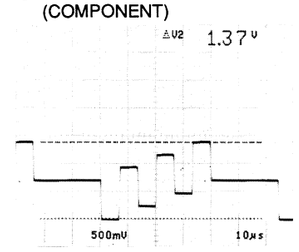

For EK

① TP201 REC/EE (COMPOSITE)

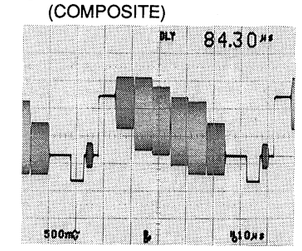

① TP201 REC/EE (COMPONENT)

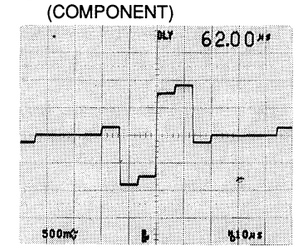

② TP202 REC/EE (COMPONENT)

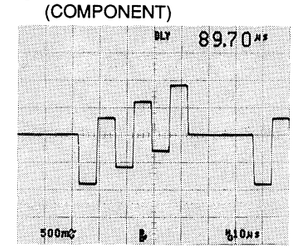

 16-140 (a)

 VRA-5/5P (2/4)

UVW-1800 (J) ;Serial No.10001 through 10900
UVW-1800 (UC);Serial No.10001 through 13930
UVW-1800P(EK);Serial No.10001 through 14140

VRA-5/5P(2/4);A/D,Y/C SEP.,DECODE,CTDM(COMP.),D/A

*	NTSC	PAL
C201	15P	10P
C202	68P	47P
C203	68P	47P
C204	33P	27P
C205	150P	120P
C206	150P	120P
R240	NO M'T	0
R260	NO M'T	10K
R262	10K	NO M'T
R264	NO M'T	10K
R267	NO M'T	10K
R269	10K	NO M'T
R271	NO M'T	10K
L202	33UH	22UH
L203	68UH	56UH
L206	2.2UH	1.8UH
IC208	UPD42101C-3	UPD42505C-50
IC209	UPD42101C-3	UPD42505C-50
IC217	MC74HC4002F	NO M'T
IC219	TC7S08F	NO M'T

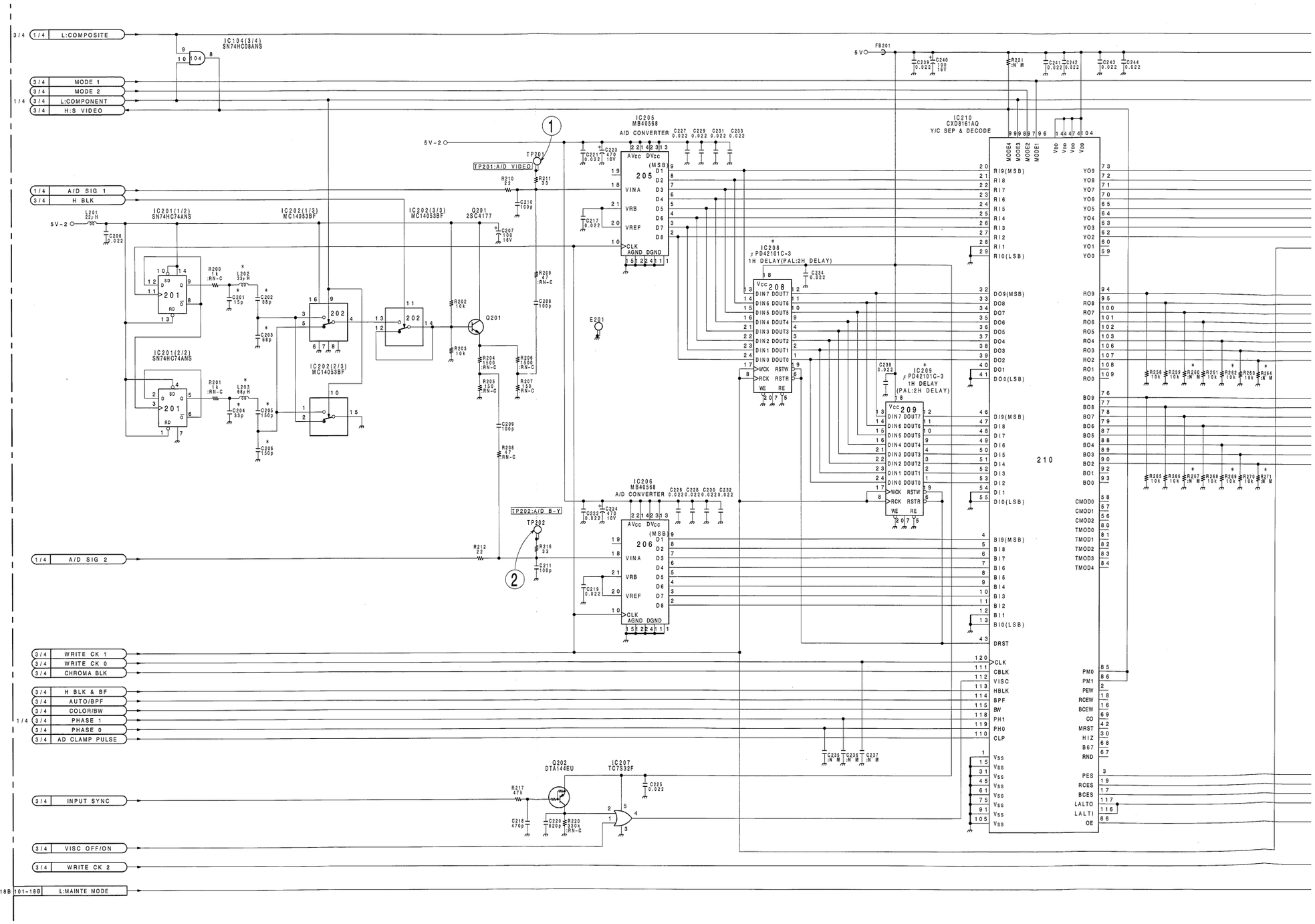

 16-141 (a1)

 VRA-5/5P (2/4)

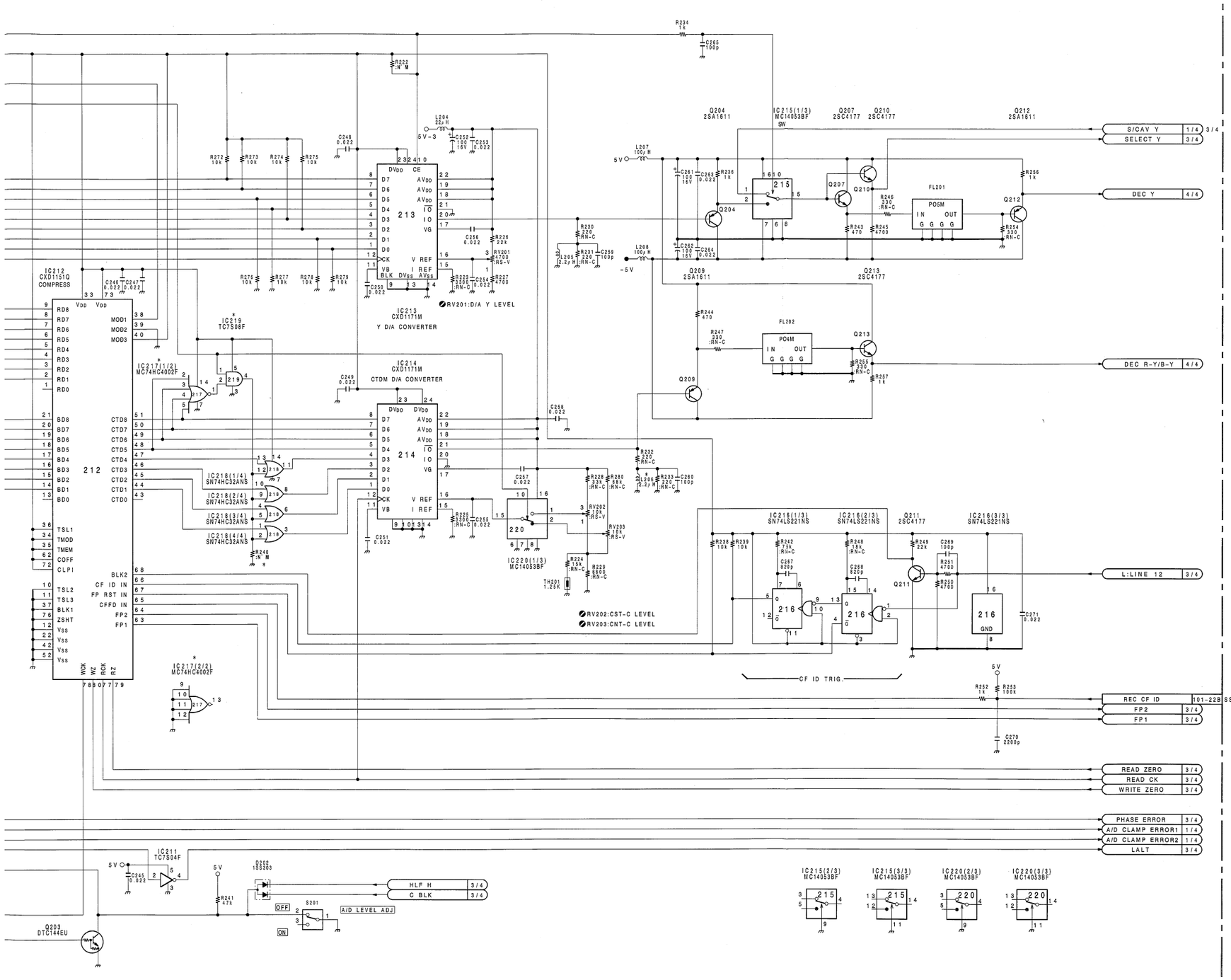

VRA-5/5P BOARD (2/4)

BOARD NO.1-648-898-11
UVW-1800 (J) ;#10001-10900
UVW-1800 (UC);#10001-13930
UVW-1800P(EK);#10001-14140

 VRA-5/5P

VRA-5 (1-648-898-11)

CN101		N-6	IC801	N	D-3	✱Q509	P-2
CN102		C-6	IC802	N	D-2	✱Q510	R-4
			IC901		K-6	✱Q511	N-3
CV301		F-5	IC902		G-6	✱Q512	P-4
			IC903		J-6	✱Q513	P-4
✱D101		B-3	IC904		E-6	✱Q514	P-4
✱D102		C-3				✱Q515	P-4
✱D109		D-4	LV301		E-4	✱Q516	N-4
✱D202		H-4				✱Q517	N-4
✱D301		E-3	✱Q101		A-3	✱Q518	P-4
✱D302	P	F-4	✱Q102		A-5	✱Q519	P-5
✱D303		F-4	✱Q103		A-3	✱Q520	P-5
D305		F-5	Q104		A-4	✱Q601	L-2
D306	P	J-3	✱Q105		A-4	✱Q602	M-2
D801	N	A-2	✱Q106		A-3	✱Q603	N-4
			✱Q107		A-3	✱Q604	M-4
E101		B-4	✱Q108		A-1	✱Q605	M-4
E201		E-2	✱Q109		B-2	✱Q606	L-4
E301		K-3	✱Q110		B-2	✱Q607	M-4
E302		D-3	✱Q111		B-1	✱Q608	L-4
E303		H-1	✱Q112		C-1	✱Q609	M-5
E501		R-5	✱Q113		C-2	✱Q610	M-5
E502		N-1	✱Q114		B-4	Q801	N A-2
E601		M-1	✱Q115		B-4	Q802	N A-2
			✱Q116		B-3	Q803	N A-2
FB201		K-2	✱Q117		B-3	Q804	N D-3
			✱Q118		B-3		
FL101		A-2	✱Q119		B-3	RV101	B-2
FL102		B-3	✱Q120		B-2	RV102	B-3
FL103		C-3	✱Q121		C-4	RV103	C-4
FL201		R-2	✱Q122		C-4	RV104	C-3
FL202		N-2	✱Q123		C-4	RV105	A-2
			✱Q124		C-3	RV201	P-1
IC101		A-3	✱Q125		C-3	RV202	N-1
IC102		C-2	✱Q126		C-3	RV203	M-1
IC103		D-4	✱Q127		C-3	RV301	E-3
IC104		G-5	✱Q128		C-3	RV302	K-1
IC201		A-1	✱Q129		C-2	RV303	L-1
IC202		B-1	✱Q130		C-2	RV304	L-1
IC205		D-2	✱Q131		B-5	RV305	L-1
IC206		D-1	✱Q132		C-5	RV306	K-5
IC207		H-1	✱Q133		A-2	RV501	R-1
IC208		E-2	✱Q201		C-1	RV502	R-4
IC209		E-2	✱Q202		H-1	RV503	R-4
IC210		G-2	✱Q203		H-4	RV602	M-4
IC211		H-1	✱Q204		P-2	RV603	M-4
IC212		J-2	✱Q207		R-2		
IC213		P-1	✱Q209		N-2	S201	H-4
IC214		N-1	✱Q210		R-2		
IC215		P-2	✱Q211		K-2	TH201	M-1
IC216		K-2	✱Q212		R-1		
IC217	N	K-2	✱Q213		M-3	TP101	A-3
IC218		K-2	✱Q301		D-3	TP201	C-2
IC219	N	J-1	✱Q303		E-3	TP202	C-1
IC220		M-1	✱Q305		E-3	TP301	E-3
IC301		E-4	✱Q306		E-3	TP302	E-4
IC302		H-3	✱Q307		E-3	TP303	H-1
IC303		E-4	✱Q308		J-4	TP304	L-5
IC304		E-5	✱Q309		J-4	TP305	K-4
IC305		F-4	✱Q310		F-3	TP306	J-4
IC306		K-4	✱Q311		F-3	TP307	J-5
IC307		F-3	✱Q312		K-3	TP308	N-5
IC308		J-3	✱Q313		E-4	TP309	N-5
IC309		J-3	✱Q314		E-4	TP310	F-5
IC310		G-3	✱Q315		J-3	TP501	R-4
IC311		J-4	✱Q316		F-5	TP502	P-1
IC312		L-2	✱Q317		F-5	TP503	P-5
IC313		G-5	✱Q318		E-5	TP504	N-4
IC314		L-1	✱Q319		K-3	TP601	N-4
IC315		K-5	✱Q320		J-3	TP602	M-1
IC316		H-4	✱Q321		J-4	TP603	P-5
IC317		F-4	✱Q322		J-4		
IC501		P-4	✱Q323		J-4	X301	F-4
IC502		R-5	✱Q324		F-4	X302	H-4
IC601		L-4	✱Q325		F-4		
IC602		M-4	✱Q508		N-2		

✱ : B SIDE
N : UVW-1800 ONLY
P : UVW-1800P ONLY

For J,UC

① TP305 REC/EE

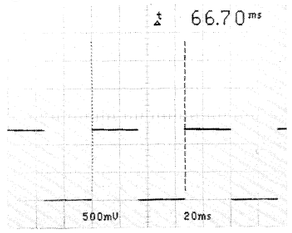

For EK

① TP305 REC/EE

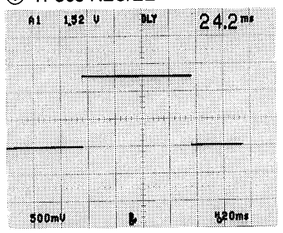

 16-144 (a)

 VRA-5/5P (3/4)

UVW-1800 (J) ;Serial No.10001 through 10900
UVW-1800 (UC);Serial No.10001 through 13930
UVW-1800P(EK);Serial No.10001 through 14140

VRA-5/5P(3/4);Y/C REF SYNC,TIMING PULSE

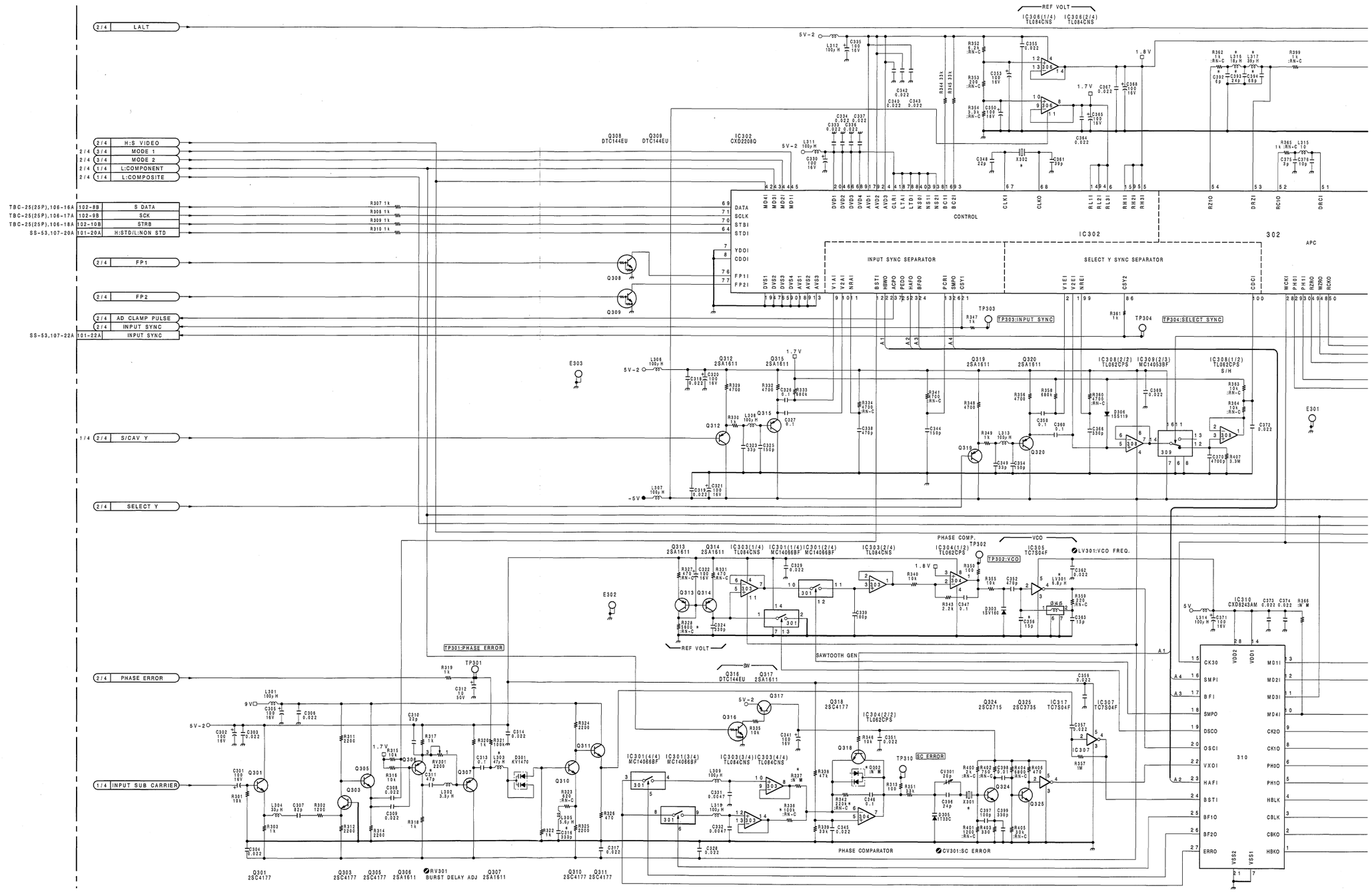

 16-145 (a1)

 VRA-5/5P (3/4)

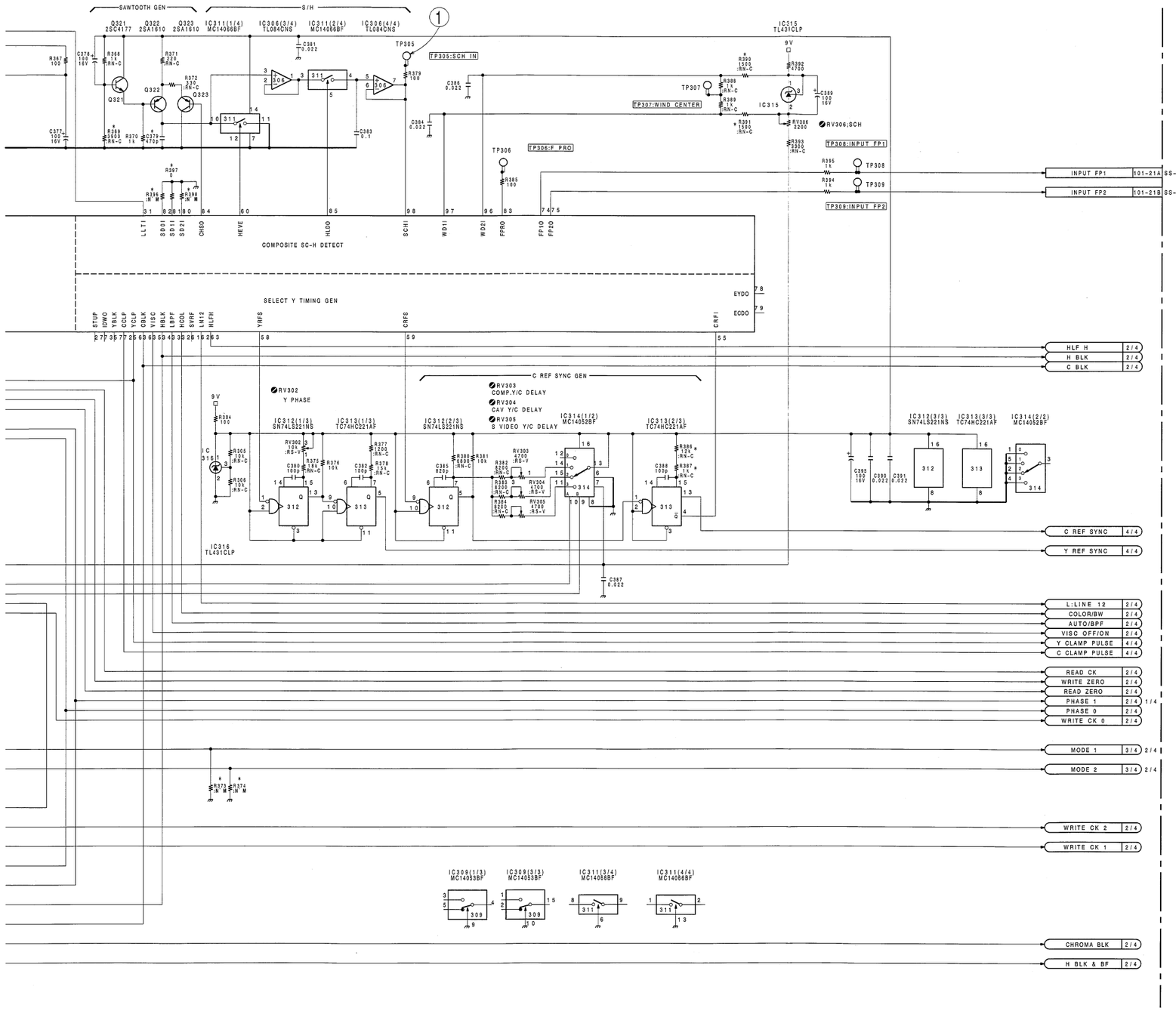

*	NTSC	PAL
C311	47P	22P
C316	330P	220P
C356	15P	6P
C379	470P	390P
C392	6P	6P
C393	24P	18P
C394	68P	39P
R328	▲ 5600	▲ 4700
R336	▲ 100K	▲ 330K
R337	NO M'T	▲ 330K
R342	▲ 220K	▲ 68K
R369	▲ 3900	▲ 3300
R373	NO M'T	0
R374	NO M'T	0
R386	▲ 12K	▲ 12K
R387	▲ 1K	▲ 1800
R390	▲ 1500	▲ 1200
R391	▲ 1500	▲ 1200
R396	NO M'T	0
R397	0	0
R398	NO M'T	NO M'T
D302	NO M'T	DA204U
L303	47UH	33UH
L316	18UH	15UH
L317	39UH	33UH
LV301	6.8UH	5.6UH

▲ = :RN-C

*	NTSC	PAL
X301	1-527-722-21	1-579-057-11
X302	10.738635MHz 1-760-109-21	10.664135MHz 1-760-183-21

VRA-5/5P BOARD (3/4)

BOARD NO.1-648-898-11
UVW-1800 (J) ;#10001-10900
UVW-1800 (UC);#10001-13930
UVW-1800P(EK);#10001-14140

 VRA-5/5P

VRA-5 (1-648-898-11)

CN101		N-6	IC801	N	D-3	✱Q509	P-2
CN102		C-6	IC802	N	D-2	✱Q510	R-4
			IC901		K-6	✱Q511	N-3
CV301		F-5	IC902		G-6	✱Q512	P-4
			IC903		J-6	✱Q513	P-4
✱D101		B-3	IC904		E-6	✱Q514	P-4
✱D102		C-3				✱Q515	P-4
✱D109		D-4	LV301		E-4	✱Q516	N-4
✱D202		H-4				✱Q517	N-4
✱D301		E-3	✱Q101		A-3	✱Q518	P-4
✱D302	P	F-4	✱Q102		A-5	✱Q519	P-5
✱D303		F-4	✱Q103		A-3	✱Q520	P-5
D305		F-5	Q104		A-4	✱Q601	L-2
D306	P	J-3	✱Q105		A-4	✱Q602	M-2
D801	N	A-2	✱Q106		A-3	✱Q603	N-4
			✱Q107		A-3	✱Q604	M-4
E101		B-4	✱Q108		A-1	✱Q605	M-4
E201		E-2	✱Q109		B-2	✱Q606	L-4
E301		K-3	✱Q110		B-2	✱Q607	M-4
E302		D-3	✱Q111		B-1	✱Q608	L-4
E303		H-1	✱Q112		C-1	✱Q609	M-5
E501		R-5	✱Q113		C-2	✱Q610	M-5
E502		N-1	✱Q114		B-4	Q801	N A-2
E601		M-1	✱Q115		B-4	Q802	N A-2
			✱Q116		B-3	Q803	N A-2
FB201		K-2	✱Q117		B-3	Q804	N D-3
			✱Q118		B-3		
FL101		A-2	✱Q119		B-3	RV101	B-2
FL102		B-3	✱Q120		B-2	RV102	B-3
FL103		C-3	✱Q121		C-4	RV103	C-4
FL201		R-2	✱Q122		C-4	RV104	C-3
FL202		N-2	✱Q123		C-4	RV105	A-2
			✱Q124		C-3	RV201	P-1
IC101		A-3	✱Q125		C-3	RV202	N-1
IC102		C-2	✱Q126		C-3	RV203	M-1
IC103		D-4	✱Q127		C-3	RV301	E-3
IC104		G-5	✱Q128		C-3	RV302	K-1
IC201		A-1	✱Q129		C-2	RV303	L-1
IC202		B-1	✱Q130		C-2	RV304	L-1
IC205		D-2	✱Q131		B-5	RV305	L-1
IC206		D-1	✱Q132		C-5	RV306	K-5
IC207		H-1	✱Q133		A-2	RV501	R-1
IC208		E-2	✱Q201		C-1	RV502	R-4
IC209		E-2	✱Q202		H-1	RV503	R-4
IC210		G-2	✱Q203		H-4	RV602	M-4
IC211		H-1	✱Q204		P-2	RV603	M-4
IC212		J-2	✱Q207		R-2		
IC213		P-1	✱Q209		N-2	S201	H-4
IC214		N-1	✱Q210		R-2		
IC215		P-2	✱Q211		K-2	TH201	M-1
IC216		K-2	✱Q212		R-1		
IC217	N	K-2	✱Q213		M-3	TP101	A-3
IC218		K-2	✱Q301		D-3	TP201	C-2
IC219	N	J-1	✱Q303		E-3	TP202	C-1
IC220		M-1	✱Q305		E-3	TP301	E-3
IC301		E-4	✱Q306		E-3	TP302	E-4
IC302		H-3	✱Q307		E-3	TP303	H-1
IC303		E-4	✱Q308		J-4	TP304	L-5
IC304		E-5	✱Q309		J-4	TP305	K-4
IC305		F-4	✱Q310		F-3	TP306	J-4
IC306		K-4	✱Q311		F-3	TP307	J-5
IC307		F-3	✱Q312		K-3	TP308	N-5
IC308		J-3	✱Q313		E-4	TP309	N-5
IC309		J-3	✱Q314		E-4	TP310	F-5
IC310		G-3	✱Q315		J-3	TP501	R-4
IC311		J-4	✱Q316		F-5	TP502	P-1
IC312		L-2	✱Q317		F-5	TP503	P-5
IC313		G-5	✱Q318		E-5	TP504	N-4
IC314		L-1	✱Q319		K-3	TP601	N-4
IC315		K-5	✱Q320		J-3	TP602	M-1
IC316		H-4	✱Q321		J-4	TP603	P-5
IC317		F-4	✱Q322		J-4		
IC501		P-4	✱Q323		J-4	X301	F-4
IC502		R-5	✱Q324		F-4	X302	H-4
IC601		L-4	✱Q325		F-4		
IC602		M-4	✱Q508		N-2		

✱ : B SIDE
N : UVW-1800 ONLY
P : UVW-1800P ONLY

For J,UC

① TP502 REC/EE

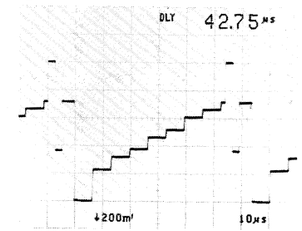

② TP602 REC/EE

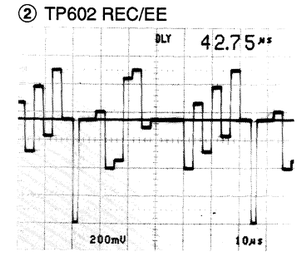

③ TP503 REC/EE
TP603 REC/EE

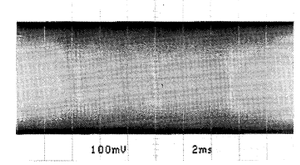

For EK

① TP502 REC/EE

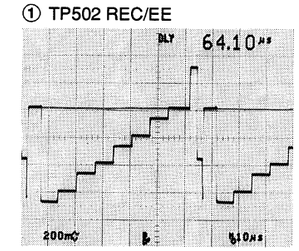

② TP602 REC/EE

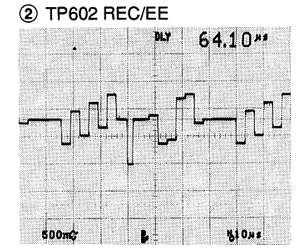

③ TP503 REC/EE
TP603 REC/EE

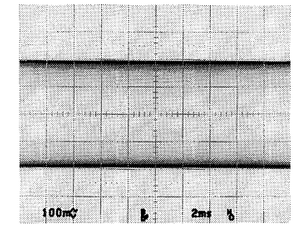

 16-148 (a)

 VRA-5/5P (4/4)

UVW-1800 (J) ;Serial No.10001 through 10900
UVW-1800 (UC);Serial No.10001 through 13930
UVW-1800P(EK);Serial No.10001 through 14140

VRA-5/5P(4/4);Y/C MOD,Y REC HF

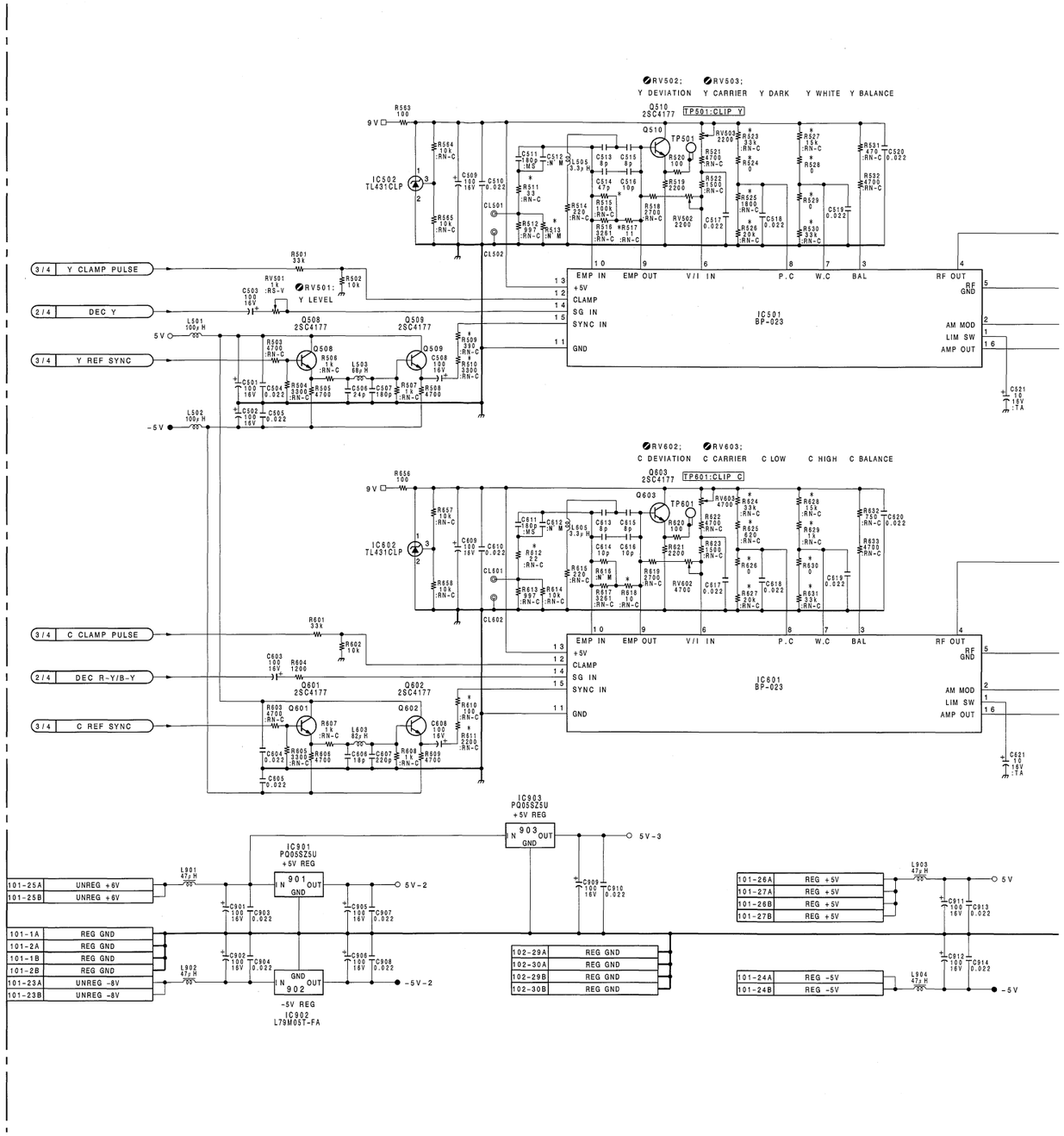

 16-149 (a1)

 VRA-5/5P (4/4)

*	NTSC	PAL
R509	▲ 390	▲ 330
R523	▲ 33K	▲ 33K
R524	0	0
R525	▲ 1800	▲ 330
R526	▲ 20K	▲ 18K
R527	▲ 15K	▲ 12K
R528	0	▲ 330
R529	0	0
R530	▲ 33K	▲ 33K

*	NTSC	PAL
R549	0	▲ 2K
R610	▲ 100	▲ 220
R611	▲ 2200	▲ 1K
R624	▲ 33K	▲ 33K
R625	▲ 620	0
R626	0	▲ 220
R627	▲ 20K	▲ 18K
R628	▲ 15K	▲ 12K
R629	▲ 1K	▲ 680

*	NTSC	PAL
R630	0	0
R631	▲ 33K	▲ 33K
R510	▲ 3300	▲ 2700
R511	▲ 33	0
R513	NO M'T	▲ 10K
R515	▲ 100K	▲ 47K
R517	▲ 11	▲ 15
R612	▲ 22	▲ 62
R618	▲ 10	0

▲ = :RN-C

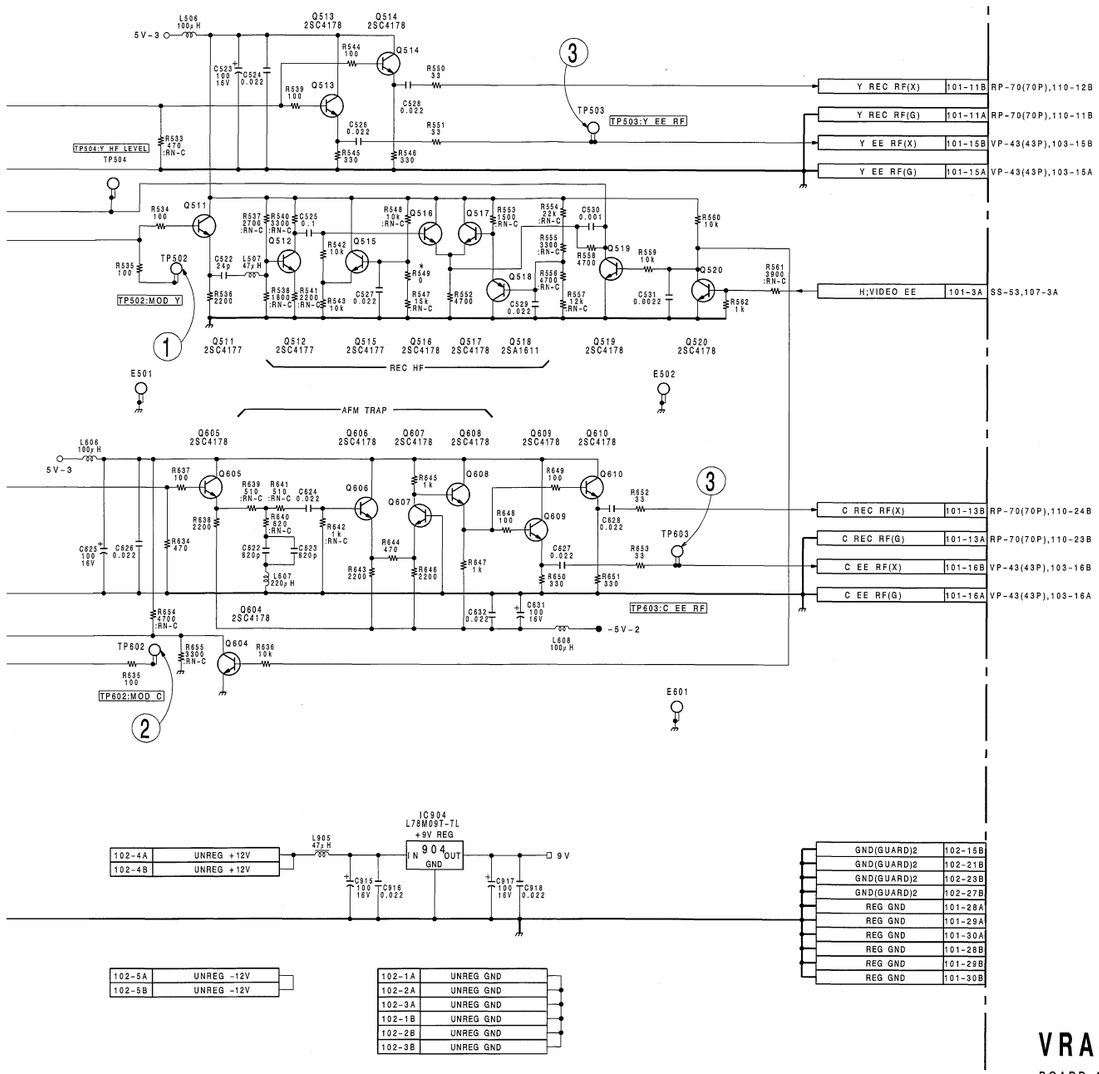

VRA-5/5P BOARD (4/4)

BOARD NO.1-648-898-11
UVW-1800 (J) ;#10001-10900
UVW-1800 (UC);#10001-13930
UVW-1800P(EK);#10001-14140

 16-149 (a2)

 SOPS-1045/1046

SOPS-1045;POWER SUPPLY(SWITCHING REGULATOR)(FOR J,UC)

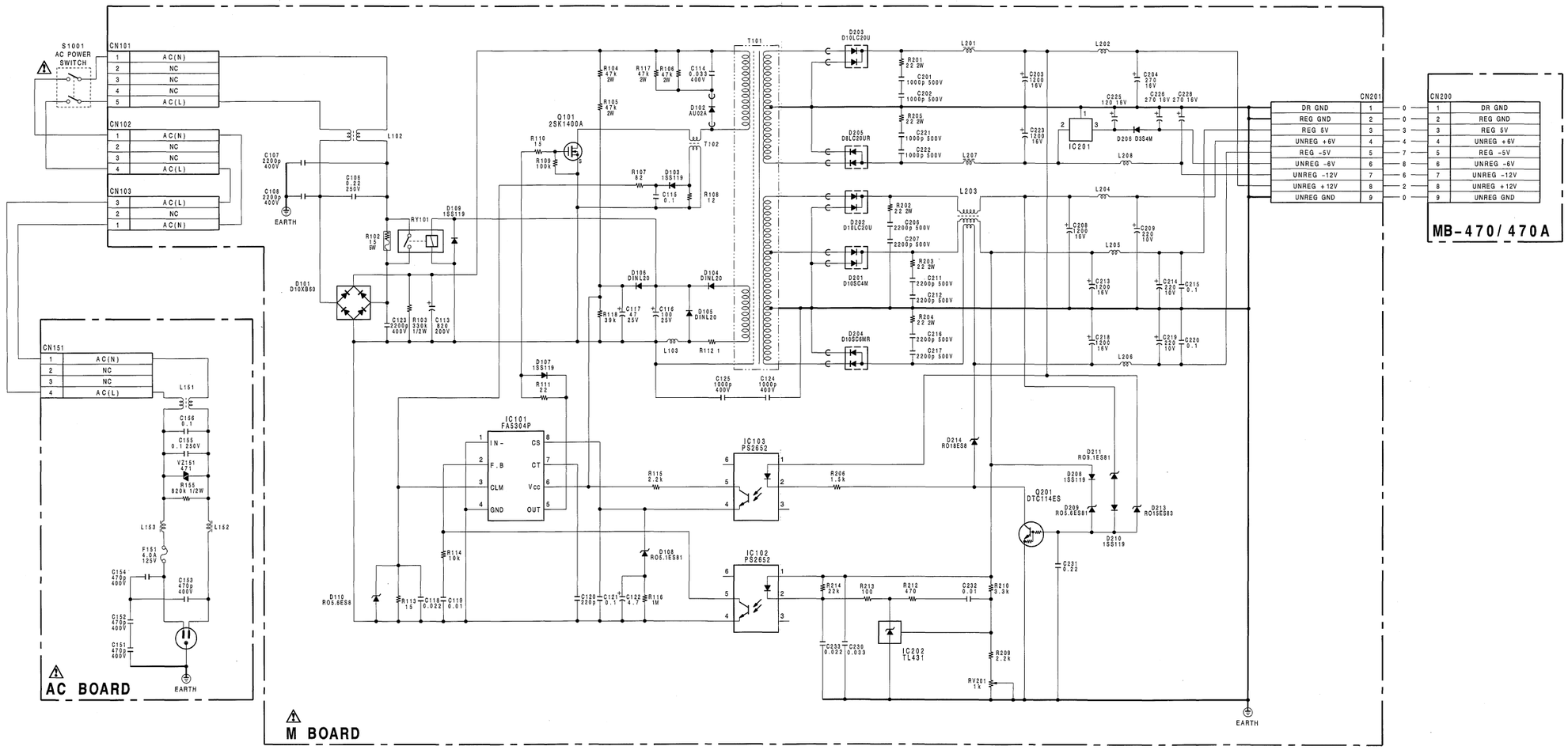

SOPS-1045 BOARD

BOARD NO.1-649-935-11
UVW-1800(J) ;#10001-
UVW-1800(UC);#10001-
UVW-1600(J) ;#10001-
UVW-1600(UC);#10001-

 16-151 (1)

SOPS-1046;POWER SUPPLY(SWITCHING REGULATOR)(FOR EK)

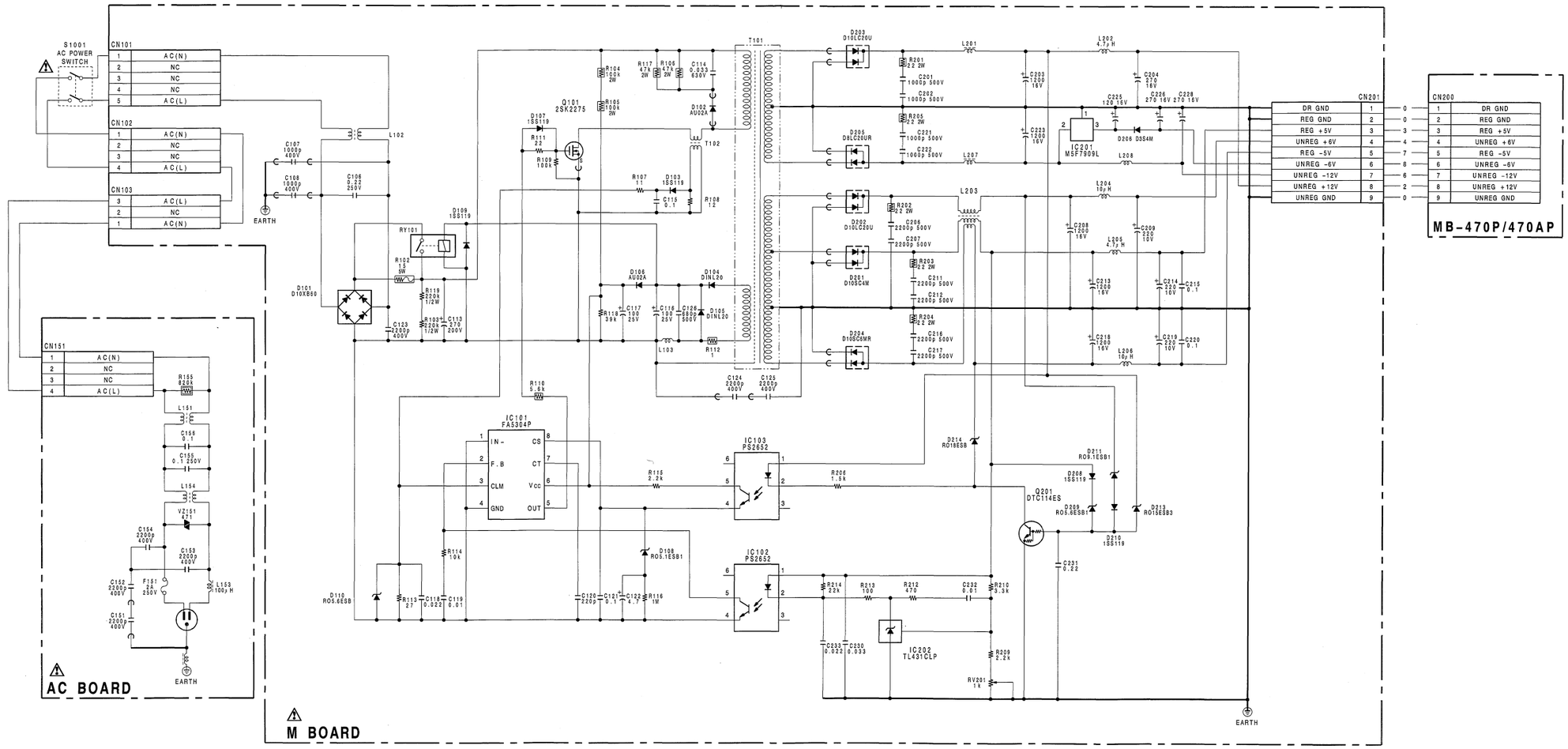

SOPS-1046 BOARD

BOARD NO.1-413-925-11,12
UVW-1800P(EK);#10001-
UVW-1600P(EK);#10001-

	1800P	1600P
-11	-	S/N 10001-10600
-12	S/N 10001-	S/N 10601-

 MB-470/470A/470P/470AP (1/4)

UVW-1800 (J) ;Serial No.10901 and higher
UVW-1800 (UC);Serial No.13931 and higher
UVW-1800P(EK);Serial No.14141 and higher
UVW-1600 (J) ;Serial No.10601 and higher
UVW-1600 (UC);Serial No.12901 and higher
UVW-1600P(EK);Serial No.13781 and higher

MB-470/470A/470P/470AP(1/4);MOTHER BOARD

VRA-5/5P

VRA-5/5P CN101

	A		B	
200-2	REG GND	1	REG GND	103-1・2
200-1	REG GND	2	REG GND	103-1・2
103-3A,105-3A	H:VIDEO EE	3	NC	
	NC	4	NC	
	NC	5	NC	
	NC	6	NC	
	NC	7	NC	
	NC	8	NC	
	NC	9	NC	
	NC	10	NC	
211-12	Y REC RF(G)	11	Y REC RF(X)	211-11
	NC	12	NC	
211-6	C REC RF(G)	13	C REC RF(X)	211-5
	NC	14	NC	
103-15A	Y EE RF(G)	15	Y EE RF(X)	103-15B
103-16A	C EE RF(G)	16	C EE RF(X)	103-16B
	NC	17	NC	
107-18A	L:RGB INPUT SEL	18	L:MAINTE MODE	105-14B,107-18B,231-24
107-19A	L:COMPOSITE	19	L:COMPONENT	107-19B
107-20A	H:STD/L:NON STD	20	NC	
107-21A	INPUT FP1	21	INPUT FP2	107-21B
107-22A	INPUT SYNC	22	REC CF ID	107-22B
200-6	UNREG -8V	23	UNREG -8V	103-23
200-5	REG -5V	24	REG -5V	103-24
200-4	UNREG +6V	25	UNREG +6V	103-25
200-3	REG +5V	26	REG +5V	103-26・27
200-3	REG +5V	27	REG +5V	103-26・27
200-2	REG GND	28	REG GND	103-28・29・30
200-2	REG GND	29	REG GND	103-28・29・30
200-2	REG GND	30	REG GND	103-28・29・30

VRA-5/5P CN102

	A		B	
200-9	UNREG GND	1	UNREG GND	104-1・2・3
200-9	UNREG GND	2	UNREG GND	104-1・2・3
200-9	UNREG GND	3	UNREG GND	104-1・2・3
F2	UNREG +12V-2	4	UNREG +12V-2	104-4
F1	UNREG -12V-2	5	UNREG -12V-2	104-5
	NC	6	NC	
	NC	7	NC	
	NC	8	S DATA	106-16A
	NC	9	SCK	106-17A
	NC	10	STRB	106-18A
	NC	11	NC	
	NC	12	NC	
	NC	13	NC	
	NC	14	NC	
	NC	15	GND(GUARD)2	
271-8	INPUT Y(G)	16	INPUT Y(X)	271-7
	NC	17	NC	
271-10	INPUT R-Y(G)	18	INPUT R-Y(X)	271-9
	NC	19	NC	
271-12	INPUT B-Y(G)	20	INPUT B-Y(X)	271-11
	NC	21	GND(GUARD)2	
271-2	INPUT VIDEO(G)	22	INPUT VIDEO(X)	271-1
	NC	23	GND(GUARD)2	
271-6	INPUT S-Y(G)	24	INPUT S-Y(X)	271-5
	NC	25	NC	
271-4	INPUT S-C(G)	26	INPUT S-C(X)	271-3
	NC	27	GND(GUARD)2	
	NC	28	NC	
	REG GND	29	REG GND	104-29・30
	REG GND	30	REG GND	104-29・30

VP-43/43A/

VP-43/43A/43P/43AP CN103

	A		B	
101-1・2	REG GND	1	REG GND	105-1・2
101-1・2	REG GND	2	REG GND	105-1・2
105-3A,101-3A	H:VIDEO EE	3	CTL SIG	108-12B,214-33B
105-4A,107-4A	L:FWD/REV X13	4	TRACKING CONT(X)	108-23A
108-23B	L:JIG EXIST	5	L:NO SIG	105-5B,107-5B
105-6A,107-6A	Y SW PLS	6	C SW PLS	105-6B,107-6B
231-12	LTC EQ(G)	7	LTC EQ(X)	231-11
107-14A	L:SLOW BID	8	VP SPARE	107-17B
211-10	Y A PB RF(G)	9	Y A PB RF(X)	211-9
211-8	Y B PB RF(G)	10	Y B PB RF(X)	211-7
	NC	11	GND(GUARD)1	
211-4	C A PB RF(G)	12	C A PB RF(X)	211-3
211-2	C B PB RF(G)	13	C B PB RF(X)	211-1
	NC	14	GND(GUARD)1	
101-15A	Y EE RF(G)	15	Y EE RF(X)	101-15B
101-16A	C EE RF(G)	16	C EE RF(X)	101-16B
	NC	17	GND	NC
105-18A	DEMOD Y(G)	18	DEMOD Y(X)	105-18B
105-19A	DEMOD C(G)	19	DEMOD C(X)	105-19B
107-14B	SV DO PLS	20	L:OXIDE/H:METAL	108-24B,106-18B
105-21A	Y DO PLS	21	C DO PLS	105-21B
106-20A	TBC SPEED	22	L:NOISE LESS PB	105-3B,107-3B
101-23	UNREG -8V	23	UNREG -8V	105-23
101-24	REG -5V	24	REG -5V	105-24
101-25	UNREG +6V	25	UNREG +6V	105-25
101-26・27	REG +5V	26	REG +5V	105-26・27
101-26・27	REG +5V	27	REG +5V	105-26・27
101-28・29・30	REG GND	28	REG GND	105-28・29・30
101-28・29・30	REG GND	29	REG GND	105-28・29・30
101-28・29・30	REG GND	30	REG GND	105-28・29・30

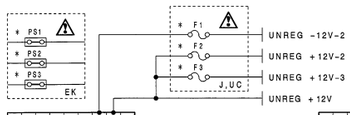

*

J,UC	1-532-777-51		
	F1	F2	F3
EK	PS1	PS2	PS3
	1-532-840-41		

CN200

1	DR GND	214-5・6
2	REG GND	201-1・2
3	REG +5V	201-3
4	UNREG +6V	201-4
5	REG -5V	201-5
6	UNREG -8V	201-6
7	UNREG -12V	
8	UNREG +12V	
9	UNREG GND	201-9

SW-REG.1-1	
SW-REG.1-2	
SW-REG.1-3	
SW-REG.1-4	
SW-REG.1-5	
SW-REG.1-6	
SW-REG.1-7	
SW-REG.1-8	
SW-REG.1-9	

CN201

1	REG GND	200-2
2	REG GND	200-2
3	REG +5V	200-3
4	UNREG +6V	200-4
5	REG -5V	200-5
6	UNREG -8V	200-6
7	UNREG -12V-2	F2
8	UNREG +12V-3	F3
9	UNREG GND	200-9

MB-471/A,251-1	
MB-471/A,251-2	
MB-471/A,251-3	
MB-471/A,251-4	
MB-471/A,251-5	
MB-471/A,251-6	
MB-471/A,251-7	
MB-471/A,251-8	
MB-471/A,251-9	

CN211

1	C B PB RF(X)	103-13B
2	C A PB RF(G)	103-13A
3	C A PB RF(X)	103-12B
4	C B PB RF(G)	103-12A
5	C REC RF(X)	101-13B
6	C REC RF(G)	101-13A
7	Y B PB RF(X)	103-10B
8	Y B PB RF(G)	103-10A
9	Y A PB RF(X)	103-9B
10	Y A PB RF(G)	103-9A
11	Y REC RF(X)	101-11B
12	Y REC RF(G)	101-11A

MB-471/A,261-1	
MB-471/A,261-2	
MB-471/A,261-3	
MB-471/A,261-4	
MB-471/A,261-5	
MB-471/A,261-6	
MB-471/A,261-7	
MB-471/A,261-8	
MB-471/A,261-9	
MB-471/A,261-10	
MB-471/A,261-11	
MB-471/A,261-12	

CN231

1	L:LTC ERASE ON	109-19A
2	REC LTC	109-20A
3	L:AU CH 2 ERASE ON	109-20B
4	L:AU CH 1 ERASE ON	109-19B
5	L:AU CH 2 REC MUTE	109-18A
6	L:AU CH 1 REC MUTE	109-18B
7	H:OSC OFF	109-17A
8	L:AU CH 1 BIAS ON	109-16A
9	L:AU CH 2 BIAS ON	109-15A
10	PB LTC	109-14A
11	LTC EQ(X)	103-7B
12	LTC EQ(G)	103-7A
13	H:CTL CUT	109-16B
14	L:AU CH 1 HEAD REC	109-13A
15	L:AU CH 1 PB MUTE	109-15B
16	L:AU CH 2 PB MUTE	109-14B
17	L:AU CH 2 HEAD REC	109-12A
18	L:AU CH 1 PB	109-13B
19	L:AU CH 2 PB	109-12B
20	H:LTC PB	109-11A
21	L:AUDIO ATT ON	109-11B
22	L:SLOW EQ ON	109-10B
23	H:NR ON	109-10A
24	L:MAINTE MODE	107-18B,105-14B,101-18B
25	DEW DET(X)	109-21A
26	DEW DET(G)	109-21B
27	H:FULL ERASE ON	109-9A
28	L:RE B CONT	109-8A
29	L:RE A CONT	109-9B
30	L:C B REC EN A/V	109-7A
31	L:C A REC EN A/V	109-8B
32	L:REC CONT	109-7B
33	L:Y B REC EN A/V	109-6A
34	L:Y A REC EN A/V	109-6B

MB-471/A,281-34	
MB-471/A,281-33	
MB-471/A,281-32	
MB-471/A,281-31	
MB-471/A,281-30	
MB-471/A,281-29	
MB-471/A,281-28	
MB-471/A,281-27	
MB-471/A,281-26	
MB-471/A,281-25	
MB-471/A,281-24	
MB-471/A,281-23	
MB-471/A,281-22	
MB-471/A,281-21	
MB-471/A,281-20	
MB-471/A,281-19	
MB-471/A,281-18	
MB-471/A,281-17	
MB-471/A,281-16	
MB-471/A,281-15	
MB-471/A,281-14	
MB-471/A,281-13	
MB-471/A,281-12	
MB-471/A,281-11	
MB-471/A,281-10	
MB-471/A,281-9	
MB-471/A,281-8	
MB-471/A,281-7	
MB-471/A,281-6	
MB-471/A,281-5	
MB-471/A,281-4	
MB-471/A,281-3	
MB-471/A,281-2	
MB-471/A,281-1	

 16-153 (b1)

 MB-470/470A/470P/470AP (1/4)

43P/43AP

	VP-43/43A/43P/43AP CN104			
	A		B	
102-1・2・3	UNREG GND	1	UNREG GND	106-1・2・3
102-1・2・3	UNREG GND	2	UNREG GND	106-1・2・3
102-1・2・3	UNREG GND	3	UNREG GND	106-1・2・3
102-4	UNREG +12V	4	UNREG +12V	106-4
102-5	UNREG -12V	5	UNREG -12V	106-5
107-16B	L:RGB OUTPUT SEL	6	NC	
106-7A	TBC' d Y(G)	7	TBC' d Y(X)	106-7B
106-8A	TBC' d B-Y(G)	8	TBC' d B-Y(X)	106-8B
106-9A	TBC' d R-Y(G)	9	TBC' d R-Y(X)	106-9B
	NC	10	GND(GUARD)3	
106-11A	U AXIS SC(G)	11	U AXIS SC(X)	106-11B
106-12A	V AXIS SC(G)	12	V AXIS SC(X)	106-12B
	NC	13	GND(GUARD)	
268-3	OUTPUT S-Y(G)	14	OUTPUT S-Y(X)	268-4
268-1	OUTPUT S-C(G)	15	OUTPUT S-C(X)	268-2
	NC	16	GND(GUARD)3	
269-5	OUTPUT Y 1(G)	17	OUTPUT Y 1(X)	269-6
268-9	OUTPUT Y 2(G)	18	OUTPUT Y 2(X)	268-10
269-1	OUTPUT B-Y 1(G)	19	OUTPUT B-Y 1(X)	269-2
268-13	OUTPUT B-Y 2(G)	20	OUTPUT B-Y 2(X)	268-14
269-3	OUTPUT R-Y 1(G)	21	OUTPUT R-Y 1(X)	269-4
268-11	OUTPUT R-Y 2(G)	22	OUTPUT R-Y 2(X)	268-12
106-21A	ENC CLAMP	23	GND(GUARD)3	
268-5	OUTPUT VIDEO 1(G)	24	OUTPUT VIDEO 1(X)	268-6
268-7	OUTPUT VIDEO 2(G)	25	OUTPUT VIDEO 2(X)	268-8
105-7A,107-7A	HD	26	H:WIDE	106-19B,107-17A
107-15A	CHARA FRAME	27	OUTPUT SYNC	106-20B
107-15B	CHARA SIG	28	ENC BLANK	106-21B
102-29・30	REG GND	29	REG GND	106-29・30
102-29・30	REG GND	30	REG GND	106-29・30

TBC-25/25P

	TBC-25/25P CN105			
	A		B	
103-1・2	REG GND	1	REG GND	107-1・2
103-1・2	REG GND	2	REG GND	107-1・2
107-3A,103-3A	H:VIDEO EE	3	L:NOISE LESS PB	107-3B,103-22B
107-4A,103-4A	L:FWD/REV X13	4	H:FWD/L:REV	107-4B
107-5A	L:TBC MUTE	5	L:NO SIG	103-5B,107-5B
107-6A,103-6A	Y SW PLS	6	C SW PLS	103-6B,107-6B
107-7A,104-26A	HD	7	PB SYNC	107-7B
107-8A	REF SYNC	8	REF 1ST FIELD	107-8B
107-9A	VD	9	SERVO V	107-9B
107-10A	L:FWD/REV X15	10	H:EXT SC DET	107-10B
107-11A	H:EXT SYNC DET	11	PB FF1	107-11B
107-12A	PB FF2	12	L:SYNC DELAY	107-12B
107-13A	TAPE SPEED	13	L:CS TBC	107-13B
	NC	14	L:MAINTE MODE	101-18B,107-18B,231-24
	NC	15	NC	
	NC	16	NC	
107-18A	TBC SPARE	17	GND	NC
103-18A	DEMOD Y(G)	18	DEMOD Y(X)	103-18B
103-19A	DEMOD C(G)	19	DEMOD C(X)	103-19B
	NC	20	GND	NC
103-21A	Y DO PLS	21	C DO PLS	103-21B
	NC	22	H:CHROMA MUTE	107-20B
103-23	UNREG -8V	23	UNREG -8V	107-23
103-24	REG -5V	24	REG -5V	107-24
103-25	UNREG +6V	25	UNREG +6V	107-25
103-26・27	REG +5V	26	REG +5V	107-26・27
103-26・27	REG +5V	27	REG +5V	107-26・27
103-28・29・30	REG GND	28	REG GND	107-28・29・30
103-28・29・30	REG GND	29	REG GND	107-28・29・30
103-28・29・30	REG GND	30	REG GND	107-28・29・30

	TBC-25/25P CN106			
	A		B	
104-1・2・3	UNREG GND	1	UNREG GND	109-1・2・3
104-1・2・3	UNREG GND	2	UNREG GND	109-1・2・3
104-1・2・3	UNREG GND	3	UNREG GND	109-1・2・3
104-4	UNREG +12V-2	4	UNREG +12V-2	109-4
104-5	UNREG -12V-2	5	UNREG -12V-2	109-5
267-1	INPUT REF(G)	6	INPUT REF(X)	267-2
104-7A	TBC' d Y(G)	7	TBC' d Y(X)	104-7B
104-8A	TBC' d B-Y(G)	8	TBC' d B-Y(X)	104-8B
104-9A	TBC' d R-Y(G)	9	TBC' d R-Y(X)	104-9B
	NC	10	GND(GUARD)3	
104-11A	U AXIS SC(G)	11	U AXIS SC(X)	104-11B
104-12A	V AXIS SC(G)	12	V AXIS SC(X)	104-12B
	NC	13	GND(GUARD)3	
267-6	DUB INPUT REF(G)	14	DUB INPUT REF(X)	267-7
	NC	15	NC	
102-8B	S DATA	16	NC	
102-9B	SCK	17	NC	
102-10B	STRB	18	L:OXIDE/H:METAL	108-24B,103-20B
	GND(GUARD)3	19	H:WIDE	104-26B,107-17A
103-22A	TBC SPEED	20	OUTPUT SYNC	104-27B
104-23A	ENC CLAMP	21	ENC BLANK	104-28B
109-22A,262-8	L:SYSTEM RESET	22	LOCAL SYNC PHASE	262-10
109-23A,262-6	SERIAL CLOCK	23	L:SERIAL READY	109-23B,262-5
109-24A,262-4	SERIAL RX	24	SERIAL TX	109-24B
232-7	REMOTE SYNC PHASE	25	LOCAL SC PHASE	262-11
232-9	REMOTE SC PHASE	26	HUE	232-8
232-11	SET UP	27	OUTPUT VIDEO LEVEL	232-10
232-13	OUTPUT CHROMA LEVEL	28	Y/C DELAY	232-12
104-29・30	REG GND	29	REG GND	109-29・30
104-29・30	REG GND	30	REG GND	109-29・30

CN232	CP-2371A,532-17	1	FRAME GND
	CP-2371A,532-16	2	FRAME GND
	CP-2371A,532-15	3	RX(-)
	CP-2371A,532-14	4	RX(+)
	CP-2371A,532-13	5	TX(+)
	CP-2371A,532-12	6	TX(-)
	CP-2371A,532-11	7	REMOTE SYNC PHASE
	CP-2371A,532-10	8	HUE
	CP-2371A,532-9	9	REMOTE SC PHASE
	CP-2371A,532-8	10	OUTPUT VIDEO LEVEL
	CP-2371A,532-7	11	SET UP
	CP-2371A,532-6	12	Y/C DELAY
	CP-2371A,532-5	13	OUTPUT CHROMA LEVEL
	CP-2371A,532-4	14	REG -9V
	CP-2371A,532-3	15	REG +9V
	CP-2371A,532-2	16	REG GND
	CP-2371A,532-1	17	REG GND

CN235	HP-61IA,403-1	1	SIRCS VCC
	HP-61IA,403-2	2	SIRCS DATA
	HP-61IA,403-3	3	SIRCS GND

CN262	KY-249IA,590-1	1	REG GND
	KY-249IA,590-2	2	REG GND
	KY-249IA,590-3	3	SERIAL TX
	KY-249IA,590-4	4	SERIAL RX
	KY-249IA,590-5	5	L:SERIAL READY
	KY-249IA,590-6	6	SERIAL CLOCK
	KY-249IA,590-7	7	L:CS KEY
	KY-249IA,590-8	8	L:SYSTEM RESET
	KY-249IA,590-9	9	L:CS DOT
	KY-249IA,590-10	10	LOCAL SYNC PHASE
	KY-249IA,590-11	11	LOCAL SC PHASE
	KY-249IA,590-12	12	REG +5V
	KY-249IA,590-13	13	REG +5V
	KY-249IA,590-14	14	UNREG +12V-2
	KY-249IA,590-15	15	UNREG +12V-2

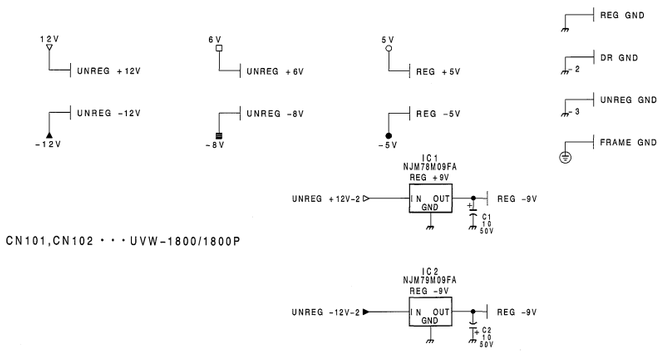

CN101,CN102・・・UVW-1800/1800P

MB-470/470A
MB-470P/470AP BOARD (1/4)

BOARD NO.1-648-918-12,22
UVW-1800 (J) ;#10901-
UVW-1800 (UC);#13931-
UVW-1800P(EK);#14141-
UVW-1600 (J) ;#10601-
UVW-1600 (UC);#12901-
UVW-1600P(EK);#13781-

 16-153 (b2)

 MB-470/470A/470P/470AP (2/4)

UVW-1800 (J) ;Serial No.10901 and higher
UVW-1800 (UC);Serial No.13931 and higher
UVW-1800P(EK);Serial No.14141 and higher
UVW-1600 (J) ;Serial No.10601 and higher
UVW-1600 (UC);Serial No.12901 and higher
UVW-1600P(EK);Serial No.13781 and higher

MB-470/470A/470P/470AP(2/4);MOTHER BOARD

SS-53

	SS-53 CN107 A		B	
105-1・2	REG GND	1	REG GND	
105-1・2	REG GND	2	REG GND	
105-3A,103-3A	H:VIDEO EE	3	L:NOISE LESS PB	105-3B
105-4A,103-4A	L:FWD/REV X13	4	H:FWD/L:REV	105-4B
105-5A	L:TBC MUTE	5	L:NO SIG	105-5B,103-5B
105-6A,103-6A	Y SW PLS	6	C SW PLS	105-6B,103-6B
105-7A,104-26A	HD	7	PB SYNC	105-7B
105-8A	REF SYNC	8	REF 1ST FIELD	105-8B
105-9A	VD	9	SERVO V	105-9B
105-10A	L:FWD/REV X15	10	H:EXT SC DET	105-10B
105-11A	H:EXT SYNC DET	11	PB FP1	105-11B
105-12A	PB FP2	12	L:SYNC DELAY	105-12B
105-13A	TAPE SPEED	13	L:CS TBC	105-13B
103-8A	L:SLOW BID	14	SV DO PLS	103-20A
104-27A	CHARA FRAME	15	CHARA SIG	104-28B
101-18A	L:RGB INPUT SEL	16	L:RGB OUTPUT SEL	104-6A
106-19B,104-26B	H:WIDE	17	VP SPARE	103-8B
105-17A	TBC SPARE	18	L:MAINTE MODE	231-24,105-14B,101-18B
101-19A	L:COMPOSITE	19	L:COMPONENT	101-19B
101-20A	H:STD/L:NON STD	20	H:CHROMA MUTE	105-22B
101-21A	INPUT FP1	21	INPUT FP2	101-21B
101-22A	INPUT SYNC	22	REC CF ID	101-22B
105-23	UNREG -8V	23	UNREG -8V	105-23
105-24	REG -5V	24	REG -5V	214-2
105-25	UNREG +6V	25	UNREG +6V	214-3
105-26・27	REG +5V	26	REG +5V	214-4
105-26・27	REG +5V	27	REG +5V	214-4
105-28・29・30	REG GND	28	REG GND	214-1
105-28・29・30	REG GND	29	REG GND	214-1
105-28・29・30	REG GND	30	REG GND	214-1

	SS-53 CN108 A		B	
214-10B	DRUM ERROR	1	DRUM CURRENT	214-11B
214-12B	CAPSTAN ERROR	2	CAPSTAN CURRENT	214-13B
214-14B	S REEL POWER CONT	3	S REEL ERROR	214-15B
214-16B	S REEL CURRENT	4	SOL CURRENT	214-17B
214-18B	DRUM FG	5	DRUM PG	214-19B
214-20B	S REEL FG B	6	S REEL FG A	214-21B
214-22B	L:TAPE END	7	CAPSTAN DIR CONT	214-23B
214-24B	CAPSTAN FG A	8	CAPSTAN FG B	214-25B
214-26B	ADJUST +11V	9	CAPSTAN FG A NORM	214-27B
214-28B	CAPSTAN FG B NORM	10	ADJUST GND	214-29B
214-30B	S TENSION	11	ADJUST +5V	214-31B
214-32B	H:CTL GAIN UP	12	CTL SIG	214-33B,103-3B
214-34B	CTL PULSE	13	REC CTL	214-35B
214-36B	H:CTL REC	14	L:TAPE TOP	214-37B
214-38B	THREADING FG	15	H:UNTH END	214-39B
214-40B	H:TH END	16	EMERGENCY MS RESET	214-41B
214-42B	1/2 VD	17	SERVO SCK	214-43B
214-44B	SERVO SI	18	SERVO SO	214-45B
214-46B	T REEL FG B	19	T REEL FG A	214-47B
214-48A	T REEL POWER CONT	20	T REEL ERROR	214-49A
214-50A	T REEL CURRENT	21	THREADING ERROR	214-50B
214-49B	TH/UNTH POWER CONT	22	L:MS BUSY	214-48B
103-4B	TRACKING CONT(X)	23	L:JIG EXIST	103-5A
NC	SV SPARE	24	L:OXIDE/H:METAL	103-20B,106-18B
235-1	SIRCS VCC	25	SIRCS DATA	235-2
235-3	SIRCS GND	26	NC	
	NC	27	NC	
	NC	28	NC	
	NC	29	NC	
	NC	30	NC	

	CN266		
CP-225/A.651-1	EXT TC IN(G)	1	109-28A
CP-225/A.651-2	EXT TC IN(X)	2	109-28B
CP-225/A.651-3	OUTPUT LTC(G)	3	109-27A
CP-225/A.651-4	OUTPUT LTC(X)	4	109-27B

	CN267		
CP-225/A.652-1	INPUT REF(G)	1	106-6A
CP-225/A.652-2	INPUT REF(X)	2	106-6B
CP-225/A.652-3	REG -5V	3	200-5
CP-225/A.652-4	REG GND	4	200-2
CP-225/A.652-5	REG +5V	5	200-3
CP-225/A.652-6	DUB INPUT REF(G)	6	106-14A
CP-225/A.652-7	DUB INPUT REF(X)	7	106-14B

	CN268		
CP-225/A.655-1	OUTPUT S-C(G)	1	104-15A
CP-225/A.655-2	OUTPUT S-C(X)	2	104-15B
CP-225/A.655-3	OUTPUT S-Y(G)	3	104-14A
CP-225/A.655-4	OUTPUT S-Y(X)	4	104-14B
CP-225/A.655-5	OUTPUT VIDEO 1(G)	5	104-24A
CP-225/A.655-6	OUTPUT VIDEO 1(X)	6	104-24B
CP-225/A.655-7	OUTPUT VIDEO 2(G)	7	104-25A
CP-225/A.655-8	OUTPUT VIDEO 2(X)	8	104-25B
CP-225/A.655-9	OUTPUT Y 2(G)	9	104-18A
CP-225/A.655-10	OUTPUT Y 2(X)	10	104-18B
CP-225/A.655-11	OUTPUT R-Y 2(G)	11	104-22A
CP-225/A.655-12	OUTPUT R-Y 2(X)	12	104-22B
CP-225/A.655-13	OUTPUT B-Y 2(G)	13	104-20A
CP-225/A.655-14	OUTPUT B-Y 2(X)	14	104-20B

	CN269		
CP-225/A.653-1	OUTPUT B-Y 1(G)	1	104-19A
CP-225/A.653-2	OUTPUT B-Y 1(X)	2	104-19B
CP-225/A.653-3	OUTPUT R-Y 1(G)	3	104-21A
CP-225/A.653-4	OUTPUT R-Y 1(X)	4	104-21B
CP-225/A.653-5	OUTPUT Y 1(G)	5	104-17A
CP-225/A.653-6	OUTPUT Y 1(X)	6	104-17B

 16-155 (b1)

 MB-470/470A/470P/470AP (2/4)

	SS-53 CN109 A		B	
106-1・2・3	UNREG GND	1	UNREG GND	
106-1・2・3	UNREG GND	2	UNREG GND	
106-1・2・3	UNREG GND	3	UNREG GND	
106-4	UNREG +12V-2	4	UNREG +12V-2	
106-5	UNREG -12V-2	5	UNREG -12V-2	
231-33	L:Y B REC EN A/V	6	L:Y A REC EN A/V	231-34
231-30	L:C B REC EN A/V	7	L:REC CONT	231-32
231-28	L:RE B CONT	8	L:C A REC EN A/V	231-31
231-27	H:FULL ERASE ON	9	L:RE A CONT	231-29
231-23	H:NR ON	10	L:SLOW EQ ON	231-22
231-20	H:LTC PB	11	L:AUDIO ATT ON	231-21
231-17	L:AU CH 2 HEAD REC	12	L:AU CH 2 PB	231-19
231-14	L:AU CH 1 HEAD REC	13	L:AU CH 1 PB	231-18
231-10	PB LTC	14	L:AU CH 2 PB MUTE	231-16
231-9	L:AU CH 2 BIAS ON	15	L:AU CH 1 PB MUTE	231-15
231-8	L:AU CH 1 BIAS ON	16	H:CTL CUT	231-13
231-7	H:OSC OFF	17	L:CS DOT	262-9
231-5	L:AU CH 2 REC MUTE	18	L:AU CH 1 REC MUTE	231-6
231-1	L:LTC ERASE ON	19	L:AU CH 1 ERASE ON	231-4
231-2	REC LTC	20	L:AU CH 2 ERASE ON	231-3
231-25	DEW DET(X)	21	DEW DET(G)	231-26
262-8,106-22A	L:SYSTEM RESET	22	L:CS KEY	262-7
262-6,106-23A	SERIAL CLOCK	23	L:SERIAL READY	106-23B,262-5
262-4,106-24A	SERIAL RX	24	SERIAL TX	106-24B,262-3
232-6	TX(-)	25	TX(+)	232-5
232-3	RX(-)	26	RX(+)	232-4
266-3	OUTPUT LTC(G)	27	OUTPUT LTC(X)	266-4
266-1	EXT TC IN(G)	28	EXT TC IN(X)	266-2
106-29・30	REG GND	29	REG GND	250-9・10,251-1・2
106-29・30	REG GND	30	REG GND	250-9・10,251-1・2

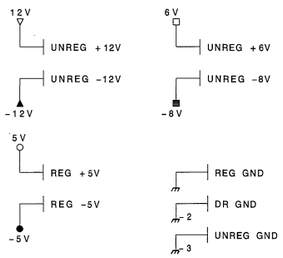

CN271・・・UVW-1800/1800P

CN271		
1	INPUT VIDEO(X)	102-22B
2	INPUT VIDEO(G)	102-22A
3	INPUT S-C(X)	102-26B
4	INPUT S-C(G)	102-26A
5	INPUT S-Y(X)	102-24B
6	INPUT S-Y(G)	102-24A
7	INPUT Y(X)	102-16B
8	INPUT Y(G)	102-16A
9	INPUT R-Y(X)	102-18B
10	INPUT R-Y(G)	102-18A
11	INPUT B-Y(X)	102-20B
12	INPUT B-Y(G)	102-20A

CP-225,654-1
CP-225,654-2
CP-225,654-3
CP-225,654-4
CP-225,654-5
CP-225,654-6
CP-225,654-7
CP-225,654-8
CP-225,654-9
CP-225,654-10
CP-225,654-11
CP-225,654-12

DR-214

	CN214 A		B	
	REG GND	1	REG GND	107-28,29,30
	REG -5V	2	REG -5V	107-24
	UNREG +6V	3	UNREG +6V	107-25
	REG +5V	4	REG +5V	107-26,27
	DR GND	5	DR GND	200-1
	DR GND	6	DR GND	200-1
	UNREG +12V	7	UNREG +12V	200-8
	UNREG +12V	8	UNREG +12V	200-8
	UNREG -12V-2	9	UNREG -12V-2	
	NC	10	DRUM ERROR	108-1A
	NC	11	DRUM CURRENT	108-1B
	NC	12	CAPSTAN ERROR	108-2A
	NC	13	CAPSTAN CURRENT	108-2B
	NC	14	S REEL POWER CONT	108-3A
	NC	15	S REEL ERROR	108-3B
	NC	16	S REEL CURRENT	108-4A
	NC	17	SOL CURRENT	108-4B
	NC	18	DRUM FG	108-5A
	NC	19	DRUM PG	108-5B
	NC	20	S REEL FG B	108-6A
	NC	21	S REEL FG A	108-6B
	NC	22	L:TAPE END	108-7A
	NC	23	CAPSTAN DIR CONT	108-7B
	NC	24	CAPSTAN FG A	108-8A
	NC	25	CAPSTAN FG B	108-8B
	NC	26	ADJUST +11V	108-9A
	NC	27	CAPSTAN FG A NORM	108-9B
	NC	28	CAPSTAN FG B NORM	108-10A
	NC	29	ADJUST GND	108-10B
	NC	30	S TENSION	108-11A
	NC	31	ADJUST +5V	108-11B
	NC	32	H:CTL GAIN UP	108-12A
	NC	33	CTL SIG	108-12B,103-3B
	NC	34	CTL PULSE	108-13A
	NC	35	REC CTL	108-13B
	NC	36	H:CTL REC	108-14A
	NC	37	L:TAPE TOP	108-14B
	NC	38	THREADING FG	108-15A
	NC	39	H:UNTH END	108-15B
	NC	40	H:TH END	108-16A
	NC	41	EMERGENCY MS RESET	108-16B
	NC	42	1/2 VD	108-17A
	NC	43	SERVO SCK	108-17B
	NC	44	SERVO SI	108-18A
	NC	45	SERVO SO	108-18B
	NC	46	T REEL FG B	108-19A
	NC	47	T REEL FG A	108-19B
108-20A	T REEL POWER CONT	48	L:MS BUSY	108-22B
108-20B	T REEL ERROR	49	TH/UNTH POWER CONT	108-22A
108-21A	T REEL CURRENT	50	THREADING ERROR	108-21B

MB-470/470A
MB-470P/470AP BOARD (2/4)

BOARD NO.1-648-918-12,22
UVW-1800 (J) ;#10901-
UVW-1800 (UC);#13931-
UVW-1800P(EK);#14141-
UVW-1600 (J) ;#10601-
UVW-1600 (UC);#12901-
UVW-1600P(EK);#13781-

 16-155 (b2)

 MB-470/470A/470P/470AP (3/4)

UVW-1800 (J) ;Serial No.10901 and higher
UVW-1800 (UC);Serial No.13931 and higher
UVW-1800P(EK);Serial No.14141 and higher
UVW-1600 (J) ;Serial No.10601 and higher
UVW-1600 (UC);Serial No.12901 and higher
UVW-1600P(EK);Serial No.13781 and higher

MB-470/470A/470P/470AP(3/4);MOTHER BOARD

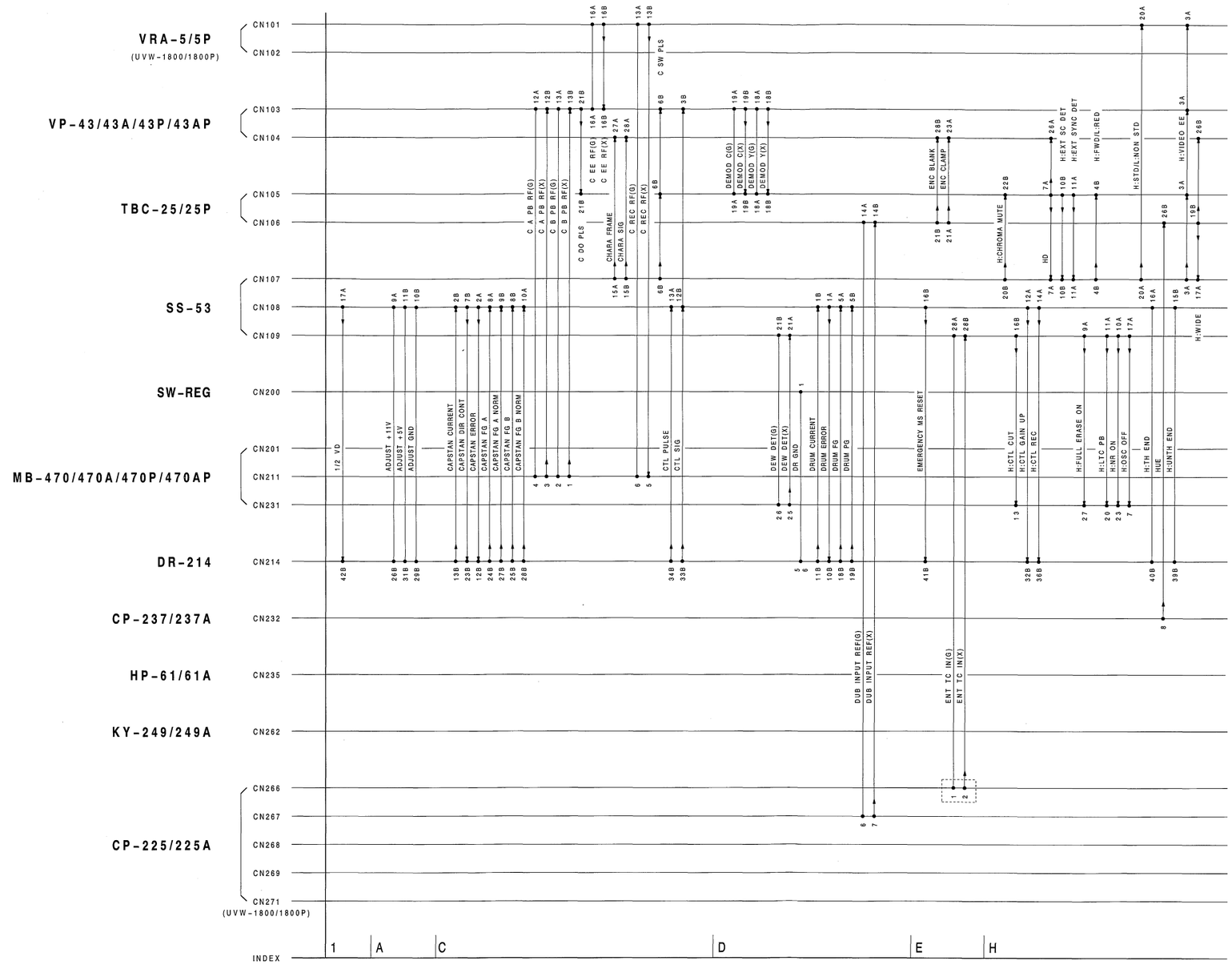

 16-157 (b1)

 MB-470/470A/470P/470AP (3/4)

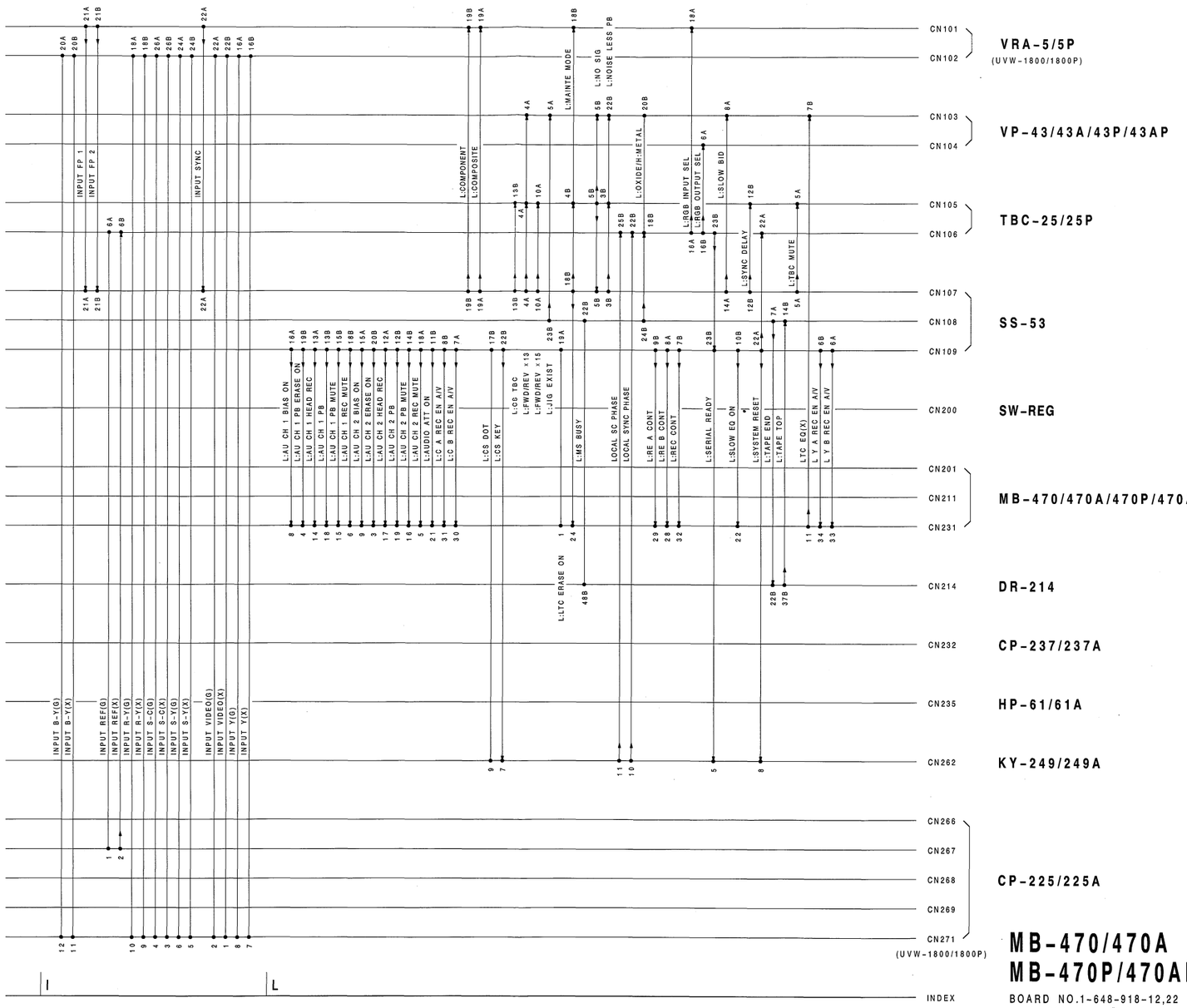

MB-470/470A
MB-470P/470AP BOARD (3/4)

BOARD NO.1-648-918-12,22
UVW-1800 (J) ;#10901-
UVW-1800 (UC);#13931-
UVW-1800P(EK);#14141-
UVW-1600 (J) ;#10601-
UVW-1600 (UC);#12901-
UVW-1600P(EK);#13781-

16-157 (b2)

 MB-470/470A/470P/470AP (4/4)

UVW-1800 (J) ;Serial No.10901 and higher
UVW-1800 (UC);Serial No.13931 and higher
UVW-1800P(EK);Serial No.14141 and higher
UVW-1600 (J) ;Serial No.10601 and higher
UVW-1600 (UC);Serial No.12901 and higher
UVW-1600P(EK);Serial No.13781 and higher

MB-470/470A/470P/470AP(4/4);MOTHER BOARD

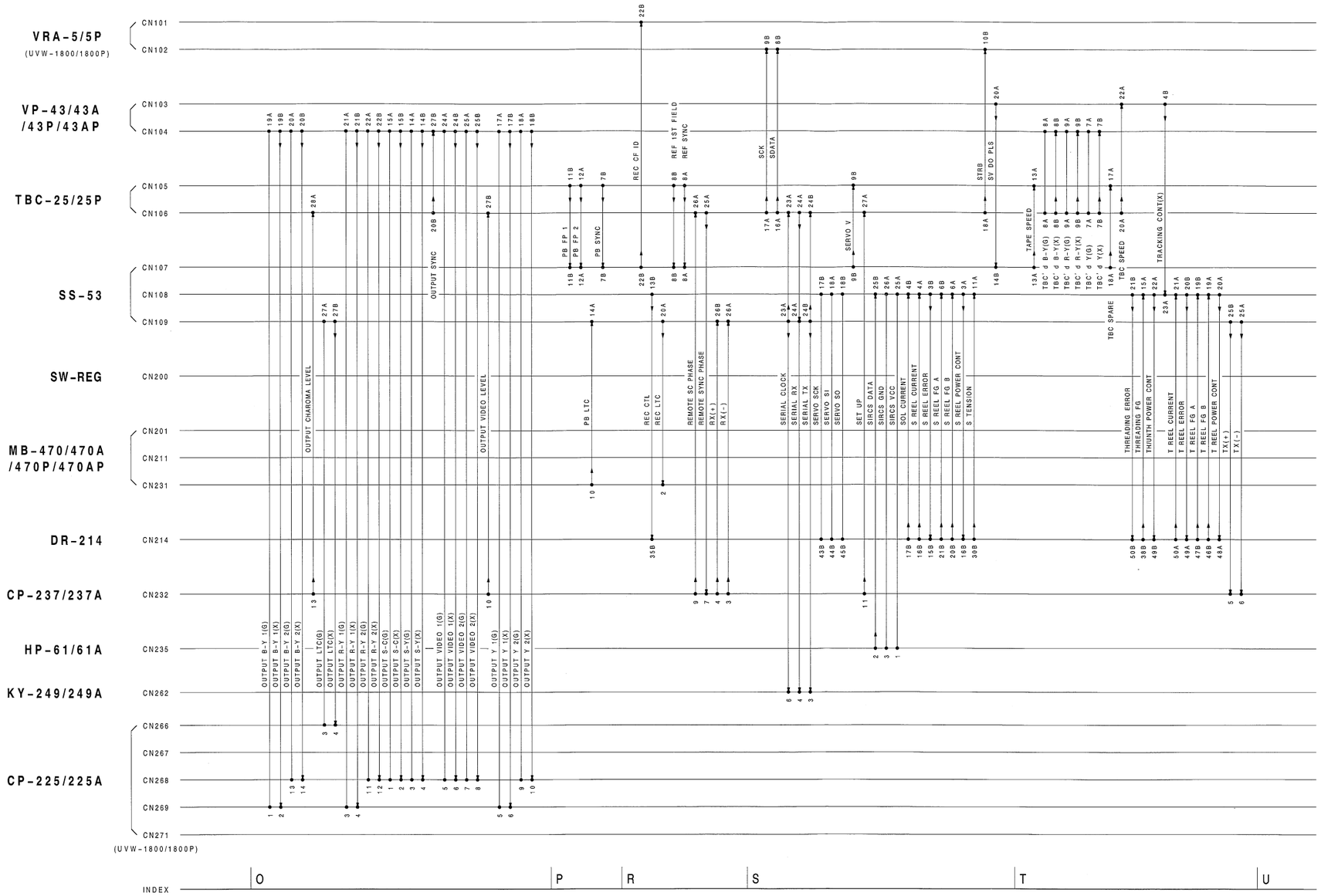

 16-159 (b1)

 MB-470/470A/470P/470AP (4/4)

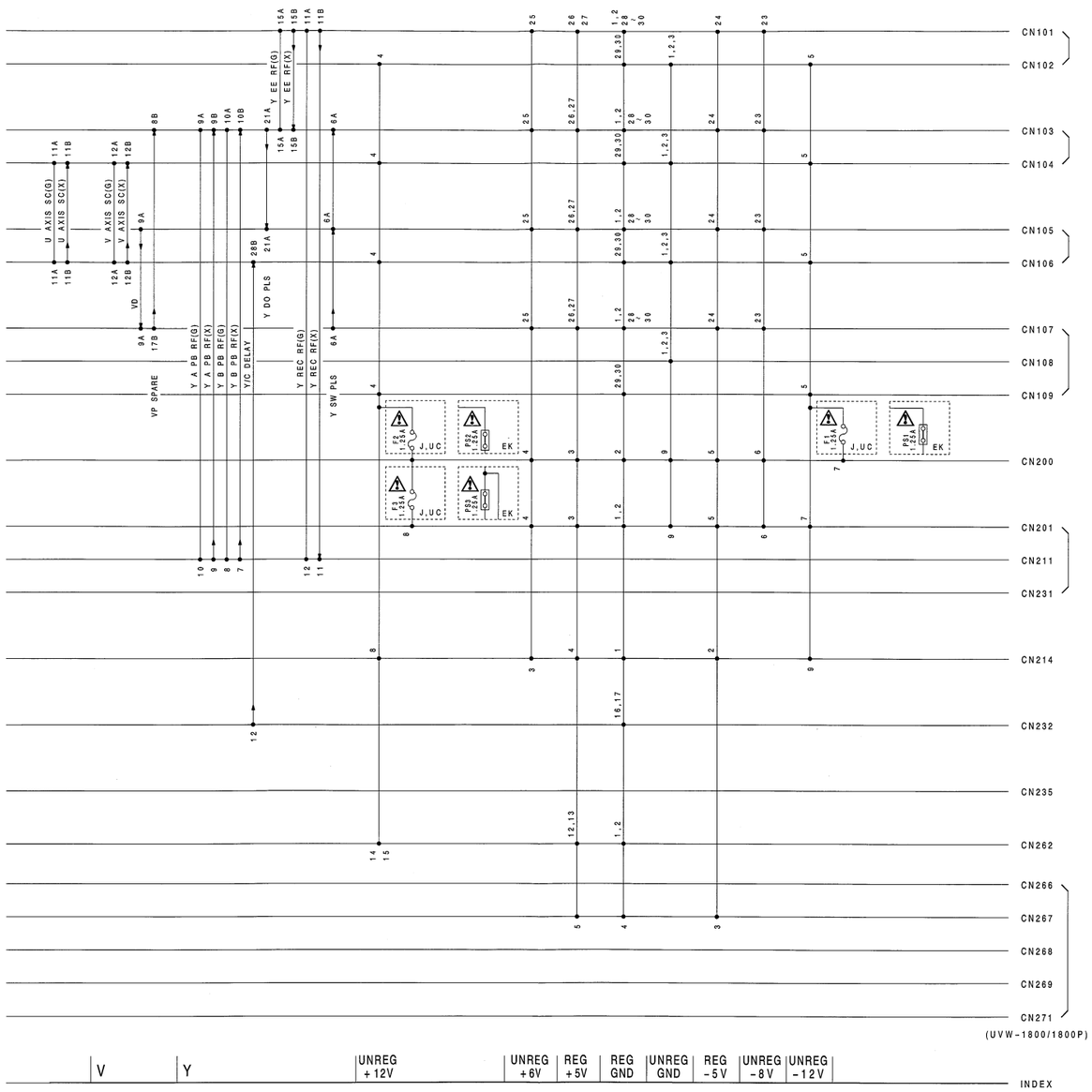

MB-470/470A
MB-470P/470AP BOARD (4/4)

BOARD NO.1-648-918-12,22
UVW-1800 (J) ;#10901-
UVW-1800 (UC);#13931-
UVW-1800P(EK);#14141-
UVW-1600 (J) ;#10601-
UVW-1600 (UC);#12901-
UVW-1600P(EK);#13781-

 16-159 (b2)

 MB-470/470A/470P/470AP (1/4)

UVW-1800 (J) ;Serial No.10001 through 10900
UVW-1800 (UC);Serial No.10001 through 13930
UVW-1800P(EK);Serial No.10001 through 14140
UVW-1600 (J) ;Serial No.10001 through 10600
UVW-1600 (UC);Serial No.10001 through 12900
UVW-1600P(EK);Serial No.10001 through 13780

MB-470/470A/470P/470AP(1/4);MOTHER BOARD

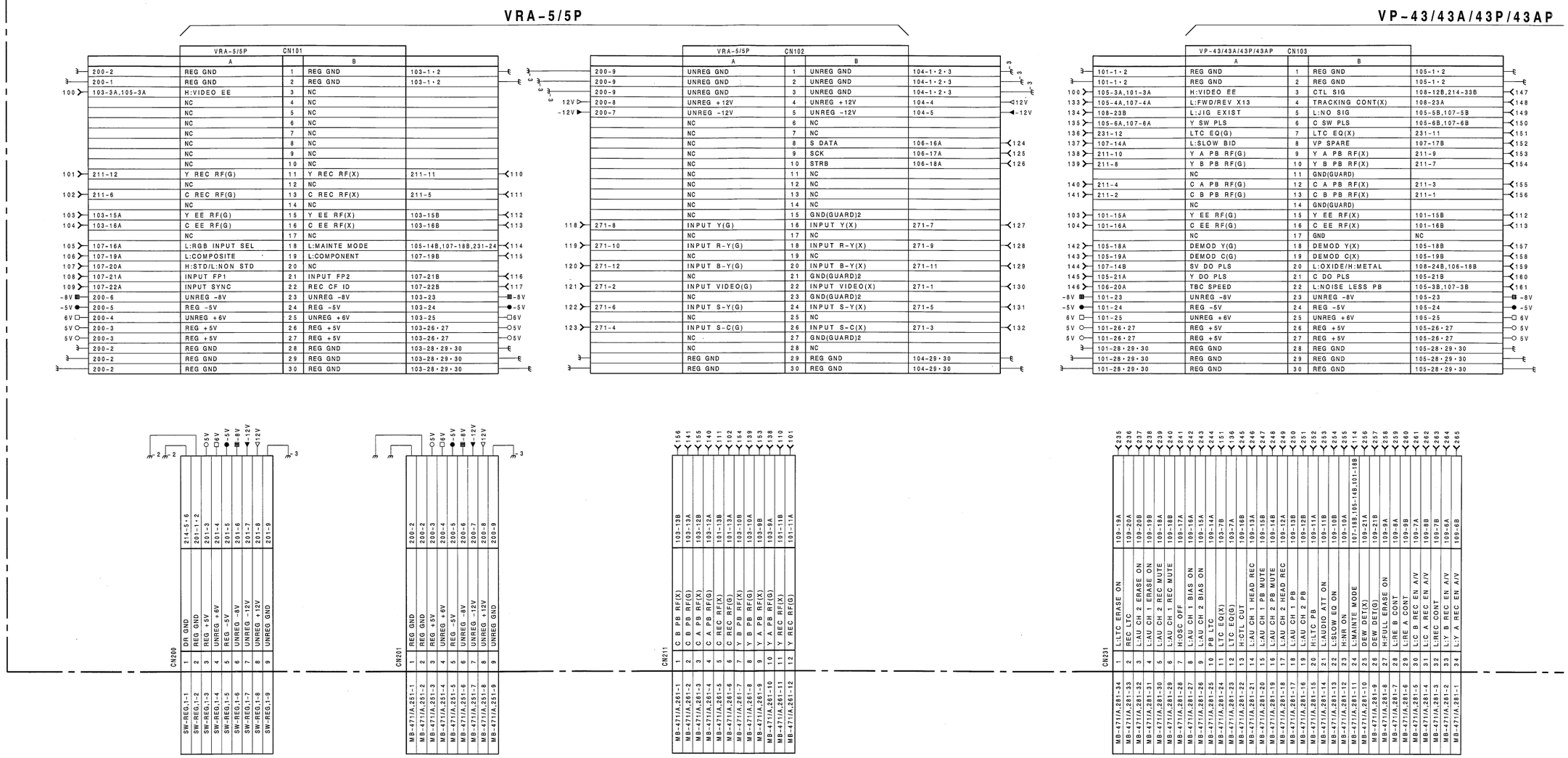

 16-153 (a1)

 MB-470/470A/470P/470AP (1/4)

TBC-25/25P

VP-43/43A/43P/43AP CN104

		A		B		
	102-1・2・3	UNREG GND	1	UNREG GND	106-1・2・3	3
	102-1・2・3	UNREG GND	2	UNREG GND	106-1・2・3	3
	102-1・2・3	UNREG GND	3	UNREG GND	106-1・2・3	3
12V	102-4	UNREG +12V	4	UNREG +12V	106-4	12V
-12V	102-5	UNREG -12V	5	UNREG -12V	106-5	-12V
162	107-16B	L:RGB OUTPUT SEL	6	NC		
163	106-7A	TBC' d Y(G)	7	TBC' d Y(X)	106-7B	182
164	106-8A	TBC' d B-Y(G)	8	TBC' d B-Y(X)	106-8B	183
165	106-9A	TBC' d R-Y(G)	9	TBC' d R-Y(X)	106-9B	184
		NC	10	GND(GUARD)		
166	106-11A	U AXIS SC(G)	11	U AXIS SC(X)	106-11B	185
167	106-12A	V AXIS SC(G)	12	V AXIS SC(X)	106-12B	186
		NC	13	GND(GUARD)		
168	268-3	OUTPUT S-Y(G)	14	OUTPUT S-Y(X)	268-4	187
169	268-1	OUTPUT S-C(G)	15	OUTPUT S-C(X)	268-2	188
		NC	16	GND(GUARD)		
170	269-5	OUTPUT Y 1(G)	17	OUTPUT Y 1(X)	269-6	189
171	268-9	OUTPUT Y 2(G)	18	OUTPUT Y 2(X)	268-10	190
172	269-1	OUTPUT B-Y 1(G)	19	OUTPUT B-Y 1(X)	269-2	191
173	268-13	OUTPUT B-Y 2(G)	20	OUTPUT B-Y 2(X)	268-14	192
174	269-3	OUTPUT R-Y 1(G)	21	OUTPUT R-Y 1(X)	269-4	193
175	268-11	OUTPUT R-Y 2(G)	22	OUTPUT R-Y 2(X)	268-12	194
176	106-21A	ENC CLAMP	23	GND(GUARD)		
177	268-5	OUTPUT VIDEO 1(G)	24	OUTPUT VIDEO 1(X)	268-6	195
178	268-7	OUTPUT VIDEO 2(G)	25	OUTPUT VIDEO 2(X)	268-8	196
179	105-7A,107-7A	HD	26	H:WIDE	106-19B,107-17A	197
180	107-15A	CHARA FRAME	27	OUTPUT SYNC	106-20B	198
181	107-15B	CHARA SIG	28	ENC BLANK	106-21B	199
	102-29・30	REG GND	29	REG GND	106-29・30	
	102-29・30	REG GND	30	REG GND	106-29・30	

TBC-25/25P CN105

		A		B		
	103-1・2	REG GND	1	REG GND	107-1・2	
	103-1・2	REG GND	2	REG GND	107-1・2	
100	107-3A,103-3A	H:VIDEO EE	3	L:NOISE LESS PB	107-3B,103-22B	161
133	107-4A,103-4A	L:FWD/REV X13	4	H:FWD/L:REV	107-4B	208
200	107-5A	L:TBC MUTE	5	L:NO SIG	103-5B,107-5B	149
135	107-6A,103-6A	Y SW PLS	6	C SW PLS	103-6B,107-6B	150
179	107-7A,104-26A	HD	7	PB SYNC	107-7B	209
201	107-8A	REF SYNC	8	REF 1ST FIELD	107-8B	210
202	107-9A	VD	9	SERVO V	107-9B	211
203	107-10A	L:FWD/REV X15	10	H:EXT SC DET	107-10B	212
204	107-11A	H:EXT SYNC DET	11	PB FP1	107-11B	213
205	107-12A	PB FP2	12	L:SYNC DELAY	107-12B	214
206	107-13A	TAPE SPEED	13	L:CS TBC	107-13B	215
		NC	14	L:MAINTE MODE	101-18B,107-18B,231-24	114
		NC	15	NC		
		NC	16	NC		
207	107-18A	TBC SPARE	17	GND	NC	
142	103-18A	DEMOD Y(G)	18	DEMOD Y(X)	103-18B	157
143	103-19A	DEMOD C(G)	19	DEMOD C(X)	103-19B	158
		NC	20	GND	NC	
145	103-21A	Y DO PLS	21	C DO PLS	103-21B	160
		NC	22	H:CHROMA MUTE	107-20B	216
-8V	103-23	UNREG -8V	23	UNREG -8V	107-23	-8V
-5V	103-24	REG -5V	24	REG -5V	107-24	-5V
6V	103-25	UNREG +6V	25	UNREG +6V	107-25	6V
5V	103-26・27	REG +5V	26	REG +5V	107-26・27	5V
5V	103-26・27	REG +5V	27	REG +5V	107-26・27	5V
	103-28・29・30	REG GND	28	REG GND	107-28・29・30	
	103-28・29・30	REG GND	29	REG GND	107-28・29・30	
	103-28・29・30	REG GND	30	REG GND	107-28・29・30	

TBC-25/25P CN106

		A		B		
	104-1・2・3	UNREG GND	1	UNREG GND	109-1・2・3	3
	104-1・2・3	UNREG GND	2	UNREG GND	109-1・2・3	3
	104-1・2・3	UNREG GND	3	UNREG GND	109-1・2・3	
12V	104-4	UNREG +12V	4	UNREG +12V	109-4	12V
-12V	104-5	UNREG -12V	5	UNREG -12V	109-5	-12V
217	267-1	INPUT REF(G)	6	INPUT REF(X)	267-2	226
163	104-7A	TBC' d Y(G)	7	TBC' d Y(X)	104-7B	182
164	104-8A	TBC' d B-Y(G)	8	TBC' d B-Y(X)	104-8B	183
165	104-9A	TBC' d R-Y(G)	9	TBC' d R-Y(X)	104-9B	184
		NC	10	GND(GUARD)		
166	104-11A	U AXIS SC(G)	11	U AXIS SC(X)	104-11B	185
167	104-12A	V AXIS SC(G)	12	V AXIS SC(X)	104-12B	186
		NC	13	GND(GUARD)		
218	267-6	DUB INPUT REF(G)	14	DUB INPUT REF(X)	267-7	227
		NC	15	NC		
124	102-8B	S DATA	16	NC		
125	102-9B	SCK	17	NC		
126	102-10B	STRB	18	L:OXIDE/H:METAL	108-24B,103-20B	159
		GND(GUARD)	19	H:WIDE	104-26B,107-17A	197
146	103-22A	TBC SPEED	20	OUTPUT SYNC	104-27B	198
176	104-23A	ENC CLAMP	21	ENC BLANK	104-28B	199
219	109-22A,262-8	L:SYSTEM RESET	22	LOCAL SYNC PHASE	262-10	228
220	109-23A,262-6	SERIAL CLOCK	23	L:SERIAL READY	109-23B,262-5	229
221	109-24A,262-4	SERIAL RX	24	SERIAL TX	109-24B	230
222	232-7	REMOTE SYNC PHASE	25	LOCAL SC PHASE	262-11	231
223	232-9	REMOTE SC PHASE	26	HUE	232-8	232
224	232-11	SET UP	27	OUTPUT VIDEO LEVEL	232-10	233
225	232-13	OUTPUT CHROMA LEVEL	28	Y/C DELAY	232-12	234
	104-29・30	REG GND	29	REG GND	109-29・30	
	104-29・30	REG GND	30	REG GND	109-29・30	

CN232

266	1	FRAME GND	109-26A
267	2	FRAME GND	109-26B
268	3	RX(-)	109-25B
269	4	RX(+)	109-25A
222	5	TX(+)	109-25A
232	6	TX(-)	106-25A
223	7	REMOTE SYNC PHASE	106-26B
233	8	HUE	106-26A
224	9	REMOTE SC PHASE	106-27B
234	10	OUTPUT VIDEO LEVEL	106-27A
225	11	SET UP	106-28B
270	12	Y/C DELAY	106-28A
271	13	OUTPUT CHROMA LEVEL	IC2 OUT
	14	REG -9V	IC1 OUT
	15	REG +9V	
	16	REG GND	
	17	REG GND	

CP-237/A,532-17	HP-61/A,403-1
CP-237/A,532-16	HP-61/A,403-2
CP-237/A,532-15	HP-61/A,403-3
CP-237/A,532-14	
CP-237/A,532-13	
CP-237/A,532-12	
CP-237/A,532-11	
CP-237/A,532-10	
CP-237/A,532-9	
CP-237/A,532-8	
CP-237/A,532-7	
CP-237/A,532-6	
CP-237/A,532-5	
CP-237/A,532-4	
CP-237/A,532-3	
CP-237/A,532-2	
CP-237/A,532-1	

CN235

272	1	SIRCS VCC
273	2	SIRCS DATA
274	3	SIRCS GND

CN262

230	1	REG GND	106-29・30
221	2	REG GND	106-29・30
229	3	SERIAL TX	109-24B,106-24B
220	4	SERIAL RX	109-24A,106-24A
5V	5	L:SERIAL READY	109-23B,106-23B
5V	6	SERIAL CLOCK	109-23A,106-23A
12V	7	L:CS KEY	106-22B
12V	8	L:SYSTEM RESET	106-22A,106-22A
	9	L:CS DOT	109-17B
	10	LOCAL SYNC PHASE	106-22B
	11	LOCAL SC PHASE	106-25B
	12	REG +5V	107-26・27
	13	REG +5V	107-26・27
	14	UNREG +12V	109-4
	15	UNREG +12V	109-4

KY-249/A,590-1	KY-249/A,590-15
KY-249/A,590-2	KY-249/A,590-14
KY-249/A,590-3	KY-249/A,590-13
KY-249/A,590-4	KY-249/A,590-12
KY-249/A,590-5	KY-249/A,590-11
KY-249/A,590-6	KY-249/A,590-10
KY-249/A,590-7	KY-249/A,590-9
KY-249/A,590-8	KY-249/A,590-8
KY-249/A,590-9	KY-249/A,590-7
KY-249/A,590-10	KY-249/A,590-6
KY-249/A,590-11	KY-249/A,590-5
KY-249/A,590-12	KY-249/A,590-4
KY-249/A,590-13	KY-249/A,590-3
KY-249/A,590-14	KY-249/A,590-2
KY-249/A,590-15	KY-249/A,590-1

CN101,CN102 ・・・UVW-1800/1800P

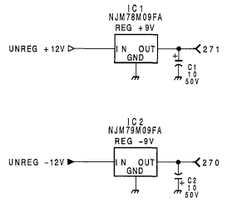

MB-470/470A
MB-470P/470AP BOARD (1/4)

BOARD NO.1-648-918-11,21
UVW-1800 (J) ;#10001-10900
UVW-1800 (UC);#10001-13930
UVW-1800P(EK);#10001-14140
UVW-1600 (J) ;#10001-10600
UVW-1600 (UC);#10001-12900
UVW-1600P(EK);#10001-13780

 MB-470/470A/470P/470AP (2/4)

UVW-1800 (J) ;Serial No.10001 through 10900
UVW-1800 (UC);Serial No.10001 through 13930
UVW-1800P(EK);Serial No.10001 through 14140
UVW-1600 (J) ;Serial No.10001 through 10600
UVW-1600 (UC);Serial No.10001 through 12900
UVW-1600P(EK);Serial No.10001 through 13780

MB-470/470A/470P/470AP(2/4);MOTHER BOARD

SS-53

SS-53 CN107

		A		B		
	105-1・2	REG GND	1	REG GND		
	105-1・2	REG GND	2	REG GND		
100	105-3A,105-3A	H:VIDEO EE	3	L:NOISE LESS PB	105-3B	161
133	105-4A,103-4A	L:FWD/REV X13	4	H:FWD/L:REV	105-4B	208
200	105-5A	L:TBC MUTE	5	L:NO SIG	105-5B,103-5B	149
135	105-6A,103-6A	Y SW PLS	6	C SW PLS	105-6B,103-6B	150
179	105-7A,104-26A	HD	7	PB SYNC	105-7B	209
201	105-8A	REF SYNC	8	REF 1ST FIELD	105-8B	210
202	105-9A	VD	9	SERVO V	105-9B	211
203	105-10A	L:FWD/REV X15	10	H:EXT SC DET	105-10B	212
204	105-11A	H:EXT SYNC DET	11	PB FP1	105-11B	213
205	105-12A	PB FP2	12	L:SYNC DELAY	105-12B	214
206	105-13A	TAPE SPEED	13	L:CS TBC	105-13B	215
137	103-8A	L:SLOW BID	14	SV DO PLS	103-20A	144
180	104-27A	CHARA FRAME	15	CHARA SIG	104-28B	181
105	101-18A	L:RGB INPUT SEL	16	L:RGB OUTPUT SEL	104-6A	162
197	106-19B,104-26B	H:WIDE	17	VP SPARE	103-8B	152
207	105-17A	TBC SPARE	18	L:MAINTE MODE	231-24,105-14B,101-18B	114
106	101-19A	L:COMPOSITE	19	L:COMPONENT	101-19B	115
107	101-20A	H:STD/L:NON STD	20	H:CHROMA MUTE	105-22B	216
108	101-21A	INPUT FP1'	21	INPUT FP2	101-21B	116
109	101-22A	INPUT SYNC	22	REC CF ID	101-22B	117
-8V	105-23	UNREG -8V	23	UNREG -8V	105-23	-8V
-5V	105-24	REG -5V	24	REG -5V	214-2	5V
6V	105-25	UNREG +6V	25	UNREG +6V	214-3	6V
5V	105-26・27	REG +5V	26	REG +5V	214-4	5V
5V	105-26・27	REG +5V	27	REG +5V	214-4	5V
	105-28・29・30	REG GND	28	REG GND	214-1	
	105-28・29・30	REG GND	29	REG GND	214-1	
	105-28・29・30	REG GND	30	REG GND	214-1	

SS-53 CN108

		A		B		
277	214-10B	DRUM ERROR	1	DRUM CURRENT	214-11B	299
278	214-12B	CAPSTAN ERROR	2	CAPSTAN CURRENT	214-13B	300
279	214-14B	S REEL POWER CONT	3	S REEL ERROR	214-15B	301
280	214-16B	S REEL CURRENT	4	SOL CURRENT	214-17B	302
281	214-18B	DRUM FG	5	DRUM PG	214-19B	303
282	214-20B	S REEL FG B	6	S REEL FG A	214-21B	304
283	214-22B	L:TAPE END	7	CAPSTAN DIR CONT	214-23B	305
284	214-24B	CAPSTAN FG A	8	CAPSTAN FG B	214-25B	306
285	214-26B	ADJUST +11V	9	CAPSTAN FG A NORM	214-27B	307
286	214-28B	CAPSTAN FG B NORM	10	ADJUST GND	214-29B	308
287	214-30B	S TENSION	11	ADJUST +5V	214-31B	309
288	214-32B	H:CTL GAIN UP	12	CTL SIG	214-33B,103-3B	147
289	214-34B	CTL PULSE	13	REC CTL	214-35B	310
290	214-36B	H:CTL REC	14	L:TAPE TOP	214-37B	311
291	214-38B	THREADING FG	15	H:UNTH END	214-39B	312
292	214-40B	H:TH END	16	EMERGENCY MS RESET	214-41B	313
293	214-42B	1/2 VD	17	SERVO SCK	214-43B	314
294	214-44B	SERVO SI	18	SERVO SO	214-45B	315
295	214-46B	T REEL FG B	19	T REEL FG A	214-47B	316
296	214-48A	T REEL POWER CONT	20	T REEL ERROR	214-49A	317
297	214-50A	T REEL CURRENT	21	THREADING ERROR	214-50B	318
298	214-49B	TH/UNTH POWER CONT	22	L:MS BUSY	214-48B	319
148	103-4B	TRACKING CONT(X)	23	L:JIG EXIST	103-5A	134
	NC	SV SPARE	24	L:OXIDE/H:METAL	103-20B,106-18B	159
272	235-1	SIRCS VCC	25	SIRCS DATA	235-2	273
274	235-3	SIRCS GND	26	NC		
		NC	27	NC		
		NC	28	NC		
		NC	29	NC		
		NC	30	NC		

CN266

CP-225/A,651-1	1	EXT TC IN(G)	109-28A
CP-225/A,651-2	2	EXT TC IN(X)	109-28B
CP-225/A,651-3	3	OUTPUT LTC(G)	109-27A
CP-225/A,651-4	4	OUTPUT LTC(X)	109-27B

CN267

CP-225/A,652-1	1	INPUT REF(G)	106-6A
CP-225/A,652-2	2	INPUT REF(X)	106-6B
CP-225/A,652-3	3	REG -5V	200-5
CP-225/A,652-4	4	REG GND	200-2
CP-225/A,652-5	5	REG +5V	200-3
CP-225/A,652-6	6	DUB INPUT REF(G)	106-14A
CP-225/A,652-7	7	DUB INPUT REF(X)	106-14B

CN268

CP-225/A,655-1	1	OUTPUT S-C(G)	104-15A
CP-225/A,655-2	2	OUTPUT S-C(X)	104-15B
CP-225/A,655-3	3	OUTPUT S-Y(G)	104-14A
CP-225/A,655-4	4	OUTPUT S-Y(X)	104-14B
CP-225/A,655-5	5	OUTPUT VIDEO 1(G)	104-24A
CP-225/A,655-6	6	OUTPUT VIDEO 1(X)	104-24B
CP-225/A,655-7	7	OUTPUT VIDEO 2(G)	104-25A
CP-225/A,655-8	8	OUTPUT VIDEO 2(X)	104-25B
CP-225/A,655-9	9	OUTPUT Y 2(G)	104-18A
CP-225/A,655-10	10	OUTPUT Y 2(X)	104-18B
CP-225/A,655-11	11	OUTPUT R-Y 2(G)	104-22A
CP-225/A,655-12	12	OUTPUT R-Y 2(X)	104-22B
CP-225/A,655-13	13	OUTPUT B-Y 2(G)	104-20A
CP-225/A,655-14	14	OUTPUT B-Y 2(X)	104-20B

CN269

CP-225/A,653-1	1	OUTPUT B-Y 1(G)	104-19A
CP-225/A,653-2	2	OUTPUT B-Y 1(X)	104-19B
CP-225/A,653-3	3	OUTPUT R-Y 1(G)	104-21A
CP-225/A,653-4	4	OUTPUT R-Y 1(X)	104-21B
CP-225/A,653-5	5	OUTPUT Y 1(G)	104-17A
CP-225/A,653-6	6	OUTPUT Y 1(X)	104-17B

 16-155 (a1)

 MB-470/470A/470P/470AP (2/4)

SS-53 CN109

		A		B	
	106-1・2・3	UNREG GND	1	UNREG GND	
	106-1・2・3	UNREG GND	2	UNREG GND	
	106-1・2・3	UNREG GND	3	UNREG GND	
12V	106-4	UNREG +12V	4	UNREG +12V	12V
-12V	106-5	UNREG -12V	5	UNREG -12V	-12V
264	231-33	L:Y B REC EN A/V	6	L:Y A REC EN A/V	231-34 265
261	231-30	L:C B REC EN A/V	7	L:REC CONT	231-32 263
259	231-28	L:RE B CONT	8	L:C A REC EN A/V	231-31 262
258	231-27	H:FULL ERASE ON	9	L:RE A CONT	231-29 260
255	231-23	H:NR ON	10	L:SLOW EQ ON	231-22 254
252	231-20	H:LTC PB	11	L:AUDIO ATT ON	231-21 253
249	231-17	L:AU CH 2 HEAD REC	12	L:AU CH 2 PB	231-19 251
246	231-14	L:AU CH 1 HEAD REC	13	L:AU CH 1 PB	231-18 250
244	231-10	PB LTC	14	L:AU CH 2 PB MUTE	231-16 248
243	231-9	L:AU CH 2 BIAS ON	15	L:AU CH 1 PB MUTE	231-15 247
242	231-8	L:AU CH 1 BIAS ON	16	H:CTL CUT	231-13 245
241	231-7	H:OSC OFF	17	L:CS DOT	262-9 276
239	231-5	L:AU CH 2 REC MUTE	18	L:AU CH 1 REC MUTE	231-6 240
235	231-1	L:LTC ERASE ON	19	L:AU CH 1 ERASE ON	231-4 238
236	231-2	REC LTC	20	L:AU CH 2 ERASE ON	231-3 237
256	231-25	DEW DET(X)	21	DEW DET(G)	231-26 257
219	262-8,106-22A	L:SYSTEM RESET	22	L:CS KEY	262-7 275
220	262-6,106-23A	SERIAL CLOCK	23	L:SERIAL READY	106-23B,262-5 229
221	262-4,106-24A	SERIAL RX	24	SERIAL TX	106-24B,262-3 230
269	232-6	TX(-)	25	TX(+)	232-5 268
266	232-3	RX(-)	26	RX(+)	232-4 267
320	266-3	OUTPUT LTC(G)	27	OUTPUT LTC(X)	266-4 322
321	266-1	EXT TC IN(G)	28	EXT TC IN(X)	266-2 323
	106-29・30	REG GND	29	REG GND	250-9・10,251-1・2
	106-29・30	REG GND	30	REG GND	250-9・10,251-1・2

DR-214

CN214

		A		B	
		REG GND	1	REG GND	107-28,29,30
-5V		REG -5V	2	REG -5V	107-24 -5V
6V		UNREG +6V	3	UNREG +6V	107-25 6V
5V		REG +5V	4	REG +5V	107-26,27 5V
		DR GND	5	DR GND	200-1
		DR GND	6	DR GND	200-1
12V		UNREG +12V	7	UNREG +12V	200-8 12V
12V		UNREG +12V	8	UNREG +12V	200-8 12V
-12V		UNREG -12V	9	UNREG -12V	200-7 -12V
		NC	10	DRUM ERROR	108-1A 277
		NC	11	DRUM CURRENT	108-1B 299
		NC	12	CAPSTAN ERROR	108-2A 278
		NC	13	CAPSTAN CURRENT	108-2B 300
		NC	14	S REEL POWER CONT	108-3A 279
		NC	15	S REEL ERROR	108-3B 301
		NC	16	S REEL CURRENT	108-4A 280
		NC	17	SOL CURRENT	108-4B 302
		NC	18	DRUM FG	108-5A 281
		NC	19	DRUM PG	108-5B 303
		NC	20	S REEL FG B	108-6A 282
		NC	21	S REEL FG A	108-6B 304
		NC	22	L:TAPE END	108-7A 283
		NC	23	CAPSTAN DIR CONT	108-7B 305
		NC	24	CAPSTAN FG A	108-8A 284
		NC	25	CAPSTAN FG B	108-8B 306
		NC	26	ADJUST +11V	108-9A 285
		NC	27	CAPSTAN FG A NORM	108-9B 307
		NC	28	CAPSTAN FG B NORM	108-10A 286
		NC	29	ADJUST GND	108-10B 308
		NC	30	S TENSION	108-11A 287
		NC	31	ADJUST +5V	108-11B 309
		NC	32	H:CTL GAIN UP	108-12A 288
		NC	33	CTL SIG	108-12B,103-3B 147
		NC	34	CTL PULSE	108-13A 289
		NC	35	REC CTL	108-13B 310
		NC	36	H:CTL REC	108-14A 290
		NC	37	L:TAPE TOP	108-14B 311
		NC	38	THREADING FG	108-15A 291
		NC	39	H:UNTH END	108-15B 312
		NC	40	H:TH END	108-16A 292
		NC	41	EMERGENCY MS RESET	108-16B 313
		NC	42	1/2 VD	108-17A 293
		NC	43	SERVO SCK	108-17B 314
		NC	44	SERVO SI	108-18A 294
		NC	45	SERVO SO	108-18B 315
		NC	46	T REEL FG B	108-19A 295
		NC	47	T REEL FG A	108-19B 316
296	108-20A	T REEL POWER CONT	48	L:MS BUSY	108-22B 319
317	108-20B	T REEL ERROR	49	TH/UNTH POWER CONT	108-22A 298
297	108-21A	T REEL CURRENT	50	THREADING ERROR	108-21B 318

CN271

1	INPUT VIDEO(X)	102-22B	130
2	INPUT VIDEO(G)	102-22A	121
3	INPUT S-C(X)	102-26B	132
4	INPUT S-C(G)	102-26A	123
5	INPUT S-Y(X)	102-24B	131
6	INPUT S-Y(G)	102-24A	122
7	INPUT Y(X)	102-16B	127
8	INPUT Y(G)	102-16A	118
9	INPUT R-Y(X)	102-18B	128
10	INPUT R-Y(G)	102-18A	119
11	INPUT B-Y(X)	102-20B	129
12	INPUT B-Y(G)	102-20A	120

CP-225,654-1 … CP-225,654-12

CN271・・・UVW-1800/1800P

MB-470/470A
MB-470P/470AP BOARD (2/4)

BOARD NO.1-648-918-11,21
UVW-1800 (J) ;#10001-10900
UVW-1800 (UC);#10001-13930
UVW-1800P(EK);#10001-14140
UVW-1600 (J) ;#10001-10600
UVW-1600 (UC);#10001-12900
UVW-1600P(EK);#10001-13780

 16-155 (a2)

 MB-470/470A/470P/470AP (3/4)

UVW-1800 (J) ;Serial No.10001 through 10900
UVW-1800 (UC);Serial No.10001 through 13930
UVW-1800P(EK);Serial No.10001 through 14140
UVW-1600 (J) ;Serial No.10001 through 10600
UVW-1600 (UC);Serial No.10001 through 12900
UVW-1600P(EK);Serial No.10001 through 13780

MB-470/470A/470P/470AP(3/4);MOTHER BOARD

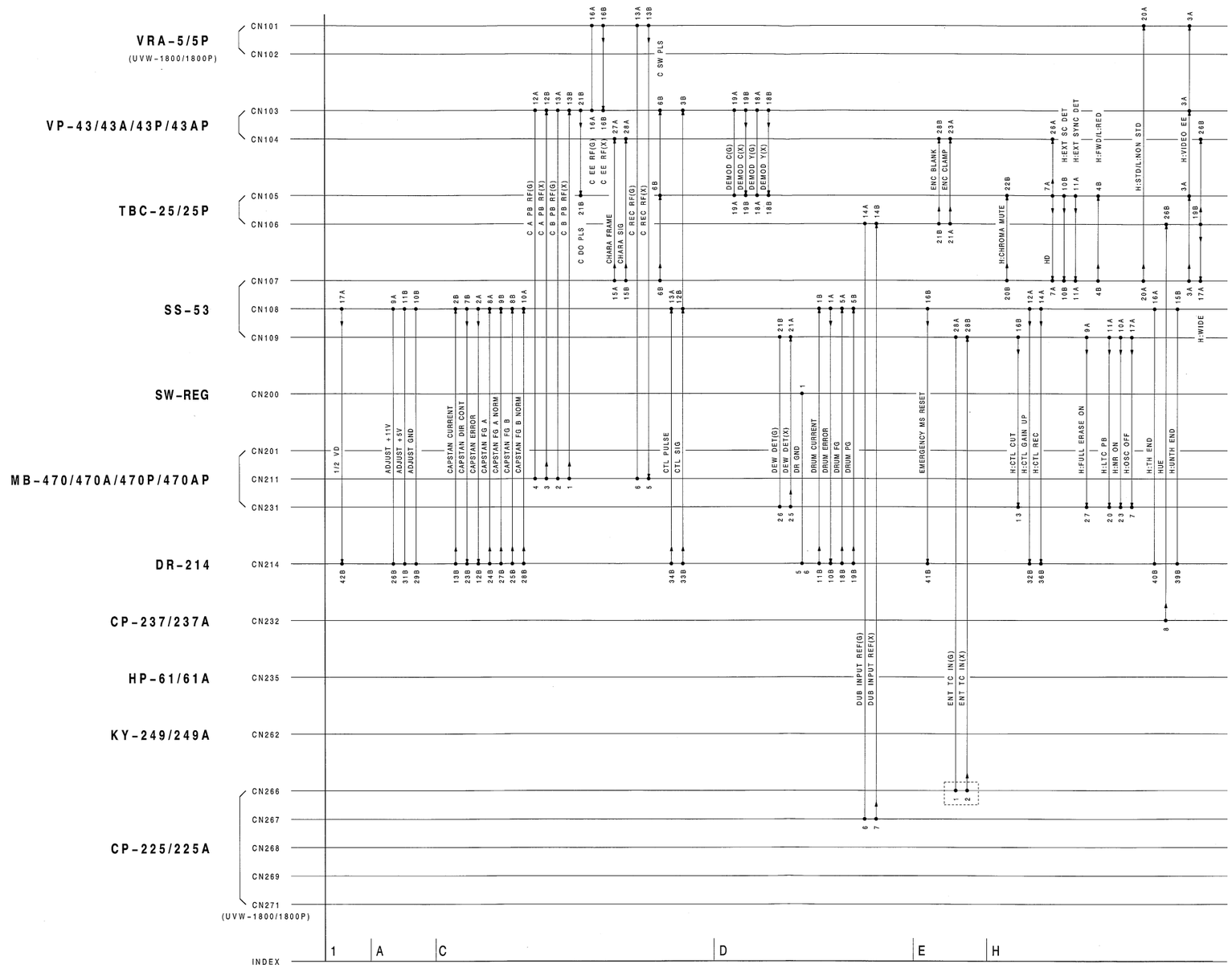

 16-157 (a1)

 MB-470/470A/470P/470AP (3/4)

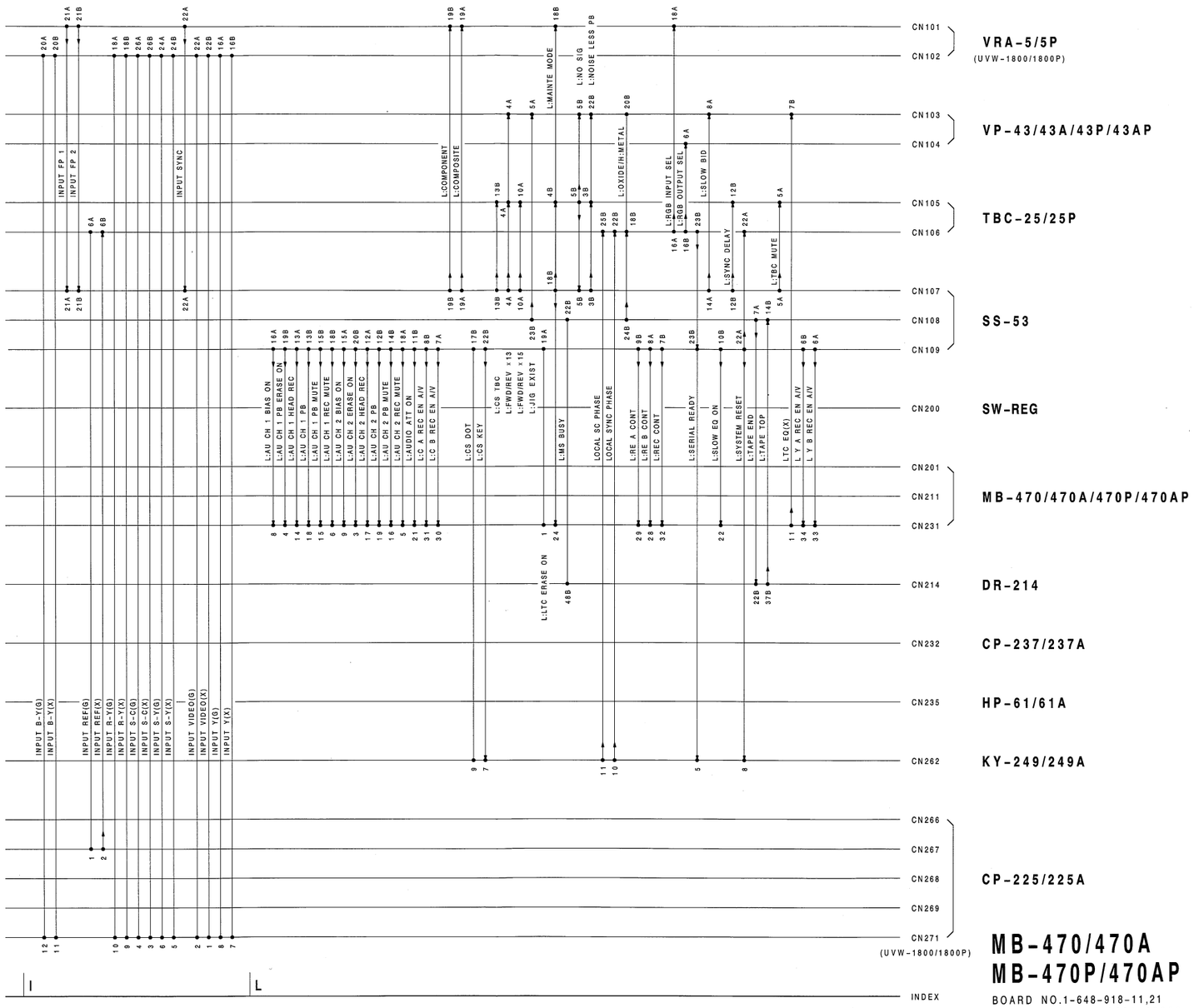

MB-470/470A
MB-470P/470AP BOARD (3/4)

BOARD NO.1-648-918-11,21
UVW-1800 (J) ;#10001-10900
UVW-1800 (UC);#10001-13930
UVW-1800P(EK);#10001-14140
UVW-1600 (J) ;#10001-10600
UVW-1600 (UC);#10001-12900
UVW-1600P(EK);#10001-13780

 16-157 (a2)

 MB-470/470A/470P/470AP (4/4)

UVW-1800 (J) ;Serial No.10001 through 10900
UVW-1800 (UC);Serial No.10001 through 13930
UVW-1800P(EK);Serial No.10001 through 14140
UVW-1600 (J) ;Serial No.10001 through 10600
UVW-1600 (UC);Serial No.10001 through 12900
UVW-1600P(EK);Serial No.10001 through 13780

MB-470/470A/470P/470AP(4/4);MOTHER BOARD

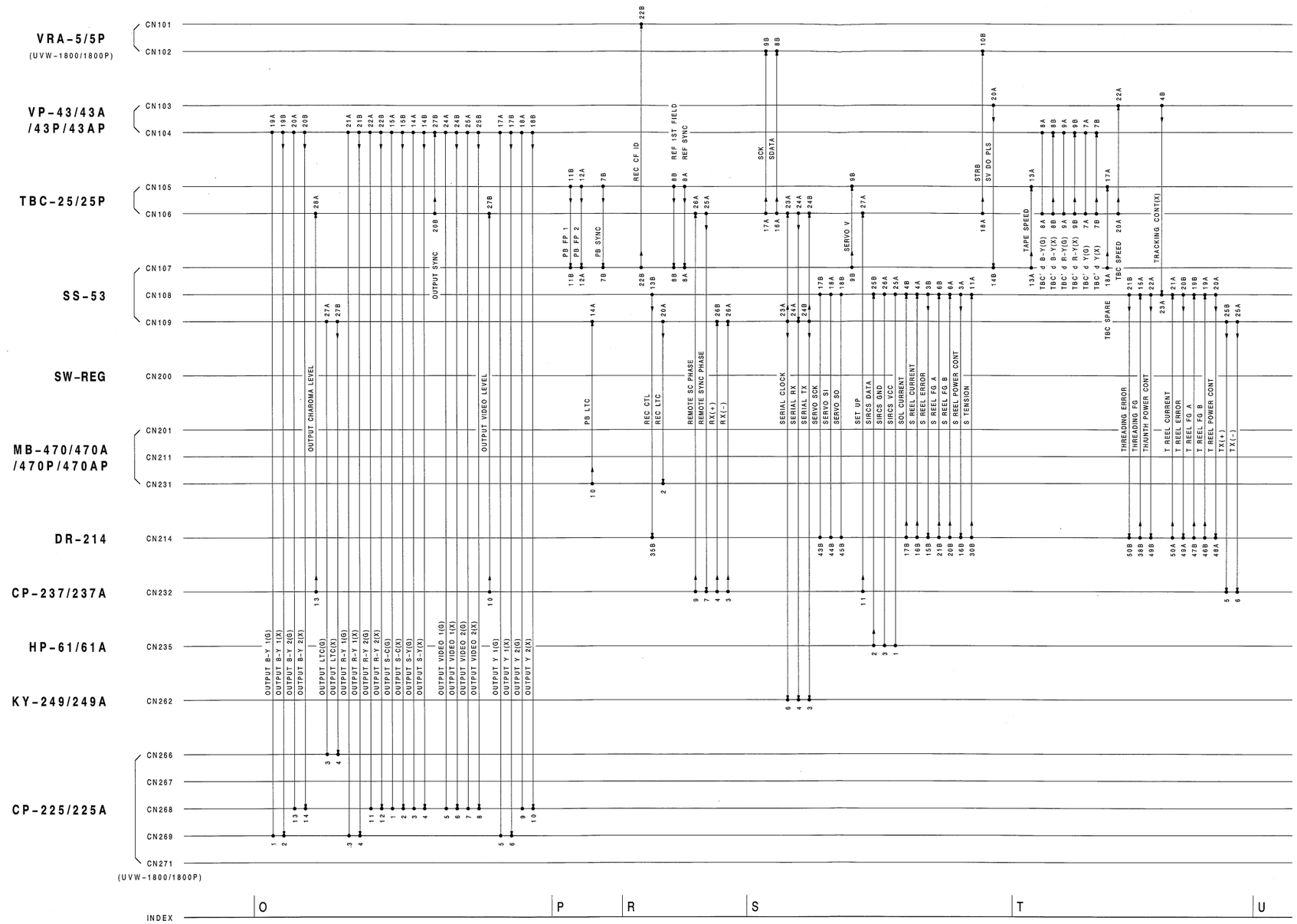

 16-159 (a1)

 MB-470/470A/470P/470AP (4/4)

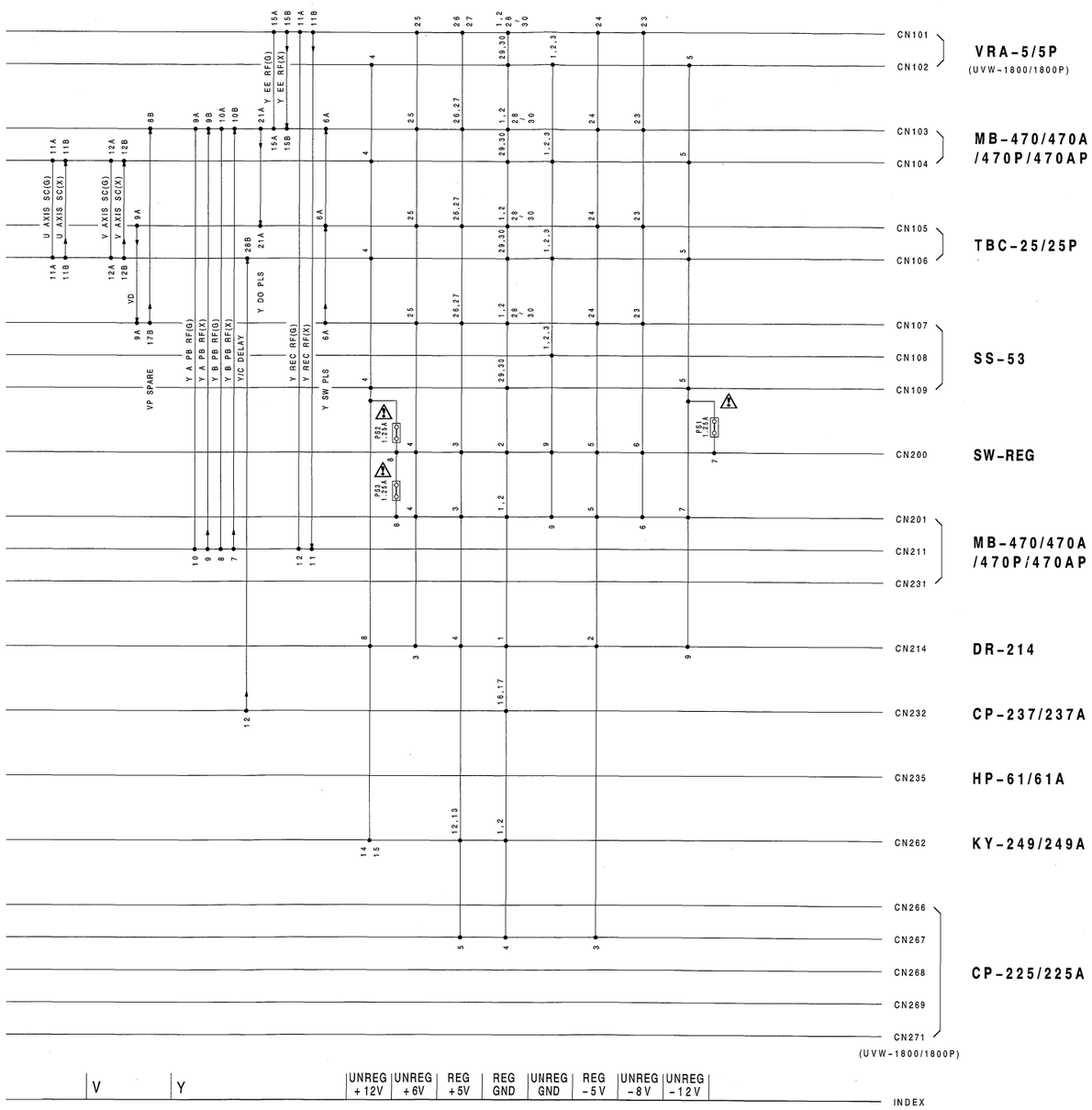

MB-470/470A
MB-470P/470AP BOARD (4/4)

BOARD NO.1-648-918-11,21
UVW-1800 (J) ;#10001-10900
UVW-1800 (UC);#10001-13930
UVW-1800P(EK);#10001-14140
UVW-1600 (J) ;#10001-10600
UVW-1600 (UC);#10001-12900
UVW-1600P(EK);#10001-13780

 16-159 (a2)

 MB-471/471A (1/2)

UVW-1800 (J) ;Serial No.10901 and higher
UVW-1800 (UC);Serial No.13931 and higher
UVW-1800P(EK);Serial No.14141 and higher
UVW-1600 (J) ;Serial No.10601 and higher
UVW-1600 (UC);Serial No.12901 and higher
UVW-1600P(EK);Serial No.13781 and higher

MB-471/471A(1/2);MOTHER BOARD

RP-70/70A/70P/70AP

	RP-70/70A/70P/70AP CN110			
	A		B	
111-1・2・3	REG GND	1	REG GND	251-1・2
111-1・2・3	REG GND	2	REG GND	251-1・2
111-1・2・3	REG GND	3	REG GND	251-1・2
111-4	REG +5V	4	REG +5V	251-3
111-5	UNREG +6V	5	UNREG +6V	251-4
111-6	REG -5V	6	REG -5V	251-5
111-7	UNREG -8V	7	UNREG -8V	251-6
	NC	8	NC	
281-2	L:Y B REC EN A/V	9	L:Y A REC EN A/V	281-1
	NC	10	GND(GUARD)	
	NC	11	Y REC RF(G)	261-12
	NC	12	Y REC RF(X)	261-11
	NC	13	GND(GUARD)	
	NC	14	Y A PB RF(G)	261-10
	NC	15	Y A PB RF(X)	261-9
	NC	16	GND(GUARD)	
	NC	17	Y B PB RF(G)	261-8
	NC	18	Y B PB RF(X)	261-7
	NC	19	GND(GUARD)	
	NC	20	L:REC CONT	281-3
281-5	L:C B REC EN A/V	21	L:C A REC EN A/V	281-4
	NC	22	GND(GUARD)	
	NC	23	C REC RF(G)	261-6
	NC	24	C REC RF(X)	261-5
	NC	25	GND(GUARD)	
	NC	26	C A PB RF(G)	261-4
	NC	27	C A PB RF(X)	261-3
	NC	28	GND(GUARD)	
	NC	29	C B PB RF(G)	261-2
	NC	30	C B PB RF(X)	261-1
	NC	31	GND(GUARD)	
281-7	L:RE B CONT	32	L:RE A CONT	281-6
	NC	33	NC	
	NC	34	CH-B RE(Y)	264-6
	NC	35	CH-B RE(X)	264-5
	NC	36	CH-B RE(G)	264-7
	NC	37	CH-A RE(G)	264-4
	NC	38	CH-A RE(Y)	264-3
	NC	39	CH-A RE(X)	264-2
	NC	40	NC	
	NC	41	FULL ERASE(G)	265-2
	NC	42	FULL ERASE(Y)	265-1
281-8	H:FULL ERASE ON	43	FULL ERASE(X)	265-3
111-44・45	UNREG -12V	44	UNREG -12V	251-7
111-44・45	UNREG -12V	45	UNREG -12V	251-7
111-46・47	UNREG +12V	46	UNREG +12V	251-8
111-46・47	UNREG +12V	47	UNREG +12V	251-8
111-48・49・50	UNREG GND	48	UNREG GND	251-9
111-48・49・50	UNREG GND	49	UNREG GND	251-9
111-48・49・50	UNREG GND	50	UNREG GND	251-9

AP-31/31A/31P/31AP

	AP-31/31A/31P/31AP CN111			
	A		B	
112-1・2・3	REG GND	1	REG GND	110-1・2・3
112-1・2・3	REG GND	2	REG GND	110-1・2・3
112-1・2・3	REG GND	3	REG GND	110-1・2・3
112-4	REG +5V	4	REG +5V	110-4
112-5	UNREG +6V	5	UNREG +6V	110-5
112-6	REG -5V	6	REG -5V	110-6
112-7	UNREG -8V	7	UNREG -8V	110-7
NC	(REG GND)	8	CH 1 LINE OUT(G)	274-3
274-4	CH 1 LINE OUT(X)	9	CH 1 HP OUT(G)	278-2
NC	(REG GND)	10	CH 1 HP OUT(X)	
278-5	CH 1 HP RET	11	CH 1 HP VOL(G)	278-7
NC	(REG GND)	12	CH 1 HP VOL(X)	278-6
112-15A,276-6	CH 1 REC VOL(G)	13	CH 1 METER OUT	277-1
NC	(REG GND)	14	CH 1 REC RET	276-5
112-18B	CH 1 ENC(X)	15	CH 1 ENC(G)	112-17A
NC	(REG GND)	16	(REG GND)	NC
281-25	PB LTC	17	LTC EQ(X)	281-24
NC	(REG GND)	18	(REG GND)	NC
112-19B	LTC REC I(G)	19	LTC REC I(X)	112-20B
NC	(REG GND)	20	LTC REC I(G)	112-21B
112-30B	CH 2 INSERT CROSSTALK	21	CH 1 INSERT CROSSTALK	112-10B
NC	(REG GND)	22	H:CTL CUT	281-22
281-21	L:AU CH 1 HEAD REC	23	L:AU CH 1 PB MUTE	281-20
NC	(REG GND)	24	L:AU CH 2 PB MUTE	281-19
281-18	L:AU CH 2 HEAD REC	25	L:AU CH 1 PB	281-17
NC	(REG GND)	26	L:AU CH 2 PB	281-16
112-27B,281-15	H:LTC PB	27	L:AUDIO ATT ON	281-14
NC	(REG GND)	28	L:SLOW EQ ON	281-13
112-29B	H:BIAS ON	29	H:NR ON	281-12
NC	(REG GND)	30	L:MAINTE MODE	281-11
NC	(REG GND)	31	CH 1 REC HEAD(X)	112-41B
NC	(REG GND)	32	CH 1 REC HEAD(G)	111-33A,112-41A
112-41A,111-32B	CH 1 REC HEAD(G)	33	CH 2 REC HEAD(X)	112-43A
274-2	MONI OUT(X)	34	CH 2 REC HEAD(G)	112-42B
NC	(REG GND)	35	MONI OUT(G)	274-1
112-32B	CH 2 ENC(X)	36	(REG GND)	NC
112-33A	CH 2 ENC(G)	37	CH 2 REC RET	276-2
NC	(REG GND)	38	CH 2 REC VOL(G)	112-35A,276-3
277-2	CH 2 METER OUT	39	CH 2 HP VOL(X)	278-8
NC	(REG GND)	40	CH 2 HP VOL(G)	278-10
278-9	CH 2 HP RET	41	CH 2 HP OUT(X)	
NC	(REG GND)	42	CH 2 HP OUT(G)	278-4
274-6	CH 2 LINE OUT(X)	43	CH 2 LINE OUT(G)	274-5
112-44・45	UNREG -12V	44	UNREG -12V	110-44・45
112-44・45	UNREG -12V	45	UNREG -12V	110-44・45
112-46・47	UNREG +12V	46	UNREG +12V	110-46・47
112-46・47	UNREG +12V	47	UNREG +12V	110-46・47
112-48・49・50,277-3	UNREG GND	48	UNREG GND	110-48・49・50
112-48・49・50,277-3	UNREG GND	49	UNREG GND	110-48・49・50
112-48・49・50,277-3	UNREG GND	50	UNREG GND	110-48・49・50

W1

W2

CN251			
MB-470/P/A/AP,201-1	1	REG GND	110-1・2・3
MB-470/P/A/AP,201-2	2	REG GND	110-1・2・3
MB-470/P/A/AP,201-3	3	REG +5V	110-4
MB-470/P/A/AP,201-4	4	UNREG +6V	110-5
MB-470/P/A/AP,201-5	5	REG -5V	110-6
MB-470/P/A/AP,201-6	6	UNREG -8V	110-7
MB-470/P/A/AP,201-7	7	UNREG -12V	110-44・45
MB-470/P/A/AP,201-8	8	UNREG +12V	110-46・47
MB-470/P/A/AP,201-9	9	UNREG GND	110-48・49・50

CN261			
MB-470/P/A/AP,211-1	1	C B PB RF(X)	110-30B
MB-470/P/A/AP,211-2	2	C B PB RF(G)	110-29B
MB-470/P/A/AP,211-3	3	C A PB RF(X)	110-27B
MB-470/P/A/AP,211-4	4	C A PB RF(G)	110-26B
MB-470/P/A/AP,211-5	5	C REC RF(X)	110-25B
MB-470/P/A/AP,211-6	6	C REC RF(G)	110-24B
MB-470/P/A/AP,211-7	7	Y B PB RF(X)	110-18B
MB-470/P/A/AP,211-8	8	Y B PB RF(G)	110-17B
MB-470/P/A/AP,211-9	9	Y A PB RF(X)	110-15B
MB-470/P/A/AP,211-10	10	Y A PB RF(G)	110-14B
MB-470/P/A/AP,211-11	11	Y REC RF(X)	110-12B
MB-470/P/A/AP,211-12	12	Y REC RF(G)	110-11B

CN283			
DEW SENSOR	1	DEW DET(X)	281-10
DEW SENSOR	2	DEW DET(G)	281-9

CN284			
DRUM,901-1	1	NC	110-39B
DRUM,901-2	2	CH-A RE(X)	110-38B
DRUM,901-3	3	CH-A RE(Y)	110-37B
DRUM,901-4	4	CH-A RE(G)	110-36B
DRUM,901-5	5	CH-B RE(X)	110-35B
DRUM,901-6	6	CH-B RE(Y)	110-34B
DRUM,901-7	7	CH-B RE(G)	110-36B

CN285			
FE HEAD	1	FULL ERASE(Y)	110-42B
FE HEAD	2	FULL ERASE(G)	110-41B
FE HEAD	3	FULL ERASE(X)	110-43B

CN274			
CP-226/A,274-1	1	MONI OUT(G)	111-35B
CP-226/A,274-2	2	MONI OUT(X)	111-34A
CP-226/A,274-3	3	CH 1 LINE OUT(G)	111-8B
CP-226/A,274-4	4	CH 1 LINE OUT(X)	111-9A
CP-226/A,274-5	5	CH 2 LINE OUT(G)	111-40B
CP-226/A,274-6	6	CH 2 LINE OUT(X)	111-40A
CP-226/A,274-7	7	NC	

CN275			
CP-226,275-1	1	AU CH 1 INPUT(G)	112-13A
CP-226,275-2	2	AU CH 1 INPUT(Y)	112-12B
CP-226,275-3	3	AU CH 1 INPUT(X)	112-14B
CP-226,275-4	4	AU CH 2 INPUT(G)	112-37A
CP-226,275-5	5	AU CH 2 INPUT(Y)	112-38B
CP-226,275-6	6	AU CH 2 INPUT(X)	112-36B

16-161 (b1) 16-161 (b1)

A B C D E F G H

 MB-471/471A (1/2)

AR-14/14P

	AR-14/14P A	CN112	B	
	REG GND	1	REG GND	111-1・2・3
	REG GND	2	REG GND	111-1・2・3
	REG GND	3	REG GND	111-1・2・3
	REG +5V	4	REG +5V	111-4
	UNREG +6V	5	UNREG +6V	111-5
	REG -5V	6	REG -5V	111-6
	UNREG -8V	7	UNREG -8V	111-7
NC	(REG GND)	8	(REG GND)	NC
NC	(REG GND)	9	(REG GND)	NC
NC	(REG GND)	10	CH 1 INSERT CROSSTALK	111-21B
NC	(REG GND)	11	(REG GND)	NC
NC	(REG GND)	12	AU CH 1 INPUT(Y)	275-2
275-1	AU CH 1 INPUT(G)	13	(REG GND)	NC
NC	(REG GND)	14	AU CH 1 INPUT(X)	275-3
111-13A,276-6	CH 1 REC VOL(G)	15	(REG GND)	NC
NC	(REG GND)	16	CH 1 REC VOL(X)	276-4
111-15B	CH 1 ENC(G)	17	(REG GND)	NC
NC	(REG GND)	18	CH 1 ENC(X)	111-15A
NC	(REG GND)	19	LTC REC I(G)	111-19A
NC	(REG GND)	20	LTC REC I(X)	111-19B
NC	(REG GND)	21	LTC REC I(G)	111-20B
NC	(REG GND)	22	(REG GND)	NC
281-33	REC LTC	23	L:LTC ERASE ON	281-34
NC	(REG GND)	24	L:AU CH 2 ERASE ON	281-32
281-30	L:AU CH 2 REC MUTE	25	L:AU CH 1 ERASE ON	281-31
NC	(REG GND)	26	L:AU CH 1 REC MUTE	281-29
281-28	H:OSC OFF	27	H:LTC PB	111-27A,281-15
NC	(REG GND)	28	L:AU CH 1 BIAS ON	281-27
281-26	L:AU CH 2 BIAS ON	29	H:BIAS ON	111-29A
NC	(REG GND)	30	CH 2 INSERT CROSSTALK	111-21A
NC	(REG GND)	31	(REG GND)	NC
NC	(REG GND)	32	CH 2 ENC(X)	111-36A
111-37A	CH 2 ENC(G)	33	(REG GND)	NC
NC	(REG GND)	34	CH 2 REC VOL(X)	276-1
111-38B,276-3	CH 2 REC VOL(G)	35	(REG GND)	NC
NC	(REG GND)	36	AU CH 2 INPUT(X)	275-6
275-4	AU CH 2 INPUT(G)	37	(REG GND)	NC
NC	(REG GND)	38	AU CH 2 INPUT(Y)	275-5
NC	(REG GND)	39	(REG GND)	NC
NC	(REG GND)	40	(REG GND)	NC
111-33A,111-32B	CH 1 REC HEAD(G)	41	CH 1 REC HEAD(X)	111-31B
NC	(REG GND)	42	CH 2 REC HEAD(G)	111-34B
111-33B	CH 2 REC HEAD(X)	43	(REG GND)	NC
	UNREG -12V	44	UNREG -12V	111-44・45
	UNREG -12V	45	UNREG -12V	111-44・45
	UNREG +12V	46	UNREG +12V	111-46・47
	UNREG +12V	47	UNREG +12V	111-46・47
	UNREG GND	48	UNREG GND	111-48・49・50
	UNREG GND	49	UNREG GND	111-48・49・50
	UNREG GND	50	UNREG GND	111-48・49・50

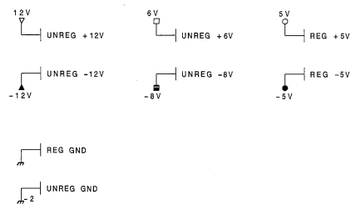

CN112,CN264,CN265,CN275,CN276 • • • UVW-1800/1800P

CN278	
VR-155.402-1	CH 2 REC VOL(X) 112-34B
VR-155.402-2	CH 2 REC VOL(G) 112-37B
VR-155.402-3	CH 1 REC VOL(G) 111-38A,111-38B
VR-155.402-4	CH 1 REC VOL(X) 112-16B
VR-155.402-5	CH 1 REC RET 111-14B
VR-155.402-6	CH 1 REC VOL(G) 112-15A,111-13A

CN277	
KY-249/A.592-1	CH 1 METER OUT 111-13B
KY-249/A.592-2	CH 2 METER OUT 111-39A
KY-249/A.592-3	UNREG GND 111-50A
KY-249/A.592-4	NC

CN278	
HP-61/A.401-1	CH 1 HP OUT(X)
HP-61/A.401-2	CH 1 HP OUT(G) 111-9B
HP-61/A.401-3	CH 2 HP OUT(X)
HP-61/A.401-4	CH 2 HP OUT(G) 111-42B
HP-61/A.401-5	CH 1 HP RET 111-11A
HP-61/A.401-6	CH 1 HP VOL(X) 111-12B
HP-61/A.401-7	CH 1 HP VOL(G) 111-11B
HP-61/A.401-8	CH 2 HP VOL(X) 111-39B
HP-61/A.401-9	CH 2 HP RET 111-41A
HP-61/A.401-10	CH 2 HP VOL(G) 111-40B

CN281		
MB-470/P/A/AP.231-34	1	L:Y A REC EN A/V 110-9B
MB-470/P/A/AP.231-33	2	L:Y B REC EN A/V 110-9A
MB-470/P/A/AP.231-32	3	L:REC CONT 110-26B
MB-470/P/A/AP.231-31	4	L:C A REC EN A/V 110-24B
MB-470/P/A/AP.231-30	5	L:C B REC EN A/V 110-24A
MB-470/P/A/AP.231-29	6	L:RE A CONT 110-32B
MB-470/P/A/AP.231-28	7	L:RE B CONT 110-32A
MB-470/P/A/AP.231-27	8	H:FULL ERASE ON 110-43A
MB-470/P/A/AP.231-26	9	DEW DET(G) 283-2
MB-470/P/A/AP.231-25	10	DEW DET(X) 283-1
MB-470/P/A/AP.231-24	11	L:MAINTE MODE 111-30B
MB-470/P/A/AP.231-23	12	H:NR ON 111-29B
MB-470/P/A/AP.231-22	13	L:SLOW EQ ON 111-28B
MB-470/P/A/AP.231-21	14	L:AUDIO ATT ON 111-27B
MB-470/P/A/AP.231-20	15	H:LTC PB 111-27A,112-27B
MB-470/P/A/AP.231-19	16	L:AU CH 2 PB 111-26B
MB-470/P/A/AP.231-18	17	L:AU CH 1 PB 111-26B
MB-470/P/A/AP.231-17	18	L:AU CH 2 HEAD REC 111-25A
MB-470/P/A/AP.231-16	19	L:AU CH 2 PB MUTE 111-24B
MB-470/P/A/AP.231-15	20	L:AU CH 1 PB MUTE 111-23B
MB-470/P/A/AP.231-14	21	L:AU CH 1 HEAD REC 111-23A
MB-470/P/A/AP.231-13	22	H:CTL CUT 111-22B
MB-470/P/A/AP.231-12	23	LTC EQ(G) (GUARD)
MB-470/P/A/AP.231-11	24	LTC EQ(X) 111-17B
MB-470/P/A/AP.231-10	25	PB LTC 111-17A
MB-470/P/A/AP.231-9	26	L:AU CH 2 BIAS ON 112-29A
MB-470/P/A/AP.231-8	27	L:AU CH 1 BIAS ON 112-28B
MB-470/P/A/AP.231-7	28	H:AO OFF 112-27A
MB-470/P/A/AP.231-6	29	L:AU CH 1 REC MUTE 112-26B
MB-470/P/A/AP.231-5	30	L:AU CH 2 REC MUTE 112-25A
MB-470/P/A/AP.231-4	31	L:AU CH 1 ERASE ON 112-25B
MB-470/P/A/AP.231-3	32	L:AU CH 2 ERASE ON 112-24B
MB-470/P/A/AP.231-2	33	REC LTC 112-23A
MB-470/P/A/AP.231-1	34	L:LTC ERASE ON 112-23B

MB-471/471A BOARD (1/2)

BOARD NO.1-648-919-12,22
UVW-1800 (J) ;#10901-
UVW-1800 (UC);#13931-
UVW-1800P(EK);#14141-
UVW-1600 (J) ;#10601-
UVW-1600 (UC);#12901-
UVW-1600P(EK);#13781-

16-161 (b2)

 MB-471/471A (2/2)

UVW-1800 (J) ;Serial No.10901 and higher
UVW-1800 (UC);Serial No.13931 and higher
UVW-1800P(EK);Serial No.14141 and higher
UVW-1600 (J) ;Serial No.10601 and higher
UVW-1600 (UC);Serial No.12901 and higher
UVW-1600P(EK);Serial No.13781 and higher

MB-471/471A(2/2);MOTHER BOARD

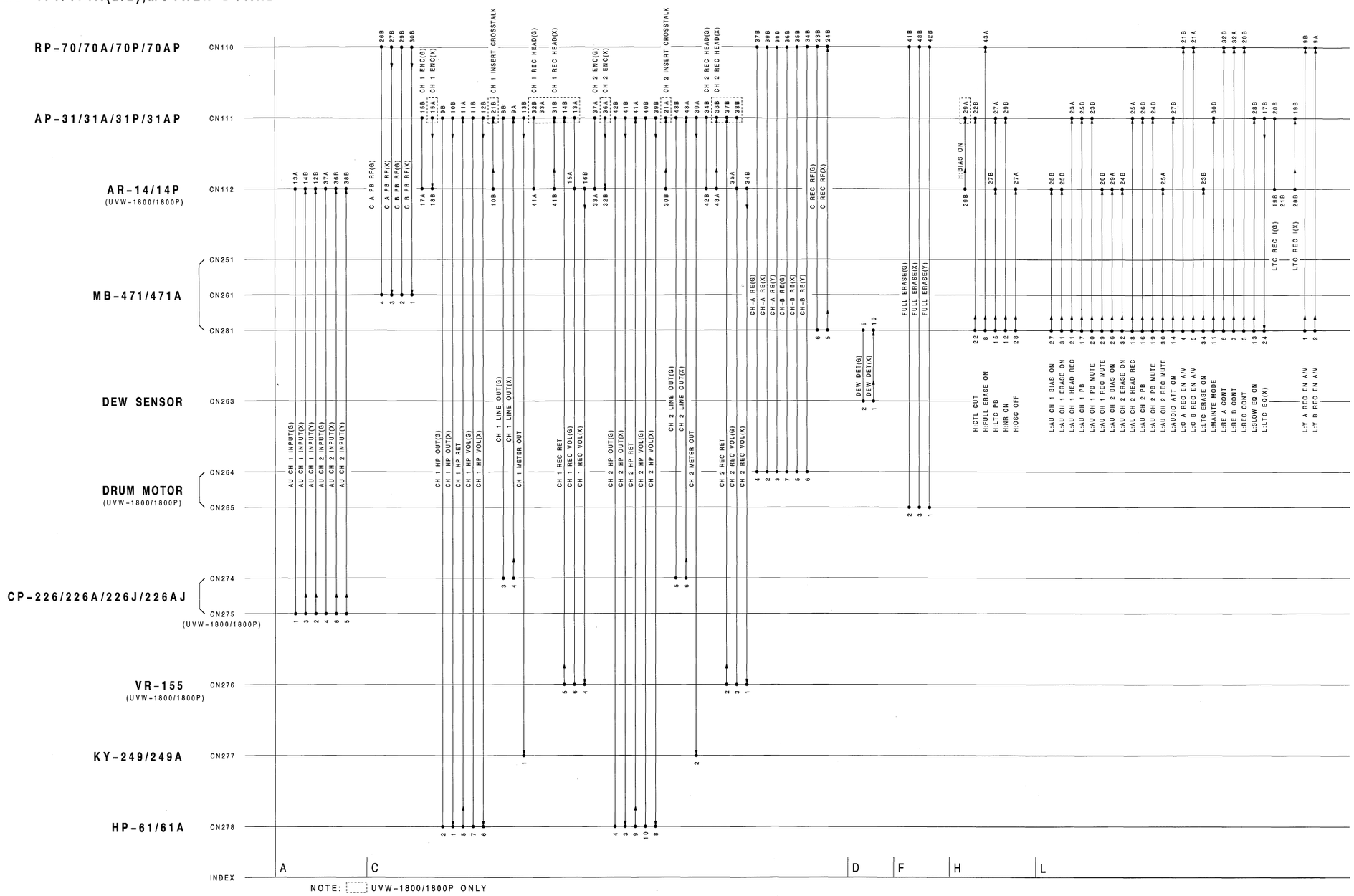

 16-163 (b1)

 MB-471/471A (2/2)

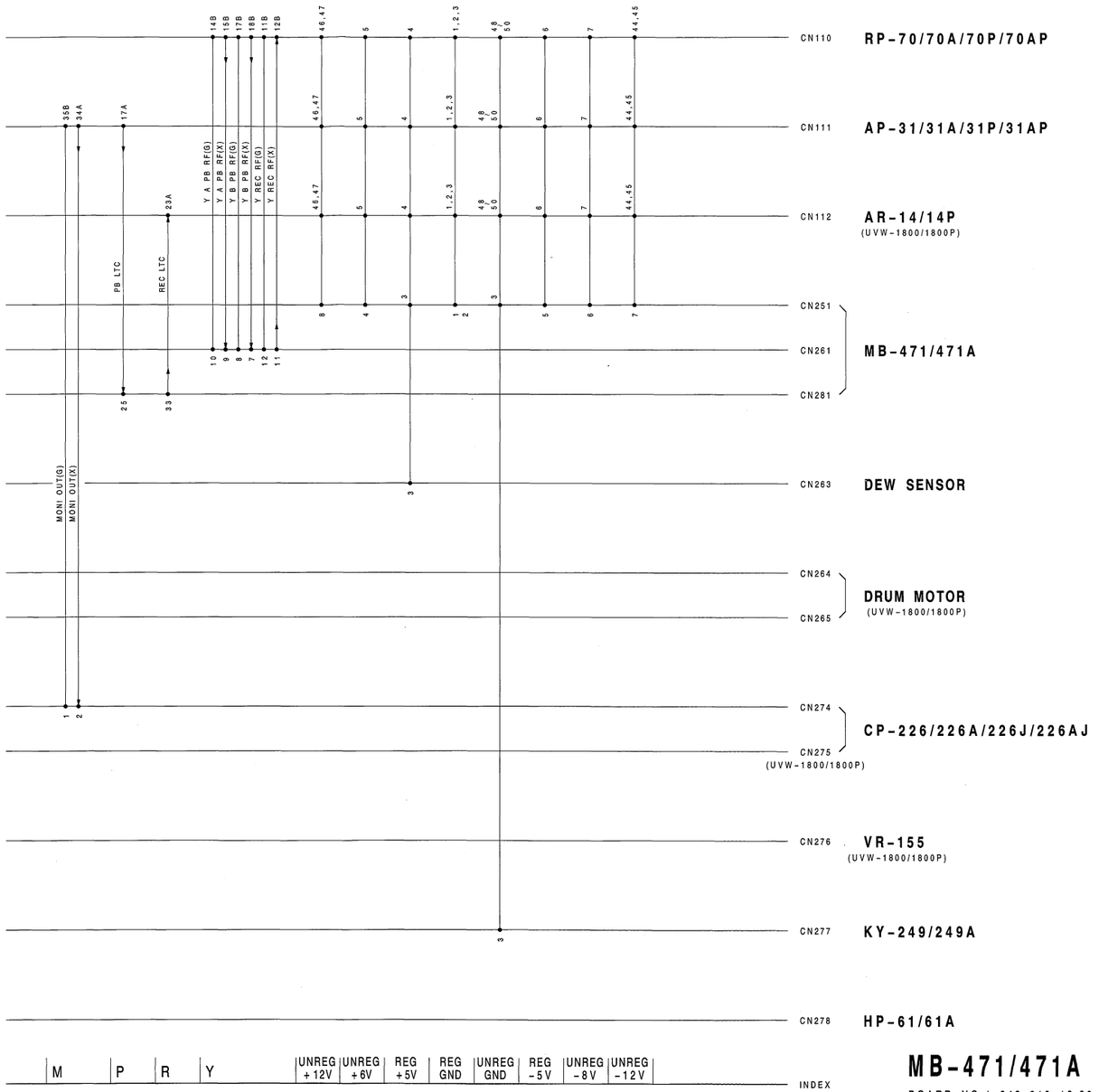

MB-471/471A BOARD (2/2)

BOARD NO.1-648-919-12,22
UVW-1800 (J) ;#10901-
UVW-1800 (UC);#13931-
UVW-1800P(EK);#14141-
UVW-1600 (J) ;#10601-
UVW-1600 (UC);#12901-
UVW-1600P(EK);#13781-

 16-163 (b2)

 MB-471/471A (1/2)

UVW-1800 (J) ;Serial No.10001 through 10900
UVW-1800 (UC);Serial No.10001 through 13930
UVW-1800P(EK);Serial No.10001 through 14140
UVW-1600 (J) ;Serial No.10001 through 10600
UVW-1600 (UC);Serial No.10001 through 12900
UVW-1600P(EK);Serial No.10001 through 13780

MB-471/471A(1/2);MOTHER BOARD

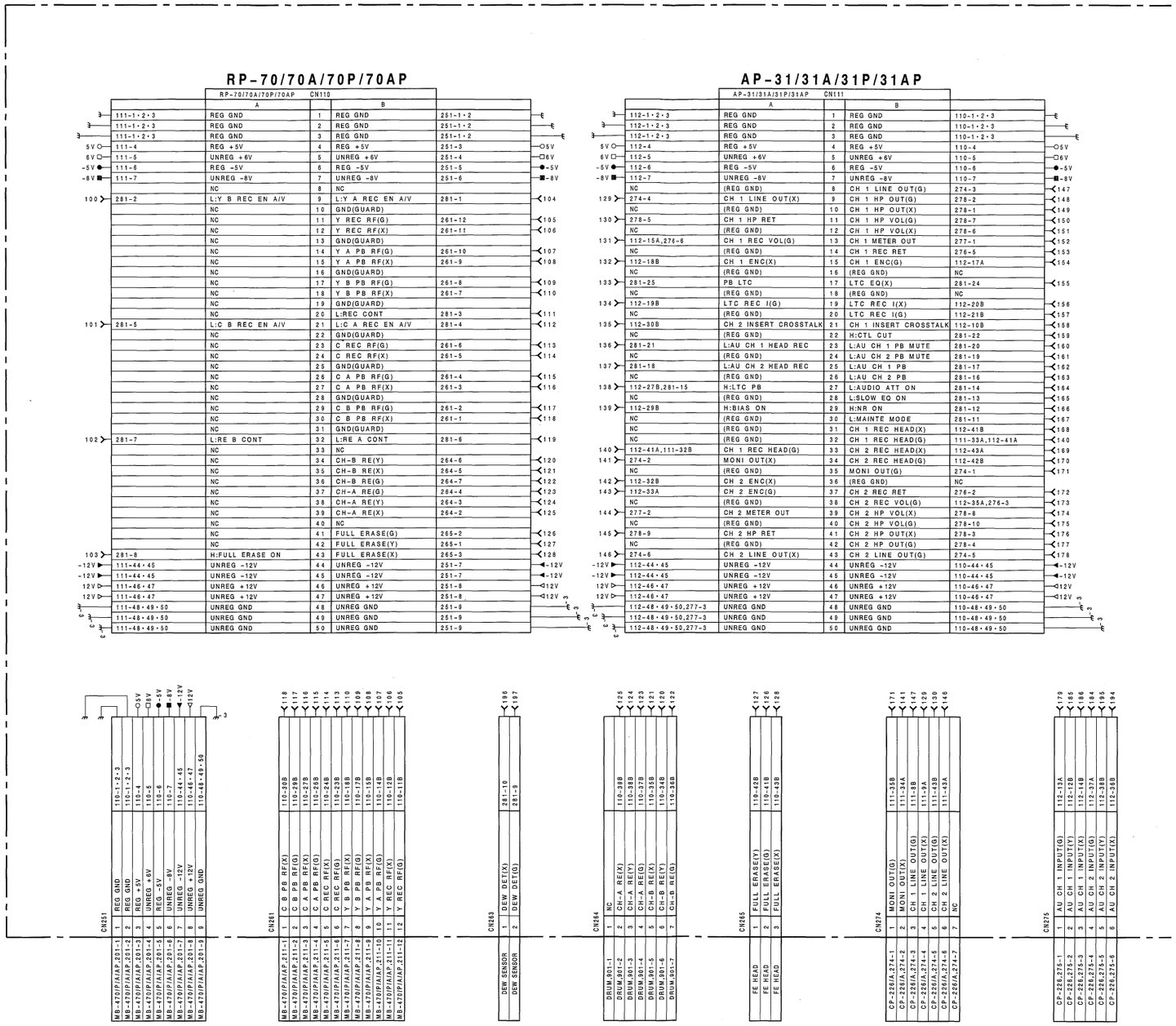

 16-161 (a1)

 MB-471/471A (1/2)

AR-14/14P

AR-14/14P CN112

		A		B	
		REG GND	1	REG GND	111-1・2・3
		REG GND	2	REG GND	111-1・2・3
		REG GND	3	REG GND	111-1・2・3
5V		REG +5V	4	REG +5V	111-4
6V		UNREG +6V	5	UNREG +6V	111-5
-5V		REG -5V	6	REG -5V	111-6
-8V		UNREG -8V	7	UNREG -8V	111-7
	NC	(REG GND)	8	(REG GND)	NC
	NC	(REG GND)	9	(REG GND)	NC
	NC	(REG GND)	10	CH 1 INSERT CROSSTALK	111-21B
	NC	(REG GND)	11	(REG GND)	NC
	NC	(REG GND)	12	AU CH 1 INPUT(Y)	275-2
179	275-1	AU CH 1 INPUT(G)	13	(REG GND)	NC
	NC	(REG GND)	14	AU CH 1 INPUT(X)	275-3
131	111-13A,276-6	CH 1 REC VOL(G)	15	(REG GND)	NC
	NC	(REG GND)	16	CH 1 REC VOL(X)	276-4
154	111-15B	CH 1 ENC(G)	17	(REG GND)	NC
	NC	(REG GND)	18	CH 1 ENC(X)	111-15A
	NC	(REG GND)	19	LTC REC I(G)	111-19A
	NC	(REG GND)	20	LTC REC I(X)	111-19B
	NC	(REG GND)	21	LTC REC I(G)	111-20B
	NC	(REG GND)	22	(REG GND)	NC
180	281-33	REC LTC	23	L:LTC ERASE ON	281-34
	NC	(REG GND)	24	L:AU CH 2 ERASE ON	281-32
181	281-30	L:AU CH 2 REC MUTE	25	L:AU CH 1 ERASE ON	281-31
	NC	(REG GND)	26	L:AU CH 1 REC MUTE	281-29
182	281-28	H:OSC OFF	27	H:LTC PB	111-27A,281-15
	NC	(REG GND)	28	L:AU CH 1 BIAS ON	281-27
183	281-26	L:AU CH 2 BIAS ON	29	H:BIAS ON	111-29A
	NC	(REG GND)	30	CH 2 INSERT CROSSTALK	111-21A
	NC	(REG GND)	31	(REG GND)	NC
	NC	(REG GND)	32	CH 2 ENC(X)	111-36A
143	111-37A	CH 2 ENC(G)	33	(REG GND)	NC
	NC	(REG GND)	34	CH 2 REC VOL(X)	276-1
173	111-38B,276-3	CH 2 REC VOL(G)	35	(REG GND)	NC
	NC	(REG GND)	36	AU CH 2 INPUT(X)	275-6
184	275-4	AU CH 2 INPUT(G)	37	(REG GND)	NC
	NC	(REG GND)	38	AU CH 2 INPUT(Y)	275-5
	NC	(REG GND)	39	(REG GND)	NC
	NC	(REG GND)	40	(REG GND)	NC
140	111-33A,111-32B	CH 1 REC HEAD(G)	41	CH 1 REC HEAD(X)	111-31B
	NC	(REG GND)	42	CH 2 REC HEAD(G)	111-34B
169	111-33B	CH 2 REC HEAD(X)	43	(REG GND)	NC
-12V		UNREG -12V	44	UNREG -12V	111-44・45
-12V		UNREG -12V	45	UNREG -12V	111-44・45
12V		UNREG +12V	46	UNREG +12V	111-46・47
12V		UNREG +12V	47	UNREG +12V	111-46・47
		UNREG GND	48	UNREG GND	111-48・49・50
		UNREG GND	49	UNREG GND	111-48・49・50
		UNREG GND	50	UNREG GND	111-48・49・50

CN112,CN264,CN265,CN275,CN276 ••• UVW-1800/1800P

CN276

VR-155.402-1	1	CH 2 REC VOL(X)	112-24B
VR-155.402-2	2	CH 2 REC RET	111-37B
VR-155.402-3	3	CH 2 REC VOL(G)	112-35A,111-38B
VR-155.402-4	4	CH 1 REC VOL(X)	112-16B
VR-155.402-5	5	CH 1 REC RET	111-14B
VR-155.402-6	6	CH 1 REC VOL(G)	112-15A,111-13A

CN277

KY-249/A.592-1	1	CH 1 METER OUT	111-13B
KY-249/A.592-2	2	CH 2 METER OUT	111-39A
KY-249/A.592-3	3	UNREG GND	111-50A
KY-249/A.592-4	4	NC	

CN278

HP-61/A.401-1	1	CH 1 HP OUT(X)	111-10B
HP-61/A.401-2	2	CH 1 HP OUT(G)	111-9B
HP-61/A.401-3	3	CH 2 HP OUT(X)	111-41B
HP-61/A.401-4	4	CH 2 HP OUT(G)	111-42B
HP-61/A.401-5	5	CH 1 HP RET	111-11A
HP-61/A.401-6	6	CH 1 HP VOL(X)	111-12B
HP-61/A.401-7	7	CH 1 HP VOL(G)	111-13B
HP-61/A.401-8	8	CH 2 HP VOL(X)	111-39B
HP-61/A.401-9	9	CH 2 HP RET	111-41A
HP-61/A.401-10	10	CH 2 HP VOL(G)	111-40B

CN281

MB-470/P/A/AP.231-34	1	L:Y A REC EN A/V	110-9B
MB-470/P/A/AP.231-33	2	L:Y B REC EN A/V	110-8A
MB-470/P/A/AP.231-32	3	L:REC CONT	110-20B
MB-470/P/A/AP.231-31	4	L:C A REC EN A/V	110-21B
MB-470/P/A/AP.231-30	5	L:C B REC EN A/V	110-21A
MB-470/P/A/AP.231-29	6	L:RE A CONT	110-32B
MB-470/P/A/AP.231-28	7	L:RE B CONT	110-32A
MB-470/P/A/AP.231-27	8	H:FULL ERASE ON	110-43A
MB-470/P/A/AP.231-26	9	DEW DET(G)	265-2
MB-470/P/A/AP.231-25	10	DEW DET(X)	265-1
MB-470/P/A/AP.231-24	11	L:AUTO STOP MODE	111-39B
MB-470/P/A/AP.231-23	12	H:NR ON	111-27B
MB-470/P/A/AP.231-22	13	L:SLOW EQ ON	111-28B
MB-470/P/A/AP.231-21	14	L:AUDIO ATT ON	111-27B
MB-470/P/A/AP.231-20	15	H:LTC PB	111-27A,112-27B
MB-470/P/A/AP.231-19	16	L:AU CH 2 PB	111-26B
MB-470/P/A/AP.231-18	17	L:AU CH 1 PB	111-25B
MB-470/P/A/AP.231-17	18	L:AU CH 2 HEAD REC	111-25A
MB-470/P/A/AP.231-16	19	L:AU CH 2 PB MUTE	111-24B
MB-470/P/A/AP.231-15	20	L:AU CH 1 PB MUTE	111-23B
MB-470/P/A/AP.231-14	21	L:AU CH 1 HEAD REC	111-23A
MB-470/P/A/AP.231-13	22	H:CTL OUT	111-22B
MB-470/P/A/AP.231-12	23	L:CTL OUT	(GUARD)
MB-470/P/A/AP.231-11	24	LTC EQ(G)	111-17B
MB-470/P/A/AP.231-10	25	PB LTC	111-17A
MB-470/P/A/AP.231-9	26	L:AU CH 2 BIAS ON	112-29A
MB-470/P/A/AP.231-8	27	L:AU CH 1 BIAS ON	112-28B
MB-470/P/A/AP.231-7	28	H:OSC OFF	112-27A
MB-470/P/A/AP.231-6	29	L:AU CH 1 REC MUTE	112-26B
MB-470/P/A/AP.231-5	30	L:AU CH 2 REC MUTE	112-25A
MB-470/P/A/AP.231-4	31	L:AU CH 1 ERASE ON	112-25B
MB-470/P/A/AP.231-3	32	L:AU CH 2 ERASE ON	112-24B
MB-470/P/A/AP.231-2	33	REC LTC	112-23A
MB-470/P/A/AP.231-1	34	L:LTC ERASE ON	112-23B

MB-471/471A BOARD (1/2)

BOARD NO.1-648-919-11,21
UVW-1800 (J) ;#10001-10900
UVW-1800 (UC);#10001-13930
UVW-1800P(EK);#10001-14140
UVW-1600 (J) ;#10001-10600
UVW-1600 (UC);#10001-12900
UVW-1600P(EK);#10001-13780

16-161 (a2)

 MB-471/471A (2/2)

UVW-1800 (J) ;Serial No.10001 through 10900
UVW-1800 (UC);Serial No.10001 through 13930
UVW-1800P(EK);Serial No.10001 through 14140
UVW-1600 (J) ;Serial No.10001 through 10600
UVW-1600 (UC);Serial No.10001 through 12900
UVW-1600P(EK);Serial No.10001 through 13780

MB-471/471A(2/2);MOTHER BOARD

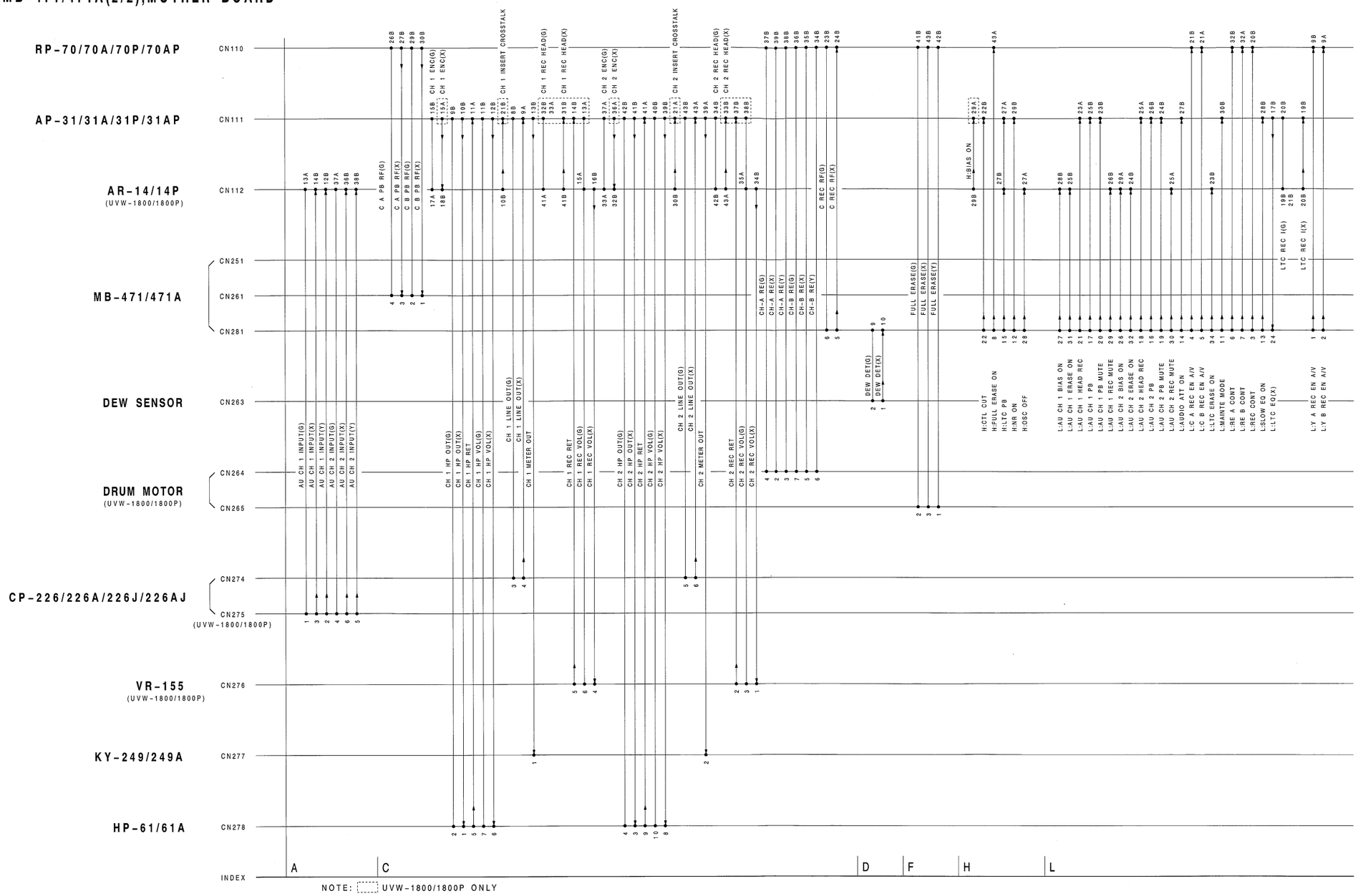

 16-163 (a1)

 MB-471/471A (2/2)

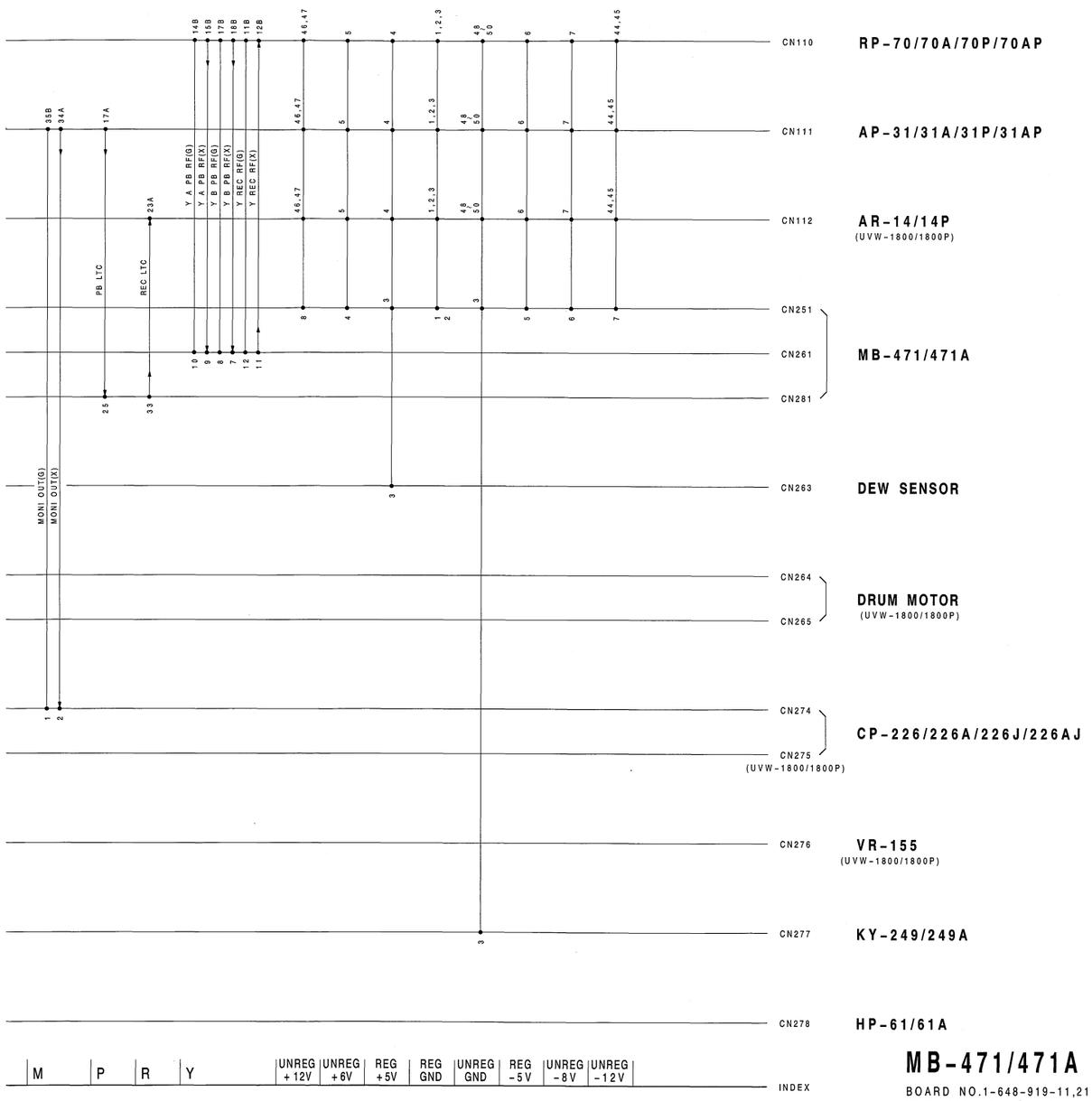

MB-471/471A BOARD (2/2)

BOARD NO.1-648-919-11,21
UVW-1800 (J) ;#10001-10900
UVW-1800 (UC);#10001-13930
UVW-1800P(EK);#10001-14140
UVW-1600 (J) ;#10001-10600
UVW-1600 (UC);#10001-12900
UVW-1600P(EK);#10001-13780

 16-163 (a2)

 FRAME (1/2)

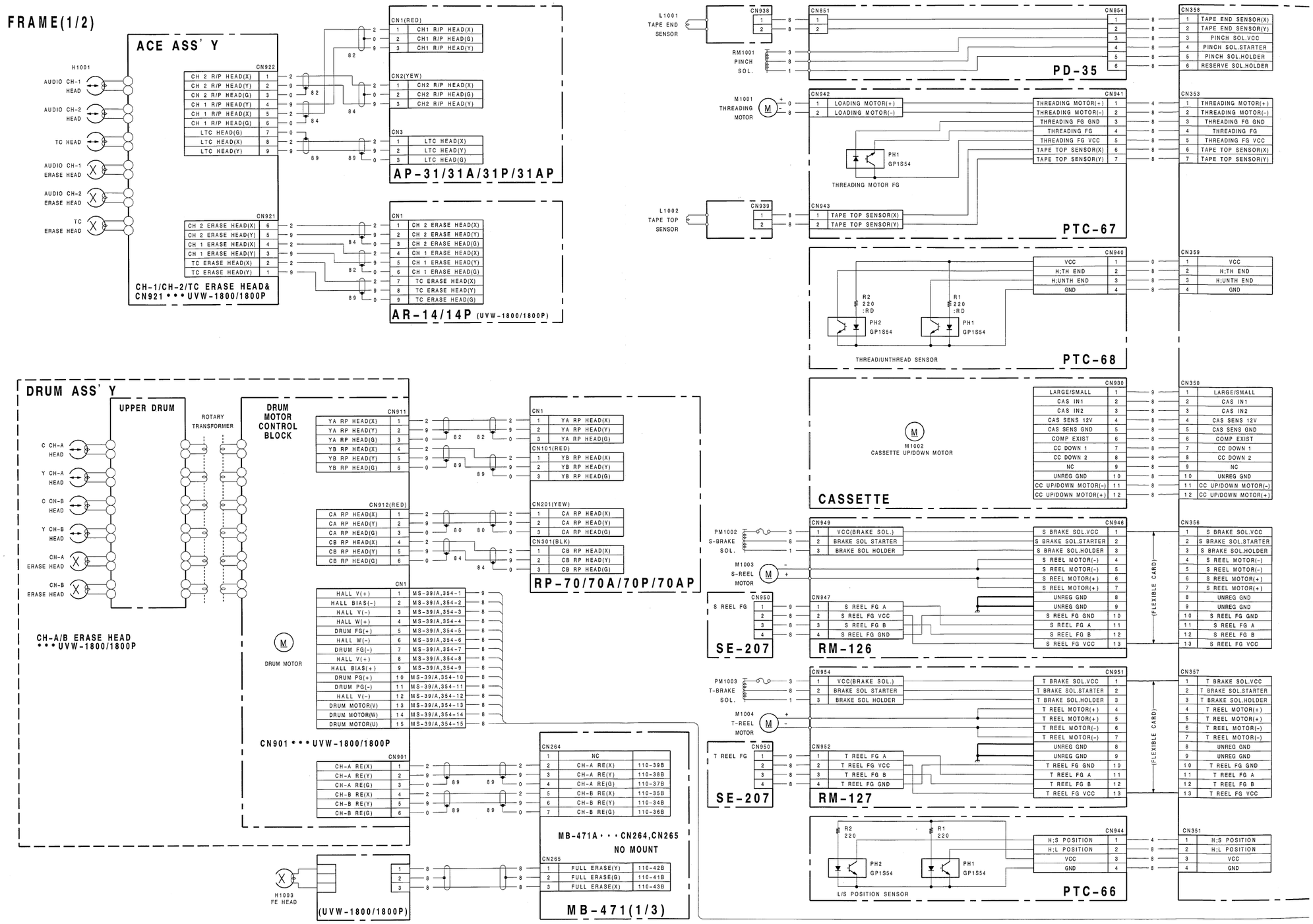

 16-165 (1)

 FRAME (1/2)

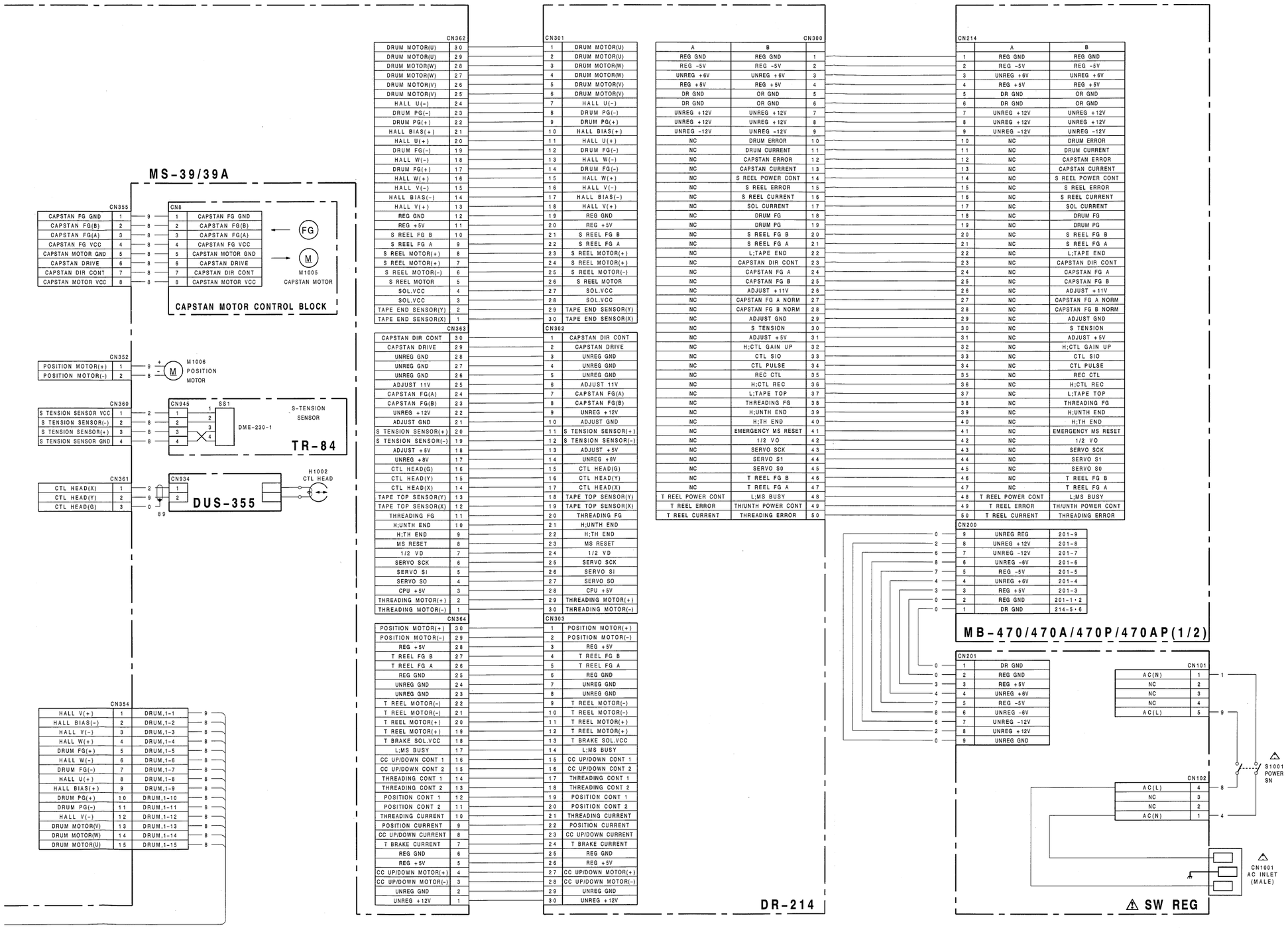

FRAME(1/2)

UVW-1800/1600 (J) ;#10001-
UVW-1800/1600 (UC);#10001-
UVW-1800P/1600P(EK);#10001-

 16-165 (2)

 FRAME (2/2)

FRAME(2/2)

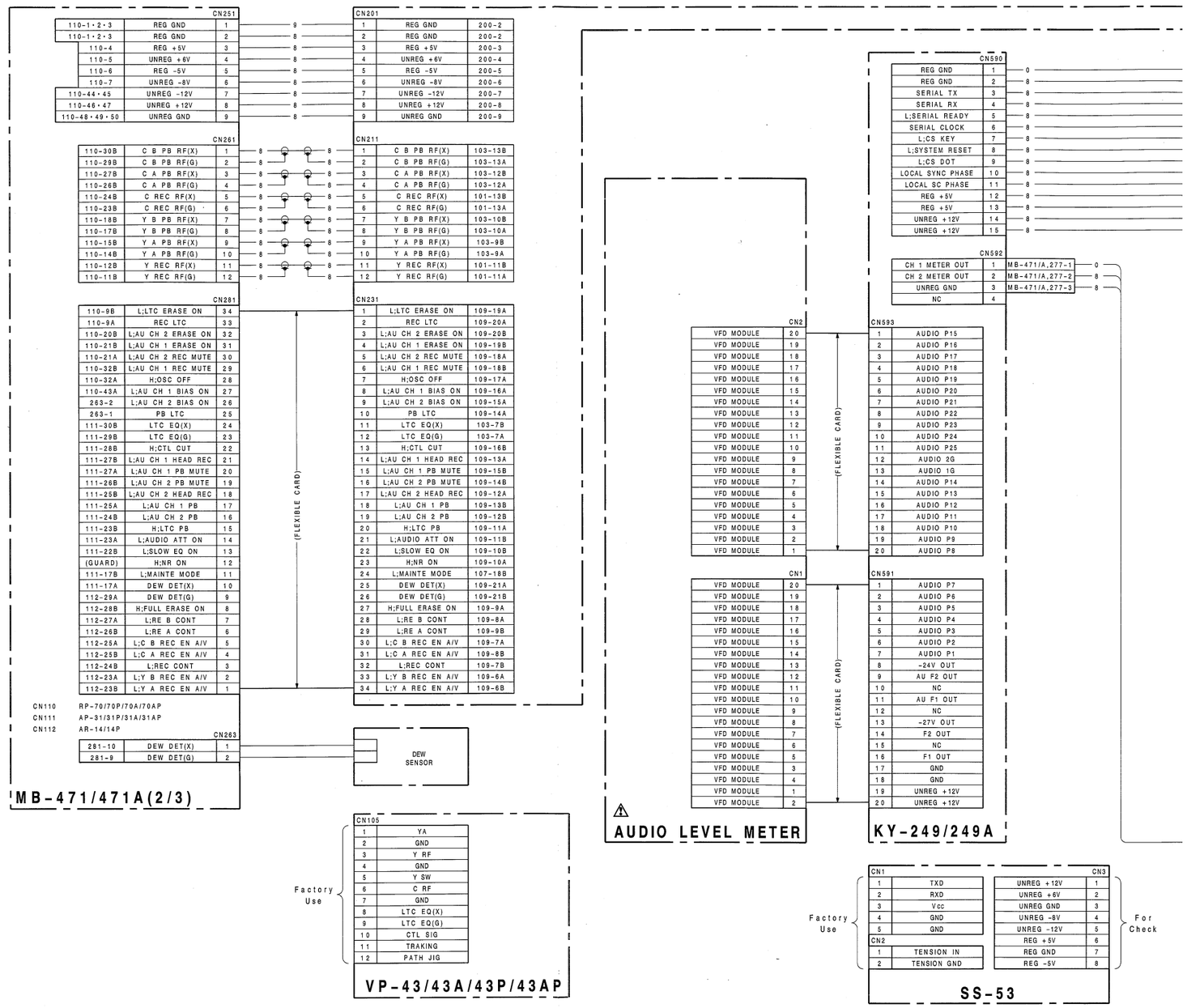

 16-167 (1)

 FRAME (2/2)

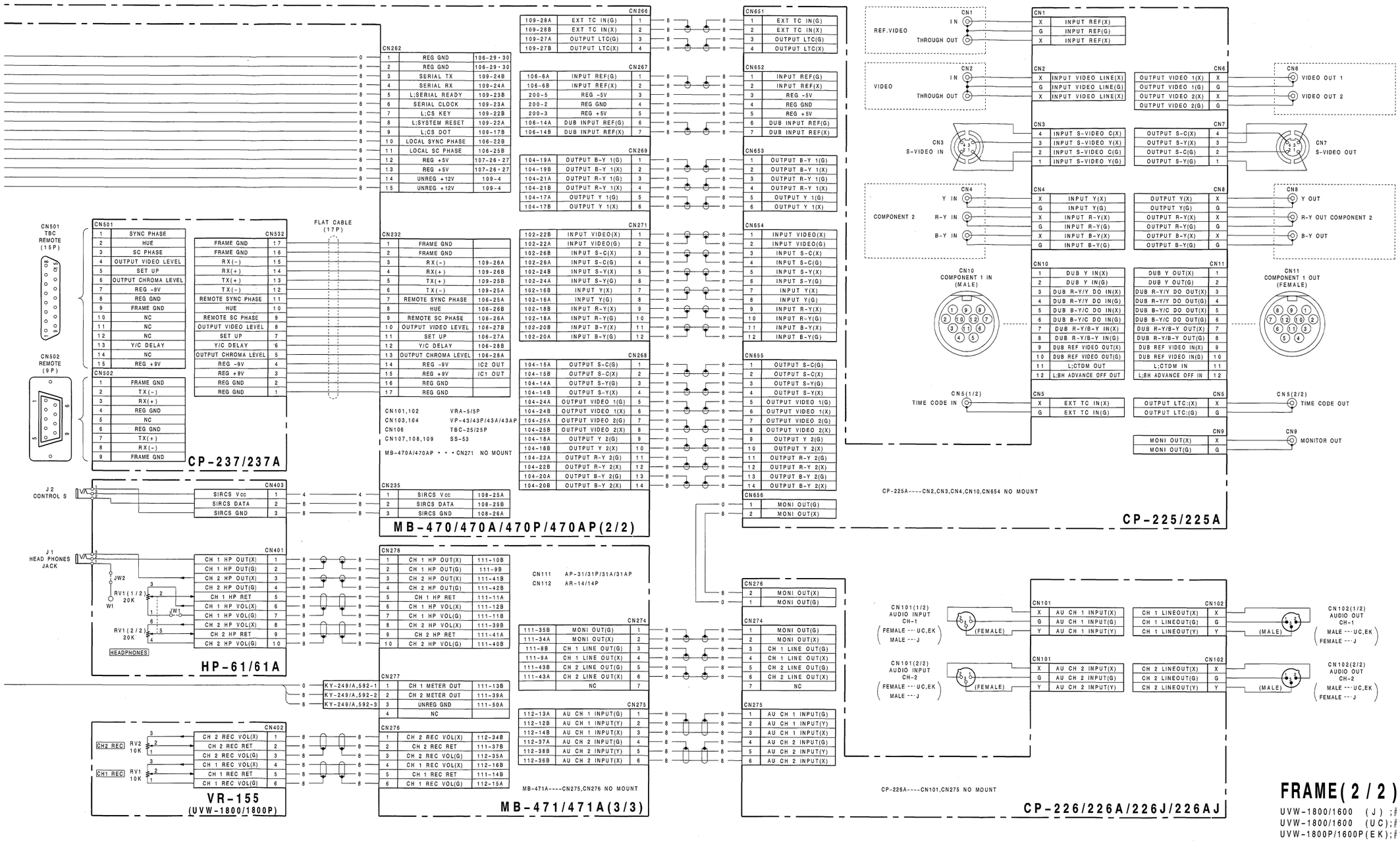

16-167 (2)

SECTION 17
SEMICONDUCTOR PIN ASSIGNMENTS

この章の図の中には互換性のないダイオード、トランジスタ、ICが併記されていることがあります。部品を交換するときには必ず部品表を参照してください。
等価回路はICメーカーのData Bookに従いました。

The chart in this section may sometimes show diodes, transistors, and ICs that are not interchangeable. When replacing a component, be sure to refer to the parts list. The circuit diagram of each IC is obtained from the IC data book published by the manufacturer.

INDEX

DIODE

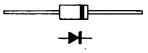

10E-2
11E2
1SS119
1SS119TD
RB441Q

TOP VIEW

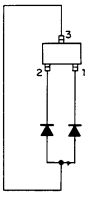

1SS303

TOP VIEW

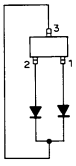

1SS304

TOP VIEW

1SV160

1T33C

TOP VIEW

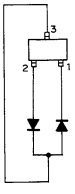

DA204U

DA210S

TOP VIEW

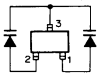

KV1470

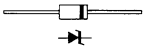

RD ?? ESB

TOP VIEW

RD ? ?M
RD ? ?M-B ?
UZM ? ?B

TOP VIEW

SB007-03CP

SB01-05CP

TOP VIEW

1T363

LED

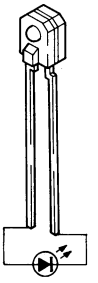

GL480 ; INFRARED

MISCELLANEOUS

TOP VIEW

DM-230

– Equivalent Circuit –

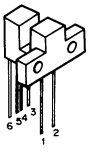

GP1A30R

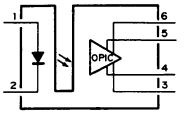

TRANSISTOR

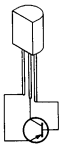

2SA1020

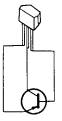

2SA1115
2SA1150

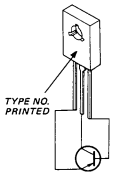

2SA1141

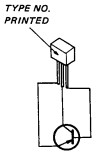

2SA1175
2SB810

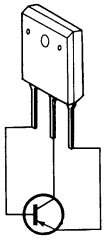

2SA1232

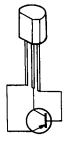

2SA1319

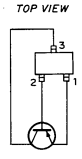

2SA1610
2SA1611

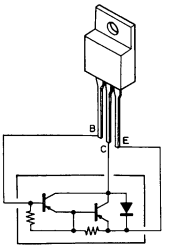

2SB1094

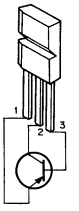

2SB1416

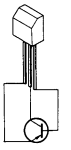

2SB733
2SB733-34

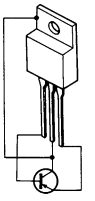

2SB941

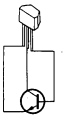

2SC2458

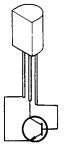

2SC2655
2SD788

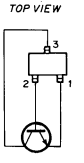

2SC1623
2SC2715
2SC2715Y
2SC3735
2SC4176-B35
2SC4177-L6
2SC4178-F13
2SC4213A
2SD596-DV5

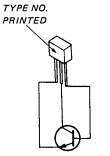

2SC2785
2SD1020
2SD1021

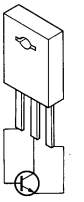

2SC3012

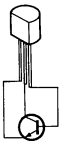

2SC3332

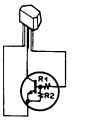

2SC3399 (R1 = 47K, R2 = 47K)
DTC144ES (R1 = 47K, R2 = 47K)

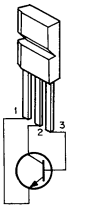

2SD2136

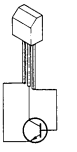

2SD773

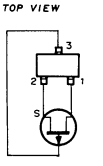

2SJ106

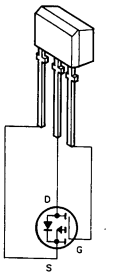

2SJ226

TOP VIEW

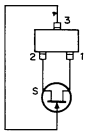

2SK209
2SK613
2SK852
2SK94-X4

TOP VIEW

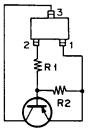

DTA123JU (R1 = 2.2K, R2 = 47K)
DTA144EU (R1 = 47K, R2 = 47K)

TOP VIEW

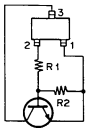

DTC144EU (R1 = 47K, R2 = 47K)

TOP VIEW

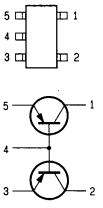

FMS2

TOP VIEW

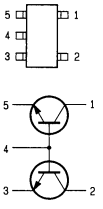

FMW2

TOP VIEW

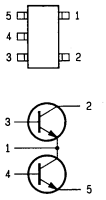

FMW7

TOP VIEW

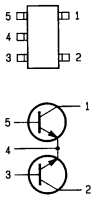

FMW8

TOP VIEW

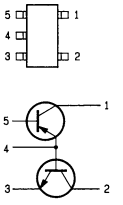

FMY3

– TOP VIEW –

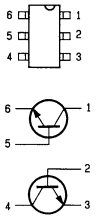

IMX1

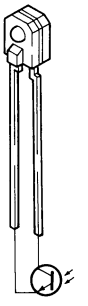

PT480

IC

74F00SJ (NS) FLAT PACKAGE

TTL 2-INPUT POSITIVE-NAND GATE

– TOP VIEW –

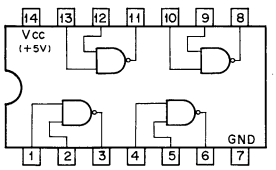

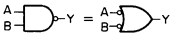

$Y = \overline{A \cdot B} = \overline{A} + \overline{B}$

A	B	Y
0	0	1
0	1	1
1	0	1
1	1	0

0; LOW LEVEL
1; HIGH LEVEL

AM27C020-150DC (AMD)

C-MOS 2M (262,144x8)-BIT UV ERASABLE PROM

– TOP VIEW –

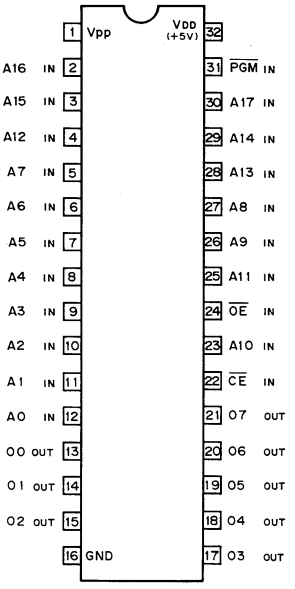

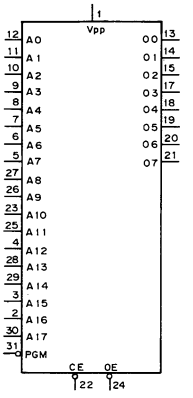

A0 – A17 ; ADDRESS INPUT
O0 – O7 ; DATA OUTPUT
CE ; CHIP ENABLE
OE ; OUTPUT ENABLE
PGM ; PROGRAM INPUT

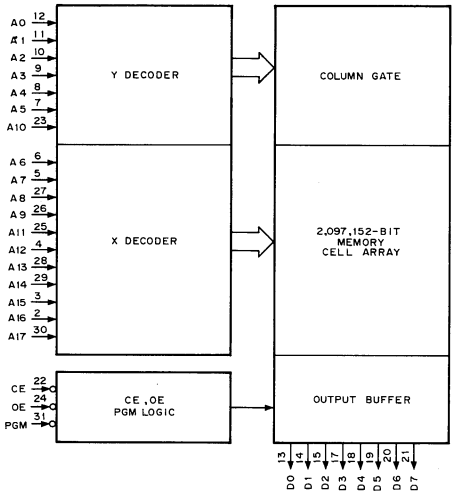

AN77L05 (PANASONIC) + 5V

POSITIVE VOLTAGE REGULATOR

– FRONT VIEW –

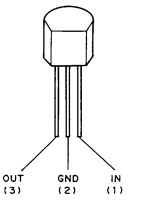

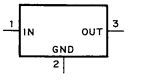

BX3914 (SONY)

CTL REC/PB AMPLIFIER

– PRINTED SIDE –

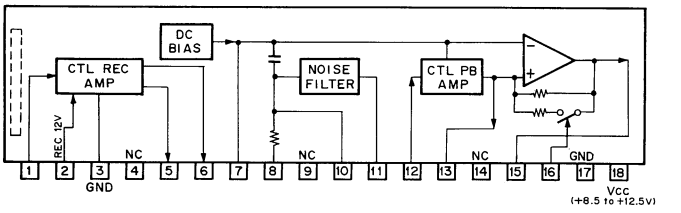

CX22017 (SONY)

VIDEO SIGNAL PROCESSOR

– TOP VIEW –

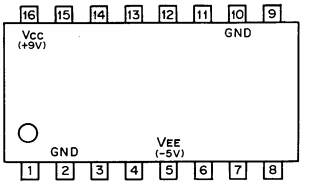

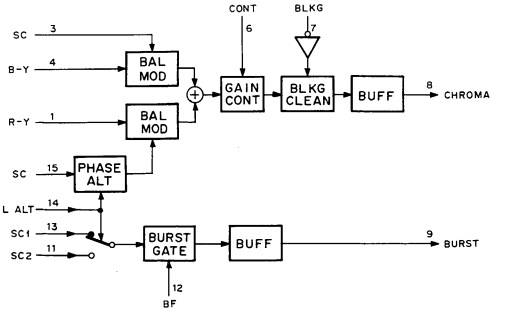

CXA1451M (SONY)

WIDEBAND VIDEO SWITCH
– TOP VIEW –

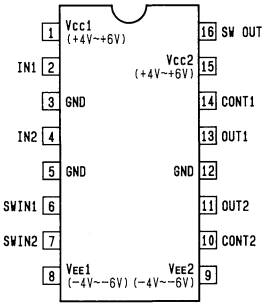

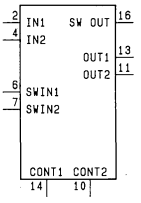

INPUT
CONT1, 2 ; POWER SAVE CONTROL PIN OF DRV.1 AND DRV.2
INT1, 2 ; 1/2-CHANNEL INPUT PIN
SWIN1, 2 ; IN1/IN2 PINS SWITCH CONTROL PIN

OUTPUT
OUT1, 2 ; OUTPUT PIN OF DRV.1/2
SWOUT ; OUTPUTS IN1 PIN OR IN2 PIN WHICH HAS BEEN SELECTED BY SWITCH.

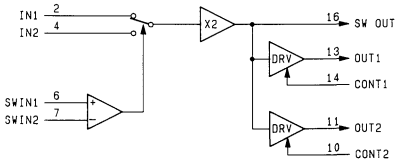

CX20188 (SONY)

DOLBY B TYPE AND C TYPE, NOISE REDUCTION SYSTEM
– TOP VIEW –

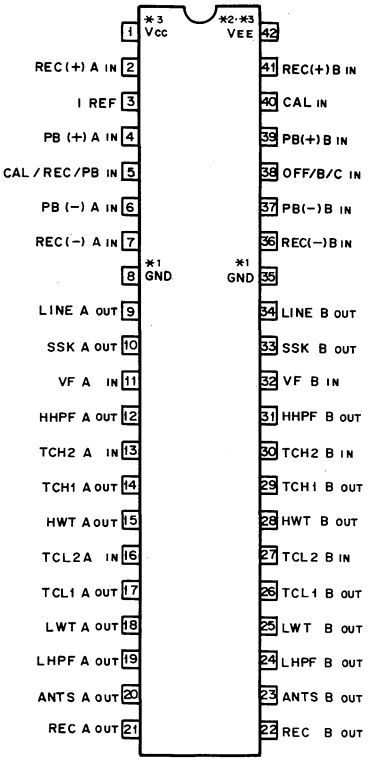

*1 ; ONE POWER→Vcc/2. TWO POWER→GND
*2 ; ONE POWER→GND. TWO POWER→VEE
*3 ; Vcc – VEE : +8 to +21V

CXA1450M (SONY) FLAT PACKAGE

VIDEO SIGNAL SWITCH
– TOP VIEW –

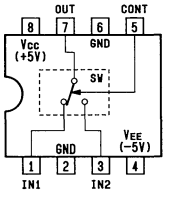

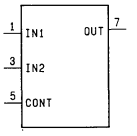

ANTS ; ANTI SATURATION
CAL ; CALIBRATION
CAL/REC/PB ; CALIBRATION/REC/ PB SELECT
HHPF ; *HLS HIGH PASS FILTER
HWT ; *HLS WAITING
I REF ; REFERENCE SOURCE CURRENT
LHPF ; *LLS HIGH PASS FILTER
LWT ; *LLS WAITING
OFF/B/C ; DOLBY NR OFF/B-TYPE/C-TYPE SELECT
SSK ; SPECTRAL SKEWING SWITCH
TCH ; *HLS DETECTOR TIME CONSTANT
TCL ; *LLS DETECTOR TIME CONSTANT
VF ; ENCODE INPUT
*HLS ; HIGH LEVEL STAGE
*LLS ; LOW LEVEL STAGE

CXA1521M (SONY)

GAIN CONTROL AMP
– TOP VIEW –

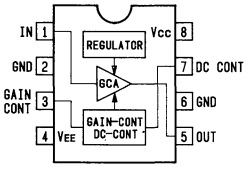

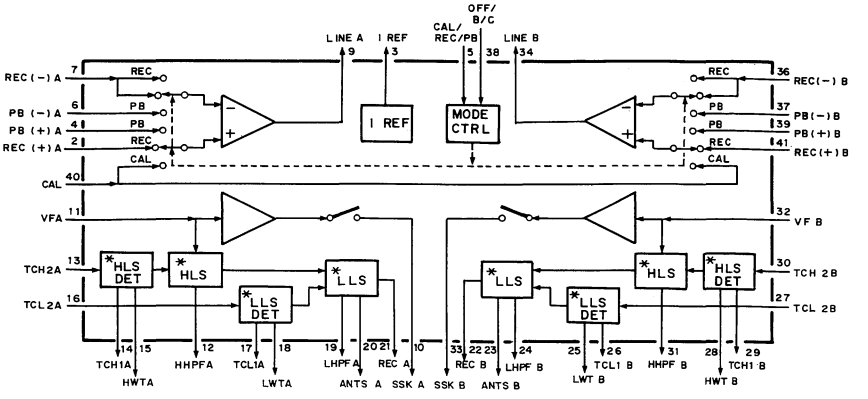

CXA1370Q (SONY)

DEMODULATOR/OVER MODULATION COMPENSATOR
– TOP VIEW –

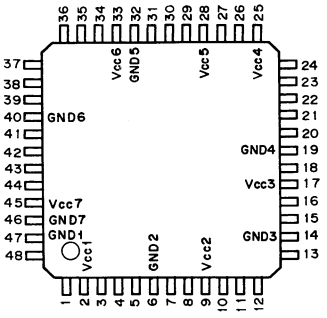

(Vcc = + 5V)

PIN No.	I/O	SIGNAL	PIN No.	I/O	SIGANL	PIN No.	I/O	SIGNAL	PIN No.	I/O	SIGNAL
1	O	OMC	13	I	DRPV	25	–	Vcc4	37	I	SHREF
2	–	Vcc1	14	–	GND3	26	O	DEMCV	38	I	SHAPL
3	O	MVDC	15	O	BBO	27	I	VDGAIN	39	I	SHCLP
4	I	LMT2	16	O	BAO	28	–	Vcc5	40	–	GND6
5	I	LMT1	17	–	Vcc3	29	I	IEXT2	41	I	LM2IN1
6	–	GND2	18	O	SWO	30	I	VIIN	42	I	LM2IN2
7	I	HFX	19	–	GND4	31	I	IEXT1	43	I	LM1IN1
8	I	LDO	20	I	SW3	32	–	GND5	44	I	LM1IN2
9	–	Vcc2	21	I	SWC1	33	–	Vcc6	45	–	Vcc7
10	O	DMRC	22	I	SW2	34	O	SHO	46	–	GND7
11	O	FDEDC	23	I	SWC2	35	O	SHC	47	–	GND1
12	I	DMGAIN	24	I	SW1	36	I	SHVIN	48	I	REFV

Vcc1, GND1; FOR OVER MODULATION COMPENSATOR
Vcc2, GND2; FOR DEMODULATOR
Vcc3, GND3; FOR BUFFER
Vcc4, GND4; FOR 3 INPUT SWITCH
Vcc5, GND5; FOR DEMODULATOR
Vcc6, GND6; FOR SAMPLE HOLD
Vcc7, GND7; FOR LIMITER

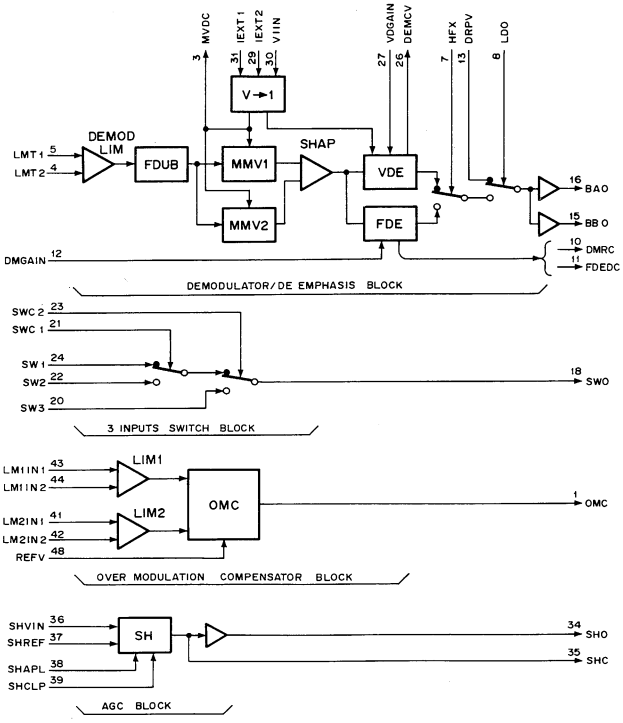

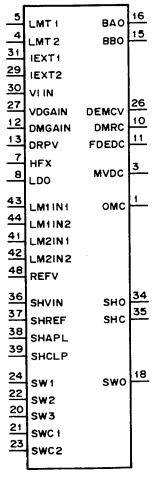

INPUT

DMGAIN	; FOR RESISTOR
DRPV	; VIDEO SIGNAL
HFX	; SWITCH CONTROL
IEXT1, 2	; FOR RESISTOR
LM1, 2	; OVER MODULATION COMPENSATE LIMITER
LMT1, 2	; DEMODULATE LIMITER
LDO	; SWITCH CONTROL
REFV	; REFERENCE VOLTAGE
SHAPL	; FOR RESISTOR
SHCLP	; SAMPLE HOLD PULSE
SHREF	; SAMPLE HOLD REFERENCE VOLTAGE
SHVIN	; SAMPLE HOLD DEMODULATE VIDEO
SW1 – 3	; 3 INPUT SWITCH
SWC1, 2	; 3 INPUT SWITCH CONTROL
VDGAIN	; GAIN CONTROL VOLTAGE
VIIN	; V→I CONTROL VOLTAGE

OUTPUT

BAO, BBO	; DEMODULATOR
DEMCV	; VARIABLE DEEMPHASIS CONSTANT
DMRC	; FIXED DEEMPHASIS CONSTANT
FDEDC	; FIXED DEEMPHASIS DECOUPLING
MVDC	; MONOMULTI DECOUPLING
OMC	; OVER MODULATION COMPENSATER
SHC	; SAMPLE HOLD CAPACITY
SHO	; SAMPLE HOLD
SWO	; 3 INPUT SWITCH

CXA1479Q (SONY)

PB RF SIGNAL PROCESSOR FOR VTR
– TOP VIEW –

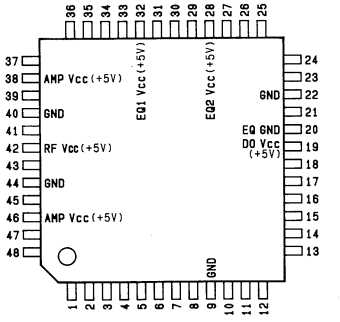

PIN NO.	I/O	SIGNAL	PIN NO.	I/O	SIGNAL	PIN NO.	I/O	SIGNAL	PIN NO.	I/O	SIGNAL
1	I	CHSW CONT	13	I	OFF SET1	25	I	EQ2(A)IN	37	O	AB RF OUT
2	I	OFF SET2	14	I	IN A	26	I	EQ2(MAIN)CNT	38	–	AMP Vcc
3	O	AOR OUT	15	I	EQSEL	27	I	EQ2(B)IN	39	I	RF(A)IN
4	I	ENV(B)	16	I	IN B	28	–	EQ2 Vcc	40	–	GND
5	I	ENV(A)	17	–	DCPL1	29	O	EQ1 OUT	41	I	RF(B)IN
6	O	TH OUT	18	O	DO EQ	30	I	EQ1 CONT	42	–	RF Vcc
7	I	TH CONT	19	–	DO Vcc	31	I	EQ1(B)IN	43	I	RF(C)IN
8	O	DO OUT	20	–	EQ GND	32	–	EQ1 Vcc	44	–	GND
9	O	REF	21	O	EQ2(MAIN)OUT	33	I	EQ1(A)IN	45	I	RF(D)IN
10	I	ENV IN	22	–	GND	34	I	GAIN CNT	46	–	AMP Vcc
11	O	DET OUT2	23	O	EQ2(SUB)OUT	35	O	SWD RF	47	O	CD RF OUT
12	O	DET OUT1	24	I	EQ2(SUB)CNT	36	I	RF LEVEL	48	I	MODE CONT

CXD1095Q (SONY) FLAT PACKAGE

C-MOS I/O PORT EXPANDER

– TOP VIEW –

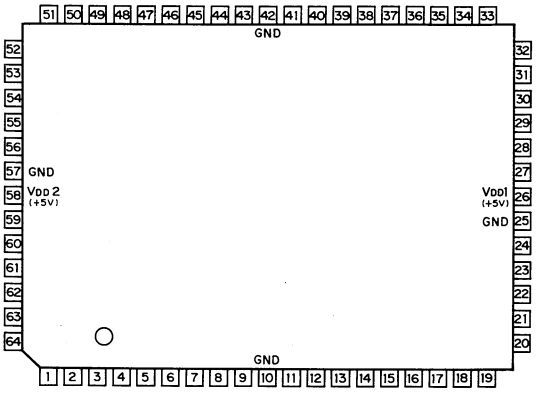

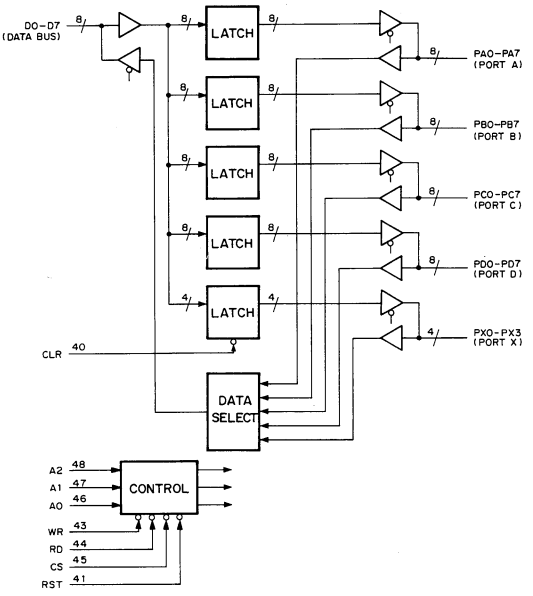

PIN NO.	IN	OUT	SYMBOL	PIN NO.	IN	OUT	SYMBOL	PIN NO.	IN	OUT	SYMBOL	PIN NO.	IN	OUT	SYMBOL
1			NC	17	O	O	PC6	33			NC	49	O	O	PX0
2			NC	18	O	O	PC7	34			NC	50	O	O	PX1
3	O	O	PB1	19			NC	35	O	O	D3	51			NC
4	O	O	PB2	20	O	O	PD0	36	O	O	D4	52	O	O	PX2
5	O	O	PB3	21	O	O	PD1	37	O	O	D5	53	O	O	PX3
6	O	O	PB4	22	O	O	PD2	38	O	O	D6	54	O	O	PA0
7	O	O	PB5	23	O	O	PD3	39	O	O	D7	55	O	O	PA1
8	O	O	PB6	24	O	O	PD4	40	O		CLR	56	O	O	PA2
9	O	O	PB7	25			GND	41	O		RST	57			GND
10			GND	26	O		VDD (+5V)	42			GND	58	O		VDD (+5V)
11	O	O	PC0	27	O	O	PD5	43	O		WR	59	O	O	PA3
12	O	O	PC1	28	O	O	PD6	44	O		RD	60	O	O	PA4
13	O	O	PC2	29	O	O	PD7	45	O		CS	61	O	O	PA5
14	O	O	PC3	30	O	O	D0	46	O		A0	62	O	O	PA6
15	O	O	PC4	31	O	O	D1	47	O		A1	63	O	O	PA7
16	O	O	PC5	32	O	O	D2	48	O		A2	64	O	O	PB0

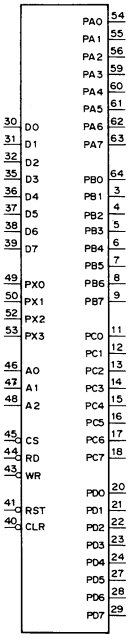

CS	RD	WR	A2	A1	A0	MODE
0	0	1	0	0	0	PORT A → DATA BUS
0	0	1	0	0	1	PORT B → DATA BUS
0	0	1	0	1	0	PORT C → DATA BUS
0	0	1	0	1	1	PORT D → DATA BUS
0	0	1	1	0	0	PORT X → DATA BUS
0	0	1	1	0	1	——
0	0	1	1	1	0	——
0	0	1	1	1	1	——
0	1	0	0	0	0	DATA BUS → PORT A
0	1	0	0	0	1	DATA BUS → PORT B
0	1	0	0	1	0	DATA BUS → PORT C
0	1	0	0	1	1	DATA BUS → PORT D
0	1	0	1	0	0	DATA BUS → PORT X
0	1	0	1	0	1	——
0	1	0	1	1	0	DATA BUS → CTL REG.1
0	1	0	1	1	1	DATA BUS → CTL REG.2
1	X	X	X	X	X	DATA BUS ; HI–Z

0 ; LOW LEVEL
1 ; HIGH LEVEL
X ; DON'T CARE
HI–Z, HIGH IMPEDANCE

D0–D7 ; DATA BUS INPUTS/OUTPUTS
CS ; CHIP SELECT INPUT
RD ; READ STROBE INPUT
WR ; WRITE STROBE INPUT
A0–A2 ; ADDRESS INPUT
RST ; RESET INPUT
CLR ; CLEAR INPUT
PA0–PA7 ; PORT A INPUTS/OUTPUTS
PB0–PB7 ; PORT B INPUTS/OUTPUTS
PC0–PC7 ; PORT C INPUTS/OUTPUTS
PD0–PD7 ; PORT D INPUTS/OUTPUTS
PX0–PX3 ; PORT X INPUTS/OUTPUTS

CXD1171M (SONY) FLAT PACKAGE

C-MOS 8-BIT D/A CONVERTER

– TOP VIEW –

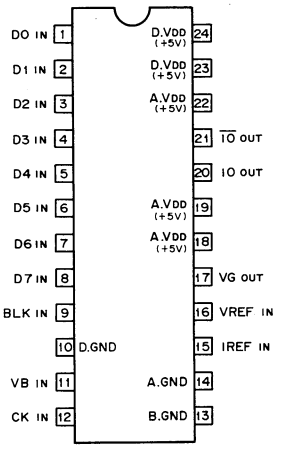

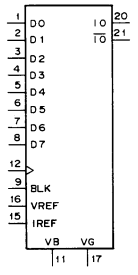

CK ; CLOCK INPUT
BLK ; BLANKING PULSE INPUT
D0 – 7 ; DIGITAL DATA INPUT
IO ; CURRENT OUTPUT
$\overline{IO}$; INVERT CURRENT OUTPUT
IREF ; CURRENT REFERENCE INPUT
VB, VG ; FOR CAPACITOR
VREF ; VOLTAGE REFERENCE INPUT

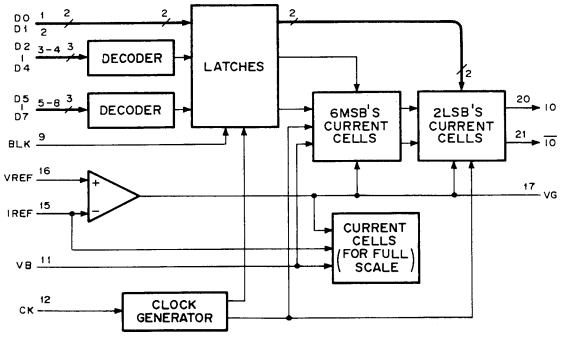

CXD1151Q (SONY)

C-MOS VIDEO SIGNAL PROCESSOR FOR BETACAM
– TOP VIEW –

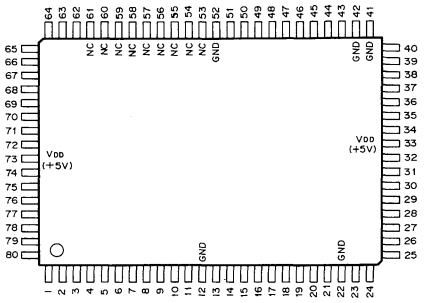

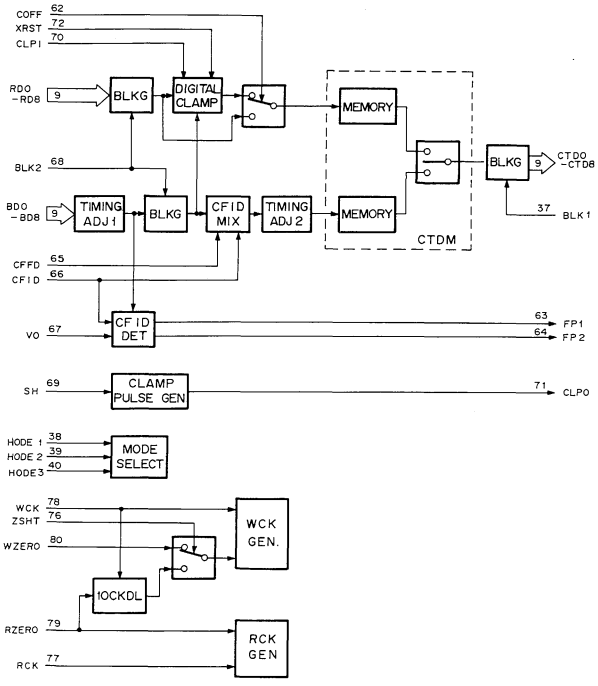

PIN ASSIGNMENT

Pin NO.	I/O	SIGNAL	Pin NO.	I/O	SIGNAL	Pin NO.	I/O	SIGNAL	Pin NO.	I/O	SIGNAL
1	I	RD0	21	I	BD8	41		NC	61		NC
2	I	RD1	22	–	Vss (GND)	42	–	Vss (GND)	62	I	COFF
3	I	RD2	23	O	TM0	43	O	CTD0	63	I	FP1
4	I	RD3	24	O	TM1	44	O	CTD1	64	I	FP2
5	I	RD4	25	O	TM2	45	O	CTD2	65	I	CFFD
6	I	RD5	26	O	TM3	46	O	CTD3	66	I	CFID
7	I	RD6	27	O	TM4	47	O	CTD4	67	I	VO
8	I	RD7	28	O	TM5	48	O	CTD5	68	I	BLK2
9	I	RD8	29	O	TM6	49	O	CTD6	69	I	SH
10	I	TSL2	30	O	TM7	50	O	CTD7	70	I	CLPI
11	I	TSL3	31	O	TM8	51	O	CTD8	71	O	CLPO
12	–	Vss (GND)	32	O	TM9	52	–	Vss (GND)	72	I	XRST
13	I	BD0	33	I	VDD (+5V)	53		NC	73	I	VDD (+5V)
14	I	BD1	34	I	TMOD	54		NC	74	I	TST1
15	I	BD2	35	I	TMEN	55		NC	75	I	TST2
16	I	BD3	36	I	TSL1	56		NC	76	I	ZSHT
17	I	BD4	37	I	BLK1	57		NC	77	I	RCK
18	I	BD5	38	I	MODE1	58		NC	78	I	WCK
19	I	BD6	39	I	MODE2	59		NC	79	I	RZERO
20	I	BD7	40	I	MODE3	60		NC	80	I	WZERO

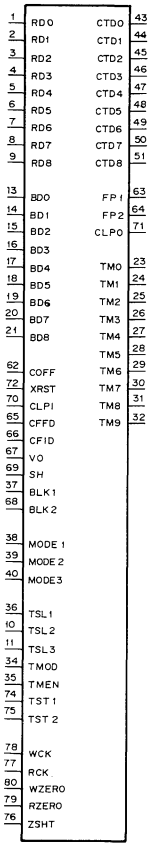

RDO-RD8 ; R-Y DATA INPUTS
BDO-BD8 ; B-Y DATA INPUTS
COFF ; DIGTAL CLAMP CIRCUIT CONTROL INPUT
XRST ; DIGTAL CLAMP CIRCUIT RESET PULSE INPUT
CLPI ; CLAMP PULSE INPUT FOR DIGITAL CLAMP
CFFD ; FIELD SIGNAL INPUT FOR COLOR FRAMING ID MIX
CFID ; PULSE INPUT FOR COLOR FRAMING ID MIX
VO ; COLOR FRAMING DETECT CIRCUIT RESET PULSE INPUT
SH ; TRIGGER INPUT FOR CLPO OUTPUT
BLK1, BLK2 ; BLKG PULSE INPUTS
TSL1 ; MEMORY SELECT INPUT IN TEST MODE
TSL2, TSL3 ; TEST INPUTS
TMOD ; TEST MODE CONTROL INPUT
TMEN ; MEMORY ADD CONTROL INPUT IN TEST MODE
TST1, TST2 ; DIGITAL CLAMP CIRCUIT TEST CONTROL INPUTS
WCK ; WRITE CLOCK INPUT
RCK ; READ CLOCK INPUT
WZERO ; WRITE ZERO INPUT
RZERO ; READ ZERO INPUT
ZSHT ; INTERNAL/EXTERNAL WZERO SELECT INPUT
CTD0-CTD8 ; CTDM DATA OUTPUTS
FP1, FP2 ; COLOR FRAMING DETECT PULSE OUTPUTS
CLPO ; CLAMP PULSE OUTPUT
TM0-TM9 ; DIGITAL CLAMP CIRCUIT TEST SIGNAL OUTPUTS
MODE1-MODE3; MODE SELECT INPUTS

MODE1	1				1			
MODE2	1		0		1		0	
MODE3	1	0	1	0	1	0	1	0
nfH	910fH	858fH	909fH	X	908fH	864fH	1135fH	TCLR

0 : LOW LEVEL 1 : HIGH LEVEL

CXD8310M (SONY)

C-MOS GATE ARRAY
– TOP VIEW –

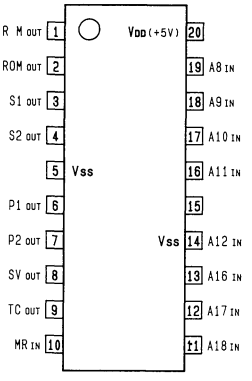

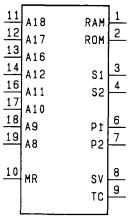

INPUT
A8 – A12 ; ADDRESS BUS
A16 – A18 ; ADDRESS BUS
MR ; MEMORY REQUEST

OUTPUT
P1, P2 ; PARALLEL I/O
RAM ; RAM TERMINAL
ROM ; ROM TERMINAL
S1, S2 ; SERIAL I/O
SV ; RAM-SV TERMINAL
TC ; RAM-TC TERMINAL

CXD1175AM (SONY) FLAT PACKAGE

C-MOS 8-BIT 20MSPS VIDEO A/D CONVERTER

– TOP VIEW –

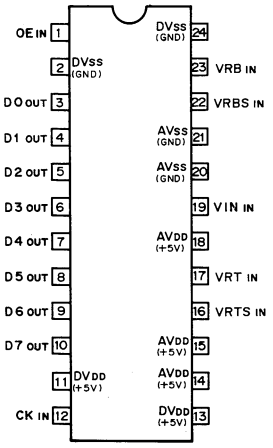

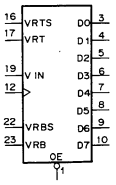

AV_{DD} : ANALOG POWER SUPPLY
AV_{SS} : ANALOG GROUND
CK : CLOCK INPUT
D0 – 7 : DIGITAL DATA OUTPUTS (LSB to MSB)
DV_{DD} : DIGITAL POWER SUPPLY
DV_{SS} : DIGITAL GROUND
OE : OUTPUT ENABLE (OE = HIGH ; HIGH IMPEDANCE)
VIN : ANALOG VOLTAGE INPUT
VRB : BOTTOM REFERENCE VOLTAGE INPUT
VRBS : AS SHORT-CIRCUIT AT VRB. GENERATES + 0.6V
VRT : TOP REFERENCE VOLTAGE INPUT
VRTS : AS SHORT-CIRCUIT AT VRT. GENERATES + 2.6V

STEP	INPUT SIGNAL VOLTAGE	DATA OUTPUTS							
		D7	D6	D5	D4	D3	D2	D1	D0
0	0V (VRT)	1	1	1	1	1	1	1	1
1	0.01V	1	1	1	1	1	1	1	0
⋮	⋮	⋮	⋮	⋮	⋮	⋮	⋮	⋮	⋮
127	1.34V	1	0	0	0	0	0	0	0
128	1.35V	0	1	1	1	1	1	1	1
⋮	⋮	⋮	⋮	⋮	⋮	⋮	⋮	⋮	⋮
255	2.7V (VRB)	0	0	0	0	0	0	0	0

0 : LOW LEVEL
1 : HIGH LEVEL

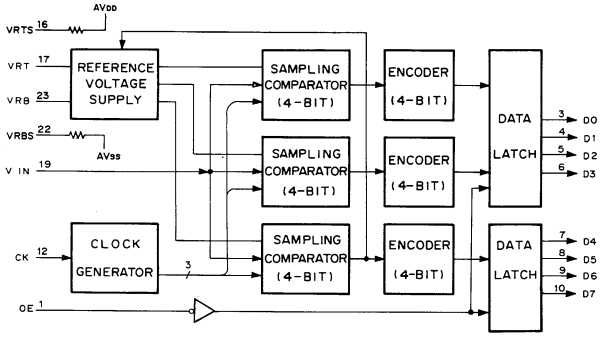

CXD1216M (SONY) FLAT PACKAGE

C-MOS GENLOCK DRIVER

– TOP VIEW –

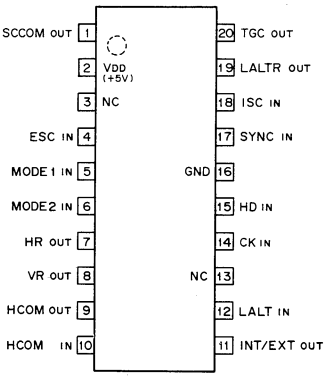

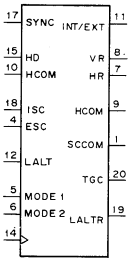

INPUT		MODE	SYSTEM
MODE1	MODE2		
0	0	M1	PAL-VBS
1	0	M2	PALM-VBS
0	1	M3	PAL,SECAM-VS/SC/LALT
1	1	M4	NTSC-VBS,NTSC-VS/SC PALM-VS/SC/LALT

0 ; LOW LEVEL
1 ; HIGH LEVEL

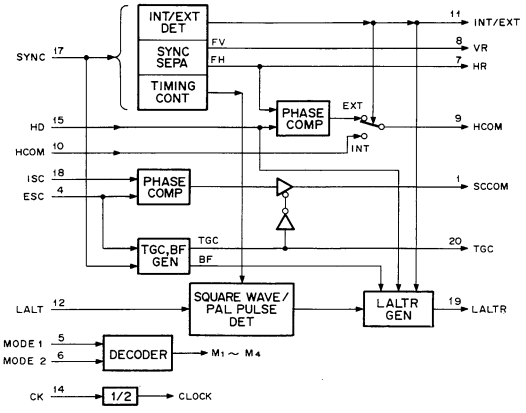

INPUT
CK ; 4fsc CLOCK INPUT
ESC ; SC/COLOR BURST
HCOM ; PHASE COMPARATE FROM CXD1217
HD ; H DRIVE FROM CXD1217
ISC ; SUBCARRIER FROM CXD1217
LALT ; LALT FROM REFERENCE SIGNAL GENERATOR
MODE1,2 ; SYSTEM SELECT
SYNC ; SYNC FROM REFERENCE SIGNAL GENERATOR

OUTPUT
HCOM ; PHASE COMPARATOR HR WITH HD
HR ; fH OF SYNC SEPARATE
INT/EXT ; INTERNAL/EXTERNAL SPECIFIED
LALTR ; LINE CHANGE RESET
SCCOM ; PHASE COMPARATOR ESC WITH ISC
TGC ; TRISTATE CONTROL
VR ; fv OF SYNC SEPARATE

CXD2202Q (SONY)

SERVO IC

– TOP VIEW –

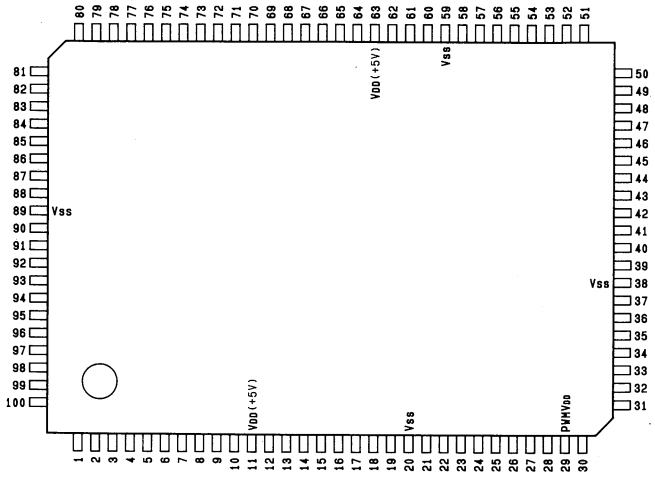

(VDD = + 5V)

PIN No.	I/O	SIGNAL	PIN No.	I/O	SIGNAL	PIN No.	I/O	SIGNAL	PIN No.	I/O	SIGNAL
1	I	FG1/IP24	26	I/O	IOP2	51	I/O	D7	76	O	PPG11/OP21
2	I	FG0/IP23	27	I/O	IOP1	52	I/O	D6	77	O	PPG10/OP20
3	I	$\overline{PBH}$/IP22	28	I/O	IOP0	53	I/O	D5	78	O	PPG0F/OP17
4	I	$\overline{SYNC1}$/IP21	29	–	PWM VDD	54	I/O	D4	79	O	PPG0E/OP16
5	I	$\overline{SYNC0}$/IP20	30	O	PWM7/OP37	55	I/O	D3	80	O	PPG0D/OP15
6	I	FG02/IP14	31	O	PWM6/OP36	56	I/O	D2	81	O	PPG0C/OP14
7	I	FG01/IP13	32	O	PWM5/OP35	57	I/O	D1	82	O	PPG0B/OP13
8	I	FG00/IP12	33	O	PWM4/OP34	58	I/O	D0	83	O	PPG0A/OP12
9	I	CTL/IP11	34	O	PWM3/OP33	59	–	Vss	84	O	PPG09/OP11
10	I	LAT/IP10	35	O	PWM2/OP32	60	I	RES	85	O	PPG08/OP10
11	–	VDD	36	O	PWM1/OP31	61	I	MD1	86	O	CLKO
12	I	UD/IP07	37	O	PWM0/OP30	62	I	MD0	87	I	EXTAL
13	I	CCLK/IP06	38	–	Vss	63	–	VDD	88	O	XTAL
14	I	FGC1/IP05	39	I	AS14	64	I	WR	89	–	Vss
15	I	FGC0/IP04	40	I	AS13	65	I	RD	90	O	PPG07/OP07
16	I	FGB1/IP03	41	I	A15	66	I	CE	91	O	PPG06/OP06
17	I	FGB0/IP02	42	I	A14	67	O	IREQ2	92	O	PPG05/OP05
18	I	FGA1/IP01	43	I	A13	68	O	IREQ1	93	O	PPG04/OP04
19	I	FGA0/IP00	44	I	A6	69	O	IREQ0	94	O	PPG03/OP03
20	–	Vss	45	I	A5	70	I	FXSEL	95	O	PPG02/OP02
21	I/O	IOP7	46	I	A4	71	O	OP26	96	O	PPG01/OP01
22	I/O	IOP6	47	I	A3	72	O	$\overline{EXCS1}$/OP25	97	O	PPG00/OP00
23	I/O	IOP5	48	I	A2	73	O	$\overline{EXCS0}$/OP24	98	I	FG12/IP27
24	I/O	IOP4	49	I	A1	74	O	PPG13/OP23	99	I	FG11/IP26
25	I/O	IOP3	50	I	A0	75	O	PPG12/OP22	100	I	FG10/IP25

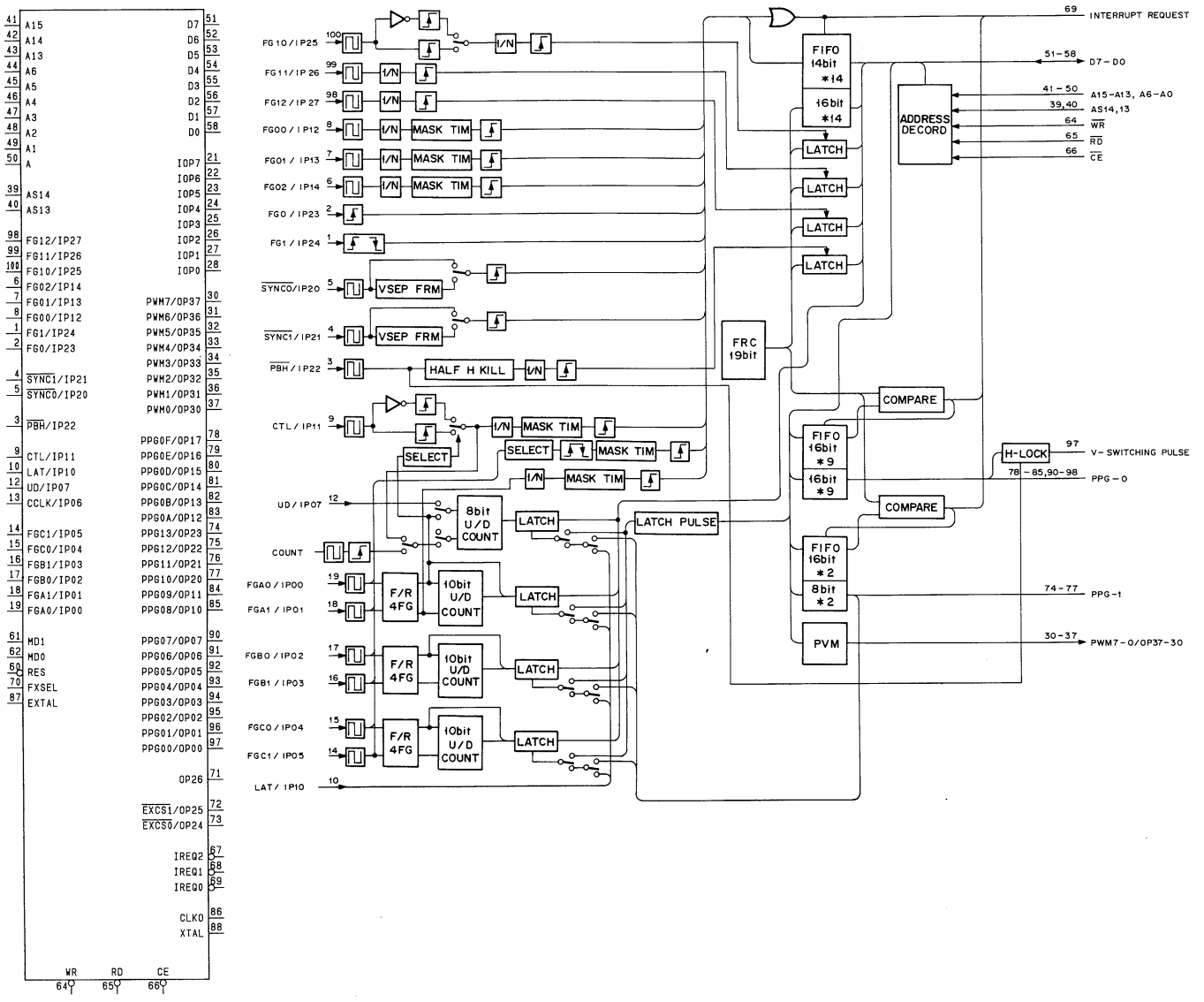

INPUT

A0 – A15 ; ADDRESS BUS
AS13, AS14 ; SELECTING CONDITION OF ADDRESS DECODER AS13 AND AS14 BITS
CCLK ; 8-BIT COUNTER CLOCK INPUT
CE ; CHIP ENABLE
CTL ; RESOLUTION 2.5MHz WITH EDGE SELECT FUNCTION. WITH FREQUENCY DIVISION MASK TIMER
EXTAL ; CRYSTAL OSCILLATION OR EXTERNAL CLOCK INPUT
FG0 ; RESOLUTION 2.5MHz
FG00 – FG02 ; FREQUENCY DIVISION ENABLE RESOLUTION 2.5MHz. WITH FREQUENCY DIVISION MASK TIMER
FG1 ; RESOLUTION 2.5MHz BOTH EDGES
FG10 ; EDGE SELECTION ENABLE RESOLUTION 10MHz
FG11, 12 ; FREQUENCY DIVISION ENABLE RESOLUTION 10MHz
FGA0 ; PERFORMS FORWARD/REVERSE ROTATION DETECTION AND 4FG COUNT (UP/DOWN) BY FGA0 AND FGA1. 10 BITS. UP/DOWN IS MADE BY CONTROLLING THE UP/DOWN OF 8-BIT COUNTER.
FGA1 ; 4FG PERFORMS FREQUENCY DIVISION AND FRC CAPTURE THROUGH MASK TIMER.
*1 : SELECTS ONE OF FGA0 TO FGC1 INPUT AND DETECTS BOTH EDGES AND PERFORM THE FRC CAPTURE THROUGH THE MASK TIMER.
FGB0 ; PERFORMS FORWARD/REVERSE ROTATION DETECTION AND 4FG COUNT BY FGB0 AND FGB1.
FGB1 ; *1 : SELECTS ONE OF FGA0 TO FGC1 INPUT AND DETECTS BOTH EDGES AND PERFORM THE FRC CAPTURE THROUGH THE MASK TIMER.
FGC0 ; PERFORMS FORWARD/REVERSE ROTATION DETECTION AND 4FG COUNT BY FGC0 AND FGC1.
FGC1 ; *1 : SELECTS ONE OF FGA0 TO FGC1 INPUT AND DETECTS BOTH EDGES AND PERFORM THE FRC CAPTURE THROUGH THE MASK TIMER.
FXSEL ; FREQUENCY DIVISION SELECTION OF CLOCK INPUT
LAT ; EXTERNAL LATCH TIMING OF UP/DOWN COUNTER
MD0, 1 ; TEST MODE DESIGNATION
PBH ; INPUT OF COMPOSITE SYNC OR H SYNC. RESOLUTION 10MHz. WITH HALF H KILLER.
RD ; REDE
RES ; RESET
SYNC0, 1 ; INPUT OF COMPOSITE SYNC OR V SYNC. RESOLUTION 2.5MHz.
UD ; 8-BIT COUNTER UP/DOWN INPUT
WR ; WRITE

XOUTPUT

CLKO ; CLOCK OUTPUT
EXCS0, 1 ; DECODE AT ADDRESS A3 LEVEL
IREQ0 ; INTERRUPTION SIGNAL OF FRC CAPTURE UNIT
IREQ1 ; COINCIDENCE INTERRUPTION OF PPG0
IREQ2 ; COINCIDENCE INTERRUPTION OF PPG1
OP26 ; EXCLUSIVELY OUTPUT PORT
PPG00 – PPG0F
PPG10 – PPG13 ; PROGRAMMABLE PULSE GENERATOR RESOLUTION 1.25MHz PPG00 : WITH HLOCK
PWM0 – PWM5 ; PWM OUTPUT NORMALLY PWM, OR PWM0 AND PWM1, PWM2 AND PWM3, OR PWM4 AND PWM5 OUTPUT SIGNAL CORRESPONDED TO PUSH-PULL.
PWM6, 7 ; PWM OUTPUT
XTAL ; CRYSTAL OSCILLATION

INPUT/OUTPUT

D0 – D7 ; DATA BUS
IOP0 – IOP7 ; SELECTS AND USES INPUT AND OUTPUT BY EVERY 1 BIT.

CXD2207Q (SONY)

C-MOS TBC WRITE CLOCK GENERATOR FOR BETACAM
– TOP VIEW –

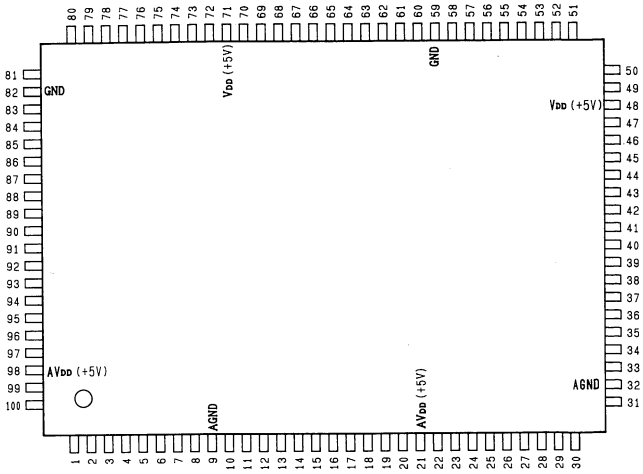

(VDD = AVDD = + 5V)

PIN No.	I/O	SIGNAL	PIN No.	I/O	SIGNAL	PIN No.	I/O	SIGNAL	PIN No.	I/O	SIGNAL
1	O	SYNC	26	I	FOPO	51	I	PBE	76	I	SVLK
2	I	BLK	27	I	SHOT	52	I	NOS	77	I	SVD
3	I	VIN4	28	I	BCPI	53	I	SPD	78	I	OFF
4	I	REF3	29	O	BCPO	54	I	R20	79	O	IOCK
5	I	VIN3	30	I	EOPX	55	I	FBID	80	O	CS
6	O	VOT3	31	O	EOPO	56	I	DO	81	I/O	MO0
7	I	AI3	32	–	AGND	57	I	GBD	82	–	GND
8	I	ACPI	33	I	AI2	58	I	GAT	83	I/O	MO1
9	–	AGND	34	I	DOPI	59	–	GND	84	I/O	MO2
10	I	ACPX	35	I	DOPX	60	I	GH	85	I/O	MO3
11	O	ACPO	36	O	DOPO	61	O	WCP	86	I/O	MO4
12	I	SMPL	37	I	VCOI	62	O	ACP	87	I/O	MO5
13	I	CHIN	38	I	VCEN	63	O	TOUT	88	I/O	MO6
14	I	BOPX	39	I	MD1	64	O	AZ2	89	I/O	MO7
15	I	BOPO	40	I	MD2	65	O	AZ1	90	I	AMD
16	I	SHC1	41	I	INT	66	O	WZ	91	I	VIN2
17	I	SHC2	42	I	YC	67	I	CKN	92	I	REF1
18	I	SH2I	43	I	TMOD	68	O	GCK	93	I	REF2
19	O	ER1	44	I	TCK	69	O	ACK	94	I	VIN1
20	O	ER2	45	I	TDAT	70	O	XCK	95	I	AOPI
21	–	AVDD	46	I	BTS	71	–	VDD	96	I	AOPX
22	I	COPI	47	I	REST	72	O	CH	97	O	AOPO
23	I	COPX	48	–	VDD	73	O	SSH	98	–	AVDD
24	O	COPO	49	I	DDF	74	O	DCP	99	I	AI1
25	I	FOPX	50	O	SHO	75	I	ERR	100	I	CCPI

CXD8176AQ (NEC)

C-MOS DUAL PORT RAM CONTROLLER

– TOP VIEW –

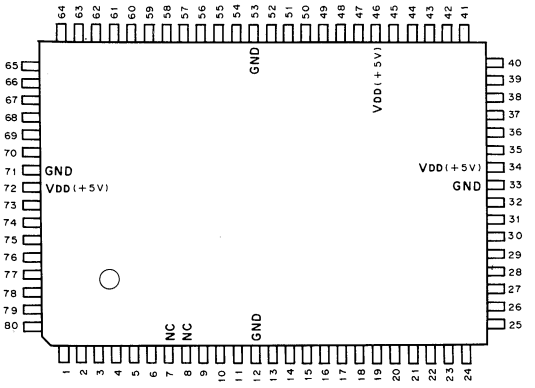

(VDD = + 5 V)

PIN No.	I/O	SIGNAL	PIN No.	I/O	SIGNAL	PIN No.	I/O	SIGNAL	PIN No.	I/O	SIGNAL
1	I/O	DOL	21	I/O	D7R	41	I/O	D6M	61	I	A10L
2	I	$\overline{WRL}$	22	I/O	D6R	42	I/O	D5M	62	I	A9L
3	I	$\overline{RDL}$	23	I/O	D5R	43	I/O	D4M	63	I	A8L
4	O	$\overline{WAITL}$	24	I/O	D4R	44	I/O	D3M	64	I	A7L
5	I	$\overline{CSL}$	25	I/O	D3R	45	I/O	D2M	65	I	A6L
6	I	$\overline{CKL}$	26	I/O	D2R	46	–	VDD	66	I	A5L
7	–	NC	27	I/O	D1R	47	I/O	D1M	67	I	A4L
8	–	NC	28	I/O	D0R	48	I/O	D0M	68	I	A3L
9	I	A10R	29	I	$\overline{WRR}$	49	O	A0M	69	I	A2L
10	I	A9R	30	I	$\overline{RDR}$	50	O	A1M	70	I	A1L
11	I	A8R	31	O	$\overline{WAITR}$	51	O	A2M	71	–	GND
12	–	GND	32	I	$\overline{CSR}$	52	O	A3M	72	–	VDD
13	I	A7R	33	–	GND	53	–	GND	73	I	A0L
14	I	A6R	34	–	VDD	54	O	A4M	74	I/O	D7L
15	I	A5R	35	I	CKR	55	O	A5M	75	I/O	D6L
16	I	A4R	36	I	CKT	56	O	A6M	76	I/O	D5L
17	I	A3R	37	O	$\overline{WEM}$	57	O	A7M	77	I/O	D4L
18	I	A2R	38	O	$\overline{OEM}$	58	O	A8M	78	I/O	D3L
19	I	A1R	39	O	$\overline{CEM}$	59	O	A9M	79	I/O	D2L
20	I	A0R	40	I/O	D7M	60	O	A10M	80	I/O	D1L

CXD8243AM (SONY) FLAT PACKAGE

C-MOS DIGITAL YC SEPARATOR/DECODER/CTDM CLOCK GENERATOR

– TOP VIEW –

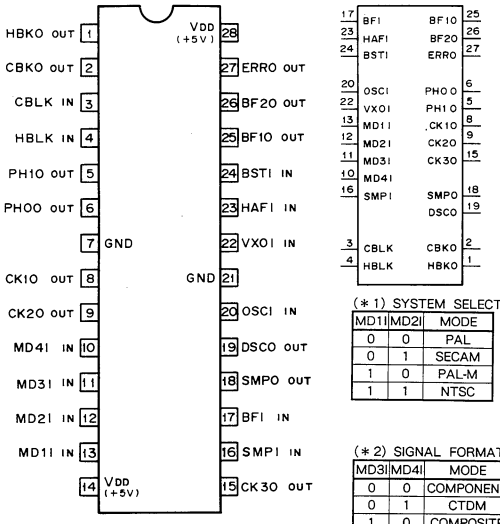

(＊1) SYSTEM SELECT

MD1I	MD2I	MODE
0	0	PAL
0	1	SECAM
1	0	PAL-M
1	1	NTSC

(＊2) SIGNAL FORMAT SELECT

MD3I	MD4I	MODE
0	0	COMPONENT
0	1	CTDM
1	0	COMPOSITE
1	1	S-VIDEO

0 ; LOW LEVEL
1 ; HIGH LEVEL

INPUT

BFI ; BURST FLAG
BSTI ; BURST FOR PHASE COMPARISON
CBLK ; CHROMA BLANKING PULSE
HAFI ; TRIGGER PULSE FOR BURST SAMPLING
HBLK ; H BLANKING PULSE
MD1, 2I ; SYSTEM SELECT (＊1)
MD3, 4I ; SIGNAL FORMAT SELECT (＊2)
OSCI ; H LOCK LOOP VCO
SMPI ; TRAPEZOID SAMPLING PULSE OF THE H LOCK LOOP
VXOI ; BURST LOCK LOOP VCXO

OUTPUT

BF1, 2O ; BURST FLAG
CBKO ; CHROMA BLANKING PULSE
CK1 – 3O ; CLOCK, SELECTED BY MODE
DSCO ; TRAPEZOID GENERATOR DISCHARGE PULSE
ERRO ; BURST PHASE COMPARISON ERROR
HBKO ; H BLANKING PULSE
PH0O ; 2FSC
PH1O ; FSC
SMPO ; TRAPEZOID SAMPLING PULSE OF THE H LOCK LOOP

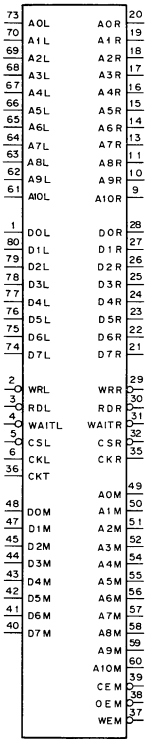

INPUT

A0L – A10L ; ADDRESS BUS OF PORT L
A0R – A10R ; ADDRESS BUS OF PORT R
CKL ; CLOCK OF PORT L
CKR ; CLOCK OF PORT R
CKT ; CLOCK
CSL ; CHIP SELECT OF PORT L
CSR ; CHIP SELECT OF PORT R
RDL ; READ STROBE OF PORT L
RDR ; READ STROBE OF PORT R
WRL ; WRITE STROBE OF PORT L
WRR ; WRITE STROBE OF PORT R

OUTPUT

A0M – A10M ; ADDRESS BUS FOR MEMORY DEVICE
CEM ; CHIP ENABLE FOR MEMORY DEVICE
OEM ; OUTPUT ENABLE FOR MEMORY DEVICE
WAITL ; WAIT OF PORT L
WAITR ; WAIT OF PORT R
WEM ; WRITE ENABLE FOR MEMORY DEVICE

INPUT/OUTPUT

D0L – D7L ; DATA BUS OF PORT L
D0M – D7M ; DATA BUS FOR MEMORY DEVICE
D0R – D7R ; DATA BUS OF PORT R

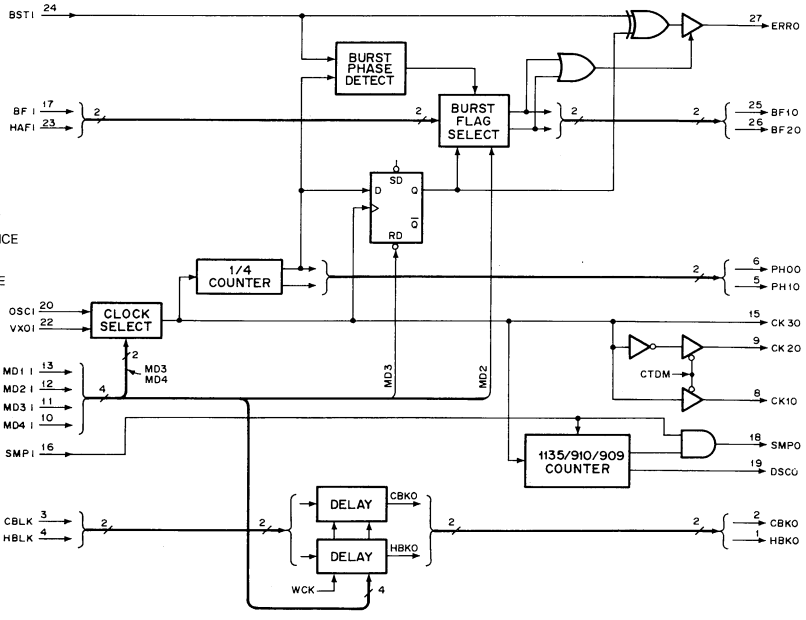

CXD8165Q (SONY) FLAT PACKAGE

C-MOS REFERENCE SYNC GENERATOR

– TOP VIEW –

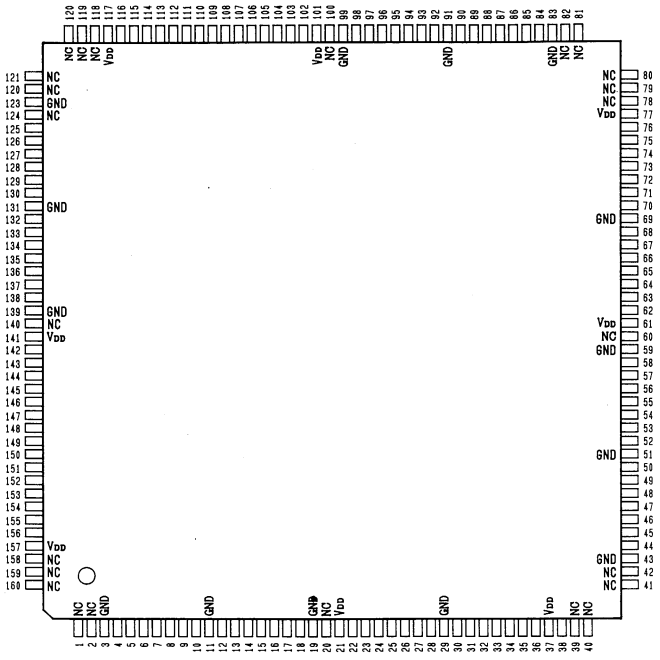

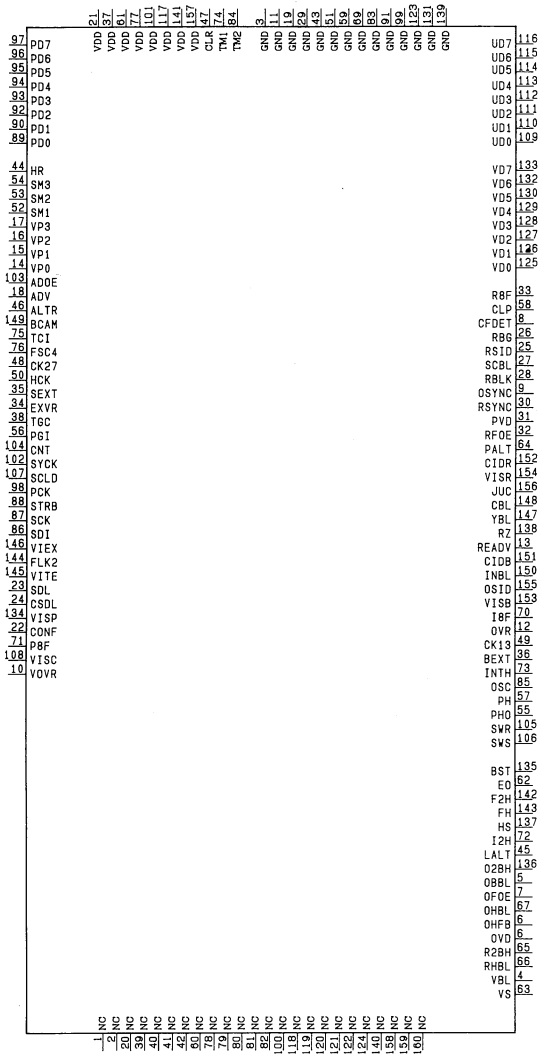

PIN No.	I/O	SIGNAL	PIN No.	I/O	SIGNAL	PIN No.	I/O	SIGNAL	PIN No.	I/O	SIGNAL
1	–	NC	41	–	NC	81	–	NC	121	–	NC
2	–	NC	42	–	NC	82	–	NC	122	–	NC
3	–	GND	43	–	GND	83	–	GND	123	–	GND
4	I/O	VBL	44	I	HR	84	I	TM2	124	–	NC
5	I/O	OBBL	45	I/O	LALT	85	O	OSC	125	O	VD0
6	I/O	OVD	46	I	ALTR	86	I	SD1	126	O	VD1
7	I/O	OFOE	47	I	CLR	87	I	SCK	127	O	VD2
8	O	CFDET	48	I	CK27	88	I	STRB	128	O	VD3
9	O	OSYNC	49	O	CK13	89	I/O	PD0	129	O	VD4
10	I	VOVR	50	I	HCK	90	I/O	PD1	130	O	VD5
11	–	GND	51	–	GND	91	–	GND	131	–	GND
12	O	OVR	52	I	SM1	92	I/O	PD2	132	O	VD6
13	O	READV	53	I	SM2	93	I/O	PD3	133	O	VD7
14	I	VP0	54	I	SM3	94	I/O	PD4	134	I	VISP
15	I	VP1	55	O	PHO	95	I/O	PD5	135	I/O	BST
16	I	VP2	56	I	PHI	96	I/O	PD6	136	I/O	O2BH
17	I	VP3	57	O	PH	97	I/O	PD7	137	I/O	HS
18	I	ADV	58	O	CLP	98	I	PCK	138	O	RZ
19	–	GND	59	–	GND	99	–	GND	139	–	GND
20	–	NC	60	–	NC	100	–	NC	140	–	NC
21	–	VDD	61	–	NC	101	–	VDD	141	–	VDD
22	I	CONF	62	I/O	EQ	102	I	SYCK	142	I/O	F2H
23	I	SDL	63	I/O	VS	103	I	ADOE	143	I/O	FH
24	I	CSDL	64	O	PALT	104	I	CNT	144	I	FLK2
25	O	RSID	65	I/O	R2BH	105	O	SWR	145	I	VITE
26	O	RBG	66	I/O	RHBL	106	O	SWS	146	I	VIEX
27	O	SCBL	67	I/O	OHBL	107	I	SCLD	147	O	YBL
28	O	RBLK	68	I/O	OHFB	108	I	VISC	148	O	CBL
29	–	GND	69	–	GND	109	O	UD0	149	I	BCAM
30	O	RSYNC	70	O	I8F	110	O	UD1	150	O	ENBL
31	O	RVD	71	I	P8F	111	O	UD2	151	O	CID8
32	O	REOE	72	I/O	I2H	112	O	UD3	152	O	CIDR
33	O	R8F	73	O	INTH	113	O	UD4	153	O	VISB
34	I	EXVR	74	I	TM1	114	O	UD5	154	O	VISR
35	I	SEXT	75	I	TCI	115	O	UD6	155	O	OSID
36	O	BEXT	76	I	FSC4	116	O	UD7	156	O	JUC
37	–	VDD	77	–	VDD	117	–	VDD	157	–	VDD
38	I	TGC	78	–	NC	118	–	NC	158	–	NC
39	–	NC	79	–	NC	119	–	NC	159	–	NC
40	–	NC	80	–	NC	120	–	NC	160	–	NC

CXK48324Q (SONY)

C-MOS 2.4M (960x306x8) BITS 3 PORTS VIDEO FIELD MEMORY
– TOP VIEW –

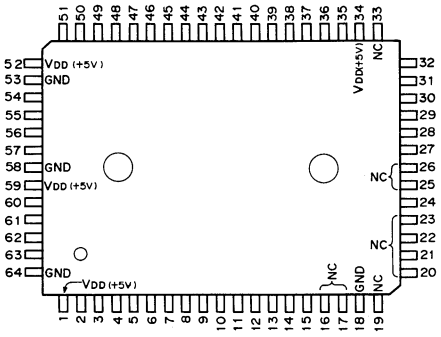

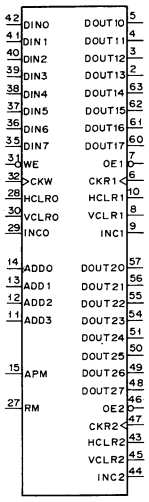

(VDD = + 5 V)

PIN No.	I/O	SIGNAL	PIN No.	I/O	SIGANL	PIN No.	I/O	SIGNAL
1	–	VDD	23	–	NC	45	I	VCLR2
2	O	DO13	24	I	TE	46	I	OE2
3	O	DO12	25	–	NC	47	I	CKR2
4	O	DO11	26	–	NC	48	O	DO27
5	O	DO10	27	I	RM	49	O	DO26
6	I	CKR1	28	I	HCLR0	50	O	DO25
7	I	OE1	29	I	INC0	51	O	DO24
8	I	VCLR1	30	I	VCLR0	52	–	Vdb
9	I	INC1	31	I	WE	53	–	GND
10	I	HCLR1	32	I	CKW	54	O	DO23
11	I	ADD3	33	–	NC	55	O	DO22
12	I	ADD2	34	–	VDD	56	O	DO21
13	I	ADD1	35	I	DIN7	57	O	DO20
14	I	ADD0	36	I	DIN6	58	–	GND
15	I	APM	37	I	DIN5	59	–	VDD
16	–	NC	38	I	DIN4	60	O	DO17
17	–	NC	39	I	DIN3	61	O	DO16
18	–	GND	40	I	DIN2	62	O	DO15
19	–	NC	41	I	DIN1	63	O	DO14
20	–	NC	42	I	DIN0	64	–	GND
21	–	NC	43	I	HCLR2			
22	–	NC	44	I	INC2			

INPUT

ADD0 – ADD3 ; ADDRESS INPUT
APM ; ADDRESS PRESET MODE ENABLE
CKR1, CKR2 ; PORT 1 OR 2 SHIFT SIGNAL INPUT
CKW ; PORT 0 SHIFT SIGNAL INPUT
DIN0 – DIN7 ; PORT 0 DATA INPUT
HCLR0 – HCLR2 ; PORT 0 – 2 HORIZONTAL CLEAR
INC0 – INC2 ; PORT 0 – 2 LINE INCREMENT
RM ; RECURSIVE MODE ENABLE
TE ; TEST MODE ENABLE
VCLR0 – VCLR2 ; PORT 0 – 2 VERTICAL CLEAR
OE1, OE2 ; PORT 1 OR 2 OUTPUT ENABLE
WE ; PORT 0 WRITE ENABLE

OUTPUT

DO10 – DO17 ; PORT 1 DATA OUTPUT
DO20 – DO27 ; PORT 2 DATA OUTPUT

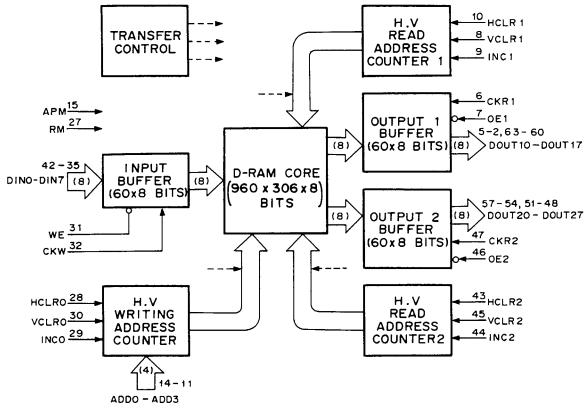

CXD8161AQ (SONY) FLAT PACKAGE

C-MOS DIGITAL Y/C SEPARATOR & CHROMA DECODER
– TOP VIEW –

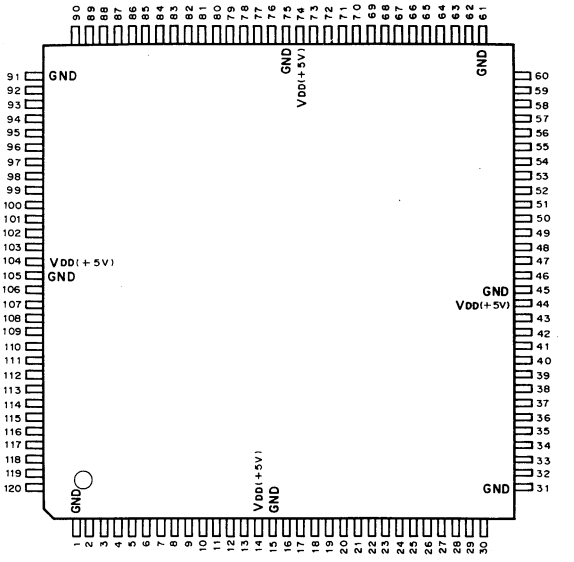

(VDD = + 5V)

PIN No.	I/O	SIGNAL	PIN No.	I/O	SIGNAL	PIN No.	I/O	SIGNAL	PIN No.	I/O	SIGNAL
1	–	GND	31	–	GND	61	–	GND	91	–	GND
2	O	PEW	32	I	DO9	62	O	YO2	92	O	BO1
3	O	PES	33	I	DO8	63	O	YO3	93	O	BO0
4	I	BI9	34	I	DO7	64	O	YO4	94	O	RO9
5	I	BI8	35	I	DO6	65	O	YO5	95	O	RO8
6	I	BI7	36	I	DO5	66	I	OE	96	I	HOD1
7	I	BI6	37	I	DO4	67	I	RND	97	I	HOD2
8	I	BI5	38	I	DO3	68	I	B67	98	I	HOD3
9	I	BI4	39	I	DO2	69	I	CO	99	I	HOD4
10	I	BI3	40	I	DO1	70	O	YO6	100	O	RO7
11	I	BI2	41	I	DO0	71	O	YO7	101	O	RO6
12	I	BI1	42	I	MRST	72	O	YO8	102	O	RO5
13	I	BI0	43	O	DRST	73	O	YO9	103	O	RO4
14	–	VDD	44	–	VDD	74	–	VDD	104	–	VDD
15	–	GND	45	–	GND	75	–	GND	105	–	GND
16	O	BCEW	46	I	DI9	76	O	BO9	106	O	RO3
17	O	BCES	47	I	DI8	77	O	BO8	107	O	RO2
18	O	RCEW	48	I	DI7	78	O	BO7	108	O	RO1
19	O	RCES	49	I	DI6	79	O	BO6	109	O	RO0
20	I	RI9	50	I	DI5	80	I	TMOD0	110	I	CLP
21	I	RI8	51	I	DI4	81	I	TMOD1	111	I	CBLK
22	I	RI7	52	I	DI3	82	I	TMOD2	112	I	YISC
23	I	RI6	53	I	DI2	83	I	TMOD3	113	I	HBLK
24	I	RI5	54	I	DI1	84	I	TMOD4	114	I	BPF
25	I	RI4	55	I	DI0	85	I	PM0	115	I	BW
26	I	RI3	56	I	CMOD2	86	I	PM1	116	I	LALT1
27	I	RI2	57	I	CMOD1	87	O	BO5	117	O	LALT0
28	I	RI1	58	I	CMOD0	88	O	BO4	118	I	PH1
29	I	RI0	59	O	YO0	89	O	BO3	119	I	PH0
30	I	HIZ	60	O	YO1	90	O	BO2	120	I	CLK

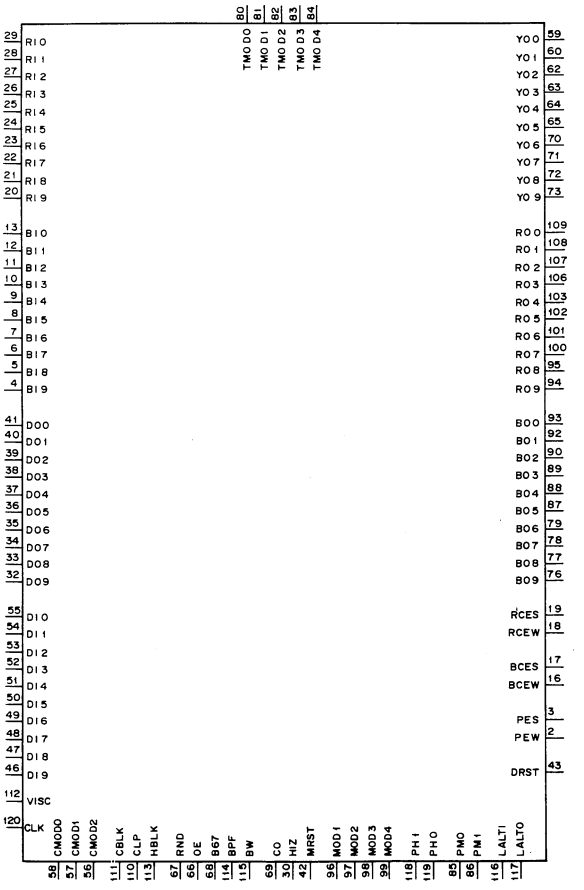

INPUT

B67	; CORRELATION DETECT SENSITIVITY SELECT (H ; 6 BITS/L ; 7 BITS)
BI0 – BI9	; B-Y DATA (COMPONENT MODE)
BPF	; L ; BAND PASS FILTER SELECT
BW	; COMPOSITE SIGNAL THROUGH OUT CONTROL
CBLK	; CHROMA BLANKING PULSE
CLK	; CLOCK
CLP	; CLAMP PULSE
* 1) CMOD0 – D2	; Y/C CORRECATION MODE SELECT
CO	; CHROMA DECODE CONTROL
DI0 – DI9	; 2H DELAY DATA (COMPOSITE MODE) for NTSC 4H DELAY DATA (COMPOSITE MODE) for PAL/PAL-M
DO0 – DO9	; 1H DELAY DATA (COMPOSITE MODE) for NTSC 2H DELAY DATA (COMPOSITE MODE) for PAL/PAL-M
HBLK	; H BLANKING PULSE
HIZ	; PULSE CONTROL
LALTI	; LINE ALTERNATE
* 2) MODE1 – MODE4	; MODE SELECT
MRST	; RESET
OE	; OUTPUT ENABLE
PH0, PH1	; REFERENCE PHASE for CHROMA DECODE and VLSC GENERATION
PM0, PM1	; PHASE SHIFT CONTROL
RI0 – RI9	; COMPOSITE DATA (COMPOSITE MODE) R-Y DATA (COMPONENT MODE) CHROMA DATA (CHROMA MODE)
RND	; OUTPUT ROUND OFF SELECT
TMOD0 – D4	; TEST MODE/BPF STAGE SELECT
VISC	; VIRTICAL INTERVAL SUB-CARRIER CONTROL

OUTPUT

BCES	; B-Y CLAMP ERROR SENSE
BCEW	; B-Y CLAMP ERROR WIDTH
BO0 – BO9	; B-Y DATA (B 09 ; MSB)
DRST	; EXTERNAL DELAY LINE RESET
LALTO	; LINE ALTERNATE
PES	; PHASE ERROR SENSE
PEW	; PHASE ERROR WIDTH
RCES	; R-Y CLAMP ERROR SENSE
RCEW	; R-Y CLAMP ERROR WIDTH
RO0 – RO9	; R-Y DATA (RO9 ; MSB)
YO0 – YO9	; Y DATA (YO9 ; MSB)

* 1)

CMOD2	CMOD1	CMOD0	MODE
0	0	0	0-1 FIX
0	0	1	1-2 FIX
0	1	0	0-1-2 FIX
0	1	1	BPF FIX
1	0	0	0-1/1-2/0-1 ADAPTIVE
1	0	1	0-1/1-2/1-2 ADAPTIVE
1	1	0	0-1/1-2/0-1-2 ADAPTIVE
1	1	1	0-1/1-2/0-1-2/BPF ADAPTIVE

0 ; LOW LEVEL
1 ; HIGH LEVEL

0-1 ; UPPER 2 LINE COMB FILTER
1-2 ; LOWER 2 LINE COMB FILTER
0-1-2 ; UPPER/LOWER 3 LINE COMB FILTER

* 2)

MODE2	MODE1	MODE
0	0	PAL
0	1	PAL-M
1	0	SECAM
1	1	NTSC

MODE4	MODE3	MODE
0	0	COMPONENT
0	1	COMPOSITE
1	0	CTDM
1	1	CHROMA

0 ; LOW LEVEL
1 ; HIGH LEVEL

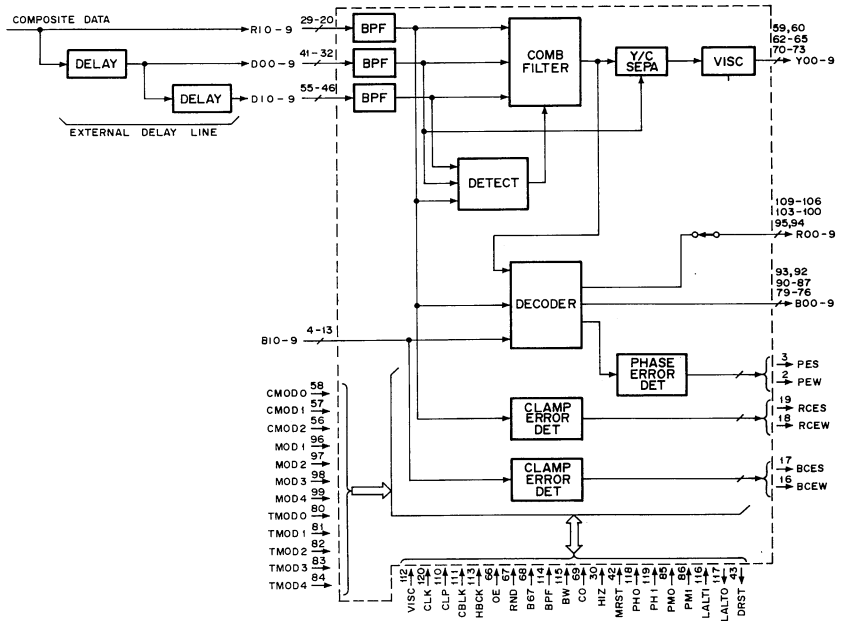

CXD8313Q (SONY)
C-MOS TBC
– TOP VIEW –

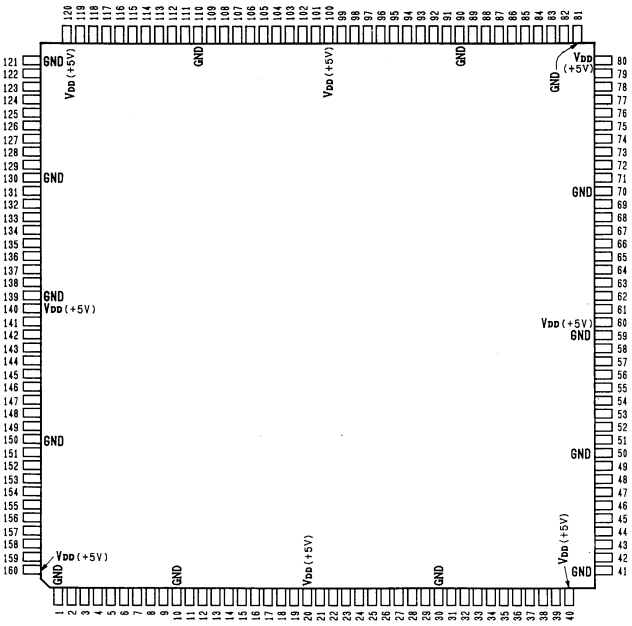

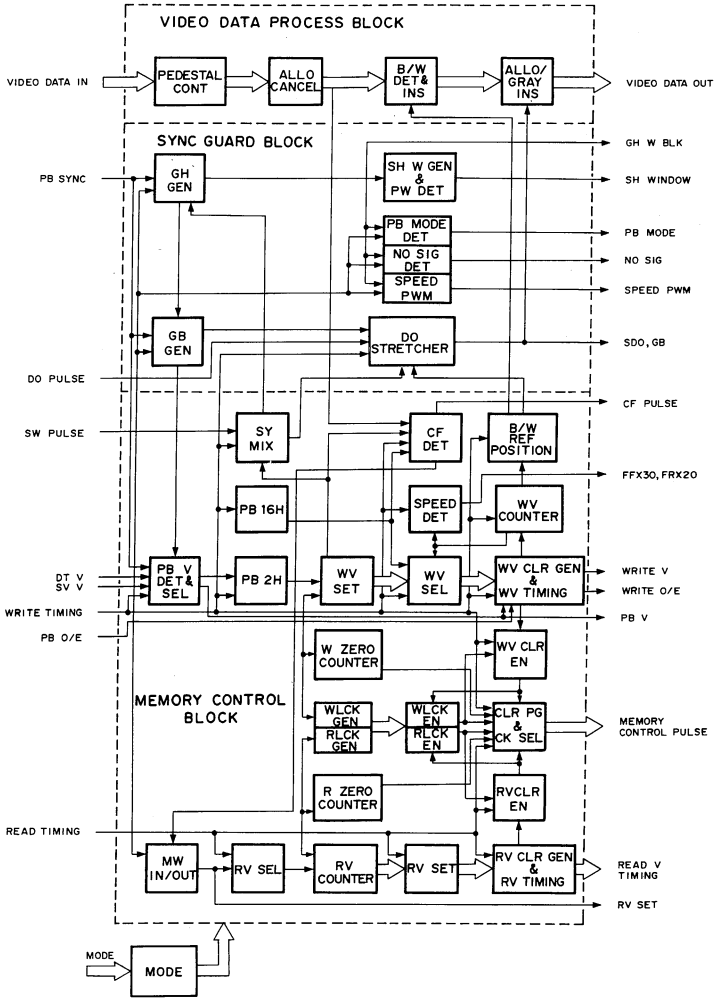

PIN No.	I/O	PIN NAME	PIN No.	I/O	PIN NAME	PIN No.	I/O	PIN NAME	PIN No.	I/O	PIN NAME
1	–	GND	41	–	GND	81	–	GND	121	–	GND
2	I	FWDXREV	42	I/O	RMAB	82	O	RBWLN	122	I	DIN9
3	I	X13	43	I/O	RVCLR	83	O	COMPBLK	123	I	DIN8
4	I	NOIPB	44	I/O	WMAB	84	O	VBLK2	124	I	DIN7
5	I	HEE	45	I/O	WVCLR	85	O	VBLK1	125	I	DIN6
6	I	HINPHASE	46	I/O	TDT0	86	O	ADVVBLK	126	I	DIN5
7	I	SHIFTINH	47	I	TST5	87	O	ADDTHRU	127	I	DIN4
8	O	VSCEXFP1	48	I	TST4	88	O	RDIZ	128	I	DIN3
9	O	VSCDTFP2	49	I	TST3	89	O	RCK	129	I	DIN2
10	–	GND	50	–	GND	90	–	GND	130	–	GND
11	I	OSCON	51	I	TST2	91	O	VCLR2	131	I	DIN1
12	I	MOD6	52	I	TST1	92	O	INC2	132	I	DIN0
13	I	DT	53	I	TST0	93	O	HCLR2	133	I	WCK
14	I	DTX3	54	I	RLMOFF	94	O	MRCK2	134	I	WZ
15	I	PBOE	55	I	FLMOFF	95	O	VCLR1	135	I	ADVWZ
16	I	DTV	56	I	MOD11	96	O	INC1	136	I	WCLP
17	I	SVV	57	I	MOD10	97	O	HCLR1	137	I	VISCCMUT
18	I	SWP	58	I	MOD7	98	O	MRCK1	138	I	PRCK
19	I	FRX3020	59	–	GND	99	O	VCLR0	139	–	GND
20	–	VDD	60	–	VDD	100	–	VDD	140	–	VDD
21	O	BINS	61	I/O	BID	101	O	INCO	141	I	PRZ
22	O	WINS	62	I/O	BIDDIR	102	O	HCLR0	142	I	PBSYNC
23	O	BWBLK	63	I	MOD4	103	O	DOCLR	143	O	WBLK
24	O	WHITECNT	64	I	MOD3	104	O	MWCK	144	I/O	GH
25	I	D0	65	I	MOD2	105	O	WE	145	O	SHW
26	I/O	PB16H	66	I	MOD1	106	O	DOUT0	146	I/O	SD01
27	I/O	PB2H	67	I	JUC	107	O	DOUT1	147	I/O	GB
28	O	COUNTERV	68	I	SGBLK	108	O	DOUT2	148	O	WDIZ
29	I/O	PBV	69	I	REFOE	109	O	DOUT3	149	I/O	FBID
30	–	GND	70	–	GND	110	–	GND	150	–	GND
31	O	WRITEV	71	I	READV	111	O	DOUT4	151	I/O	FFB
32	O	WOE	72	I	RZ	112	O	DOUT5	152	I/O	FRB
33	I/O	WVISCID	73	I	R456FH	113	O	DOUT6	153	O	FF30COFF
34	O	RVISCID	74	I	R2BH	114	O	DOUT7	154	O	FR30HDL
35	I/O	RVSET	75	I	R2FH	115	–	–	155	I	THRU2
36	I/O	WENP	76	I	HCK	116	O	DOUT8	156	I	THRU1
37	I/O	RENP	77	I	SDATA	117	O	DOUT9	157	I/O	NOSIG
38	I	LEVTST	78	I	SLD	118	O	SDO2WDO	158	O	PDSCONT
39	I	CLR	79	I	SCK	119	I	HOE	159	O	SPDPWM
40	–	VDD	80	–	VDD	120	–	VDD	160	–	VDD

L78M09T-FA (SANYO) +9V 0.5A
PQ05SZ51 (SHARP) +5V 1A

POSITIVE VOLTAGE REGULATOR

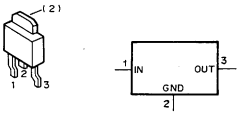

L79M05T-FA (SANYO) −5 V
L79M09T-FA (SANYO) −9 V

NEGATIVE VOLTAGE REGULATOR (500 mA)

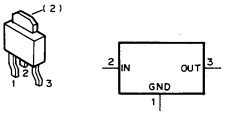

LA7205 (SANYO)

AGC AMP, INPUT SELECT, AGC DET, COMPARATOR
− SIDE VIEW −

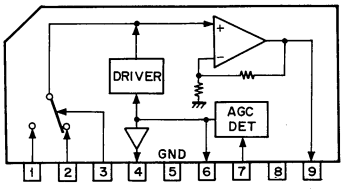

LM1881M (NS) FLAT PACKAGE

VIDEO SYNC SEPARATOR
− TOP VIEW −

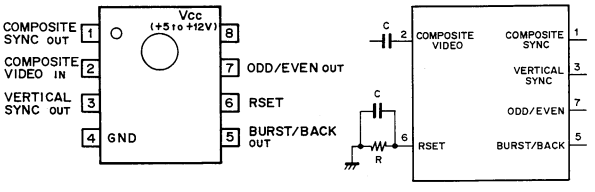

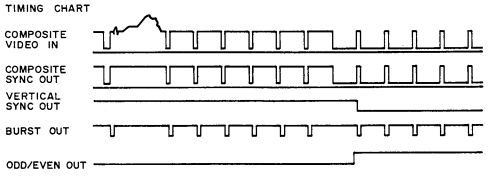

LM358P (TI)
UPC358C (NEC)
UPC358G2 (NEC) FLAT PACKAGE

DUAL OPERATIONAL AMPLIFIERS
− TOP VIEW −

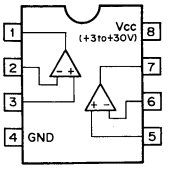

LM2903P (TI)
LM2903PS (TI) FLAT PACKAGE
NJM2903D (JRC)

DUAL VOLTAGE COMPARATORS
− TOP VIEW −

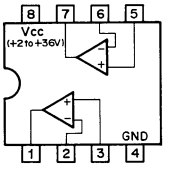

LM311PS (TI) FLAT PACKAGE

VOLTAGE COMPARATOR WITH STROBE
− TOP VIEW −

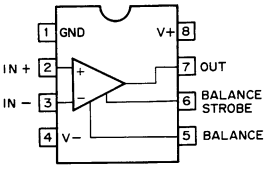

LB1620 (SANYO)

3-PHASE MOTOR DRIVER
– TOP VIEW –

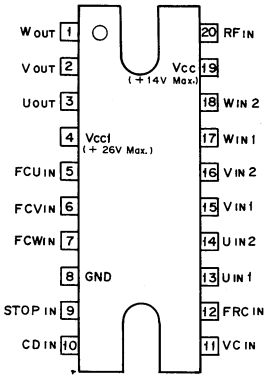

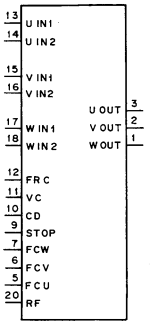

	SOURCE / SINK	INPUT U	INPUT V	INPUT W	FRC
1	W PHASE→V PHASE	1	1	0	0
	V PHASE→W PHASE				1
2	W PHASE→U PHASE	1	0	0	0
	U PHASE→W PHASE				1
3	V PHASE→W PHASE	0	0	1	0
	W PHASE→V PHASE				1
4	U PHASE→V PHASE	0	1	0	0
	V PHASE→U PHASE				1
5	V PHASE→U PHASE	1	0	1	0
	U PHASE→V PHASE				1
6	U PHASE→W PHASE	0	1	1	0
	W PHASE→U PHASE				1

0 ; LOW LEVEL
1 ; HIGH LEVEL

INPUT

CD	; CURRENT DETECTION
FCU	; PHASE COMPENSATION
FCV	; PHASE COMPENSATION
FCW	; PHASE COMPENSATION
FRC	; DIRECTION CONTROL
RF	; CURRENT DETECTION
STOP	; OVERCURRENT PROTECTION
UIN1, UIN2	; U PHASE HALL ELEMENT
VC	; SPEED/PHASE CONTROL
VIN1, VIN2	; V PHASE HALL ELEMENT
WIN1, WIN2	; W PHASE HALL ELEMENT

OUTPUT

U OUT	; U PHASE OUTPUT
V OUT	; V PHASE OUTPUT
W OUT	; W PHASE OUTPUT

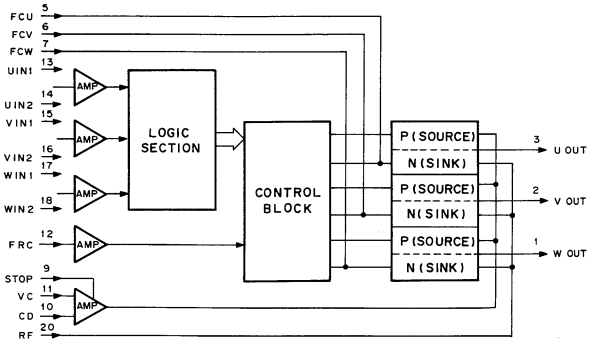

HD6435348RA00F (HITACHI)

C-MOS 8-BIT 1-CHIP MICROCOMPUTER
– TOP VIEW –

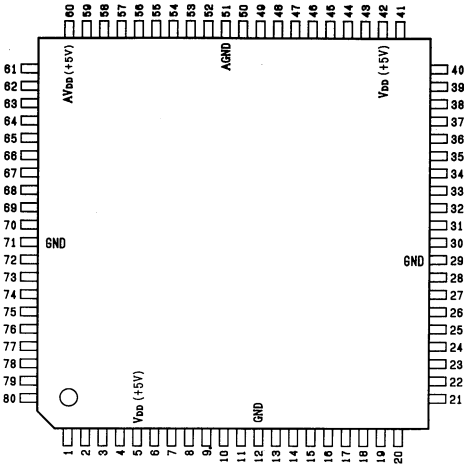

AVDD, VDD = (+5V)

PIN No.	I/O	SIGNAL	PIN No.	I/O	SIGNAL
1	I/O	P21/R/$\overline{W}$	41	I/O	P63/PM3/$\overline{IRQ_5}$/A19
2	I/O	P22/$\overline{DS}$	42	–	VDD
3	I/O	P23/$\overline{RD}$	43	I/O	P70/TMCI
4	I/O	P24/$\overline{WR}$	44	I/O	P71/FTI1
5	–	VDD	45	I/O	P72/FTI2
6	I	MD0	46	I/O	P73/FTI3/TMRI
7	I	MD1	47	I/O	P74/FTOB1/FTCI1
8	I	MD2	48	I/O	P75/FTOB2/FTCI2
9	I	$\overline{STBY}$	49	I/O	P76/FTOB3/FTCI3
10	I	$\overline{RES}$	50	I/O	P77/FTOA1
11	I	NMI	51	–	AGND
12	–	GND	52	I	P80/AN0
13	I/O	P30/D0	53	I	P81/AN1
14	I/O	P31/D1	54	I	P82/AN2
15	I/O	P32/D2	55	I	P83/AN3
16	I/O	P33/D3	56	I	P84/AN4
17	I/O	P34/D4	57	I	P85/AN5
18	I/O	P35/D5	58	I	P86/AN6
19	I/O	P36/D6	59	I	P87/AN7
20	I/O	P37/D7	60	–	AVDD
21	I/O	P40/A0	61	I/O	P90/FTOA2
22	I/O	P41/A1	62	I/O	P91/FTOA3
23	I/O	P42/A2	63	I/O	P92/TXD2/PW1
24	I/O	P43/A3	64	I/O	P93/RXD2/PW2
25	I/O	P44/A4	65	I/O	P94/SCK2/PW3
26	I/O	P45/A5	66	I/O	P95/TXD1
27	I/O	P46/A6	67	I/O	P96/RXD1
28	I/O	P47/A7	68	I/O	P97/SCK1
29	–	GND	69	I	EXTAL
30	I/O	P50/A1	70	I	XTAL
31	I/O	P51/A2	71	–	GND
32	I/O	P52/A10	72	I/O	P10/φ
33	I/O	P53/A11	73	I/O	P11/E
34	I/O	P54/A12	74	I/O	P12/$\overline{BACK}$
35	I/O	P55/A13	75	I/O	P13/$\overline{BREQ}$
36	I/O	P56/A14	76	I/O	P14/$\overline{WAIT}$
37	I/O	P57/A15	77	I/O	P15/$\overline{IRQ0}$
38	I/O	P60/$\overline{IRQ_2}$/A16	78	I/O	P16/$\overline{IRQ1}$/$\overline{ADTRG}$
39	I/O	P61/PM1/$\overline{IRQ_3}$/A17	79	I/O	P17/TMO
40	I/O	P62/PM2/$\overline{IRQ_4}$/A18	80	I/O	P20/$\overline{AS}$

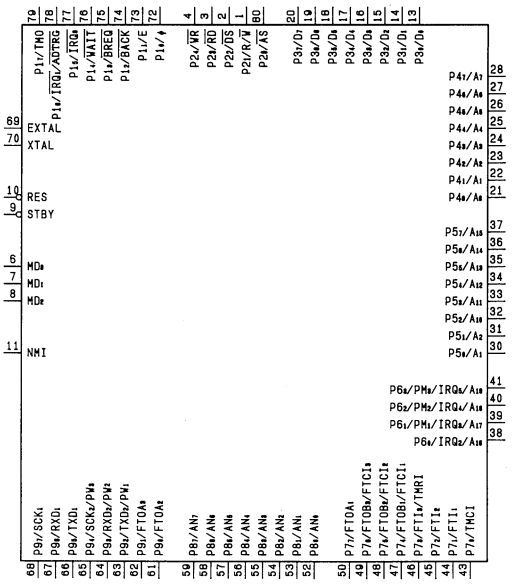

INPUT

ADTRG	; EXTERNAL TRIGGER
AN0 – AN7	; ANALOG DATA
BREQ	; BUS REQUEST
EXTAL	; CONNECTED TO CRYSTAL OSCILLATOR
FTCI1 – FTCI3	; FRT COUNTER CLOCK (CHANNEL 1 TO 3)
FTI1 – FTI3	; FRT INPUT CAPTURE (CHANNEL 1 TO 3)
IRQ0 – IRQ5	; INTERRUPTION REQUEST 0 AND 1
MD0 – MD2	; MODE SETTING
NMI	; NON MASKABLE INTERRUPTION
P80 – P87	; PORT 8
RES	; RESET
RXD1, 2	; RECEIVE DATA
STBY	; STANDBY
TMCI	; 8-BIT TIMER CLOCK
TMRI	; 8-BIT TIMER COUNTER RESET
WAIT	; WAIT
XTAL	; CONNECTED TO CRYSTAL OSCILLATOR

OUTPUT

A0 – A19	; ADDRESS BUS
AS	; ADDRESS STROBE
BACK	; BUS REQUEST ACKNOWLEDGE
DS	; DATA STROBE
E	; ENABLE CLOCK
FTOA1 – FTOA3	; FRT OUTPUT COMPARE A (CHANNEL 1 TO 3)
FTOB1 – FTOB3	; FRT OUTPUT COMPARE B (CHANNEL 1 TO 3)
PW1 – PW3	; PWM TIMER (CHANNEL 1 TO 3)
R/W	; READ/WRITE
RD	; READ
TMO	; 8-BIT TIMER
TXD1, 2	; SEND DATA
WR	; WRITE
φ	; SYSTEM CLOCK

INPUT/OUTPUT

D0 – D7	; DATA BUS
P10 – P17	; PORT 1
P20 – P24	; PORT 2
P30 – P37	; PORT 3
P40 – P47	; PORT 4
P50 – P57	; PORT 5
P60 – P63	; PORT 6
P70 – P77	; PORT 7
P90 – P97	; PORT 9
SCK1, 2	; SERIAL CLOCK

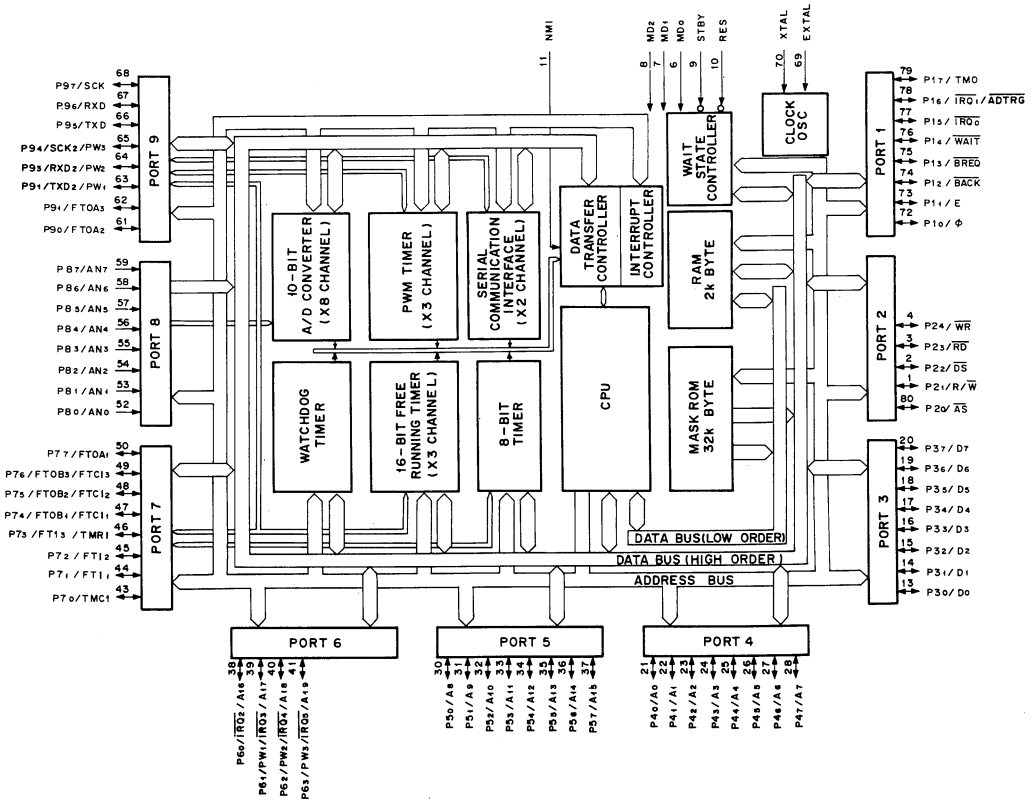

M51957BFP (MITSUBISHI) FLAT PACKAGE

VOLTAGE DETECTOR
– TOP VIEW –

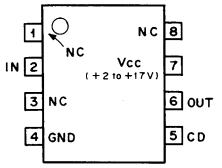

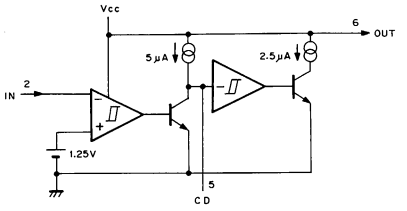

M51957BL (MITSUBISHI)

VOLTAGE DETECT DELAY
– PRINTED SIDE VIEW –

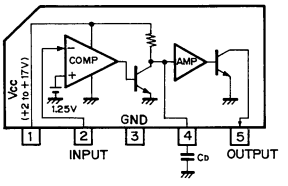

TIMING CHART

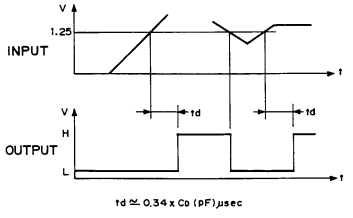

M51958A (MITSUBISHI) FLAT PACKAGE

VOLTAGE DETECT DELAY
– TOP VIEW –

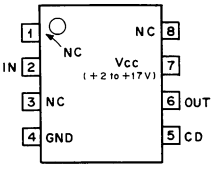

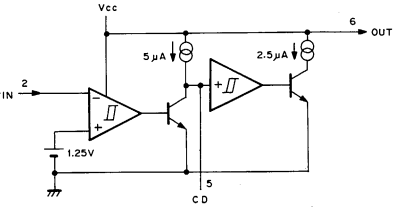

M54523P (MITSUBISHI)

BIPOLAR TRANSISTOR ARRAY WITH OPEN COLLECTOR
– TOP VIEW –

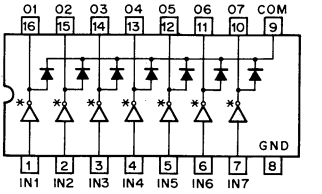

COM : COMMON

M54532P (MITSUBISHI)

DARLINGTON TRANSISTOR ARRAY WITH CLAMP DIODE
– TOP VIEW –

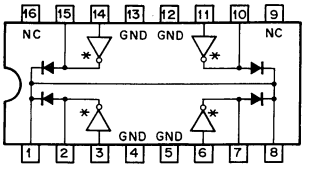

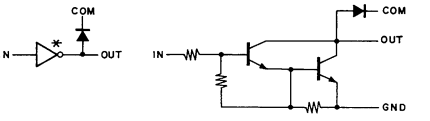

MB4002PF (FUJITSU) FLAT PACKAGE

HIGH SPEED VOLTAGE COMPARATOR
– TOP VIEW –

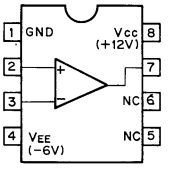

MB88201 (FUJITSU)

C-MOS 4-BIT MICROCOMPUTER
– TOP VIEW –

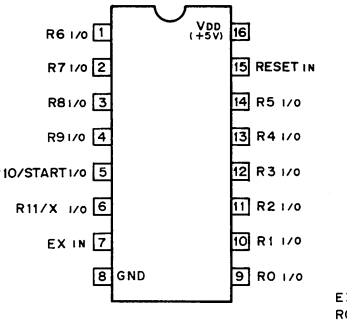

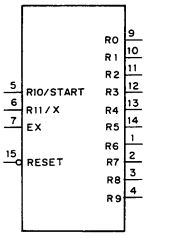

EX ; EXTERNAL X'TAL IN
R0–R11 ; I/O PORT(R) IN/OUT
RESET ; RESET IN
START ; STANDBY RELEASE IN
R11/X ; EXT CLOCK IN/INT CLOCK OUT

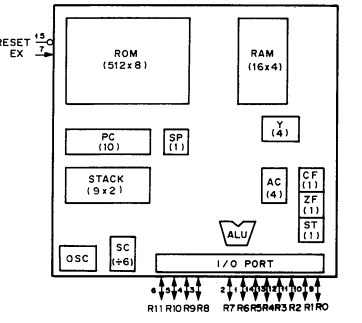

MB40568 (FUJITSU) FLAT PACKAGE

MB40568PF (FUJITSU) FLAT PACKAGE

8BIT VIDEO A/D CONVERTER

– TOP VIEW –

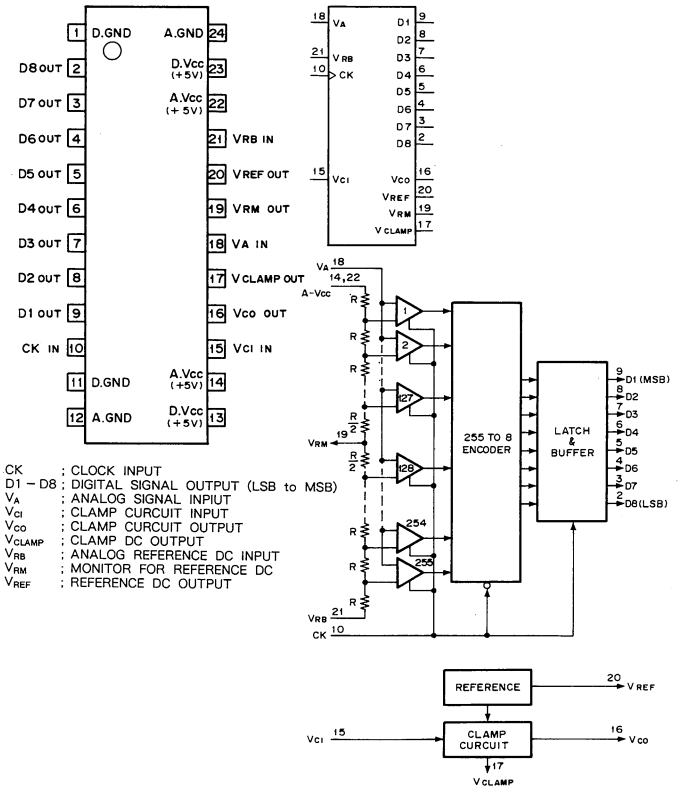

CK ; CLOCK INPUT
D1 – D8 ; DIGITAL SIGNAL OUTPUT (LSB to MSB)
V_A ; ANALOG SIGNAL INPIUT
V_{CI} ; CLAMP CURCUIT INPUT
V_{CO} ; CLAMP CURCUIT OUTPUT
V_{CLAMP} ; CLAMP DC OUTPUT
V_{RB} ; ANALOG REFERENCE DC INPUT
V_{RM} ; MONITOR FOR REFERENCE DC
V_{REF} ; REFERENCE DC OUTPUT

MB88342PF (FUJITSU) FLAT PACKAGE

C-MOS 8-BIT D/A CONVERTER

– TOP VIEW –

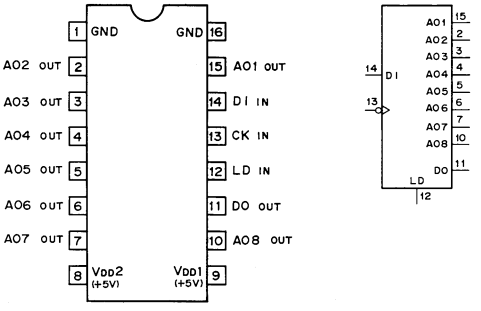

AO1 – AO8 ; 8-BIT D/A OUTPUTS
CK ; CLOCK INPUT
DI ; SERIAL DATA INPUT
DO ; DATA OUTPUT
LD ; DATA LOAD CONTROL INPUT (H ; LOAD)

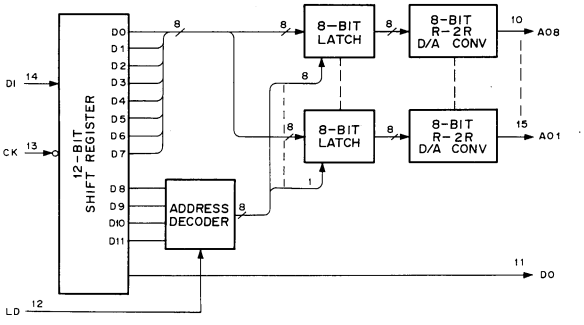

MC14051BF (MOTOROLA) FLAT PACKAGE

C-MOS 8-CHANNEL ANALOG MULTIPLEXER/DEMULTIPLEXER

– TOP VIEW –

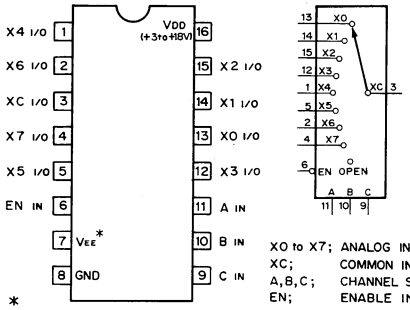

*
V_{EE} ; $V_{DD} - V_{EE}$ = +3 to +18V

XO to X7; ANALOG INPUTS/OUTPUTS
XC; COMMON INPUT/OUTPUT
A,B,C; CHANNEL SELECT INPUT
EN; ENABLE INPUT

CONTROL INPUTS				SELECTED CHANNEL
EN	SELECT C	B	A	
0	0	0	0	X0
0	0	0	1	X1
0	0	1	0	X2
0	0	1	1	X3
0	1	0	0	X4
0	1	0	1	X5
0	1	1	0	X6
0	1	1	1	X7
1	X	X	X	OPEN

0; LOW LEVEL
1; HIGH LEVEL
X; DON'T CARE

MC14052BF (MOTOROLA) FLAT PACKAGE

C-MOS DUAL 4-CHANNEL ANALOG MULTIPLEXERS/DEMULTIPLEXERS

– TOP VIEW –

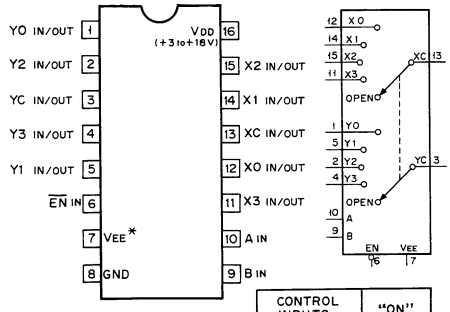

V_{EE}* ; $V_{DD} - V_{EE}$ = +3 to +18V

CONTROL INPUTS			"ON" CHANNEL
EN	B	A	
0	0	0	0
0	0	1	1
0	1	0	2
0	1	1	3
1	X	X	OPEN

0; LOW LEVEL
1; HIGH LEVEL
X; DON'T CARE.

MC14053BCP (MOTOROLA)

MC14053BF (MOTOROLA) FLAT PACKAGE

UPD4053BC (NEC)

C-MOS TRIPLE 2-CHANNEL ANALOG MULTIPLEXERS/DEMULTIPLEXERS

– TOP VIEW –

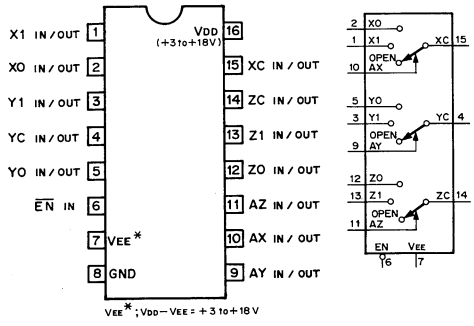

V_{EE}* ; $V_{DD} - V_{EE}$ = +3 to +18 V

CONT. INPUTS		ON CHANNEL
EN	A (X,Y,Z,)	
0	0	0
0	1	1
1	X	OPEN

0; LOW LEVEL
1; HIGH LEVEL
X; DON'T CARE.

MC14066BF (MOTOROLA) FLAT PACKAGE

C-MOS QUAD BILATERAL ANALOG SWITCH
– TOP VIEW –

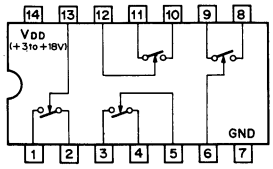

CONTROL	SWITCH
0	OFF
1	ON

0; LOW LEVEL
1; HIGH LEVEL

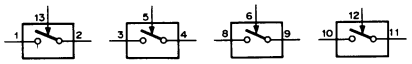

MC14069UBF (MOTOROLA)

C-MOS INVERTER
– TOP VIEW –

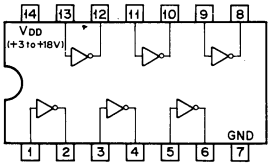

A → Y = A → Y

Y = $\overline{A}$

A	Y
0	1
1	0

0; LOW LEVEL
1; HIGH LEVEL

MC14576BF (MOTOROLA) FLAT PACKAGE
MC14576CFEL (MOTOROLA) FLAT PACKAGE

C-MOS DUAL VIDEO AMPLIFIERS
– TOP VIEW –

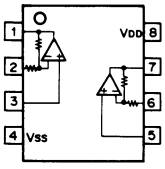

*|VDD + | Vss | = + 5V to + 12V

MC34051M (MOTOROLA) FLAT PACKAGE

RS-422 DRIVER/RECEIVER
– TOP VIEW –

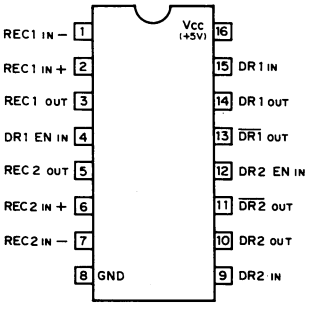

DR EN	MODE
0	DISABLE
1	ENABLE

0 ; LOW LEVEL
1 ; HIGH LEVEL

DR ; DRIVER
DR EN ; DRIVER ENABLE
REC ; RECEIVER

DRIVER CIRCUIT

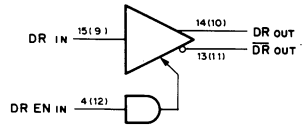

RECEIVER CIRCUIT

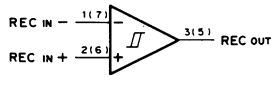

MC68HC05C8 (MOTOROLA)

C-MOS 8-BIT MICROCONTROLLER UNIT
– TOP VIEW –

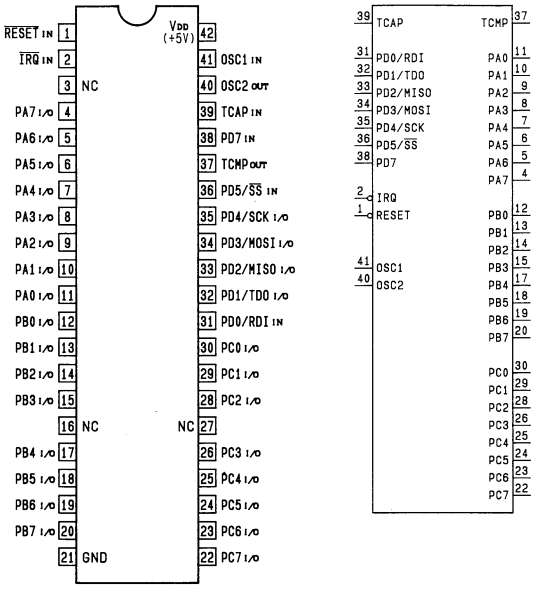

INPUT

IRQ	; INTERRUPT REQUEST
OSC1	; OSCILLATOR FREQUENCY
PD0 – PD5, PD7	; PROGRAMMABLE D PORT
RDI	; RECEIVING DATA
RESET	; RESET
SS	; SUB SELECT
TCAP	; CAPTURE FEATURE FOR THE ON-CHIP PROGRAMMABLE TIMER

OUTPUT

OSC2	; OSCILLATOR FREQUENCY
SCK	; SERIAL CLOCK
TCMP	; COMPARE FEATURE OF THE ON-CHIP TIMER
TDO	; TRANSMITION DATA

INPUT/OUTPUT

MISO	; MASTER INPUT, SUB OUTPUT
MOSI	; MASTER OUTPUT, SUB INPUT
PA0 – PA7	; PROGRAMMABLE A PORT
PB0 – PB7	; PROGRAMMABLE B PORT
PC0 – PC7.	; PROGRAMMABLE C PORT

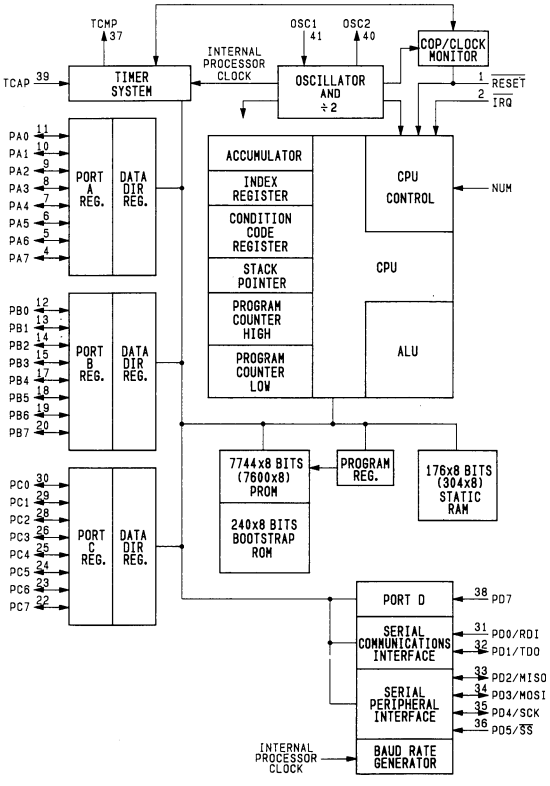

MC74HC4002F (MOTOROLA) FLAT PACKAGE

C-MOS 4-INPUT NOR GATE
– TOP VIEW –

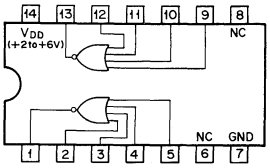

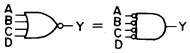

A	B	C	D	Y
0	0	0	0	1
X	X	X	1	0
X	X	1	X	0
X	1	X	X	0
1	X	X	X	0

0; LOW LEVEL
1; HIGH LEVEL
X; DON'T CARE

MC74HC173F (MOTOROLA) FLAT PACKAGE

C-MOS 4-BIT D-TYPE REGISTERS WITH 3-STATE OUTPUT
– TOP VIEW –

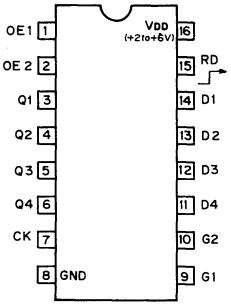

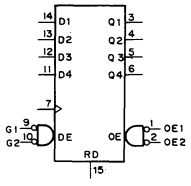

D1 – D4 ; DATA INPUT
Q1 – Q4 ; OUTPUT (3-STATE)
G1, G2 ; DATA ENABLE INPUT
OE1, OE2 ; OUTPUT ENABLE INPUT

INPUT							OUTPUT
RD	CK	DATA IN G1	DATA IN G2	D	OUTPUT EN OE1	OUTPUT EN OE2	Q
1	X	X	X	X	0	0	0
0	0	X	X	X	0	0	Q0
0	↑	1	X	X	0	0	Q0
0	↑	X	1	X	0	0	Q0
0	↑	0	0	0	0	0	0
0	↑	0	0	1	0	0	1
X	X	X	X	X	1	X	HI-Z
X	X	X	X	X	X	1	HI-Z

0 ; LOW LEVEL
1 ; HIGH LEVEL
X ; DON'T CARE
HI-Z ; HIGH IMPEDANCE
Q0 ; LEVEL OF Q BEFORE THE INDICATED INPUT CONDITIONS WERE STABLISHED

MC74HC4024N (MOTOROLA)

C-MOS 7-BIT BINARY COUNTERS
– TOP VIEW –

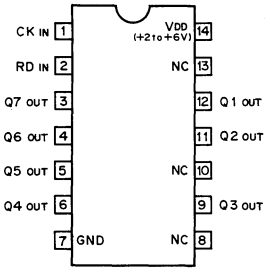

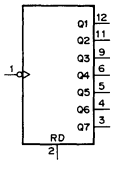

COUNT	INPUTS CK	INPUTS RD	OUTPUTS Q7	Q6	Q5	Q4	Q3	Q2	Q1
0	X	1	0	0	0	0	0	0	0
1	↓	0	0	0	0	0	0	0	1
2	↓	0	0	0	0	0	0	1	0
3	↓	0	0	0	0	0	0	1	1
	⋮		⋮	⋮	⋮	⋮	⋮	⋮	⋮
125	↓	0	1	1	1	1	1	0	1
126	↓	0	1	1	1	1	1	1	0
127	↓	0	1	1	1	1	1	1	1
–	0	0	NO CHANGE						
–	1	0							

0; LOW LEVEL
1; HIGH LEVEL
X; DON'T CARE

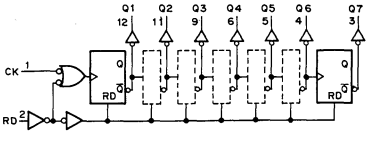

MS6264CLL-10FC (MOSEL) FLAT PACKAGE

C-MOS 64K (8kx8)-BIT STATIC RAM
– TOP VIEW –

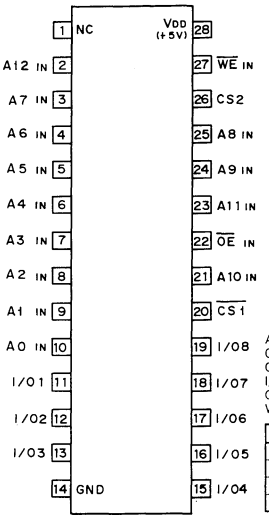

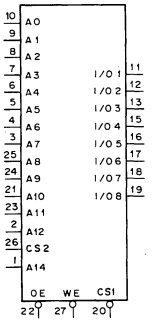

A0 – A12 ; ADDRESS INPUTS
CS1 ; CHIP SELECT 1 INPUT
CS2 ; CHIP SELECT 2 INPUT
I/O1 – I/O8 ; DATA INPUTS/OUTPUTS
OE ; OUTPUT ENABLE INPUT
WE ; WRITE ENABLE INPUT

CS1	CS2	OE	WE	MODE	I/O TERMINAL
1	X	X	X	NOT SELECT	HIGH IMPEDANCE
0	1	1	1	OUTPUT DISABLE	HIGH IMPEDANCE
0	1	0	1	READ	OUTPUT DATA
0	1	X	0	WRITE	INPUT DATA

0 ; LOW LEVEL
1 ; HIGH LEVEL
X ; DON'T CARE

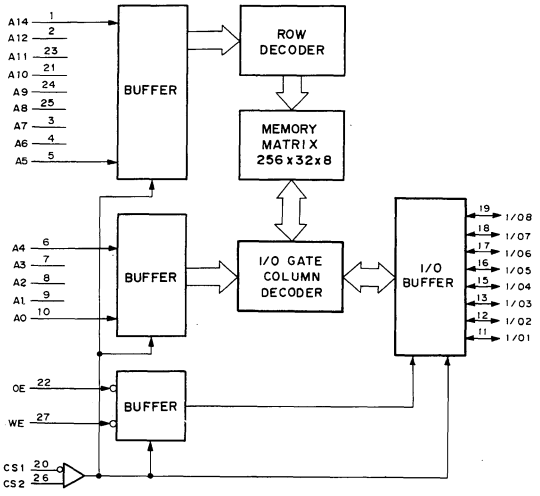

MC74HC4538AN (MOTOROLA)

C - MOS DUAL RETRIGGERABLE / NON - RETRIGGERABLE MONOSTABLE MULTIVIBRATOR
– TOP VIEW –

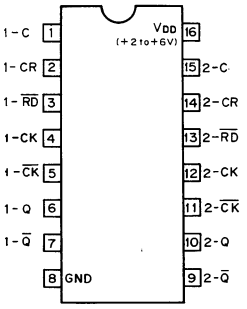

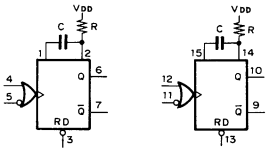

OUTPUT PULSE WIDTH = k·C·R

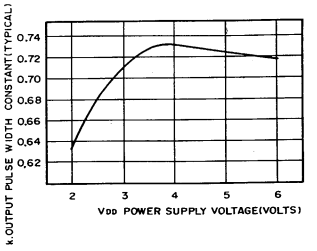

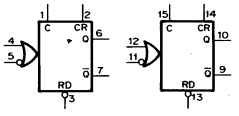

RETRIGGERABLE M.M.V

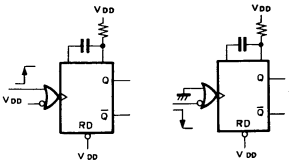

NON-RETRIGGERABLE M.M.V

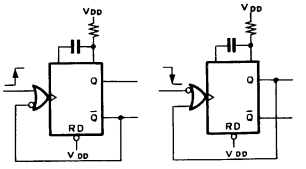

NJM2068DD (JRC)

LOW NOISE OPERATIONAL AMPLIFIER
– TOP VIEW –

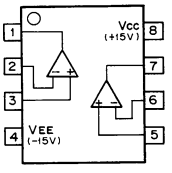

NJM360M (JRC) FLAT PACKAGE

HIGH SPEED VOLTAGE COMPARATOR
(TTL OUTPUT)
– TOP VIEW –

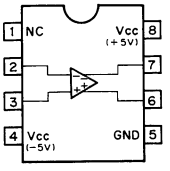

NJM4556M-A (JRC) FLAT PACKAGE

OPERATIONAL AMPLIFIER
(WIDE BAND, DECOMPENSATED)
– TOP VIEW –

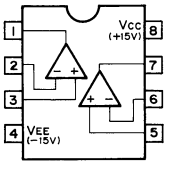

NJM4558D-D (JRC)
NJM4558D-FA (JRC)
NJM4558M (JRC) FLAT PACKAGE

DUAL OPERATIONAL AMPLIFIER
– TOP VIEW –

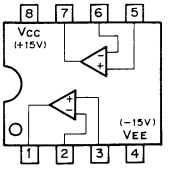

NJM78L09A (JRC) + 9V (100mA)
TA78L09S (TOSHIBA) + 9V (100mA)

POSITIVE VOLTAGE REGULATOR

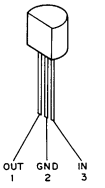

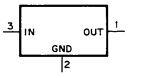

NJM78M09FA (JRC) + 9V

POSITIVE VOLTAGE REGULATOR (500mA)
– FRONT VIEW –

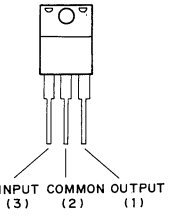

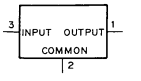

NJM79L05A (JRC) – 5V
NJM79L09A (JRC) – 9V

NEGATIVE VOLTAGE REGULATOR (100mA)

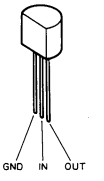

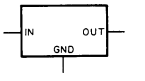

NJM79M09FA (JRC) – 9V
NEGATIVE VOLTAGE REGULATOR (500mA)
– FRONT VIEW –

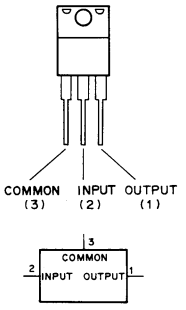

PQ30RV1 (SHARP) VARIABLE 1A
POSITIVE VOLTAGE REGULATOR

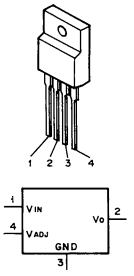

SC14S66FEL (MOTOROLA) CHIP PACKAGE
C-MOS BILATERAL ANALOG SWITCH

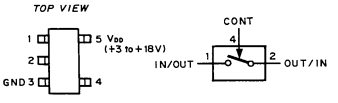

CONT	SWITCH
0	OFF
1	ON

0 ; LOW LEVEL
1 ; HIGH LEVEL

SC7S04F (MOTOROLA) CHIP PACKAGE
TC7S04F (TOSHIBA) CHIP PACKAGE
C-MOS INVERTER

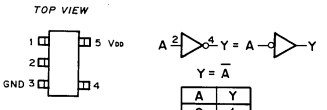

$Y = \overline{A}$

A	Y
0	1
1	0

0; LOW LEVEL
1 ; HIGH LEVEL

TYPE	VDD
7S04F 7SU04F	+ 2 to + 6V
4S69F 4SU69F	+ 3 to + 18V

SC7S32F (MOTOROLA) CHIP PACKAGE
TC7S32F (TOSHIBA) CHIP PACKAGE
C-MOS 2-INPUT OR GATE

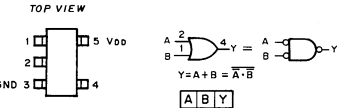

$Y = A + B = \overline{\overline{A} \cdot \overline{B}}$

A	B	Y
0	0	0
0	1	1
1	0	1
1	1	1

0 ; LOW LEVEL
1 ; HIGH LEVEL

TYPE	VDD
7S32F 7S32FU	+ 2 to + 6V
4S71F	+ 3 to + 18V

SN74HC00AN (TI)
SN74HC00ANS (TI) FLAT PACKAGE
C-MOS QUAD 2-INPUT NAND GATES
– TOP VIEW –

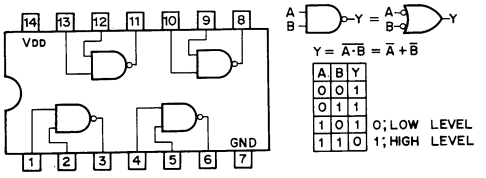

$Y = \overline{A \cdot B} = \overline{A} + \overline{B}$

A	B	Y
0	0	1
0	1	1
1	0	1
1	1	0

0; LOW LEVEL
1; HIGH LEVEL

NOTE :

TYPE	VDD
TC74AC00 TYPE TC74VHC00	+2 to +5.5V
MC74HCT00N	+5V
74ACT00 TYPE	+4.5 to +5.5V
OTHER TYPES	+2 to +6V

SN74HC04ANS (TI) FLAT PACKAGE
SN74HCU04AN (TI)
SN74HCU04ANS (TI) FLAT PACKAGE
C-MOS HEX INVERTERS
– TOP VIEW –

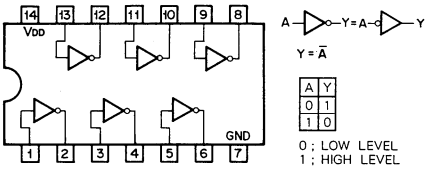

$Y = \overline{A}$

A	Y
0	1
1	0

0 ; LOW LEVEL
1 ; HIGH LEVEL

NOTE :

TYPE	VDD
74HCT04 TYPE	+ 5V
TC74AC04 TYPE TC74VHC04 TYPE	+ 2 to + 5.5V
74ACT04 TYPE	+ 4.5 to + 5.5V
OTHER TYPES	+ 2 to + 6V

SN74HC08AN (TI)
SN74HC08ANS (TI) FLAT PACKAGE
C-MOS QUAD 2-INPUT AND GATES
– TOP VIEW –

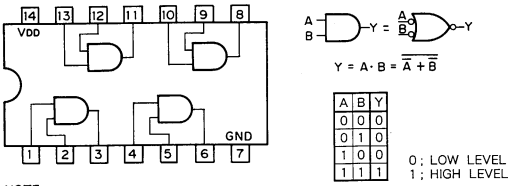

$Y = A \cdot B = \overline{\overline{A} + \overline{B}}$

A	B	Y
0	0	0
0	1	0
1	0	0
1	1	1

0 ; LOW LEVEL
1 ; HIGH LEVEL

NOTE :

TYPE	VDD
TC74AC08F MC74ACT08M	+ 2 to + 5.5V
TC40H	+ 2 to + 8V
OTHER TYPES	+ 2 to + 6V

SN74HC10ANS (TI) FLAT PACKAGE

C-MOS 3-INPUT NAND GATE
– TOP VIEW –

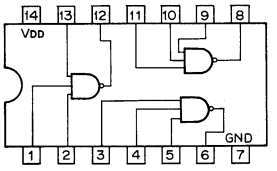

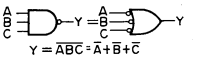

A	B	C	Y
0	0	0	1
0	0	1	1
0	1	0	1
0	1	1	1
1	0	0	1
1	0	1	1
1	1	0	1
1	1	1	0

0 ; LOW LEVEL
1 ; HIGH LEVEL

NOTE :

TYPE	VDD
TC40H	+2 to +8V
OTHERS	+2 to +6V

SN74HC11ANS (TI) FLAT PACKAGE

C-MOS 3-INPUT POSITIVE-AND GATE

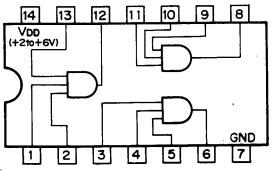

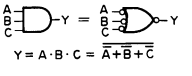

A	B	C	Y
0	0	0	0
0	0	1	0
0	1	0	0
0	1	1	0
1	0	0	0
1	0	1	0
1	1	0	0
1	1	1	1

0;LOW LEVEL
1;HIGH LEVEL

SN74HC138ANS (TI) FLAT PACKAGE

C-MOS 3-TO-8 LINE DECODER/DEMULTIPLEXER
– TOP VIEW –

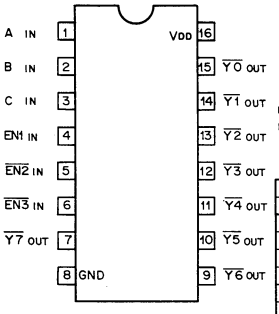

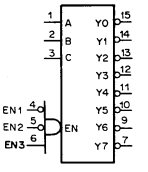

INPUTS				OUTPUTS							
EN	C	B	A	Y7	Y6	Y5	Y4	Y3	Y2	Y1	Y0
0	X	X	X	1	1	1	1	1	1	1	1
1	0	0	0	1	1	1	1	1	1	1	0
1	0	0	1	1	1	1	1	1	1	0	1
1	0	1	0	1	1	1	1	1	0	1	1
1	0	1	1	1	1	1	1	0	1	1	1
1	1	0	0	1	1	1	0	1	1	1	1
1	1	0	1	1	1	0	1	1	1	1	1
1	1	1	0	1	0	1	1	1	1	1	1
1	1	1	1	0	1	1	1	1	1	1	1

$EN = \overline{EN1} \cdot \overline{EN2} \cdot EN3$

0 ; LOW LEVEL
1 ; HIGH LEVEL
X ; DON'T CARE

NOTE :

TYPE	VDD
74HCT138 TYPE	+5V
74ACT138 TYPE	+4.5 to +5.5V
TC74AC138 TYPE TC74VHC138	+2 to +5.5V
OTHER TYPES	+2 to +6V

SN74HC157ANS (TI) FLAT PACKAGE

C-MOS QUAD 2-LINE-TO-1-LINE DATA SELECTOR/MULTIPLEXER
– TOP VIEW –

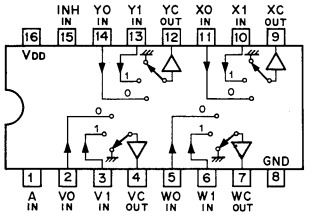

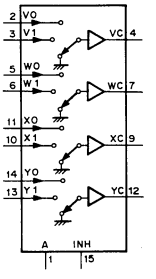

NOTE :

TYPE	VDD
74ACT157	+5V
TC74AC157P TC74AC157F	+2 to +5.5V
TC40H	+2 to +8V
OTHER TYPES	+2 to +6V

CONT. IN		ON CHANNEL
INH	A	
0	0	0
0	1	1
1	X	GND

0 ; LOW LEVEL
1 ; HIGH LEVEL
X ; DON'T CARE

SN74HC161AN (TI)

C-MOS SYNCHRONOUS PRESETTABLE 4-BIT BINARY COUNTER
– TOP VIEW –

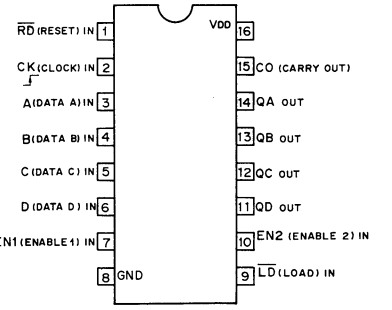

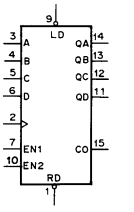

MODE SELECTION

CONTROL INPUTS				MODE
RD	LD	EN1	EN2	
0	X	X	X	RESET (ASYNCHRONOUS)
1	0	X	X	PRESET (SYNCHRONOUS)
1	1	0	X	NO COUNT
1	1	X	0	NO COUNT
1	1	1	1	COUNT

0 ; LOW LEVEL
1 ; HIGH LEVEL
X ; DON'T CARE

COUNT SEQUENCE

COUNT	OUTPUTS			
	QD	QC	QB	QA
0	0	0	0	0
1	0	0	0	1
2	0	0	1	0
3	0	0	1	1
4	0	1	0	0
5	0	1	0	1
6	0	1	1	0
7	0	1	1	1
8	1	0	0	0
9	1	0	0	1
10	1	0	1	0
11	1	0	1	1
12	1	1	0	0
13	1	1	0	1
14	1	1	1	0
15	1	1	1	1

CARRY OUTPUT "CO"

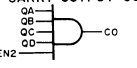

CO IS HIGH WHEN EN2 INPUT IS HIGH AND COUNT IS "15".

NOTE :

TYPE	VDD
74ACT	+5V
TC40H	+2 to +8V
OTHERS	+2 to +6V

SN74HC164ANS (TI) FLAT PACKAGE

C-MOS 8-BIT SERIAL-IN/PARALLEL-OUT SHIFT REGISTER
– TOP VIEW –

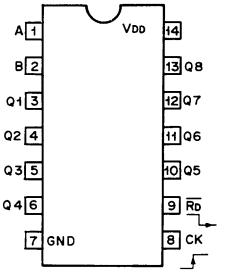

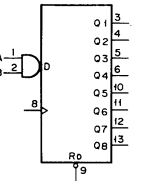

INPUTS				OUTPUTS			
RD	CK	A	B	Q1	Q2	----	Q8
0	X	X	X	0	0	0	0
1	0	X	X	Q1o	Q2o	----	Q8o
1	↑	1	1	1	Q1n	----	Q7n
1	↑	0	X	0	Q1n	----	Q7n
1	↑	X	0	0	Q1n	----	Q7n

0;LOW LEVEL
1;HIGH LEVEL
X;DON'T CARE

NOTE :

TYPE	VDD
TC74AC164 TYPE	+2 to +5.5V
OTHER TYPES	+2 to +6V

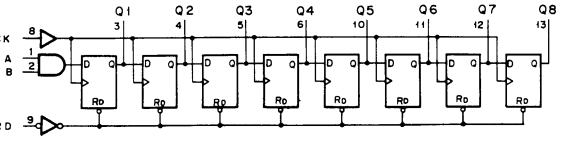

SN74HC192NS (TI) FLAT PACKAGE

C-MOS SYNCHRNOUS UP/DOWN DECADE COUNTER
– TOP VIEW –

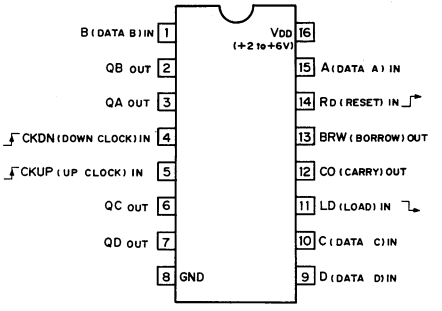

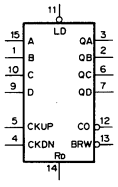

CONTROL INPUTS				MODE
RD	LD	CKUP	CKDN	
1	X	X	X	RESET TO ZERO
0	0	X	X	PRESET
0	1	↑	1	UP COUNT
0	1	1	↑	DOWN COUNT
0	1	1	1	NO COUNT

COUNT	OUTPUTS			
	QD	QC	QB	QA
0	0	0	0	0
1	0	0	0	1
2	0	0	1	0
3	0	0	1	1
4	0	1	0	0
5	0	1	0	1
6	0	1	1	0
7	0	1	1	1
8	1	0	0	0
9	1	0	0	1

UP COUNT
DOWN COUNT

0 ; LOW LEVEL
1 ; HIGH LEVEL
X ; DON'T CARE

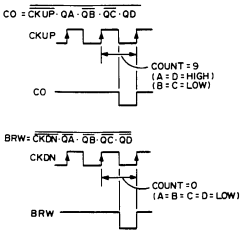

SN74HC266ANS (TI) FLAT PACKAGE

C-MOS 2-INPUT EXCLUSIVE-NOR GATE
– TOP VIEW –

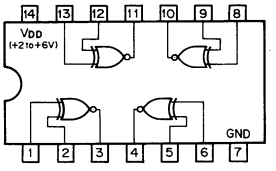

A	B	Y
0	0	1
0	1	0
1	0	0
1	1	1

0 ; LOW LEVEL
1 ; HIGH LEVEL

SN74HC27ANS (TI) FLAT PACKAGE

C-MOS 3-LINE POSITIVE-NOR GATE
– TOP VIEW –

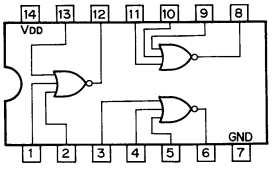

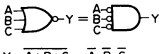

$Y = \overline{A+B+C} = \overline{A} \cdot \overline{B} \cdot \overline{C}$

A	B	C	Y
0	0	0	1
0	0	1	0
0	1	0	0
0	1	1	0
1	0	0	0
1	0	1	0
1	1	0	0
1	1	1	0

0 ; LOW LEVEL
1 ; HIGH LEVEL

NOTE :

TYPE	VDD
TC40H	+2 to +8V
OTHERS	+2 to +6V

SN74HC32ANS (TI) FLAT PACKAGE

C-MOS QUAD 2-INPUT OR GATES
– TOP VIEW –

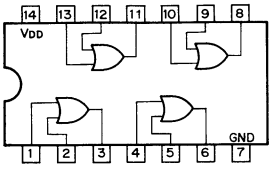

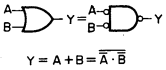

$Y = A + B = \overline{\overline{A} \cdot \overline{B}}$

A	B	Y
0	0	0
0	1	1
1	0	1
1	1	1

0 ; LOW LEVEL
1 ; HIGH LEVEL

NOTE :

TYPE	VDD
TC74AC32 TYPE TC74VHC32	+2 to +5.5V
OTHER TYPES	+2 to +6V

SN74HC541ANS (TI) FLAT PACKAGE

C-MOS BUFFERS AND LINE DRIVERS WITH 3-STATE OUTPUTS
– TOP VIEW –

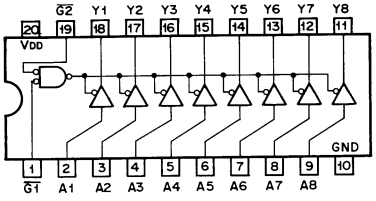

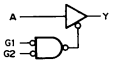

G1	G2	A	Y
0	0	0	0
0	0	1	1
1	X	X	HI-Z
X	1	X	HI-Z

0 ; LOW LEVEL
1 ; HIGH LEVEL
X ; DON'T CARE
HI-Z ; HIGH IMPEDANCE

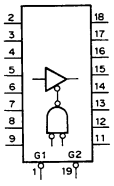

NOTE :

TYPE	VDD
AC/VHC	+2 to +5.5V
HC	+2 to +6V
ACT/BCT/HCT	+5V

SN74HC7266NS (TI) FLAT PACKAGE

C-MOS 2-INPUT EXCLUSIVE-NOR GATES
– TOP VIEW –

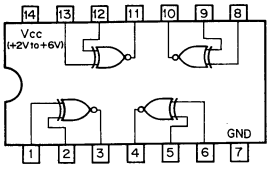

A	B	Y
0	0	1
0	1	0
1	0	0
1	1	1

0 ; LOW LEVEL
1 ; HIGH LEVEL

SN74HC74AN (TI)
SN74HC74ANS (TI) FLAT PACKAGE

C-MOS DUAL D-TYPE FLIP-FLOPS WITH DIRECT SET/RESET
– TOP VIEW –

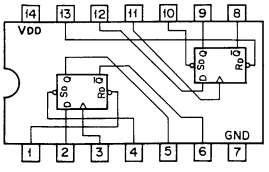

INPUTS				OUTPUTS	
$\overline{SD}$	$\overline{RD}$	CK	D	Qn+1	$\overline{Qn+1}$
0	1	X	X	1	0
1	0	X	X	0	1
0	0	X	X	1	1
1	1	↑	1	1	0
1	1	↑	0	0	1
1	1	0	X	Qn	$\overline{Qn}$

0 ; LOW LEVEL
1 ; HIGH LEVEL
X ; DON'T CARE

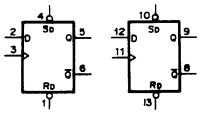

NOTE :

TYPE	VDD
TC74HCT74AF	+5V
TC74AC74 TYPE	+2 to +5.5V
74ACT74 TYPE	+4.5 to +5.5V
OTHER TYPES	+2 to +6V

SN74HC86ANS (TI) FLAT PACKAGE

C-MOS QUAD EXCLUSIVE OR GATES
– TOP VIEW –

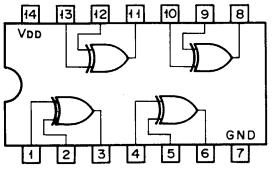

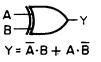

$Y = \bar{A} \cdot B + A \cdot \bar{B}$

A	B	Y
0	0	0
0	1	1
1	0	1
1	1	0

0;LOW LEVEL
1;HIGH LEVEL

NOTE :

TYPE	VDD
TC74AC86 TYPE	+2 to +5.5V
OTHER TYPES	+2 to +6V

SRM2016M10 (SEIKO EPSON) FLAT PACKAGE

C-MOS 16384-BIT (2048x8) STATIC RAM
– TOP VIEW –

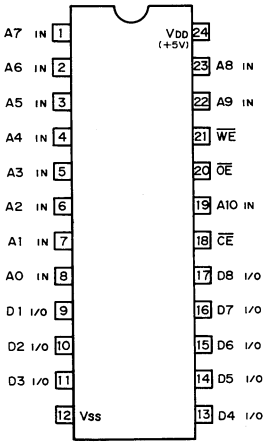

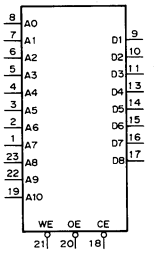

A0 – A10 ; ADDRESS INPUTS
$\overline{CE}$; CHIP ENABLE
D1 – D8 ; DATA INPUTS/OUTPUTS
$\overline{OE}$; OUTPUT ENABLE
$\overline{WE}$; WRITE ENABLE

INPUTS			FUNCTION
$\overline{CE}$	$\overline{OE}$	$\overline{WE}$	
1	X	X	NO SELECTION(HI–Z)
0	1	1	OUTPUT DISABLE(HI–Z)
0	0	1	READ
0	X	0	WRITE

0 ; LOW LEVEL
1 ; HIGH LEVEL
X ; DON'T CARE
HI–Z ; HIGH IMPEDANCE

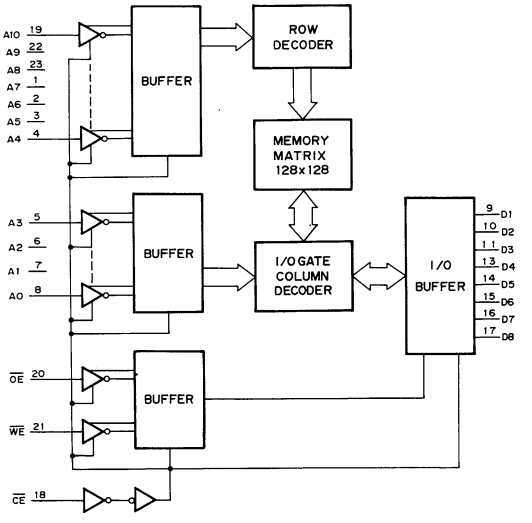

SN74LS221NS (TI) FLAT PACKAGE

TTL MONOSTABLE MULTIVIBRATOR WITH SCHMITT TRIGGER INPUT
– TOP VIEW –

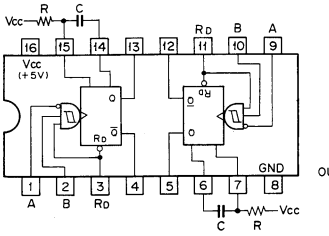

INPUTS			OUTPUTS	
RD	A	B	Q	$\bar{Q}$
0	X	X	0	1
X	1	X	0	1
X	X	0	0	1
1	0	↑	↓	↑
1	↓	1	↓	↑
↑	0	1	↓	↑

0;LOW LEVEL
1;HIGH LEVEL
X;DON'T CARE

OUTPUT PULSE WIDTH = 0.7CR

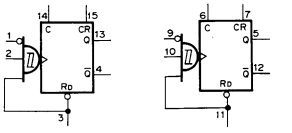

TA7267P (TOSHIBA)

DC MOTOR DRIVER
– PRINTED SIDE VIEW –

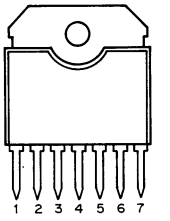

INPUTS		OUTPUTS		MODE
1	2	1	2	
1	1	0	0	BRAKE
0	1	0	1	ROTATION/ REV. ROTATION
1	0	1	0	REV. ROTATION / ROTATION
0	0	HI–Z		STOP

0 ; LOW LEVEL
1 ; HIGH LEVEL
HI–Z; HIGH IMPEDANCE

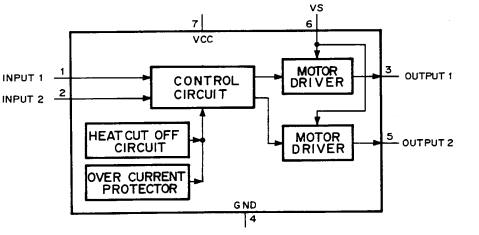

TC74HC221AF (TOSHIBA) FLAT PACKAGE

C-MOS MONOSTABLE MULTIVIBRATOR WITH SCHMITT TRIGGER INPUT
– TOP VIEW –

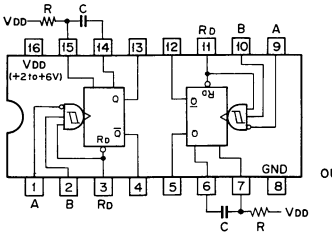

INPUTS			OUTPUTS	
RD	A	B	Q	$\bar{Q}$
0	X	X	0	1
X	1	X	0	1
X	X	0	0	1
1	0	↑	↓	↑
1	↓	1	↓	↑
↑	0	1	↓	↑

0;LOW LEVEL
1;HIGH LEVEL
X;DON'T CARE

OUTPUT PULSE WIDTH = 0.7CR

TC5081AP (TOSHIBA)

C-MOS PHASE COMPARATOR
– SIDE VIEW –

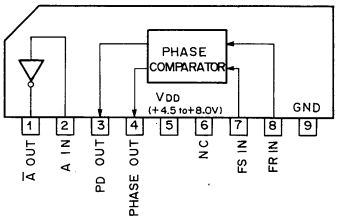

PHASE COMPARATOR TIMING CHART

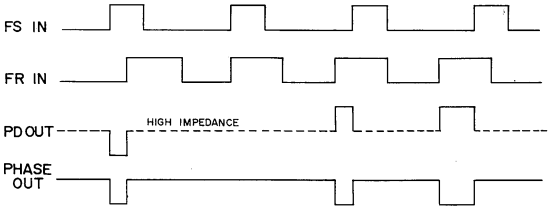

TC74HC123AF (TOSHIBA) FLAT PACKAGE

C-MOS DUAL RETRIGGERABLE MONOSTABLE MULTIVIBRATORS
– TOP VIEW –

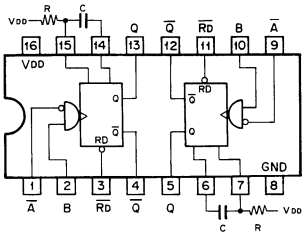

INPUT			OUTPUT	
RD	A	B	Q	Q̄
0	X	X	0	1
1	1	X	0	1
1	X	0	0	1
1	0	↓	↓	↑
1	↑	1	↓	↑
↓	0	1	↓	↑

0 ; LOW LEVEL
1 ; HIGH LEVEL
X ; DON'T CARE

OUTPUT PULSE WIDTH = 0.46CR

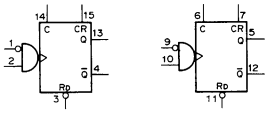

NOTE :

TYPE	VDD
TC74HCT123AF	+5V
OTHER TYPES	+2 to +6V

TC7S08F (TOSHIBA) CHIP PACKAGE

C-MOS 2-INPUT AND GATE

(SCALE 6/1)
TOP VIEW

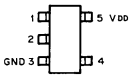

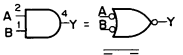

$Y = A \cdot B = \overline{\overline{A} + \overline{B}}$

A	B	Y
0	0	0
0	1	0
1	0	0
1	1	1

0; LOW LEVEL
1; HIGH LEVEL

TYPE	VDD
7S08F 7S08FU	+2 to +6V
4S81F 14S81F	+3 to +18V

TC74HC191AF (TOSHIBA) FLAT PACKAGE

C-MOS PRESETTABLE SYNCHRONOUS 4-BIT BINARY UP/DOWN COUNTER
– TOP VIEW –

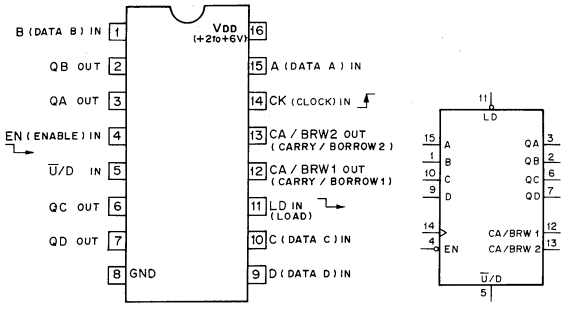

MODE SELECTION

CONTROL INPUTS			MODE
LD	EN	Ū/D	
0	X	X	PRESET (ASYNCHRONOUS)
1	1	X	NO COUNT
1	0	0	UP COUNT
1	0	1	DOWN COUNT

0 ; LOW LEVEL
1 ; HIGH LEVEL
X ; DON'T CARE.

COUNT SEQUENCE

COUNT	OUTPUTS			
	QD	QC	QB	QA
0	0	0	0	0
1	0	0	0	1
2	0	0	1	0
3	0	0	1	1
4	0	1	0	0
5	0	1	0	1
6	0	1	1	0
7	0	1	1	1
8	1	0	0	0
9	1	0	0	1
10	1	0	1	0
11	1	0	1	1
12	1	1	0	0
13	1	1	0	1
14	1	1	1	0
15	1	1	1	1

UP COUNT
DOWN COUNT

CA/BRW OUTPUTS

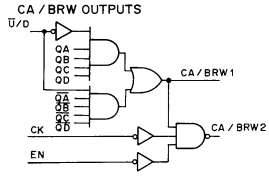

CA/BRW1 OUTPUT IS HIGH WHEN COUNT IS "15" AT UP-COUNT OR WHEN COUNT IS "0" AT DOWN COUNT.

CA/BRW2 OUTPUT IS LOW WHEN BOTH THE CLOCK AND EN INPUTS ARE LOW AND CA/BRW1 OUTPUT IS HIGH.

TL062CPS (TI) FLAT PACKAGE
TL082CPS (TI) FLAT PACKAGE

OPERATIONAL AMPLIFIER
(JFET INPUT)
– TOP VIEW –

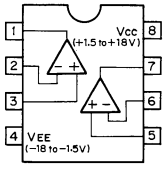

TL084CNS (TI) FLAT PACKAGE

OPERATIONAL AMPLIFIER
(J FET-INPUT)
– TOP VIEW –

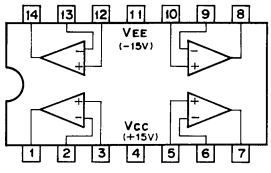

TL431CLP (TI)

ADJUSTABLE PRECISION SHUNT REGULATOR

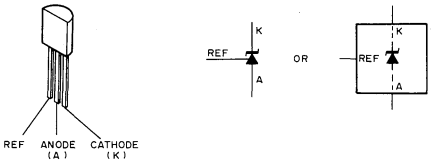

UPC78L05T (NEC) + 5V

POSITIVE VOLTAGE REGULATOR (100mA)

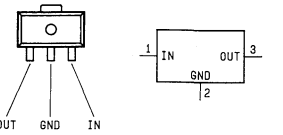

UPC324G2 (NEC) FLAT PACKAGE

QUAD OPERATIOAL AMPLIFIERS

– TOP VIEW –

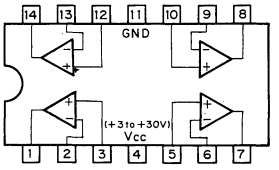

UPC4557C (NEC)

OPERATIONAL AMPLIFIER (WIDE BAND, LOW NOISE)

– TOP VIEW –

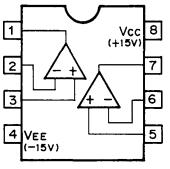

UPC4570C (NEC)

UPC4570G2 (NEC) FLAT PACKAGE

OPERATIONAL AMPLIFIER

– TOP VIEW –

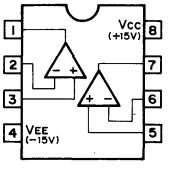

UPC4574G2 (NEC)

QUAD OPERATIONAL AMPLIFIER

– TOP VIEW –

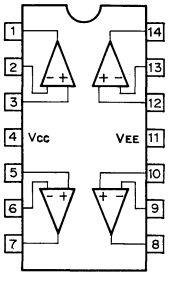

Vcc – VEE ≦ 36V

UPD42101C-3 (NEC)

UPD42101G-3 (NEC) FLAT PACKAGE

C-MOS 7K (910x8)-BIT FIFO MEMORY

– TOP VIEW –

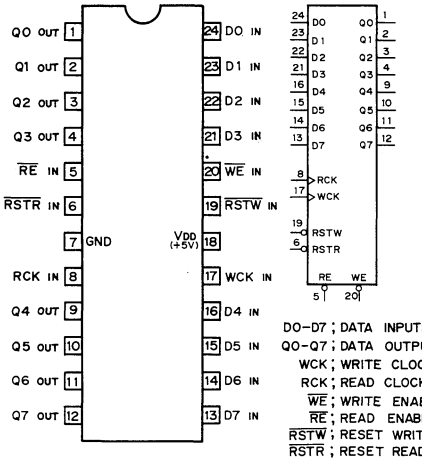

DO–D7 ; DATA INPUTS

QO–Q7 ; DATA OUTPUTS

WCK ; WRITE CLOCK INPUT

RCK ; READ CLOCK INPUT

$\overline{WE}$; WRITE ENABLE INPUT

$\overline{RE}$; READ ENABLE INPUT

$\overline{RSTW}$; RESET WRITE INPUT

$\overline{RSTR}$; RESET READ INPUT

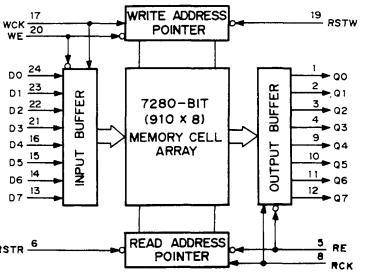

UPD6453GT (NEC) FLAT PACKAGE

C-MOS ON-SCREEN CHARACTER DISPLAY
– TOP VIEW –

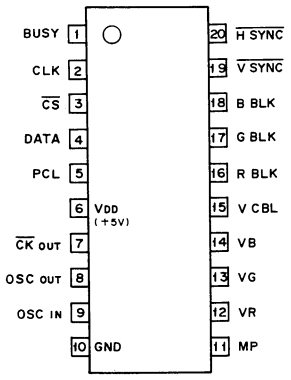

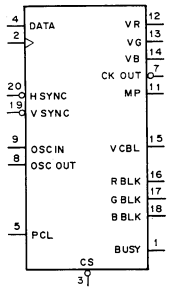

INPUT

CLK	; CLOCK
CS	; CHIP SELECT
DATA	; SERIAL DATA
H SYNC	; HORIZONTAL SYNC
OSC IN	; OSCILLATOR IN
PCL	; POWER ON CLEAR
V SYNC	; VERTICAL SYNC

OUTPUT

B_{BLK}, R_{BLK}, G_{BLK}	; B, R, G, BLANKING
BUSY	; BUSY OUT
CK OUT	; CLOCK
MP	; MASK PULSE
OSC OUT	; OSCILLATOR OUT
V_R, V_G, V_B	; R, G, B, CHARACTER DATA
V_{CBL}	; VIDEO CUT BLANKING

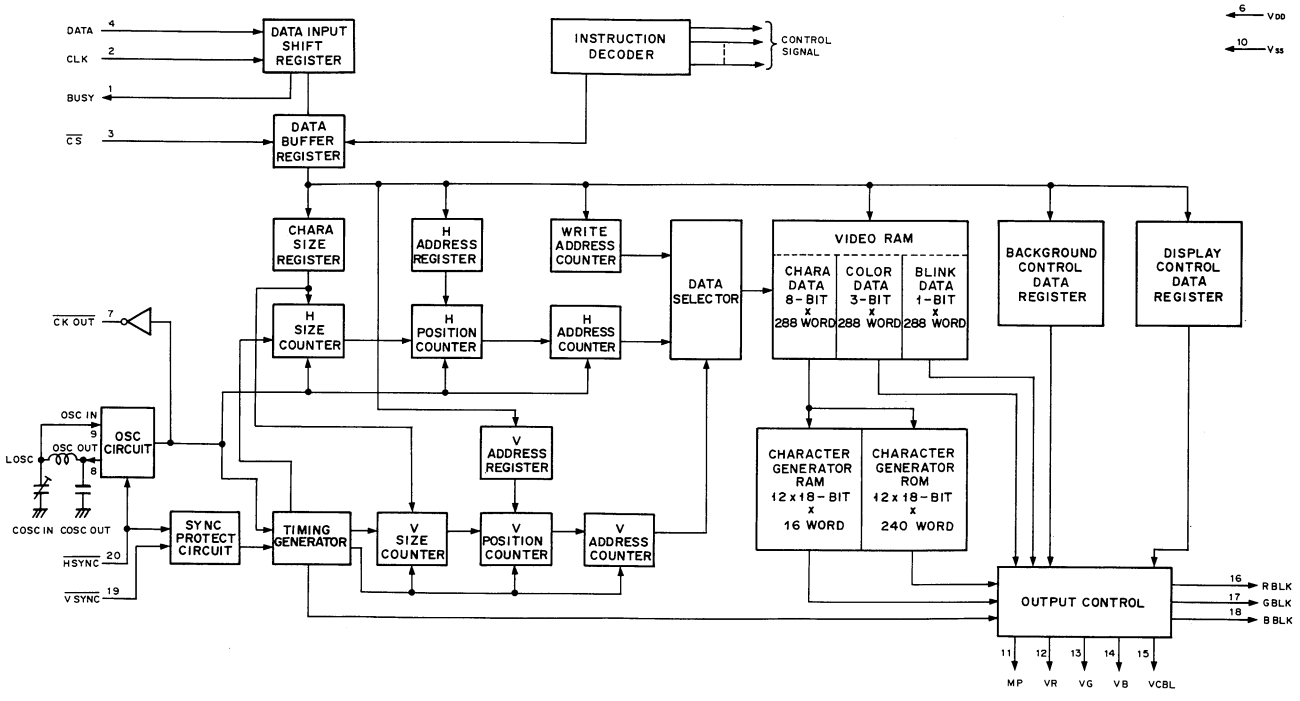

UPD75028GC (NEC)

C-MOS 4-BIT 1-CHIP MICROCOMPUTER
– TOP VIEW –

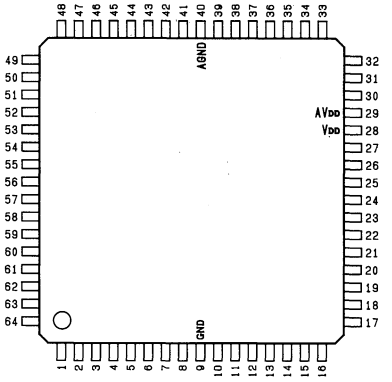

PIN NO.	I/O	SYMBOL	PIN NO.	I/O	SYMBOL	PIN NO.	I/O	SYMBOL	PIN NO.	I/O	SYMBOL
1	I/O	P43	17	I/O	PTO0/P20	33	I	AN6	49	I/O	P83
2	I/O	P42	18	I/O	$\overline{MAT}$/P103	34	I	AN5	50	I/O	P82
3	I/O	P41	19	I/O	$\overline{MAZ}$/P102	35	I	AN4	51	I/O	P81
4	I/O	P40	20	I/O	$\overline{MAI}$/P101	36	I	AN3/P113	52	I/O	P80
5	I/O	P33	21	I/O	$\overline{MAR}$/P100	37	I	AN2/P112	53	I/O	P73/KR7
6	I/O	P32	22	I	$\overline{RESET}$	38	I	AN1/P111	54	I/O	P72/KR6
7	I/O	P31	23	I	X1	39	I	AN0/P110	55	I/O	P71/KR5
8	I/O	P30	24	–	X2	40	I	A GND	56	I/O	P70/KR4
9	–	GND	25	–	IC	41	I	TI0/P13	57	I/O	P63/KR3
10	I/O	SB1/SI/P03	26	I	XT1	42	I	P12/INT2	58	I/O	P62/KR2
11	I/O	SB0/SO	27	I/O	XT2	43	I	P11/INT1	59	I/O	P61/KR1
12	I/O	$\overline{SCK}$/P01	28	–	V_{DD}	44	I	P10/INT0	60	I/O	P60/KR0
13	I	INT4/P00	29	–	AV_{DD}	45	I/O	P93	61	I/O	P53
14	I/O	BUZ/P23	30	–	AV_{REF+}	46	I/O	P92	62	I/O	P52
15	I/O	PCL/P22	31	–	AV_{REF-}	47	I/O	P91	63	I/O	P51
16	I/O	PPO/P21	32	I	AN7	48	I/O	P90	64	I/O	P50

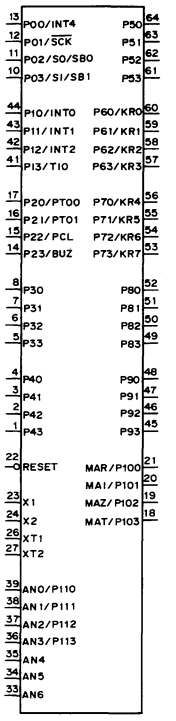

INPUT

AN0 – AN7	; ANALOG 0 – 7
AVREF (+)	; ANALOG REFERENCE (+)
AVREF (–)	; ANALOG REFERENCE (–)
INT 0, 1, 4	; EXTEMAL VECTORED INTERRUPT 0, 1, 4
INT2	; EXTEMAL TEST 2
KR0 – KR7	; KEY RETUM 0 – 7
MAT	; EXTEMAL COMPARATE TIMING (MFT A/D MODE)
P00 – P03	; PORT 0
P10 – P13	; PORT 1
P20 – P23	; PORT 2
P30 – P33	; PORT 3
P40 – P43	; PORT 4
P50 – P53	; PORT 5
P60 – P63	; PORT 6
P70 – P73	; PORT 7
P80 – P83	; PORT 8
P90 – P93	; PORT 9
P100 – P103	; PORT 10
P110 – P113	; PORT 11
$\overline{RESET}$	; RESET
SI	; SIREAL
TI 0	; TIMER 0
X1, 2	; MAIN SYSTEM CLOCK OSCILLATION 1, 2
XT1, XT2	; SUB SYSTEM CLOCK OSCILLATION 1, 2

OUTPUT

BUZ	; BUZZER CLOCK
MAI	; INTEGRATION CONTROL (MFT A/D MODE)
MAR	; REFERENCE INTEGRATION CONTROL (MFT A/D MODE)
MAZ	; AUTOZERO CONTROL (MFT A/D MODE)
PCL	; PROGRAMMABLE CLOCK
PPO	; PROGRAMMABLE PULSE (MFT TIMER MODE)
PTO0	; PROGRAMMABLE TIMER 0
SB 0, 1	; SERIAL BUS 0.1
SO	; SERIAL

INPUT/OUTPUT

SCK	; SERIAL CLOCK

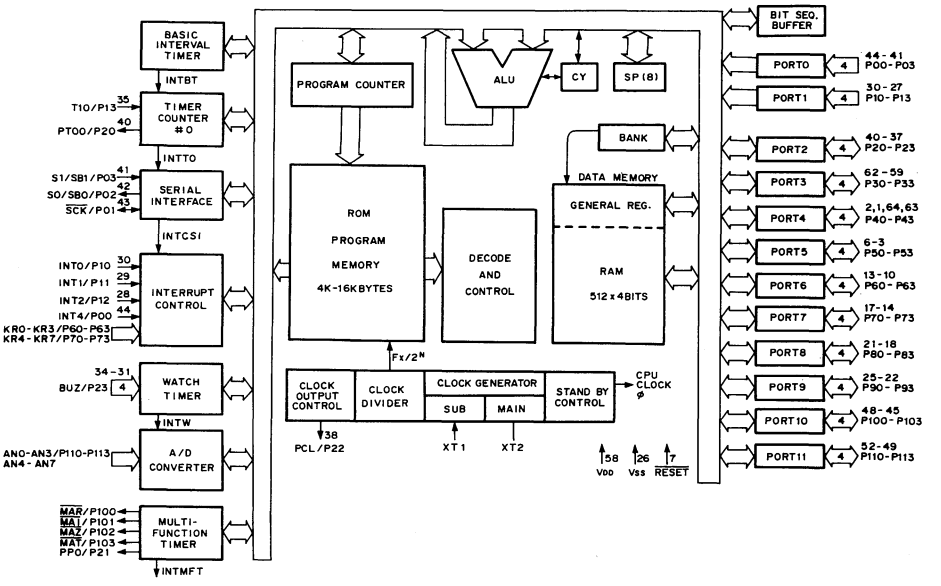

UPD75048CW (NEC)

C-MOS 4-BIT 1-CHIP MICROCOMPUTER
– TOP VIEW –

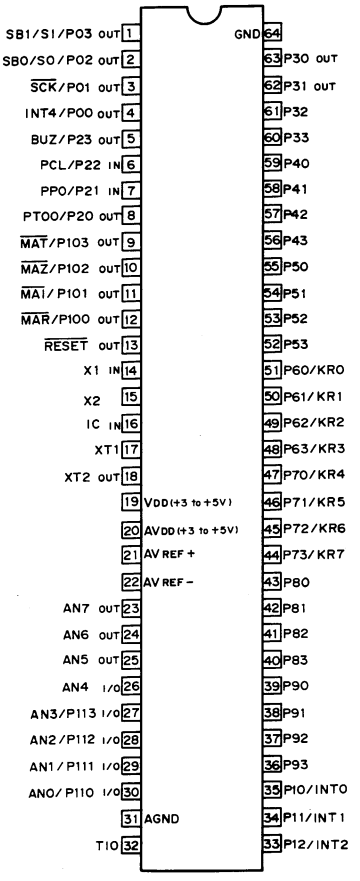

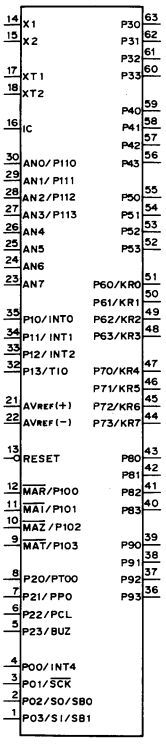

INPUT

AN0 – AN7	; ANALOG 0 – 7
AVREF (+)	; ANALOG REFERENCE (+)
AVREF (–)	; ANALOG REFERENCE (–)
INT 0, 1, 4	; EXTEMAL VECTORED INTERRUPT 0, 1, 4
INT2	; EXTEMAL TEST 2
KR0 – KR7	; KEY RETUM 0 – 7
MAT	; EXTEMAL COMPARATE TIMING (MFT A/D MODE)
P00 – P03	; PORT 0
P10 – P13	; PORT 1
P20 – P23	; PORT 2
P30 – P33	; PORT 3
P40 – P43	; PORT 4
P50 – P53	; PORT 5
P60 – P63	; PORT 6
P70 – P73	; PORT 7
P80 – P83	; PORT 8
P90 – P93	; PORT 9
P100 – P103	; PORT 10
P110 – P113	; PORT 11
RESET	; RESET
SI	; SIREAL
TI 0	; TIMER 0
X1, 2	; MAIN SYSTEM CLOCK OSCILLATION 1, 2
XT1, XT2	; SUB SYSTEM CLOCK OSCILLATION 1, 2

OUTPUT

BUZ	; BUZZER CLOCK
MAI	; INTEGRATION CONTROL (MFT A/D MODE)
MAR	; REFERENCE INTEGRATION CONTROL (MFT A/D MODE)
MAZ	; AUTOZERO CONTROL (MFT A/D MODE)
PCL	; PROGRAMMABLE CLOCK
PPO	; PROGRAMMABLE PULSE (MFT TIMER MODE)
PTO0	; PROGRAMMABLE TIMER 0
SB 0, 1	; SERIAL BUS 0.1
SO	; SERIAL

INPUT/OUTPUT

SCK	; SERIAL CLOCK

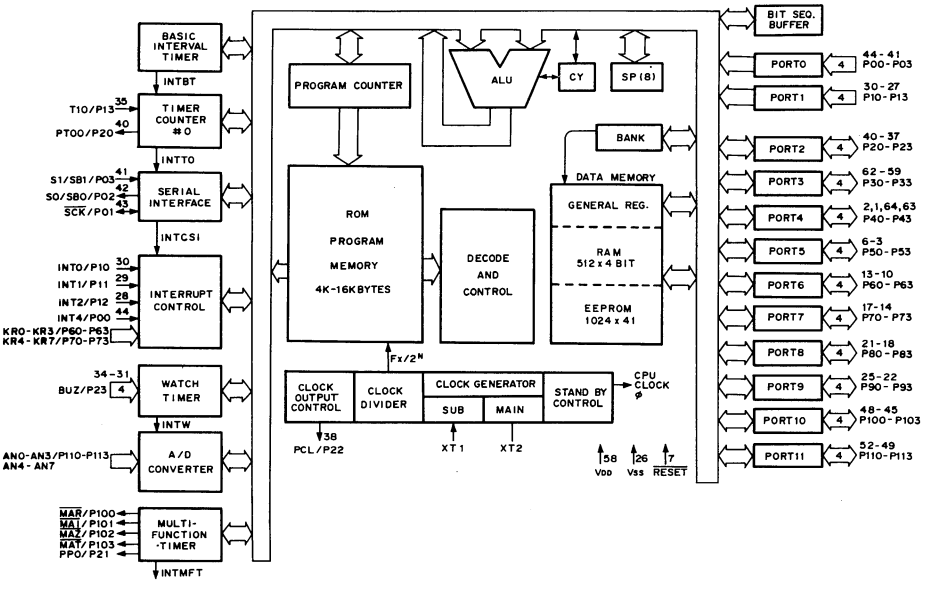

UPD70320GJ-8-5BG (NEC)

C-MOS SINGLE CHIP 16/8-BIT MICROCOMPUTER

– TOP VIEW –

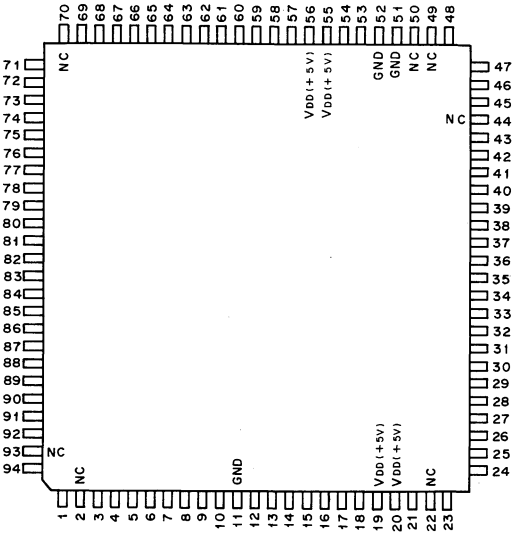

(VDD = + 5V)

PIN No.	I/O	SYMBOL	PIN No.	I/O	SYMBOL	PIN No.	I/O	SYMBOL
1	O	A12	33	I/O	P13/INTP2/INTAK	65	I/O	P01
2	–	NC	34	I/O	P14/INT/POLL	66	I/O	P02
3	O	A13	35	I/O	P15/TOUT	67	I/O	P03
4	O	A14	36	I/O	P16/SCK0	68	I/O	P04
5	O	A15	37	I/O	P17/READY	69	–	INT.CONNECT
6	O	A16	38	I	PT0	70	–	NC
7	O	A17	39	I	PT1	71	I/O	P05
8	O	A18	40	I	PT2	72	I/O	P06
9	O	A19	41	I	PT3	73	I/O	P07/CLKOUT
10	I	RxD0	42	I	PT4	74	I/O	D0
11	–	GND	43	I	PT5	75	I/O	D1
12	I/O	CTS0	44	–	NC	76	I/O	D2
13	O	TxD0	45	I	PT6	77	I/O	D3
14	I	RxD1	46	I	PT7	78	I/O	D4
15	I	CTS1	47	–	INT.CONNECT	79	I/O	D5
16	O	TxD1	48	–	VTH	80	I/O	D6
17	I/O	P20/DMARQ0	49	–	NC	81	I/O	D7
18	–	INT.CONNECT	50	–	NC	82	O	A0
19	–	VDD	51	–	GND	83	O	A1
20	–	VDD	52	–	GND	84	O	A2
21	I/O	P21/DMAAK0	53	–	X1	85	O	A3
22	–	NC	54	–	X2	86	O	A4
23	I/O	P22/TC0	55	–	VDD	87	O	A5
24	–	INT.CONNECT	56	–	VDD	88	O	A6
25	I/O	P23/DMARQ1	57	I	RESET	89	O	A7
26	I/O	P24/DMAAK1	58	O	REFRQ	90	O	A8
27	I/O	P25/TC1	59	O	R/W	91	O	A9
28	I/O.	P26/HLDAK	60	O	MSTB	92	O	A10
29	I/O	P27/HLDRQ	61	O	IOSTB	93	–	NC
30	I	P10/NMI	62	O	MREQ	94	O	A11
31	I	P11/INTP0	63	I	EA			
32	I	P12/INTP1	64	I/O	P00			

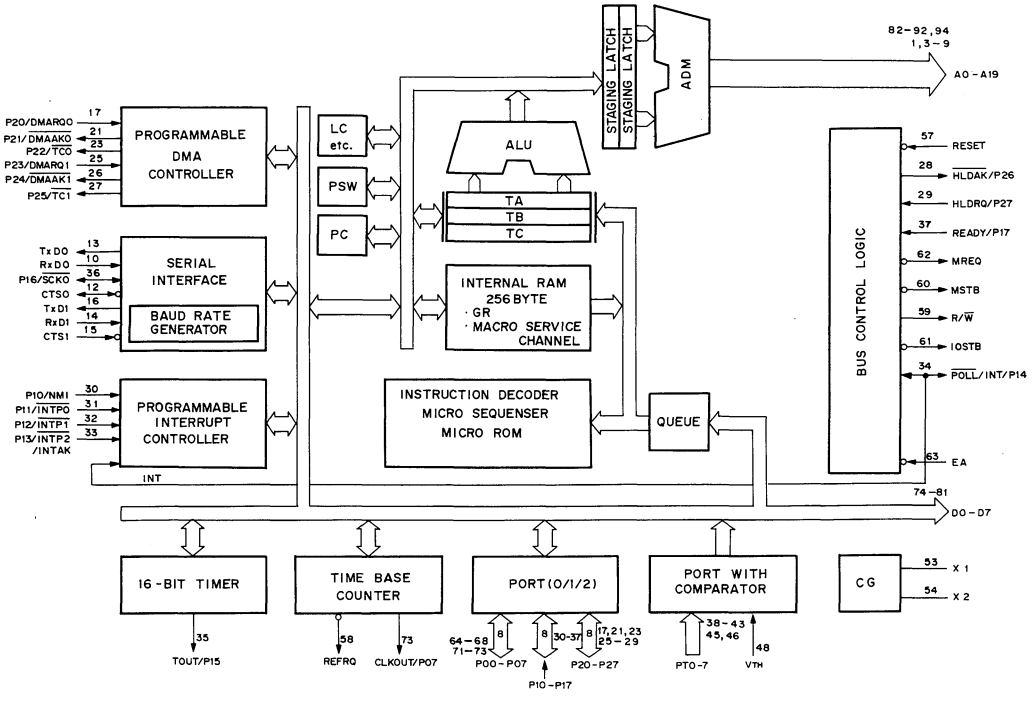

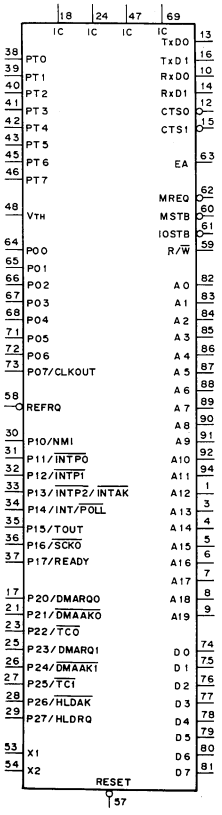

INPUT
DMARQ0 ; DMA REQUEST CH0, CH1 INPUTS
DMARQ1
EA ; ROM-LESS MODE SET INPUT
HLDRQ ; HOLD REQUEST INPUT
INTP0, INTP1 ; INTERRUPT REQUEST INPUTS
INTP2 ; INTERRUPT REQUEST INPUT
INT/$\overline{\text{POLL}}$; INTERRUPT REQUEST INPUT
NMI ; NON-MASKABLE INTERRUPT INPUT
PT0 – PT7 ; PORT 0 INPUTS
READY ; READY INPUT
RESET ; RESET INPUT
RXD0, RXD1 ; SERIAL DATA INPUTS
VTH ; REF. V FOR COMPARATOR INPUT
X1, X2 ; CRYSTAL 1, 2

OUTPUT
A0 – A19 ; ADDRESS BUS OUTPUTS
CLKOUT ; SYSTEM CLOCK OUTPUT
DMAAK0 ; DMA ACKNOWLEDGE CH0, CH1 OUTPUTS
DMAAK1 ; HOLD ACKNOWLEDGE OUTPUT
HLDAK
INTAK ; INTERRUPT ACKNOWLEDGE OUTPUT
IOSTB ; I/O READ/WRITE STROBE OUTPUT
MREQ ; MEMORY REQUEST OUTPUT
MSTB ; MEMORY READ/WRITE STROBE OUTPUT
REFRQ ; REFRESH REQUEST OUTPUT
R/$\overline{\text{W}}$; READ AND WRITE CYCLE OUTPUT
SCKO ; SERIAL CLOCK OUTPUT
TC0, TC1 ; DMA (CH0/CH1) ENDING OUTPUTS
TOUT ; TIMER OUTPUT
TXD0, TXD1 ; SERIAL DATA OUTPUTS

INPUT/OUTPUT
CTS0, CTS1 ; CLEAR TO SEND INPUT/OUTPUT
D0 – D7 ; DATA BUS INPUTS/OUTPUTS
P00 – P07 ; PORT 0 INPUTS/OUTPUTS
P10 – P17 ; PORT 1 INPUTS/OUTPUTS
P20 – P27 ; PORT 2 INPUTS/OUTPUTS

CXA1727Q (SONY)

ID ADDER/DETECTOR FOR WIDE TV SIGNAL
– TOP VIEW –

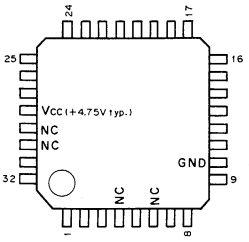

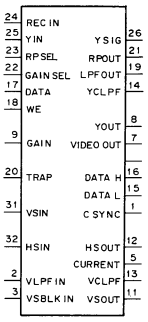

(Vcc = + 4.75V typ.)

PIN No.	I/O	SIGNAL	PIN No.	I/O	SIGNAL
1	O	CSYNC	17	I	DATA
2	I	VLPFIN	18	I	WE
3	I	VSBLKIN	19	O	LPFOUT
4	–	NC	20	I	TRAP
5	O	CURRENT	21	O	RPOUT
6	–	NC	22	I	GAINSEL
7	O	VIDEOOUT	23	I	RPSEL
8	O	YOUT	24	I	RECIN
9	I	GAIN	25	I	YIN
10	–	GND	26	O	YSIG
11	O	VSOUT	27	I	VIDEOIN
12	O	HSOUT	28	–	Vcc
13	O	VCLPF	29	–	NC
14	O	YCLPF	30	–	NC
15	O	DATAL	31	I	VSIN
16	O	DATAH	32	I	HSIN

INPUT
DATA ; ID DATA
GAIN ; VIDEO/Y OUT AMP GAIN SELECT
GAINSEL ; Y AMP GAIN SELECT
HSIN ; H SYNC SEP.
RECIN ; REC Y
RPSEL ; Y R/P SELECT
TRAP ; TRAPPED Y
VIDEOIN ; VIDEO
VLPFIN ; LOW-PASSED CSYNC
VSBLKIN ; LOW-PASSED CSYNC
VSIN ; V SYNC SEP.
WE ; ID WRITE ENABLE
YIN ; PB Y

OUTPUT
CSYNC ; COMPOSITE SYNC
DATAH ; Y LEVEL HIGH
DATAL ; Y LEVEL LOW
HSOUT ; H SYNC
LPFOUT ; LOW-PASSED Y
RPOUT ; R/P Y
VIDEOOUT ; VIDEO
VSOUT ; V SYNC
YOUT ; Y MAIN
YSIG ; R/P SELECTED Y

OTHER
CURRENT ; REF CURRENT RESISTOR
VCLPF ; CAPACITOR FOR VIDEO CLAMP
YCLPF ; CAPACITOR FOR Y CLAMP

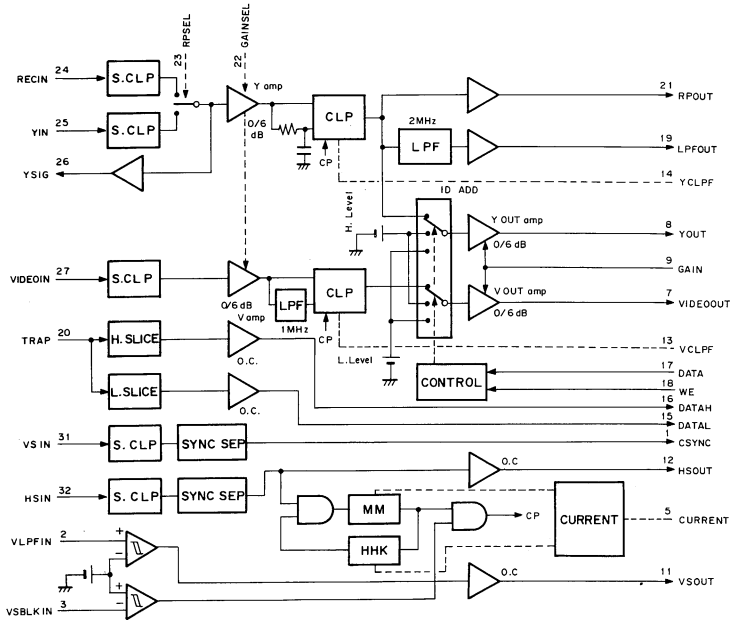

CXD101-106Q (SONY)

C-MOS DIGITAL DELAY LINE
– TOP VIEW –

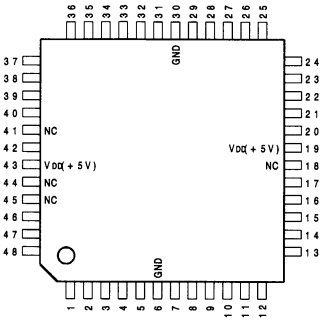

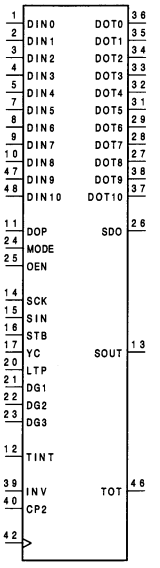

INPUT

CLK ;CLOCK INPUT
DIN0-DIN10;DATA INPUT
DOP ;DO PULSE INPUT
MODE ;H:14CK DELAY
L:5CK DELAY
OEN ;OUTPUT ENABLE
(L:DOT0-10 OUTPUT STATUS
H:HIGH IMPEDANCE STATUS)
TINT ;H:MPU COMMUNICATION MODE
SCK ;MPU SERIAL I/F CLOCK
SIN ;MPU SERIAL DATA IN
STB ;MPU SERIAL I/F STROBE
YC ;L:CHROMA,H:Y
DG1-DG3 ;FOR DIAG INPUT
LTP ;FOR DIAG INPUT
CP2 ;TEST TERMINAL GENERALLY USE:L
INV ;TEST TERMINAL GENERALLY USE:L

OUTPUT

DOT0-DOT10;DATA OUTPUT
SDO ;STRETCHED DO OUTPUT
SOUT ;DATA OUT TO MPU
TOT ;TEST OUTPUT

(VDD = +5V)

PIN No.	I/O	SIGNAL	PIN No.	I/O	SIGNAL	PIN No.	I/O	SIGNAL	PIN No.	I/O	SIGNAL
1	I	DIN0	13	O	SOUT	25	I	OEN	37	O	DOT10
2	I	DIN1	14	I	SCK	26	O	SDO	38	O	DOT9
3	I	DIN2	15	I	SIN	27	O	DOT8	39	I	INV
4	I	DIN3	16	I	STB	28	O	DOT7	40	I	CP2
5	I	DIN4	17	I	YC	29	O	DOT6	41	–	NC
6	–	GND	18	–	NC	30	–	GND	42	I	CLK
7	I	DIN5	19	–	VDD	31	O	DOT5	43	–	VDD
8	I	DIN6	20	I	LTP	32	O	DOT4	44	–	NC
9	I	DIN7	21	I	DG1	33	O	DOT3	45	–	NC
10	I	DIN8	22	I	DG2	34	O	DOT2	46	O	TOT
11	I	DOP	23	I	DG3	35	O	DOT1	47	I	DIN9
12	I	TINT	24	I	MODE	36	O	DOT0	48	I	DIN10

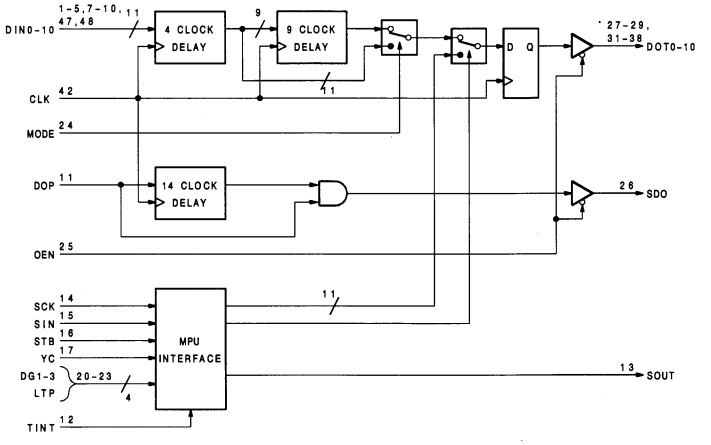

SN74HC273ANS (TI) FLAT PACKAGE

C-MOS OCTAL D-TYPE FLIP-FLOPS WITH RESET
– TOP VIEW –

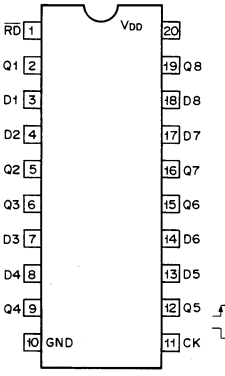

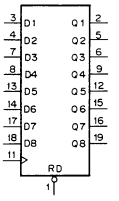

EACH FLIP-FLOP

INPUT			OUT
RD	CK	D	Q
0	X	X	0
1	↑	0	0
1	↑	1	1
1	0	X	Q_0

0 ; LOW LEVEL
1 ; HIGH LEVEL
X ; DON'T CARE
Q_0 ; NO CHANGE

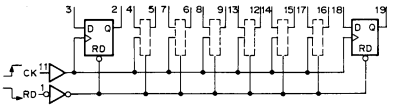

NOTE :

TYPE	VDD
AC HC	+2 to +6V
VHC	+2 to +5.5V

SECTION 18
REPLACEABLE PARTS AND OPTIONAL FIXTURES

18-1. NOTES ON REPAIR PARTS

(1) Safety Related Components Warning

Components marked with ⚠ on the schematic diagrams, exploded views and electrical spare parts list are critical to safe operation. Replace these components with Sony parts whose part numbers appear in this manual or in service bulletin and service manual supplements published by Sony.

(2) Standardization of Parts

Repair parts supplied from Sony Parts Center may not be always identical with the parts which actually in use due to "accommodating the improved parts and/or engineering changes" or "standardization of genuine parts".

This manual's exploded views and electrical spare parts list are indicating the part numbers of "the standardized genuine parts at present".

(3) Stock of Parts

Parts marked with "o" SP (Supply Code) column of the spare parts list are not normally required for routine service work. Orders for parts marked with "o" will be processed, but allow for additional delivery time.

(4) Units for Capacitors, Indictors and Resistors

The following units are assumed in schematic diagrams, electrical parts list and exploded views unless otherwise specified.

Capacitors : μF
Inductors : μH
Resistors : Ω

(5) Tension Spring

(××T) after a tension spring is shown on the parts list in order to indicate the number of spring turns required for the use.

(Example) TENSION, SPRING (20 T) :
This spring must be cut at its 20th turn for actual use.

18-1. 補修用部品注意事項

(1) 安全重要部品

回路図、分解図、電気部品表中、⚠印の部品は安全性を維持するために重要な部品です。従ってこれらの部品を交換するときには必ず指定の部品と交換して下さい。

(2) 部品の共通化

ソニーから供給される部品は、セットに実装されているものと異なることがあります。これは部品の共通化、改良等によるものです。

分解図や電気部品表には現時点での共通化された部品が記載されています。

(3) 部品の在庫

部品表のSP (Supply code) 欄に"o"で示される部品は交換頻度が低い部品ですので在庫していないことがあり、納期が長くなることがあります。

(4) コンデンサー、インダクター、抵抗の単位

回路図、分解図、電気部品表中、特に明記したものを除き、下記の単位は省略されています。

コンデンサー : μF
インダクター : μH
抵抗 : Ω

(5) 引張コイルバネ

部品表中の引張コイルバネの名称のあとの (××T) は、使用時の巻数を示しています。

(例) TENSION、SPRING (20 T)
巻数が20になるように切断し、使用する。

 EXPLODED VIEW

18-2. EXPLODED VIEWS

Index of Main Mechanical Parts/Components

Mark	Item	Title	Page
① ②	Reel Table Block (T) RS Table (T) Block	REEL CHASSIS (1)	18-4
③ ④ ⑤	Loarding Ring Block Gear Box Block Cleaning Roller Block	LOARDING RING	18-6
⑥ ⑦ ⑧ ⑨	MC Block Reel Table Block (S) RS Table (S) Block LS Motor Block	REEL CHASSIS (2)	18-8
⑩ ⑪ ⑫	Head Drum Tension Regulator Block Capstan Motor	DRUM & TENSION REGULATOR ASSEMBLY	18-10
⑬	DR-214 Board	DR-214 BOARD ASSEMBLY	18-12
⑭ ⑮ ⑯ ⑰ ⑱	AT Head (R) Block Pinch Press Block FE Head Block CTL Head Block T Sensor Block	PRESS ASSY, PINCH	18-14
⑲	Cassette Compartment	CASSETTE COMPARTMENT ASSEMBLY	18-16
⑳	Upper Lid Bottom Plate Cabinet (right) Cabinet (left)	CHASSIS & ORNAMENTAL PANEL BLOCK	18-18
㉑	Printed Circuit Boards	CARD RACK BLOCK (1)	18-20
㉒	Printed Circuit Boards	CARD RACK BLOCK (2)	18-22
㉓	SC Guide Block Indicator Tube Module, Fluoresce	CHASSIS BLOCK	18-24
㉔	Connector Panel	CONNECTOR PANEL BLOCK	18-26

 18-2

EXPLODED VIEW

MECHANICAL DECK

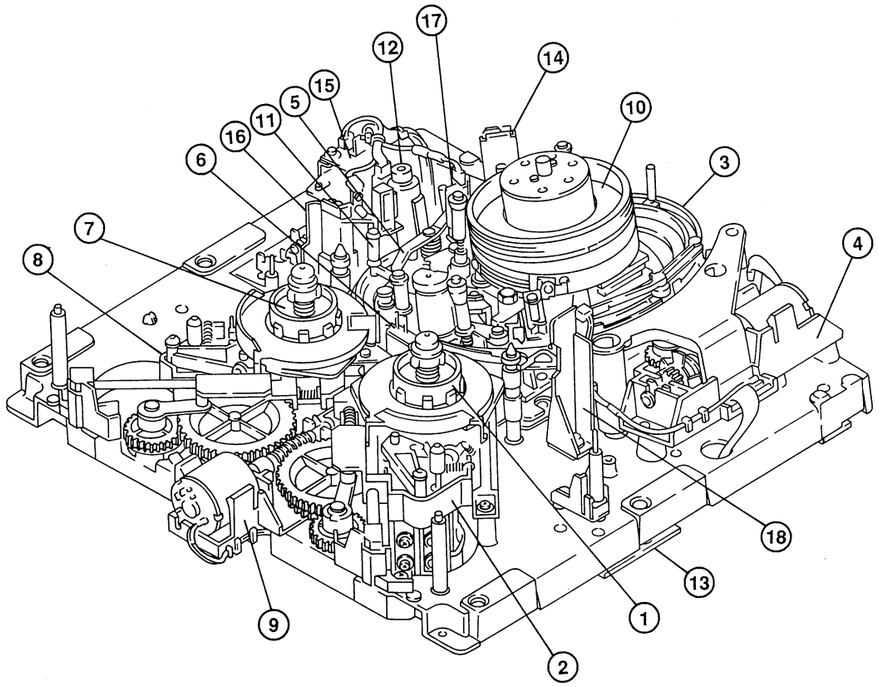

OVERALL BLOCK

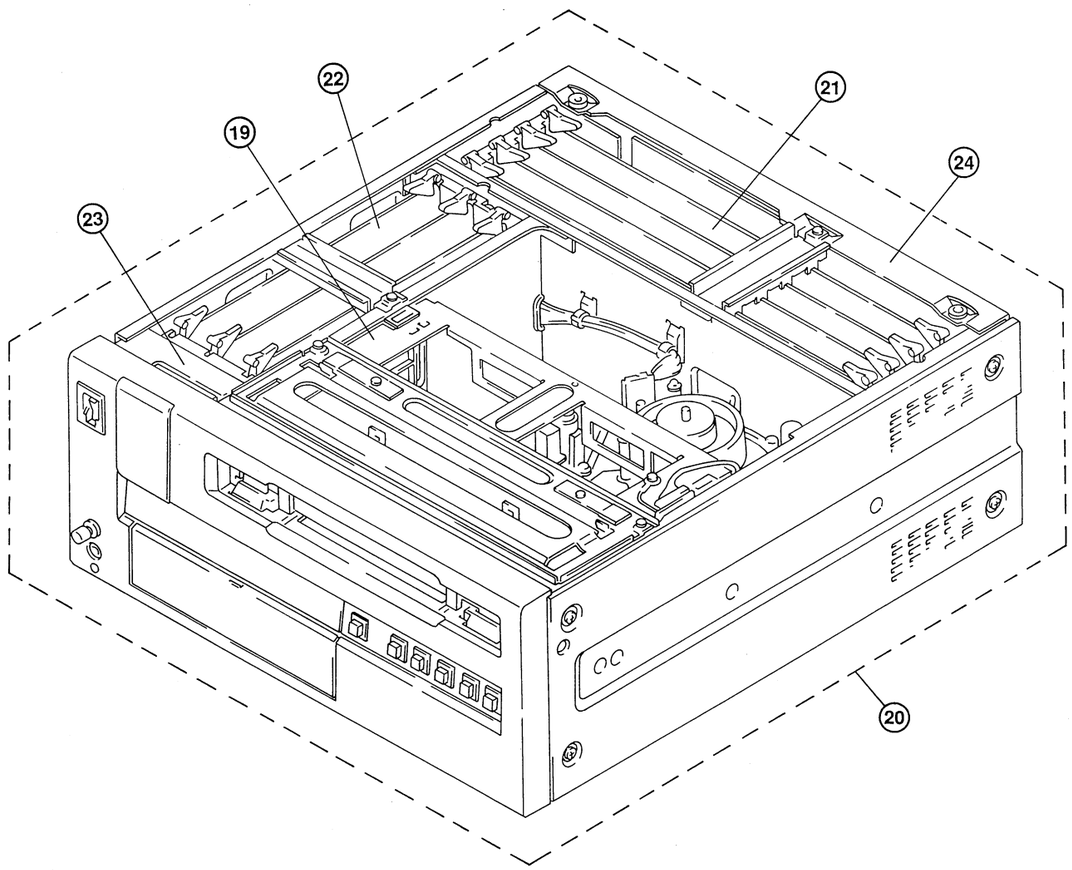

18-3

 REEL CHASSIS (1)

REEL CHASSIS (1)

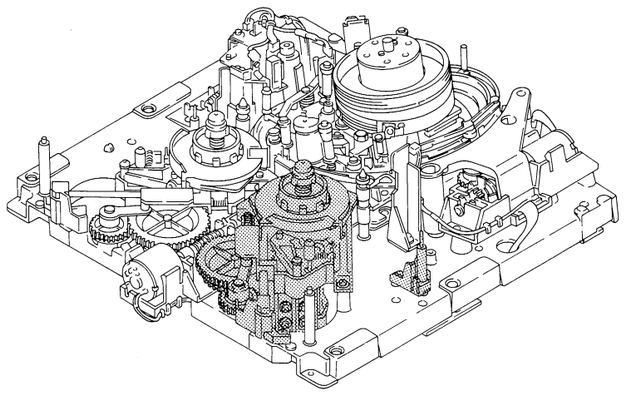

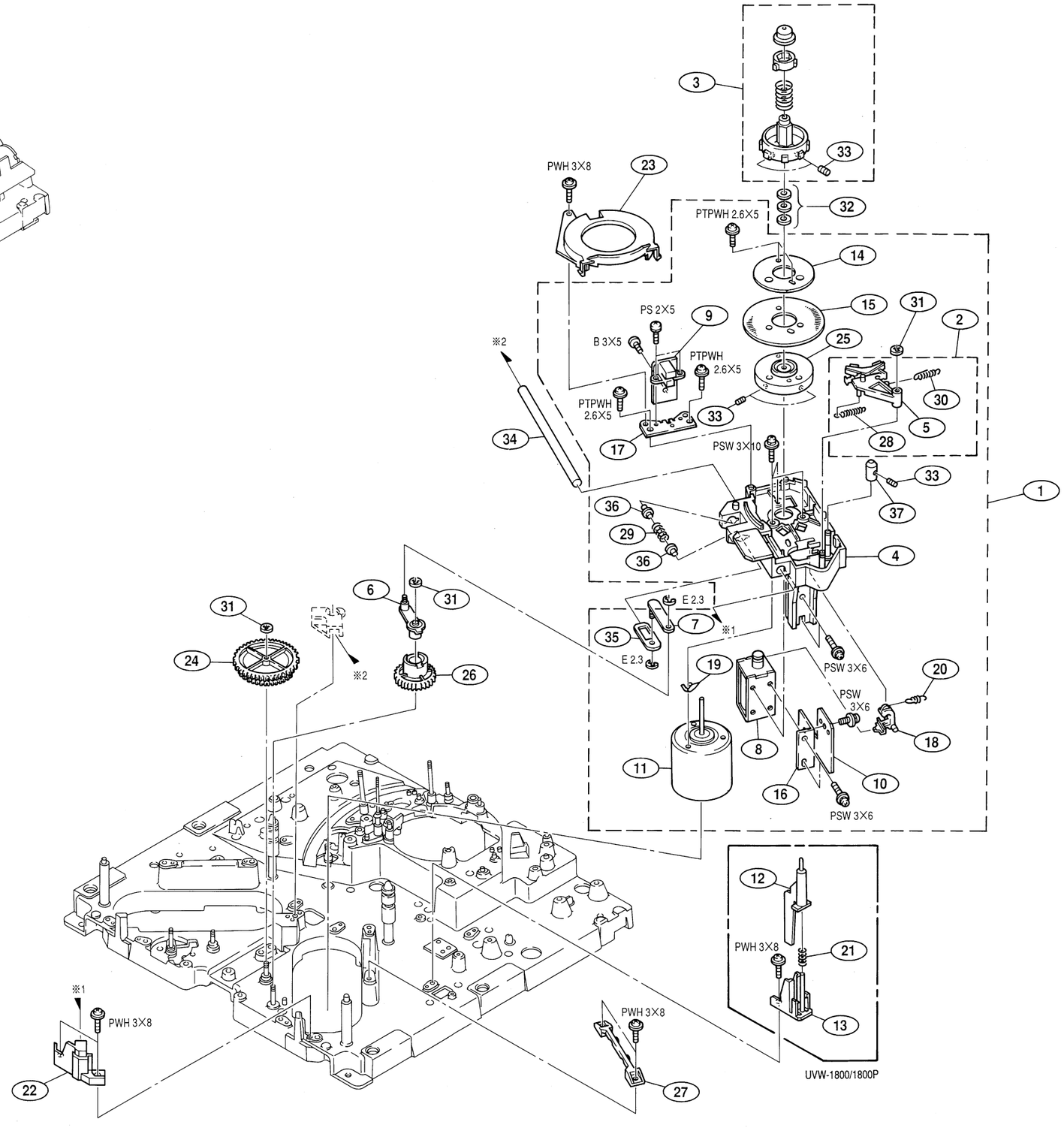

 18-4

 REEL CHASSIS (1)

No.	Part No.	SP	Description
1	A-8267-684-E	s	TABLE (T) ASSY, RS
2	A-8267-685-C	s	BRAKE ASSY
3	A-8267-690-B	s	TABLE ASSY, REEL
4	X-3167-230-3	o	PLATE (T) ASSY, REEL MOTOR
5	X-3167-231-3	s	LINING ASSY
6	X-3717-202-3	o	ARM ASSY, CRANK
7	X-3717-204-1	o	ARM (B) ASSY, CRANK
8	1-454-417-41	s	SOLENOID, PLUNGER
9	1-648-923-11	o	SE-207 BOARD
10	1-648-924-11	o	RM-126 BOARD
11	1-698-231-12	s	MOTOR, DC (REEL)
12	3-180-745-01	o	LEVER, MR **(UVW-1800/1800P)**
13	3-180-746-01	o	HOLDER, MR **(UVW-1800/1800P)**
14	3-182-279-02	o	RETAINER, DISK
15	3-182-280-02	o	DISK, REEL
16	3-182-281-01	o	SHEET METAL (T), RM FITTING
17	3-182-282-01	o	SHEET METAL, SENSOR FITTING
18	3-182-284-03	o	ARM, BRAKE RELEASE
19	3-182-285-01	s	SPACER (0.02T)
19	3-182-285-11	s	SPACER (0.05T)
20	3-182-286-03	s	SPRING, TENSION
21	3-182-295-01	o	SPRING, COMPRESSION **(UVW-1800/1800P)**
22	3-182-367-01	o	RETAINER (T), SHAFT
23	3-182-368-01	o	COVER, REEL
24	3-182-369-01	s	WHEEL, WORM
25	3-182-375-03	o	DISK HUB, REEL
26	3-182-382-01	s	GEAR (T), CRANK
27	3-182-402-01	o	GUIDE, PLATE
28	3-307-381-00	s	SPRING, TENSION
29	3-491-247-00	s	SPRING, COMPRESSION
30	3-648-217-00	o	SPRING, TENSION
31	3-669-596-01	s	WASHER (2.3), STOPPER
32	3-701-439-01	s	WASHER, POLY 3MM DIA 0.13T
32	3-701-439-11	s	WASHER, POLY 3MM DIA 0.25T
32	3-701-439-21	s	WASHER, POLY 3MM DIA 0.5T
33	3-701-506-01	s	SET SCREW, DOUBLE POINT 3×4
34	3-717-223-01	s	SHAFT, SLIDE
35	3-717-230-01	o	BRACKET, LIMITER
36	3-717-231-01	o	HOLDER, LIMITER
37	3-717-266-01	o	CAP (S), CG SHAFT

 18-5

 LOARDING RING

No.	Part No.	SP	Description
101	A-8267-680-B	s	BOX ASSY, GEAR
102	A-8267-681-C	o	RING ASSY, LOADING
103	A-8267-683-A	o	ROLLER ASSY, ADJUSTMENT RING
104	A-8267-699-C	o	ROLLER ASSY, CLEANING
105	X-3167-224-1	s	ROLLER ASSY, PRECEDING
106	X-3167-225-1	s	ROLLER ASSY, GUIDE
107	X-3167-226-1	s	ARM ASSY, AT CLEANER
108	X-3167-232-1	s	ROLLER ASSY, C
109	X-3167-233-2	o	ARM ASSY, C MAIN
110	X-3167-234-1	o	DECK ASSY, C
111	X-3167-235-4	o	ARM ASSY, DRIVING
112	X-3167-236-1	o	ROLLER (B) ASSY, RING
113	X-3717-215-3	s	ARM ASSY, PINCH ROLLER
114	1-648-922-11	o	PTC-67 BOARD
115	1-698-152-11	s	MOTOR, DC (SVD-1449)
116	3-171-423-02	o	JOINT, MOTOR
117	3-180-036-01	s	GEAR, LIMITER
118	3-183-653-02	s	RUBBER, LIMITER
119	3-182-242-01	o	WHEEL, WORM
120	3-182-276-01	o	SPRING, DRIVING
121	3-182-293-01	s	FLANGE, GUIDE
122	3-182-294-01	s	GUIDE, TAPE
123	3-182-346-02	s	SPRING, PINCH ARM
124	3-182-347-01	s	FLANGE, PRECEDING UPPER
125	3-182-349-01	o	RETAINER, SHAFT
126	3-182-350-02	s	SPRING, CLEANER ARM
127	3-182-389-02	s	CLEANER, AT
128	3-182-390-01	o	GEAR, WORM
129	3-182-453-01	o	GUIDE, P
130	3-533-373-21	s	SPRING, TENSION
131	3-549-887-00	s	SPRING, COIL, COMPRISION
132	3-657-841-71	s	SPACER (2×6.5)
133	3-669-465-00	s	WASHER (1.5), STOPPER
134	3-669-596-01	s	WASHER (2.3), STOPPER
135	3-675-866-00	s	ROLLER, RING
136	3-680-812-00	s	FLANGE, LOWER
137	3-682-166-21	s	SPACER DIA 2
138	3-698-829-01	s	NUT (M2)
139	3-701-437-11	s	WASHER POLY, 2MM DIA 0.25T
140	3-701-439-21	s	WASHER POLY, 3MM DIA 0.5T
141	3-721-333-01	s	SPRING, COMPRESSION
142	4-602-490-00	o	SPRING, TENSION
143	8-719-939-05	s	PHOTO INTERR PTER GP1S54

 18-6

 LOARDING RING

LOARDING RING

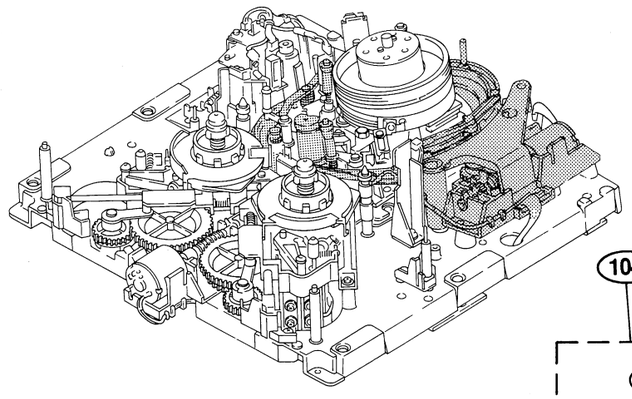

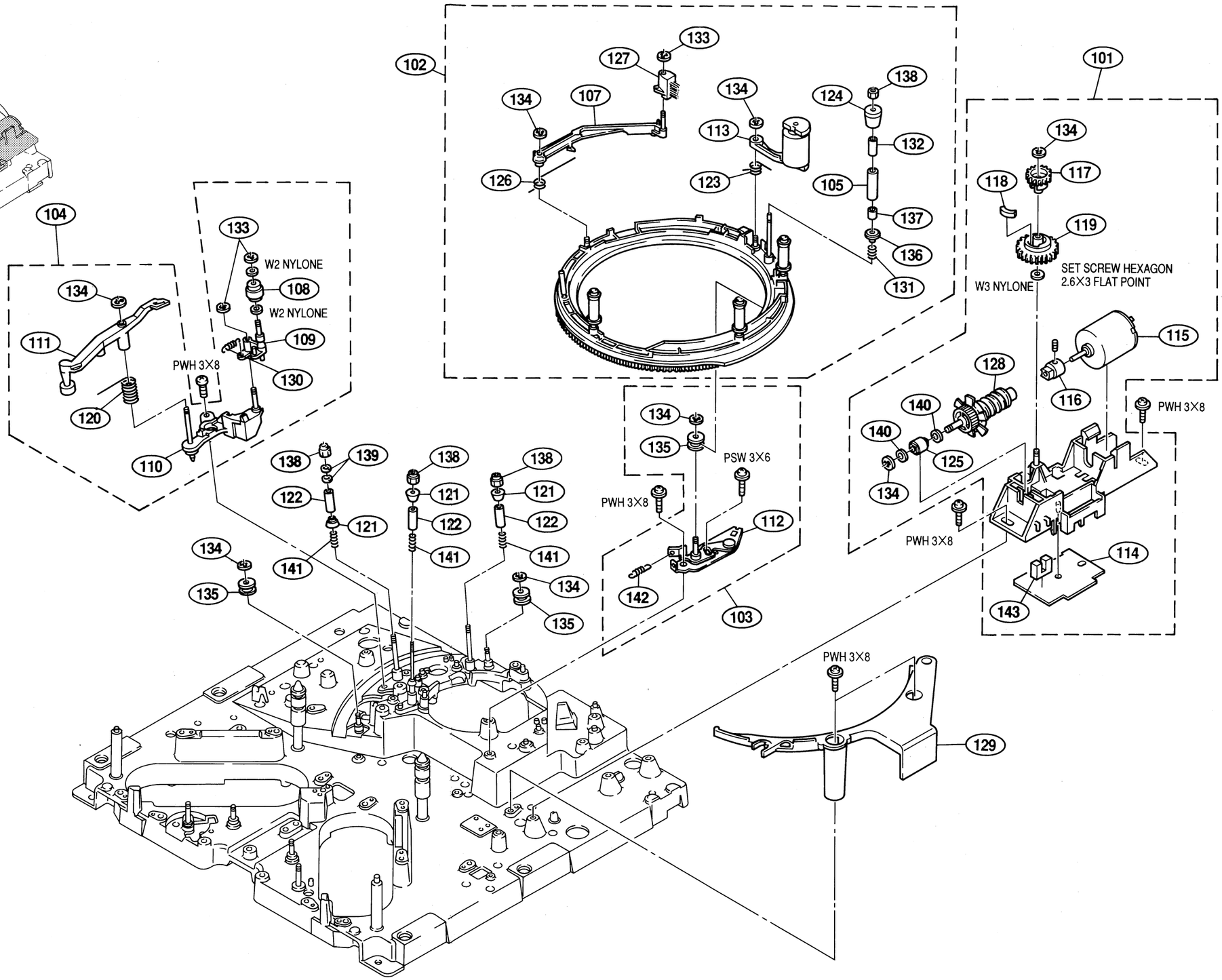

 18-7

 REEL CHASSIS (2)

REEL CHASSIS (2)

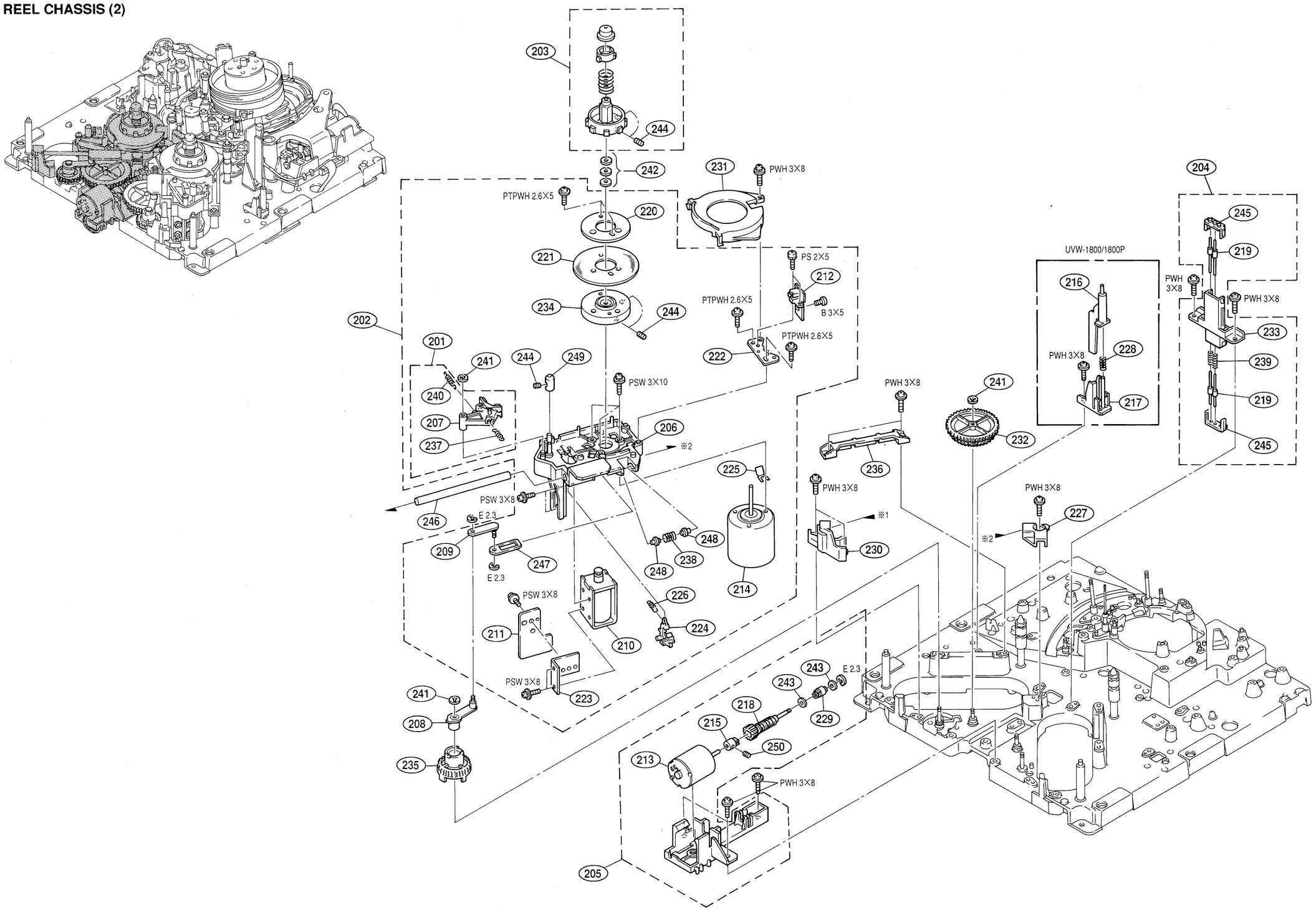

 18-8

 REEL CHASSIS (2)

No.	Part No.	SP	Description
201	A-8267-685-C	s	BRAKE ASSY
202	A-8267-688-E	s	TABLE (S) ASSY, RS
203	A-8267-690-B	s	TABLE ASSY, REEL
204	A-8267-691-A	s	MC ASSY
205	A-8267-698-A	o	MOTOR ASSY, LS
206	X-3167-229-3	o	PLATE (S) ASSY, REEL MOTOR
207	X-3167-231-3	s	LINING ASSY
208	X-3717-202-3	o	ARM ASSY, CRANK
209	X-3717-204-1	o	ARM (B) ASSY, CRANK
210	1-454-417-41	s	SOLENOID, PLUNGER
211	1-648-925-11	o	RM-127 BOARD
212	1-648-923-11	o	SE-207 BOARD
213	1-698-152-11	s	MOTOR, DC (SVD-1449)
214	1-698-231-12	s	MOTOR, DC (REEL)
215	3-171-423-02	o	JOINT, MOTOR
216	3-180-745-01	o	LEVER, MR **(UVW-1800/1800P)**
217	3-180-746-01	o	HOLDER, MR **(UVW-1800/1800P)**
218	3-182-266-01	o	WORM
219	3-182-277-01	o	PIN, MC
220	3-182-279-02	o	RETAINER, DISK
221	3-182-280-02	o	DISK, REEL
222	3-182-282-01	o	SHEET METAL, SENSOR FITTING
223	3-182-283-01	o	SHEET METAL, (S) RM FITTING
224	3-182-284-03	o	ARM, BRAKE RELEASE
225	3-182-285-01	s	SPACER
225	3-182-285-11	s	SPACER
226	3-182-286-01	s	SPRING, TENSION
227	3-182-292-01	o	RETAINER (ST), SHAFT
228	3-182-295-01	o	SPRING, COMPRESSION **(UVW-1800/1800P)**
229	3-182-349-01	o	RETAINER, SHAFT
230	3-182-366-01	o	RETAINER (S), SHAFT
231	3-182-368-01	o	COVER, REEL
232	3-182-369-01	s	WHEEL, WORM
233	3-182-372-01	o	HOLDER, MC
234	3-182-375-03	o	DISK HUB, REEL
235	3-182-383-01	s	GEAR (S), CRANK
236	3-182-402-01	o	GUIDE, PLATE
237	3-307-381-00	s	SPRING, TENSION
238	3-491-247-00	s	SPRING, COMPRESSION
239	3-554-202-00	o	SPRING, COMPRESSION
240	3-648-217-00	o	SPRING, TENSION
241	3-669-596-01	s	WASHER (2.3), STOPPER
242	3-701-439-01	s	WASHER POLY 3MM DIA, 0.13T
242	3-701-439-11	s	WASHER POLY 3MM DIA, 0.25T
242	3-701-439-21	s	WASHER POLY 3MM DIA, 0.5T
243	3-701-439-21	s	WASHER POLY 3MM DIA, 0.5T
244	3-701-506-01	s	SET SCREW, DOUBLE POINT 3×4
245	3-717-207-01	s	COVER, M/C DETECTION HOLDER
246	3-717-223-01	s	SHAFT, SLIDE
247	3-717-230-01	o	BRACKET, LIMITER
248	3-717-231-01	o	HOLDER, LIMITER
249	3-717-266-01	o	CAP (S), CG SHAFT
250	7-621-734-09	s	SET SCREW, DOUBLE POINT 2.6×3

 18-9

 DRUM & TENSION REGULATOR ASSEMBLY

No.	Part No.	SP	Description
301	A-8260-972-A	s	HEAD DRUM ASSY, DBH-39A-R **(UVW-1800)**
301	A-8260-976-A	s	HEAD DRUM ASSY, DBH-41A-R **(UVW-1600)**
301	A-8260-974-A	s	HEAD DRUM ASSY, DBH-40A-R **(UVW-1800P)**
301	A-8260-978-A	s	HEAD DRUM ASSY, DBH-42A-R **(UVW-1600P)**
302	A-8260-973-A	s	UPPER DRUM ASSY, DBR-39-R **(UVW-1800)**
302	A-8260-977-A	s	UPPER DRUM ASSY, DBR-41-R **(UVW-1600)**
302	A-8260-975-A	s	UPPER DRUM ASSY, DBR-40-R **(UVW-1800P)**
302	A-8260-979-A	s	UPPER DRUM ASSY, DBR-42-R **(UVW-1600P)**
303	A-8267-693-A	s	TENSION REGULATOR ASSY
304	X-3166-376-1	s	GROUND ASSY, SHAFT
305	X-3167-218-1	o	HOOK ASSY, TR
306	X-3167-219-1	o	BASE ASSY, TR HOOK
307	X-3167-220-1	o	PLATE, ADJUSTMENT ASSY, TR
308	X-3167-241-1	s	ARM ASSY, RETURN
309	X-3675-851-0	s	ROLLER ASSY, TR
310	1-648-921-11	o	TR-84 BOARD
311	1-648-927-11	o	PTC-68 BOARD
312	1-698-179-11	s	MOTOR, DC (CAPSTAN)
313	1-810-381-11	s	SENSOR, DEW CONDENSATION
314	2-618-901-00	s	SPRING
315	3-171-234-01	s	SPACER, FLANGE 0.01T
316	3-171-234-11	s	SPACER, FLANGE 0.03T
317	3-171-234-21	s	SPACER, FLANGE 0.05T
318	3-171-579-02	o	SPRING,LEAF, TENSION REGULATOR
319	3-182-216-01	o	BRACKET, GROUND
320	3-171-326-01	o	BRACKET (B) , TAPE
321	3-182-257-02	s	HOLDER, DME
322	3-182-274-01	o	PLATE, ADJUSTMENT, RETURN
323	3-182-275-01	o	COVER, MAGNET
324	3-182-288-01	o	PROTECTOR
325	3-182-289-01	o	BASE, TR
326	3-437-173-02	o	SCREW, HEAD ADJUSTING
327	3-653-350-00	s	SPRING, COMPRESSION
328	3-669-465-00	s	WASHER (1.5), STOPPER
329	3-669-596-01	s	WASHER (2.3), STOPPER
330	3-677-749-03	s	RETAINER, B
331	3-677-752-00	s	NUT, ADJUSTMENT, T
332	3-680-828-00	o	MAGNET
333	3-680-860-01	s	SPRING, TENSION(POWER TENSION)
334	3-717-253-01	s	ROLLER
335	3-729-125-01	o	SCREW (M2.6×8)
336	7-621-731-08	s	SET SCREW, FLAT POINT 2×2.5
337	7-682-176-21	s	SET SCREW, SLOT CONE POINT 3×6
338	8-759-057-48	s	PHOTO REFLECTOR NJL5803K-F10
339	8-745-001-07	s	DM-230-1

 18-10

 DRUM & TENSION REGULATOR ASSEMBLY

DRUM & TENSION REGULATOR ASSEMBLY

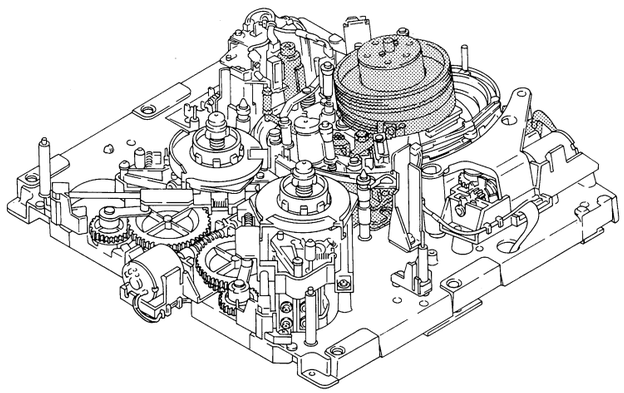

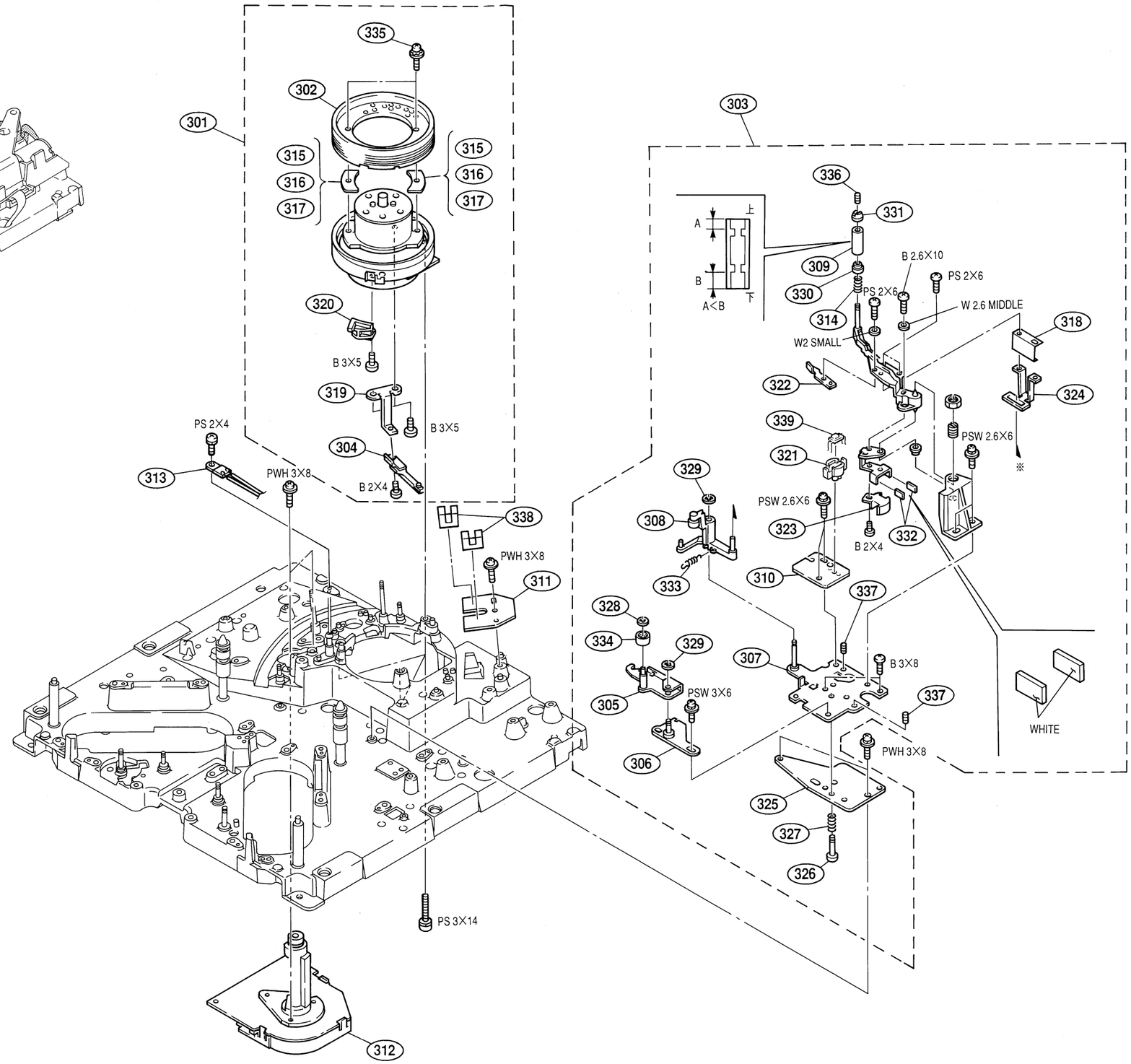

 18-11

 DR-214 BOARD ASSEMBLY

DR-214 BOARD ASSEMBLY

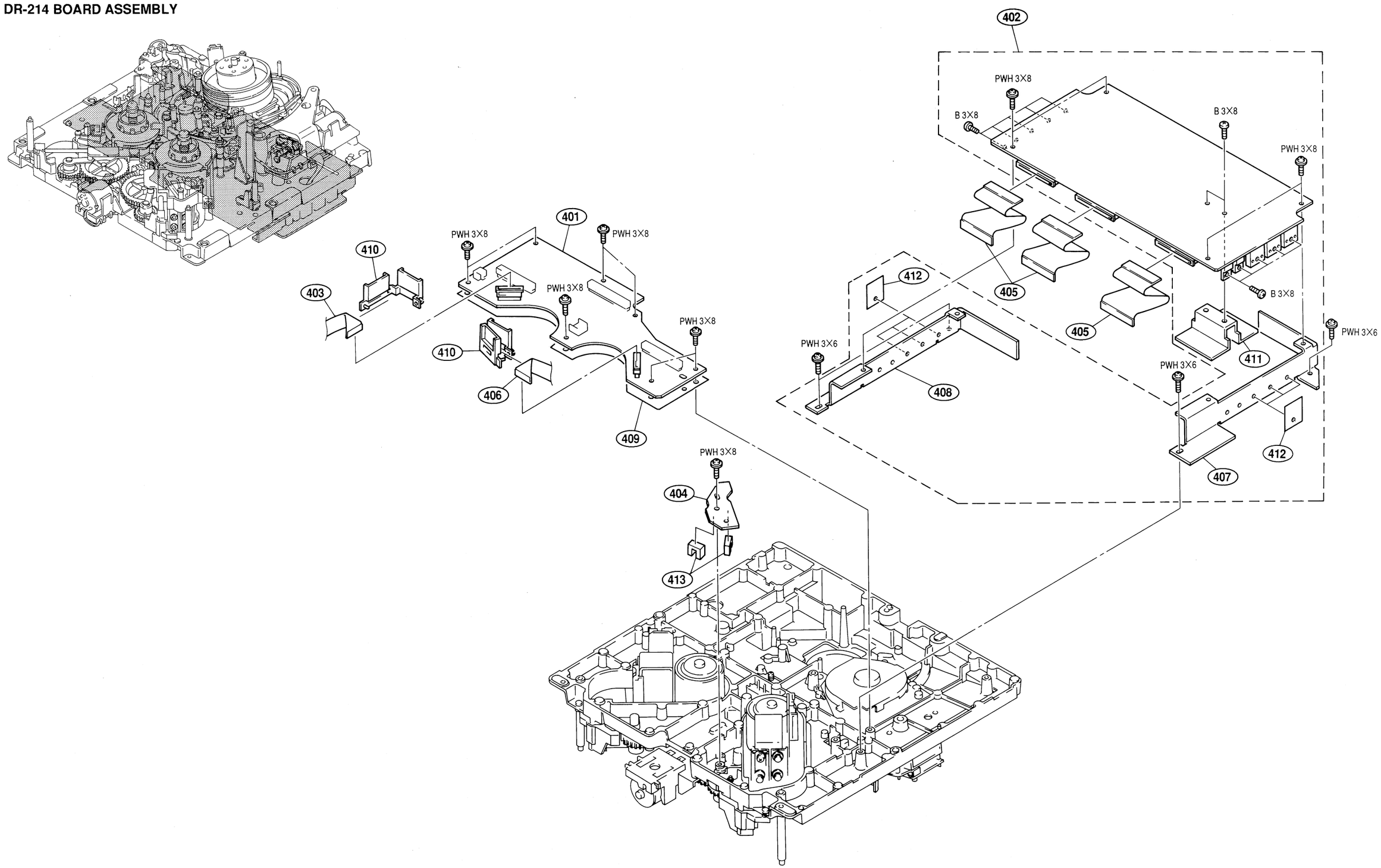

 18-12

 DR-214 BOARD ASSEMBLY

No.	Part No.	SP	Description
401	A-8275-288-A	o	COMPLETE PCB, MS-39A **(UVW-1600/1600P)**
401	A-8275-291-A	o	COMPLETE PCB, MS-39 **(UVW-1800/1800P)**
402	A-8275-290-A	o	COMPLETE PCB, DR-214
403	1-558-261-31	s	WIRE, FLEXIBLE CARD
404	1-648-926-11	o	PTC-66 BOARD
405	1-751-633-11	s	WIRE, FLEXIBLE CARD
406	1-751-634-11	s	WIRE, FLEXIBLE CARD
407	3-182-357-01	o	HEAT SINK (L), DR
408	3-182-358-01	o	HEAT SINK (R), DR
409	3-182-400-01	o	SHEET, MS
410	3-182-401-02	o	HOLDER, FLAT CABLE
411	3-183-144-01	o	HEAT SINK (D), DR
412	4-911-232-01	s	SHEET INSULATING
413	8-719-939-05	s	PHOTO INTERRUPTER GP1S54

 18-13

 PRESS ASSY, PINCH

No.	Part No.	SP	Description
501	A-8267-676-A	o	BLADE ASSY **(UVW-1600/1600P)**
502	A-8267-677-B	s	HEAD (P) ASSY, AT **(UVW-1600/1600P)**
502	A-8267-682-B	s	HEAD (R) ASSY, AT **(UVW-1800/1800P)**
503	A-8267-694-A	s	HEAD ASSY, CTL
504	A-8267-695-A	s	PRESS ASSY, PINCH
505	A-8267-696-A	o	SENSOR ASSY, T
506	A-8267-697-A	o	HEAD ASSY, FE **(UVW-1800/1800P)**
507	X-3167-210-2	o	SUPPORT (P) ASSY, AT **(UVW-1600/1600P)**
507	X-3167-228-2	o	SUPPORT (R) ASSY, AT **(UVW-1800/1800P)**
508	X-3167-211-2	o	PLATE, ADJUSTMENT ASSY, P **(UVW-1600/1600P)**
508	X-3167-227-2	o	PLATE, ADJUSTMENT ASSY, RP **(UVW-1800/1800P)**
509	X-3167-212-2	s	CLEANING BLADE ASSY **(UVW-1600/1600P)**
510	X-3167-221-1	o	BRACKET ASSY, CTL HEAD
511	X-3167-316-2	s	HEAD (EF291-21) ASSY **(UVW-1800/1800P)**
512	1-454-338-00	s	SOLENOID, PLUNGER
513	1-506-481-11	o	PIN, CONNECTOR 2P
514	1-543-316-31	s	HEAD, SENSING (SMALL TYPE)
515	1-564-001-11	o	PIN, CONNECTOR 2P
516	1-564-005-11	o	PIN, CONNECTOR 6P
517	1-564-013-11	o	PIN, CONNECTOR 3P **(UVW-1800/1800P)**
518	1-622-596-11	o	PC BOARD, PD-35
519	2-279-715-01	s	RIVET, NYLON
520	3-182-244-01	o	LEVER, P PRESS
521	3-182-250-01	o	HOLDER, S SENSOR
522	3-182-255-01	s	SPRING, CTL
523	3-182-256-01	o	DECK, CTL HEAD
524	3-182-317-01	o	SHAFT, AT FIXED
525	3-182-376-02	o	CASE (1), AT SHIELD
526	3-182-377-03	o	CASE (2), AT SHIELD
527	3-182-388-02	o	BRACKET, RP
528	3-182-391-01	o	HOLDER, T SENSOR
529	3-537-674-03	s	SPRING, TENSION
530	3-642-719-01	o	SPACER (2.6×11)
531	3-653-382-01	o	SPACER (4×25)
532	3-698-829-01	s	NUT (M2)
533	3-701-441-21	s	WASHER, POLY 4MM DIA 0.5T
534	3-717-247-01	o	LIMITER, P
535	3-717-248-01	o	SPRING
536	3-717-249-01	o	STOPPER, P
537	3-717-250-02	o	SHAFT, JOINT, P
538	3-738-730-01	s	SPRING, COMPRESSION
539	4-812-134-21	s	RIVET NYLON, 3.5
540	7-621-712-46	s	SET SCREW, SLOT FLAT POINT 2.6×5
541	7-621-712-55	s	SET SCREW, SLOT CONE POINT 2.6×6
542	8-825-554-83	s	HEAD, CTL PS244-21B
543	8-825-778-81	s	HEAD EPS244-2103H **(UVW-1800/1800P)**
543	8-825-778-91	s	HEAD PS244-2103G **(UVW-1600/1600P)**
544	3-639-647-00	s	WASHER (0.5T)

 18-14

 PRESS ASSY, PINCH

PRESS ASSY, PINCH

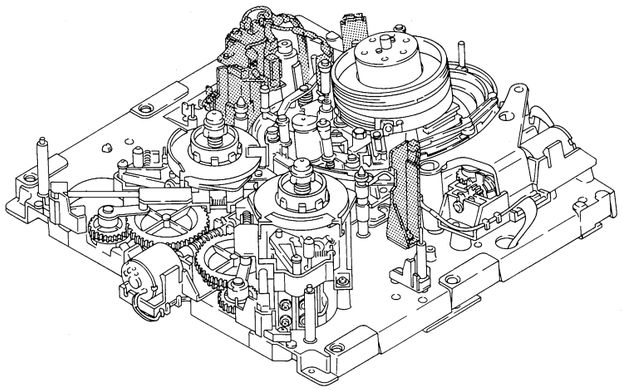

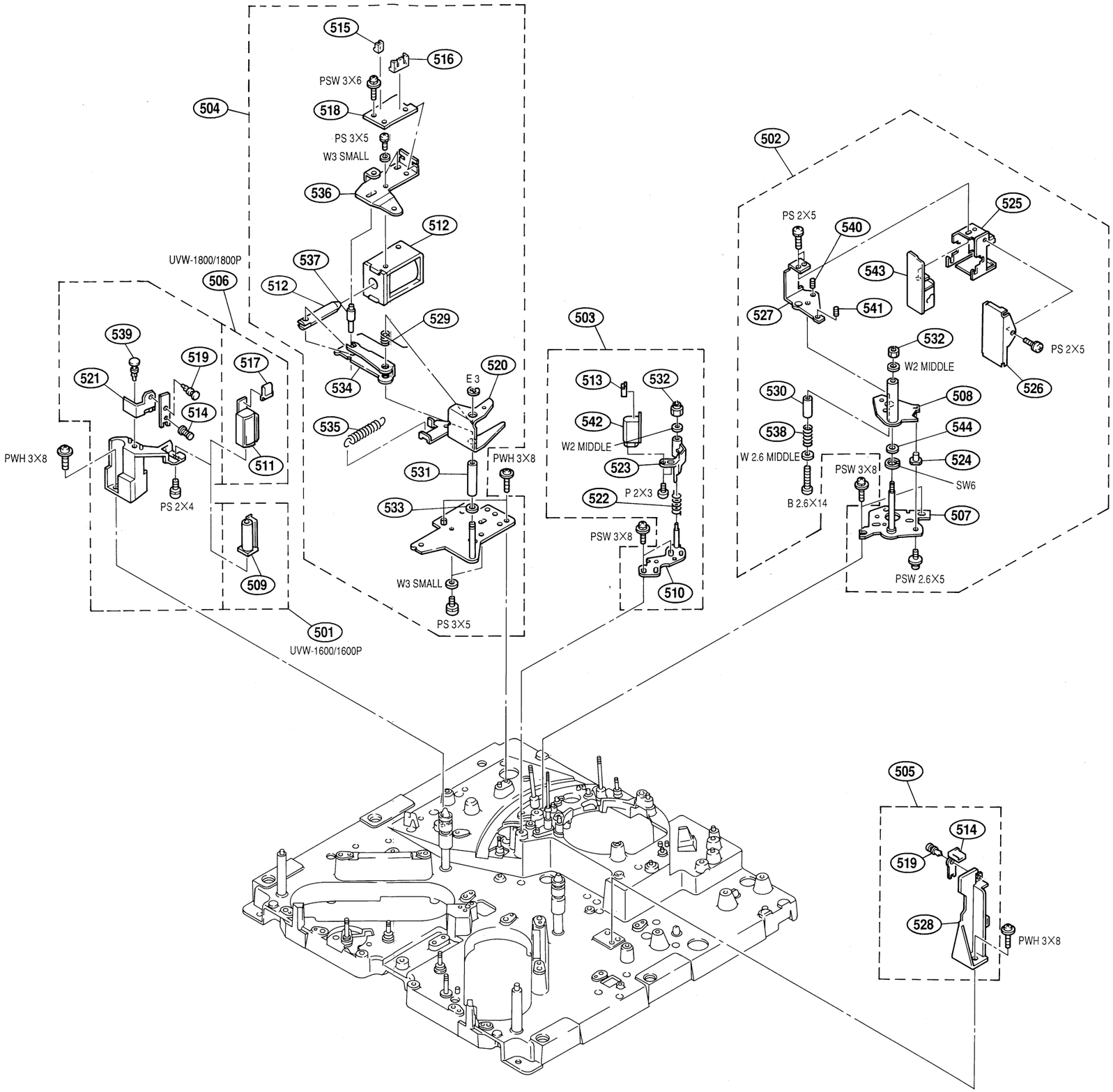

 18-15

 CASSETTE COMPARTMENT ASSEMBLY

CASSETTE COMPARTMENT ASSEMBLY

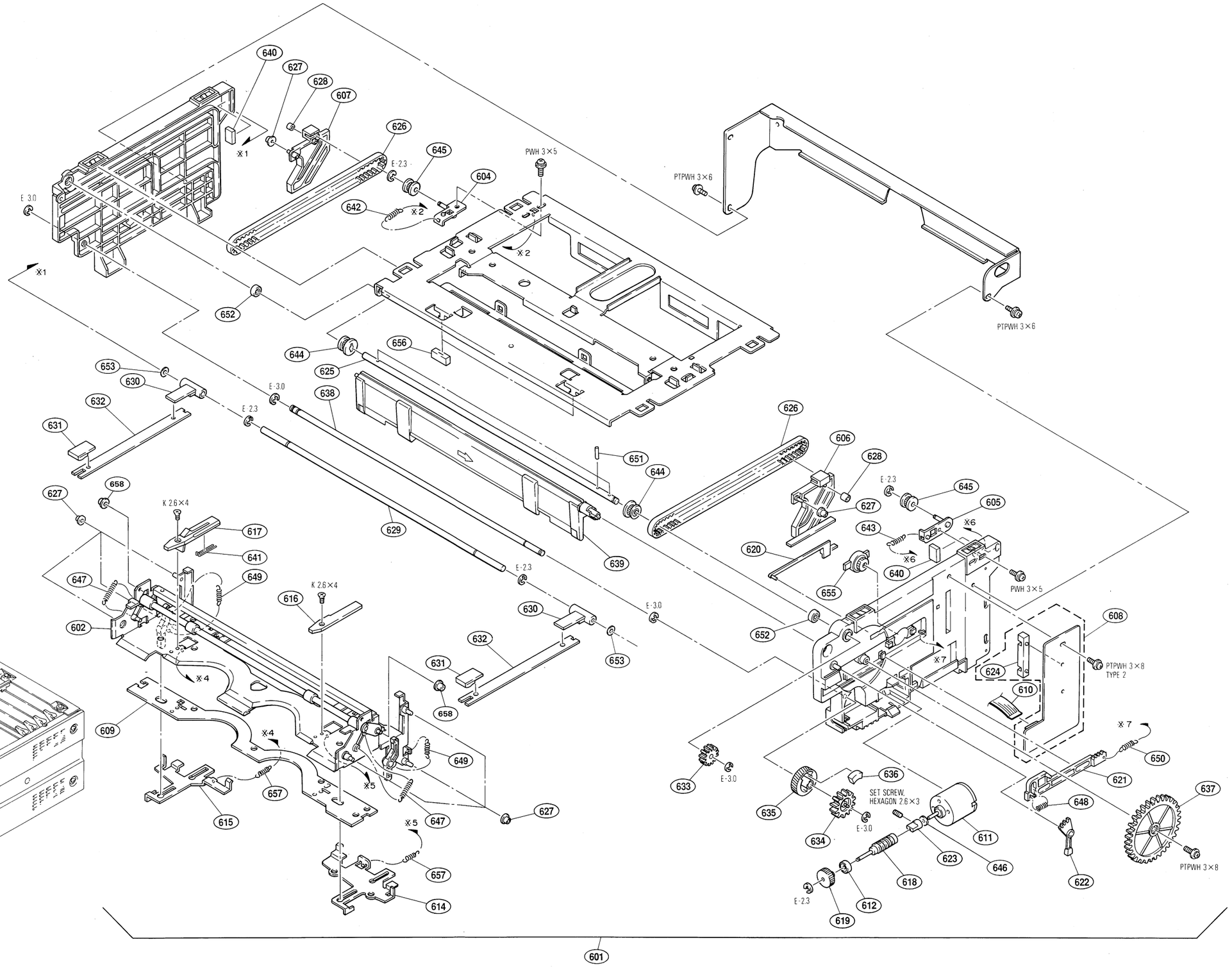

 18-16

 CASSETTE COMPARTMENT ASSEMBLY

No.	Part No.	SP	Description
601	A-8267-863-A	s	CASSETTE COMPARTMENT ASSY
602	A-8276-957-A	s	STAGE ASSY(RP)
604	X-3166-065-1	o	DECK (L) ASSY, PULLEY
605	X-3166-066-1	o	DECK (R) ASSY, PULLEY
606	X-3167-447-2	o	SLIDER (R) ASSY
607	X-3167-446-2	o	SLIDER (L) ASSY
608	A-8276-626-B	o	MOUNTED CIRCUIT BOARD, CL-29
609	A-8276-625-A	o	MOUNTED CIRCUIT BOARD, PC-70
610	1-751-644-11	s	WIRE, FLEXIBLE CARD (5P)
611	1-698-152-11	s	MOTOR, DC SVD-1499
612	3-188-745-01	s	BEARING, BALL, (B) (NO FRANGE)
614	3-171-367-04	o	SWITCH (R), IN
615	3-171-398-03	o	SWITCH (L), IN
616	3-171-399-02	o	GUIDE (R), CASSETTE
617	3-171-400-04	o	GUIDE (L), CASSETTE
618	3-171-418-02	s	WORM
619	3-171-419-11	s	WHEEL
620	3-171-420-03	o	SHUTTER
621	3-171-421-01	o	SLIDER, DOOR SWITCHING
622	3-171-422-01	o	LEVER, DOOR SWITCHING
623	3-171-423-02	o	JOINT, MOTOR
624	3-171-424-02	o	HOLDER, SENSER
625	3-171-457-01	o	SHAFT, JOINT
626	3-171-458-01	s	BELT, TIMING
627	3-171-459-01	s	ROLLER, GUIDE
628	3-171-460-01	s	ROLLER, SLIDER
629	3-171-461-01	o	SHAFT, RETAINER, L CASSETTE
630	3-171-462-01	o	HOLDER, SHAFT
631	3-171-463-02	o	PLATE
632	3-171-464-01	o	SPRING, LEAF
633	3-171-465-01	o	GEAR, DRIVING
634	3-171-466-02	o	GEAR, LIMITER
635	3-181-430-01	o	WHEEL, WORM
636	3-181-431-01	o	RUBBER, LIMITER
637	3-171-479-01	o	GEAR, MIDWAY
638	3-171-480-01	o	SHAFT, WORM WHEEL
639	3-171-510-02	s	DOOR, CASSETTE
640	3-174-908-01	s	STOPPER
641	3-176-139-01	s	SPRING, C GUIDE
642	3-176-578-01	s	SPRING, TENSION
643	3-176-579-01	s	SPRING, TENSION
644	3-176-583-01	o	PULLEY (A)
645	3-176-584-01	o	PULLEY (B)
646	3-182-706-01	s	SPACER
647	3-548-757-00	s	SPRING, TENSION
648	3-579-759-00	s	SPRING, COMPRESSION
649	3-646-214-00	s	SPRING
650	3-672-461-00	s	SPRING, TENSION
651	3-677-193-00	o	PIN, STOPPER
652	3-698-217-01	s	BEARING (NO FLANGE), BALL
653	3-701-439-21	s	WASHER
655	3-712-786-01	s	DAMPER, OIL
656	3-717-369-04	o	STOPPER, DOOR
657	4-858-799-00	s	SPRING, TENSION
658	3-188-273-01	s	ROLLER(B), GUIDE

 18-17

CHASSIS & ORNAMENTAL PANEL BLOCK

No.	Part No.	SP	Description
701	A-6771-428-A	s	STAY ASSY, CASSETTE COMPARTMENT
702	A-8267-664-G	o	PANEL ASSY, FRONT **(UVW-1600)**
702	A-8267-909-B	o	PANEL ASSY, FRONT **(UVW-1600P)**
702	A-8267-666-G	o	PANEL ASSY, FRONT **(UVW-1800)**
702	A-8267-911-B	o	PANEL ASSY, FRONT **(UVW-1800P)**
703	A-8267-665-A	o	LID, UPPER ASSY
704	A-8267-667-C	o	DOOR ASSY, FRONT
705	A-8267-670-B	o	RETAINER (L) ASSY, PC BOARD
706	A-8267-673-B	o	RETAINER (S) ASSY, PC BOARD
707	X-3166-071-1	s	KNOB ASSY (B), VOL
708	3-182-395-01	o	GEAR, DAMPER
709	3-182-406-01	o	GUARD, POWER SW
710	3-182-441-03	o	PLATE, BOTTOM
711	3-182-451-02	o	CABINET (RIGHT)
712	3-182-452-02	o	CABINET (LEFT)
713	3-642-656-01	s	FOOT
714	3-669-595-00	s	WASHER (2), STOPPER
715	3-688-102-01	o	SPACER, M4
716	3-701-438-21	s	WASHER
717	3-712-786-02	s	DAMPER, OIL
718	3-717-306-01	o	SPRING
719	3-717-377-01	o	FRAME (SQUARE 17), ORNAMENTAL

18-18

 CHASSIS & ORNAMENTAL PANEL BLOCK

CHASSIS & ORNAMENTAL PANEL BLOCK

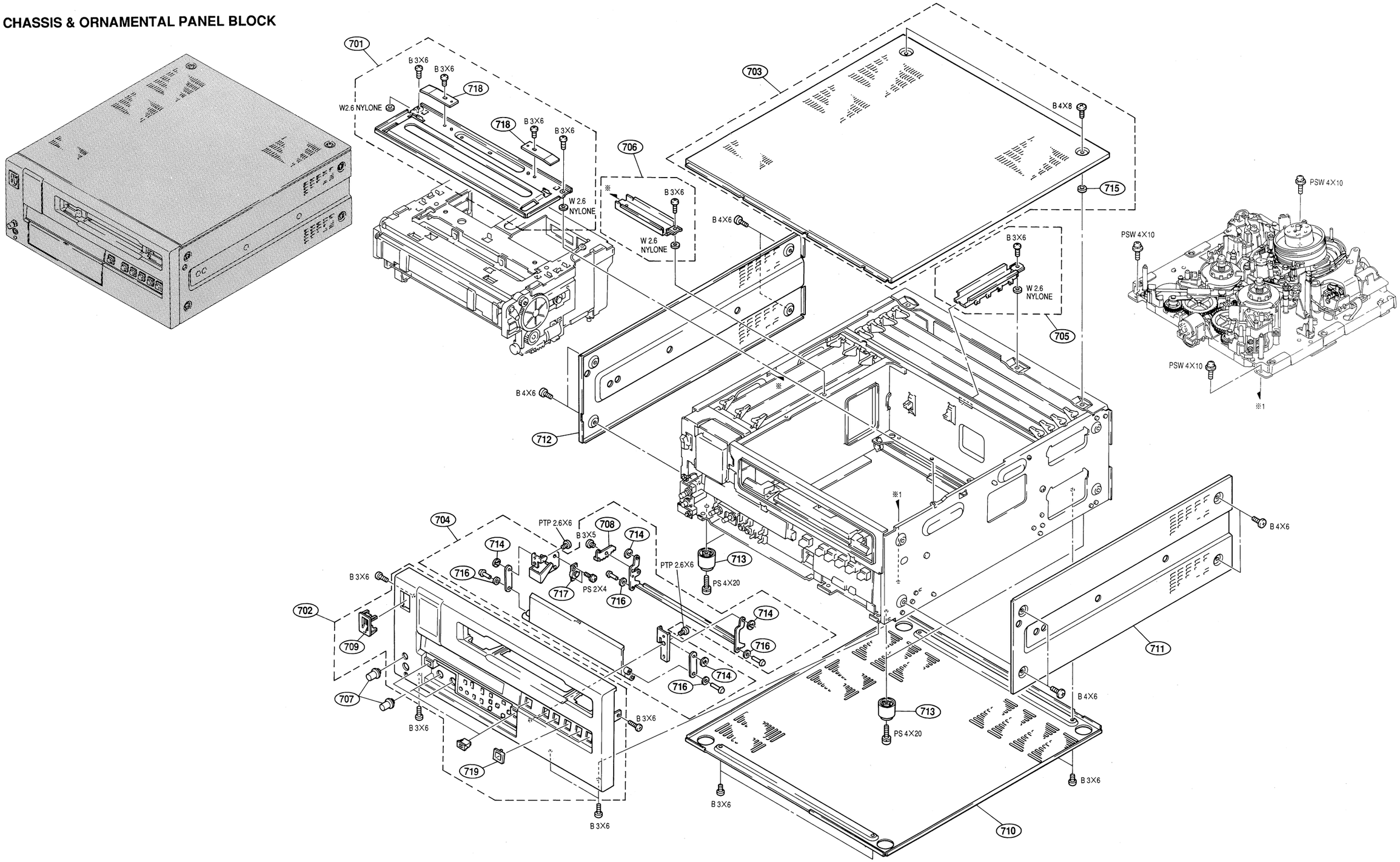

 18-19

 CARD RACK BLOCK (1)

CARD RACK BLOCK (1)

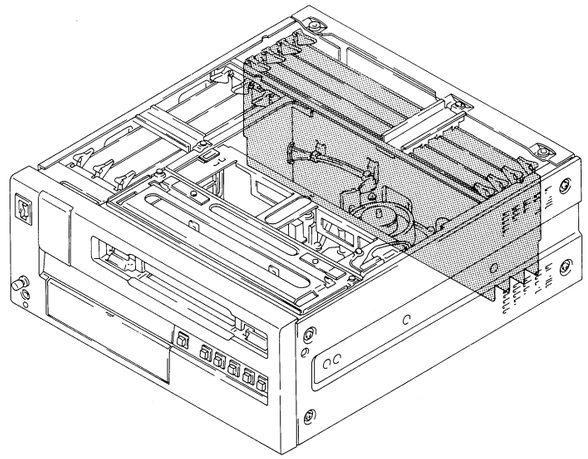

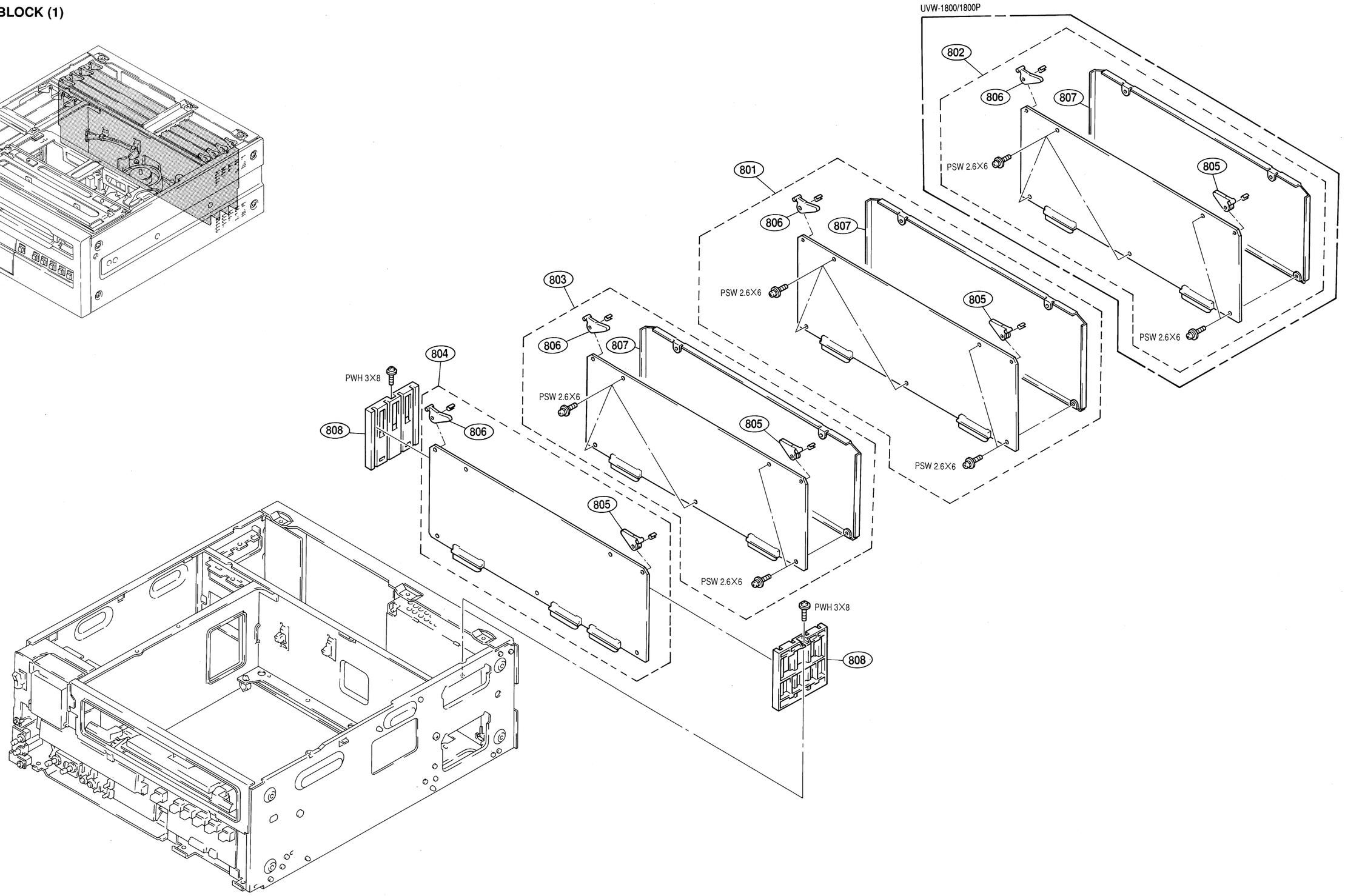

 18-20

CARD RACK BLOCK (1)

CARD RACK BLOCK (1)

No.	Part No.	SP	Description
801	A-8275-277-A	o	MOUNTED CIRCUIT BOARD, VP-43A **(UVW-1600)**
801	A-8275-464-A	o	MOUNTED CIRCUIT BOARD, VP-43AP **(UVW-1600P)**
801	A-8275-281-A	o	MOUNTED CIRCUIT BOARD, VP-43 **(UVW-1800)**
801	A-8275-468-A	o	MOUNTED CIRCUIT BOARD, VP-43P **(UVW-1800P)**
802	A-8275-280-A	o	MOUNTED CIRCUIT BOARD, VRA-5 **(UVW-1800)**
802	A-8275-467-A	o	MOUNTED CIRCUIT BOARD, VRA-5P **(UVW-1800P)**
803	A-8275-282-A	o	MOUNTED CIRCUIT BOARD, TBC-25 **(UVW-1800/1600)**
803	A-8275-469-A	o	MOUNTED CIRCUIT BOARD, TBC-25P **(UVW-1800P/1600P)**
804	A-8275-284-A	o	MOUNTED CIRCUIT BOARD, SS-53
805	3-179-084-01	s	LEVER, PC BOARD (R)
806	3-179-085-01	s	LEVER, PC BOARD (L)
807	3-182-386-02	o	PLATE, SHIELD (L), CARD
808	3-182-438-02	o	GUIDE (L), PCB

18-21

 CARD RACK BLOCK (2)

No.	Part No.	SP	Description
901	A-8275-278-A	o	MOUNTED CIRCUIT BOARD, RP-70A **(UVW-1600)**
901	A-8275-465-A	o	MOUNTED CIRCUIT BOARD, RP-70AP **(UVW-1600P)**
901	A-8275-285-A	o	MOUNTED CIRCUIT BOARD, RP-70 **(UVW-1800)**
901	A-8275-470-A	o	MOUNTED CIRCUIT BOARD, RP-70P **(UVW-1800P)**
902	A-8275-279-A	o	MOUNTED CIRCUIT BOARD, AP-31A **(UVW-1600)**
902	A-8275-466-A	o	MOUNTED CIRCUIT BOARD, AP-31AP **(UVW-1600P)**
902	A-8275-286-A	o	MOUNTED CIRCUIT BOARD, AP-31 **(UVW-1800)**
902	A-8275-471-A	o	MOUNTED CIRCUIT BOARD, AP-31P **(UVW-1800P)**
903	A-8275-287-A	o	MOUNTED CIRCUIT BOARD, AR-14 **(UVW-1800)**
903	A-8275-472-A	o	MOUNTED CIRCUIT BOARD, AR-14P **(UVW-1800P)**
904	A-8276-730-A	o	MOUNTED CIRCUIT BOARD, MB-470A **(UVW-1600)**
904	A-8276-855-A	o	MOUNTED CIRCUIT BOARD, MB-470AP **(UVW-1600P)**
904	A-8276-736-A	o	MOUNTED CIRCUIT BOARD, MB-470 **(UVW-1800)**
904	A-8276-854-A	o	MOUNTED CIRCUIT BOARD, MB-470P **(UVW-1800P)**
905	A-8276-731-A	o	MOUNTED CIRCUIT BOARD, MB-471A **(UVW-1600/1600P)**
905	A-8276-737-A	o	MOUNTED CIRCUIT BOARD, MB-471 **(UVW-1800/1800P)**
906	1-571-632-11	s	WIRE, FLEXIBLE CARD 34P
907	3-179-084-01	s	LEVER, PC BOARD (R)
908	3-179-085-01	s	LEVER, PC BOARD (L)
909	3-182-298-01	o	CASE, SHIELD (LID), AP2
910	3-182-316-01	o	CASE, SHIELD (LID), PR70V
911	3-182-351-01	o	CASE, SHIELD, AP (2B)
912	3-182-385-02	o	PLATE, SHIELD (S), CARD
913	3-182-407-01	o	LID, AR CASE, SHIELD **(UVW-1800/1800P)**
914	3-182-439-02	o	GUIDE (S), PCB

 18-22

 CARD RACK BLOCK (2)

CARD RACK BLOCK (2)

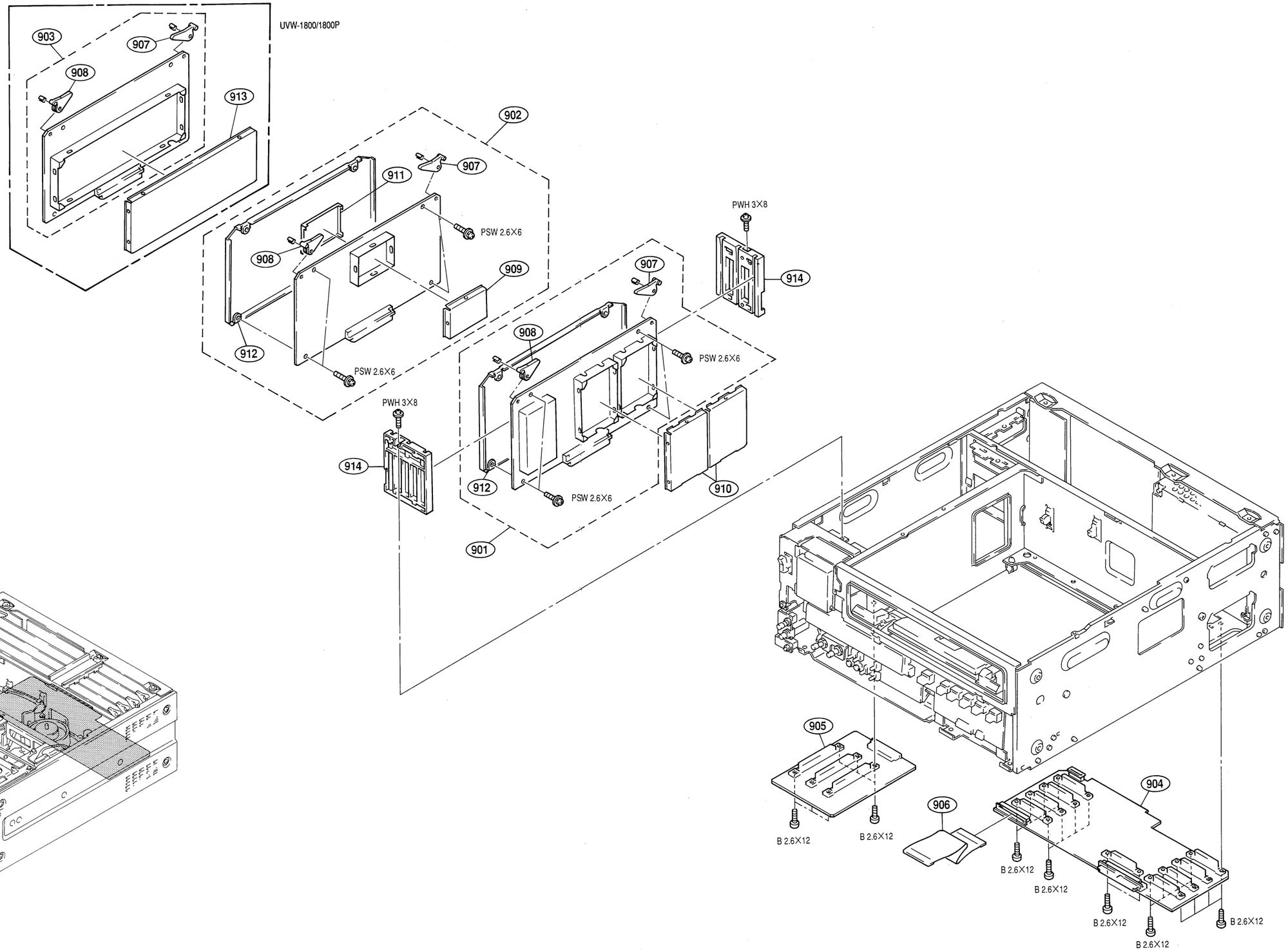

 18-23

 CHASSIS BLOCK

CHASSIS BLOCK

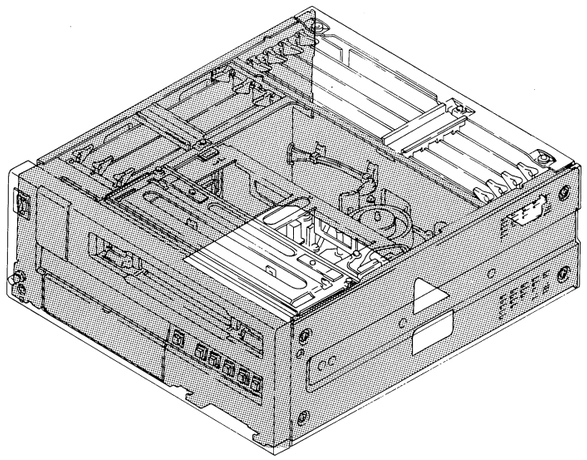

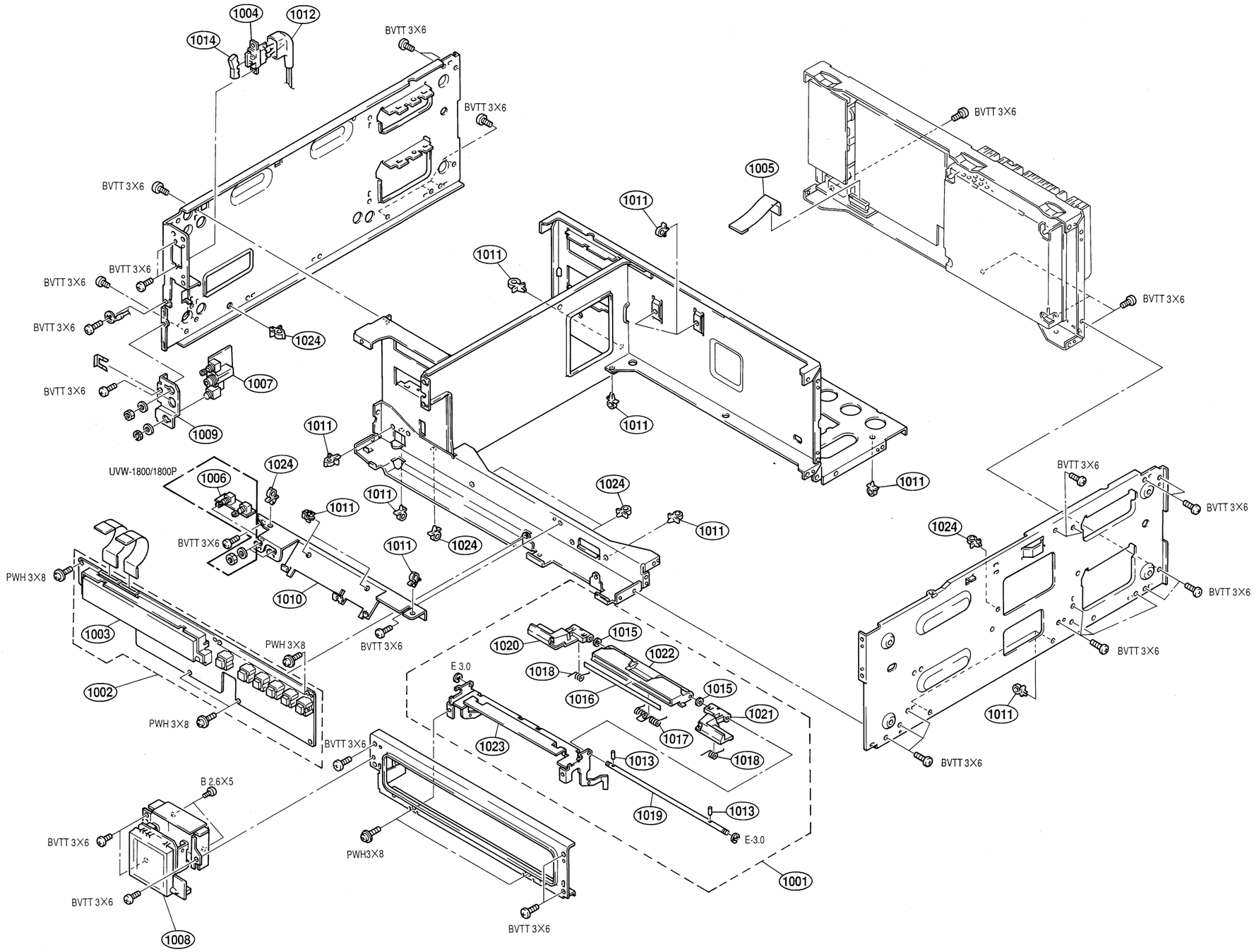

 18-24

 CHASSIS BLOCK

No.	Part No.	SP	Description
1001	A-6751-377-G	o	GUIDE ASSY, SC
1002	A-8275-283-A	o	COMPLETE PCB, KY-249A **(UVW-1600/1600P)**
1002	A-8275-289-A	o	COMPLETE PCB, KY-249 **(UVW-1800/1800P)**
1003	1-517-246-11	s	INDICATION TUBE, FLUORESCENT
1004 ⚠	1-570-117-31	s	SWITCH, SEESAW (AC POWER)
1005	1-575-733-11	s	WIRE, FLAT TYPE (17 CORE)
1006	1-648-916-11	o	VR-155 BOARD **(UVW-1800/1800P)**
1007	1-648-917-11	o	HP-61 BOARD **(UVW-1800/1800P)**
1007	1-648-917-21	o	HP-61A BOARD **(UVW-1600/1600P)**
1008 ⚠	1-810-374-11	s	INDICATOR TUBE MODULE, FLUORES
1009	3-182-297-01	o	BRACKET, HP FIXED
1010	3-182-449-01	o	BRACKET, VR
1011	3-312-955-00	o	CLIP, CABLE
1012	3-659-969-11	o	COVER, SWITCH
1013	3-677-193-00	o	PIN, STOPPER
1014	3-688-814-01	s	CAP, SWITCH
1015	3-701-441-21	s	WASHER
1016	3-717-614-01	o	LABEL, C-LOCK OUT
1017	3-717-615-01	o	SPRING
1018	3-717-616-01	o	SPRING
1019	3-717-617-01	o	SHAFT, SC GUIDE
1020	3-717-618-01	o	GUIDE (LEFT), SC
1021	3-717-619-02	o	GUIDE (RIGHT), SC
1022	3-717-620-01	o	PLATE, OUT, C-LOCK
1023	3-717-621-03	o	PLATE, INDICATION, SC GUIDE
1024	4-312-237-00	o	CLIP, CABLE

 18-25

 CONNECTOR PANEL BLOCK

No.	Part No.	SP	Description
1101	A-8276-732-A	o	MOUNTED PCB, CP-225A **(UVW-1600/1600P)**
1101	A-8276-738-A	o	MOUNTED PCB, CP-225 **(UVW-1800/1800P)**
1102	A-8276-733-A	o	MOUNTED PCB, CP-226A **(UVW-1600/1600P)**
1102	A-8276-739-A	o	MOUNTED PCB, CP-226 **(UVW-1800/1800P)**
1102	A-8276-762-A	o	MOUNTED PCB, CP-226J **(UVW-1800 For J)**
1102	A-8276-763-A	o	MOUNTED PCB, CP-226AJ **(UVW-1600 For J)**
1103	A-8276-734-A	o	MOUNTED PCB, CP-237A **(UVW-1600/1600P)**
1103	A-8276-741-A	o	MOUNTED PCB, CP-237 **(UVW-1800/1800P)**
1104	⚠ 1-413-889-11	s	SWITCHING REGULATOR (SOPS-1045) **(UVW1800/1600)**
1104	⚠ 1-413-925-12	s	SWITCHING REGULATOR (SOPS-1046) **(UVW1800P/1600P)**
1105	1-570-157-51	s	SWITCH, SLIDE
1106	1-570-756-11	s	SWITCH, SLIDE **(UVW-1800/1800P)**
1107	1-573-566-11	s	CONNECTOR, D-SUB (ANGLE TYPE) 9P
1108	1-573-582-11	s	CONNECTOR, BNC (RECEPTACLE)
1109	1-573-583-11	s	CONNECTOR, BNC (RECEPTACLE)
1110	1-573-584-11	s	CONNECTOR, BNC (RECEPTACLE)
1112	1-573-589-11	s	CONNECTOR (R-M) 12P **(UVW-1800/1800P)**
1113	1-573-590-12	s	CONNECTOR, (S) TERMINAL 4P
1114	1-573-592-11	s	CONNECTOR (R-F) 12P
1115	1-691-273-11	s	JACK, PIN 1P
1116	1-750-785-11	s	CONNECTOR (XLR TYPE) 3P
1117	1-750-786-11	s	CONNECTOR (XLR TYPE) 3P
1119	1-764-259-11	s	CONNECTOR, D-SUB (ANGLE TYPE) 15P
1120	3-171-450-01	o	ADAPTOR, SW
1121	3-182-459-02	o	CONNECTOR, PANEL **(UVW-1800/1800P)**
1121	3-182-459-12	o	CONNECTOR, PANEL **(UVW-1600/1600P)**

 18-26

 CONNECTOR PANEL BLOCK

CONNECTOR PANEL BLOCK

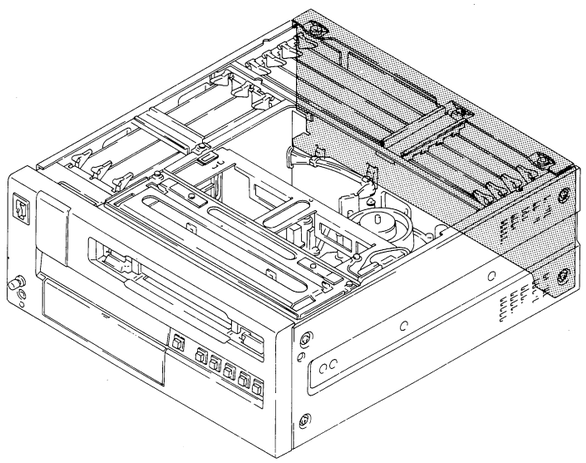

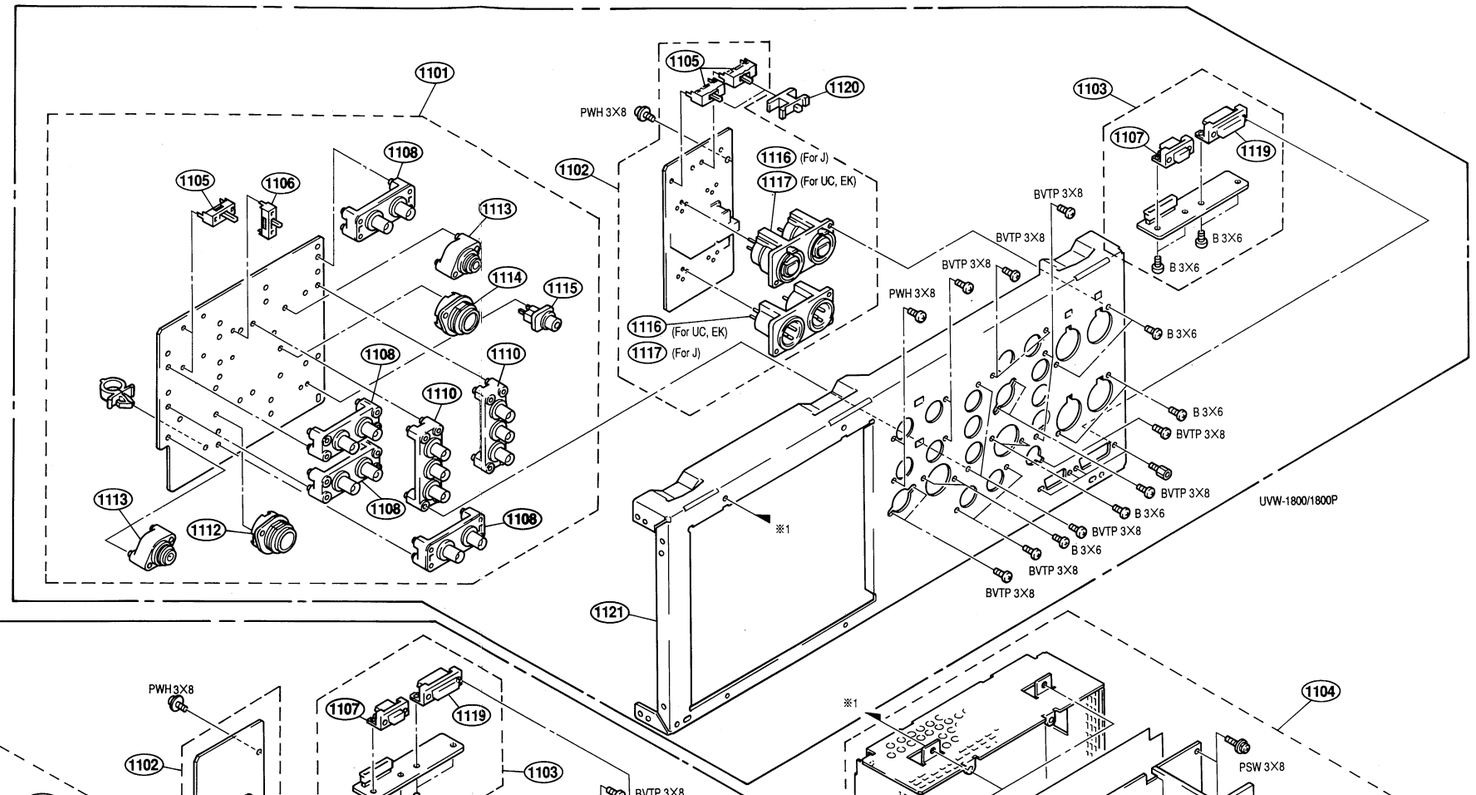

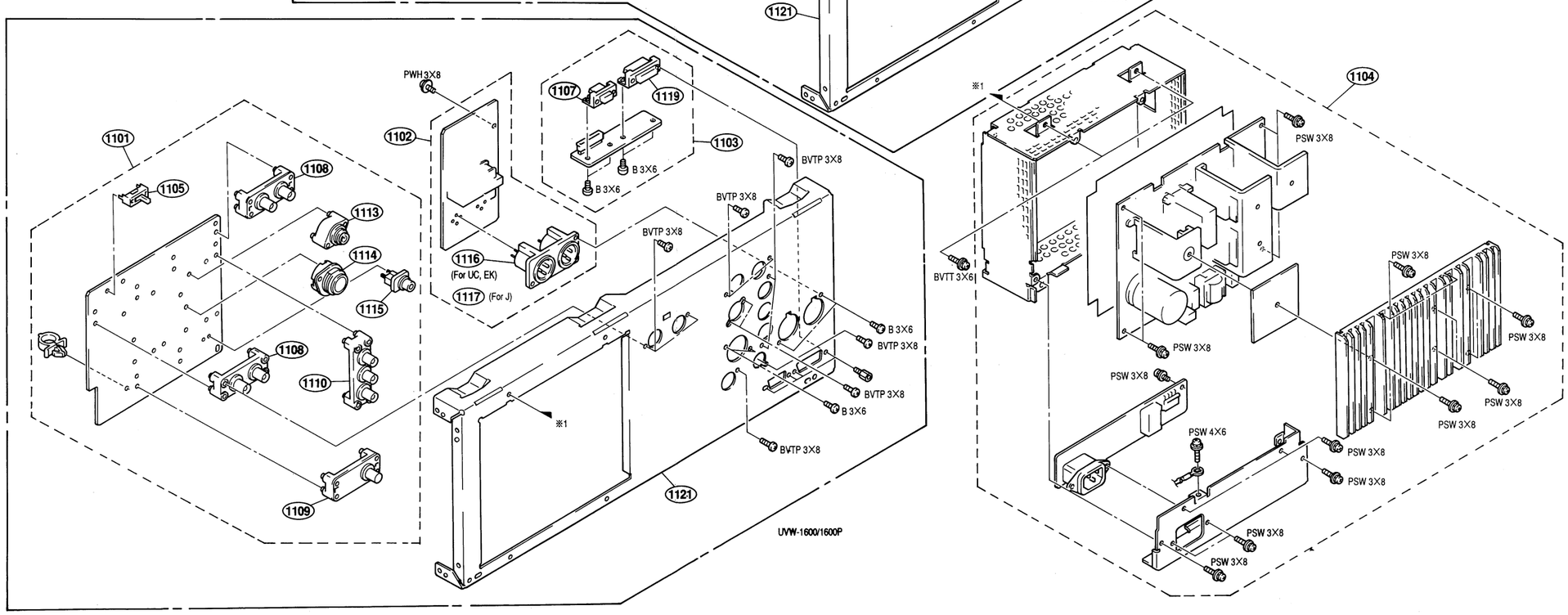

 18-27

18-3.ELECTRICAL PARTS LISTS

AP-31 BOARD(UVW-1800)

Ref. No. or Q'ty	Part No.	SP	Description
AP-31 board is used for UVW-1800(J,UC).			
1pc	A-8275-286-A	o	MOUNTED CIRCUIT BOARD, AP-31
1pc	3-179-084-01	s	LEVER (R), PC BOARD
1pc	3-179-085-01	s	LEVER (L), PC BOARD
1pc	3-182-385-02	o	PLATE, SHIELD (S), CARD
1pc	3-655-862-00	o	SPACER, INSULATING
1pc	7-621-759-45	s	SCREW, +PSW2.6x6
1pc	3-182-298-01	o	CASE, SHIELD (LID), AP (2)
1pc	3-182-351-01	o	CASE, SHIELD, AP (2B)
C2	1-163-131-00	s	CERAMIC, CHIP 390PF 5% 50V
C3	1-163-243-11	s	CERAMIC, CHIP 47PF 5% 50V
C4	1-163-113-00	s	CERAMIC, CHIP 68PF 5% 50V
C5	1-126-964-11	s	ELECT 10uF 20% 50V
C7	1-130-485-00	s	MYLAR 0.015uF 5% 50V
C8	1-126-933-11	s	ELECT 100uF 20% 16V
C9	1-163-125-00	s	CERAMIC, CHIP 220PF 5% 50V
C10	1-126-964-11	s	ELECT 10uF 20% 50V
C11	1-128-551-11	s	ELECT 22uF 20% 50V
C12	1-163-263-11	s	CERAMIC, CHIP 330PF 5% 50V
C15	1-126-964-11	s	ELECT 10uF 20% 50V
C16	1-128-551-11	s	ELECT 22uF 20% 50V
C17	1-163-235-11	s	CERAMIC, CHIP 22PF 5% 50V
C18	1-128-551-11	s	ELECT 22uF 20% 50V
C19	1-163-235-11	s	CERAMIC, CHIP 22PF 5% 50V
C20	1-130-498-00	s	MYLAR 0.18uF 5% 50V
C21-C26	1-130-487-00	s	MYLAR 0.022uF 5% 50V
C27	1-163-243-11	s	CERAMIC, CHIP 47PF 5% 50V
C28	1-163-017-00	s	CERAMIC, CHIP 0.0047uF 5% 50V
C29	1-130-483-00	s	MYLAR 0.01uF 5% 50V
C30	1-163-275-11	s	CERAMIC, CHIP 0.001uF 5% 50V
C31	1-163-275-11	s	CERAMIC, CHIP 0.001uF 5% 50V
C32	1-163-275-11	s	CERAMIC, CHIP 0.001uF 5% 50V
C33	1-163-275-11	s	CERAMIC, CHIP 0.001uF 5% 50V
C34	1-130-483-00	s	MYLAR 0.01uF 5% 50V
C35	1-163-139-00	s	CERAMIC, CHIP 820PF 5% 50V
C36	1-163-243-11	s	CERAMIC, CHIP 47PF 5% 50V
C37	1-164-232-11	s	CERAMIC, CHIP 0.01uF 10% 100V
C38	1-164-232-11	s	CERAMIC, CHIP 0.01uF 10% 100V
C39	1-124-925-11	s	ELECT 2.2uF 20% 100V
C40	1-164-004-11	s	CERAMIC, CHIP 0.1uF 10% 25V
C41	1-107-498-11	s	FILM, CHIP 0.0022uF 2% 50V
C42	1-107-498-11	s	FILM, CHIP 0.0022uF 2% 50V
C43	1-107-499-11	s	FILM, CHIP 0.0039uF 2% 16V
C44	1-131-345-00	s	TANTALUM 0.47uF 10% 35V
C45	1-130-497-00	s	MYLAR 0.15uF 5% 50V
C46	1-124-925-11	s	ELECT 2.2uF 20% 100V
C47	1-104-553-11	s	FILM, CHIP 0.015uF 5% 16V
C48	1-130-499-00	s	MYLAR 0.22uF 5% 50V
C49	1-164-344-11	s	CERAMIC, CHIP 0.068uF 10% 25V
C50	1-104-560-11	s	FILM, CHIP 0.056uF 5% 16V
C51	1-124-925-11	s	ELECT 2.2uF 20% 100V
C52	1-107-553-11	s	FILM, CHIP 0.0056uF 2% 16V
C53	1-104-551-11	s	FILM, CHIP 0.01uF 5% 16V
C54	1-130-478-00	s	MYLAR 0.0039uF 5% 50V
C55	1-130-478-00	s	MYLAR 0.0039uF 5% 50V
C56	1-163-251-11	s	CERAMIC, CHIP 100PF 5% 50V
C57	1-126-947-11	s	ELECT 47uF 20% 35V
C58	1-163-263-11	s	CERAMIC, CHIP 330PF 5% 50V

(AP-31 BOARD(UVW-1800))

Ref. No. or Q'ty	Part No.	SP	Description
C59	1-163-235-11	s	CERAMIC, CHIP 22PF 5% 50V
C60	1-126-964-11	s	ELECT 10uF 20% 50V
C61	1-126-964-11	s	ELECT 10uF 20% 50V
C62	1-126-926-11	s	ELECT 1000uF 20% 10V
C63	1-126-926-11	s	ELECT 1000uF 20% 10V
C64	1-126-926-11	s	ELECT 1000uF 20% 10V
C65	1-164-004-11	s	CERAMIC, CHIP 0.1uF 10% 25V
C66	1-126-926-11	s	ELECT 1000uF 20% 10V
C67	1-126-947-11	s	ELECT 47uF 20% 35V
C68	1-124-903-11	s	ELECT 1uF 20% 50V
C69	1-163-251-11	s	CERAMIC, CHIP 100PF 5% 50V
C70	1-126-947-11	s	ELECT 47uF 20% 35V
C71	1-163-235-11	s	CERAMIC, CHIP 22PF 5% 50V
C72	1-163-809-11	s	CERAMIC, CHIP 0.047uF 10% 25V
C73	1-130-491-00	s	MYLAR 0.047uF 5% 50V
C74	1-130-491-00	s	MYLAR 0.047uF 5% 50V
C75	1-130-491-00	s	MYLAR 0.047uF 5% 50V
C76	1-130-491-00	s	MYLAR 0.047uF 5% 50V
C77	1-163-251-11	s	CERAMIC, CHIP 100PF 5% 50V
C78	1-126-964-11	s	ELECT 10uF 20% 50V
C79	1-126-964-11	s	ELECT 10uF 20% 50V
C80	1-126-964-11	s	ELECT 10uF 20% 50V
C81	1-130-483-00	s	MYLAR 0.01uF 5% 50V
C82	1-126-926-11	s	ELECT 1000uF 20% 10V
C83	1-126-926-11	s	ELECT 1000uF 20% 10V
C84	1-124-925-11	s	ELECT 2.2uF 20% 100V
C85	1-131-352-00	s	TANTALUM 6.8uF 10% 35V
C87	1-126-964-11	s	ELECT 10uF 20% 50V
C202	1-163-131-00	s	CERAMIC, CHIP 390PF 5% 50V
C203	1-163-243-11	s	CERAMIC, CHIP 47PF 5% 50V
C204	1-163-113-00	s	CERAMIC, CHIP 68PF 5% 50V
C205	1-126-964-11	s	ELECT 10uF 20% 50V
C207	1-130-485-00	s	MYLAR 0.015uF 5% 50V
C208	1-126-933-11	s	ELECT 100uF 20% 16V
C209	1-163-125-00	s	CERAMIC, CHIP 220PF 5% 50V
C210	1-126-964-11	s	ELECT 10uF 20% 50V
C211	1-128-551-11	s	ELECT 22uF 20% 50V
C212	1-163-263-11	s	CERAMIC, CHIP 330PF 5% 50V
C215	1-126-964-11	s	ELECT 10uF 20% 50V
C216	1-128-551-11	s	ELECT 22uF 20% 50V
C217	1-163-235-11	s	CERAMIC, CHIP 22PF 5% 50V
C218	1-128-551-11	s	ELECT 22uF 20% 50V
C219	1-163-235-11	s	CERAMIC, CHIP 22PF 5% 50V
C220	1-130-498-00	s	MYLAR 0.18uF 5% 50V
C221-226	1-130-487-00	s	MYLAR 0.022uF 5% 50V
C227	1-163-243-11	s	CERAMIC, CHIP 47PF 5% 50V
C228	1-163-017-00	s	CERAMIC, CHIP 0.0047uF 5% 50V
C229	1-130-483-00	s	MYLAR 0.01uF 5% 50V
C230	1-163-275-11	s	CERAMIC, CHIP 0.001uF 5% 50V
C231	1-163-275-11	s	CERAMIC, CHIP 0.001uF 5% 50V
C232	1-163-275-11	s	CERAMIC, CHIP 0.001uF 5% 50V
C233	1-163-275-11	s	CERAMIC, CHIP 0.001uF 5% 50V
C234	1-130-483-00	s	MYLAR 0.01uF 5% 50V
C235	1-163-139-00	s	CERAMIC, CHIP 820PF 5% 50V
C236	1-163-243-11	s	CERAMIC, CHIP 47PF 5% 50V
C237	1-124-925-11	s	ELECT 2.2uF 20% 100V
C238	1-107-498-11	s	FILM, CHIP 0.0022uF 2% 50V
C239	1-107-498-11	s	FILM, CHIP 0.0022uF 2% 50V
C240	1-107-499-11	s	FILM, CHIP 0.0039uF 2% 16V

(AP-31 BOARD(UVW-1800))

Ref. No. or Q'ty	Part No.	SP	Description
C241	1-131-345-00	s	TANTALUM 0.47uF 10% 35V
C242	1-130-497-00	s	MYLAR 0.15uF 5% 50V
C243	1-124-925-11	s	ELECT 2.2uF 20% 100V
C244	1-104-553-11	s	FILM, CHIP 0.015uF 5% 16V
C245	1-130-499-00	s	MYLAR 0.22uF 5% 50V
C246	1-164-344-11	s	CERAMIC, CHIP 0.068uF 10% 25V
C247	1-104-560-11	s	FILM, CHIP 0.056uF 5% 16V
C248	1-124-925-11	s	ELECT 2.2uF 20% 100V
C249	1-107-553-11	s	FILM, CHIP 0.0056uF 2% 16V
C250	1-104-551-11	s	FILM, CHIP 0.01uF 5% 16V
C251	1-130-478-00	s	MYLAR 0.0039uF 5% 50V
C252	1-130-478-00	s	MYLAR 0.0039uF 5% 50V
C253	1-163-251-11	s	CERAMIC, CHIP 100PF 5% 50V
C254	1-126-947-11	s	ELECT 47uF 20% 35V
C255	1-163-263-11	s	CERAMIC, CHIP 330PF 5% 50V
C256	1-163-235-11	s	CERAMIC, CHIP 22PF 5% 50V
C257	1-126-964-11	s	ELECT 10uF 20% 50V
C258	1-126-964-11	s	ELECT 10uF 20% 50V
C259	1-126-926-11	s	ELECT 1000uF 20% 10V
C260	1-126-926-11	s	ELECT 1000uF 20% 10V
C261	1-126-926-11	s	ELECT 1000uF 20% 10V
C262	1-164-004-11	s	CERAMIC, CHIP 0.1uF 10% 25V
C263	1-126-926-11	s	ELECT 1000uF 20% 10V
C264	1-126-947-11	s	ELECT 47uF 20% 35V
C265	1-124-903-11	s	ELECT 1uF 20% 50V
C266	1-163-251-11	s	CERAMIC, CHIP 100PF 5% 50V
C267	1-126-947-11	s	ELECT 47uF 20% 35V
C268	1-163-235-11	s	CERAMIC, CHIP 22PF 5% 50V
C269	1-163-809-11	s	CERAMIC, CHIP 0.047uF 10% 25V
C270	1-124-925-11	s	ELECT 2.2uF 20% 100V
C271	1-131-352-00	s	TANTALUM 6.8uF 10% 35V
C278	1-126-964-11	s	ELECT 10uF 20% 50V
C279	1-126-964-11	s	ELECT 10uF 20% 50V
C280	1-126-964-11	s	ELECT 10uF 20% 50V
C281	1-130-483-00	s	MYLAR 0.01uF 5% 50V
C282	1-126-926-11	s	ELECT 1000uF 20% 10V
C283	1-126-926-11	s	ELECT 1000uF 20% 10V
C401	1-163-033-91	s	CERAMIC, CHIP 0.022uF 50V
C402	1-126-933-11	s	ELECT 100uF 20% 16V
C403	1-163-989-11	s	CERAMIC, CHIP 0.033uF 10% 25V
C404	1-164-004-11	s	CERAMIC, CHIP 0.1uF 10% 25V
C405	1-164-232-11	s	CERAMIC, CHIP 0.01uF 10% 100V
C406	1-164-232-11	s	CERAMIC, CHIP 0.01uF 10% 100V
C408	1-126-964-11	s	ELECT 10uF 20% 50V
C409	1-163-239-11	s	CERAMIC, CHIP 33PF 5% 50V
C410	1-164-004-11	s	CERAMIC, CHIP 0.1uF 10% 25V
C411	1-163-989-11	s	CERAMIC, CHIP 0.033uF 10% 25V
C412	1-126-964-11	s	ELECT 10uF 20% 50V
C413	1-126-964-11	s	ELECT 10uF 20% 50V
C414	1-126-964-11	s	ELECT 10uF 20% 50V
C415	1-163-033-91	s	CERAMIC, CHIP 0.022uF 50V
C416	1-163-033-91	s	CERAMIC, CHIP 0.022uF 50V
C417	1-126-933-11	s	ELECT 100uF 20% 16V
C418	1-126-933-11	s	ELECT 100uF 20% 16V
C419	1-126-964-11	s	ELECT 10uF 20% 50V
C420	1-163-033-91	s	CERAMIC, CHIP 0.022uF 50V
C421	1-163-033-91	s	CERAMIC, CHIP 0.022uF 50V
C422	1-126-933-11	s	ELECT 100uF 20% 16V
C423	1-126-933-11	s	ELECT 100uF 20% 16V

(AP-31 BOARD(UVW-1800))

Ref. No. or Q'ty	Part No.	SP	Description
C424	1-126-933-11	s	ELECT 100uF 20% 16V
C425	1-126-933-11	s	ELECT 100uF 20% 16V
C426	1-163-033-91	s	CERAMIC, CHIP 0.022uF 50V
C427	1-163-033-91	s	CERAMIC, CHIP 0.022uF 50V
C428	1-163-989-11	s	CERAMIC, CHIP 0.033uF 10% 25V
C429	1-161-021-11	s	CERAMIC 0.047uF 10% 25V
C430	1-161-021-11	s	CERAMIC 0.047uF 10% 25V
C500	1-163-125-00	s	CERAMIC, CHIP 220PF 5% 50V
C501	1-163-133-00	s	CERAMIC, CHIP 470PF 5% 50V
C600	1-163-809-11	s	CERAMIC, CHIP 0.047uF 10% 25V
C601	1-163-809-11	s	CERAMIC, CHIP 0.047uF 10% 25V
CN1	1-506-468-11	s	CONNECTOR 3P, MALE
CN2	1-564-002-41	s	CONNECTOR 3P, MALE
CN3	1-564-002-11	s	CONNECTOR 3P, MALE
CN111	1-573-600-21	s	CONNECTOR, PHEC 100P, MALE
D1	8-719-941-23	s	DIODE DA204U
D2	8-719-941-23	s	DIODE DA204U
D3	8-719-941-23	s	DIODE DA204U
D5	8-719-941-23	s	DIODE DA204U
D6	8-719-123-85	s	DIODE 1SS304
D7	8-719-941-23	s	DIODE DA204U
D8	8-719-123-85	s	DIODE 1SS304
D10	8-719-123-85	s	DIODE 1SS304
D11	8-719-123-85	s	DIODE 1SS304
D12	8-719-123-85	s	DIODE 1SS304
D13	8-719-123-85	s	DIODE 1SS304
D15	8-719-123-85	s	DIODE 1SS304
D16	8-719-123-85	s	DIODE 1SS304
D17	8-719-941-23	s	DIODE DA204U
D18	8-719-911-19	s	DIODE 1SS119
D201	8-719-941-23	s	DIODE DA204U
D202	8-719-941-23	s	DIODE DA204U
D203	8-719-941-23	s	DIODE DA204U
D204	8-719-941-23	s	DIODE DA204U
D205	8-719-123-85	s	DIODE 1SS304
D206	8-719-941-23	s	DIODE DA204U
D207	8-719-123-85	s	DIODE 1SS304
D209	8-719-123-85	s	DIODE 1SS304
D210	8-719-941-23	s	DIODE DA204U
D211	8-719-911-19	s	DIODE 1SS119
D401	8-719-941-23	s	DIODE DA204U
D403	8-719-941-23	s	DIODE DA204U
D500	8-719-106-88	s	DIODE RD15M-B1
IC1	8-759-701-25	s	IC NJM2068D-D
IC2	8-759-701-25	s	IC NJM2068D-D
IC3	8-759-701-25	s	IC NJM2068D-D
IC4	8-759-701-25	s	IC NJM2068D-D
IC5	8-759-705-58	s	IC NJM4558D-D
IC6	8-759-705-58	s	IC NJM4558D-D
IC7	8-759-705-58	s	IC NJM4558D-D
IC8	8-752-018-80	s	IC CX20188
IC9	8-759-705-58	s	IC NJM4558D-D
IC10	8-759-705-58	s	IC NJM4558D-D
IC11	8-759-145-57	s	IC UPC4557C
IC12	8-759-917-18	s	IC SN74HCU04AN
IC13	8-759-917-18	s	IC SN74HCU04AN
IC14	8-759-145-57	s	IC UPC4557C
IC15	8-759-705-58	s	IC NJM4558D-D

(AP-31 BOARD(UVW-1800))

Ref. No. or Q'ty	Part No.	SP	Description
IC201	8-759-701-25	s	IC NJM2068D-D
IC202	8-759-701-25	s	IC NJM2068D-D
IC203	8-759-701-25	s	IC NJM2068D-D
IC204	8-759-701-25	s	IC NJM2068D-D
IC205	8-759-705-58	s	IC NJM4558D-D
IC206	8-759-705-58	s	IC NJM4558D-D
IC207	8-759-705-58	s	IC NJM4558D-D
IC208	8-759-705-58	s	IC NJM4558D-D
IC209	8-759-705-58	s	IC NJM4558D-D
IC210	8-759-145-57	s	IC UPC4557C
IC211	8-759-705-58	s	IC NJM4558D-D
IC401	8-759-701-25	s	IC NJM2068D-D
IC402	8-759-729-03	s	IC NJM2903D
IC405	8-759-172-41	s	IC L78M09T-TL
IC406	8-759-173-37	s	IC L79M09T-TL
IC407	8-759-635-83	s	IC M51957BFP
IC408	8-759-172-41	s	IC L78M09T-TL
IC409	8-759-173-37	s	IC L79M09T-TL
IC410	8-759-701-25	s	IC NJM2068D-D
L2	1-408-617-31	s	INDUCTOR 150uH
L202	1-408-617-31	s	INDUCTOR 150uH
L401	1-410-470-11	s	INDUCTOR 10uH
L402	1-410-470-11	s	INDUCTOR 10uH
PS1	⚠ 1-532-727-11	s	LINK, IC 0.25A
PS2	⚠ 1-532-727-11	s	LINK, IC 0.25A
Q1	8-729-209-06	s	TRANSISTOR 2SC4213-A
Q2	8-729-803-89	s	TRANSISTOR 2SC3332-T
Q3	8-729-803-89	s	TRANSISTOR 2SC3332-T
Q4	8-729-209-06	s	TRANSISTOR 2SC4213-A
Q5	8-729-209-06	s	TRANSISTOR 2SC4213-A
Q6	8-729-209-06	s	TRANSISTOR 2SC4213-A
Q7	8-729-209-06	s	TRANSISTOR 2SC4213-A
Q8	8-729-140-63	s	TRANSISTOR 2SA1611-M5M6
Q9	8-729-109-44	s	TRANSISTOR 2SK94
Q10	8-729-203-30	s	TRANSISTOR 2SJ106Y
Q11	8-729-905-18	s	TRANSISTOR DTC144EU
Q12	8-729-905-12	s	TRANSISTOR DTA144EU
Q13	8-729-422-44	s	TRANSISTOR 2SK663
Q14	8-729-209-06	s	TRANSISTOR 2SC4213-A
Q15	8-729-209-06	s	TRANSISTOR 2SC4213-A
Q16	8-729-140-63	s	TRANSISTOR 2SA1611-M5M6
Q17	8-729-422-44	s	TRANSISTOR 2SK663
Q18	8-729-423-93	s	TRANSISTOR 2SD2136-R(TA)
Q19	8-729-022-00	s	TRANSISTOR 2SB1416-R(TA)
Q20	8-729-021-98	s	TRANSISTOR 2SJ226-AZ
Q21	8-729-021-98	s	TRANSISTOR 2SJ226-AZ
Q22	8-729-117-32	s	TRANSISTOR 2SC4177
Q23	8-729-117-32	s	TRANSISTOR 2SC4177
Q25	8-729-140-93	s	TRANSISTOR 2SB733-34
Q26	8-729-209-06	s	TRANSISTOR 2SC4213-A
Q27	8-729-209-06	s	TRANSISTOR 2SC4213-A
Q28	8-729-804-09	s	TRANSISTOR 2SA1319-T
Q29	8-729-804-09	s	TRANSISTOR 2SA1319-T
Q30	8-729-140-93	s	TRANSISTOR 2SB733-34
Q34	8-729-905-18	s	TRANSISTOR DTC144EU
Q35	8-729-905-12	s	TRANSISTOR DTA144EU
Q36	8-729-422-44	s	TRANSISTOR 2SK663
Q201	8-729-209-06	s	TRANSISTOR 2SC4213-A

(AP-31 BOARD(UVW-1800))

Ref. No. or Q'ty	Part No.	SP	Description
Q202	8-729-803-89	s	TRANSISTOR 2SC3332-T
Q203	8-729-803-89	s	TRANSISTOR 2SC3332-T
Q204	8-729-209-06	s	TRANSISTOR 2SC4213-A
Q205	8-729-209-06	s	TRANSISTOR 2SC4213-A
Q206	8-729-209-06	s	TRANSISTOR 2SC4213-A
Q207	8-729-209-06	s	TRANSISTOR 2SC4213-A
Q208	8-729-140-63	s	TRANSISTOR 2SA1611-M5M6
Q209	8-729-109-44	s	TRANSISTOR 2SK94
Q210	8-729-203-30	s	TRANSISTOR 2SJ106Y
Q211	8-729-422-44	s	TRANSISTOR 2SK663
Q212	8-729-209-06	s	TRANSISTOR 2SC4213-A
Q213	8-729-209-06	s	TRANSISTOR 2SC4213-A
Q214	8-729-140-63	s	TRANSISTOR 2SA1611-M5M6
Q215	8-729-422-44	s	TRANSISTOR 2SK663
Q216	8-729-423-93	s	TRANSISTOR 2SD2136-R(TA)
Q217	8-729-022-00	s	TRANSISTOR 2SB1416-R(TA)
Q218	8-729-021-98	s	TRANSISTOR 2SJ226-AZ
Q219	8-729-021-98	s	TRANSISTOR 2SJ226-AZ
Q220	8-729-117-32	s	TRANSISTOR 2SC4177
Q221	8-729-117-32	s	TRANSISTOR 2SC4177
Q223	8-729-140-93	s	TRANSISTOR 2SB733-34
Q224	8-729-905-18	s	TRANSISTOR DTC144EU
Q225	8-729-905-12	s	TRANSISTOR DTA144EU
Q226	8-729-422-44	s	TRANSISTOR 2SK663
Q401	8-729-209-06	s	TRANSISTOR 2SC4213-A
Q402	8-729-209-06	s	TRANSISTOR 2SC4213-A
Q403	8-729-209-06	s	TRANSISTOR 2SC4213-A
R1	1-216-603-11	s	METAL, CHIP 10 0.5% 1/10W
R2	1-216-049-91	s	METAL, CHIP 1k 5% 1/10W
R3	1-216-051-00	s	METAL, CHIP 1.2K 5% 1/10W
R4	1-216-051-00	s	METAL, CHIP 1.2K 5% 1/10W
R5	1-216-097-91	s	METAL, CHIP 100k 5% 1/10W
R7	1-216-073-00	s	METAL, CHIP 10K 5% 1/10W
R8	1-216-105-91	s	METAL, CHIP 220k 5% 1/10W
R9	1-216-626-11	s	METAL, CHIP 91 0.5% 1/10W
R10	1-216-651-11	s	METAL, CHIP 1K 0.5% 1/10W
R11	1-216-073-00	s	METAL, CHIP 10K 5% 1/10W
R12	1-216-073-00	s	METAL, CHIP 10K 5% 1/10W
R13	1-216-659-11	s	METAL, CHIP 2.2K 0.5% 1/10W
R14	1-216-049-91	s	METAL, CHIP 1k 5% 1/10W
R16	1-216-009-00	s	METAL, CHIP 22 5% 1/10W
R17	1-216-073-00	s	METAL, CHIP 10K 5% 1/10W
R19-R23	1-216-073-00	s	METAL, CHIP 10K 5% 1/10W
R24	1-216-049-91	s	METAL, CHIP 1k 5% 1/10W
R25	1-216-073-00	s	METAL, CHIP 10K 5% 1/10W
R26	1-216-073-00	s	METAL, CHIP 10K 5% 1/10W
R27	1-216-085-00	s	METAL, CHIP 33K 5% 1/10W
R28	1-216-085-00	s	METAL, CHIP 33K 5% 1/10W
R30	1-208-806-11	s	METAL, CHIP 10k 0.5% 1/10W
R31	1-216-041-00	s	METAL, CHIP 470 5% 1/10W
R32	1-216-642-11	s	METAL, CHIP 430 0.5% 1/10W
R33	1-208-806-11	s	METAL, CHIP 10k 0.5% 1/10W
R34	1-208-822-11	s	METAL, CHIP 47k 0.5% 1/10W
R35	1-208-806-11	s	METAL, CHIP 10k 0.5% 1/10W
R36	1-208-814-11	s	METAL, CHIP 22k 0.5% 1/10W
R37	1-215-473-00	s	METAL 150K 1% 1/6W
R38	1-215-471-00	s	METAL 120K 1% 1/6W
R39	1-215-479-00	s	METAL 270K 1% 1/6W

(AP-31 BOARD(UVW-1800))

Ref. No. or Q'ty	Part No.	SP	Description
R40	1-208-812-11	s	METAL, CHIP 18k 0.5% 1/10W
R41	1-208-810-11	s	METAL, CHIP 15k 0.5% 1/10W
R42	1-216-695-11	s	METAL, CHIP 68K 0.5% 1/10W
R43	1-215-469-00	s	METAL 100K 1% 1/6W
R44	1-215-473-00	s	METAL 150K 1% 1/6W
R45	1-215-455-00	s	METAL 27K 1% 1/6W
R46	1-208-812-11	s	METAL, CHIP 18k 0.5% 1/10W
R47	1-208-814-11	s	METAL, CHIP 22k 0.5% 1/10W
R48	1-216-089-91	s	METAL, CHIP 47k 5% 1/10W
R49	1-216-071-00	s	METAL, CHIP 8.2K 5% 1/10W
R50	1-216-081-00	s	METAL, CHIP 22K 5% 1/10W
R51	1-216-121-91	s	METAL, CHIP 1M 5% 1/10W
R52	1-216-121-91	s	METAL, CHIP 1M 5% 1/10W
R53	1-216-121-91	s	METAL, CHIP 1M 5% 1/10W
R54	1-216-121-91	s	METAL, CHIP 1M 5% 1/10W
R56	1-216-009-00	s	METAL, CHIP 22 5% 1/10W
R57	1-208-822-11	s	METAL, CHIP 47k 0.5% 1/10W
R58	1-208-774-11	s	METAL, CHIP 470 0.5% 1/10W
R59	1-216-622-11	s	METAL, CHIP 62 0.5% 1/10W
R60	1-216-678-11	s	METAL, CHIP 13K 0.5% 1/10W
R61	1-216-673-11	s	METAL, CHIP 8.2K 0.5% 1/10W
R62	1-216-652-11	s	METAL, CHIP 1.1K 0.5% 1/10W
R63	1-216-622-11	s	METAL, CHIP 62 0.5% 1/10W
R64	1-208-784-11	s	METAL, CHIP 1.2k 0.5% 1/10W
R65	1-216-676-11	s	METAL, CHIP 11K 0.5% 1/10W
R66	1-216-677-11	s	METAL, CHIP 12K 0.5% 1/10W
R67	1-208-785-11	s	METAL, CHIP 1.3k 0.5% 1/10W
R68	1-215-493-00	s	METAL 1M 1% 1/6W
R69	1-216-666-11	s	METAL, CHIP 4.3K 0.5% 1/10W
R70	1-208-822-11	s	METAL, CHIP 47k 0.5% 1/10W
R71	1-208-806-11	s	METAL, CHIP 10k 0.5% 1/10W
R72	1-216-073-00	s	METAL, CHIP 10K 5% 1/10W
R73	1-216-081-00	s	METAL, CHIP 22K 5% 1/10W
R74	1-216-049-91	s	METAL, CHIP 1k 5% 1/10W
R75	1-216-081-00	s	METAL, CHIP 22K 5% 1/10W
R76	1-216-081-00	s	METAL, CHIP 22K 5% 1/10W
R77	1-216-699-11	s	METAL, CHIP 100K 0.5% 1/10W
R78	1-208-817-11	s	METAL, CHIP 30k 0.5% 1/10W
R79	1-216-081-00	s	METAL, CHIP 22K 5% 1/10W
R80	1-216-049-91	s	METAL, CHIP 1k 5% 1/10W
R81	1-208-810-11	s	METAL, CHIP 15k 0.5% 1/10W
R82	1-216-659-11	s	METAL, CHIP 2.2K 0.5% 1/10W
R83	1-208-789-11	s	METAL, CHIP 2k 0.5% 1/10W
R84	1-216-677-11	s	METAL, CHIP 12K 0.5% 1/10W
R85	1-216-645-11	s	METAL, CHIP 560 0.5% 1/10W
R86	1-216-121-91	s	METAL, CHIP 1M 5% 1/10W
R87	1-208-814-11	s	METAL, CHIP 22k 0.5% 1/10W
R88	1-208-803-11	s	METAL, CHIP 7.5k 0.5% 1/10W
R89	1-216-045-00	s	METAL, CHIP 680 5% 1/10W
R90	1-216-674-11	s	METAL, CHIP 9.1K 0.5% 1/10W
R91	1-208-812-11	s	METAL, CHIP 18k 0.5% 1/10W
R92	1-216-657-11	s	METAL, CHIP 1.8K 0.5% 1/10W
R93	1-216-121-91	s	METAL, CHIP 1M 5% 1/10W
R94	1-216-121-91	s	METAL, CHIP 1M 5% 1/10W
R95	1-208-822-11	s	METAL, CHIP 47k 0.5% 1/10W
R96	1-208-814-11	s	METAL, CHIP 22k 0.5% 1/10W
R97	1-216-659-11	s	METAL, CHIP 2.2K 0.5% 1/10W
R98	1-216-659-11	s	METAL, CHIP 2.2K 0.5% 1/10W
R99	1-216-073-00	s	METAL, CHIP 10K 5% 1/10W

(AP-31 BOARD(UVW-1800))

Ref. No. or Q'ty	Part No.	SP	Description
R100	1-216-097-91	s	METAL, CHIP 100k 5% 1/10W
R101	1-216-073-00	s	METAL, CHIP 10K 5% 1/10W
R102	1-216-121-91	s	METAL, CHIP 1M 5% 1/10W
R103	1-216-073-00	s	METAL, CHIP 10K 5% 1/10W
R104	1-216-073-00	s	METAL, CHIP 10K 5% 1/10W
R105	1-216-121-91	s	METAL, CHIP 1M 5% 1/10W
R106	1-216-069-00	s	METAL, CHIP 6.8K 5% 1/10W
R107	1-216-073-00	s	METAL, CHIP 10K 5% 1/10W
R108	1-208-799-11	s	METAL, CHIP 5.1k 0.5% 1/10W
R109	1-216-663-11	s	METAL, CHIP 3.3K 0.5% 1/10W
R110	1-216-650-11	s	METAL, CHIP 910 0.5% 1/10W
R111	1-216-663-11	s	METAL, CHIP 3.3K 0.5% 1/10W
R112	1-216-073-00	s	METAL, CHIP 10K 5% 1/10W
R113	1-216-667-11	s	METAL, CHIP 4.7K 0.5% 1/10W
R114	1-216-033-00	s	METAL, CHIP 220 5% 1/10W
R115	1-216-067-00	s	METAL, CHIP 5.6K 5% 1/10W
R116	1-216-067-00	s	METAL, CHIP 5.6K 5% 1/10W
R117	1-208-810-11	s	METAL, CHIP 15k 0.5% 1/10W
R118	1-247-807-31	s	CARBON 100 5% 1/4W
R119 ⚠	1-216-399-00	s	WIREWOUND 6.8 10% 3W
R120 ⚠	1-216-399-00	s	WIREWOUND 6.8 10% 3W
R121	1-247-807-31	s	CARBON 100 5% 1/4W
R122	1-216-121-91	s	METAL, CHIP 1M 5% 1/10W
R123	1-249-389-11	s	CARBON 4.7 5% 1/4W
R124	1-216-121-91	s	METAL, CHIP 1M 5% 1/10W
R125	1-216-057-00	s	METAL, CHIP 2.2K 5% 1/10W
R126	1-216-075-00	s	METAL, CHIP 12K 5% 1/10W
R127	1-216-081-00	s	METAL, CHIP 22K 5% 1/10W
R128	1-216-025-91	s	METAL, CHIP 100 5% 1/10W
R129	1-216-121-91	s	METAL, CHIP 1M 5% 1/10W
R130	1-216-033-00	s	METAL, CHIP 220 5% 1/10W
R131	1-216-065-00	s	METAL, CHIP 4.7K 5% 1/10W
R132	1-216-081-00	s	METAL, CHIP 22K 5% 1/10W
R133	1-216-095-00	s	METAL, CHIP 82K 5% 1/10W
R134	1-216-676-11	s	METAL, CHIP 11K 0.5% 1/10W
R135	1-216-057-00	s	METAL, CHIP 2.2K 5% 1/10W
R136	1-216-678-11	s	METAL, CHIP 13K 0.5% 1/10W
R137	1-216-025-91	s	METAL, CHIP 100 5% 1/10W
R138	1-216-073-00	s	METAL, CHIP 10K 5% 1/10W
R139	1-216-073-00	s	METAL, CHIP 10K 5% 1/10W
R140	1-216-073-00	s	METAL, CHIP 10K 5% 1/10W
R141	1-216-684-91	s	METAL, CHIP 24k 0.5% 1/10W
R142	1-216-025-91	s	METAL, CHIP 100 5% 1/10W
R143	1-216-073-00	s	METAL, CHIP 10K 5% 1/10W
R144	1-216-073-00	s	METAL, CHIP 10K 5% 1/10W
R145-154	1-216-097-91	s	METAL, CHIP 100k 5% 1/10W
R155	1-216-081-00	s	METAL, CHIP 22K 5% 1/10W
R156	1-216-081-00	s	METAL, CHIP 22K 5% 1/10W
R157	1-216-081-00	s	METAL, CHIP 22K 5% 1/10W
R158	1-216-081-00	s	METAL, CHIP 22K 5% 1/10W
R159	1-216-073-00	s	METAL, CHIP 10K 5% 1/10W
R160	1-216-049-91	s	METAL, CHIP 1k 5% 1/10W
R161	1-216-063-91	s	METAL, CHIP 3.9k 5% 1/10W
R162	1-216-089-91	s	METAL, CHIP 47k 5% 1/10W
R163	1-216-053-00	s	METAL, CHIP 1.5K 5% 1/10W
R164	1-216-059-00	s	METAL, CHIP 2.7K 5% 1/10W
R165	1-216-071-00	s	METAL, CHIP 8.2K 5% 1/10W
R167	1-216-295-91	s	RES, CHIP 0
R168	1-216-073-00	s	METAL, CHIP 10K 5% 1/10W

(AP-31 BOARD(UVW-1800))

Ref. No. or Q'ty	Part No.	SP	Description
R169	1-216-049-91	s	METAL, CHIP 1k 5% 1/10W
R170	1-216-063-91	s	METAL, CHIP 3.9k 5% 1/10W
R171	1-216-089-91	s	METAL, CHIP 47k 5% 1/10W
R172	1-216-053-00	s	METAL, CHIP 1.5K 5% 1/10W
R173	1-216-059-00	s	METAL, CHIP 2.7K 5% 1/10W
R174	1-216-071-00	s	METAL, CHIP 8.2K 5% 1/10W
R175	1-216-121-91	s	METAL, CHIP 1M 5% 1/10W
R176	1-216-121-91	s	METAL, CHIP 1M 5% 1/10W
R177	1-216-025-91	s	METAL, CHIP 100 5% 1/10W
R178	1-216-073-00	s	METAL, CHIP 10K 5% 1/10W
R179	1-216-664-11	s	METAL, CHIP 3.6K 0.5% 1/10W
R180	1-216-073-00	s	METAL, CHIP 10K 5% 1/10W
R181	1-216-073-00	s	METAL, CHIP 10K 5% 1/10W
R182	1-216-646-11	s	METAL, CHIP 620 0.5% 1/10W
R183	1-216-073-00	s	METAL, CHIP 10K 5% 1/10W
R184	1-216-073-00	s	METAL, CHIP 10K 5% 1/10W
R186	1-216-095-00	s	METAL, CHIP 82K 5% 1/10W
R187	1-208-799-11	s	METAL, CHIP 5.1k 0.5% 1/10W
R188	1-216-085-00	s	METAL, CHIP 33K 5% 1/10W
R189	1-216-295-91	s	RES, CHIP 0
R190	1-208-814-11	s	METAL, CHIP 22k 0.5% 1/10W
R201	1-216-603-11	s	METAL, CHIP 10 0.5% 1/10W
R202	1-216-049-91	s	METAL, CHIP 1k 5% 1/10W
R203	1-216-051-00	s	METAL, CHIP 1.2K 5% 1/10W
R204	1-216-051-00	s	METAL, CHIP 1.2K 5% 1/10W
R205	1-216-097-91	s	METAL, CHIP 100k 5% 1/10W
R207	1-216-073-00	s	METAL, CHIP 10K 5% 1/10W
R208	1-216-105-91	s	METAL, CHIP 220k 5% 1/10W
R209	1-216-626-11	s	METAL, CHIP 91 0.5% 1/10W
R210	1-216-651-11	s	METAL, CHIP 1K 0.5% 1/10W
R211	1-216-073-00	s	METAL, CHIP 10K 5% 1/10W
R212	1-216-073-00	s	METAL, CHIP 10K 5% 1/10W
R213	1-216-659-11	s	METAL, CHIP 2.2K 0.5% 1/10W
R214	1-216-049-91	s	METAL, CHIP 1k 5% 1/10W
R216	1-216-009-00	s	METAL, CHIP 22 5% 1/10W
R217	1-216-073-00	s	METAL, CHIP 10K 5% 1/10W
R219-223	1-216-073-00	s	METAL, CHIP 10K 5% 1/10W
R224	1-216-049-91	s	METAL, CHIP 1k 5% 1/10W
R225	1-216-073-00	s	METAL, CHIP 10K 5% 1/10W
R226	1-216-073-00	s	METAL, CHIP 10K 5% 1/10W
R227	1-216-085-00	s	METAL, CHIP 33K 5% 1/10W
R228	1-216-085-00	s	METAL, CHIP 33K 5% 1/10W
R230	1-208-806-11	s	METAL, CHIP 10k 0.5% 1/10W
R231	1-216-041-00	s	METAL, CHIP 470 5% 1/10W
R232	1-216-642-11	s	METAL, CHIP 430 0.5% 1/10W
R233	1-208-806-11	s	METAL, CHIP 10k 0.5% 1/10W
R234	1-208-822-11	s	METAL, CHIP 47k 0.5% 1/10W
R235	1-208-806-11	s	METAL, CHIP 10k 0.5% 1/10W
R236	1-208-814-11	s	METAL, CHIP 22k 0.5% 1/10W
R237	1-215-473-00	s	METAL 150K 1% 1/6W
R238	1-215-471-00	s	METAL 120K 1% 1/6W
R239	1-215-479-00	s	METAL 270K 1% 1/6W
R240	1-208-812-11	s	METAL, CHIP 18k 0.5% 1/10W
R241	1-208-822-11	s	METAL, CHIP 47k 0.5% 1/10W
R242	1-216-699-11	s	METAL, CHIP 100K 0.5% 1/10W
R243	1-215-479-00	s	METAL 270K 1% 1/6W
R244	1-215-460-00	s	METAL 43K 1% 1/6W
R245	1-215-453-00	s	METAL 22K 1% 1/6W
R246	1-208-812-11	s	METAL, CHIP 18k 0.5% 1/10W

(AP-31 BOARD(UVW-1800))

Ref. No. or Q'ty	Part No.	SP	Description
R247	1-208-814-11	s	METAL, CHIP 22k 0.5% 1/10W
R248	1-216-089-91	s	METAL, CHIP 47k 5% 1/10W
R249	1-216-071-00	s	METAL, CHIP 8.2K 5% 1/10W
R250	1-216-081-00	s	METAL, CHIP 22K 5% 1/10W
R251	1-216-121-91	s	METAL, CHIP 1M 5% 1/10W
R252	1-216-121-91	s	METAL, CHIP 1M 5% 1/10W
R253	1-216-121-91	s	METAL, CHIP 1M 5% 1/10W
R254	1-216-121-91	s	METAL, CHIP 1M 5% 1/10W
R255	1-216-009-00	s	METAL, CHIP 22 5% 1/10W
R256	1-208-822-11	s	METAL, CHIP 47k 0.5% 1/10W
R257	1-208-774-11	s	METAL, CHIP 470 0.5% 1/10W
R258	1-216-622-11	s	METAL, CHIP 62 0.5% 1/10W
R259	1-216-678-11	s	METAL, CHIP 13K 0.5% 1/10W
R260	1-216-673-11	s	METAL, CHIP 8.2K 0.5% 1/10W
R261	1-216-652-11	s	METAL, CHIP 1.1K 0.5% 1/10W
R262	1-216-622-11	s	METAL, CHIP 62 0.5% 1/10W
R263	1-208-784-11	s	METAL, CHIP 1.2k 0.5% 1/10W
R264	1-216-676-11	s	METAL, CHIP 11K 0.5% 1/10W
R265	1-216-677-11	s	METAL, CHIP 12K 0.5% 1/10W
R266	1-208-785-11	s	METAL, CHIP 1.3k 0.5% 1/10W
R267	1-215-493-00	s	METAL 1M 1% 1/6W
R268	1-216-666-11	s	METAL, CHIP 4.3K 0.5% 1/10W
R269	1-208-822-11	s	METAL, CHIP 47k 0.5% 1/10W
R270	1-208-806-11	s	METAL, CHIP 10k 0.5% 1/10W
R271	1-216-073-00	s	METAL, CHIP 10K 5% 1/10W
R272	1-216-049-91	s	METAL, CHIP 1k 5% 1/10W
R273	1-216-081-00	s	METAL, CHIP 22K 5% 1/10W
R274	1-216-081-00	s	METAL, CHIP 22K 5% 1/10W
R275	1-208-810-11	s	METAL, CHIP 15k 0.5% 1/10W
R276	1-216-659-11	s	METAL, CHIP 2.2K 0.5% 1/10W
R277	1-208-789-11	s	METAL, CHIP 2k 0.5% 1/10W
R278	1-216-677-11	s	METAL, CHIP 12K 0.5% 1/10W
R279	1-216-645-11	s	METAL, CHIP 560 0.5% 1/10W
R280	1-216-121-91	s	METAL, CHIP 1M 5% 1/10W
R281	1-208-814-11	s	METAL, CHIP 22k 0.5% 1/10W
R282	1-208-803-11	s	METAL, CHIP 7.5k 0.5% 1/10W
R283	1-216-045-00	s	METAL, CHIP 680 5% 1/10W
R284	1-216-674-11	s	METAL, CHIP 9.1K 0.5% 1/10W
R285	1-208-812-11	s	METAL, CHIP 18k 0.5% 1/10W
R286	1-216-657-11	s	METAL, CHIP 1.8K 0.5% 1/10W
R287	1-216-121-91	s	METAL, CHIP 1M 5% 1/10W
R288	1-216-121-91	s	METAL, CHIP 1M 5% 1/10W
R289	1-208-822-11	s	METAL, CHIP 47k 0.5% 1/10W
R290	1-208-814-11	s	METAL, CHIP 22k 0.5% 1/10W
R291	1-216-659-11	s	METAL, CHIP 2.2K 0.5% 1/10W
R292	1-216-659-11	s	METAL, CHIP 2.2K 0.5% 1/10W
R293	1-216-073-00	s	METAL, CHIP 10K 5% 1/10W
R294	1-216-097-91	s	METAL, CHIP 100k 5% 1/10W
R295	1-216-073-00	s	METAL, CHIP 10K 5% 1/10W
R296	1-216-121-91	s	METAL, CHIP 1M 5% 1/10W
R297	1-216-073-00	s	METAL, CHIP 10K 5% 1/10W
R298	1-216-073-00	s	METAL, CHIP 10K 5% 1/10W
R299	1-216-121-91	s	METAL, CHIP 1M 5% 1/10W
R300	1-216-069-00	s	METAL, CHIP 6.8K 5% 1/10W
R301	1-216-073-00	s	METAL, CHIP 10K 5% 1/10W
R302	1-208-799-11	s	METAL, CHIP 5.1k 0.5% 1/10W
R303	1-216-663-11	s	METAL, CHIP 3.3K 0.5% 1/10W
R304	1-216-650-11	s	METAL, CHIP 910 0.5% 1/10W
R305	1-216-663-11	s	METAL, CHIP 3.3K 0.5% 1/10W

(AP-31 BOARD(UVW-1800))

Ref. No. or Q'ty	Part No.	SP	Description
R306	1-216-073-00	s	METAL, CHIP 10K 5% 1/10W
R307	1-216-667-11	s	METAL, CHIP 4.7K 0.5% 1/10W
R308	1-216-033-00	s	METAL, CHIP 220 5% 1/10W
R309	1-216-067-00	s	METAL, CHIP 5.6K 5% 1/10W
R310	1-216-067-00	s	METAL, CHIP 5.6K 5% 1/10W
R311	1-208-810-11	s	METAL, CHIP 15k 0.5% 1/10W
R312	1-247-807-31	s	CARBON 100 5% 1/4W
R313	⚠ 1-216-399-00	s	WIREWOUND 6.8 10% 3W
R314	⚠ 1-216-399-00	s	WIREWOUND 6.8 10% 3W
R315	1-247-807-31	s	CARBON 100 5% 1/4W
R316	1-216-121-91	s	METAL, CHIP 1M 5% 1/10W
R317	1-249-389-11	s	CARBON 4.7 5% 1/4W
R318	1-216-121-91	s	METAL, CHIP 1M 5% 1/10W
R319	1-216-057-00	s	METAL, CHIP 2.2K 5% 1/10W
R320	1-216-075-00	s	METAL, CHIP 12K 5% 1/10W
R321	1-216-081-00	s	METAL, CHIP 22K 5% 1/10W
R322	1-216-025-91	s	METAL, CHIP 100 5% 1/10W
R323	1-216-121-91	s	METAL, CHIP 1M 5% 1/10W
R324	1-216-033-00	s	METAL, CHIP 220 5% 1/10W
R325	1-216-065-00	s	METAL, CHIP 4.7K 5% 1/10W
R326	1-216-081-00	s	METAL, CHIP 22K 5% 1/10W
R327	1-216-095-00	s	METAL, CHIP 82K 5% 1/10W
R328	1-216-676-11	s	METAL, CHIP 11K 0.5% 1/10W
R329	1-216-057-00	s	METAL, CHIP 2.2K 5% 1/10W
R330	1-216-678-11	s	METAL, CHIP 13K 0.5% 1/10W
R331	1-216-025-91	s	METAL, CHIP 100 5% 1/10W
R332	1-216-073-00	s	METAL, CHIP 10K 5% 1/10W
R333	1-216-073-00	s	METAL, CHIP 10K 5% 1/10W
R334	1-216-073-00	s	METAL, CHIP 10K 5% 1/10W
R335	1-216-684-91	s	METAL, CHIP 24k 0.5% 1/10W
R336	1-216-025-91	s	METAL, CHIP 100 5% 1/10W
R337	1-216-073-00	s	METAL, CHIP 10K 5% 1/10W
R338	1-216-073-00	s	METAL, CHIP 10K 5% 1/10W
R339	1-216-025-91	s	METAL, CHIP 100 5% 1/10W
R341	1-216-095-00	s	METAL, CHIP 82K 5% 1/10W
R342	1-216-073-00	s	METAL, CHIP 10K 5% 1/10W
R344	1-216-295-91	s	RES, CHIP 0
R345	1-216-121-91	s	METAL, CHIP 1M 5% 1/10W
R346	1-216-121-91	s	METAL, CHIP 1M 5% 1/10W
R347	1-216-085-00	s	METAL, CHIP 33K 5% 1/10W
R350	1-216-295-91	s	RES, CHIP 0
R351	1-208-814-11	s	METAL, CHIP 22k 0.5% 1/10W
R387	1-208-799-11	s	METAL, CHIP 5.1k 0.5% 1/10W
R400	1-216-603-11	s	METAL, CHIP 10 0.5% 1/10W
R402	1-216-295-91	s	RES, CHIP 0
R403	1-216-073-00	s	METAL, CHIP 10K 5% 1/10W
R404	1-216-073-00	s	METAL, CHIP 10K 5% 1/10W
R405	1-216-049-91	s	METAL, CHIP 1k 5% 1/10W
R406	1-216-033-00	s	METAL, CHIP 220 5% 1/10W
R407	1-216-121-91	s	METAL, CHIP 1M 5% 1/10W
R408	1-216-053-00	s	METAL, CHIP 1.5K 5% 1/10W
R409	1-216-089-91	s	METAL, CHIP 47k 5% 1/10W
R410	1-216-053-00	s	METAL, CHIP 1.5K 5% 1/10W
R411	1-216-089-91	s	METAL, CHIP 47k 5% 1/10W
R412	1-216-049-91	s	METAL, CHIP 1k 5% 1/10W
R413	1-216-067-00	s	METAL, CHIP 5.6K 5% 1/10W
R414	1-216-089-91	s	METAL, CHIP 47k 5% 1/10W
R415	1-216-089-91	s	METAL, CHIP 47k 5% 1/10W
R416	1-216-057-00	s	METAL, CHIP 2.2K 5% 1/10W

(AP-31 BOARD(UVW-1800))

Ref. No. or Q'ty	Part No.	SP	Description
R417	1-216-121-91	s	METAL, CHIP 1M 5% 1/10W
R418	1-216-049-91	s	METAL, CHIP 1k 5% 1/10W
R419	1-216-073-00	s	METAL, CHIP 10K 5% 1/10W
R420	1-216-113-00	s	METAL, CHIP 470K 5% 1/10W
R421	1-216-025-91	s	METAL, CHIP 100 5% 1/10W
R422	1-216-067-00	s	METAL, CHIP 5.6K 5% 1/10W
R423	1-216-089-91	s	METAL, CHIP 47k 5% 1/10W
R424	1-216-073-00	s	METAL, CHIP 10K 5% 1/10W
R425	1-216-065-00	s	METAL, CHIP 4.7K 5% 1/10W
R426	1-216-065-00	s	METAL, CHIP 4.7K 5% 1/10W
R427	1-216-025-91	s	METAL, CHIP 100 5% 1/10W
R428	1-216-073-00	s	METAL, CHIP 10K 5% 1/10W
R500	1-216-633-11	s	METAL, CHIP 180 0.5% 1/10W
R501	1-216-633-11	s	METAL, CHIP 180 0.5% 1/10W
R502	1-216-049-91	s	METAL, CHIP 1k 5% 1/10W
R600	1-216-025-91	s	METAL, CHIP 100 5% 1/10W
R601	1-216-025-91	s	METAL, CHIP 100 5% 1/10W
R602	1-247-855-11	s	CARBON 10K 5% 1/4W
RV1	1-241-789-11	s	RES, ADJ METAL 220k
RV2	1-241-784-11	s	RES, ADJ METAL 4.7k
RV3	1-241-783-11	s	RES, ADJ METAL 2.2k
RV4	1-241-785-11	s	RES, ADJ METAL 10k
RV5	1-241-786-11	s	RES, ADJ METAL 22k
RV201	1-241-789-11	s	RES, ADJ METAL 220k
RV202	1-241-784-11	s	RES, ADJ METAL 4.7k
RV203	1-241-783-11	s	RES, ADJ METAL 2.2k
RV204	1-241-785-11	s	RES, ADJ METAL 10k
RV205	1-241-786-11	s	RES, ADJ METAL 22k
S1	1-570-602-11	s	SWITCH, DIP 2-CKT
S2	1-570-602-11	s	SWITCH, DIP 2-CKT
S201	1-570-602-11	s	SWITCH, DIP 2-CKT
S202	1-570-602-11	s	SWITCH, DIP 2-CKT
TH1	1-807-972-11	s	THERMISTOR SV-1715 1.25k
TH2	1-807-972-11	s	THERMISTOR SV-1715 1.25k

AP-31P BOARD(UVW-1800P)

Ref. No. or Q'ty	Part No.	SP	Description
AP-31P board is used for UVW-1800P(EK).			
1pc	A-8275-471-A	o	MOUNTED CIRCUIT BOARD, AP-31P
1pc	3-179-084-01	s	LEVER (R), PC BOARD
1pc	3-179-085-01	s	LEVER (L), PC BOARD
1pc	3-182-385-02	o	PLATE, SHIELD (S), CARD
1pc	7-621-759-45	s	SCREW, +PSW2.6x6
1pc	3-182-298-01	o	CASE, SHIELD (LID), AP (2)
1pc	3-182-351-01	o	CASE, SHIELD, AP (2B)
C2	1-163-133-00	s	CERAMIC, CHIP 470PF 5% 50V
C3	1-163-243-11	s	CERAMIC, CHIP 47PF 5% 50V
C4	1-163-235-11	s	CERAMIC, CHIP 22PF 5% 50V
C5	1-126-964-11	s	ELECT 10uF 20% 50V
C7	1-130-485-00	s	MYLAR 0.015uF 5% 50V
C8	1-126-933-11	s	ELECT 100uF 20% 16V
C9	1-163-125-00	s	CERAMIC, CHIP 220PF 5% 50V
C10	1-126-964-11	s	ELECT 10uF 20% 50V
C11	1-128-551-11	s	ELECT 22uF 20% 50V
C12	1-163-263-11	s	CERAMIC, CHIP 330PF 5% 50V
C13	1-130-481-00	s	MYLAR 0.0068uF 5% 50V
C14	1-164-182-11	s	CERAMIC, CHIP 3300PF 10% 100V
C15	1-126-964-11	s	ELECT 10uF 20% 50V
C16	1-128-551-11	s	ELECT 22uF 20% 50V
C17	1-163-235-11	s	CERAMIC, CHIP 22PF 5% 50V
C18	1-128-551-11	s	ELECT 22uF 20% 50V
C19	1-163-235-11	s	CERAMIC, CHIP 22PF 5% 50V
C20	1-130-498-00	s	MYLAR 0.18uF 5% 50V
C21-C26	1-130-487-00	s	MYLAR 0.022uF 5% 50V
C27	1-163-243-11	s	CERAMIC, CHIP 47PF 5% 50V
C28	1-163-017-00	s	CERAMIC, CHIP 0.0047uF 5% 50V
C29	1-130-483-00	s	MYLAR 0.01uF 5% 50V
C30	1-163-275-11	s	CERAMIC, CHIP 0.001uF 5% 50V
C31	1-163-275-11	s	CERAMIC, CHIP 0.001uF 5% 50V
C32	1-163-275-11	s	CERAMIC, CHIP 0.001uF 5% 50V
C33	1-163-275-11	s	CERAMIC, CHIP 0.001uF 5% 50V
C34	1-130-483-00	s	MYLAR 0.01uF 5% 50V
C35	1-163-139-00	s	CERAMIC, CHIP 820PF 5% 50V
C36	1-163-243-11	s	CERAMIC, CHIP 47PF 5% 50V
C37	1-164-232-11	s	CERAMIC, CHIP 0.01uF 10% 100V
C38	1-164-232-11	s	CERAMIC, CHIP 0.01uF 10% 100V
C39	1-124-925-11	s	ELECT 2.2uF 20% 100V
C40	1-164-004-11	s	CERAMIC, CHIP 0.1uF 10% 25V
C41	1-107-498-11	s	FILM, CHIP 0.0022uF 2% 50V
C42	1-107-498-11	s	FILM, CHIP 0.0022uF 2% 50V
C43	1-107-499-11	s	FILM, CHIP 0.0039uF 2% 16V
C44	1-131-345-00	s	TANTALUM 0.47uF 10% 35V
C45	1-130-497-00	s	MYLAR 0.15uF 5% 50V
C46	1-124-925-11	s	ELECT 2.2uF 20% 100V
C47	1-104-553-11	s	FILM, CHIP 0.015uF 5% 16V
C48	1-130-499-00	s	MYLAR 0.22uF 5% 50V
C49	1-164-344-11	s	CERAMIC, CHIP 0.068uF 10% 25V
C50	1-104-560-11	s	FILM, CHIP 0.056uF 5% 16V
C51	1-124-925-11	s	ELECT 2.2uF 20% 100V
C52	1-107-553-11	s	FILM, CHIP 0.0056uF 2% 16V
C53	1-104-551-11	s	FILM, CHIP 0.01uF 5% 16V
C54	1-130-478-00	s	MYLAR 0.0039uF 5% 50V
C55	1-130-478-00	s	MYLAR 0.0039uF 5% 50V
C56	1-163-251-11	s	CERAMIC, CHIP 100PF 5% 50V
C57	1-126-947-11	s	ELECT 47uF 20% 35V

(AP-31P BOARD(UVW-1800P))

Ref. No. or Q'ty	Part No.	SP	Description
C58	1-163-263-11	s	CERAMIC, CHIP 330PF 5% 50V
C59	1-163-235-11	s	CERAMIC, CHIP 22PF 5% 50V
C60	1-126-964-11	s	ELECT 10uF 20% 50V
C61	1-126-964-11	s	ELECT 10uF 20% 50V
C62	1-126-926-11	s	ELECT 1000uF 20% 10V
C63	1-126-926-11	s	ELECT 1000uF 20% 10V
C64	1-126-926-11	s	ELECT 1000uF 20% 10V
C65	1-164-004-11	s	CERAMIC, CHIP 0.1uF 10% 25V
C66	1-126-926-11	s	ELECT 1000uF 20% 10V
C67	1-126-947-11	s	ELECT 47uF 20% 35V
C68	1-124-903-11	s	ELECT 1uF 20% 50V
C69	1-163-251-11	s	CERAMIC, CHIP 100PF 5% 50V
C70	1-126-947-11	s	ELECT 47uF 20% 35V
C71	1-163-235-11	s	CERAMIC, CHIP 22PF 5% 50V
C72	1-163-809-11	s	CERAMIC, CHIP 0.047uF 10% 25V
C73	1-130-491-00	s	MYLAR 0.047uF 5% 50V
C74	1-130-491-00	s	MYLAR 0.047uF 5% 50V
C75	1-130-491-00	s	MYLAR 0.047uF 5% 50V
C76	1-130-491-00	s	MYLAR 0.047uF 5% 50V
C77	1-163-251-11	s	CERAMIC, CHIP 100PF 5% 50V
C78	1-126-964-11	s	ELECT 10uF 20% 50V
C79	1-126-964-11	s	ELECT 10uF 20% 50V
C80	1-126-964-11	s	ELECT 10uF 20% 50V
C81	1-130-483-00	s	MYLAR 0.01uF 5% 50V
C82	1-126-926-11	s	ELECT 1000uF 20% 10V
C83	1-126-926-11	s	ELECT 1000uF 20% 10V
C84	1-124-925-11	s	ELECT 2.2uF 20% 100V
C85	1-131-352-00	s	TANTALUM 6.8uF 10% 35V
C87	1-126-964-11	s	ELECT 10uF 20% 50V
C202	1-163-133-00	s	CERAMIC, CHIP 470PF 5% 50V
C203	1-163-243-11	s	CERAMIC, CHIP 47PF 5% 50V
C204	1-163-235-11	s	CERAMIC, CHIP 22PF 5% 50V
C205	1-126-964-11	s	ELECT 10uF 20% 50V
C207	1-130-485-00	s	MYLAR 0.015uF 5% 50V
C208	1-126-933-11	s	ELECT 100uF 20% 16V
C209	1-163-125-00	s	CERAMIC, CHIP 220PF 5% 50V
C210	1-126-964-11	s	ELECT 10uF 20% 50V
C211	1-128-551-11	s	ELECT 22uF 20% 50V
C212	1-163-263-11	s	CERAMIC, CHIP 330PF 5% 50V
C213	1-130-481-00	s	MYLAR 0.0068uF 5% 50V
C214	1-164-182-11	s	CERAMIC, CHIP 3300PF 10% 100V
C215	1-126-964-11	s	ELECT 10uF 20% 50V
C216	1-128-551-11	s	ELECT 22uF 20% 50V
C217	1-163-235-11	s	CERAMIC, CHIP 22PF 5% 50V
C218	1-128-551-11	s	ELECT 22uF 20% 50V
C219	1-163-235-11	s	CERAMIC, CHIP 22PF 5% 50V
C220	1-130-498-00	s	MYLAR 0.18uF 5% 50V
C221-226	1-130-487-00	s	MYLAR 0.022uF 5% 50V
C227	1-163-243-11	s	CERAMIC, CHIP 47PF 5% 50V
C228	1-163-017-00	s	CERAMIC, CHIP 0.0047uF 5% 50V
C229	1-130-483-00	s	MYLAR 0.01uF 5% 50V
C230	1-163-275-11	s	CERAMIC, CHIP 0.001uF 5% 50V
C231	1-163-275-11	s	CERAMIC, CHIP 0.001uF 5% 50V
C232	1-163-275-11	s	CERAMIC, CHIP 0.001uF 5% 50V
C233	1-163-275-11	s	CERAMIC, CHIP 0.001uF 5% 50V
C234	1-130-483-00	s	MYLAR 0.01uF 5% 50V
C235	1-163-139-00	s	CERAMIC, CHIP 820PF 5% 50V
C236	1-163-243-11	s	CERAMIC, CHIP 47PF 5% 50V
C237	1-124-925-11	s	ELECT 2.2uF 20% 100V

(AP-31P BOARD(UVW-1800P))

Ref. No. or Q'ty	Part No.	SP	Description
C238	1-107-498-11	s	FILM, CHIP 0.0022uF 2% 50V
C239	1-107-498-11	s	FILM, CHIP 0.0022uF 2% 50V
C240	1-107-499-11	s	FILM, CHIP 0.0039uF 2% 16V
C241	1-131-345-00	s	TANTALUM 0.47uF 10% 35V
C242	1-130-497-00	s	MYLAR 0.15uF 5% 50V
C243	1-124-925-11	s	ELECT 2.2uF 20% 100V
C244	1-104-553-11	s	FILM, CHIP 0.015uF 5% 16V
C245	1-130-499-00	s	MYLAR 0.22uF 5% 50V
C246	1-164-344-11	s	CERAMIC, CHIP 0.068uF 10% 25V
C247	1-104-560-11	s	FILM, CHIP 0.056uF 5% 16V
C248	1-124-925-11	s	ELECT 2.2uF 20% 100V
C249	1-107-553-11	s	FILM, CHIP 0.0056uF 2% 16V
C250	1-104-551-11	s	FILM, CHIP 0.01uF 5% 16V
C251	1-130-478-00	s	MYLAR 0.0039uF 5% 50V
C252	1-130-478-00	s	MYLAR 0.0039uF 5% 50V
C253	1-163-251-11	s	CERAMIC, CHIP 100PF 5% 50V
C254	1-126-947-11	s	ELECT 47uF 20% 35V
C255	1-163-263-11	s	CERAMIC, CHIP 330PF 5% 50V
C256	1-163-235-11	s	CERAMIC, CHIP 22PF 5% 50V
C257	1-126-964-11	s	ELECT 10uF 20% 50V
C258	1-126-964-11	s	ELECT 10uF 20% 50V
C259	1-126-926-11	s	ELECT 1000uF 20% 10V
C260	1-126-926-11	s	ELECT 1000uF 20% 10V
C261	1-126-926-11	s	ELECT 1000uF 20% 10V
C262	1-164-004-11	s	CERAMIC, CHIP 0.1uF 10% 25V
C263	1-126-926-11	s	ELECT 1000uF 20% 10V
C264	1-126-947-11	s	ELECT 47uF 20% 35V
C265	1-124-903-11	s	ELECT 1uF 20% 50V
C266	1-163-251-11	s	CERAMIC, CHIP 100PF 5% 50V
C267	1-126-947-11	s	ELECT 47uF 20% 35V
C268	1-163-235-11	s	CERAMIC, CHIP 22PF 5% 50V
C269	1-163-809-11	s	CERAMIC, CHIP 0.047uF 10% 25V
C270	1-124-925-11	s	ELECT 2.2uF 20% 100V
C271	1-131-352-00	s	TANTALUM 6.8uF 10% 35V
C278	1-126-964-11	s	ELECT 10uF 20% 50V
C279	1-126-964-11	s	ELECT 10uF 20% 50V
C280	1-126-964-11	s	ELECT 10uF 20% 50V
C281	1-130-483-00	s	MYLAR 0.01uF 5% 50V
C282	1-126-926-11	s	ELECT 1000uF 20% 10V
C283	1-126-926-11	s	ELECT 1000uF 20% 10V
C401	1-163-033-91	s	CERAMIC, CHIP 0.022uF 50V
C402	1-126-933-11	s	ELECT 100uF 20% 16V
C403	1-163-989-11	s	CERAMIC, CHIP 0.033uF 10% 25V
C404	1-164-004-11	s	CERAMIC, CHIP 0.1uF 10% 25V
C405	1-164-232-11	s	CERAMIC, CHIP 0.01uF 10% 100V
C406	1-164-232-11	s	CERAMIC, CHIP 0.01uF 10% 100V
C408	1-126-964-11	s	ELECT 10uF 20% 50V
C409	1-163-239-11	s	CERAMIC, CHIP 33PF 5% 50V
C410	1-164-004-11	s	CERAMIC, CHIP 0.1uF 10% 25V
C411	1-163-989-11	s	CERAMIC, CHIP 0.033uF 10% 25V
C412	1-126-964-11	s	ELECT 10uF 20% 50V
C413	1-126-964-11	s	ELECT 10uF 20% 50V
C414	1-126-964-11	s	ELECT 10uF 20% 50V
C415	1-163-033-91	s	CERAMIC, CHIP 0.022uF 50V
C416	1-163-033-91	s	CERAMIC, CHIP 0.022uF 50V
C417	1-126-933-11	s	ELECT 100uF 20% 16V
C418	1-126-933-11	s	ELECT 100uF 20% 16V
C419	1-126-964-11	s	ELECT 10uF 20% 50V
C420	1-163-033-91	s	CERAMIC, CHIP 0.022uF 50V

(AP-31P BOARD(UVW-1800P))

Ref. No. or Q'ty	Part No.	SP	Description
C421	1-163-033-91	s	CERAMIC, CHIP 0.022uF 50V
C422	1-126-933-11	s	ELECT 100uF 20% 16V
C423	1-126-933-11	s	ELECT 100uF 20% 16V
C424	1-126-933-11	s	ELECT 100uF 20% 16V
C425	1-126-933-11	s	ELECT 100uF 20% 16V
C426	1-163-033-91	s	CERAMIC, CHIP 0.022uF 50V
C427	1-163-033-91	s	CERAMIC, CHIP 0.022uF 50V
C428	1-163-989-11	s	CERAMIC, CHIP 0.033uF 10% 25V
C429	1-161-021-11	s	CERAMIC 0.047uF 10% 25V
C430	1-161-021-11	s	CERAMIC 0.047uF 10% 25V
C500	1-163-125-00	s	CERAMIC, CHIP 220PF 5% 50V
C501	1-163-133-00	s	CERAMIC, CHIP 470PF 5% 50V
C600	1-163-809-11	s	CERAMIC, CHIP 0.047uF 10% 25V
C601	1-163-809-11	s	CERAMIC, CHIP 0.047uF 10% 25V
CN1	1-506-468-11	s	CONNECTOR 3P, MALE
CN2	1-564-002-41	s	CONNECTOR 3P, MALE
CN3	1-564-002-11	s	CONNECTOR 3P, MALE
CN111	1-573-600-21	s	CONNECTOR, PHEC 100P, MALE
D1	8-719-941-23	s	DIODE DA204U
D2	8-719-941-23	s	DIODE DA204U
D3	8-719-941-23	s	DIODE DA204U
D5	8-719-941-23	s	DIODE DA204U
D6	8-719-123-85	s	DIODE 1SS304
D7	8-719-941-23	s	DIODE DA204U
D8	8-719-123-85	s	DIODE 1SS304
D10	8-719-123-85	s	DIODE 1SS304
D11	8-719-123-85	s	DIODE 1SS304
D12	8-719-123-85	s	DIODE 1SS304
D13	8-719-123-85	s	DIODE 1SS304
D15	8-719-123-85	s	DIODE 1SS304
D16	8-719-123-85	s	DIODE 1SS304
D17	8-719-941-23	s	DIODE DA204U
D18	8-719-911-19	s	DIODE 1SS119
D201	8-719-941-23	s	DIODE DA204U
D202	8-719-941-23	s	DIODE DA204U
D203	8-719-941-23	s	DIODE DA204U
D204	8-719-941-23	s	DIODE DA204U
D205	8-719-123-85	s	DIODE 1SS304
D206	8-719-941-23	s	DIODE DA204U
D207	8-719-123-85	s	DIODE 1SS304
D209	8-719-123-85	s	DIODE 1SS304
D210	8-719-941-23	s	DIODE DA204U
D211	8-719-911-19	s	DIODE 1SS119
D401	8-719-941-23	s	DIODE DA204U
D403	8-719-941-23	s	DIODE DA204U
D500	8-719-106-88	s	DIODE RD15M-B1
IC1	8-759-701-25	s	IC NJM2068D-D
IC2	8-759-701-25	s	IC NJM2068D-D
IC3	8-759-701-25	s	IC NJM2068D-D
IC4	8-759-701-25	s	IC NJM2068D-D
IC5	8-759-705-58	s	IC NJM4558D-D
IC6	8-759-705-58	s	IC NJM4558D-D
IC7	8-759-705-58	s	IC NJM4558D-D
IC8	8-752-018-80	s	IC CX20188
IC9	8-759-705-58	s	IC NJM4558D-D
IC10	8-759-705-58	s	IC NJM4558D-D
IC11	8-759-145-57	s	IC UPC4557C
IC12	8-759-917-18	s	IC SN74HCU04AN

(AP-31P BOARD(UVW-1800P))

Ref. No. or Q'ty	Part No.	SP	Description
IC13	8-759-917-18	s	IC SN74HCU04AN
IC14	8-759-145-57	s	IC UPC4557C
IC15	8-759-705-58	s	IC NJM4558D-D
IC201	8-759-701-25	s	IC NJM2068D-D
IC202	8-759-701-25	s	IC NJM2068D-D
IC203	8-759-701-25	s	IC NJM2068D-D
IC204	8-759-701-25	s	IC NJM2068D-D
IC205	8-759-705-58	s	IC NJM4558D-D
IC206	8-759-705-58	s	IC NJM4558D-D
IC207	8-759-705-58	s	IC NJM4558D-D
IC208	8-759-705-58	s	IC NJM4558D-D
IC209	8-759-705-58	s	IC NJM4558D-D
IC210	8-759-145-57	s	IC UPC4557C
IC211	8-759-705-58	s	IC NJM4558D-D
IC401	8-759-701-25	s	IC NJM2068D-D
IC402	8-759-729-03	s	IC NJM2903D
IC405	8-759-172-41	s	IC L78M09T-TL
IC406	8-759-173-37	s	IC L79M09T-TL
IC407	8-759-635-83	s	IC M51957BFP
IC408	8-759-172-41	s	IC L78M09T-TL
IC409	8-759-173-37	s	IC L79M09T-TL
IC410	8-759-701-25	s	IC NJM2068D-D
L2	1-408-617-31	s	INDUCTOR 150uH
L202	1-408-617-31	s	INDUCTOR 150uH
L401	1-410-470-11	s	INDUCTOR 10uH
L402	1-410-470-11	s	INDUCTOR 10uH
PS1	⚠ 1-532-727-11	s	LINK, IC 0.25A
PS2	⚠ 1-532-727-11	s	LINK, IC 0.25A
Q1	8-729-209-06	s	TRANSISTOR 2SC4213-A
Q2	8-729-803-89	s	TRANSISTOR 2SC3332-T
Q3	8-729-803-89	s	TRANSISTOR 2SC3332-T
Q4	8-729-209-06	s	TRANSISTOR 2SC4213-A
Q5	8-729-209-06	s	TRANSISTOR 2SC4213-A
Q6	8-729-209-06	s	TRANSISTOR 2SC4213-A
Q7	8-729-209-06	s	TRANSISTOR 2SC4213-A
Q8	8-729-140-63	s	TRANSISTOR 2SA1611-M5M6
Q9	8-729-109-44	s	TRANSISTOR 2SK94
Q10	8-729-203-30	s	TRANSISTOR 2SJ106Y
Q11	8-729-905-18	s	TRANSISTOR DTC144EU
Q12	8-729-905-12	s	TRANSISTOR DTA144EU
Q13	8-729-422-44	s	TRANSISTOR 2SK663
Q14	8-729-209-06	s	TRANSISTOR 2SC4213-A
Q15	8-729-209-06	s	TRANSISTOR 2SC4213-A
Q16	8-729-140-63	s	TRANSISTOR 2SA1611-M5M6
Q17	8-729-422-44	s	TRANSISTOR 2SK663
Q18	8-729-423-93	s	TRANSISTOR 2SD2136-R(TA)
Q19	8-729-022-00	s	TRANSISTOR 2SB1416-R(TA)
Q20	8-729-021-98	s	TRANSISTOR 2SJ226-AZ
Q21	8-729-021-98	s	TRANSISTOR 2SJ226-AZ
Q22	8-729-117-32	s	TRANSISTOR 2SC4177
Q23	8-729-117-32	s	TRANSISTOR 2SC4177
Q25	8-729-140-93	s	TRANSISTOR 2SB733-34
Q26	8-729-209-06	s	TRANSISTOR 2SC4213-A
Q27	8-729-209-06	s	TRANSISTOR 2SC4213-A
Q28	8-729-804-09	s	TRANSISTOR 2SA1319-T
Q29	8-729-804-09	s	TRANSISTOR 2SA1319-T
Q30	8-729-140-93	s	TRANSISTOR 2SB733-34
Q34	8-729-905-18	s	TRANSISTOR DTC144EU

(AP-31P BOARD(UVW-1800P))

Ref. No. or Q'ty	Part No.	SP	Description
Q35	8-729-905-12	s	TRANSISTOR DTA144EU
Q36	8-729-422-44	s	TRANSISTOR 2SK663
Q201	8-729-209-06	s	TRANSISTOR 2SC4213-A
Q202	8-729-803-89	s	TRANSISTOR 2SC3332-T
Q203	8-729-803-89	s	TRANSISTOR 2SC3332-T
Q204	8-729-209-06	s	TRANSISTOR 2SC4213-A
Q205	8-729-209-06	s	TRANSISTOR 2SC4213-A
Q206	8-729-209-06	s	TRANSISTOR 2SC4213-A
Q207	8-729-209-06	s	TRANSISTOR 2SC4213-A
Q208	8-729-140-63	s	TRANSISTOR 2SA1611-M5M6
Q209	8-729-109-44	s	TRANSISTOR 2SK94
Q210	8-729-203-30	s	TRANSISTOR 2SJ106Y
Q211	8-729-422-44	s	TRANSISTOR 2SK663
Q212	8-729-209-06	s	TRANSISTOR 2SC4213-A
Q213	8-729-209-06	s	TRANSISTOR 2SC4213-A
Q214	8-729-140-63	s	TRANSISTOR 2SA1611-M5M6
Q215	8-729-422-44	s	TRANSISTOR 2SK663
Q216	8-729-423-93	s	TRANSISTOR 2SD2136-R(TA)
Q217	8-729-022-00	s	TRANSISTOR 2SB1416-R(TA)
Q218	8-729-021-98	s	TRANSISTOR 2SJ226-AZ
Q219	8-729-021-98	s	TRANSISTOR 2SJ226-AZ
Q220	8-729-117-32	s	TRANSISTOR 2SC4177
Q221	8-729-117-32	s	TRANSISTOR 2SC4177
Q223	8-729-140-93	s	TRANSISTOR 2SB733-34
Q224	8-729-905-18	s	TRANSISTOR DTC144EU
Q225	8-729-905-12	s	TRANSISTOR DTA144EU
Q226	8-729-422-44	s	TRANSISTOR 2SK663
Q401	8-729-209-06	s	TRANSISTOR 2SC4213-A
Q402	8-729-209-06	s	TRANSISTOR 2SC4213-A
Q403	8-729-209-06	s	TRANSISTOR 2SC4213-A
R1	1-216-603-11	s	METAL, CHIP 10 0.5% 1/10W
R2	1-216-049-91	s	METAL, CHIP 1k 5% 1/10W
R3	1-216-051-00	s	METAL, CHIP 1.2K 5% 1/10W
R4	1-216-051-00	s	METAL, CHIP 1.2K 5% 1/10W
R5	1-216-097-91	s	METAL, CHIP 100k 5% 1/10W
R7	1-216-073-00	s	METAL, CHIP 10K 5% 1/10W
R8	1-216-105-91	s	METAL, CHIP 220k 5% 1/10W
R9	1-216-626-11	s	METAL, CHIP 91 0.5% 1/10W
R10	1-208-774-11	s	METAL, CHIP 470 0.5% 1/10W
R11	1-216-073-00	s	METAL, CHIP 10K 5% 1/10W
R12	1-216-073-00	s	METAL, CHIP 10K 5% 1/10W
R13	1-216-659-11	s	METAL, CHIP 2.2K 0.5% 1/10W
R14	1-216-049-91	s	METAL, CHIP 1k 5% 1/10W
R15	1-208-806-11	s	METAL, CHIP 10k 0.5% 1/10W
R16	1-216-009-00	s	METAL, CHIP 22 5% 1/10W
R17	1-216-073-00	s	METAL, CHIP 10K 5% 1/10W
R19-R23	1-216-073-00	s	METAL, CHIP 10K 5% 1/10W
R20	1-216-073-00	s	METAL, CHIP 10K 5% 1/10W
R21	1-216-073-00	s	METAL, CHIP 10K 5% 1/10W
R22	1-216-073-00	s	METAL, CHIP 10K 5% 1/10W
R23	1-216-073-00	s	METAL, CHIP 10K 5% 1/10W
R24	1-216-049-91	s	METAL, CHIP 1k 5% 1/10W
R25	1-216-073-00	s	METAL, CHIP 10K 5% 1/10W
R26	1-216-073-00	s	METAL, CHIP 10K 5% 1/10W
R27	1-216-085-00	s	METAL, CHIP 33K 5% 1/10W
R28	1-216-085-00	s	METAL, CHIP 33K 5% 1/10W
R30	1-208-806-11	s	METAL, CHIP 10k 0.5% 1/10W
R31	1-216-041-00	s	METAL, CHIP 470 5% 1/10W
R32	1-216-642-11	s	METAL, CHIP 430 0.5% 1/10W

(AP-31P BOARD(UVW-1800P))

Ref. No. or Q'ty	Part No.	SP	Description
R33	1-208-806-11	s	METAL, CHIP 10k 0.5% 1/10W
R34	1-208-822-11	s	METAL, CHIP 47k 0.5% 1/10W
R35	1-208-806-11	s	METAL, CHIP 10k 0.5% 1/10W
R36	1-208-814-11	s	METAL, CHIP 22k 0.5% 1/10W
R37	1-215-479-00	s	METAL 270K 1% 1/6W
R38	1-215-471-00	s	METAL 120K 1% 1/6W
R39	1-215-479-00	s	METAL 270K 1% 1/6W
R40	1-208-812-11	s	METAL, CHIP 18k 0.5% 1/10W
R41	1-208-824-11	s	METAL, CHIP 56k 0.5% 1/10W
R42	1-216-699-11	s	METAL, CHIP 100K 0.5% 1/10W
R44	1-215-493-00	s	METAL 1M 1% 1/6W
R45	1-215-453-00	s	METAL 22K 1% 1/6W
R46	1-208-812-11	s	METAL, CHIP 18k 0.5% 1/10W
R47	1-208-814-11	s	METAL, CHIP 22k 0.5% 1/10W
R48	1-216-089-91	s	METAL, CHIP 47k 5% 1/10W
R49	1-216-071-00	s	METAL, CHIP 8.2K 5% 1/10W
R50	1-216-081-00	s	METAL, CHIP 22K 5% 1/10W
R51	1-216-121-91	s	METAL, CHIP 1M 5% 1/10W
R52	1-216-121-91	s	METAL, CHIP 1M 5% 1/10W
R53	1-216-121-91	s	METAL, CHIP 1M 5% 1/10W
R54	1-216-121-91	s	METAL, CHIP 1M 5% 1/10W
R56	1-216-009-00	s	METAL, CHIP 22 5% 1/10W
R57	1-208-822-11	s	METAL, CHIP 47k 0.5% 1/10W
R58	1-208-774-11	s	METAL, CHIP 470 0.5% 1/10W
R59	1-216-622-11	s	METAL, CHIP 62 0.5% 1/10W
R60	1-216-678-11	s	METAL, CHIP 13K 0.5% 1/10W
R61	1-216-673-11	s	METAL, CHIP 8.2K 0.5% 1/10W
R62	1-216-652-11	s	METAL, CHIP 1.1K 0.5% 1/10W
R63	1-216-622-11	s	METAL, CHIP 62 0.5% 1/10W
R64	1-208-784-11	s	METAL, CHIP 1.2k 0.5% 1/10W
R65	1-216-676-11	s	METAL, CHIP 11K 0.5% 1/10W
R66	1-216-677-11	s	METAL, CHIP 12K 0.5% 1/10W
R67	1-208-785-11	s	METAL, CHIP 1.3k 0.5% 1/10W
R68	1-215-493-00	s	METAL 1M 1% 1/6W
R69	1-216-666-11	s	METAL, CHIP 4.3K 0.5% 1/10W
R70	1-208-822-11	s	METAL, CHIP 47k 0.5% 1/10W
R71	1-208-806-11	s	METAL, CHIP 10k 0.5% 1/10W
R72	1-216-073-00	s	METAL, CHIP 10K 5% 1/10W
R73	1-216-081-00	s	METAL, CHIP 22K 5% 1/10W
R74	1-216-049-91	s	METAL, CHIP 1k 5% 1/10W
R75	1-216-081-00	s	METAL, CHIP 22K 5% 1/10W
R76	1-216-081-00	s	METAL, CHIP 22K 5% 1/10W
R77	1-216-699-11	s	METAL, CHIP 100K 0.5% 1/10W
R78	1-208-817-11	s	METAL, CHIP 30k 0.5% 1/10W
R79	1-216-081-00	s	METAL, CHIP 22K 5% 1/10W
R80	1-216-049-91	s	METAL, CHIP 1k 5% 1/10W
R81	1-208-810-11	s	METAL, CHIP 15k 0.5% 1/10W
R82	1-216-659-11	s	METAL, CHIP 2.2K 0.5% 1/10W
R83	1-208-789-11	s	METAL, CHIP 2k 0.5% 1/10W
R84	1-216-677-11	s	METAL, CHIP 12K 0.5% 1/10W
R85	1-216-645-11	s	METAL, CHIP 560 0.5% 1/10W
R86	1-216-121-91	s	METAL, CHIP 1M 5% 1/10W
R87	1-208-814-11	s	METAL, CHIP 22k 0.5% 1/10W
R88	1-208-803-11	s	METAL, CHIP 7.5k 0.5% 1/10W
R89	1-216-045-00	s	METAL, CHIP 680 5% 1/10W
R90	1-216-674-11	s	METAL, CHIP 9.1K 0.5% 1/10W
R91	1-208-812-11	s	METAL, CHIP 18k 0.5% 1/10W
R92	1-216-657-11	s	METAL, CHIP 1.8K 0.5% 1/10W
R93	1-216-121-91	s	METAL, CHIP 1M 5% 1/10W

(AP-31P BOARD(UVW-1800P))

Ref. No. or Q'ty	Part No.	SP	Description
R94	1-216-121-91	s	METAL, CHIP 1M 5% 1/10W
R95	1-208-822-11	s	METAL, CHIP 47k 0.5% 1/10W
R96	1-208-814-11	s	METAL, CHIP 22k 0.5% 1/10W
R97	1-216-659-11	s	METAL, CHIP 2.2K 0.5% 1/10W
R98	1-216-659-11	s	METAL, CHIP 2.2K 0.5% 1/10W
R99	1-216-073-00	s	METAL, CHIP 10K 5% 1/10W
R100	1-216-097-91	s	METAL, CHIP 100k 5% 1/10W
R101	1-216-073-00	s	METAL, CHIP 10K 5% 1/10W
R102	1-216-121-91	s	METAL, CHIP 1M 5% 1/10W
R103	1-216-073-00	s	METAL, CHIP 10K 5% 1/10W
R104	1-216-073-00	s	METAL, CHIP 10K 5% 1/10W
R105	1-216-121-91	s	METAL, CHIP 1M 5% 1/10W
R106	1-216-069-00	s	METAL, CHIP 6.8K 5% 1/10W
R107	1-216-073-00	s	METAL, CHIP 10K 5% 1/10W
R108	1-208-799-11	s	METAL, CHIP 5.1k 0.5% 1/10W
R109	1-216-663-11	s	METAL, CHIP 3.3K 0.5% 1/10W
R110	1-216-650-11	s	METAL, CHIP 910 0.5% 1/10W
R111	1-216-663-11	s	METAL, CHIP 3.3K 0.5% 1/10W
R112	1-216-073-00	s	METAL, CHIP 10K 5% 1/10W
R113	1-216-667-11	s	METAL, CHIP 4.7K 0.5% 1/10W
R114	1-216-033-00	s	METAL, CHIP 220 5% 1/10W
R115	1-216-067-00	s	METAL, CHIP 5.6K 5% 1/10W
R116	1-216-067-00	s	METAL, CHIP 5.6K 5% 1/10W
R117	1-208-810-11	s	METAL, CHIP 15k 0.5% 1/10W
R118	1-247-807-31	s	CARBON 100 5% 1/4W
R119	⚠ 1-216-399-00	s	WIREWOUND 6.8 10% 3W
R120	⚠ 1-216-399-00	s	WIREWOUND 6.8 10% 3W
R121	1-247-807-31	s	CARBON 100 5% 1/4W
R122	1-216-121-91	s	METAL, CHIP 1M 5% 1/10W
R123	1-249-389-11	s	CARBON 4.7 5% 1/4W
R124	1-216-121-91	s	METAL, CHIP 1M 5% 1/10W
R125	1-216-057-00	s	METAL, CHIP 2.2K 5% 1/10W
R126	1-216-075-00	s	METAL, CHIP 12K 5% 1/10W
R127	1-216-081-00	s	METAL, CHIP 22K 5% 1/10W
R128	1-216-025-91	s	METAL, CHIP 100 5% 1/10W
R129	1-216-121-91	s	METAL, CHIP 1M 5% 1/10W
R130	1-216-033-00	s	METAL, CHIP 220 5% 1/10W
R131	1-216-065-00	s	METAL, CHIP 4.7K 5% 1/10W
R132	1-216-081-00	s	METAL, CHIP 22K 5% 1/10W
R133	1-216-095-00	s	METAL, CHIP 82K 5% 1/10W
R134	1-216-676-11	s	METAL, CHIP 11K 0.5% 1/10W
R135	1-216-057-00	s	METAL, CHIP 2.2K 5% 1/10W
R136	1-216-678-11	s	METAL, CHIP 13K 0.5% 1/10W
R137	1-216-025-91	s	METAL, CHIP 100 5% 1/10W
R138	1-216-073-00	s	METAL, CHIP 10K 5% 1/10W
R139	1-216-073-00	s	METAL, CHIP 10K 5% 1/10W
R140	1-216-073-00	s	METAL, CHIP 10K 5% 1/10W
R141	1-216-684-91	s	METAL, CHIP 24k 0.5% 1/10W
R142	1-216-025-91	s	METAL, CHIP 100 5% 1/10W
R143	1-216-073-00	s	METAL, CHIP 10K 5% 1/10W
R144	1-216-073-00	s	METAL, CHIP 10K 5% 1/10W
R145	1-216-097-91	s	METAL, CHIP 100k 5% 1/10W
R146	1-216-097-91	s	METAL, CHIP 100k 5% 1/10W
R147	1-216-097-91	s	METAL, CHIP 100k 5% 1/10W
R148	1-216-097-91	s	METAL, CHIP 100k 5% 1/10W
R149	1-216-097-91	s	METAL, CHIP 100k 5% 1/10W
R150	1-216-097-91	s	METAL, CHIP 100k 5% 1/10W
R151	1-216-097-91	s	METAL, CHIP 100k 5% 1/10W
R152	1-216-097-91	s	METAL, CHIP 100k 5% 1/10W

(AP-31P BOARD(UVW-1800P))

Ref. No. or Q'ty	Part No.	SP	Description
R153	1-216-097-91	s	METAL, CHIP 100k 5% 1/10W
R154	1-216-097-91	s	METAL, CHIP 100k 5% 1/10W
R155	1-216-081-00	s	METAL, CHIP 22K 5% 1/10W
R156	1-216-081-00	s	METAL, CHIP 22K 5% 1/10W
R157	1-216-081-00	s	METAL, CHIP 22K 5% 1/10W
R158	1-216-081-00	s	METAL, CHIP 22K 5% 1/10W
R159	1-216-073-00	s	METAL, CHIP 10K 5% 1/10W
R160	1-216-049-91	s	METAL, CHIP 1k 5% 1/10W
R161	1-216-063-91	s	METAL, CHIP 3.9k 5% 1/10W
R162	1-216-089-91	s	METAL, CHIP 47k 5% 1/10W
R163	1-216-053-00	s	METAL, CHIP 1.5K 5% 1/10W
R164	1-216-059-00	s	METAL, CHIP 2.7K 5% 1/10W
R165	1-216-071-00	s	METAL, CHIP 8.2K 5% 1/10W
R167	1-216-295-91	s	RES, CHIP 0
R168	1-216-073-00	s	METAL, CHIP 10K 5% 1/10W
R169	1-216-049-91	s	METAL, CHIP 1k 5% 1/10W
R170	1-216-063-91	s	METAL, CHIP 3.9k 5% 1/10W
R171	1-216-089-91	s	METAL, CHIP 47k 5% 1/10W
R172	1-216-053-00	s	METAL, CHIP 1.5K 5% 1/10W
R173	1-216-059-00	s	METAL, CHIP 2.7K 5% 1/10W
R174	1-216-071-00	s	METAL, CHIP 8.2K 5% 1/10W
R175	1-216-121-91	s	METAL, CHIP 1M 5% 1/10W
R176	1-216-121-91	s	METAL, CHIP 1M 5% 1/10W
R177	1-216-025-91	s	METAL, CHIP 100 5% 1/10W
R178	1-216-073-00	s	METAL, CHIP 10K 5% 1/10W
R179	1-216-664-11	s	METAL, CHIP 3.6K 0.5% 1/10W
R180	1-216-073-00	s	METAL, CHIP 10K 5% 1/10W
R181	1-216-073-00	s	METAL, CHIP 10K 5% 1/10W
R182	1-216-646-11	s	METAL, CHIP 620 0.5% 1/10W
R183	1-216-073-00	s	METAL, CHIP 10K 5% 1/10W
R184	1-216-073-00	s	METAL, CHIP 10K 5% 1/10W
R186	1-216-095-00	s	METAL, CHIP 82K 5% 1/10W
R187	1-208-799-11	s	METAL, CHIP 5.1k 0.5% 1/10W
R188	1-216-085-00	s	METAL, CHIP 33K 5% 1/10W
R189	1-216-295-91	s	RES, CHIP 0
R190	1-208-814-11	s	METAL, CHIP 22k 0.5% 1/10W
R201	1-216-603-11	s	METAL, CHIP 10 0.5% 1/10W
R202	1-216-049-91	s	METAL, CHIP 1k 5% 1/10W
R203	1-216-051-00	s	METAL, CHIP 1.2K 5% 1/10W
R204	1-216-051-00	s	METAL, CHIP 1.2K 5% 1/10W
R205	1-216-097-91	s	METAL, CHIP 100k 5% 1/10W
R207	1-216-073-00	s	METAL, CHIP 10K 5% 1/10W
R208	1-216-105-91	s	METAL, CHIP 220k 5% 1/10W
R209	1-216-626-11	s	METAL, CHIP 91 0.5% 1/10W
R210	1-208-774-11	s	METAL, CHIP 470 0.5% 1/10W
R211	1-216-073-00	s	METAL, CHIP 10K 5% 1/10W
R212	1-216-073-00	s	METAL, CHIP 10K 5% 1/10W
R213	1-216-659-11	s	METAL, CHIP 2.2K 0.5% 1/10W
R214	1-216-049-91	s	METAL, CHIP 1k 5% 1/10W
R215	1-208-806-11	s	METAL, CHIP 10k 0.5% 1/10W
R216	1-216-009-00	s	METAL, CHIP 22 5% 1/10W
R217	1-216-073-00	s	METAL, CHIP 10K 5% 1/10W
R219	1-216-073-00	s	METAL, CHIP 10K 5% 1/10W
R220	1-216-073-00	s	METAL, CHIP 10K 5% 1/10W
R221	1-216-073-00	s	METAL, CHIP 10K 5% 1/10W
R222	1-216-073-00	s	METAL, CHIP 10K 5% 1/10W
R223	1-216-073-00	s	METAL, CHIP 10K 5% 1/10W
R224	1-216-049-91	s	METAL, CHIP 1k 5% 1/10W
R225	1-216-073-00	s	METAL, CHIP 10K 5% 1/10W

(AP-31P BOARD(UVW-1800P))

Ref. No. or Q'ty	Part No.	SP	Description
R226	1-216-073-00	s	METAL, CHIP 10K 5% 1/10W
R227	1-216-085-00	s	METAL, CHIP 33K 5% 1/10W
R228	1-216-085-00	s	METAL, CHIP 33K 5% 1/10W
R230	1-208-806-11	s	METAL, CHIP 10k 0.5% 1/10W
R231	1-216-041-00	s	METAL, CHIP 470 5% 1/10W
R232	1-216-642-11	s	METAL, CHIP 430 0.5% 1/10W
R233	1-208-806-11	s	METAL, CHIP 10k 0.5% 1/10W
R234	1-208-822-11	s	METAL, CHIP 47k 0.5% 1/10W
R235	1-208-806-11	s	METAL, CHIP 10k 0.5% 1/10W
R236	1-208-814-11	s	METAL, CHIP 22k 0.5% 1/10W
R237	1-215-484-00	s	METAL 430K 1% 1/6W
R238	1-215-471-00	s	METAL 120K 1% 1/6W
R239	1-215-484-00	s	METAL 430K 1% 1/6W
R240	1-216-689-11	s	METAL, CHIP 39K 0.5% 1/10W
R241	1-208-824-11	s	METAL, CHIP 56k 0.5% 1/10W
R242	1-216-695-11	s	METAL, CHIP 68K 0.5% 1/10W
R244	1-215-461-00	s	METAL 47K 1% 1/6W
R245	1-215-466-00	s	METAL 75K 1% 1/6W
R246	1-208-812-11	s	METAL, CHIP 18k 0.5% 1/10W
R247	1-208-814-11	s	METAL, CHIP 22k 0.5% 1/10W
R248	1-216-089-91	s	METAL, CHIP 47k 5% 1/10W
R249	1-216-071-00	s	METAL, CHIP 8.2K 5% 1/10W
R250	1-216-081-00	s	METAL, CHIP 22K 5% 1/10W
R251	1-216-121-91	s	METAL, CHIP 1M 5% 1/10W
R252	1-216-121-91	s	METAL, CHIP 1M 5% 1/10W
R253	1-216-121-91	s	METAL, CHIP 1M 5% 1/10W
R254	1-216-121-91	s	METAL, CHIP 1M 5% 1/10W
R255	1-216-009-00	s	METAL, CHIP 22 5% 1/10W
R256	1-208-822-11	s	METAL, CHIP 47k 0.5% 1/10W
R257	1-208-774-11	s	METAL, CHIP 470 0.5% 1/10W
R258	1-216-622-11	s	METAL, CHIP 62 0.5% 1/10W
R259	1-216-678-11	s	METAL, CHIP 13K 0.5% 1/10W
R260	1-216-673-11	s	METAL, CHIP 8.2K 0.5% 1/10W
R261	1-216-652-11	s	METAL, CHIP 1.1K 0.5% 1/10W
R262	1-216-622-11	s	METAL, CHIP 62 0.5% 1/10W
R263	1-208-784-11	s	METAL, CHIP 1.2k 0.5% 1/10W
R264	1-216-676-11	s	METAL, CHIP 11K 0.5% 1/10W
R265	1-216-677-11	s	METAL, CHIP 12K 0.5% 1/10W
R266	1-208-785-11	s	METAL, CHIP 1.3k 0.5% 1/10W
R267	1-215-493-00	s	METAL 1M 1% 1/6W
R268	1-216-666-11	s	METAL, CHIP 4.3K 0.5% 1/10W
R269	1-208-822-11	s	METAL, CHIP 47k 0.5% 1/10W
R270	1-208-806-11	s	METAL, CHIP 10k 0.5% 1/10W
R271	1-216-073-00	s	METAL, CHIP 10K 5% 1/10W
R272	1-216-049-91	s	METAL, CHIP 1k 5% 1/10W
R273	1-216-081-00	s	METAL, CHIP 22K 5% 1/10W
R274	1-216-081-00	s	METAL, CHIP 22K 5% 1/10W
R275	1-208-810-11	s	METAL, CHIP 15k 0.5% 1/10W
R276	1-216-659-11	s	METAL, CHIP 2.2K 0.5% 1/10W
R277	1-208-789-11	s	METAL, CHIP 2k 0.5% 1/10W
R278	1-216-677-11	s	METAL, CHIP 12K 0.5% 1/10W
R279	1-216-645-11	s	METAL, CHIP 560 0.5% 1/10W
R280	1-216-121-91	s	METAL, CHIP 1M 5% 1/10W
R281	1-208-814-11	s	METAL, CHIP 22k 0.5% 1/10W
R282	1-208-803-11	s	METAL, CHIP 7.5k 0.5% 1/10W
R283	1-216-045-00	s	METAL, CHIP 680 5% 1/10W
R284	1-216-674-11	s	METAL, CHIP 9.1K 0.5% 1/10W
R285	1-208-812-11	s	METAL, CHIP 18k 0.5% 1/10W
R286	1-216-657-11	s	METAL, CHIP 1.8K 0.5% 1/10W

(AP-31P BOARD(UVW-1800P))

Ref. No. or Q'ty	Part No.	SP	Description
R287	1-216-121-91	s	METAL, CHIP 1M 5% 1/10W
R288	1-216-121-91	s	METAL, CHIP 1M 5% 1/10W
R289	1-208-822-11	s	METAL, CHIP 47k 0.5% 1/10W
R290	1-208-814-11	s	METAL, CHIP 22k 0.5% 1/10W
R291	1-216-659-11	s	METAL, CHIP 2.2K 0.5% 1/10W
R292	1-216-659-11	s	METAL, CHIP 2.2K 0.5% 1/10W
R293	1-216-073-00	s	METAL, CHIP 10K 5% 1/10W
R294	1-216-097-91	s	METAL, CHIP 100k 5% 1/10W
R295	1-216-073-00	s	METAL, CHIP 10K 5% 1/10W
R296	1-216-121-91	s	METAL, CHIP 1M 5% 1/10W
R297	1-216-073-00	s	METAL, CHIP 10K 5% 1/10W
R298	1-216-073-00	s	METAL, CHIP 10K 5% 1/10W
R299	1-216-121-91	s	METAL, CHIP 1M 5% 1/10W
R300	1-216-069-00	s	METAL, CHIP 6.8K 5% 1/10W
R301	1-216-073-00	s	METAL, CHIP 10K 5% 1/10W
R302	1-208-799-11	s	METAL, CHIP 5.1k 0.5% 1/10W
R303	1-216-663-11	s	METAL, CHIP 3.3K 0.5% 1/10W
R304	1-216-650-11	s	METAL, CHIP 910 0.5% 1/10W
R305	1-216-663-11	s	METAL, CHIP 3.3K 0.5% 1/10W
R306	1-216-073-00	s	METAL, CHIP 10K 5% 1/10W
R307	1-216-667-11	s	METAL, CHIP 4.7K 0.5% 1/10W
R308	1-216-033-00	s	METAL, CHIP 220 5% 1/10W
R309	1-216-067-00	s	METAL, CHIP 5.6K 5% 1/10W
R310	1-216-067-00	s	METAL, CHIP 5.6K 5% 1/10W
R311	1-208-810-11	s	METAL, CHIP 15k 0.5% 1/10W
R312	1-247-807-31	s	CARBON 100 5% 1/4W
R313 ⚠	1-216-399-00	s	WIREWOUND 6.8 10% 3W
R314 ⚠	1-216-399-00	s	WIREWOUND 6.8 10% 3W
R315	1-247-807-31	s	CARBON 100 5% 1/4W
R316	1-216-121-91	s	METAL, CHIP 1M 5% 1/10W
R317	1-249-389-11	s	CARBON 4.7 5% 1/4W
R318	1-216-121-91	s	METAL, CHIP 1M 5% 1/10W
R319	1-216-057-00	s	METAL, CHIP 2.2K 5% 1/10W
R320	1-216-075-00	s	METAL, CHIP 12K 5% 1/10W
R321	1-216-081-00	s	METAL, CHIP 22K 5% 1/10W
R322	1-216-025-91	s	METAL, CHIP 100 5% 1/10W
R323	1-216-121-91	s	METAL, CHIP 1M 5% 1/10W
R324	1-216-033-00	s	METAL, CHIP 220 5% 1/10W
R325	1-216-065-00	s	METAL, CHIP 4.7K 5% 1/10W
R326	1-216-081-00	s	METAL, CHIP 22K 5% 1/10W
R327	1-216-095-00	s	METAL, CHIP 82K 5% 1/10W
R328	1-216-676-11	s	METAL, CHIP 11K 0.5% 1/10W
R329	1-216-057-00	s	METAL, CHIP 2.2K 5% 1/10W
R330	1-216-678-11	s	METAL, CHIP 13K 0.5% 1/10W
R331	1-216-025-91	s	METAL, CHIP 100 5% 1/10W
R332	1-216-073-00	s	METAL, CHIP 10K 5% 1/10W
R333	1-216-073-00	s	METAL, CHIP 10K 5% 1/10W
R334	1-216-073-00	s	METAL, CHIP 10K 5% 1/10W
R335	1-216-684-91	s	METAL, CHIP 24k 0.5% 1/10W
R336	1-216-025-91	s	METAL, CHIP 100 5% 1/10W
R337	1-216-073-00	s	METAL, CHIP 10K 5% 1/10W
R338	1-216-073-00	s	METAL, CHIP 10K 5% 1/10W
R339	1-216-025-91	s	METAL, CHIP 100 5% 1/10W
R341	1-216-095-00	s	METAL, CHIP 82K 5% 1/10W
R342	1-216-073-00	s	METAL, CHIP 10K 5% 1/10W
R344	1-216-295-91	s	RES, CHIP 0
R345	1-216-121-91	s	METAL, CHIP 1M 5% 1/10W
R346	1-216-121-91	s	METAL, CHIP 1M 5% 1/10W
R347	1-216-085-00	s	METAL, CHIP 33K 5% 1/10W

(AP-31P BOARD(UVW-1800P))

Ref. No. or Q'ty	Part No.	SP	Description
R350	1-216-295-91	s	RES, CHIP 0
R351	1-208-814-11	s	METAL, CHIP 22k 0.5% 1/10W
R387	1-208-799-11	s	METAL, CHIP 5.1k 0.5% 1/10W
R400	1-216-603-11	s	METAL, CHIP 10 0.5% 1/10W
R402	1-216-295-91	s	RES, CHIP 0
R403	1-216-073-00	s	METAL, CHIP 10K 5% 1/10W
R404	1-216-073-00	s	METAL, CHIP 10K 5% 1/10W
R405	1-216-049-91	s	METAL, CHIP 1k 5% 1/10W
R406	1-216-033-00	s	METAL, CHIP 220 5% 1/10W
R407	1-216-121-91	s	METAL, CHIP 1M 5% 1/10W
R408	1-216-053-00	s	METAL, CHIP 1.5K 5% 1/10W
R409	1-216-089-91	s	METAL, CHIP 47k 5% 1/10W
R410	1-216-053-00	s	METAL, CHIP 1.5K 5% 1/10W
R411	1-216-089-91	s	METAL, CHIP 47k 5% 1/10W
R412	1-216-049-91	s	METAL, CHIP 1k 5% 1/10W
R413	1-216-067-00	s	METAL, CHIP 5.6K 5% 1/10W
R414	1-216-089-91	s	METAL, CHIP 47k 5% 1/10W
R415	1-216-089-91	s	METAL, CHIP 47k 5% 1/10W
R416	1-216-057-00	s	METAL, CHIP 2.2K 5% 1/10W
R417	1-216-121-91	s	METAL, CHIP 1M 5% 1/10W
R418	1-216-049-91	s	METAL, CHIP 1k 5% 1/10W
R419	1-216-073-00	s	METAL, CHIP 10K 5% 1/10W
R420	1-216-113-00	s	METAL, CHIP 470K 5% 1/10W
R421	1-216-025-91	s	METAL, CHIP 100 5% 1/10W
R422	1-216-067-00	s	METAL, CHIP 5.6K 5% 1/10W
R423	1-216-089-91	s	METAL, CHIP 47k 5% 1/10W
R424	1-216-073-00	s	METAL, CHIP 10K 5% 1/10W
R425	1-216-065-00	s	METAL, CHIP 4.7K 5% 1/10W
R426	1-216-065-00	s	METAL, CHIP 4.7K 5% 1/10W
R427	1-216-025-91	s	METAL, CHIP 100 5% 1/10W
R428	1-216-073-00	s	METAL, CHIP 10K 5% 1/10W
R500	1-216-633-11	s	METAL, CHIP 180 0.5% 1/10W
R501	1-216-633-11	s	METAL, CHIP 180 0.5% 1/10W
R502	1-216-049-91	s	METAL, CHIP 1k 5% 1/10W
R600	1-216-025-91	s	METAL, CHIP 100 5% 1/10W
R601	1-216-025-91	s	METAL, CHIP 100 5% 1/10W
R602	1-247-855-11	s	CARBON 10K 5% 1/4W
RV1	1-241-789-11	s	RES, ADJ METAL 220k
RV2	1-241-783-11	s	RES, ADJ METAL 2.2k
RV3	1-241-783-11	s	RES, ADJ METAL 2.2k
RV4	1-241-785-11	s	RES, ADJ METAL 10k
RV5	1-241-786-11	s	RES, ADJ METAL 22k
RV201	1-241-789-11	s	RES, ADJ METAL 220k
RV202	1-241-783-11	s	RES, ADJ METAL 2.2k
RV203	1-241-783-11	s	RES, ADJ METAL 2.2k
RV204	1-241-785-11	s	RES, ADJ METAL 10k
RV205	1-241-786-11	s	RES, ADJ METAL 22k
S1	1-570-602-11	s	SWITCH, DIP 2-CKT
S2	1-570-602-11	s	SWITCH, DIP 2-CKT
S201	1-570-602-11	s	SWITCH, DIP 2-CKT
S202	1-570-602-11	s	SWITCH, DIP 2-CKT
TH1	1-807-972-11	s	THERMISTOR SV-1715 1.25k
TH2	1-807-972-11	s	THERMISTOR SV-1715 1.25k

AP-31A BOARD(UVW-1600)

Ref. No. or Q'ty	Part No.	SP	Description
AP-31A board is used for UVW-1600(J,UC).			
1pc	A-8275-279-A	o	MOUNTED CIRCUIT BOARD, AP-31A
1pc	3-179-084-01	s	LEVER (R), PC BOARD
1pc	3-179-085-01	s	LEVER (L), PC BOARD
1pc	3-182-385-02	o	PLATE, SHIELD (S), CARD
1pc	3-655-862-00	o	SPACER, INSULATING
1pc	7-621-759-45	s	SCREW, +PSW2.6x6
1pc	3-182-298-01	o	CASE, SHIELD (LID), AP (2)
1pc	3-182-351-01	o	CASE, SHIELD, AP (2B)
C2	1-163-131-00	s	CERAMIC, CHIP 390PF 5% 50V
C3	1-163-243-11	s	CERAMIC, CHIP 47PF 5% 50V
C4	1-163-113-00	s	CERAMIC, CHIP 68PF 5% 50V
C7	1-130-485-00	s	MYLAR 0.015uF 5% 50V
C8	1-126-933-11	s	ELECT 100uF 20% 16V
C9	1-163-125-00	s	CERAMIC, CHIP 220PF 5% 50V
C10	1-126-964-11	s	ELECT 10uF 20% 50V
C15	1-126-964-11	s	ELECT 10uF 20% 50V
C16	1-128-551-11	s	ELECT 22uF 20% 50V
C18	1-128-551-11	s	ELECT 22uF 20% 50V
C20	1-130-498-00	s	MYLAR 0.18uF 5% 50V
C21-C26	1-130-487-00	s	MYLAR 0.022uF 5% 50V
C27	1-163-243-11	s	CERAMIC, CHIP 47PF 5% 50V
C29	1-130-483-00	s	MYLAR 0.01uF 5% 50V
C30	1-163-275-11	s	CERAMIC, CHIP 0.001uF 5% 50V
C31	1-163-275-11	s	CERAMIC, CHIP 0.001uF 5% 50V
C32	1-163-275-11	s	CERAMIC, CHIP 0.001uF 5% 50V
C33	1-163-275-11	s	CERAMIC, CHIP 0.001uF 5% 50V
C34	1-130-483-00	s	MYLAR 0.01uF 5% 50V
C35	1-163-139-00	s	CERAMIC, CHIP 820PF 5% 50V
C36	1-163-243-11	s	CERAMIC, CHIP 47PF 5% 50V
C37	1-164-232-11	s	CERAMIC, CHIP 0.01uF 10% 100V
C38	1-164-232-11	s	CERAMIC, CHIP 0.01uF 10% 100V
C39	1-124-925-11	s	ELECT 2.2uF 20% 100V
C40	1-164-004-11	s	CERAMIC, CHIP 0.1uF 10% 25V
C41	1-107-498-11	s	FILM, CHIP 0.0022uF 2% 50V
C42	1-107-498-11	s	FILM, CHIP 0.0022uF 2% 50V
C43	1-107-499-11	s	FILM, CHIP 0.0039uF 2% 16V
C44	1-131-345-00	s	TANTALUM 0.47uF 10% 35V
C45	1-130-497-00	s	MYLAR 0.15uF 5% 50V
C46	1-124-925-11	s	ELECT 2.2uF 20% 100V
C47	1-104-553-11	s	FILM, CHIP 0.015uF 5% 16V
C48	1-130-499-00	s	MYLAR 0.22uF 5% 50V
C49	1-164-344-11	s	CERAMIC, CHIP 0.068uF 10% 25V
C50	1-104-560-11	s	FILM, CHIP 0.056uF 5% 16V
C51	1-124-925-11	s	ELECT 2.2uF 20% 100V
C52	1-107-553-11	s	FILM, CHIP 0.0056uF 2% 16V
C53	1-104-551-11	s	FILM, CHIP 0.01uF 5% 16V
C56	1-163-251-11	s	CERAMIC, CHIP 100PF 5% 50V
C57	1-126-947-11	s	ELECT 47uF 20% 35V
C58	1-163-263-11	s	CERAMIC, CHIP 330PF 5% 50V
C59	1-163-235-11	s	CERAMIC, CHIP 22PF 5% 50V
C60	1-126-964-11	s	ELECT 10uF 20% 50V
C61	1-126-964-11	s	ELECT 10uF 20% 50V
C62	1-126-926-11	s	ELECT 1000uF 20% 10V
C63	1-126-926-11	s	ELECT 1000uF 20% 10V
C64	1-126-926-11	s	ELECT 1000uF 20% 10V
C65	1-164-004-11	s	CERAMIC, CHIP 0.1uF 10% 25V
C66	1-126-926-11	s	ELECT 1000uF 20% 10V

(AP-31A BOARD(UVW-1600))

Ref. No. or Q'ty	Part No.	SP	Description
C67	1-126-947-11	s	ELECT 47uF 20% 35V
C68	1-124-903-11	s	ELECT 1uF 20% 50V
C69	1-163-251-11	s	CERAMIC, CHIP 100PF 5% 50V
C70	1-126-947-11	s	ELECT 47uF 20% 35V
C71	1-163-235-11	s	CERAMIC, CHIP 22PF 5% 50V
C72	1-163-809-11	s	CERAMIC, CHIP 0.047uF 10% 25V
C77	1-163-251-11	s	CERAMIC, CHIP 100PF 5% 50V
C78	1-126-964-11	s	ELECT 10uF 20% 50V
C79	1-126-964-11	s	ELECT 10uF 20% 50V
C80	1-126-964-11	s	ELECT 10uF 20% 50V
C81	1-130-483-00	s	MYLAR 0.01uF 5% 50V
C82	1-126-926-11	s	ELECT 1000uF 20% 10V
C83	1-126-926-11	s	ELECT 1000uF 20% 10V
C84	1-124-925-11	s	ELECT 2.2uF 20% 100V
C87	1-126-964-11	s	ELECT 10uF 20% 50V
C202	1-163-131-00	s	CERAMIC, CHIP 390PF 5% 50V
C203	1-163-243-11	s	CERAMIC, CHIP 47PF 5% 50V
C204	1-163-113-00	s	CERAMIC, CHIP 68PF 5% 50V
C207	1-130-485-00	s	MYLAR 0.015uF 5% 50V
C208	1-126-933-11	s	ELECT 100uF 20% 16V
C209	1-163-125-00	s	CERAMIC, CHIP 220PF 5% 50V
C210	1-126-964-11	s	ELECT 10uF 20% 50V
C215	1-126-964-11	s	ELECT 10uF 20% 50V
C216	1-128-551-11	s	ELECT 22uF 20% 50V
C218	1-128-551-11	s	ELECT 22uF 20% 50V
C220	1-130-498-00	s	MYLAR 0.18uF 5% 50V
C221-226	1-130-487-00	s	MYLAR 0.022uF 5% 50V
C227	1-163-243-11	s	CERAMIC, CHIP 47PF 5% 50V
C229	1-130-483-00	s	MYLAR 0.01uF 5% 50V
C230	1-163-275-11	s	CERAMIC, CHIP 0.001uF 5% 50V
C231	1-163-275-11	s	CERAMIC, CHIP 0.001uF 5% 50V
C232	1-163-275-11	s	CERAMIC, CHIP 0.001uF 5% 50V
C233	1-163-275-11	s	CERAMIC, CHIP 0.001uF 5% 50V
C234	1-130-483-00	s	MYLAR 0.01uF 5% 50V
C235	1-163-139-00	s	CERAMIC, CHIP 820PF 5% 50V
C236	1-163-243-11	s	CERAMIC, CHIP 47PF 5% 50V
C237	1-124-925-11	s	ELECT 2.2uF 20% 100V
C238	1-107-498-11	s	FILM, CHIP 0.0022uF 2% 50V
C239	1-107-498-11	s	FILM, CHIP 0.0022uF 2% 50V
C240	1-107-499-11	s	FILM, CHIP 0.0039uF 2% 16V
C241	1-131-345-00	s	TANTALUM 0.47uF 10% 35V
C242	1-130-497-00	s	MYLAR 0.15uF 5% 50V
C243	1-124-925-11	s	ELECT 2.2uF 20% 100V
C244	1-104-553-11	s	FILM, CHIP 0.015uF 5% 16V
C245	1-130-499-00	s	MYLAR 0.22uF 5% 50V
C246	1-164-344-11	s	CERAMIC, CHIP 0.068uF 10% 25V
C247	1-104-560-11	s	FILM, CHIP 0.056uF 5% 16V
C248	1-124-925-11	s	ELECT 2.2uF 20% 100V
C249	1-107-553-11	s	FILM, CHIP 0.0056uF 2% 16V
C250	1-104-551-11	s	FILM, CHIP 0.01uF 5% 16V
C253	1-163-251-11	s	CERAMIC, CHIP 100PF 5% 50V
C254	1-126-947-11	s	ELECT 47uF 20% 35V
C255	1-163-263-11	s	CERAMIC, CHIP 330PF 5% 50V
C256	1-163-235-11	s	CERAMIC, CHIP 22PF 5% 50V
C257	1-126-964-11	s	ELECT 10uF 20% 50V
C258	1-126-964-11	s	ELECT 10uF 20% 50V
C259	1-126-926-11	s	ELECT 1000uF 20% 10V
C260	1-126-926-11	s	ELECT 1000uF 20% 10V
C261	1-126-926-11	s	ELECT 1000uF 20% 10V

(AP-31A BOARD(UVW-1600))

Ref. No. or Q'ty	Part No.	SP	Description
C262	1-164-004-11	s	CERAMIC, CHIP 0.1uF 10% 25V
C263	1-126-926-11	s	ELECT 1000uF 20% 10V
C264	1-126-947-11	s	ELECT 47uF 20% 35V
C265	1-124-903-11	s	ELECT 1uF 20% 50V
C266	1-163-251-11	s	CERAMIC, CHIP 100PF 5% 50V
C267	1-126-947-11	s	ELECT 47uF 20% 35V
C268	1-163-235-11	s	CERAMIC, CHIP 22PF 5% 50V
C269	1-163-809-11	s	CERAMIC, CHIP 0.047uF 10% 25V
C270	1-124-925-11	s	ELECT 2.2uF 20% 100V
C278	1-126-964-11	s	ELECT 10uF 20% 50V
C279	1-126-964-11	s	ELECT 10uF 20% 50V
C280	1-126-964-11	s	ELECT 10uF 20% 50V
C281	1-130-483-00	s	MYLAR 0.01uF 5% 50V
C282	1-126-926-11	s	ELECT 1000uF 20% 10V
C283	1-126-926-11	s	ELECT 1000uF 20% 10V
C402	1-126-933-11	s	ELECT 100uF 20% 16V
C403	1-163-989-11	s	CERAMIC, CHIP 0.033uF 10% 25V
C408	1-126-964-11	s	ELECT 10uF 20% 50V
C409	1-163-239-11	s	CERAMIC, CHIP 33PF 5% 50V
C410	1-164-004-11	s	CERAMIC, CHIP 0.1uF 10% 25V
C411	1-163-989-11	s	CERAMIC, CHIP 0.033uF 10% 25V
C412	1-126-964-11	s	ELECT 10uF 20% 50V
C413	1-126-964-11	s	ELECT 10uF 20% 50V
C414	1-126-964-11	s	ELECT 10uF 20% 50V
C415	1-163-033-91	s	CERAMIC, CHIP 0.022uF 50V
C416	1-163-033-91	s	CERAMIC, CHIP 0.022uF 50V
C417	1-126-933-11	s	ELECT 100uF 20% 16V
C418	1-126-933-11	s	ELECT 100uF 20% 16V
C419	1-126-964-11	s	ELECT 10uF 20% 50V
C420	1-163-033-91	s	CERAMIC, CHIP 0.022uF 50V
C421	1-163-033-91	s	CERAMIC, CHIP 0.022uF 50V
C422	1-126-933-11	s	ELECT 100uF 20% 16V
C423	1-126-933-11	s	ELECT 100uF 20% 16V
C424	1-126-933-11	s	ELECT 100uF 20% 16V
C425	1-126-933-11	s	ELECT 100uF 20% 16V
C426	1-163-033-91	s	CERAMIC, CHIP 0.022uF 50V
C427	1-163-033-91	s	CERAMIC, CHIP 0.022uF 50V
C428	1-163-989-11	s	CERAMIC, CHIP 0.033uF 10% 25V
C500	1-163-125-00	s	CERAMIC, CHIP 220PF 5% 50V
C501	1-163-133-00	s	CERAMIC, CHIP 470PF 5% 50V
CN1	1-506-468-11	s	CONNECTOR 3P, MALE
CN2	1-564-002-41	s	CONNECTOR 3P, MALE
CN3	1-564-002-11	s	CONNECTOR 3P, MALE
CN111	1-573-600-21	s	CONNECTOR, PHEC 100P, MALE
D1	8-719-941-23	s	DIODE DA204U
D7	8-719-941-23	s	DIODE DA204U
D8	8-719-123-85	s	DIODE 1SS304
D10	8-719-123-85	s	DIODE 1SS304
D11	8-719-123-85	s	DIODE 1SS304
D201	8-719-941-23	s	DIODE DA204U
D206	8-719-941-23	s	DIODE DA204U
D207	8-719-123-85	s	DIODE 1SS304
D209	8-719-123-85	s	DIODE 1SS304
D401	8-719-941-23	s	DIODE DA204U
D403	8-719-941-23	s	DIODE DA204U
D500	8-719-106-88	s	DIODE RD15M-B1
IC1	8-759-701-25	s	IC NJM2068D-D
IC2	8-759-701-25	s	IC NJM2068D-D

(AP-31A BOARD(UVW-1600))

Ref. No. or Q'ty	Part No.	SP	Description
IC3	8-759-701-25	s	IC NJM2068D-D
IC4	8-759-701-25	s	IC NJM2068D-D
IC5	8-759-705-58	s	IC NJM4558D-D
IC6	8-759-705-58	s	IC NJM4558D-D
IC7	8-759-705-58	s	IC NJM4558D-D
IC8	8-752-018-80	s	IC CX20188
IC9	8-759-705-58	s	IC NJM4558D-D
IC10	8-759-705-58	s	IC NJM4558D-D
IC11	8-759-145-57	s	IC UPC4557C
IC12	8-759-917-18	s	IC SN74HCU04AN
IC13	8-759-917-18	s	IC SN74HCU04AN
IC14	8-759-145-57	s	IC UPC4557C
IC15	8-759-705-58	s	IC NJM4558D-D
IC201	8-759-701-25	s	IC NJM2068D-D
IC202	8-759-701-25	s	IC NJM2068D-D
IC203	8-759-701-25	s	IC NJM2068D-D
IC204	8-759-701-25	s	IC NJM2068D-D
IC205	8-759-705-58	s	IC NJM4558D-D
IC206	8-759-705-58	s	IC NJM4558D-D
IC207	8-759-705-58	s	IC NJM4558D-D
IC208	8-759-705-58	s	IC NJM4558D-D
IC209	8-759-705-58	s	IC NJM4558D-D
IC210	8-759-145-57	s	IC UPC4557C
IC211	8-759-705-58	s	IC NJM4558D-D
IC401	8-759-701-25	s	IC NJM2068D-D
IC402	8-759-729-03	s	IC NJM2903D
IC405	8-759-172-41	s	IC L78M09T-TL
IC406	8-759-173-37	s	IC L79M09T-TL
IC407	8-759-635-83	s	IC M51957BFP
IC408	8-759-172-41	s	IC L78M09T-TL
IC409	8-759-173-37	s	IC L79M09T-TL
IC410	8-759-701-25	s	IC NJM2068D-D
L2	1-408-617-31	s	INDUCTOR 150uH
L202	1-408-617-31	s	INDUCTOR 150uH
L401	1-410-470-11	s	INDUCTOR 10uH
L402	1-410-470-11	s	INDUCTOR 10uH
PS1	⚠ 1-532-727-11	s	LINK, IC 0.25A
PS2	⚠ 1-532-727-11	s	LINK, IC 0.25A
Q5	8-729-209-06	s	TRANSISTOR 2SC4213-A
Q6	8-729-209-06	s	TRANSISTOR 2SC4213-A
Q7	8-729-209-06	s	TRANSISTOR 2SC4213-A
Q9	8-729-109-44	s	TRANSISTOR 2SK94
Q11	8-729-905-18	s	TRANSISTOR DTC144EU
Q12	8-729-905-12	s	TRANSISTOR DTA144EU
Q13	8-729-422-44	s	TRANSISTOR 2SK663
Q18	8-729-423-93	s	TRANSISTOR 2SD2136-R(TA)
Q19	8-729-022-00	s	TRANSISTOR 2SB1416-R(TA)
Q20	8-729-021-98	s	TRANSISTOR 2SJ226-AZ
Q21	8-729-021-98	s	TRANSISTOR 2SJ226-AZ
Q22	8-729-117-32	s	TRANSISTOR 2SC4177
Q23	8-729-117-32	s	TRANSISTOR 2SC4177
Q25	8-729-140-93	s	TRANSISTOR 2SB733-34
Q30	8-729-140-93	s	TRANSISTOR 2SB733-34
Q205	8-729-209-06	s	TRANSISTOR 2SC4213-A
Q206	8-729-209-06	s	TRANSISTOR 2SC4213-A
Q207	8-729-209-06	s	TRANSISTOR 2SC4213-A
Q209	8-729-109-44	s	TRANSISTOR 2SK94
Q211	8-729-422-44	s	TRANSISTOR 2SK663

(AP-31A BOARD(UVW-1600))

Ref. No. or Q'ty	Part No.	SP	Description
Q216	8-729-423-93	s	TRANSISTOR 2SD2136-R(TA)
Q217	8-729-022-00	s	TRANSISTOR 2SB1416-R(TA)
Q218	8-729-021-98	s	TRANSISTOR 2SJ226-AZ
Q219	8-729-021-98	s	TRANSISTOR 2SJ226-AZ
Q220	8-729-117-32	s	TRANSISTOR 2SC4177
Q221	8-729-117-32	s	TRANSISTOR 2SC4177
Q223	8-729-140-93	s	TRANSISTOR 2SB733-34
Q403	8-729-209-06	s	TRANSISTOR 2SC4213-A
R1	1-216-603-11	s	METAL, CHIP 10 0.5% 1/10W
R5	1-216-097-91	s	METAL, CHIP 100k 5% 1/10W
R8	1-216-105-91	s	METAL, CHIP 220k 5% 1/10W
R9	1-216-626-11	s	METAL, CHIP 91 0.5% 1/10W
R10	1-216-651-11	s	METAL, CHIP 1K 0.5% 1/10W
R13	1-216-659-11	s	METAL, CHIP 2.2K 0.5% 1/10W
R16	1-216-009-00	s	METAL, CHIP 22 5% 1/10W
R17	1-216-073-00	s	METAL, CHIP 10K 5% 1/10W
R19	1-216-073-00	s	METAL, CHIP 10K 5% 1/10W
R20	1-216-073-00	s	METAL, CHIP 10K 5% 1/10W
R23	1-216-073-00	s	METAL, CHIP 10K 5% 1/10W
R24	1-216-049-91	s	METAL, CHIP 1k 5% 1/10W
R25	1-216-073-00	s	METAL, CHIP 10K 5% 1/10W
R26	1-216-073-00	s	METAL, CHIP 10K 5% 1/10W
R27	1-216-097-91	s	METAL, CHIP 100k 5% 1/10W
R28	1-216-097-91	s	METAL, CHIP 100k 5% 1/10W
R30	1-208-806-11	s	METAL, CHIP 10k 0.5% 1/10W
R31	1-216-041-00	s	METAL, CHIP 470 5% 1/10W
R32	1-216-642-11	s	METAL, CHIP 430 0.5% 1/10W
R33	1-208-806-11	s	METAL, CHIP 10k 0.5% 1/10W
R34	1-208-822-11	s	METAL, CHIP 47k 0.5% 1/10W
R35	1-208-806-11	s	METAL, CHIP 10k 0.5% 1/10W
R36	1-208-814-11	s	METAL, CHIP 22k 0.5% 1/10W
R37	1-215-473-00	s	METAL 150K 1% 1/6W
R38	1-215-471-00	s	METAL 120K 1% 1/6W
R39	1-215-479-00	s	METAL 270K 1% 1/6W
R40	1-208-812-11	s	METAL, CHIP 18k 0.5% 1/10W
R41	1-208-806-11	s	METAL, CHIP 10k 0.5% 1/10W
R42	1-216-695-11	s	METAL, CHIP 68K 0.5% 1/10W
R43	1-215-475-00	s	METAL 180K 1% 1/6W
R44	1-215-493-00	s	METAL 1M 1% 1/6W
R45	1-215-455-00	s	METAL 27K 1% 1/6W
R46	1-208-812-11	s	METAL, CHIP 18k 0.5% 1/10W
R47	1-208-814-11	s	METAL, CHIP 22k 0.5% 1/10W
R51	1-216-121-91	s	METAL, CHIP 1M 5% 1/10W
R56	1-216-009-00	s	METAL, CHIP 22 5% 1/10W
R57	1-208-822-11	s	METAL, CHIP 47k 0.5% 1/10W
R58	1-208-774-11	s	METAL, CHIP 470 0.5% 1/10W
R59	1-216-622-11	s	METAL, CHIP 62 0.5% 1/10W
R60	1-216-678-11	s	METAL, CHIP 13K 0.5% 1/10W
R61	1-216-673-11	s	METAL, CHIP 8.2K 0.5% 1/10W
R62	1-216-652-11	s	METAL, CHIP 1.1K 0.5% 1/10W
R63	1-216-622-11	s	METAL, CHIP 62 0.5% 1/10W
R64	1-208-784-11	s	METAL, CHIP 1.2k 0.5% 1/10W
R65	1-216-676-11	s	METAL, CHIP 11K 0.5% 1/10W
R66	1-216-677-11	s	METAL, CHIP 12K 0.5% 1/10W
R67	1-208-785-11	s	METAL, CHIP 1.3k 0.5% 1/10W
R68	1-215-493-00	s	METAL 1M 1% 1/6W
R69	1-216-666-11	s	METAL, CHIP 4.3K 0.5% 1/10W
R70	1-208-822-11	s	METAL, CHIP 47k 0.5% 1/10W

(AP-31A BOARD(UVW-1600))

Ref. No. or Q'ty	Part No.	SP	Description
R71	1-208-806-11	s	METAL, CHIP 10k 0.5% 1/10W
R72	1-216-073-00	s	METAL, CHIP 10K 5% 1/10W
R73	1-216-081-00	s	METAL, CHIP 22K 5% 1/10W
R74	1-216-049-91	s	METAL, CHIP 1k 5% 1/10W
R75	1-216-081-00	s	METAL, CHIP 22K 5% 1/10W
R76	1-216-081-00	s	METAL, CHIP 22K 5% 1/10W
R77	1-216-699-11	s	METAL, CHIP 100K 0.5% 1/10W
R78	1-208-817-11	s	METAL, CHIP 30k 0.5% 1/10W
R79	1-216-081-00	s	METAL, CHIP 22K 5% 1/10W
R80	1-216-049-91	s	METAL, CHIP 1k 5% 1/10W
R82	1-216-659-11	s	METAL, CHIP 2.2K 0.5% 1/10W
R83	1-208-789-11	s	METAL, CHIP 2k 0.5% 1/10W
R84	1-216-677-11	s	METAL, CHIP 12K 0.5% 1/10W
R85	1-216-645-11	s	METAL, CHIP 560 0.5% 1/10W
R86	1-216-121-91	s	METAL, CHIP 1M 5% 1/10W
R87	1-208-814-11	s	METAL, CHIP 22k 0.5% 1/10W
R88	1-208-803-11	s	METAL, CHIP 7.5k 0.5% 1/10W
R89	1-216-045-00	s	METAL, CHIP 680 5% 1/10W
R90	1-216-674-11	s	METAL, CHIP 9.1K 0.5% 1/10W
R91	1-208-812-11	s	METAL, CHIP 18k 0.5% 1/10W
R92	1-216-657-11	s	METAL, CHIP 1.8K 0.5% 1/10W
R93	1-216-121-91	s	METAL, CHIP 1M 5% 1/10W
R106	1-216-069-00	s	METAL, CHIP 6.8K 5% 1/10W
R107	1-216-073-00	s	METAL, CHIP 10K 5% 1/10W
R108	1-208-799-11	s	METAL, CHIP 5.1k 0.5% 1/10W
R109	1-216-663-11	s	METAL, CHIP 3.3K 0.5% 1/10W
R110	1-216-650-11	s	METAL, CHIP 910 0.5% 1/10W
R111	1-216-663-11	s	METAL, CHIP 3.3K 0.5% 1/10W
R112	1-216-073-00	s	METAL, CHIP 10K 5% 1/10W
R113	1-216-667-11	s	METAL, CHIP 4.7K 0.5% 1/10W
R114	1-216-033-00	s	METAL, CHIP 220 5% 1/10W
R115	1-216-067-00	s	METAL, CHIP 5.6K 5% 1/10W
R116	1-216-067-00	s	METAL, CHIP 5.6K 5% 1/10W
R117	1-208-810-11	s	METAL, CHIP 15k 0.5% 1/10W
R118	1-247-807-31	s	CARBON 100 5% 1/4W
R119 ⚠	1-216-399-00	s	WIREWOUND 6.8 10% 3W
R120 ⚠	1-216-399-00	s	WIREWOUND 6.8 10% 3W
R121	1-247-807-31	s	CARBON 100 5% 1/4W
R122	1-216-121-91	s	METAL, CHIP 1M 5% 1/10W
R123	1-249-389-11	s	CARBON 4.7 5% 1/4W
R124	1-216-121-91	s	METAL, CHIP 1M 5% 1/10W
R125	1-216-057-00	s	METAL, CHIP 2.2K 5% 1/10W
R126	1-216-075-00	s	METAL, CHIP 12K 5% 1/10W
R127	1-216-081-00	s	METAL, CHIP 22K 5% 1/10W
R128	1-216-025-91	s	METAL, CHIP 100 5% 1/10W
R129	1-216-121-91	s	METAL, CHIP 1M 5% 1/10W
R130	1-216-033-00	s	METAL, CHIP 220 5% 1/10W
R131	1-216-065-00	s	METAL, CHIP 4.7K 5% 1/10W
R132	1-216-081-00	s	METAL, CHIP 22K 5% 1/10W
R133	1-216-095-00	s	METAL, CHIP 82K 5% 1/10W
R134	1-216-676-11	s	METAL, CHIP 11K 0.5% 1/10W
R135	1-216-057-00	s	METAL, CHIP 2.2K 5% 1/10W
R136	1-216-678-11	s	METAL, CHIP 13K 0.5% 1/10W
R137	1-216-025-91	s	METAL, CHIP 100 5% 1/10W
R138	1-216-073-00	s	METAL, CHIP 10K 5% 1/10W
R139	1-216-073-00	s	METAL, CHIP 10K 5% 1/10W
R140	1-216-073-00	s	METAL, CHIP 10K 5% 1/10W
R141	1-216-684-91	s	METAL, CHIP 24k 0.5% 1/10W
R142	1-216-025-91	s	METAL, CHIP 100 5% 1/10W

(AP-31A BOARD(UVW-1600))

Ref. No. or Q'ty	Part No.	SP	Description
R143	1-216-073-00	s	METAL, CHIP 10K 5% 1/10W
R144	1-216-073-00	s	METAL, CHIP 10K 5% 1/10W
R145-154	1-216-097-91	s	METAL, CHIP 100k 5% 1/10W
R166	1-216-295-91	s	RES, CHIP 0
R178	1-216-073-00	s	METAL, CHIP 10K 5% 1/10W
R179	1-216-664-11	s	METAL, CHIP 3.6K 0.5% 1/10W
R180	1-216-073-00	s	METAL, CHIP 10K 5% 1/10W
R181	1-216-073-00	s	METAL, CHIP 10K 5% 1/10W
R182	1-216-646-11	s	METAL, CHIP 620 0.5% 1/10W
R183	1-216-073-00	s	METAL, CHIP 10K 5% 1/10W
R184	1-216-073-00	s	METAL, CHIP 10K 5% 1/10W
R186	1-216-095-00	s	METAL, CHIP 82K 5% 1/10W
R187	1-208-799-11	s	METAL, CHIP 5.1k 0.5% 1/10W
R189	1-216-295-91	s	RES, CHIP 0
R190	1-208-814-11	s	METAL, CHIP 22k 0.5% 1/10W
R201	1-216-603-11	s	METAL, CHIP 10 0.5% 1/10W
R205	1-216-097-91	s	METAL, CHIP 100k 5% 1/10W
R208	1-216-105-91	s	METAL, CHIP 220k 5% 1/10W
R209	1-216-626-11	s	METAL, CHIP 91 0.5% 1/10W
R210	1-216-651-11	s	METAL, CHIP 1K 0.5% 1/10W
R213	1-216-659-11	s	METAL, CHIP 2.2K 0.5% 1/10W
R216	1-216-009-00	s	METAL, CHIP 22 5% 1/10W
R217	1-216-073-00	s	METAL, CHIP 10K 5% 1/10W
R219	1-216-073-00	s	METAL, CHIP 10K 5% 1/10W
R220	1-216-073-00	s	METAL, CHIP 10K 5% 1/10W
R223	1-216-073-00	s	METAL, CHIP 10K 5% 1/10W
R224	1-216-049-91	s	METAL, CHIP 1k 5% 1/10W
R225	1-216-073-00	s	METAL, CHIP 10K 5% 1/10W
R226	1-216-073-00	s	METAL, CHIP 10K 5% 1/10W
R227	1-216-097-91	s	METAL, CHIP 100k 5% 1/10W
R228	1-216-097-91	s	METAL, CHIP 100k 5% 1/10W
R230	1-208-806-11	s	METAL, CHIP 10k 0.5% 1/10W
R231	1-216-041-00	s	METAL, CHIP 470 5% 1/10W
R232	1-216-642-11	s	METAL, CHIP 430 0.5% 1/10W
R233	1-208-806-11	s	METAL, CHIP 10k 0.5% 1/10W
R234	1-208-822-11	s	METAL, CHIP 47k 0.5% 1/10W
R235	1-208-806-11	s	METAL, CHIP 10k 0.5% 1/10W
R236	1-208-814-11	s	METAL, CHIP 22k 0.5% 1/10W
R237	1-215-473-00	s	METAL 150K 1% 1/6W
R238	1-215-471-00	s	METAL 120K 1% 1/6W
R239	1-215-479-00	s	METAL 270K 1% 1/6W
R240	1-208-812-11	s	METAL, CHIP 18k 0.5% 1/10W
R241	1-208-806-11	s	METAL, CHIP 10k 0.5% 1/10W
R242	1-216-699-11	s	METAL, CHIP 100K 0.5% 1/10W
R243	1-215-483-00	s	METAL 390K 1% 1/6W
R244	1-215-493-00	s	METAL 1M 1% 1/6W
R245	1-215-453-00	s	METAL 22K 1% 1/6W
R246	1-208-812-11	s	METAL, CHIP 18k 0.5% 1/10W
R247	1-208-814-11	s	METAL, CHIP 22k 0.5% 1/10W
R251	1-216-121-91	s	METAL, CHIP 1M 5% 1/10W
R255	1-216-009-00	s	METAL, CHIP 22 5% 1/10W
R256	1-208-822-11	s	METAL, CHIP 47k 0.5% 1/10W
R257	1-208-774-11	s	METAL, CHIP 470 0.5% 1/10W
R258	1-216-622-11	s	METAL, CHIP 62 0.5% 1/10W
R259	1-216-678-11	s	METAL, CHIP 13K 0.5% 1/10W
R260	1-216-673-11	s	METAL, CHIP 8.2K 0.5% 1/10W
R261	1-216-652-11	s	METAL, CHIP 1.1K 0.5% 1/10W
R262	1-216-622-11	s	METAL, CHIP 62 0.5% 1/10W
R263	1-208-784-11	s	METAL, CHIP 1.2k 0.5% 1/10W

(AP-31A BOARD(UVW-1600))

Ref. No. or Q'ty	Part No.	SP	Description
R264	1-216-676-11	s	METAL, CHIP 11K 0.5% 1/10W
R265	1-216-677-11	s	METAL, CHIP 12K 0.5% 1/10W
R266	1-208-785-11	s	METAL, CHIP 1.3k 0.5% 1/10W
R267	1-215-493-00	s	METAL 1M 1% 1/6W
R268	1-216-666-11	s	METAL, CHIP 4.3K 0.5% 1/10W
R269	1-208-822-11	s	METAL, CHIP 47k 0.5% 1/10W
R270	1-208-806-11	s	METAL, CHIP 10k 0.5% 1/10W
R271	1-216-073-00	s	METAL, CHIP 10K 5% 1/10W
R272	1-216-049-91	s	METAL, CHIP 1k 5% 1/10W
R273	1-216-081-00	s	METAL, CHIP 22K 5% 1/10W
R274	1-216-081-00	s	METAL, CHIP 22K 5% 1/10W
R276	1-216-659-11	s	METAL, CHIP 2.2K 0.5% 1/10W
R277	1-208-789-11	s	METAL, CHIP 2k 0.5% 1/10W
R278	1-216-677-11	s	METAL, CHIP 12K 0.5% 1/10W
R279	1-216-645-11	s	METAL, CHIP 560 0.5% 1/10W
R280	1-216-121-91	s	METAL, CHIP 1M 5% 1/10W
R281	1-208-814-11	s	METAL, CHIP 22k 0.5% 1/10W
R282	1-208-803-11	s	METAL, CHIP 7.5k 0.5% 1/10W
R283	1-216-045-00	s	METAL, CHIP 680 5% 1/10W
R284	1-216-674-11	s	METAL, CHIP 9.1K 0.5% 1/10W
R285	1-208-812-11	s	METAL, CHIP 18k 0.5% 1/10W
R286	1-216-657-11	s	METAL, CHIP 1.8K 0.5% 1/10W
R287	1-216-121-91	s	METAL, CHIP 1M 5% 1/10W
R300	1-216-069-00	s	METAL, CHIP 6.8K 5% 1/10W
R301	1-216-073-00	s	METAL, CHIP 10K 5% 1/10W
R302	1-208-799-11	s	METAL, CHIP 5.1k 0.5% 1/10W
R303	1-216-663-11	s	METAL, CHIP 3.3K 0.5% 1/10W
R304	1-216-650-11	s	METAL, CHIP 910 0.5% 1/10W
R305	1-216-663-11	s	METAL, CHIP 3.3K 0.5% 1/10W
R306	1-216-073-00	s	METAL, CHIP 10K 5% 1/10W
R307	1-216-667-11	s	METAL, CHIP 4.7K 0.5% 1/10W
R308	1-216-033-00	s	METAL, CHIP 220 5% 1/10W
R309	1-216-067-00	s	METAL, CHIP 5.6K 5% 1/10W
R310	1-216-067-00	s	METAL, CHIP 5.6K 5% 1/10W
R311	1-208-810-11	s	METAL, CHIP 15k 0.5% 1/10W
R312	1-247-807-31	s	CARBON 100 5% 1/4W
R313 ⚠	1-216-399-00	s	WIREWOUND 6.8 10% 3W
R314 ⚠	1-216-399-00	s	WIREWOUND 6.8 10% 3W
R315	1-247-807-31	s	CARBON 100 5% 1/4W
R316	1-216-121-91	s	METAL, CHIP 1M 5% 1/10W
R317	1-249-389-11	s	CARBON 4.7 5% 1/4W
R318	1-216-121-91	s	METAL, CHIP 1M 5% 1/10W
R319	1-216-057-00	s	METAL, CHIP 2.2K 5% 1/10W
R320	1-216-075-00	s	METAL, CHIP 12K 5% 1/10W
R321	1-216-081-00	s	METAL, CHIP 22K 5% 1/10W
R322	1-216-025-91	s	METAL, CHIP 100 5% 1/10W
R323	1-216-121-91	s	METAL, CHIP 1M 5% 1/10W
R324	1-216-033-00	s	METAL, CHIP 220 5% 1/10W
R325	1-216-065-00	s	METAL, CHIP 4.7K 5% 1/10W
R326	1-216-081-00	s	METAL, CHIP 22K 5% 1/10W
R327	1-216-095-00	s	METAL, CHIP 82K 5% 1/10W
R328	1-216-676-11	s	METAL, CHIP 11K 0.5% 1/10W
R329	1-216-057-00	s	METAL, CHIP 2.2K 5% 1/10W
R330	1-216-678-11	s	METAL, CHIP 13K 0.5% 1/10W
R331	1-216-025-91	s	METAL, CHIP 100 5% 1/10W
R332	1-216-073-00	s	METAL, CHIP 10K 5% 1/10W
R333	1-216-073-00	s	METAL, CHIP 10K 5% 1/10W
R334	1-216-073-00	s	METAL, CHIP 10K 5% 1/10W
R335	1-216-684-91	s	METAL, CHIP 24k 0.5% 1/10W

(AP-31A BOARD(UVW-1600))

Ref. No. or Q'ty	Part No.	SP	Description
R336	1-216-025-91	s	METAL, CHIP 100 5% 1/10W
R337	1-216-073-00	s	METAL, CHIP 10K 5% 1/10W
R338	1-216-073-00	s	METAL, CHIP 10K 5% 1/10W
R341	1-216-095-00	s	METAL, CHIP 82K 5% 1/10W
R342	1-216-073-00	s	METAL, CHIP 10K 5% 1/10W
R343	1-216-295-91	s	RES, CHIP 0
R350	1-216-295-91	s	RES, CHIP 0
R351	1-208-814-11	s	METAL, CHIP 22k 0.5% 1/10W
R387	1-208-799-11	s	METAL, CHIP 5.1k 0.5% 1/10W
R400	1-216-603-11	s	METAL, CHIP 10 0.5% 1/10W
R401	1-216-073-00	s	METAL, CHIP 10K 5% 1/10W
R402	1-216-049-91	s	METAL, CHIP 1k 5% 1/10W
R403	1-216-073-00	s	METAL, CHIP 10K 5% 1/10W
R405	1-216-049-91	s	METAL, CHIP 1k 5% 1/10W
R406	1-216-033-00	s	METAL, CHIP 220 5% 1/10W
R407	1-216-121-91	s	METAL, CHIP 1M 5% 1/10W
R408	1-216-053-00	s	METAL, CHIP 1.5K 5% 1/10W
R410	1-216-053-00	s	METAL, CHIP 1.5K 5% 1/10W
R412	1-216-049-91	s	METAL, CHIP 1k 5% 1/10W
R413	1-216-067-00	s	METAL, CHIP 5.6K 5% 1/10W
R414	1-216-089-91	s	METAL, CHIP 47k 5% 1/10W
R415	1-216-089-91	s	METAL, CHIP 47k 5% 1/10W
R416	1-216-057-00	s	METAL, CHIP 2.2K 5% 1/10W
R417	1-216-121-91	s	METAL, CHIP 1M 5% 1/10W
R418	1-216-049-91	s	METAL, CHIP 1k 5% 1/10W
R419	1-216-073-00	s	METAL, CHIP 10K 5% 1/10W
R420	1-216-113-00	s	METAL, CHIP 470K 5% 1/10W
R421	1-216-025-91	s	METAL, CHIP 100 5% 1/10W
R422	1-216-067-00	s	METAL, CHIP 5.6K 5% 1/10W
R423	1-216-089-91	s	METAL, CHIP 47k 5% 1/10W
R424	1-216-073-00	s	METAL, CHIP 10K 5% 1/10W
R425	1-216-065-00	s	METAL, CHIP 4.7K 5% 1/10W
R426	1-216-065-00	s	METAL, CHIP 4.7K 5% 1/10W
R427	1-216-025-91	s	METAL, CHIP 100 5% 1/10W
R428	1-216-073-00	s	METAL, CHIP 10K 5% 1/10W
R500	1-216-633-11	s	METAL, CHIP 180 0.5% 1/10W
R501	1-216-633-11	s	METAL, CHIP 180 0.5% 1/10W
R502	1-216-049-91	s	METAL, CHIP 1k 5% 1/10W
R602	1-247-855-11	s	CARBON 10K 5% 1/4W
RV1	1-241-789-11	s	RES, ADJ METAL 220k
RV2	1-241-784-11	s	RES, ADJ METAL 4.7k
RV3	1-241-783-11	s	RES, ADJ METAL 2.2k
RV4	1-241-785-11	s	RES, ADJ METAL 10k
RV5	1-241-786-11	s	RES, ADJ METAL 22k
RV201	1-241-789-11	s	RES, ADJ METAL 220k
RV202	1-241-784-11	s	RES, ADJ METAL 4.7k
RV203	1-241-783-11	s	RES, ADJ METAL 2.2k
RV204	1-241-785-11	s	RES, ADJ METAL 10k
RV205	1-241-786-11	s	RES, ADJ METAL 22k
S1	1-570-602-11	s	SWITCH, DIP 2-CKT
S2	1-570-602-11	s	SWITCH, DIP 2-CKT
S201	1-570-602-11	s	SWITCH, DIP 2-CKT
S202	1-570-602-11	s	SWITCH, DIP 2-CKT
TH1	1-807-972-11	s	THERMISTOR SV-1715 1.25k
TH2	1-807-972-11	s	THERMISTOR SV-1715 1.25k

AP-31AP BOARD(UVW-1600P)

Ref. No. or Q'ty	Part No.	SP	Description
AP-31AP board is used for UVW-1600P(EK).			
1pc	A-8275-466-A	o	MOUNTED CIRCUIT BOARD, AP-31AP
1pc	3-179-084-01	s	LEVER (R), PC BOARD
1pc	3-179-085-01	s	LEVER (L), PC BOARD
1pc	3-182-385-02	o	PLATE, SHIELD (S), CARD
1pc	7-621-759-45	s	SCREW, +PSW2.6x6
1pc	3-182-298-01	o	CASE, SHIELD (LID), AP (2)
1pc	3-182-351-01	o	CASE, SHIELD, AP (2B)
C2	1-163-133-00	s	CERAMIC, CHIP 470PF 5% 50V
C3	1-163-243-11	s	CERAMIC, CHIP 47PF 5% 50V
C4	1-163-235-11	s	CERAMIC, CHIP 22PF 5% 50V
C7	1-130-485-00	s	MYLAR 0.015uF 5% 50V
C8	1-126-933-11	s	ELECT 100uF 20% 16V
C9	1-163-125-00	s	CERAMIC, CHIP 220PF 5% 50V
C10	1-126-964-11	s	ELECT 10uF 20% 50V
C13	1-130-481-00	s	MYLAR 0.0068uF 5% 50V
C14	1-164-182-11	s	CERAMIC, CHIP 3300PF 10% 100V
C15	1-126-964-11	s	ELECT 10uF 20% 50V
C16	1-128-551-11	s	ELECT 22uF 20% 50V
C18	1-128-551-11	s	ELECT 22uF 20% 50V
C20	1-130-498-00	s	MYLAR 0.18uF 5% 50V
C21-C26	1-130-487-00	s	MYLAR 0.022uF 5% 50V
C27	1-163-243-11	s	CERAMIC, CHIP 47PF 5% 50V
C29	1-130-483-00	s	MYLAR 0.01uF 5% 50V
C30	1-163-275-11	s	CERAMIC, CHIP 0.001uF 5% 50V
C31	1-163-275-11	s	CERAMIC, CHIP 0.001uF 5% 50V
C32	1-163-275-11	s	CERAMIC, CHIP 0.001uF 5% 50V
C33	1-163-275-11	s	CERAMIC, CHIP 0.001uF 5% 50V
C34	1-130-483-00	s	MYLAR 0.01uF 5% 50V
C35	1-163-139-00	s	CERAMIC, CHIP 820PF 5% 50V
C36	1-163-243-11	s	CERAMIC, CHIP 47PF 5% 50V
C37	1-164-232-11	s	CERAMIC, CHIP 0.01uF 10% 100V
C38	1-164-232-11	s	CERAMIC, CHIP 0.01uF 10% 100V
C39	1-124-925-11	s	ELECT 2.2uF 20% 100V
C40	1-164-004-11	s	CERAMIC, CHIP 0.1uF 10% 25V
C41	1-107-498-11	s	FILM, CHIP 0.0022uF 2% 50V
C42	1-107-498-11	s	FILM, CHIP 0.0022uF 2% 50V
C43	1-107-499-11	s	FILM, CHIP 0.0039uF 2% 16V
C44	1-131-345-00	s	TANTALUM 0.47uF 10% 35V
C45	1-130-497-00	s	MYLAR 0.15uF 5% 50V
C46	1-124-925-11	s	ELECT 2.2uF 20% 100V
C47	1-104-553-11	s	FILM, CHIP 0.015uF 5% 16V
C48	1-130-499-00	s	MYLAR 0.22uF 5% 50V
C49	1-164-344-11	s	CERAMIC, CHIP 0.068uF 10% 25V
C50	1-104-560-11	s	FILM, CHIP 0.056uF 5% 16V
C51	1-124-925-11	s	ELECT 2.2uF 20% 100V
C52	1-107-553-11	s	FILM, CHIP 0.0056uF 2% 16V
C53	1-104-551-11	s	FILM, CHIP 0.01uF 5% 16V
C56	1-163-251-11	s	CERAMIC, CHIP 100PF 5% 50V
C57	1-126-947-11	s	ELECT 47uF 20% 35V
C58	1-163-263-11	s	CERAMIC, CHIP 330PF 5% 50V
C59	1-163-235-11	s	CERAMIC, CHIP 22PF 5% 50V
C60	1-126-964-11	s	ELECT 10uF 20% 50V
C61	1-126-964-11	s	ELECT 10uF 20% 50V
C62	1-126-926-11	s	ELECT 1000uF 20% 10V
C63	1-126-926-11	s	ELECT 1000uF 20% 10V
C64	1-126-926-11	s	ELECT 1000uF 20% 10V
C65	1-164-004-11	s	CERAMIC, CHIP 0.1uF 10% 25V

(AP-31AP BOARD(UVW-1600P))

Ref. No. or Q'ty	Part No.	SP	Description
C66	1-126-926-11	s	ELECT 1000uF 20% 10V
C67	1-126-947-11	s	ELECT 47uF 20% 35V
C68	1-124-903-11	s	ELECT 1uF 20% 50V
C69	1-163-251-11	s	CERAMIC, CHIP 100PF 5% 50V
C70	1-126-947-11	s	ELECT 47uF 20% 35V
C71	1-163-235-11	s	CERAMIC, CHIP 22PF 5% 50V
C72	1-163-809-11	s	CERAMIC, CHIP 0.047uF 10% 25V
C77	1-163-251-11	s	CERAMIC, CHIP 100PF 5% 50V
C78	1-126-964-11	s	ELECT 10uF 20% 50V
C79	1-126-964-11	s	ELECT 10uF 20% 50V
C80	1-126-964-11	s	ELECT 10uF 20% 50V
C81	1-130-483-00	s	MYLAR 0.01uF 5% 50V
C82	1-126-926-11	s	ELECT 1000uF 20% 10V
C83	1-126-926-11	s	ELECT 1000uF 20% 10V
C84	1-124-925-11	s	ELECT 2.2uF 20% 100V
C87	1-126-964-11	s	ELECT 10uF 20% 50V
C202	1-163-133-00	s	CERAMIC, CHIP 470PF 5% 50V
C203	1-163-243-11	s	CERAMIC, CHIP 47PF 5% 50V
C204	1-163-235-11	s	CERAMIC, CHIP 22PF 5% 50V
C207	1-130-485-00	s	MYLAR 0.015uF 5% 50V
C208	1-126-933-11	s	ELECT 100uF 20% 16V
C209	1-163-125-00	s	CERAMIC, CHIP 220PF 5% 50V
C210	1-126-964-11	s	ELECT 10uF 20% 50V
C213	1-130-481-00	s	MYLAR 0.0068uF 5% 50V
C214	1-164-182-11	s	CERAMIC, CHIP 3300PF 10% 100V
C215	1-126-964-11	s	ELECT 10uF 20% 50V
C216	1-128-551-11	s	ELECT 22uF 20% 50V
C218	1-128-551-11	s	ELECT 22uF 20% 50V
C220	1-130-498-00	s	MYLAR 0.18uF 5% 50V
C221-226	1-130-487-00	s	MYLAR 0.022uF 5% 50V
C227	1-163-243-11	s	CERAMIC, CHIP 47PF 5% 50V
C229	1-130-483-00	s	MYLAR 0.01uF 5% 50V
C230	1-163-275-11	s	CERAMIC, CHIP 0.001uF 5% 50V
C231	1-163-275-11	s	CERAMIC, CHIP 0.001uF 5% 50V
C232	1-163-275-11	s	CERAMIC, CHIP 0.001uF 5% 50V
C233	1-163-275-11	s	CERAMIC, CHIP 0.001uF 5% 50V
C234	1-130-483-00	s	MYLAR 0.01uF 5% 50V
C235	1-163-139-00	s	CERAMIC, CHIP 820PF 5% 50V
C236	1-163-243-11	s	CERAMIC, CHIP 47PF 5% 50V
C237	1-124-925-11	s	ELECT 2.2uF 20% 100V
C238	1-107-498-11	s	FILM, CHIP 0.0022uF 2% 50V
C239	1-107-498-11	s	FILM, CHIP 0.0022uF 2% 50V
C240	1-107-499-11	s	FILM, CHIP 0.0039uF 2% 16V
C241	1-131-345-00	s	TANTALUM 0.47uF 10% 35V
C242	1-130-497-00	s	MYLAR 0.15uF 5% 50V
C243	1-124-925-11	s	ELECT 2.2uF 20% 100V
C244	1-104-553-11	s	FILM, CHIP 0.015uF 5% 16V
C245	1-130-499-00	s	MYLAR 0.22uF 5% 50V
C246	1-164-344-11	s	CERAMIC, CHIP 0.068uF 10% 25V
C247	1-104-560-11	s	FILM, CHIP 0.056uF 5% 16V
C248	1-124-925-11	s	ELECT 2.2uF 20% 100V
C249	1-107-553-11	s	FILM, CHIP 0.0056uF 2% 16V
C250	1-104-551-11	s	FILM, CHIP 0.01uF 5% 16V
C253	1-163-251-11	s	CERAMIC, CHIP 100PF 5% 50V
C254	1-126-947-11	s	ELECT 47uF 20% 35V
C255	1-163-263-11	s	CERAMIC, CHIP 330PF 5% 50V
C256	1-163-235-11	s	CERAMIC, CHIP 22PF 5% 50V
C257	1-126-964-11	s	ELECT 10uF 20% 50V
C258	1-126-964-11	s	ELECT 10uF 20% 50V

(AP-31AP BOARD(UVW-1600P))

Ref. No. or Q'ty	Part No.	SP	Description
C259	1-126-926-11	s	ELECT 1000uF 20% 10V
C260	1-126-926-11	s	ELECT 1000uF 20% 10V
C261	1-126-926-11	s	ELECT 1000uF 20% 10V
C262	1-164-004-11	s	CERAMIC, CHIP 0.1uF 10% 25V
C263	1-126-926-11	s	ELECT 1000uF 20% 10V
C264	1-126-947-11	s	ELECT 47uF 20% 35V
C265	1-124-903-11	s	ELECT 1uF 20% 50V
C266	1-163-251-11	s	CERAMIC, CHIP 100PF 5% 50V
C267	1-126-947-11	s	ELECT 47uF 20% 35V
C268	1-163-235-11	s	CERAMIC, CHIP 22PF 5% 50V
C269	1-163-809-11	s	CERAMIC, CHIP 0.047uF 10% 25V
C270	1-124-925-11	s	ELECT 2.2uF 20% 100V
C278	1-126-964-11	s	ELECT 10uF 20% 50V
C279	1-126-964-11	s	ELECT 10uF 20% 50V
C280	1-126-964-11	s	ELECT 10uF 20% 50V
C281	1-130-483-00	s	MYLAR 0.01uF 5% 50V
C282	1-126-926-11	s	ELECT 1000uF 20% 10V
C283	1-126-926-11	s	ELECT 1000uF 20% 10V
C402	1-126-933-11	s	ELECT 100uF 20% 16V
C403	1-163-989-11	s	CERAMIC, CHIP 0.033uF 10% 25V
C408	1-126-964-11	s	ELECT 10uF 20% 50V
C409	1-163-239-11	s	CERAMIC, CHIP 33PF 5% 50V
C410	1-164-004-11	s	CERAMIC, CHIP 0.1uF 10% 25V
C411	1-163-989-11	s	CERAMIC, CHIP 0.033uF 10% 25V
C412	1-126-964-11	s	ELECT 10uF 20% 50V
C413	1-126-964-11	s	ELECT 10uF 20% 50V
C414	1-126-964-11	s	ELECT 10uF 20% 50V
C415	1-163-033-91	s	CERAMIC, CHIP 0.022uF 50V
C416	1-163-033-91	s	CERAMIC, CHIP 0.022uF 50V
C417	1-126-933-11	s	ELECT 100uF 20% 16V
C418	1-126-933-11	s	ELECT 100uF 20% 16V
C419	1-126-964-11	s	ELECT 10uF 20% 50V
C420	1-163-033-91	s	CERAMIC, CHIP 0.022uF 50V
C421	1-163-033-91	s	CERAMIC, CHIP 0.022uF 50V
C422	1-126-933-11	s	ELECT 100uF 20% 16V
C423	1-126-933-11	s	ELECT 100uF 20% 16V
C424	1-126-933-11	s	ELECT 100uF 20% 16V
C425	1-126-933-11	s	ELECT 100uF 20% 16V
C426	1-163-033-91	s	CERAMIC, CHIP 0.022uF 50V
C427	1-163-033-91	s	CERAMIC, CHIP 0.022uF 50V
C428	1-163-989-11	s	CERAMIC, CHIP 0.033uF 10% 25V
C500	1-163-125-00	s	CERAMIC, CHIP 220PF 5% 50V
C501	1-163-133-00	s	CERAMIC, CHIP 470PF 5% 50V
CN1	1-506-468-11	s	CONNECTOR 3P, MALE
CN2	1-564-002-41	s	CONNECTOR 3P, MALE
CN3	1-564-002-11	s	CONNECTOR 3P, MALE
CN111	1-573-600-21	s	CONNECTOR, PHEC 100P, MALE
D1	8-719-941-23	s	DIODE DA204U
D7	8-719-941-23	s	DIODE DA204U
D8	8-719-123-85	s	DIODE 1SS304
D10	8-719-123-85	s	DIODE 1SS304
D11	8-719-123-85	s	DIODE 1SS304
D201	8-719-941-23	s	DIODE DA204U
D206	8-719-941-23	s	DIODE DA204U
D207	8-719-123-85	s	DIODE 1SS304
D209	8-719-123-85	s	DIODE 1SS304
D401	8-719-941-23	s	DIODE DA204U
D403	8-719-941-23	s	DIODE DA204U

(AP-31AP BOARD(UVW-1600P))

Ref. No. or Q'ty	Part No.	SP	Description
D500	8-719-106-88	s	DIODE RD15M-B1
IC1	8-759-701-25	s	IC NJM2068D-D
IC2	8-759-701-25	s	IC NJM2068D-D
IC3	8-759-701-25	s	IC NJM2068D-D
IC4	8-759-701-25	s	IC NJM2068D-D
IC5	8-759-705-58	s	IC NJM4558D-D
IC6	8-759-705-58	s	IC NJM4558D-D
IC7	8-759-705-58	s	IC NJM4558D-D
IC8	8-752-018-80	s	IC CX20188
IC9	8-759-705-58	s	IC NJM4558D-D
IC10	8-759-705-58	s	IC NJM4558D-D
IC11	8-759-145-57	s	IC UPC4557C
IC12	8-759-917-18	s	IC SN74HCU04AN
IC13	8-759-917-18	s	IC SN74HCU04AN
IC14	8-759-145-57	s	IC UPC4557C
IC15	8-759-705-58	s	IC NJM4558D-D
IC201	8-759-701-25	s	IC NJM2068D-D
IC202	8-759-701-25	s	IC NJM2068D-D
IC203	8-759-701-25	s	IC NJM2068D-D
IC204	8-759-701-25	s	IC NJM2068D-D
IC205	8-759-705-58	s	IC NJM4558D-D
IC206	8-759-705-58	s	IC NJM4558D-D
IC207	8-759-705-58	s	IC NJM4558D-D
IC208	8-759-705-58	s	IC NJM4558D-D
IC209	8-759-705-58	s	IC NJM4558D-D
IC210	8-759-145-57	s	IC UPC4557C
IC211	8-759-705-58	s	IC NJM4558D-D
IC401	8-759-701-25	s	IC NJM2068D-D
IC402	8-759-729-03	s	IC NJM2903D
IC405	8-759-172-41	s	IC L78M09T-TL
IC406	8-759-173-37	s	IC L79M09T-TL
IC407	8-759-635-83	s	IC M51957BFP
IC408	8-759-172-41	s	IC L78M09T-TL
IC409	8-759-173-37	s	IC L79M09T-TL
IC410	8-759-701-25	s	IC NJM2068D-D
L2	1-408-617-31	s	INDUCTOR 150uH
L202	1-408-617-31	s	INDUCTOR 150uH
L401	1-410-470-11	s	INDUCTOR 10uH
L402	1-410-470-11	s	INDUCTOR 10uH
PS1	⚠ 1-532-727-11	s	LINK, IC 0.25A
PS2	⚠ 1-532-727-11	s	LINK, IC 0.25A
Q5	8-729-209-06	s	TRANSISTOR 2SC4213-A
Q6	8-729-209-06	s	TRANSISTOR 2SC4213-A
Q7	8-729-209-06	s	TRANSISTOR 2SC4213-A
Q9	8-729-109-44	s	TRANSISTOR 2SK94
Q11	8-729-905-18	s	TRANSISTOR DTC144EU
Q12	8-729-905-12	s	TRANSISTOR DTA144EU
Q13	8-729-422-44	s	TRANSISTOR 2SK663
Q18	8-729-423-93	s	TRANSISTOR 2SD2136-R(TA)
Q19	8-729-022-00	s	TRANSISTOR 2SB1416-R(TA)
Q20	8-729-021-98	s	TRANSISTOR 2SJ226-AZ
Q21	8-729-021-98	s	TRANSISTOR 2SJ226-AZ
Q22	8-729-117-32	s	TRANSISTOR 2SC4177
Q23	8-729-117-32	s	TRANSISTOR 2SC4177
Q25	8-729-140-93	s	TRANSISTOR 2SB733-34
Q30	8-729-140-93	s	TRANSISTOR 2SB733-34
Q205	8-729-209-06	s	TRANSISTOR 2SC4213-A

(AP-31AP BOARD(UVW-1600P))

Ref. No. or Q'ty	Part No.	SP	Description
Q206	8-729-209-06	s	TRANSISTOR 2SC4213-A
Q207	8-729-209-06	s	TRANSISTOR 2SC4213-A
Q209	8-729-109-44	s	TRANSISTOR 2SK94
Q211	8-729-422-44	s	TRANSISTOR 2SK663
Q216	8-729-423-93	s	TRANSISTOR 2SD2136-R(TA)
Q217	8-729-022-00	s	TRANSISTOR 2SB1416-R(TA)
Q218	8-729-021-98	s	TRANSISTOR 2SJ226-AZ
Q219	8-729-021-98	s	TRANSISTOR 2SJ226-AZ
Q220	8-729-117-32	s	TRANSISTOR 2SC4177
Q221	8-729-117-32	s	TRANSISTOR 2SC4177
Q223	8-729-140-93	s	TRANSISTOR 2SB733-34
Q403	8-729-209-06	s	TRANSISTOR 2SC4213-A
R1	1-216-603-11	s	METAL, CHIP 10 0.5% 1/10W
R5	1-216-097-91	s	METAL, CHIP 100k 5% 1/10W
R8	1-216-105-91	s	METAL, CHIP 220k 5% 1/10W
R9	1-216-626-11	s	METAL, CHIP 91 0.5% 1/10W
R10	1-208-774-11	s	METAL, CHIP 470 0.5% 1/10W
R13	1-216-659-11	s	METAL, CHIP 2.2K 0.5% 1/10W
R15	1-208-806-11	s	METAL, CHIP 10k 0.5% 1/10W
R16	1-216-009-00	s	METAL, CHIP 22 5% 1/10W
R17	1-216-073-00	s	METAL, CHIP 10K 5% 1/10W
R19	1-216-073-00	s	METAL, CHIP 10K 5% 1/10W
R20	1-216-073-00	s	METAL, CHIP 10K 5% 1/10W
R23	1-216-073-00	s	METAL, CHIP 10K 5% 1/10W
R24	1-216-049-91	s	METAL, CHIP 1k 5% 1/10W
R25	1-216-073-00	s	METAL, CHIP 10K 5% 1/10W
R26	1-216-073-00	s	METAL, CHIP 10K 5% 1/10W
R27	1-216-097-91	s	METAL, CHIP 100k 5% 1/10W
R28	1-216-097-91	s	METAL, CHIP 100k 5% 1/10W
R30	1-208-806-11	s	METAL, CHIP 10k 0.5% 1/10W
R31	1-216-041-00	s	METAL, CHIP 470 5% 1/10W
R32	1-216-642-11	s	METAL, CHIP 430 0.5% 1/10W
R33	1-208-806-11	s	METAL, CHIP 10k 0.5% 1/10W
R34	1-208-822-11	s	METAL, CHIP 47k 0.5% 1/10W
R35	1-208-806-11	s	METAL, CHIP 10k 0.5% 1/10W
R36	1-208-814-11	s	METAL, CHIP 22k 0.5% 1/10W
R37	1-215-479-00	s	METAL 270K 1% 1/6W
R38	1-215-471-00	s	METAL 120K 1% 1/6W
R39	1-215-484-00	s	METAL 430K 1% 1/6W
R40	1-208-812-11	s	METAL, CHIP 18k 0.5% 1/10W
R41	1-216-677-11	s	METAL, CHIP 12K 0.5% 1/10W
R42	1-216-695-11	s	METAL, CHIP 68K 0.5% 1/10W
R44	1-215-479-00	s	METAL 270K 1% 1/6W
R45	1-215-463-00	s	METAL 56K 1% 1/6W
R46	1-208-812-11	s	METAL, CHIP 18k 0.5% 1/10W
R47	1-208-814-11	s	METAL, CHIP 22k 0.5% 1/10W
R51	1-216-121-91	s	METAL, CHIP 1M 5% 1/10W
R56	1-216-009-00	s	METAL, CHIP 22 5% 1/10W
R57	1-208-822-11	s	METAL, CHIP 47k 0.5% 1/10W
R58	1-208-774-11	s	METAL, CHIP 470 0.5% 1/10W
R59	1-216-622-11	s	METAL, CHIP 62 0.5% 1/10W
R60	1-216-678-11	s	METAL, CHIP 13K 0.5% 1/10W
R61	1-216-673-11	s	METAL, CHIP 8.2K 0.5% 1/10W
R62	1-216-652-11	s	METAL, CHIP 1.1K 0.5% 1/10W
R63	1-216-622-11	s	METAL, CHIP 62 0.5% 1/10W
R64	1-208-784-11	s	METAL, CHIP 1.2k 0.5% 1/10W
R65	1-216-676-11	s	METAL, CHIP 11K 0.5% 1/10W
R66	1-216-677-11	s	METAL, CHIP 12K 0.5% 1/10W

(AP-31AP BOARD(UVW-1600P))

Ref. No. or Q'ty	Part No.	SP	Description
R67	1-208-785-11	s	METAL, CHIP 1.3k 0.5% 1/10W
R68	1-215-493-00	s	METAL 1M 1% 1/6W
R69	1-216-666-11	s	METAL, CHIP 4.3K 0.5% 1/10W
R70	1-208-822-11	s	METAL, CHIP 47k 0.5% 1/10W
R71	1-208-806-11	s	METAL, CHIP 10k 0.5% 1/10W
R72	1-216-073-00	s	METAL, CHIP 10K 5% 1/10W
R73	1-216-081-00	s	METAL, CHIP 22K 5% 1/10W
R74	1-216-049-91	s	METAL, CHIP 1k 5% 1/10W
R75	1-216-081-00	s	METAL, CHIP 22K 5% 1/10W
R76	1-216-081-00	s	METAL, CHIP 22K 5% 1/10W
R77	1-216-699-11	s	METAL, CHIP 100K 0.5% 1/10W
R78	1-208-817-11	s	METAL, CHIP 30k 0.5% 1/10W
R79	1-216-081-00	s	METAL, CHIP 22K 5% 1/10W
R80	1-216-049-91	s	METAL, CHIP 1k 5% 1/10W
R82	1-216-659-11	s	METAL, CHIP 2.2K 0.5% 1/10W
R83	1-208-789-11	s	METAL, CHIP 2k 0.5% 1/10W
R84	1-216-677-11	s	METAL, CHIP 12K 0.5% 1/10W
R85	1-216-645-11	s	METAL, CHIP 560 0.5% 1/10W
R86	1-216-121-91	s	METAL, CHIP 1M 5% 1/10W
R87	1-208-814-11	s	METAL, CHIP 22k 0.5% 1/10W
R88	1-208-803-11	s	METAL, CHIP 7.5k 0.5% 1/10W
R89	1-216-045-00	s	METAL, CHIP 680 5% 1/10W
R90	1-216-674-11	s	METAL, CHIP 9.1K 0.5% 1/10W
R91	1-208-812-11	s	METAL, CHIP 18k 0.5% 1/10W
R92	1-216-657-11	s	METAL, CHIP 1.8K 0.5% 1/10W
R93	1-216-121-91	s	METAL, CHIP 1M 5% 1/10W
R106	1-216-069-00	s	METAL, CHIP 6.8K 5% 1/10W
R107	1-216-073-00	s	METAL, CHIP 10K 5% 1/10W
R108	1-208-799-11	s	METAL, CHIP 5.1k 0.5% 1/10W
R109	1-216-663-11	s	METAL, CHIP 3.3K 0.5% 1/10W
R110	1-216-650-11	s	METAL, CHIP 910 0.5% 1/10W
R111	1-216-663-11	s	METAL, CHIP 3.3K 0.5% 1/10W
R112	1-216-073-00	s	METAL, CHIP 10K 5% 1/10W
R113	1-216-667-11	s	METAL, CHIP 4.7K 0.5% 1/10W
R114	1-216-033-00	s	METAL, CHIP 220 5% 1/10W
R115	1-216-067-00	s	METAL, CHIP 5.6K 5% 1/10W
R116	1-216-067-00	s	METAL, CHIP 5.6K 5% 1/10W
R117	1-208-810-11	s	METAL, CHIP 15k 0.5% 1/10W
R118	1-247-807-31	s	CARBON 100 5% 1/4W
R119 ⚠	1-216-399-00	s	WIREWOUND 6.8 10% 3W
R120 ⚠	1-216-399-00	s	WIREWOUND 6.8 10% 3W
R121	1-247-807-31	s	CARBON 100 5% 1/4W
R122	1-216-121-91	s	METAL, CHIP 1M 5% 1/10W
R123	1-249-389-11	s	CARBON 4.7 5% 1/4W
R124	1-216-121-91	s	METAL, CHIP 1M 5% 1/10W
R125	1-216-057-00	s	METAL, CHIP 2.2K 5% 1/10W
R126	1-216-075-00	s	METAL, CHIP 12K 5% 1/10W
R127	1-216-081-00	s	METAL, CHIP 22K 5% 1/10W
R128	1-216-025-91	s	METAL, CHIP 100 5% 1/10W
R129	1-216-121-91	s	METAL, CHIP 1M 5% 1/10W
R130	1-216-033-00	s	METAL, CHIP 220 5% 1/10W
R131	1-216-065-00	s	METAL, CHIP 4.7K 5% 1/10W
R132	1-216-081-00	s	METAL, CHIP 22K 5% 1/10W
R133	1-216-095-00	s	METAL, CHIP 82K 5% 1/10W
R134	1-216-676-11	s	METAL, CHIP 11K 0.5% 1/10W
R135	1-216-057-00	s	METAL, CHIP 2.2K 5% 1/10W
R136	1-216-678-11	s	METAL, CHIP 13K 0.5% 1/10W
R137	1-216-025-91	s	METAL, CHIP 100 5% 1/10W
R138	1-216-073-00	s	METAL, CHIP 10K 5% 1/10W

(AP-31AP BOARD(UVW-1600P))

Ref. No. or Q'ty	Part No.	SP	Description
R139	1-216-073-00	s	METAL, CHIP 10K 5% 1/10W
R140	1-216-073-00	s	METAL, CHIP 10K 5% 1/10W
R141	1-216-684-91	s	METAL, CHIP 24k 0.5% 1/10W
R142	1-216-025-91	s	METAL, CHIP 100 5% 1/10W
R143	1-216-073-00	s	METAL, CHIP 10K 5% 1/10W
R144	1-216-073-00	s	METAL, CHIP 10K 5% 1/10W
R145-154	1-216-097-91	s	METAL, CHIP 100k 5% 1/10W
R166	1-216-295-91	s	RES, CHIP 0
R178	1-216-073-00	s	METAL, CHIP 10K 5% 1/10W
R179	1-216-664-11	s	METAL, CHIP 3.6K 0.5% 1/10W
R180	1-216-073-00	s	METAL, CHIP 10K 5% 1/10W
R181	1-216-073-00	s	METAL, CHIP 10K 5% 1/10W
R182	1-216-646-11	s	METAL, CHIP 620 0.5% 1/10W
R183	1-216-073-00	s	METAL, CHIP 10K 5% 1/10W
R184	1-216-073-00	s	METAL, CHIP 10K 5% 1/10W
R186	1-216-095-00	s	METAL, CHIP 82K 5% 1/10W
R187	1-208-799-11	s	METAL, CHIP 5.1k 0.5% 1/10W
R189	1-216-295-91	s	RES, CHIP 0
R190	1-208-814-11	s	METAL, CHIP 22k 0.5% 1/10W
R201	1-216-603-11	s	METAL, CHIP 10 0.5% 1/10W
R205	1-216-097-91	s	METAL, CHIP 100k 5% 1/10W
R208	1-216-105-91	s	METAL, CHIP 220k 5% 1/10W
R209	1-216-626-11	s	METAL, CHIP 91 0.5% 1/10W
R210	1-208-774-11	s	METAL, CHIP 470 0.5% 1/10W
R213	1-216-659-11	s	METAL, CHIP 2.2K 0.5% 1/10W
R215	1-208-806-11	s	METAL, CHIP 10k 0.5% 1/10W
R216	1-216-009-00	s	METAL, CHIP 22 5% 1/10W
R217	1-216-073-00	s	METAL, CHIP 10K 5% 1/10W
R219	1-216-073-00	s	METAL, CHIP 10K 5% 1/10W
R220	1-216-073-00	s	METAL, CHIP 10K 5% 1/10W
R223	1-216-073-00	s	METAL, CHIP 10K 5% 1/10W
R224	1-216-049-91	s	METAL, CHIP 1k 5% 1/10W
R225	1-216-073-00	s	METAL, CHIP 10K 5% 1/10W
R226	1-216-073-00	s	METAL, CHIP 10K 5% 1/10W
R227	1-216-097-91	s	METAL, CHIP 100k 5% 1/10W
R228	1-216-097-91	s	METAL, CHIP 100k 5% 1/10W
R230	1-208-806-11	s	METAL, CHIP 10k 0.5% 1/10W
R231	1-216-041-00	s	METAL, CHIP 470 5% 1/10W
R232	1-216-642-11	s	METAL, CHIP 430 0.5% 1/10W
R233	1-208-806-11	s	METAL, CHIP 10k 0.5% 1/10W
R234	1-208-822-11	s	METAL, CHIP 47k 0.5% 1/10W
R235	1-208-806-11	s	METAL, CHIP 10k 0.5% 1/10W
R236	1-208-814-11	s	METAL, CHIP 22k 0.5% 1/10W
R237	1-215-484-00	s	METAL 430K 1% 1/6W
R238	1-215-484-00	s	METAL 430K 1% 1/6W
R239	1-215-484-00	s	METAL 430K 1% 1/6W
R240	1-216-689-11	s	METAL, CHIP 39K 0.5% 1/10W
R241	1-208-812-11	s	METAL, CHIP 18k 0.5% 1/10W
R242	1-216-695-11	s	METAL, CHIP 68K 0.5% 1/10W
R244	1-215-487-00	s	METAL 560K 1% 1/6W
R245	1-215-466-00	s	METAL 75K 1% 1/6W
R246	1-208-812-11	s	METAL, CHIP 18k 0.5% 1/10W
R247	1-208-814-11	s	METAL, CHIP 22k 0.5% 1/10W
R251	1-216-121-91	s	METAL, CHIP 1M 5% 1/10W
R255	1-216-009-00	s	METAL, CHIP 22 5% 1/10W
R256	1-208-822-11	s	METAL, CHIP 47k 0.5% 1/10W
R257	1-208-774-11	s	METAL, CHIP 470 0.5% 1/10W
R258	1-216-622-11	s	METAL, CHIP 62 0.5% 1/10W
R259	1-216-678-11	s	METAL, CHIP 13K 0.5% 1/10W

(AP-31AP BOARD(UVW-1600P))

Ref. No. or Q'ty	Part No.	SP	Description
R260	1-216-673-11	s	METAL, CHIP 8.2K 0.5% 1/10W
R261	1-216-652-11	s	METAL, CHIP 1.1K 0.5% 1/10W
R262	1-216-622-11	s	METAL, CHIP 62 0.5% 1/10W
R263	1-208-784-11	s	METAL, CHIP 1.2k 0.5% 1/10W
R264	1-216-676-11	s	METAL, CHIP 11K 0.5% 1/10W
R265	1-216-677-11	s	METAL, CHIP 12K 0.5% 1/10W
R266	1-208-785-11	s	METAL, CHIP 1.3k 0.5% 1/10W
R267	1-215-493-00	s	METAL 1M 1% 1/6W
R268	1-216-666-11	s	METAL, CHIP 4.3K 0.5% 1/10W
R269	1-208-822-11	s	METAL, CHIP 47k 0.5% 1/10W
R270	1-208-806-11	s	METAL, CHIP 10k 0.5% 1/10W
R271	1-216-073-00	s	METAL, CHIP 10K 5% 1/10W
R272	1-216-049-91	s	METAL, CHIP 1k 5% 1/10W
R273	1-216-081-00	s	METAL, CHIP 22K 5% 1/10W
R274	1-216-081-00	s	METAL, CHIP 22K 5% 1/10W
R276	1-216-659-11	s	METAL, CHIP 2.2K 0.5% 1/10W
R277	1-208-789-11	s	METAL, CHIP 2k 0.5% 1/10W
R278	1-216-677-11	s	METAL, CHIP 12K 0.5% 1/10W
R279	1-216-645-11	s	METAL, CHIP 560 0.5% 1/10W
R280	1-216-121-91	s	METAL, CHIP 1M 5% 1/10W
R281	1-208-814-11	s	METAL, CHIP 22k 0.5% 1/10W
R282	1-208-803-11	s	METAL, CHIP 7.5k 0.5% 1/10W
R283	1-216-045-00	s	METAL, CHIP 680 5% 1/10W
R284	1-216-674-11	s	METAL, CHIP 9.1K 0.5% 1/10W
R285	1-208-812-11	s	METAL, CHIP 18k 0.5% 1/10W
R286	1-216-657-11	s	METAL, CHIP 1.8K 0.5% 1/10W
R287	1-216-121-91	s	METAL, CHIP 1M 5% 1/10W
R300	1-216-069-00	s	METAL, CHIP 6.8K 5% 1/10W
R301	1-216-073-00	s	METAL, CHIP 10K 5% 1/10W
R302	1-208-799-11	s	METAL, CHIP 5.1k 0.5% 1/10W
R303	1-216-663-11	s	METAL, CHIP 3.3K 0.5% 1/10W
R304	1-216-650-11	s	METAL, CHIP 910 0.5% 1/10W
R305	1-216-663-11	s	METAL, CHIP 3.3K 0.5% 1/10W
R306	1-216-073-00	s	METAL, CHIP 10K 5% 1/10W
R307	1-216-667-11	s	METAL, CHIP 4.7K 0.5% 1/10W
R308	1-216-033-00	s	METAL, CHIP 220 5% 1/10W
R309	1-216-067-00	s	METAL, CHIP 5.6K 5% 1/10W
R310	1-216-067-00	s	METAL, CHIP 5.6K 5% 1/10W
R311	1-208-810-11	s	METAL, CHIP 15k 0.5% 1/10W
R312	1-247-807-31	s	CARBON 100 5% 1/4W
R313	⚠ 1-216-399-00	s	WIREWOUND 6.8 10% 3W
R314	⚠ 1-216-399-00	s	WIREWOUND 6.8 10% 3W
R315	1-247-807-31	s	CARBON 100 5% 1/4W
R316	1-216-121-91	s	METAL, CHIP 1M 5% 1/10W
R317	1-249-389-11	s	CARBON 4.7 5% 1/4W
R318	1-216-121-91	s	METAL, CHIP 1M 5% 1/10W
R319	1-216-057-00	s	METAL, CHIP 2.2K 5% 1/10W
R320	1-216-075-00	s	METAL, CHIP 12K 5% 1/10W
R321	1-216-081-00	s	METAL, CHIP 22K 5% 1/10W
R322	1-216-025-91	s	METAL, CHIP 100 5% 1/10W
R323	1-216-121-91	s	METAL, CHIP 1M 5% 1/10W
R324	1-216-033-00	s	METAL, CHIP 220 5% 1/10W
R325	1-216-065-00	s	METAL, CHIP 4.7K 5% 1/10W
R326	1-216-081-00	s	METAL, CHIP 22K 5% 1/10W
R327	1-216-095-00	s	METAL, CHIP 82K 5% 1/10W
R328	1-216-676-11	s	METAL, CHIP 11K 0.5% 1/10W
R329	1-216-057-00	s	METAL, CHIP 2.2K 5% 1/10W
R330	1-216-678-11	s	METAL, CHIP 13K 0.5% 1/10W
R331	1-216-025-91	s	METAL, CHIP 100 5% 1/10W

(AP-31AP BOARD(UVW-1600P))

Ref. No. or Q'ty	Part No.	SP	Description
R332	1-216-073-00	s	METAL, CHIP 10K 5% 1/10W
R333	1-216-073-00	s	METAL, CHIP 10K 5% 1/10W
R334	1-216-073-00	s	METAL, CHIP 10K 5% 1/10W
R335	1-216-684-91	s	METAL, CHIP 24k 0.5% 1/10W
R336	1-216-025-91	s	METAL, CHIP 100 5% 1/10W
R337	1-216-073-00	s	METAL, CHIP 10K 5% 1/10W
R338	1-216-073-00	s	METAL, CHIP 10K 5% 1/10W
R341	1-216-095-00	s	METAL, CHIP 82K 5% 1/10W
R342	1-216-073-00	s	METAL, CHIP 10K 5% 1/10W
R343	1-216-295-91	s	RES, CHIP 0
R350	1-216-295-91	s	RES, CHIP 0
R351	1-208-814-11	s	METAL, CHIP 22k 0.5% 1/10W
R387	1-208-799-11	s	METAL, CHIP 5.1k 0.5% 1/10W
R400	1-216-603-11	s	METAL, CHIP 10 0.5% 1/10W
R401	1-216-073-00	s	METAL, CHIP 10K 5% 1/10W
R402	1-216-049-91	s	METAL, CHIP 1k 5% 1/10W
R403	1-216-073-00	s	METAL, CHIP 10K 5% 1/10W
R405	1-216-049-91	s	METAL, CHIP 1k 5% 1/10W
R406	1-216-033-00	s	METAL, CHIP 220 5% 1/10W
R407	1-216-121-91	s	METAL, CHIP 1M 5% 1/10W
R408	1-216-053-00	s	METAL, CHIP 1.5K 5% 1/10W
R410	1-216-053-00	s	METAL, CHIP 1.5K 5% 1/10W
R412	1-216-049-91	s	METAL, CHIP 1k 5% 1/10W
R413	1-216-067-00	s	METAL, CHIP 5.6K 5% 1/10W
R414	1-216-089-91	s	METAL, CHIP 47k 5% 1/10W
R415	1-216-089-91	s	METAL, CHIP 47k 5% 1/10W
R416	1-216-057-00	s	METAL, CHIP 2.2K 5% 1/10W
R417	1-216-121-91	s	METAL, CHIP 1M 5% 1/10W
R418	1-216-049-91	s	METAL, CHIP 1k 5% 1/10W
R419	1-216-073-00	s	METAL, CHIP 10K 5% 1/10W
R420	1-216-113-00	s	METAL, CHIP 470K 5% 1/10W
R421	1-216-025-91	s	METAL, CHIP 100 5% 1/10W
R422	1-216-067-00	s	METAL, CHIP 5.6K 5% 1/10W
R423	1-216-089-91	s	METAL, CHIP 47k 5% 1/10W
R424	1-216-073-00	s	METAL, CHIP 10K 5% 1/10W
R425	1-216-065-00	s	METAL, CHIP 4.7K 5% 1/10W
R426	1-216-065-00	s	METAL, CHIP 4.7K 5% 1/10W
R427	1-216-025-91	s	METAL, CHIP 100 5% 1/10W
R428	1-216-073-00	s	METAL, CHIP 10K 5% 1/10W
R500	1-216-633-11	s	METAL, CHIP 180 0.5% 1/10W
R501	1-216-633-11	s	METAL, CHIP 180 0.5% 1/10W
R502	1-216-049-91	s	METAL, CHIP 1k 5% 1/10W
R602	1-247-855-11	s	CARBON 10K 5% 1/4W
RV1	1-241-789-11	s	RES, ADJ METAL 220k
RV2	1-241-783-11	s	RES, ADJ METAL 2.2k
RV3	1-241-783-11	s	RES, ADJ METAL 2.2k
RV4	1-241-785-11	s	RES, ADJ METAL 10k
RV5	1-241-786-11	s	RES, ADJ METAL 22k
RV201	1-241-789-11	s	RES, ADJ METAL 220k
RV202	1-241-783-11	s	RES, ADJ METAL 2.2k
RV203	1-241-783-11	s	RES, ADJ METAL 2.2k
RV204	1-241-785-11	s	RES, ADJ METAL 10k
RV205	1-241-786-11	s	RES, ADJ METAL 22k
S1	1-570-602-11	s	SWITCH, DIP 2-CKT
S2	1-570-602-11	s	SWITCH, DIP 2-CKT
S201	1-570-602-11	s	SWITCH, DIP 2-CKT
S202	1-570-602-11	s	SWITCH, DIP 2-CKT
TH1,2	1-807-972-11	s	THERMISTOR SV-1715 1.25k

AR-14 BOARD(UVW-1800)

Ref. No. or Q'ty	Part No.	SP	Description
AR-14 board is used for UVW-1800(J,UC).			
1pc	A-8275-287-A	o	MOUNTED CIRCUIT BOARD, AR-14
1pc	3-179-084-01	s	LEVER (R), PC BOARD
1pc	3-179-085-01	s	LEVER (L), PC BOARD
C1	1-163-137-00	s	CERAMIC, CHIP 680PF 5% 50V
C2	1-164-004-11	s	CERAMIC, CHIP 0.1uF 10% 25V
C3	1-163-137-00	s	CERAMIC, CHIP 680PF 5% 50V
C4	1-126-964-11	s	ELECT 10uF 20% 50V
C5	1-164-004-11	s	CERAMIC, CHIP 0.1uF 10% 25V
C6	1-163-137-00	s	CERAMIC, CHIP 680PF 5% 50V
C7	1-126-964-11	s	ELECT 10uF 20% 50V
C8	1-126-964-11	s	ELECT 10uF 20% 50V
C9	1-126-964-11	s	ELECT 10uF 20% 50V
C10	1-163-033-91	s	CERAMIC, CHIP 0.022uF 50V
C11	1-163-033-91	s	CERAMIC, CHIP 0.022uF 50V
C12	1-126-933-11	s	ELECT 100uF 20% 16V
C13	1-126-933-11	s	ELECT 100uF 20% 16V
C14	1-126-933-11	s	ELECT 100uF 20% 16V
C15	1-126-933-11	s	ELECT 100uF 20% 16V
C16-C20	1-163-033-91	s	CERAMIC, CHIP 0.022uF 50V
C21	1-126-933-11	s	ELECT 100uF 20% 16V
C22	1-164-004-11	s	CERAMIC, CHIP 0.1uF 10% 25V
C23	1-164-004-11	s	CERAMIC, CHIP 0.1uF 10% 25V
C101	1-126-947-11	s	ELECT 47uF 20% 35V
C102	1-126-947-11	s	ELECT 47uF 20% 35V
C103	1-163-275-11	s	CERAMIC, CHIP 0.001uF 5% 50V
C104	1-126-950-11	s	ELECT 330uF 20% 35V
C105	1-163-239-11	s	CERAMIC, CHIP 33PF 5% 50V
C106	1-163-239-11	s	CERAMIC, CHIP 33PF 5% 50V
C107	1-163-113-00	s	CERAMIC, CHIP 68PF 5% 50V
C108	1-163-113-00	s	CERAMIC, CHIP 68PF 5% 50V
C109	1-126-947-11	s	ELECT 47uF 20% 35V
C110	1-163-251-11	s	CERAMIC, CHIP 100PF 5% 50V
C111	1-163-251-11	s	CERAMIC, CHIP 100PF 5% 50V
C112	1-126-933-11	s	ELECT 100uF 20% 16V
C113	1-126-933-11	s	ELECT 100uF 20% 16V
C114	1-131-353-00	s	TANTALUM 10uF 10% 35V
C115	1-130-475-00	s	MYLAR 0.0022uF 5% 50V
C116	1-130-471-00	s	MYLAR 0.001uF 5% 50V
C117	1-163-227-11	s	CERAMIC, CHIP 10PF 5% 50V
C118	1-163-251-11	s	CERAMIC, CHIP 100PF 5% 50V
C119	1-130-489-00	s	MYLAR 0.033uF 5% 50V
C120	1-130-473-00	s	MYLAR 0.0015uF 5% 50V
C121	1-130-494-11	s	MYLAR 0.082uF 5% 50V
C122	1-126-964-11	s	ELECT 10uF 20% 50V
C123	1-163-275-11	s	CERAMIC, CHIP 0.001uF 5% 50V
C124	1-163-251-11	s	CERAMIC, CHIP 100PF 5% 50V
C130	1-126-964-11	s	ELECT 10uF 20% 50V
C131	1-163-263-11	s	CERAMIC, CHIP 330PF 5% 50V
C132	1-130-485-00	s	MYLAR 0.015uF 5% 50V
C133	1-163-125-00	s	CERAMIC, CHIP 220PF 5% 50V
C134	1-163-125-00	s	CERAMIC, CHIP 220PF 5% 50V
C135	1-130-479-00	s	MYLAR 0.0047uF 5% 50V
C136	1-130-487-00	s	MYLAR 0.022uF 5% 50V
C137	1-126-964-11	s	ELECT 10uF 20% 50V
C201	1-126-947-11	s	ELECT 47uF 20% 35V
C202	1-126-947-11	s	ELECT 47uF 20% 35V
C203	1-163-275-11	s	CERAMIC, CHIP 0.001uF 5% 50V

(AR-14 BOARD(UVW-1800))

Ref. No. or Q'ty	Part No.	SP	Description
C204	1-126-950-11	s	ELECT 330uF 20% 35V
C205	1-163-239-11	s	CERAMIC, CHIP 33PF 5% 50V
C206	1-163-239-11	s	CERAMIC, CHIP 33PF 5% 50V
C207	1-163-113-00	s	CERAMIC, CHIP 68PF 5% 50V
C208	1-163-113-00	s	CERAMIC, CHIP 68PF 5% 50V
C209	1-126-947-11	s	ELECT 47uF 20% 35V
C210	1-163-251-11	s	CERAMIC, CHIP 100PF 5% 50V
C211	1-163-251-11	s	CERAMIC, CHIP 100PF 5% 50V
C212	1-126-933-11	s	ELECT 100uF 20% 16V
C213	1-126-933-11	s	ELECT 100uF 20% 16V
C214	1-131-353-00	s	TANTALUM 10uF 10% 35V
C215	1-130-475-00	s	MYLAR 0.0022uF 5% 50V
C216	1-130-471-00	s	MYLAR 0.001uF 5% 50V
C217	1-163-227-11	s	CERAMIC, CHIP 10PF 5% 50V
C218	1-163-251-11	s	CERAMIC, CHIP 100PF 5% 50V
C219	1-130-489-00	s	MYLAR 0.033uF 5% 50V
C220	1-130-473-00	s	MYLAR 0.0015uF 5% 50V
C221	1-130-494-11	s	MYLAR 0.082uF 5% 50V
C222	1-126-964-11	s	ELECT 10uF 20% 50V
C223	1-163-275-11	s	CERAMIC, CHIP 0.001uF 5% 50V
C224	1-163-251-11	s	CERAMIC, CHIP 100PF 5% 50V
C230	1-126-964-11	s	ELECT 10uF 20% 50V
C231	1-163-263-11	s	CERAMIC, CHIP 330PF 5% 50V
C232	1-130-485-00	s	MYLAR 0.015uF 5% 50V
C233	1-163-125-00	s	CERAMIC, CHIP 220PF 5% 50V
C234	1-163-125-00	s	CERAMIC, CHIP 220PF 5% 50V
C235	1-130-479-00	s	MYLAR 0.0047uF 5% 50V
C236	1-130-487-00	s	MYLAR 0.022uF 5% 50V
C237	1-126-964-11	s	ELECT 10uF 20% 50V
C301	1-163-235-11	s	CERAMIC, CHIP 22PF 5% 50V
C302	1-163-235-11	s	CERAMIC, CHIP 22PF 5% 50V
C303	1-163-257-11	s	CERAMIC, CHIP 180PF 5% 50V
C305	1-163-133-00	s	CERAMIC, CHIP 470PF 5% 50V
C307	1-131-347-00	s	TANTALUM 1uF 10% 35V
C308	1-131-347-00	s	TANTALUM 1uF 10% 35V
C309	1-163-033-91	s	CERAMIC, CHIP 0.022uF 50V
C312	1-131-347-00	s	TANTALUM 1uF 10% 35V
C313	1-163-275-11	s	CERAMIC, CHIP 0.001uF 5% 50V
C322	1-131-347-00	s	TANTALUM 1uF 10% 35V
C323	1-163-275-11	s	CERAMIC, CHIP 0.001uF 5% 50V
C332	1-131-349-00	s	TANTALUM 2.2uF 10% 35V
C333	1-163-275-11	s	CERAMIC, CHIP 0.001uF 5% 50V
C334	1-126-963-11	s	ELECT 4.7uF 20% 50V
C335	1-136-561-11	s	FILM 0.0068uF 5% 630V
C336	1-131-347-00	s	TANTALUM 1uF 10% 35V
C337	1-163-033-91	s	CERAMIC, CHIP 0.022uF 50V
C342	1-131-349-00	s	TANTALUM 2.2uF 10% 35V
C343	1-163-275-11	s	CERAMIC, CHIP 0.001uF 5% 50V
C344	1-126-963-11	s	ELECT 4.7uF 20% 50V
C345	1-136-561-11	s	FILM 0.0068uF 5% 630V
C346	1-131-347-00	s	TANTALUM 1uF 10% 35V
C347	1-163-033-91	s	CERAMIC, CHIP 0.022uF 50V
C352	1-131-349-00	s	TANTALUM 2.2uF 10% 35V
C353	1-163-275-11	s	CERAMIC, CHIP 0.001uF 5% 50V
C354	1-126-947-11	s	ELECT 47uF 20% 35V
C355	1-136-561-11	s	FILM 0.0068uF 5% 630V
C356	1-131-347-00	s	TANTALUM 1uF 10% 35V
C364	1-109-900-11	s	CERAMIC, CHIP 470pF 5% 200V
C374	1-109-900-11	s	CERAMIC, CHIP 470pF 5% 200V

(AR-14 BOARD(UVW-1800))

Ref. No. or Q'ty	Part No.	SP	Description
CN1	1-506-474-11	s	CONNECTOR 9P, MALE
CN112	1-573-600-21	s	CONNECTOR, PHEC 100P, MALE
D1	8-719-123-85	s	DIODE 1SS304
D101	8-719-941-23	s	DIODE DA204U
D102	8-719-941-23	s	DIODE DA204U
D103	8-719-941-23	s	DIODE DA204U
D201	8-719-941-23	s	DIODE DA204U
D202	8-719-941-23	s	DIODE DA204U
D203	8-719-941-23	s	DIODE DA204U
D301	8-719-123-82	s	DIODE 1SS303-T1
D302	8-719-123-82	s	DIODE 1SS303-T1
D303	8-719-123-82	s	DIODE 1SS303-T1
D304	8-719-157-23	s	DIODE RD4.7M-B
D305	8-719-123-82	s	DIODE 1SS303-T1
D306	8-719-157-23	s	DIODE RD4.7M-B
D311	8-719-123-82	s	DIODE 1SS303-T1
D312	8-719-157-23	s	DIODE RD4.7M-B
D313	8-719-123-82	s	DIODE 1SS303-T1
D314	8-719-123-82	s	DIODE 1SS303-T1
D321	8-719-123-82	s	DIODE 1SS303-T1
D322	8-719-157-23	s	DIODE RD4.7M-B
D323	8-719-123-82	s	DIODE 1SS303-T1
D324	8-719-123-82	s	DIODE 1SS303-T1
D331	8-719-123-82	s	DIODE 1SS303-T1
D332	8-719-157-23	s	DIODE RD4.7M-B
D334	8-719-123-82	s	DIODE 1SS303-T1
D401	8-719-123-82	s	DIODE 1SS303-T1
D402	8-719-123-82	s	DIODE 1SS303-T1
IC1	8-759-140-53	s	IC UPD4053BC
IC2	8-759-705-58	s	IC NJM4558D-D
IC3	8-759-917-18	s	IC SN74HCU04AN
IC5	8-759-168-20	s	IC TA78L09S
IC6	8-759-700-68	s	IC NJM79L09A
IC7	8-759-168-20	s	IC TA78L09S
IC101	8-759-705-58	s	IC NJM4558D-D
IC102	8-759-705-58	s	IC NJM4558D-D
IC103	8-759-705-58	s	IC NJM4558D-D
IC104	8-759-705-58	s	IC NJM4558D-D
IC105	8-759-705-58	s	IC NJM4558D-D
IC201	8-759-705-58	s	IC NJM4558D-D
IC202	8-759-705-58	s	IC NJM4558D-D
IC203	8-759-705-58	s	IC NJM4558D-D
IC204	8-759-705-58	s	IC NJM4558D-D
IC205	8-759-705-58	s	IC NJM4558D-D
IC301	8-759-917-18	s	IC SN74HCU04AN
IC302	8-759-917-37	s	IC MC74HC4024N
IC303	8-759-038-14	s	IC MC74HC4538AN
IC304	8-759-916-16	s	IC MC74HC08AN
IC305	8-759-921-19	s	IC SN74HC161N
IC306	8-759-032-81	s	IC MC74HC74N
IC307	8-759-917-18	s	IC SN74HCU04AN
IC308	8-759-916-16	s	IC MC74HC08AN
IC309	8-759-135-80	s	IC UPC358C
IC310	8-759-135-80	s	IC UPC358C
IC311	8-759-916-12	s	IC SN74HC00N
IC312	8-759-917-18	s	IC SN74HCU04AN
IC313	8-759-135-80	s	IC UPC358C

(AR-14 BOARD(UVW-1800))

Ref. No. or Q'ty	Part No.	SP	Description
IC314	8-759-916-12	s	IC SN74HC00N
IC315	8-759-705-58	s	IC NJM4558D-D
IC316	8-759-705-58	s	IC NJM4558D-D
L1	1-410-470-11	s	INDUCTOR 10uH
L2	1-410-470-11	s	INDUCTOR 10uH
L101	1-410-478-11	s	INDUCTOR 47uH
L102	1-407-496-00	s	INDUCTOR 2.2mH
L201	1-410-478-11	s	INDUCTOR 47uH
L202	1-407-496-00	s	INDUCTOR 2.2mH
L301	1-410-470-11	s	INDUCTOR 10uH
L311	1-410-470-11	s	INDUCTOR 10uH
L321	1-410-470-11	s	INDUCTOR 10uH
LV101	1-410-853-21	s	COIL, VAR 4.5uH
LV201	1-410-853-21	s	COIL, VAR 4.5uH
LV301	1-414-007-11	s	COIL, VAR 1.5uH
LV311	1-414-007-11	s	COIL, VAR 1.5uH
LV321	1-414-007-11	s	COIL, VAR 1.5uH
PS1	⚠ 1-532-727-11	s	LINK, IC 0.25A
PS2	⚠ 1-532-727-11	s	LINK, IC 0.25A
Q1	8-729-117-32	s	TRANSISTOR 2SC4177
Q2	8-729-140-63	s	TRANSISTOR 2SA1611-M5M6
Q3	8-729-905-12	s	TRANSISTOR DTA144EU
Q4	8-729-905-12	s	TRANSISTOR DTA144EU
Q5	8-729-905-12	s	TRANSISTOR DTA144EU
Q101	8-729-209-06	s	TRANSISTOR 2SC4213-A
Q102	8-729-905-18	s	TRANSISTOR DTC144EU
Q103	8-729-905-12	s	TRANSISTOR DTA144EU
Q104	8-729-140-98	s	TRANSISTOR 2SD773-3
Q105	8-729-140-98	s	TRANSISTOR 2SD773-3
Q201	8-729-209-06	s	TRANSISTOR 2SC4213-A
Q202	8-729-905-18	s	TRANSISTOR DTC144EU
Q203	8-729-905-12	s	TRANSISTOR DTA144EU
Q204	8-729-140-98	s	TRANSISTOR 2SD773-3
Q205	8-729-140-98	s	TRANSISTOR 2SD773-3
Q301	8-729-203-30	s	TRANSISTOR 2SJ106Y
Q302	8-729-140-93	s	TRANSISTOR 2SB733-34
Q303	8-729-203-30	s	TRANSISTOR 2SJ106Y
Q304	8-729-140-93	s	TRANSISTOR 2SB733-34
Q305	8-729-140-98	s	TRANSISTOR 2SD773-3
Q306	8-729-140-98	s	TRANSISTOR 2SD773-3
Q311	8-729-203-30	s	TRANSISTOR 2SJ106Y
Q312	8-729-140-93	s	TRANSISTOR 2SB733-34
Q313	8-729-905-12	s	TRANSISTOR DTA144EU
Q314	8-729-140-63	s	TRANSISTOR 2SA1611-M5M6
Q315	8-729-140-63	s	TRANSISTOR 2SA1611-M5M6
Q316	8-729-140-98	s	TRANSISTOR 2SD773-3
Q317	8-729-140-98	s	TRANSISTOR 2SD773-3
Q318	8-729-140-63	s	TRANSISTOR 2SA1611-M5M6
Q319	8-729-140-98	s	TRANSISTOR 2SD773-3
Q321	8-729-203-30	s	TRANSISTOR 2SJ106Y
Q322	8-729-140-93	s	TRANSISTOR 2SB733-34
Q323	8-729-905-12	s	TRANSISTOR DTA144EU
Q324	8-729-140-63	s	TRANSISTOR 2SA1611-M5M6
Q325	8-729-140-63	s	TRANSISTOR 2SA1611-M5M6
Q326	8-729-140-98	s	TRANSISTOR 2SD773-3
Q327	8-729-140-98	s	TRANSISTOR 2SD773-3
Q328	8-729-140-63	s	TRANSISTOR 2SA1611-M5M6
Q329	8-729-140-98	s	TRANSISTOR 2SD773-3

(AR-14 BOARD(UVW-1800))

Ref. No. or Q'ty	Part No.	SP	Description
Q331	8-729-203-30	s	TRANSISTOR 2SJ106Y
Q332	8-729-140-93	s	TRANSISTOR 2SB733-34
Q333	8-729-905-12	s	TRANSISTOR DTA144EU
Q334	8-729-140-63	s	TRANSISTOR 2SA1611-M5M6
Q335	8-729-140-63	s	TRANSISTOR 2SA1611-M5M6
Q336	8-729-140-98	s	TRANSISTOR 2SD773-3
Q337	8-729-140-98	s	TRANSISTOR 2SD773-3
Q339	8-729-140-98	s	TRANSISTOR 2SD773-3
R1	1-216-682-11	s	METAL, CHIP 20K 0.5% 1/10W
R2	1-216-682-11	s	METAL, CHIP 20K 0.5% 1/10W
R3	1-216-097-91	s	METAL, CHIP 100k 5% 1/10W
R4	1-216-073-00	s	METAL, CHIP 10K 5% 1/10W
R5	1-216-097-91	s	METAL, CHIP 100k 5% 1/10W
R6	1-216-073-00	s	METAL, CHIP 10K 5% 1/10W
R7	1-216-073-00	s	METAL, CHIP 10K 5% 1/10W
R8	1-216-097-91	s	METAL, CHIP 100k 5% 1/10W
R9	1-216-049-91	s	METAL, CHIP 1k 5% 1/10W
R10	1-216-073-00	s	METAL, CHIP 10K 5% 1/10W
R11	1-216-073-00	s	METAL, CHIP 10K 5% 1/10W
R12	1-216-097-91	s	METAL, CHIP 100k 5% 1/10W
R13	1-216-073-00	s	METAL, CHIP 10K 5% 1/10W
R14	1-216-073-00	s	METAL, CHIP 10K 5% 1/10W
R15	1-216-073-00	s	METAL, CHIP 10K 5% 1/10W
R16	1-216-097-91	s	METAL, CHIP 100k 5% 1/10W
R17	1-216-073-00	s	METAL, CHIP 10K 5% 1/10W
R18-R25	1-216-097-91	s	METAL, CHIP 100k 5% 1/10W
R26	1-216-049-91	s	METAL, CHIP 1k 5% 1/10W
R27	1-216-073-00	s	METAL, CHIP 10K 5% 1/10W
R103	1-208-799-11	s	METAL, CHIP 5.1k 0.5% 1/10W
R104	1-208-799-11	s	METAL, CHIP 5.1k 0.5% 1/10W
R105	1-216-642-11	s	METAL, CHIP 430 0.5% 1/10W
R106	1-216-641-11	s	METAL, CHIP 390 0.5% 1/10W
R107	1-216-633-11	s	METAL, CHIP 180 0.5% 1/10W
R108	1-216-097-91	s	METAL, CHIP 100k 5% 1/10W
R109	1-216-097-91	s	METAL, CHIP 100k 5% 1/10W
R110	1-216-061-00	s	METAL, CHIP 3.3K 5% 1/10W
R111	1-216-061-00	s	METAL, CHIP 3.3K 5% 1/10W
R112	1-216-061-00	s	METAL, CHIP 3.3K 5% 1/10W
R113	1-216-049-91	s	METAL, CHIP 1k 5% 1/10W
R114	1-216-049-91	s	METAL, CHIP 1k 5% 1/10W
R115	1-216-065-00	s	METAL, CHIP 4.7K 5% 1/10W
R116	1-216-065-00	s	METAL, CHIP 4.7K 5% 1/10W
R117	1-216-025-91	s	METAL, CHIP 100 5% 1/10W
R118	1-216-057-00	s	METAL, CHIP 2.2K 5% 1/10W
R119	1-216-073-00	s	METAL, CHIP 10K 5% 1/10W
R120	1-216-073-00	s	METAL, CHIP 10K 5% 1/10W
R121	1-216-073-00	s	METAL, CHIP 10K 5% 1/10W
R122	1-216-073-00	s	METAL, CHIP 10K 5% 1/10W
R123	1-216-073-00	s	METAL, CHIP 10K 5% 1/10W
R124	1-216-057-00	s	METAL, CHIP 2.2K 5% 1/10W
R125	1-216-049-91	s	METAL, CHIP 1k 5% 1/10W
R126	1-216-073-00	s	METAL, CHIP 10K 5% 1/10W
R127	1-216-674-11	s	METAL, CHIP 9.1K 0.5% 1/10W
R128	1-216-097-91	s	METAL, CHIP 100k 5% 1/10W
R129	1-216-109-00	s	METAL, CHIP 330K 5% 1/10W
R130	1-216-095-00	s	METAL, CHIP 82K 5% 1/10W
R131	1-216-295-91	s	RES, CHIP 0
R132	1-216-097-91	s	METAL, CHIP 100k 5% 1/10W

(AR-14 BOARD(UVW-1800))

Ref. No. or Q'ty	Part No.	SP	Description
R133	1-216-041-00	s	METAL, CHIP 470 5% 1/10W
R134	1-216-041-00	s	METAL, CHIP 470 5% 1/10W
R135	1-216-009-00	s	METAL, CHIP 22 5% 1/10W
R136	1-216-045-00	s	METAL, CHIP 680 5% 1/10W
R137	1-216-077-00	s	METAL, CHIP 15K 5% 1/10W
R138	1-216-089-91	s	METAL, CHIP 47k 5% 1/10W
R139 ⚠	1-215-905-11	s	METAL 10 5% 3W
R140 ⚠	1-215-905-11	s	METAL 10 5% 3W
R141	1-216-097-91	s	METAL, CHIP 100k 5% 1/10W
R142	1-216-097-91	s	METAL, CHIP 100k 5% 1/10W
R143	1-216-089-91	s	METAL, CHIP 47k 5% 1/10W
R144	1-216-065-00	s	METAL, CHIP 4.7K 5% 1/10W
R146	1-216-073-00	s	METAL, CHIP 10K 5% 1/10W
R147	1-216-049-91	s	METAL, CHIP 1k 5% 1/10W
R148	1-216-073-00	s	METAL, CHIP 10K 5% 1/10W
R149	1-216-117-00	s	METAL, CHIP 680K 5% 1/10W
R150	1-216-097-91	s	METAL, CHIP 100k 5% 1/10W
R151-155	1-216-073-00	s	METAL, CHIP 10K 5% 1/10W
R152	1-216-073-00	s	METAL, CHIP 10K 5% 1/10W
R153	1-216-073-00	s	METAL, CHIP 10K 5% 1/10W
R154	1-216-073-00	s	METAL, CHIP 10K 5% 1/10W
R155	1-216-073-00	s	METAL, CHIP 10K 5% 1/10W
R156	1-216-665-11	s	METAL, CHIP 3.9K 0.5% 1/10W
R203	1-208-799-11	s	METAL, CHIP 5.1k 0.5% 1/10W
R204	1-208-799-11	s	METAL, CHIP 5.1k 0.5% 1/10W
R205	1-216-642-11	s	METAL, CHIP 430 0.5% 1/10W
R206	1-216-641-11	s	METAL, CHIP 390 0.5% 1/10W
R207	1-216-633-11	s	METAL, CHIP 180 0.5% 1/10W
R208	1-216-097-91	s	METAL, CHIP 100k 5% 1/10W
R209	1-216-097-91	s	METAL, CHIP 100k 5% 1/10W
R210	1-216-061-00	s	METAL, CHIP 3.3K 5% 1/10W
R211	1-216-061-00	s	METAL, CHIP 3.3K 5% 1/10W
R212	1-216-061-00	s	METAL, CHIP 3.3K 5% 1/10W
R213	1-216-049-91	s	METAL, CHIP 1k 5% 1/10W
R214	1-216-049-91	s	METAL, CHIP 1k 5% 1/10W
R215	1-216-065-00	s	METAL, CHIP 4.7K 5% 1/10W
R216	1-216-065-00	s	METAL, CHIP 4.7K 5% 1/10W
R217	1-216-025-91	s	METAL, CHIP 100 5% 1/10W
R218	1-216-057-00	s	METAL, CHIP 2.2K 5% 1/10W
R219	1-216-073-00	s	METAL, CHIP 10K 5% 1/10W
R220	1-216-073-00	s	METAL, CHIP 10K 5% 1/10W
R221	1-216-073-00	s	METAL, CHIP 10K 5% 1/10W
R222	1-216-073-00	s	METAL, CHIP 10K 5% 1/10W
R223	1-216-073-00	s	METAL, CHIP 10K 5% 1/10W
R224	1-216-057-00	s	METAL, CHIP 2.2K 5% 1/10W
R225	1-216-049-91	s	METAL, CHIP 1k 5% 1/10W
R226	1-216-073-00	s	METAL, CHIP 10K 5% 1/10W
R227	1-216-674-11	s	METAL, CHIP 9.1K 0.5% 1/10W
R228	1-216-097-91	s	METAL, CHIP 100k 5% 1/10W
R229	1-216-109-00	s	METAL, CHIP 330K 5% 1/10W
R230	1-216-095-00	s	METAL, CHIP 82K 5% 1/10W
R231	1-216-295-91	s	RES, CHIP 0
R232	1-216-097-91	s	METAL, CHIP 100k 5% 1/10W
R233	1-216-041-00	s	METAL, CHIP 470 5% 1/10W
R234	1-216-041-00	s	METAL, CHIP 470 5% 1/10W
R235	1-216-009-00	s	METAL, CHIP 22 5% 1/10W
R236	1-216-045-00	s	METAL, CHIP 680 5% 1/10W
R237	1-216-077-00	s	METAL, CHIP 15K 5% 1/10W
R238	1-216-089-91	s	METAL, CHIP 47k 5% 1/10W

(AR-14 BOARD(UVW-1800))

Ref. No. or Q'ty	Part No.	SP	Description
R239	⚠ 1-215-905-11	s	METAL 10 5% 3W
R240	⚠ 1-215-905-11	s	METAL 10 5% 3W
R241	1-216-097-91	s	METAL, CHIP 100k 5% 1/10W
R242	1-216-097-91	s	METAL, CHIP 100k 5% 1/10W
R243	1-216-089-91	s	METAL, CHIP 47k 5% 1/10W
R244	1-216-065-00	s	METAL, CHIP 4.7K 5% 1/10W
R246	1-216-073-00	s	METAL, CHIP 10K 5% 1/10W
R247	1-216-049-91	s	METAL, CHIP 1k 5% 1/10W
R248	1-216-073-00	s	METAL, CHIP 10K 5% 1/10W
R249	1-216-117-00	s	METAL, CHIP 680K 5% 1/10W
R250	1-216-097-91	s	METAL, CHIP 100k 5% 1/10W
R251	1-216-073-00	s	METAL, CHIP 10K 5% 1/10W
R252	1-216-073-00	s	METAL, CHIP 10K 5% 1/10W
R253	1-216-073-00	s	METAL, CHIP 10K 5% 1/10W
R254	1-216-073-00	s	METAL, CHIP 10K 5% 1/10W
R255	1-216-073-00	s	METAL, CHIP 10K 5% 1/10W
R256	1-216-665-11	s	METAL, CHIP 3.9K 0.5% 1/10W
R301	1-216-121-91	s	METAL, CHIP 1M 5% 1/10W
R302	1-216-097-91	s	METAL, CHIP 100k 5% 1/10W
R303	1-216-677-11	s	METAL, CHIP 12K 0.5% 1/10W
R304	1-216-049-91	s	METAL, CHIP 1k 5% 1/10W
R305	1-208-803-11	s	METAL, CHIP 7.5k 0.5% 1/10W
R306	1-216-049-91	s	METAL, CHIP 1k 5% 1/10W
R307	1-216-089-91	s	METAL, CHIP 47k 5% 1/10W
R308	1-216-089-91	s	METAL, CHIP 47k 5% 1/10W
R309	1-216-057-00	s	METAL, CHIP 2.2K 5% 1/10W
R310	1-216-057-00	s	METAL, CHIP 2.2K 5% 1/10W
R311	1-216-057-00	s	METAL, CHIP 2.2K 5% 1/10W
R312	1-216-057-00	s	METAL, CHIP 2.2K 5% 1/10W
R313	1-216-065-00	s	METAL, CHIP 4.7K 5% 1/10W
R314	1-216-081-00	s	METAL, CHIP 22K 5% 1/10W
R315	1-216-689-11	s	METAL, CHIP 39K 0.5% 1/10W
R316	1-208-806-11	s	METAL, CHIP 10k 0.5% 1/10W
R317	1-216-673-11	s	METAL, CHIP 8.2K 0.5% 1/10W
R318	1-216-077-00	s	METAL, CHIP 15K 5% 1/10W
R319	1-216-077-00	s	METAL, CHIP 15K 5% 1/10W
R320	1-216-057-00	s	METAL, CHIP 2.2K 5% 1/10W
R321	1-216-065-00	s	METAL, CHIP 4.7K 5% 1/10W
R322	1-216-085-00	s	METAL, CHIP 33K 5% 1/10W
R323	1-216-065-00	s	METAL, CHIP 4.7K 5% 1/10W
R324	1-216-081-00	s	METAL, CHIP 22K 5% 1/10W
R325	1-216-689-11	s	METAL, CHIP 39K 0.5% 1/10W
R326	1-208-806-11	s	METAL, CHIP 10k 0.5% 1/10W
R327	1-216-673-11	s	METAL, CHIP 8.2K 0.5% 1/10W
R328	1-216-077-00	s	METAL, CHIP 15K 5% 1/10W
R329	1-216-077-00	s	METAL, CHIP 15K 5% 1/10W
R330	1-216-057-00	s	METAL, CHIP 2.2K 5% 1/10W
R331	1-216-065-00	s	METAL, CHIP 4.7K 5% 1/10W
R332	1-216-085-00	s	METAL, CHIP 33K 5% 1/10W
R341	1-216-057-00	s	METAL, CHIP 2.2K 5% 1/10W
R342	1-216-081-00	s	METAL, CHIP 22K 5% 1/10W
R343	1-216-085-00	s	METAL, CHIP 33K 5% 1/10W
R344	1-216-049-91	s	METAL, CHIP 1k 5% 1/10W
R345	1-208-814-11	s	METAL, CHIP 22k 0.5% 1/10W
R346	1-216-687-11	s	METAL, CHIP 33K 0.5% 1/10W
R347	1-216-057-00	s	METAL, CHIP 2.2K 5% 1/10W
R348	1-216-065-00	s	METAL, CHIP 4.7K 5% 1/10W
R349	1-216-085-00	s	METAL, CHIP 33K 5% 1/10W
R350	1-216-089-91	s	METAL, CHIP 47k 5% 1/10W

(AR-14 BOARD(UVW-1800))

Ref. No. or Q'ty	Part No.	SP	Description
R351	1-216-073-00	s	METAL, CHIP 10K 5% 1/10W
R352	1-216-073-00	s	METAL, CHIP 10K 5% 1/10W
R353	1-216-073-00	s	METAL, CHIP 10K 5% 1/10W
R354	1-216-073-00	s	METAL, CHIP 10K 5% 1/10W
R355	1-216-057-00	s	METAL, CHIP 2.2K 5% 1/10W
R356	1-216-057-00	s	METAL, CHIP 2.2K 5% 1/10W
R357	1-216-061-00	s	METAL, CHIP 3.3K 5% 1/10W
R358	1-216-061-00	s	METAL, CHIP 3.3K 5% 1/10W
R359	⚠ 1-216-397-11	s	METAL 4.7 5% 3W
R361	⚠ 1-216-397-11	s	METAL 4.7 5% 3W
R363	1-217-671-11	s	METAL, CHIP 1 5% 1/10W
R364	1-216-073-00	s	METAL, CHIP 10K 5% 1/10W
R365	1-216-073-00	s	METAL, CHIP 10K 5% 1/10W
R366	1-216-699-11	s	METAL, CHIP 100K 0.5% 1/10W
R371	1-216-057-00	s	METAL, CHIP 2.2K 5% 1/10W
R372	1-216-081-00	s	METAL, CHIP 22K 5% 1/10W
R373	1-216-085-00	s	METAL, CHIP 33K 5% 1/10W
R374	1-216-049-91	s	METAL, CHIP 1k 5% 1/10W
R375	1-208-814-11	s	METAL, CHIP 22k 0.5% 1/10W
R376	1-216-687-11	s	METAL, CHIP 33K 0.5% 1/10W
R377	1-216-057-00	s	METAL, CHIP 2.2K 5% 1/10W
R378	1-216-065-00	s	METAL, CHIP 4.7K 5% 1/10W
R379	1-216-085-00	s	METAL, CHIP 33K 5% 1/10W
R380	1-216-089-91	s	METAL, CHIP 47k 5% 1/10W
R381	1-216-073-00	s	METAL, CHIP 10K 5% 1/10W
R382	1-216-073-00	s	METAL, CHIP 10K 5% 1/10W
R383	1-216-073-00	s	METAL, CHIP 10K 5% 1/10W
R384	1-216-073-00	s	METAL, CHIP 10K 5% 1/10W
R385	1-216-057-00	s	METAL, CHIP 2.2K 5% 1/10W
R386	1-216-057-00	s	METAL, CHIP 2.2K 5% 1/10W
R387	1-216-061-00	s	METAL, CHIP 3.3K 5% 1/10W
R388	1-216-061-00	s	METAL, CHIP 3.3K 5% 1/10W
R389	⚠ 1-216-397-11	s	METAL 4.7 5% 3W
R391	⚠ 1-216-397-11	s	METAL 4.7 5% 3W
R393	1-217-671-11	s	METAL, CHIP 1 5% 1/10W
R394	1-216-073-00	s	METAL, CHIP 10K 5% 1/10W
R395	1-216-073-00	s	METAL, CHIP 10K 5% 1/10W
R396	1-216-699-11	s	METAL, CHIP 100K 0.5% 1/10W
R397	1-249-421-11	s	CARBON 2.2K 5% 1/4W
R398	1-249-421-11	s	CARBON 2.2K 5% 1/4W
R399	1-249-421-11	s	CARBON 2.2K 5% 1/4W
R401	1-216-057-00	s	METAL, CHIP 2.2K 5% 1/10W
R402	1-216-081-00	s	METAL, CHIP 22K 5% 1/10W
R403	1-216-085-00	s	METAL, CHIP 33K 5% 1/10W
R404	1-216-295-91	s	RES, CHIP 0
R405	1-208-800-11	s	METAL, CHIP 5.6k 0.5% 1/10W
R406	1-216-687-11	s	METAL, CHIP 33K 0.5% 1/10W
R407	1-216-057-00	s	METAL, CHIP 2.2K 5% 1/10W
R408	1-216-065-00	s	METAL, CHIP 4.7K 5% 1/10W
R409	1-216-085-00	s	METAL, CHIP 33K 5% 1/10W
R410	1-216-089-91	s	METAL, CHIP 47k 5% 1/10W
R411	1-216-073-00	s	METAL, CHIP 10K 5% 1/10W
R412	1-216-073-00	s	METAL, CHIP 10K 5% 1/10W
R413	1-216-073-00	s	METAL, CHIP 10K 5% 1/10W
R414	1-216-073-00	s	METAL, CHIP 10K 5% 1/10W
R415	1-216-057-00	s	METAL, CHIP 2.2K 5% 1/10W
R416	1-216-057-00	s	METAL, CHIP 2.2K 5% 1/10W
R417	1-216-061-00	s	METAL, CHIP 3.3K 5% 1/10W
R418	1-216-061-00	s	METAL, CHIP 3.3K 5% 1/10W

(AR-14 BOARD(UVW-1800))

Ref. No. or Q'ty	Part No.	SP	Description
R419 ⚠	1-216-397-11	s	METAL 4.7 5% 3W
R421 ⚠	1-216-397-11	s	METAL 4.7 5% 3W
R423	1-217-671-11	s	METAL, CHIP 1 5% 1/10W
R426	1-216-699-11	s	METAL, CHIP 100K 0.5% 1/10W
RV106	1-241-783-11	s	RES, ADJ METAL 2.2k
RV107	1-241-786-11	s	RES, ADJ METAL 22k
RV108	1-241-785-11	s	RES, ADJ METAL 10k
RV109	1-241-761-11	s	RES, ADJ METAL 1k
RV110	1-241-761-11	s	RES, ADJ METAL 1k
RV111	1-241-784-11	s	RES, ADJ METAL 4.7k
RV112	1-241-785-11	s	RES, ADJ METAL 10k
RV206	1-241-783-11	s	RES, ADJ METAL 2.2k
RV207	1-241-786-11	s	RES, ADJ METAL 22k
RV208	1-241-785-11	s	RES, ADJ METAL 10k
RV209	1-241-761-11	s	RES, ADJ METAL 1k
RV210	1-241-761-11	s	RES, ADJ METAL 1k
RV211	1-241-784-11	s	RES, ADJ METAL 4.7k
RV212	1-241-785-11	s	RES, ADJ METAL 10k
RV301	1-241-765-11	s	RES, ADJ METAL 22k
RV302	1-241-765-11	s	RES, ADJ METAL 22k
RY301	1-515-434-00	s	RELAY, REED
RY311	1-515-434-00	s	RELAY, REED
S103	1-570-602-11	s	SWITCH, DIP 2-CKT
S203	1-570-602-11	s	SWITCH, DIP 2-CKT
T101	1-423-870-11	s	TRANSFORMER, BIAS OSC
T201	1-423-870-11	s	TRANSFORMER, BIAS OSC
T301	1-424-511-11	s	TRANSFORMER, FE
T311	1-424-511-11	s	TRANSFORMER, FE
T321	1-424-511-11	s	TRANSFORMER, FE
TH1	1-807-972-11	s	THERMISTOR SV-1715 1.25k
TH2	1-807-972-11	s	THERMISTOR SV-1715 1.25k
X301	1-567-861-21	s	CRYSTAL 4.194304MHz

AR-14P BOARD(UVW-1800P)

Ref. No. or Q'ty	Part No.	SP	Description
AR-14P board is used for UVW-1800P(EK).			
1pc	A-8275-472-A	o	MOUNTED CIRCUIT BOARD, AR-14P
1pc	3-179-084-01	s	LEVER (R), PC BOARD
1pc	3-179-085-01	s	LEVER (L), PC BOARD
C1	1-163-137-00	s	CERAMIC, CHIP 680PF 5% 50V
C2	1-164-004-11	s	CERAMIC, CHIP 0.1uF 10% 25V
C3	1-163-137-00	s	CERAMIC, CHIP 680PF 5% 50V
C4	1-126-964-11	s	ELECT 10uF 20% 50V
C5	1-164-004-11	s	CERAMIC, CHIP 0.1uF 10% 25V
C6	1-163-137-00	s	CERAMIC, CHIP 680PF 5% 50V
C7	1-126-964-11	s	ELECT 10uF 20% 50V
C8	1-126-964-11	s	ELECT 10uF 20% 50V
C9	1-126-964-11	s	ELECT 10uF 20% 50V
C10	1-163-033-91	s	CERAMIC, CHIP 0.022uF 50V
C11	1-163-033-91	s	CERAMIC, CHIP 0.022uF 50V
C12	1-126-933-11	s	ELECT 100uF 20% 16V
C13	1-126-933-11	s	ELECT 100uF 20% 16V
C14	1-126-933-11	s	ELECT 100uF 20% 16V
C15	1-126-933-11	s	ELECT 100uF 20% 16V
C16-C20	1-163-033-91	s	CERAMIC, CHIP 0.022uF 50V
C21	1-126-933-11	s	ELECT 100uF 20% 16V
C22	1-164-004-11	s	CERAMIC, CHIP 0.1uF 10% 25V
C23	1-164-004-11	s	CERAMIC, CHIP 0.1uF 10% 25V
C101	1-126-947-11	s	ELECT 47uF 20% 35V
C102	1-126-947-11	s	ELECT 47uF 20% 35V
C103	1-163-275-11	s	CERAMIC, CHIP 0.001uF 5% 50V
C104	1-126-950-11	s	ELECT 330uF 20% 35V
C105	1-163-239-11	s	CERAMIC, CHIP 33PF 5% 50V
C106	1-163-239-11	s	CERAMIC, CHIP 33PF 5% 50V
C107	1-163-113-00	s	CERAMIC, CHIP 68PF 5% 50V
C108	1-163-113-00	s	CERAMIC, CHIP 68PF 5% 50V
C109	1-126-947-11	s	ELECT 47uF 20% 35V
C110	1-163-251-11	s	CERAMIC, CHIP 100PF 5% 50V
C111	1-163-251-11	s	CERAMIC, CHIP 100PF 5% 50V
C112	1-126-933-11	s	ELECT 100uF 20% 16V
C113	1-126-933-11	s	ELECT 100uF 20% 16V
C114	1-131-353-00	s	TANTALUM 10uF 10% 35V
C115	1-130-476-00	s	MYLAR 0.0027uF 5% 50V
C116	1-130-474-00	s	MYLAR 0.0018uF 5% 50V
C117	1-163-227-11	s	CERAMIC, CHIP 10PF 5% 50V
C119	1-130-489-00	s	MYLAR 0.033uF 5% 50V
C120	1-130-476-00	s	MYLAR 0.0027uF 5% 50V
C121	1-130-494-11	s	MYLAR 0.082uF 5% 50V
C122	1-126-964-11	s	ELECT 10uF 20% 50V
C123	1-163-275-11	s	CERAMIC, CHIP 0.001uF 5% 50V
C124	1-163-251-11	s	CERAMIC, CHIP 100PF 5% 50V
C130	1-126-964-11	s	ELECT 10uF 20% 50V
C131	1-163-263-11	s	CERAMIC, CHIP 330PF 5% 50V
C132	1-130-485-00	s	MYLAR 0.015uF 5% 50V
C133	1-163-125-00	s	CERAMIC, CHIP 220PF 5% 50V
C134	1-163-125-00	s	CERAMIC, CHIP 220PF 5% 50V
C135	1-130-483-00	s	MYLAR 0.01uF 5% 50V
C136	1-130-483-00	s	MYLAR 0.01uF 5% 50V
C137	1-126-964-11	s	ELECT 10uF 20% 50V
C201	1-126-947-11	s	ELECT 47uF 20% 35V
C202	1-126-947-11	s	ELECT 47uF 20% 35V
C203	1-163-275-11	s	CERAMIC, CHIP 0.001uF 5% 50V
C204	1-126-950-11	s	ELECT 330uF 20% 35V

(AR-14P BOARD(UVW-1800P))

Ref. No. or Q'ty	Part No.	SP	Description
C205	1-163-239-11	s	CERAMIC, CHIP 33PF 5% 50V
C206	1-163-239-11	s	CERAMIC, CHIP 33PF 5% 50V
C207	1-163-113-00	s	CERAMIC, CHIP 68PF 5% 50V
C208	1-163-113-00	s	CERAMIC, CHIP 68PF 5% 50V
C209	1-126-947-11	s	ELECT 47uF 20% 35V
C210	1-163-251-11	s	CERAMIC, CHIP 100PF 5% 50V
C211	1-163-251-11	s	CERAMIC, CHIP 100PF 5% 50V
C212	1-126-933-11	s	ELECT 100uF 20% 16V
C213	1-126-933-11	s	ELECT 100uF 20% 16V
C214	1-131-353-00	s	TANTALUM 10uF 10% 35V
C215	1-130-476-00	s	MYLAR 0.0027uF 5% 50V
C216	1-130-474-00	s	MYLAR 0.0018uF 5% 50V
C217	1-163-227-11	s	CERAMIC, CHIP 10PF 5% 50V
C219	1-130-489-00	s	MYLAR 0.033uF 5% 50V
C220	1-130-476-00	s	MYLAR 0.0027uF 5% 50V
C221	1-130-494-11	s	MYLAR 0.082uF 5% 50V
C222	1-126-964-11	s	ELECT 10uF 20% 50V
C223	1-163-275-11	s	CERAMIC, CHIP 0.001uF 5% 50V
C224	1-163-251-11	s	CERAMIC, CHIP 100PF 5% 50V
C230	1-126-964-11	s	ELECT 10uF 20% 50V
C231	1-163-263-11	s	CERAMIC, CHIP 330PF 5% 50V
C232	1-130-485-00	s	MYLAR 0.015uF 5% 50V
C233	1-163-125-00	s	CERAMIC, CHIP 220PF 5% 50V
C234	1-163-125-00	s	CERAMIC, CHIP 220PF 5% 50V
C235	1-130-483-00	s	MYLAR 0.01uF 5% 50V
C236	1-130-483-00	s	MYLAR 0.01uF 5% 50V
C237	1-126-964-11	s	ELECT 10uF 20% 50V
C301	1-163-235-11	s	CERAMIC, CHIP 22PF 5% 50V
C302	1-163-235-11	s	CERAMIC, CHIP 22PF 5% 50V
C303	1-163-257-11	s	CERAMIC, CHIP 180PF 5% 50V
C305	1-163-133-00	s	CERAMIC, CHIP 470PF 5% 50V
C307	1-131-347-00	s	TANTALUM 1uF 10% 35V
C308	1-131-347-00	s	TANTALUM 1uF 10% 35V
C309	1-163-033-91	s	CERAMIC, CHIP 0.022uF 50V
C312	1-131-347-00	s	TANTALUM 1uF 10% 35V
C313	1-163-275-11	s	CERAMIC, CHIP 0.001uF 5% 50V
C322	1-131-347-00	s	TANTALUM 1uF 10% 35V
C323	1-163-275-11	s	CERAMIC, CHIP 0.001uF 5% 50V
C332	1-131-349-00	s	TANTALUM 2.2uF 10% 35V
C333	1-163-275-11	s	CERAMIC, CHIP 0.001uF 5% 50V
C334	1-126-963-11	s	ELECT 4.7uF 20% 50V
C335	1-136-561-11	s	FILM 0.0068uF 5% 630V
C336	1-131-347-00	s	TANTALUM 1uF 10% 35V
C337	1-163-033-91	s	CERAMIC, CHIP 0.022uF 50V
C342	1-131-349-00	s	TANTALUM 2.2uF 10% 35V
C343	1-163-275-11	s	CERAMIC, CHIP 0.001uF 5% 50V
C344	1-126-963-11	s	ELECT 4.7uF 20% 50V
C345	1-136-561-11	s	FILM 0.0068uF 5% 630V
C346	1-131-347-00	s	TANTALUM 1uF 10% 35V
C347	1-163-033-91	s	CERAMIC, CHIP 0.022uF 50V
C352	1-131-349-00	s	TANTALUM 2.2uF 10% 35V
C353	1-163-275-11	s	CERAMIC, CHIP 0.001uF 5% 50V
C354	1-126-947-11	s	ELECT 47uF 20% 35V
C355	1-136-561-11	s	FILM 0.0068uF 5% 630V
C356	1-131-347-00	s	TANTALUM 1uF 10% 35V
C364	1-109-900-11	s	CERAMIC, CHIP 470pF 5% 200V
C374	1-109-900-11	s	CERAMIC, CHIP 470pF 5% 200V
CN1	1-506-474-11	s	CONNECTOR 9P, MALE

(AR-14P BOARD(UVW-1800P))

Ref. No. or Q'ty	Part No.	SP	Description
CN112	1-573-600-21	s	CONNECTOR, PHEC 100P, MALE
D1	8-719-123-85	s	DIODE 1SS304
D101	8-719-941-23	s	DIODE DA204U
D102	8-719-941-23	s	DIODE DA204U
D103	8-719-941-23	s	DIODE DA204U
D201	8-719-941-23	s	DIODE DA204U
D202	8-719-941-23	s	DIODE DA204U
D203	8-719-941-23	s	DIODE DA204U
D301	8-719-123-82	s	DIODE 1SS303-T1
D302	8-719-123-82	s	DIODE 1SS303-T1
D303	8-719-123-82	s	DIODE 1SS303-T1
D304	8-719-157-23	s	DIODE RD4.7M-B
D305	8-719-123-82	s	DIODE 1SS303-T1
D306	8-719-157-23	s	DIODE RD4.7M-B
D311	8-719-123-82	s	DIODE 1SS303-T1
D312	8-719-157-23	s	DIODE RD4.7M-B
D313	8-719-123-82	s	DIODE 1SS303-T1
D314	8-719-123-82	s	DIODE 1SS303-T1
D321	8-719-123-82	s	DIODE 1SS303-T1
D322	8-719-157-23	s	DIODE RD4.7M-B
D323	8-719-123-82	s	DIODE 1SS303-T1
D324	8-719-123-82	s	DIODE 1SS303-T1
D331	8-719-123-82	s	DIODE 1SS303-T1
D332	8-719-157-23	s	DIODE RD4.7M-B
D334	8-719-123-82	s	DIODE 1SS303-T1
D401	8-719-123-82	s	DIODE 1SS303-T1
D402	8-719-123-82	s	DIODE 1SS303-T1
IC1	8-759-140-53	s	IC UPD4053BC
IC2	8-759-705-58	s	IC NJM4558D-D
IC3	8-759-917-18	s	IC SN74HCU04AN
IC5	8-759-168-20	s	IC TA78L09S
IC6	8-759-700-68	s	IC NJM79L09A
IC7	8-759-168-20	s	IC TA78L09S
IC101	8-759-705-58	s	IC NJM4558D-D
IC102	8-759-705-58	s	IC NJM4558D-D
IC103	8-759-705-58	s	IC NJM4558D-D
IC104	8-759-705-58	s	IC NJM4558D-D
IC105	8-759-705-58	s	IC NJM4558D-D
IC201	8-759-705-58	s	IC NJM4558D-D
IC202	8-759-705-58	s	IC NJM4558D-D
IC203	8-759-705-58	s	IC NJM4558D-D
IC204	8-759-705-58	s	IC NJM4558D-D
IC205	8-759-705-58	s	IC NJM4558D-D
IC301	8-759-917-18	s	IC SN74HCU04AN
IC302	8-759-917-37	s	IC MC74HC4024N
IC303	8-759-038-14	s	IC MC74HC4538AN
IC304	8-759-916-16	s	IC MC74HC08AN
IC305	8-759-921-19	s	IC SN74HC161N
IC306	8-759-032-81	s	IC MC74HC74N
IC307	8-759-917-18	s	IC SN74HCU04AN
IC308	8-759-916-16	s	IC MC74HC08AN
IC309	8-759-135-80	s	IC UPC358C
IC310	8-759-135-80	s	IC UPC358C
IC311	8-759-916-12	s	IC SN74HC00N
IC312	8-759-917-18	s	IC SN74HCU04AN
IC313	8-759-135-80	s	IC UPC358C
IC314	8-759-916-12	s	IC SN74HC00N

(AR-14P BOARD(UVW-1800P))

Ref. No. or Q'ty	Part No.	SP	Description
IC315	8-759-705-58	s	IC NJM4558D-D
IC316	8-759-705-58	s	IC NJM4558D-D
L1	1-410-470-11	s	INDUCTOR 10uH
L2	1-410-470-11	s	INDUCTOR 10uH
L101	1-410-478-11	s	INDUCTOR 47uH
L102	1-407-496-00	s	INDUCTOR 2.2mH
L201	1-410-478-11	s	INDUCTOR 47uH
L202	1-407-496-00	s	INDUCTOR 2.2mH
L301	1-410-470-11	s	INDUCTOR 10uH
L311	1-410-470-11	s	INDUCTOR 10uH
L321	1-410-470-11	s	INDUCTOR 10uH
LV101	1-410-853-21	s	COIL, VAR 4.5uH
LV201	1-410-853-21	s	COIL, VAR 4.5uH
LV301	1-414-007-11	s	COIL, VAR 1.5uH
LV311	1-414-007-11	s	COIL, VAR 1.5uH
LV321	1-414-007-11	s	COIL, VAR 1.5uH
PS1	⚠ 1-532-727-11	s	LINK, IC 0.25A
PS2	⚠ 1-532-727-11	s	LINK, IC 0.25A
Q1	8-729-117-32	s	TRANSISTOR 2SC4177
Q2	8-729-140-63	s	TRANSISTOR 2SA1611-M5M6
Q3	8-729-905-12	s	TRANSISTOR DTA144EU
Q4	8-729-905-12	s	TRANSISTOR DTA144EU
Q5	8-729-905-12	s	TRANSISTOR DTA144EU
Q101	8-729-209-06	s	TRANSISTOR 2SC4213-A
Q102	8-729-905-18	s	TRANSISTOR DTC144EU
Q103	8-729-905-12	s	TRANSISTOR DTA144EU
Q104	8-729-140-98	s	TRANSISTOR 2SD773-3
Q105	8-729-140-98	s	TRANSISTOR 2SD773-3
Q201	8-729-209-06	s	TRANSISTOR 2SC4213-A
Q202	8-729-905-18	s	TRANSISTOR DTC144EU
Q203	8-729-905-12	s	TRANSISTOR DTA144EU
Q204	8-729-140-98	s	TRANSISTOR 2SD773-3
Q205	8-729-140-98	s	TRANSISTOR 2SD773-3
Q301	8-729-203-30	s	TRANSISTOR 2SJ106Y
Q302	8-729-140-93	s	TRANSISTOR 2SB733-34
Q303	8-729-203-30	s	TRANSISTOR 2SJ106Y
Q304	8-729-140-93	s	TRANSISTOR 2SB733-34
Q305	8-729-140-98	s	TRANSISTOR 2SD773-3
Q306	8-729-140-98	s	TRANSISTOR 2SD773-3
Q311	8-729-203-30	s	TRANSISTOR 2SJ106Y
Q312	8-729-140-93	s	TRANSISTOR 2SB733-34
Q313	8-729-905-12	s	TRANSISTOR DTA144EU
Q314	8-729-140-63	s	TRANSISTOR 2SA1611-M5M6
Q315	8-729-140-63	s	TRANSISTOR 2SA1611-M5M6
Q316	8-729-140-98	s	TRANSISTOR 2SD773-3
Q317	8-729-140-98	s	TRANSISTOR 2SD773-3
Q318	8-729-140-63	s	TRANSISTOR 2SA1611-M5M6
Q319	8-729-140-98	s	TRANSISTOR 2SD773-3
Q321	8-729-203-30	s	TRANSISTOR 2SJ106Y
Q322	8-729-140-93	s	TRANSISTOR 2SB733-34
Q323	8-729-905-12	s	TRANSISTOR DTA144EU
Q324	8-729-140-63	s	TRANSISTOR 2SA1611-M5M6
Q325	8-729-140-63	s	TRANSISTOR 2SA1611-M5M6
Q326	8-729-140-98	s	TRANSISTOR 2SD773-3
Q327	8-729-140-98	s	TRANSISTOR 2SD773-3
Q328	8-729-140-63	s	TRANSISTOR 2SA1611-M5M6
Q329	8-729-140-98	s	TRANSISTOR 2SD773-3
Q331	8-729-203-30	s	TRANSISTOR 2SJ106Y

(AR-14P BOARD(UVW-1800P))

Ref. No. or Q'ty	Part No.	SP	Description
Q332	8-729-140-93	s	TRANSISTOR 2SB733-34
Q333	8-729-905-12	s	TRANSISTOR DTA144EU
Q334	8-729-140-63	s	TRANSISTOR 2SA1611-M5M6
Q335	8-729-140-63	s	TRANSISTOR 2SA1611-M5M6
Q336	8-729-140-98	s	TRANSISTOR 2SD773-3
Q337	8-729-140-98	s	TRANSISTOR 2SD773-3
Q339	8-729-140-98	s	TRANSISTOR 2SD773-3
R1	1-216-682-11	s	METAL, CHIP 20K 0.5% 1/10W
R2	1-216-682-11	s	METAL, CHIP 20K 0.5% 1/10W
R3	1-216-097-91	s	METAL, CHIP 100k 5% 1/10W
R4	1-216-073-00	s	METAL, CHIP 10K 5% 1/10W
R5	1-216-097-91	s	METAL, CHIP 100k 5% 1/10W
R6	1-216-073-00	s	METAL, CHIP 10K 5% 1/10W
R7	1-216-073-00	s	METAL, CHIP 10K 5% 1/10W
R8	1-216-097-91	s	METAL, CHIP 100k 5% 1/10W
R9	1-216-049-91	s	METAL, CHIP 1k 5% 1/10W
R10	1-216-073-00	s	METAL, CHIP 10K 5% 1/10W
R11	1-216-073-00	s	METAL, CHIP 10K 5% 1/10W
R12	1-216-097-91	s	METAL, CHIP 100k 5% 1/10W
R13	1-216-073-00	s	METAL, CHIP 10K 5% 1/10W
R14	1-216-073-00	s	METAL, CHIP 10K 5% 1/10W
R15	1-216-073-00	s	METAL, CHIP 10K 5% 1/10W
R16	1-216-097-91	s	METAL, CHIP 100k 5% 1/10W
R17	1-216-073-00	s	METAL, CHIP 10K 5% 1/10W
R18-R25	1-216-097-91	s	METAL, CHIP 100k 5% 1/10W
R26	1-216-049-91	s	METAL, CHIP 1k 5% 1/10W
R27	1-216-073-00	s	METAL, CHIP 10K 5% 1/10W
R103	1-208-799-11	s	METAL, CHIP 5.1k 0.5% 1/10W
R104	1-208-799-11	s	METAL, CHIP 5.1k 0.5% 1/10W
R105	1-216-642-11	s	METAL, CHIP 430 0.5% 1/10W
R106	1-216-641-11	s	METAL, CHIP 390 0.5% 1/10W
R107	1-216-633-11	s	METAL, CHIP 180 0.5% 1/10W
R108	1-216-097-91	s	METAL, CHIP 100k 5% 1/10W
R109	1-216-097-91	s	METAL, CHIP 100k 5% 1/10W
R110	1-216-061-00	s	METAL, CHIP 3.3K 5% 1/10W
R111	1-216-061-00	s	METAL, CHIP 3.3K 5% 1/10W
R112	1-216-061-00	s	METAL, CHIP 3.3K 5% 1/10W
R113	1-216-049-91	s	METAL, CHIP 1k 5% 1/10W
R114	1-216-049-91	s	METAL, CHIP 1k 5% 1/10W
R115	1-216-065-00	s	METAL, CHIP 4.7K 5% 1/10W
R116	1-216-065-00	s	METAL, CHIP 4.7K 5% 1/10W
R117	1-216-025-91	s	METAL, CHIP 100 5% 1/10W
R118	1-216-057-00	s	METAL, CHIP 2.2K 5% 1/10W
R119	1-216-073-00	s	METAL, CHIP 10K 5% 1/10W
R120	1-216-073-00	s	METAL, CHIP 10K 5% 1/10W
R121	1-216-073-00	s	METAL, CHIP 10K 5% 1/10W
R122	1-216-073-00	s	METAL, CHIP 10K 5% 1/10W
R123	1-216-073-00	s	METAL, CHIP 10K 5% 1/10W
R124	1-216-057-00	s	METAL, CHIP 2.2K 5% 1/10W
R125	1-216-049-91	s	METAL, CHIP 1k 5% 1/10W
R126	1-216-073-00	s	METAL, CHIP 10K 5% 1/10W
R127	1-216-674-11	s	METAL, CHIP 9.1K 0.5% 1/10W
R128	1-216-071-00	s	METAL, CHIP 8.2K 5% 1/10W
R130	1-216-095-00	s	METAL, CHIP 82K 5% 1/10W
R131	1-216-295-91	s	RES, CHIP 0
R132	1-216-097-91	s	METAL, CHIP 100k 5% 1/10W
R133	1-216-041-00	s	METAL, CHIP 470 5% 1/10W
R134	1-216-041-00	s	METAL, CHIP 470 5% 1/10W

(AR-14P BOARD(UVW-1800P))

Ref. No. or Q'ty	Part No.	SP	Description
R135	1-216-009-00	s	METAL, CHIP 22 5% 1/10W
R136	1-216-045-00	s	METAL, CHIP 680 5% 1/10W
R137	1-216-077-00	s	METAL, CHIP 15K 5% 1/10W
R138	1-216-089-91	s	METAL, CHIP 47k 5% 1/10W
R139 ⚠	1-215-905-11	s	METAL 10 5% 3W
R140 ⚠	1-215-905-11	s	METAL 10 5% 3W
R141	1-216-097-91	s	METAL, CHIP 100k 5% 1/10W
R142	1-216-097-91	s	METAL, CHIP 100k 5% 1/10W
R143	1-216-089-91	s	METAL, CHIP 47k 5% 1/10W
R144	1-216-075-00	s	METAL, CHIP 12K 5% 1/10W
R146	1-216-073-00	s	METAL, CHIP 10K 5% 1/10W
R147	1-216-647-11	s	METAL, CHIP 680 0.5% 1/10W
R148	1-216-073-00	s	METAL, CHIP 10K 5% 1/10W
R149	1-216-117-00	s	METAL, CHIP 680K 5% 1/10W
R150	1-216-097-91	s	METAL, CHIP 100k 5% 1/10W
R151-155	1-216-073-00	s	METAL, CHIP 10K 5% 1/10W
R156	1-216-665-11	s	METAL, CHIP 3.9K 0.5% 1/10W
R203	1-208-799-11	s	METAL, CHIP 5.1k 0.5% 1/10W
R204	1-208-799-11	s	METAL, CHIP 5.1k 0.5% 1/10W
R205	1-216-642-11	s	METAL, CHIP 430 0.5% 1/10W
R206	1-216-641-11	s	METAL, CHIP 390 0.5% 1/10W
R207	1-216-633-11	s	METAL, CHIP 180 0.5% 1/10W
R208	1-216-097-91	s	METAL, CHIP 100k 5% 1/10W
R209	1-216-097-91	s	METAL, CHIP 100k 5% 1/10W
R210	1-216-061-00	s	METAL, CHIP 3.3K 5% 1/10W
R211	1-216-061-00	s	METAL, CHIP 3.3K 5% 1/10W
R212	1-216-061-00	s	METAL, CHIP 3.3K 5% 1/10W
R213	1-216-049-91	s	METAL, CHIP 1k 5% 1/10W
R214	1-216-049-91	s	METAL, CHIP 1k 5% 1/10W
R215	1-216-065-00	s	METAL, CHIP 4.7K 5% 1/10W
R216	1-216-065-00	s	METAL, CHIP 4.7K 5% 1/10W
R217	1-216-025-91	s	METAL, CHIP 100 5% 1/10W
R218	1-216-057-00	s	METAL, CHIP 2.2K 5% 1/10W
R219	1-216-073-00	s	METAL, CHIP 10K 5% 1/10W
R220	1-216-073-00	s	METAL, CHIP 10K 5% 1/10W
R221	1-216-073-00	s	METAL, CHIP 10K 5% 1/10W
R222	1-216-073-00	s	METAL, CHIP 10K 5% 1/10W
R223	1-216-073-00	s	METAL, CHIP 10K 5% 1/10W
R224	1-216-057-00	s	METAL, CHIP 2.2K 5% 1/10W
R225	1-216-049-91	s	METAL, CHIP 1k 5% 1/10W
R226	1-216-073-00	s	METAL, CHIP 10K 5% 1/10W
R227	1-216-674-11	s	METAL, CHIP 9.1K 0.5% 1/10W
R228	1-216-071-00	s	METAL, CHIP 8.2K 5% 1/10W
R230	1-216-095-00	s	METAL, CHIP 82K 5% 1/10W
R231	1-216-295-91	s	RES, CHIP 0
R232	1-216-097-91	s	METAL, CHIP 100k 5% 1/10W
R233	1-216-041-00	s	METAL, CHIP 470 5% 1/10W
R234	1-216-041-00	s	METAL, CHIP 470 5% 1/10W
R235	1-216-009-00	s	METAL, CHIP 22 5% 1/10W
R236	1-216-045-00	s	METAL, CHIP 680 5% 1/10W
R237	1-216-077-00	s	METAL, CHIP 15K 5% 1/10W
R238	1-216-089-91	s	METAL, CHIP 47k 5% 1/10W
R239 ⚠	1-215-905-11	s	METAL 10 5% 3W
R240 ⚠	1-215-905-11	s	METAL 10 5% 3W
R241	1-216-097-91	s	METAL, CHIP 100k 5% 1/10W
R242	1-216-097-91	s	METAL, CHIP 100k 5% 1/10W
R243	1-216-089-91	s	METAL, CHIP 47k 5% 1/10W
R244	1-216-075-00	s	METAL, CHIP 12K 5% 1/10W
R246	1-216-073-00	s	METAL, CHIP 10K 5% 1/10W

(AR-14P BOARD(UVW-1800P))

Ref. No. or Q'ty	Part No.	SP	Description
R247	1-216-647-11	s	METAL, CHIP 680 0.5% 1/10W
R248	1-216-073-00	s	METAL, CHIP 10K 5% 1/10W
R249	1-216-117-00	s	METAL, CHIP 680K 5% 1/10W
R250	1-216-097-91	s	METAL, CHIP 100k 5% 1/10W
R251-255	1-216-073-00	s	METAL, CHIP 10K 5% 1/10W
R256	1-216-665-11	s	METAL, CHIP 3.9K 0.5% 1/10W
R301	1-216-121-91	s	METAL, CHIP 1M 5% 1/10W
R302	1-216-097-91	s	METAL, CHIP 100k 5% 1/10W
R303	1-216-677-11	s	METAL, CHIP 12K 0.5% 1/10W
R304	1-216-049-91	s	METAL, CHIP 1k 5% 1/10W
R305	1-208-803-11	s	METAL, CHIP 7.5k 0.5% 1/10W
R306	1-216-049-91	s	METAL, CHIP 1k 5% 1/10W
R307	1-216-089-91	s	METAL, CHIP 47k 5% 1/10W
R308	1-216-089-91	s	METAL, CHIP 47k 5% 1/10W
R309	1-216-057-00	s	METAL, CHIP 2.2K 5% 1/10W
R310	1-216-057-00	s	METAL, CHIP 2.2K 5% 1/10W
R311	1-216-057-00	s	METAL, CHIP 2.2K 5% 1/10W
R312	1-216-057-00	s	METAL, CHIP 2.2K 5% 1/10W
R313	1-216-065-00	s	METAL, CHIP 4.7K 5% 1/10W
R314	1-216-081-00	s	METAL, CHIP 22K 5% 1/10W
R315	1-216-689-11	s	METAL, CHIP 39K 0.5% 1/10W
R316	1-208-806-11	s	METAL, CHIP 10k 0.5% 1/10W
R317	1-216-673-11	s	METAL, CHIP 8.2K 0.5% 1/10W
R318	1-216-077-00	s	METAL, CHIP 15K 5% 1/10W
R319	1-216-077-00	s	METAL, CHIP 15K 5% 1/10W
R320	1-216-057-00	s	METAL, CHIP 2.2K 5% 1/10W
R321	1-216-065-00	s	METAL, CHIP 4.7K 5% 1/10W
R322	1-216-085-00	s	METAL, CHIP 33K 5% 1/10W
R323	1-216-065-00	s	METAL, CHIP 4.7K 5% 1/10W
R324	1-216-081-00	s	METAL, CHIP 22K 5% 1/10W
R325	1-216-689-11	s	METAL, CHIP 39K 0.5% 1/10W
R326	1-208-806-11	s	METAL, CHIP 10k 0.5% 1/10W
R327	1-216-673-11	s	METAL, CHIP 8.2K 0.5% 1/10W
R328	1-216-077-00	s	METAL, CHIP 15K 5% 1/10W
R329	1-216-077-00	s	METAL, CHIP 15K 5% 1/10W
R330	1-216-057-00	s	METAL, CHIP 2.2K 5% 1/10W
R331	1-216-065-00	s	METAL, CHIP 4.7K 5% 1/10W
R332	1-216-085-00	s	METAL, CHIP 33K 5% 1/10W
R341	1-216-057-00	s	METAL, CHIP 2.2K 5% 1/10W
R342	1-216-081-00	s	METAL, CHIP 22K 5% 1/10W
R343	1-216-085-00	s	METAL, CHIP 33K 5% 1/10W
R344	1-216-049-91	s	METAL, CHIP 1k 5% 1/10W
R345	1-208-814-11	s	METAL, CHIP 22k 0.5% 1/10W
R346	1-216-687-11	s	METAL, CHIP 33K 0.5% 1/10W
R347	1-216-057-00	s	METAL, CHIP 2.2K 5% 1/10W
R348	1-216-065-00	s	METAL, CHIP 4.7K 5% 1/10W
R349	1-216-085-00	s	METAL, CHIP 33K 5% 1/10W
R350	1-216-089-91	s	METAL, CHIP 47k 5% 1/10W
R351	1-216-073-00	s	METAL, CHIP 10K 5% 1/10W
R352	1-216-073-00	s	METAL, CHIP 10K 5% 1/10W
R353	1-216-073-00	s	METAL, CHIP 10K 5% 1/10W
R354	1-216-073-00	s	METAL, CHIP 10K 5% 1/10W
R355	1-216-057-00	s	METAL, CHIP 2.2K 5% 1/10W
R356	1-216-057-00	s	METAL, CHIP 2.2K 5% 1/10W
R357	1-216-061-00	s	METAL, CHIP 3.3K 5% 1/10W
R358	1-216-061-00	s	METAL, CHIP 3.3K 5% 1/10W
R359 ⚠	1-216-397-11	s	METAL 4.7 5% 3W
R361 ⚠	1-216-397-11	s	METAL 4.7 5% 3W
R363	1-217-671-11	s	METAL, CHIP 1 5% 1/10W

(AR-14P BOARD(UVW-1800P))

Ref. No. or Q'ty	Part No.	SP	Description
R364	1-216-073-00	s	METAL, CHIP 10K 5% 1/10W
R365	1-216-073-00	s	METAL, CHIP 10K 5% 1/10W
R366	1-216-699-11	s	METAL, CHIP 100K 0.5% 1/10W
R371	1-216-057-00	s	METAL, CHIP 2.2K 5% 1/10W
R372	1-216-081-00	s	METAL, CHIP 22K 5% 1/10W
R373	1-216-085-00	s	METAL, CHIP 33K 5% 1/10W
R374	1-216-049-91	s	METAL, CHIP 1k 5% 1/10W
R375	1-208-814-11	s	METAL, CHIP 22k 0.5% 1/10W
R376	1-216-687-11	s	METAL, CHIP 33K 0.5% 1/10W
R377	1-216-057-00	s	METAL, CHIP 2.2K 5% 1/10W
R378	1-216-065-00	s	METAL, CHIP 4.7K 5% 1/10W
R379	1-216-085-00	s	METAL, CHIP 33K 5% 1/10W
R380	1-216-089-91	s	METAL, CHIP 47k 5% 1/10W
R381	1-216-073-00	s	METAL, CHIP 10K 5% 1/10W
R382	1-216-073-00	s	METAL, CHIP 10K 5% 1/10W
R383	1-216-073-00	s	METAL, CHIP 10K 5% 1/10W
R384	1-216-073-00	s	METAL, CHIP 10K 5% 1/10W
R385	1-216-057-00	s	METAL, CHIP 2.2K 5% 1/10W
R386	1-216-057-00	s	METAL, CHIP 2.2K 5% 1/10W
R387	1-216-061-00	s	METAL, CHIP 3.3K 5% 1/10W
R388	1-216-061-00	s	METAL, CHIP 3.3K 5% 1/10W
R389 ⚠	1-216-397-11	s	METAL 4.7 5% 3W
R391 ⚠	1-216-397-11	s	METAL 4.7 5% 3W
R393	1-217-671-11	s	METAL, CHIP 1 5% 1/10W
R394	1-216-073-00	s	METAL, CHIP 10K 5% 1/10W
R395	1-216-073-00	s	METAL, CHIP 10K 5% 1/10W
R396	1-216-699-11	s	METAL, CHIP 100K 0.5% 1/10W
R397	1-249-421-11	s	CARBON 2.2K 5% 1/4W
R398	1-249-421-11	s	CARBON 2.2K 5% 1/4W
R399	1-249-421-11	s	CARBON 2.2K 5% 1/4W
R401	1-216-057-00	s	METAL, CHIP 2.2K 5% 1/10W
R402	1-216-081-00	s	METAL, CHIP 22K 5% 1/10W
R403	1-216-085-00	s	METAL, CHIP 33K 5% 1/10W
R404	1-216-295-91	s	RES, CHIP 0
R405	1-208-800-11	s	METAL, CHIP 5.6k 0.5% 1/10W
R406	1-216-687-11	s	METAL, CHIP 33K 0.5% 1/10W
R407	1-216-057-00	s	METAL, CHIP 2.2K 5% 1/10W
R408	1-216-065-00	s	METAL, CHIP 4.7K 5% 1/10W
R409	1-216-085-00	s	METAL, CHIP 33K 5% 1/10W
R410	1-216-089-91	s	METAL, CHIP 47k 5% 1/10W
R411	1-216-073-00	s	METAL, CHIP 10K 5% 1/10W
R412	1-216-073-00	s	METAL, CHIP 10K 5% 1/10W
R413	1-216-073-00	s	METAL, CHIP 10K 5% 1/10W
R414	1-216-073-00	s	METAL, CHIP 10K 5% 1/10W
R415	1-216-057-00	s	METAL, CHIP 2.2K 5% 1/10W
R416	1-216-057-00	s	METAL, CHIP 2.2K 5% 1/10W
R417	1-216-061-00	s	METAL, CHIP 3.3K 5% 1/10W
R418	1-216-061-00	s	METAL, CHIP 3.3K 5% 1/10W
R419 ⚠	1-216-397-11	s	METAL 4.7 5% 3W
R421 ⚠	1-216-397-11	s	METAL 4.7 5% 3W
R423	1-217-671-11	s	METAL, CHIP 1 5% 1/10W
R426	1-216-699-11	s	METAL, CHIP 100K 0.5% 1/10W
RV106	1-241-783-11	s	RES, ADJ METAL 2.2k
RV107	1-241-786-11	s	RES, ADJ METAL 22k
RV108	1-241-783-11	s	RES, ADJ METAL 2.2k
RV109	1-241-761-11	s	RES, ADJ METAL 1k
RV110	1-241-761-11	s	RES, ADJ METAL 1k
RV111	1-241-784-11	s	RES, ADJ METAL 4.7k

(AR-14P BOARD(UVW-1800P))

Ref. No. or Q'ty	Part No.	SP	Description
RV112	1-241-785-11	s	RES, ADJ METAL 10k
RV206	1-241-783-11	s	RES, ADJ METAL 2.2k
RV207	1-241-786-11	s	RES, ADJ METAL 22k
RV208	1-241-783-11	s	RES, ADJ METAL 2.2k
RV209	1-241-761-11	s	RES, ADJ METAL 1k
RV210	1-241-761-11	s	RES, ADJ METAL 1k
RV211	1-241-784-11	s	RES, ADJ METAL 4.7k
RV212	1-241-785-11	s	RES, ADJ METAL 10k
RV301	1-241-765-11	s	RES, ADJ METAL 22k
RV302	1-241-765-11	s	RES, ADJ METAL 22k
RY301	1-515-434-00	s	RELAY, REED
RY311	1-515-434-00	s	RELAY, REED
S103	1-570-602-11	s	SWITCH, DIP 2-CKT
S203	1-570-602-11	s	SWITCH, DIP 2-CKT
T101	1-423-870-11	s	TRANSFORMER, BIAS OSC
T201	1-423-870-11	s	TRANSFORMER, BIAS OSC
T301	1-424-511-11	s	TRANSFORMER, FE
T311	1-424-511-11	s	TRANSFORMER, FE
T321	1-424-511-11	s	TRANSFORMER, FE
TH1	1-807-972-11	s	THERMISTOR SV-1715 1.25k
TH2	1-807-972-11	s	THERMISTOR SV-1715 1.25k
X301	1-567-861-21	s	CRYSTAL 4.194304MHz

CL-29 BOARD

Ref. No. or Q'ty	Part No.	SP	Description
1pc	A-8276-626-B	o	MOUNTED CIRCUIT BOARD, CL-29
1pc	3-171-424-02	o	HOLDER, SENSOR
C1	1-161-051-00	s	CERAMIC 0.01uF 10% 50V
CN930	1-564-011-11	o	CONNECTOR 12P, MALE
CN931	1-564-001-11	o	CONNECTOR 2P, MALE
CN933	1-573-599-11	s	CONNECTOR 5P, FEMALE
CN935	1-564-001-11	o	CONNECTOR 2P, MALE
D1	8-719-938-07	s	LED GL480, INFRARED
D2	8-719-938-07	s	LED GL480, INFRARED
Q1	8-729-903-81	s	PHOTOTRANSISTOR PT480
Q2	8-729-903-81	s	PHOTOTRANSISTOR PT480
R1	1-247-825-31	s	CARBON 560 5% 1/4W
R2	1-247-825-31	s	CARBON 560 5% 1/4W

CP-225 BOARD(UVW-1800/1800P)

CP-225 board is used for UVW-1800/1800P(J,UC,EK).

Ref. No. or Q'ty	Part No.	SP	Description
1pc	A-8276-738-A	o	MOUNTED CIRCUIT BOARD, CP-225
C1	1-126-933-11	s	ELECT 100uF 20% 16V
C2	1-126-933-11	s	ELECT 100uF 20% 16V
C3	1-126-933-11	s	ELECT 100uF 20% 16V
C5	1-163-809-11	s	CERAMIC, CHIP 0.047uF 10% 25V
C6	1-163-809-11	s	CERAMIC, CHIP 0.047uF 10% 25V
C7	1-163-809-11	s	CERAMIC, CHIP 0.047uF 10% 25V
CN1	1-573-582-11	s	CONNECTOR, BNC, FEMALE
CN2	1-573-582-11	s	CONNECTOR, BNC, FEMALE
CN3	1-573-590-13	s	CONNECTOR, CIRCULAR 4P(S), FEMALE
CN5	1-573-582-11	s	CONNECTOR, BNC, FEMALE
CN6	1-573-582-11	s	CONNECTOR, BNC, FEMALE
CN7	1-573-590-13	s	CONNECTOR, CIRCULAR 4P(S), FEMALE
CN9	1-766-596-11	s	JACK, PIN 1P
CN10	1-573-589-11	s	CONNECTOR, CIRCULAR 12P, MALE
CN11	1-573-592-11	s	CONNECTOR, CIRCULAR 12P, FEMALE
CN651	1-564-014-11	s	CONNECTOR 4P, MALE
CN652	1-506-486-11	s	CONNECTOR 7P, MALE
CN653	1-506-485-11	s	CONNECTOR 6P, MALE
CN654	1-506-491-11	s	CONNECTOR 12P, MALE
CN655	1-506-493-11	s	CONNECTOR 14P, MALE
CN656	1-564-001-11	o	CONNECTOR 2P, MALE
FL3	1-236-058-11	s	FILTER, NOISE
FL4	1-236-058-11	s	FILTER, NOISE
FL5	1-236-129-11	s	FILTER, NOISE
FL6	1-236-129-11	s	FILTER, NOISE
FL7	1-236-129-11	s	FILTER, NOISE
FL8	1-236-129-11	s	FILTER, NOISE
FL9	1-236-129-11	s	FILTER, NOISE
FL10	1-236-129-11	s	FILTER, NOISE
FL11	1-236-129-11	s	FILTER, NOISE
FL12	1-236-129-11	s	FILTER, NOISE
JW1-JW9	1-219-202-11	s	RES 0
JW13-17	1-219-202-11	s	RES 0
Q1	8-729-117-32	s	TRANSISTOR 2SC4177
Q2	8-729-117-32	s	TRANSISTOR 2SC4177
R1	1-216-025-91	s	METAL, CHIP 100 5% 1/10W
R2	1-216-077-00	s	METAL, CHIP 15K 5% 1/10W
R3	1-216-624-11	s	METAL, CHIP 75 0.5% 1/10W
R4	1-216-045-00	s	METAL, CHIP 680 5% 1/10W
R5	1-216-025-91	s	METAL, CHIP 100 5% 1/10W
R6	1-216-077-00	s	METAL, CHIP 15K 5% 1/10W
R7	1-216-624-11	s	METAL, CHIP 75 0.5% 1/10W
R8	1-216-045-00	s	METAL, CHIP 680 5% 1/10W
R9	1-216-009-00	s	METAL, CHIP 22 5% 1/10W
R10	1-216-009-00	s	METAL, CHIP 22 5% 1/10W
R11-R16	1-216-625-11	s	METAL, CHIP 82 0.5% 1/10W
S1	1-570-157-51	s	SWITCH, SLIDE
S2	1-570-157-51	s	SWITCH, SLIDE
S3	1-570-756-11	s	SWITCH, SLIDE

CP-225A BOARD(UVW-1600/1600P)

CP-225A board is used for UVW-1600/1600P(J,UC,EK).

Ref. No. or Q'ty	Part No.	SP	Description
1pc	A-8276-732-A	o	MOUNTED CIRCUIT BOARD, CP-225A
C1	1-126-933-11	s	ELECT 100uF 20% 16V
C5	1-163-809-11	s	CERAMIC, CHIP 0.047uF 10% 25V
C6	1-163-809-11	s	CERAMIC, CHIP 0.047uF 10% 25V
C7	1-163-809-11	s	CERAMIC, CHIP 0.047uF 10% 25V
CN1	1-573-582-11	s	CONNECTOR, BNC, FEMALE
CN5	1-573-583-11	s	CONNECTOR, BNC, FEMALE
CN6	1-573-582-11	s	CONNECTOR, BNC, FEMALE
CN7	1-573-590-13	s	CONNECTOR, CIRCULAR 4P(S), FEMALE
CN9	1-766-596-11	s	JACK, PIN 1P
CN11	1-573-592-11	s	CONNECTOR, CIRCULAR 12P, FEMALE
CN651	1-564-014-11	s	CONNECTOR 4P, MALE
CN652	1-506-486-11	s	CONNECTOR 7P, MALE
CN653	1-506-485-11	s	CONNECTOR 6P, MALE
CN655	1-506-493-11	s	CONNECTOR 14P, MALE
CN656	1-564-001-11	o	CONNECTOR 2P, MALE
FL6	1-236-129-11	s	FILTER, NOISE
FL7	1-236-129-11	s	FILTER, NOISE
FL8	1-236-129-11	s	FILTER, NOISE
FL9	1-236-129-11	s	FILTER, NOISE
FL10	1-236-129-11	s	FILTER, NOISE
FL11	1-236-129-11	s	FILTER, NOISE
FL12	1-236-129-11	s	FILTER, NOISE
JW2	1-219-202-11	s	RES 0
JW8	1-219-202-11	s	RES 0
JW9	1-219-202-11	s	RES 0
JW13	1-219-202-11	s	RES 0
JW16	1-219-202-11	s	RES 0
Q1	8-729-117-32	s	TRANSISTOR 2SC4177
R1	1-216-025-91	s	METAL, CHIP 100 5% 1/10W
R2	1-216-077-00	s	METAL, CHIP 15K 5% 1/10W
R3	1-216-624-11	s	METAL, CHIP 75 0.5% 1/10W
R4	1-216-045-00	s	METAL, CHIP 680 5% 1/10W
R9	1-216-009-00	s	METAL, CHIP 22 5% 1/10W
R16	1-216-625-11	s	METAL, CHIP 82 0.5% 1/10W
S1	1-570-157-51	s	SWITCH, SLIDE

CP-226 BOARD(UVW-1800/1800P)

CP-226 board is used for UVW-1800/1800P(UC,EK).

Ref. No. or Q'ty	Part No.	SP	Description
1pc	A-8276-739-A	o	MOUNTED CIRCUIT BOARD, CP-226
C1	1-163-809-11	s	CERAMIC, CHIP 0.047uF 10% 25V
C21	1-163-809-11	s	CERAMIC, CHIP 0.047uF 10% 25V
CN101	1-750-786-11	s	CONNECTOR, XLR 3P, FEMALE
CN102	1-750-785-11	s	CONNECTOR, XLR 3P, MALE
CN274	1-506-486-11	s	CONNECTOR 7P, MALE
CN275	1-506-485-11	s	CONNECTOR 6P, MALE
CN276	1-564-001-11	o	CONNECTOR 2P, MALE
R1	1-216-295-91	s	RES, CHIP 0
R2	1-216-295-91	s	RES, CHIP 0
R5	1-216-646-11	s	METAL, CHIP 620 0.5% 1/10W
R6	1-216-295-91	s	RES, CHIP 0
R7	1-216-025-91	s	METAL, CHIP 100 5% 1/10W
R8	1-216-295-91	s	RES, CHIP 0
R11	1-216-295-91	s	RES, CHIP 0
R12	1-216-295-91	s	RES, CHIP 0
R21	1-216-295-91	s	RES, CHIP 0
R22	1-216-295-91	s	RES, CHIP 0
R25	1-216-646-11	s	METAL, CHIP 620 0.5% 1/10W
R27	1-216-025-91	s	METAL, CHIP 100 5% 1/10W
R28	1-216-295-91	s	RES, CHIP 0
R31	1-216-295-91	s	RES, CHIP 0
S1	1-570-157-11	s	SWITCH, SLIDE
S2	1-570-157-11	s	SWITCH, SLIDE
T1	1-427-586-11	s	TRANSFORMER, INPUT/OUTPUT
T2	1-427-586-11	s	TRANSFORMER, INPUT/OUTPUT

CP-226J BOARD(UVW-1800)

CP-226J board is used for UVW-1800(J).

Ref. No. or Q'ty	Part No.	SP	Description
1pc	A-8276-762-A	o	MOUNTED CIRCUIT BOARD, CP-226J
C1	1-163-809-11	s	CERAMIC, CHIP 0.047uF 10% 25V
C21	1-163-809-11	s	CERAMIC, CHIP 0.047uF 10% 25V
CN101	1-750-785-11	s	CONNECTOR, XLR 3P, MALE
CN102	1-750-786-11	s	CONNECTOR, XLR 3P, FEMALE
CN274	1-506-486-11	s	CONNECTOR 7P, MALE
CN275	1-506-485-11	s	CONNECTOR 6P, MALE
CN276	1-564-001-11	o	CONNECTOR 2P, MALE
R3	1-216-295-91	s	RES, CHIP 0
R4	1-216-295-91	s	RES, CHIP 0
R5	1-216-646-11	s	METAL, CHIP 620 0.5% 1/10W
R6	1-216-295-91	s	RES, CHIP 0
R7	1-216-025-91	s	METAL, CHIP 100 5% 1/10W
R9	1-216-295-91	s	RES, CHIP 0
R10	1-216-295-91	s	RES, CHIP 0
R12	1-216-295-91	s	RES, CHIP 0
R23	1-216-295-91	s	RES, CHIP 0
R24	1-216-295-91	s	RES, CHIP 0
R25	1-216-646-11	s	METAL, CHIP 620 0.5% 1/10W
R27	1-216-025-91	s	METAL, CHIP 100 5% 1/10W
R29	1-216-295-91	s	RES, CHIP 0
R30	1-216-295-91	s	RES, CHIP 0
S1	1-570-157-11	s	SWITCH, SLIDE
S2	1-570-157-11	s	SWITCH, SLIDE
T1	1-427-586-11	s	TRANSFORMER, INPUT/OUTPUT
T2	1-427-586-11	s	TRANSFORMER, INPUT/OUTPUT

CP-226A BOARD(UVW-1600/1600P)

Ref. No. or Q'ty	Part No.	SP	Description
CP-226A board is used for UVW-1600/1600P(UC,EK).			
1pc	A-8276-733-A	o	MOUNTED CIRCUIT BOARD, CP-226A
C1	1-163-809-11	s	CERAMIC, CHIP 0.047uF 10% 25V
C21	1-163-809-11	s	CERAMIC, CHIP 0.047uF 10% 25V
CN102	1-750-785-11	s	CONNECTOR, XLR 3P, MALE
CN274	1-506-486-11	s	CONNECTOR 7P, MALE
CN276	1-564-001-11	o	CONNECTOR 2P, MALE
R7	1-216-025-91	s	METAL, CHIP 100 5% 1/10W
R8	1-216-295-91	s	RES, CHIP 0
R11	1-216-295-91	s	RES, CHIP 0
R12	1-216-295-91	s	RES, CHIP 0
R27	1-216-025-91	s	METAL, CHIP 100 5% 1/10W
R28	1-216-295-91	s	RES, CHIP 0
R31	1-216-295-91	s	RES, CHIP 0
T1	1-427-586-11	s	TRANSFORMER, INPUT/OUTPUT
T2	1-427-586-11	s	TRANSFORMER, INPUT/OUTPUT

CP-226AJ BOARD(UVW-1600)

Ref. No. or Q'ty	Part No.	SP	Description
CP-226AJ board is used for UVW-1600(J).			
1pc	A-8276-763-A	o	MOUNTED CIRCUIT BOARD, CP-226AJ
C1	1-163-809-11	s	CERAMIC, CHIP 0.047uF 10% 25V
C21	1-163-809-11	s	CERAMIC, CHIP 0.047uF 10% 25V
CN102	1-750-786-11	s	CONNECTOR XLR 3P, FEMALE
CN274	1-506-486-11	s	CONNECTOR 7P, MALE
CN276	1-564-001-11	o	CONNECTOR 2P, MALE
R7	1-216-025-91	s	METAL, CHIP 100 5% 1/10W
R9	1-216-295-91	s	RES, CHIP 0
R10	1-216-295-91	s	RES, CHIP 0
R12	1-216-295-91	s	RES, CHIP 0
R27	1-216-025-91	s	METAL, CHIP 100 5% 1/10W
R29	1-216-295-91	s	RES, CHIP 0
R30	1-216-295-91	s	RES, CHIP 0
T1	1-427-586-11	s	TRANSFORMER, INPUT/OUTPUT
T2	1-427-586-11	s	TRANSFORMER, INPUT/OUTPUT

CP-237 BOARD

Ref. No. or Q'ty	Part No.	SP	Description
CP-237 board is used for UVW-1800/1800P(J,UC,EK).			
1pc	A-8276-741-A	o	MOUNTED CIRCUIT BOARD, CP-237
CN501	1-764-259-11	s	CONNECTOR, D-SUB 15P, MALE
CN502	1-573-566-11	s	CONNECTOR, D-SUB 9P, FEMALE
CN532	1-563-462-11	o	CONNECTOR, FPC 17P

DR-214 BOARD

Ref. No. or Q'ty	Part No.	SP	Description
1pc	A-8275-290-A	o	MOUNTED CIRCUIT BOARD, DR-214
6pcs	4-911-232-01	s	SHEET, INSULATING
1pc	3-182-357-01	o	HEAT SINK (L), DR
1pc	3-182-358-01	o	HEAT SINK (R), DR
1pc	3-183-144-01	o	HEAT SINK (D), DR
16pcs	7-682-548-04	s	SCREW, +B3x8
3pcs	9-911-841-XX	s	CUSHION (B)
C1,C2	1-126-940-11	s	ELECT 330uF 20% 25V
C3	1-126-933-11	s	ELECT 100uF 20% 16V
C4	1-126-933-11	s	ELECT 100uF 20% 16V
C5	1-124-589-11	s	ELECT 47uF 20% 16V
C6	1-125-404-00	s	DOUBLE LAYERS 0.47F 5.5V
C7	1-131-347-00	s	TANTALUM 1uF 10% 35V
C8	1-126-940-11	s	ELECT 330uF 20% 25V
C51	1-164-095-11	s	CERAMIC 0.01uF 10% 16V
C52	1-164-095-11	s	CERAMIC 0.01uF 10% 16V
C53	1-164-095-11	s	CERAMIC 0.01uF 10% 16V
C54	1-164-095-11	s	CERAMIC 0.01uF 10% 16V
C55	1-130-489-00	s	MYLAR 0.033uF 5% 50V
C56	1-130-489-00	s	MYLAR 0.033uF 5% 50V
C57	1-130-489-00	s	MYLAR 0.033uF 5% 50V
C58	1-126-096-11	s	ELECT 10uF 20% 35V
C59	1-126-096-11	s	ELECT 10uF 20% 35V
C60	1-126-096-11	s	ELECT 10uF 20% 35V
C61	1-164-097-11	s	CERAMIC 0.022uF 50V
C62	1-164-097-11	s	CERAMIC 0.022uF 50V
C101	1-164-095-11	s	CERAMIC 0.01uF 10% 16V
C102	1-130-489-00	s	MYLAR 0.033uF 5% 50V
C103	1-164-035-11	s	CERAMIC 47pF 5% 50V
C104	1-164-035-11	s	CERAMIC 47pF 5% 50V
C151-155	1-126-096-11	s	ELECT 10uF 20% 35V
C152	1-126-096-11	s	ELECT 10uF 20% 35V
C153	1-126-096-11	s	ELECT 10uF 20% 35V
C154	1-126-096-11	s	ELECT 10uF 20% 35V
C155	1-126-096-11	s	ELECT 10uF 20% 35V
C156	1-164-095-11	s	CERAMIC 0.01uF 10% 16V
C201	1-124-248-00	s	ELECT 22uF 20% 35V
C202	1-124-248-00	s	ELECT 22uF 20% 35V
C203	1-124-248-00	s	ELECT 22uF 20% 35V
C204	1-124-248-00	s	ELECT 22uF 20% 35V
C205	1-130-489-00	s	MYLAR 0.033uF 5% 50V
C206	1-130-489-00	s	MYLAR 0.033uF 5% 50V
C207	1-164-035-11	s	CERAMIC 47pF 5% 50V
C208	1-164-035-11	s	CERAMIC 47pF 5% 50V
C209	1-164-035-11	s	CERAMIC 47pF 5% 50V
C210	1-164-097-11	s	CERAMIC 0.022uF 50V
C211	1-164-097-11	s	CERAMIC 0.022uF 50V
C212	1-164-035-11	s	CERAMIC 47pF 5% 50V
C251	1-124-248-00	s	ELECT 22uF 20% 35V
C252	1-124-248-00	s	ELECT 22uF 20% 35V
C253	1-124-248-00	s	ELECT 22uF 20% 35V
C254	1-124-248-00	s	ELECT 22uF 20% 35V
C255	1-130-489-00	s	MYLAR 0.033uF 5% 50V
C256	1-130-489-00	s	MYLAR 0.033uF 5% 50V
C257	1-164-097-11	s	CERAMIC 0.022uF 50V
C258	1-164-097-11	s	CERAMIC 0.022uF 50V
C259	1-164-035-11	s	CERAMIC 47pF 5% 50V
C260	1-164-035-11	s	CERAMIC 47pF 5% 50V

(DR-214 BOARD)

Ref. No. or Q'ty	Part No.	SP	Description
C261	1-164-035-11	s	CERAMIC 47pF 5% 50V
C264	1-164-035-11	s	CERAMIC 47pF 5% 50V
C301	1-124-248-00	s	ELECT 22uF 20% 35V
C303	1-130-491-00	s	MYLAR 0.047uF 5% 50V
C304	1-130-495-00	s	MYLAR 0.1uF 5% 50V
C305	1-126-160-11	s	ELECT 1uF 20% 50V
C306	1-126-096-11	s	ELECT 10uF 20% 35V
C308	1-164-097-11	s	CERAMIC 0.022uF 50V
C309	1-164-097-11	s	CERAMIC 0.022uF 50V
C310	1-161-494-00	s	CERAMIC 0.022uF 25V
C311	1-161-494-00	s	CERAMIC 0.022uF 25V
C313	1-130-491-00	s	MYLAR 0.047uF 5% 50V
C314	1-130-495-00	s	MYLAR 0.1uF 5% 50V
C315	1-130-495-00	s	MYLAR 0.1uF 5% 50V
C316	1-130-491-00	s	MYLAR 0.047uF 5% 50V
C317	1-130-477-00	s	MYLAR 0.0033uF 5% 50V
C318	1-162-290-31	s	CERAMIC 470PF 10% 50V
C319	1-130-477-00	s	MYLAR 0.0033uF 5% 50V
C320	1-126-096-11	s	ELECT 10uF 20% 35V
C321	1-162-290-31	s	CERAMIC 470PF 10% 50V
C322	1-162-282-31	s	CERAMIC 100PF 10% 50V
C323	1-162-282-31	s	CERAMIC 100PF 10% 50V
C324	1-126-096-11	s	ELECT 10uF 20% 35V
C325	1-161-494-00	s	CERAMIC 0.022uF 25V
C326	1-161-494-00	s	CERAMIC 0.022uF 25V
C327	1-161-494-00	s	CERAMIC 0.022uF 25V
C328	1-130-495-00	s	MYLAR 0.1uF 5% 50V
C331	1-130-487-00	s	MYLAR 0.022uF 5% 50V
C332	1-126-096-11	s	ELECT 10uF 20% 35V
C333	1-130-495-00	s	MYLAR 0.1uF 5% 50V
C335	1-130-491-00	s	MYLAR 0.047uF 5% 50V
C337	1-162-288-31	s	CERAMIC 330PF 10% 50V
C339	1-131-388-00	s	TANTALUM 68uF 10% 6.3V
C340	1-131-388-00	s	TANTALUM 68uF 10% 6.3V
C341	1-124-248-00	s	ELECT 22uF 20% 35V
C343	1-124-248-00	s	ELECT 22uF 20% 35V
C345	1-126-947-11	s	ELECT 47uF 20% 35V
C349	1-164-097-11	s	CERAMIC 0.022uF 50V
CN300	1-573-600-21	s	CONNECTOR, PHEC 100P, MALE
CN301	1-563-017-11	o	CONNECTOR, FPC 30P
CN302	1-563-017-11	o	CONNECTOR, FPC 30P
CN303	1-563-017-11	o	CONNECTOR, FPC 30P
D1	8-719-986-73	s	DIODE RB441Q
D151-156	8-719-200-02	s	DIODE 10E2
D301	8-719-911-19	s	DIODE 1SS119
D302	8-719-911-19	s	DIODE 1SS119
D303	8-719-911-19	s	DIODE 1SS119
D304	8-719-911-19	s	DIODE 1SS119
D306	8-719-911-19	s	DIODE 1SS119
IC1	8-759-603-69	s	IC M51957BL
IC51	8-759-106-41	s	IC UPC4570C
IC52	8-759-801-95	s	IC LB1620
IC151	8-759-205-56	s	IC TA7267P
IC152	8-759-205-56	s	IC TA7267P
IC153	8-759-205-56	s	IC TA7267P
IC201	8-759-106-41	s	IC UPC4570C
IC251	8-759-106-41	s	IC UPC4570C
IC301	8-759-106-41	s	IC UPC4570C

(DR-214 BOARD)

Ref. No. or Q'ty	Part No.	SP	Description
IC302	8-759-106-41	s	IC UPC4570C
IC303	8-759-729-03	s	IC NJM2903D
IC304	8-759-106-41	s	IC UPC4570C
IC305	8-759-106-41	s	IC UPC4570C
IC306	8-759-729-03	s	IC NJM2903D
IC307	8-759-140-53	s	IC UPD4053BC
IC308	8-759-800-72	s	IC LA7205
IC310	8-743-914-00	s	IC BX3914
IC311	8-759-705-58	s	IC NJM4558D-D
IC313	8-759-140-53	s	IC UPD4053BC
L1	1-412-533-21	s	INDUCTOR 47uH
PS1	1-532-679-00	s	LINK, IC 0.6A
PS2	1-532-679-00	s	LINK, IC 0.6A
Q1	8-729-900-89	s	TRANSISTOR DTC144ES
Q51	8-729-265-52	s	TRANSISTOR 2SC2655-Y
Q52	8-729-021-83	s	TRANSISTOR 2SA1020-Y-TPE6
Q53	8-729-400-12	s	TRANSISTOR 2SB941-P
Q101	8-729-265-52	s	TRANSISTOR 2SC2655-Y
Q102	8-729-021-83	s	TRANSISTOR 2SA1020-Y-TPE6
Q103	8-729-400-12	s	TRANSISTOR 2SB941-P
Q151	8-729-265-52	s	TRANSISTOR 2SC2655-Y
Q152	8-729-141-83	s	TRANSISTOR 2SA473-Y
Q153	8-729-265-52	s	TRANSISTOR 2SC2655-Y
Q154	8-729-400-12	s	TRANSISTOR 2SB941-P
Q155	8-729-021-83	s	TRANSISTOR 2SA1020-Y-TPE6
Q201	8-729-265-52	s	TRANSISTOR 2SC2655-Y
Q202	8-729-021-83	s	TRANSISTOR 2SA1020-Y-TPE6
Q203	8-729-102-47	s	TRANSISTOR 2SA1141-Q
Q204	8-729-102-57	s	TRANSISTOR 2SC3012
Q205	8-729-102-14	s	TRANSISTOR 2SD1021-F
Q206	8-729-205-02	s	TRANSISTOR 2SA1150-Y
Q207	8-729-102-47	s	TRANSISTOR 2SA1141-Q
Q208	8-729-102-57	s	TRANSISTOR 2SC3012
Q251	8-729-265-52	s	TRANSISTOR 2SC2655-Y
Q252	8-729-021-83	s	TRANSISTOR 2SA1020-Y-TPE6
Q253	8-729-102-47	s	TRANSISTOR 2SA1141-Q
Q254	8-729-102-57	s	TRANSISTOR 2SC3012
Q255	8-729-102-14	s	TRANSISTOR 2SD1021-F
Q256	8-729-205-02	s	TRANSISTOR 2SA1150-Y
Q257	8-729-102-47	s	TRANSISTOR 2SA1141-Q
Q258	8-729-102-57	s	TRANSISTOR 2SC3012
Q301	8-729-900-89	s	TRANSISTOR DTC144ES
Q302	8-729-900-89	s	TRANSISTOR DTC144ES
Q303	8-729-119-76	s	TRANSISTOR 2SA1115P
R1	⚠ 1-215-860-11	s	METAL 33 5% 1W
R2	1-215-461-00	s	METAL 47K 1% 1/6W
R3	1-215-457-00	s	METAL 33K 1% 1/6W
R4	1-249-437-11	s	CARBON 47K 5% 1/4W
R51	1-249-429-11	s	CARBON 10K 5% 1/4W
R52	1-249-429-11	s	CARBON 10K 5% 1/4W
R53	⚠ 1-216-389-11	s	METAL 1 5% 3W
R54	1-249-437-11	s	CARBON 47K 5% 1/4W
R55	1-249-437-11	s	CARBON 47K 5% 1/4W
R56	1-249-393-11	s	CARBON 10 5% 1/4W
R57	1-249-393-11	s	CARBON 10 5% 1/4W
R58	1-249-393-11	s	CARBON 10 5% 1/4W
R59	1-249-408-11	s	CARBON 180 5% 1/4W

(DR-214 BOARD)

Ref. No. or Q'ty	Part No.	SP	Description
R60	1-249-406-11	s	CARBON 120 5% 1/4W
R101	1-247-887-00	s	CARBON 220K 5% 1/4W
R102	⚠ 1-215-863-11	s	METAL 100 5% 1W
R103	⚠ 1-215-863-11	s	METAL 100 5% 1W
R104	⚠ 1-216-383-11	s	METAL 0.33 5% 3W
R105	⚠ 1-216-365-00	s	METAL 0.47 5% 2W
R106	1-249-429-11	s	CARBON 10K 5% 1/4W
R107	1-249-429-11	s	CARBON 10K 5% 1/4W
R108	1-249-437-11	s	CARBON 47K 5% 1/4W
R109	1-249-437-11	s	CARBON 47K 5% 1/4W
R151	1-249-429-11	s	CARBON 10K 5% 1/4W
R152	1-249-429-11	s	CARBON 10K 5% 1/4W
R153	1-249-429-11	s	CARBON 10K 5% 1/4W
R154	⚠ 1-215-866-11	s	METAL 330 5% 1W
R155-160	1-249-429-11	s	CARBON 10K 5% 1/4W
R161	1-247-887-00	s	CARBON 220K 5% 1/4W
R162	⚠ 1-215-863-11	s	METAL 100 5% 1W
R163	⚠ 1-215-867-00	s	METAL 470 5% 1W
R164	⚠ 1-215-868-00	s	METAL 680 5% 1W
R165	⚠ 1-216-383-11	s	METAL 0.33 5% 3W
R166	⚠ 1-216-383-11	s	METAL 0.33 5% 3W
R167	⚠ 1-216-383-11	s	METAL 0.33 5% 3W
R168	⚠ 1-216-385-11	s	METAL 0.47 5% 3W
R201	1-249-429-11	s	CARBON 10K 5% 1/4W
R202	1-249-417-11	s	CARBON 1K 5% 1/4W
R203	1-249-417-11	s	CARBON 1K 5% 1/4W
R204	1-249-429-11	s	CARBON 10K 5% 1/4W
R205	1-249-417-11	s	CARBON 1K 5% 1/4W
R206	⚠ 1-215-863-11	s	METAL 100 5% 1W
R207	⚠ 1-215-889-00	s	METAL 330 5% 2W
R208	⚠ 1-215-889-00	s	METAL 330 5% 2W
R209	⚠ 1-215-863-11	s	METAL 100 5% 1W
R210	1-249-417-11	s	CARBON 1K 5% 1/4W
R211	1-249-417-11	s	CARBON 1K 5% 1/4W
R212	⚠ 1-216-365-00	s	METAL 0.47 5% 2W
R213	1-249-429-11	s	CARBON 10K 5% 1/4W
R214	1-249-437-11	s	CARBON 47K 5% 1/4W
R215	1-249-429-11	s	CARBON 10K 5% 1/4W
R216	1-249-429-11	s	CARBON 10K 5% 1/4W
R217	1-249-437-11	s	CARBON 47K 5% 1/4W
R218	1-249-437-11	s	CARBON 47K 5% 1/4W
R219	1-249-429-11	s	CARBON 10K 5% 1/4W
R220	1-249-437-11	s	CARBON 47K 5% 1/4W
R221	⚠ 1-216-365-00	s	METAL 0.47 5% 2W
R251	1-249-429-11	s	CARBON 10K 5% 1/4W
R252	1-249-417-11	s	CARBON 1K 5% 1/4W
R253	1-249-417-11	s	CARBON 1K 5% 1/4W
R254	1-249-429-11	s	CARBON 10K 5% 1/4W
R255	1-249-417-11	s	CARBON 1K 5% 1/4W
R256	⚠ 1-215-863-11	s	METAL 100 5% 1W
R257	⚠ 1-215-889-00	s	METAL 330 5% 2W
R258	⚠ 1-215-889-00	s	METAL 330 5% 2W
R259	⚠ 1-215-863-11	s	METAL 100 5% 1W
R260	1-249-417-11	s	CARBON 1K 5% 1/4W
R261	1-249-417-11	s	CARBON 1K 5% 1/4W
R262	1-249-437-11	s	CARBON 47K 5% 1/4W
R263	⚠ 1-216-365-00	s	METAL 0.47 5% 2W
R264	1-249-429-11	s	CARBON 10K 5% 1/4W
R265	1-249-429-11	s	CARBON 10K 5% 1/4W

(DR-214 BOARD)

Ref. No. or Q'ty	Part No.	SP	Description
R266	1-249-429-11	s	CARBON 10K 5% 1/4W
R267	1-249-437-11	s	CARBON 47K 5% 1/4W
R268	1-249-437-11	s	CARBON 47K 5% 1/4W
R269	1-249-429-11	s	CARBON 10K 5% 1/4W
R270 ⚠	1-216-365-00	s	METAL 0.47 5% 2W
R271	1-249-437-11	s	CARBON 47K 5% 1/4W
R301	1-249-417-11	s	CARBON 1K 5% 1/4W
R302	1-249-417-11	s	CARBON 1K 5% 1/4W
R303	1-249-417-11	s	CARBON 1K 5% 1/4W
R304	1-249-417-11	s	CARBON 1K 5% 1/4W
R305	1-247-863-91	s	CARBON 22k 5% 1/4W
R306	1-247-863-91	s	CARBON 22k 5% 1/4W
R307	1-249-441-11	s	CARBON 100K 5% 1/4W
R308	1-249-426-11	s	CARBON 5.6K 5% 1/4W
R309	1-249-429-11	s	CARBON 10K 5% 1/4W
R310	1-249-429-11	s	CARBON 10K 5% 1/4W
R311	1-249-441-11	s	CARBON 100K 5% 1/4W
R312	1-249-441-11	s	CARBON 100K 5% 1/4W
R313	1-249-429-11	s	CARBON 10K 5% 1/4W
R314	1-247-863-91	s	CARBON 22k 5% 1/4W
R315	1-249-417-11	s	CARBON 1K 5% 1/4W
R316	1-247-895-91	s	CARBON 470K 5% 1/4W
R317	1-249-421-11	s	CARBON 2.2K 5% 1/4W
R318	1-249-421-11	s	CARBON 2.2K 5% 1/4W
R319	1-215-429-00	s	METAL 2.2K 1% 1/6W
R320	1-215-429-00	s	METAL 2.2K 1% 1/6W
R321	1-215-461-00	s	METAL 47K 1% 1/6W
R322	1-215-461-00	s	METAL 47K 1% 1/6W
R323	1-249-426-11	s	CARBON 5.6K 5% 1/4W
R324	1-249-426-11	s	CARBON 5.6K 5% 1/4W
R325	1-215-481-00	s	METAL 330K 1% 1/6W
R326	1-249-441-11	s	CARBON 100K 5% 1/4W
R327	1-249-435-11	s	CARBON 33K 5% 1/4W
R328	1-249-441-11	s	CARBON 100K 5% 1/4W
R329	1-249-429-11	s	CARBON 10K 5% 1/4W
R330	1-249-441-11	s	CARBON 100K 5% 1/4W
R331	1-249-435-11	s	CARBON 33K 5% 1/4W
R332	1-249-429-11	s	CARBON 10K 5% 1/4W
R333	1-249-441-11	s	CARBON 100K 5% 1/4W
R334	1-215-481-00	s	METAL 330K 1% 1/6W
R335	1-247-903-00	s	CARBON 1M 5% 1/4W
R336	1-247-903-00	s	CARBON 1M 5% 1/4W
R337	1-249-429-11	s	CARBON 10K 5% 1/4W
R338	1-249-429-11	s	CARBON 10K 5% 1/4W
R339	1-249-437-11	s	CARBON 47K 5% 1/4W
R340	1-249-425-11	s	CARBON 4.7K 5% 1/4W
R341	1-215-419-00	s	METAL 820 1% 1/6W
R342	1-249-425-11	s	CARBON 4.7K 5% 1/4W
R343	1-249-437-11	s	CARBON 47K 5% 1/4W
R344	1-215-461-00	s	METAL 47K 1% 1/6W
R345	1-215-461-00	s	METAL 47K 1% 1/6W
R346	1-249-418-11	s	CARBON 1.2K 5% 1/4W
R347	1-249-437-11	s	CARBON 47K 5% 1/4W
R349	1-249-429-11	s	CARBON 10K 5% 1/4W
R350	1-249-427-11	s	CARBON 6.8K 5% 1/4W
R351	1-259-882-11	s	CARBON 3.3M 5% 1/4W
R352	1-249-429-11	s	CARBON 10K 5% 1/4W
R353	1-249-429-11	s	CARBON 10K 5% 1/4W
R354	1-249-429-11	s	CARBON 10K 5% 1/4W

(DR-214 BOARD)

Ref. No. or Q'ty	Part No.	SP	Description
R356	1-249-427-11	s	CARBON 6.8K 5% 1/4W
R357	1-249-425-11	s	CARBON 4.7K 5% 1/4W
R358 ⚠	1-215-886-11	s	METAL 100 5% 2W

HP-61 BOARD

Ref. No. or Q'ty	Part No.	SP	Description

HP-61 board is used for UVW-1800/1800p(J,UC,EK).

1pc	1-648-917-12	o	PRINTED CIRCUIT BOARD, HP-61
CN401	1-506-475-11	s	CONNECTOR 10P, MALE
CN403	1-564-002-41	s	CONNECTOR 3P, MALE
J1	1-565-327-11	s	JACK, PHONE STEREO
J2	1-507-743-21	s	JACK, MINI STEREO
JW1	1-219-202-11	s	RES 0
JW2	1-219-202-11	s	RES 0
RV1	1-241-577-11	s	RES, VAR CARBON 20k/20k

KY-249 BOARD(UVW-1800/1800P)

Ref. No. or Q'ty	Part No.	SP	Description
KY-249 board is used for UVW-1800/1800P(J,UC,EK).			
1pc	A-8275-289-A	o	MOUNTED CIRCUIT BOARD, KY-249
1pc	3-182-359-02	o	HOLDER, VFD
C1	1-163-033-91	s	CERAMIC, CHIP 0.022uF 50V
C3	1-163-033-91	s	CERAMIC, CHIP 0.022uF 50V
C4	1-126-394-11	s	ELECT, CHIP 10uF 20% 16V
C5	1-163-033-91	s	CERAMIC, CHIP 0.022uF 50V
C6	1-163-251-11	s	CERAMIC, CHIP 100PF 5% 50V
C7	1-163-251-11	s	CERAMIC, CHIP 100PF 5% 50V
C8	1-163-033-91	s	CERAMIC, CHIP 0.022uF 50V
C14	1-126-400-11	s	ELECT, CHIP 22uF 20% 35V
C15	1-126-400-11	s	ELECT, CHIP 22uF 20% 35V
C16-C20	1-163-033-91	s	CERAMIC, CHIP 0.022uF 50V
C21	1-163-251-11	s	CERAMIC, CHIP 100PF 5% 50V
C22	1-163-033-91	s	CERAMIC, CHIP 0.022uF 50V
C25	1-163-133-00	s	CERAMIC, CHIP 470PF 5% 50V
C26	1-163-133-00	s	CERAMIC, CHIP 470PF 5% 50V
CN590	1-506-494-11	s	CONNECTOR 15P, MALE
CN591	1-563-003-21	o	CONNECTOR, FPC 20P
CN592	1-564-014-11	s	CONNECTOR 4P, MALE
CN593	1-563-003-21	o	CONNECTOR, FPC 20P
D1	8-719-123-85	s	DIODE 1SS304
D2-D11	8-719-123-82	s	DIODE 1SS303-T1
IC1	8-759-505-99	s	IC MSC7128-04GS-V1K
IC2	8-759-150-61	s	IC UPC78L05T
IC3	8-759-194-79	s	IC UPD75028GC-542-AB8
IC6	8-759-925-74	s	IC TC74HC04ANS
ND1	1-517-246-11	s	UNIT, FLD
Q1-Q8	8-729-924-19	s	TRANSISTOR DTA123JU
Q9-Q33	8-729-905-12	s	TRANSISTOR DTA144EU
Q34	8-729-924-19	s	TRANSISTOR DTA123JU
Q35	8-729-924-19	s	TRANSISTOR DTA123JU
Q36-Q41	8-729-905-12	s	TRANSISTOR DTA144EU
Q42	8-729-924-19	s	TRANSISTOR DTA123JU
R1	1-216-049-91	s	METAL, CHIP 1k 5% 1/10W
R3	1-216-089-91	s	METAL, CHIP 47k 5% 1/10W
R4	1-216-081-00	s	METAL, CHIP 22K 5% 1/10W
R5	1-216-089-91	s	METAL, CHIP 47k 5% 1/10W
R6	1-216-089-91	s	METAL, CHIP 47k 5% 1/10W
R7-R19	1-216-073-00	s	METAL, CHIP 10K 5% 1/10W
R22	1-216-027-00	s	METAL, CHIP 120 5% 1/10W
R23	1-216-027-00	s	METAL, CHIP 120 5% 1/10W
R25	1-216-027-00	s	METAL, CHIP 120 5% 1/10W
R26	1-216-027-00	s	METAL, CHIP 120 5% 1/10W
R27	1-216-027-00	s	METAL, CHIP 120 5% 1/10W
R28	1-216-027-00	s	METAL, CHIP 120 5% 1/10W
R29-R63	1-216-103-91	s	METAL, CHIP 180k 5% 1/10W
R76	1-208-822-11	s	METAL, CHIP 47k 0.5% 1/10W
R77-R82	1-216-083-00	s	METAL, CHIP 27K 5% 1/10W
R83	1-216-103-91	s	METAL, CHIP 180k 5% 1/10W
R84	1-216-049-91	s	METAL, CHIP 1k 5% 1/10W
R85	1-216-049-91	s	METAL, CHIP 1k 5% 1/10W
R1021	1-216-057-00	s	METAL, CHIP 2.2K 5% 1/10W
R1022	1-216-057-00	s	METAL, CHIP 2.2K 5% 1/10W
RV1	1-237-695-11	s	RES, VAR CARBON 5K

(KY-249 BOARD(UVW-1800/1800P))

Ref. No. or Q'ty	Part No.	SP	Description
RV2	1-237-695-11	s	RES, VAR CARBON 5K
S1	1-692-892-11	s	SWITCH, PUSH
S2	1-692-892-21	s	SWITCH, PUSH
S3	1-692-890-41	s	SWITCH, PUSH
S4	1-692-890-31	s	SWITCH, PUSH
S5	1-692-890-21	s	SWITCH, PUSH
S7	1-692-891-21	s	SWITCH, PUSH
S8	1-571-787-31	s	SWITCH, PUSH
S9	1-571-787-31	s	SWITCH, PUSH
S10	1-571-787-31	s	SWITCH, PUSH
S11	1-571-787-31	s	SWITCH, PUSH
S12	1-571-787-31	s	SWITCH, PUSH
S13	1-571-787-31	s	SWITCH, PUSH
S14	1-571-787-31	s	SWITCH, PUSH
S15	1-571-787-31	s	SWITCH, PUSH
S16	1-572-992-11	s	SWITCH, SLIDE
S17	1-572-992-11	s	SWITCH, SLIDE
S18	1-571-787-31	s	SWITCH, PUSH
S19	1-571-640-21	s	SWITCH, SLIDE
S20	1-571-640-21	s	SWITCH, SLIDE
S21	1-571-640-21	s	SWITCH, SLIDE
X1	1-577-101-11	s	RESONATOR, CERAMIC 4.19MHz

KY-249A BOARD(UVW-1600/1600P)

Ref. No. or Q'ty	Part No.	SP	Description
KY-249A board is used for UVW-1600/1600P(J,UC,EK).			
1pc	A-8275-283-A	o	MOUNTED CIRCUIT BOARD, KY-249A
1pc	3-182-359-02	o	HOLDER, VFD
C1	1-163-033-91	s	CERAMIC, CHIP 0.022uF 50V
C3	1-163-033-91	s	CERAMIC, CHIP 0.022uF 50V
C4	1-126-394-11	s	ELECT, CHIP 10uF 20% 16V
C5	1-163-033-91	s	CERAMIC, CHIP 0.022uF 50V
C6	1-163-251-11	s	CERAMIC, CHIP 100PF 5% 50V
C7	1-163-251-11	s	CERAMIC, CHIP 100PF 5% 50V
C8	1-163-033-91	s	CERAMIC, CHIP 0.022uF 50V
C14	1-126-400-11	s	ELECT, CHIP 22uF 20% 35V
C15	1-126-400-11	s	ELECT, CHIP 22uF 20% 35V
C16-C20	1-163-033-91	s	CERAMIC, CHIP 0.022uF 50V
C21	1-163-251-11	s	CERAMIC, CHIP 100PF 5% 50V
C22	1-163-033-91	s	CERAMIC, CHIP 0.022uF 50V
C25	1-163-133-00	s	CERAMIC, CHIP 470PF 5% 50V
C26	1-163-133-00	s	CERAMIC, CHIP 470PF 5% 50V
CN590	1-506-494-11	s	CONNECTOR 15P, MALE
CN591	1-563-003-21	o	CONNECTOR, FPC 20P
CN592	1-564-014-11	s	CONNECTOR 4P, MALE
CN593	1-563-003-21	o	CONNECTOR, FPC 20P
D1	8-719-123-85	s	DIODE 1SS304
D2-D11	8-719-123-82	s	DIODE 1SS303-T1
IC1	8-759-505-99	s	IC MSC7128-04GS-V1K
IC2	8-759-150-61	s	IC UPC78L05T
IC3	8-759-194-79	s	IC UPD75028GC-542-AB8
IC6	8-759-925-74	s	IC TC74HC04ANS
ND1	1-517-246-11	s	UNIT, FLD
Q1-Q8	8-729-924-19	s	TRANSISTOR DTA123JU
Q9-Q33	8-729-905-12	s	TRANSISTOR DTA144EU
Q34	8-729-924-19	s	TRANSISTOR DTA123JU
Q35	8-729-924-19	s	TRANSISTOR DTA123JU
Q36-Q40	8-729-905-12	s	TRANSISTOR DTA144EU
Q42	8-729-924-19	s	TRANSISTOR DTA123JU
R1	1-216-049-91	s	METAL, CHIP 1k 5% 1/10W
R3	1-216-089-91	s	METAL, CHIP 47k 5% 1/10W
R4	1-216-081-00	s	METAL, CHIP 22K 5% 1/10W
R5	1-216-089-91	s	METAL, CHIP 47k 5% 1/10W
R6	1-216-089-91	s	METAL, CHIP 47k 5% 1/10W
R7	1-216-073-00	s	METAL, CHIP 10K 5% 1/10W
R10-R19	1-216-073-00	s	METAL, CHIP 10K 5% 1/10W
R22	1-216-027-00	s	METAL, CHIP 120 5% 1/10W
R23	1-216-027-00	s	METAL, CHIP 120 5% 1/10W
R25	1-216-027-00	s	METAL, CHIP 120 5% 1/10W
R26	1-216-027-00	s	METAL, CHIP 120 5% 1/10W
R27	1-216-027-00	s	METAL, CHIP 120 5% 1/10W
R29-R63	1-216-103-91	s	METAL, CHIP 180k 5% 1/10W
R76	1-208-822-11	s	METAL, CHIP 47k 0.5% 1/10W
R77-R81	1-216-083-00	s	METAL, CHIP 27K 5% 1/10W
R83	1-216-103-91	s	METAL, CHIP 180k 5% 1/10W
R84	1-216-049-91	s	METAL, CHIP 1k 5% 1/10W
R85	1-216-049-91	s	METAL, CHIP 1k 5% 1/10W
R1021	1-216-057-00	s	METAL, CHIP 2.2K 5% 1/10W
R1022	1-216-057-00	s	METAL, CHIP 2.2K 5% 1/10W
RV1	1-237-695-11	s	RES, VAR CARBON 5K

(KY-249A BOARD(UVW-1600/1600P))

Ref. No. or Q'ty	Part No.	SP	Description
RV2	1-237-695-11	s	RES, VAR CARBON 5K
S1	1-692-892-11	s	SWITCH, PUSH
S2	1-692-892-21	s	SWITCH, PUSH
S3	1-692-890-41	s	SWITCH, PUSH
S4	1-692-890-31	s	SWITCH, PUSH
S5	1-692-890-21	s	SWITCH, PUSH
S8	1-571-787-31	s	SWITCH, PUSH
S9	1-571-787-31	s	SWITCH, PUSH
S10	1-571-787-31	s	SWITCH, PUSH
S11	1-571-787-31	s	SWITCH, PUSH
S12	1-571-787-31	s	SWITCH, PUSH
S13	1-571-787-31	s	SWITCH, PUSH
S15	1-571-787-31	s	SWITCH, PUSH
S16	1-572-992-11	s	SWITCH, SLIDE
S18	1-571-787-31	s	SWITCH, PUSH
S20	1-571-640-21	s	SWITCH, SLIDE
S21	1-571-640-21	s	SWITCH, SLIDE
X1	1-577-101-11	s	RESONATOR, CERAMIC 4.19MHz

MB-470 BOARD(UVW-1800)

MB-470 board is used for UVW-1800(J,UC).

Ref. No. or Q'ty	Part No.	SP	Description
1pc	A-8276-736-A	o	MOUNTED CIRCUIT BOARD, MB-470
1pc	3-683-631-01	o	CLAMP
1pc	9-911-841-99	s	CUSHION (B)
C1	1-126-964-11	s	ELECT 10uF 20% 50V
C2	1-126-964-11	s	ELECT 10uF 20% 50V
CN101	1-573-784-91	o	CONNECTOR, DIN 60P, FEMALE
CN102	1-573-784-91	o	CONNECTOR, DIN 60P, FEMALE
CN103	1-573-784-91	o	CONNECTOR, DIN 60P, FEMALE
CN104	1-573-784-91	o	CONNECTOR, DIN 60P, FEMALE
CN105	1-573-784-91	o	CONNECTOR, DIN 60P, FEMALE
CN106	1-573-784-91	o	CONNECTOR, DIN 60P, FEMALE
CN107	1-573-784-91	o	CONNECTOR, DIN 60P, FEMALE
CN108	1-573-784-91	o	CONNECTOR, DIN 60P, FEMALE
CN109	1-573-784-91	o	CONNECTOR, DIN 60P, FEMALE
CN200	1-564-905-11	o	CONNECTOR, VH 9P, MALE
CN201	1-564-512-11	o	CONNECTOR 9P, MALE
CN211	1-506-491-11	s	CONNECTOR 12P, MALE
CN214	1-580-195-21	s	CONNECTOR, PHEC 100P, FEMALE
CN231	1-563-018-11	o	CONNECTOR, FPC 34P
CN232	1-563-462-11	o	CONNECTOR, FPC 17P
CN235	1-506-482-11	s	CONNECTOR 3P, MALE
CN262	1-506-494-11	s	CONNECTOR 15P, MALE
CN266	1-506-469-11	s	CONNECTOR 4P, MALE
CN267	1-506-472-11	s	CONNECTOR 7P, MALE
CN268	1-506-479-11	s	CONNECTOR 14P, MALE
CN269	1-564-005-11	o	CONNECTOR 6P, MALE
CN271	1-564-011-11	o	CONNECTOR 12P, MALE
F1	⚠ 1-532-777-21	s	FUSE 1.25A 125V
F2	⚠ 1-532-777-21	s	FUSE 1.25A 125V
F3	⚠ 1-532-777-21	s	FUSE 1.25A 125V
IC1	8-759-701-59	s	IC NJM78M09FA
IC2	8-759-982-54	s	IC RC79M09FA

MB-470P BOARD(UVW-1800P)

MB-470P board is used for UVW-1800P(EK).

Ref. No. or Q'ty	Part No.	SP	Description
1pc	A-8276-854-A	o	MOUNTED CIRCUIT BOARD, MB-470P
1pc	3-683-631-01	o	CLAMP
1pc	9-911-841-99	s	CUSHION (B)
C1	1-126-964-11	s	ELECT 10uF 20% 50V
C2	1-126-964-11	s	ELECT 10uF 20% 50V
CN101	1-573-784-91	o	CONNECTOR, DIN 60P, FEMALE
CN102	1-573-784-91	o	CONNECTOR, DIN 60P, FEMALE
CN103	1-573-784-91	o	CONNECTOR, DIN 60P, FEMALE
CN104	1-573-784-91	o	CONNECTOR, DIN 60P, FEMALE
CN105	1-573-784-91	o	CONNECTOR, DIN 60P, FEMALE
CN106	1-573-784-91	o	CONNECTOR, DIN 60P, FEMALE
CN107	1-573-784-91	o	CONNECTOR, DIN 60P, FEMALE
CN108	1-573-784-91	o	CONNECTOR, DIN 60P, FEMALE
CN109	1-573-784-91	o	CONNECTOR, DIN 60P, FEMALE
CN200	1-564-905-11	o	CONNECTOR, VH 9P, MALE
CN201	1-564-512-11	o	CONNECTOR 9P, MALE
CN211	1-506-491-11	s	CONNECTOR 12P, MALE
CN214	1-580-195-21	s	CONNECTOR, PHEC 100P, FEMALE
CN231	1-563-018-11	o	CONNECTOR, FPC 34P
CN232	1-563-462-11	o	CONNECTOR, FPC 17P
CN235	1-506-482-11	s	CONNECTOR 3P, MALE
CN262	1-506-494-11	s	CONNECTOR 15P, MALE
CN266	1-506-469-11	s	CONNECTOR 4P, MALE
CN267	1-506-472-11	s	CONNECTOR 7P, MALE
CN268	1-506-479-11	s	CONNECTOR 14P, MALE
CN269	1-564-005-11	o	CONNECTOR 6P, MALE
CN271	1-564-011-11	o	CONNECTOR 12P, MALE
IC1	8-759-701-59	s	IC NJM78M09FA
IC2	8-759-982-54	s	IC RC79M09FA
PS1	⚠ 1-532-840-21	s	LINK, IC 1.25A
PS2	⚠ 1-532-840-21	s	LINK, IC 1.25A
PS3	⚠ 1-532-840-21	s	LINK, IC 1.25A

MB-470A BOARD(UVW-1600)

MB-470A board is used for UVW-1600(J,UC).

Ref. No. or Q'ty	Part No.	SP	Description
1pc	A-8276-730-A	o	MOUNTED CIRCUIT BOARD, MB-470A
1pc	3-683-631-01	o	CLAMP
1pc	9-911-841-99	s	CUSHION (B)
C1	1-126-964-11	s	ELECT 10uF 20% 50V
C2	1-126-964-11	s	ELECT 10uF 20% 50V
CN103	1-573-784-91	o	CONNECTOR, DIN 60P, FEMALE
CN104	1-573-784-91	o	CONNECTOR, DIN 60P, FEMALE
CN105	1-573-784-91	o	CONNECTOR, DIN 60P, FEMALE
CN106	1-573-784-91	o	CONNECTOR, DIN 60P, FEMALE
CN107	1-573-784-91	o	CONNECTOR, DIN 60P, FEMALE
CN108	1-573-784-91	o	CONNECTOR, DIN 60P, FEMALE
CN109	1-573-784-91	o	CONNECTOR, DIN 60P, FEMALE
CN200	1-564-905-11	o	CONNECTOR, VH 9P, MALE
CN201	1-564-512-11	o	CONNECTOR 9P, MALE
CN211	1-506-491-11	s	CONNECTOR 12P, MALE
CN214	1-580-195-21	s	CONNECTOR, PHEC 100P, FEMALE
CN231	1-563-018-11	o	CONNECTOR, FPC 34P
CN232	1-563-462-11	o	CONNECTOR, FPC 17P
CN235	1-506-482-11	s	CONNECTOR 3P, MALE
CN262	1-506-494-11	s	CONNECTOR 15P, MALE
CN266	1-506-469-11	s	CONNECTOR 4P, MALE
CN267	1-506-472-11	s	CONNECTOR 7P, MALE
CN268	1-506-479-11	s	CONNECTOR 14P, MALE
CN269	1-564-005-11	o	CONNECTOR 6P, MALE
F1 ⚠	1-532-777-21	s	FUSE 1.25A 125V
F2 ⚠	1-532-777-21	s	FUSE 1.25A 125V
F3 ⚠	1-532-777-21	s	FUSE 1.25A 125V
IC1	8-759-701-59	s	IC NJM78M09FA
IC2	8-759-982-54	s	IC RC79M09FA

MB-470AP BOARD(UVW-1600P)

MB-470AP board is used for UVW-1600P(EK).

Ref. No. or Q'ty	Part No.	SP	Description
1pc	A-8276-855-A	o	MOUNTED CIRCUIT BOARD, MB-470AP
1pc	3-683-631-01	o	CLAMP
1pc	9-911-841-99	s	CUSHION (B)
C1	1-126-964-11	s	ELECT 10uF 20% 50V
C2	1-126-964-11	s	ELECT 10uF 20% 50V
CN103	1-573-784-91	o	CONNECTOR, DIN 60P, FEMALE
CN104	1-573-784-91	o	CONNECTOR, DIN 60P, FEMALE
CN105	1-573-784-91	o	CONNECTOR, DIN 60P, FEMALE
CN106	1-573-784-91	o	CONNECTOR, DIN 60P, FEMALE
CN107	1-573-784-91	o	CONNECTOR, DIN 60P, FEMALE
CN108	1-573-784-91	o	CONNECTOR, DIN 60P, FEMALE
CN109	1-573-784-91	o	CONNECTOR, DIN 60P, FEMALE
CN200	1-564-905-11	o	CONNECTOR, VH 9P, MALE
CN201	1-564-512-11	o	CONNECTOR 9P, MALE
CN211	1-506-491-11	s	CONNECTOR 12P, MALE
CN214	1-580-195-21	s	CONNECTOR, PHEC 100P, FEMALE
CN231	1-563-018-11	o	CONNECTOR, FPC 34P
CN232	1-563-462-11	o	CONNECTOR, FPC 17P
CN235	1-506-482-11	s	CONNECTOR 3P, MALE
CN262	1-506-494-11	s	CONNECTOR 15P, MALE
CN266	1-506-469-11	s	CONNECTOR 4P, MALE
CN267	1-506-472-11	s	CONNECTOR 7P, MALE
CN268	1-506-479-11	s	CONNECTOR 14P, MALE
CN269	1-564-005-11	o	CONNECTOR 6P, MALE
IC1	8-759-701-59	s	IC NJM78M09FA
IC2	8-759-982-54	s	IC RC79M09FA
PS1 ⚠	1-532-840-21	s	LINK, IC 1.25A
PS2 ⚠	1-532-840-21	s	LINK, IC 1.25A
PS3 ⚠	1-532-840-21	s	LINK, IC 1.25A

MB-471 BOARD(UVW-1800/1800P)

Ref. No. or Q'ty	Part No.	SP	Description
MB-471 board is used for UVW-1800/1800P(J,UC,EK).			
1pc	A-8276-737-A	o	MOUNTED CIRCUIT BOARD, MB-471
CN110	1-573-598-11	s	CONNECTOR, PHEC 100P, FEMALE
CN111	1-573-598-11	s	CONNECTOR, PHEC 100P, FEMALE
CN112	1-573-598-11	s	CONNECTOR, PHEC 100P, FEMALE
CN251	1-564-524-11	s	CONNECTOR 9P, MALE
CN261	1-506-491-11	s	CONNECTOR 12P, MALE
CN263	1-506-481-11	s	CONNECTOR 2P, MALE
CN264	1-506-486-11	s	CONNECTOR 7P, MALE
CN265	1-564-013-11	o	CONNECTOR 3P, MALE
CN274	1-506-486-11	s	CONNECTOR 7P, MALE
CN275	1-506-485-11	s	CONNECTOR 6P, MALE
CN276	1-506-485-11	s	CONNECTOR 6P, MALE
CN277	1-564-014-11	s	CONNECTOR 4P, MALE
CN278	1-506-489-11	o	CONNECTOR 10P, MALE
CN281	1-563-018-11	o	CONNECTOR, FPC 34P

MB-471A BOARD(UVW-1600/1600P)

Ref. No. or Q'ty	Part No.	SP	Description
MB-471A board is used for UVW-1600/1600P(J,UC,EK).			
1pc	A-8276-731-A	o	MOUNTED CIRCUIT BOARD, MB-471A
CN110	1-573-598-11	s	CONNECTOR, PHEC 100P, FEMALE
CN111	1-573-598-11	s	CONNECTOR, PHEC 100P, FEMALE
CN251	1-564-524-11	s	CONNECTOR 9P, MALE
CN261	1-506-491-11	s	CONNECTOR 12P, MALE
CN263	1-506-481-11	s	CONNECTOR 2P, MALE
CN274	1-506-486-11	s	CONNECTOR 7P, MALE
CN277	1-564-014-11	s	CONNECTOR 4P, MALE
CN278	1-506-489-11	o	CONNECTOR 10P, MALE
CN281	1-563-018-11	o	CONNECTOR, FPC 34P

MS-39 BOARD(UVW-1800/1800P)

Ref. No. or Q'ty	Part No.	SP	Description
MS-39 board is used for UVW-1800/1800P(J,UC,EK).			
1pc	A-8275-291-A	o	MOUNTED CIRCUIT BOARD, M
1pc	3-182-355-02	o	COVER, MC SENSOR
2pcs	3-180-854-03	o	COVER, MR SENSOR
C3	1-164-097-11	s	CERAMIC 0.022uF 50V
C5	1-126-933-11	s	ELECT 100uF 20% 16V
C6	1-164-097-11	s	CERAMIC 0.022uF 50V
C11	1-126-947-11	s	ELECT 47uF 20% 35V
C12	1-126-947-11	s	ELECT 47uF 20% 35V
C13	1-164-097-11	s	CERAMIC 0.022uF 50V
C14	1-130-728-00	s	FILM 0.0022uF 1% 100V
C15	1-130-728-00	s	FILM 0.0022uF 1% 100V
C16	1-164-097-11	s	CERAMIC 0.022uF 50V
C17	1-130-495-00	s	MYLAR 0.1uF 5% 50V
CN350	1-564-011-11	o	CONNECTOR 12P, MALE
CN351	1-506-469-11	s	CONNECTOR 4P, MALE
CN352	1-564-001-11	o	CONNECTOR 2P, MALE
CN353	1-506-472-11	s	CONNECTOR 7P, MALE
CN354	1-506-480-11	s	CONNECTOR 15P, MALE
CN355	1-506-473-11	s	CONNECTOR 8P, MALE
CN356	1-562-708-11	o	CONNECTOR, FPC 13P
CN357	1-562-708-11	o	CONNECTOR, FPC 13P
CN358	1-564-005-11	o	CONNECTOR 6P, MALE
CN359	1-506-469-11	s	CONNECTOR 4P, MALE
CN360	1-506-469-11	s	CONNECTOR 4P, MALE
CN361	1-564-002-11	s	CONNECTOR 3P, MALE
CN362	1-562-993-11	o	CONNECTOR, FPC 30P
CN363	1-562-993-11	o	CONNECTOR, FPC 30P
CN364	1-562-993-11	o	CONNECTOR, FPC 30P
D1	8-719-938-07	s	LED GL480, INFRARED
D2	8-719-938-07	s	LED GL480, INFRARED
D3	8-719-938-07	s	LED GL480, INFRARED
D4	8-719-938-07	s	LED GL480, INFRARED
D7	8-719-933-30	s	DIODE DA210S
D8	8-719-933-30	s	DIODE DA210S
D9	8-719-933-30	s	DIODE DA210S
D10	8-719-933-30	s	DIODE DA210S
IC1	8-759-196-00	s	IC UPD75048CW-018
IC2	8-759-600-34	s	IC M54532P
IC3	8-759-645-23	s	IC M54523P
IC7	8-759-189-43	s	IC AN77L05-TA
IC8	8-759-190-25	s	IC PQ30VB11
Q1	8-729-903-81	s	PHOTOTRANSISTOR PT480
Q2	8-729-903-81	s	PHOTOTRANSISTOR PT480
Q3	8-729-903-81	s	PHOTOTRANSISTOR PT480
Q4	8-729-903-81	s	PHOTOTRANSISTOR PT480
R2	1-249-437-11	s	CARBON 47K 5% 1/4W
R3	1-249-429-11	s	CARBON 10K 5% 1/4W
R5	1-249-437-11	s	CARBON 47K 5% 1/4W
R6	1-249-429-11	s	CARBON 10K 5% 1/4W
R7	1-247-815-91	s	CARBON 220 5% 1/4W
R8	1-249-437-11	s	CARBON 47K 5% 1/4W
R9	1-249-429-11	s	CARBON 10K 5% 1/4W
R10	1-247-815-91	s	CARBON 220 5% 1/4W
R11	1-249-437-11	s	CARBON 47K 5% 1/4W
R12	1-249-429-11	s	CARBON 10K 5% 1/4W
R13	1-247-815-91	s	CARBON 220 5% 1/4W

(MS-39 BOARD(UVW-1800/1800P))

Ref. No. or Q'ty	Part No.	SP	Description
R14	1-249-437-11	s	CARBON 47K 5% 1/4W
R15	1-249-429-11	s	CARBON 10K 5% 1/4W
R16	1-247-815-91	s	CARBON 220 5% 1/4W
R17	1-249-437-11	s	CARBON 47K 5% 1/4W
R18	1-249-429-11	s	CARBON 10K 5% 1/4W
R19-R24	1-249-437-11	s	CARBON 47K 5% 1/4W
R25-R30	1-249-429-11	s	CARBON 10K 5% 1/4W
R31	1-249-437-11	s	CARBON 47K 5% 1/4W
R32	1-249-437-11	s	CARBON 47K 5% 1/4W
R34	1-249-417-11	s	CARBON 1K 5% 1/4W
R35	1-249-417-11	s	CARBON 1K 5% 1/4W
R36	1-249-417-11	s	CARBON 1K 5% 1/4W
R37	1-249-417-11	s	CARBON 1K 5% 1/4W
R38	1-249-437-11	s	CARBON 47K 5% 1/4W
R42	1-249-429-11	s	CARBON 10K 5% 1/4W
R43	1-249-429-11	s	CARBON 10K 5% 1/4W
R44	1-247-895-91	s	CARBON 470K 5% 1/4W
R46	1-249-437-11	s	CARBON 47K 5% 1/4W
R47	1-249-417-11	s	CARBON 1K 5% 1/4W
R49	1-249-437-11	s	CARBON 47K 5% 1/4W
R50	1-249-417-11	s	CARBON 1K 5% 1/4W
R51	1-249-429-11	s	CARBON 10K 5% 1/4W
R52	1-249-429-11	s	CARBON 10K 5% 1/4W
R53	1-249-429-11	s	CARBON 10K 5% 1/4W
R63	1-249-429-11	s	CARBON 10K 5% 1/4W
R64	1-215-432-00	s	METAL 3K 1% 1/6W
R65	1-215-411-00	s	METAL 390 1% 1/6W
X1	1-579-232-11	s	RESONATOR, CERAMIC 2.50MHz

MS-39A BOARD(UVW-1600/1600P)

Ref. No. or Q'ty	Part No.	SP	Description
MS-39A board is used for UVW-1600/1600P(J,UC,EK).			
1pc	A-8275-288-A	o	MOUNTED CIRCUIT BOARD, MS-39A
1pc	3-182-355-02	o	COVER, MC SENSOR
C3	1-164-097-11	s	CERAMIC 0.022uF 50V
C5	1-126-933-11	s	ELECT 100uF 20% 16V
C6	1-164-097-11	s	CERAMIC 0.022uF 50V
C11	1-126-947-11	s	ELECT 47uF 20% 35V
C12	1-126-947-11	s	ELECT 47uF 20% 35V
C13	1-164-097-11	s	CERAMIC 0.022uF 50V
C14	1-130-728-00	s	FILM 0.0022uF 1% 100V
C15	1-130-728-00	s	FILM 0.0022uF 1% 100V
C16	1-164-097-11	s	CERAMIC 0.022uF 50V
C17	1-130-495-00	s	MYLAR 0.1uF 5% 50V
CN350	1-564-011-11	o	CONNECTOR 12P, MALE
CN351	1-506-469-11	s	CONNECTOR 4P, MALE
CN352	1-564-001-11	o	CONNECTOR 2P, MALE
CN353	1-506-472-11	s	CONNECTOR 7P, MALE
CN354	1-506-480-11	s	CONNECTOR 15P, MALE
CN355	1-506-473-11	s	CONNECTOR 8P, MALE
CN356	1-562-708-11	o	CONNECTOR, FPC 13P
CN357	1-562-708-11	o	CONNECTOR, FPC 13P
CN358	1-564-005-11	o	CONNECTOR 6P, MALE
CN359	1-506-469-11	s	CONNECTOR 4P, MALE
CN360	1-506-469-11	s	CONNECTOR 4P, MALE
CN361	1-564-002-11	s	CONNECTOR 3P, MALE
CN362	1-562-993-11	o	CONNECTOR, FPC 30P
CN363	1-562-993-11	o	CONNECTOR, FPC 30P
CN364	1-562-993-11	o	CONNECTOR, FPC 30P
D1	8-719-938-07	s	LED GL480, INFRARED
D2	8-719-938-07	s	LED GL480, INFRARED
D7	8-719-933-30	s	DIODE DA210S
D8	8-719-933-30	s	DIODE DA210S
D9	8-719-933-30	s	DIODE DA210S
D10	8-719-933-30	s	DIODE DA210S
IC1	8-759-196-00	s	IC UPD75048CW-018
IC2	8-759-600-34	s	IC M54532P
IC3	8-759-645-23	s	IC M54523P
IC7	8-759-189-43	s	IC AN77L05-TA
IC8	8-759-190-25	s	IC PQ30VB11
Q1	8-729-903-81	s	PHOTOTRANSISTOR PT480
Q2	8-729-903-81	s	PHOTOTRANSISTOR PT480
R2	1-249-437-11	s	CARBON 47K 5% 1/4W
R3	1-249-429-11	s	CARBON 10K 5% 1/4W
R5	1-249-437-11	s	CARBON 47K 5% 1/4W
R6	1-249-429-11	s	CARBON 10K 5% 1/4W
R7	1-247-815-91	s	CARBON 220 5% 1/4W
R8	1-249-437-11	s	CARBON 47K 5% 1/4W
R9	1-249-429-11	s	CARBON 10K 5% 1/4W
R10	1-247-815-91	s	CARBON 220 5% 1/4W
R11	1-249-437-11	s	CARBON 47K 5% 1/4W
R12	1-249-429-11	s	CARBON 10K 5% 1/4W
R14	1-249-437-11	s	CARBON 47K 5% 1/4W
R15	1-249-429-11	s	CARBON 10K 5% 1/4W
R17	1-249-437-11	s	CARBON 47K 5% 1/4W
R18	1-249-429-11	s	CARBON 10K 5% 1/4W
R19-R24	1-249-437-11	s	CARBON 47K 5% 1/4W

(MS-39A BOARD(UVW-1600/1600P))

Ref. No. or Q'ty	Part No.	SP	Description
R25-R30	1-249-429-11	s	CARBON 10K 5% 1/4W
R31	1-249-437-11	s	CARBON 47K 5% 1/4W
R32	1-249-437-11	s	CARBON 47K 5% 1/4W
R34	1-249-417-11	s	CARBON 1K 5% 1/4W
R35	1-249-417-11	s	CARBON 1K 5% 1/4W
R36	1-249-417-11	s	CARBON 1K 5% 1/4W
R37	1-249-417-11	s	CARBON 1K 5% 1/4W
R38	1-249-437-11	s	CARBON 47K 5% 1/4W
R42	1-249-429-11	s	CARBON 10K 5% 1/4W
R43	1-249-429-11	s	CARBON 10K 5% 1/4W
R44	1-247-895-91	s	CARBON 470K 5% 1/4W
R46	1-249-437-11	s	CARBON 47K 5% 1/4W
R47	1-249-417-11	s	CARBON 1K 5% 1/4W
R49	1-249-437-11	s	CARBON 47K 5% 1/4W
R50	1-249-417-11	s	CARBON 1K 5% 1/4W
R51	1-249-429-11	s	CARBON 10K 5% 1/4W
R52	1-249-429-11	s	CARBON 10K 5% 1/4W
R53	1-249-429-11	s	CARBON 10K 5% 1/4W
R63	1-249-429-11	s	CARBON 10K 5% 1/4W
R64	1-215-432-00	s	METAL 3K 1% 1/6W
R65	1-215-411-00	s	METAL 390 1% 1/6W
X1	1-579-232-11	s	RESONATOR, CERAMIC 2.50MHz

PC-70 BOARD

Ref. No. or Q'ty	Part No.	SP	Description
1pc	A-8276-625-A	o	MOUNTED CIRCUIT BOARD, PC-70
1pc	3-176-598-02	o	SPRING, GROUND
CN934	1-565-038-11	s	CONNECTOR, FPC 5P
PH1	8-719-939-05	s	PHOTOINTERRUPTER GP-1S54
PH2	8-719-939-05	s	PHOTOINTERRUPTER GP-1S54
PH3	8-719-939-05	s	PHOTOINTERRUPTER GP-1S54
R1	1-247-825-31	s	CARBON 560 5% 1/4W
R2	1-247-825-31	s	CARBON 560 5% 1/4W
R3	1-247-825-31	s	CARBON 560 5% 1/4W

PD-35 BOARD

Ref. No. or Q'ty	Part No.	SP	Description
1pc	1-622-596-11	o	PRINTED CIRCUIT BOARD, PD-35

PTC-66 BOARD

Ref. No. or Q'ty	Part No.	SP	Description
1pc	1-648-926-12	o	PRINTED CIRCUIT BOARD, PTC-66
CN944	1-564-014-11	s	CONNECTOR 4P, MALE
PH1	8-719-939-05	s	PHOTOINTERRUPTER GP-1S54
PH2	8-719-939-05	s	PHOTOINTERRUPTER GP-1S54
R1	1-247-815-91	s	CARBON 220 5% 1/4W
R2	1-247-815-91	s	CARBON 220 5% 1/4W

PTC-67 BOARD

Ref. No. or Q'ty	Part No.	SP	Description
1pc	1-648-922-12	o	PRINTED CIRCUIT BOARD, PTC-67
C1	1-164-096-11	s	CERAMIC 0.01uF 50V
CN941	1-506-472-11	s	CONNECTOR 7P, MALE
CN942	1-564-001-11	o	CONNECTOR 2P, MALE
CN943	1-506-481-11	s	CONNECTOR 2P, MALE
PH1	8-719-939-05	s	PHOTOINTERRUPTER GP-1S54
R1	1-249-408-11	s	CARBON 180 5% 1/4W

PTC-68 BOARD

Ref. No. or Q'ty	Part No.	SP	Description
1pc	1-648-927-12	o	PRINTED CIRCUIT BOARD, PTC-68
CN940	1-506-469-11	s	CONNECTOR 4P, MALE
PH1	8-719-939-05	s	PHOTOINTERRUPTER GP-1S54
PH2	8-719-939-05	s	PHOTOINTERRUPTER GP-1S54
R1	1-247-815-91	s	CARBON 220 5% 1/4W
R2	1-247-815-91	s	CARBON 220 5% 1/4W

RM-126 BOARD

Ref. No. or Q'ty	Part No.	SP	Description
1pc	1-648-924-12	o	PRINTED CIRCUIT BOARD, RM-126
CN946	1-563-233-11	o	CONNECTOR, FPC 13P, FEMALE
CN947	1-564-014-11	s	CONNECTOR 4P, MALE
CN948	1-564-718-11	o	CONNECTOR 2P, MALE
CN949	1-564-013-11	o	CONNECTOR 3P, MALE

RM-127 BOARD

Ref. No. or Q'ty	Part No.	SP	Description
1pc	1-648-925-12	o	PRINTED CIRCUIT BOARD, RM-127
CN951	1-563-233-11	o	CONNECTOR, FPC 13P, FEMALE
CN952	1-564-014-11	s	CONNECTOR 4P, MALE
CN953	1-564-718-11	o	CONNECTOR 2P, MALE
CN954	1-564-013-11	o	CONNECTOR 3P, MALE

RP-70 BOARD(UVW-1800)

Ref. No. or Q'ty	Part No.	SP	Description
RP-70 board is used for UVW-1800(J,UC).			
1pc	A-8275-285-A	o	MOUNTED CIRCUIT BOARD, RP-70
1pc	3-182-385-02	o	PLATE, SHIELD (S), CARD
1pc	7-621-759-45	s	SCREW, +PSW2.6x6
1pc	3-179-084-01	s	LEVER (R), PC BOARD
1pc	3-179-085-01	s	LEVER (L), PC BOARD
C2	1-163-033-91	s	CERAMIC, CHIP 0.022uF 50V
C3	1-126-933-11	s	ELECT 100uF 20% 16V
C4	1-163-033-91	s	CERAMIC, CHIP 0.022uF 50V
C5	1-164-004-11	s	CERAMIC, CHIP 0.1uF 10% 25V
C6	1-126-933-11	s	ELECT 100uF 20% 16V
C7	1-163-033-91	s	CERAMIC, CHIP 0.022uF 50V
C8	1-164-004-11	s	CERAMIC, CHIP 0.1uF 10% 25V
C11	1-163-033-91	s	CERAMIC, CHIP 0.022uF 50V
C12	1-163-033-91	s	CERAMIC, CHIP 0.022uF 50V
C13	1-126-933-11	s	ELECT 100uF 20% 16V
C14	1-163-033-91	s	CERAMIC, CHIP 0.022uF 50V
C15	1-126-933-11	s	ELECT 100uF 20% 16V
C16	1-163-033-91	s	CERAMIC, CHIP 0.022uF 50V
C17	1-163-033-91	s	CERAMIC, CHIP 0.022uF 50V
C18	1-126-933-11	s	ELECT 100uF 20% 16V
C19	1-163-227-11	s	CERAMIC, CHIP 10PF 5% 50V
C20	1-163-033-91	s	CERAMIC, CHIP 0.022uF 50V
C21	1-164-004-11	s	CERAMIC, CHIP 0.1uF 10% 25V
C23	1-126-933-11	s	ELECT 100uF 20% 16V
C103	1-126-933-11	s	ELECT 100uF 20% 16V
C104	1-163-033-91	s	CERAMIC, CHIP 0.022uF 50V
C105	1-164-004-11	s	CERAMIC, CHIP 0.1uF 10% 25V
C106	1-126-933-11	s	ELECT 100uF 20% 16V
C107	1-163-033-91	s	CERAMIC, CHIP 0.022uF 50V
C108	1-164-004-11	s	CERAMIC, CHIP 0.1uF 10% 25V
C111	1-163-033-91	s	CERAMIC, CHIP 0.022uF 50V
C112	1-163-033-91	s	CERAMIC, CHIP 0.022uF 50V
C113	1-126-933-11	s	ELECT 100uF 20% 16V
C114	1-163-033-91	s	CERAMIC, CHIP 0.022uF 50V
C115	1-126-933-11	s	ELECT 100uF 20% 16V
C116	1-163-033-91	s	CERAMIC, CHIP 0.022uF 50V
C117	1-163-033-91	s	CERAMIC, CHIP 0.022uF 50V
C118	1-126-933-11	s	ELECT 100uF 20% 16V
C119	1-163-227-11	s	CERAMIC, CHIP 10PF 5% 50V
C120	1-163-033-91	s	CERAMIC, CHIP 0.022uF 50V
C121	1-164-004-11	s	CERAMIC, CHIP 0.1uF 10% 25V
C123	1-126-933-11	s	ELECT 100uF 20% 16V
C202	1-163-033-91	s	CERAMIC, CHIP 0.022uF 50V
C203	1-126-933-11	s	ELECT 100uF 20% 16V
C204	1-163-033-91	s	CERAMIC, CHIP 0.022uF 50V
C205	1-164-004-11	s	CERAMIC, CHIP 0.1uF 10% 25V
C206	1-126-933-11	s	ELECT 100uF 20% 16V
C207	1-163-033-91	s	CERAMIC, CHIP 0.022uF 50V
C208	1-164-004-11	s	CERAMIC, CHIP 0.1uF 10% 25V
C211	1-163-033-91	s	CERAMIC, CHIP 0.022uF 50V
C212	1-163-033-91	s	CERAMIC, CHIP 0.022uF 50V
C213	1-126-933-11	s	ELECT 100uF 20% 16V
C214	1-163-033-91	s	CERAMIC, CHIP 0.022uF 50V
C215	1-126-933-11	s	ELECT 100uF 20% 16V
C216	1-163-033-91	s	CERAMIC, CHIP 0.022uF 50V
C217	1-163-033-91	s	CERAMIC, CHIP 0.022uF 50V
C218	1-126-933-11	s	ELECT 100uF 20% 16V

(RP-70 BOARD(UVW-1800))

Ref. No. or Q'ty	Part No.	SP	Description
C219	1-163-227-11	s	CERAMIC, CHIP 10PF 5% 50V
C220	1-163-033-91	s	CERAMIC, CHIP 0.022uF 50V
C221	1-164-004-11	s	CERAMIC, CHIP 0.1uF 10% 25V
C223	1-126-933-11	s	ELECT 100uF 20% 16V
C303	1-126-933-11	s	ELECT 100uF 20% 16V
C304	1-163-033-91	s	CERAMIC, CHIP 0.022uF 50V
C305	1-164-004-11	s	CERAMIC, CHIP 0.1uF 10% 25V
C306	1-126-933-11	s	ELECT 100uF 20% 16V
C307	1-163-033-91	s	CERAMIC, CHIP 0.022uF 50V
C308	1-164-004-11	s	CERAMIC, CHIP 0.1uF 10% 25V
C311	1-163-033-91	s	CERAMIC, CHIP 0.022uF 50V
C312	1-163-033-91	s	CERAMIC, CHIP 0.022uF 50V
C313	1-126-933-11	s	ELECT 100uF 20% 16V
C314	1-163-033-91	s	CERAMIC, CHIP 0.022uF 50V
C315	1-126-933-11	s	ELECT 100uF 20% 16V
C316	1-163-033-91	s	CERAMIC, CHIP 0.022uF 50V
C317	1-163-033-91	s	CERAMIC, CHIP 0.022uF 50V
C318	1-126-933-11	s	ELECT 100uF 20% 16V
C319	1-163-227-11	s	CERAMIC, CHIP 10PF 5% 50V
C320	1-163-033-91	s	CERAMIC, CHIP 0.022uF 50V
C321	1-164-004-11	s	CERAMIC, CHIP 0.1uF 10% 25V
C323	1-126-933-11	s	ELECT 100uF 20% 16V
C501-507	1-163-033-91	s	CERAMIC, CHIP 0.022uF 50V
C601	1-126-933-11	s	ELECT 100uF 20% 16V
C602	1-163-033-91	s	CERAMIC, CHIP 0.022uF 50V
C603	1-130-477-00	s	MYLAR 0.0033uF 5% 50V
C604	1-130-487-00	s	MYLAR 0.022uF 5% 50V
C605	1-163-121-00	s	CERAMIC, CHIP 150PF 5% 50V
C606	1-137-361-11	s	FILM 330pF 5% 50V
C607	1-163-121-00	s	CERAMIC, CHIP 150PF 5% 50V
C609	1-163-275-11	s	CERAMIC, CHIP 0.001uF 5% 50V
C610	1-163-033-91	s	CERAMIC, CHIP 0.022uF 50V
C611	1-126-933-11	s	ELECT 100uF 20% 16V
C612	1-126-933-11	s	ELECT 100uF 20% 16V
C613	1-163-033-91	s	CERAMIC, CHIP 0.022uF 50V
C614	1-130-477-00	s	MYLAR 0.0033uF 5% 50V
C615	1-130-487-00	s	MYLAR 0.022uF 5% 50V
C616	1-163-121-00	s	CERAMIC, CHIP 150PF 5% 50V
C617	1-137-361-11	s	FILM 330pF 5% 50V
C618	1-163-121-00	s	CERAMIC, CHIP 150PF 5% 50V
C620	1-163-275-11	s	CERAMIC, CHIP 0.001uF 5% 50V
C621	1-163-033-91	s	CERAMIC, CHIP 0.022uF 50V
C622	1-126-933-11	s	ELECT 100uF 20% 16V
C623	1-126-933-11	s	ELECT 100uF 20% 16V
C624	1-163-033-91	s	CERAMIC, CHIP 0.022uF 50V
C625	1-126-933-11	s	ELECT 100uF 20% 16V
C626	1-163-033-91	s	CERAMIC, CHIP 0.022uF 50V
C627	1-126-933-11	s	ELECT 100uF 20% 16V
C628	1-126-933-11	s	ELECT 100uF 20% 16V
C629	1-163-017-00	s	CERAMIC, CHIP 0.0047uF 5% 50V
C630	1-163-017-00	s	CERAMIC, CHIP 0.0047uF 5% 50V
C631	1-164-232-11	s	CERAMIC, CHIP 0.01uF 10% 100V
C632	1-164-182-11	s	CERAMIC, CHIP 3300PF 10% 100V
C635	1-136-562-11	s	FILM 0.0082uF 5% 630V
C636	1-131-368-00	s	TANTALUM 3.3uF 10% 16V
C701	1-163-033-91	s	CERAMIC, CHIP 0.022uF 50V
C702	1-126-933-11	s	ELECT 100uF 20% 16V
C703	1-126-933-11	s	ELECT 100uF 20% 16V
C704	1-163-033-91	s	CERAMIC, CHIP 0.022uF 50V

(RP-70 BOARD(UVW-1800))

Ref. No. or Q'ty	Part No.	SP	Description
C705	1-163-033-91	s	CERAMIC, CHIP 0.022uF 50V
C706	1-126-933-11	s	ELECT 100uF 20% 16V
C707	1-163-033-91	s	CERAMIC, CHIP 0.022uF 50V
C708	1-126-933-11	s	ELECT 100uF 20% 16V
C709	1-163-033-91	s	CERAMIC, CHIP 0.022uF 50V
C710	1-126-933-11	s	ELECT 100uF 20% 16V
C711	1-126-933-11	s	ELECT 100uF 20% 16V
C712	1-163-033-91	s	CERAMIC, CHIP 0.022uF 50V
C713	1-163-033-91	s	CERAMIC, CHIP 0.022uF 50V
C714	1-126-933-11	s	ELECT 100uF 20% 16V
C715	1-163-033-91	s	CERAMIC, CHIP 0.022uF 50V
C716	1-126-933-11	s	ELECT 100uF 20% 16V
C717	1-163-033-91	s	CERAMIC, CHIP 0.022uF 50V
C718	1-126-933-11	s	ELECT 100uF 20% 16V
C719	1-126-933-11	s	ELECT 100uF 20% 16V
C720	1-163-033-91	s	CERAMIC, CHIP 0.022uF 50V
C721	1-163-033-91	s	CERAMIC, CHIP 0.022uF 50V
C722	1-126-933-11	s	ELECT 100uF 20% 16V
C723	1-163-033-91	s	CERAMIC, CHIP 0.022uF 50V
C724	1-126-933-11	s	ELECT 100uF 20% 16V
C725	1-163-033-91	s	CERAMIC, CHIP 0.022uF 50V
C726	1-126-933-11	s	ELECT 100uF 20% 16V
C727	1-126-933-11	s	ELECT 100uF 20% 16V
C728	1-163-033-91	s	CERAMIC, CHIP 0.022uF 50V
C729	1-163-033-91	s	CERAMIC, CHIP 0.022uF 50V
C730	1-126-933-11	s	ELECT 100uF 20% 16V
C731	1-163-033-91	s	CERAMIC, CHIP 0.022uF 50V
C732	1-126-933-11	s	ELECT 100uF 20% 16V
CN1	1-506-468-11	o	CONNECTOR 3P, MALE
CN101	1-506-468-11	o	CONNECTOR 3P, MALE
CN110	1-573-600-21	s	CONNECTOR, PHEC 100P, MALE
CN201	1-506-468-11	o	CONNECTOR 3P, MALE
CN301	1-506-468-11	o	CONNECTOR 3P, MALE
D701	8-719-123-82	s	DIODE 1SS303-T1
D702	8-719-123-82	s	DIODE 1SS303-T1
D703	8-719-123-85	s	DIODE 1SS304
D704	8-719-123-85	s	DIODE 1SS304
IC1	1-810-336-11	s	HIC BP-025
IC2	1-810-335-11	s	HIC BP-024
IC101	1-810-336-11	s	HIC BP-025
IC102	1-810-335-11	s	HIC BP-024
IC201	1-810-336-11	s	HIC BP-025
IC202	1-810-335-11	s	HIC BP-024
IC301	1-810-336-11	s	HIC BP-025
IC302	1-810-335-11	s	HIC BP-024
IC501	8-759-009-10	s	IC MC14069UBF
IC502	8-759-009-10	s	IC MC14069UBF
IC503	8-759-009-10	s	IC MC14069UBF
IC601	8-759-981-48	s	IC NJM082M
IC602	8-759-981-48	s	IC NJM082M
IC701	8-759-182-84	s	IC PQ05SZ5U
IC702	8-759-189-43	s	IC AN77L05-TA
IC703	8-759-168-20	s	IC TA78L09S
IC704	8-759-168-20	s	IC TA78L09S
IC705	8-759-822-95	s	IC L79M05T-FA
IC706	8-759-700-65	s	IC NJM79L05A
IC707	8-759-700-68	s	IC NJM79L09A
IC708	8-759-700-68	s	IC NJM79L09A

(RP-70 BOARD(UVW-1800))

Ref. No. or Q'ty	Part No.	SP	Description
L1-L5	1-410-482-31	s	INDUCTOR 100uH
L101-105	1-410-482-31	s	INDUCTOR 100uH
L201-205	1-410-482-31	s	INDUCTOR 100uH
L301-305	1-410-482-31	s	INDUCTOR 100uH
L603	1-412-533-21	s	INDUCTOR 47uH
L604	1-408-397-00	s	INDUCTOR 1uH
L605	1-408-397-00	s	INDUCTOR 1uH
L701	1-412-533-21	s	INDUCTOR 47uH
L702	1-412-533-21	s	INDUCTOR 47uH
L703	1-412-533-21	s	INDUCTOR 47uH
L704	1-412-533-21	s	INDUCTOR 47uH
Q1	8-729-117-72	s	TRANSISTOR 2SC4178
Q2	8-729-117-72	s	TRANSISTOR 2SC4178
Q3	8-729-117-72	s	TRANSISTOR 2SC4178
Q102	8-729-117-72	s	TRANSISTOR 2SC4178
Q103	8-729-117-72	s	TRANSISTOR 2SC4178
Q201	8-729-117-72	s	TRANSISTOR 2SC4178
Q202	8-729-117-72	s	TRANSISTOR 2SC4178
Q203	8-729-117-72	s	TRANSISTOR 2SC4178
Q302	8-729-117-72	s	TRANSISTOR 2SC4178
Q303	8-729-117-72	s	TRANSISTOR 2SC4178
Q501	8-729-209-06	s	TRANSISTOR 2SC4213-A
Q601	8-729-119-76	s	TRANSISTOR 2SA1115P
Q602	8-729-119-78	s	TRANSISTOR 2SC2785-HFE
Q603	8-729-320-60	s	TRANSISTOR 2SD788-34
Q604	8-729-320-60	s	TRANSISTOR 2SD788-34
Q605	8-729-119-76	s	TRANSISTOR 2SA1115P
Q606	8-729-119-78	s	TRANSISTOR 2SC2785-HFE
Q607	8-729-320-60	s	TRANSISTOR 2SD788-34
Q608	8-729-320-60	s	TRANSISTOR 2SD788-34
Q609	8-729-905-18	s	TRANSISTOR DTC144EU
Q610	8-729-140-63	s	TRANSISTOR 2SA1611-M5M6
Q611	8-729-022-00	s	TRANSISTOR 2SB1416-R(TA)
Q612	8-729-117-32	s	TRANSISTOR 2SC4177
Q613	8-729-159-65	s	TRANSISTOR 2SD596-DV5
Q614	8-729-159-65	s	TRANSISTOR 2SD596-DV5
Q615	8-729-140-63	s	TRANSISTOR 2SA1611-M5M6
Q616	8-729-209-06	s	TRANSISTOR 2SC4213-A
Q617	8-729-209-06	s	TRANSISTOR 2SC4213-A
R1	1-216-041-00	s	METAL, CHIP 470 5% 1/10W
R2	1-216-624-11	s	METAL, CHIP 75 0.5% 1/10W
R4	1-216-001-00	s	METAL, CHIP 10 5% 1/10W
R5	1-216-047-91	s	METAL, CHIP 820 5% 1/10W
R6	1-216-047-91	s	METAL, CHIP 820 5% 1/10W
R7	1-216-053-00	s	METAL, CHIP 1.5K 5% 1/10W
R8	1-216-009-00	s	METAL, CHIP 22 5% 1/10W
R9	1-216-055-00	s	METAL, CHIP 1.8K 5% 1/10W
R10	1-216-073-00	s	METAL, CHIP 10K 5% 1/10W
R11	1-216-009-00	s	METAL, CHIP 22 5% 1/10W
R12	1-216-057-00	s	METAL, CHIP 2.2K 5% 1/10W
R13	1-216-001-00	s	METAL, CHIP 10 5% 1/10W
R16	1-216-001-00	s	METAL, CHIP 10 5% 1/10W
R18	1-216-001-00	s	METAL, CHIP 10 5% 1/10W
R19	1-216-687-11	s	METAL, CHIP 33K 0.5% 1/10W
R21	1-208-822-11	s	METAL, CHIP 47k 0.5% 1/10W
R22	1-216-625-11	s	METAL, CHIP 82 0.5% 1/10W
R106	1-216-047-91	s	METAL, CHIP 820 5% 1/10W
R107	1-216-053-00	s	METAL, CHIP 1.5K 5% 1/10W

(RP-70 BOARD(UVW-1800))

Ref. No. or Q'ty	Part No.	SP	Description
R108	1-216-009-00	s	METAL, CHIP 22 5% 1/10W
R109	1-216-055-00	s	METAL, CHIP 1.8K 5% 1/10W
R110	1-216-073-00	s	METAL, CHIP 10K 5% 1/10W
R111	1-216-009-00	s	METAL, CHIP 22 5% 1/10W
R112	1-216-057-00	s	METAL, CHIP 2.2K 5% 1/10W
R113	1-216-001-00	s	METAL, CHIP 10 5% 1/10W
R116	1-216-001-00	s	METAL, CHIP 10 5% 1/10W
R118	1-216-001-00	s	METAL, CHIP 10 5% 1/10W
R119	1-216-687-11	s	METAL, CHIP 33K 0.5% 1/10W
R121	1-208-822-11	s	METAL, CHIP 47k 0.5% 1/10W
R122	1-216-625-11	s	METAL, CHIP 82 0.5% 1/10W
R201	1-216-041-00	s	METAL, CHIP 470 5% 1/10W
R202	1-216-624-11	s	METAL, CHIP 75 0.5% 1/10W
R204	1-216-001-00	s	METAL, CHIP 10 5% 1/10W
R205	1-216-047-91	s	METAL, CHIP 820 5% 1/10W
R206	1-216-047-91	s	METAL, CHIP 820 5% 1/10W
R207	1-216-053-00	s	METAL, CHIP 1.5K 5% 1/10W
R208	1-216-009-00	s	METAL, CHIP 22 5% 1/10W
R209	1-216-055-00	s	METAL, CHIP 1.8K 5% 1/10W
R210	1-216-073-00	s	METAL, CHIP 10K 5% 1/10W
R211	1-216-009-00	s	METAL, CHIP 22 5% 1/10W
R212	1-216-057-00	s	METAL, CHIP 2.2K 5% 1/10W
R213	1-216-001-00	s	METAL, CHIP 10 5% 1/10W
R216	1-216-001-00	s	METAL, CHIP 10 5% 1/10W
R218	1-216-001-00	s	METAL, CHIP 10 5% 1/10W
R219	1-208-822-11	s	METAL, CHIP 47k 0.5% 1/10W
R221	1-216-689-11	s	METAL, CHIP 39K 0.5% 1/10W
R222	1-216-625-11	s	METAL, CHIP 82 0.5% 1/10W
R306	1-216-047-91	s	METAL, CHIP 820 5% 1/10W
R307	1-216-053-00	s	METAL, CHIP 1.5K 5% 1/10W
R308	1-216-009-00	s	METAL, CHIP 22 5% 1/10W
R309	1-216-055-00	s	METAL, CHIP 1.8K 5% 1/10W
R310	1-216-073-00	s	METAL, CHIP 10K 5% 1/10W
R311	1-216-009-00	s	METAL, CHIP 22 5% 1/10W
R312	1-216-057-00	s	METAL, CHIP 2.2K 5% 1/10W
R313	1-216-001-00	s	METAL, CHIP 10 5% 1/10W
R316	1-216-001-00	s	METAL, CHIP 10 5% 1/10W
R318	1-216-001-00	s	METAL, CHIP 10 5% 1/10W
R319	1-208-822-11	s	METAL, CHIP 47k 0.5% 1/10W
R321	1-216-689-11	s	METAL, CHIP 39K 0.5% 1/10W
R322	1-216-625-11	s	METAL, CHIP 82 0.5% 1/10W
R501	1-216-073-00	s	METAL, CHIP 10K 5% 1/10W
R502	1-216-049-91	s	METAL, CHIP 1k 5% 1/10W
R503	1-216-073-00	s	METAL, CHIP 10K 5% 1/10W
R504	1-216-049-91	s	METAL, CHIP 1k 5% 1/10W
R505	1-216-049-91	s	METAL, CHIP 1k 5% 1/10W
R506	1-216-081-00	s	METAL, CHIP 22K 5% 1/10W
R507	1-216-081-00	s	METAL, CHIP 22K 5% 1/10W
R508	1-216-081-00	s	METAL, CHIP 22K 5% 1/10W
R509	1-216-073-00	s	METAL, CHIP 10K 5% 1/10W
R510	1-216-049-91	s	METAL, CHIP 1k 5% 1/10W
R511	1-216-049-91	s	METAL, CHIP 1k 5% 1/10W
R512	1-216-073-00	s	METAL, CHIP 10K 5% 1/10W
R513	1-216-049-91	s	METAL, CHIP 1k 5% 1/10W
R514	1-216-073-00	s	METAL, CHIP 10K 5% 1/10W
R515	1-216-049-91	s	METAL, CHIP 1k 5% 1/10W
R516	1-216-049-91	s	METAL, CHIP 1k 5% 1/10W
R517	1-216-049-91	s	METAL, CHIP 1k 5% 1/10W
R518	1-216-073-00	s	METAL, CHIP 10K 5% 1/10W

(RP-70 BOARD(UVW-1800))

Ref. No. or Q'ty	Part No.	SP	Description
R519	1-216-073-00	s	METAL, CHIP 10K 5% 1/10W
R601	1-216-073-00	s	METAL, CHIP 10K 5% 1/10W
R602	1-216-081-00	s	METAL, CHIP 22K 5% 1/10W
R603	1-249-402-11	s	CARBON 56 5% 1/4W
R604	1-216-073-00	s	METAL, CHIP 10K 5% 1/10W
R605	1-249-417-11	s	CARBON 1K 5% 1/4W
R606	1-216-663-11	s	METAL, CHIP 3.3K 0.5% 1/10W
R607	1-216-121-91	s	METAL, CHIP 1M 5% 1/10W
R608	1-208-800-11	s	METAL, CHIP 5.6k 0.5% 1/10W
R609	1-249-402-11	s	CARBON 56 5% 1/4W
R610	1-216-659-11	s	METAL, CHIP 2.2K 0.5% 1/10W
R611	1-215-403-00	s	METAL 180 1% 1/6W
R612	1-216-061-00	s	METAL, CHIP 3.3K 5% 1/10W
R613	1-216-061-00	s	METAL, CHIP 3.3K 5% 1/10W
R614	1-216-077-00	s	METAL, CHIP 15K 5% 1/10W
R615	1-216-061-00	s	METAL, CHIP 3.3K 5% 1/10W
R616	1-216-073-00	s	METAL, CHIP 10K 5% 1/10W
R617	1-216-081-00	s	METAL, CHIP 22K 5% 1/10W
R618	1-249-402-11	s	CARBON 56 5% 1/4W
R619	1-216-073-00	s	METAL, CHIP 10K 5% 1/10W
R620	1-249-417-11	s	CARBON 1K 5% 1/4W
R621	1-216-663-11	s	METAL, CHIP 3.3K 0.5% 1/10W
R622	1-216-121-91	s	METAL, CHIP 1M 5% 1/10W
R623	1-208-800-11	s	METAL, CHIP 5.6k 0.5% 1/10W
R624	1-249-402-11	s	CARBON 56 5% 1/4W
R625	1-216-659-11	s	METAL, CHIP 2.2K 0.5% 1/10W
R626	1-215-403-00	s	METAL 180 1% 1/6W
R627	1-216-061-00	s	METAL, CHIP 3.3K 5% 1/10W
R628	1-216-061-00	s	METAL, CHIP 3.3K 5% 1/10W
R629	1-216-077-00	s	METAL, CHIP 15K 5% 1/10W
R630	1-216-061-00	s	METAL, CHIP 3.3K 5% 1/10W
R631	1-216-085-00	s	METAL, CHIP 33K 5% 1/10W
R632	1-216-065-00	s	METAL, CHIP 4.7K 5% 1/10W
R633	1-216-051-00	s	METAL, CHIP 1.2K 5% 1/10W
R634	1-216-071-00	s	METAL, CHIP 8.2K 5% 1/10W
R635	1-216-081-00	s	METAL, CHIP 22K 5% 1/10W
R636	1-216-093-00	s	METAL, CHIP 68K 5% 1/10W
R637	1-216-093-00	s	METAL, CHIP 68K 5% 1/10W
R639	1-216-073-00	s	METAL, CHIP 10K 5% 1/10W
R640	1-216-077-00	s	METAL, CHIP 15K 5% 1/10W
R641	1-216-057-00	s	METAL, CHIP 2.2K 5% 1/10W
R642	1-216-057-00	s	METAL, CHIP 2.2K 5% 1/10W
RV1	1-241-783-11	s	RES, ADJ METAL 2.2k
RV2	1-241-761-11	s	RES, ADJ METAL 1k
RV101	1-241-783-11	s	RES, ADJ METAL 2.2k
RV102	1-241-761-11	s	RES, ADJ METAL 1k
RV201	1-241-783-11	s	RES, ADJ METAL 2.2k
RV202	1-241-761-11	s	RES, ADJ METAL 1k
RV301	1-241-783-11	s	RES, ADJ METAL 2.2k
RV302	1-241-761-11	s	RES, ADJ METAL 1k
S1	1-553-977-00	s	SWITCH, SLIDE
S101	1-553-977-00	s	SWITCH, SLIDE
S201	1-553-977-00	s	SWITCH, SLIDE
S301	1-553-977-00	s	SWITCH, SLIDE
T1	1-423-659-11	s	TRANSFORMER, RF OUTPUT
T2	1-423-658-11	s	TRANSFORMER, RF INPUT
T101	1-423-659-11	s	TRANSFORMER, RF OUTPUT
T102	1-423-658-11	s	TRANSFORMER, RF INPUT

(RP-70 BOARD(UVW-1800))

Ref. No. or Q'ty	Part No.	SP	Description
T201	1-423-659-11	s	TRANSFORMER, RF OUTPUT
T202	1-423-657-11	s	TRANSFORMER, RF INPUT
T301	1-423-659-11	s	TRANSFORMER, RF OUTPUT
T302	1-423-657-11	s	TRANSFORMER, RF INPUT
T601	1-423-656-11	s	TRANSFORMER, ROTARY ERASE
T602	1-423-656-11	s	TRANSFORMER, ROTARY ERASE
T603	1-424-511-11	s	TRANSFORMER, FE

RP-70P BOARD(UVW-1800P)

Ref. No. or Q'ty	Part No.	SP	Description
RP-70P board is used for UVW-1800P(EK).			
1pc	A-8275-470-A	o	MOUNTED CIRCUIT BOARD, RP-70P
1pc	3-182-385-02	o	PLATE, SHIELD (S), CARD
1pc	7-621-759-45	s	SCREW, +PSW2.6x6
1pc	3-179-084-01	s	LEVER (R), PC BOARD
1pc	3-179-085-01	s	LEVER (L), PC BOARD
C2	1-163-033-91	s	CERAMIC, CHIP 0.022uF 50V
C3	1-126-933-11	s	ELECT 100uF 20% 16V
C4	1-163-033-91	s	CERAMIC, CHIP 0.022uF 50V
C5	1-164-004-11	s	CERAMIC, CHIP 0.1uF 10% 25V
C6	1-126-933-11	s	ELECT 100uF 20% 16V
C7	1-163-033-91	s	CERAMIC, CHIP 0.022uF 50V
C8	1-164-004-11	s	CERAMIC, CHIP 0.1uF 10% 25V
C11	1-163-033-91	s	CERAMIC, CHIP 0.022uF 50V
C12	1-163-033-91	s	CERAMIC, CHIP 0.022uF 50V
C13	1-126-933-11	s	ELECT 100uF 20% 16V
C14	1-163-033-91	s	CERAMIC, CHIP 0.022uF 50V
C15	1-126-933-11	s	ELECT 100uF 20% 16V
C16	1-163-033-91	s	CERAMIC, CHIP 0.022uF 50V
C17	1-163-033-91	s	CERAMIC, CHIP 0.022uF 50V
C18	1-126-933-11	s	ELECT 100uF 20% 16V
C19	1-163-227-11	s	CERAMIC, CHIP 10PF 5% 50V
C20	1-163-033-91	s	CERAMIC, CHIP 0.022uF 50V
C21	1-164-004-11	s	CERAMIC, CHIP 0.1uF 10% 25V
C23	1-126-933-11	s	ELECT 100uF 20% 16V
C103	1-126-933-11	s	ELECT 100uF 20% 16V
C104	1-163-033-91	s	CERAMIC, CHIP 0.022uF 50V
C105	1-164-004-11	s	CERAMIC, CHIP 0.1uF 10% 25V
C106	1-126-933-11	s	ELECT 100uF 20% 16V
C107	1-163-033-91	s	CERAMIC, CHIP 0.022uF 50V
C108	1-164-004-11	s	CERAMIC, CHIP 0.1uF 10% 25V
C111	1-163-033-91	s	CERAMIC, CHIP 0.022uF 50V
C112	1-163-033-91	s	CERAMIC, CHIP 0.022uF 50V
C113	1-126-933-11	s	ELECT 100uF 20% 16V
C114	1-163-033-91	s	CERAMIC, CHIP 0.022uF 50V
C115	1-126-933-11	s	ELECT 100uF 20% 16V
C116	1-163-033-91	s	CERAMIC, CHIP 0.022uF 50V
C117	1-163-033-91	s	CERAMIC, CHIP 0.022uF 50V
C118	1-126-933-11	s	ELECT 100uF 20% 16V
C119	1-163-227-11	s	CERAMIC, CHIP 10PF 5% 50V
C120	1-163-033-91	s	CERAMIC, CHIP 0.022uF 50V
C121	1-164-004-11	s	CERAMIC, CHIP 0.1uF 10% 25V
C123	1-126-933-11	s	ELECT 100uF 20% 16V
C202	1-163-033-91	s	CERAMIC, CHIP 0.022uF 50V
C203	1-126-933-11	s	ELECT 100uF 20% 16V
C204	1-163-033-91	s	CERAMIC, CHIP 0.022uF 50V
C205	1-164-004-11	s	CERAMIC, CHIP 0.1uF 10% 25V
C206	1-126-933-11	s	ELECT 100uF 20% 16V
C207	1-163-033-91	s	CERAMIC, CHIP 0.022uF 50V
C208	1-164-004-11	s	CERAMIC, CHIP 0.1uF 10% 25V
C211	1-163-033-91	s	CERAMIC, CHIP 0.022uF 50V
C212	1-163-033-91	s	CERAMIC, CHIP 0.022uF 50V
C213	1-126-933-11	s	ELECT 100uF 20% 16V
C214	1-163-033-91	s	CERAMIC, CHIP 0.022uF 50V
C215	1-126-933-11	s	ELECT 100uF 20% 16V
C216	1-163-033-91	s	CERAMIC, CHIP 0.022uF 50V
C217	1-163-033-91	s	CERAMIC, CHIP 0.022uF 50V
C218	1-126-933-11	s	ELECT 100uF 20% 16V

(RP-70P BOARD(UVW-1800P))

Ref. No. or Q'ty	Part No.	SP	Description
C219	1-163-227-11	s	CERAMIC, CHIP 10PF 5% 50V
C220	1-163-033-91	s	CERAMIC, CHIP 0.022uF 50V
C221	1-164-004-11	s	CERAMIC, CHIP 0.1uF 10% 25V
C223	1-126-933-11	s	ELECT 100uF 20% 16V
C303	1-126-933-11	s	ELECT 100uF 20% 16V
C304	1-163-033-91	s	CERAMIC, CHIP 0.022uF 50V
C305	1-164-004-11	s	CERAMIC, CHIP 0.1uF 10% 25V
C306	1-126-933-11	s	ELECT 100uF 20% 16V
C307	1-163-033-91	s	CERAMIC, CHIP 0.022uF 50V
C308	1-164-004-11	s	CERAMIC, CHIP 0.1uF 10% 25V
C311	1-163-033-91	s	CERAMIC, CHIP 0.022uF 50V
C312	1-163-033-91	s	CERAMIC, CHIP 0.022uF 50V
C313	1-126-933-11	s	ELECT 100uF 20% 16V
C314	1-163-033-91	s	CERAMIC, CHIP 0.022uF 50V
C315	1-126-933-11	s	ELECT 100uF 20% 16V
C316	1-163-033-91	s	CERAMIC, CHIP 0.022uF 50V
C317	1-163-033-91	s	CERAMIC, CHIP 0.022uF 50V
C318	1-126-933-11	s	ELECT 100uF 20% 16V
C319	1-163-227-11	s	CERAMIC, CHIP 10PF 5% 50V
C320	1-163-033-91	s	CERAMIC, CHIP 0.022uF 50V
C321	1-164-004-11	s	CERAMIC, CHIP 0.1uF 10% 25V
C323	1-126-933-11	s	ELECT 100uF 20% 16V
C501-507	1-163-033-91	s	CERAMIC, CHIP 0.022uF 50V
C601	1-126-933-11	s	ELECT 100uF 20% 16V
C602	1-163-033-91	s	CERAMIC, CHIP 0.022uF 50V
C603	1-130-477-00	s	MYLAR 0.0033uF 5% 50V
C604	1-130-487-00	s	MYLAR 0.022uF 5% 50V
C605	1-163-121-00	s	CERAMIC, CHIP 150PF 5% 50V
C606	1-137-361-11	s	FILM 330pF 5% 50V
C607	1-163-121-00	s	CERAMIC, CHIP 150PF 5% 50V
C609	1-163-275-11	s	CERAMIC, CHIP 0.001uF 5% 50V
C610	1-163-033-91	s	CERAMIC, CHIP 0.022uF 50V
C611	1-126-933-11	s	ELECT 100uF 20% 16V
C612	1-126-933-11	s	ELECT 100uF 20% 16V
C613	1-163-033-91	s	CERAMIC, CHIP 0.022uF 50V
C614	1-130-477-00	s	MYLAR 0.0033uF 5% 50V
C615	1-130-487-00	s	MYLAR 0.022uF 5% 50V
C616	1-163-121-00	s	CERAMIC, CHIP 150PF 5% 50V
C617	1-137-361-11	s	FILM 330pF 5% 50V
C618	1-163-121-00	s	CERAMIC, CHIP 150PF 5% 50V
C620	1-163-275-11	s	CERAMIC, CHIP 0.001uF 5% 50V
C621	1-163-033-91	s	CERAMIC, CHIP 0.022uF 50V
C622	1-126-933-11	s	ELECT 100uF 20% 16V
C623	1-126-933-11	s	ELECT 100uF 20% 16V
C624	1-163-033-91	s	CERAMIC, CHIP 0.022uF 50V
C625	1-126-933-11	s	ELECT 100uF 20% 16V
C626	1-163-033-91	s	CERAMIC, CHIP 0.022uF 50V
C627	1-126-933-11	s	ELECT 100uF 20% 16V
C628	1-126-933-11	s	ELECT 100uF 20% 16V
C629	1-163-017-00	s	CERAMIC, CHIP 0.0047uF 5% 50V
C630	1-163-017-00	s	CERAMIC, CHIP 0.0047uF 5% 50V
C631	1-164-232-11	s	CERAMIC, CHIP 0.01uF 10% 100V
C632	1-164-182-11	s	CERAMIC, CHIP 3300PF 10% 100V
C635	1-136-562-11	s	FILM 0.0082uF 5% 630V
C636	1-131-368-00	s	TANTALUM 3.3uF 10% 16V
C701	1-163-033-91	s	CERAMIC, CHIP 0.022uF 50V
C702	1-126-933-11	s	ELECT 100uF 20% 16V
C703	1-126-933-11	s	ELECT 100uF 20% 16V
C704	1-163-033-91	s	CERAMIC, CHIP 0.022uF 50V

(RP-70P BOARD(UVW-1800P))

Ref. No. or Q'ty	Part No.	SP	Description
C705	1-163-033-91	s	CERAMIC, CHIP 0.022uF 50V
C706	1-126-933-11	s	ELECT 100uF 20% 16V
C707	1-163-033-91	s	CERAMIC, CHIP 0.022uF 50V
C708	1-126-933-11	s	ELECT 100uF 20% 16V
C709	1-163-033-91	s	CERAMIC, CHIP 0.022uF 50V
C710	1-126-933-11	s	ELECT 100uF 20% 16V
C711	1-126-933-11	s	ELECT 100uF 20% 16V
C712	1-163-033-91	s	CERAMIC, CHIP 0.022uF 50V
C713	1-163-033-91	s	CERAMIC, CHIP 0.022uF 50V
C714	1-126-933-11	s	ELECT 100uF 20% 16V
C715	1-163-033-91	s	CERAMIC, CHIP 0.022uF 50V
C716	1-126-933-11	s	ELECT 100uF 20% 16V
C717	1-163-033-91	s	CERAMIC, CHIP 0.022uF 50V
C718	1-126-933-11	s	ELECT 100uF 20% 16V
C719	1-126-933-11	s	ELECT 100uF 20% 16V
C720	1-163-033-91	s	CERAMIC, CHIP 0.022uF 50V
C721	1-163-033-91	s	CERAMIC, CHIP 0.022uF 50V
C722	1-126-933-11	s	ELECT 100uF 20% 16V
C723	1-163-033-91	s	CERAMIC, CHIP 0.022uF 50V
C724	1-126-933-11	s	ELECT 100uF 20% 16V
C725	1-163-033-91	s	CERAMIC, CHIP 0.022uF 50V
C726	1-126-933-11	s	ELECT 100uF 20% 16V
C727	1-126-933-11	s	ELECT 100uF 20% 16V
C728	1-163-033-91	s	CERAMIC, CHIP 0.022uF 50V
C729	1-163-033-91	s	CERAMIC, CHIP 0.022uF 50V
C730	1-126-933-11	s	ELECT 100uF 20% 16V
C731	1-163-033-91	s	CERAMIC, CHIP 0.022uF 50V
C732	1-126-933-11	s	ELECT 100uF 20% 16V
CN1	1-506-468-11	o	CONNECTOR 3P, MALE
CN101	1-506-468-11	o	CONNECTOR 3P, MALE
CN110	1-573-600-21	s	CONNECTOR, PHEC 100P, MALE
CN201	1-506-468-11	o	CONNECTOR 3P, MALE
CN301	1-506-468-11	o	CONNECTOR 3P, MALE
D701	8-719-123-82	s	DIODE 1SS303-T1
D702	8-719-123-82	s	DIODE 1SS303-T1
D703	8-719-123-85	s	DIODE 1SS304
D704	8-719-123-85	s	DIODE 1SS304
IC1	1-810-336-11	s	HIC BP-025
IC2	1-810-335-11	s	HIC BP-024
IC101	1-810-336-11	s	HIC BP-025
IC102	1-810-335-11	s	HIC BP-024
IC201	1-810-336-11	s	HIC BP-025
IC202	1-810-335-11	s	HIC BP-024
IC301	1-810-336-11	s	HIC BP-025
IC302	1-810-335-11	s	HIC BP-024
IC501	8-759-009-10	s	IC MC14069UBF
IC502	8-759-009-10	s	IC MC14069UBF
IC503	8-759-009-10	s	IC MC14069UBF
IC601	8-759-981-48	s	IC NJM082M
IC602	8-759-981-48	s	IC NJM082M
IC701	8-759-182-84	s	IC PQ05SZ5U
IC702	8-759-189-43	s	IC AN77L05-TA
IC703	8-759-168-20	s	IC TA78L09S
IC704	8-759-168-20	s	IC TA78L09S
IC705	8-759-822-95	s	IC L79M05T-FA
IC706	8-759-700-65	s	IC NJM79L05A
IC707	8-759-700-68	s	IC NJM79L09A
IC708	8-759-700-68	s	IC NJM79L09A

(RP-70P BOARD(UVW-1800P))

Ref. No. or Q'ty	Part No.	SP	Description
L1-L5	1-410-482-31	s	INDUCTOR 100uH
L101-105	1-410-482-31	s	INDUCTOR 100uH
L201-205	1-410-482-31	s	INDUCTOR 100uH
L301-305	1-410-482-31	s	INDUCTOR 100uH
L603	1-412-533-21	s	INDUCTOR 47uH
L604	1-408-397-00	s	INDUCTOR 1uH
L605	1-408-397-00	s	INDUCTOR 1uH
L701	1-412-533-21	s	INDUCTOR 47uH
L702	1-412-533-21	s	INDUCTOR 47uH
L703	1-412-533-21	s	INDUCTOR 47uH
L704	1-412-533-21	s	INDUCTOR 47uH
Q1	8-729-117-72	s	TRANSISTOR 2SC4178
Q2	8-729-117-72	s	TRANSISTOR 2SC4178
Q3	8-729-117-72	s	TRANSISTOR 2SC4178
Q102	8-729-117-72	s	TRANSISTOR 2SC4178
Q103	8-729-117-72	s	TRANSISTOR 2SC4178
Q201	8-729-117-72	s	TRANSISTOR 2SC4178
Q202	8-729-117-72	s	TRANSISTOR 2SC4178
Q203	8-729-117-72	s	TRANSISTOR 2SC4178
Q302	8-729-117-72	s	TRANSISTOR 2SC4178
Q303	8-729-117-72	s	TRANSISTOR 2SC4178
Q501	8-729-209-06	s	TRANSISTOR 2SC4213-A
Q601	8-729-119-76	s	TRANSISTOR 2SA1115P
Q602	8-729-119-78	s	TRANSISTOR 2SC2785-HFE
Q603	8-729-320-60	s	TRANSISTOR 2SD788-34
Q604	8-729-320-60	s	TRANSISTOR 2SD788-34
Q605	8-729-119-76	s	TRANSISTOR 2SA1115P
Q606	8-729-119-78	s	TRANSISTOR 2SC2785-HFE
Q607	8-729-320-60	s	TRANSISTOR 2SD788-34
Q608	8-729-320-60	s	TRANSISTOR 2SD788-34
Q609	8-729-905-18	s	TRANSISTOR DTC144EU
Q610	8-729-140-63	s	TRANSISTOR 2SA1611-M5M6
Q611	8-729-022-00	s	TRANSISTOR 2SB1416-R(TA)
Q612	8-729-117-32	s	TRANSISTOR 2SC4177
Q613	8-729-159-65	s	TRANSISTOR 2SD596-DV5
Q614	8-729-159-65	s	TRANSISTOR 2SD596-DV5
Q615	8-729-140-63	s	TRANSISTOR 2SA1611-M5M6
Q616	8-729-209-06	s	TRANSISTOR 2SC4213-A
Q617	8-729-209-06	s	TRANSISTOR 2SC4213-A
R1	1-216-041-00	s	METAL, CHIP 470 5% 1/10W
R2	1-216-624-11	s	METAL, CHIP 75 0.5% 1/10W
R4	1-216-001-00	s	METAL, CHIP 10 5% 1/10W
R5	1-216-047-91	s	METAL, CHIP 820 5% 1/10W
R6	1-216-047-91	s	METAL, CHIP 820 5% 1/10W
R7	1-216-053-00	s	METAL, CHIP 1.5K 5% 1/10W
R8	1-216-009-00	s	METAL, CHIP 22 5% 1/10W
R9	1-216-055-00	s	METAL, CHIP 1.8K 5% 1/10W
R10	1-216-073-00	s	METAL, CHIP 10K 5% 1/10W
R11	1-216-009-00	s	METAL, CHIP 22 5% 1/10W
R12	1-216-057-00	s	METAL, CHIP 2.2K 5% 1/10W
R13	1-216-001-00	s	METAL, CHIP 10 5% 1/10W
R16	1-216-001-00	s	METAL, CHIP 10 5% 1/10W
R18	1-216-001-00	s	METAL, CHIP 10 5% 1/10W
R19	1-208-822-11	s	METAL, CHIP 47k 0.5% 1/10W
R21	1-208-822-11	s	METAL, CHIP 47k 0.5% 1/10W
R22	1-216-625-11	s	METAL, CHIP 82 0.5% 1/10W
R106	1-216-047-91	s	METAL, CHIP 820 5% 1/10W
R107	1-216-053-00	s	METAL, CHIP 1.5K 5% 1/10W

(RP-70P BOARD(UVW-1800P))

Ref. No. or Q'ty	Part No.	SP	Description
R108	1-216-009-00	s	METAL, CHIP 22 5% 1/10W
R109	1-216-055-00	s	METAL, CHIP 1.8K 5% 1/10W
R110	1-216-073-00	s	METAL, CHIP 10K 5% 1/10W
R111	1-216-009-00	s	METAL, CHIP 22 5% 1/10W
R112	1-216-057-00	s	METAL, CHIP 2.2K 5% 1/10W
R113	1-216-001-00	s	METAL, CHIP 10 5% 1/10W
R116	1-216-001-00	s	METAL, CHIP 10 5% 1/10W
R118	1-216-001-00	s	METAL, CHIP 10 5% 1/10W
R119	1-208-822-11	s	METAL, CHIP 47k 0.5% 1/10W
R121	1-208-822-11	s	METAL, CHIP 47k 0.5% 1/10W
R122	1-216-625-11	s	METAL, CHIP 82 0.5% 1/10W
R201	1-216-041-00	s	METAL, CHIP 470 5% 1/10W
R202	1-216-624-11	s	METAL, CHIP 75 0.5% 1/10W
R204	1-216-001-00	s	METAL, CHIP 10 5% 1/10W
R205	1-216-047-91	s	METAL, CHIP 820 5% 1/10W
R206	1-216-047-91	s	METAL, CHIP 820 5% 1/10W
R207	1-216-053-00	s	METAL, CHIP 1.5K 5% 1/10W
R208	1-216-009-00	s	METAL, CHIP 22 5% 1/10W
R209	1-216-055-00	s	METAL, CHIP 1.8K 5% 1/10W
R210	1-216-073-00	s	METAL, CHIP 10K 5% 1/10W
R211	1-216-009-00	s	METAL, CHIP 22 5% 1/10W
R212	1-216-057-00	s	METAL, CHIP 2.2K 5% 1/10W
R213	1-216-001-00	s	METAL, CHIP 10 5% 1/10W
R216	1-216-001-00	s	METAL, CHIP 10 5% 1/10W
R218	1-216-001-00	s	METAL, CHIP 10 5% 1/10W
R219	1-208-822-11	s	METAL, CHIP 47k 0.5% 1/10W
R221	1-216-689-11	s	METAL, CHIP 39K 0.5% 1/10W
R222	1-216-625-11	s	METAL, CHIP 82 0.5% 1/10W
R306	1-216-047-91	s	METAL, CHIP 820 5% 1/10W
R307	1-216-053-00	s	METAL, CHIP 1.5K 5% 1/10W
R308	1-216-009-00	s	METAL, CHIP 22 5% 1/10W
R309	1-216-055-00	s	METAL, CHIP 1.8K 5% 1/10W
R310	1-216-073-00	s	METAL, CHIP 10K 5% 1/10W
R311	1-216-009-00	s	METAL, CHIP 22 5% 1/10W
R312	1-216-057-00	s	METAL, CHIP 2.2K 5% 1/10W
R313	1-216-001-00	s	METAL, CHIP 10 5% 1/10W
R316	1-216-001-00	s	METAL, CHIP 10 5% 1/10W
R318	1-216-001-00	s	METAL, CHIP 10 5% 1/10W
R319	1-208-822-11	s	METAL, CHIP 47k 0.5% 1/10W
R321	1-216-689-11	s	METAL, CHIP 39K 0.5% 1/10W
R322	1-216-625-11	s	METAL, CHIP 82 0.5% 1/10W
R501	1-216-073-00	s	METAL, CHIP 10K 5% 1/10W
R502	1-216-049-91	s	METAL, CHIP 1k 5% 1/10W
R503	1-216-073-00	s	METAL, CHIP 10K 5% 1/10W
R504	1-216-049-91	s	METAL, CHIP 1k 5% 1/10W
R505	1-216-049-91	s	METAL, CHIP 1k 5% 1/10W
R506	1-216-081-00	s	METAL, CHIP 22K 5% 1/10W
R507	1-216-081-00	s	METAL, CHIP 22K 5% 1/10W
R508	1-216-081-00	s	METAL, CHIP 22K 5% 1/10W
R509	1-216-073-00	s	METAL, CHIP 10K 5% 1/10W
R510	1-216-049-91	s	METAL, CHIP 1k 5% 1/10W
R511	1-216-049-91	s	METAL, CHIP 1k 5% 1/10W
R512	1-216-073-00	s	METAL, CHIP 10K 5% 1/10W
R513	1-216-049-91	s	METAL, CHIP 1k 5% 1/10W
R514	1-216-073-00	s	METAL, CHIP 10K 5% 1/10W
R515	1-216-049-91	s	METAL, CHIP 1k 5% 1/10W
R516	1-216-049-91	s	METAL, CHIP 1k 5% 1/10W
R517	1-216-049-91	s	METAL, CHIP 1k 5% 1/10W
R518	1-216-073-00	s	METAL, CHIP 10K 5% 1/10W

(RP-70P BOARD(UVW-1800P))

Ref. No. or Q'ty	Part No.	SP	Description
R519	1-216-073-00	s	METAL, CHIP 10K 5% 1/10W
R601	1-216-073-00	s	METAL, CHIP 10K 5% 1/10W
R602	1-216-081-00	s	METAL, CHIP 22K 5% 1/10W
R603	1-249-402-11	s	CARBON 56 5% 1/4W
R604	1-216-073-00	s	METAL, CHIP 10K 5% 1/10W
R605	1-249-417-11	s	CARBON 1K 5% 1/4W
R606	1-216-663-11	s	METAL, CHIP 3.3K 0.5% 1/10W
R607	1-216-121-91	s	METAL, CHIP 1M 5% 1/10W
R608	1-208-800-11	s	METAL, CHIP 5.6k 0.5% 1/10W
R609	1-249-402-11	s	CARBON 56 5% 1/4W
R610	1-216-659-11	s	METAL, CHIP 2.2K 0.5% 1/10W
R611	1-215-403-00	s	METAL 180 1% 1/6W
R612	1-216-061-00	s	METAL, CHIP 3.3K 5% 1/10W
R613	1-216-061-00	s	METAL, CHIP 3.3K 5% 1/10W
R614	1-216-077-00	s	METAL, CHIP 15K 5% 1/10W
R615	1-216-061-00	s	METAL, CHIP 3.3K 5% 1/10W
R616	1-216-073-00	s	METAL, CHIP 10K 5% 1/10W
R617	1-216-081-00	s	METAL, CHIP 22K 5% 1/10W
R618	1-249-402-11	s	CARBON 56 5% 1/4W
R619	1-216-073-00	s	METAL, CHIP 10K 5% 1/10W
R620	1-249-417-11	s	CARBON 1K 5% 1/4W
R621	1-216-663-11	s	METAL, CHIP 3.3K 0.5% 1/10W
R622	1-216-121-91	s	METAL, CHIP 1M 5% 1/10W
R623	1-208-800-11	s	METAL, CHIP 5.6k 0.5% 1/10W
R624	1-249-402-11	s	CARBON 56 5% 1/4W
R625	1-216-659-11	s	METAL, CHIP 2.2K 0.5% 1/10W
R626	1-215-403-00	s	METAL 180 1% 1/6W
R627	1-216-061-00	s	METAL, CHIP 3.3K 5% 1/10W
R628	1-216-061-00	s	METAL, CHIP 3.3K 5% 1/10W
R629	1-216-077-00	s	METAL, CHIP 15K 5% 1/10W
R630	1-216-061-00	s	METAL, CHIP 3.3K 5% 1/10W
R631	1-216-085-00	s	METAL, CHIP 33K 5% 1/10W
R632	1-216-065-00	s	METAL, CHIP 4.7K 5% 1/10W
R633	1-216-051-00	s	METAL, CHIP 1.2K 5% 1/10W
R634	1-216-071-00	s	METAL, CHIP 8.2K 5% 1/10W
R635	1-216-081-00	s	METAL, CHIP 22K 5% 1/10W
R636	1-216-093-00	s	METAL, CHIP 68K 5% 1/10W
R637	1-216-093-00	s	METAL, CHIP 68K 5% 1/10W
R639	1-216-073-00	s	METAL, CHIP 10K 5% 1/10W
R640	1-216-077-00	s	METAL, CHIP 15K 5% 1/10W
R641	1-216-057-00	s	METAL, CHIP 2.2K 5% 1/10W
R642	1-216-057-00	s	METAL, CHIP 2.2K 5% 1/10W
RV1	1-241-783-11	s	RES, ADJ METAL 2.2k
RV2	1-241-762-11	s	RES, ADJ METAL 2.2k
RV101	1-241-783-11	s	RES, ADJ METAL 2.2k
RV102	1-241-762-11	s	RES, ADJ METAL 2.2k
RV201	1-241-783-11	s	RES, ADJ METAL 2.2k
RV202	1-241-762-11	s	RES, ADJ METAL 2.2k
RV301	1-241-783-11	s	RES, ADJ METAL 2.2k
RV302	1-241-762-11	s	RES, ADJ METAL 2.2k
S1	1-553-977-00	s	SWITCH, SLIDE
S101	1-553-977-00	s	SWITCH, SLIDE
S201	1-553-977-00	s	SWITCH, SLIDE
S301	1-553-977-00	s	SWITCH, SLIDE
T1	1-423-659-11	s	TRANSFORMER, RF OUTPUT
T2	1-423-658-11	s	TRANSFORMER, RF INPUT
T101	1-423-659-11	s	TRANSFORMER, RF OUTPUT
T102	1-423-658-11	s	TRANSFORMER, RF INPUT

(RP-70P BOARD(UVW-1800P))

Ref. No. or Q'ty	Part No.	SP	Description
T201	1-423-659-11	s	TRANSFORMER, RF OUTPUT
T202	1-423-658-11	s	TRANSFORMER, RF INPUT
T301	1-423-659-11	s	TRANSFORMER, RF OUTPUT
T302	1-423-658-11	s	TRANSFORMER, RF INPUT
T601	1-423-656-11	s	TRANSFORMER, ROTARY ERASE
T602	1-423-656-11	s	TRANSFORMER, ROTARY ERASE
T603	1-424-511-11	s	TRANSFORMER, FE

RP-70A BOARD(UVW-1600)

Ref. No. or Q'ty	Part No.	SP	Description
RP-70A board is used for UVW-1600(J,UC).			
1pc	A-8275-278-A	o	MOUNTED CIRCUIT BOARD, RP-70A
1pc	3-182-385-02	o	PLATE, SHIELD (S), CARD
1pc	7-621-759-45	s	SCREW, +PSW2.6x6
1pc	3-179-084-01	s	LEVER (R), PC BOARD
1pc	3-179-085-01	s	LEVER (L), PC BOARD
C17	1-163-033-91	s	CERAMIC, CHIP 0.022uF 50V
C18	1-126-933-11	s	ELECT 100uF 20% 16V
C19	1-163-227-11	s	CERAMIC, CHIP 10PF 5% 50V
C21	1-164-004-11	s	CERAMIC, CHIP 0.1uF 10% 25V
C23	1-126-933-11	s	ELECT 100uF 20% 16V
C117	1-163-033-91	s	CERAMIC, CHIP 0.022uF 50V
C118	1-126-933-11	s	ELECT 100uF 20% 16V
C119	1-163-227-11	s	CERAMIC, CHIP 10PF 5% 50V
C121	1-164-004-11	s	CERAMIC, CHIP 0.1uF 10% 25V
C123	1-126-933-11	s	ELECT 100uF 20% 16V
C217	1-163-033-91	s	CERAMIC, CHIP 0.022uF 50V
C218	1-126-933-11	s	ELECT 100uF 20% 16V
C219	1-163-227-11	s	CERAMIC, CHIP 10PF 5% 50V
C221	1-164-004-11	s	CERAMIC, CHIP 0.1uF 10% 25V
C223	1-126-933-11	s	ELECT 100uF 20% 16V
C317	1-163-033-91	s	CERAMIC, CHIP 0.022uF 50V
C318	1-126-933-11	s	ELECT 100uF 20% 16V
C319	1-163-227-11	s	CERAMIC, CHIP 10PF 5% 50V
C321	1-164-004-11	s	CERAMIC, CHIP 0.1uF 10% 25V
C323	1-126-933-11	s	ELECT 100uF 20% 16V
C709	1-163-033-91	s	CERAMIC, CHIP 0.022uF 50V
C710	1-126-933-11	s	ELECT 100uF 20% 16V
C711	1-126-933-11	s	ELECT 100uF 20% 16V
C712	1-163-033-91	s	CERAMIC, CHIP 0.022uF 50V
C713	1-163-033-91	s	CERAMIC, CHIP 0.022uF 50V
C714	1-126-933-11	s	ELECT 100uF 20% 16V
C715	1-163-033-91	s	CERAMIC, CHIP 0.022uF 50V
C716	1-126-933-11	s	ELECT 100uF 20% 16V
CN1	1-506-468-11	o	CONNECTOR 3P, MALE
CN101	1-506-468-11	o	CONNECTOR 3P, MALE
CN110	1-573-600-21	s	CONNECTOR, PHEC 100P, MALE
CN201	1-506-468-11	o	CONNECTOR 3P, MALE
CN301	1-506-468-11	o	CONNECTOR 3P, MALE
D702	8-719-123-82	s	DIODE 1SS303-T1
IC2	1-810-335-11	s	HIC BP-024
IC102	1-810-335-11	s	HIC BP-024
IC202	1-810-335-11	s	HIC BP-024
IC302	1-810-335-11	s	HIC BP-024
IC703	8-759-168-20	s	IC TA78L09S
IC704	8-759-168-20	s	IC TA78L09S
L702	1-412-533-21	s	INDUCTOR 47uH
R17	1-216-295-91	s	RES, CHIP 0
R18	1-216-001-00	s	METAL, CHIP 10 5% 1/10W
R19	1-208-814-11	s	METAL, CHIP 22k 0.5% 1/10W
R21	1-208-822-11	s	METAL, CHIP 47k 0.5% 1/10W
R22	1-216-625-11	s	METAL, CHIP 82 0.5% 1/10W
R117	1-216-295-91	s	RES, CHIP 0
R118	1-216-001-00	s	METAL, CHIP 10 5% 1/10W
R119	1-208-814-11	s	METAL, CHIP 22k 0.5% 1/10W
R121	1-208-822-11	s	METAL, CHIP 47k 0.5% 1/10W

(RP-70A BOARD(UVW-1600))

Ref. No. or Q'ty	Part No.	SP	Description
R122	1-216-625-11	s	METAL, CHIP 82 0.5% 1/10W
R217	1-216-295-91	s	RES, CHIP 0
R218	1-216-001-00	s	METAL, CHIP 10 5% 1/10W
R219	1-208-822-11	s	METAL, CHIP 47k 0.5% 1/10W
R221	1-216-689-11	s	METAL, CHIP 39K 0.5% 1/10W
R222	1-216-625-11	s	METAL, CHIP 82 0.5% 1/10W
R317	1-216-295-91	s	RES, CHIP 0
R318	1-216-001-00	s	METAL, CHIP 10 5% 1/10W
R319	1-208-822-11	s	METAL, CHIP 47k 0.5% 1/10W
R321	1-216-689-11	s	METAL, CHIP 39K 0.5% 1/10W
R322	1-216-625-11	s	METAL, CHIP 82 0.5% 1/10W
R651-658	1-216-295-91	s	RES, CHIP 0
T2	1-423-658-11	s	TRANSFORMER, RF INPUT
T102	1-423-658-11	s	TRANSFORMER, RF INPUT
T202	1-423-657-11	s	TRANSFORMER, RF INPUT
T302	1-423-657-11	s	TRANSFORMER, RF INPUT

RP-70AP BOARD(UVW-1600P)

Ref. No. or Q'ty	Part No.	SP	Description
RP-70AP board is used for UVW-1600P(EK).			
1pc	A-8275-465-A	o	MOUNTED CIRCUIT BOARD, RP-70AF
1pc	3-182-385-02	o	PLATE, SHIELD (S), CARD
1pc	7-621-759-45	s	SCREW, +PSW2.6x6
1pc	3-179-084-01	s	LEVER (R), PC BOARD
1pc	3-179-085-01	s	LEVER (L), PC BOARD
C17	1-163-033-91	s	CERAMIC, CHIP 0.022uF 50V
C18	1-126-933-11	s	ELECT 100uF 20% 16V
C19	1-163-227-11	s	CERAMIC, CHIP 10PF 5% 50V
C21	1-164-004-11	s	CERAMIC, CHIP 0.1uF 10% 25V
C23	1-126-933-11	s	ELECT 100uF 20% 16V
C117	1-163-033-91	s	CERAMIC, CHIP 0.022uF 50V
C118	1-126-933-11	s	ELECT 100uF 20% 16V
C119	1-163-227-11	s	CERAMIC, CHIP 10PF 5% 50V
C121	1-164-004-11	s	CERAMIC, CHIP 0.1uF 10% 25V
C123	1-126-933-11	s	ELECT 100uF 20% 16V
C217	1-163-033-91	s	CERAMIC, CHIP 0.022uF 50V
C218	1-126-933-11	s	ELECT 100uF 20% 16V
C219	1-163-227-11	s	CERAMIC, CHIP 10PF 5% 50V
C221	1-164-004-11	s	CERAMIC, CHIP 0.1uF 10% 25V
C223	1-126-933-11	s	ELECT 100uF 20% 16V
C317	1-163-033-91	s	CERAMIC, CHIP 0.022uF 50V
C318	1-126-933-11	s	ELECT 100uF 20% 16V
C319	1-163-227-11	s	CERAMIC, CHIP 10PF 5% 50V
C321	1-164-004-11	s	CERAMIC, CHIP 0.1uF 10% 25V
C323	1-126-933-11	s	ELECT 100uF 20% 16V
C709	1-163-033-91	s	CERAMIC, CHIP 0.022uF 50V
C710	1-126-933-11	s	ELECT 100uF 20% 16V
C711	1-126-933-11	s	ELECT 100uF 20% 16V
C712	1-163-033-91	s	CERAMIC, CHIP 0.022uF 50V
C713	1-163-033-91	s	CERAMIC, CHIP 0.022uF 50V
C714	1-126-933-11	s	ELECT 100uF 20% 16V
C715	1-163-033-91	s	CERAMIC, CHIP 0.022uF 50V
C716	1-126-933-11	s	ELECT 100uF 20% 16V
CN1	1-506-468-11	o	CONNECTOR 3P, MALE
CN101	1-506-468-11	o	CONNECTOR 3P, MALE
CN110	1-573-600-21	s	CONNECTOR, PHEC 100P, MALE
CN201	1-506-468-11	o	CONNECTOR 3P, MALE
CN301	1-506-468-11	o	CONNECTOR 3P, MALE
D702	8-719-123-82	s	DIODE 1SS303-T1
IC2	1-810-335-11	s	HIC BP-024
IC102	1-810-335-11	s	HIC BP-024
IC202	1-810-335-11	s	HIC BP-024
IC302	1-810-335-11	s	HIC BP-024
IC703	8-759-168-20	s	IC TA78L09S
IC704	8-759-168-20	s	IC TA78L09S
L702	1-412-533-21	s	INDUCTOR 47uH
R17	1-216-295-91	s	RES, CHIP 0
R18	1-216-001-00	s	METAL, CHIP 10 5% 1/10W
R19	1-216-687-11	s	METAL, CHIP 33K 0.5% 1/10W
R21	1-208-822-11	s	METAL, CHIP 47k 0.5% 1/10W
R22	1-216-625-11	s	METAL, CHIP 82 0.5% 1/10W
R117	1-216-295-91	s	RES, CHIP 0
R118	1-216-001-00	s	METAL, CHIP 10 5% 1/10W
R119	1-216-687-11	s	METAL, CHIP 33K 0.5% 1/10W
R121	1-208-822-11	s	METAL, CHIP 47k 0.5% 1/10W

(RP-70AP BOARD(UVW-1600P))

Ref. No. or Q'ty	Part No.	SP	Description
R122	1-216-625-11	s	METAL, CHIP 82 0.5% 1/10W
R217	1-216-295-91	s	RES, CHIP 0
R218	1-216-001-00	s	METAL, CHIP 10 5% 1/10W
R219	1-208-822-11	s	METAL, CHIP 47k 0.5% 1/10W
R221	1-216-689-11	s	METAL, CHIP 39K 0.5% 1/10W
R222	1-216-625-11	s	METAL, CHIP 82 0.5% 1/10W
R317	1-216-295-91	s	RES, CHIP 0
R318	1-216-001-00	s	METAL, CHIP 10 5% 1/10W
R319	1-208-822-11	s	METAL, CHIP 47k 0.5% 1/10W
R321	1-216-689-11	s	METAL, CHIP 39K 0.5% 1/10W
R322	1-216-625-11	s	METAL, CHIP 82 0.5% 1/10W
R651-658	1-216-295-91	s	RES, CHIP 0
T2	1-423-658-11	s	TRANSFORMER, RF INPUT
T102	1-423-658-11	s	TRANSFORMER, RF INPUT
T202	1-423-658-11	s	TRANSFORMER, RF INPUT
T302	1-423-658-11	s	TRANSFORMER, RF INPUT

SE-207 BOARD

Ref. No. or Q'ty	Part No.	SP	Description

Two SE-207 boards are used in UVW-1800/1800P/1600/1600P (J,UC,EK)
One board has the following parts.

1pc	1-648-923-12	o	PRINTED CIRCUIT BOARD, SE-207
CN950	1-565-876-11	o	CONNECTOR 4P, MALE
PH1	8-749-924-54	s	PHOTO-INTERRUPTER GP1A30R
R1	1-249-408-11	s	CARBON 180 5% 1/4W

SS-53 BOARD

Ref. No. or Q'ty	Part No.	SP	Description
1pc	A-8275-284-A	o	MOUNTED CIRCUIT BOARD, SS-53
1pc	3-179-084-01	s	LEVER (R), PC BOARD
1pc	3-179-085-01	s	LEVER (L), PC BOARD
C1	1-135-076-21	s	TANTALUM, CHIP 1uF 10% 35V
C2	1-163-033-91	s	CERAMIC, CHIP 0.022uF 50V
C5-C16	1-163-033-91	s	CERAMIC, CHIP 0.022uF 50V
C19	1-163-033-91	s	CERAMIC, CHIP 0.022uF 50V
C20	1-163-033-91	s	CERAMIC, CHIP 0.022uF 50V
C21	1-163-033-91	s	CERAMIC, CHIP 0.022uF 50V
C22	1-163-251-11	s	CERAMIC, CHIP 100PF 5% 50V
C23	1-163-033-91	s	CERAMIC, CHIP 0.022uF 50V
C24	1-126-924-11	s	ELECT 330uF 20% 10V
C100	1-126-964-11	s	ELECT 10uF 20% 50V
C101	1-126-964-11	s	ELECT 10uF 20% 50V
C102	1-163-275-11	s	CERAMIC, CHIP 0.001uF 5% 50V
C103	1-163-033-91	s	CERAMIC, CHIP 0.022uF 50V
C104	1-163-033-91	s	CERAMIC, CHIP 0.022uF 50V
C106	1-163-037-11	s	CERAMIC, CHIP 0.022uF 10% 25V
C109	1-163-235-11	s	CERAMIC, CHIP 22PF 5% 50V
C110	1-163-235-11	s	CERAMIC, CHIP 22PF 5% 50V
C111	1-163-033-91	s	CERAMIC, CHIP 0.022uF 50V
C112	1-164-232-11	s	CERAMIC, CHIP 0.01uF 10% 100V
C113	1-163-251-11	s	CERAMIC, CHIP 100PF 5% 50V
C114	1-126-924-11	s	ELECT 330uF 20% 10V
C115	1-163-033-91	s	CERAMIC, CHIP 0.022uF 50V
C116	1-163-033-91	s	CERAMIC, CHIP 0.022uF 50V
C117	1-163-033-91	s	CERAMIC, CHIP 0.022uF 50V
C200	1-135-076-21	s	TANTALUM, CHIP 1uF 10% 35V
C201	1-163-809-11	s	CERAMIC, CHIP 0.047uF 10% 25V
C202-209	1-163-275-11	s	CERAMIC, CHIP 0.001uF 5% 50V
C210	1-163-237-11	s	CERAMIC, CHIP 27PF 5% 50V
C211	1-163-033-91	s	CERAMIC, CHIP 0.022uF 50V
C212	1-163-102-00	s	CERAMIC, CHIP 24PF 5% 50V
C213	1-126-924-11	s	ELECT 330uF 20% 10V
C214	1-163-275-11	s	CERAMIC, CHIP 0.001uF 5% 50V
C215-230	1-163-033-91	s	CERAMIC, CHIP 0.022uF 50V
C232	1-163-033-91	s	CERAMIC, CHIP 0.022uF 50V
C233	1-163-037-11	s	CERAMIC, CHIP 0.022uF 10% 25V
C234	1-163-037-11	s	CERAMIC, CHIP 0.022uF 10% 25V
C235	1-163-037-11	s	CERAMIC, CHIP 0.022uF 10% 25V
C236	1-163-037-11	s	CERAMIC, CHIP 0.022uF 10% 25V
C237	1-164-232-11	s	CERAMIC, CHIP 0.01uF 10% 100V
C238	1-164-232-11	s	CERAMIC, CHIP 0.01uF 10% 100V
C239	1-163-033-91	s	CERAMIC, CHIP 0.022uF 50V
C240	1-163-037-11	s	CERAMIC, CHIP 0.022uF 10% 25V
C241	1-163-037-11	s	CERAMIC, CHIP 0.022uF 10% 25V
C242	1-163-037-11	s	CERAMIC, CHIP 0.022uF 10% 25V
C243	1-163-037-11	s	CERAMIC, CHIP 0.022uF 10% 25V
C245	1-163-037-11	s	CERAMIC, CHIP 0.022uF 10% 25V
C246	1-163-037-11	s	CERAMIC, CHIP 0.022uF 10% 25V
C247	1-164-161-11	s	CERAMIC, CHIP 0.0022uF 10% 100V
C248	1-164-161-11	s	CERAMIC, CHIP 0.0022uF 10% 100V
C249	1-163-033-91	s	CERAMIC, CHIP 0.022uF 50V
C251-269	1-163-033-91	s	CERAMIC, CHIP 0.022uF 50V
C270-275	1-126-947-11	s	ELECT 47uF 20% 35V
C276	1-163-989-11	s	CERAMIC, CHIP 0.033uF 10% 25V
C277	1-163-033-91	s	CERAMIC, CHIP 0.022uF 50V
C278	1-163-275-11	s	CERAMIC, CHIP 0.001uF 5% 50V

(SS-53 BOARD)

Ref. No. or Q'ty	Part No.	SP	Description
C279	1-163-033-91	s	CERAMIC, CHIP 0.022uF 50V
C280	1-162-667-11	s	CERAMIC 10PF 5% 50V
C281	1-162-667-11	s	CERAMIC 10PF 5% 50V
C400	1-163-033-91	s	CERAMIC, CHIP 0.022uF 50V
C401	1-163-033-91	s	CERAMIC, CHIP 0.022uF 50V
C402	1-163-809-11	s	CERAMIC, CHIP 0.047uF 10% 25V
C403	1-163-033-91	s	CERAMIC, CHIP 0.022uF 50V
C404	1-163-033-91	s	CERAMIC, CHIP 0.022uF 50V
C405	1-163-275-11	s	CERAMIC, CHIP 0.001uF 5% 50V
C406	1-163-235-11	s	CERAMIC, CHIP 22PF 5% 50V
C407	1-163-809-11	s	CERAMIC, CHIP 0.047uF 10% 25V
C408	1-163-033-91	s	CERAMIC, CHIP 0.022uF 50V
C409	1-163-033-91	s	CERAMIC, CHIP 0.022uF 50V
C410	1-163-275-11	s	CERAMIC, CHIP 0.001uF 5% 50V
C411	1-163-033-91	s	CERAMIC, CHIP 0.022uF 50V
C412	1-163-235-11	s	CERAMIC, CHIP 22PF 5% 50V
CN1	1-506-484-11	s	CONNECTOR 5P, MALE
CN2	1-506-481-11	s	CONNECTOR 2P, MALE
CN3	1-560-369-00	o	CONNECTOR,ILG 8P, MALE
CN107	1-573-782-21	o	CONNECTOR, PHEC 60P, MALE
CN108	1-573-782-21	o	CONNECTOR, PHEC 60P, MALE
CN109	1-573-782-21	o	CONNECTOR, PHEC 60P, MALE
CNI4	1-526-660-21	o	SOCKET, IC 32P
CNI212	1-526-660-21	o	SOCKET, IC 32P
CV1	1-141-389-11	s	CAP, TRIMMER 50PF
D100-105	8-719-941-23	s	DIODE DA204U
D200-208	8-719-941-23	s	DIODE DA204U
D210	8-719-938-72	s	DIODE SB01-05CP
D211	8-719-941-23	s	DIODE DA204U
D213	8-719-941-23	s	DIODE DA204U
D214	8-719-941-23	s	DIODE DA204U
D215	8-719-941-23	s	DIODE DA204U
IC1	8-759-151-97	s	IC UPD70320GJ-8-5BG
IC2	8-759-043-34	s	IC CXD8310M
IC3	8-759-507-51	s	IC MS6264CLL-10FC-EF
IC4	8-759-326-97	o	IC C1001-UVW1000SY-V200
IC5	8-759-095-41	s	IC CXD8176AQ
IC6	8-759-054-54	s	IC SRM2016M10
IC7	8-759-632-39	s	IC M51958A
IC8	8-759-061-67	s	IC MC34051M
IC9	8-759-926-77	s	IC SN74HC541ANS
IC10	8-759-925-74	s	IC TC74HC04ANS
IC11	8-759-925-85	s	IC SN74HC32ANS
IC12	8-759-925-90	s	IC SN74HC74ANS
IC15	8-759-192-25	s	IC UPD6453GT-635-E2
IC100	8-759-175-77	s	IC CXD8384Q
IC101	8-759-100-96	s	IC UPC4558G2
IC102	8-759-925-05	s	IC LM2903PS
IC103	8-759-356-17	s	IC NJM4556AM-A-TE2
IC200	8-759-300-71	s	IC HD14053BFP
IC201	8-759-510-71	s	IC UPC358G2-E2
IC202	8-759-192-26	s	IC HD6435348RA00F
IC203	8-759-925-76	s	IC SN74HC08ANS
IC204	8-759-925-74	s	IC TC74HC04ANS
IC206	8-759-916-23	s	IC SN74HC27N
IC207	8-759-925-79	s	IC SN74HC11ANS

(SS-53 BOARD)

Ref. No. or Q'ty	Part No.	SP	Description
IC208	8-759-926-11	s	IC SN74HC138ANS
IC209	8-759-925-85	s	IC SN74HC32ANS
IC210	8-759-925-76	s	IC SN74HC08ANS
IC211	8-759-938-68	s	IC CXD1095Q
IC212	8-759-378-01	o	IC C2001-UVW1000SV-V202
IC213	8-759-507-51	s	IC MS6264CLL-10FC-EF
IC214	8-759-300-71	s	IC HD14053BFP
IC215	8-759-300-71	s	IC HD14053BFP
IC216	8-759-925-05	s	IC LM2903PS
IC217	8-759-239-23	s	IC TC74HC86AF
IC219	8-752-343-05	s	IC CXD2202Q
IC220	8-759-100-95	s	IC UPC324G2
IC221	8-759-300-71	s	IC HD14053BFP
IC222	8-759-100-95	s	IC UPC324G2
IC223	8-759-106-02	s	IC UPC4570G2
IC224	8-759-141-05	s	IC UPC4574G2
IC225	8-759-106-02	s	IC UPC4570G2
IC226	8-759-938-68	s	IC CXD1095Q
IC227	8-759-913-99	s	IC MB88201-173N
IC228	8-759-927-29	s	IC SN74HCU04NS
IC229	8-759-977-80	s	IC MB88342PF
IC230	8-759-925-05	s	IC LM2903PS
IC231	8-759-106-02	s	IC UPC4570G2
IC232	8-759-925-05	s	IC LM2903PS
IC233	8-759-106-02	s	IC UPC4570G2
L1	1-408-411-00	s	INDUCTOR 15uH
L200	1-412-533-21	s	INDUCTOR 47uH
L201	1-412-533-21	s	INDUCTOR 47uH
PS1	⚠ 1-532-637-00	s	LINK, IC 1.0A
PS2	⚠ 1-532-637-00	s	LINK, IC 1.0A
Q105	8-729-905-12	s	TRANSISTOR DTA144EU
Q106	8-729-422-44	s	TRANSISTOR 2SK663
Q107	8-729-905-12	s	TRANSISTOR DTA144EU
Q108	8-729-422-44	s	TRANSISTOR 2SK663
Q204-209	8-729-905-18	s	TRANSISTOR DTC144EU
Q210	8-729-209-06	s	TRANSISTOR 2SC4213-A
Q211	8-729-209-06	s	TRANSISTOR 2SC4213-A
R1	1-216-073-00	s	METAL, CHIP 10K 5% 1/10W
R2	1-216-077-00	s	METAL, CHIP 15K 5% 1/10W
R3	1-216-077-00	s	METAL, CHIP 15K 5% 1/10W
R4	1-216-097-91	s	METAL, CHIP 100k 5% 1/10W
R5	1-216-097-91	s	METAL, CHIP 100k 5% 1/10W
R6	1-216-097-91	s	METAL, CHIP 100k 5% 1/10W
R7	1-216-097-91	s	METAL, CHIP 100k 5% 1/10W
R9	1-216-097-91	s	METAL, CHIP 100k 5% 1/10W
R11	1-216-089-91	s	METAL, CHIP 47k 5% 1/10W
R12	1-216-097-91	s	METAL, CHIP 100k 5% 1/10W
R14	1-216-097-91	s	METAL, CHIP 100k 5% 1/10W
R24	1-216-089-91	s	METAL, CHIP 47k 5% 1/10W
R26	1-208-817-11	s	METAL, CHIP 30k 0.5% 1/10W
R27	1-208-811-11	s	METAL, CHIP 16k 0.5% 1/10W
R31	1-216-089-91	s	METAL, CHIP 47k 5% 1/10W
R33	1-216-089-91	s	METAL, CHIP 47k 5% 1/10W
R35	1-216-089-91	s	METAL, CHIP 47k 5% 1/10W
R36-R41	1-216-073-00	s	METAL, CHIP 10K 5% 1/10W
R43	1-216-089-91	s	METAL, CHIP 47k 5% 1/10W
R45	1-216-089-91	s	METAL, CHIP 47k 5% 1/10W

(SS-53 BOARD)

Ref. No. or Q'ty	Part No.	SP	Description
R47	1-216-089-91	s	METAL, CHIP 47k 5% 1/10W
R49	1-216-089-91	s	METAL, CHIP 47k 5% 1/10W
R51	1-216-073-00	s	METAL, CHIP 10K 5% 1/10W
R55	1-216-025-91	s	METAL, CHIP 100 5% 1/10W
R56	1-216-089-91	s	METAL, CHIP 47k 5% 1/10W
R57	1-216-089-91	s	METAL, CHIP 47k 5% 1/10W
R61	1-216-089-91	s	METAL, CHIP 47k 5% 1/10W
R62	1-216-089-91	s	METAL, CHIP 47k 5% 1/10W
R63	1-216-049-91	s	METAL, CHIP 1k 5% 1/10W
R64	1-216-049-91	s	METAL, CHIP 1k 5% 1/10W
R65	1-216-097-91	s	METAL, CHIP 100k 5% 1/10W
R66	1-216-097-91	s	METAL, CHIP 100k 5% 1/10W
R67	1-216-049-91	s	METAL, CHIP 1k 5% 1/10W
R68	1-216-049-91	s	METAL, CHIP 1k 5% 1/10W
R69	1-216-049-91	s	METAL, CHIP 1k 5% 1/10W
R100	1-216-663-11	s	METAL, CHIP 3.3K 0.5% 1/10W
R101	1-216-648-11	s	METAL, CHIP 750 0.5% 1/10W
R102	1-208-822-11	s	METAL, CHIP 47k 0.5% 1/10W
R103	1-208-822-11	s	METAL, CHIP 47k 0.5% 1/10W
R104	1-216-659-11	s	METAL, CHIP 2.2K 0.5% 1/10W
R105	1-216-659-11	s	METAL, CHIP 2.2K 0.5% 1/10W
R106	1-216-699-11	s	METAL, CHIP 100K 0.5% 1/10W
R107	1-216-699-11	s	METAL, CHIP 100K 0.5% 1/10W
R108	1-216-065-00	s	METAL, CHIP 4.7K 5% 1/10W
R109	1-216-097-91	s	METAL, CHIP 100k 5% 1/10W
R110	1-216-067-00	s	METAL, CHIP 5.6K 5% 1/10W
R111	1-216-065-00	s	METAL, CHIP 4.7K 5% 1/10W
R112	1-216-025-91	s	METAL, CHIP 100 5% 1/10W
R128	1-216-057-00	s	METAL, CHIP 2.2K 5% 1/10W
R129	1-216-065-00	s	METAL, CHIP 4.7K 5% 1/10W
R130	1-216-097-91	s	METAL, CHIP 100k 5% 1/10W
R131	1-216-037-00	s	METAL, CHIP 330 5% 1/10W
R132	1-216-121-91	s	METAL, CHIP 1M 5% 1/10W
R133	1-216-065-00	s	METAL, CHIP 4.7K 5% 1/10W
R134	1-216-065-00	s	METAL, CHIP 4.7K 5% 1/10W
R135	1-216-081-00	s	METAL, CHIP 22K 5% 1/10W
R136	1-216-049-91	s	METAL, CHIP 1k 5% 1/10W
R137	1-216-121-91	s	METAL, CHIP 1M 5% 1/10W
R138	1-216-121-91	s	METAL, CHIP 1M 5% 1/10W
R139	1-216-061-00	s	METAL, CHIP 3.3K 5% 1/10W
R140	1-216-071-00	s	METAL, CHIP 8.2K 5% 1/10W
R141	1-216-624-11	s	METAL, CHIP 75 0.5% 1/10W
R142	1-216-073-00	s	METAL, CHIP 10K 5% 1/10W
R145	1-216-073-00	s	METAL, CHIP 10K 5% 1/10W
R146	1-216-025-91	s	METAL, CHIP 100 5% 1/10W
R149	1-216-081-00	s	METAL, CHIP 22K 5% 1/10W
R150	1-216-121-91	s	METAL, CHIP 1M 5% 1/10W
R151	1-216-121-91	s	METAL, CHIP 1M 5% 1/10W
R200	1-216-699-11	s	METAL, CHIP 100K 0.5% 1/10W
R201	1-216-699-11	s	METAL, CHIP 100K 0.5% 1/10W
R202	1-216-687-11	s	METAL, CHIP 33K 0.5% 1/10W
R203	1-218-764-11	s	METAL, CHIP 330K 0.5% 1/10W
R204-213	1-216-073-00	s	METAL, CHIP 10K 5% 1/10W
R214	1-216-097-91	s	METAL, CHIP 100k 5% 1/10W
R215	1-216-089-91	s	METAL, CHIP 47k 5% 1/10W
R216	1-216-089-91	s	METAL, CHIP 47k 5% 1/10W
R217	1-216-089-91	s	METAL, CHIP 47k 5% 1/10W
R218	1-216-089-91	s	METAL, CHIP 47k 5% 1/10W
R219	1-216-057-00	s	METAL, CHIP 2.2K 5% 1/10W

(SS-53 BOARD)

Ref. No. or Q'ty	Part No.	SP	Description
R220	1-208-817-11	s	METAL, CHIP 30k 0.5% 1/10W
R221	1-216-665-11	s	METAL, CHIP 3.9K 0.5% 1/10W
R222	1-216-648-11	s	METAL, CHIP 750 0.5% 1/10W
R223	1-216-699-11	s	METAL, CHIP 100K 0.5% 1/10W
R224	1-208-806-11	s	METAL, CHIP 10k 0.5% 1/10W
R225	1-218-764-11	s	METAL, CHIP 330K 0.5% 1/10W
R227	1-216-049-91	s	METAL, CHIP 1k 5% 1/10W
R228	1-216-049-91	s	METAL, CHIP 1k 5% 1/10W
R229	1-216-025-91	s	METAL, CHIP 100 5% 1/10W
R231	1-216-049-91	s	METAL, CHIP 1k 5% 1/10W
R232	1-216-049-91	s	METAL, CHIP 1k 5% 1/10W
R233	1-216-049-91	s	METAL, CHIP 1k 5% 1/10W
R234	1-216-049-91	s	METAL, CHIP 1k 5% 1/10W
R235	1-216-073-00	s	METAL, CHIP 10K 5% 1/10W
R236	1-216-025-91	s	METAL, CHIP 100 5% 1/10W
R237	1-216-025-91	s	METAL, CHIP 100 5% 1/10W
R238	1-216-049-91	s	METAL, CHIP 1k 5% 1/10W
R239	1-216-049-91	s	METAL, CHIP 1k 5% 1/10W
R240	1-216-049-91	s	METAL, CHIP 1k 5% 1/10W
R241	1-216-025-91	s	METAL, CHIP 100 5% 1/10W
R242	1-216-049-91	s	METAL, CHIP 1k 5% 1/10W
R243	1-216-057-00	s	METAL, CHIP 2.2K 5% 1/10W
R244	1-216-057-00	s	METAL, CHIP 2.2K 5% 1/10W
R245	1-216-089-91	s	METAL, CHIP 47k 5% 1/10W
R254	1-216-089-91	s	METAL, CHIP 47k 5% 1/10W
R255	1-208-806-11	s	METAL, CHIP 10k 0.5% 1/10W
R256	1-208-814-11	s	METAL, CHIP 22k 0.5% 1/10W
R257	1-208-806-11	s	METAL, CHIP 10k 0.5% 1/10W
R258	1-208-814-11	s	METAL, CHIP 22k 0.5% 1/10W
R260	1-216-097-91	s	METAL, CHIP 100k 5% 1/10W
R261	1-216-073-00	s	METAL, CHIP 10K 5% 1/10W
R262	1-216-089-91	s	METAL, CHIP 47k 5% 1/10W
R263	1-216-089-91	s	METAL, CHIP 47k 5% 1/10W
R264	1-216-105-91	s	METAL, CHIP 220k 5% 1/10W
R265	1-216-105-91	s	METAL, CHIP 220k 5% 1/10W
R268	1-216-057-00	s	METAL, CHIP 2.2K 5% 1/10W
R269	1-216-057-00	s	METAL, CHIP 2.2K 5% 1/10W
R275	1-216-073-00	s	METAL, CHIP 10K 5% 1/10W
R276	1-216-073-00	s	METAL, CHIP 10K 5% 1/10W
R277	1-216-073-00	s	METAL, CHIP 10K 5% 1/10W
R281	1-216-121-91	s	METAL, CHIP 1M 5% 1/10W
R282	1-216-073-00	s	METAL, CHIP 10K 5% 1/10W
R283	1-220-221-11	s	METAL, CHIP 100 5% 1/2W
R284	1-216-025-91	s	METAL, CHIP 100 5% 1/10W
R285	1-216-089-91	s	METAL, CHIP 47k 5% 1/10W
R286	1-216-097-91	s	METAL, CHIP 100k 5% 1/10W
R287	1-216-025-91	s	METAL, CHIP 100 5% 1/10W
R288	1-216-025-91	s	METAL, CHIP 100 5% 1/10W
R289	1-216-073-00	s	METAL, CHIP 10K 5% 1/10W
R290	1-216-073-00	s	METAL, CHIP 10K 5% 1/10W
R291	1-216-073-00	s	METAL, CHIP 10K 5% 1/10W
R292	1-216-073-00	s	METAL, CHIP 10K 5% 1/10W
R294	1-216-073-00	s	METAL, CHIP 10K 5% 1/10W
R295	1-216-073-00	s	METAL, CHIP 10K 5% 1/10W
R297	1-216-025-91	s	METAL, CHIP 100 5% 1/10W
R298	1-216-109-00	s	METAL, CHIP 330K 5% 1/10W
R299	1-216-109-00	s	METAL, CHIP 330K 5% 1/10W
R300	1-216-025-91	s	METAL, CHIP 100 5% 1/10W
R302	1-216-025-91	s	METAL, CHIP 100 5% 1/10W

(SS-53 BOARD)

Ref. No. or Q'ty	Part No.	SP	Description
R303	1-216-057-00	s	METAL, CHIP 2.2K 5% 1/10W
R304	1-216-057-00	s	METAL, CHIP 2.2K 5% 1/10W
R306	1-216-025-91	s	METAL, CHIP 100 5% 1/10W
R307	1-216-121-91	s	METAL, CHIP 1M 5% 1/10W
R309	1-216-081-00	s	METAL, CHIP 22K 5% 1/10W
R310	1-216-081-00	s	METAL, CHIP 22K 5% 1/10W
R311	1-216-081-00	s	METAL, CHIP 22K 5% 1/10W
R312	1-216-049-91	s	METAL, CHIP 1k 5% 1/10W
R313	1-216-049-91	s	METAL, CHIP 1k 5% 1/10W
R314	1-216-049-91	s	METAL, CHIP 1k 5% 1/10W
R315	1-216-049-91	s	METAL, CHIP 1k 5% 1/10W
R316	1-216-085-00	s	METAL, CHIP 33K 5% 1/10W
R317	1-216-057-00	s	METAL, CHIP 2.2K 5% 1/10W
R318	1-216-085-00	s	METAL, CHIP 33K 5% 1/10W
R319	1-216-073-00	s	METAL, CHIP 10K 5% 1/10W
R320	1-216-085-00	s	METAL, CHIP 33K 5% 1/10W
R321	1-216-073-00	s	METAL, CHIP 10K 5% 1/10W
R322	1-216-085-00	s	METAL, CHIP 33K 5% 1/10W
R323	1-216-097-91	s	METAL, CHIP 100k 5% 1/10W
R324	1-216-073-00	s	METAL, CHIP 10K 5% 1/10W
R325	1-216-121-91	s	METAL, CHIP 1M 5% 1/10W
R326-331	1-216-089-91	s	METAL, CHIP 47k 5% 1/10W
R332	1-216-065-00	s	METAL, CHIP 4.7K 5% 1/10W
R333	1-216-061-00	s	METAL, CHIP 3.3K 5% 1/10W
R334	1-216-097-91	s	METAL, CHIP 100k 5% 1/10W
R335	1-216-097-91	s	METAL, CHIP 100k 5% 1/10W
R336	1-216-049-91	s	METAL, CHIP 1k 5% 1/10W
R337	1-216-049-91	s	METAL, CHIP 1k 5% 1/10W
R338	1-216-085-00	s	METAL, CHIP 33K 5% 1/10W
R339	1-216-057-00	s	METAL, CHIP 2.2K 5% 1/10W
R340	1-216-057-00	s	METAL, CHIP 2.2K 5% 1/10W
R341	1-216-061-00	s	METAL, CHIP 3.3K 5% 1/10W
R342	1-216-061-00	s	METAL, CHIP 3.3K 5% 1/10W
R343	1-216-121-91	s	METAL, CHIP 1M 5% 1/10W
R344	1-216-097-91	s	METAL, CHIP 100k 5% 1/10W
R345	1-216-085-00	s	METAL, CHIP 33K 5% 1/10W
R346-350	1-216-049-91	s	METAL, CHIP 1k 5% 1/10W
R351	1-216-121-91	s	METAL, CHIP 1M 5% 1/10W
R352	1-216-039-00	s	METAL, CHIP 390 5% 1/10W
R353-381	1-216-049-91	s	METAL, CHIP 1k 5% 1/10W
R382	1-216-073-00	s	METAL, CHIP 10K 5% 1/10W
R383	1-216-073-00	s	METAL, CHIP 10K 5% 1/10W
R385	1-216-089-91	s	METAL, CHIP 47k 5% 1/10W
R386	1-216-089-91	s	METAL, CHIP 47k 5% 1/10W
R387	1-216-049-91	s	METAL, CHIP 1k 5% 1/10W
R388	1-216-049-91	s	METAL, CHIP 1k 5% 1/10W
R389	1-216-049-91	s	METAL, CHIP 1k 5% 1/10W
R390	1-216-073-00	s	METAL, CHIP 10K 5% 1/10W
R391	1-216-089-91	s	METAL, CHIP 47k 5% 1/10W
R392	1-216-025-91	s	METAL, CHIP 100 5% 1/10W
R393	1-216-073-00	s	METAL, CHIP 10K 5% 1/10W
R394	1-216-073-00	s	METAL, CHIP 10K 5% 1/10W
R395	1-216-097-91	s	METAL, CHIP 100k 5% 1/10W
R396	1-216-057-00	s	METAL, CHIP 2.2K 5% 1/10W
R397	1-216-073-00	s	METAL, CHIP 10K 5% 1/10W
R398	1-216-073-00	s	METAL, CHIP 10K 5% 1/10W
R399	1-216-097-91	s	METAL, CHIP 100k 5% 1/10W
R400	1-208-822-11	s	METAL, CHIP 47k 0.5% 1/10W
R401	1-208-806-11	s	METAL, CHIP 10k 0.5% 1/10W

(SS-53 BOARD)

Ref. No. or Q'ty	Part No.	SP	Description
R402	1-208-806-11	s	METAL, CHIP 10k 0.5% 1/10W
R403	1-208-814-11	s	METAL, CHIP 22k 0.5% 1/10W
R404	1-208-814-11	s	METAL, CHIP 22k 0.5% 1/10W
R405	1-216-651-11	s	METAL, CHIP 1K 0.5% 1/10W
R406	1-208-806-11	s	METAL, CHIP 10k 0.5% 1/10W
R407	1-216-695-11	s	METAL, CHIP 68K 0.5% 1/10W
R408	1-216-695-11	s	METAL, CHIP 68K 0.5% 1/10W
R409	1-216-699-11	s	METAL, CHIP 100K 0.5% 1/10W
R410	1-216-687-11	s	METAL, CHIP 33K 0.5% 1/10W
R411	1-216-057-00	s	METAL, CHIP 2.2K 5% 1/10W
R412	1-208-822-11	s	METAL, CHIP 47k 0.5% 1/10W
R413	1-208-806-11	s	METAL, CHIP 10k 0.5% 1/10W
R414	1-208-806-11	s	METAL, CHIP 10k 0.5% 1/10W
R415	1-208-814-11	s	METAL, CHIP 22k 0.5% 1/10W
R416	1-208-814-11	s	METAL, CHIP 22k 0.5% 1/10W
R417	1-216-695-11	s	METAL, CHIP 68K 0.5% 1/10W
R418	1-216-695-11	s	METAL, CHIP 68K 0.5% 1/10W
R419	1-216-651-11	s	METAL, CHIP 1K 0.5% 1/10W
R420	1-208-806-11	s	METAL, CHIP 10k 0.5% 1/10W
R421	1-216-687-11	s	METAL, CHIP 33K 0.5% 1/10W
R422	1-216-699-11	s	METAL, CHIP 100K 0.5% 1/10W
R423	1-216-057-00	s	METAL, CHIP 2.2K 5% 1/10W
RB1	1-239-304-11	s	RESISTOR BLOCK, CHIP 2.2kx8
RB2	1-239-308-11	s	RESISTOR BLOCK, CHIP 47kx8
RB201	1-239-304-11	s	RESISTOR BLOCK, CHIP 2.2kx8
RB202	1-239-309-11	s	RESISTOR BLOCK, CHIP 100kx8
RB203	1-239-306-11	s	RESISTOR BLOCK, CHIP 10kx8
S1	1-692-535-11	s	SWITCH, DIP 4-CKT
S201	1-692-536-11	s	SWITCH, DIP 8-CKT
X1	1-579-930-12	s	RESONATOR, CERAMIC 16.00MHz
X101	1-579-993-21	s	CRYSTAL 13.50MHz
X200	1-579-996-21	s	RESONATOR, CERAMIC 20.00MHz

TBC-25 BOARD(UVW-1800/1600)

Ref. No. or Q'ty	Part No.	SP	Description
TBC-25 board is used for UVW-1800/1600(J,UC).			
1pc	A-8275-282-A	o	MOUNTED CIRCUIT BOARD, TBC-25
1pc	3-182-386-02	o	PLATE, SHIELD (L), CARD
1pc	7-621-759-45	s	SCREW, +PSW2.6x6
1pc	3-179-084-01	s	LEVER (R), PC BOARD
1pc	3-179-085-01	s	LEVER (L), PC BOARD
2pcs	1-750-484-11	s	BUS-BAR
C1	1-126-933-11	s	ELECT 100uF 20% 16V
C2	1-126-933-11	s	ELECT 100uF 20% 16V
C3	1-163-033-91	s	CERAMIC, CHIP 0.022uF 50V
C4	1-126-933-11	s	ELECT 100uF 20% 16V
C5	1-126-933-11	s	ELECT 100uF 20% 16V
C6	1-126-933-11	s	ELECT 100uF 20% 16V
C7	1-126-933-11	s	ELECT 100uF 20% 16V
C8	1-163-033-91	s	CERAMIC, CHIP 0.022uF 50V
C9	1-126-933-11	s	ELECT 100uF 20% 16V
C10	1-126-933-11	s	ELECT 100uF 20% 16V
C11	1-163-033-91	s	CERAMIC, CHIP 0.022uF 50V
C12	1-126-933-11	s	ELECT 100uF 20% 16V
C13	1-126-933-11	s	ELECT 100uF 20% 16V
C14	1-126-933-11	s	ELECT 100uF 20% 16V
C15	1-163-033-91	s	CERAMIC, CHIP 0.022uF 50V
C16-C21	1-126-933-11	s	ELECT 100uF 20% 16V
C22	1-163-033-91	s	CERAMIC, CHIP 0.022uF 50V
C100	1-163-033-91	s	CERAMIC, CHIP 0.022uF 50V
C101	1-126-947-11	s	ELECT 47uF 20% 35V
C102	1-163-231-11	s	CERAMIC, CHIP 15pF 5% 50V
C103	1-163-231-11	s	CERAMIC, CHIP 15pF 5% 50V
C104	1-163-033-91	s	CERAMIC, CHIP 0.022uF 50V
C105	1-163-033-91	s	CERAMIC, CHIP 0.022uF 50V
C106	1-163-033-91	s	CERAMIC, CHIP 0.022uF 50V
C107	1-126-947-11	s	ELECT 47uF 20% 35V
C108	1-163-809-11	s	CERAMIC, CHIP 0.047uF 10% 25V
C109	1-124-903-11	s	ELECT 1uF 20% 50V
C110	1-126-964-11	s	ELECT 10uF 20% 50V
C111	1-163-239-11	s	CERAMIC, CHIP 33PF 5% 50V
C112	1-164-004-11	s	CERAMIC, CHIP 0.1uF 10% 25V
C113	1-126-934-11	s	ELECT 220uF 20% 16V
C114	1-126-947-11	s	ELECT 47uF 20% 35V
C115	1-163-033-91	s	CERAMIC, CHIP 0.022uF 50V
C116	1-163-033-91	s	CERAMIC, CHIP 0.022uF 50V
C117	1-126-947-11	s	ELECT 47uF 20% 35V
C118	1-126-933-11	s	ELECT 100uF 20% 16V
C200	1-163-033-91	s	CERAMIC, CHIP 0.022uF 50V
C201	1-126-947-11	s	ELECT 47uF 20% 35V
C202	1-163-231-11	s	CERAMIC, CHIP 15pF 5% 50V
C203	1-163-231-11	s	CERAMIC, CHIP 15pF 5% 50V
C204	1-163-033-91	s	CERAMIC, CHIP 0.022uF 50V
C205	1-163-033-91	s	CERAMIC, CHIP 0.022uF 50V
C206	1-163-033-91	s	CERAMIC, CHIP 0.022uF 50V
C207	1-126-947-11	s	ELECT 47uF 20% 35V
C208	1-163-809-11	s	CERAMIC, CHIP 0.047uF 10% 25V
C209	1-124-903-11	s	ELECT 1uF 20% 50V
C210	1-126-964-11	s	ELECT 10uF 20% 50V
C211	1-163-239-11	s	CERAMIC, CHIP 33PF 5% 50V
C212	1-164-004-11	s	CERAMIC, CHIP 0.1uF 10% 25V
C213	1-126-934-11	s	ELECT 220uF 20% 16V

(TBC-25 BOARD(UVW-1800/1600))

Ref. No. or Q'ty	Part No.	SP	Description
C214	1-126-947-11	s	ELECT 47uF 20% 35V
C215	1-163-033-91	s	CERAMIC, CHIP 0.022uF 50V
C216	1-163-033-91	s	CERAMIC, CHIP 0.022uF 50V
C218	1-126-933-11	s	ELECT 100uF 20% 16V
C300	1-126-947-11	s	ELECT 47uF 20% 35V
C301	1-163-033-91	s	CERAMIC, CHIP 0.022uF 50V
C302	1-163-251-11	s	CERAMIC, CHIP 100PF 5% 50V
C303	1-163-033-91	s	CERAMIC, CHIP 0.022uF 50V
C305	1-163-033-91	s	CERAMIC, CHIP 0.022uF 50V
C306	1-163-251-11	s	CERAMIC, CHIP 100PF 5% 50V
C307	1-163-133-00	s	CERAMIC, CHIP 470PF 5% 50V
C308	1-163-263-11	s	CERAMIC, CHIP 330PF 5% 50V
C309	1-126-947-11	s	ELECT 47uF 20% 35V
C310	1-163-033-91	s	CERAMIC, CHIP 0.022uF 50V
C311	1-126-947-11	s	ELECT 47uF 20% 35V
C312-316	1-163-033-91	s	CERAMIC, CHIP 0.022uF 50V
C317	1-126-963-11	s	ELECT 4.7uF 20% 50V
C318	1-163-033-91	s	CERAMIC, CHIP 0.022uF 50V
C319	1-163-033-91	s	CERAMIC, CHIP 0.022uF 50V
C320	1-163-033-91	s	CERAMIC, CHIP 0.022uF 50V
C321	1-163-251-11	s	CERAMIC, CHIP 100PF 5% 50V
C322	1-163-133-00	s	CERAMIC, CHIP 470PF 5% 50V
C324	1-163-033-91	s	CERAMIC, CHIP 0.022uF 50V
C325	1-164-004-11	s	CERAMIC, CHIP 0.1uF 10% 25V
C326	1-164-232-11	s	CERAMIC, CHIP 0.01uF 10% 100V
C327	1-124-903-11	s	ELECT 1uF 20% 50V
C328	1-163-033-91	s	CERAMIC, CHIP 0.022uF 50V
C329	1-163-033-91	s	CERAMIC, CHIP 0.022uF 50V
C330	1-164-004-11	s	CERAMIC, CHIP 0.1uF 10% 25V
C331	1-124-903-11	s	ELECT 1uF 20% 50V
C332	1-164-004-11	s	CERAMIC, CHIP 0.1uF 10% 25V
C333	1-163-243-11	s	CERAMIC, CHIP 47PF 5% 50V
C334	1-126-933-11	s	ELECT 100uF 20% 16V
C335	1-163-033-91	s	CERAMIC, CHIP 0.022uF 50V
C336	1-163-133-00	s	CERAMIC, CHIP 470PF 5% 50V
C337	1-164-232-11	s	CERAMIC, CHIP 0.01uF 10% 100V
C338	1-163-033-91	s	CERAMIC, CHIP 0.022uF 50V
C339	1-163-251-11	s	CERAMIC, CHIP 100PF 5% 50V
C340	1-163-033-91	s	CERAMIC, CHIP 0.022uF 50V
C341	1-163-125-00	s	CERAMIC, CHIP 220PF 5% 50V
C342	1-163-133-00	s	CERAMIC, CHIP 470PF 5% 50V
C344	1-163-243-11	s	CERAMIC, CHIP 47PF 5% 50V
C345	1-163-243-11	s	CERAMIC, CHIP 47PF 5% 50V
C347	1-164-004-11	s	CERAMIC, CHIP 0.1uF 10% 25V
C348	1-163-227-11	s	CERAMIC, CHIP 10PF 5% 50V
C349	1-163-227-11	s	CERAMIC, CHIP 10PF 5% 50V
C350	1-126-933-11	s	ELECT 100uF 20% 16V
C351	1-164-489-11	s	CERAMIC, CHIP 0.22uF 10% 16V
C352	1-124-925-11	s	ELECT 2.2uF 20% 100V
C353	1-124-925-11	s	ELECT 2.2uF 20% 100V
C354	1-163-120-00	s	CERAMIC, CHIP 130PF 5% 50V
C355	1-163-243-11	s	CERAMIC, CHIP 47PF 5% 50V
C356	1-163-243-11	s	CERAMIC, CHIP 47PF 5% 50V
C357	1-163-275-11	s	CERAMIC, CHIP 0.001uF 5% 50V
C359	1-163-033-91	s	CERAMIC, CHIP 0.022uF 50V
C360	1-126-947-11	s	ELECT 47uF 20% 35V
C361	1-126-947-11	s	ELECT 47uF 20% 35V
C362	1-163-033-91	s	CERAMIC, CHIP 0.022uF 50V
C363	1-126-947-11	s	ELECT 47uF 20% 35V

(TBC-25 BOARD(UVW-1800/1600))

Ref. No. or Q'ty	Part No.	SP	Description
C364	1-163-033-91	s	CERAMIC, CHIP 0.022uF 50V
C400	1-126-947-11	s	ELECT 47uF 20% 35V
C401	1-163-033-91	s	CERAMIC, CHIP 0.022uF 50V
C402	1-163-033-91	s	CERAMIC, CHIP 0.022uF 50V
C404	1-163-033-91	s	CERAMIC, CHIP 0.022uF 50V
C405	1-126-947-11	s	ELECT 47uF 20% 35V
C406	1-163-033-91	s	CERAMIC, CHIP 0.022uF 50V
C407	1-163-222-11	s	CERAMIC, CHIP 5PF 50V
C408	1-163-102-00	s	CERAMIC, CHIP 24PF 5% 50V
C409	1-163-243-11	s	CERAMIC, CHIP 47PF 5% 50V
C410	1-126-947-11	s	ELECT 47uF 20% 35V
C411	1-163-106-00	s	CERAMIC, CHIP 36PF 5% 50V
C412	1-163-120-00	s	CERAMIC, CHIP 130PF 5% 50V
C413	1-163-263-11	s	CERAMIC, CHIP 330PF 5% 50V
C414-419	1-163-033-91	s	CERAMIC, CHIP 0.022uF 50V
C420	1-163-239-11	s	CERAMIC, CHIP 33PF 5% 50V
C421	1-163-125-00	s	CERAMIC, CHIP 220PF 5% 50V
C422	1-163-033-91	s	CERAMIC, CHIP 0.022uF 50V
C423	1-164-004-11	s	CERAMIC, CHIP 0.1uF 10% 25V
C424	1-164-004-11	s	CERAMIC, CHIP 0.1uF 10% 25V
C425	1-164-232-11	s	CERAMIC, CHIP 0.01uF 10% 100V
C426	1-124-903-11	s	ELECT 1uF 20% 50V
C427	1-163-033-91	s	CERAMIC, CHIP 0.022uF 50V
C428	1-163-033-91	s	CERAMIC, CHIP 0.022uF 50V
C429	1-124-903-11	s	ELECT 1uF 20% 50V
C430	1-163-033-91	s	CERAMIC, CHIP 0.022uF 50V
C431	1-164-004-11	s	CERAMIC, CHIP 0.1uF 10% 25V
C432	1-164-232-11	s	CERAMIC, CHIP 0.01uF 10% 100V
C433	1-163-263-11	s	CERAMIC, CHIP 330PF 5% 50V
C434	1-163-243-11	s	CERAMIC, CHIP 47PF 5% 50V
C435	1-126-933-11	s	ELECT 100uF 20% 16V
C436	1-163-033-91	s	CERAMIC, CHIP 0.022uF 50V
C437	1-163-133-00	s	CERAMIC, CHIP 470PF 5% 50V
C438	1-164-232-11	s	CERAMIC, CHIP 0.01uF 10% 100V
C439	1-163-033-91	s	CERAMIC, CHIP 0.022uF 50V
C440	1-163-251-11	s	CERAMIC, CHIP 100PF 5% 50V
C441	1-163-033-91	s	CERAMIC, CHIP 0.022uF 50V
C443	1-163-125-00	s	CERAMIC, CHIP 220PF 5% 50V
C444	1-163-263-11	s	CERAMIC, CHIP 330PF 5% 50V
C445	1-163-243-11	s	CERAMIC, CHIP 47PF 5% 50V
C446	1-163-243-11	s	CERAMIC, CHIP 47PF 5% 50V
C447	1-164-004-11	s	CERAMIC, CHIP 0.1uF 10% 25V
C448	1-126-933-11	s	ELECT 100uF 20% 16V
C449	1-164-489-11	s	CERAMIC, CHIP 0.22uF 10% 16V
C450	1-124-925-11	s	ELECT 2.2uF 20% 100V
C451	1-124-925-11	s	ELECT 2.2uF 20% 100V
C452	1-163-275-11	s	CERAMIC, CHIP 0.001uF 5% 50V
C454	1-163-033-91	s	CERAMIC, CHIP 0.022uF 50V
C455	1-126-947-11	s	ELECT 47uF 20% 35V
C456	1-126-947-11	s	ELECT 47uF 20% 35V
C457	1-163-033-91	s	CERAMIC, CHIP 0.022uF 50V
C458	1-126-947-11	s	ELECT 47uF 20% 35V
C459	1-163-033-91	s	CERAMIC, CHIP 0.022uF 50V
C461	1-163-033-91	s	CERAMIC, CHIP 0.022uF 50V
C462	1-163-102-00	s	CERAMIC, CHIP 24PF 5% 50V
C463	1-163-227-11	s	CERAMIC, CHIP 10PF 5% 50V
C464	1-163-227-11	s	CERAMIC, CHIP 10PF 5% 50V
C465	1-163-121-00	s	CERAMIC, CHIP 150PF 5% 50V
C501	1-163-125-00	s	CERAMIC, CHIP 220PF 5% 50V

(TBC-25 BOARD(UVW-1800/1600))

Ref. No. or Q'ty	Part No.	SP	Description
C502	1-163-125-00	s	CERAMIC, CHIP 220PF 5% 50V
C503	1-163-033-91	s	CERAMIC, CHIP 0.022uF 50V
C504	1-163-033-91	s	CERAMIC, CHIP 0.022uF 50V
C505	1-163-033-91	s	CERAMIC, CHIP 0.022uF 50V
C506	1-163-033-91	s	CERAMIC, CHIP 0.022uF 50V
C507	1-126-947-11	s	ELECT 47uF 20% 35V
C508	1-163-033-91	s	CERAMIC, CHIP 0.022uF 50V
C509	1-163-033-91	s	CERAMIC, CHIP 0.022uF 50V
C510	1-163-033-91	s	CERAMIC, CHIP 0.022uF 50V
C511	1-163-033-91	s	CERAMIC, CHIP 0.022uF 50V
C512	1-163-125-00	s	CERAMIC, CHIP 220PF 5% 50V
C513	1-163-033-91	s	CERAMIC, CHIP 0.022uF 50V
C514	1-163-251-11	s	CERAMIC, CHIP 100PF 5% 50V
C515-523	1-163-033-91	s	CERAMIC, CHIP 0.022uF 50V
C524	1-164-004-11	s	CERAMIC, CHIP 0.1uF 10% 25V
C525	1-164-004-11	s	CERAMIC, CHIP 0.1uF 10% 25V
C526	1-164-004-11	s	CERAMIC, CHIP 0.1uF 10% 25V
C527	1-163-033-91	s	CERAMIC, CHIP 0.022uF 50V
C528	1-164-004-11	s	CERAMIC, CHIP 0.1uF 10% 25V
C529	1-163-033-91	s	CERAMIC, CHIP 0.022uF 50V
C530	1-164-004-11	s	CERAMIC, CHIP 0.1uF 10% 25V
C531	1-163-033-91	s	CERAMIC, CHIP 0.022uF 50V
C532	1-164-004-11	s	CERAMIC, CHIP 0.1uF 10% 25V
C533	1-163-033-91	s	CERAMIC, CHIP 0.022uF 50V
C534	1-163-033-91	s	CERAMIC, CHIP 0.022uF 50V
C535	1-163-033-91	s	CERAMIC, CHIP 0.022uF 50V
C536	1-163-033-91	s	CERAMIC, CHIP 0.022uF 50V
C537	1-126-947-11	s	ELECT 47uF 20% 35V
C538	1-126-947-11	s	ELECT 47uF 20% 35V
C539	1-163-033-91	s	CERAMIC, CHIP 0.022uF 50V
C540	1-163-033-91	s	CERAMIC, CHIP 0.022uF 50V
C541	1-163-231-11	s	CERAMIC, CHIP 15pF 5% 50V
C542	1-126-947-11	s	ELECT 47uF 20% 35V
C543	1-126-947-11	s	ELECT 47uF 20% 35V
C544	1-163-033-91	s	CERAMIC, CHIP 0.022uF 50V
C545	1-163-251-11	s	CERAMIC, CHIP 100PF 5% 50V
C546	1-163-243-11	s	CERAMIC, CHIP 47PF 5% 50V
C547-553	1-163-033-91	s	CERAMIC, CHIP 0.022uF 50V
C554	1-163-227-11	s	CERAMIC, CHIP 10PF 5% 50V
C555	1-163-227-11	s	CERAMIC, CHIP 10PF 5% 50V
C700	1-164-232-11	s	CERAMIC, CHIP 0.01uF 10% 100V
C701	1-164-232-11	s	CERAMIC, CHIP 0.01uF 10% 100V
C702	1-126-964-11	s	ELECT 10uF 20% 50V
C703	1-126-964-11	s	ELECT 10uF 20% 50V
C704	1-163-239-11	s	CERAMIC, CHIP 33PF 5% 50V
C705	1-163-125-00	s	CERAMIC, CHIP 220PF 5% 50V
C706	1-163-033-91	s	CERAMIC, CHIP 0.022uF 50V
C707	1-164-004-11	s	CERAMIC, CHIP 0.1uF 10% 25V
C708	1-126-947-11	s	ELECT 47uF 20% 35V
C709-715	1-163-033-91	s	CERAMIC, CHIP 0.022uF 50V
C716	1-163-239-11	s	CERAMIC, CHIP 33PF 5% 50V
C717	1-163-033-91	s	CERAMIC, CHIP 0.022uF 50V
C718	1-163-033-91	s	CERAMIC, CHIP 0.022uF 50V
C719	1-126-947-11	s	ELECT 47uF 20% 35V
C720	1-130-489-00	s	MYLAR 0.033uF 5% 50V
C721	1-163-033-91	s	CERAMIC, CHIP 0.022uF 50V
C722	1-126-947-11	s	ELECT 47uF 20% 35V
C723-728	1-163-033-91	s	CERAMIC, CHIP 0.022uF 50V
C729	1-126-947-11	s	ELECT 47uF 20% 35V

(TBC-25 BOARD(UVW-1800/1600))

Ref. No. or Q'ty	Part No.	SP	Description
C730	1-126-947-11	s	ELECT 47uF 20% 35V
C731	1-164-004-11	s	CERAMIC, CHIP 0.1uF 10% 25V
C732	1-164-004-11	s	CERAMIC, CHIP 0.1uF 10% 25V
C733	1-164-004-11	s	CERAMIC, CHIP 0.1uF 10% 25V
C734	1-163-251-11	s	CERAMIC, CHIP 100PF 5% 50V
C735	1-164-004-11	s	CERAMIC, CHIP 0.1uF 10% 25V
C736	1-163-121-00	s	CERAMIC, CHIP 150PF 5% 50V
C737	1-163-125-00	s	CERAMIC, CHIP 220PF 5% 50V
C738	1-163-033-91	s	CERAMIC, CHIP 0.022uF 50V
C739	1-163-033-91	s	CERAMIC, CHIP 0.022uF 50V
C740	1-163-275-11	s	CERAMIC, CHIP 0.001uF 5% 50V
C741	1-131-347-00	s	TANTALUM 1uF 10% 35V
C742	1-163-033-91	s	CERAMIC, CHIP 0.022uF 50V
C743	1-131-363-00	s	TANTALUM 4.7uF 10% 20V
C744	1-164-232-11	s	CERAMIC, CHIP 0.01uF 10% 100V
C746	1-163-033-91	s	CERAMIC, CHIP 0.022uF 50V
C747	1-163-033-91	s	CERAMIC, CHIP 0.022uF 50V
C748	1-163-239-11	s	CERAMIC, CHIP 33PF 5% 50V
C749	1-163-102-00	s	CERAMIC, CHIP 24PF 5% 50V
C750	1-163-102-00	s	CERAMIC, CHIP 24PF 5% 50V
C751	1-163-243-11	s	CERAMIC, CHIP 47PF 5% 50V
C752	1-164-232-11	s	CERAMIC, CHIP 0.01uF 10% 100V
C753	1-164-232-11	s	CERAMIC, CHIP 0.01uF 10% 100V
C754	1-163-263-11	s	CERAMIC, CHIP 330PF 5% 50V
C755	1-163-263-11	s	CERAMIC, CHIP 330PF 5% 50V
C756	1-163-809-11	s	CERAMIC, CHIP 0.047uF 10% 25V
C757	1-163-809-11	s	CERAMIC, CHIP 0.047uF 10% 25V
C758	1-163-033-91	s	CERAMIC, CHIP 0.022uF 50V
C759	1-164-004-11	s	CERAMIC, CHIP 0.1uF 10% 25V
C760	1-164-004-11	s	CERAMIC, CHIP 0.1uF 10% 25V
C761	1-163-033-91	s	CERAMIC, CHIP 0.022uF 50V
C762	1-163-033-91	s	CERAMIC, CHIP 0.022uF 50V
C763	1-126-947-11	s	ELECT 47uF 20% 35V
C764	1-126-947-11	s	ELECT 47uF 20% 35V
C765	1-124-903-11	s	ELECT 1uF 20% 50V
C766	1-163-033-91	s	CERAMIC, CHIP 0.022uF 50V
C767	1-163-033-91	s	CERAMIC, CHIP 0.022uF 50V
C768	1-163-243-11	s	CERAMIC, CHIP 47PF 5% 50V
C769	1-163-033-91	s	CERAMIC, CHIP 0.022uF 50V
C770	1-164-004-11	s	CERAMIC, CHIP 0.1uF 10% 25V
C771	1-164-004-11	s	CERAMIC, CHIP 0.1uF 10% 25V
C772	1-163-033-91	s	CERAMIC, CHIP 0.022uF 50V
C773	1-163-033-91	s	CERAMIC, CHIP 0.022uF 50V
C774	1-164-004-11	s	CERAMIC, CHIP 0.1uF 10% 25V
C775	1-164-004-11	s	CERAMIC, CHIP 0.1uF 10% 25V
C776	1-163-033-91	s	CERAMIC, CHIP 0.022uF 50V
C777	1-163-033-91	s	CERAMIC, CHIP 0.022uF 50V
C778	1-163-033-91	s	CERAMIC, CHIP 0.022uF 50V
C779	1-163-033-91	s	CERAMIC, CHIP 0.022uF 50V
C780	1-126-947-11	s	ELECT 47uF 20% 35V
C781	1-163-033-91	s	CERAMIC, CHIP 0.022uF 50V
C782	1-163-033-91	s	CERAMIC, CHIP 0.022uF 50V
C783	1-126-947-11	s	ELECT 47uF 20% 35V
C784	1-163-033-91	s	CERAMIC, CHIP 0.022uF 50V
C785	1-163-033-91	s	CERAMIC, CHIP 0.022uF 50V
C787	1-163-125-00	s	CERAMIC, CHIP 220PF 5% 50V
C788	1-163-033-91	s	CERAMIC, CHIP 0.022uF 50V
C789	1-126-964-11	s	ELECT 10uF 20% 50V
C790	1-126-964-11	s	ELECT 10uF 20% 50V

(TBC-25 BOARD(UVW-1800/1600))

Ref. No. or Q'ty	Part No.	SP	Description
C791	1-163-033-91	s	CERAMIC, CHIP 0.022uF 50V
C792	1-126-947-11	s	ELECT 47uF 20% 35V
C793	1-126-947-11	s	ELECT 47uF 20% 35V
C794	1-124-903-11	s	ELECT 1uF 20% 50V
C795	1-164-222-11	s	CERAMIC, CHIP 0.22uF 25V
C796	1-163-033-91	s	CERAMIC, CHIP 0.022uF 50V
C797	1-164-232-11	s	CERAMIC, CHIP 0.01uF 10% 100V
C798	1-164-232-11	s	CERAMIC, CHIP 0.01uF 10% 100V
C799	1-163-033-91	s	CERAMIC, CHIP 0.022uF 50V
C800	1-163-033-91	s	CERAMIC, CHIP 0.022uF 50V
C802	1-163-033-91	s	CERAMIC, CHIP 0.022uF 50V
C803	1-163-121-00	s	CERAMIC, CHIP 150PF 5% 50V
C804	1-163-251-11	s	CERAMIC, CHIP 100PF 5% 50V
C805	1-163-227-11	s	CERAMIC, CHIP 10PF 5% 50V
C806	1-163-227-11	s	CERAMIC, CHIP 10PF 5% 50V
CN1	1-564-005-11	o	CONNECTOR 6P, MALE
CN2	1-564-005-11	o	CONNECTOR 6P, MALE
CN105	1-573-782-21	o	CONNECTOR, PHEC 60P, MALE
CN106	1-573-782-21	o	CONNECTOR, PHEC 60P, MALE
CV700	1-141-443-11	s	CAP, TRIMMER 30pF
CV701	1-141-443-11	s	CAP, TRIMMER 30pF
D1	8-719-941-04	s	DIODE SB007-03CP
D2	8-719-941-04	s	DIODE SB007-03CP
D100	8-719-941-23	s	DIODE DA204U
D101	8-719-123-82	s	DIODE 1SS303-T1
D102	8-719-123-85	s	DIODE 1SS304
D200	8-719-941-23	s	DIODE DA204U
D301	8-719-941-23	s	DIODE DA204U
D302	8-719-105-38	s	DIODE RD3.0M-B1
D303	8-719-041-39	s	DIODE KV1470
D304	8-719-041-39	s	DIODE KV1470
D401	8-719-941-23	s	DIODE DA204U
D402	8-719-105-38	s	DIODE RD3.0M-B1
D403	8-719-041-39	s	DIODE KV1470
D404	8-719-041-39	s	DIODE KV1470
D502	8-719-123-82	s	DIODE 1SS303-T1
D503	8-719-123-82	s	DIODE 1SS303-T1
D504	8-719-941-23	s	DIODE DA204U
D505	8-719-123-85	s	DIODE 1SS304
D506	8-719-123-85	s	DIODE 1SS304
D701	8-719-123-82	s	DIODE 1SS303-T1
D702	8-719-002-81	s	DIODE 1T363A-M20-T8A
D703	8-719-002-81	s	DIODE 1T363A-M20-T8A
FL500	1-239-769-11	s	FILTER, LOW-PASS 5MHz
FL501	1-239-767-11	s	FILTER, LOW-PASS 2MHz
FL502	1-239-767-11	s	FILTER, LOW-PASS 2MHz
IC1	8-759-168-20	s	IC TA78L09S
IC2	8-759-168-20	s	IC TA78L09S
IC3	8-759-822-95	s	IC L79M05T-FA
IC4	8-759-822-95	s	IC L79M05T-FA
IC5	8-759-182-84	s	IC PQ05SZ5U
IC6	8-759-182-84	s	IC PQ05SZ5U
IC7	8-759-182-84	s	IC PQ05SZ5U
IC100	8-759-030-74	s	IC SC14S66FEL
IC101	8-759-981-48	s	IC NJM082M
IC102	8-759-908-15	s	IC TL431CLP
IC103	8-752-334-55	s	IC CXD1175M

(TBC-25 BOARD(UVW-1800/1600))

Ref. No. or Q'ty	Part No.	SP	Description
IC200	8-759-030-74	s	IC SC14S66FEL
IC203	8-752-334-55	s	IC CXD1175M
IC300	8-759-702-08	s	IC NJM360M
IC301	8-752-339-03	s	IC CXD2207Q
IC302	8-759-300-71	s	IC HD14053BFP
IC303	8-759-100-96	s	IC UPC4558G2
IC304	8-759-100-96	s	IC UPC4558G2
IC305	8-759-941-27	s	IC MB4002PF
IC306	8-759-907-81	s	IC SN74LS221NS
IC307	8-759-991-85	s	IC 74F00SJ
IC308	8-759-030-74	s	IC SC14S66FEL
IC310	8-759-035-93	s	IC TC7S32F-TE85L
IC400	8-759-702-08	s	IC NJM360M
IC401	8-752-339-03	s	IC CXD2207Q
IC402	8-759-100-96	s	IC UPC4558G2
IC403	8-759-100-96	s	IC UPC4558G2
IC404	8-759-702-08	s	IC NJM360M
IC405	8-759-907-81	s	IC SN74LS221NS
IC406	8-759-926-24	s	IC SN74HC164ANS
IC407	8-759-991-85	s	IC 74F00SJ
IC408	8-759-030-74	s	IC SC14S66FEL
IC409	8-759-035-93	s	IC TC7S32F-TE85L
IC501	8-752-362-70	s	IC CXD101-106Q
IC502	8-752-362-70	s	IC CXD101-106Q
IC503	8-759-055-71	s	IC CXD8313Q
IC504	8-759-055-71	s	IC CXD8313Q
IC505	8-752-340-52	s	IC CXK48324Q
IC506	8-759-926-55	s	IC SN74HC266NS
IC507	8-759-147-05	s	IC UPD42101G-3
IC508	8-752-340-52	s	IC CXK48324Q
IC509	8-759-927-46	s	IC SN74HC00ANS
IC510	8-759-926-77	s	IC SN74HC541ANS
IC511	8-759-925-78	s	IC SN74HC10ANS
IC512	8-759-926-18	s	IC SN74HC157ANS
IC513	8-759-926-18	s	IC SN74HC157ANS
IC514	8-759-239-55	s	IC TC74HC123AF
IC515	8-759-100-96	s	IC UPC4558G2
IC516	8-759-100-96	s	IC UPC4558G2
IC517	8-759-100-96	s	IC UPC4558G2
IC518	8-752-363-43	s	IC CXD1171M-1-TH
IC519	8-752-363-43	s	IC CXD1171M-1-TH
IC520	8-752-363-43	s	IC CXD1171M-1-TH
IC521	8-752-052-77	s	IC CXA1450M
IC522	8-759-926-24	s	IC SN74HC164ANS
IC523	8-759-925-85	s	IC SN74HC32ANS
IC524	8-759-926-18	s	IC SN74HC157ANS
IC525	8-759-926-18	s	IC SN74HC157ANS
IC526	8-759-926-18	s	IC SN74HC157ANS
IC527	8-759-926-18	s	IC SN74HC157ANS
IC528	8-759-925-90	s	IC SN74HC74ANS
IC529	8-759-926-27	s	IC SN74HC173NS
IC530	8-759-926-27	s	IC SN74HC173NS
IC531	8-759-926-27	s	IC SN74HC173NS
IC532	8-759-926-27	s	IC SN74HC173NS
IC533	8-759-031-84	s	IC TC7S04F
IC534	8-759-926-56	s	IC SN74HC273ANS
IC700	8-759-300-71	s	IC HD14053BFP
IC701	8-759-981-48	s	IC NJM082M
IC702	8-759-009-05	s	IC MC14051BF

(TBC-25 BOARD(UVW-1800/1600))

Ref. No. or Q'ty	Part No.	SP	Description
IC703	8-759-987-27	s	IC LM1881M
IC704	8-759-100-96	s	IC UPC4558G2
IC705	8-759-981-48	s	IC NJM082M
IC706	8-759-702-08	s	IC NJM360M
IC707	8-759-100-96	s	IC UPC4558G2
IC708	8-759-908-15	s	IC TL431CLP
IC709	8-759-980-04	s	IC LM311PS
IC710	8-759-239-55	s	IC TC74HC123AF
IC711	8-759-925-74	s	IC TC74HC04ANS
IC712	8-759-250-81	s	IC TC5081AP
IC713	8-752-335-47	s	IC CXD1216M
IC714	8-759-336-06	s	IC MC68HC05C4-SC412511FU
IC715	8-759-300-71	s	IC HD14053BFP
IC716	8-759-925-76	s	IC SN74HC08ANS
IC717	8-759-241-03	s	IC TC74HC191AF
IC718	8-759-031-84	s	IC TC7S04F
IC719	8-759-031-84	s	IC TC7S04F
IC720	8-759-925-90	s	IC SN74HC74ANS
IC721	8-759-239-55	s	IC TC74HC123AF
IC722	8-759-519-49	s	IC CXD8165Q
IC723	8-752-334-64	s	IC CXD1171M
IC724	8-752-334-64	s	IC CXD1171M
IC725	8-752-052-77	s	IC CXA1450M
IC726	8-759-981-48	s	IC NJM082M
IC727	8-759-239-55	s	IC TC74HC123AF
IC728	8-759-031-84	s	IC TC7S04F
L1-L5	1-412-533-21	s	INDUCTOR 47uH
L100	1-410-478-11	s	INDUCTOR 47uH
L101	1-410-476-11	s	INDUCTOR 33uH
L102	1-410-478-11	s	INDUCTOR 47uH
L103	1-410-478-11	s	INDUCTOR 47uH
L200	1-410-478-11	s	INDUCTOR 47uH
L201	1-410-476-11	s	INDUCTOR 33uH
L202	1-410-478-11	s	INDUCTOR 47uH
L203	1-410-478-11	s	INDUCTOR 47uH
L300	1-410-478-11	s	INDUCTOR 47uH
L301	1-410-478-11	s	INDUCTOR 47uH
L302	1-408-621-31	s	INDUCTOR 330uH
L303	1-410-492-11	s	INDUCTOR 680uH
L304	1-408-419-00	s	INDUCTOR 68uH
L305	1-410-478-11	s	INDUCTOR 47uH
L306	1-410-478-11	s	INDUCTOR 47uH
L307	1-408-406-00	s	INDUCTOR 5.6uH
L400	1-410-478-11	s	INDUCTOR 47uH
L401	1-410-478-11	s	INDUCTOR 47uH
L402	1-408-411-00	s	INDUCTOR 15uH
L403	1-410-476-11	s	INDUCTOR 33uH
L404	1-410-482-31	s	INDUCTOR 100uH
L405	1-408-425-00	s	INDUCTOR 220uH
L406	1-408-416-00	s	INDUCTOR 39uH
L407	1-410-478-11	s	INDUCTOR 47uH
L408	1-410-478-11	s	INDUCTOR 47uH
L500-504	1-410-478-11	s	INDUCTOR 47uH
L700	1-410-482-31	s	INDUCTOR 100uH
L701	1-408-419-00	s	INDUCTOR 68uH
L702-709	1-410-478-11	s	INDUCTOR 47uH
LV300	1-406-746-11	s	INDUCTOR, VAR 22uH
LV400	1-406-745-11	s	INDUCTOR, VAR 6.8uH

(TBC-25 BOARD(UVW-1800/1600))

Ref. No. or Q'ty	Part No.	SP	Description
Q100	8-729-117-32	s	TRANSISTOR 2SC4177
Q101	8-729-117-32	s	TRANSISTOR 2SC4177
Q102	8-729-117-32	s	TRANSISTOR 2SC4177
Q103	8-729-118-56	s	TRANSISTOR 2SK852-X2
Q104	8-729-140-63	s	TRANSISTOR 2SA1611-M5M6
Q200	8-729-117-32	s	TRANSISTOR 2SC4177
Q201	8-729-117-32	s	TRANSISTOR 2SC4177
Q202	8-729-117-32	s	TRANSISTOR 2SC4177
Q203	8-729-118-56	s	TRANSISTOR 2SK852-X2
Q300	8-729-117-32	s	TRANSISTOR 2SC4177
Q301	8-729-117-32	s	TRANSISTOR 2SC4177
Q302	8-729-117-32	s	TRANSISTOR 2SC4177
Q303	8-729-140-63	s	TRANSISTOR 2SA1611-M5M6
Q304	8-729-140-47	s	TRANSISTOR 2SC3735-B34
Q305	8-729-140-63	s	TRANSISTOR 2SA1611-M5M6
Q306	8-729-117-32	s	TRANSISTOR 2SC4177
Q400	8-729-117-32	s	TRANSISTOR 2SC4177
Q401	8-729-117-32	s	TRANSISTOR 2SC4177
Q402	8-729-117-32	s	TRANSISTOR 2SC4177
Q403	8-729-117-32	s	TRANSISTOR 2SC4177
Q404	8-729-140-63	s	TRANSISTOR 2SA1611-M5M6
Q405	8-729-140-47	s	TRANSISTOR 2SC3735-B34
Q406	8-729-140-63	s	TRANSISTOR 2SA1611-M5M6
Q407	8-729-117-32	s	TRANSISTOR 2SC4177
Q500	8-729-117-32	s	TRANSISTOR 2SC4177
Q501	8-729-140-63	s	TRANSISTOR 2SA1611-M5M6
Q502	8-729-117-32	s	TRANSISTOR 2SC4177
Q503	8-729-117-32	s	TRANSISTOR 2SC4177
Q700	8-729-140-63	s	TRANSISTOR 2SA1611-M5M6
Q701	8-729-117-32	s	TRANSISTOR 2SC4177
Q702	8-729-117-32	s	TRANSISTOR 2SC4177
Q703	8-729-117-32	s	TRANSISTOR 2SC4177
Q704	8-729-117-32	s	TRANSISTOR 2SC4177
Q705	8-729-140-47	s	TRANSISTOR 2SC3735-B34
Q706	8-729-140-47	s	TRANSISTOR 2SC3735-B34
Q707-711	8-729-117-32	s	TRANSISTOR 2SC4177
R100	1-216-638-11	s	METAL, CHIP 300 0.5% 1/10W
R101	1-216-025-91	s	METAL, CHIP 100 5% 1/10W
R102	1-216-659-11	s	METAL, CHIP 2.2K 0.5% 1/10W
R103	1-216-041-00	s	METAL, CHIP 470 5% 1/10W
R104	1-216-033-00	s	METAL, CHIP 220 5% 1/10W
R105	1-216-049-91	s	METAL, CHIP 1k 5% 1/10W
R106	1-216-652-11	s	METAL, CHIP 1.1K 0.5% 1/10W
R107	1-216-652-11	s	METAL, CHIP 1.1K 0.5% 1/10W
R108	1-216-059-00	s	METAL, CHIP 2.7K 5% 1/10W
R109	1-216-025-91	s	METAL, CHIP 100 5% 1/10W
R110	1-216-093-00	s	METAL, CHIP 68K 5% 1/10W
R111	1-216-061-00	s	METAL, CHIP 3.3K 5% 1/10W
R112	1-216-049-91	s	METAL, CHIP 1k 5% 1/10W
R113	1-216-017-91	s	METAL, CHIP 47 5% 1/10W
R114	1-216-073-00	s	METAL, CHIP 10K 5% 1/10W
R115	1-216-097-91	s	METAL, CHIP 100k 5% 1/10W
R116	1-216-057-00	s	METAL, CHIP 2.2K 5% 1/10W
R117	1-216-057-00	s	METAL, CHIP 2.2K 5% 1/10W
R118	1-216-073-00	s	METAL, CHIP 10K 5% 1/10W
R119	1-216-037-00	s	METAL, CHIP 330 5% 1/10W
R120	1-216-033-00	s	METAL, CHIP 220 5% 1/10W
R121	1-216-033-00	s	METAL, CHIP 220 5% 1/10W

(TBC-25 BOARD(UVW-1800/1600))

Ref. No. or Q'ty	Part No.	SP	Description
R122	1-216-017-91	s	METAL, CHIP 47 5% 1/10W
R123	1-216-073-00	s	METAL, CHIP 10K 5% 1/10W
R124	1-216-065-00	s	METAL, CHIP 4.7K 5% 1/10W
R125	1-216-059-00	s	METAL, CHIP 2.7K 5% 1/10W
R200	1-216-638-11	s	METAL, CHIP 300 0.5% 1/10W
R201	1-216-025-91	s	METAL, CHIP 100 5% 1/10W
R202	1-216-659-11	s	METAL, CHIP 2.2K 0.5% 1/10W
R203	1-216-041-00	s	METAL, CHIP 470 5% 1/10W
R204	1-216-033-00	s	METAL, CHIP 220 5% 1/10W
R205	1-216-049-91	s	METAL, CHIP 1k 5% 1/10W
R206	1-216-652-11	s	METAL, CHIP 1.1K 0.5% 1/10W
R207	1-216-652-11	s	METAL, CHIP 1.1K 0.5% 1/10W
R208	1-216-059-00	s	METAL, CHIP 2.7K 5% 1/10W
R209	1-216-025-91	s	METAL, CHIP 100 5% 1/10W
R210	1-216-081-00	s	METAL, CHIP 22K 5% 1/10W
R211	1-216-073-00	s	METAL, CHIP 10K 5% 1/10W
R212	1-216-049-91	s	METAL, CHIP 1k 5% 1/10W
R213	1-216-017-91	s	METAL, CHIP 47 5% 1/10W
R214	1-216-073-00	s	METAL, CHIP 10K 5% 1/10W
R215	1-216-097-91	s	METAL, CHIP 100k 5% 1/10W
R222	1-216-017-91	s	METAL, CHIP 47 5% 1/10W
R223	1-216-073-00	s	METAL, CHIP 10K 5% 1/10W
R301	1-216-049-91	s	METAL, CHIP 1k 5% 1/10W
R302	1-216-085-00	s	METAL, CHIP 33K 5% 1/10W
R303	1-216-065-00	s	METAL, CHIP 4.7K 5% 1/10W
R304	1-216-073-00	s	METAL, CHIP 10K 5% 1/10W
R305	1-216-085-00	s	METAL, CHIP 33K 5% 1/10W
R306	1-216-017-91	s	METAL, CHIP 47 5% 1/10W
R307	1-216-051-00	s	METAL, CHIP 1.2K 5% 1/10W
R308	1-216-025-91	s	METAL, CHIP 100 5% 1/10W
R309	1-216-057-00	s	METAL, CHIP 2.2K 5% 1/10W
R310	1-216-033-00	s	METAL, CHIP 220 5% 1/10W
R311	1-216-049-91	s	METAL, CHIP 1k 5% 1/10W
R312	1-216-057-00	s	METAL, CHIP 2.2K 5% 1/10W
R313	1-216-059-00	s	METAL, CHIP 2.7K 5% 1/10W
R314	1-216-049-91	s	METAL, CHIP 1k 5% 1/10W
R315	1-216-089-91	s	METAL, CHIP 47k 5% 1/10W
R316	1-216-049-91	s	METAL, CHIP 1k 5% 1/10W
R317	1-216-069-00	s	METAL, CHIP 6.8K 5% 1/10W
R318	1-216-041-00	s	METAL, CHIP 470 5% 1/10W
R319	1-208-806-11	s	METAL, CHIP 10k 0.5% 1/10W
R320	1-216-295-91	s	RES, CHIP 0
R321	1-216-065-00	s	METAL, CHIP 4.7K 5% 1/10W
R322	1-216-677-11	s	METAL, CHIP 12K 0.5% 1/10W
R323	1-216-033-00	s	METAL, CHIP 220 5% 1/10W
R324	1-216-033-00	s	METAL, CHIP 220 5% 1/10W
R325	1-216-117-00	s	METAL, CHIP 680K 5% 1/10W
R326	1-208-822-11	s	METAL, CHIP 47k 0.5% 1/10W
R328	1-216-687-11	s	METAL, CHIP 33K 0.5% 1/10W
R329	1-208-800-11	s	METAL, CHIP 5.6k 0.5% 1/10W
R330	1-216-634-11	s	METAL, CHIP 200 0.5% 1/10W
R331	1-216-025-91	s	METAL, CHIP 100 5% 1/10W
R332	1-216-057-00	s	METAL, CHIP 2.2K 5% 1/10W
R333	1-216-667-11	s	METAL, CHIP 4.7K 0.5% 1/10W
R334	1-216-121-91	s	METAL, CHIP 1M 5% 1/10W
R335	1-216-033-00	s	METAL, CHIP 220 5% 1/10W
R336	1-216-061-00	s	METAL, CHIP 3.3K 5% 1/10W
R337	1-216-671-11	s	METAL, CHIP 6.8K 0.5% 1/10W
R338	1-208-810-11	s	METAL, CHIP 15k 0.5% 1/10W

(TBC-25 BOARD(UVW-1800/1600))

Ref. No. or Q'ty	Part No.	SP	Description
R339	1-216-073-00	s	METAL, CHIP 10K 5% 1/10W
R340	1-216-025-91	s	METAL, CHIP 100 5% 1/10W
R341	1-216-659-11	s	METAL, CHIP 2.2K 0.5% 1/10W
R342	1-216-033-00	s	METAL, CHIP 220 5% 1/10W
R343	1-216-033-00	s	METAL, CHIP 220 5% 1/10W
R344	1-216-661-11	s	METAL, CHIP 2.7K 0.5% 1/10W
R345	1-208-789-11	s	METAL, CHIP 2k 0.5% 1/10W
R346	1-208-806-11	s	METAL, CHIP 10k 0.5% 1/10W
R348	1-216-057-00	s	METAL, CHIP 2.2K 5% 1/10W
R350	1-216-097-91	s	METAL, CHIP 100k 5% 1/10W
R352	1-216-057-00	s	METAL, CHIP 2.2K 5% 1/10W
R353	1-216-057-00	s	METAL, CHIP 2.2K 5% 1/10W
R354	1-216-037-00	s	METAL, CHIP 330 5% 1/10W
R358	1-216-061-00	s	METAL, CHIP 3.3K 5% 1/10W
R359	1-208-822-11	s	METAL, CHIP 47k 0.5% 1/10W
R360	1-216-109-00	s	METAL, CHIP 330K 5% 1/10W
R361	1-216-057-00	s	METAL, CHIP 2.2K 5% 1/10W
R363	1-216-017-91	s	METAL, CHIP 47 5% 1/10W
R367	1-216-073-00	s	METAL, CHIP 10K 5% 1/10W
R369	1-216-049-91	s	METAL, CHIP 1k 5% 1/10W
R371	1-216-041-00	s	METAL, CHIP 470 5% 1/10W
R372	1-216-041-00	s	METAL, CHIP 470 5% 1/10W
R373	1-216-085-00	s	METAL, CHIP 33K 5% 1/10W
R374	1-216-085-00	s	METAL, CHIP 33K 5% 1/10W
R375	1-216-085-00	s	METAL, CHIP 33K 5% 1/10W
R376	1-216-017-91	s	METAL, CHIP 47 5% 1/10W
R380	1-208-814-11	s	METAL, CHIP 22k 0.5% 1/10W
R400	1-216-085-00	s	METAL, CHIP 33K 5% 1/10W
R401	1-216-065-00	s	METAL, CHIP 4.7K 5% 1/10W
R402	1-216-073-00	s	METAL, CHIP 10K 5% 1/10W
R403	1-216-085-00	s	METAL, CHIP 33K 5% 1/10W
R404	1-216-017-91	s	METAL, CHIP 47 5% 1/10W
R405	1-216-049-91	s	METAL, CHIP 1k 5% 1/10W
R406	1-216-065-00	s	METAL, CHIP 4.7K 5% 1/10W
R407	1-216-049-91	s	METAL, CHIP 1k 5% 1/10W
R408	1-216-025-91	s	METAL, CHIP 100 5% 1/10W
R409	1-216-049-91	s	METAL, CHIP 1k 5% 1/10W
R410	1-216-057-00	s	METAL, CHIP 2.2K 5% 1/10W
R411	1-216-033-00	s	METAL, CHIP 220 5% 1/10W
R412	1-216-057-00	s	METAL, CHIP 2.2K 5% 1/10W
R413	1-216-059-00	s	METAL, CHIP 2.7K 5% 1/10W
R414	1-216-049-91	s	METAL, CHIP 1k 5% 1/10W
R415	1-216-049-91	s	METAL, CHIP 1k 5% 1/10W
R416	1-216-089-91	s	METAL, CHIP 47k 5% 1/10W
R417	1-216-041-00	s	METAL, CHIP 470 5% 1/10W
R418	1-208-806-11	s	METAL, CHIP 10k 0.5% 1/10W
R419	1-216-121-91	s	METAL, CHIP 1M 5% 1/10W
R420	1-208-806-11	s	METAL, CHIP 10k 0.5% 1/10W
R421	1-216-065-00	s	METAL, CHIP 4.7K 5% 1/10W
R422	1-216-037-00	s	METAL, CHIP 330 5% 1/10W
R423	1-208-822-11	s	METAL, CHIP 47k 0.5% 1/10W
R424	1-216-033-00	s	METAL, CHIP 220 5% 1/10W
R425	1-216-033-00	s	METAL, CHIP 220 5% 1/10W
R426	1-216-117-00	s	METAL, CHIP 680K 5% 1/10W
R427	1-216-645-11	s	METAL, CHIP 560 0.5% 1/10W
R428	1-216-623-11	s	METAL, CHIP 68 0.5% 1/10W
R429	1-216-655-11	s	METAL, CHIP 1.5K 0.5% 1/10W
R430	1-216-121-91	s	METAL, CHIP 1M 5% 1/10W
R431	1-216-051-00	s	METAL, CHIP 1.2K 5% 1/10W

(TBC-25 BOARD(UVW-1800/1600))

Ref. No. or Q'ty	Part No.	SP	Description
R432	1-216-049-91	s	METAL, CHIP 1k 5% 1/10W
R433	1-216-033-00	s	METAL, CHIP 220 5% 1/10W
R434	1-216-673-11	s	METAL, CHIP 8.2K 0.5% 1/10W
R435	1-216-667-11	s	METAL, CHIP 4.7K 0.5% 1/10W
R436	1-216-061-00	s	METAL, CHIP 3.3K 5% 1/10W
R437	1-216-671-11	s	METAL, CHIP 6.8K 0.5% 1/10W
R438	1-208-810-11	s	METAL, CHIP 15k 0.5% 1/10W
R439	1-216-073-00	s	METAL, CHIP 10K 5% 1/10W
R440	1-216-025-91	s	METAL, CHIP 100 5% 1/10W
R441	1-216-659-11	s	METAL, CHIP 2.2K 0.5% 1/10W
R442	1-216-033-00	s	METAL, CHIP 220 5% 1/10W
R443	1-216-033-00	s	METAL, CHIP 220 5% 1/10W
R444	1-216-661-11	s	METAL, CHIP 2.7K 0.5% 1/10W
R445	1-208-789-11	s	METAL, CHIP 2k 0.5% 1/10W
R446	1-208-806-11	s	METAL, CHIP 10k 0.5% 1/10W
R447	1-216-037-00	s	METAL, CHIP 330 5% 1/10W
R448	1-216-057-00	s	METAL, CHIP 2.2K 5% 1/10W
R449	1-216-097-91	s	METAL, CHIP 100k 5% 1/10W
R450	1-216-057-00	s	METAL, CHIP 2.2K 5% 1/10W
R451	1-216-057-00	s	METAL, CHIP 2.2K 5% 1/10W
R452	1-216-061-00	s	METAL, CHIP 3.3K 5% 1/10W
R453	1-216-109-00	s	METAL, CHIP 330K 5% 1/10W
R454	1-216-057-00	s	METAL, CHIP 2.2K 5% 1/10W
R455	1-216-017-91	s	METAL, CHIP 47 5% 1/10W
R456	1-216-073-00	s	METAL, CHIP 10K 5% 1/10W
R457	1-216-049-91	s	METAL, CHIP 1k 5% 1/10W
R458	1-208-822-11	s	METAL, CHIP 47k 0.5% 1/10W
R459	1-216-041-00	s	METAL, CHIP 470 5% 1/10W
R460	1-216-041-00	s	METAL, CHIP 470 5% 1/10W
R461	1-216-085-00	s	METAL, CHIP 33K 5% 1/10W
R462	1-216-085-00	s	METAL, CHIP 33K 5% 1/10W
R463	1-216-085-00	s	METAL, CHIP 33K 5% 1/10W
R464	1-216-017-91	s	METAL, CHIP 47 5% 1/10W
R468	1-216-634-11	s	METAL, CHIP 200 0.5% 1/10W
R469	1-208-800-11	s	METAL, CHIP 5.6k 0.5% 1/10W
R470	1-216-687-11	s	METAL, CHIP 33K 0.5% 1/10W
R500-506	1-216-057-00	s	METAL, CHIP 2.2K 5% 1/10W
R507	1-216-041-00	s	METAL, CHIP 470 5% 1/10W
R508-512	1-216-057-00	s	METAL, CHIP 2.2K 5% 1/10W
R513	1-216-097-91	s	METAL, CHIP 100k 5% 1/10W
R514	1-216-057-00	s	METAL, CHIP 2.2K 5% 1/10W
R515	1-216-057-00	s	METAL, CHIP 2.2K 5% 1/10W
R516	1-216-057-00	s	METAL, CHIP 2.2K 5% 1/10W
R540	1-216-097-91	s	METAL, CHIP 100k 5% 1/10W
R541	1-216-089-91	s	METAL, CHIP 47k 5% 1/10W
R542	1-216-057-00	s	METAL, CHIP 2.2K 5% 1/10W
R543	1-216-057-00	s	METAL, CHIP 2.2K 5% 1/10W
R545	1-216-678-11	s	METAL, CHIP 13K 0.5% 1/10W
R546	1-216-678-11	s	METAL, CHIP 13K 0.5% 1/10W
R547	1-216-659-11	s	METAL, CHIP 2.2K 0.5% 1/10W
R548	1-216-659-11	s	METAL, CHIP 2.2K 0.5% 1/10W
R549	1-216-661-11	s	METAL, CHIP 2.7K 0.5% 1/10W
R550	1-216-661-11	s	METAL, CHIP 2.7K 0.5% 1/10W
R551	1-208-806-11	s	METAL, CHIP 10k 0.5% 1/10W
R552	1-208-806-11	s	METAL, CHIP 10k 0.5% 1/10W
R553	1-208-810-11	s	METAL, CHIP 15k 0.5% 1/10W
R554	1-216-678-11	s	METAL, CHIP 13K 0.5% 1/10W
R555	1-208-810-11	s	METAL, CHIP 15k 0.5% 1/10W
R556	1-216-671-11	s	METAL, CHIP 6.8K 0.5% 1/10W

(TBC-25 BOARD(UVW-1800/1600))

Ref. No. or Q'ty	Part No.	SP	Description
R557	1-216-665-11	s	METAL, CHIP 3.9K 0.5% 1/10W
R558	1-208-810-11	s	METAL, CHIP 15k 0.5% 1/10W
R559	1-216-671-11	s	METAL, CHIP 6.8K 0.5% 1/10W
R560	1-216-673-11	s	METAL, CHIP 8.2K 0.5% 1/10W
R561	1-208-810-11	s	METAL, CHIP 15k 0.5% 1/10W
R562	1-208-810-11	s	METAL, CHIP 15k 0.5% 1/10W
R563	1-216-677-11	s	METAL, CHIP 12K 0.5% 1/10W
R564	1-216-659-11	s	METAL, CHIP 2.2K 0.5% 1/10W
R565	1-208-814-11	s	METAL, CHIP 22k 0.5% 1/10W
R566	1-216-661-11	s	METAL, CHIP 2.7K 0.5% 1/10W
R567	1-208-814-11	s	METAL, CHIP 22k 0.5% 1/10W
R568	1-208-814-11	s	METAL, CHIP 22k 0.5% 1/10W
R569	1-208-822-11	s	METAL, CHIP 47k 0.5% 1/10W
R570	1-216-667-11	s	METAL, CHIP 4.7K 0.5% 1/10W
R571	1-208-822-11	s	METAL, CHIP 47k 0.5% 1/10W
R572	1-216-665-11	s	METAL, CHIP 3.9K 0.5% 1/10W
R573	1-208-822-11	s	METAL, CHIP 47k 0.5% 1/10W
R574	1-216-665-11	s	METAL, CHIP 3.9K 0.5% 1/10W
R575	1-216-639-11	s	METAL, CHIP 330 0.5% 1/10W
R576	1-216-639-11	s	METAL, CHIP 330 0.5% 1/10W
R577	1-216-639-11	s	METAL, CHIP 330 0.5% 1/10W
R578	1-216-663-11	s	METAL, CHIP 3.3K 0.5% 1/10W
R579	1-216-659-11	s	METAL, CHIP 2.2K 0.5% 1/10W
R580	1-216-639-11	s	METAL, CHIP 330 0.5% 1/10W
R581	1-216-639-11	s	METAL, CHIP 330 0.5% 1/10W
R582	1-216-639-11	s	METAL, CHIP 330 0.5% 1/10W
R583	1-216-645-11	s	METAL, CHIP 560 0.5% 1/10W
R584	1-216-041-00	s	METAL, CHIP 470 5% 1/10W
R585	1-216-619-11	s	METAL, CHIP 47 0.5% 1/10W
R586	1-216-619-11	s	METAL, CHIP 47 0.5% 1/10W
R587	1-216-041-00	s	METAL, CHIP 470 5% 1/10W
R588	1-216-619-11	s	METAL, CHIP 47 0.5% 1/10W
R589	1-216-041-00	s	METAL, CHIP 470 5% 1/10W
R590	1-216-017-91	s	METAL, CHIP 47 5% 1/10W
R591	1-216-017-91	s	METAL, CHIP 47 5% 1/10W
R592	1-216-017-91	s	METAL, CHIP 47 5% 1/10W
R593	1-208-810-11	s	METAL, CHIP 15k 0.5% 1/10W
R595	1-216-111-91	s	METAL, CHIP 390k 5% 1/10W
R596	1-216-111-91	s	METAL, CHIP 390k 5% 1/10W
R598	1-216-111-91	s	METAL, CHIP 390k 5% 1/10W
R700	1-216-057-00	s	METAL, CHIP 2.2K 5% 1/10W
R701	1-216-097-91	s	METAL, CHIP 100k 5% 1/10W
R702	1-216-097-91	s	METAL, CHIP 100k 5% 1/10W
R703	1-216-659-11	s	METAL, CHIP 2.2K 0.5% 1/10W
R704	1-208-810-11	s	METAL, CHIP 15k 0.5% 1/10W
R705	1-216-671-11	s	METAL, CHIP 6.8K 0.5% 1/10W
R706	1-208-806-11	s	METAL, CHIP 10k 0.5% 1/10W
R707	1-216-665-11	s	METAL, CHIP 3.9K 0.5% 1/10W
R708	1-208-806-11	s	METAL, CHIP 10k 0.5% 1/10W
R709	1-216-671-11	s	METAL, CHIP 6.8K 0.5% 1/10W
R710	1-216-651-11	s	METAL, CHIP 1K 0.5% 1/10W
R711	1-208-822-11	s	METAL, CHIP 47k 0.5% 1/10W
R712	1-208-806-11	s	METAL, CHIP 10k 0.5% 1/10W
R713	1-216-651-11	s	METAL, CHIP 1K 0.5% 1/10W
R714	1-216-677-11	s	METAL, CHIP 12K 0.5% 1/10W
R715	1-216-059-00	s	METAL, CHIP 2.7K 5% 1/10W
R716	1-216-041-00	s	METAL, CHIP 470 5% 1/10W
R717	1-216-037-00	s	METAL, CHIP 330 5% 1/10W
R718	1-216-059-00	s	METAL, CHIP 2.7K 5% 1/10W

(TBC-25 BOARD(UVW-1800/1600))

Ref. No. or Q'ty	Part No.	SP	Description
R719	1-216-097-91	s	METAL, CHIP 100k 5% 1/10W
R720	1-208-814-11	s	METAL, CHIP 22k 0.5% 1/10W
R721	1-208-817-11	s	METAL, CHIP 30k 0.5% 1/10W
R722	1-216-069-00	s	METAL, CHIP 6.8K 5% 1/10W
R723	1-208-814-11	s	METAL, CHIP 22k 0.5% 1/10W
R724	1-208-810-11	s	METAL, CHIP 15k 0.5% 1/10W
R725	1-208-817-11	s	METAL, CHIP 30k 0.5% 1/10W
R726	1-216-041-00	s	METAL, CHIP 470 5% 1/10W
R727	1-208-800-11	s	METAL, CHIP 5.6k 0.5% 1/10W
R728	1-208-817-11	s	METAL, CHIP 30k 0.5% 1/10W
R729	1-216-049-91	s	METAL, CHIP 1k 5% 1/10W
R730	1-216-049-91	s	METAL, CHIP 1k 5% 1/10W
R731	1-216-093-00	s	METAL, CHIP 68K 5% 1/10W
R732	1-216-025-91	s	METAL, CHIP 100 5% 1/10W
R733	1-208-814-11	s	METAL, CHIP 22k 0.5% 1/10W
R734	1-208-814-11	s	METAL, CHIP 22k 0.5% 1/10W
R735	1-216-671-11	s	METAL, CHIP 6.8K 0.5% 1/10W
R736	1-216-061-00	s	METAL, CHIP 3.3K 5% 1/10W
R737	1-216-097-91	s	METAL, CHIP 100k 5% 1/10W
R738	1-216-687-11	s	METAL, CHIP 33K 0.5% 1/10W
R739	1-216-017-91	s	METAL, CHIP 47 5% 1/10W
R740	1-216-049-91	s	METAL, CHIP 1k 5% 1/10W
R741	1-208-822-11	s	METAL, CHIP 47k 0.5% 1/10W
R742	1-216-017-91	s	METAL, CHIP 47 5% 1/10W
R743	1-216-049-91	s	METAL, CHIP 1k 5% 1/10W
R744	1-216-081-00	s	METAL, CHIP 22K 5% 1/10W
R745	1-216-017-91	s	METAL, CHIP 47 5% 1/10W
R746	1-216-049-91	s	METAL, CHIP 1k 5% 1/10W
R747	1-216-041-00	s	METAL, CHIP 470 5% 1/10W
R748	1-216-687-11	s	METAL, CHIP 33K 0.5% 1/10W
R750	1-208-811-11	s	METAL, CHIP 16k 0.5% 1/10W
R751	1-216-097-91	s	METAL, CHIP 100k 5% 1/10W
R753	1-216-097-91	s	METAL, CHIP 100k 5% 1/10W
R755	1-216-017-91	s	METAL, CHIP 47 5% 1/10W
R756	1-216-049-91	s	METAL, CHIP 1k 5% 1/10W
R757	1-216-085-00	s	METAL, CHIP 33K 5% 1/10W
R758	1-216-065-00	s	METAL, CHIP 4.7K 5% 1/10W
R759	1-216-065-00	s	METAL, CHIP 4.7K 5% 1/10W
R760	1-216-073-00	s	METAL, CHIP 10K 5% 1/10W
R761	1-216-085-00	s	METAL, CHIP 33K 5% 1/10W
R762	1-216-017-91	s	METAL, CHIP 47 5% 1/10W
R763	1-216-085-00	s	METAL, CHIP 33K 5% 1/10W
R764	1-208-789-11	s	METAL, CHIP 2k 0.5% 1/10W
R765	1-216-051-00	s	METAL, CHIP 1.2K 5% 1/10W
R766	1-208-789-11	s	METAL, CHIP 2k 0.5% 1/10W
R767	1-216-051-00	s	METAL, CHIP 1.2K 5% 1/10W
R768	1-216-648-11	s	METAL, CHIP 750 0.5% 1/10W
R769	1-216-037-00	s	METAL, CHIP 330 5% 1/10W
R770	1-216-648-11	s	METAL, CHIP 750 0.5% 1/10W
R771	1-216-037-00	s	METAL, CHIP 330 5% 1/10W
R772	1-216-069-00	s	METAL, CHIP 6.8K 5% 1/10W
R773	1-208-817-11	s	METAL, CHIP 30k 0.5% 1/10W
R774	1-216-069-00	s	METAL, CHIP 6.8K 5% 1/10W
R775	1-208-817-11	s	METAL, CHIP 30k 0.5% 1/10W
R776	1-216-041-00	s	METAL, CHIP 470 5% 1/10W
R777	1-216-049-91	s	METAL, CHIP 1k 5% 1/10W
R778	1-216-017-91	s	METAL, CHIP 47 5% 1/10W
R780	1-216-097-91	s	METAL, CHIP 100k 5% 1/10W
R781	1-216-667-11	s	METAL, CHIP 4.7K 0.5% 1/10W

(TBC-25 BOARD(UVW-1800/1600))

Ref. No. or Q'ty	Part No.	SP	Description
R782	1-216-017-91	s	METAL, CHIP 47 5% 1/10W
R783	1-216-667-11	s	METAL, CHIP 4.7K 0.5% 1/10W
R784	1-216-667-11	s	METAL, CHIP 4.7K 0.5% 1/10W
R785	1-216-665-11	s	METAL, CHIP 3.9K 0.5% 1/10W
R786	1-216-663-11	s	METAL, CHIP 3.3K 0.5% 1/10W
R787	1-216-638-11	s	METAL, CHIP 300 0.5% 1/10W
R788	1-216-638-11	s	METAL, CHIP 300 0.5% 1/10W
R789	1-216-677-11	s	METAL, CHIP 12K 0.5% 1/10W
R790	1-216-677-11	s	METAL, CHIP 12K 0.5% 1/10W
R791	1-216-041-00	s	METAL, CHIP 470 5% 1/10W
R792	1-216-041-00	s	METAL, CHIP 470 5% 1/10W
R793	1-216-619-11	s	METAL, CHIP 47 0.5% 1/10W
R794	1-216-619-11	s	METAL, CHIP 47 0.5% 1/10W
R795	1-216-295-91	s	RES, CHIP 0
R796	1-216-057-00	s	METAL, CHIP 2.2K 5% 1/10W
R797	1-216-057-00	s	METAL, CHIP 2.2K 5% 1/10W
R798	1-216-057-00	s	METAL, CHIP 2.2K 5% 1/10W
R799	1-216-057-00	s	METAL, CHIP 2.2K 5% 1/10W
R800	1-216-017-91	s	METAL, CHIP 47 5% 1/10W
R801	1-216-057-00	s	METAL, CHIP 2.2K 5% 1/10W
R802-807	1-216-041-00	s	METAL, CHIP 470 5% 1/10W
R810	1-208-822-11	s	METAL, CHIP 47k 0.5% 1/10W
R811	1-216-057-00	s	METAL, CHIP 2.2K 5% 1/10W
R812	1-216-089-91	s	METAL, CHIP 47k 5% 1/10W
R813	1-216-097-91	s	METAL, CHIP 100k 5% 1/10W
R814	1-208-806-11	s	METAL, CHIP 10k 0.5% 1/10W
R815	1-208-806-11	s	METAL, CHIP 10k 0.5% 1/10W
R816	1-216-677-11	s	METAL, CHIP 12K 0.5% 1/10W
R817	1-216-677-11	s	METAL, CHIP 12K 0.5% 1/10W
R818	1-216-089-91	s	METAL, CHIP 47k 5% 1/10W
R819	1-216-065-00	s	METAL, CHIP 4.7K 5% 1/10W
R820	1-216-049-91	s	METAL, CHIP 1k 5% 1/10W
R821	1-216-059-00	s	METAL, CHIP 2.7K 5% 1/10W
R822	1-208-810-11	s	METAL, CHIP 15k 0.5% 1/10W
R823	1-216-057-00	s	METAL, CHIP 2.2K 5% 1/10W
R824	1-216-073-00	s	METAL, CHIP 10K 5% 1/10W
R825	1-216-049-91	s	METAL, CHIP 1k 5% 1/10W
R826	1-216-051-00	s	METAL, CHIP 1.2K 5% 1/10W
R827	1-216-659-11	s	METAL, CHIP 2.2K 0.5% 1/10W
R828	1-216-663-11	s	METAL, CHIP 3.3K 0.5% 1/10W
R829	1-208-822-11	s	METAL, CHIP 47k 0.5% 1/10W
R830	1-216-677-11	s	METAL, CHIP 12K 0.5% 1/10W
R831	1-208-814-11	s	METAL, CHIP 22k 0.5% 1/10W
R832	1-208-810-11	s	METAL, CHIP 15k 0.5% 1/10W
R833	1-216-049-91	s	METAL, CHIP 1k 5% 1/10W
R834	1-216-049-91	s	METAL, CHIP 1k 5% 1/10W
R835	1-216-057-00	s	METAL, CHIP 2.2K 5% 1/10W
R836	1-216-677-11	s	METAL, CHIP 12K 0.5% 1/10W
R837	1-208-810-11	s	METAL, CHIP 15k 0.5% 1/10W
R838	1-216-115-00	s	METAL, CHIP 560K 5% 1/10W
R839	1-216-097-91	s	METAL, CHIP 100k 5% 1/10W
R840	1-216-097-91	s	METAL, CHIP 100k 5% 1/10W
RV100	1-241-758-11	s	RES, ADJ METAL 100
RV200	1-241-758-11	s	RES, ADJ METAL 100
RV300	1-241-786-11	s	RES, ADJ METAL 22k
RV301	1-241-763-11	s	RES, ADJ METAL 4.7k
RV400	1-241-786-11	s	RES, ADJ METAL 22k
RV401	1-241-763-11	s	RES, ADJ METAL 4.7k

(TBC-25 BOARD(UVW-1800/1600))

Ref. No. or Q'ty	Part No.	SP	Description
RV500	1-241-784-11	s	RES, ADJ METAL 4.7k
RV501	1-241-784-11	s	RES, ADJ METAL 4.7k
RV502	1-241-785-11	s	RES, ADJ METAL 10k
RV700	1-241-785-11	s	RES, ADJ METAL 10k
RV701	1-241-785-11	s	RES, ADJ METAL 10k
RV702	1-241-786-11	s	RES, ADJ METAL 22k
RV703	1-241-784-11	s	RES, ADJ METAL 4.7k
S500	1-692-535-11	s	SWITCH, DIP 4-CKT
TH400	1-807-972-11	s	THERMISTOR SV-1715 1.25k
X700	1-527-722-00	s	CRYSTAL 14.31818MHz
X701	1-579-459-11	s	CRYSTAL 13.5MHz

TBC-25P BOARD(UVW-1800P/1600P)

Ref. No. or Q'ty	Part No.	SP	Description
TBC-25P board is used for UVW-1800P/1600P(EK).			
1pc	A-8275-469-A	o	MOUNTED CIRCUIT BOARD, TBC-25P
1pc	3-182-386-02	o	PLATE, SHIELD (L), CARD
1pc	7-621-759-45	s	SCREW, +PSW2.6x6
1pc	3-179-084-01	s	LEVER (R), PC BOARD
1pc	3-179-085-01	s	LEVER (L), PC BOARD
2pcs	1-750-484-11	s	BUS-BAR
C1	1-126-933-11	s	ELECT 100uF 20% 16V
C2	1-126-933-11	s	ELECT 100uF 20% 16V
C3	1-163-033-91	s	CERAMIC, CHIP 0.022uF 50V
C4	1-126-933-11	s	ELECT 100uF 20% 16V
C5	1-126-933-11	s	ELECT 100uF 20% 16V
C6	1-126-933-11	s	ELECT 100uF 20% 16V
C7	1-126-933-11	s	ELECT 100uF 20% 16V
C8	1-163-033-91	s	CERAMIC, CHIP 0.022uF 50V
C9	1-126-933-11	s	ELECT 100uF 20% 16V
C10	1-126-933-11	s	ELECT 100uF 20% 16V
C11	1-163-033-91	s	CERAMIC, CHIP 0.022uF 50V
C12	1-126-933-11	s	ELECT 100uF 20% 16V
C13	1-126-933-11	s	ELECT 100uF 20% 16V
C14	1-126-933-11	s	ELECT 100uF 20% 16V
C15	1-163-033-91	s	CERAMIC, CHIP 0.022uF 50V
C16-C21	1-126-933-11	s	ELECT 100uF 20% 16V
C22	1-163-033-91	s	CERAMIC, CHIP 0.022uF 50V
C100	1-163-033-91	s	CERAMIC, CHIP 0.022uF 50V
C101	1-126-947-11	s	ELECT 47uF 20% 35V
C102	1-163-231-11	s	CERAMIC, CHIP 15pF 5% 50V
C103	1-163-231-11	s	CERAMIC, CHIP 15pF 5% 50V
C104	1-163-033-91	s	CERAMIC, CHIP 0.022uF 50V
C105	1-163-033-91	s	CERAMIC, CHIP 0.022uF 50V
C106	1-163-033-91	s	CERAMIC, CHIP 0.022uF 50V
C107	1-126-947-11	s	ELECT 47uF 20% 35V
C108	1-163-809-11	s	CERAMIC, CHIP 0.047uF 10% 25V
C109	1-124-903-11	s	ELECT 1uF 20% 50V
C110	1-126-964-11	s	ELECT 10uF 20% 50V
C111	1-163-239-11	s	CERAMIC, CHIP 33PF 5% 50V
C112	1-164-004-11	s	CERAMIC, CHIP 0.1uF 10% 25V
C113	1-126-934-11	s	ELECT 220uF 20% 16V
C114	1-126-947-11	s	ELECT 47uF 20% 35V
C115	1-163-033-91	s	CERAMIC, CHIP 0.022uF 50V
C116	1-163-033-91	s	CERAMIC, CHIP 0.022uF 50V
C117	1-126-947-11	s	ELECT 47uF 20% 35V
C118	1-126-933-11	s	ELECT 100uF 20% 16V
C200	1-163-033-91	s	CERAMIC, CHIP 0.022uF 50V
C201	1-126-947-11	s	ELECT 47uF 20% 35V
C202	1-163-231-11	s	CERAMIC, CHIP 15pF 5% 50V
C203	1-163-231-11	s	CERAMIC, CHIP 15pF 5% 50V
C204	1-163-033-91	s	CERAMIC, CHIP 0.022uF 50V
C205	1-163-033-91	s	CERAMIC, CHIP 0.022uF 50V
C206	1-163-033-91	s	CERAMIC, CHIP 0.022uF 50V
C207	1-126-947-11	s	ELECT 47uF 20% 35V
C208	1-163-809-11	s	CERAMIC, CHIP 0.047uF 10% 25V
C209	1-124-903-11	s	ELECT 1uF 20% 50V
C210	1-126-964-11	s	ELECT 10uF 20% 50V
C211	1-163-239-11	s	CERAMIC, CHIP 33PF 5% 50V
C212	1-164-004-11	s	CERAMIC, CHIP 0.1uF 10% 25V
C213	1-126-934-11	s	ELECT 220uF 20% 16V

Ref. No. or Q'ty	Part No.	SP	Description
C214	1-126-947-11	s	ELECT 47uF 20% 35V
C215	1-163-033-91	s	CERAMIC, CHIP 0.022uF 50V
C216	1-163-033-91	s	CERAMIC, CHIP 0.022uF 50V
C218	1-126-933-11	s	ELECT 100uF 20% 16V
C300	1-126-947-11	s	ELECT 47uF 20% 35V
C301	1-163-033-91	s	CERAMIC, CHIP 0.022uF 50V
C302	1-163-251-11	s	CERAMIC, CHIP 100PF 5% 50V
C303	1-163-033-91	s	CERAMIC, CHIP 0.022uF 50V
C305	1-163-033-91	s	CERAMIC, CHIP 0.022uF 50V
C306	1-163-251-11	s	CERAMIC, CHIP 100PF 5% 50V
C307	1-163-133-00	s	CERAMIC, CHIP 470PF 5% 50V
C308	1-163-263-11	s	CERAMIC, CHIP 330PF 5% 50V
C309	1-126-947-11	s	ELECT 47uF 20% 35V
C310	1-163-033-91	s	CERAMIC, CHIP 0.022uF 50V
C311	1-126-947-11	s	ELECT 47uF 20% 35V
C312-316	1-163-033-91	s	CERAMIC, CHIP 0.022uF 50V
C317	1-126-963-11	s	ELECT 4.7uF 20% 50V
C318	1-163-033-91	s	CERAMIC, CHIP 0.022uF 50V
C319	1-163-033-91	s	CERAMIC, CHIP 0.022uF 50V
C320	1-163-033-91	s	CERAMIC, CHIP 0.022uF 50V
C321	1-163-251-11	s	CERAMIC, CHIP 100PF 5% 50V
C322	1-163-133-00	s	CERAMIC, CHIP 470PF 5% 50V
C324	1-163-033-91	s	CERAMIC, CHIP 0.022uF 50V
C325	1-164-004-11	s	CERAMIC, CHIP 0.1uF 10% 25V
C326	1-164-232-11	s	CERAMIC, CHIP 0.01uF 10% 100V
C327	1-124-903-11	s	ELECT 1uF 20% 50V
C328	1-163-033-91	s	CERAMIC, CHIP 0.022uF 50V
C329	1-163-033-91	s	CERAMIC, CHIP 0.022uF 50V
C330	1-164-004-11	s	CERAMIC, CHIP 0.1uF 10% 25V
C331	1-124-903-11	s	ELECT 1uF 20% 50V
C332	1-164-004-11	s	CERAMIC, CHIP 0.1uF 10% 25V
C333	1-163-243-11	s	CERAMIC, CHIP 47PF 5% 50V
C334	1-126-933-11	s	ELECT 100uF 20% 16V
C335	1-163-033-91	s	CERAMIC, CHIP 0.022uF 50V
C336	1-163-133-00	s	CERAMIC, CHIP 470PF 5% 50V
C337	1-164-232-11	s	CERAMIC, CHIP 0.01uF 10% 100V
C338	1-163-033-91	s	CERAMIC, CHIP 0.022uF 50V
C339	1-163-251-11	s	CERAMIC, CHIP 100PF 5% 50V
C340	1-163-033-91	s	CERAMIC, CHIP 0.022uF 50V
C341	1-163-125-00	s	CERAMIC, CHIP 220PF 5% 50V
C342	1-163-133-00	s	CERAMIC, CHIP 470PF 5% 50V
C344	1-163-243-11	s	CERAMIC, CHIP 47PF 5% 50V
C345	1-163-243-11	s	CERAMIC, CHIP 47PF 5% 50V
C347	1-164-004-11	s	CERAMIC, CHIP 0.1uF 10% 25V
C348	1-163-227-11	s	CERAMIC, CHIP 10PF 5% 50V
C349	1-163-227-11	s	CERAMIC, CHIP 10PF 5% 50V
C350	1-126-933-11	s	ELECT 100uF 20% 16V
C351	1-164-489-11	s	CERAMIC, CHIP 0.22uF 10% 16V
C352	1-124-925-11	s	ELECT 2.2uF 20% 100V
C353	1-124-925-11	s	ELECT 2.2uF 20% 100V
C354	1-163-120-00	s	CERAMIC, CHIP 130PF 5% 50V
C355	1-163-243-11	s	CERAMIC, CHIP 47PF 5% 50V
C356	1-163-243-11	s	CERAMIC, CHIP 47PF 5% 50V
C357	1-163-275-11	s	CERAMIC, CHIP 0.001uF 5% 50V
C359	1-163-033-91	s	CERAMIC, CHIP 0.022uF 50V
C360	1-126-947-11	s	ELECT 47uF 20% 35V
C361	1-126-947-11	s	ELECT 47uF 20% 35V
C362	1-163-033-91	s	CERAMIC, CHIP 0.022uF 50V
C363	1-126-947-11	s	ELECT 47uF 20% 35V

(TBC-25P BOARD(UVW-1800P/1600P))

Ref. No. or Q'ty	Part No.	SP	Description
C364	1-163-033-91	s	CERAMIC, CHIP 0.022uF 50V
C400	1-126-947-11	s	ELECT 47uF 20% 35V
C401	1-163-033-91	s	CERAMIC, CHIP 0.022uF 50V
C402	1-163-033-91	s	CERAMIC, CHIP 0.022uF 50V
C404	1-163-033-91	s	CERAMIC, CHIP 0.022uF 50V
C405	1-126-947-11	s	ELECT 47uF 20% 35V
C406	1-163-033-91	s	CERAMIC, CHIP 0.022uF 50V
C407	1-163-222-11	s	CERAMIC, CHIP 5PF 50V
C408	1-163-102-00	s	CERAMIC, CHIP 24PF 5% 50V
C409	1-163-243-11	s	CERAMIC, CHIP 47PF 5% 50V
C410	1-126-947-11	s	ELECT 47uF 20% 35V
C411	1-163-106-00	s	CERAMIC, CHIP 36PF 5% 50V
C412	1-163-120-00	s	CERAMIC, CHIP 130PF 5% 50V
C413	1-163-263-11	s	CERAMIC, CHIP 330PF 5% 50V
C414-419	1-163-033-91	s	CERAMIC, CHIP 0.022uF 50V
C420	1-163-239-11	s	CERAMIC, CHIP 33PF 5% 50V
C421	1-163-125-00	s	CERAMIC, CHIP 220PF 5% 50V
C422	1-163-033-91	s	CERAMIC, CHIP 0.022uF 50V
C424	1-164-004-11	s	CERAMIC, CHIP 0.1uF 10% 25V
C425	1-164-232-11	s	CERAMIC, CHIP 0.01uF 10% 100V
C426	1-124-903-11	s	ELECT 1uF 20% 50V
C427	1-163-033-91	s	CERAMIC, CHIP 0.022uF 50V
C428	1-163-033-91	s	CERAMIC, CHIP 0.022uF 50V
C429	1-124-903-11	s	ELECT 1uF 20% 50V
C430	1-163-033-91	s	CERAMIC, CHIP 0.022uF 50V
C431	1-164-004-11	s	CERAMIC, CHIP 0.1uF 10% 25V
C432	1-164-232-11	s	CERAMIC, CHIP 0.01uF 10% 100V
C433	1-163-263-11	s	CERAMIC, CHIP 330PF 5% 50V
C434	1-163-243-11	s	CERAMIC, CHIP 47PF 5% 50V
C435	1-126-933-11	s	ELECT 100uF 20% 16V
C436	1-163-033-91	s	CERAMIC, CHIP 0.022uF 50V
C437	1-163-133-00	s	CERAMIC, CHIP 470PF 5% 50V
C438	1-164-232-11	s	CERAMIC, CHIP 0.01uF 10% 100V
C439	1-163-033-91	s	CERAMIC, CHIP 0.022uF 50V
C440	1-163-251-11	s	CERAMIC, CHIP 100PF 5% 50V
C441	1-163-033-91	s	CERAMIC, CHIP 0.022uF 50V
C443	1-163-125-00	s	CERAMIC, CHIP 220PF 5% 50V
C444	1-163-263-11	s	CERAMIC, CHIP 330PF 5% 50V
C445	1-163-243-11	s	CERAMIC, CHIP 47PF 5% 50V
C446	1-163-243-11	s	CERAMIC, CHIP 47PF 5% 50V
C447	1-164-004-11	s	CERAMIC, CHIP 0.1uF 10% 25V
C448	1-126-933-11	s	ELECT 100uF 20% 16V
C449	1-164-489-11	s	CERAMIC, CHIP 0.22uF 10% 16V
C450	1-124-925-11	s	ELECT 2.2uF 20% 100V
C451	1-124-925-11	s	ELECT 2.2uF 20% 100V
C452	1-163-275-11	s	CERAMIC, CHIP 0.001uF 5% 50V
C454	1-163-033-91	s	CERAMIC, CHIP 0.022uF 50V
C455	1-126-947-11	s	ELECT 47uF 20% 35V
C456	1-126-947-11	s	ELECT 47uF 20% 35V
C457	1-163-033-91	s	CERAMIC, CHIP 0.022uF 50V
C458	1-126-947-11	s	ELECT 47uF 20% 35V
C459	1-163-033-91	s	CERAMIC, CHIP 0.022uF 50V
C461	1-163-033-91	s	CERAMIC, CHIP 0.022uF 50V
C462	1-163-102-00	s	CERAMIC, CHIP 24PF 5% 50V
C463	1-163-227-11	s	CERAMIC, CHIP 10PF 5% 50V
C464	1-163-227-11	s	CERAMIC, CHIP 10PF 5% 50V
C465	1-163-121-00	s	CERAMIC, CHIP 150PF 5% 50V
C501	1-163-125-00	s	CERAMIC, CHIP 220PF 5% 50V
C502	1-163-125-00	s	CERAMIC, CHIP 220PF 5% 50V

(TBC-25P BOARD(UVW-1800P/1600P))

Ref. No. or Q'ty	Part No.	SP	Description
C503	1-163-033-91	s	CERAMIC, CHIP 0.022uF 50V
C504	1-163-033-91	s	CERAMIC, CHIP 0.022uF 50V
C505	1-163-033-91	s	CERAMIC, CHIP 0.022uF 50V
C506	1-163-033-91	s	CERAMIC, CHIP 0.022uF 50V
C507	1-126-947-11	s	ELECT 47uF 20% 35V
C508	1-163-033-91	s	CERAMIC, CHIP 0.022uF 50V
C509	1-163-033-91	s	CERAMIC, CHIP 0.022uF 50V
C510	1-163-033-91	s	CERAMIC, CHIP 0.022uF 50V
C511	1-163-033-91	s	CERAMIC, CHIP 0.022uF 50V
C512	1-163-125-00	s	CERAMIC, CHIP 220PF 5% 50V
C513	1-163-033-91	s	CERAMIC, CHIP 0.022uF 50V
C514	1-163-251-11	s	CERAMIC, CHIP 100PF 5% 50V
C515-523	1-163-033-91	s	CERAMIC, CHIP 0.022uF 50V
C524	1-164-004-11	s	CERAMIC, CHIP 0.1uF 10% 25V
C525	1-164-004-11	s	CERAMIC, CHIP 0.1uF 10% 25V
C526	1-164-004-11	s	CERAMIC, CHIP 0.1uF 10% 25V
C527	1-163-033-91	s	CERAMIC, CHIP 0.022uF 50V
C528	1-164-004-11	s	CERAMIC, CHIP 0.1uF 10% 25V
C529	1-163-033-91	s	CERAMIC, CHIP 0.022uF 50V
C530	1-164-004-11	s	CERAMIC, CHIP 0.1uF 10% 25V
C531	1-163-033-91	s	CERAMIC, CHIP 0.022uF 50V
C532	1-164-004-11	s	CERAMIC, CHIP 0.1uF 10% 25V
C533	1-163-033-91	s	CERAMIC, CHIP 0.022uF 50V
C534	1-163-033-91	s	CERAMIC, CHIP 0.022uF 50V
C535	1-163-033-91	s	CERAMIC, CHIP 0.022uF 50V
C536	1-163-033-91	s	CERAMIC, CHIP 0.022uF 50V
C537	1-126-947-11	s	ELECT 47uF 20% 35V
C538	1-126-947-11	s	ELECT 47uF 20% 35V
C539	1-163-033-91	s	CERAMIC, CHIP 0.022uF 50V
C540	1-163-033-91	s	CERAMIC, CHIP 0.022uF 50V
C541	1-163-231-11	s	CERAMIC, CHIP 15pF 5% 50V
C542	1-126-947-11	s	ELECT 47uF 20% 35V
C543	1-126-947-11	s	ELECT 47uF 20% 35V
C544	1-163-033-91	s	CERAMIC, CHIP 0.022uF 50V
C546	1-163-243-11	s	CERAMIC, CHIP 47PF 5% 50V
C547-552	1-163-033-91	s	CERAMIC, CHIP 0.022uF 50V
C554	1-163-227-11	s	CERAMIC, CHIP 10PF 5% 50V
C555	1-163-227-11	s	CERAMIC, CHIP 10PF 5% 50V
C700	1-164-232-11	s	CERAMIC, CHIP 0.01uF 10% 100V
C701	1-164-232-11	s	CERAMIC, CHIP 0.01uF 10% 100V
C702	1-126-964-11	s	ELECT 10uF 20% 50V
C703	1-126-964-11	s	ELECT 10uF 20% 50V
C704	1-163-239-11	s	CERAMIC, CHIP 33PF 5% 50V
C705	1-163-125-00	s	CERAMIC, CHIP 220PF 5% 50V
C706	1-163-033-91	s	CERAMIC, CHIP 0.022uF 50V
C707	1-164-004-11	s	CERAMIC, CHIP 0.1uF 10% 25V
C708	1-126-947-11	s	ELECT 47uF 20% 35V
C709-715	1-163-033-91	s	CERAMIC, CHIP 0.022uF 50V
C716	1-163-235-11	s	CERAMIC, CHIP 22PF 5% 50V
C717	1-163-033-91	s	CERAMIC, CHIP 0.022uF 50V
C718	1-163-033-91	s	CERAMIC, CHIP 0.022uF 50V
C719	1-126-947-11	s	ELECT 47uF 20% 35V
C720	1-130-489-00	s	MYLAR 0.033uF 5% 50V
C721	1-163-033-91	s	CERAMIC, CHIP 0.022uF 50V
C722	1-126-947-11	s	ELECT 47uF 20% 35V
C723-728	1-163-033-91	s	CERAMIC, CHIP 0.022uF 50V
C729	1-126-947-11	s	ELECT 47uF 20% 35V
C730	1-126-947-11	s	ELECT 47uF 20% 35V
C731	1-164-004-11	s	CERAMIC, CHIP 0.1uF 10% 25V

(TBC-25P BOARD(UVW-1800P/1600P))

Ref. No. or Q'ty	Part No.	SP	Description
C732	1-164-004-11	s	CERAMIC, CHIP 0.1uF 10% 25V
C733	1-164-004-11	s	CERAMIC, CHIP 0.1uF 10% 25V
C734	1-163-251-11	s	CERAMIC, CHIP 100PF 5% 50V
C735	1-164-004-11	s	CERAMIC, CHIP 0.1uF 10% 25V
C736	1-163-121-00	s	CERAMIC, CHIP 150PF 5% 50V
C738	1-163-033-91	s	CERAMIC, CHIP 0.022uF 50V
C739	1-163-033-91	s	CERAMIC, CHIP 0.022uF 50V
C740	1-163-275-11	s	CERAMIC, CHIP 0.001uF 5% 50V
C741	1-131-347-00	s	TANTALUM 1uF 10% 35V
C742	1-163-033-91	s	CERAMIC, CHIP 0.022uF 50V
C743	1-131-363-00	s	TANTALUM 4.7uF 10% 20V
C744	1-164-232-11	s	CERAMIC, CHIP 0.01uF 10% 100V
C746	1-163-033-91	s	CERAMIC, CHIP 0.022uF 50V
C747	1-164-004-11	s	CERAMIC, CHIP 0.1uF 10% 25V
C748	1-163-106-00	s	CERAMIC, CHIP 36PF 5% 50V
C749	1-163-102-00	s	CERAMIC, CHIP 24PF 5% 50V
C750	1-163-102-00	s	CERAMIC, CHIP 24PF 5% 50V
C751	1-163-243-11	s	CERAMIC, CHIP 47PF 5% 50V
C752	1-164-232-11	s	CERAMIC, CHIP 0.01uF 10% 100V
C753	1-164-232-11	s	CERAMIC, CHIP 0.01uF 10% 100V
C754	1-163-263-11	s	CERAMIC, CHIP 330PF 5% 50V
C755	1-163-263-11	s	CERAMIC, CHIP 330PF 5% 50V
C756	1-163-809-11	s	CERAMIC, CHIP 0.047uF 10% 25V
C757	1-163-809-11	s	CERAMIC, CHIP 0.047uF 10% 25V
C758	1-163-033-91	s	CERAMIC, CHIP 0.022uF 50V
C759	1-164-004-11	s	CERAMIC, CHIP 0.1uF 10% 25V
C760	1-164-004-11	s	CERAMIC, CHIP 0.1uF 10% 25V
C761	1-163-033-91	s	CERAMIC, CHIP 0.022uF 50V
C762	1-163-033-91	s	CERAMIC, CHIP 0.022uF 50V
C763	1-126-947-11	s	ELECT 47uF 20% 35V
C764	1-126-947-11	s	ELECT 47uF 20% 35V
C765	1-124-903-11	s	ELECT 1uF 20% 50V
C766	1-163-033-91	s	CERAMIC, CHIP 0.022uF 50V
C767	1-163-033-91	s	CERAMIC, CHIP 0.022uF 50V
C768	1-163-243-11	s	CERAMIC, CHIP 47PF 5% 50V
C769	1-163-033-91	s	CERAMIC, CHIP 0.022uF 50V
C770	1-164-004-11	s	CERAMIC, CHIP 0.1uF 10% 25V
C771	1-164-004-11	s	CERAMIC, CHIP 0.1uF 10% 25V
C772	1-163-033-91	s	CERAMIC, CHIP 0.022uF 50V
C773	1-163-033-91	s	CERAMIC, CHIP 0.022uF 50V
C774	1-164-004-11	s	CERAMIC, CHIP 0.1uF 10% 25V
C775	1-164-004-11	s	CERAMIC, CHIP 0.1uF 10% 25V
C776	1-163-033-91	s	CERAMIC, CHIP 0.022uF 50V
C777	1-163-033-91	s	CERAMIC, CHIP 0.022uF 50V
C778	1-163-033-91	s	CERAMIC, CHIP 0.022uF 50V
C779	1-163-033-91	s	CERAMIC, CHIP 0.022uF 50V
C780	1-126-947-11	s	ELECT 47uF 20% 35V
C781	1-163-033-91	s	CERAMIC, CHIP 0.022uF 50V
C782	1-163-033-91	s	CERAMIC, CHIP 0.022uF 50V
C783	1-126-947-11	s	ELECT 47uF 20% 35V
C784	1-163-033-91	s	CERAMIC, CHIP 0.022uF 50V
C785	1-163-033-91	s	CERAMIC, CHIP 0.022uF 50V
C786	1-163-102-00	s	CERAMIC, CHIP 24PF 5% 50V
C787	1-163-125-00	s	CERAMIC, CHIP 220PF 5% 50V
C788	1-163-033-91	s	CERAMIC, CHIP 0.022uF 50V
C789	1-126-964-11	s	ELECT 10uF 20% 50V
C790	1-126-964-11	s	ELECT 10uF 20% 50V
C791	1-163-033-91	s	CERAMIC, CHIP 0.022uF 50V
C792	1-126-947-11	s	ELECT 47uF 20% 35V

(TBC-25P BOARD(UVW-1800P/1600P))

Ref. No. or Q'ty	Part No.	SP	Description
C793	1-126-947-11	s	ELECT 47uF 20% 35V
C794	1-124-903-11	s	ELECT 1uF 20% 50V
C795	1-164-222-11	s	CERAMIC, CHIP 0.22uF 25V
C796	1-163-033-91	s	CERAMIC, CHIP 0.022uF 50V
C797	1-164-232-11	s	CERAMIC, CHIP 0.01uF 10% 100V
C798	1-164-232-11	s	CERAMIC, CHIP 0.01uF 10% 100V
C799	1-163-033-91	s	CERAMIC, CHIP 0.022uF 50V
C800	1-163-033-91	s	CERAMIC, CHIP 0.022uF 50V
C805	1-163-227-11	s	CERAMIC, CHIP 10PF 5% 50V
C806	1-163-227-11	s	CERAMIC, CHIP 10PF 5% 50V
CN1	1-564-005-11	o	CONNECTOR 6P, MALE
CN2	1-564-005-11	o	CONNECTOR 6P, MALE
CN105	1-573-782-21	o	CONNECTOR, PHEC 60P, MALE
CN106	1-573-782-21	o	CONNECTOR, PHEC 60P, MALE
CV700	1-141-443-11	s	CAP, TRIMMER 30pF
CV701	1-141-443-11	s	CAP, TRIMMER 30pF
D1	8-719-941-04	s	DIODE SB007-03CP
D2	8-719-941-04	s	DIODE SB007-03CP
D100	8-719-941-23	s	DIODE DA204U
D101	8-719-123-82	s	DIODE 1SS303-T1
D102	8-719-123-85	s	DIODE 1SS304
D200	8-719-941-23	s	DIODE DA204U
D301	8-719-941-23	s	DIODE DA204U
D302	8-719-105-38	s	DIODE RD3.0M-B1
D303	8-719-041-39	s	DIODE KV1470
D304	8-719-041-39	s	DIODE KV1470
D305	8-719-941-23	s	DIODE DA204U
D401	8-719-941-23	s	DIODE DA204U
D402	8-719-105-38	s	DIODE RD3.0M-B1
D403	8-719-041-39	s	DIODE KV1470
D404	8-719-041-39	s	DIODE KV1470
D502	8-719-123-82	s	DIODE 1SS303-T1
D503	8-719-123-82	s	DIODE 1SS303-T1
D504	8-719-941-23	s	DIODE DA204U
D505	8-719-123-85	s	DIODE 1SS304
D506	8-719-123-85	s	DIODE 1SS304
D701	8-719-123-82	s	DIODE 1SS303-T1
D702	8-719-002-81	s	DIODE 1T363A-M20-T8A
D703	8-719-002-81	s	DIODE 1T363A-M20-T8A
FL500	1-239-769-11	s	FILTER, LOW-PASS 5MHz
FL501	1-239-767-11	s	FILTER, LOW-PASS 2MHz
FL502	1-239-767-11	s	FILTER, LOW-PASS 2MHz
IC1	8-759-168-20	s	IC TA78L09S
IC2	8-759-168-20	s	IC TA78L09S
IC3	8-759-822-95	s	IC L79M05T-FA
IC4	8-759-822-95	s	IC L79M05T-FA
IC5	8-759-182-84	s	IC PQ05SZ5U
IC6	8-759-182-84	s	IC PQ05SZ5U
IC7	8-759-182-84	s	IC PQ05SZ5U
IC100	8-759-030-74	s	IC SC14S66FEL
IC101	8-759-981-48	s	IC NJM082M
IC102	8-759-908-15	s	IC TL431CLP
IC103	8-752-334-55	s	IC CXD1175M
IC200	8-759-030-74	s	IC SC14S66FEL
IC203	8-752-334-55	s	IC CXD1175M
IC300	8-759-702-08	s	IC NJM360M
IC301	8-752-339-03	s	IC CXD2207Q

(TBC-25P BOARD(UVW-1800P/1600P))

Ref. No. or Q'ty	Part No.	SP	Description
IC302	8-759-300-71	s	IC HD14053BFP
IC303	8-759-100-96	s	IC UPC4558G2
IC304	8-759-100-96	s	IC UPC4558G2
IC305	8-759-941-27	s	IC MB4002PF
IC306	8-759-907-81	s	IC SN74LS221NS
IC307	8-759-991-85	s	IC 74F00SJ
IC308	8-759-030-74	s	IC SC14S66FEL
IC309	8-759-981-48	s	IC NJM082M
IC310	8-759-035-93	s	IC TC7S32F-TE85L
IC400	8-759-702-08	s	IC NJM360M
IC401	8-752-339-03	s	IC CXD2207Q
IC402	8-759-100-96	s	IC UPC4558G2
IC403	8-759-100-96	s	IC UPC4558G2
IC404	8-759-702-08	s	IC NJM360M
IC405	8-759-907-81	s	IC SN74LS221NS
IC406	8-759-926-24	s	IC SN74HC164ANS
IC407	8-759-991-85	s	IC 74F00SJ
IC408	8-759-030-74	s	IC SC14S66FEL
IC409	8-759-035-93	s	IC TC7S32F-TE85L
IC501	8-752-362-70	s	IC CXD101-106Q
IC502	8-752-362-70	s	IC CXD101-106Q
IC503	8-759-055-71	s	IC CXD8313Q
IC504	8-759-055-71	s	IC CXD8313Q
IC505	8-752-340-52	s	IC CXK48324Q
IC506	8-759-926-55	s	IC SN74HC266NS
IC507	8-759-147-05	s	IC UPD42101G-3
IC508	8-752-340-52	s	IC CXK48324Q
IC509	8-759-927-46	s	IC SN74HC00ANS
IC510	8-759-926-77	s	IC SN74HC541ANS
IC511	8-759-925-78	s	IC SN74HC10ANS
IC512	8-759-926-18	s	IC SN74HC157ANS
IC513	8-759-926-18	s	IC SN74HC157ANS
IC514	8-759-239-55	s	IC TC74HC123AF
IC515	8-759-100-96	s	IC UPC4558G2
IC516	8-759-100-96	s	IC UPC4558G2
IC517	8-759-100-96	s	IC UPC4558G2
IC518	8-752-363-43	s	IC CXD1171M-1-TH
IC519	8-752-363-43	s	IC CXD1171M-1-TH
IC520	8-752-363-43	s	IC CXD1171M-1-TH
IC521	8-752-052-77	s	IC CXA1450M
IC522	8-759-926-24	s	IC SN74HC164ANS
IC523	8-759-925-85	s	IC SN74HC32ANS
IC524	8-759-926-18	s	IC SN74HC157ANS
IC525	8-759-926-18	s	IC SN74HC157ANS
IC526	8-759-926-18	s	IC SN74HC157ANS
IC527	8-759-926-18	s	IC SN74HC157ANS
IC528	8-759-925-90	s	IC SN74HC74ANS
IC700	8-759-300-71	s	IC HD14053BFP
IC701	8-759-981-48	s	IC NJM082M
IC702	8-759-009-05	s	IC MC14051BF
IC703	8-759-987-27	s	IC LM1881M
IC704	8-759-100-96	s	IC UPC4558G2
IC705	8-759-981-48	s	IC NJM082M
IC706	8-759-702-08	s	IC NJM360M
IC707	8-759-100-96	s	IC UPC4558G2
IC708	8-759-908-15	s	IC TL431CLP
IC709	8-759-980-04	s	IC LM311PS
IC710	8-759-239-55	s	IC TC74HC123AF
IC711	8-759-925-74	s	IC TC74HC04ANS

(TBC-25P BOARD(UVW-1800P/1600P))

Ref. No. or Q'ty	Part No.	SP	Description
IC712	8-759-250-81	s	IC TC5081AP
IC713	8-752-335-47	s	IC CXD1216M
IC714	8-759-336-06	s	IC MC68HC05C4-SC412511FU
IC715	8-759-300-71	s	IC HD14053BFP
IC716	8-759-925-76	s	IC SN74HC08ANS
IC717	8-759-241-03	s	IC TC74HC191AF
IC718	8-759-031-84	s	IC TC7S04F
IC719	8-759-031-84	s	IC TC7S04F
IC720	8-759-925-90	s	IC SN74HC74ANS
IC721	8-759-239-55	s	IC TC74HC123AF
IC722	8-759-519-49	s	IC CXD8165Q
IC723	8-752-334-64	s	IC CXD1171M
IC724	8-752-334-64	s	IC CXD1171M
IC725	8-752-052-77	s	IC CXA1450M
IC726	8-759-981-48	s	IC NJM082M
IC728	8-759-031-84	s	IC TC7S04F
L1-L5	1-412-533-21	s	INDUCTOR 47uH
L100	1-410-478-11	s	INDUCTOR 47uH
L101	1-410-476-11	s	INDUCTOR 33uH
L102	1-410-478-11	s	INDUCTOR 47uH
L103	1-410-478-11	s	INDUCTOR 47uH
L200	1-410-478-11	s	INDUCTOR 47uH
L201	1-410-476-11	s	INDUCTOR 33uH
L202	1-410-478-11	s	INDUCTOR 47uH
L203	1-410-478-11	s	INDUCTOR 47uH
L300	1-410-478-11	s	INDUCTOR 47uH
L301	1-410-478-11	s	INDUCTOR 47uH
L302	1-408-621-31	s	INDUCTOR 330uH
L303	1-410-492-11	s	INDUCTOR 680uH
L304	1-408-419-00	s	INDUCTOR 68uH
L305	1-410-478-11	s	INDUCTOR 47uH
L306	1-410-478-11	s	INDUCTOR 47uH
L307	1-408-406-00	s	INDUCTOR 5.6uH
L400	1-410-478-11	s	INDUCTOR 47uH
L401	1-410-478-11	s	INDUCTOR 47uH
L402	1-408-411-00	s	INDUCTOR 15uH
L403	1-410-476-11	s	INDUCTOR 33uH
L404	1-410-482-31	s	INDUCTOR 100uH
L405	1-408-425-00	s	INDUCTOR 220uH
L406	1-408-416-00	s	INDUCTOR 39uH
L407	1-410-478-11	s	INDUCTOR 47uH
L408	1-410-478-11	s	INDUCTOR 47uH
L500-504	1-410-478-11	s	INDUCTOR 47uH
L700	1-410-482-31	s	INDUCTOR 100uH
L701	1-408-419-00	s	INDUCTOR 68uH
L702-709	1-410-478-11	s	INDUCTOR 47uH
LV300	1-406-746-11	s	INDUCTOR, VAR 22uH
LV400	1-406-745-11	s	INDUCTOR, VAR 6.8uH
Q100	8-729-117-32	s	TRANSISTOR 2SC4177
Q101	8-729-117-32	s	TRANSISTOR 2SC4177
Q102	8-729-117-32	s	TRANSISTOR 2SC4177
Q103	8-729-118-56	s	TRANSISTOR 2SK852-X2
Q104	8-729-140-63	s	TRANSISTOR 2SA1611-M5M6
Q200	8-729-117-32	s	TRANSISTOR 2SC4177
Q201	8-729-117-32	s	TRANSISTOR 2SC4177
Q202	8-729-117-32	s	TRANSISTOR 2SC4177
Q203	8-729-118-56	s	TRANSISTOR 2SK852-X2
Q300	8-729-117-32	s	TRANSISTOR 2SC4177

(TBC-25P BOARD(UVW-1800P/1600P))

Ref. No. or Q'ty	Part No.	SP	Description
Q301	8-729-117-32	s	TRANSISTOR 2SC4177
Q302	8-729-117-32	s	TRANSISTOR 2SC4177
Q303	8-729-140-63	s	TRANSISTOR 2SA1611-M5M6
Q304	8-729-140-47	s	TRANSISTOR 2SC3735-B34
Q305	8-729-140-63	s	TRANSISTOR 2SA1611-M5M6
Q306	8-729-117-32	s	TRANSISTOR 2SC4177
Q400	8-729-117-32	s	TRANSISTOR 2SC4177
Q401	8-729-117-32	s	TRANSISTOR 2SC4177
Q402	8-729-117-32	s	TRANSISTOR 2SC4177
Q403	8-729-117-32	s	TRANSISTOR 2SC4177
Q404	8-729-140-63	s	TRANSISTOR 2SA1611-M5M6
Q405	8-729-140-47	s	TRANSISTOR 2SC3735-B34
Q406	8-729-140-63	s	TRANSISTOR 2SA1611-M5M6
Q407	8-729-117-32	s	TRANSISTOR 2SC4177
Q500	8-729-117-32	s	TRANSISTOR 2SC4177
Q501	8-729-140-63	s	TRANSISTOR 2SA1611-M5M6
Q502	8-729-117-32	s	TRANSISTOR 2SC4177
Q503	8-729-117-32	s	TRANSISTOR 2SC4177
Q700	8-729-140-63	s	TRANSISTOR 2SA1611-M5M6
Q701	8-729-117-32	s	TRANSISTOR 2SC4177
Q702	8-729-117-32	s	TRANSISTOR 2SC4177
Q703	8-729-117-32	s	TRANSISTOR 2SC4177
Q704	8-729-117-32	s	TRANSISTOR 2SC4177
Q705	8-729-140-47	s	TRANSISTOR 2SC3735-B34
Q706	8-729-140-47	s	TRANSISTOR 2SC3735-B34
Q707-711	8-729-117-32	s	TRANSISTOR 2SC4177
R100	1-216-638-11	s	METAL, CHIP 300 0.5% 1/10W
R101	1-216-025-91	s	METAL, CHIP 100 5% 1/10W
R102	1-216-659-11	s	METAL, CHIP 2.2K 0.5% 1/10W
R103	1-216-041-00	s	METAL, CHIP 470 5% 1/10W
R104	1-216-033-00	s	METAL, CHIP 220 5% 1/10W
R105	1-216-049-91	s	METAL, CHIP 1k 5% 1/10W
R106	1-216-652-11	s	METAL, CHIP 1.1K 0.5% 1/10W
R107	1-216-652-11	s	METAL, CHIP 1.1K 0.5% 1/10W
R108	1-216-059-00	s	METAL, CHIP 2.7K 5% 1/10W
R109	1-216-025-91	s	METAL, CHIP 100 5% 1/10W
R110	1-216-093-00	s	METAL, CHIP 68K 5% 1/10W
R111	1-216-061-00	s	METAL, CHIP 3.3K 5% 1/10W
R112	1-216-049-91	s	METAL, CHIP 1k 5% 1/10W
R113	1-216-017-91	s	METAL, CHIP 47 5% 1/10W
R114	1-216-073-00	s	METAL, CHIP 10K 5% 1/10W
R115	1-216-097-91	s	METAL, CHIP 100k 5% 1/10W
R116	1-216-057-00	s	METAL, CHIP 2.2K 5% 1/10W
R117	1-216-041-00	s	METAL, CHIP 470 5% 1/10W
R118	1-216-073-00	s	METAL, CHIP 10K 5% 1/10W
R119	1-216-037-00	s	METAL, CHIP 330 5% 1/10W
R120	1-216-033-00	s	METAL, CHIP 220 5% 1/10W
R121	1-216-033-00	s	METAL, CHIP 220 5% 1/10W
R122	1-216-017-91	s	METAL, CHIP 47 5% 1/10W
R123	1-216-073-00	s	METAL, CHIP 10K 5% 1/10W
R124	1-216-065-00	s	METAL, CHIP 4.7K 5% 1/10W
R125	1-216-059-00	s	METAL, CHIP 2.7K 5% 1/10W
R200	1-216-638-11	s	METAL, CHIP 300 0.5% 1/10W
R201	1-216-025-91	s	METAL, CHIP 100 5% 1/10W
R202	1-216-659-11	s	METAL, CHIP 2.2K 0.5% 1/10W
R203	1-216-041-00	s	METAL, CHIP 470 5% 1/10W
R204	1-216-033-00	s	METAL, CHIP 220 5% 1/10W
R205	1-216-049-91	s	METAL, CHIP 1k 5% 1/10W

(TBC-25P BOARD(UVW-1800P/1600P))

Ref. No. or Q'ty	Part No.	SP	Description
R206	1-216-652-11	s	METAL, CHIP 1.1K 0.5% 1/10W
R207	1-216-652-11	s	METAL, CHIP 1.1K 0.5% 1/10W
R208	1-216-059-00	s	METAL, CHIP 2.7K 5% 1/10W
R209	1-216-025-91	s	METAL, CHIP 100 5% 1/10W
R210	1-216-081-00	s	METAL, CHIP 22K 5% 1/10W
R211	1-216-073-00	s	METAL, CHIP 10K 5% 1/10W
R212	1-216-049-91	s	METAL, CHIP 1k 5% 1/10W
R213	1-216-017-91	s	METAL, CHIP 47 5% 1/10W
R214	1-216-073-00	s	METAL, CHIP 10K 5% 1/10W
R215	1-216-097-91	s	METAL, CHIP 100k 5% 1/10W
R222	1-216-017-91	s	METAL, CHIP 47 5% 1/10W
R223	1-216-073-00	s	METAL, CHIP 10K 5% 1/10W
R301	1-216-049-91	s	METAL, CHIP 1k 5% 1/10W
R302	1-216-085-00	s	METAL, CHIP 33K 5% 1/10W
R303	1-216-065-00	s	METAL, CHIP 4.7K 5% 1/10W
R304	1-216-073-00	s	METAL, CHIP 10K 5% 1/10W
R305	1-216-085-00	s	METAL, CHIP 33K 5% 1/10W
R306	1-216-017-91	s	METAL, CHIP 47 5% 1/10W
R307	1-216-051-00	s	METAL, CHIP 1.2K 5% 1/10W
R308	1-216-025-91	s	METAL, CHIP 100 5% 1/10W
R309	1-216-057-00	s	METAL, CHIP 2.2K 5% 1/10W
R310	1-216-033-00	s	METAL, CHIP 220 5% 1/10W
R311	1-216-049-91	s	METAL, CHIP 1k 5% 1/10W
R312	1-216-057-00	s	METAL, CHIP 2.2K 5% 1/10W
R313	1-216-059-00	s	METAL, CHIP 2.7K 5% 1/10W
R314	1-216-049-91	s	METAL, CHIP 1k 5% 1/10W
R315	1-216-089-91	s	METAL, CHIP 47k 5% 1/10W
R316	1-216-049-91	s	METAL, CHIP 1k 5% 1/10W
R317	1-216-069-00	s	METAL, CHIP 6.8K 5% 1/10W
R318	1-216-041-00	s	METAL, CHIP 470 5% 1/10W
R319	1-208-806-11	s	METAL, CHIP 10k 0.5% 1/10W
R320	1-216-295-91	s	RES, CHIP 0
R321	1-216-065-00	s	METAL, CHIP 4.7K 5% 1/10W
R322	1-216-677-11	s	METAL, CHIP 12K 0.5% 1/10W
R323	1-216-033-00	s	METAL, CHIP 220 5% 1/10W
R324	1-216-033-00	s	METAL, CHIP 220 5% 1/10W
R325	1-216-117-00	s	METAL, CHIP 680K 5% 1/10W
R326	1-208-822-11	s	METAL, CHIP 47k 0.5% 1/10W
R327	1-208-810-11	s	METAL, CHIP 15k 0.5% 1/10W
R328	1-216-687-11	s	METAL, CHIP 33K 0.5% 1/10W
R329	1-208-800-11	s	METAL, CHIP 5.6k 0.5% 1/10W
R330	1-216-634-11	s	METAL, CHIP 200 0.5% 1/10W
R331	1-216-025-91	s	METAL, CHIP 100 5% 1/10W
R332	1-216-057-00	s	METAL, CHIP 2.2K 5% 1/10W
R333	1-216-667-11	s	METAL, CHIP 4.7K 0.5% 1/10W
R334	1-216-121-91	s	METAL, CHIP 1M 5% 1/10W
R335	1-216-033-00	s	METAL, CHIP 220 5% 1/10W
R336	1-216-061-00	s	METAL, CHIP 3.3K 5% 1/10W
R337	1-216-671-11	s	METAL, CHIP 6.8K 0.5% 1/10W
R338	1-208-810-11	s	METAL, CHIP 15k 0.5% 1/10W
R339	1-216-073-00	s	METAL, CHIP 10K 5% 1/10W
R340	1-216-025-91	s	METAL, CHIP 100 5% 1/10W
R341	1-216-659-11	s	METAL, CHIP 2.2K 0.5% 1/10W
R342	1-216-033-00	s	METAL, CHIP 220 5% 1/10W
R343	1-216-033-00	s	METAL, CHIP 220 5% 1/10W
R344	1-216-661-11	s	METAL, CHIP 2.7K 0.5% 1/10W
R345	1-208-789-11	s	METAL, CHIP 2k 0.5% 1/10W
R346	1-208-806-11	s	METAL, CHIP 10k 0.5% 1/10W
R347	1-208-806-11	s	METAL, CHIP 10k 0.5% 1/10W

(TBC-25P BOARD(UVW-1800P/1600P))

Ref. No. or Q'ty	Part No.	SP	Description
R348	1-216-057-00	s	METAL, CHIP 2.2K 5% 1/10W
R349	1-216-678-11	s	METAL, CHIP 13K 0.5% 1/10W
R350	1-216-097-91	s	METAL, CHIP 100k 5% 1/10W
R351	1-216-677-11	s	METAL, CHIP 12K 0.5% 1/10W
R352	1-216-057-00	s	METAL, CHIP 2.2K 5% 1/10W
R353	1-216-057-00	s	METAL, CHIP 2.2K 5% 1/10W
R354	1-216-037-00	s	METAL, CHIP 330 5% 1/10W
R355	1-216-037-00	s	METAL, CHIP 330 5% 1/10W
R358	1-216-061-00	s	METAL, CHIP 3.3K 5% 1/10W
R359	1-208-822-11	s	METAL, CHIP 47k 0.5% 1/10W
R360	1-216-109-00	s	METAL, CHIP 330K 5% 1/10W
R361	1-216-057-00	s	METAL, CHIP 2.2K 5% 1/10W
R363	1-216-017-91	s	METAL, CHIP 47 5% 1/10W
R367	1-216-073-00	s	METAL, CHIP 10K 5% 1/10W
R369	1-216-049-91	s	METAL, CHIP 1k 5% 1/10W
R371	1-216-041-00	s	METAL, CHIP 470 5% 1/10W
R372	1-216-041-00	s	METAL, CHIP 470 5% 1/10W
R373	1-216-085-00	s	METAL, CHIP 33K 5% 1/10W
R374	1-216-085-00	s	METAL, CHIP 33K 5% 1/10W
R375	1-216-085-00	s	METAL, CHIP 33K 5% 1/10W
R376	1-216-017-91	s	METAL, CHIP 47 5% 1/10W
R380	1-208-814-11	s	METAL, CHIP 22k 0.5% 1/10W
R400	1-216-085-00	s	METAL, CHIP 33K 5% 1/10W
R401	1-216-065-00	s	METAL, CHIP 4.7K 5% 1/10W
R402	1-216-073-00	s	METAL, CHIP 10K 5% 1/10W
R403	1-216-085-00	s	METAL, CHIP 33K 5% 1/10W
R404	1-216-017-91	s	METAL, CHIP 47 5% 1/10W
R405	1-216-049-91	s	METAL, CHIP 1k 5% 1/10W
R406	1-216-065-00	s	METAL, CHIP 4.7K 5% 1/10W
R407	1-216-049-91	s	METAL, CHIP 1k 5% 1/10W
R408	1-216-025-91	s	METAL, CHIP 100 5% 1/10W
R409	1-216-049-91	s	METAL, CHIP 1k 5% 1/10W
R410	1-216-057-00	s	METAL, CHIP 2.2K 5% 1/10W
R411	1-216-033-00	s	METAL, CHIP 220 5% 1/10W
R412	1-216-057-00	s	METAL, CHIP 2.2K 5% 1/10W
R413	1-216-059-00	s	METAL, CHIP 2.7K 5% 1/10W
R414	1-216-049-91	s	METAL, CHIP 1k 5% 1/10W
R415	1-216-049-91	s	METAL, CHIP 1k 5% 1/10W
R416	1-216-089-91	s	METAL, CHIP 47k 5% 1/10W
R417	1-216-041-00	s	METAL, CHIP 470 5% 1/10W
R418	1-208-806-11	s	METAL, CHIP 10k 0.5% 1/10W
R419	1-216-295-91	s	RES, CHIP 0
R420	1-208-806-11	s	METAL, CHIP 10k 0.5% 1/10W
R421	1-216-065-00	s	METAL, CHIP 4.7K 5% 1/10W
R423	1-208-822-11	s	METAL, CHIP 47k 0.5% 1/10W
R424	1-216-033-00	s	METAL, CHIP 220 5% 1/10W
R425	1-216-033-00	s	METAL, CHIP 220 5% 1/10W
R426	1-216-117-00	s	METAL, CHIP 680K 5% 1/10W
R427	1-216-634-11	s	METAL, CHIP 200 0.5% 1/10W
R428	1-216-627-11	s	METAL, CHIP 100 0.5% 1/10W
R429	1-216-659-11	s	METAL, CHIP 2.2K 0.5% 1/10W
R430	1-216-121-91	s	METAL, CHIP 1M 5% 1/10W
R431	1-216-051-00	s	METAL, CHIP 1.2K 5% 1/10W
R432	1-216-049-91	s	METAL, CHIP 1k 5% 1/10W
R433	1-216-033-00	s	METAL, CHIP 220 5% 1/10W
R434	1-216-673-11	s	METAL, CHIP 8.2K 0.5% 1/10W
R435	1-216-667-11	s	METAL, CHIP 4.7K 0.5% 1/10W
R436	1-216-061-00	s	METAL, CHIP 3.3K 5% 1/10W
R437	1-216-671-11	s	METAL, CHIP 6.8K 0.5% 1/10W

(TBC-25P BOARD(UVW-1800P/1600P))

Ref. No. or Q'ty	Part No.	SP	Description
R438	1-208-810-11	s	METAL, CHIP 15k 0.5% 1/10W
R439	1-216-073-00	s	METAL, CHIP 10K 5% 1/10W
R440	1-216-025-91	s	METAL, CHIP 100 5% 1/10W
R441	1-216-659-11	s	METAL, CHIP 2.2K 0.5% 1/10W
R442	1-216-033-00	s	METAL, CHIP 220 5% 1/10W
R443	1-216-033-00	s	METAL, CHIP 220 5% 1/10W
R444	1-216-661-11	s	METAL, CHIP 2.7K 0.5% 1/10W
R445	1-208-789-11	s	METAL, CHIP 2k 0.5% 1/10W
R446	1-208-806-11	s	METAL, CHIP 10k 0.5% 1/10W
R447	1-216-037-00	s	METAL, CHIP 330 5% 1/10W
R448	1-216-057-00	s	METAL, CHIP 2.2K 5% 1/10W
R449	1-216-097-91	s	METAL, CHIP 100k 5% 1/10W
R450	1-216-057-00	s	METAL, CHIP 2.2K 5% 1/10W
R451	1-216-057-00	s	METAL, CHIP 2.2K 5% 1/10W
R452	1-216-061-00	s	METAL, CHIP 3.3K 5% 1/10W
R453	1-216-109-00	s	METAL, CHIP 330K 5% 1/10W
R454	1-216-057-00	s	METAL, CHIP 2.2K 5% 1/10W
R455	1-216-017-91	s	METAL, CHIP 47 5% 1/10W
R456	1-216-073-00	s	METAL, CHIP 10K 5% 1/10W
R457	1-216-049-91	s	METAL, CHIP 1k 5% 1/10W
R458	1-208-822-11	s	METAL, CHIP 47k 0.5% 1/10W
R459	1-216-041-00	s	METAL, CHIP 470 5% 1/10W
R460	1-216-041-00	s	METAL, CHIP 470 5% 1/10W
R461	1-216-085-00	s	METAL, CHIP 33K 5% 1/10W
R462	1-216-085-00	s	METAL, CHIP 33K 5% 1/10W
R463	1-216-085-00	s	METAL, CHIP 33K 5% 1/10W
R464	1-216-017-91	s	METAL, CHIP 47 5% 1/10W
R468	1-216-634-11	s	METAL, CHIP 200 0.5% 1/10W
R469	1-208-800-11	s	METAL, CHIP 5.6k 0.5% 1/10W
R470	1-216-687-11	s	METAL, CHIP 33K 0.5% 1/10W
R500-506	1-216-057-00	s	METAL, CHIP 2.2K 5% 1/10W
R507	1-216-041-00	s	METAL, CHIP 470 5% 1/10W
R508-512	1-216-057-00	s	METAL, CHIP 2.2K 5% 1/10W
R513	1-216-097-91	s	METAL, CHIP 100k 5% 1/10W
R514	1-216-057-00	s	METAL, CHIP 2.2K 5% 1/10W
R515	1-216-057-00	s	METAL, CHIP 2.2K 5% 1/10W
R516	1-216-057-00	s	METAL, CHIP 2.2K 5% 1/10W
R540	1-216-097-91	s	METAL, CHIP 100k 5% 1/10W
R541	1-216-089-91	s	METAL, CHIP 47k 5% 1/10W
R542	1-216-057-00	s	METAL, CHIP 2.2K 5% 1/10W
R543	1-216-057-00	s	METAL, CHIP 2.2K 5% 1/10W
R545	1-216-678-11	s	METAL, CHIP 13K 0.5% 1/10W
R546	1-216-678-11	s	METAL, CHIP 13K 0.5% 1/10W
R547	1-216-659-11	s	METAL, CHIP 2.2K 0.5% 1/10W
R548	1-216-659-11	s	METAL, CHIP 2.2K 0.5% 1/10W
R549	1-216-661-11	s	METAL, CHIP 2.7K 0.5% 1/10W
R550	1-216-661-11	s	METAL, CHIP 2.7K 0.5% 1/10W
R551	1-208-806-11	s	METAL, CHIP 10k 0.5% 1/10W
R552	1-208-806-11	s	METAL, CHIP 10k 0.5% 1/10W
R553	1-208-810-11	s	METAL, CHIP 15k 0.5% 1/10W
R554	1-216-678-11	s	METAL, CHIP 13K 0.5% 1/10W
R555	1-208-810-11	s	METAL, CHIP 15k 0.5% 1/10W
R556	1-216-671-11	s	METAL, CHIP 6.8K 0.5% 1/10W
R557	1-216-665-11	s	METAL, CHIP 3.9K 0.5% 1/10W
R558	1-208-810-11	s	METAL, CHIP 15k 0.5% 1/10W
R559	1-216-671-11	s	METAL, CHIP 6.8K 0.5% 1/10W
R560	1-216-673-11	s	METAL, CHIP 8.2K 0.5% 1/10W
R561	1-208-810-11	s	METAL, CHIP 15k 0.5% 1/10W
R562	1-208-810-11	s	METAL, CHIP 15k 0.5% 1/10W

(TBC-25P BOARD(UVW-1800P/1600P))

Ref. No. or Q'ty	Part No.	SP	Description
R563	1-216-677-11	s	METAL, CHIP 12K 0.5% 1/10W
R564	1-216-659-11	s	METAL, CHIP 2.2K 0.5% 1/10W
R565	1-208-814-11	s	METAL, CHIP 22k 0.5% 1/10W
R566	1-216-661-11	s	METAL, CHIP 2.7K 0.5% 1/10W
R567	1-208-814-11	s	METAL, CHIP 22k 0.5% 1/10W
R568	1-208-814-11	s	METAL, CHIP 22k 0.5% 1/10W
R569	1-208-822-11	s	METAL, CHIP 47k 0.5% 1/10W
R570	1-216-667-11	s	METAL, CHIP 4.7K 0.5% 1/10W
R571	1-208-822-11	s	METAL, CHIP 47k 0.5% 1/10W
R572	1-216-665-11	s	METAL, CHIP 3.9K 0.5% 1/10W
R573	1-208-822-11	s	METAL, CHIP 47k 0.5% 1/10W
R574	1-216-665-11	s	METAL, CHIP 3.9K 0.5% 1/10W
R575	1-216-639-11	s	METAL, CHIP 330 0.5% 1/10W
R576	1-216-639-11	s	METAL, CHIP 330 0.5% 1/10W
R577	1-216-639-11	s	METAL, CHIP 330 0.5% 1/10W
R578	1-216-663-11	s	METAL, CHIP 3.3K 0.5% 1/10W
R579	1-216-659-11	s	METAL, CHIP 2.2K 0.5% 1/10W
R580	1-216-639-11	s	METAL, CHIP 330 0.5% 1/10W
R581	1-216-639-11	s	METAL, CHIP 330 0.5% 1/10W
R582	1-216-639-11	s	METAL, CHIP 330 0.5% 1/10W
R583	1-216-645-11	s	METAL, CHIP 560 0.5% 1/10W
R584	1-216-041-00	s	METAL, CHIP 470 5% 1/10W
R585	1-216-619-11	s	METAL, CHIP 47 0.5% 1/10W
R586	1-216-619-11	s	METAL, CHIP 47 0.5% 1/10W
R587	1-216-041-00	s	METAL, CHIP 470 5% 1/10W
R588	1-216-619-11	s	METAL, CHIP 47 0.5% 1/10W
R589	1-216-041-00	s	METAL, CHIP 470 5% 1/10W
R590	1-216-017-91	s	METAL, CHIP 47 5% 1/10W
R591	1-216-017-91	s	METAL, CHIP 47 5% 1/10W
R592	1-216-017-91	s	METAL, CHIP 47 5% 1/10W
R595	1-216-113-00	s	METAL, CHIP 470K 5% 1/10W
R596	1-216-113-00	s	METAL, CHIP 470K 5% 1/10W
R597	1-216-295-91	s	RES, CHIP 0
R598	1-216-113-00	s	METAL, CHIP 470K 5% 1/10W
R700	1-216-057-00	s	METAL, CHIP 2.2K 5% 1/10W
R701	1-216-097-91	s	METAL, CHIP 100k 5% 1/10W
R702	1-216-097-91	s	METAL, CHIP 100k 5% 1/10W
R704	1-208-810-11	s	METAL, CHIP 15k 0.5% 1/10W
R705	1-216-677-11	s	METAL, CHIP 12K 0.5% 1/10W
R706	1-208-806-11	s	METAL, CHIP 10k 0.5% 1/10W
R707	1-216-665-11	s	METAL, CHIP 3.9K 0.5% 1/10W
R708	1-208-806-11	s	METAL, CHIP 10k 0.5% 1/10W
R710	1-216-651-11	s	METAL, CHIP 1K 0.5% 1/10W
R711	1-208-822-11	s	METAL, CHIP 47k 0.5% 1/10W
R712	1-208-806-11	s	METAL, CHIP 10k 0.5% 1/10W
R713	1-216-651-11	s	METAL, CHIP 1K 0.5% 1/10W
R714	1-216-677-11	s	METAL, CHIP 12K 0.5% 1/10W
R715	1-216-059-00	s	METAL, CHIP 2.7K 5% 1/10W
R716	1-216-041-00	s	METAL, CHIP 470 5% 1/10W
R717	1-216-037-00	s	METAL, CHIP 330 5% 1/10W
R718	1-216-059-00	s	METAL, CHIP 2.7K 5% 1/10W
R719	1-216-097-91	s	METAL, CHIP 100k 5% 1/10W
R720	1-208-814-11	s	METAL, CHIP 22k 0.5% 1/10W
R721	1-208-817-11	s	METAL, CHIP 30k 0.5% 1/10W
R722	1-216-069-00	s	METAL, CHIP 6.8K 5% 1/10W
R723	1-208-814-11	s	METAL, CHIP 22k 0.5% 1/10W
R724	1-208-810-11	s	METAL, CHIP 15k 0.5% 1/10W
R725	1-208-817-11	s	METAL, CHIP 30k 0.5% 1/10W
R726	1-216-041-00	s	METAL, CHIP 470 5% 1/10W

(TBC-25P BOARD(UVW-1800P/1600P))

Ref. No. or Q'ty	Part No.	SP	Description
R727	1-208-800-11	s	METAL, CHIP 5.6k 0.5% 1/10W
R728	1-208-817-11	s	METAL, CHIP 30k 0.5% 1/10W
R729	1-216-049-91	s	METAL, CHIP 1k 5% 1/10W
R730	1-216-049-91	s	METAL, CHIP 1k 5% 1/10W
R731	1-216-093-00	s	METAL, CHIP 68K 5% 1/10W
R732	1-216-025-91	s	METAL, CHIP 100 5% 1/10W
R733	1-208-814-11	s	METAL, CHIP 22k 0.5% 1/10W
R734	1-208-814-11	s	METAL, CHIP 22k 0.5% 1/10W
R735	1-216-671-11	s	METAL, CHIP 6.8K 0.5% 1/10W
R736	1-216-061-00	s	METAL, CHIP 3.3K 5% 1/10W
R737	1-216-097-91	s	METAL, CHIP 100k 5% 1/10W
R738	1-216-687-11	s	METAL, CHIP 33K 0.5% 1/10W
R739	1-216-017-91	s	METAL, CHIP 47 5% 1/10W
R740	1-216-049-91	s	METAL, CHIP 1k 5% 1/10W
R741	1-208-822-11	s	METAL, CHIP 47k 0.5% 1/10W
R742	1-216-017-91	s	METAL, CHIP 47 5% 1/10W
R743	1-216-049-91	s	METAL, CHIP 1k 5% 1/10W
R744	1-216-081-00	s	METAL, CHIP 22K 5% 1/10W
R745	1-216-017-91	s	METAL, CHIP 47 5% 1/10W
R746	1-216-049-91	s	METAL, CHIP 1k 5% 1/10W
R747	1-216-041-00	s	METAL, CHIP 470 5% 1/10W
R748	1-216-687-11	s	METAL, CHIP 33K 0.5% 1/10W
R749	1-208-806-11	s	METAL, CHIP 10k 0.5% 1/10W
R752	1-216-295-91	s	RES, CHIP 0
R754	1-216-295-91	s	RES, CHIP 0
R755	1-216-017-91	s	METAL, CHIP 47 5% 1/10W
R756	1-216-049-91	s	METAL, CHIP 1k 5% 1/10W
R757	1-216-085-00	s	METAL, CHIP 33K 5% 1/10W
R758	1-216-065-00	s	METAL, CHIP 4.7K 5% 1/10W
R760	1-216-073-00	s	METAL, CHIP 10K 5% 1/10W
R761	1-216-085-00	s	METAL, CHIP 33K 5% 1/10W
R762	1-216-017-91	s	METAL, CHIP 47 5% 1/10W
R763	1-216-085-00	s	METAL, CHIP 33K 5% 1/10W
R764	1-208-789-11	s	METAL, CHIP 2k 0.5% 1/10W
R765	1-216-051-00	s	METAL, CHIP 1.2K 5% 1/10W
R766	1-208-789-11	s	METAL, CHIP 2k 0.5% 1/10W
R767	1-216-051-00	s	METAL, CHIP 1.2K 5% 1/10W
R768	1-216-648-11	s	METAL, CHIP 750 0.5% 1/10W
R769	1-216-037-00	s	METAL, CHIP 330 5% 1/10W
R770	1-216-648-11	s	METAL, CHIP 750 0.5% 1/10W
R771	1-216-037-00	s	METAL, CHIP 330 5% 1/10W
R772	1-216-069-00	s	METAL, CHIP 6.8K 5% 1/10W
R773	1-208-817-11	s	METAL, CHIP 30k 0.5% 1/10W
R774	1-216-069-00	s	METAL, CHIP 6.8K 5% 1/10W
R775	1-208-817-11	s	METAL, CHIP 30k 0.5% 1/10W
R776	1-216-041-00	s	METAL, CHIP 470 5% 1/10W
R777	1-216-049-91	s	METAL, CHIP 1k 5% 1/10W
R778	1-216-017-91	s	METAL, CHIP 47 5% 1/10W
R780	1-216-097-91	s	METAL, CHIP 100k 5% 1/10W
R781	1-216-667-11	s	METAL, CHIP 4.7K 0.5% 1/10W
R782	1-216-017-91	s	METAL, CHIP 47 5% 1/10W
R783	1-216-663-11	s	METAL, CHIP 3.3K 0.5% 1/10W
R784	1-216-663-11	s	METAL, CHIP 3.3K 0.5% 1/10W
R785	1-216-665-11	s	METAL, CHIP 3.9K 0.5% 1/10W
R786	1-216-663-11	s	METAL, CHIP 3.3K 0.5% 1/10W
R787	1-216-635-11	s	METAL, CHIP 220 0.5% 1/10W
R788	1-216-635-11	s	METAL, CHIP 220 0.5% 1/10W
R789	1-216-677-11	s	METAL, CHIP 12K 0.5% 1/10W
R790	1-216-678-11	s	METAL, CHIP 13K 0.5% 1/10W

(TBC-25P BOARD(UVW-1800P/1600P))

Ref. No. or Q'ty	Part No.	SP	Description
R791	1-216-041-00	s	METAL, CHIP 470 5% 1/10W
R792	1-216-041-00	s	METAL, CHIP 470 5% 1/10W
R793	1-216-619-11	s	METAL, CHIP 47 0.5% 1/10W
R794	1-216-619-11	s	METAL, CHIP 47 0.5% 1/10W
R795-799	1-216-057-00	s	METAL, CHIP 2.2K 5% 1/10W
R800	1-216-017-91	s	METAL, CHIP 47 5% 1/10W
R801	1-216-057-00	s	METAL, CHIP 2.2K 5% 1/10W
R802-807	1-216-041-00	s	METAL, CHIP 470 5% 1/10W
R809	1-216-065-00	s	METAL, CHIP 4.7K 5% 1/10W
R810	1-208-822-11	s	METAL, CHIP 47k 0.5% 1/10W
R811	1-216-057-00	s	METAL, CHIP 2.2K 5% 1/10W
R812	1-216-089-91	s	METAL, CHIP 47k 5% 1/10W
R813	1-216-097-91	s	METAL, CHIP 100k 5% 1/10W
R814	1-208-806-11	s	METAL, CHIP 10k 0.5% 1/10W
R815	1-208-806-11	s	METAL, CHIP 10k 0.5% 1/10W
R816	1-216-677-11	s	METAL, CHIP 12K 0.5% 1/10W
R817	1-216-677-11	s	METAL, CHIP 12K 0.5% 1/10W
R818	1-216-089-91	s	METAL, CHIP 47k 5% 1/10W
R819	1-216-065-00	s	METAL, CHIP 4.7K 5% 1/10W
R820	1-216-049-91	s	METAL, CHIP 1k 5% 1/10W
R821	1-216-059-00	s	METAL, CHIP 2.7K 5% 1/10W
R822	1-208-810-11	s	METAL, CHIP 15k 0.5% 1/10W
R823	1-216-057-00	s	METAL, CHIP 2.2K 5% 1/10W
R824	1-216-073-00	s	METAL, CHIP 10K 5% 1/10W
R825	1-216-049-91	s	METAL, CHIP 1k 5% 1/10W
R826	1-216-051-00	s	METAL, CHIP 1.2K 5% 1/10W
R827	1-216-655-11	s	METAL, CHIP 1.5K 0.5% 1/10W
R828	1-216-667-11	s	METAL, CHIP 4.7K 0.5% 1/10W
R829	1-208-822-11	s	METAL, CHIP 47k 0.5% 1/10W
R830	1-216-677-11	s	METAL, CHIP 12K 0.5% 1/10W
R831	1-208-814-11	s	METAL, CHIP 22k 0.5% 1/10W
R832	1-208-810-11	s	METAL, CHIP 15k 0.5% 1/10W
R833	1-216-049-91	s	METAL, CHIP 1k 5% 1/10W
R834	1-216-049-91	s	METAL, CHIP 1k 5% 1/10W
R835	1-216-057-00	s	METAL, CHIP 2.2K 5% 1/10W
R838	1-216-117-00	s	METAL, CHIP 680K 5% 1/10W
R839	1-216-097-91	s	METAL, CHIP 100k 5% 1/10W
R840	1-216-097-91	s	METAL, CHIP 100k 5% 1/10W
RV100	1-241-758-11	s	RES, ADJ METAL 100
RV200	1-241-758-11	s	RES, ADJ METAL 100
RV300	1-241-786-11	s	RES, ADJ METAL 22k
RV301	1-241-763-11	s	RES, ADJ METAL 4.7k
RV400	1-241-786-11	s	RES, ADJ METAL 22k
RV401	1-241-763-11	s	RES, ADJ METAL 4.7k
RV500	1-241-784-11	s	RES, ADJ METAL 4.7k
RV501	1-241-784-11	s	RES, ADJ METAL 4.7k
RV502	1-241-785-11	s	RES, ADJ METAL 10k
RV700	1-241-785-11	s	RES, ADJ METAL 10k
RV701	1-241-785-11	s	RES, ADJ METAL 10k
RV702	1-241-786-11	s	RES, ADJ METAL 22k
RV703	1-241-784-11	s	RES, ADJ METAL 4.7k
S500	1-692-535-11	s	SWITCH, DIP 4-CKT
TH400	1-807-972-11	s	THERMISTOR SV-1715 1.25k
TH701	1-807-972-11	s	THERMISTOR SV-1715 1.25k
X700	1-579-057-11	s	CRYSTAL 17.734475MHz
X701	1-579-459-11	s	CRYSTAL 13.5MHz

TR-84 BOARD

Ref. No. or Q'ty	Part No.	SP	Description
1pc	1-648-921-11	o	PRINTED CIRCUIT BOARD, TR-84
1pc	3-182-257-02	s	HOLDER, DME
CN945	1-565-876-11	o	CONNECTOR 4P, MALE
IC1	8-745-001-07	s	DME DM-230-1

VP-43 BOARD(UVW-1800)

Ref. No. or Q'ty	Part No.	SP	Description
VP-43 board is used for UVW-1800(J,UC).			
1pc	A-8275-281-A	o	MOUNTED CIRCUIT BOARD, VP-43
1pc	3-182-386-02	o	PLATE, SHIELD (L), CARD
1pc	7-621-759-45	s	SCREW, +PSW2.6x6
1pc	3-179-084-01	s	LEVER (R), PC BOARD
1pc	3-179-085-01	s	LEVER (L), PC BOARD
C101	1-163-033-91	s	CERAMIC, CHIP 0.022uF 50V
C102	1-163-033-91	s	CERAMIC, CHIP 0.022uF 50V
C103	1-163-275-11	s	CERAMIC, CHIP 0.001uF 5% 50V
C104	1-163-033-91	s	CERAMIC, CHIP 0.022uF 50V
C105	1-163-033-91	s	CERAMIC, CHIP 0.022uF 50V
C106	1-126-933-11	s	ELECT 100uF 20% 16V
C107	1-163-033-91	s	CERAMIC, CHIP 0.022uF 50V
C108	1-163-033-91	s	CERAMIC, CHIP 0.022uF 50V
C109	1-163-108-00	s	CERAMIC, CHIP 43PF 5% 50V
C110	1-163-249-11	s	CERAMIC, CHIP 82pF 5% 50V
C111	1-163-108-00	s	CERAMIC, CHIP 43PF 5% 50V
C112	1-124-903-11	s	ELECT 1uF 20% 50V
C113	1-124-903-11	s	ELECT 1uF 20% 50V
C114	1-163-275-11	s	CERAMIC, CHIP 0.001uF 5% 50V
C115	1-163-033-91	s	CERAMIC, CHIP 0.022uF 50V
C116	1-163-033-91	s	CERAMIC, CHIP 0.022uF 50V
C117	1-163-033-91	s	CERAMIC, CHIP 0.022uF 50V
C118	1-163-245-11	s	CERAMIC, CHIP 56PF 5% 50V
C119	1-163-235-11	s	CERAMIC, CHIP 22PF 5% 50V
C120-127	1-163-033-91	s	CERAMIC, CHIP 0.022uF 50V
C128	1-163-133-00	s	CERAMIC, CHIP 470PF 5% 50V
C129	1-163-033-91	s	CERAMIC, CHIP 0.022uF 50V
C130	1-163-033-91	s	CERAMIC, CHIP 0.022uF 50V
C131	1-126-933-11	s	ELECT 100uF 20% 16V
C132	1-163-033-91	s	CERAMIC, CHIP 0.022uF 50V
C133	1-163-113-00	s	CERAMIC, CHIP 68PF 5% 50V
C134-142	1-163-033-91	s	CERAMIC, CHIP 0.022uF 50V
C143	1-126-933-11	s	ELECT 100uF 20% 16V
C144	1-126-933-11	s	ELECT 100uF 20% 16V
C145	1-126-933-11	s	ELECT 100uF 20% 16V
C146	1-126-933-11	s	ELECT 100uF 20% 16V
C147	1-163-231-11	s	CERAMIC, CHIP 15pF 5% 50V
C148	1-163-241-11	s	CERAMIC, CHIP 39PF 5% 50V
C149	1-163-033-91	s	CERAMIC, CHIP 0.022uF 50V
C150	1-126-933-11	s	ELECT 100uF 20% 16V
C201-212	1-163-033-91	s	CERAMIC, CHIP 0.022uF 50V
C213	1-163-222-11	s	CERAMIC, CHIP 5PF 50V
C214	1-163-222-11	s	CERAMIC, CHIP 5PF 50V
C215	1-126-925-11	s	ELECT 470uF 20% 10V
C216	1-163-033-91	s	CERAMIC, CHIP 0.022uF 50V
C217	1-163-033-91	s	CERAMIC, CHIP 0.022uF 50V
C218	1-163-033-91	s	CERAMIC, CHIP 0.022uF 50V
C219	1-163-227-11	s	CERAMIC, CHIP 10PF 5% 50V
C220	1-164-161-11	s	CERAMIC, CHIP 0.0022uF 10% 100V
C221	1-163-091-00	s	CERAMIC, CHIP 8PF 50V
C222	1-163-033-91	s	CERAMIC, CHIP 0.022uF 50V
C223	1-163-033-91	s	CERAMIC, CHIP 0.022uF 50V
C224	1-126-925-11	s	ELECT 470uF 20% 10V
C225	1-126-925-11	s	ELECT 470uF 20% 10V
C226-230	1-163-033-91	s	CERAMIC, CHIP 0.022uF 50V
C231	1-126-925-11	s	ELECT 470uF 20% 10V
C232	1-163-033-91	s	CERAMIC, CHIP 0.022uF 50V

(VP-43 BOARD(UVW-1800))

Ref. No. or Q'ty	Part No.	SP	Description
C234	1-107-552-11	s	MICA, CHIP 150pF 1% 50V
C235	1-126-933-11	s	ELECT 100uF 20% 16V
C236	1-163-033-91	s	CERAMIC, CHIP 0.022uF 50V
C237	1-126-963-11	s	ELECT 4.7uF 20% 50V
C238	1-163-235-11	s	CERAMIC, CHIP 22PF 5% 50V
C239	1-163-114-00	s	CERAMIC, CHIP 75PF 5% 50V
C240	1-163-033-91	s	CERAMIC, CHIP 0.022uF 50V
C241	1-163-243-11	s	CERAMIC, CHIP 47PF 5% 50V
C242	1-163-033-91	s	CERAMIC, CHIP 0.022uF 50V
C243	1-163-033-91	s	CERAMIC, CHIP 0.022uF 50V
C244	1-163-033-91	s	CERAMIC, CHIP 0.022uF 50V
C245	1-126-925-11	s	ELECT 470uF 20% 10V
C246	1-126-933-11	s	ELECT 100uF 20% 16V
C247	1-163-033-91	s	CERAMIC, CHIP 0.022uF 50V
C248	1-163-033-91	s	CERAMIC, CHIP 0.022uF 50V
C249	1-126-933-11	s	ELECT 100uF 20% 16V
C250	1-126-933-11	s	ELECT 100uF 20% 16V
C251	1-126-964-11	s	ELECT 10uF 20% 50V
C253	1-163-033-91	s	CERAMIC, CHIP 0.022uF 50V
C301	1-163-033-91	s	CERAMIC, CHIP 0.022uF 50V
C302	1-163-033-91	s	CERAMIC, CHIP 0.022uF 50V
C303	1-163-275-11	s	CERAMIC, CHIP 0.001uF 5% 50V
C304	1-163-033-91	s	CERAMIC, CHIP 0.022uF 50V
C305	1-126-933-11	s	ELECT 100uF 20% 16V
C306	1-163-033-91	s	CERAMIC, CHIP 0.022uF 50V
C307	1-163-033-91	s	CERAMIC, CHIP 0.022uF 50V
C308	1-163-033-91	s	CERAMIC, CHIP 0.022uF 50V
C309	1-163-110-00	s	CERAMIC, CHIP 51PF 5% 50V
C310	1-163-251-11	s	CERAMIC, CHIP 100PF 5% 50V
C311	1-163-110-00	s	CERAMIC, CHIP 51PF 5% 50V
C312	1-124-903-11	s	ELECT 1uF 20% 50V
C313	1-124-903-11	s	ELECT 1uF 20% 50V
C314	1-163-275-11	s	CERAMIC, CHIP 0.001uF 5% 50V
C315	1-163-135-00	s	CERAMIC, CHIP 560PF 5% 50V
C316	1-163-257-11	s	CERAMIC, CHIP 180PF 5% 50V
C317	1-163-033-91	s	CERAMIC, CHIP 0.022uF 50V
C318	1-163-033-91	s	CERAMIC, CHIP 0.022uF 50V
C319	1-163-243-11	s	CERAMIC, CHIP 47PF 5% 50V
C320	1-163-033-91	s	CERAMIC, CHIP 0.022uF 50V
C321	1-163-033-91	s	CERAMIC, CHIP 0.022uF 50V
C322	1-163-235-11	s	CERAMIC, CHIP 22PF 5% 50V
C323	1-163-033-91	s	CERAMIC, CHIP 0.022uF 50V
C324	1-163-033-91	s	CERAMIC, CHIP 0.022uF 50V
C325	1-163-033-91	s	CERAMIC, CHIP 0.022uF 50V
C326	1-163-033-91	s	CERAMIC, CHIP 0.022uF 50V
C327	1-163-133-00	s	CERAMIC, CHIP 470PF 5% 50V
C328	1-163-033-91	s	CERAMIC, CHIP 0.022uF 50V
C329	1-163-033-91	s	CERAMIC, CHIP 0.022uF 50V
C330	1-163-033-91	s	CERAMIC, CHIP 0.022uF 50V
C331	1-163-033-91	s	CERAMIC, CHIP 0.022uF 50V
C332	1-126-933-11	s	ELECT 100uF 20% 16V
C333	1-163-033-91	s	CERAMIC, CHIP 0.022uF 50V
C334	1-163-253-11	s	CERAMIC, CHIP 120PF 5% 50V
C335-339	1-163-033-91	s	CERAMIC, CHIP 0.022uF 50V
C340	1-126-933-11	s	ELECT 100uF 20% 16V
C341	1-163-033-91	s	CERAMIC, CHIP 0.022uF 50V
C342	1-163-033-91	s	CERAMIC, CHIP 0.022uF 50V
C343	1-126-933-11	s	ELECT 100uF 20% 16V
C344	1-163-033-91	s	CERAMIC, CHIP 0.022uF 50V

(VP-43 BOARD(UVW-1800))

Ref. No. or Q'ty	Part No.	SP	Description
C345	1-163-033-91	s	CERAMIC, CHIP 0.022uF 50V
C346	1-163-231-11	s	CERAMIC, CHIP 15pF 5% 50V
C347	1-126-933-11	s	ELECT 100uF 20% 16V
C348	1-126-933-11	s	ELECT 100uF 20% 16V
C349	1-163-241-11	s	CERAMIC, CHIP 39PF 5% 50V
C350	1-163-033-91	s	CERAMIC, CHIP 0.022uF 50V
C351	1-126-933-11	s	ELECT 100uF 20% 16V
C401-408	1-163-033-91	s	CERAMIC, CHIP 0.022uF 50V
C409	1-126-925-11	s	ELECT 470uF 20% 10V
C410	1-163-033-91	s	CERAMIC, CHIP 0.022uF 50V
C411	1-163-033-91	s	CERAMIC, CHIP 0.022uF 50V
C412	1-163-222-11	s	CERAMIC, CHIP 5PF 50V
C413	1-163-222-11	s	CERAMIC, CHIP 5PF 50V
C414	1-163-033-91	s	CERAMIC, CHIP 0.022uF 50V
C415	1-164-161-11	s	CERAMIC, CHIP 0.0022uF 10% 100V
C416	1-163-222-11	s	CERAMIC, CHIP 5PF 50V
C417	1-163-033-91	s	CERAMIC, CHIP 0.022uF 50V
C418	1-163-033-91	s	CERAMIC, CHIP 0.022uF 50V
C419	1-126-925-11	s	ELECT 470uF 20% 10V
C420	1-126-925-11	s	ELECT 470uF 20% 10V
C421-425	1-163-033-91	s	CERAMIC, CHIP 0.022uF 50V
C426	1-126-933-11	s	ELECT 100uF 20% 16V
C427	1-126-925-11	s	ELECT 470uF 20% 10V
C428	1-163-033-91	s	CERAMIC, CHIP 0.022uF 50V
C429	1-163-084-00	s	CERAMIC, CHIP 1.5PF 50V
C430	1-107-552-11	s	MICA, CHIP 150pF 1% 50V
C431	1-163-033-91	s	CERAMIC, CHIP 0.022uF 50V
C432	1-126-963-11	s	ELECT 4.7uF 20% 50V
C433	1-163-239-11	s	CERAMIC, CHIP 33PF 5% 50V
C434	1-163-033-91	s	CERAMIC, CHIP 0.022uF 50V
C435	1-163-033-91	s	CERAMIC, CHIP 0.022uF 50V
C436	1-163-251-11	s	CERAMIC, CHIP 100PF 5% 50V
C437	1-126-925-11	s	ELECT 470uF 20% 10V
C438	1-126-933-11	s	ELECT 100uF 20% 16V
C439	1-163-033-91	s	CERAMIC, CHIP 0.022uF 50V
C440	1-163-033-91	s	CERAMIC, CHIP 0.022uF 50V
C441	1-163-033-91	s	CERAMIC, CHIP 0.022uF 50V
C442	1-126-933-11	s	ELECT 100uF 20% 16V
C443	1-126-933-11	s	ELECT 100uF 20% 16V
C501	1-126-933-11	s	ELECT 100uF 20% 16V
C502	1-126-933-11	s	ELECT 100uF 20% 16V
C503	1-126-933-11	s	ELECT 100uF 20% 16V
C504	1-126-933-11	s	ELECT 100uF 20% 16V
C505-509	1-163-033-91	s	CERAMIC, CHIP 0.022uF 50V
C510	1-131-353-00	s	TANTALUM 10uF 10% 35V
C511	1-131-353-00	s	TANTALUM 10uF 10% 35V
C512	1-126-933-11	s	ELECT 100uF 20% 16V
C513	1-163-033-91	s	CERAMIC, CHIP 0.022uF 50V
C514	1-163-033-91	s	CERAMIC, CHIP 0.022uF 50V
C515	1-163-033-91	s	CERAMIC, CHIP 0.022uF 50V
C516	1-130-491-00	s	MYLAR 0.047uF 5% 50V
C517	1-163-033-91	s	CERAMIC, CHIP 0.022uF 50V
C518	1-163-033-91	s	CERAMIC, CHIP 0.022uF 50V
C519	1-163-231-11	s	CERAMIC, CHIP 15pF 5% 50V
C520	1-163-033-91	s	CERAMIC, CHIP 0.022uF 50V
C521	1-163-253-11	s	CERAMIC, CHIP 120PF 5% 50V
C522	1-163-227-11	s	CERAMIC, CHIP 10PF 5% 50V
C523	1-163-235-11	s	CERAMIC, CHIP 22PF 5% 50V
C524	1-126-933-11	s	ELECT 100uF 20% 16V

(VP-43 BOARD(UVW-1800))

Ref. No. or Q'ty	Part No.	SP	Description
C525-529	1-163-033-91	s	CERAMIC, CHIP 0.022uF 50V
C530	1-126-933-11	s	ELECT 100uF 20% 16V
C531	1-163-224-11	s	CERAMIC, CHIP 7PF 50V
C532	1-163-033-91	s	CERAMIC, CHIP 0.022uF 50V
C533	1-131-353-00	s	TANTALUM 10uF 10% 35V
C534	1-131-353-00	s	TANTALUM 10uF 10% 35V
C535	1-126-933-11	s	ELECT 100uF 20% 16V
C536	1-130-491-00	s	MYLAR 0.047uF 5% 50V
C537	1-163-033-91	s	CERAMIC, CHIP 0.022uF 50V
C538	1-163-227-11	s	CERAMIC, CHIP 10PF 5% 50V
C539	1-163-033-91	s	CERAMIC, CHIP 0.022uF 50V
C540	1-163-243-11	s	CERAMIC, CHIP 47PF 5% 50V
C541	1-163-033-91	s	CERAMIC, CHIP 0.022uF 50V
C542	1-163-033-91	s	CERAMIC, CHIP 0.022uF 50V
C543	1-163-033-91	s	CERAMIC, CHIP 0.022uF 50V
C544	1-163-033-91	s	CERAMIC, CHIP 0.022uF 50V
C545	1-163-227-11	s	CERAMIC, CHIP 10PF 5% 50V
C546	1-163-243-11	s	CERAMIC, CHIP 47PF 5% 50V
C547	1-163-033-91	s	CERAMIC, CHIP 0.022uF 50V
C548	1-163-033-91	s	CERAMIC, CHIP 0.022uF 50V
C549	1-163-033-91	s	CERAMIC, CHIP 0.022uF 50V
C550	1-163-222-11	s	CERAMIC, CHIP 5PF 50V
C551-555	1-163-033-91	s	CERAMIC, CHIP 0.022uF 50V
C556	1-126-925-11	s	ELECT 470uF 20% 10V
C557	1-126-925-11	s	ELECT 470uF 20% 10V
C558	1-163-033-91	s	CERAMIC, CHIP 0.022uF 50V
C559	1-163-033-91	s	CERAMIC, CHIP 0.022uF 50V
C600	1-163-227-11	s	CERAMIC, CHIP 10PF 5% 50V
C601	1-126-933-11	s	ELECT 100uF 20% 16V
C602	1-126-933-11	s	ELECT 100uF 20% 16V
C603	1-163-033-91	s	CERAMIC, CHIP 0.022uF 50V
C604	1-163-033-91	s	CERAMIC, CHIP 0.022uF 50V
C605	1-163-227-11	s	CERAMIC, CHIP 10PF 5% 50V
C606	1-163-251-11	s	CERAMIC, CHIP 100PF 5% 50V
C607	1-163-033-91	s	CERAMIC, CHIP 0.022uF 50V
C608	1-163-033-91	s	CERAMIC, CHIP 0.022uF 50V
C609	1-163-118-00	s	CERAMIC, CHIP 110PF 5% 50V
C610	1-163-033-91	s	CERAMIC, CHIP 0.022uF 50V
C611	1-163-033-91	s	CERAMIC, CHIP 0.022uF 50V
C614	1-126-933-11	s	ELECT 100uF 20% 16V
C615	1-163-033-91	s	CERAMIC, CHIP 0.022uF 50V
C616	1-126-933-11	s	ELECT 100uF 20% 16V
C617	1-126-933-11	s	ELECT 100uF 20% 16V
C618	1-163-033-91	s	CERAMIC, CHIP 0.022uF 50V
C619	1-163-033-91	s	CERAMIC, CHIP 0.022uF 50V
C620	1-163-033-91	s	CERAMIC, CHIP 0.022uF 50V
C621	1-163-231-11	s	CERAMIC, CHIP 15pF 5% 50V
C622	1-131-347-00	s	TANTALUM 1uF 10% 35V
C623	1-163-125-00	s	CERAMIC, CHIP 220PF 5% 50V
C624	1-131-347-00	s	TANTALUM 1uF 10% 35V
C625	1-131-347-00	s	TANTALUM 1uF 10% 35V
C626	1-131-347-00	s	TANTALUM 1uF 10% 35V
C627	1-126-933-11	s	ELECT 100uF 20% 16V
C628	1-163-033-91	s	CERAMIC, CHIP 0.022uF 50V
C629	1-163-033-91	s	CERAMIC, CHIP 0.022uF 50V
C630	1-163-033-91	s	CERAMIC, CHIP 0.022uF 50V
C631	1-130-491-00	s	MYLAR 0.047uF 5% 50V
C632	1-130-491-00	s	MYLAR 0.047uF 5% 50V
C633	1-163-033-91	s	CERAMIC, CHIP 0.022uF 50V

(VP-43 BOARD(UVW-1800))

Ref. No. or Q'ty	Part No.	SP	Description
C634	1-163-227-11	s	CERAMIC, CHIP 10PF 5% 50V
C635-645	1-163-033-91	s	CERAMIC, CHIP 0.022uF 50V
C646	1-126-933-11	s	ELECT 100uF 20% 16V
C647	1-163-033-91	s	CERAMIC, CHIP 0.022uF 50V
C648	1-126-933-11	s	ELECT 100uF 20% 16V
C649	1-126-933-11	s	ELECT 100uF 20% 16V
C651	1-163-033-91	s	CERAMIC, CHIP 0.022uF 50V
C652	1-163-033-91	s	CERAMIC, CHIP 0.022uF 50V
C653	1-163-243-11	s	CERAMIC, CHIP 47PF 5% 50V
C654	1-163-237-11	s	CERAMIC, CHIP 27PF 5% 50V
C655	1-163-237-11	s	CERAMIC, CHIP 27PF 5% 50V
C656	1-163-227-11	s	CERAMIC, CHIP 10PF 5% 50V
C657	1-163-033-91	s	CERAMIC, CHIP 0.022uF 50V
C658	1-163-245-11	s	CERAMIC, CHIP 56PF 5% 50V
C659	1-163-245-11	s	CERAMIC, CHIP 56PF 5% 50V
C660	1-163-237-11	s	CERAMIC, CHIP 27PF 5% 50V
C661	1-163-237-11	s	CERAMIC, CHIP 27PF 5% 50V
C662	1-163-033-91	s	CERAMIC, CHIP 0.022uF 50V
C663	1-163-033-91	s	CERAMIC, CHIP 0.022uF 50V
C664	1-163-033-91	s	CERAMIC, CHIP 0.022uF 50V
C665	1-163-224-11	s	CERAMIC, CHIP 7PF 50V
C667	1-163-033-91	s	CERAMIC, CHIP 0.022uF 50V
C668	1-163-033-91	s	CERAMIC, CHIP 0.022uF 50V
C669	1-163-033-91	s	CERAMIC, CHIP 0.022uF 50V
C670	1-163-033-91	s	CERAMIC, CHIP 0.022uF 50V
C671	1-126-933-11	s	ELECT 100uF 20% 16V
C701	1-126-933-11	s	ELECT 100uF 20% 16V
C702	1-126-933-11	s	ELECT 100uF 20% 16V
C703	1-163-033-91	s	CERAMIC, CHIP 0.022uF 50V
C704	1-163-033-91	s	CERAMIC, CHIP 0.022uF 50V
C705	1-163-231-11	s	CERAMIC, CHIP 15pF 5% 50V
C706	1-163-231-11	s	CERAMIC, CHIP 15pF 5% 50V
C707	1-163-243-11	s	CERAMIC, CHIP 47PF 5% 50V
C708	1-163-243-11	s	CERAMIC, CHIP 47PF 5% 50V
C709	1-163-227-11	s	CERAMIC, CHIP 10PF 5% 50V
C710	1-163-227-11	s	CERAMIC, CHIP 10PF 5% 50V
C711	1-163-231-11	s	CERAMIC, CHIP 15pF 5% 50V
C712	1-163-231-11	s	CERAMIC, CHIP 15pF 5% 50V
C713	1-126-933-11	s	ELECT 100uF 20% 16V
C714-719	1-163-033-91	s	CERAMIC, CHIP 0.022uF 50V
C720-724	1-126-933-11	s	ELECT 100uF 20% 16V
C725	1-131-353-00	s	TANTALUM 10uF 10% 35V
C726	1-163-033-91	s	CERAMIC, CHIP 0.022uF 50V
C727	1-130-475-00	s	MYLAR 0.0022uF 5% 50V
CN103	1-573-782-21	o	CONNECTOR, PHEC 60P, MALE
CN104	1-573-782-21	o	CONNECTOR, PHEC 60P, MALE
CN105	1-506-491-11	s	CONNECTOR 12P, MALE
D201	8-719-123-82	s	DIODE 1SS303-T1
D401	8-719-123-82	s	DIODE 1SS303-T1
D501	8-719-123-82	s	DIODE 1SS303-T1
D502	8-719-941-04	s	DIODE SB007-03CP
D503	8-719-021-31	s	DIODE UZM5.1B
D504	8-719-123-82	s	DIODE 1SS303-T1
D601	8-719-941-04	s	DIODE SB007-03CP
D701	8-719-123-85	s	DIODE 1SS304
DL101	1-415-154-00	s	DELAY LINE 35nS
DL301	1-415-546-11	s	DELAY LINE 50nS

(VP-43 BOARD(UVW-1800))

Ref. No. or Q'ty	Part No.	SP	Description
FL201	1-239-770-11	s	FILTER, LOW-PASS 4MHz
FL401	1-239-772-11	s	FILTER, LOW-PASS 3MHz
FL601	1-239-771-11	s	FILTER, LOW-PASS 6 MHz
IC101	8-752-052-75	s	IC CXA1479Q
IC102	8-759-300-71	s	IC HD14053BFP
IC103	8-759-908-92	s	IC TL084CNS
IC104	8-759-702-08	s	IC NJM360M
IC201	8-759-981-48	s	IC NJM082M
IC202	8-752-052-48	s	IC CXA1370Q
IC203	8-759-700-65	s	IC NJM79L05A
IC204	1-810-333-11	s	HIC BP-022
IC205	8-759-189-43	s	IC AN77L05-TA
IC301	8-752-052-75	s	IC CXA1479Q
IC302	8-759-300-71	s	IC HD14053BFP
IC303	8-759-908-92	s	IC TL084CNS
IC401	8-752-052-48	s	IC CXA1370Q
IC402	8-759-700-65	s	IC NJM79L05A
IC403	1-810-333-11	s	HIC BP-022
IC404	8-759-189-43	s	IC AN77L05-TA
IC501	8-759-927-46	s	IC SN74HC00ANS
IC502	8-759-908-92	s	IC TL084CNS
IC503	8-759-300-71	s	IC HD14053BFP
IC504	8-759-168-20	s	IC TA78L09S
IC505	8-759-700-65	s	IC NJM79L05A
IC506	8-759-908-92	s	IC TL084CNS
IC507	8-752-052-73	s	IC CXA1451M
IC508	8-752-052-73	s	IC CXA1451M
IC509	8-752-052-73	s	IC CXA1451M
IC510	8-752-052-73	s	IC CXA1451M
IC511	8-759-182-84	s	IC PQ05SZ5U
IC512	8-759-822-95	s	IC L79M05T-FA
IC601	8-759-907-81	s	IC SN74LS221NS
IC602	8-759-927-46	s	IC SN74HC00ANS
IC603	8-759-908-92	s	IC TL084CNS
IC604	8-759-300-71	s	IC HD14053BFP
IC605	8-759-908-92	s	IC TL084CNS
IC606	8-752-054-80	s	IC CXA1521M
IC607	8-752-054-80	s	IC CXA1521M
IC608	8-759-168-20	s	IC TA78L09S
IC609	8-759-906-59	s	IC CX22017
IC610	8-759-700-65	s	IC NJM79L05A
IC611	8-752-052-73	s	IC CXA1451M
IC612	8-759-262-00	s	IC MC14576CF
IC701	8-752-052-73	s	IC CXA1451M
IC702	8-752-052-73	s	IC CXA1451M
IC703	8-759-927-46	s	IC SN74HC00ANS
IC704	8-759-925-74	s	IC TC74HC04ANS
IC705	8-759-925-85	s	IC SN74HC32ANS
L101	1-410-482-31	s	INDUCTOR 100uH
L102	1-408-406-00	s	INDUCTOR 5.6uH
L103	1-408-406-00	s	INDUCTOR 5.6uH
L104	1-410-466-41	s	INDUCTOR 4.7uH
L105	1-410-482-31	s	INDUCTOR 100uH
L106	1-410-462-11	s	INDUCTOR 2.2uH
L107	1-410-482-31	s	INDUCTOR 100uH
L108	1-410-482-31	s	INDUCTOR 100uH
L109	1-408-621-31	s	INDUCTOR 330uH
L110	1-410-482-31	s	INDUCTOR 100uH

(VP-43 BOARD(UVW-1800))

Ref. No. or Q'ty	Part No.	SP	Description
L201	1-410-471-11	s	INDUCTOR 12uH
L202	1-410-482-31	s	INDUCTOR 100uH
L203	1-410-468-11	s	INDUCTOR 6.8uH
L204	1-410-478-11	s	INDUCTOR 47uH
L205	1-410-482-31	s	INDUCTOR 100uH
L206	1-410-482-31	s	INDUCTOR 100uH
L207	1-410-482-31	s	INDUCTOR 100uH
L301	1-410-482-31	s	INDUCTOR 100uH
L302	1-410-468-11	s	INDUCTOR 6.8uH
L303	1-410-468-11	s	INDUCTOR 6.8uH
L304	1-408-429-00	s	INDUCTOR 470uH
L305	1-408-429-00	s	INDUCTOR 470uH
L306	1-408-406-00	s	INDUCTOR 5.6uH
L307	1-410-482-31	s	INDUCTOR 100uH
L308	1-410-462-11	s	INDUCTOR 2.2uH
L309	1-408-621-31	s	INDUCTOR 330uH
L310	1-410-482-31	s	INDUCTOR 100uH
L311	1-410-482-31	s	INDUCTOR 100uH
L312	1-410-482-31	s	INDUCTOR 100uH
L401	1-410-471-11	s	INDUCTOR 12uH
L402	1-410-482-31	s	INDUCTOR 100uH
L403	1-408-408-00	s	INDUCTOR 8.2uH
L404	1-410-482-31	s	INDUCTOR 100uH
L405	1-410-482-31	s	INDUCTOR 100uH
L406	1-410-482-31	s	INDUCTOR 100uH
L501	1-410-482-31	s	INDUCTOR 100uH
L502	1-410-482-31	s	INDUCTOR 100uH
L503	1-410-482-31	s	INDUCTOR 100uH
L505	1-410-482-31	s	INDUCTOR 100uH
L506	1-410-482-31	s	INDUCTOR 100uH
L507	1-408-419-00	s	INDUCTOR 68uH
L508	1-410-478-11	s	INDUCTOR 47uH
L509	1-410-476-11	s	INDUCTOR 33uH
L601-609	1-410-482-31	s	INDUCTOR 100uH
L610	1-410-478-11	s	INDUCTOR 47uH
L611	1-410-478-11	s	INDUCTOR 47uH
L612	1-410-478-11	s	INDUCTOR 47uH
L613	1-410-478-11	s	INDUCTOR 47uH
L614	1-408-413-00	s	INDUCTOR 22uH
L701	1-410-482-31	s	INDUCTOR 100uH
L702	1-410-482-31	s	INDUCTOR 100uH
L703	1-410-476-11	s	INDUCTOR 33uH
L704	1-410-476-11	s	INDUCTOR 33uH
L705	1-410-482-31	s	INDUCTOR 100uH
L706-710	1-412-533-21	s	INDUCTOR 47uH
Q101	8-729-117-32	s	TRANSISTOR 2SC4177
Q102	8-729-117-72	s	TRANSISTOR 2SC4178
Q103	8-729-143-07	s	TRANSISTOR 2SA1610-YY33
Q104	8-729-117-72	s	TRANSISTOR 2SC4178
Q105	8-729-117-72	s	TRANSISTOR 2SC4178
Q106	8-729-143-07	s	TRANSISTOR 2SA1610-YY33
Q107-111	8-729-117-72	s	TRANSISTOR 2SC4178
Q112	8-729-905-18	s	TRANSISTOR DTC144EU
Q201	8-729-117-72	s	TRANSISTOR 2SC4178
Q202	8-729-143-07	s	TRANSISTOR 2SA1610-YY33
Q203	8-729-117-72	s	TRANSISTOR 2SC4178
Q204	8-729-117-72	s	TRANSISTOR 2SC4178
Q205	8-729-143-07	s	TRANSISTOR 2SA1610-YY33
Q206	8-729-143-07	s	TRANSISTOR 2SA1610-YY33

(VP-43 BOARD(UVW-1800))

Ref. No. or Q'ty	Part No.	SP	Description
Q207	8-729-117-72	s	TRANSISTOR 2SC4178
Q208	8-729-143-07	s	TRANSISTOR 2SA1610-YY33
Q209	8-729-143-07	s	TRANSISTOR 2SA1610-YY33
Q210	8-729-117-72	s	TRANSISTOR 2SC4178
Q211	8-729-117-72	s	TRANSISTOR 2SC4178
Q212	8-729-117-72	s	TRANSISTOR 2SC4178
Q213	8-729-143-07	s	TRANSISTOR 2SA1610-YY33
Q214	8-729-143-07	s	TRANSISTOR 2SA1610-YY33
Q215	8-729-117-72	s	TRANSISTOR 2SC4178
Q216	8-729-905-12	s	TRANSISTOR DTA144EU
Q217	8-729-117-72	s	TRANSISTOR 2SC4178
Q218	8-729-143-07	s	TRANSISTOR 2SA1610-YY33
Q219	8-729-117-72	s	TRANSISTOR 2SC4178
Q220	8-729-143-07	s	TRANSISTOR 2SA1610-YY33
Q301	8-729-117-32	s	TRANSISTOR 2SC4177
Q302	8-729-117-72	s	TRANSISTOR 2SC4178
Q303	8-729-117-72	s	TRANSISTOR 2SC4178
Q304	8-729-143-07	s	TRANSISTOR 2SA1610-YY33
Q305	8-729-117-72	s	TRANSISTOR 2SC4178
Q306	8-729-143-07	s	TRANSISTOR 2SA1610-YY33
Q307-311	8-729-117-72	s	TRANSISTOR 2SC4178
Q401	8-729-117-72	s	TRANSISTOR 2SC4178
Q402	8-729-143-07	s	TRANSISTOR 2SA1610-YY33
Q403	8-729-117-72	s	TRANSISTOR 2SC4178
Q404	8-729-117-72	s	TRANSISTOR 2SC4178
Q405	8-729-143-07	s	TRANSISTOR 2SA1610-YY33
Q406	8-729-143-07	s	TRANSISTOR 2SA1610-YY33
Q407	8-729-117-72	s	TRANSISTOR 2SC4178
Q408	8-729-117-72	s	TRANSISTOR 2SC4178
Q409	8-729-117-72	s	TRANSISTOR 2SC4178
Q410	8-729-117-72	s	TRANSISTOR 2SC4178
Q411	8-729-143-07	s	TRANSISTOR 2SA1610-YY33
Q412	8-729-143-07	s	TRANSISTOR 2SA1610-YY33
Q413	8-729-117-72	s	TRANSISTOR 2SC4178
Q414	8-729-143-07	s	TRANSISTOR 2SA1610-YY33
Q415	8-729-143-07	s	TRANSISTOR 2SA1610-YY33
Q416	8-729-905-12	s	TRANSISTOR DTA144EU
Q417	8-729-117-72	s	TRANSISTOR 2SC4178
Q418	8-729-143-07	s	TRANSISTOR 2SA1610-YY33
Q501	8-729-117-32	s	TRANSISTOR 2SC4177
Q502	8-729-923-06	s	TRANSISTOR FMW8
Q503	8-729-904-04	s	TRANSISTOR FMS2
Q504	8-729-903-82	s	TRANSISTOR FMW2
Q505	8-729-143-14	s	TRANSISTOR 2SC4176-B35
Q506	8-729-140-63	s	TRANSISTOR 2SA1611-M5M6
Q507	8-729-931-46	s	TRANSISTOR FMW7
Q508	8-729-907-26	s	TRANSISTOR IMX1
Q509	8-729-117-32	s	TRANSISTOR 2SC4177
Q510	8-729-140-63	s	TRANSISTOR 2SA1611-M5M6
Q511	8-729-117-32	s	TRANSISTOR 2SC4177
Q512	8-729-117-32	s	TRANSISTOR 2SC4177
Q513	8-729-117-32	s	TRANSISTOR 2SC4177
Q514	8-729-904-41	s	TRANSISTOR FMY3
Q515	8-729-143-14	s	TRANSISTOR 2SC4176-B35
Q516	8-729-117-32	s	TRANSISTOR 2SC4177
Q517	8-729-904-41	s	TRANSISTOR FMY3
Q601	8-729-117-32	s	TRANSISTOR 2SC4177
Q602	8-729-117-32	s	TRANSISTOR 2SC4177
Q603	8-729-923-06	s	TRANSISTOR FMW8

(VP-43 BOARD(UVW-1800))

Ref. No. or Q'ty	Part No.	SP	Description
Q604	8-729-923-06	s	TRANSISTOR FMW8
Q605	8-729-904-04	s	TRANSISTOR FMS2
Q606	8-729-904-04	s	TRANSISTOR FMS2
Q607	8-729-903-82	s	TRANSISTOR FMW2
Q608	8-729-903-82	s	TRANSISTOR FMW2
Q609	8-729-907-26	s	TRANSISTOR IMX1
Q610	8-729-907-26	s	TRANSISTOR IMX1
Q611	8-729-931-46	s	TRANSISTOR FMW7
Q612	8-729-931-46	s	TRANSISTOR FMW7
Q613	8-729-143-14	s	TRANSISTOR 2SC4176-B35
Q614	8-729-140-63	s	TRANSISTOR 2SA1611-M5M6
Q615	8-729-117-32	s	TRANSISTOR 2SC4177
Q616	8-729-140-63	s	TRANSISTOR 2SA1611-M5M6
Q617-626	8-729-117-32	s	TRANSISTOR 2SC4177
Q627	8-729-143-14	s	TRANSISTOR 2SC4176-B35
Q628	8-729-117-32	s	TRANSISTOR 2SC4177
Q701	8-729-117-32	s	TRANSISTOR 2SC4177
Q702	8-729-117-32	s	TRANSISTOR 2SC4177
Q703	8-729-140-63	s	TRANSISTOR 2SA1611-M5M6
Q704	8-729-140-63	s	TRANSISTOR 2SA1611-M5M6
Q705	8-729-117-32	s	TRANSISTOR 2SC4177
Q706	8-729-117-32	s	TRANSISTOR 2SC4177
Q707	8-729-117-32	s	TRANSISTOR 2SC4177
Q708	8-729-117-32	s	TRANSISTOR 2SC4177
Q709	8-729-422-44	s	TRANSISTOR 2SK663
Q710	8-729-422-44	s	TRANSISTOR 2SK663
Q711	8-729-422-44	s	TRANSISTOR 2SK663
Q712	8-729-422-44	s	TRANSISTOR 2SK663
Q713	8-729-140-63	s	TRANSISTOR 2SA1611-M5M6
Q714	8-729-140-63	s	TRANSISTOR 2SA1611-M5M6
R101	1-216-295-91	s	RES, CHIP 0
R102	1-216-295-91	s	RES, CHIP 0
R103	1-216-638-11	s	METAL, CHIP 300 0.5% 1/10W
R104	1-216-638-11	s	METAL, CHIP 300 0.5% 1/10W
R105	1-216-025-91	s	METAL, CHIP 100 5% 1/10W
R106	1-216-057-00	s	METAL, CHIP 2.2K 5% 1/10W
R107	1-216-295-91	s	RES, CHIP 0
R108	1-216-025-91	s	METAL, CHIP 100 5% 1/10W
R109	1-216-025-91	s	METAL, CHIP 100 5% 1/10W
R110	1-216-049-91	s	METAL, CHIP 1k 5% 1/10W
R111	1-216-025-91	s	METAL, CHIP 100 5% 1/10W
R112	1-216-065-00	s	METAL, CHIP 4.7K 5% 1/10W
R113	1-216-025-91	s	METAL, CHIP 100 5% 1/10W
R114	1-216-057-00	s	METAL, CHIP 2.2K 5% 1/10W
R115	1-216-025-91	s	METAL, CHIP 100 5% 1/10W
R116	1-216-073-00	s	METAL, CHIP 10K 5% 1/10W
R117	1-216-073-00	s	METAL, CHIP 10K 5% 1/10W
R118	1-216-025-91	s	METAL, CHIP 100 5% 1/10W
R119	1-216-057-00	s	METAL, CHIP 2.2K 5% 1/10W
R120	1-216-638-11	s	METAL, CHIP 300 0.5% 1/10W
R121	1-216-065-00	s	METAL, CHIP 4.7K 5% 1/10W
R122	1-216-638-11	s	METAL, CHIP 300 0.5% 1/10W
R123	1-216-025-91	s	METAL, CHIP 100 5% 1/10W
R124	1-216-049-91	s	METAL, CHIP 1k 5% 1/10W
R125	1-216-065-00	s	METAL, CHIP 4.7K 5% 1/10W
R126	1-216-049-91	s	METAL, CHIP 1k 5% 1/10W
R127	1-216-073-00	s	METAL, CHIP 10K 5% 1/10W
R128	1-216-097-91	s	METAL, CHIP 100k 5% 1/10W
R129	1-216-025-91	s	METAL, CHIP 100 5% 1/10W

(VP-43 BOARD(UVW-1800))

Ref. No. or Q'ty	Part No.	SP	Description
R130	1-216-025-91	s	METAL, CHIP 100 5% 1/10W
R131	1-208-775-11	s	METAL, CHIP 510 0.5% 1/10W
R132	1-208-774-11	s	METAL, CHIP 470 0.5% 1/10W
R133	1-216-041-00	s	METAL, CHIP 470 5% 1/10W
R134	1-208-774-11	s	METAL, CHIP 470 0.5% 1/10W
R135	1-216-025-91	s	METAL, CHIP 100 5% 1/10W
R136	1-208-822-11	s	METAL, CHIP 47k 0.5% 1/10W
R137	1-216-659-11	s	METAL, CHIP 2.2K 0.5% 1/10W
R138	1-216-065-00	s	METAL, CHIP 4.7K 5% 1/10W
R139	1-216-073-00	s	METAL, CHIP 10K 5% 1/10W
R140	1-216-025-91	s	METAL, CHIP 100 5% 1/10W
R141	1-216-073-00	s	METAL, CHIP 10K 5% 1/10W
R142	1-216-081-00	s	METAL, CHIP 22K 5% 1/10W
R143	1-216-041-00	s	METAL, CHIP 470 5% 1/10W
R144	1-216-635-11	s	METAL, CHIP 220 0.5% 1/10W
R145	1-216-037-00	s	METAL, CHIP 330 5% 1/10W
R146	1-216-037-00	s	METAL, CHIP 330 5% 1/10W
R147	1-216-065-00	s	METAL, CHIP 4.7K 5% 1/10W
R148	1-216-065-00	s	METAL, CHIP 4.7K 5% 1/10W
R149	1-216-651-11	s	METAL, CHIP 1K 0.5% 1/10W
R150	1-216-659-11	s	METAL, CHIP 2.2K 0.5% 1/10W
R151	1-216-025-91	s	METAL, CHIP 100 5% 1/10W
R152	1-216-057-00	s	METAL, CHIP 2.2K 5% 1/10W
R153	1-216-057-00	s	METAL, CHIP 2.2K 5% 1/10W
R154	1-216-037-00	s	METAL, CHIP 330 5% 1/10W
R155	1-216-041-00	s	METAL, CHIP 470 5% 1/10W
R156	1-216-035-00	s	METAL, CHIP 270 5% 1/10W
R157	1-216-037-00	s	METAL, CHIP 330 5% 1/10W
R158	1-216-065-00	s	METAL, CHIP 4.7K 5% 1/10W
R159	1-216-077-00	s	METAL, CHIP 15K 5% 1/10W
R160	1-216-085-00	s	METAL, CHIP 33K 5% 1/10W
R161	1-216-073-00	s	METAL, CHIP 10K 5% 1/10W
R162	1-216-073-00	s	METAL, CHIP 10K 5% 1/10W
R163	1-208-806-11	s	METAL, CHIP 10k 0.5% 1/10W
R164	1-216-661-11	s	METAL, CHIP 2.7K 0.5% 1/10W
R165	1-216-065-00	s	METAL, CHIP 4.7K 5% 1/10W
R166	1-216-037-00	s	METAL, CHIP 330 5% 1/10W
R168	1-216-295-91	s	RES, CHIP 0
R169	1-216-295-91	s	RES, CHIP 0
R170	1-216-667-11	s	METAL, CHIP 4.7K 0.5% 1/10W
R201	1-208-806-11	s	METAL, CHIP 10k 0.5% 1/10W
R202	1-208-806-11	s	METAL, CHIP 10k 0.5% 1/10W
R203	1-208-806-11	s	METAL, CHIP 10k 0.5% 1/10W
R204	1-208-823-11	s	METAL, CHIP 51k 0.5% 1/10W
R205	1-216-650-11	s	METAL, CHIP 910 0.5% 1/10W
R206	1-216-049-91	s	METAL, CHIP 1k 5% 1/10W
R207	1-216-025-91	s	METAL, CHIP 100 5% 1/10W
R208	1-216-025-91	s	METAL, CHIP 100 5% 1/10W
R209	1-216-639-11	s	METAL, CHIP 330 0.5% 1/10W
R210	1-216-057-00	s	METAL, CHIP 2.2K 5% 1/10W
R211	1-216-651-11	s	METAL, CHIP 1K 0.5% 1/10W
R212	1-216-025-91	s	METAL, CHIP 100 5% 1/10W
R213	1-216-639-11	s	METAL, CHIP 330 0.5% 1/10W
R214	1-216-065-00	s	METAL, CHIP 4.7K 5% 1/10W
R215	1-216-651-11	s	METAL, CHIP 1K 0.5% 1/10W
R216	1-216-673-11	s	METAL, CHIP 8.2K 0.5% 1/10W
R217	1-208-784-11	s	METAL, CHIP 1.2k 0.5% 1/10W
R218	1-216-073-00	s	METAL, CHIP 10K 5% 1/10W
R219	1-216-073-00	s	METAL, CHIP 10K 5% 1/10W

(VP-43 BOARD(UVW-1800))

Ref. No. or Q'ty	Part No.	SP	Description
R220	1-216-025-91	s	METAL, CHIP 100 5% 1/10W
R221	1-216-025-91	s	METAL, CHIP 100 5% 1/10W
R222	1-216-065-00	s	METAL, CHIP 4.7K 5% 1/10W
R223	1-216-025-91	s	METAL, CHIP 100 5% 1/10W
R224	1-216-049-91	s	METAL, CHIP 1k 5% 1/10W
R225	1-216-049-91	s	METAL, CHIP 1k 5% 1/10W
R226	1-216-063-91	s	METAL, CHIP 3.9k 5% 1/10W
R227	1-216-065-00	s	METAL, CHIP 4.7K 5% 1/10W
R228	1-216-025-91	s	METAL, CHIP 100 5% 1/10W
R229	1-216-055-00	s	METAL, CHIP 1.8K 5% 1/10W
R230	1-216-025-91	s	METAL, CHIP 100 5% 1/10W
R231	1-216-049-91	s	METAL, CHIP 1k 5% 1/10W
R232	1-216-025-91	s	METAL, CHIP 100 5% 1/10W
R233	1-216-055-00	s	METAL, CHIP 1.8K 5% 1/10W
R234	1-216-057-00	s	METAL, CHIP 2.2K 5% 1/10W
R235	1-216-057-00	s	METAL, CHIP 2.2K 5% 1/10W
R236	1-216-025-91	s	METAL, CHIP 100 5% 1/10W
R237	1-216-065-00	s	METAL, CHIP 4.7K 5% 1/10W
R238	1-216-065-00	s	METAL, CHIP 4.7K 5% 1/10W
R239	1-216-025-91	s	METAL, CHIP 100 5% 1/10W
R240	1-216-655-11	s	METAL, CHIP 1.5K 0.5% 1/10W
R241	1-216-663-11	s	METAL, CHIP 3.3K 0.5% 1/10W
R242	1-216-049-91	s	METAL, CHIP 1k 5% 1/10W
R243	1-216-063-91	s	METAL, CHIP 3.9k 5% 1/10W
R244	1-216-646-11	s	METAL, CHIP 620 0.5% 1/10W
R245	1-216-673-11	s	METAL, CHIP 8.2K 0.5% 1/10W
R246	1-216-057-00	s	METAL, CHIP 2.2K 5% 1/10W
R247	1-216-667-11	s	METAL, CHIP 4.7K 0.5% 1/10W
R248	1-208-799-11	s	METAL, CHIP 5.1k 0.5% 1/10W
R249	1-216-057-00	s	METAL, CHIP 2.2K 5% 1/10W
R250	1-216-113-00	s	METAL, CHIP 470K 5% 1/10W
R251	1-216-667-11	s	METAL, CHIP 4.7K 0.5% 1/10W
R253	1-208-817-11	s	METAL, CHIP 30k 0.5% 1/10W
R255	1-216-652-11	s	METAL, CHIP 1.1K 0.5% 1/10W
R256	1-216-025-91	s	METAL, CHIP 100 5% 1/10W
R257	1-216-638-11	s	METAL, CHIP 300 0.5% 1/10W
R258	1-216-665-11	s	METAL, CHIP 3.9K 0.5% 1/10W
R259	1-216-671-11	s	METAL, CHIP 6.8K 0.5% 1/10W
R260	1-216-687-11	s	METAL, CHIP 33K 0.5% 1/10W
R262	1-216-685-11	s	METAL, CHIP 27K 0.5% 1/10W
R263	1-216-073-00	s	METAL, CHIP 10K 5% 1/10W
R264	1-216-025-91	s	METAL, CHIP 100 5% 1/10W
R265	1-216-041-00	s	METAL, CHIP 470 5% 1/10W
R266	1-216-638-11	s	METAL, CHIP 300 0.5% 1/10W
R267	1-216-037-00	s	METAL, CHIP 330 5% 1/10W
R268	1-216-057-00	s	METAL, CHIP 2.2K 5% 1/10W
R269	1-216-041-00	s	METAL, CHIP 470 5% 1/10W
R270	1-216-638-11	s	METAL, CHIP 300 0.5% 1/10W
R271	1-216-049-91	s	METAL, CHIP 1k 5% 1/10W
R272	1-208-751-11	s	METAL, CHIP 51 0.5% 1/10W
R273	1-216-037-00	s	METAL, CHIP 330 5% 1/10W
R274	1-216-295-91	s	RES, CHIP 0
R275	1-216-089-91	s	METAL, CHIP 47k 5% 1/10W
R276	1-216-057-00	s	METAL, CHIP 2.2K 5% 1/10W
R278	1-216-025-91	s	METAL, CHIP 100 5% 1/10W
R301	1-216-629-11	s	METAL, CHIP 120 0.5% 1/10W
R302	1-216-629-11	s	METAL, CHIP 120 0.5% 1/10W
R303	1-216-633-11	s	METAL, CHIP 180 0.5% 1/10W
R304	1-216-633-11	s	METAL, CHIP 180 0.5% 1/10W

(VP-43 BOARD(UVW-1800))

Ref. No. or Q'ty	Part No.	SP	Description
R305	1-216-025-91	s	METAL, CHIP 100 5% 1/10W
R306	1-216-049-91	s	METAL, CHIP 1k 5% 1/10W
R307	1-216-025-91	s	METAL, CHIP 100 5% 1/10W
R308	1-216-065-00	s	METAL, CHIP 4.7K 5% 1/10W
R309	1-216-025-91	s	METAL, CHIP 100 5% 1/10W
R310	1-216-025-91	s	METAL, CHIP 100 5% 1/10W
R311	1-216-057-00	s	METAL, CHIP 2.2K 5% 1/10W
R312	1-216-025-91	s	METAL, CHIP 100 5% 1/10W
R313	1-216-057-00	s	METAL, CHIP 2.2K 5% 1/10W
R314	1-216-073-00	s	METAL, CHIP 10K 5% 1/10W
R315	1-216-638-11	s	METAL, CHIP 300 0.5% 1/10W
R316	1-216-073-00	s	METAL, CHIP 10K 5% 1/10W
R317	1-216-025-91	s	METAL, CHIP 100 5% 1/10W
R318	1-216-638-11	s	METAL, CHIP 300 0.5% 1/10W
R319	1-216-065-00	s	METAL, CHIP 4.7K 5% 1/10W
R320	1-216-065-00	s	METAL, CHIP 4.7K 5% 1/10W
R321	1-216-049-91	s	METAL, CHIP 1k 5% 1/10W
R322	1-216-651-11	s	METAL, CHIP 1K 0.5% 1/10W
R323	1-216-049-91	s	METAL, CHIP 1k 5% 1/10W
R324	1-216-025-91	s	METAL, CHIP 100 5% 1/10W
R325	1-208-775-11	s	METAL, CHIP 510 0.5% 1/10W
R326	1-208-774-11	s	METAL, CHIP 470 0.5% 1/10W
R327	1-216-041-00	s	METAL, CHIP 470 5% 1/10W
R328	1-216-073-00	s	METAL, CHIP 10K 5% 1/10W
R329	1-216-097-91	s	METAL, CHIP 100k 5% 1/10W
R330	1-216-639-11	s	METAL, CHIP 330 0.5% 1/10W
R331	1-216-025-91	s	METAL, CHIP 100 5% 1/10W
R332	1-216-065-00	s	METAL, CHIP 4.7K 5% 1/10W
R333	1-216-073-00	s	METAL, CHIP 10K 5% 1/10W
R334	1-216-025-91	s	METAL, CHIP 100 5% 1/10W
R335	1-216-073-00	s	METAL, CHIP 10K 5% 1/10W
R336	1-216-635-11	s	METAL, CHIP 220 0.5% 1/10W
R337	1-216-041-00	s	METAL, CHIP 470 5% 1/10W
R338	1-216-037-00	s	METAL, CHIP 330 5% 1/10W
R339	1-216-037-00	s	METAL, CHIP 330 5% 1/10W
R340	1-216-065-00	s	METAL, CHIP 4.7K 5% 1/10W
R341	1-216-065-00	s	METAL, CHIP 4.7K 5% 1/10W
R342	1-216-651-11	s	METAL, CHIP 1K 0.5% 1/10W
R343	1-208-784-11	s	METAL, CHIP 1.2k 0.5% 1/10W
R344	1-216-037-00	s	METAL, CHIP 330 5% 1/10W
R345	1-216-041-00	s	METAL, CHIP 470 5% 1/10W
R346	1-216-037-00	s	METAL, CHIP 330 5% 1/10W
R347	1-216-619-11	s	METAL, CHIP 47 0.5% 1/10W
R348	1-216-057-00	s	METAL, CHIP 2.2K 5% 1/10W
R349	1-216-025-91	s	METAL, CHIP 100 5% 1/10W
R350	1-216-065-00	s	METAL, CHIP 4.7K 5% 1/10W
R351	1-216-057-00	s	METAL, CHIP 2.2K 5% 1/10W
R352	1-216-077-00	s	METAL, CHIP 15K 5% 1/10W
R353	1-216-085-00	s	METAL, CHIP 33K 5% 1/10W
R354	1-216-073-00	s	METAL, CHIP 10K 5% 1/10W
R355	1-216-073-00	s	METAL, CHIP 10K 5% 1/10W
R356	1-208-806-11	s	METAL, CHIP 10k 0.5% 1/10W
R357	1-216-661-11	s	METAL, CHIP 2.7K 0.5% 1/10W
R358	1-216-065-00	s	METAL, CHIP 4.7K 5% 1/10W
R359	1-216-037-00	s	METAL, CHIP 330 5% 1/10W
R401	1-216-025-91	s	METAL, CHIP 100 5% 1/10W
R402	1-216-025-91	s	METAL, CHIP 100 5% 1/10W
R403	1-216-639-11	s	METAL, CHIP 330 0.5% 1/10W
R404	1-216-057-00	s	METAL, CHIP 2.2K 5% 1/10W

(VP-43 BOARD(UVW-1800))

Ref. No. or Q'ty	Part No.	SP	Description
R405	1-216-639-11	s	METAL, CHIP 330 0.5% 1/10W
R406	1-216-025-91	s	METAL, CHIP 100 5% 1/10W
R407	1-216-065-00	s	METAL, CHIP 4.7K 5% 1/10W
R408	1-216-025-91	s	METAL, CHIP 100 5% 1/10W
R409	1-216-065-00	s	METAL, CHIP 4.7K 5% 1/10W
R410	1-216-651-11	s	METAL, CHIP 1K 0.5% 1/10W
R411	1-216-025-91	s	METAL, CHIP 100 5% 1/10W
R412	1-216-055-00	s	METAL, CHIP 1.8K 5% 1/10W
R413	1-216-025-91	s	METAL, CHIP 100 5% 1/10W
R414	1-216-673-11	s	METAL, CHIP 8.2K 0.5% 1/10W
R415	1-208-774-11	s	METAL, CHIP 470 0.5% 1/10W
R416	1-216-025-91	s	METAL, CHIP 100 5% 1/10W
R417	1-216-055-00	s	METAL, CHIP 1.8K 5% 1/10W
R418	1-208-784-11	s	METAL, CHIP 1.2k 0.5% 1/10W
R419	1-216-065-00	s	METAL, CHIP 4.7K 5% 1/10W
R420	1-216-651-11	s	METAL, CHIP 1K 0.5% 1/10W
R421	1-216-649-11	s	METAL, CHIP 820 0.5% 1/10W
R422	1-216-664-11	s	METAL, CHIP 3.6K 0.5% 1/10W
R423	1-216-073-00	s	METAL, CHIP 10K 5% 1/10W
R424	1-216-073-00	s	METAL, CHIP 10K 5% 1/10W
R425	1-216-025-91	s	METAL, CHIP 100 5% 1/10W
R426	1-208-806-11	s	METAL, CHIP 10k 0.5% 1/10W
R427	1-216-065-00	s	METAL, CHIP 4.7K 5% 1/10W
R428	1-216-025-91	s	METAL, CHIP 100 5% 1/10W
R429	1-216-057-00	s	METAL, CHIP 2.2K 5% 1/10W
R430	1-216-049-91	s	METAL, CHIP 1k 5% 1/10W
R431	1-216-063-91	s	METAL, CHIP 3.9k 5% 1/10W
R432	1-216-049-91	s	METAL, CHIP 1k 5% 1/10W
R433	1-216-057-00	s	METAL, CHIP 2.2K 5% 1/10W
R434	1-216-057-00	s	METAL, CHIP 2.2K 5% 1/10W
R435	1-216-025-91	s	METAL, CHIP 100 5% 1/10W
R436	1-216-025-91	s	METAL, CHIP 100 5% 1/10W
R437	1-216-065-00	s	METAL, CHIP 4.7K 5% 1/10W
R438	1-216-049-91	s	METAL, CHIP 1k 5% 1/10W
R439	1-216-063-91	s	METAL, CHIP 3.9k 5% 1/10W
R440	1-216-665-11	s	METAL, CHIP 3.9K 0.5% 1/10W
R441	1-208-801-11	s	METAL, CHIP 6.2k 0.5% 1/10W
R442	1-216-057-00	s	METAL, CHIP 2.2K 5% 1/10W
R443	1-216-113-00	s	METAL, CHIP 470K 5% 1/10W
R444	1-216-671-11	s	METAL, CHIP 6.8K 0.5% 1/10W
R445	1-216-119-00	s	METAL, CHIP 820K 5% 1/10W
R446	1-216-687-11	s	METAL, CHIP 33K 0.5% 1/10W
R447	1-208-814-11	s	METAL, CHIP 22k 0.5% 1/10W
R448	1-216-651-11	s	METAL, CHIP 1K 0.5% 1/10W
R449	1-216-025-91	s	METAL, CHIP 100 5% 1/10W
R450	1-216-639-11	s	METAL, CHIP 330 0.5% 1/10W
R451	1-216-665-11	s	METAL, CHIP 3.9K 0.5% 1/10W
R452	1-216-671-11	s	METAL, CHIP 6.8K 0.5% 1/10W
R453	1-216-689-11	s	METAL, CHIP 39K 0.5% 1/10W
R454	1-216-121-91	s	METAL, CHIP 1M 5% 1/10W
R455	1-216-685-11	s	METAL, CHIP 27K 0.5% 1/10W
R456	1-216-073-00	s	METAL, CHIP 10K 5% 1/10W
R457	1-216-025-91	s	METAL, CHIP 100 5% 1/10W
R458	1-216-041-00	s	METAL, CHIP 470 5% 1/10W
R459	1-216-638-11	s	METAL, CHIP 300 0.5% 1/10W
R460	1-216-049-91	s	METAL, CHIP 1k 5% 1/10W
R461	1-208-751-11	s	METAL, CHIP 51 0.5% 1/10W
R462	1-216-037-00	s	METAL, CHIP 330 5% 1/10W
R463	1-216-057-00	s	METAL, CHIP 2.2K 5% 1/10W

(VP-43 BOARD(UVW-1800))

Ref. No. or Q'ty	Part No.	SP	Description
R464	1-216-089-91	s	METAL, CHIP 47k 5% 1/10W
R501	1-216-081-00	s	METAL, CHIP 22K 5% 1/10W
R502	1-216-049-91	s	METAL, CHIP 1k 5% 1/10W
R503	1-216-049-91	s	METAL, CHIP 1k 5% 1/10W
R504	1-216-049-91	s	METAL, CHIP 1k 5% 1/10W
R505	1-216-049-91	s	METAL, CHIP 1k 5% 1/10W
R506	1-216-057-00	s	METAL, CHIP 2.2K 5% 1/10W
R507	1-216-049-91	s	METAL, CHIP 1k 5% 1/10W
R508	1-216-121-91	s	METAL, CHIP 1M 5% 1/10W
R509	1-216-049-91	s	METAL, CHIP 1k 5% 1/10W
R510	1-216-049-91	s	METAL, CHIP 1k 5% 1/10W
R511	1-216-033-00	s	METAL, CHIP 220 5% 1/10W
R512	1-216-065-00	s	METAL, CHIP 4.7K 5% 1/10W
R513	1-216-045-00	s	METAL, CHIP 680 5% 1/10W
R514	1-216-065-00	s	METAL, CHIP 4.7K 5% 1/10W
R515	1-216-077-00	s	METAL, CHIP 15K 5% 1/10W
R516	1-216-049-91	s	METAL, CHIP 1k 5% 1/10W
R517	1-216-033-00	s	METAL, CHIP 220 5% 1/10W
R518	1-216-049-91	s	METAL, CHIP 1k 5% 1/10W
R519	1-216-073-00	s	METAL, CHIP 10K 5% 1/10W
R520	1-216-049-91	s	METAL, CHIP 1k 5% 1/10W
R521	1-216-017-91	s	METAL, CHIP 47 5% 1/10W
R522	1-216-027-00	s	METAL, CHIP 120 5% 1/10W
R523	1-216-081-00	s	METAL, CHIP 22K 5% 1/10W
R524	1-216-081-00	s	METAL, CHIP 22K 5% 1/10W
R525	1-216-081-00	s	METAL, CHIP 22K 5% 1/10W
R526	1-216-049-91	s	METAL, CHIP 1k 5% 1/10W
R527	1-216-647-11	s	METAL, CHIP 680 0.5% 1/10W
R528	1-216-057-00	s	METAL, CHIP 2.2K 5% 1/10W
R529	1-216-659-11	s	METAL, CHIP 2.2K 0.5% 1/10W
R530	1-216-651-11	s	METAL, CHIP 1K 0.5% 1/10W
R531	1-216-025-91	s	METAL, CHIP 100 5% 1/10W
R532	1-216-041-00	s	METAL, CHIP 470 5% 1/10W
R533	1-216-025-91	s	METAL, CHIP 100 5% 1/10W
R534	1-216-041-00	s	METAL, CHIP 470 5% 1/10W
R535	1-216-041-00	s	METAL, CHIP 470 5% 1/10W
R536	1-216-049-91	s	METAL, CHIP 1k 5% 1/10W
R537	1-216-041-00	s	METAL, CHIP 470 5% 1/10W
R538	1-216-651-11	s	METAL, CHIP 1K 0.5% 1/10W
R539	1-208-784-11	s	METAL, CHIP 1.2k 0.5% 1/10W
R540	1-216-057-00	s	METAL, CHIP 2.2K 5% 1/10W
R541	1-216-651-11	s	METAL, CHIP 1K 0.5% 1/10W
R542	1-216-057-00	s	METAL, CHIP 2.2K 5% 1/10W
R543	1-216-057-00	s	METAL, CHIP 2.2K 5% 1/10W
R544	1-216-049-91	s	METAL, CHIP 1k 5% 1/10W
R545	1-216-049-91	s	METAL, CHIP 1k 5% 1/10W
R546	1-216-113-00	s	METAL, CHIP 470K 5% 1/10W
R547	1-216-053-00	s	METAL, CHIP 1.5K 5% 1/10W
R548	1-216-049-91	s	METAL, CHIP 1k 5% 1/10W
R549	1-216-049-91	s	METAL, CHIP 1k 5% 1/10W
R550	1-216-049-91	s	METAL, CHIP 1k 5% 1/10W
R551	1-216-057-00	s	METAL, CHIP 2.2K 5% 1/10W
R552	1-216-057-00	s	METAL, CHIP 2.2K 5% 1/10W
R553	1-216-041-00	s	METAL, CHIP 470 5% 1/10W
R554	1-216-041-00	s	METAL, CHIP 470 5% 1/10W
R555	1-216-073-00	s	METAL, CHIP 10K 5% 1/10W
R556	1-216-049-91	s	METAL, CHIP 1k 5% 1/10W
R557	1-216-049-91	s	METAL, CHIP 1k 5% 1/10W
R558	1-216-041-00	s	METAL, CHIP 470 5% 1/10W

(VP-43 BOARD(UVW-1800))

Ref. No. or Q'ty	Part No.	SP	Description
R559	1-216-053-00	s	METAL, CHIP 1.5K 5% 1/10W
R560	1-216-049-91	s	METAL, CHIP 1k 5% 1/10W
R561	1-216-025-91	s	METAL, CHIP 100 5% 1/10W
R562	1-216-017-91	s	METAL, CHIP 47 5% 1/10W
R563	1-216-017-91	s	METAL, CHIP 47 5% 1/10W
R564	1-216-667-11	s	METAL, CHIP 4.7K 0.5% 1/10W
R565	1-216-651-11	s	METAL, CHIP 1K 0.5% 1/10W
R566	1-216-073-00	s	METAL, CHIP 10K 5% 1/10W
R567	1-208-784-11	s	METAL, CHIP 1.2k 0.5% 1/10W
R568-572	1-216-624-11	s	METAL, CHIP 75 0.5% 1/10W
R573	1-216-049-91	s	METAL, CHIP 1k 5% 1/10W
R574	1-216-081-00	s	METAL, CHIP 22K 5% 1/10W
R575	1-216-097-91	s	METAL, CHIP 100k 5% 1/10W
R576	1-216-057-00	s	METAL, CHIP 2.2K 5% 1/10W
R600	1-208-806-11	s	METAL, CHIP 10k 0.5% 1/10W
R601	1-216-049-91	s	METAL, CHIP 1k 5% 1/10W
R602	1-216-049-91	s	METAL, CHIP 1k 5% 1/10W
R603	1-216-089-91	s	METAL, CHIP 47k 5% 1/10W
R604	1-216-049-91	s	METAL, CHIP 1k 5% 1/10W
R605	1-216-049-91	s	METAL, CHIP 1k 5% 1/10W
R606	1-216-049-91	s	METAL, CHIP 1k 5% 1/10W
R607	1-216-049-91	s	METAL, CHIP 1k 5% 1/10W
R608	1-216-057-00	s	METAL, CHIP 2.2K 5% 1/10W
R609	1-216-057-00	s	METAL, CHIP 2.2K 5% 1/10W
R610	1-216-033-00	s	METAL, CHIP 220 5% 1/10W
R611	1-216-033-00	s	METAL, CHIP 220 5% 1/10W
R612	1-208-799-11	s	METAL, CHIP 5.1k 0.5% 1/10W
R613	1-216-045-00	s	METAL, CHIP 680 5% 1/10W
R614	1-216-045-00	s	METAL, CHIP 680 5% 1/10W
R615	1-216-077-00	s	METAL, CHIP 15K 5% 1/10W
R616	1-216-077-00	s	METAL, CHIP 15K 5% 1/10W
R617	1-216-017-91	s	METAL, CHIP 47 5% 1/10W
R618	1-216-017-91	s	METAL, CHIP 47 5% 1/10W
R619	1-216-027-00	s	METAL, CHIP 120 5% 1/10W
R620	1-216-027-00	s	METAL, CHIP 120 5% 1/10W
R621	1-216-687-11	s	METAL, CHIP 33K 0.5% 1/10W
R622	1-216-081-00	s	METAL, CHIP 22K 5% 1/10W
R623	1-216-049-91	s	METAL, CHIP 1k 5% 1/10W
R626	1-216-049-91	s	METAL, CHIP 1k 5% 1/10W
R627	1-216-049-91	s	METAL, CHIP 1k 5% 1/10W
R628	1-216-057-00	s	METAL, CHIP 2.2K 5% 1/10W
R629	1-216-057-00	s	METAL, CHIP 2.2K 5% 1/10W
R630	1-216-065-00	s	METAL, CHIP 4.7K 5% 1/10W
R631	1-216-065-00	s	METAL, CHIP 4.7K 5% 1/10W
R632	1-216-049-91	s	METAL, CHIP 1k 5% 1/10W
R633	1-216-295-91	s	RES, CHIP 0
R634	1-216-049-91	s	METAL, CHIP 1k 5% 1/10W
R635	1-216-049-91	s	METAL, CHIP 1k 5% 1/10W
R636	1-216-081-00	s	METAL, CHIP 22K 5% 1/10W
R637	1-216-121-91	s	METAL, CHIP 1M 5% 1/10W
R638	1-216-121-91	s	METAL, CHIP 1M 5% 1/10W
R639	1-216-081-00	s	METAL, CHIP 22K 5% 1/10W
R640	1-216-081-00	s	METAL, CHIP 22K 5% 1/10W
R641	1-216-049-91	s	METAL, CHIP 1k 5% 1/10W
R642	1-216-049-91	s	METAL, CHIP 1k 5% 1/10W
R643	1-216-049-91	s	METAL, CHIP 1k 5% 1/10W
R644	1-216-081-00	s	METAL, CHIP 22K 5% 1/10W
R645	1-216-089-91	s	METAL, CHIP 47k 5% 1/10W
R646	1-216-049-91	s	METAL, CHIP 1k 5% 1/10W

(VP-43 BOARD(UVW-1800))

Ref. No. or Q'ty	Part No.	SP	Description
R647	1-216-089-91	s	METAL, CHIP 47k 5% 1/10W
R648	1-216-049-91	s	METAL, CHIP 1k 5% 1/10W
R649	1-216-049-91	s	METAL, CHIP 1k 5% 1/10W
R650	1-216-049-91	s	METAL, CHIP 1k 5% 1/10W
R651	1-216-025-91	s	METAL, CHIP 100 5% 1/10W
R652	1-216-657-11	s	METAL, CHIP 1.8K 0.5% 1/10W
R653	1-216-073-00	s	METAL, CHIP 10K 5% 1/10W
R654	1-216-065-00	s	METAL, CHIP 4.7K 5% 1/10W
R655	1-216-065-00	s	METAL, CHIP 4.7K 5% 1/10W
R656	1-216-047-91	s	METAL, CHIP 820 5% 1/10W
R657	1-216-065-00	s	METAL, CHIP 4.7K 5% 1/10W
R658	1-216-065-00	s	METAL, CHIP 4.7K 5% 1/10W
R659	1-216-041-00	s	METAL, CHIP 470 5% 1/10W
R660	1-216-041-00	s	METAL, CHIP 470 5% 1/10W
R661	1-216-049-91	s	METAL, CHIP 1k 5% 1/10W
R662	1-216-037-00	s	METAL, CHIP 330 5% 1/10W
R663	1-216-077-00	s	METAL, CHIP 15K 5% 1/10W
R664	1-216-079-00	s	METAL, CHIP 18K 5% 1/10W
R665	1-216-081-00	s	METAL, CHIP 22K 5% 1/10W
R666	1-216-081-00	s	METAL, CHIP 22K 5% 1/10W
R667	1-216-097-91	s	METAL, CHIP 100k 5% 1/10W
R668	1-216-049-91	s	METAL, CHIP 1k 5% 1/10W
R669	1-216-049-91	s	METAL, CHIP 1k 5% 1/10W
R670	1-216-666-11	s	METAL, CHIP 4.3K 0.5% 1/10W
R671	1-216-049-91	s	METAL, CHIP 1k 5% 1/10W
R672	1-216-049-91	s	METAL, CHIP 1k 5% 1/10W
R673	1-216-295-91	s	RES, CHIP 0
R675	1-216-049-91	s	METAL, CHIP 1k 5% 1/10W
R676	1-216-037-00	s	METAL, CHIP 330 5% 1/10W
R677	1-216-037-00	s	METAL, CHIP 330 5% 1/10W
R678-682	1-216-049-91	s	METAL, CHIP 1k 5% 1/10W
R683	1-216-057-00	s	METAL, CHIP 2.2K 5% 1/10W
R684	1-216-647-11	s	METAL, CHIP 680 0.5% 1/10W
R686	1-216-661-11	s	METAL, CHIP 2.7K 0.5% 1/10W
R687	1-216-057-00	s	METAL, CHIP 2.2K 5% 1/10W
R688	1-216-045-00	s	METAL, CHIP 680 5% 1/10W
R689	1-216-639-11	s	METAL, CHIP 330 0.5% 1/10W
R690	1-216-651-11	s	METAL, CHIP 1K 0.5% 1/10W
R691	1-216-049-91	s	METAL, CHIP 1k 5% 1/10W
R692	1-216-025-91	s	METAL, CHIP 100 5% 1/10W
R693	1-216-025-91	s	METAL, CHIP 100 5% 1/10W
R694	1-216-624-11	s	METAL, CHIP 75 0.5% 1/10W
R695	1-216-081-00	s	METAL, CHIP 22K 5% 1/10W
R696	1-216-095-00	s	METAL, CHIP 82K 5% 1/10W
R697	1-216-057-00	s	METAL, CHIP 2.2K 5% 1/10W
R698	1-216-057-00	s	METAL, CHIP 2.2K 5% 1/10W
R699	1-216-073-00	s	METAL, CHIP 10K 5% 1/10W
R701	1-216-025-91	s	METAL, CHIP 100 5% 1/10W
R702	1-216-025-91	s	METAL, CHIP 100 5% 1/10W
R703	1-216-049-91	s	METAL, CHIP 1k 5% 1/10W
R704	1-216-049-91	s	METAL, CHIP 1k 5% 1/10W
R705	1-216-049-91	s	METAL, CHIP 1k 5% 1/10W
R706	1-216-049-91	s	METAL, CHIP 1k 5% 1/10W
R707	1-216-655-11	s	METAL, CHIP 1.5K 0.5% 1/10W
R708	1-216-655-11	s	METAL, CHIP 1.5K 0.5% 1/10W
R709	1-216-065-00	s	METAL, CHIP 4.7K 5% 1/10W
R710	1-216-065-00	s	METAL, CHIP 4.7K 5% 1/10W
R711	1-216-025-91	s	METAL, CHIP 100 5% 1/10W
R712	1-216-025-91	s	METAL, CHIP 100 5% 1/10W

(VP-43 BOARD(UVW-1800))

Ref. No. or Q'ty	Part No.	SP	Description
R713	1-216-049-91	s	METAL, CHIP 1k 5% 1/10W
R714	1-216-049-91	s	METAL, CHIP 1k 5% 1/10W
R715	1-216-049-91	s	METAL, CHIP 1k 5% 1/10W
R716	1-216-049-91	s	METAL, CHIP 1k 5% 1/10W
R717	1-216-065-00	s	METAL, CHIP 4.7K 5% 1/10W
R718	1-216-065-00	s	METAL, CHIP 4.7K 5% 1/10W
R719	1-216-639-11	s	METAL, CHIP 330 0.5% 1/10W
R720	1-216-639-11	s	METAL, CHIP 330 0.5% 1/10W
R721	1-216-025-91	s	METAL, CHIP 100 5% 1/10W
R722	1-216-025-91	s	METAL, CHIP 100 5% 1/10W
R723	1-216-065-00	s	METAL, CHIP 4.7K 5% 1/10W
R724	1-216-041-00	s	METAL, CHIP 470 5% 1/10W
R725	1-216-065-00	s	METAL, CHIP 4.7K 5% 1/10W
R726	1-216-041-00	s	METAL, CHIP 470 5% 1/10W
R727	1-216-049-91	s	METAL, CHIP 1k 5% 1/10W
R728	1-216-049-91	s	METAL, CHIP 1k 5% 1/10W
R729	1-216-624-11	s	METAL, CHIP 75 0.5% 1/10W
R730	1-216-624-11	s	METAL, CHIP 75 0.5% 1/10W
R731	1-216-624-11	s	METAL, CHIP 75 0.5% 1/10W
R732	1-216-624-11	s	METAL, CHIP 75 0.5% 1/10W
R733-737	1-216-097-91	s	METAL, CHIP 100k 5% 1/10W
R738	1-216-049-91	s	METAL, CHIP 1k 5% 1/10W
R739	1-216-049-91	s	METAL, CHIP 1k 5% 1/10W
R740	1-216-049-91	s	METAL, CHIP 1k 5% 1/10W
R741	1-216-073-00	s	METAL, CHIP 10K 5% 1/10W
R742	1-216-049-91	s	METAL, CHIP 1k 5% 1/10W
R743	1-216-049-91	s	METAL, CHIP 1k 5% 1/10W
R744	1-216-049-91	s	METAL, CHIP 1k 5% 1/10W
R745	1-216-113-00	s	METAL, CHIP 470K 5% 1/10W
R746	1-216-049-91	s	METAL, CHIP 1k 5% 1/10W
R747	1-216-049-91	s	METAL, CHIP 1k 5% 1/10W
R748	1-216-097-91	s	METAL, CHIP 100k 5% 1/10W
R749	1-216-049-91	s	METAL, CHIP 1k 5% 1/10W
R750	1-216-097-91	s	METAL, CHIP 100k 5% 1/10W
R751	1-216-049-91	s	METAL, CHIP 1k 5% 1/10W
RV101	1-241-785-11	s	RES, ADJ METAL 10k
RV102	1-241-785-11	s	RES, ADJ METAL 10k
RV103	1-241-761-11	s	RES, ADJ METAL 1k
RV201	1-241-763-11	s	RES, ADJ METAL 4.7k
RV301	1-241-785-11	s	RES, ADJ METAL 10k
RV302	1-241-785-11	s	RES, ADJ METAL 10k
RV303	1-241-761-11	s	RES, ADJ METAL 1k
RV401	1-241-764-11	s	RES, ADJ METAL 10k
RV501	1-241-761-11	s	RES, ADJ METAL 1k
RV502	1-241-761-11	s	RES, ADJ METAL 1k
RV503	1-241-761-11	s	RES, ADJ METAL 1k
RV504	1-241-761-11	s	RES, ADJ METAL 1k
RV505	1-241-761-11	s	RES, ADJ METAL 1k
RV506	1-241-758-11	s	RES, ADJ METAL 100
RV601	1-241-787-11	s	RES, ADJ METAL 47k
RV602	1-241-787-11	s	RES, ADJ METAL 47k
RV603	1-241-783-11	s	RES, ADJ METAL 2.2k
RV604	1-241-784-11	s	RES, ADJ METAL 4.7k
RV605	1-241-784-11	s	RES, ADJ METAL 4.7k
RV606	1-241-779-11	s	RES, ADJ METAL 100
RV701	1-241-783-11	s	RES, ADJ METAL 2.2k
RV702	1-241-783-11	s	RES, ADJ METAL 2.2k
RV703	1-241-761-11	s	RES, ADJ METAL 1k
RV704	1-241-761-11	s	RES, ADJ METAL 1k

(VP-43 BOARD(UVW-1800))

Ref. No. or Q'ty	Part No.	SP	Description
TH201	1-807-972-11	s	THERMISTOR SV-1715 1.25k
TH401	1-807-972-11	s	THERMISTOR SV-1715 1.25k
TH601	1-807-972-11	s	THERMISTOR SV-1715 1.25k

VP-43P BOARD(UVW-1800P)

Ref. No. or Q'ty	Part No.	SP	Description
VP-43P board is used for UVW-1800P(EK).			
1pc	A-8275-468-A	o	MOUNTED CIRCUIT BOARD, VP-43P
1pc	3-182-386-02	o	PLATE, SHIELD (L), CARD
1pc	7-621-759-45	s	SCREW, +PSW2.6x6
1pc	3-179-084-01	s	LEVER (R), PC BOARD
1pc	3-179-085-01	s	LEVER (L), PC BOARD
C101	1-163-033-91	s	CERAMIC, CHIP 0.022uF 50V
C102	1-163-033-91	s	CERAMIC, CHIP 0.022uF 50V
C103	1-163-275-11	s	CERAMIC, CHIP 0.001uF 5% 50V
C104	1-163-033-91	s	CERAMIC, CHIP 0.022uF 50V
C105	1-163-033-91	s	CERAMIC, CHIP 0.022uF 50V
C106	1-126-933-11	s	ELECT 100uF 20% 16V
C107	1-163-033-91	s	CERAMIC, CHIP 0.022uF 50V
C108	1-163-033-91	s	CERAMIC, CHIP 0.022uF 50V
C109	1-163-108-00	s	CERAMIC, CHIP 43PF 5% 50V
C110	1-163-249-11	s	CERAMIC, CHIP 82pF 5% 50V
C111	1-163-108-00	s	CERAMIC, CHIP 43PF 5% 50V
C112	1-124-903-11	s	ELECT 1uF 20% 50V
C113	1-124-903-11	s	ELECT 1uF 20% 50V
C114	1-163-275-11	s	CERAMIC, CHIP 0.001uF 5% 50V
C115	1-163-033-91	s	CERAMIC, CHIP 0.022uF 50V
C116	1-163-033-91	s	CERAMIC, CHIP 0.022uF 50V
C117	1-163-033-91	s	CERAMIC, CHIP 0.022uF 50V
C118	1-163-245-11	s	CERAMIC, CHIP 56PF 5% 50V
C119	1-163-235-11	s	CERAMIC, CHIP 22PF 5% 50V
C120-127	1-163-033-91	s	CERAMIC, CHIP 0.022uF 50V
C128	1-163-133-00	s	CERAMIC, CHIP 470PF 5% 50V
C129	1-163-033-91	s	CERAMIC, CHIP 0.022uF 50V
C130	1-163-033-91	s	CERAMIC, CHIP 0.022uF 50V
C131	1-126-933-11	s	ELECT 100uF 20% 16V
C132	1-163-033-91	s	CERAMIC, CHIP 0.022uF 50V
C133	1-163-113-00	s	CERAMIC, CHIP 68PF 5% 50V
C134-142	1-163-033-91	s	CERAMIC, CHIP 0.022uF 50V
C143	1-126-933-11	s	ELECT 100uF 20% 16V
C144	1-126-933-11	s	ELECT 100uF 20% 16V
C145	1-126-933-11	s	ELECT 100uF 20% 16V
C146	1-126-933-11	s	ELECT 100uF 20% 16V
C147	1-163-231-11	s	CERAMIC, CHIP 15pF 5% 50V
C148	1-163-241-11	s	CERAMIC, CHIP 39PF 5% 50V
C149	1-163-033-91	s	CERAMIC, CHIP 0.022uF 50V
C150	1-126-933-11	s	ELECT 100uF 20% 16V
C151	1-163-229-11	s	CERAMIC, CHIP 12PF 5% 50V
C201-212	1-163-033-91	s	CERAMIC, CHIP 0.022uF 50V
C213	1-163-222-11	s	CERAMIC, CHIP 5PF 50V
C214	1-163-222-11	s	CERAMIC, CHIP 5PF 50V
C215	1-126-925-11	s	ELECT 470uF 20% 10V
C216	1-163-033-91	s	CERAMIC, CHIP 0.022uF 50V
C217	1-163-033-91	s	CERAMIC, CHIP 0.022uF 50V
C218	1-163-033-91	s	CERAMIC, CHIP 0.022uF 50V
C219	1-163-222-11	s	CERAMIC, CHIP 5PF 50V
C220	1-164-161-11	s	CERAMIC, CHIP 0.0022uF 10% 100V
C221	1-163-091-00	s	CERAMIC, CHIP 8PF 50V
C222	1-163-033-91	s	CERAMIC, CHIP 0.022uF 50V
C223	1-163-033-91	s	CERAMIC, CHIP 0.022uF 50V
C224	1-126-925-11	s	ELECT 470uF 20% 10V
C225	1-126-925-11	s	ELECT 470uF 20% 10V
C226-230	1-163-033-91	s	CERAMIC, CHIP 0.022uF 50V
C231	1-126-925-11	s	ELECT 470uF 20% 10V

(VP-43P BOARD(UVW-1800P))

Ref. No. or Q'ty	Part No.	SP	Description
C232	1-163-033-91	s	CERAMIC, CHIP 0.022uF 50V
C234	1-107-552-11	s	MICA, CHIP 150pF 1% 50V
C235	1-126-933-11	s	ELECT 100uF 20% 16V
C236	1-163-033-91	s	CERAMIC, CHIP 0.022uF 50V
C237	1-126-963-11	s	ELECT 4.7uF 20% 50V
C238	1-163-235-11	s	CERAMIC, CHIP 22PF 5% 50V
C239	1-163-114-00	s	CERAMIC, CHIP 75PF 5% 50V
C240	1-163-033-91	s	CERAMIC, CHIP 0.022uF 50V
C241	1-163-241-11	s	CERAMIC, CHIP 39PF 5% 50V
C242	1-163-033-91	s	CERAMIC, CHIP 0.022uF 50V
C243	1-163-033-91	s	CERAMIC, CHIP 0.022uF 50V
C244	1-163-033-91	s	CERAMIC, CHIP 0.022uF 50V
C245	1-126-925-11	s	ELECT 470uF 20% 10V
C246	1-126-933-11	s	ELECT 100uF 20% 16V
C247	1-163-033-91	s	CERAMIC, CHIP 0.022uF 50V
C248	1-163-033-91	s	CERAMIC, CHIP 0.022uF 50V
C249	1-126-933-11	s	ELECT 100uF 20% 16V
C250	1-126-933-11	s	ELECT 100uF 20% 16V
C251	1-126-964-11	s	ELECT 10uF 20% 50V
C252	1-163-243-11	s	CERAMIC, CHIP 47PF 5% 50V
C253	1-163-033-91	s	CERAMIC, CHIP 0.022uF 50V
C301	1-163-033-91	s	CERAMIC, CHIP 0.022uF 50V
C302	1-163-033-91	s	CERAMIC, CHIP 0.022uF 50V
C303	1-163-275-11	s	CERAMIC, CHIP 0.001uF 5% 50V
C304	1-163-033-91	s	CERAMIC, CHIP 0.022uF 50V
C305	1-126-933-11	s	ELECT 100uF 20% 16V
C306	1-163-033-91	s	CERAMIC, CHIP 0.022uF 50V
C307	1-163-033-91	s	CERAMIC, CHIP 0.022uF 50V
C308	1-163-033-91	s	CERAMIC, CHIP 0.022uF 50V
C309	1-163-110-00	s	CERAMIC, CHIP 51PF 5% 50V
C310	1-163-251-11	s	CERAMIC, CHIP 100PF 5% 50V
C311	1-163-110-00	s	CERAMIC, CHIP 51PF 5% 50V
C312	1-124-903-11	s	ELECT 1uF 20% 50V
C313	1-124-903-11	s	ELECT 1uF 20% 50V
C314	1-163-275-11	s	CERAMIC, CHIP 0.001uF 5% 50V
C315	1-163-135-00	s	CERAMIC, CHIP 560PF 5% 50V
C316	1-163-257-11	s	CERAMIC, CHIP 180PF 5% 50V
C317	1-163-033-91	s	CERAMIC, CHIP 0.022uF 50V
C318	1-163-033-91	s	CERAMIC, CHIP 0.022uF 50V
C319	1-163-113-00	s	CERAMIC, CHIP 68PF 5% 50V
C320	1-163-033-91	s	CERAMIC, CHIP 0.022uF 50V
C321	1-163-033-91	s	CERAMIC, CHIP 0.022uF 50V
C322	1-163-235-11	s	CERAMIC, CHIP 22PF 5% 50V
C323	1-163-033-91	s	CERAMIC, CHIP 0.022uF 50V
C324	1-163-033-91	s	CERAMIC, CHIP 0.022uF 50V
C325	1-163-033-91	s	CERAMIC, CHIP 0.022uF 50V
C326	1-163-033-91	s	CERAMIC, CHIP 0.022uF 50V
C327	1-163-133-00	s	CERAMIC, CHIP 470PF 5% 50V
C328	1-163-033-91	s	CERAMIC, CHIP 0.022uF 50V
C329	1-163-033-91	s	CERAMIC, CHIP 0.022uF 50V
C330	1-163-033-91	s	CERAMIC, CHIP 0.022uF 50V
C331	1-163-033-91	s	CERAMIC, CHIP 0.022uF 50V
C332	1-126-933-11	s	ELECT 100uF 20% 16V
C333	1-163-033-91	s	CERAMIC, CHIP 0.022uF 50V
C334	1-163-251-11	s	CERAMIC, CHIP 100PF 5% 50V
C335-339	1-163-033-91	s	CERAMIC, CHIP 0.022uF 50V
C340	1-126-933-11	s	ELECT 100uF 20% 16V
C341	1-163-033-91	s	CERAMIC, CHIP 0.022uF 50V
C342	1-163-033-91	s	CERAMIC, CHIP 0.022uF 50V

(VP-43P BOARD(UVW-1800P))

Ref. No. or Q'ty	Part No.	SP	Description
C343	1-126-933-11	s	ELECT 100uF 20% 16V
C344	1-163-033-91	s	CERAMIC, CHIP 0.022uF 50V
C345	1-163-033-91	s	CERAMIC, CHIP 0.022uF 50V
C346	1-163-231-11	s	CERAMIC, CHIP 15pF 5% 50V
C347	1-126-933-11	s	ELECT 100uF 20% 16V
C348	1-126-933-11	s	ELECT 100uF 20% 16V
C349	1-163-241-11	s	CERAMIC, CHIP 39PF 5% 50V
C350	1-163-033-91	s	CERAMIC, CHIP 0.022uF 50V
C351	1-126-933-11	s	ELECT 100uF 20% 16V
C401-408	1-163-033-91	s	CERAMIC, CHIP 0.022uF 50V
C409	1-126-925-11	s	ELECT 470uF 20% 10V
C410	1-163-033-91	s	CERAMIC, CHIP 0.022uF 50V
C411	1-163-033-91	s	CERAMIC, CHIP 0.022uF 50V
C412	1-163-222-11	s	CERAMIC, CHIP 5PF 50V
C413	1-163-222-11	s	CERAMIC, CHIP 5PF 50V
C414	1-163-033-91	s	CERAMIC, CHIP 0.022uF 50V
C415	1-164-161-11	s	CERAMIC, CHIP 0.0022uF 10% 100V
C416	1-163-222-11	s	CERAMIC, CHIP 5PF 50V
C417	1-163-033-91	s	CERAMIC, CHIP 0.022uF 50V
C418	1-163-033-91	s	CERAMIC, CHIP 0.022uF 50V
C419	1-126-925-11	s	ELECT 470uF 20% 10V
C420	1-126-925-11	s	ELECT 470uF 20% 10V
C421-425	1-163-033-91	s	CERAMIC, CHIP 0.022uF 50V
C426	1-126-933-11	s	ELECT 100uF 20% 16V
C427	1-126-925-11	s	ELECT 470uF 20% 10V
C428	1-163-033-91	s	CERAMIC, CHIP 0.022uF 50V
C429	1-163-222-11	s	CERAMIC, CHIP 5PF 50V
C430	1-107-552-11	s	MICA, CHIP 150pF 1% 50V
C431	1-163-033-91	s	CERAMIC, CHIP 0.022uF 50V
C432	1-126-963-11	s	ELECT 4.7uF 20% 50V
C433	1-163-239-11	s	CERAMIC, CHIP 33PF 5% 50V
C434	1-163-033-91	s	CERAMIC, CHIP 0.022uF 50V
C435	1-163-033-91	s	CERAMIC, CHIP 0.022uF 50V
C436	1-163-251-11	s	CERAMIC, CHIP 100PF 5% 50V
C437	1-126-925-11	s	ELECT 470uF 20% 10V
C438	1-126-933-11	s	ELECT 100uF 20% 16V
C439	1-163-033-91	s	CERAMIC, CHIP 0.022uF 50V
C440	1-163-033-91	s	CERAMIC, CHIP 0.022uF 50V
C441	1-163-033-91	s	CERAMIC, CHIP 0.022uF 50V
C442	1-126-933-11	s	ELECT 100uF 20% 16V
C443	1-126-933-11	s	ELECT 100uF 20% 16V
C501	1-126-933-11	s	ELECT 100uF 20% 16V
C502	1-126-933-11	s	ELECT 100uF 20% 16V
C503	1-126-933-11	s	ELECT 100uF 20% 16V
C504	1-126-933-11	s	ELECT 100uF 20% 16V
C505-509	1-163-033-91	s	CERAMIC, CHIP 0.022uF 50V
C510	1-131-353-00	s	TANTALUM 10uF 10% 35V
C511	1-131-353-00	s	TANTALUM 10uF 10% 35V
C512	1-126-933-11	s	ELECT 100uF 20% 16V
C513	1-163-033-91	s	CERAMIC, CHIP 0.022uF 50V
C514	1-163-033-91	s	CERAMIC, CHIP 0.022uF 50V
C515	1-163-033-91	s	CERAMIC, CHIP 0.022uF 50V
C516	1-130-491-00	s	MYLAR 0.047uF 5% 50V
C517	1-163-033-91	s	CERAMIC, CHIP 0.022uF 50V
C518	1-163-033-91	s	CERAMIC, CHIP 0.022uF 50V
C519	1-163-231-11	s	CERAMIC, CHIP 15pF 5% 50V
C520	1-163-033-91	s	CERAMIC, CHIP 0.022uF 50V
C521	1-163-125-00	s	CERAMIC, CHIP 220PF 5% 50V
C522	1-163-227-11	s	CERAMIC, CHIP 10PF 5% 50V

(VP-43P BOARD(UVW-1800P))

Ref. No. or Q'ty	Part No.	SP	Description
C523	1-163-235-11	s	CERAMIC, CHIP 22PF 5% 50V
C524	1-126-933-11	s	ELECT 100uF 20% 16V
C525-529	1-163-033-91	s	CERAMIC, CHIP 0.022uF 50V
C530	1-126-933-11	s	ELECT 100uF 20% 16V
C531	1-163-222-11	s	CERAMIC, CHIP 5PF 50V
C532	1-163-033-91	s	CERAMIC, CHIP 0.022uF 50V
C533	1-131-353-00	s	TANTALUM 10uF 10% 35V
C534	1-131-353-00	s	TANTALUM 10uF 10% 35V
C535	1-126-933-11	s	ELECT 100uF 20% 16V
C536	1-130-491-00	s	MYLAR 0.047uF 5% 50V
C537	1-163-033-91	s	CERAMIC, CHIP 0.022uF 50V
C538	1-163-227-11	s	CERAMIC, CHIP 10PF 5% 50V
C539	1-163-033-91	s	CERAMIC, CHIP 0.022uF 50V
C540	1-163-237-11	s	CERAMIC, CHIP 27PF 5% 50V
C541	1-163-033-91	s	CERAMIC, CHIP 0.022uF 50V
C542	1-163-033-91	s	CERAMIC, CHIP 0.022uF 50V
C543	1-163-033-91	s	CERAMIC, CHIP 0.022uF 50V
C544	1-163-033-91	s	CERAMIC, CHIP 0.022uF 50V
C545	1-163-227-11	s	CERAMIC, CHIP 10PF 5% 50V
C546	1-163-243-11	s	CERAMIC, CHIP 47PF 5% 50V
C547	1-163-033-91	s	CERAMIC, CHIP 0.022uF 50V
C548	1-163-033-91	s	CERAMIC, CHIP 0.022uF 50V
C549	1-163-033-91	s	CERAMIC, CHIP 0.022uF 50V
C550	1-163-222-11	s	CERAMIC, CHIP 5PF 50V
C551-555	1-163-033-91	s	CERAMIC, CHIP 0.022uF 50V
C556	1-126-925-11	s	ELECT 470uF 20% 10V
C557	1-126-925-11	s	ELECT 470uF 20% 10V
C558	1-163-033-91	s	CERAMIC, CHIP 0.022uF 50V
C559	1-163-033-91	s	CERAMIC, CHIP 0.022uF 50V
C600	1-163-227-11	s	CERAMIC, CHIP 10PF 5% 50V
C601	1-126-933-11	s	ELECT 100uF 20% 16V
C602	1-126-933-11	s	ELECT 100uF 20% 16V
C603	1-163-033-91	s	CERAMIC, CHIP 0.022uF 50V
C604	1-163-033-91	s	CERAMIC, CHIP 0.022uF 50V
C605	1-163-227-11	s	CERAMIC, CHIP 10PF 5% 50V
C606	1-163-251-11	s	CERAMIC, CHIP 100PF 5% 50V
C607	1-163-033-91	s	CERAMIC, CHIP 0.022uF 50V
C608	1-163-033-91	s	CERAMIC, CHIP 0.022uF 50V
C609	1-163-121-00	s	CERAMIC, CHIP 150PF 5% 50V
C610	1-163-033-91	s	CERAMIC, CHIP 0.022uF 50V
C611	1-163-033-91	s	CERAMIC, CHIP 0.022uF 50V
C614	1-126-933-11	s	ELECT 100uF 20% 16V
C615	1-163-033-91	s	CERAMIC, CHIP 0.022uF 50V
C616	1-126-933-11	s	ELECT 100uF 20% 16V
C617	1-126-933-11	s	ELECT 100uF 20% 16V
C618	1-163-033-91	s	CERAMIC, CHIP 0.022uF 50V
C619	1-163-033-91	s	CERAMIC, CHIP 0.022uF 50V
C620	1-163-033-91	s	CERAMIC, CHIP 0.022uF 50V
C621	1-163-231-11	s	CERAMIC, CHIP 15pF 5% 50V
C622	1-131-347-00	s	TANTALUM 1uF 10% 35V
C623	1-163-125-00	s	CERAMIC, CHIP 220PF 5% 50V
C624	1-131-347-00	s	TANTALUM 1uF 10% 35V
C625	1-131-347-00	s	TANTALUM 1uF 10% 35V
C626	1-131-347-00	s	TANTALUM 1uF 10% 35V
C627	1-126-933-11	s	ELECT 100uF 20% 16V
C628	1-163-033-91	s	CERAMIC, CHIP 0.022uF 50V
C629	1-163-033-91	s	CERAMIC, CHIP 0.022uF 50V
C630	1-163-033-91	s	CERAMIC, CHIP 0.022uF 50V
C631	1-130-491-00	s	MYLAR 0.047uF 5% 50V

(VP-43P BOARD(UVW-1800P))

Ref. No. or Q'ty	Part No.	SP	Description
C632	1-130-491-00	s	MYLAR 0.047uF 5% 50V
C633	1-163-033-91	s	CERAMIC, CHIP 0.022uF 50V
C634	1-163-227-11	s	CERAMIC, CHIP 10PF 5% 50V
C635-645	1-163-033-91	s	CERAMIC, CHIP 0.022uF 50V
C646	1-126-933-11	s	ELECT 100uF 20% 16V
C647	1-163-033-91	s	CERAMIC, CHIP 0.022uF 50V
C648	1-126-933-11	s	ELECT 100uF 20% 16V
C649	1-126-933-11	s	ELECT 100uF 20% 16V
C651	1-163-033-91	s	CERAMIC, CHIP 0.022uF 50V
C652	1-163-033-91	s	CERAMIC, CHIP 0.022uF 50V
C653	1-163-243-11	s	CERAMIC, CHIP 47PF 5% 50V
C654	1-163-239-11	s	CERAMIC, CHIP 33PF 5% 50V
C655	1-163-239-11	s	CERAMIC, CHIP 33PF 5% 50V
C656	1-163-227-11	s	CERAMIC, CHIP 10PF 5% 50V
C657	1-163-033-91	s	CERAMIC, CHIP 0.022uF 50V
C658	1-163-113-00	s	CERAMIC, CHIP 68PF 5% 50V
C659	1-163-113-00	s	CERAMIC, CHIP 68PF 5% 50V
C660	1-163-239-11	s	CERAMIC, CHIP 33PF 5% 50V
C661	1-163-239-11	s	CERAMIC, CHIP 33PF 5% 50V
C662	1-163-033-91	s	CERAMIC, CHIP 0.022uF 50V
C663	1-163-033-91	s	CERAMIC, CHIP 0.022uF 50V
C664	1-163-033-91	s	CERAMIC, CHIP 0.022uF 50V
C665	1-163-087-00	s	CERAMIC, CHIP 4PF 50V
C666	1-163-227-11	s	CERAMIC, CHIP 10PF 5% 50V
C667	1-163-033-91	s	CERAMIC, CHIP 0.022uF 50V
C668	1-163-033-91	s	CERAMIC, CHIP 0.022uF 50V
C669	1-163-033-91	s	CERAMIC, CHIP 0.022uF 50V
C670	1-163-033-91	s	CERAMIC, CHIP 0.022uF 50V
C671	1-126-933-11	s	ELECT 100uF 20% 16V
C701	1-126-933-11	s	ELECT 100uF 20% 16V
C702	1-126-933-11	s	ELECT 100uF 20% 16V
C703	1-163-033-91	s	CERAMIC, CHIP 0.022uF 50V
C704	1-163-033-91	s	CERAMIC, CHIP 0.022uF 50V
C705	1-163-231-11	s	CERAMIC, CHIP 15pF 5% 50V
C706	1-163-231-11	s	CERAMIC, CHIP 15pF 5% 50V
C707	1-163-243-11	s	CERAMIC, CHIP 47PF 5% 50V
C708	1-163-243-11	s	CERAMIC, CHIP 47PF 5% 50V
C709	1-163-227-11	s	CERAMIC, CHIP 10PF 5% 50V
C710	1-163-227-11	s	CERAMIC, CHIP 10PF 5% 50V
C711	1-163-237-11	s	CERAMIC, CHIP 27PF 5% 50V
C712	1-163-237-11	s	CERAMIC, CHIP 27PF 5% 50V
C713	1-126-933-11	s	ELECT 100uF 20% 16V
C714-719	1-163-033-91	s	CERAMIC, CHIP 0.022uF 50V
C720-724	1-126-933-11	s	ELECT 100uF 20% 16V
C725	1-131-353-00	s	TANTALUM 10uF 10% 35V
C726	1-163-033-91	s	CERAMIC, CHIP 0.022uF 50V
C727	1-130-475-00	s	MYLAR 0.0022uF 5% 50V
CN103	1-573-782-21	o	CONNECTOR, PHEC 60P, MALE
CN104	1-573-782-21	o	CONNECTOR, PHEC 60P, MALE
CN105	1-506-491-11	s	CONNECTOR 12P, MALE
D201	8-719-123-82	s	DIODE 1SS303-T1
D401	8-719-123-82	s	DIODE 1SS303-T1
D501	8-719-123-82	s	DIODE 1SS303-T1
D502	8-719-941-04	s	DIODE SB007-03CP
D503	8-719-021-31	s	DIODE UZM5.1B
D504	8-719-123-82	s	DIODE 1SS303-T1
D601	8-719-941-04	s	DIODE SB007-03CP
D701	8-719-123-85	s	DIODE 1SS304

(VP-43P BOARD(UVW-1800P))

Ref. No. or Q'ty	Part No.	SP	Description
DL101	1-415-674-11	s	DELAY LINE
DL301	1-415-546-11	s	DELAY LINE 50nS
FL201	1-239-819-11	s	FILTER, LOW-PASS
FL401	1-239-772-11	s	FILTER, LOW-PASS 3MHz
FL601	1-239-771-11	s	FILTER, LOW-PASS 6 MHz
IC101	8-752-052-75	s	IC CXA1479Q
IC102	8-759-300-71	s	IC HD14053BFP
IC103	8-759-908-92	s	IC TL084CNS
IC104	8-759-702-08	s	IC NJM360M
IC201	8-759-981-48	s	IC NJM082M
IC202	8-752-052-48	s	IC CXA1370Q
IC203	8-759-700-65	s	IC NJM79L05A
IC204	1-810-333-11	s	HIC BP-022
IC205	8-759-189-43	s	IC AN77L05-TA
IC301	8-752-052-75	s	IC CXA1479Q
IC302	8-759-300-71	s	IC HD14053BFP
IC303	8-759-908-92	s	IC TL084CNS
IC401	8-752-052-48	s	IC CXA1370Q
IC402	8-759-700-65	s	IC NJM79L05A
IC403	1-810-333-11	s	HIC BP-022
IC404	8-759-189-43	s	IC AN77L05-TA
IC501	8-759-927-46	s	IC SN74HC00ANS
IC502	8-759-908-92	s	IC TL084CNS
IC503	8-759-300-71	s	IC HD14053BFP
IC504	8-759-168-20	s	IC TA78L09S
IC505	8-759-700-65	s	IC NJM79L05A
IC506	8-759-908-92	s	IC TL084CNS
IC507	8-752-052-73	s	IC CXA1451M
IC508	8-752-052-73	s	IC CXA1451M
IC509	8-752-052-73	s	IC CXA1451M
IC510	8-752-052-73	s	IC CXA1451M
IC511	8-759-182-84	s	IC PQ05SZ5U
IC512	8-759-822-95	s	IC L79M05T-FA
IC601	8-759-907-81	s	IC SN74LS221NS
IC602	8-759-927-46	s	IC SN74HC00ANS
IC603	8-759-908-92	s	IC TL084CNS
IC604	8-759-300-71	s	IC HD14053BFP
IC605	8-759-908-92	s	IC TL084CNS
IC606	8-752-054-80	s	IC CXA1521M
IC607	8-752-054-80	s	IC CXA1521M
IC608	8-759-168-20	s	IC TA78L09S
IC609	8-759-906-59	s	IC CX22017
IC610	8-759-700-65	s	IC NJM79L05A
IC611	8-752-052-73	s	IC CXA1451M
IC612	8-759-262-00	s	IC MC14576CF
IC701	8-752-052-73	s	IC CXA1451M
IC702	8-752-052-73	s	IC CXA1451M
IC703	8-759-927-46	s	IC SN74HC00ANS
IC704	8-759-925-74	s	IC TC74HC04ANS
IC705	8-759-925-85	s	IC SN74HC32ANS
L101	1-410-482-31	s	INDUCTOR 100uH
L102	1-410-466-41	s	INDUCTOR 4.7uH
L103	1-410-466-41	s	INDUCTOR 4.7uH
L104	1-410-466-41	s	INDUCTOR 4.7uH
L105	1-410-482-31	s	INDUCTOR 100uH
L106	1-410-462-11	s	INDUCTOR 2.2uH
L107	1-410-482-31	s	INDUCTOR 100uH

(VP-43P BOARD(UVW-1800P))

Ref. No. or Q'ty	Part No.	SP	Description
L108	1-410-482-31	s	INDUCTOR 100uH
L109	1-408-621-31	s	INDUCTOR 330uH
L110	1-410-482-31	s	INDUCTOR 100uH
L111	1-410-466-41	s	INDUCTOR 4.7uH
L201	1-410-471-11	s	INDUCTOR 12uH
L202	1-410-482-31	s	INDUCTOR 100uH
L203	1-410-468-11	s	INDUCTOR 6.8uH
L204	1-410-476-11	s	INDUCTOR 33uH
L205	1-410-482-31	s	INDUCTOR 100uH
L206	1-410-482-31	s	INDUCTOR 100uH
L207	1-410-482-31	s	INDUCTOR 100uH
L208	1-408-617-31	s	INDUCTOR 150uH
L301	1-410-482-31	s	INDUCTOR 100uH
L302	1-410-468-11	s	INDUCTOR 6.8uH
L303	1-410-468-11	s	INDUCTOR 6.8uH
L304	1-408-429-00	s	INDUCTOR 470uH
L305	1-408-429-00	s	INDUCTOR 470uH
L306	1-408-406-00	s	INDUCTOR 5.6uH
L307	1-410-482-31	s	INDUCTOR 100uH
L308	1-410-462-11	s	INDUCTOR 2.2uH
L309	1-408-621-31	s	INDUCTOR 330uH
L310	1-410-482-31	s	INDUCTOR 100uH
L311	1-410-482-31	s	INDUCTOR 100uH
L312	1-410-482-31	s	INDUCTOR 100uH
L401	1-410-471-11	s	INDUCTOR 12uH
L402	1-410-482-31	s	INDUCTOR 100uH
L403	1-408-408-00	s	INDUCTOR 8.2uH
L404	1-410-482-31	s	INDUCTOR 100uH
L405	1-410-482-31	s	INDUCTOR 100uH
L406	1-410-482-31	s	INDUCTOR 100uH
L501	1-410-482-31	s	INDUCTOR 100uH
L502	1-410-482-31	s	INDUCTOR 100uH
L503	1-410-482-31	s	INDUCTOR 100uH
L505	1-410-482-31	s	INDUCTOR 100uH
L506	1-410-482-31	s	INDUCTOR 100uH
L507	1-410-482-31	s	INDUCTOR 100uH
L508	1-410-478-11	s	INDUCTOR 47uH
L509	1-410-476-11	s	INDUCTOR 33uH
L601-609	1-410-482-31	s	INDUCTOR 100uH
L610	1-408-414-00	s	INDUCTOR 27uH
L611	1-408-414-00	s	INDUCTOR 27uH
L612	1-408-414-00	s	INDUCTOR 27uH
L613	1-408-414-00	s	INDUCTOR 27uH
L614	1-408-413-00	s	INDUCTOR 22uH
L615	1-408-413-00	s	INDUCTOR 22uH
L701	1-410-482-31	s	INDUCTOR 100uH
L702	1-410-482-31	s	INDUCTOR 100uH
L703	1-410-476-11	s	INDUCTOR 33uH
L704	1-410-476-11	s	INDUCTOR 33uH
L705	1-410-482-31	s	INDUCTOR 100uH
L706-710	1-412-533-21	s	INDUCTOR 47uH
Q101	8-729-117-32	s	TRANSISTOR 2SC4177
Q102	8-729-117-72	s	TRANSISTOR 2SC4178
Q103	8-729-143-07	s	TRANSISTOR 2SA1610-YY33
Q104	8-729-117-72	s	TRANSISTOR 2SC4178
Q105	8-729-117-72	s	TRANSISTOR 2SC4178
Q106	8-729-143-07	s	TRANSISTOR 2SA1610-YY33
Q107-111	8-729-117-72	s	TRANSISTOR 2SC4178

(VP-43P BOARD(UVW-1800P))

Ref. No. or Q'ty	Part No.	SP	Description
Q112	8-729-905-18	s	TRANSISTOR DTC144EU
Q201	8-729-117-72	s	TRANSISTOR 2SC4178
Q202	8-729-143-07	s	TRANSISTOR 2SA1610-YY33
Q203	8-729-117-72	s	TRANSISTOR 2SC4178
Q204	8-729-117-72	s	TRANSISTOR 2SC4178
Q205	8-729-143-07	s	TRANSISTOR 2SA1610-YY33
Q206	8-729-143-07	s	TRANSISTOR 2SA1610-YY33
Q207	8-729-117-72	s	TRANSISTOR 2SC4178
Q208	8-729-143-07	s	TRANSISTOR 2SA1610-YY33
Q209	8-729-143-07	s	TRANSISTOR 2SA1610-YY33
Q210	8-729-117-72	s	TRANSISTOR 2SC4178
Q211	8-729-117-72	s	TRANSISTOR 2SC4178
Q212	8-729-117-72	s	TRANSISTOR 2SC4178
Q213	8-729-143-07	s	TRANSISTOR 2SA1610-YY33
Q214	8-729-143-07	s	TRANSISTOR 2SA1610-YY33
Q215	8-729-117-72	s	TRANSISTOR 2SC4178
Q216	8-729-905-12	s	TRANSISTOR DTA144EU
Q217	8-729-117-72	s	TRANSISTOR 2SC4178
Q218	8-729-143-07	s	TRANSISTOR 2SA1610-YY33
Q219	8-729-117-72	s	TRANSISTOR 2SC4178
Q220	8-729-143-07	s	TRANSISTOR 2SA1610-YY33
Q301	8-729-117-32	s	TRANSISTOR 2SC4177
Q302	8-729-117-72	s	TRANSISTOR 2SC4178
Q303	8-729-117-72	s	TRANSISTOR 2SC4178
Q304	8-729-143-07	s	TRANSISTOR 2SA1610-YY33
Q305	8-729-117-72	s	TRANSISTOR 2SC4178
Q306	8-729-143-07	s	TRANSISTOR 2SA1610-YY33
Q307-311	8-729-117-72	s	TRANSISTOR 2SC4178
Q401	8-729-117-72	s	TRANSISTOR 2SC4178
Q402	8-729-143-07	s	TRANSISTOR 2SA1610-YY33
Q403	8-729-117-72	s	TRANSISTOR 2SC4178
Q404	8-729-117-72	s	TRANSISTOR 2SC4178
Q405	8-729-143-07	s	TRANSISTOR 2SA1610-YY33
Q406	8-729-143-07	s	TRANSISTOR 2SA1610-YY33
Q407	8-729-117-72	s	TRANSISTOR 2SC4178
Q408	8-729-117-72	s	TRANSISTOR 2SC4178
Q409	8-729-117-72	s	TRANSISTOR 2SC4178
Q410	8-729-117-72	s	TRANSISTOR 2SC4178
Q411	8-729-143-07	s	TRANSISTOR 2SA1610-YY33
Q412	8-729-143-07	s	TRANSISTOR 2SA1610-YY33
Q413	8-729-117-72	s	TRANSISTOR 2SC4178
Q414	8-729-143-07	s	TRANSISTOR 2SA1610-YY33
Q415	8-729-143-07	s	TRANSISTOR 2SA1610-YY33
Q416	8-729-905-12	s	TRANSISTOR DTA144EU
Q417	8-729-117-72	s	TRANSISTOR 2SC4178
Q418	8-729-143-07	s	TRANSISTOR 2SA1610-YY33
Q501	8-729-117-32	s	TRANSISTOR 2SC4177
Q502	8-729-923-06	s	TRANSISTOR FMW8
Q503	8-729-904-04	s	TRANSISTOR FMS2
Q504	8-729-903-82	s	TRANSISTOR FMW2
Q505	8-729-143-14	s	TRANSISTOR 2SC4176-B35
Q506	8-729-140-63	s	TRANSISTOR 2SA1611-M5M6
Q507	8-729-931-46	s	TRANSISTOR FMW7
Q508	8-729-907-26	s	TRANSISTOR IMX1
Q509	8-729-117-32	s	TRANSISTOR 2SC4177
Q510	8-729-140-63	s	TRANSISTOR 2SA1611-M5M6
Q511	8-729-117-32	s	TRANSISTOR 2SC4177
Q512	8-729-117-32	s	TRANSISTOR 2SC4177
Q513	8-729-117-32	s	TRANSISTOR 2SC4177

(VP-43P BOARD(UVW-1800P))

Ref. No. or Q'ty	Part No.	SP	Description
Q514	8-729-904-41	s	TRANSISTOR FMY3
Q515	8-729-143-14	s	TRANSISTOR 2SC4176-B35
Q516	8-729-117-32	s	TRANSISTOR 2SC4177
Q517	8-729-904-41	s	TRANSISTOR FMY3
Q601	8-729-117-32	s	TRANSISTOR 2SC4177
Q602	8-729-117-32	s	TRANSISTOR 2SC4177
Q603	8-729-923-06	s	TRANSISTOR FMW8
Q604	8-729-923-06	s	TRANSISTOR FMW8
Q605	8-729-904-04	s	TRANSISTOR FMS2
Q606	8-729-904-04	s	TRANSISTOR FMS2
Q607	8-729-903-82	s	TRANSISTOR FMW2
Q608	8-729-903-82	s	TRANSISTOR FMW2
Q609	8-729-907-26	s	TRANSISTOR IMX1
Q610	8-729-907-26	s	TRANSISTOR IMX1
Q611	8-729-931-46	s	TRANSISTOR FMW7
Q612	8-729-931-46	s	TRANSISTOR FMW7
Q613	8-729-143-14	s	TRANSISTOR 2SC4176-B35
Q614	8-729-140-63	s	TRANSISTOR 2SA1611-M5M6
Q615	8-729-117-32	s	TRANSISTOR 2SC4177
Q616	8-729-140-63	s	TRANSISTOR 2SA1611-M5M6
Q617-626	8-729-117-32	s	TRANSISTOR 2SC4177
Q627	8-729-143-14	s	TRANSISTOR 2SC4176-B35
Q628	8-729-117-32	s	TRANSISTOR 2SC4177
Q701	8-729-117-32	s	TRANSISTOR 2SC4177
Q702	8-729-117-32	s	TRANSISTOR 2SC4177
Q703	8-729-140-63	s	TRANSISTOR 2SA1611-M5M6
Q704	8-729-140-63	s	TRANSISTOR 2SA1611-M5M6
Q705	8-729-117-32	s	TRANSISTOR 2SC4177
Q706	8-729-117-32	s	TRANSISTOR 2SC4177
Q707	8-729-117-32	s	TRANSISTOR 2SC4177
Q708	8-729-117-32	s	TRANSISTOR 2SC4177
Q709	8-729-422-44	s	TRANSISTOR 2SK663
Q710	8-729-422-44	s	TRANSISTOR 2SK663
Q711	8-729-422-44	s	TRANSISTOR 2SK663
Q712	8-729-422-44	s	TRANSISTOR 2SK663
Q713	8-729-140-63	s	TRANSISTOR 2SA1611-M5M6
Q714	8-729-140-63	s	TRANSISTOR 2SA1611-M5M6
R101	1-216-295-91	s	RES, CHIP 0
R102	1-216-295-91	s	RES, CHIP 0
R103	1-216-638-11	s	METAL, CHIP 300 0.5% 1/10W
R104	1-216-638-11	s	METAL, CHIP 300 0.5% 1/10W
R105	1-216-025-91	s	METAL, CHIP 100 5% 1/10W
R106	1-216-057-00	s	METAL, CHIP 2.2K 5% 1/10W
R108	1-216-025-91	s	METAL, CHIP 100 5% 1/10W
R109	1-216-025-91	s	METAL, CHIP 100 5% 1/10W
R110	1-216-049-91	s	METAL, CHIP 1k 5% 1/10W
R111	1-216-025-91	s	METAL, CHIP 100 5% 1/10W
R112	1-216-065-00	s	METAL, CHIP 4.7K 5% 1/10W
R113	1-216-025-91	s	METAL, CHIP 100 5% 1/10W
R114	1-216-057-00	s	METAL, CHIP 2.2K 5% 1/10W
R115	1-216-025-91	s	METAL, CHIP 100 5% 1/10W
R116	1-216-073-00	s	METAL, CHIP 10K 5% 1/10W
R117	1-216-073-00	s	METAL, CHIP 10K 5% 1/10W
R118	1-216-025-91	s	METAL, CHIP 100 5% 1/10W
R119	1-216-057-00	s	METAL, CHIP 2.2K 5% 1/10W
R120	1-216-638-11	s	METAL, CHIP 300 0.5% 1/10W
R121	1-216-065-00	s	METAL, CHIP 4.7K 5% 1/10W
R122	1-216-638-11	s	METAL, CHIP 300 0.5% 1/10W

(VP-43P BOARD(UVW-1800P))

Ref. No. or Q'ty	Part No.	SP	Description
R123	1-216-025-91	s	METAL, CHIP 100 5% 1/10W
R124	1-216-049-91	s	METAL, CHIP 1k 5% 1/10W
R125	1-216-065-00	s	METAL, CHIP 4.7K 5% 1/10W
R126	1-216-049-91	s	METAL, CHIP 1k 5% 1/10W
R127	1-216-073-00	s	METAL, CHIP 10K 5% 1/10W
R128	1-216-097-91	s	METAL, CHIP 100k 5% 1/10W
R129	1-216-025-91	s	METAL, CHIP 100 5% 1/10W
R130	1-216-025-91	s	METAL, CHIP 100 5% 1/10W
R131	1-208-775-11	s	METAL, CHIP 510 0.5% 1/10W
R132	1-208-774-11	s	METAL, CHIP 470 0.5% 1/10W
R133	1-216-041-00	s	METAL, CHIP 470 5% 1/10W
R134	1-216-645-11	s	METAL, CHIP 560 0.5% 1/10W
R135	1-216-025-91	s	METAL, CHIP 100 5% 1/10W
R136	1-208-822-11	s	METAL, CHIP 47k 0.5% 1/10W
R137	1-216-659-11	s	METAL, CHIP 2.2K 0.5% 1/10W
R138	1-216-065-00	s	METAL, CHIP 4.7K 5% 1/10W
R139	1-216-073-00	s	METAL, CHIP 10K 5% 1/10W
R140	1-216-025-91	s	METAL, CHIP 100 5% 1/10W
R141	1-216-073-00	s	METAL, CHIP 10K 5% 1/10W
R142	1-216-081-00	s	METAL, CHIP 22K 5% 1/10W
R143	1-216-041-00	s	METAL, CHIP 470 5% 1/10W
R144	1-216-635-11	s	METAL, CHIP 220 0.5% 1/10W
R145	1-216-037-00	s	METAL, CHIP 330 5% 1/10W
R146	1-216-037-00	s	METAL, CHIP 330 5% 1/10W
R147	1-216-065-00	s	METAL, CHIP 4.7K 5% 1/10W
R148	1-216-065-00	s	METAL, CHIP 4.7K 5% 1/10W
R149	1-216-655-11	s	METAL, CHIP 1.5K 0.5% 1/10W
R150	1-216-671-11	s	METAL, CHIP 6.8K 0.5% 1/10W
R151	1-216-025-91	s	METAL, CHIP 100 5% 1/10W
R152	1-216-057-00	s	METAL, CHIP 2.2K 5% 1/10W
R153	1-216-057-00	s	METAL, CHIP 2.2K 5% 1/10W
R154	1-216-037-00	s	METAL, CHIP 330 5% 1/10W
R155	1-216-041-00	s	METAL, CHIP 470 5% 1/10W
R156	1-216-035-00	s	METAL, CHIP 270 5% 1/10W
R157	1-216-037-00	s	METAL, CHIP 330 5% 1/10W
R158	1-216-065-00	s	METAL, CHIP 4.7K 5% 1/10W
R159	1-216-077-00	s	METAL, CHIP 15K 5% 1/10W
R160	1-216-085-00	s	METAL, CHIP 33K 5% 1/10W
R161	1-216-073-00	s	METAL, CHIP 10K 5% 1/10W
R162	1-216-073-00	s	METAL, CHIP 10K 5% 1/10W
R163	1-208-806-11	s	METAL, CHIP 10k 0.5% 1/10W
R164	1-216-659-11	s	METAL, CHIP 2.2K 0.5% 1/10W
R165	1-216-065-00	s	METAL, CHIP 4.7K 5% 1/10W
R166	1-216-037-00	s	METAL, CHIP 330 5% 1/10W
R167	1-216-295-91	s	RES, CHIP 0
R168	1-216-073-00	s	METAL, CHIP 10K 5% 1/10W
R169	1-216-073-00	s	METAL, CHIP 10K 5% 1/10W
R170	1-216-073-00	s	METAL, CHIP 10K 5% 1/10W
R201	1-208-806-11	s	METAL, CHIP 10k 0.5% 1/10W
R202	1-208-806-11	s	METAL, CHIP 10k 0.5% 1/10W
R203	1-208-806-11	s	METAL, CHIP 10k 0.5% 1/10W
R204	1-216-695-11	s	METAL, CHIP 68K 0.5% 1/10W
R205	1-216-650-11	s	METAL, CHIP 910 0.5% 1/10W
R206	1-216-049-91	s	METAL, CHIP 1k 5% 1/10W
R207	1-216-025-91	s	METAL, CHIP 100 5% 1/10W
R208	1-216-025-91	s	METAL, CHIP 100 5% 1/10W
R209	1-216-639-11	s	METAL, CHIP 330 0.5% 1/10W
R210	1-216-057-00	s	METAL, CHIP 2.2K 5% 1/10W
R211	1-216-651-11	s	METAL, CHIP 1K 0.5% 1/10W

(VP-43P BOARD(UVW-1800P))

Ref. No. or Q'ty	Part No.	SP	Description
R212	1-216-025-91	s	METAL, CHIP 100 5% 1/10W
R213	1-216-639-11	s	METAL, CHIP 330 0.5% 1/10W
R214	1-216-065-00	s	METAL, CHIP 4.7K 5% 1/10W
R215	1-208-784-11	s	METAL, CHIP 1.2k 0.5% 1/10W
R216	1-216-673-11	s	METAL, CHIP 8.2K 0.5% 1/10W
R217	1-208-784-11	s	METAL, CHIP 1.2k 0.5% 1/10W
R218	1-216-073-00	s	METAL, CHIP 10K 5% 1/10W
R219	1-216-073-00	s	METAL, CHIP 10K 5% 1/10W
R220	1-216-025-91	s	METAL, CHIP 100 5% 1/10W
R221	1-216-025-91	s	METAL, CHIP 100 5% 1/10W
R222	1-216-065-00	s	METAL, CHIP 4.7K 5% 1/10W
R223	1-216-025-91	s	METAL, CHIP 100 5% 1/10W
R224	1-216-049-91	s	METAL, CHIP 1k 5% 1/10W
R225	1-216-049-91	s	METAL, CHIP 1k 5% 1/10W
R226	1-216-063-91	s	METAL, CHIP 3.9k 5% 1/10W
R227	1-216-065-00	s	METAL, CHIP 4.7K 5% 1/10W
R228	1-216-025-91	s	METAL, CHIP 100 5% 1/10W
R229	1-216-055-00	s	METAL, CHIP 1.8K 5% 1/10W
R230	1-216-025-91	s	METAL, CHIP 100 5% 1/10W
R231	1-216-049-91	s	METAL, CHIP 1k 5% 1/10W
R232	1-216-025-91	s	METAL, CHIP 100 5% 1/10W
R233	1-216-055-00	s	METAL, CHIP 1.8K 5% 1/10W
R234	1-216-057-00	s	METAL, CHIP 2.2K 5% 1/10W
R235	1-216-057-00	s	METAL, CHIP 2.2K 5% 1/10W
R236	1-216-025-91	s	METAL, CHIP 100 5% 1/10W
R237	1-216-065-00	s	METAL, CHIP 4.7K 5% 1/10W
R238	1-216-065-00	s	METAL, CHIP 4.7K 5% 1/10W
R239	1-216-025-91	s	METAL, CHIP 100 5% 1/10W
R240	1-216-655-11	s	METAL, CHIP 1.5K 0.5% 1/10W
R241	1-216-663-11	s	METAL, CHIP 3.3K 0.5% 1/10W
R242	1-216-049-91	s	METAL, CHIP 1k 5% 1/10W
R243	1-216-063-91	s	METAL, CHIP 3.9k 5% 1/10W
R244	1-216-646-11	s	METAL, CHIP 620 0.5% 1/10W
R245	1-216-671-11	s	METAL, CHIP 6.8K 0.5% 1/10W
R246	1-216-057-00	s	METAL, CHIP 2.2K 5% 1/10W
R247	1-216-667-11	s	METAL, CHIP 4.7K 0.5% 1/10W
R248	1-208-799-11	s	METAL, CHIP 5.1k 0.5% 1/10W
R249	1-216-057-00	s	METAL, CHIP 2.2K 5% 1/10W
R250	1-216-113-00	s	METAL, CHIP 470K 5% 1/10W
R251	1-216-667-11	s	METAL, CHIP 4.7K 0.5% 1/10W
R253	1-216-687-11	s	METAL, CHIP 33K 0.5% 1/10W
R254	1-216-687-11	s	METAL, CHIP 33K 0.5% 1/10W
R255	1-216-651-11	s	METAL, CHIP 1K 0.5% 1/10W
R256	1-216-025-91	s	METAL, CHIP 100 5% 1/10W
R257	1-216-638-11	s	METAL, CHIP 300 0.5% 1/10W
R258	1-216-665-11	s	METAL, CHIP 3.9K 0.5% 1/10W
R259	1-216-671-11	s	METAL, CHIP 6.8K 0.5% 1/10W
R260	1-216-689-11	s	METAL, CHIP 39K 0.5% 1/10W
R261	1-216-121-91	s	METAL, CHIP 1M 5% 1/10W
R262	1-216-685-11	s	METAL, CHIP 27K 0.5% 1/10W
R263	1-216-073-00	s	METAL, CHIP 10K 5% 1/10W
R264	1-216-025-91	s	METAL, CHIP 100 5% 1/10W
R265	1-216-041-00	s	METAL, CHIP 470 5% 1/10W
R266	1-216-638-11	s	METAL, CHIP 300 0.5% 1/10W
R267	1-216-037-00	s	METAL, CHIP 330 5% 1/10W
R268	1-216-057-00	s	METAL, CHIP 2.2K 5% 1/10W
R269	1-216-041-00	s	METAL, CHIP 470 5% 1/10W
R270	1-216-638-11	s	METAL, CHIP 300 0.5% 1/10W
R271	1-216-049-91	s	METAL, CHIP 1k 5% 1/10W

(VP-43P BOARD(UVW-1800P))

Ref. No. or Q'ty	Part No.	SP	Description
R272	1-208-751-11	s	METAL, CHIP 51 0.5% 1/10W
R273	1-216-037-00	s	METAL, CHIP 330 5% 1/10W
R274	1-216-295-91	s	RES, CHIP 0
R275	1-216-089-91	s	METAL, CHIP 47k 5% 1/10W
R276	1-216-057-00	s	METAL, CHIP 2.2K 5% 1/10W
R277	1-216-671-11	s	METAL, CHIP 6.8K 0.5% 1/10W
R278	1-216-025-91	s	METAL, CHIP 100 5% 1/10W
R301	1-216-295-91	s	RES, CHIP 0
R302	1-216-295-91	s	RES, CHIP 0
R303	1-216-638-11	s	METAL, CHIP 300 0.5% 1/10W
R304	1-216-638-11	s	METAL, CHIP 300 0.5% 1/10W
R305	1-216-025-91	s	METAL, CHIP 100 5% 1/10W
R306	1-216-049-91	s	METAL, CHIP 1k 5% 1/10W
R307	1-216-025-91	s	METAL, CHIP 100 5% 1/10W
R308	1-216-065-00	s	METAL, CHIP 4.7K 5% 1/10W
R309	1-216-025-91	s	METAL, CHIP 100 5% 1/10W
R310	1-216-025-91	s	METAL, CHIP 100 5% 1/10W
R311	1-216-057-00	s	METAL, CHIP 2.2K 5% 1/10W
R312	1-216-025-91	s	METAL, CHIP 100 5% 1/10W
R313	1-216-057-00	s	METAL, CHIP 2.2K 5% 1/10W
R314	1-216-073-00	s	METAL, CHIP 10K 5% 1/10W
R315	1-216-638-11	s	METAL, CHIP 300 0.5% 1/10W
R316	1-216-073-00	s	METAL, CHIP 10K 5% 1/10W
R317	1-216-025-91	s	METAL, CHIP 100 5% 1/10W
R318	1-216-638-11	s	METAL, CHIP 300 0.5% 1/10W
R319	1-216-065-00	s	METAL, CHIP 4.7K 5% 1/10W
R320	1-216-065-00	s	METAL, CHIP 4.7K 5% 1/10W
R321	1-216-049-91	s	METAL, CHIP 1k 5% 1/10W
R322	1-216-651-11	s	METAL, CHIP 1K 0.5% 1/10W
R323	1-216-049-91	s	METAL, CHIP 1k 5% 1/10W
R324	1-216-025-91	s	METAL, CHIP 100 5% 1/10W
R325	1-208-775-11	s	METAL, CHIP 510 0.5% 1/10W
R326	1-208-774-11	s	METAL, CHIP 470 0.5% 1/10W
R327	1-216-041-00	s	METAL, CHIP 470 5% 1/10W
R328	1-216-073-00	s	METAL, CHIP 10K 5% 1/10W
R329	1-216-097-91	s	METAL, CHIP 100k 5% 1/10W
R330	1-208-774-11	s	METAL, CHIP 470 0.5% 1/10W
R331	1-216-025-91	s	METAL, CHIP 100 5% 1/10W
R332	1-216-065-00	s	METAL, CHIP 4.7K 5% 1/10W
R333	1-216-073-00	s	METAL, CHIP 10K 5% 1/10W
R334	1-216-025-91	s	METAL, CHIP 100 5% 1/10W
R335	1-216-073-00	s	METAL, CHIP 10K 5% 1/10W
R336	1-216-635-11	s	METAL, CHIP 220 0.5% 1/10W
R337	1-216-041-00	s	METAL, CHIP 470 5% 1/10W
R338	1-216-037-00	s	METAL, CHIP 330 5% 1/10W
R339	1-216-037-00	s	METAL, CHIP 330 5% 1/10W
R340	1-216-065-00	s	METAL, CHIP 4.7K 5% 1/10W
R341	1-216-065-00	s	METAL, CHIP 4.7K 5% 1/10W
R342	1-216-651-11	s	METAL, CHIP 1K 0.5% 1/10W
R343	1-208-784-11	s	METAL, CHIP 1.2k 0.5% 1/10W
R344	1-216-037-00	s	METAL, CHIP 330 5% 1/10W
R345	1-216-041-00	s	METAL, CHIP 470 5% 1/10W
R346	1-216-037-00	s	METAL, CHIP 330 5% 1/10W
R347	1-216-619-11	s	METAL, CHIP 47 0.5% 1/10W
R348	1-216-057-00	s	METAL, CHIP 2.2K 5% 1/10W
R349	1-216-025-91	s	METAL, CHIP 100 5% 1/10W
R350	1-216-065-00	s	METAL, CHIP 4.7K 5% 1/10W
R351	1-216-057-00	s	METAL, CHIP 2.2K 5% 1/10W
R352	1-216-077-00	s	METAL, CHIP 15K 5% 1/10W

(VP-43P BOARD(UVW-1800P))

Ref. No. or Q'ty	Part No.	SP	Description
R353	1-216-085-00	s	METAL, CHIP 33K 5% 1/10W
R354	1-216-073-00	s	METAL, CHIP 10K 5% 1/10W
R355	1-216-073-00	s	METAL, CHIP 10K 5% 1/10W
R356	1-208-806-11	s	METAL, CHIP 10k 0.5% 1/10W
R357	1-216-661-11	s	METAL, CHIP 2.7K 0.5% 1/10W
R358	1-216-065-00	s	METAL, CHIP 4.7K 5% 1/10W
R359	1-216-037-00	s	METAL, CHIP 330 5% 1/10W
R401	1-216-025-91	s	METAL, CHIP 100 5% 1/10W
R402	1-216-025-91	s	METAL, CHIP 100 5% 1/10W
R403	1-216-639-11	s	METAL, CHIP 330 0.5% 1/10W
R404	1-216-057-00	s	METAL, CHIP 2.2K 5% 1/10W
R405	1-216-639-11	s	METAL, CHIP 330 0.5% 1/10W
R406	1-216-025-91	s	METAL, CHIP 100 5% 1/10W
R407	1-216-065-00	s	METAL, CHIP 4.7K 5% 1/10W
R408	1-216-025-91	s	METAL, CHIP 100 5% 1/10W
R409	1-216-065-00	s	METAL, CHIP 4.7K 5% 1/10W
R410	1-216-651-11	s	METAL, CHIP 1K 0.5% 1/10W
R411	1-216-025-91	s	METAL, CHIP 100 5% 1/10W
R412	1-216-055-00	s	METAL, CHIP 1.8K 5% 1/10W
R413	1-216-025-91	s	METAL, CHIP 100 5% 1/10W
R414	1-216-673-11	s	METAL, CHIP 8.2K 0.5% 1/10W
R415	1-208-774-11	s	METAL, CHIP 470 0.5% 1/10W
R416	1-216-025-91	s	METAL, CHIP 100 5% 1/10W
R417	1-216-055-00	s	METAL, CHIP 1.8K 5% 1/10W
R418	1-208-784-11	s	METAL, CHIP 1.2k 0.5% 1/10W
R419	1-216-065-00	s	METAL, CHIP 4.7K 5% 1/10W
R420	1-216-651-11	s	METAL, CHIP 1K 0.5% 1/10W
R421	1-216-649-11	s	METAL, CHIP 820 0.5% 1/10W
R422	1-216-664-11	s	METAL, CHIP 3.6K 0.5% 1/10W
R423	1-216-073-00	s	METAL, CHIP 10K 5% 1/10W
R424	1-216-073-00	s	METAL, CHIP 10K 5% 1/10W
R425	1-216-025-91	s	METAL, CHIP 100 5% 1/10W
R426	1-208-806-11	s	METAL, CHIP 10k 0.5% 1/10W
R427	1-216-065-00	s	METAL, CHIP 4.7K 5% 1/10W
R428	1-216-025-91	s	METAL, CHIP 100 5% 1/10W
R429	1-216-057-00	s	METAL, CHIP 2.2K 5% 1/10W
R430	1-216-049-91	s	METAL, CHIP 1k 5% 1/10W
R431	1-216-063-91	s	METAL, CHIP 3.9k 5% 1/10W
R432	1-216-049-91	s	METAL, CHIP 1k 5% 1/10W
R433	1-216-057-00	s	METAL, CHIP 2.2K 5% 1/10W
R434	1-216-057-00	s	METAL, CHIP 2.2K 5% 1/10W
R435	1-216-025-91	s	METAL, CHIP 100 5% 1/10W
R436	1-216-025-91	s	METAL, CHIP 100 5% 1/10W
R437	1-216-065-00	s	METAL, CHIP 4.7K 5% 1/10W
R438	1-216-049-91	s	METAL, CHIP 1k 5% 1/10W
R439	1-216-063-91	s	METAL, CHIP 3.9k 5% 1/10W
R440	1-216-667-11	s	METAL, CHIP 4.7K 0.5% 1/10W
R441	1-216-667-11	s	METAL, CHIP 4.7K 0.5% 1/10W
R442	1-216-057-00	s	METAL, CHIP 2.2K 5% 1/10W
R443	1-216-113-00	s	METAL, CHIP 470K 5% 1/10W
R444	1-208-800-11	s	METAL, CHIP 5.6k 0.5% 1/10W
R446	1-216-687-11	s	METAL, CHIP 33K 0.5% 1/10W
R447	1-208-812-11	s	METAL, CHIP 18k 0.5% 1/10W
R448	1-216-651-11	s	METAL, CHIP 1K 0.5% 1/10W
R449	1-216-025-91	s	METAL, CHIP 100 5% 1/10W
R450	1-216-639-11	s	METAL, CHIP 330 0.5% 1/10W
R451	1-216-665-11	s	METAL, CHIP 3.9K 0.5% 1/10W
R452	1-208-800-11	s	METAL, CHIP 5.6k 0.5% 1/10W
R453	1-216-689-11	s	METAL, CHIP 39K 0.5% 1/10W

(VP-43P BOARD(UVW-1800P))

Ref. No. or Q'ty	Part No.	SP	Description
R454	1-216-121-91	s	METAL, CHIP 1M 5% 1/10W
R455	1-216-685-11	s	METAL, CHIP 27K 0.5% 1/10W
R456	1-216-073-00	s	METAL, CHIP 10K 5% 1/10W
R457	1-216-025-91	s	METAL, CHIP 100 5% 1/10W
R458	1-216-041-00	s	METAL, CHIP 470 5% 1/10W
R459	1-216-638-11	s	METAL, CHIP 300 0.5% 1/10W
R460	1-216-049-91	s	METAL, CHIP 1k 5% 1/10W
R461	1-208-751-11	s	METAL, CHIP 51 0.5% 1/10W
R462	1-216-037-00	s	METAL, CHIP 330 5% 1/10W
R463	1-216-057-00	s	METAL, CHIP 2.2K 5% 1/10W
R464	1-216-089-91	s	METAL, CHIP 47k 5% 1/10W
R501	1-216-081-00	s	METAL, CHIP 22K 5% 1/10W
R502	1-216-049-91	s	METAL, CHIP 1k 5% 1/10W
R503	1-216-049-91	s	METAL, CHIP 1k 5% 1/10W
R504	1-216-049-91	s	METAL, CHIP 1k 5% 1/10W
R505	1-216-049-91	s	METAL, CHIP 1k 5% 1/10W
R506	1-216-057-00	s	METAL, CHIP 2.2K 5% 1/10W
R507	1-216-049-91	s	METAL, CHIP 1k 5% 1/10W
R508	1-216-121-91	s	METAL, CHIP 1M 5% 1/10W
R509	1-216-049-91	s	METAL, CHIP 1k 5% 1/10W
R510	1-216-049-91	s	METAL, CHIP 1k 5% 1/10W
R511	1-216-033-00	s	METAL, CHIP 220 5% 1/10W
R512	1-216-065-00	s	METAL, CHIP 4.7K 5% 1/10W
R513	1-216-045-00	s	METAL, CHIP 680 5% 1/10W
R514	1-216-065-00	s	METAL, CHIP 4.7K 5% 1/10W
R515	1-216-077-00	s	METAL, CHIP 15K 5% 1/10W
R516	1-216-049-91	s	METAL, CHIP 1k 5% 1/10W
R517	1-216-033-00	s	METAL, CHIP 220 5% 1/10W
R518	1-216-049-91	s	METAL, CHIP 1k 5% 1/10W
R519	1-216-073-00	s	METAL, CHIP 10K 5% 1/10W
R520	1-216-049-91	s	METAL, CHIP 1k 5% 1/10W
R521	1-216-017-91	s	METAL, CHIP 47 5% 1/10W
R522	1-216-027-00	s	METAL, CHIP 120 5% 1/10W
R523	1-216-081-00	s	METAL, CHIP 22K 5% 1/10W
R524	1-216-081-00	s	METAL, CHIP 22K 5% 1/10W
R525	1-216-081-00	s	METAL, CHIP 22K 5% 1/10W
R526	1-216-049-91	s	METAL, CHIP 1k 5% 1/10W
R527	1-216-647-11	s	METAL, CHIP 680 0.5% 1/10W
R528	1-216-057-00	s	METAL, CHIP 2.2K 5% 1/10W
R529	1-216-659-11	s	METAL, CHIP 2.2K 0.5% 1/10W
R530	1-216-651-11	s	METAL, CHIP 1K 0.5% 1/10W
R531	1-216-025-91	s	METAL, CHIP 100 5% 1/10W
R532	1-216-041-00	s	METAL, CHIP 470 5% 1/10W
R533	1-216-025-91	s	METAL, CHIP 100 5% 1/10W
R534	1-216-041-00	s	METAL, CHIP 470 5% 1/10W
R535	1-216-041-00	s	METAL, CHIP 470 5% 1/10W
R536	1-216-049-91	s	METAL, CHIP 1k 5% 1/10W
R537	1-216-041-00	s	METAL, CHIP 470 5% 1/10W
R538	1-216-651-11	s	METAL, CHIP 1K 0.5% 1/10W
R539	1-208-784-11	s	METAL, CHIP 1.2k 0.5% 1/10W
R540	1-216-057-00	s	METAL, CHIP 2.2K 5% 1/10W
R541	1-216-651-11	s	METAL, CHIP 1K 0.5% 1/10W
R542	1-216-057-00	s	METAL, CHIP 2.2K 5% 1/10W
R543	1-216-057-00	s	METAL, CHIP 2.2K 5% 1/10W
R544	1-216-049-91	s	METAL, CHIP 1k 5% 1/10W
R545	1-216-049-91	s	METAL, CHIP 1k 5% 1/10W
R546	1-216-113-00	s	METAL, CHIP 470K 5% 1/10W
R547	1-216-053-00	s	METAL, CHIP 1.5K 5% 1/10W
R548	1-216-049-91	s	METAL, CHIP 1k 5% 1/10W

(VP-43P BOARD(UVW-1800P))

Ref. No. or Q'ty	Part No.	SP	Description
R549	1-216-049-91	s	METAL, CHIP 1k 5% 1/10W
R550	1-216-049-91	s	METAL, CHIP 1k 5% 1/10W
R551	1-216-057-00	s	METAL, CHIP 2.2K 5% 1/10W
R552	1-216-057-00	s	METAL, CHIP 2.2K 5% 1/10W
R553	1-216-041-00	s	METAL, CHIP 470 5% 1/10W
R554	1-216-041-00	s	METAL, CHIP 470 5% 1/10W
R555	1-216-073-00	s	METAL, CHIP 10K 5% 1/10W
R556	1-216-049-91	s	METAL, CHIP 1k 5% 1/10W
R557	1-216-049-91	s	METAL, CHIP 1k 5% 1/10W
R558	1-216-041-00	s	METAL, CHIP 470 5% 1/10W
R559	1-216-053-00	s	METAL, CHIP 1.5K 5% 1/10W
R560	1-216-049-91	s	METAL, CHIP 1k 5% 1/10W
R561	1-216-025-91	s	METAL, CHIP 100 5% 1/10W
R562	1-216-017-91	s	METAL, CHIP 47 5% 1/10W
R563	1-216-017-91	s	METAL, CHIP 47 5% 1/10W
R564	1-216-667-11	s	METAL, CHIP 4.7K 0.5% 1/10W
R565	1-216-651-11	s	METAL, CHIP 1K 0.5% 1/10W
R566	1-216-073-00	s	METAL, CHIP 10K 5% 1/10W
R567	1-208-784-11	s	METAL, CHIP 1.2k 0.5% 1/10W
R568-572	1-216-624-11	s	METAL, CHIP 75 0.5% 1/10W
R573	1-216-049-91	s	METAL, CHIP 1k 5% 1/10W
R574	1-216-081-00	s	METAL, CHIP 22K 5% 1/10W
R575	1-216-097-91	s	METAL, CHIP 100k 5% 1/10W
R576	1-216-057-00	s	METAL, CHIP 2.2K 5% 1/10W
R600	1-208-806-11	s	METAL, CHIP 10k 0.5% 1/10W
R601	1-216-049-91	s	METAL, CHIP 1k 5% 1/10W
R602	1-216-049-91	s	METAL, CHIP 1k 5% 1/10W
R603	1-216-089-91	s	METAL, CHIP 47k 5% 1/10W
R604	1-216-049-91	s	METAL, CHIP 1k 5% 1/10W
R605	1-216-049-91	s	METAL, CHIP 1k 5% 1/10W
R606	1-216-049-91	s	METAL, CHIP 1k 5% 1/10W
R607	1-216-049-91	s	METAL, CHIP 1k 5% 1/10W
R608	1-216-057-00	s	METAL, CHIP 2.2K 5% 1/10W
R609	1-216-057-00	s	METAL, CHIP 2.2K 5% 1/10W
R610	1-216-033-00	s	METAL, CHIP 220 5% 1/10W
R611	1-216-033-00	s	METAL, CHIP 220 5% 1/10W
R612	1-208-806-11	s	METAL, CHIP 10k 0.5% 1/10W
R613	1-216-045-00	s	METAL, CHIP 680 5% 1/10W
R614	1-216-045-00	s	METAL, CHIP 680 5% 1/10W
R615	1-216-077-00	s	METAL, CHIP 15K 5% 1/10W
R616	1-216-077-00	s	METAL, CHIP 15K 5% 1/10W
R617	1-216-017-91	s	METAL, CHIP 47 5% 1/10W
R618	1-216-017-91	s	METAL, CHIP 47 5% 1/10W
R619	1-216-027-00	s	METAL, CHIP 120 5% 1/10W
R620	1-216-027-00	s	METAL, CHIP 120 5% 1/10W
R621	1-216-682-11	s	METAL, CHIP 20K 0.5% 1/10W
R622	1-216-081-00	s	METAL, CHIP 22K 5% 1/10W
R623	1-216-049-91	s	METAL, CHIP 1k 5% 1/10W
R626	1-216-049-91	s	METAL, CHIP 1k 5% 1/10W
R627	1-216-049-91	s	METAL, CHIP 1k 5% 1/10W
R628	1-216-057-00	s	METAL, CHIP 2.2K 5% 1/10W
R629	1-216-057-00	s	METAL, CHIP 2.2K 5% 1/10W
R630	1-216-065-00	s	METAL, CHIP 4.7K 5% 1/10W
R631	1-216-065-00	s	METAL, CHIP 4.7K 5% 1/10W
R632	1-216-049-91	s	METAL, CHIP 1k 5% 1/10W
R633	1-216-295-91	s	RES, CHIP 0
R634	1-216-049-91	s	METAL, CHIP 1k 5% 1/10W
R635	1-216-049-91	s	METAL, CHIP 1k 5% 1/10W
R636	1-216-081-00	s	METAL, CHIP 22K 5% 1/10W

(VP-43P BOARD(UVW-1800P))

Ref. No. or Q'ty	Part No.	SP	Description
R637	1-216-121-91	s	METAL, CHIP 1M 5% 1/10W
R638	1-216-121-91	s	METAL, CHIP 1M 5% 1/10W
R639	1-216-081-00	s	METAL, CHIP 22K 5% 1/10W
R640	1-216-081-00	s	METAL, CHIP 22K 5% 1/10W
R641	1-216-049-91	s	METAL, CHIP 1k 5% 1/10W
R642	1-216-049-91	s	METAL, CHIP 1k 5% 1/10W
R643	1-216-049-91	s	METAL, CHIP 1k 5% 1/10W
R644	1-216-081-00	s	METAL, CHIP 22K 5% 1/10W
R645	1-216-089-91	s	METAL, CHIP 47k 5% 1/10W
R646	1-216-049-91	s	METAL, CHIP 1k 5% 1/10W
R647	1-216-089-91	s	METAL, CHIP 47k 5% 1/10W
R648	1-216-049-91	s	METAL, CHIP 1k 5% 1/10W
R649	1-216-049-91	s	METAL, CHIP 1k 5% 1/10W
R650	1-216-049-91	s	METAL, CHIP 1k 5% 1/10W
R651	1-216-025-91	s	METAL, CHIP 100 5% 1/10W
R652	1-216-657-11	s	METAL, CHIP 1.8K 0.5% 1/10W
R653	1-216-073-00	s	METAL, CHIP 10K 5% 1/10W
R654	1-216-065-00	s	METAL, CHIP 4.7K 5% 1/10W
R655	1-216-065-00	s	METAL, CHIP 4.7K 5% 1/10W
R656	1-216-047-91	s	METAL, CHIP 820 5% 1/10W
R657	1-216-065-00	s	METAL, CHIP 4.7K 5% 1/10W
R658	1-216-065-00	s	METAL, CHIP 4.7K 5% 1/10W
R659	1-216-041-00	s	METAL, CHIP 470 5% 1/10W
R660	1-216-041-00	s	METAL, CHIP 470 5% 1/10W
R661	1-216-049-91	s	METAL, CHIP 1k 5% 1/10W
R662	1-216-037-00	s	METAL, CHIP 330 5% 1/10W
R663	1-216-077-00	s	METAL, CHIP 15K 5% 1/10W
R664	1-216-079-00	s	METAL, CHIP 18K 5% 1/10W
R665	1-216-081-00	s	METAL, CHIP 22K 5% 1/10W
R666	1-216-081-00	s	METAL, CHIP 22K 5% 1/10W
R667	1-216-097-91	s	METAL, CHIP 100k 5% 1/10W
R668	1-216-049-91	s	METAL, CHIP 1k 5% 1/10W
R669	1-216-049-91	s	METAL, CHIP 1k 5% 1/10W
R670	1-216-666-11	s	METAL, CHIP 4.3K 0.5% 1/10W
R671	1-216-049-91	s	METAL, CHIP 1k 5% 1/10W
R672	1-216-049-91	s	METAL, CHIP 1k 5% 1/10W
R673	1-216-295-91	s	RES, CHIP 0
R675	1-216-049-91	s	METAL, CHIP 1k 5% 1/10W
R676	1-216-037-00	s	METAL, CHIP 330 5% 1/10W
R677	1-216-037-00	s	METAL, CHIP 330 5% 1/10W
R678-682	1-216-049-91	s	METAL, CHIP 1k 5% 1/10W
R683	1-216-057-00	s	METAL, CHIP 2.2K 5% 1/10W
R684	1-216-647-11	s	METAL, CHIP 680 0.5% 1/10W
R685	1-216-049-91	s	METAL, CHIP 1k 5% 1/10W
R686	1-216-661-11	s	METAL, CHIP 2.7K 0.5% 1/10W
R687	1-216-057-00	s	METAL, CHIP 2.2K 5% 1/10W
R688	1-216-045-00	s	METAL, CHIP 680 5% 1/10W
R689	1-216-639-11	s	METAL, CHIP 330 0.5% 1/10W
R690	1-216-651-11	s	METAL, CHIP 1K 0.5% 1/10W
R691	1-216-049-91	s	METAL, CHIP 1k 5% 1/10W
R692	1-216-025-91	s	METAL, CHIP 100 5% 1/10W
R693	1-216-025-91	s	METAL, CHIP 100 5% 1/10W
R694	1-216-624-11	s	METAL, CHIP 75 0.5% 1/10W
R695	1-216-081-00	s	METAL, CHIP 22K 5% 1/10W
R696	1-216-095-00	s	METAL, CHIP 82K 5% 1/10W
R697	1-216-057-00	s	METAL, CHIP 2.2K 5% 1/10W
R698	1-216-057-00	s	METAL, CHIP 2.2K 5% 1/10W
R699	1-216-073-00	s	METAL, CHIP 10K 5% 1/10W
R701	1-216-025-91	s	METAL, CHIP 100 5% 1/10W

(VP-43P BOARD(UVW-1800P))

Ref. No. or Q'ty	Part No.	SP	Description
R702	1-216-025-91	s	METAL, CHIP 100 5% 1/10W
R703	1-216-049-91	s	METAL, CHIP 1k 5% 1/10W
R704	1-216-049-91	s	METAL, CHIP 1k 5% 1/10W
R705	1-216-049-91	s	METAL, CHIP 1k 5% 1/10W
R706	1-216-049-91	s	METAL, CHIP 1k 5% 1/10W
R707	1-208-784-11	s	METAL, CHIP 1.2k 0.5% 1/10W
R708	1-208-784-11	s	METAL, CHIP 1.2k 0.5% 1/10W
R709	1-216-065-00	s	METAL, CHIP 4.7K 5% 1/10W
R710	1-216-065-00	s	METAL, CHIP 4.7K 5% 1/10W
R711	1-216-025-91	s	METAL, CHIP 100 5% 1/10W
R712	1-216-025-91	s	METAL, CHIP 100 5% 1/10W
R713	1-216-049-91	s	METAL, CHIP 1k 5% 1/10W
R714	1-216-049-91	s	METAL, CHIP 1k 5% 1/10W
R715	1-216-049-91	s	METAL, CHIP 1k 5% 1/10W
R716	1-216-049-91	s	METAL, CHIP 1k 5% 1/10W
R717	1-216-065-00	s	METAL, CHIP 4.7K 5% 1/10W
R718	1-216-065-00	s	METAL, CHIP 4.7K 5% 1/10W
R719	1-216-639-11	s	METAL, CHIP 330 0.5% 1/10W
R720	1-216-639-11	s	METAL, CHIP 330 0.5% 1/10W
R721	1-216-025-91	s	METAL, CHIP 100 5% 1/10W
R722	1-216-025-91	s	METAL, CHIP 100 5% 1/10W
R723	1-216-065-00	s	METAL, CHIP 4.7K 5% 1/10W
R724	1-216-041-00	s	METAL, CHIP 470 5% 1/10W
R725	1-216-065-00	s	METAL, CHIP 4.7K 5% 1/10W
R726	1-216-041-00	s	METAL, CHIP 470 5% 1/10W
R727	1-216-049-91	s	METAL, CHIP 1k 5% 1/10W
R728	1-216-049-91	s	METAL, CHIP 1k 5% 1/10W
R729	1-216-624-11	s	METAL, CHIP 75 0.5% 1/10W
R730	1-216-624-11	s	METAL, CHIP 75 0.5% 1/10W
R731	1-216-624-11	s	METAL, CHIP 75 0.5% 1/10W
R732	1-216-624-11	s	METAL, CHIP 75 0.5% 1/10W
R733-737	1-216-097-91	s	METAL, CHIP 100k 5% 1/10W
R738	1-216-049-91	s	METAL, CHIP 1k 5% 1/10W
R739	1-216-049-91	s	METAL, CHIP 1k 5% 1/10W
R740	1-216-049-91	s	METAL, CHIP 1k 5% 1/10W
R741	1-216-073-00	s	METAL, CHIP 10K 5% 1/10W
R742	1-216-049-91	s	METAL, CHIP 1k 5% 1/10W
R743	1-216-049-91	s	METAL, CHIP 1k 5% 1/10W
R744	1-216-049-91	s	METAL, CHIP 1k 5% 1/10W
R745	1-216-113-00	s	METAL, CHIP 470K 5% 1/10W
R746	1-216-049-91	s	METAL, CHIP 1k 5% 1/10W
R747	1-216-049-91	s	METAL, CHIP 1k 5% 1/10W
R748	1-216-097-91	s	METAL, CHIP 100k 5% 1/10W
R749	1-216-049-91	s	METAL, CHIP 1k 5% 1/10W
R750	1-216-097-91	s	METAL, CHIP 100k 5% 1/10W
R751	1-216-049-91	s	METAL, CHIP 1k 5% 1/10W
RV101	1-241-785-11	s	RES, ADJ METAL 10k
RV102	1-241-785-11	s	RES, ADJ METAL 10k
RV103	1-241-761-11	s	RES, ADJ METAL 1k
RV201	1-241-763-11	s	RES, ADJ METAL 4.7k
RV301	1-241-785-11	s	RES, ADJ METAL 10k
RV302	1-241-785-11	s	RES, ADJ METAL 10k
RV303	1-241-761-11	s	RES, ADJ METAL 1k
RV401	1-241-764-11	s	RES, ADJ METAL 10k
RV501	1-241-761-11	s	RES, ADJ METAL 1k
RV502	1-241-761-11	s	RES, ADJ METAL 1k
RV503	1-241-761-11	s	RES, ADJ METAL 1k
RV504	1-241-761-11	s	RES, ADJ METAL 1k

(VP-43P BOARD(UVW-1800P))

Ref. No. or Q'ty	Part No.	SP	Description
RV505	1-241-761-11	s	RES, ADJ METAL 1k
RV506	1-241-758-11	s	RES, ADJ METAL 100
RV601	1-241-787-11	s	RES, ADJ METAL 47k
RV602	1-241-787-11	s	RES, ADJ METAL 47k
RV603	1-241-783-11	s	RES, ADJ METAL 2.2k
RV604	1-241-784-11	s	RES, ADJ METAL 4.7k
RV605	1-241-784-11	s	RES, ADJ METAL 4.7k
RV606	1-241-779-11	s	RES, ADJ METAL 100
RV701	1-241-783-11	s	RES, ADJ METAL 2.2k
RV702	1-241-783-11	s	RES, ADJ METAL 2.2k
RV703	1-241-761-11	s	RES, ADJ METAL 1k
RV704	1-241-761-11	s	RES, ADJ METAL 1k
TH201	1-807-972-11	s	THERMISTOR SV-1715 1.25k
TH401	1-807-972-11	s	THERMISTOR SV-1715 1.25k
TH601	1-807-972-11	s	THERMISTOR SV-1715 1.25k

VP-43A BOARD(UVW-1600)

VP-43A board is used for UVW-1600(J,UC).

Ref. No. or Q'ty	Part No.	SP	Description
1pc	A-8275-277-A	o	MOUNTED CIRCUIT BOARD, VP-43A
1pc	3-182-386-02	o	PLATE, SHIELD (L), CARD
1pc	7-621-759-45	s	SCREW, +PSW2.6x6
1pc	3-179-084-01	s	LEVER (R), PC BOARD
1pc	3-179-085-01	s	LEVER (L), PC BOARD
C101	1-163-033-91	s	CERAMIC, CHIP 0.022uF 50V
C102	1-163-033-91	s	CERAMIC, CHIP 0.022uF 50V
C103	1-163-275-11	s	CERAMIC, CHIP 0.001uF 5% 50V
C104	1-163-033-91	s	CERAMIC, CHIP 0.022uF 50V
C105	1-163-033-91	s	CERAMIC, CHIP 0.022uF 50V
C106	1-126-933-11	s	ELECT 100uF 20% 16V
C107	1-163-033-91	s	CERAMIC, CHIP 0.022uF 50V
C108	1-163-033-91	s	CERAMIC, CHIP 0.022uF 50V
C109	1-163-108-00	s	CERAMIC, CHIP 43PF 5% 50V
C110	1-163-249-11	s	CERAMIC, CHIP 82pF 5% 50V
C111	1-163-108-00	s	CERAMIC, CHIP 43PF 5% 50V
C112	1-124-903-11	s	ELECT 1uF 20% 50V
C113	1-124-903-11	s	ELECT 1uF 20% 50V
C114	1-163-275-11	s	CERAMIC, CHIP 0.001uF 5% 50V
C115	1-163-033-91	s	CERAMIC, CHIP 0.022uF 50V
C116	1-163-033-91	s	CERAMIC, CHIP 0.022uF 50V
C117	1-163-033-91	s	CERAMIC, CHIP 0.022uF 50V
C118	1-163-245-11	s	CERAMIC, CHIP 56PF 5% 50V
C119	1-163-235-11	s	CERAMIC, CHIP 22PF 5% 50V
C120-127	1-163-033-91	s	CERAMIC, CHIP 0.022uF 50V
C121	1-163-033-91	s	CERAMIC, CHIP 0.022uF 50V
C122	1-163-033-91	s	CERAMIC, CHIP 0.022uF 50V
C123	1-163-033-91	s	CERAMIC, CHIP 0.022uF 50V
C124	1-163-033-91	s	CERAMIC, CHIP 0.022uF 50V
C125	1-163-033-91	s	CERAMIC, CHIP 0.022uF 50V
C126	1-163-033-91	s	CERAMIC, CHIP 0.022uF 50V
C127	1-163-033-91	s	CERAMIC, CHIP 0.022uF 50V
C128	1-163-133-00	s	CERAMIC, CHIP 470PF 5% 50V
C129	1-163-033-91	s	CERAMIC, CHIP 0.022uF 50V
C130	1-163-033-91	s	CERAMIC, CHIP 0.022uF 50V
C131	1-126-933-11	s	ELECT 100uF 20% 16V
C132	1-163-033-91	s	CERAMIC, CHIP 0.022uF 50V
C133	1-163-113-00	s	CERAMIC, CHIP 68PF 5% 50V
C134	1-163-033-91	s	CERAMIC, CHIP 0.022uF 50V
C135-142	1-163-033-91	s	CERAMIC, CHIP 0.022uF 50V
C143	1-126-933-11	s	ELECT 100uF 20% 16V
C144	1-126-933-11	s	ELECT 100uF 20% 16V
C145	1-126-933-11	s	ELECT 100uF 20% 16V
C146	1-126-933-11	s	ELECT 100uF 20% 16V
C147	1-163-231-11	s	CERAMIC, CHIP 15pF 5% 50V
C148	1-163-241-11	s	CERAMIC, CHIP 39PF 5% 50V
C149	1-163-033-91	s	CERAMIC, CHIP 0.022uF 50V
C150	1-126-933-11	s	ELECT 100uF 20% 16V
C201-212	1-163-033-91	s	CERAMIC, CHIP 0.022uF 50V
C213	1-163-222-11	s	CERAMIC, CHIP 5PF 50V
C214	1-163-222-11	s	CERAMIC, CHIP 5PF 50V
C215	1-126-925-11	s	ELECT 470uF 20% 10V
C216	1-163-033-91	s	CERAMIC, CHIP 0.022uF 50V
C217	1-163-033-91	s	CERAMIC, CHIP 0.022uF 50V
C218	1-163-033-91	s	CERAMIC, CHIP 0.022uF 50V
C219	1-163-227-11	s	CERAMIC, CHIP 10PF 5% 50V
C220	1-164-161-11	s	CERAMIC, CHIP 0.0022uF 10% 100V

(VP-43A BOARD(UVW-1600))

Ref. No. or Q'ty	Part No.	SP	Description
C221	1-163-091-00	s	CERAMIC, CHIP 8PF 50V
C222	1-163-033-91	s	CERAMIC, CHIP 0.022uF 50V
C223	1-163-033-91	s	CERAMIC, CHIP 0.022uF 50V
C224	1-126-925-11	s	ELECT 470uF 20% 10V
C225	1-126-925-11	s	ELECT 470uF 20% 10V
C226-230	1-163-033-91	s	CERAMIC, CHIP 0.022uF 50V
C231	1-126-925-11	s	ELECT 470uF 20% 10V
C232	1-163-033-91	s	CERAMIC, CHIP 0.022uF 50V
C234	1-107-552-11	s	MICA, CHIP 150pF 1% 50V
C235	1-126-933-11	s	ELECT 100uF 20% 16V
C236	1-163-033-91	s	CERAMIC, CHIP 0.022uF 50V
C237	1-126-963-11	s	ELECT 4.7uF 20% 50V
C238	1-163-235-11	s	CERAMIC, CHIP 22PF 5% 50V
C239	1-163-114-00	s	CERAMIC, CHIP 75PF 5% 50V
C240	1-163-033-91	s	CERAMIC, CHIP 0.022uF 50V
C241	1-163-243-11	s	CERAMIC, CHIP 47PF 5% 50V
C242	1-163-033-91	s	CERAMIC, CHIP 0.022uF 50V
C243	1-163-033-91	s	CERAMIC, CHIP 0.022uF 50V
C244	1-163-033-91	s	CERAMIC, CHIP 0.022uF 50V
C245	1-126-925-11	s	ELECT 470uF 20% 10V
C246	1-126-933-11	s	ELECT 100uF 20% 16V
C247	1-163-033-91	s	CERAMIC, CHIP 0.022uF 50V
C248	1-163-033-91	s	CERAMIC, CHIP 0.022uF 50V
C249	1-126-933-11	s	ELECT 100uF 20% 16V
C250	1-126-933-11	s	ELECT 100uF 20% 16V
C251	1-126-964-11	s	ELECT 10uF 20% 50V
C253	1-163-033-91	s	CERAMIC, CHIP 0.022uF 50V
C301	1-163-033-91	s	CERAMIC, CHIP 0.022uF 50V
C302	1-163-033-91	s	CERAMIC, CHIP 0.022uF 50V
C303	1-163-275-11	s	CERAMIC, CHIP 0.001uF 5% 50V
C304	1-163-033-91	s	CERAMIC, CHIP 0.022uF 50V
C305	1-126-933-11	s	ELECT 100uF 20% 16V
C306	1-163-033-91	s	CERAMIC, CHIP 0.022uF 50V
C307	1-163-033-91	s	CERAMIC, CHIP 0.022uF 50V
C308	1-163-033-91	s	CERAMIC, CHIP 0.022uF 50V
C309	1-163-110-00	s	CERAMIC, CHIP 51PF 5% 50V
C310	1-163-251-11	s	CERAMIC, CHIP 100PF 5% 50V
C311	1-163-110-00	s	CERAMIC, CHIP 51PF 5% 50V
C312	1-124-903-11	s	ELECT 1uF 20% 50V
C313	1-124-903-11	s	ELECT 1uF 20% 50V
C314	1-163-275-11	s	CERAMIC, CHIP 0.001uF 5% 50V
C315	1-163-135-00	s	CERAMIC, CHIP 560PF 5% 50V
C316	1-163-257-11	s	CERAMIC, CHIP 180PF 5% 50V
C317	1-163-033-91	s	CERAMIC, CHIP 0.022uF 50V
C318	1-163-033-91	s	CERAMIC, CHIP 0.022uF 50V
C319	1-163-243-11	s	CERAMIC, CHIP 47PF 5% 50V
C320	1-163-033-91	s	CERAMIC, CHIP 0.022uF 50V
C321	1-163-033-91	s	CERAMIC, CHIP 0.022uF 50V
C322	1-163-235-11	s	CERAMIC, CHIP 22PF 5% 50V
C323	1-163-033-91	s	CERAMIC, CHIP 0.022uF 50V
C324	1-163-033-91	s	CERAMIC, CHIP 0.022uF 50V
C325	1-163-033-91	s	CERAMIC, CHIP 0.022uF 50V
C326	1-163-033-91	s	CERAMIC, CHIP 0.022uF 50V
C327	1-163-133-00	s	CERAMIC, CHIP 470PF 5% 50V
C328	1-163-033-91	s	CERAMIC, CHIP 0.022uF 50V
C329	1-163-033-91	s	CERAMIC, CHIP 0.022uF 50V
C330	1-163-033-91	s	CERAMIC, CHIP 0.022uF 50V
C331	1-163-033-91	s	CERAMIC, CHIP 0.022uF 50V
C332	1-126-933-11	s	ELECT 100uF 20% 16V

(VP-43A BOARD(UVW-1600))

Ref. No. or Q'ty	Part No.	SP	Description
C333	1-163-033-91	s	CERAMIC, CHIP 0.022uF 50V
C334	1-163-253-11	s	CERAMIC, CHIP 120PF 5% 50V
C335-339	1-163-033-91	s	CERAMIC, CHIP 0.022uF 50V
C340	1-126-933-11	s	ELECT 100uF 20% 16V
C341	1-163-033-91	s	CERAMIC, CHIP 0.022uF 50V
C342	1-163-033-91	s	CERAMIC, CHIP 0.022uF 50V
C343	1-126-933-11	s	ELECT 100uF 20% 16V
C344	1-163-033-91	s	CERAMIC, CHIP 0.022uF 50V
C345	1-163-033-91	s	CERAMIC, CHIP 0.022uF 50V
C346	1-163-231-11	s	CERAMIC, CHIP 15pF 5% 50V
C347	1-126-933-11	s	ELECT 100uF 20% 16V
C348	1-126-933-11	s	ELECT 100uF 20% 16V
C349	1-163-241-11	s	CERAMIC, CHIP 39PF 5% 50V
C350	1-163-033-91	s	CERAMIC, CHIP 0.022uF 50V
C351	1-126-933-11	s	ELECT 100uF 20% 16V
C401-408	1-163-033-91	s	CERAMIC, CHIP 0.022uF 50V
C409	1-126-925-11	s	ELECT 470uF 20% 10V
C410	1-163-033-91	s	CERAMIC, CHIP 0.022uF 50V
C411	1-163-033-91	s	CERAMIC, CHIP 0.022uF 50V
C412	1-163-222-11	s	CERAMIC, CHIP 5PF 50V
C413	1-163-222-11	s	CERAMIC, CHIP 5PF 50V
C414	1-163-033-91	s	CERAMIC, CHIP 0.022uF 50V
C415	1-164-161-11	s	CERAMIC, CHIP 0.0022uF 10% 100V
C416	1-163-222-11	s	CERAMIC, CHIP 5PF 50V
C417	1-163-033-91	s	CERAMIC, CHIP 0.022uF 50V
C418	1-163-033-91	s	CERAMIC, CHIP 0.022uF 50V
C419	1-126-925-11	s	ELECT 470uF 20% 10V
C420	1-126-925-11	s	ELECT 470uF 20% 10V
C421-425	1-163-033-91	s	CERAMIC, CHIP 0.022uF 50V
C426	1-126-933-11	s	ELECT 100uF 20% 16V
C427	1-126-925-11	s	ELECT 470uF 20% 10V
C428	1-163-033-91	s	CERAMIC, CHIP 0.022uF 50V
C429	1-163-084-00	s	CERAMIC, CHIP 1.5PF 50V
C430	1-107-552-11	s	MICA, CHIP 150pF 1% 50V
C431	1-163-033-91	s	CERAMIC, CHIP 0.022uF 50V
C432	1-126-963-11	s	ELECT 4.7uF 20% 50V
C433	1-163-239-11	s	CERAMIC, CHIP 33PF 5% 50V
C434	1-163-033-91	s	CERAMIC, CHIP 0.022uF 50V
C435	1-163-033-91	s	CERAMIC, CHIP 0.022uF 50V
C436	1-163-251-11	s	CERAMIC, CHIP 100PF 5% 50V
C437	1-126-925-11	s	ELECT 470uF 20% 10V
C438	1-126-933-11	s	ELECT 100uF 20% 16V
C439	1-163-033-91	s	CERAMIC, CHIP 0.022uF 50V
C440	1-163-033-91	s	CERAMIC, CHIP 0.022uF 50V
C441	1-163-033-91	s	CERAMIC, CHIP 0.022uF 50V
C442	1-126-933-11	s	ELECT 100uF 20% 16V
C443	1-126-933-11	s	ELECT 100uF 20% 16V
C501	1-126-933-11	s	ELECT 100uF 20% 16V
C502	1-126-933-11	s	ELECT 100uF 20% 16V
C503	1-126-933-11	s	ELECT 100uF 20% 16V
C504	1-126-933-11	s	ELECT 100uF 20% 16V
C505-509	1-163-033-91	s	CERAMIC, CHIP 0.022uF 50V
C510	1-131-353-00	s	TANTALUM 10uF 10% 35V
C511	1-131-353-00	s	TANTALUM 10uF 10% 35V
C512	1-126-933-11	s	ELECT 100uF 20% 16V
C513	1-163-033-91	s	CERAMIC, CHIP 0.022uF 50V
C514	1-163-033-91	s	CERAMIC, CHIP 0.022uF 50V
C515	1-163-033-91	s	CERAMIC, CHIP 0.022uF 50V
C516	1-130-491-00	s	MYLAR 0.047uF 5% 50V

(VP-43A BOARD(UVW-1600))

Ref. No. or Q'ty	Part No.	SP	Description
C517	1-163-033-91	s	CERAMIC, CHIP 0.022uF 50V
C518	1-163-033-91	s	CERAMIC, CHIP 0.022uF 50V
C519	1-163-231-11	s	CERAMIC, CHIP 15pF 5% 50V
C520	1-163-033-91	s	CERAMIC, CHIP 0.022uF 50V
C521	1-163-253-11	s	CERAMIC, CHIP 120PF 5% 50V
C522	1-163-227-11	s	CERAMIC, CHIP 10PF 5% 50V
C523	1-163-235-11	s	CERAMIC, CHIP 22PF 5% 50V
C524	1-126-933-11	s	ELECT 100uF 20% 16V
C525-529	1-163-033-91	s	CERAMIC, CHIP 0.022uF 50V
C530	1-126-933-11	s	ELECT 100uF 20% 16V
C531	1-163-224-11	s	CERAMIC, CHIP 7PF 50V
C532	1-163-033-91	s	CERAMIC, CHIP 0.022uF 50V
C533	1-131-353-00	s	TANTALUM 10uF 10% 35V
C534	1-131-353-00	s	TANTALUM 10uF 10% 35V
C535	1-126-933-11	s	ELECT 100uF 20% 16V
C536	1-130-491-00	s	MYLAR 0.047uF 5% 50V
C537	1-163-033-91	s	CERAMIC, CHIP 0.022uF 50V
C538	1-163-227-11	s	CERAMIC, CHIP 10PF 5% 50V
C539	1-163-033-91	s	CERAMIC, CHIP 0.022uF 50V
C540	1-163-243-11	s	CERAMIC, CHIP 47PF 5% 50V
C541	1-163-033-91	s	CERAMIC, CHIP 0.022uF 50V
C542	1-163-033-91	s	CERAMIC, CHIP 0.022uF 50V
C543	1-163-033-91	s	CERAMIC, CHIP 0.022uF 50V
C544	1-163-033-91	s	CERAMIC, CHIP 0.022uF 50V
C545	1-163-227-11	s	CERAMIC, CHIP 10PF 5% 50V
C546	1-163-243-11	s	CERAMIC, CHIP 47PF 5% 50V
C547	1-163-033-91	s	CERAMIC, CHIP 0.022uF 50V
C548	1-163-033-91	s	CERAMIC, CHIP 0.022uF 50V
C549	1-163-033-91	s	CERAMIC, CHIP 0.022uF 50V
C550	1-163-222-11	s	CERAMIC, CHIP 5PF 50V
C551-555	1-163-033-91	s	CERAMIC, CHIP 0.022uF 50V
C556	1-126-925-11	s	ELECT 470uF 20% 10V
C557	1-126-925-11	s	ELECT 470uF 20% 10V
C558	1-163-033-91	s	CERAMIC, CHIP 0.022uF 50V
C559	1-163-033-91	s	CERAMIC, CHIP 0.022uF 50V
C600	1-163-227-11	s	CERAMIC, CHIP 10PF 5% 50V
C601	1-126-933-11	s	ELECT 100uF 20% 16V
C602	1-126-933-11	s	ELECT 100uF 20% 16V
C603	1-163-033-91	s	CERAMIC, CHIP 0.022uF 50V
C604	1-163-033-91	s	CERAMIC, CHIP 0.022uF 50V
C605	1-163-227-11	s	CERAMIC, CHIP 10PF 5% 50V
C606	1-163-251-11	s	CERAMIC, CHIP 100PF 5% 50V
C607	1-163-033-91	s	CERAMIC, CHIP 0.022uF 50V
C608	1-163-033-91	s	CERAMIC, CHIP 0.022uF 50V
C609	1-163-118-00	s	CERAMIC, CHIP 110PF 5% 50V
C610	1-163-033-91	s	CERAMIC, CHIP 0.022uF 50V
C611	1-163-033-91	s	CERAMIC, CHIP 0.022uF 50V
C614	1-126-933-11	s	ELECT 100uF 20% 16V
C615	1-163-033-91	s	CERAMIC, CHIP 0.022uF 50V
C616	1-126-933-11	s	ELECT 100uF 20% 16V
C617	1-126-933-11	s	ELECT 100uF 20% 16V
C618	1-163-033-91	s	CERAMIC, CHIP 0.022uF 50V
C619	1-163-033-91	s	CERAMIC, CHIP 0.022uF 50V
C620	1-163-033-91	s	CERAMIC, CHIP 0.022uF 50V
C621	1-163-231-11	s	CERAMIC, CHIP 15pF 5% 50V
C622	1-131-347-00	s	TANTALUM 1uF 10% 35V
C623	1-163-125-00	s	CERAMIC, CHIP 220PF 5% 50V
C624	1-131-347-00	s	TANTALUM 1uF 10% 35V
C625	1-131-347-00	s	TANTALUM 1uF 10% 35V

(VP-43A BOARD(UVW-1600))

Ref. No. or Q'ty	Part No.	SP	Description
C626	1-131-347-00	s	TANTALUM 1uF 10% 35V
C627	1-126-933-11	s	ELECT 100uF 20% 16V
C628	1-163-033-91	s	CERAMIC, CHIP 0.022uF 50V
C629	1-163-033-91	s	CERAMIC, CHIP 0.022uF 50V
C630	1-163-033-91	s	CERAMIC, CHIP 0.022uF 50V
C631	1-130-491-00	s	MYLAR 0.047uF 5% 50V
C632	1-130-491-00	s	MYLAR 0.047uF 5% 50V
C633	1-163-033-91	s	CERAMIC, CHIP 0.022uF 50V
C634	1-163-227-11	s	CERAMIC, CHIP 10PF 5% 50V
C635-645	1-163-033-91	s	CERAMIC, CHIP 0.022uF 50V
C646	1-126-933-11	s	ELECT 100uF 20% 16V
C647	1-163-033-91	s	CERAMIC, CHIP 0.022uF 50V
C648	1-126-933-11	s	ELECT 100uF 20% 16V
C649	1-126-933-11	s	ELECT 100uF 20% 16V
C651	1-163-033-91	s	CERAMIC, CHIP 0.022uF 50V
C652	1-163-033-91	s	CERAMIC, CHIP 0.022uF 50V
C653	1-163-243-11	s	CERAMIC, CHIP 47PF 5% 50V
C654	1-163-237-11	s	CERAMIC, CHIP 27PF 5% 50V
C655	1-163-237-11	s	CERAMIC, CHIP 27PF 5% 50V
C656	1-163-227-11	s	CERAMIC, CHIP 10PF 5% 50V
C657	1-163-033-91	s	CERAMIC, CHIP 0.022uF 50V
C658	1-163-245-11	s	CERAMIC, CHIP 56PF 5% 50V
C659	1-163-245-11	s	CERAMIC, CHIP 56PF 5% 50V
C660	1-163-237-11	s	CERAMIC, CHIP 27PF 5% 50V
C661	1-163-237-11	s	CERAMIC, CHIP 27PF 5% 50V
C662	1-163-033-91	s	CERAMIC, CHIP 0.022uF 50V
C663	1-163-033-91	s	CERAMIC, CHIP 0.022uF 50V
C664	1-163-033-91	s	CERAMIC, CHIP 0.022uF 50V
C665	1-163-224-11	s	CERAMIC, CHIP 7PF 50V
C667	1-163-033-91	s	CERAMIC, CHIP 0.022uF 50V
C668	1-163-033-91	s	CERAMIC, CHIP 0.022uF 50V
C669	1-163-033-91	s	CERAMIC, CHIP 0.022uF 50V
C670	1-163-033-91	s	CERAMIC, CHIP 0.022uF 50V
C671	1-126-933-11	s	ELECT 100uF 20% 16V
C701	1-126-933-11	s	ELECT 100uF 20% 16V
C702	1-126-933-11	s	ELECT 100uF 20% 16V
C703	1-163-033-91	s	CERAMIC, CHIP 0.022uF 50V
C704	1-163-033-91	s	CERAMIC, CHIP 0.022uF 50V
C705	1-163-231-11	s	CERAMIC, CHIP 15pF 5% 50V
C706	1-163-231-11	s	CERAMIC, CHIP 15pF 5% 50V
C707	1-163-243-11	s	CERAMIC, CHIP 47PF 5% 50V
C708	1-163-243-11	s	CERAMIC, CHIP 47PF 5% 50V
C709	1-163-227-11	s	CERAMIC, CHIP 10PF 5% 50V
C710	1-163-227-11	s	CERAMIC, CHIP 10PF 5% 50V
C711	1-163-231-11	s	CERAMIC, CHIP 15pF 5% 50V
C712	1-163-231-11	s	CERAMIC, CHIP 15pF 5% 50V
C713	1-126-933-11	s	ELECT 100uF 20% 16V
C714-719	1-163-033-91	s	CERAMIC, CHIP 0.022uF 50V
C720-724	1-126-933-11	s	ELECT 100uF 20% 16V
C725	1-131-353-00	s	TANTALUM 10uF 10% 35V
C726	1-163-033-91	s	CERAMIC, CHIP 0.022uF 50V
CN103	1-573-782-21	o	CONNECTOR, PHEC 60P, MALE
CN104	1-573-782-21	o	CONNECTOR, PHEC 60P, MALE
CN105	1-506-491-11	s	CONNECTOR 12P, MALE
D201	8-719-123-82	s	DIODE 1SS303-T1
D401	8-719-123-82	s	DIODE 1SS303-T1
D501	8-719-123-82	s	DIODE 1SS303-T1
D502	8-719-941-04	s	DIODE SB007-03CP

(VP-43A BOARD(UVW-1600))

Ref. No. or Q'ty	Part No.	SP	Description
D503	8-719-021-31	s	DIODE UZM5.1B
D504	8-719-123-82	s	DIODE 1SS303-T1
D601	8-719-941-04	s	DIODE SB007-03CP
DL101	1-415-154-00	s	DELAY LINE 35nS
DL301	1-415-546-11	s	DELAY LINE 50nS
FL201	1-239-770-11	s	FILTER, LOW-PASS 4MHz
FL401	1-239-772-11	s	FILTER, LOW-PASS 3MHz
FL601	1-239-771-11	s	FILTER, LOW-PASS 6 MHz
IC101	8-752-052-75	s	IC CXA1479Q
IC102	8-759-300-71	s	IC HD14053BFP
IC103	8-759-908-92	s	IC TL084CNS
IC104	8-759-702-08	s	IC NJM360M
IC201	8-759-981-48	s	IC NJM082M
IC202	8-752-052-48	s	IC CXA1370Q
IC203	8-759-700-65	s	IC NJM79L05A
IC204	1-810-333-11	s	HIC BP-022
IC205	8-759-189-43	s	IC AN77L05-TA
IC301	8-752-052-75	s	IC CXA1479Q
IC302	8-759-300-71	s	IC HD14053BFP
IC303	8-759-908-92	s	IC TL084CNS
IC401	8-752-052-48	s	IC CXA1370Q
IC402	8-759-700-65	s	IC NJM79L05A
IC403	1-810-333-11	s	HIC BP-022
IC404	8-759-189-43	s	IC AN77L05-TA
IC501	8-759-927-46	s	IC SN74HC00ANS
IC502	8-759-908-92	s	IC TL084CNS
IC503	8-759-300-71	s	IC HD14053BFP
IC504	8-759-168-20	s	IC TA78L09S
IC505	8-759-700-65	s	IC NJM79L05A
IC506	8-759-908-92	s	IC TL084CNS
IC507	8-752-052-73	s	IC CXA1451M
IC508	8-752-052-73	s	IC CXA1451M
IC509	8-752-052-73	s	IC CXA1451M
IC510	8-752-052-73	s	IC CXA1451M
IC511	8-759-182-84	s	IC PQ05SZ5U
IC512	8-759-822-95	s	IC L79M05T-FA
IC601	8-759-907-81	s	IC SN74LS221NS
IC602	8-759-927-46	s	IC SN74HC00ANS
IC603	8-759-908-92	s	IC TL084CNS
IC604	8-759-300-71	s	IC HD14053BFP
IC605	8-759-908-92	s	IC TL084CNS
IC606	8-752-054-80	s	IC CXA1521M
IC607	8-752-054-80	s	IC CXA1521M
IC608	8-759-168-20	s	IC TA78L09S
IC609	8-759-906-59	s	IC CX22017
IC610	8-759-700-65	s	IC NJM79L05A
IC611	8-752-052-73	s	IC CXA1451M
IC612	8-759-262-00	s	IC MC14576CF
IC701	8-752-052-73	s	IC CXA1451M
IC702	8-752-052-73	s	IC CXA1451M
IC703	8-759-927-46	s	IC SN74HC00ANS
IC704	8-759-925-74	s	IC TC74HC04ANS
IC705	8-759-925-85	s	IC SN74HC32ANS
L101	1-410-482-31	s	INDUCTOR 100uH
L102	1-408-406-00	s	INDUCTOR 5.6uH
L103	1-408-406-00	s	INDUCTOR 5.6uH
L104	1-410-466-41	s	INDUCTOR 4.7uH
L105	1-410-482-31	s	INDUCTOR 100uH

(VP-43A BOARD(UVW-1600))

Ref. No. or Q'ty	Part No.	SP	Description
L106	1-410-462-11	s	INDUCTOR 2.2uH
L107	1-410-482-31	s	INDUCTOR 100uH
L108	1-410-482-31	s	INDUCTOR 100uH
L109	1-408-621-31	s	INDUCTOR 330uH
L110	1-410-482-31	s	INDUCTOR 100uH
L201	1-410-471-11	s	INDUCTOR 12uH
L202	1-410-482-31	s	INDUCTOR 100uH
L203	1-410-468-11	s	INDUCTOR 6.8uH
L204	1-410-478-11	s	INDUCTOR 47uH
L205	1-410-482-31	s	INDUCTOR 100uH
L206	1-410-482-31	s	INDUCTOR 100uH
L207	1-410-482-31	s	INDUCTOR 100uH
L301	1-410-482-31	s	INDUCTOR 100uH
L302	1-410-468-11	s	INDUCTOR 6.8uH
L303	1-410-468-11	s	INDUCTOR 6.8uH
L304	1-408-429-00	s	INDUCTOR 470uH
L305	1-408-429-00	s	INDUCTOR 470uH
L306	1-408-406-00	s	INDUCTOR 5.6uH
L307	1-410-482-31	s	INDUCTOR 100uH
L308	1-410-462-11	s	INDUCTOR 2.2uH
L309	1-408-621-31	s	INDUCTOR 330uH
L310	1-410-482-31	s	INDUCTOR 100uH
L311	1-410-482-31	s	INDUCTOR 100uH
L312	1-410-482-31	s	INDUCTOR 100uH
L401	1-410-471-11	s	INDUCTOR 12uH
L402	1-410-482-31	s	INDUCTOR 100uH
L403	1-408-408-00	s	INDUCTOR 8.2uH
L404	1-410-482-31	s	INDUCTOR 100uH
L405	1-410-482-31	s	INDUCTOR 100uH
L406	1-410-482-31	s	INDUCTOR 100uH
L501	1-410-482-31	s	INDUCTOR 100uH
L502	1-410-482-31	s	INDUCTOR 100uH
L503	1-410-482-31	s	INDUCTOR 100uH
L505	1-410-482-31	s	INDUCTOR 100uH
L506	1-410-482-31	s	INDUCTOR 100uH
L507	1-408-419-00	s	INDUCTOR 68uH
L508	1-410-478-11	s	INDUCTOR 47uH
L509	1-410-476-11	s	INDUCTOR 33uH
L601-609	1-410-482-31	s	INDUCTOR 100uH
L610	1-410-478-11	s	INDUCTOR 47uH
L611	1-410-478-11	s	INDUCTOR 47uH
L612	1-410-478-11	s	INDUCTOR 47uH
L613	1-410-478-11	s	INDUCTOR 47uH
L614	1-408-413-00	s	INDUCTOR 22uH
L701	1-410-482-31	s	INDUCTOR 100uH
L702	1-410-482-31	s	INDUCTOR 100uH
L703	1-410-476-11	s	INDUCTOR 33uH
L704	1-410-476-11	s	INDUCTOR 33uH
L705	1-410-482-31	s	INDUCTOR 100uH
L706-710	1-412-533-21	s	INDUCTOR 47uH
Q101	8-729-117-32	s	TRANSISTOR 2SC4177
Q102	8-729-117-72	s	TRANSISTOR 2SC4178
Q103	8-729-143-07	s	TRANSISTOR 2SA1610-YY33
Q104	8-729-117-72	s	TRANSISTOR 2SC4178
Q105	8-729-117-72	s	TRANSISTOR 2SC4178
Q106	8-729-143-07	s	TRANSISTOR 2SA1610-YY33
Q107-111	8-729-117-72	s	TRANSISTOR 2SC4178
Q112	8-729-905-18	s	TRANSISTOR DTC144EU
Q201	8-729-117-72	s	TRANSISTOR 2SC4178

(VP-43A BOARD(UVW-1600))

Ref. No. or Q'ty	Part No.	SP	Description
Q202	8-729-143-07	s	TRANSISTOR 2SA1610-YY33
Q203	8-729-117-72	s	TRANSISTOR 2SC4178
Q204	8-729-117-72	s	TRANSISTOR 2SC4178
Q206	8-729-143-07	s	TRANSISTOR 2SA1610-YY33
Q207	8-729-117-72	s	TRANSISTOR 2SC4178
Q208	8-729-143-07	s	TRANSISTOR 2SA1610-YY33
Q209	8-729-143-07	s	TRANSISTOR 2SA1610-YY33
Q210	8-729-117-72	s	TRANSISTOR 2SC4178
Q212	8-729-117-72	s	TRANSISTOR 2SC4178
Q215	8-729-117-72	s	TRANSISTOR 2SC4178
Q216	8-729-905-12	s	TRANSISTOR DTA144EU
Q217	8-729-117-72	s	TRANSISTOR 2SC4178
Q218	8-729-143-07	s	TRANSISTOR 2SA1610-YY33
Q219	8-729-117-72	s	TRANSISTOR 2SC4178
Q220	8-729-143-07	s	TRANSISTOR 2SA1610-YY33
Q301	8-729-117-32	s	TRANSISTOR 2SC4177
Q302	8-729-117-72	s	TRANSISTOR 2SC4178
Q303	8-729-117-72	s	TRANSISTOR 2SC4178
Q304	8-729-143-07	s	TRANSISTOR 2SA1610-YY33
Q305	8-729-117-72	s	TRANSISTOR 2SC4178
Q306	8-729-143-07	s	TRANSISTOR 2SA1610-YY33
Q307-311	8-729-117-72	s	TRANSISTOR 2SC4178
Q401	8-729-117-72	s	TRANSISTOR 2SC4178
Q402	8-729-143-07	s	TRANSISTOR 2SA1610-YY33
Q403	8-729-117-72	s	TRANSISTOR 2SC4178
Q404	8-729-117-72	s	TRANSISTOR 2SC4178
Q405	8-729-143-07	s	TRANSISTOR 2SA1610-YY33
Q406	8-729-143-07	s	TRANSISTOR 2SA1610-YY33
Q407	8-729-117-72	s	TRANSISTOR 2SC4178
Q408	8-729-117-72	s	TRANSISTOR 2SC4178
Q409	8-729-117-72	s	TRANSISTOR 2SC4178
Q410	8-729-117-72	s	TRANSISTOR 2SC4178
Q411	8-729-143-07	s	TRANSISTOR 2SA1610-YY33
Q416	8-729-905-12	s	TRANSISTOR DTA144EU
Q417	8-729-117-72	s	TRANSISTOR 2SC4178
Q418	8-729-143-07	s	TRANSISTOR 2SA1610-YY33
Q501	8-729-117-32	s	TRANSISTOR 2SC4177
Q502	8-729-923-06	s	TRANSISTOR FMW8
Q503	8-729-904-04	s	TRANSISTOR FMS2
Q504	8-729-903-82	s	TRANSISTOR FMW2
Q505	8-729-143-14	s	TRANSISTOR 2SC4176-B35
Q506	8-729-140-63	s	TRANSISTOR 2SA1611-M5M6
Q507	8-729-931-46	s	TRANSISTOR FMW7
Q508	8-729-907-26	s	TRANSISTOR IMX1
Q509	8-729-117-32	s	TRANSISTOR 2SC4177
Q510	8-729-140-63	s	TRANSISTOR 2SA1611-M5M6
Q511	8-729-117-32	s	TRANSISTOR 2SC4177
Q512	8-729-117-32	s	TRANSISTOR 2SC4177
Q513	8-729-117-32	s	TRANSISTOR 2SC4177
Q514	8-729-904-41	s	TRANSISTOR FMY3
Q515	8-729-143-14	s	TRANSISTOR 2SC4176-B35
Q516	8-729-117-32	s	TRANSISTOR 2SC4177
Q517	8-729-904-41	s	TRANSISTOR FMY3
Q601	8-729-117-32	s	TRANSISTOR 2SC4177
Q602	8-729-117-32	s	TRANSISTOR 2SC4177
Q603	8-729-923-06	s	TRANSISTOR FMW8
Q604	8-729-923-06	s	TRANSISTOR FMW8
Q605	8-729-904-04	s	TRANSISTOR FMS2
Q606	8-729-904-04	s	TRANSISTOR FMS2

(VP-43A BOARD(UVW-1600))

Ref. No. or Q'ty	Part No.	SP	Description
Q607	8-729-903-82	s	TRANSISTOR FMW2
Q608	8-729-903-82	s	TRANSISTOR FMW2
Q609	8-729-907-26	s	TRANSISTOR IMX1
Q610	8-729-907-26	s	TRANSISTOR IMX1
Q611	8-729-931-46	s	TRANSISTOR FMW7
Q612	8-729-931-46	s	TRANSISTOR FMW7
Q613	8-729-143-14	s	TRANSISTOR 2SC4176-B35
Q614	8-729-140-63	s	TRANSISTOR 2SA1611-M5M6
Q615	8-729-117-32	s	TRANSISTOR 2SC4177
Q616	8-729-140-63	s	TRANSISTOR 2SA1611-M5M6
Q617-626	8-729-117-32	s	TRANSISTOR 2SC4177
Q627	8-729-143-14	s	TRANSISTOR 2SC4176-B35
Q628	8-729-117-32	s	TRANSISTOR 2SC4177
Q701	8-729-117-32	s	TRANSISTOR 2SC4177
Q702	8-729-117-32	s	TRANSISTOR 2SC4177
Q703	8-729-140-63	s	TRANSISTOR 2SA1611-M5M6
Q704	8-729-140-63	s	TRANSISTOR 2SA1611-M5M6
Q705	8-729-117-32	s	TRANSISTOR 2SC4177
Q706	8-729-117-32	s	TRANSISTOR 2SC4177
Q707	8-729-117-32	s	TRANSISTOR 2SC4177
Q708	8-729-117-32	s	TRANSISTOR 2SC4177
Q709	8-729-422-44	s	TRANSISTOR 2SK663
Q710	8-729-422-44	s	TRANSISTOR 2SK663
Q711	8-729-422-44	s	TRANSISTOR 2SK663
Q712	8-729-422-44	s	TRANSISTOR 2SK663
Q713	8-729-140-63	s	TRANSISTOR 2SA1611-M5M6
Q714	8-729-140-63	s	TRANSISTOR 2SA1611-M5M6
R101	1-216-627-11	s	METAL, CHIP 100 0.5% 1/10W
R102	1-216-627-11	s	METAL, CHIP 100 0.5% 1/10W
R103	1-216-634-11	s	METAL, CHIP 200 0.5% 1/10W
R104	1-216-634-11	s	METAL, CHIP 200 0.5% 1/10W
R105	1-216-025-91	s	METAL, CHIP 100 5% 1/10W
R106	1-216-057-00	s	METAL, CHIP 2.2K 5% 1/10W
R107	1-216-295-91	s	RES, CHIP 0
R108	1-216-025-91	s	METAL, CHIP 100 5% 1/10W
R109	1-216-025-91	s	METAL, CHIP 100 5% 1/10W
R110	1-216-049-91	s	METAL, CHIP 1k 5% 1/10W
R111	1-216-025-91	s	METAL, CHIP 100 5% 1/10W
R112	1-216-065-00	s	METAL, CHIP 4.7K 5% 1/10W
R113	1-216-025-91	s	METAL, CHIP 100 5% 1/10W
R114	1-216-057-00	s	METAL, CHIP 2.2K 5% 1/10W
R115	1-216-025-91	s	METAL, CHIP 100 5% 1/10W
R116	1-216-073-00	s	METAL, CHIP 10K 5% 1/10W
R117	1-216-073-00	s	METAL, CHIP 10K 5% 1/10W
R118	1-216-025-91	s	METAL, CHIP 100 5% 1/10W
R119	1-216-057-00	s	METAL, CHIP 2.2K 5% 1/10W
R120	1-216-638-11	s	METAL, CHIP 300 0.5% 1/10W
R121	1-216-065-00	s	METAL, CHIP 4.7K 5% 1/10W
R122	1-216-638-11	s	METAL, CHIP 300 0.5% 1/10W
R123	1-216-025-91	s	METAL, CHIP 100 5% 1/10W
R124	1-216-049-91	s	METAL, CHIP 1k 5% 1/10W
R125	1-216-065-00	s	METAL, CHIP 4.7K 5% 1/10W
R126	1-216-049-91	s	METAL, CHIP 1k 5% 1/10W
R127	1-216-073-00	s	METAL, CHIP 10K 5% 1/10W
R128	1-216-097-91	s	METAL, CHIP 100k 5% 1/10W
R129	1-216-025-91	s	METAL, CHIP 100 5% 1/10W
R130	1-216-025-91	s	METAL, CHIP 100 5% 1/10W
R131	1-208-775-11	s	METAL, CHIP 510 0.5% 1/10W

(VP-43A BOARD(UVW-1600))

Ref. No. or Q'ty	Part No.	SP	Description
R132	1-208-774-11	s	METAL, CHIP 470 0.5% 1/10W
R133	1-216-041-00	s	METAL, CHIP 470 5% 1/10W
R134	1-208-774-11	s	METAL, CHIP 470 0.5% 1/10W
R135	1-216-025-91	s	METAL, CHIP 100 5% 1/10W
R136	1-208-822-11	s	METAL, CHIP 47k 0.5% 1/10W
R137	1-216-659-11	s	METAL, CHIP 2.2K 0.5% 1/10W
R138	1-216-065-00	s	METAL, CHIP 4.7K 5% 1/10W
R139	1-216-073-00	s	METAL, CHIP 10K 5% 1/10W
R140	1-216-025-91	s	METAL, CHIP 100 5% 1/10W
R141	1-216-073-00	s	METAL, CHIP 10K 5% 1/10W
R142	1-216-081-00	s	METAL, CHIP 22K 5% 1/10W
R143	1-216-041-00	s	METAL, CHIP 470 5% 1/10W
R144	1-216-635-11	s	METAL, CHIP 220 0.5% 1/10W
R145	1-216-037-00	s	METAL, CHIP 330 5% 1/10W
R146	1-216-037-00	s	METAL, CHIP 330 5% 1/10W
R147	1-216-065-00	s	METAL, CHIP 4.7K 5% 1/10W
R148	1-216-065-00	s	METAL, CHIP 4.7K 5% 1/10W
R149	1-216-651-11	s	METAL, CHIP 1K 0.5% 1/10W
R150	1-216-667-11	s	METAL, CHIP 4.7K 0.5% 1/10W
R151	1-216-025-91	s	METAL, CHIP 100 5% 1/10W
R152	1-216-057-00	s	METAL, CHIP 2.2K 5% 1/10W
R153	1-216-057-00	s	METAL, CHIP 2.2K 5% 1/10W
R154	1-216-037-00	s	METAL, CHIP 330 5% 1/10W
R155	1-216-041-00	s	METAL, CHIP 470 5% 1/10W
R156	1-216-035-00	s	METAL, CHIP 270 5% 1/10W
R157	1-216-037-00	s	METAL, CHIP 330 5% 1/10W
R158	1-216-065-00	s	METAL, CHIP 4.7K 5% 1/10W
R159	1-216-077-00	s	METAL, CHIP 15K 5% 1/10W
R160	1-216-085-00	s	METAL, CHIP 33K 5% 1/10W
R161	1-216-073-00	s	METAL, CHIP 10K 5% 1/10W
R162	1-216-073-00	s	METAL, CHIP 10K 5% 1/10W
R163	1-208-806-11	s	METAL, CHIP 10k 0.5% 1/10W
R164	1-216-661-11	s	METAL, CHIP 2.7K 0.5% 1/10W
R165	1-216-065-00	s	METAL, CHIP 4.7K 5% 1/10W
R166	1-216-037-00	s	METAL, CHIP 330 5% 1/10W
R168	1-216-295-91	s	RES, CHIP 0
R169	1-216-295-91	s	RES, CHIP 0
R170	1-216-663-11	s	METAL, CHIP 3.3K 0.5% 1/10W
R201	1-208-806-11	s	METAL, CHIP 10k 0.5% 1/10W
R202	1-208-806-11	s	METAL, CHIP 10k 0.5% 1/10W
R203	1-208-806-11	s	METAL, CHIP 10k 0.5% 1/10W
R204	1-208-823-11	s	METAL, CHIP 51k 0.5% 1/10W
R205	1-216-650-11	s	METAL, CHIP 910 0.5% 1/10W
R206	1-216-049-91	s	METAL, CHIP 1k 5% 1/10W
R207	1-216-025-91	s	METAL, CHIP 100 5% 1/10W
R208	1-216-025-91	s	METAL, CHIP 100 5% 1/10W
R209	1-216-639-11	s	METAL, CHIP 330 0.5% 1/10W
R210	1-216-057-00	s	METAL, CHIP 2.2K 5% 1/10W
R211	1-216-651-11	s	METAL, CHIP 1K 0.5% 1/10W
R212	1-216-025-91	s	METAL, CHIP 100 5% 1/10W
R213	1-216-639-11	s	METAL, CHIP 330 0.5% 1/10W
R214	1-216-065-00	s	METAL, CHIP 4.7K 5% 1/10W
R215	1-216-651-11	s	METAL, CHIP 1K 0.5% 1/10W
R216	1-216-673-11	s	METAL, CHIP 8.2K 0.5% 1/10W
R217	1-208-784-11	s	METAL, CHIP 1.2k 0.5% 1/10W
R218	1-216-073-00	s	METAL, CHIP 10K 5% 1/10W
R219	1-216-073-00	s	METAL, CHIP 10K 5% 1/10W
R220	1-216-025-91	s	METAL, CHIP 100 5% 1/10W
R221	1-216-025-91	s	METAL, CHIP 100 5% 1/10W

(VP-43A BOARD(UVW-1600))

Ref. No. or Q'ty	Part No.	SP	Description
R222	1-216-065-00	s	METAL, CHIP 4.7K 5% 1/10W
R223	1-216-025-91	s	METAL, CHIP 100 5% 1/10W
R224	1-216-049-91	s	METAL, CHIP 1k 5% 1/10W
R227	1-216-065-00	s	METAL, CHIP 4.7K 5% 1/10W
R228	1-216-025-91	s	METAL, CHIP 100 5% 1/10W
R229	1-216-055-00	s	METAL, CHIP 1.8K 5% 1/10W
R230	1-216-025-91	s	METAL, CHIP 100 5% 1/10W
R232	1-216-025-91	s	METAL, CHIP 100 5% 1/10W
R233	1-216-055-00	s	METAL, CHIP 1.8K 5% 1/10W
R237	1-216-065-00	s	METAL, CHIP 4.7K 5% 1/10W
R240	1-216-655-11	s	METAL, CHIP 1.5K 0.5% 1/10W
R241	1-216-663-11	s	METAL, CHIP 3.3K 0.5% 1/10W
R244	1-216-646-11	s	METAL, CHIP 620 0.5% 1/10W
R245	1-216-673-11	s	METAL, CHIP 8.2K 0.5% 1/10W
R246	1-216-057-00	s	METAL, CHIP 2.2K 5% 1/10W
R247	1-216-667-11	s	METAL, CHIP 4.7K 0.5% 1/10W
R248	1-208-799-11	s	METAL, CHIP 5.1k 0.5% 1/10W
R249	1-216-057-00	s	METAL, CHIP 2.2K 5% 1/10W
R250	1-216-113-00	s	METAL, CHIP 470K 5% 1/10W
R251	1-216-667-11	s	METAL, CHIP 4.7K 0.5% 1/10W
R253	1-208-817-11	s	METAL, CHIP 30k 0.5% 1/10W
R255	1-216-652-11	s	METAL, CHIP 1.1K 0.5% 1/10W
R256	1-216-025-91	s	METAL, CHIP 100 5% 1/10W
R257	1-216-638-11	s	METAL, CHIP 300 0.5% 1/10W
R258	1-216-665-11	s	METAL, CHIP 3.9K 0.5% 1/10W
R259	1-216-671-11	s	METAL, CHIP 6.8K 0.5% 1/10W
R260	1-216-687-11	s	METAL, CHIP 33K 0.5% 1/10W
R262	1-216-685-11	s	METAL, CHIP 27K 0.5% 1/10W
R263	1-216-073-00	s	METAL, CHIP 10K 5% 1/10W
R264	1-216-025-91	s	METAL, CHIP 100 5% 1/10W
R265	1-216-041-00	s	METAL, CHIP 470 5% 1/10W
R266	1-216-638-11	s	METAL, CHIP 300 0.5% 1/10W
R267	1-216-037-00	s	METAL, CHIP 330 5% 1/10W
R268	1-216-057-00	s	METAL, CHIP 2.2K 5% 1/10W
R269	1-216-041-00	s	METAL, CHIP 470 5% 1/10W
R270	1-216-638-11	s	METAL, CHIP 300 0.5% 1/10W
R271	1-216-049-91	s	METAL, CHIP 1k 5% 1/10W
R272	1-208-751-11	s	METAL, CHIP 51 0.5% 1/10W
R273	1-216-037-00	s	METAL, CHIP 330 5% 1/10W
R274	1-216-295-91	s	RES, CHIP 0
R275	1-216-089-91	s	METAL, CHIP 47k 5% 1/10W
R276	1-216-057-00	s	METAL, CHIP 2.2K 5% 1/10W
R278	1-216-025-91	s	METAL, CHIP 100 5% 1/10W
R301	1-216-633-11	s	METAL, CHIP 180 0.5% 1/10W
R302	1-216-633-11	s	METAL, CHIP 180 0.5% 1/10W
R303	1-216-629-11	s	METAL, CHIP 120 0.5% 1/10W
R304	1-216-629-11	s	METAL, CHIP 120 0.5% 1/10W
R305	1-216-025-91	s	METAL, CHIP 100 5% 1/10W
R306	1-216-049-91	s	METAL, CHIP 1k 5% 1/10W
R307	1-216-025-91	s	METAL, CHIP 100 5% 1/10W
R308	1-216-065-00	s	METAL, CHIP 4.7K 5% 1/10W
R309	1-216-025-91	s	METAL, CHIP 100 5% 1/10W
R310	1-216-025-91	s	METAL, CHIP 100 5% 1/10W
R311	1-216-057-00	s	METAL, CHIP 2.2K 5% 1/10W
R312	1-216-025-91	s	METAL, CHIP 100 5% 1/10W
R313	1-216-057-00	s	METAL, CHIP 2.2K 5% 1/10W
R314	1-216-073-00	s	METAL, CHIP 10K 5% 1/10W
R315	1-216-638-11	s	METAL, CHIP 300 0.5% 1/10W
R316	1-216-073-00	s	METAL, CHIP 10K 5% 1/10W

(VP-43A BOARD(UVW-1600))

Ref. No. or Q'ty	Part No.	SP	Description
R317	1-216-025-91	s	METAL, CHIP 100 5% 1/10W
R318	1-216-638-11	s	METAL, CHIP 300 0.5% 1/10W
R319	1-216-065-00	s	METAL, CHIP 4.7K 5% 1/10W
R320	1-216-065-00	s	METAL, CHIP 4.7K 5% 1/10W
R321	1-216-049-91	s	METAL, CHIP 1k 5% 1/10W
R322	1-216-651-11	s	METAL, CHIP 1K 0.5% 1/10W
R323	1-216-049-91	s	METAL, CHIP 1k 5% 1/10W
R324	1-216-025-91	s	METAL, CHIP 100 5% 1/10W
R325	1-208-775-11	s	METAL, CHIP 510 0.5% 1/10W
R326	1-208-774-11	s	METAL, CHIP 470 0.5% 1/10W
R327	1-216-041-00	s	METAL, CHIP 470 5% 1/10W
R328	1-216-073-00	s	METAL, CHIP 10K 5% 1/10W
R329	1-216-097-91	s	METAL, CHIP 100k 5% 1/10W
R330	1-216-639-11	s	METAL, CHIP 330 0.5% 1/10W
R331	1-216-025-91	s	METAL, CHIP 100 5% 1/10W
R332	1-216-065-00	s	METAL, CHIP 4.7K 5% 1/10W
R333	1-216-073-00	s	METAL, CHIP 10K 5% 1/10W
R334	1-216-025-91	s	METAL, CHIP 100 5% 1/10W
R335	1-216-073-00	s	METAL, CHIP 10K 5% 1/10W
R336	1-216-635-11	s	METAL, CHIP 220 0.5% 1/10W
R337	1-216-041-00	s	METAL, CHIP 470 5% 1/10W
R338	1-216-037-00	s	METAL, CHIP 330 5% 1/10W
R339	1-216-037-00	s	METAL, CHIP 330 5% 1/10W
R340	1-216-065-00	s	METAL, CHIP 4.7K 5% 1/10W
R341	1-216-065-00	s	METAL, CHIP 4.7K 5% 1/10W
R342	1-216-651-11	s	METAL, CHIP 1K 0.5% 1/10W
R343	1-208-784-11	s	METAL, CHIP 1.2k 0.5% 1/10W
R344	1-216-037-00	s	METAL, CHIP 330 5% 1/10W
R345	1-216-041-00	s	METAL, CHIP 470 5% 1/10W
R346	1-216-037-00	s	METAL, CHIP 330 5% 1/10W
R347	1-216-619-11	s	METAL, CHIP 47 0.5% 1/10W
R348	1-216-057-00	s	METAL, CHIP 2.2K 5% 1/10W
R349	1-216-025-91	s	METAL, CHIP 100 5% 1/10W
R350	1-216-065-00	s	METAL, CHIP 4.7K 5% 1/10W
R351	1-216-057-00	s	METAL, CHIP 2.2K 5% 1/10W
R352	1-216-077-00	s	METAL, CHIP 15K 5% 1/10W
R353	1-216-085-00	s	METAL, CHIP 33K 5% 1/10W
R354	1-216-073-00	s	METAL, CHIP 10K 5% 1/10W
R355	1-216-073-00	s	METAL, CHIP 10K 5% 1/10W
R356	1-208-806-11	s	METAL, CHIP 10k 0.5% 1/10W
R357	1-216-661-11	s	METAL, CHIP 2.7K 0.5% 1/10W
R358	1-216-065-00	s	METAL, CHIP 4.7K 5% 1/10W
R359	1-216-037-00	s	METAL, CHIP 330 5% 1/10W
R401	1-216-025-91	s	METAL, CHIP 100 5% 1/10W
R402	1-216-025-91	s	METAL, CHIP 100 5% 1/10W
R403	1-216-639-11	s	METAL, CHIP 330 0.5% 1/10W
R404	1-216-057-00	s	METAL, CHIP 2.2K 5% 1/10W
R405	1-216-639-11	s	METAL, CHIP 330 0.5% 1/10W
R406	1-216-025-91	s	METAL, CHIP 100 5% 1/10W
R407	1-216-065-00	s	METAL, CHIP 4.7K 5% 1/10W
R408	1-216-025-91	s	METAL, CHIP 100 5% 1/10W
R409	1-216-065-00	s	METAL, CHIP 4.7K 5% 1/10W
R410	1-216-651-11	s	METAL, CHIP 1K 0.5% 1/10W
R411	1-216-025-91	s	METAL, CHIP 100 5% 1/10W
R412	1-216-055-00	s	METAL, CHIP 1.8K 5% 1/10W
R413	1-216-025-91	s	METAL, CHIP 100 5% 1/10W
R414	1-216-673-11	s	METAL, CHIP 8.2K 0.5% 1/10W
R415	1-208-774-11	s	METAL, CHIP 470 0.5% 1/10W
R416	1-216-025-91	s	METAL, CHIP 100 5% 1/10W

(VP-43A BOARD(UVW-1600))

Ref. No. or Q'ty	Part No.	SP	Description
R417	1-216-055-00	s	METAL, CHIP 1.8K 5% 1/10W
R418	1-208-784-11	s	METAL, CHIP 1.2k 0.5% 1/10W
R419	1-216-065-00	s	METAL, CHIP 4.7K 5% 1/10W
R420	1-216-651-11	s	METAL, CHIP 1K 0.5% 1/10W
R421	1-216-649-11	s	METAL, CHIP 820 0.5% 1/10W
R422	1-216-664-11	s	METAL, CHIP 3.6K 0.5% 1/10W
R423	1-216-073-00	s	METAL, CHIP 10K 5% 1/10W
R424	1-216-073-00	s	METAL, CHIP 10K 5% 1/10W
R425	1-216-025-91	s	METAL, CHIP 100 5% 1/10W
R426	1-208-806-11	s	METAL, CHIP 10k 0.5% 1/10W
R427	1-216-065-00	s	METAL, CHIP 4.7K 5% 1/10W
R428	1-216-025-91	s	METAL, CHIP 100 5% 1/10W
R429	1-216-057-00	s	METAL, CHIP 2.2K 5% 1/10W
R440	1-216-665-11	s	METAL, CHIP 3.9K 0.5% 1/10W
R441	1-208-801-11	s	METAL, CHIP 6.2k 0.5% 1/10W
R442	1-216-057-00	s	METAL, CHIP 2.2K 5% 1/10W
R443	1-216-113-00	s	METAL, CHIP 470K 5% 1/10W
R444	1-216-671-11	s	METAL, CHIP 6.8K 0.5% 1/10W
R445	1-216-119-00	s	METAL, CHIP 820K 5% 1/10W
R446	1-216-687-11	s	METAL, CHIP 33K 0.5% 1/10W
R447	1-208-814-11	s	METAL, CHIP 22k 0.5% 1/10W
R448	1-216-651-11	s	METAL, CHIP 1K 0.5% 1/10W
R449	1-216-025-91	s	METAL, CHIP 100 5% 1/10W
R450	1-216-639-11	s	METAL, CHIP 330 0.5% 1/10W
R451	1-216-665-11	s	METAL, CHIP 3.9K 0.5% 1/10W
R452	1-216-671-11	s	METAL, CHIP 6.8K 0.5% 1/10W
R453	1-216-689-11	s	METAL, CHIP 39K 0.5% 1/10W
R454	1-216-121-91	s	METAL, CHIP 1M 5% 1/10W
R455	1-216-685-11	s	METAL, CHIP 27K 0.5% 1/10W
R456	1-216-073-00	s	METAL, CHIP 10K 5% 1/10W
R457	1-216-025-91	s	METAL, CHIP 100 5% 1/10W
R458	1-216-041-00	s	METAL, CHIP 470 5% 1/10W
R459	1-216-638-11	s	METAL, CHIP 300 0.5% 1/10W
R460	1-216-049-91	s	METAL, CHIP 1k 5% 1/10W
R461	1-208-751-11	s	METAL, CHIP 51 0.5% 1/10W
R462	1-216-037-00	s	METAL, CHIP 330 5% 1/10W
R463	1-216-057-00	s	METAL, CHIP 2.2K 5% 1/10W
R464	1-216-089-91	s	METAL, CHIP 47k 5% 1/10W
R501	1-216-081-00	s	METAL, CHIP 22K 5% 1/10W
R502	1-216-049-91	s	METAL, CHIP 1k 5% 1/10W
R503	1-216-049-91	s	METAL, CHIP 1k 5% 1/10W
R504	1-216-049-91	s	METAL, CHIP 1k 5% 1/10W
R505	1-216-049-91	s	METAL, CHIP 1k 5% 1/10W
R506	1-216-057-00	s	METAL, CHIP 2.2K 5% 1/10W
R507	1-216-049-91	s	METAL, CHIP 1k 5% 1/10W
R508	1-216-121-91	s	METAL, CHIP 1M 5% 1/10W
R509	1-216-049-91	s	METAL, CHIP 1k 5% 1/10W
R510	1-216-049-91	s	METAL, CHIP 1k 5% 1/10W
R511	1-216-033-00	s	METAL, CHIP 220 5% 1/10W
R512	1-216-065-00	s	METAL, CHIP 4.7K 5% 1/10W
R513	1-216-045-00	s	METAL, CHIP 680 5% 1/10W
R514	1-216-065-00	s	METAL, CHIP 4.7K 5% 1/10W
R515	1-216-077-00	s	METAL, CHIP 15K 5% 1/10W
R516	1-216-049-91	s	METAL, CHIP 1k 5% 1/10W
R517	1-216-033-00	s	METAL, CHIP 220 5% 1/10W
R518	1-216-049-91	s	METAL, CHIP 1k 5% 1/10W
R519	1-216-073-00	s	METAL, CHIP 10K 5% 1/10W
R520	1-216-049-91	s	METAL, CHIP 1k 5% 1/10W
R521	1-216-017-91	s	METAL, CHIP 47 5% 1/10W

(VP-43A BOARD(UVW-1600))

Ref. No. or Q'ty	Part No.	SP	Description
R522	1-216-027-00	s	METAL, CHIP 120 5% 1/10W
R523	1-216-081-00	s	METAL, CHIP 22K 5% 1/10W
R524	1-216-081-00	s	METAL, CHIP 22K 5% 1/10W
R525	1-216-081-00	s	METAL, CHIP 22K 5% 1/10W
R526	1-216-049-91	s	METAL, CHIP 1k 5% 1/10W
R527	1-216-647-11	s	METAL, CHIP 680 0.5% 1/10W
R528	1-216-057-00	s	METAL, CHIP 2.2K 5% 1/10W
R529	1-216-659-11	s	METAL, CHIP 2.2K 0.5% 1/10W
R530	1-216-651-11	s	METAL, CHIP 1K 0.5% 1/10W
R531	1-216-025-91	s	METAL, CHIP 100 5% 1/10W
R532	1-216-041-00	s	METAL, CHIP 470 5% 1/10W
R533	1-216-025-91	s	METAL, CHIP 100 5% 1/10W
R534	1-216-041-00	s	METAL, CHIP 470 5% 1/10W
R535	1-216-041-00	s	METAL, CHIP 470 5% 1/10W
R536	1-216-049-91	s	METAL, CHIP 1k 5% 1/10W
R537	1-216-041-00	s	METAL, CHIP 470 5% 1/10W
R538	1-216-651-11	s	METAL, CHIP 1K 0.5% 1/10W
R539	1-208-784-11	s	METAL, CHIP 1.2k 0.5% 1/10W
R540	1-216-057-00	s	METAL, CHIP 2.2K 5% 1/10W
R541	1-216-651-11	s	METAL, CHIP 1K 0.5% 1/10W
R542	1-216-057-00	s	METAL, CHIP 2.2K 5% 1/10W
R543	1-216-057-00	s	METAL, CHIP 2.2K 5% 1/10W
R544	1-216-049-91	s	METAL, CHIP 1k 5% 1/10W
R545	1-216-049-91	s	METAL, CHIP 1k 5% 1/10W
R546	1-216-113-00	s	METAL, CHIP 470K 5% 1/10W
R547	1-216-053-00	s	METAL, CHIP 1.5K 5% 1/10W
R548	1-216-049-91	s	METAL, CHIP 1k 5% 1/10W
R549	1-216-049-91	s	METAL, CHIP 1k 5% 1/10W
R550	1-216-049-91	s	METAL, CHIP 1k 5% 1/10W
R551	1-216-057-00	s	METAL, CHIP 2.2K 5% 1/10W
R552	1-216-057-00	s	METAL, CHIP 2.2K 5% 1/10W
R553	1-216-041-00	s	METAL, CHIP 470 5% 1/10W
R554	1-216-041-00	s	METAL, CHIP 470 5% 1/10W
R555	1-216-073-00	s	METAL, CHIP 10K 5% 1/10W
R556	1-216-049-91	s	METAL, CHIP 1k 5% 1/10W
R557	1-216-049-91	s	METAL, CHIP 1k 5% 1/10W
R558	1-216-041-00	s	METAL, CHIP 470 5% 1/10W
R559	1-216-053-00	s	METAL, CHIP 1.5K 5% 1/10W
R560	1-216-049-91	s	METAL, CHIP 1k 5% 1/10W
R561	1-216-025-91	s	METAL, CHIP 100 5% 1/10W
R562	1-216-017-91	s	METAL, CHIP 47 5% 1/10W
R563	1-216-017-91	s	METAL, CHIP 47 5% 1/10W
R564	1-216-667-11	s	METAL, CHIP 4.7K 0.5% 1/10W
R565	1-216-651-11	s	METAL, CHIP 1K 0.5% 1/10W
R566	1-216-073-00	s	METAL, CHIP 10K 5% 1/10W
R567	1-208-784-11	s	METAL, CHIP 1.2k 0.5% 1/10W
R568-572	1-216-624-11	s	METAL, CHIP 75 0.5% 1/10W
R573	1-216-049-91	s	METAL, CHIP 1k 5% 1/10W
R574	1-216-081-00	s	METAL, CHIP 22K 5% 1/10W
R575	1-216-097-91	s	METAL, CHIP 100k 5% 1/10W
R576	1-216-057-00	s	METAL, CHIP 2.2K 5% 1/10W
R600	1-208-806-11	s	METAL, CHIP 10k 0.5% 1/10W
R601	1-216-049-91	s	METAL, CHIP 1k 5% 1/10W
R602	1-216-049-91	s	METAL, CHIP 1k 5% 1/10W
R603	1-216-089-91	s	METAL, CHIP 47k 5% 1/10W
R604	1-216-049-91	s	METAL, CHIP 1k 5% 1/10W
R605	1-216-049-91	s	METAL, CHIP 1k 5% 1/10W
R606	1-216-049-91	s	METAL, CHIP 1k 5% 1/10W
R607	1-216-049-91	s	METAL, CHIP 1k 5% 1/10W

(VP-43A BOARD(UVW-1600))

Ref. No. or Q'ty	Part No.	SP	Description
R608	1-216-057-00	s	METAL, CHIP 2.2K 5% 1/10W
R609	1-216-057-00	s	METAL, CHIP 2.2K 5% 1/10W
R610	1-216-033-00	s	METAL, CHIP 220 5% 1/10W
R611	1-216-033-00	s	METAL, CHIP 220 5% 1/10W
R612	1-208-799-11	s	METAL, CHIP 5.1k 0.5% 1/10W
R613	1-216-045-00	s	METAL, CHIP 680 5% 1/10W
R614	1-216-045-00	s	METAL, CHIP 680 5% 1/10W
R615	1-216-077-00	s	METAL, CHIP 15K 5% 1/10W
R616	1-216-077-00	s	METAL, CHIP 15K 5% 1/10W
R617	1-216-017-91	s	METAL, CHIP 47 5% 1/10W
R618	1-216-017-91	s	METAL, CHIP 47 5% 1/10W
R619	1-216-027-00	s	METAL, CHIP 120 5% 1/10W
R620	1-216-027-00	s	METAL, CHIP 120 5% 1/10W
R621	1-216-687-11	s	METAL, CHIP 33K 0.5% 1/10W
R622	1-216-081-00	s	METAL, CHIP 22K 5% 1/10W
R623	1-216-049-91	s	METAL, CHIP 1k 5% 1/10W
R626	1-216-049-91	s	METAL, CHIP 1k 5% 1/10W
R627	1-216-049-91	s	METAL, CHIP 1k 5% 1/10W
R628	1-216-057-00	s	METAL, CHIP 2.2K 5% 1/10W
R629	1-216-057-00	s	METAL, CHIP 2.2K 5% 1/10W
R630	1-216-065-00	s	METAL, CHIP 4.7K 5% 1/10W
R631	1-216-065-00	s	METAL, CHIP 4.7K 5% 1/10W
R632	1-216-049-91	s	METAL, CHIP 1k 5% 1/10W
R633	1-216-295-91	s	RES, CHIP 0
R634	1-216-049-91	s	METAL, CHIP 1k 5% 1/10W
R635	1-216-049-91	s	METAL, CHIP 1k 5% 1/10W
R636	1-216-081-00	s	METAL, CHIP 22K 5% 1/10W
R637	1-216-121-91	s	METAL, CHIP 1M 5% 1/10W
R638	1-216-121-91	s	METAL, CHIP 1M 5% 1/10W
R639	1-216-081-00	s	METAL, CHIP 22K 5% 1/10W
R640	1-216-081-00	s	METAL, CHIP 22K 5% 1/10W
R641	1-216-049-91	s	METAL, CHIP 1k 5% 1/10W
R642	1-216-049-91	s	METAL, CHIP 1k 5% 1/10W
R643	1-216-049-91	s	METAL, CHIP 1k 5% 1/10W
R644	1-216-081-00	s	METAL, CHIP 22K 5% 1/10W
R645	1-216-089-91	s	METAL, CHIP 47k 5% 1/10W
R646	1-216-049-91	s	METAL, CHIP 1k 5% 1/10W
R647	1-216-089-91	s	METAL, CHIP 47k 5% 1/10W
R648	1-216-049-91	s	METAL, CHIP 1k 5% 1/10W
R649	1-216-049-91	s	METAL, CHIP 1k 5% 1/10W
R650	1-216-049-91	s	METAL, CHIP 1k 5% 1/10W
R651	1-216-025-91	s	METAL, CHIP 100 5% 1/10W
R652	1-216-657-11	s	METAL, CHIP 1.8K 0.5% 1/10W
R653	1-216-073-00	s	METAL, CHIP 10K 5% 1/10W
R654	1-216-065-00	s	METAL, CHIP 4.7K 5% 1/10W
R655	1-216-065-00	s	METAL, CHIP 4.7K 5% 1/10W
R656	1-216-047-91	s	METAL, CHIP 820 5% 1/10W
R657	1-216-065-00	s	METAL, CHIP 4.7K 5% 1/10W
R658	1-216-065-00	s	METAL, CHIP 4.7K 5% 1/10W
R659	1-216-041-00	s	METAL, CHIP 470 5% 1/10W
R660	1-216-041-00	s	METAL, CHIP 470 5% 1/10W
R661	1-216-049-91	s	METAL, CHIP 1k 5% 1/10W
R662	1-216-037-00	s	METAL, CHIP 330 5% 1/10W
R663	1-216-077-00	s	METAL, CHIP 15K 5% 1/10W
R664	1-216-079-00	s	METAL, CHIP 18K 5% 1/10W
R665	1-216-081-00	s	METAL, CHIP 22K 5% 1/10W
R666	1-216-081-00	s	METAL, CHIP 22K 5% 1/10W
R667	1-216-097-91	s	METAL, CHIP 100k 5% 1/10W
R668	1-216-049-91	s	METAL, CHIP 1k 5% 1/10W

(VP-43A BOARD(UVW-1600))

Ref. No. or Q'ty	Part No.	SP	Description
R669	1-216-049-91	s	METAL, CHIP 1k 5% 1/10W
R670	1-216-666-11	s	METAL, CHIP 4.3K 0.5% 1/10W
R671	1-216-049-91	s	METAL, CHIP 1k 5% 1/10W
R672	1-216-049-91	s	METAL, CHIP 1k 5% 1/10W
R673	1-216-295-91	s	RES, CHIP 0
R675	1-216-049-91	s	METAL, CHIP 1k 5% 1/10W
R676	1-216-037-00	s	METAL, CHIP 330 5% 1/10W
R677	1-216-037-00	s	METAL, CHIP 330 5% 1/10W
R678-682	1-216-049-91	s	METAL, CHIP 1k 5% 1/10W
R683	1-216-057-00	s	METAL, CHIP 2.2K 5% 1/10W
R684	1-216-647-11	s	METAL, CHIP 680 0.5% 1/10W
R686	1-216-661-11	s	METAL, CHIP 2.7K 0.5% 1/10W
R687	1-216-057-00	s	METAL, CHIP 2.2K 5% 1/10W
R688	1-216-045-00	s	METAL, CHIP 680 5% 1/10W
R689	1-216-639-11	s	METAL, CHIP 330 0.5% 1/10W
R690	1-216-651-11	s	METAL, CHIP 1K 0.5% 1/10W
R691	1-216-049-91	s	METAL, CHIP 1k 5% 1/10W
R692	1-216-025-91	s	METAL, CHIP 100 5% 1/10W
R693	1-216-025-91	s	METAL, CHIP 100 5% 1/10W
R694	1-216-624-11	s	METAL, CHIP 75 0.5% 1/10W
R695	1-216-081-00	s	METAL, CHIP 22K 5% 1/10W
R696	1-216-095-00	s	METAL, CHIP 82K 5% 1/10W
R697	1-216-057-00	s	METAL, CHIP 2.2K 5% 1/10W
R698	1-216-057-00	s	METAL, CHIP 2.2K 5% 1/10W
R699	1-216-073-00	s	METAL, CHIP 10K 5% 1/10W
R701	1-216-025-91	s	METAL, CHIP 100 5% 1/10W
R702	1-216-025-91	s	METAL, CHIP 100 5% 1/10W
R703	1-216-049-91	s	METAL, CHIP 1k 5% 1/10W
R704	1-216-049-91	s	METAL, CHIP 1k 5% 1/10W
R705	1-216-049-91	s	METAL, CHIP 1k 5% 1/10W
R706	1-216-049-91	s	METAL, CHIP 1k 5% 1/10W
R707	1-216-655-11	s	METAL, CHIP 1.5K 0.5% 1/10W
R708	1-216-655-11	s	METAL, CHIP 1.5K 0.5% 1/10W
R709	1-216-065-00	s	METAL, CHIP 4.7K 5% 1/10W
R710	1-216-065-00	s	METAL, CHIP 4.7K 5% 1/10W
R711	1-216-025-91	s	METAL, CHIP 100 5% 1/10W
R712	1-216-025-91	s	METAL, CHIP 100 5% 1/10W
R713	1-216-049-91	s	METAL, CHIP 1k 5% 1/10W
R714	1-216-049-91	s	METAL, CHIP 1k 5% 1/10W
R715	1-216-049-91	s	METAL, CHIP 1k 5% 1/10W
R716	1-216-049-91	s	METAL, CHIP 1k 5% 1/10W
R717	1-216-065-00	s	METAL, CHIP 4.7K 5% 1/10W
R718	1-216-065-00	s	METAL, CHIP 4.7K 5% 1/10W
R719	1-216-639-11	s	METAL, CHIP 330 0.5% 1/10W
R720	1-216-639-11	s	METAL, CHIP 330 0.5% 1/10W
R721	1-216-025-91	s	METAL, CHIP 100 5% 1/10W
R722	1-216-025-91	s	METAL, CHIP 100 5% 1/10W
R723	1-216-065-00	s	METAL, CHIP 4.7K 5% 1/10W
R724	1-216-041-00	s	METAL, CHIP 470 5% 1/10W
R725	1-216-065-00	s	METAL, CHIP 4.7K 5% 1/10W
R726	1-216-041-00	s	METAL, CHIP 470 5% 1/10W
R727	1-216-049-91	s	METAL, CHIP 1k 5% 1/10W
R728	1-216-049-91	s	METAL, CHIP 1k 5% 1/10W
R729	1-216-624-11	s	METAL, CHIP 75 0.5% 1/10W
R730	1-216-624-11	s	METAL, CHIP 75 0.5% 1/10W
R731	1-216-624-11	s	METAL, CHIP 75 0.5% 1/10W
R732	1-216-624-11	s	METAL, CHIP 75 0.5% 1/10W
R733-737	1-216-097-91	s	METAL, CHIP 100k 5% 1/10W
R738	1-216-049-91	s	METAL, CHIP 1k 5% 1/10W

(VP-43A BOARD(UVW-1600))

Ref. No. or Q'ty	Part No.	SP	Description
R739	1-216-049-91	s	METAL, CHIP 1k 5% 1/10W
R740	1-216-049-91	s	METAL, CHIP 1k 5% 1/10W
R741	1-216-073-00	s	METAL, CHIP 10K 5% 1/10W
R742	1-216-049-91	s	METAL, CHIP 1k 5% 1/10W
R743	1-216-049-91	s	METAL, CHIP 1k 5% 1/10W
R744	1-216-049-91	s	METAL, CHIP 1k 5% 1/10W
R745	1-216-113-00	s	METAL, CHIP 470K 5% 1/10W
R746	1-216-049-91	s	METAL, CHIP 1k 5% 1/10W
R747	1-216-049-91	s	METAL, CHIP 1k 5% 1/10W
R748	1-216-097-91	s	METAL, CHIP 100k 5% 1/10W
R749	1-216-049-91	s	METAL, CHIP 1k 5% 1/10W
R750	1-216-097-91	s	METAL, CHIP 100k 5% 1/10W
R751	1-216-049-91	s	METAL, CHIP 1k 5% 1/10W
RV101	1-241-785-11	s	RES, ADJ METAL 10k
RV102	1-241-785-11	s	RES, ADJ METAL 10k
RV103	1-241-761-11	s	RES, ADJ METAL 1k
RV201	1-241-763-11	s	RES, ADJ METAL 4.7k
RV301	1-241-785-11	s	RES, ADJ METAL 10k
RV302	1-241-785-11	s	RES, ADJ METAL 10k
RV303	1-241-761-11	s	RES, ADJ METAL 1k
RV401	1-241-764-11	s	RES, ADJ METAL 10k
RV501	1-241-761-11	s	RES, ADJ METAL 1k
RV502	1-241-761-11	s	RES, ADJ METAL 1k
RV503	1-241-761-11	s	RES, ADJ METAL 1k
RV504	1-241-761-11	s	RES, ADJ METAL 1k
RV505	1-241-761-11	s	RES, ADJ METAL 1k
RV506	1-241-758-11	s	RES, ADJ METAL 100
RV601	1-241-787-11	s	RES, ADJ METAL 47k
RV602	1-241-787-11	s	RES, ADJ METAL 47k
RV603	1-241-783-11	s	RES, ADJ METAL 2.2k
RV604	1-241-784-11	s	RES, ADJ METAL 4.7k
RV605	1-241-784-11	s	RES, ADJ METAL 4.7k
RV606	1-241-779-11	s	RES, ADJ METAL 100
RV701	1-241-783-11	s	RES, ADJ METAL 2.2k
RV702	1-241-783-11	s	RES, ADJ METAL 2.2k
RV703	1-241-761-11	s	RES, ADJ METAL 1k
RV704	1-241-761-11	s	RES, ADJ METAL 1k
TH201	1-807-972-11	s	THERMISTOR SV-1715 1.25k
TH401	1-807-972-11	s	THERMISTOR SV-1715 1.25k
TH601	1-807-972-11	s	THERMISTOR SV-1715 1.25k

VP-43AP BOARD(UVW-1600P)

VP-43AP board is used for UVW-1600P(EK).

Ref. No. or Q'ty	Part No.	SP	Description
1pc	A-8275-464-A	o	MOUNTED CIRCUIT BOARD, VP-43AP
1pc	3-182-386-02	o	PLATE, SHIELD (L), CARD
1pc	7-621-759-45	s	SCREW, +PSW2.6x6
1pc	3-179-084-01	s	LEVER (R), PC BOARD
1pc	3-179-085-01	s	LEVER (L), PC BOARD
C101	1-163-033-91	s	CERAMIC, CHIP 0.022uF 50V
C102	1-163-033-91	s	CERAMIC, CHIP 0.022uF 50V
C103	1-163-275-11	s	CERAMIC, CHIP 0.001uF 5% 50V
C104	1-163-033-91	s	CERAMIC, CHIP 0.022uF 50V
C105	1-163-033-91	s	CERAMIC, CHIP 0.022uF 50V
C106	1-126-933-11	s	ELECT 100uF 20% 16V
C107	1-163-033-91	s	CERAMIC, CHIP 0.022uF 50V
C108	1-163-033-91	s	CERAMIC, CHIP 0.022uF 50V
C109	1-163-108-00	s	CERAMIC, CHIP 43PF 5% 50V
C110	1-163-249-11	s	CERAMIC, CHIP 82pF 5% 50V
C111	1-163-108-00	s	CERAMIC, CHIP 43PF 5% 50V
C112	1-124-903-11	s	ELECT 1uF 20% 50V
C113	1-124-903-11	s	ELECT 1uF 20% 50V
C114	1-163-275-11	s	CERAMIC, CHIP 0.001uF 5% 50V
C115	1-163-033-91	s	CERAMIC, CHIP 0.022uF 50V
C116	1-163-033-91	s	CERAMIC, CHIP 0.022uF 50V
C117	1-163-033-91	s	CERAMIC, CHIP 0.022uF 50V
C118	1-163-245-11	s	CERAMIC, CHIP 56PF 5% 50V
C119	1-163-235-11	s	CERAMIC, CHIP 22PF 5% 50V
C120-127	1-163-033-91	s	CERAMIC, CHIP 0.022uF 50V
C128	1-163-133-00	s	CERAMIC, CHIP 470PF 5% 50V
C129	1-163-033-91	s	CERAMIC, CHIP 0.022uF 50V
C130	1-163-033-91	s	CERAMIC, CHIP 0.022uF 50V
C131	1-126-933-11	s	ELECT 100uF 20% 16V
C132	1-163-033-91	s	CERAMIC, CHIP 0.022uF 50V
C133	1-163-113-00	s	CERAMIC, CHIP 68PF 5% 50V
C134-142	1-163-033-91	s	CERAMIC, CHIP 0.022uF 50V
C143	1-126-933-11	s	ELECT 100uF 20% 16V
C144	1-126-933-11	s	ELECT 100uF 20% 16V
C145	1-126-933-11	s	ELECT 100uF 20% 16V
C146	1-126-933-11	s	ELECT 100uF 20% 16V
C147	1-163-231-11	s	CERAMIC, CHIP 15pF 5% 50V
C148	1-163-241-11	s	CERAMIC, CHIP 39PF 5% 50V
C149	1-163-033-91	s	CERAMIC, CHIP 0.022uF 50V
C150	1-126-933-11	s	ELECT 100uF 20% 16V
C151	1-163-229-11	s	CERAMIC, CHIP 12PF 5% 50V
C201-212	1-163-033-91	s	CERAMIC, CHIP 0.022uF 50V
C213	1-163-222-11	s	CERAMIC, CHIP 5PF 50V
C214	1-163-222-11	s	CERAMIC, CHIP 5PF 50V
C215	1-126-925-11	s	ELECT 470uF 20% 10V
C216	1-163-033-91	s	CERAMIC, CHIP 0.022uF 50V
C217	1-163-033-91	s	CERAMIC, CHIP 0.022uF 50V
C218	1-163-033-91	s	CERAMIC, CHIP 0.022uF 50V
C219	1-163-222-11	s	CERAMIC, CHIP 5PF 50V
C220	1-164-161-11	s	CERAMIC, CHIP 0.0022uF 10% 100V
C221	1-163-091-00	s	CERAMIC, CHIP 8PF 50V
C222	1-163-033-91	s	CERAMIC, CHIP 0.022uF 50V
C223	1-163-033-91	s	CERAMIC, CHIP 0.022uF 50V
C224	1-126-925-11	s	ELECT 470uF 20% 10V
C225	1-126-925-11	s	ELECT 470uF 20% 10V
C226-230	1-163-033-91	s	CERAMIC, CHIP 0.022uF 50V
C231	1-126-925-11	s	ELECT 470uF 20% 10V

(VP-43AP BOARD(UVW-1600P))

Ref. No. or Q'ty	Part No.	SP	Description
C232	1-163-033-91	s	CERAMIC, CHIP 0.022uF 50V
C234	1-107-552-11	s	MICA, CHIP 150pF 1% 50V
C235	1-126-933-11	s	ELECT 100uF 20% 16V
C236	1-163-033-91	s	CERAMIC, CHIP 0.022uF 50V
C237	1-126-963-11	s	ELECT 4.7uF 20% 50V
C238	1-163-235-11	s	CERAMIC, CHIP 22PF 5% 50V
C239	1-163-114-00	s	CERAMIC, CHIP 75PF 5% 50V
C240	1-163-033-91	s	CERAMIC, CHIP 0.022uF 50V
C241	1-163-241-11	s	CERAMIC, CHIP 39PF 5% 50V
C242	1-163-033-91	s	CERAMIC, CHIP 0.022uF 50V
C243	1-163-033-91	s	CERAMIC, CHIP 0.022uF 50V
C244	1-163-033-91	s	CERAMIC, CHIP 0.022uF 50V
C245	1-126-925-11	s	ELECT 470uF 20% 10V
C246	1-126-933-11	s	ELECT 100uF 20% 16V
C247	1-163-033-91	s	CERAMIC, CHIP 0.022uF 50V
C248	1-163-033-91	s	CERAMIC, CHIP 0.022uF 50V
C249	1-126-933-11	s	ELECT 100uF 20% 16V
C250	1-126-933-11	s	ELECT 100uF 20% 16V
C251	1-126-964-11	s	ELECT 10uF 20% 50V
C252	1-163-243-11	s	CERAMIC, CHIP 47PF 5% 50V
C253	1-163-033-91	s	CERAMIC, CHIP 0.022uF 50V
C301	1-163-033-91	s	CERAMIC, CHIP 0.022uF 50V
C302	1-163-033-91	s	CERAMIC, CHIP 0.022uF 50V
C303	1-163-275-11	s	CERAMIC, CHIP 0.001uF 5% 50V
C304	1-163-033-91	s	CERAMIC, CHIP 0.022uF 50V
C305	1-126-933-11	s	ELECT 100uF 20% 16V
C306	1-163-033-91	s	CERAMIC, CHIP 0.022uF 50V
C307	1-163-033-91	s	CERAMIC, CHIP 0.022uF 50V
C308	1-163-033-91	s	CERAMIC, CHIP 0.022uF 50V
C309	1-163-110-00	s	CERAMIC, CHIP 51PF 5% 50V
C310	1-163-251-11	s	CERAMIC, CHIP 100PF 5% 50V
C311	1-163-110-00	s	CERAMIC, CHIP 51PF 5% 50V
C312	1-124-903-11	s	ELECT 1uF 20% 50V
C313	1-124-903-11	s	ELECT 1uF 20% 50V
C314	1-163-275-11	s	CERAMIC, CHIP 0.001uF 5% 50V
C315	1-163-135-00	s	CERAMIC, CHIP 560PF 5% 50V
C316	1-163-257-11	s	CERAMIC, CHIP 180PF 5% 50V
C317	1-163-033-91	s	CERAMIC, CHIP 0.022uF 50V
C318	1-163-033-91	s	CERAMIC, CHIP 0.022uF 50V
C319	1-163-113-00	s	CERAMIC, CHIP 68PF 5% 50V
C320	1-163-033-91	s	CERAMIC, CHIP 0.022uF 50V
C321	1-163-033-91	s	CERAMIC, CHIP 0.022uF 50V
C322	1-163-235-11	s	CERAMIC, CHIP 22PF 5% 50V
C323	1-163-033-91	s	CERAMIC, CHIP 0.022uF 50V
C324	1-163-033-91	s	CERAMIC, CHIP 0.022uF 50V
C325	1-163-033-91	s	CERAMIC, CHIP 0.022uF 50V
C326	1-163-033-91	s	CERAMIC, CHIP 0.022uF 50V
C327	1-163-133-00	s	CERAMIC, CHIP 470PF 5% 50V
C328	1-163-033-91	s	CERAMIC, CHIP 0.022uF 50V
C329	1-163-033-91	s	CERAMIC, CHIP 0.022uF 50V
C330	1-163-033-91	s	CERAMIC, CHIP 0.022uF 50V
C331	1-163-033-91	s	CERAMIC, CHIP 0.022uF 50V
C332	1-126-933-11	s	ELECT 100uF 20% 16V
C333	1-163-033-91	s	CERAMIC, CHIP 0.022uF 50V
C334	1-163-251-11	s	CERAMIC, CHIP 100PF 5% 50V
C335-339	1-163-033-91	s	CERAMIC, CHIP 0.022uF 50V
C340	1-126-933-11	s	ELECT 100uF 20% 16V
C341	1-163-033-91	s	CERAMIC, CHIP 0.022uF 50V
C342	1-163-033-91	s	CERAMIC, CHIP 0.022uF 50V

(VP-43AP BOARD(UVW-1600P))

Ref. No. or Q'ty	Part No.	SP	Description
C343	1-126-933-11	s	ELECT 100uF 20% 16V
C344	1-163-033-91	s	CERAMIC, CHIP 0.022uF 50V
C345	1-163-033-91	s	CERAMIC, CHIP 0.022uF 50V
C346	1-163-231-11	s	CERAMIC, CHIP 15pF 5% 50V
C347	1-126-933-11	s	ELECT 100uF 20% 16V
C348	1-126-933-11	s	ELECT 100uF 20% 16V
C349	1-163-241-11	s	CERAMIC, CHIP 39PF 5% 50V
C350	1-163-033-91	s	CERAMIC, CHIP 0.022uF 50V
C351	1-126-933-11	s	ELECT 100uF 20% 16V
C401-408	1-163-033-91	s	CERAMIC, CHIP 0.022uF 50V
C409	1-126-925-11	s	ELECT 470uF 20% 10V
C410	1-163-033-91	s	CERAMIC, CHIP 0.022uF 50V
C411	1-163-033-91	s	CERAMIC, CHIP 0.022uF 50V
C412	1-163-222-11	s	CERAMIC, CHIP 5PF 50V
C413	1-163-222-11	s	CERAMIC, CHIP 5PF 50V
C414	1-163-033-91	s	CERAMIC, CHIP 0.022uF 50V
C415	1-164-161-11	s	CERAMIC, CHIP 0.0022uF 10% 100V
C416	1-163-222-11	s	CERAMIC, CHIP 5PF 50V
C417	1-163-033-91	s	CERAMIC, CHIP 0.022uF 50V
C418	1-163-033-91	s	CERAMIC, CHIP 0.022uF 50V
C419	1-126-925-11	s	ELECT 470uF 20% 10V
C420	1-126-925-11	s	ELECT 470uF 20% 10V
C421-425	1-163-033-91	s	CERAMIC, CHIP 0.022uF 50V
C426	1-126-933-11	s	ELECT 100uF 20% 16V
C427	1-126-925-11	s	ELECT 470uF 20% 10V
C428	1-163-033-91	s	CERAMIC, CHIP 0.022uF 50V
C429	1-163-222-11	s	CERAMIC, CHIP 5PF 50V
C430	1-107-552-11	s	MICA, CHIP 150pF 1% 50V
C431	1-163-033-91	s	CERAMIC, CHIP 0.022uF 50V
C432	1-126-963-11	s	ELECT 4.7uF 20% 50V
C433	1-163-239-11	s	CERAMIC, CHIP 33PF 5% 50V
C434	1-163-033-91	s	CERAMIC, CHIP 0.022uF 50V
C435	1-163-033-91	s	CERAMIC, CHIP 0.022uF 50V
C436	1-163-251-11	s	CERAMIC, CHIP 100PF 5% 50V
C437	1-126-925-11	s	ELECT 470uF 20% 10V
C438	1-126-933-11	s	ELECT 100uF 20% 16V
C439	1-163-033-91	s	CERAMIC, CHIP 0.022uF 50V
C440	1-163-033-91	s	CERAMIC, CHIP 0.022uF 50V
C441	1-163-033-91	s	CERAMIC, CHIP 0.022uF 50V
C442	1-126-933-11	s	ELECT 100uF 20% 16V
C443	1-126-933-11	s	ELECT 100uF 20% 16V
C501	1-126-933-11	s	ELECT 100uF 20% 16V
C502	1-126-933-11	s	ELECT 100uF 20% 16V
C503	1-126-933-11	s	ELECT 100uF 20% 16V
C504	1-126-933-11	s	ELECT 100uF 20% 16V
C505-509	1-163-033-91	s	CERAMIC, CHIP 0.022uF 50V
C510	1-131-353-00	s	TANTALUM 10uF 10% 35V
C511	1-131-353-00	s	TANTALUM 10uF 10% 35V
C512	1-126-933-11	s	ELECT 100uF 20% 16V
C513	1-163-033-91	s	CERAMIC, CHIP 0.022uF 50V
C514	1-163-033-91	s	CERAMIC, CHIP 0.022uF 50V
C515	1-163-033-91	s	CERAMIC, CHIP 0.022uF 50V
C516	1-130-491-00	s	MYLAR 0.047uF 5% 50V
C517	1-163-033-91	s	CERAMIC, CHIP 0.022uF 50V
C518	1-163-033-91	s	CERAMIC, CHIP 0.022uF 50V
C519	1-163-231-11	s	CERAMIC, CHIP 15pF 5% 50V
C520	1-163-033-91	s	CERAMIC, CHIP 0.022uF 50V
C521	1-163-125-00	s	CERAMIC, CHIP 220PF 5% 50V
C522	1-163-227-11	s	CERAMIC, CHIP 10PF 5% 50V

(VP-43AP BOARD(UVW-1600P))

Ref. No. or Q'ty	Part No.	SP	Description
C523	1-163-235-11	s	CERAMIC, CHIP 22PF 5% 50V
C524	1-126-933-11	s	ELECT 100uF 20% 16V
C525-529	1-163-033-91	s	CERAMIC, CHIP 0.022uF 50V
C530	1-126-933-11	s	ELECT 100uF 20% 16V
C531	1-163-222-11	s	CERAMIC, CHIP 5PF 50V
C532	1-163-033-91	s	CERAMIC, CHIP 0.022uF 50V
C533	1-131-353-00	s	TANTALUM 10uF 10% 35V
C534	1-131-353-00	s	TANTALUM 10uF 10% 35V
C535	1-126-933-11	s	ELECT 100uF 20% 16V
C536	1-130-491-00	s	MYLAR 0.047uF 5% 50V
C537	1-163-033-91	s	CERAMIC, CHIP 0.022uF 50V
C538	1-163-227-11	s	CERAMIC, CHIP 10PF 5% 50V
C539	1-163-033-91	s	CERAMIC, CHIP 0.022uF 50V
C540	1-163-237-11	s	CERAMIC, CHIP 27PF 5% 50V
C541	1-163-033-91	s	CERAMIC, CHIP 0.022uF 50V
C542	1-163-033-91	s	CERAMIC, CHIP 0.022uF 50V
C543	1-163-033-91	s	CERAMIC, CHIP 0.022uF 50V
C544	1-163-033-91	s	CERAMIC, CHIP 0.022uF 50V
C545	1-163-227-11	s	CERAMIC, CHIP 10PF 5% 50V
C546	1-163-243-11	s	CERAMIC, CHIP 47PF 5% 50V
C547	1-163-033-91	s	CERAMIC, CHIP 0.022uF 50V
C548	1-163-033-91	s	CERAMIC, CHIP 0.022uF 50V
C549	1-163-033-91	s	CERAMIC, CHIP 0.022uF 50V
C550	1-163-222-11	s	CERAMIC, CHIP 5PF 50V
C551-555	1-163-033-91	s	CERAMIC, CHIP 0.022uF 50V
C556	1-126-925-11	s	ELECT 470uF 20% 10V
C557	1-126-925-11	s	ELECT 470uF 20% 10V
C558	1-163-033-91	s	CERAMIC, CHIP 0.022uF 50V
C559	1-163-033-91	s	CERAMIC, CHIP 0.022uF 50V
C600	1-163-227-11	s	CERAMIC, CHIP 10PF 5% 50V
C601	1-126-933-11	s	ELECT 100uF 20% 16V
C602	1-126-933-11	s	ELECT 100uF 20% 16V
C603	1-163-033-91	s	CERAMIC, CHIP 0.022uF 50V
C604	1-163-033-91	s	CERAMIC, CHIP 0.022uF 50V
C605	1-163-227-11	s	CERAMIC, CHIP 10PF 5% 50V
C606	1-163-251-11	s	CERAMIC, CHIP 100PF 5% 50V
C607	1-163-033-91	s	CERAMIC, CHIP 0.022uF 50V
C608	1-163-033-91	s	CERAMIC, CHIP 0.022uF 50V
C609	1-163-121-00	s	CERAMIC, CHIP 150PF 5% 50V
C610	1-163-033-91	s	CERAMIC, CHIP 0.022uF 50V
C611	1-163-033-91	s	CERAMIC, CHIP 0.022uF 50V
C614	1-126-933-11	s	ELECT 100uF 20% 16V
C615	1-163-033-91	s	CERAMIC, CHIP 0.022uF 50V
C616	1-126-933-11	s	ELECT 100uF 20% 16V
C617	1-126-933-11	s	ELECT 100uF 20% 16V
C618	1-163-033-91	s	CERAMIC, CHIP 0.022uF 50V
C619	1-163-033-91	s	CERAMIC, CHIP 0.022uF 50V
C620	1-163-033-91	s	CERAMIC, CHIP 0.022uF 50V
C621	1-163-231-11	s	CERAMIC, CHIP 15pF 5% 50V
C622	1-131-347-00	s	TANTALUM 1uF 10% 35V
C623	1-163-125-00	s	CERAMIC, CHIP 220PF 5% 50V
C624	1-131-347-00	s	TANTALUM 1uF 10% 35V
C625	1-131-347-00	s	TANTALUM 1uF 10% 35V
C626	1-131-347-00	s	TANTALUM 1uF 10% 35V
C627	1-126-933-11	s	ELECT 100uF 20% 16V
C628	1-163-033-91	s	CERAMIC, CHIP 0.022uF 50V
C629	1-163-033-91	s	CERAMIC, CHIP 0.022uF 50V
C630	1-163-033-91	s	CERAMIC, CHIP 0.022uF 50V
C631	1-130-491-00	s	MYLAR 0.047uF 5% 50V

(VP-43AP BOARD(UVW-1600P))

Ref. No. or Q'ty	Part No.	SP	Description
C632	1-130-491-00	s	MYLAR 0.047uF 5% 50V
C633	1-163-033-91	s	CERAMIC, CHIP 0.022uF 50V
C634	1-163-227-11	s	CERAMIC, CHIP 10PF 5% 50V
C635-645	1-163-033-91	s	CERAMIC, CHIP 0.022uF 50V
C646	1-126-933-11	s	ELECT 100uF 20% 16V
C647	1-163-033-91	s	CERAMIC, CHIP 0.022uF 50V
C648	1-126-933-11	s	ELECT 100uF 20% 16V
C649	1-126-933-11	s	ELECT 100uF 20% 16V
C651	1-163-033-91	s	CERAMIC, CHIP 0.022uF 50V
C652	1-163-033-91	s	CERAMIC, CHIP 0.022uF 50V
C653	1-163-243-11	s	CERAMIC, CHIP 47PF 5% 50V
C654	1-163-239-11	s	CERAMIC, CHIP 33PF 5% 50V
C655	1-163-239-11	s	CERAMIC, CHIP 33PF 5% 50V
C656	1-163-227-11	s	CERAMIC, CHIP 10PF 5% 50V
C657	1-163-033-91	s	CERAMIC, CHIP 0.022uF 50V
C658	1-163-113-00	s	CERAMIC, CHIP 68PF 5% 50V
C659	1-163-113-00	s	CERAMIC, CHIP 68PF 5% 50V
C660	1-163-239-11	s	CERAMIC, CHIP 33PF 5% 50V
C661	1-163-239-11	s	CERAMIC, CHIP 33PF 5% 50V
C662	1-163-033-91	s	CERAMIC, CHIP 0.022uF 50V
C663	1-163-033-91	s	CERAMIC, CHIP 0.022uF 50V
C664	1-163-033-91	s	CERAMIC, CHIP 0.022uF 50V
C665	1-163-087-00	s	CERAMIC, CHIP 4PF 50V
C666	1-163-227-11	s	CERAMIC, CHIP 10PF 5% 50V
C667	1-163-033-91	s	CERAMIC, CHIP 0.022uF 50V
C668	1-163-033-91	s	CERAMIC, CHIP 0.022uF 50V
C669	1-163-033-91	s	CERAMIC, CHIP 0.022uF 50V
C670	1-163-033-91	s	CERAMIC, CHIP 0.022uF 50V
C671	1-126-933-11	s	ELECT 100uF 20% 16V
C701	1-126-933-11	s	ELECT 100uF 20% 16V
C702	1-126-933-11	s	ELECT 100uF 20% 16V
C703	1-163-033-91	s	CERAMIC, CHIP 0.022uF 50V
C704	1-163-033-91	s	CERAMIC, CHIP 0.022uF 50V
C705	1-163-231-11	s	CERAMIC, CHIP 15pF 5% 50V
C706	1-163-231-11	s	CERAMIC, CHIP 15pF 5% 50V
C707	1-163-243-11	s	CERAMIC, CHIP 47PF 5% 50V
C708	1-163-243-11	s	CERAMIC, CHIP 47PF 5% 50V
C709	1-163-227-11	s	CERAMIC, CHIP 10PF 5% 50V
C710	1-163-227-11	s	CERAMIC, CHIP 10PF 5% 50V
C711	1-163-237-11	s	CERAMIC, CHIP 27PF 5% 50V
C712	1-163-237-11	s	CERAMIC, CHIP 27PF 5% 50V
C713	1-126-933-11	s	ELECT 100uF 20% 16V
C714-719	1-163-033-91	s	CERAMIC, CHIP 0.022uF 50V
C720-724	1-126-933-11	s	ELECT 100uF 20% 16V
C725	1-131-353-00	s	TANTALUM 10uF 10% 35V
C726	1-163-033-91	s	CERAMIC, CHIP 0.022uF 50V
CN103	1-573-782-21	o	CONNECTOR, PHEC 60P, MALE
CN104	1-573-782-21	o	CONNECTOR, PHEC 60P, MALE
CN105	1-506-491-11	s	CONNECTOR 12P, MALE
D201	8-719-123-82	s	DIODE 1SS303-T1
D401	8-719-123-82	s	DIODE 1SS303-T1
D501	8-719-123-82	s	DIODE 1SS303-T1
D502	8-719-941-04	s	DIODE SB007-03CP
D503	8-719-021-31	s	DIODE UZM5.1B
D504	8-719-123-82	s	DIODE 1SS303-T1
D601	8-719-941-04	s	DIODE SB007-03CP
DL101	1-415-674-11	s	DELAY LINE

(VP-43AP BOARD(UVW-1600P))

Ref. No. or Q'ty	Part No.	SP	Description
DL301	1-415-546-11	s	DELAY LINE 50nS
FL201	1-239-819-11	s	FILTER, LOW-PASS
FL401	1-239-772-11	s	FILTER, LOW-PASS 3MHz
FL601	1-239-771-11	s	FILTER, LOW-PASS 6MHz
IC101	8-752-052-75	s	IC CXA1479Q
IC102	8-759-300-71	s	IC HD14053BFP
IC103	8-759-908-92	s	IC TL084CNS
IC104	8-759-702-08	s	IC NJM360M
IC201	8-759-981-48	s	IC NJM082M
IC202	8-752-052-48	s	IC CXA1370Q
IC203	8-759-700-65	s	IC NJM79L05A
IC204	1-810-333-11	s	HIC BP-022
IC205	8-759-189-43	s	IC AN77L05-TA
IC301	8-752-052-75	s	IC CXA1479Q
IC302	8-759-300-71	s	IC HD14053BFP
IC303	8-759-908-92	s	IC TL084CNS
IC401	8-752-052-48	s	IC CXA1370Q
IC402	8-759-700-65	s	IC NJM79L05A
IC403	1-810-333-11	s	HIC BP-022
IC404	8-759-189-43	s	IC AN77L05-TA
IC501	8-759-927-46	s	IC SN74HC00ANS
IC502	8-759-908-92	s	IC TL084CNS
IC503	8-759-300-71	s	IC HD14053BFP
IC504	8-759-168-20	s	IC TA78L09S
IC505	8-759-700-65	s	IC NJM79L05A
IC506	8-759-908-92	s	IC TL084CNS
IC507	8-752-052-73	s	IC CXA1451M
IC508	8-752-052-73	s	IC CXA1451M
IC509	8-752-052-73	s	IC CXA1451M
IC510	8-752-052-73	s	IC CXA1451M
IC511	8-759-182-84	s	IC PQ05SZ5U
IC512	8-759-822-95	s	IC L79M05T-FA
IC601	8-759-907-81	s	IC SN74LS221NS
IC602	8-759-927-46	s	IC SN74HC00ANS
IC603	8-759-908-92	s	IC TL084CNS
IC604	8-759-300-71	s	IC HD14053BFP
IC605	8-759-908-92	s	IC TL084CNS
IC606	8-752-054-80	s	IC CXA1521M
IC607	8-752-054-80	s	IC CXA1521M
IC608	8-759-168-20	s	IC TA78L09S
IC609	8-759-906-59	s	IC CX22017
IC610	8-759-700-65	s	IC NJM79L05A
IC611	8-752-052-73	s	IC CXA1451M
IC612	8-759-262-00	s	IC MC14576CF
IC701	8-752-052-73	s	IC CXA1451M
IC702	8-752-052-73	s	IC CXA1451M
IC703	8-759-927-46	s	IC SN74HC00ANS
IC704	8-759-925-74	s	IC TC74HC04ANS
IC705	8-759-925-85	s	IC SN74HC32ANS
L101	1-410-482-31	s	INDUCTOR 100uH
L102	1-410-466-41	s	INDUCTOR 4.7uH
L103	1-410-466-41	s	INDUCTOR 4.7uH
L104	1-410-466-41	s	INDUCTOR 4.7uH
L105	1-410-482-31	s	INDUCTOR 100uH
L106	1-410-462-11	s	INDUCTOR 2.2uH
L107	1-410-482-31	s	INDUCTOR 100uH
L108	1-410-482-31	s	INDUCTOR 100uH
L109	1-408-621-31	s	INDUCTOR 330uH

(VP-43AP BOARD(UVW-1600P))

Ref. No. or Q'ty	Part No.	SP	Description
L110	1-410-482-31	s	INDUCTOR 100uH
L111	1-410-466-41	s	INDUCTOR 4.7uH
L201	1-410-471-11	s	INDUCTOR 12uH
L202	1-410-482-31	s	INDUCTOR 100uH
L203	1-410-468-11	s	INDUCTOR 6.8uH
L204	1-410-476-11	s	INDUCTOR 33uH
L205	1-410-482-31	s	INDUCTOR 100uH
L206	1-410-482-31	s	INDUCTOR 100uH
L207	1-410-482-31	s	INDUCTOR 100uH
L208	1-408-617-31	s	INDUCTOR 150uH
L301	1-410-482-31	s	INDUCTOR 100uH
L302	1-410-468-11	s	INDUCTOR 6.8uH
L303	1-410-468-11	s	INDUCTOR 6.8uH
L304	1-408-429-00	s	INDUCTOR 470uH
L305	1-408-429-00	s	INDUCTOR 470uH
L306	1-408-406-00	s	INDUCTOR 5.6uH
L307	1-410-482-31	s	INDUCTOR 100uH
L308	1-410-462-11	s	INDUCTOR 2.2uH
L309	1-408-621-31	s	INDUCTOR 330uH
L310	1-410-482-31	s	INDUCTOR 100uH
L311	1-410-482-31	s	INDUCTOR 100uH
L312	1-410-482-31	s	INDUCTOR 100uH
L401	1-410-471-11	s	INDUCTOR 12uH
L402	1-410-482-31	s	INDUCTOR 100uH
L403	1-408-408-00	s	INDUCTOR 8.2uH
L404	1-410-482-31	s	INDUCTOR 100uH
L405	1-410-482-31	s	INDUCTOR 100uH
L406	1-410-482-31	s	INDUCTOR 100uH
L501	1-410-482-31	s	INDUCTOR 100uH
L502	1-410-482-31	s	INDUCTOR 100uH
L503	1-410-482-31	s	INDUCTOR 100uH
L505	1-410-482-31	s	INDUCTOR 100uH
L506	1-410-482-31	s	INDUCTOR 100uH
L507	1-410-482-31	s	INDUCTOR 100uH
L508	1-410-478-11	s	INDUCTOR 47uH
L509	1-410-476-11	s	INDUCTOR 33uH
L601-609	1-410-482-31	s	INDUCTOR 100uH
L610	1-408-414-00	s	INDUCTOR 27uH
L611	1-408-414-00	s	INDUCTOR 27uH
L612	1-408-414-00	s	INDUCTOR 27uH
L613	1-408-414-00	s	INDUCTOR 27uH
L614	1-408-413-00	s	INDUCTOR 22uH
L615	1-408-413-00	s	INDUCTOR 22uH
L701	1-410-482-31	s	INDUCTOR 100uH
L702	1-410-482-31	s	INDUCTOR 100uH
L703	1-410-476-11	s	INDUCTOR 33uH
L704	1-410-476-11	s	INDUCTOR 33uH
L705	1-410-482-31	s	INDUCTOR 100uH
L706-710	1-412-533-21	s	INDUCTOR 47uH
Q101	8-729-117-32	s	TRANSISTOR 2SC4177
Q102	8-729-117-72	s	TRANSISTOR 2SC4178
Q103	8-729-143-07	s	TRANSISTOR 2SA1610-YY33
Q104	8-729-117-72	s	TRANSISTOR 2SC4178
Q105	8-729-117-72	s	TRANSISTOR 2SC4178
Q106	8-729-143-07	s	TRANSISTOR 2SA1610-YY33
Q107-111	8-729-117-72	s	TRANSISTOR 2SC4178
Q112	8-729-905-18	s	TRANSISTOR DTC144EU
Q201	8-729-117-72	s	TRANSISTOR 2SC4178
Q202	8-729-143-07	s	TRANSISTOR 2SA1610-YY33

(VP-43AP BOARD(UVW-1600P))

Ref. No. or Q'ty	Part No.	SP	Description
Q203	8-729-117-72	s	TRANSISTOR 2SC4178
Q204	8-729-117-72	s	TRANSISTOR 2SC4178
Q206	8-729-143-07	s	TRANSISTOR 2SA1610-YY33
Q207	8-729-117-72	s	TRANSISTOR 2SC4178
Q208	8-729-143-07	s	TRANSISTOR 2SA1610-YY33
Q209	8-729-143-07	s	TRANSISTOR 2SA1610-YY33
Q210	8-729-117-72	s	TRANSISTOR 2SC4178
Q212	8-729-117-72	s	TRANSISTOR 2SC4178
Q215	8-729-117-72	s	TRANSISTOR 2SC4178
Q216	8-729-905-12	s	TRANSISTOR DTA144EU
Q217	8-729-117-72	s	TRANSISTOR 2SC4178
Q218	8-729-143-07	s	TRANSISTOR 2SA1610-YY33
Q219	8-729-117-72	s	TRANSISTOR 2SC4178
Q220	8-729-143-07	s	TRANSISTOR 2SA1610-YY33
Q301	8-729-117-32	s	TRANSISTOR 2SC4177
Q302	8-729-117-72	s	TRANSISTOR 2SC4178
Q303	8-729-117-72	s	TRANSISTOR 2SC4178
Q304	8-729-143-07	s	TRANSISTOR 2SA1610-YY33
Q305	8-729-117-72	s	TRANSISTOR 2SC4178
Q306	8-729-143-07	s	TRANSISTOR 2SA1610-YY33
Q307-311	8-729-117-72	s	TRANSISTOR 2SC4178
Q401	8-729-117-72	s	TRANSISTOR 2SC4178
Q402	8-729-143-07	s	TRANSISTOR 2SA1610-YY33
Q403	8-729-117-72	s	TRANSISTOR 2SC4178
Q404	8-729-117-72	s	TRANSISTOR 2SC4178
Q405	8-729-143-07	s	TRANSISTOR 2SA1610-YY33
Q406	8-729-143-07	s	TRANSISTOR 2SA1610-YY33
Q407	8-729-117-72	s	TRANSISTOR 2SC4178
Q408	8-729-117-72	s	TRANSISTOR 2SC4178
Q409	8-729-117-72	s	TRANSISTOR 2SC4178
Q410	8-729-117-72	s	TRANSISTOR 2SC4178
Q411	8-729-143-07	s	TRANSISTOR 2SA1610-YY33
Q416	8-729-905-12	s	TRANSISTOR DTA144EU
Q417	8-729-117-72	s	TRANSISTOR 2SC4178
Q418	8-729-143-07	s	TRANSISTOR 2SA1610-YY33
Q501	8-729-117-32	s	TRANSISTOR 2SC4177
Q502	8-729-923-06	s	TRANSISTOR FMW8
Q503	8-729-904-04	s	TRANSISTOR FMS2
Q504	8-729-903-82	s	TRANSISTOR FMW2
Q505	8-729-143-14	s	TRANSISTOR 2SC4176-B35
Q506	8-729-140-63	s	TRANSISTOR 2SA1611-M5M6
Q507	8-729-931-46	s	TRANSISTOR FMW7
Q508	8-729-907-26	s	TRANSISTOR IMX1
Q509	8-729-117-32	s	TRANSISTOR 2SC4177
Q510	8-729-140-63	s	TRANSISTOR 2SA1611-M5M6
Q511	8-729-117-32	s	TRANSISTOR 2SC4177
Q512	8-729-117-32	s	TRANSISTOR 2SC4177
Q513	8-729-117-32	s	TRANSISTOR 2SC4177
Q514	8-729-904-41	s	TRANSISTOR FMY3
Q515	8-729-143-14	s	TRANSISTOR 2SC4176-B35
Q516	8-729-117-32	s	TRANSISTOR 2SC4177
Q517	8-729-904-41	s	TRANSISTOR FMY3
Q601	8-729-117-32	s	TRANSISTOR 2SC4177
Q602	8-729-117-32	s	TRANSISTOR 2SC4177
Q603	8-729-923-06	s	TRANSISTOR FMW8
Q604	8-729-923-06	s	TRANSISTOR FMW8
Q605	8-729-904-04	s	TRANSISTOR FMS2
Q606	8-729-904-04	s	TRANSISTOR FMS2
Q607	8-729-903-82	s	TRANSISTOR FMW2

(VP-43AP BOARD(UVW-1600P))

Ref. No. or Q'ty	Part No.	SP	Description
Q608	8-729-903-82	s	TRANSISTOR FMW2
Q609	8-729-907-26	s	TRANSISTOR IMX1
Q610	8-729-907-26	s	TRANSISTOR IMX1
Q611	8-729-931-46	s	TRANSISTOR FMW7
Q612	8-729-931-46	s	TRANSISTOR FMW7
Q613	8-729-143-14	s	TRANSISTOR 2SC4176-B35
Q614	8-729-140-63	s	TRANSISTOR 2SA1611-M5M6
Q615	8-729-117-32	s	TRANSISTOR 2SC4177
Q616	8-729-140-63	s	TRANSISTOR 2SA1611-M5M6
Q617-626	8-729-117-32	s	TRANSISTOR 2SC4177
Q627	8-729-143-14	s	TRANSISTOR 2SC4176-B35
Q628	8-729-117-32	s	TRANSISTOR 2SC4177
Q701	8-729-117-32	s	TRANSISTOR 2SC4177
Q702	8-729-117-32	s	TRANSISTOR 2SC4177
Q703	8-729-140-63	s	TRANSISTOR 2SA1611-M5M6
Q704	8-729-140-63	s	TRANSISTOR 2SA1611-M5M6
Q705	8-729-117-32	s	TRANSISTOR 2SC4177
Q706	8-729-117-32	s	TRANSISTOR 2SC4177
Q707	8-729-117-32	s	TRANSISTOR 2SC4177
Q708	8-729-117-32	s	TRANSISTOR 2SC4177
Q709	8-729-422-44	s	TRANSISTOR 2SK663
Q710	8-729-422-44	s	TRANSISTOR 2SK663
Q711	8-729-422-44	s	TRANSISTOR 2SK663
Q712	8-729-422-44	s	TRANSISTOR 2SK663
Q713	8-729-140-63	s	TRANSISTOR 2SA1611-M5M6
Q714	8-729-140-63	s	TRANSISTOR 2SA1611-M5M6
R101	1-216-625-11	s	METAL, CHIP 82 0.5% 1/10W
R102	1-216-625-11	s	METAL, CHIP 82 0.5% 1/10W
R103	1-216-635-11	s	METAL, CHIP 220 0.5% 1/10W
R104	1-216-635-11	s	METAL, CHIP 220 0.5% 1/10W
R105	1-216-025-91	s	METAL, CHIP 100 5% 1/10W
R106	1-216-057-00	s	METAL, CHIP 2.2K 5% 1/10W
R108	1-216-025-91	s	METAL, CHIP 100 5% 1/10W
R109	1-216-025-91	s	METAL, CHIP 100 5% 1/10W
R110	1-216-049-91	s	METAL, CHIP 1k 5% 1/10W
R111	1-216-025-91	s	METAL, CHIP 100 5% 1/10W
R112	1-216-065-00	s	METAL, CHIP 4.7K 5% 1/10W
R113	1-216-025-91	s	METAL, CHIP 100 5% 1/10W
R114	1-216-057-00	s	METAL, CHIP 2.2K 5% 1/10W
R115	1-216-025-91	s	METAL, CHIP 100 5% 1/10W
R116	1-216-073-00	s	METAL, CHIP 10K 5% 1/10W
R117	1-216-073-00	s	METAL, CHIP 10K 5% 1/10W
R118	1-216-025-91	s	METAL, CHIP 100 5% 1/10W
R119	1-216-057-00	s	METAL, CHIP 2.2K 5% 1/10W
R120	1-216-638-11	s	METAL, CHIP 300 0.5% 1/10W
R121	1-216-065-00	s	METAL, CHIP 4.7K 5% 1/10W
R122	1-216-638-11	s	METAL, CHIP 300 0.5% 1/10W
R123	1-216-025-91	s	METAL, CHIP 100 5% 1/10W
R124	1-216-049-91	s	METAL, CHIP 1k 5% 1/10W
R125	1-216-065-00	s	METAL, CHIP 4.7K 5% 1/10W
R126	1-216-049-91	s	METAL, CHIP 1k 5% 1/10W
R127	1-216-073-00	s	METAL, CHIP 10K 5% 1/10W
R128	1-216-097-91	s	METAL, CHIP 100k 5% 1/10W
R129	1-216-025-91	s	METAL, CHIP 100 5% 1/10W
R130	1-216-025-91	s	METAL, CHIP 100 5% 1/10W
R131	1-208-775-11	s	METAL, CHIP 510 0.5% 1/10W
R132	1-208-774-11	s	METAL, CHIP 470 0.5% 1/10W
R133	1-216-041-00	s	METAL, CHIP 470 5% 1/10W

(VP-43AP BOARD(UVW-1600P))

Ref. No. or Q'ty	Part No.	SP	Description
R134	1-216-645-11	s	METAL, CHIP 560 0.5% 1/10W
R135	1-216-025-91	s	METAL, CHIP 100 5% 1/10W
R136	1-208-822-11	s	METAL, CHIP 47k 0.5% 1/10W
R137	1-216-659-11	s	METAL, CHIP 2.2K 0.5% 1/10W
R138	1-216-065-00	s	METAL, CHIP 4.7K 5% 1/10W
R139	1-216-073-00	s	METAL, CHIP 10K 5% 1/10W
R140	1-216-025-91	s	METAL, CHIP 100 5% 1/10W
R141	1-216-073-00	s	METAL, CHIP 10K 5% 1/10W
R142	1-216-081-00	s	METAL, CHIP 22K 5% 1/10W
R143	1-216-041-00	s	METAL, CHIP 470 5% 1/10W
R144	1-216-635-11	s	METAL, CHIP 220 0.5% 1/10W
R145	1-216-037-00	s	METAL, CHIP 330 5% 1/10W
R146	1-216-037-00	s	METAL, CHIP 330 5% 1/10W
R147	1-216-065-00	s	METAL, CHIP 4.7K 5% 1/10W
R148	1-216-065-00	s	METAL, CHIP 4.7K 5% 1/10W
R149	1-216-655-11	s	METAL, CHIP 1.5K 0.5% 1/10W
R150	1-208-800-11	s	METAL, CHIP 5.6k 0.5% 1/10W
R151	1-216-025-91	s	METAL, CHIP 100 5% 1/10W
R152	1-216-057-00	s	METAL, CHIP 2.2K 5% 1/10W
R153	1-216-057-00	s	METAL, CHIP 2.2K 5% 1/10W
R154	1-216-037-00	s	METAL, CHIP 330 5% 1/10W
R155	1-216-041-00	s	METAL, CHIP 470 5% 1/10W
R156	1-216-035-00	s	METAL, CHIP 270 5% 1/10W
R157	1-216-037-00	s	METAL, CHIP 330 5% 1/10W
R158	1-216-065-00	s	METAL, CHIP 4.7K 5% 1/10W
R159	1-216-077-00	s	METAL, CHIP 15K 5% 1/10W
R160	1-216-085-00	s	METAL, CHIP 33K 5% 1/10W
R161	1-216-073-00	s	METAL, CHIP 10K 5% 1/10W
R162	1-216-073-00	s	METAL, CHIP 10K 5% 1/10W
R163	1-208-806-11	s	METAL, CHIP 10k 0.5% 1/10W
R164	1-216-659-11	s	METAL, CHIP 2.2K 0.5% 1/10W
R165	1-216-065-00	s	METAL, CHIP 4.7K 5% 1/10W
R166	1-216-037-00	s	METAL, CHIP 330 5% 1/10W
R167	1-216-295-91	s	RES, CHIP 0
R168	1-216-073-00	s	METAL, CHIP 10K 5% 1/10W
R169	1-216-073-00	s	METAL, CHIP 10K 5% 1/10W
R170	1-216-073-00	s	METAL, CHIP 10K 5% 1/10W
R201	1-208-806-11	s	METAL, CHIP 10k 0.5% 1/10W
R202	1-208-806-11	s	METAL, CHIP 10k 0.5% 1/10W
R203	1-208-806-11	s	METAL, CHIP 10k 0.5% 1/10W
R204	1-216-695-11	s	METAL, CHIP 68K 0.5% 1/10W
R205	1-216-650-11	s	METAL, CHIP 910 0.5% 1/10W
R206	1-216-049-91	s	METAL, CHIP 1k 5% 1/10W
R207	1-216-025-91	s	METAL, CHIP 100 5% 1/10W
R208	1-216-025-91	s	METAL, CHIP 100 5% 1/10W
R209	1-216-639-11	s	METAL, CHIP 330 0.5% 1/10W
R210	1-216-057-00	s	METAL, CHIP 2.2K 5% 1/10W
R211	1-216-651-11	s	METAL, CHIP 1K 0.5% 1/10W
R212	1-216-025-91	s	METAL, CHIP 100 5% 1/10W
R213	1-216-639-11	s	METAL, CHIP 330 0.5% 1/10W
R214	1-216-065-00	s	METAL, CHIP 4.7K 5% 1/10W
R215	1-216-651-11	s	METAL, CHIP 1K 0.5% 1/10W
R216	1-216-673-11	s	METAL, CHIP 8.2K 0.5% 1/10W
R217	1-208-784-11	s	METAL, CHIP 1.2k 0.5% 1/10W
R218	1-216-073-00	s	METAL, CHIP 10K 5% 1/10W
R219	1-216-073-00	s	METAL, CHIP 10K 5% 1/10W
R220	1-216-025-91	s	METAL, CHIP 100 5% 1/10W
R221	1-216-025-91	s	METAL, CHIP 100 5% 1/10W
R222	1-216-065-00	s	METAL, CHIP 4.7K 5% 1/10W

(VP-43AP BOARD(UVW-1600P))

Ref. No. or Q'ty	Part No.	SP	Description
R223	1-216-025-91	s	METAL, CHIP 100 5% 1/10W
R224	1-216-049-91	s	METAL, CHIP 1k 5% 1/10W
R227	1-216-065-00	s	METAL, CHIP 4.7K 5% 1/10W
R228	1-216-025-91	s	METAL, CHIP 100 5% 1/10W
R229	1-216-055-00	s	METAL, CHIP 1.8K 5% 1/10W
R230	1-216-025-91	s	METAL, CHIP 100 5% 1/10W
R232	1-216-025-91	s	METAL, CHIP 100 5% 1/10W
R233	1-216-055-00	s	METAL, CHIP 1.8K 5% 1/10W
R237	1-216-065-00	s	METAL, CHIP 4.7K 5% 1/10W
R240	1-216-655-11	s	METAL, CHIP 1.5K 0.5% 1/10W
R241	1-216-663-11	s	METAL, CHIP 3.3K 0.5% 1/10W
R244	1-216-646-11	s	METAL, CHIP 620 0.5% 1/10W
R245	1-216-671-11	s	METAL, CHIP 6.8K 0.5% 1/10W
R246	1-216-057-00	s	METAL, CHIP 2.2K 5% 1/10W
R247	1-216-667-11	s	METAL, CHIP 4.7K 0.5% 1/10W
R248	1-208-799-11	s	METAL, CHIP 5.1k 0.5% 1/10W
R249	1-216-057-00	s	METAL, CHIP 2.2K 5% 1/10W
R250	1-216-113-00	s	METAL, CHIP 470K 5% 1/10W
R251	1-216-667-11	s	METAL, CHIP 4.7K 0.5% 1/10W
R253	1-216-687-11	s	METAL, CHIP 33K 0.5% 1/10W
R254	1-216-687-11	s	METAL, CHIP 33K 0.5% 1/10W
R255	1-216-651-11	s	METAL, CHIP 1K 0.5% 1/10W
R256	1-216-025-91	s	METAL, CHIP 100 5% 1/10W
R257	1-216-638-11	s	METAL, CHIP 300 0.5% 1/10W
R258	1-216-665-11	s	METAL, CHIP 3.9K 0.5% 1/10W
R259	1-216-671-11	s	METAL, CHIP 6.8K 0.5% 1/10W
R260	1-216-689-11	s	METAL, CHIP 39K 0.5% 1/10W
R261	1-216-121-91	s	METAL, CHIP 1M 5% 1/10W
R262	1-216-685-11	s	METAL, CHIP 27K 0.5% 1/10W
R263	1-216-073-00	s	METAL, CHIP 10K 5% 1/10W
R264	1-216-025-91	s	METAL, CHIP 100 5% 1/10W
R265	1-216-041-00	s	METAL, CHIP 470 5% 1/10W
R266	1-216-638-11	s	METAL, CHIP 300 0.5% 1/10W
R267	1-216-037-00	s	METAL, CHIP 330 5% 1/10W
R268	1-216-057-00	s	METAL, CHIP 2.2K 5% 1/10W
R269	1-216-041-00	s	METAL, CHIP 470 5% 1/10W
R270	1-216-638-11	s	METAL, CHIP 300 0.5% 1/10W
R271	1-216-049-91	s	METAL, CHIP 1k 5% 1/10W
R272	1-208-751-11	s	METAL, CHIP 51 0.5% 1/10W
R273	1-216-037-00	s	METAL, CHIP 330 5% 1/10W
R274	1-216-295-91	s	RES, CHIP 0
R275	1-216-089-91	s	METAL, CHIP 47k 5% 1/10W
R276	1-216-057-00	s	METAL, CHIP 2.2K 5% 1/10W
R277	1-216-671-11	s	METAL, CHIP 6.8K 0.5% 1/10W
R278	1-216-025-91	s	METAL, CHIP 100 5% 1/10W
R301	1-216-625-11	s	METAL, CHIP 82 0.5% 1/10W
R302	1-216-625-11	s	METAL, CHIP 82 0.5% 1/10W
R303	1-216-635-11	s	METAL, CHIP 220 0.5% 1/10W
R304	1-216-635-11	s	METAL, CHIP 220 0.5% 1/10W
R305	1-216-025-91	s	METAL, CHIP 100 5% 1/10W
R306	1-216-049-91	s	METAL, CHIP 1k 5% 1/10W
R307	1-216-025-91	s	METAL, CHIP 100 5% 1/10W
R308	1-216-065-00	s	METAL, CHIP 4.7K 5% 1/10W
R309	1-216-025-91	s	METAL, CHIP 100 5% 1/10W
R310	1-216-025-91	s	METAL, CHIP 100 5% 1/10W
R311	1-216-057-00	s	METAL, CHIP 2.2K 5% 1/10W
R312	1-216-025-91	s	METAL, CHIP 100 5% 1/10W
R313	1-216-057-00	s	METAL, CHIP 2.2K 5% 1/10W
R314	1-216-073-00	s	METAL, CHIP 10K 5% 1/10W

(VP-43AP BOARD(UVW-1600P))

Ref. No. or Q'ty	Part No.	SP	Description
R315	1-216-638-11	s	METAL, CHIP 300 0.5% 1/10W
R316	1-216-073-00	s	METAL, CHIP 10K 5% 1/10W
R317	1-216-025-91	s	METAL, CHIP 100 5% 1/10W
R318	1-216-638-11	s	METAL, CHIP 300 0.5% 1/10W
R319	1-216-065-00	s	METAL, CHIP 4.7K 5% 1/10W
R320	1-216-065-00	s	METAL, CHIP 4.7K 5% 1/10W
R321	1-216-049-91	s	METAL, CHIP 1k 5% 1/10W
R322	1-216-651-11	s	METAL, CHIP 1K 0.5% 1/10W
R323	1-216-049-91	s	METAL, CHIP 1k 5% 1/10W
R324	1-216-025-91	s	METAL, CHIP 100 5% 1/10W
R325	1-208-775-11	s	METAL, CHIP 510 0.5% 1/10W
R326	1-208-774-11	s	METAL, CHIP 470 0.5% 1/10W
R327	1-216-041-00	s	METAL, CHIP 470 5% 1/10W
R328	1-216-073-00	s	METAL, CHIP 10K 5% 1/10W
R329	1-216-097-91	s	METAL, CHIP 100k 5% 1/10W
R330	1-208-774-11	s	METAL, CHIP 470 0.5% 1/10W
R331	1-216-025-91	s	METAL, CHIP 100 5% 1/10W
R332	1-216-065-00	s	METAL, CHIP 4.7K 5% 1/10W
R333	1-216-073-00	s	METAL, CHIP 10K 5% 1/10W
R334	1-216-025-91	s	METAL, CHIP 100 5% 1/10W
R335	1-216-073-00	s	METAL, CHIP 10K 5% 1/10W
R336	1-216-635-11	s	METAL, CHIP 220 0.5% 1/10W
R337	1-216-041-00	s	METAL, CHIP 470 5% 1/10W
R338	1-216-037-00	s	METAL, CHIP 330 5% 1/10W
R339	1-216-037-00	s	METAL, CHIP 330 5% 1/10W
R340	1-216-065-00	s	METAL, CHIP 4.7K 5% 1/10W
R341	1-216-065-00	s	METAL, CHIP 4.7K 5% 1/10W
R342	1-216-651-11	s	METAL, CHIP 1K 0.5% 1/10W
R343	1-208-784-11	s	METAL, CHIP 1.2k 0.5% 1/10W
R344	1-216-037-00	s	METAL, CHIP 330 5% 1/10W
R345	1-216-041-00	s	METAL, CHIP 470 5% 1/10W
R346	1-216-037-00	s	METAL, CHIP 330 5% 1/10W
R347	1-216-619-11	s	METAL, CHIP 47 0.5% 1/10W
R348	1-216-057-00	s	METAL, CHIP 2.2K 5% 1/10W
R349	1-216-025-91	s	METAL, CHIP 100 5% 1/10W
R350	1-216-065-00	s	METAL, CHIP 4.7K 5% 1/10W
R351	1-216-057-00	s	METAL, CHIP 2.2K 5% 1/10W
R352	1-216-077-00	s	METAL, CHIP 15K 5% 1/10W
R353	1-216-085-00	s	METAL, CHIP 33K 5% 1/10W
R354	1-216-073-00	s	METAL, CHIP 10K 5% 1/10W
R355	1-216-073-00	s	METAL, CHIP 10K 5% 1/10W
R356	1-208-806-11	s	METAL, CHIP 10k 0.5% 1/10W
R357	1-216-661-11	s	METAL, CHIP 2.7K 0.5% 1/10W
R358	1-216-065-00	s	METAL, CHIP 4.7K 5% 1/10W
R359	1-216-037-00	s	METAL, CHIP 330 5% 1/10W
R401	1-216-025-91	s	METAL, CHIP 100 5% 1/10W
R402	1-216-025-91	s	METAL, CHIP 100 5% 1/10W
R403	1-216-639-11	s	METAL, CHIP 330 0.5% 1/10W
R404	1-216-057-00	s	METAL, CHIP 2.2K 5% 1/10W
R405	1-216-639-11	s	METAL, CHIP 330 0.5% 1/10W
R406	1-216-025-91	s	METAL, CHIP 100 5% 1/10W
R407	1-216-065-00	s	METAL, CHIP 4.7K 5% 1/10W
R408	1-216-025-91	s	METAL, CHIP 100 5% 1/10W
R409	1-216-065-00	s	METAL, CHIP 4.7K 5% 1/10W
R410	1-216-651-11	s	METAL, CHIP 1K 0.5% 1/10W
R411	1-216-025-91	s	METAL, CHIP 100 5% 1/10W
R412	1-216-055-00	s	METAL, CHIP 1.8K 5% 1/10W
R413	1-216-025-91	s	METAL, CHIP 100 5% 1/10W
R414	1-216-673-11	s	METAL, CHIP 8.2K 0.5% 1/10W

(VP-43AP BOARD(UVW-1600P))

Ref. No. or Q'ty	Part No.	SP	Description
R415	1-208-774-11	s	METAL, CHIP 470 0.5% 1/10W
R416	1-216-025-91	s	METAL, CHIP 100 5% 1/10W
R417	1-216-055-00	s	METAL, CHIP 1.8K 5% 1/10W
R418	1-208-784-11	s	METAL, CHIP 1.2k 0.5% 1/10W
R419	1-216-065-00	s	METAL, CHIP 4.7K 5% 1/10W
R420	1-216-651-11	s	METAL, CHIP 1K 0.5% 1/10W
R421	1-216-649-11	s	METAL, CHIP 820 0.5% 1/10W
R422	1-216-664-11	s	METAL, CHIP 3.6K 0.5% 1/10W
R423	1-216-073-00	s	METAL, CHIP 10K 5% 1/10W
R424	1-216-073-00	s	METAL, CHIP 10K 5% 1/10W
R425	1-216-025-91	s	METAL, CHIP 100 5% 1/10W
R426	1-208-806-11	s	METAL, CHIP 10k 0.5% 1/10W
R427	1-216-065-00	s	METAL, CHIP 4.7K 5% 1/10W
R428	1-216-025-91	s	METAL, CHIP 100 5% 1/10W
R429	1-216-057-00	s	METAL, CHIP 2.2K 5% 1/10W
R440	1-216-667-11	s	METAL, CHIP 4.7K 0.5% 1/10W
R441	1-216-667-11	s	METAL, CHIP 4.7K 0.5% 1/10W
R442	1-216-057-00	s	METAL, CHIP 2.2K 5% 1/10W
R443	1-216-113-00	s	METAL, CHIP 470K 5% 1/10W
R444	1-208-800-11	s	METAL, CHIP 5.6k 0.5% 1/10W
R446	1-216-687-11	s	METAL, CHIP 33K 0.5% 1/10W
R447	1-208-812-11	s	METAL, CHIP 18k 0.5% 1/10W
R448	1-216-651-11	s	METAL, CHIP 1K 0.5% 1/10W
R449	1-216-025-91	s	METAL, CHIP 100 5% 1/10W
R450	1-216-639-11	s	METAL, CHIP 330 0.5% 1/10W
R451	1-216-665-11	s	METAL, CHIP 3.9K 0.5% 1/10W
R452	1-208-800-11	s	METAL, CHIP 5.6k 0.5% 1/10W
R453	1-216-689-11	s	METAL, CHIP 39K 0.5% 1/10W
R454	1-216-121-91	s	METAL, CHIP 1M 5% 1/10W
R455	1-216-685-11	s	METAL, CHIP 27K 0.5% 1/10W
R456	1-216-073-00	s	METAL, CHIP 10K 5% 1/10W
R457	1-216-025-91	s	METAL, CHIP 100 5% 1/10W
R458	1-216-041-00	s	METAL, CHIP 470 5% 1/10W
R459	1-216-638-11	s	METAL, CHIP 300 0.5% 1/10W
R460	1-216-049-91	s	METAL, CHIP 1k 5% 1/10W
R461	1-208-751-11	s	METAL, CHIP 51 0.5% 1/10W
R462	1-216-037-00	s	METAL, CHIP 330 5% 1/10W
R463	1-216-057-00	s	METAL, CHIP 2.2K 5% 1/10W
R464	1-216-089-91	s	METAL, CHIP 47k 5% 1/10W
R501	1-216-081-00	s	METAL, CHIP 22K 5% 1/10W
R502	1-216-049-91	s	METAL, CHIP 1k 5% 1/10W
R503	1-216-049-91	s	METAL, CHIP 1k 5% 1/10W
R504	1-216-049-91	s	METAL, CHIP 1k 5% 1/10W
R505	1-216-049-91	s	METAL, CHIP 1k 5% 1/10W
R506	1-216-057-00	s	METAL, CHIP 2.2K 5% 1/10W
R507	1-216-049-91	s	METAL, CHIP 1k 5% 1/10W
R508	1-216-121-91	s	METAL, CHIP 1M 5% 1/10W
R509	1-216-049-91	s	METAL, CHIP 1k 5% 1/10W
R510	1-216-049-91	s	METAL, CHIP 1k 5% 1/10W
R511	1-216-033-00	s	METAL, CHIP 220 5% 1/10W
R512	1-216-065-00	s	METAL, CHIP 4.7K 5% 1/10W
R513	1-216-045-00	s	METAL, CHIP 680 5% 1/10W
R514	1-216-065-00	s	METAL, CHIP 4.7K 5% 1/10W
R515	1-216-077-00	s	METAL, CHIP 15K 5% 1/10W
R516	1-216-049-91	s	METAL, CHIP 1k 5% 1/10W
R517	1-216-033-00	s	METAL, CHIP 220 5% 1/10W
R518	1-216-049-91	s	METAL, CHIP 1k 5% 1/10W
R519	1-216-073-00	s	METAL, CHIP 10K 5% 1/10W
R520	1-216-049-91	s	METAL, CHIP 1k 5% 1/10W

(VP-43AP BOARD(UVW-1600P))

Ref. No. or Q'ty	Part No.	SP	Description
R521	1-216-017-91	s	METAL, CHIP 47 5% 1/10W
R522	1-216-027-00	s	METAL, CHIP 120 5% 1/10W
R523	1-216-081-00	s	METAL, CHIP 22K 5% 1/10W
R524	1-216-081-00	s	METAL, CHIP 22K 5% 1/10W
R525	1-216-081-00	s	METAL, CHIP 22K 5% 1/10W
R526	1-216-049-91	s	METAL, CHIP 1k 5% 1/10W
R527	1-216-647-11	s	METAL, CHIP 680 0.5% 1/10W
R528	1-216-057-00	s	METAL, CHIP 2.2K 5% 1/10W
R529	1-216-659-11	s	METAL, CHIP 2.2K 0.5% 1/10W
R530	1-216-651-11	s	METAL, CHIP 1K 0.5% 1/10W
R531	1-216-025-91	s	METAL, CHIP 100 5% 1/10W
R532	1-216-041-00	s	METAL, CHIP 470 5% 1/10W
R533	1-216-025-91	s	METAL, CHIP 100 5% 1/10W
R534	1-216-041-00	s	METAL, CHIP 470 5% 1/10W
R535	1-216-041-00	s	METAL, CHIP 470 5% 1/10W
R536	1-216-049-91	s	METAL, CHIP 1k 5% 1/10W
R537	1-216-041-00	s	METAL, CHIP 470 5% 1/10W
R538	1-216-651-11	s	METAL, CHIP 1K 0.5% 1/10W
R539	1-208-784-11	s	METAL, CHIP 1.2k 0.5% 1/10W
R540	1-216-057-00	s	METAL, CHIP 2.2K 5% 1/10W
R541	1-216-651-11	s	METAL, CHIP 1K 0.5% 1/10W
R542	1-216-057-00	s	METAL, CHIP 2.2K 5% 1/10W
R543	1-216-057-00	s	METAL, CHIP 2.2K 5% 1/10W
R544	1-216-049-91	s	METAL, CHIP 1k 5% 1/10W
R545	1-216-049-91	s	METAL, CHIP 1k 5% 1/10W
R546	1-216-113-00	s	METAL, CHIP 470K 5% 1/10W
R547	1-216-053-00	s	METAL, CHIP 1.5K 5% 1/10W
R548	1-216-049-91	s	METAL, CHIP 1k 5% 1/10W
R549	1-216-049-91	s	METAL, CHIP 1k 5% 1/10W
R550	1-216-049-91	s	METAL, CHIP 1k 5% 1/10W
R551	1-216-057-00	s	METAL, CHIP 2.2K 5% 1/10W
R552	1-216-057-00	s	METAL, CHIP 2.2K 5% 1/10W
R553	1-216-041-00	s	METAL, CHIP 470 5% 1/10W
R554	1-216-041-00	s	METAL, CHIP 470 5% 1/10W
R555	1-216-073-00	s	METAL, CHIP 10K 5% 1/10W
R556	1-216-049-91	s	METAL, CHIP 1k 5% 1/10W
R557	1-216-049-91	s	METAL, CHIP 1k 5% 1/10W
R558	1-216-041-00	s	METAL, CHIP 470 5% 1/10W
R559	1-216-053-00	s	METAL, CHIP 1.5K 5% 1/10W
R560	1-216-049-91	s	METAL, CHIP 1k 5% 1/10W
R561	1-216-025-91	s	METAL, CHIP 100 5% 1/10W
R562	1-216-017-91	s	METAL, CHIP 47 5% 1/10W
R563	1-216-017-91	s	METAL, CHIP 47 5% 1/10W
R564	1-216-667-11	s	METAL, CHIP 4.7K 0.5% 1/10W
R565	1-216-651-11	s	METAL, CHIP 1K 0.5% 1/10W
R566	1-216-073-00	s	METAL, CHIP 10K 5% 1/10W
R567	1-208-784-11	s	METAL, CHIP 1.2k 0.5% 1/10W
R568-572	1-216-624-11	s	METAL, CHIP 75 0.5% 1/10W
R573	1-216-049-91	s	METAL, CHIP 1k 5% 1/10W
R574	1-216-081-00	s	METAL, CHIP 22K 5% 1/10W
R575	1-216-097-91	s	METAL, CHIP 100k 5% 1/10W
R576	1-216-057-00	s	METAL, CHIP 2.2K 5% 1/10W
R600	1-208-806-11	s	METAL, CHIP 10k 0.5% 1/10W
R601	1-216-049-91	s	METAL, CHIP 1k 5% 1/10W
R602	1-216-049-91	s	METAL, CHIP 1k 5% 1/10W
R603	1-216-089-91	s	METAL, CHIP 47k 5% 1/10W
R604	1-216-049-91	s	METAL, CHIP 1k 5% 1/10W
R605	1-216-049-91	s	METAL, CHIP 1k 5% 1/10W
R606	1-216-049-91	s	METAL, CHIP 1k 5% 1/10W

(VP-43AP BOARD(UVW-1600P))

Ref. No. or Q'ty	Part No.	SP	Description
R607	1-216-049-91	s	METAL, CHIP 1k 5% 1/10W
R608	1-216-057-00	s	METAL, CHIP 2.2K 5% 1/10W
R609	1-216-057-00	s	METAL, CHIP 2.2K 5% 1/10W
R610	1-216-033-00	s	METAL, CHIP 220 5% 1/10W
R611	1-216-033-00	s	METAL, CHIP 220 5% 1/10W
R612	1-208-806-11	s	METAL, CHIP 10k 0.5% 1/10W
R613	1-216-045-00	s	METAL, CHIP 680 5% 1/10W
R614	1-216-045-00	s	METAL, CHIP 680 5% 1/10W
R615	1-216-077-00	s	METAL, CHIP 15K 5% 1/10W
R616	1-216-077-00	s	METAL, CHIP 15K 5% 1/10W
R617	1-216-017-91	s	METAL, CHIP 47 5% 1/10W
R618	1-216-017-91	s	METAL, CHIP 47 5% 1/10W
R619	1-216-027-00	s	METAL, CHIP 120 5% 1/10W
R620	1-216-027-00	s	METAL, CHIP 120 5% 1/10W
R621	1-216-682-11	s	METAL, CHIP 20K 0.5% 1/10W
R622	1-216-081-00	s	METAL, CHIP 22K 5% 1/10W
R623	1-216-049-91	s	METAL, CHIP 1k 5% 1/10W
R626	1-216-049-91	s	METAL, CHIP 1k 5% 1/10W
R627	1-216-049-91	s	METAL, CHIP 1k 5% 1/10W
R628	1-216-057-00	s	METAL, CHIP 2.2K 5% 1/10W
R629	1-216-057-00	s	METAL, CHIP 2.2K 5% 1/10W
R630	1-216-065-00	s	METAL, CHIP 4.7K 5% 1/10W
R631	1-216-065-00	s	METAL, CHIP 4.7K 5% 1/10W
R632	1-216-049-91	s	METAL, CHIP 1k 5% 1/10W
R633	1-216-295-91	s	RES, CHIP 0
R634	1-216-049-91	s	METAL, CHIP 1k 5% 1/10W
R635	1-216-049-91	s	METAL, CHIP 1k 5% 1/10W
R636	1-216-081-00	s	METAL, CHIP 22K 5% 1/10W
R637	1-216-121-91	s	METAL, CHIP 1M 5% 1/10W
R638	1-216-121-91	s	METAL, CHIP 1M 5% 1/10W
R639	1-216-081-00	s	METAL, CHIP 22K 5% 1/10W
R640	1-216-081-00	s	METAL, CHIP 22K 5% 1/10W
R641	1-216-049-91	s	METAL, CHIP 1k 5% 1/10W
R642	1-216-049-91	s	METAL, CHIP 1k 5% 1/10W
R643	1-216-049-91	s	METAL, CHIP 1k 5% 1/10W
R644	1-216-081-00	s	METAL, CHIP 22K 5% 1/10W
R645	1-216-089-91	s	METAL, CHIP 47k 5% 1/10W
R646	1-216-049-91	s	METAL, CHIP 1k 5% 1/10W
R647	1-216-089-91	s	METAL, CHIP 47k 5% 1/10W
R648	1-216-049-91	s	METAL, CHIP 1k 5% 1/10W
R649	1-216-049-91	s	METAL, CHIP 1k 5% 1/10W
R650	1-216-049-91	s	METAL, CHIP 1k 5% 1/10W
R651	1-216-025-91	s	METAL, CHIP 100 5% 1/10W
R652	1-216-657-11	s	METAL, CHIP 1.8K 0.5% 1/10W
R653	1-216-073-00	s	METAL, CHIP 10K 5% 1/10W
R654	1-216-065-00	s	METAL, CHIP 4.7K 5% 1/10W
R655	1-216-065-00	s	METAL, CHIP 4.7K 5% 1/10W
R656	1-216-047-91	s	METAL, CHIP 820 5% 1/10W
R657	1-216-065-00	s	METAL, CHIP 4.7K 5% 1/10W
R658	1-216-065-00	s	METAL, CHIP 4.7K 5% 1/10W
R659	1-216-041-00	s	METAL, CHIP 470 5% 1/10W
R660	1-216-041-00	s	METAL, CHIP 470 5% 1/10W
R661	1-216-049-91	s	METAL, CHIP 1k 5% 1/10W
R662	1-216-037-00	s	METAL, CHIP 330 5% 1/10W
R663	1-216-077-00	s	METAL, CHIP 15K 5% 1/10W
R664	1-216-079-00	s	METAL, CHIP 18K 5% 1/10W
R665	1-216-081-00	s	METAL, CHIP 22K 5% 1/10W
R666	1-216-081-00	s	METAL, CHIP 22K 5% 1/10W
R667	1-216-097-91	s	METAL, CHIP 100k 5% 1/10W

(VP-43AP BOARD(UVW-1600P))

Ref. No. or Q'ty	Part No.	SP	Description
R668	1-216-049-91	s	METAL, CHIP 1k 5% 1/10W
R669	1-216-049-91	s	METAL, CHIP 1k 5% 1/10W
R670	1-216-666-11	s	METAL, CHIP 4.3K 0.5% 1/10W
R671	1-216-049-91	s	METAL, CHIP 1k 5% 1/10W
R672	1-216-049-91	s	METAL, CHIP 1k 5% 1/10W
R673	1-216-295-91	s	RES, CHIP 0
R675	1-216-049-91	s	METAL, CHIP 1k 5% 1/10W
R676	1-216-037-00	s	METAL, CHIP 330 5% 1/10W
R677	1-216-037-00	s	METAL, CHIP 330 5% 1/10W
R678-682	1-216-049-91	s	METAL, CHIP 1k 5% 1/10W
R683	1-216-057-00	s	METAL, CHIP 2.2K 5% 1/10W
R684	1-216-647-11	s	METAL, CHIP 680 0.5% 1/10W
R685	1-216-049-91	s	METAL, CHIP 1k 5% 1/10W
R686	1-216-661-11	s	METAL, CHIP 2.7K 0.5% 1/10W
R687	1-216-057-00	s	METAL, CHIP 2.2K 5% 1/10W
R688	1-216-045-00	s	METAL, CHIP 680 5% 1/10W
R689	1-216-639-11	s	METAL, CHIP 330 0.5% 1/10W
R690	1-216-651-11	s	METAL, CHIP 1K 0.5% 1/10W
R691	1-216-049-91	s	METAL, CHIP 1k 5% 1/10W
R692	1-216-025-91	s	METAL, CHIP 100 5% 1/10W
R693	1-216-025-91	s	METAL, CHIP 100 5% 1/10W
R694	1-216-624-11	s	METAL, CHIP 75 0.5% 1/10W
R695	1-216-081-00	s	METAL, CHIP 22K 5% 1/10W
R696	1-216-095-00	s	METAL, CHIP 82K 5% 1/10W
R697	1-216-057-00	s	METAL, CHIP 2.2K 5% 1/10W
R698	1-216-057-00	s	METAL, CHIP 2.2K 5% 1/10W
R699	1-216-073-00	s	METAL, CHIP 10K 5% 1/10W
R701	1-216-025-91	s	METAL, CHIP 100 5% 1/10W
R702	1-216-025-91	s	METAL, CHIP 100 5% 1/10W
R703	1-216-049-91	s	METAL, CHIP 1k 5% 1/10W
R704	1-216-049-91	s	METAL, CHIP 1k 5% 1/10W
R705	1-216-049-91	s	METAL, CHIP 1k 5% 1/10W
R706	1-216-049-91	s	METAL, CHIP 1k 5% 1/10W
R707	1-208-784-11	s	METAL, CHIP 1.2k 0.5% 1/10W
R708	1-208-784-11	s	METAL, CHIP 1.2k 0.5% 1/10W
R709	1-216-065-00	s	METAL, CHIP 4.7K 5% 1/10W
R710	1-216-065-00	s	METAL, CHIP 4.7K 5% 1/10W
R711	1-216-025-91	s	METAL, CHIP 100 5% 1/10W
R712	1-216-025-91	s	METAL, CHIP 100 5% 1/10W
R713	1-216-049-91	s	METAL, CHIP 1k 5% 1/10W
R714	1-216-049-91	s	METAL, CHIP 1k 5% 1/10W
R715	1-216-049-91	s	METAL, CHIP 1k 5% 1/10W
R716	1-216-049-91	s	METAL, CHIP 1k 5% 1/10W
R717	1-216-065-00	s	METAL, CHIP 4.7K 5% 1/10W
R718	1-216-065-00	s	METAL, CHIP 4.7K 5% 1/10W
R719	1-216-639-11	s	METAL, CHIP 330 0.5% 1/10W
R720	1-216-639-11	s	METAL, CHIP 330 0.5% 1/10W
R721	1-216-025-91	s	METAL, CHIP 100 5% 1/10W
R722	1-216-025-91	s	METAL, CHIP 100 5% 1/10W
R723	1-216-065-00	s	METAL, CHIP 4.7K 5% 1/10W
R724	1-216-041-00	s	METAL, CHIP 470 5% 1/10W
R725	1-216-065-00	s	METAL, CHIP 4.7K 5% 1/10W
R726	1-216-041-00	s	METAL, CHIP 470 5% 1/10W
R727	1-216-049-91	s	METAL, CHIP 1k 5% 1/10W
R728	1-216-049-91	s	METAL, CHIP 1k 5% 1/10W
R729	1-216-624-11	s	METAL, CHIP 75 0.5% 1/10W
R730	1-216-624-11	s	METAL, CHIP 75 0.5% 1/10W
R731	1-216-624-11	s	METAL, CHIP 75 0.5% 1/10W
R732	1-216-624-11	s	METAL, CHIP 75 0.5% 1/10W

(VP-43AP BOARD(UVW-1600P))

Ref. No. or Q'ty	Part No.	SP	Description
R733-737	1-216-097-91	s	METAL, CHIP 100k 5% 1/10W
R738	1-216-049-91	s	METAL, CHIP 1k 5% 1/10W
R739	1-216-049-91	s	METAL, CHIP 1k 5% 1/10W
R740	1-216-049-91	s	METAL, CHIP 1k 5% 1/10W
R741	1-216-073-00	s	METAL, CHIP 10K 5% 1/10W
R742	1-216-049-91	s	METAL, CHIP 1k 5% 1/10W
R743	1-216-049-91	s	METAL, CHIP 1k 5% 1/10W
R744	1-216-049-91	s	METAL, CHIP 1k 5% 1/10W
R745	1-216-113-00	s	METAL, CHIP 470K 5% 1/10W
R746	1-216-049-91	s	METAL, CHIP 1k 5% 1/10W
R747	1-216-049-91	s	METAL, CHIP 1k 5% 1/10W
R748	1-216-097-91	s	METAL, CHIP 100k 5% 1/10W
R749	1-216-049-91	s	METAL, CHIP 1k 5% 1/10W
R750	1-216-097-91	s	METAL, CHIP 100k 5% 1/10W
R751	1-216-049-91	s	METAL, CHIP 1k 5% 1/10W
RV101	1-241-785-11	s	RES, ADJ METAL 10k
RV102	1-241-785-11	s	RES, ADJ METAL 10k
RV103	1-241-761-11	s	RES, ADJ METAL 1k
RV201	1-241-763-11	s	RES, ADJ METAL 4.7k
RV301	1-241-785-11	s	RES, ADJ METAL 10k
RV302	1-241-785-11	s	RES, ADJ METAL 10k
RV303	1-241-761-11	s	RES, ADJ METAL 1k
RV401	1-241-764-11	s	RES, ADJ METAL 10k
RV501	1-241-761-11	s	RES, ADJ METAL 1k
RV502	1-241-761-11	s	RES, ADJ METAL 1k
RV503	1-241-761-11	s	RES, ADJ METAL 1k
RV504	1-241-761-11	s	RES, ADJ METAL 1k
RV505	1-241-761-11	s	RES, ADJ METAL 1k
RV506	1-241-758-11	s	RES, ADJ METAL 100
RV601	1-241-787-11	s	RES, ADJ METAL 47k
RV602	1-241-787-11	s	RES, ADJ METAL 47k
RV603	1-241-783-11	s	RES, ADJ METAL 2.2k
RV604	1-241-784-11	s	RES, ADJ METAL 4.7k
RV605	1-241-784-11	s	RES, ADJ METAL 4.7k
RV606	1-241-779-11	s	RES, ADJ METAL 100
RV701	1-241-783-11	s	RES, ADJ METAL 2.2k
RV702	1-241-783-11	s	RES, ADJ METAL 2.2k
RV703	1-241-761-11	s	RES, ADJ METAL 1k
RV704	1-241-761-11	s	RES, ADJ METAL 1k
TH201	1-807-972-11	s	THERMISTOR SV-1715 1.25k
TH401	1-807-972-11	s	THERMISTOR SV-1715 1.25k
TH601	1-807-972-11	s	THERMISTOR SV-1715 1.25k

VR-155 BOARD

Ref. No. or Q'ty	Part No.	SP	Description
1pc	1-648-916-11	o	PRINTED CIRCUIT BOARD, VR-155
CN402	1-564-005-11	o	CONNECTOR 6P, MALE
RV1	1-237-790-21	s	RES, VAR CARBON 10K
RV2	1-237-790-21	s	RES, VAR CARBON 10K

VRA-5 BOARD(UVW-1800)

VRA-5 board is used for UVW-1800(J,UC).

Ref. No. or Q'ty	Part No.	SP	Description
1pc	A-8275-280-A	o	MOUNTED CIRCUIT BOARD, VRA-5
1pc	3-182-386-02	o	PLATE, SHIELD (L), CARD
1pc	7-621-759-45	s	SCREW, +PSW2.6x6
1pc	8-752-036-77	s	IC CXA1179N
1pc	3-179-084-01	s	LEVER (R), PC BOARD
1pc	3-179-085-01	s	LEVER (L), PC BOARD
C101,102	1-126-933-11	s	ELECT 100uF 20% 16V
C103,104	1-163-033-91	s	CERAMIC, CHIP 0.022uF 50V
C105	1-164-004-11	s	CERAMIC, CHIP 0.1uF 10% 25V
C106,107	1-126-925-11	s	ELECT 470uF 20% 10V
C108	1-163-033-91	s	CERAMIC, CHIP 0.022uF 50V
C109	1-126-925-11	s	ELECT 470uF 20% 10V
C110	1-163-033-91	s	CERAMIC, CHIP 0.022uF 50V
C111	1-131-347-00	s	TANTALUM 1uF 10% 35V
C112	1-163-033-91	s	CERAMIC, CHIP 0.022uF 50V
C113	1-163-033-91	s	CERAMIC, CHIP 0.022uF 50V
C114	1-163-033-91	s	CERAMIC, CHIP 0.022uF 50V
C115	1-126-933-11	s	ELECT 100uF 20% 16V
C116	1-126-933-11	s	ELECT 100uF 20% 16V
C117	1-163-033-91	s	CERAMIC, CHIP 0.022uF 50V
C118	1-163-033-91	s	CERAMIC, CHIP 0.022uF 50V
C119	1-126-933-11	s	ELECT 100uF 20% 16V
C121	1-163-227-11	s	CERAMIC, CHIP 10PF 5% 50V
C122	1-163-231-11	s	CERAMIC, CHIP 15pF 5% 50V
C123	1-163-231-11	s	CERAMIC, CHIP 15pF 5% 50V
C124	1-163-033-91	s	CERAMIC, CHIP 0.022uF 50V
C125	1-163-033-91	s	CERAMIC, CHIP 0.022uF 50V
C126	1-163-033-91	s	CERAMIC, CHIP 0.022uF 50V
C127	1-126-933-11	s	ELECT 100uF 20% 16V
C128	1-131-381-00	s	TANTALUM 47uF 10% 10V
C129	1-131-381-00	s	TANTALUM 47uF 10% 10V
C130	1-131-353-00	s	TANTALUM 10uF 10% 35V
C131	1-131-381-00	s	TANTALUM 47uF 10% 10V
C132	1-131-381-00	s	TANTALUM 47uF 10% 10V
C133	1-163-033-91	s	CERAMIC, CHIP 0.022uF 50V
C134	1-163-033-91	s	CERAMIC, CHIP 0.022uF 50V
C135	1-131-353-00	s	TANTALUM 10uF 10% 35V
C136	1-163-033-91	s	CERAMIC, CHIP 0.022uF 50V
C137	1-126-933-11	s	ELECT 100uF 20% 16V
C138	1-163-235-11	s	CERAMIC, CHIP 22PF 5% 50V
C140	1-163-239-11	s	CERAMIC, CHIP 33PF 5% 50V
C141	1-163-231-11	s	CERAMIC, CHIP 15pF 5% 50V
C142	1-163-033-91	s	CERAMIC, CHIP 0.022uF 50V
C143	1-163-033-91	s	CERAMIC, CHIP 0.022uF 50V
C144	1-163-033-91	s	CERAMIC, CHIP 0.022uF 50V
C145	1-163-235-11	s	CERAMIC, CHIP 22PF 5% 50V
C146	1-126-933-11	s	ELECT 100uF 20% 16V
C147	1-126-933-11	s	ELECT 100uF 20% 16V
C148	1-126-933-11	s	ELECT 100uF 20% 16V
C200	1-163-033-91	s	CERAMIC, CHIP 0.022uF 50V
C201	1-163-229-11	s	CERAMIC, CHIP 12PF 5% 50V
C202	1-164-232-11	s	CERAMIC, CHIP 0.01uF 10% 100V
C203	1-163-237-11	s	CERAMIC, CHIP 27PF 5% 50V
C204	1-163-239-11	s	CERAMIC, CHIP 33PF 5% 50V
C205	1-163-121-00	s	CERAMIC, CHIP 150PF 5% 50V
C206	1-163-121-00	s	CERAMIC, CHIP 150PF 5% 50V

(VRA-5 BOARD(UVW-1800))

Ref. No. or Q'ty	Part No.	SP	Description
C207	1-126-933-11	s	ELECT 100uF 20% 16V
C208	1-163-251-11	s	CERAMIC, CHIP 100PF 5% 50V
C209	1-163-251-11	s	CERAMIC, CHIP 100PF 5% 50V
C210	1-163-251-11	s	CERAMIC, CHIP 100PF 5% 50V
C211	1-163-251-11	s	CERAMIC, CHIP 100PF 5% 50V
C217	1-163-033-91	s	CERAMIC, CHIP 0.022uF 50V
C218	1-163-133-00	s	CERAMIC, CHIP 470PF 5% 50V
C219	1-163-033-91	s	CERAMIC, CHIP 0.022uF 50V
C220	1-163-139-00	s	CERAMIC, CHIP 820PF 5% 50V
C221	1-163-033-91	s	CERAMIC, CHIP 0.022uF 50V
C222	1-163-033-91	s	CERAMIC, CHIP 0.022uF 50V
C223	1-126-925-11	s	ELECT 470uF 20% 10V
C224	1-126-925-11	s	ELECT 470uF 20% 10V
C225-234	1-163-033-91	s	CERAMIC, CHIP 0.022uF 50V
C238	1-163-033-91	s	CERAMIC, CHIP 0.022uF 50V
C239	1-163-033-91	s	CERAMIC, CHIP 0.022uF 50V
C240	1-126-933-11	s	ELECT 100uF 20% 16V
C241-251	1-163-033-91	s	CERAMIC, CHIP 0.022uF 50V
C252	1-126-933-11	s	ELECT 100uF 20% 16V
C253-258	1-163-033-91	s	CERAMIC, CHIP 0.022uF 50V
C259	1-163-251-11	s	CERAMIC, CHIP 100PF 5% 50V
C260	1-163-251-11	s	CERAMIC, CHIP 100PF 5% 50V
C261	1-126-933-11	s	ELECT 100uF 20% 16V
C262	1-126-933-11	s	ELECT 100uF 20% 16V
C263	1-163-033-91	s	CERAMIC, CHIP 0.022uF 50V
C264	1-163-033-91	s	CERAMIC, CHIP 0.022uF 50V
C265	1-163-251-11	s	CERAMIC, CHIP 100PF 5% 50V
C267	1-163-139-00	s	CERAMIC, CHIP 820PF 5% 50V
C268	1-163-139-00	s	CERAMIC, CHIP 820PF 5% 50V
C269	1-163-251-11	s	CERAMIC, CHIP 100PF 5% 50V
C270	1-164-161-11	s	CERAMIC, CHIP 0.0022uF 10% 100V
C271	1-163-033-91	s	CERAMIC, CHIP 0.022uF 50V
C301	1-126-933-11	s	ELECT 100uF 20% 16V
C302	1-126-933-11	s	ELECT 100uF 20% 16V
C303	1-163-033-91	s	CERAMIC, CHIP 0.022uF 50V
C304	1-163-033-91	s	CERAMIC, CHIP 0.022uF 50V
C305	1-126-933-11	s	ELECT 100uF 20% 16V
C306	1-163-033-91	s	CERAMIC, CHIP 0.022uF 50V
C307	1-163-249-11	s	CERAMIC, CHIP 82pF 5% 50V
C308	1-163-033-91	s	CERAMIC, CHIP 0.022uF 50V
C309	1-163-033-91	s	CERAMIC, CHIP 0.022uF 50V
C310	1-163-235-11	s	CERAMIC, CHIP 22PF 5% 50V
C311	1-163-243-11	s	CERAMIC, CHIP 47PF 5% 50V
C312	1-131-353-00	s	TANTALUM 10uF 10% 35V
C313	1-164-004-11	s	CERAMIC, CHIP 0.1uF 10% 25V
C314	1-163-033-91	s	CERAMIC, CHIP 0.022uF 50V
C316	1-163-263-11	s	CERAMIC, CHIP 330PF 5% 50V
C317	1-163-033-91	s	CERAMIC, CHIP 0.022uF 50V
C318	1-163-033-91	s	CERAMIC, CHIP 0.022uF 50V
C319	1-163-033-91	s	CERAMIC, CHIP 0.022uF 50V
C320	1-126-933-11	s	ELECT 100uF 20% 16V
C321	1-126-933-11	s	ELECT 100uF 20% 16V
C322	1-126-933-11	s	ELECT 100uF 20% 16V
C323	1-163-239-11	s	CERAMIC, CHIP 33PF 5% 50V
C324	1-163-263-11	s	CERAMIC, CHIP 330PF 5% 50V
C325	1-163-121-00	s	CERAMIC, CHIP 150PF 5% 50V
C326	1-164-004-11	s	CERAMIC, CHIP 0.1uF 10% 25V
C327	1-164-004-11	s	CERAMIC, CHIP 0.1uF 10% 25V
C328	1-163-033-91	s	CERAMIC, CHIP 0.022uF 50V

(VRA-5 BOARD(UVW-1800))

Ref. No. or Q'ty	Part No.	SP	Description
C329	1-163-033-91	s	CERAMIC, CHIP 0.022uF 50V
C330	1-126-933-11	s	ELECT 100uF 20% 16V
C331	1-163-017-00	s	CERAMIC, CHIP 0.0047uF 5% 50V
C332	1-163-017-00	s	CERAMIC, CHIP 0.0047uF 5% 50V
C333	1-163-033-91	s	CERAMIC, CHIP 0.022uF 50V
C334	1-163-033-91	s	CERAMIC, CHIP 0.022uF 50V
C335	1-126-933-11	s	ELECT 100uF 20% 16V
C336	1-163-033-91	s	CERAMIC, CHIP 0.022uF 50V
C337	1-163-033-91	s	CERAMIC, CHIP 0.022uF 50V
C338	1-163-133-00	s	CERAMIC, CHIP 470PF 5% 50V
C339	1-163-251-11	s	CERAMIC, CHIP 100PF 5% 50V
C340	1-163-033-91	s	CERAMIC, CHIP 0.022uF 50V
C341	1-126-933-11	s	ELECT 100uF 20% 16V
C342	1-163-033-91	s	CERAMIC, CHIP 0.022uF 50V
C343	1-163-033-91	s	CERAMIC, CHIP 0.022uF 50V
C344	1-163-121-00	s	CERAMIC, CHIP 150PF 5% 50V
C345	1-163-033-91	s	CERAMIC, CHIP 0.022uF 50V
C346	1-164-004-11	s	CERAMIC, CHIP 0.1uF 10% 25V
C347	1-164-004-11	s	CERAMIC, CHIP 0.1uF 10% 25V
C348	1-163-235-11	s	CERAMIC, CHIP 22PF 5% 50V
C349	1-163-239-11	s	CERAMIC, CHIP 33PF 5% 50V
C350	1-126-933-11	s	ELECT 100uF 20% 16V
C351	1-163-033-91	s	CERAMIC, CHIP 0.022uF 50V
C352	1-163-133-00	s	CERAMIC, CHIP 470PF 5% 50V
C353	1-126-933-11	s	ELECT 100uF 20% 16V
C354	1-163-121-00	s	CERAMIC, CHIP 150PF 5% 50V
C355	1-163-033-91	s	CERAMIC, CHIP 0.022uF 50V
C356	1-163-231-11	s	CERAMIC, CHIP 15pF 5% 50V
C357	1-163-033-91	s	CERAMIC, CHIP 0.022uF 50V
C358	1-164-004-11	s	CERAMIC, CHIP 0.1uF 10% 25V
C359	1-163-033-91	s	CERAMIC, CHIP 0.022uF 50V
C360	1-164-004-11	s	CERAMIC, CHIP 0.1uF 10% 25V
C361	1-163-241-11	s	CERAMIC, CHIP 39PF 5% 50V
C362	1-163-033-91	s	CERAMIC, CHIP 0.022uF 50V
C363	1-163-231-11	s	CERAMIC, CHIP 15pF 5% 50V
C364	1-163-033-91	s	CERAMIC, CHIP 0.022uF 50V
C365	1-126-933-11	s	ELECT 100uF 20% 16V
C366	1-163-263-11	s	CERAMIC, CHIP 330PF 5% 50V
C367	1-163-033-91	s	CERAMIC, CHIP 0.022uF 50V
C368	1-126-933-11	s	ELECT 100uF 20% 16V
C369	1-163-033-91	s	CERAMIC, CHIP 0.022uF 50V
C370	1-163-017-00	s	CERAMIC, CHIP 0.0047uF 5% 50V
C371	1-126-933-11	s	ELECT 100uF 20% 16V
C372	1-163-033-91	s	CERAMIC, CHIP 0.022uF 50V
C373	1-163-033-91	s	CERAMIC, CHIP 0.022uF 50V
C374	1-163-033-91	s	CERAMIC, CHIP 0.022uF 50V
C375	1-163-220-11	s	CERAMIC, CHIP 3PF 50V
C376	1-163-227-11	s	CERAMIC, CHIP 10PF 5% 50V
C377	1-126-933-11	s	ELECT 100uF 20% 16V
C378	1-126-933-11	s	ELECT 100uF 20% 16V
C379	1-163-133-00	s	CERAMIC, CHIP 470PF 5% 50V
C380	1-163-251-11	s	CERAMIC, CHIP 100PF 5% 50V
C381	1-163-033-91	s	CERAMIC, CHIP 0.022uF 50V
C382	1-163-251-11	s	CERAMIC, CHIP 100PF 5% 50V
C383	1-164-004-11	s	CERAMIC, CHIP 0.1uF 10% 25V
C384	1-163-033-91	s	CERAMIC, CHIP 0.022uF 50V
C385	1-163-139-00	s	CERAMIC, CHIP 820PF 5% 50V
C386	1-163-033-91	s	CERAMIC, CHIP 0.022uF 50V
C387	1-163-033-91	s	CERAMIC, CHIP 0.022uF 50V

(VRA-5 BOARD(UVW-1800))

Ref. No. or Q'ty	Part No.	SP	Description
C388	1-163-251-11	s	CERAMIC, CHIP 100PF 5% 50V
C389	1-126-933-11	s	ELECT 100uF 20% 16V
C390	1-163-033-91	s	CERAMIC, CHIP 0.022uF 50V
C391	1-163-033-91	s	CERAMIC, CHIP 0.022uF 50V
C392	1-163-089-00	s	CERAMIC, CHIP 6PF 50V
C393	1-163-102-00	s	CERAMIC, CHIP 24PF 5% 50V
C394	1-163-113-00	s	CERAMIC, CHIP 68PF 5% 50V
C395	1-126-933-11	s	ELECT 100uF 20% 16V
C396	1-163-102-00	s	CERAMIC, CHIP 24PF 5% 50V
C397	1-163-251-11	s	CERAMIC, CHIP 100PF 5% 50V
C398	1-164-232-11	s	CERAMIC, CHIP 0.01uF 10% 100V
C399	1-163-263-11	s	CERAMIC, CHIP 330PF 5% 50V
C501	1-126-933-11	s	ELECT 100uF 20% 16V
C502	1-126-933-11	s	ELECT 100uF 20% 16V
C503	1-126-933-11	s	ELECT 100uF 20% 16V
C504	1-163-033-91	s	CERAMIC, CHIP 0.022uF 50V
C505	1-163-033-91	s	CERAMIC, CHIP 0.022uF 50V
C506	1-163-102-00	s	CERAMIC, CHIP 24PF 5% 50V
C507	1-163-257-11	s	CERAMIC, CHIP 180PF 5% 50V
C508	1-126-933-11	s	ELECT 100uF 20% 16V
C509	1-126-933-11	s	ELECT 100uF 20% 16V
C510	1-163-033-91	s	CERAMIC, CHIP 0.022uF 50V
C511	1-104-923-11	s	MICA, CHIP 180pF 0.25% 50V
C513	1-163-091-00	s	CERAMIC, CHIP 8PF 50V
C514	1-163-239-11	s	CERAMIC, CHIP 33PF 5% 50V
C515	1-163-091-00	s	CERAMIC, CHIP 8PF 50V
C516	1-163-227-11	s	CERAMIC, CHIP 10PF 5% 50V
C517	1-163-033-91	s	CERAMIC, CHIP 0.022uF 50V
C518	1-163-033-91	s	CERAMIC, CHIP 0.022uF 50V
C519	1-163-033-91	s	CERAMIC, CHIP 0.022uF 50V
C520	1-163-033-91	s	CERAMIC, CHIP 0.022uF 50V
C521	1-131-353-00	s	TANTALUM 10uF 10% 35V
C522	1-163-102-00	s	CERAMIC, CHIP 24PF 5% 50V
C523	1-126-933-11	s	ELECT 100uF 20% 16V
C524	1-163-033-91	s	CERAMIC, CHIP 0.022uF 50V
C525	1-164-004-11	s	CERAMIC, CHIP 0.1uF 10% 25V
C526	1-163-033-91	s	CERAMIC, CHIP 0.022uF 50V
C527	1-163-033-91	s	CERAMIC, CHIP 0.022uF 50V
C528	1-163-033-91	s	CERAMIC, CHIP 0.022uF 50V
C529	1-163-033-91	s	CERAMIC, CHIP 0.022uF 50V
C530	1-163-275-11	s	CERAMIC, CHIP 0.001uF 5% 50V
C531	1-164-161-11	s	CERAMIC, CHIP 0.0022uF 10% 100V
C603	1-126-933-11	s	ELECT 100uF 20% 16V
C604	1-163-033-91	s	CERAMIC, CHIP 0.022uF 50V
C605	1-163-033-91	s	CERAMIC, CHIP 0.022uF 50V
C606	1-163-099-00	s	CERAMIC, CHIP 18PF 5% 50V
C607	1-163-125-00	s	CERAMIC, CHIP 220PF 5% 50V
C608	1-126-933-11	s	ELECT 100uF 20% 16V
C609	1-126-933-11	s	ELECT 100uF 20% 16V
C610	1-163-033-91	s	CERAMIC, CHIP 0.022uF 50V
C611	1-104-923-11	s	MICA, CHIP 180pF 0.25% 50V
C613	1-163-091-00	s	CERAMIC, CHIP 8PF 50V
C614	1-163-227-11	s	CERAMIC, CHIP 10PF 5% 50V
C615	1-163-091-00	s	CERAMIC, CHIP 8PF 50V
C616	1-163-227-11	s	CERAMIC, CHIP 10PF 5% 50V
C617	1-163-033-91	s	CERAMIC, CHIP 0.022uF 50V
C618	1-163-033-91	s	CERAMIC, CHIP 0.022uF 50V
C619	1-163-033-91	s	CERAMIC, CHIP 0.022uF 50V
C620	1-163-033-91	s	CERAMIC, CHIP 0.022uF 50V

(VRA-5 BOARD(UVW-1800))

Ref. No. or Q'ty	Part No.	SP	Description
C621	1-131-353-00	s	TANTALUM 10uF 10% 35V
C622	1-163-139-00	s	CERAMIC, CHIP 820PF 5% 50V
C623	1-163-139-00	s	CERAMIC, CHIP 820PF 5% 50V
C624	1-163-033-91	s	CERAMIC, CHIP 0.022uF 50V
C625	1-126-933-11	s	ELECT 100uF 20% 16V
C626	1-163-033-91	s	CERAMIC, CHIP 0.022uF 50V
C627	1-163-033-91	s	CERAMIC, CHIP 0.022uF 50V
C628	1-163-033-91	s	CERAMIC, CHIP 0.022uF 50V
C631	1-126-933-11	s	ELECT 100uF 20% 16V
C632	1-163-033-91	s	CERAMIC, CHIP 0.022uF 50V
C801	1-163-275-11	s	CERAMIC, CHIP 0.001uF 5% 50V
C802	1-163-251-11	s	CERAMIC, CHIP 100PF 5% 50V
C803	1-126-933-11	s	ELECT 100uF 20% 16V
C804	1-163-275-11	s	CERAMIC, CHIP 0.001uF 5% 50V
C805	1-163-125-00	s	CERAMIC, CHIP 220PF 5% 50V
C806	1-131-347-00	s	TANTALUM 1uF 10% 35V
C807	1-131-347-00	s	TANTALUM 1uF 10% 35V
C808	1-163-275-11	s	CERAMIC, CHIP 0.001uF 5% 50V
C809	1-163-033-91	s	CERAMIC, CHIP 0.022uF 50V
C810	1-163-251-11	s	CERAMIC, CHIP 100PF 5% 50V
C811	1-131-347-00	s	TANTALUM 1uF 10% 35V
C812	1-131-353-00	s	TANTALUM 10uF 10% 35V
C813	1-126-933-11	s	ELECT 100uF 20% 16V
C814	1-163-033-91	s	CERAMIC, CHIP 0.022uF 50V
C815	1-163-033-91	s	CERAMIC, CHIP 0.022uF 50V
C816	1-131-347-00	s	TANTALUM 1uF 10% 35V
C901	1-126-933-11	s	ELECT 100uF 20% 16V
C902	1-126-933-11	s	ELECT 100uF 20% 16V
C903	1-163-033-91	s	CERAMIC, CHIP 0.022uF 50V
C904	1-163-033-91	s	CERAMIC, CHIP 0.022uF 50V
C905	1-126-933-11	s	ELECT 100uF 20% 16V
C906	1-126-933-11	s	ELECT 100uF 20% 16V
C907	1-163-033-91	s	CERAMIC, CHIP 0.022uF 50V
C908	1-163-033-91	s	CERAMIC, CHIP 0.022uF 50V
C909	1-126-933-11	s	ELECT 100uF 20% 16V
C910	1-163-033-91	s	CERAMIC, CHIP 0.022uF 50V
C911	1-126-933-11	s	ELECT 100uF 20% 16V
C912	1-126-933-11	s	ELECT 100uF 20% 16V
C913	1-163-033-91	s	CERAMIC, CHIP 0.022uF 50V
C914	1-163-033-91	s	CERAMIC, CHIP 0.022uF 50V
C915	1-126-933-11	s	ELECT 100uF 20% 16V
C916	1-163-033-91	s	CERAMIC, CHIP 0.022uF 50V
C917	1-126-933-11	s	ELECT 100uF 20% 16V
C918	1-163-033-91	s	CERAMIC, CHIP 0.022uF 50V
CN101	1-573-782-21	o	CONNECTOR, PHEC 60P, MALE
CN102	1-573-782-21	o	CONNECTOR, PHEC 60P, MALE
CV301	1-141-442-91	s	CAP, TRIMMER 20pF
D101,102	8-719-941-23	s	DIODE DA204U
D109	8-719-123-82	s	DIODE 1SS303-T1
D202	8-719-123-82	s	DIODE 1SS303-T1
D301	8-719-041-39	s	DIODE KV1470
D303	8-719-821-39	s	DIODE 1SV160
D305	8-713-300-88	s	DIODE 1T33C-01
D306	8-719-941-23	s	DIODE DA204U
D801	8-719-941-23	s	DIODE DA204U
FB201	1-543-309-21	s	BEAD, FERRITE

(VRA-5 BOARD(UVW-1800))

Ref. No. or Q'ty	Part No.	SP	Description
FL101	1-239-769-11	s	FILTER, LOW-PASS 5MHz
FL102	1-239-313-11	s	FILTER, LOW-PASS 2MHz
FL103	1-239-313-11	s	FILTER, LOW-PASS 2MHz
FL201	1-239-769-11	s	FILTER, LOW-PASS 5MHz
FL202	1-239-801-11	s	FILTER, LOW-PASS 4MHz
IC101	8-759-300-71	s	IC HD14053BFP
IC102	8-759-300-71	s	IC HD14053BFP
IC103	8-759-908-92	s	IC TL084CNS
IC104	8-759-925-76	s	IC SN74HC08ANS
IC201	8-759-925-90	s	IC SN74HC74ANS
IC202	8-759-300-71	s	IC HD14053BFP
IC203	8-759-927-46	s	IC SN74HC00ANS
IC205	8-759-085-99	s	IC MB40568PF-G-BND
IC206	8-759-085-99	s	IC MB40568PF-G-BND
IC207	8-759-035-93	s	IC TC7S32F-TE85L
IC208	8-759-147-02	s	IC UPD42101C-3
IC209	8-759-147-02	s	IC UPD42101C-3
IC210	8-759-513-76	s	IC CXD8161AQ
IC211	8-759-031-84	s	IC TC7S04F
IC212	8-752-329-28	s	IC CXD1151Q
IC213	8-752-363-43	s	IC CXD1171M-1-TH
IC214	8-752-363-43	s	IC CXD1171M-1-TH
IC215	8-759-300-71	s	IC HD14053BFP
IC216	8-759-907-81	s	IC SN74LS221NS
IC217	8-759-008-31	s	IC MC74HC4002F
IC218	8-759-925-85	s	IC SN74HC32ANS
IC219	8-759-234-20	s	IC TC7S08F
IC220	8-759-300-71	s	IC HD14053BFP
IC301	8-759-008-67	s	IC MC14066BF
IC302	8-752-339-04	s	IC CXD2208Q
IC303	8-759-908-92	s	IC TL084CNS
IC304	8-759-906-53	s	IC TL062CPS
IC305	8-759-031-84	s	IC TC7S04F
IC306	8-759-908-92	s	IC TL084CNS
IC307	8-759-031-84	s	IC TC7S04F
IC308	8-759-906-53	s	IC TL062CPS
IC309	8-759-300-71	s	IC HD14053BFP
IC310	8-759-520-55	s	IC CXD8243AM
IC311	8-759-008-67	s	IC MC14066BF
IC312	8-759-907-81	s	IC SN74LS221NS
IC313	8-759-239-58	s	IC TC74HC221AF
IC314	8-759-009-06	s	IC MC14052BF
IC315	8-759-908-15	s	IC TL431CLP
IC316	8-759-908-15	s	IC TL431CLP
IC317	8-759-031-84	s	IC TC7S04F
IC501	1-810-334-11	s	HIC BP-023
IC502	8-759-908-15	s	IC TL431CLP
IC601	1-810-334-11	s	HIC BP-023
IC602	8-759-908-15	s	IC TL431CLP
IC801	8-752-064-20	s	IC CXA1727Q
IC802	8-752-356-06	s	IC CXD2122AQ
IC901	8-759-182-84	s	IC PQ05SZ5U
IC902	8-759-822-95	s	IC L79M05T-FA
IC903	8-759-182-84	s	IC PQ05SZ5U
IC904	8-759-172-41	s	IC L78M09T-TL
L101-105	1-410-482-31	s	INDUCTOR 100uH
L107	1-410-482-31	s	INDUCTOR 100uH
L201	1-408-413-00	s	INDUCTOR 22uH
L202	1-408-413-00	s	INDUCTOR 22uH

(VRA-5 BOARD(UVW-1800))

Ref. No. or Q'ty	Part No.	SP	Description
L203	1-408-419-00	s	INDUCTOR 68uH
L204	1-408-413-00	s	INDUCTOR 22uH
L205	1-410-462-11	s	INDUCTOR 2.2uH
L206	1-410-462-11	s	INDUCTOR 2.2uH
L207	1-410-482-31	s	INDUCTOR 100uH
L208	1-410-482-31	s	INDUCTOR 100uH
L301	1-410-482-31	s	INDUCTOR 100uH
L302	1-410-464-11	s	INDUCTOR 3.3uH
L303	1-410-478-11	s	INDUCTOR 47uH
L304	1-410-476-11	s	INDUCTOR 33uH
L305	1-408-406-00	s	INDUCTOR 5.6uH
L306-314	1-410-482-31	s	INDUCTOR 100uH
L315	1-410-470-11	s	INDUCTOR 10uH
L316	1-410-473-11	s	INDUCTOR 18uH
L317	1-408-416-00	s	INDUCTOR 39uH
L501	1-410-482-31	s	INDUCTOR 100uH
L502	1-410-482-31	s	INDUCTOR 100uH
L503	1-408-419-00	s	INDUCTOR 68uH
L505	1-410-464-11	s	INDUCTOR 3.3uH
L506	1-410-482-31	s	INDUCTOR 100uH
L507	1-410-478-11	s	INDUCTOR 47uH
L603	1-408-420-00	s	INDUCTOR 82uH
L605	1-410-464-11	s	INDUCTOR 3.3uH
L606	1-410-482-31	s	INDUCTOR 100uH
L607	1-408-425-00	s	INDUCTOR 220uH
L608	1-410-482-31	s	INDUCTOR 100uH
L801	1-410-482-31	s	INDUCTOR 100uH
L901-905	1-412-533-21	s	INDUCTOR 47uH
LV301	1-406-745-11	s	INDUCTOR, VAR 6.8uH
Q101	8-729-117-32	s	TRANSISTOR 2SC4177
Q102	8-729-117-32	s	TRANSISTOR 2SC4177
Q103	8-729-140-63	s	TRANSISTOR 2SA1611-M5M6
Q104	8-729-904-41	s	TRANSISTOR FMY3
Q105	8-729-117-32	s	TRANSISTOR 2SC4177
Q106	8-729-140-63	s	TRANSISTOR 2SA1611-M5M6
Q107	8-729-140-63	s	TRANSISTOR 2SA1611-M5M6
Q108	8-729-117-32	s	TRANSISTOR 2SC4177
Q109	8-729-117-32	s	TRANSISTOR 2SC4177
Q110	8-729-117-32	s	TRANSISTOR 2SC4177
Q111	8-729-117-32	s	TRANSISTOR 2SC4177
Q112	8-729-140-63	s	TRANSISTOR 2SA1611-M5M6
Q113	8-729-140-63	s	TRANSISTOR 2SA1611-M5M6
Q114	8-729-117-32	s	TRANSISTOR 2SC4177
Q115	8-729-117-32	s	TRANSISTOR 2SC4177
Q116	8-729-140-63	s	TRANSISTOR 2SA1611-M5M6
Q117-122	8-729-117-32	s	TRANSISTOR 2SC4177
Q123	8-729-422-44	s	TRANSISTOR 2SK663
Q124	8-729-422-44	s	TRANSISTOR 2SK663
Q125	8-729-140-63	s	TRANSISTOR 2SA1611-M5M6
Q126	8-729-117-32	s	TRANSISTOR 2SC4177
Q127	8-729-117-32	s	TRANSISTOR 2SC4177
Q128	8-729-117-32	s	TRANSISTOR 2SC4177
Q129	8-729-117-32	s	TRANSISTOR 2SC4177
Q130	8-729-140-63	s	TRANSISTOR 2SA1611-M5M6
Q131	8-729-117-32	s	TRANSISTOR 2SC4177
Q132	8-729-117-32	s	TRANSISTOR 2SC4177
Q133	8-729-117-32	s	TRANSISTOR 2SC4177
Q201	8-729-117-32	s	TRANSISTOR 2SC4177

(VRA-5 BOARD(UVW-1800))

Ref. No. or Q'ty	Part No.	SP	Description
Q202	8-729-905-12	s	TRANSISTOR DTA144EU
Q203	8-729-905-18	s	TRANSISTOR DTC144EU
Q204	8-729-140-63	s	TRANSISTOR 2SA1611-M5M6
Q207	8-729-117-32	s	TRANSISTOR 2SC4177
Q209	8-729-140-63	s	TRANSISTOR 2SA1611-M5M6
Q210	8-729-117-32	s	TRANSISTOR 2SC4177
Q211	8-729-117-32	s	TRANSISTOR 2SC4177
Q212	8-729-140-63	s	TRANSISTOR 2SA1611-M5M6
Q213	8-729-117-32	s	TRANSISTOR 2SC4177
Q301	8-729-117-32	s	TRANSISTOR 2SC4177
Q303	8-729-117-32	s	TRANSISTOR 2SC4177
Q305	8-729-117-32	s	TRANSISTOR 2SC4177
Q306	8-729-140-63	s	TRANSISTOR 2SA1611-M5M6
Q307	8-729-140-63	s	TRANSISTOR 2SA1611-M5M6
Q308	8-729-905-18	s	TRANSISTOR DTC144EU
Q309	8-729-905-18	s	TRANSISTOR DTC144EU
Q310	8-729-117-32	s	TRANSISTOR 2SC4177
Q311	8-729-117-32	s	TRANSISTOR 2SC4177
Q312	8-729-140-63	s	TRANSISTOR 2SA1611-M5M6
Q313	8-729-140-63	s	TRANSISTOR 2SA1611-M5M6
Q314	8-729-140-63	s	TRANSISTOR 2SA1611-M5M6
Q315	8-729-140-63	s	TRANSISTOR 2SA1611-M5M6
Q316	8-729-905-18	s	TRANSISTOR DTC144EU
Q317	8-729-140-63	s	TRANSISTOR 2SA1611-M5M6
Q318	8-729-117-32	s	TRANSISTOR 2SC4177
Q319	8-729-140-63	s	TRANSISTOR 2SA1611-M5M6
Q320	8-729-140-63	s	TRANSISTOR 2SA1611-M5M6
Q321	8-729-117-32	s	TRANSISTOR 2SC4177
Q322	8-729-143-07	s	TRANSISTOR 2SA1610-YY33
Q323	8-729-143-07	s	TRANSISTOR 2SA1610-YY33
Q324	8-729-120-28	s	TRANSISTOR 2SC1623-L5L6
Q325	8-729-140-47	s	TRANSISTOR 2SC3735-B34
Q508-512	8-729-117-32	s	TRANSISTOR 2SC4177
Q513	8-729-117-72	s	TRANSISTOR 2SC4178
Q514	8-729-117-72	s	TRANSISTOR 2SC4178
Q515	8-729-117-32	s	TRANSISTOR 2SC4177
Q516	8-729-117-72	s	TRANSISTOR 2SC4178
Q517	8-729-117-72	s	TRANSISTOR 2SC4178
Q518	8-729-140-63	s	TRANSISTOR 2SA1611-M5M6
Q519	8-729-117-72	s	TRANSISTOR 2SC4178
Q520	8-729-117-72	s	TRANSISTOR 2SC4178
Q601	8-729-117-32	s	TRANSISTOR 2SC4177
Q602	8-729-117-32	s	TRANSISTOR 2SC4177
Q603	8-729-117-32	s	TRANSISTOR 2SC4177
Q604-610	8-729-117-72	s	TRANSISTOR 2SC4178
Q801	8-729-117-32	s	TRANSISTOR 2SC4177
Q802	8-729-117-32	s	TRANSISTOR 2SC4177
Q803	8-729-117-32	s	TRANSISTOR 2SC4177
Q804	8-729-140-63	s	TRANSISTOR 2SA1611-M5M6
R100	1-216-097-91	s	METAL, CHIP 100k 5% 1/10W
R101	1-216-651-11	s	METAL, CHIP 1K 0.5% 1/10W
R102	1-216-651-11	s	METAL, CHIP 1K 0.5% 1/10W
R103	1-216-651-11	s	METAL, CHIP 1K 0.5% 1/10W
R104	1-216-651-11	s	METAL, CHIP 1K 0.5% 1/10W
R105	1-216-049-91	s	METAL, CHIP 1k 5% 1/10W
R106	1-216-013-00	s	METAL, CHIP 33 5% 1/10W
R107	1-216-097-91	s	METAL, CHIP 100k 5% 1/10W
R108	1-216-097-91	s	METAL, CHIP 100k 5% 1/10W
R109	1-216-025-91	s	METAL, CHIP 100 5% 1/10W

(VRA-5 BOARD(UVW-1800))

Ref. No. or Q'ty	Part No.	SP	Description
R110	1-216-651-11	s	METAL, CHIP 1K 0.5% 1/10W
R111	1-216-049-91	s	METAL, CHIP 1k 5% 1/10W
R112	1-216-049-91	s	METAL, CHIP 1k 5% 1/10W
R113	1-216-651-11	s	METAL, CHIP 1K 0.5% 1/10W
R114	1-216-651-11	s	METAL, CHIP 1K 0.5% 1/10W
R115	1-216-049-91	s	METAL, CHIP 1k 5% 1/10W
R116	1-216-041-00	s	METAL, CHIP 470 5% 1/10W
R117	1-216-639-11	s	METAL, CHIP 330 0.5% 1/10W
R118	1-216-639-11	s	METAL, CHIP 330 0.5% 1/10W
R119	1-216-041-00	s	METAL, CHIP 470 5% 1/10W
R120	1-216-641-11	s	METAL, CHIP 390 0.5% 1/10W
R121	1-216-057-00	s	METAL, CHIP 2.2K 5% 1/10W
R122	1-216-037-00	s	METAL, CHIP 330 5% 1/10W
R123	1-216-065-00	s	METAL, CHIP 4.7K 5% 1/10W
R124	1-216-049-91	s	METAL, CHIP 1k 5% 1/10W
R125	1-216-065-00	s	METAL, CHIP 4.7K 5% 1/10W
R126	1-216-041-00	s	METAL, CHIP 470 5% 1/10W
R127	1-216-025-91	s	METAL, CHIP 100 5% 1/10W
R128	1-216-065-00	s	METAL, CHIP 4.7K 5% 1/10W
R129	1-216-049-91	s	METAL, CHIP 1k 5% 1/10W
R130	1-216-073-00	s	METAL, CHIP 10K 5% 1/10W
R131	1-216-049-91	s	METAL, CHIP 1k 5% 1/10W
R132	1-216-049-91	s	METAL, CHIP 1k 5% 1/10W
R133	1-216-037-00	s	METAL, CHIP 330 5% 1/10W
R134	1-216-065-00	s	METAL, CHIP 4.7K 5% 1/10W
R135	1-216-657-11	s	METAL, CHIP 1.8K 0.5% 1/10W
R136	1-216-025-91	s	METAL, CHIP 100 5% 1/10W
R137	1-216-057-00	s	METAL, CHIP 2.2K 5% 1/10W
R138	1-216-651-11	s	METAL, CHIP 1K 0.5% 1/10W
R139	1-208-814-11	s	METAL, CHIP 22k 0.5% 1/10W
R140	1-216-651-11	s	METAL, CHIP 1K 0.5% 1/10W
R141	1-216-037-00	s	METAL, CHIP 330 5% 1/10W
R142	1-216-049-91	s	METAL, CHIP 1k 5% 1/10W
R143	1-216-057-00	s	METAL, CHIP 2.2K 5% 1/10W
R144	1-216-037-00	s	METAL, CHIP 330 5% 1/10W
R145	1-216-065-00	s	METAL, CHIP 4.7K 5% 1/10W
R146	1-216-049-91	s	METAL, CHIP 1k 5% 1/10W
R147	1-216-065-00	s	METAL, CHIP 4.7K 5% 1/10W
R148	1-216-121-91	s	METAL, CHIP 1M 5% 1/10W
R149	1-216-057-00	s	METAL, CHIP 2.2K 5% 1/10W
R150	1-216-049-91	s	METAL, CHIP 1k 5% 1/10W
R151	1-216-081-00	s	METAL, CHIP 22K 5% 1/10W
R152	1-216-121-91	s	METAL, CHIP 1M 5% 1/10W
R153	1-216-057-00	s	METAL, CHIP 2.2K 5% 1/10W
R154	1-216-049-91	s	METAL, CHIP 1k 5% 1/10W
R155	1-216-073-00	s	METAL, CHIP 10K 5% 1/10W
R156	1-216-073-00	s	METAL, CHIP 10K 5% 1/10W
R157	1-216-081-00	s	METAL, CHIP 22K 5% 1/10W
R158	1-216-073-00	s	METAL, CHIP 10K 5% 1/10W
R159	1-216-049-91	s	METAL, CHIP 1k 5% 1/10W
R160	1-216-049-91	s	METAL, CHIP 1k 5% 1/10W
R161	1-216-065-00	s	METAL, CHIP 4.7K 5% 1/10W
R162	1-216-037-00	s	METAL, CHIP 330 5% 1/10W
R163	1-216-025-91	s	METAL, CHIP 100 5% 1/10W
R164	1-216-057-00	s	METAL, CHIP 2.2K 5% 1/10W
R165	1-216-651-11	s	METAL, CHIP 1K 0.5% 1/10W
R166	1-208-814-11	s	METAL, CHIP 22k 0.5% 1/10W
R167	1-216-651-11	s	METAL, CHIP 1K 0.5% 1/10W
R168	1-216-037-00	s	METAL, CHIP 330 5% 1/10W

(VRA-5 BOARD(UVW-1800))

Ref. No. or Q'ty	Part No.	SP	Description
R169	1-216-049-91	s	METAL, CHIP 1k 5% 1/10W
R170	1-216-057-00	s	METAL, CHIP 2.2K 5% 1/10W
R171	1-216-037-00	s	METAL, CHIP 330 5% 1/10W
R172	1-216-065-00	s	METAL, CHIP 4.7K 5% 1/10W
R173	1-216-049-91	s	METAL, CHIP 1k 5% 1/10W
R174	1-216-065-00	s	METAL, CHIP 4.7K 5% 1/10W
R175	1-216-025-91	s	METAL, CHIP 100 5% 1/10W
R176	1-216-049-91	s	METAL, CHIP 1k 5% 1/10W
R177	1-216-025-91	s	METAL, CHIP 100 5% 1/10W
R178	1-216-627-11	s	METAL, CHIP 100 0.5% 1/10W
R179	1-216-295-91	s	RES, CHIP 0
R180	1-216-651-11	s	METAL, CHIP 1K 0.5% 1/10W
R181	1-216-025-91	s	METAL, CHIP 100 5% 1/10W
R182	1-216-049-91	s	METAL, CHIP 1k 5% 1/10W
R183	1-216-295-91	s	RES, CHIP 0
R184	1-216-651-11	s	METAL, CHIP 1K 0.5% 1/10W
R185	1-216-025-91	s	METAL, CHIP 100 5% 1/10W
R186	1-216-049-91	s	METAL, CHIP 1k 5% 1/10W
R187	1-216-295-91	s	RES, CHIP 0
R188	1-216-618-11	s	METAL, CHIP 43 0.50% 1/10W
R190	1-216-646-11	s	METAL, CHIP 620 0.5% 1/10W
R193	1-216-097-91	s	METAL, CHIP 100k 5% 1/10W
R200	1-216-651-11	s	METAL, CHIP 1K 0.5% 1/10W
R201	1-216-651-11	s	METAL, CHIP 1K 0.5% 1/10W
R202	1-216-073-00	s	METAL, CHIP 10K 5% 1/10W
R203	1-216-073-00	s	METAL, CHIP 10K 5% 1/10W
R204	1-216-655-11	s	METAL, CHIP 1.5K 0.5% 1/10W
R205	1-216-631-11	s	METAL, CHIP 150 0.5% 1/10W
R206	1-216-655-11	s	METAL, CHIP 1.5K 0.5% 1/10W
R207	1-216-631-11	s	METAL, CHIP 150 0.5% 1/10W
R208	1-216-619-11	s	METAL, CHIP 47 0.5% 1/10W
R209	1-216-619-11	s	METAL, CHIP 47 0.5% 1/10W
R210	1-216-009-00	s	METAL, CHIP 22 5% 1/10W
R211	1-216-013-00	s	METAL, CHIP 33 5% 1/10W
R212	1-216-009-00	s	METAL, CHIP 22 5% 1/10W
R213	1-216-295-91	s	RES, CHIP 0
R216	1-216-013-00	s	METAL, CHIP 33 5% 1/10W
R217	1-216-089-91	s	METAL, CHIP 47k 5% 1/10W
R220	1-218-764-11	s	METAL, CHIP 330K 0.5% 1/10W
R223	1-216-663-11	s	METAL, CHIP 3.3K 0.5% 1/10W
R224	1-208-810-11	s	METAL, CHIP 15k 0.5% 1/10W
R225	1-216-663-11	s	METAL, CHIP 3.3K 0.5% 1/10W
R226	1-216-081-00	s	METAL, CHIP 22K 5% 1/10W
R227	1-216-065-00	s	METAL, CHIP 4.7K 5% 1/10W
R228	1-216-687-11	s	METAL, CHIP 33K 0.5% 1/10W
R229	1-216-671-11	s	METAL, CHIP 6.8K 0.5% 1/10W
R230	1-216-635-11	s	METAL, CHIP 220 0.5% 1/10W
R231	1-216-635-11	s	METAL, CHIP 220 0.5% 1/10W
R232	1-216-635-11	s	METAL, CHIP 220 0.5% 1/10W
R233	1-216-635-11	s	METAL, CHIP 220 0.5% 1/10W
R234	1-216-049-91	s	METAL, CHIP 1k 5% 1/10W
R236	1-216-049-91	s	METAL, CHIP 1k 5% 1/10W
R238	1-216-073-00	s	METAL, CHIP 10K 5% 1/10W
R239	1-216-073-00	s	METAL, CHIP 10K 5% 1/10W
R241	1-216-089-91	s	METAL, CHIP 47k 5% 1/10W
R242	1-216-696-11	s	METAL, CHIP 75K 0.5% 1/10W
R243	1-216-041-00	s	METAL, CHIP 470 5% 1/10W
R244	1-216-041-00	s	METAL, CHIP 470 5% 1/10W
R245	1-216-065-00	s	METAL, CHIP 4.7K 5% 1/10W

(VRA-5 BOARD(UVW-1800))

Ref. No. or Q'ty	Part No.	SP	Description
R246	1-216-639-11	s	METAL, CHIP 330 0.5% 1/10W
R247	1-216-639-11	s	METAL, CHIP 330 0.5% 1/10W
R248	1-208-812-11	s	METAL, CHIP 18k 0.5% 1/10W
R249	1-216-081-00	s	METAL, CHIP 22K 5% 1/10W
R250	1-216-065-00	s	METAL, CHIP 4.7K 5% 1/10W
R251	1-216-065-00	s	METAL, CHIP 4.7K 5% 1/10W
R252	1-216-049-91	s	METAL, CHIP 1k 5% 1/10W
R253	1-216-097-91	s	METAL, CHIP 100k 5% 1/10W
R254	1-216-639-11	s	METAL, CHIP 330 0.5% 1/10W
R255	1-216-639-11	s	METAL, CHIP 330 0.5% 1/10W
R256	1-216-049-91	s	METAL, CHIP 1k 5% 1/10W
R257	1-216-049-91	s	METAL, CHIP 1k 5% 1/10W
R258	1-216-073-00	s	METAL, CHIP 10K 5% 1/10W
R259	1-216-073-00	s	METAL, CHIP 10K 5% 1/10W
R261	1-216-073-00	s	METAL, CHIP 10K 5% 1/10W
R262	1-216-073-00	s	METAL, CHIP 10K 5% 1/10W
R263	1-216-073-00	s	METAL, CHIP 10K 5% 1/10W
R265	1-216-073-00	s	METAL, CHIP 10K 5% 1/10W
R266	1-216-073-00	s	METAL, CHIP 10K 5% 1/10W
R268	1-216-073-00	s	METAL, CHIP 10K 5% 1/10W
R269	1-216-073-00	s	METAL, CHIP 10K 5% 1/10W
R270	1-216-073-00	s	METAL, CHIP 10K 5% 1/10W
R272-279	1-216-073-00	s	METAL, CHIP 10K 5% 1/10W
R280	1-216-695-11	s	METAL, CHIP 68K 0.5% 1/10W
R301	1-216-073-00	s	METAL, CHIP 10K 5% 1/10W
R302	1-216-051-00	s	METAL, CHIP 1.2K 5% 1/10W
R303	1-216-049-91	s	METAL, CHIP 1k 5% 1/10W
R304	1-216-025-91	s	METAL, CHIP 100 5% 1/10W
R305	1-208-806-11	s	METAL, CHIP 10k 0.5% 1/10W
R306	1-208-806-11	s	METAL, CHIP 10k 0.5% 1/10W
R307	1-216-049-91	s	METAL, CHIP 1k 5% 1/10W
R308	1-216-049-91	s	METAL, CHIP 1k 5% 1/10W
R309	1-216-049-91	s	METAL, CHIP 1k 5% 1/10W
R310	1-216-049-91	s	METAL, CHIP 1k 5% 1/10W
R311	1-216-057-00	s	METAL, CHIP 2.2K 5% 1/10W
R312	1-216-057-00	s	METAL, CHIP 2.2K 5% 1/10W
R313	1-216-025-91	s	METAL, CHIP 100 5% 1/10W
R314	1-216-057-00	s	METAL, CHIP 2.2K 5% 1/10W
R315	1-216-073-00	s	METAL, CHIP 10K 5% 1/10W
R316	1-216-073-00	s	METAL, CHIP 10K 5% 1/10W
R317	1-216-049-91	s	METAL, CHIP 1k 5% 1/10W
R318	1-216-049-91	s	METAL, CHIP 1k 5% 1/10W
R319	1-216-049-91	s	METAL, CHIP 1k 5% 1/10W
R320	1-216-049-91	s	METAL, CHIP 1k 5% 1/10W
R321	1-216-097-91	s	METAL, CHIP 100k 5% 1/10W
R322	1-216-049-91	s	METAL, CHIP 1k 5% 1/10W
R323	1-216-646-11	s	METAL, CHIP 620 0.5% 1/10W
R324	1-216-057-00	s	METAL, CHIP 2.2K 5% 1/10W
R325	1-216-057-00	s	METAL, CHIP 2.2K 5% 1/10W
R326	1-216-041-00	s	METAL, CHIP 470 5% 1/10W
R327	1-208-774-11	s	METAL, CHIP 470 0.5% 1/10W
R328	1-208-800-11	s	METAL, CHIP 5.6k 0.5% 1/10W
R329	1-216-065-00	s	METAL, CHIP 4.7K 5% 1/10W
R330	1-216-049-91	s	METAL, CHIP 1k 5% 1/10W
R331	1-208-774-11	s	METAL, CHIP 470 0.5% 1/10W
R332	1-216-065-00	s	METAL, CHIP 4.7K 5% 1/10W
R333	1-216-117-00	s	METAL, CHIP 680K 5% 1/10W
R334	1-216-667-11	s	METAL, CHIP 4.7K 0.5% 1/10W
R335	1-216-073-00	s	METAL, CHIP 10K 5% 1/10W

(VRA-5 BOARD(UVW-1800))

Ref. No. or Q'ty	Part No.	SP	Description
R336	1-216-699-11	s	METAL, CHIP 100K 0.5% 1/10W
R338	1-216-089-91	s	METAL, CHIP 47k 5% 1/10W
R339	1-216-085-00	s	METAL, CHIP 33K 5% 1/10W
R340	1-216-073-00	s	METAL, CHIP 10K 5% 1/10W
R341	1-216-667-11	s	METAL, CHIP 4.7K 0.5% 1/10W
R342	1-218-760-11	s	METAL, CHIP 220K 0.5% 1/10W
R343	1-216-057-00	s	METAL, CHIP 2.2K 5% 1/10W
R344	1-216-085-00	s	METAL, CHIP 33K 5% 1/10W
R345	1-216-085-00	s	METAL, CHIP 33K 5% 1/10W
R346	1-216-073-00	s	METAL, CHIP 10K 5% 1/10W
R347	1-216-049-91	s	METAL, CHIP 1k 5% 1/10W
R348	1-216-065-00	s	METAL, CHIP 4.7K 5% 1/10W
R349	1-216-049-91	s	METAL, CHIP 1k 5% 1/10W
R350	1-216-025-91	s	METAL, CHIP 100 5% 1/10W
R351	1-216-085-00	s	METAL, CHIP 33K 5% 1/10W
R352	1-208-801-11	s	METAL, CHIP 6.2k 0.5% 1/10W
R353	1-216-634-11	s	METAL, CHIP 200 0.5% 1/10W
R354	1-216-663-11	s	METAL, CHIP 3.3K 0.5% 1/10W
R355	1-216-073-00	s	METAL, CHIP 10K 5% 1/10W
R356	1-216-065-00	s	METAL, CHIP 4.7K 5% 1/10W
R357	1-216-121-91	s	METAL, CHIP 1M 5% 1/10W
R358	1-216-117-00	s	METAL, CHIP 680K 5% 1/10W
R359	1-216-635-11	s	METAL, CHIP 220 0.5% 1/10W
R360	1-216-667-11	s	METAL, CHIP 4.7K 0.5% 1/10W
R361	1-216-049-91	s	METAL, CHIP 1k 5% 1/10W
R362	1-216-651-11	s	METAL, CHIP 1K 0.5% 1/10W
R363	1-208-806-11	s	METAL, CHIP 10k 0.5% 1/10W
R364	1-208-806-11	s	METAL, CHIP 10k 0.5% 1/10W
R365	1-216-651-11	s	METAL, CHIP 1K 0.5% 1/10W
R367	1-216-025-91	s	METAL, CHIP 100 5% 1/10W
R368	1-216-651-11	s	METAL, CHIP 1K 0.5% 1/10W
R369	1-216-665-11	s	METAL, CHIP 3.9K 0.5% 1/10W
R370	1-216-049-91	s	METAL, CHIP 1k 5% 1/10W
R371	1-216-635-11	s	METAL, CHIP 220 0.5% 1/10W
R372	1-216-639-11	s	METAL, CHIP 330 0.5% 1/10W
R375	1-208-812-11	s	METAL, CHIP 18k 0.5% 1/10W
R376	1-216-073-00	s	METAL, CHIP 10K 5% 1/10W
R377	1-208-784-11	s	METAL, CHIP 1.2k 0.5% 1/10W
R378	1-208-810-11	s	METAL, CHIP 15k 0.5% 1/10W
R379	1-216-025-91	s	METAL, CHIP 100 5% 1/10W
R380	1-216-671-11	s	METAL, CHIP 6.8K 0.5% 1/10W
R381	1-216-073-00	s	METAL, CHIP 10K 5% 1/10W
R382	1-216-673-11	s	METAL, CHIP 8.2K 0.5% 1/10W
R383	1-216-673-11	s	METAL, CHIP 8.2K 0.5% 1/10W
R384	1-216-673-11	s	METAL, CHIP 8.2K 0.5% 1/10W
R385	1-216-025-91	s	METAL, CHIP 100 5% 1/10W
R386	1-216-677-11	s	METAL, CHIP 12K 0.5% 1/10W
R387	1-216-651-11	s	METAL, CHIP 1K 0.5% 1/10W
R388	1-216-651-11	s	METAL, CHIP 1K 0.5% 1/10W
R389	1-216-651-11	s	METAL, CHIP 1K 0.5% 1/10W
R390	1-216-655-11	s	METAL, CHIP 1.5K 0.5% 1/10W
R391	1-216-655-11	s	METAL, CHIP 1.5K 0.5% 1/10W
R392	1-216-065-00	s	METAL, CHIP 4.7K 5% 1/10W
R393	1-216-663-11	s	METAL, CHIP 3.3K 0.5% 1/10W
R394	1-216-049-91	s	METAL, CHIP 1k 5% 1/10W
R395	1-216-049-91	s	METAL, CHIP 1k 5% 1/10W
R397	1-216-295-91	s	RES, CHIP 0
R399	1-216-651-11	s	METAL, CHIP 1K 0.5% 1/10W
R400	1-208-789-11	s	METAL, CHIP 2k 0.5% 1/10W

(VRA-5 BOARD(UVW-1800))

Ref. No. or Q'ty	Part No.	SP	Description
R401	1-208-784-11	s	METAL, CHIP 1.2k 0.5% 1/10W
R402	1-216-648-11	s	METAL, CHIP 750 0.5% 1/10W
R403	1-216-037-00	s	METAL, CHIP 330 5% 1/10W
R404	1-216-671-11	s	METAL, CHIP 6.8K 0.5% 1/10W
R405	1-208-817-11	s	METAL, CHIP 30k 0.5% 1/10W
R406	1-216-041-00	s	METAL, CHIP 470 5% 1/10W
R407	1-216-133-00	s	METAL, CHIP 3.3M 5% 1/10W
R408	1-216-295-91	s	RES, CHIP 0
R501	1-216-085-00	s	METAL, CHIP 33K 5% 1/10W
R502	1-216-073-00	s	METAL, CHIP 10K 5% 1/10W
R503	1-216-667-11	s	METAL, CHIP 4.7K 0.5% 1/10W
R504	1-216-663-11	s	METAL, CHIP 3.3K 0.5% 1/10W
R505	1-216-065-00	s	METAL, CHIP 4.7K 5% 1/10W
R506	1-216-651-11	s	METAL, CHIP 1K 0.5% 1/10W
R507	1-216-651-11	s	METAL, CHIP 1K 0.5% 1/10W
R508	1-216-065-00	s	METAL, CHIP 4.7K 5% 1/10W
R509	1-216-641-11	s	METAL, CHIP 390 0.5% 1/10W
R510	1-216-663-11	s	METAL, CHIP 3.3K 0.5% 1/10W
R511	1-216-615-11	s	METAL, CHIP 33 0.5% 1/10W
R512	1-218-184-11	s	METAL, CHIP 997 0.1% 1/16W
R514	1-216-635-11	s	METAL, CHIP 220 0.5% 1/10W
R515	1-216-699-11	s	METAL, CHIP 100K 0.5% 1/10W
R516	1-218-922-11	s	METAL, CHIP 3.26K 0.1% 1/16W
R517	1-216-604-11	s	METAL, CHIP 11 0.5% 1/10W
R518	1-216-661-11	s	METAL, CHIP 2.7K 0.5% 1/10W
R519	1-216-057-00	s	METAL, CHIP 2.2K 5% 1/10W
R520	1-216-025-91	s	METAL, CHIP 100 5% 1/10W
R521	1-216-667-11	s	METAL, CHIP 4.7K 0.5% 1/10W
R522	1-216-655-11	s	METAL, CHIP 1.5K 0.5% 1/10W
R523	1-216-687-11	s	METAL, CHIP 33K 0.5% 1/10W
R524	1-216-295-91	s	RES, CHIP 0
R525	1-216-657-11	s	METAL, CHIP 1.8K 0.5% 1/10W
R526	1-216-682-11	s	METAL, CHIP 20K 0.5% 1/10W
R527	1-208-810-11	s	METAL, CHIP 15k 0.5% 1/10W
R528	1-216-295-91	s	RES, CHIP 0
R529	1-216-295-91	s	RES, CHIP 0
R530	1-216-687-11	s	METAL, CHIP 33K 0.5% 1/10W
R531	1-208-774-11	s	METAL, CHIP 470 0.5% 1/10W
R532	1-216-667-11	s	METAL, CHIP 4.7K 0.5% 1/10W
R533	1-208-774-11	s	METAL, CHIP 470 0.5% 1/10W
R534	1-216-025-91	s	METAL, CHIP 100 5% 1/10W
R535	1-216-025-91	s	METAL, CHIP 100 5% 1/10W
R536	1-216-057-00	s	METAL, CHIP 2.2K 5% 1/10W
R537	1-216-661-11	s	METAL, CHIP 2.7K 0.5% 1/10W
R538	1-216-657-11	s	METAL, CHIP 1.8K 0.5% 1/10W
R539	1-216-025-91	s	METAL, CHIP 100 5% 1/10W
R540	1-216-663-11	s	METAL, CHIP 3.3K 0.5% 1/10W
R541	1-216-659-11	s	METAL, CHIP 2.2K 0.5% 1/10W
R542	1-216-073-00	s	METAL, CHIP 10K 5% 1/10W
R543	1-216-073-00	s	METAL, CHIP 10K 5% 1/10W
R544	1-216-025-91	s	METAL, CHIP 100 5% 1/10W
R545	1-216-037-00	s	METAL, CHIP 330 5% 1/10W
R546	1-216-037-00	s	METAL, CHIP 330 5% 1/10W
R547	1-208-810-11	s	METAL, CHIP 15k 0.5% 1/10W
R548	1-208-806-11	s	METAL, CHIP 10k 0.5% 1/10W
R549	1-216-295-91	s	RES, CHIP 0
R550	1-216-013-00	s	METAL, CHIP 33 5% 1/10W
R551	1-216-013-00	s	METAL, CHIP 33 5% 1/10W
R552	1-216-065-00	s	METAL, CHIP 4.7K 5% 1/10W

(VRA-5 BOARD(UVW-1800))

Ref. No. or Q'ty	Part No.	SP	Description
R553	1-216-655-11	s	METAL, CHIP 1.5K 0.5% 1/10W
R554	1-208-814-11	s	METAL, CHIP 22k 0.5% 1/10W
R555	1-216-663-11	s	METAL, CHIP 3.3K 0.5% 1/10W
R556	1-216-667-11	s	METAL, CHIP 4.7K 0.5% 1/10W
R557	1-216-677-11	s	METAL, CHIP 12K 0.5% 1/10W
R558	1-216-065-00	s	METAL, CHIP 4.7K 5% 1/10W
R559	1-216-073-00	s	METAL, CHIP 10K 5% 1/10W
R560	1-216-073-00	s	METAL, CHIP 10K 5% 1/10W
R561	1-216-665-11	s	METAL, CHIP 3.9K 0.5% 1/10W
R562	1-216-049-91	s	METAL, CHIP 1k 5% 1/10W
R563	1-216-025-91	s	METAL, CHIP 100 5% 1/10W
R564	1-208-806-11	s	METAL, CHIP 10k 0.5% 1/10W
R565	1-208-806-11	s	METAL, CHIP 10k 0.5% 1/10W
R601	1-216-085-00	s	METAL, CHIP 33K 5% 1/10W
R602	1-216-073-00	s	METAL, CHIP 10K 5% 1/10W
R603	1-216-667-11	s	METAL, CHIP 4.7K 0.5% 1/10W
R604	1-216-051-00	s	METAL, CHIP 1.2K 5% 1/10W
R605	1-216-663-11	s	METAL, CHIP 3.3K 0.5% 1/10W
R606	1-216-065-00	s	METAL, CHIP 4.7K 5% 1/10W
R607	1-216-651-11	s	METAL, CHIP 1K 0.5% 1/10W
R608	1-216-651-11	s	METAL, CHIP 1K 0.5% 1/10W
R609	1-216-065-00	s	METAL, CHIP 4.7K 5% 1/10W
R610	1-216-627-11	s	METAL, CHIP 100 0.5% 1/10W
R611	1-216-659-11	s	METAL, CHIP 2.2K 0.5% 1/10W
R612	1-216-611-11	s	METAL, CHIP 22 0.5% 1/10W
R613	1-218-184-11	s	METAL, CHIP 997 0.1% 1/16W
R614	1-208-806-11	s	METAL, CHIP 10k 0.5% 1/10W
R615	1-216-635-11	s	METAL, CHIP 220 0.5% 1/10W
R617	1-218-922-11	s	METAL, CHIP 3.26K 0.1% 1/16W
R618	1-216-603-11	s	METAL, CHIP 10 0.5% 1/10W
R619	1-216-661-11	s	METAL, CHIP 2.7K 0.5% 1/10W
R620	1-216-025-91	s	METAL, CHIP 100 5% 1/10W
R621	1-216-057-00	s	METAL, CHIP 2.2K 5% 1/10W
R622	1-216-667-11	s	METAL, CHIP 4.7K 0.5% 1/10W
R623	1-216-655-11	s	METAL, CHIP 1.5K 0.5% 1/10W
R624	1-216-687-11	s	METAL, CHIP 33K 0.5% 1/10W
R625	1-216-646-11	s	METAL, CHIP 620 0.5% 1/10W
R626	1-216-295-91	s	RES, CHIP 0
R627	1-216-682-11	s	METAL, CHIP 20K 0.5% 1/10W
R628	1-208-810-11	s	METAL, CHIP 15k 0.5% 1/10W
R629	1-216-651-11	s	METAL, CHIP 1K 0.5% 1/10W
R630	1-216-295-91	s	RES, CHIP 0
R631	1-216-687-11	s	METAL, CHIP 33K 0.5% 1/10W
R632	1-216-648-11	s	METAL, CHIP 750 0.5% 1/10W
R633	1-216-667-11	s	METAL, CHIP 4.7K 0.5% 1/10W
R634	1-216-041-00	s	METAL, CHIP 470 5% 1/10W
R635	1-216-025-91	s	METAL, CHIP 100 5% 1/10W
R636	1-216-073-00	s	METAL, CHIP 10K 5% 1/10W
R637	1-216-025-91	s	METAL, CHIP 100 5% 1/10W
R638	1-216-057-00	s	METAL, CHIP 2.2K 5% 1/10W
R639	1-208-775-11	s	METAL, CHIP 510 0.5% 1/10W
R640	1-216-646-11	s	METAL, CHIP 620 0.5% 1/10W
R641	1-208-775-11	s	METAL, CHIP 510 0.5% 1/10W
R642	1-216-651-11	s	METAL, CHIP 1K 0.5% 1/10W
R643	1-216-057-00	s	METAL, CHIP 2.2K 5% 1/10W
R644	1-216-041-00	s	METAL, CHIP 470 5% 1/10W
R645	1-216-049-91	s	METAL, CHIP 1k 5% 1/10W
R646	1-216-057-00	s	METAL, CHIP 2.2K 5% 1/10W
R647	1-216-049-91	s	METAL, CHIP 1k 5% 1/10W

(VRA-5 BOARD(UVW-1800))

Ref. No. or Q'ty	Part No.	SP	Description
R648	1-216-025-91	s	METAL, CHIP 100 5% 1/10W
R649	1-216-025-91	s	METAL, CHIP 100 5% 1/10W
R650	1-216-037-00	s	METAL, CHIP 330 5% 1/10W
R651	1-216-037-00	s	METAL, CHIP 330 5% 1/10W
R652	1-216-013-00	s	METAL, CHIP 33 5% 1/10W
R653	1-216-013-00	s	METAL, CHIP 33 5% 1/10W
R654	1-216-667-11	s	METAL, CHIP 4.7K 0.5% 1/10W
R655	1-216-663-11	s	METAL, CHIP 3.3K 0.5% 1/10W
R656	1-216-025-91	s	METAL, CHIP 100 5% 1/10W
R657	1-208-806-11	s	METAL, CHIP 10k 0.5% 1/10W
R658	1-208-806-11	s	METAL, CHIP 10k 0.5% 1/10W
R801	1-216-097-91	s	METAL, CHIP 100k 5% 1/10W
R802	1-216-073-00	s	METAL, CHIP 10K 5% 1/10W
R803	1-216-073-00	s	METAL, CHIP 10K 5% 1/10W
R804	1-216-065-00	s	METAL, CHIP 4.7K 5% 1/10W
R805	1-216-025-91	s	METAL, CHIP 100 5% 1/10W
R806	1-216-639-11	s	METAL, CHIP 330 0.5% 1/10W
R807	1-208-774-11	s	METAL, CHIP 470 0.5% 1/10W
R808	1-216-025-91	s	METAL, CHIP 100 5% 1/10W
R809	1-208-810-11	s	METAL, CHIP 15k 0.5% 1/10W
R810	1-208-810-11	s	METAL, CHIP 15k 0.5% 1/10W
R811	1-216-073-00	s	METAL, CHIP 10K 5% 1/10W
R812	1-216-646-11	s	METAL, CHIP 620 0.5% 1/10W
R813	1-216-025-91	s	METAL, CHIP 100 5% 1/10W
R814	1-216-065-00	s	METAL, CHIP 4.7K 5% 1/10W
R815	1-216-065-00	s	METAL, CHIP 4.7K 5% 1/10W
R816	1-216-089-91	s	METAL, CHIP 47k 5% 1/10W
R817	1-216-073-00	s	METAL, CHIP 10K 5% 1/10W
R818	1-216-073-00	s	METAL, CHIP 10K 5% 1/10W
RV101	1-241-760-21	s	RES, ADJ METAL 470
RV102	1-241-760-21	s	RES, ADJ METAL 470
RV103	1-241-762-11	s	RES, ADJ METAL 2.2k
RV104	1-241-760-21	s	RES, ADJ METAL 470
RV105	1-241-759-21	s	RES, ADJ METAL 220
RV201	1-241-784-11	s	RES, ADJ METAL 4.7k
RV202	1-241-785-11	s	RES, ADJ METAL 10k
RV203	1-241-785-11	s	RES, ADJ METAL 10k
RV301	1-241-762-11	s	RES, ADJ METAL 2.2k
RV302	1-241-785-11	s	RES, ADJ METAL 10k
RV303	1-241-784-11	s	RES, ADJ METAL 4.7k
RV304	1-241-784-11	s	RES, ADJ METAL 4.7k
RV305	1-241-784-11	s	RES, ADJ METAL 4.7k
RV306	1-241-762-11	s	RES, ADJ METAL 2.2k
RV501	1-241-761-11	s	RES, ADJ METAL 1k
RV502	1-241-762-11	s	RES, ADJ METAL 2.2k
RV503	1-241-762-11	s	RES, ADJ METAL 2.2k
RV602	1-241-763-11	s	RES, ADJ METAL 4.7k
RV603	1-241-763-11	s	RES, ADJ METAL 4.7k
S201	1-571-275-31	s	SWITCH, SLIDE
TH201	1-807-972-11	s	THERMISTOR SV-1715 1.25k
X301	1-527-722-00	s	CRYSTAL 14.31818MHz
X302	1-760-109-21	s	CRYSTAL 10.738635MHz

VRA-5P BOARD(UVW-1800P)

Ref. No. or Q'ty	Part No.	SP	Description
VRA-5P board is used for UVW-1800P(EK).			
1pc	A-8275-467-A	o	MOUNTED CIRCUIT BOARD, VRA-5P
1pc	3-182-386-02	o	PLATE, SHIELD (L), CARD
1pc	7-621-759-45	s	SCREW, +PSW2.6x6
1pc	8-752-036-77	s	IC CXA1179N
1pc	3-179-084-01	s	LEVER (R), PC BOARD
1pc	3-179-085-01	s	LEVER (L), PC BOARD
C101	1-126-933-11	s	ELECT 100uF 20% 16V
C102	1-126-933-11	s	ELECT 100uF 20% 16V
C103	1-163-033-91	s	CERAMIC, CHIP 0.022uF 50V
C104	1-163-033-91	s	CERAMIC, CHIP 0.022uF 50V
C105	1-164-004-11	s	CERAMIC, CHIP 0.1uF 10% 25V
C106	1-126-925-11	s	ELECT 470uF 20% 10V
C107	1-126-925-11	s	ELECT 470uF 20% 10V
C108	1-163-033-91	s	CERAMIC, CHIP 0.022uF 50V
C109	1-126-925-11	s	ELECT 470uF 20% 10V
C110	1-163-033-91	s	CERAMIC, CHIP 0.022uF 50V
C111	1-131-347-00	s	TANTALUM 1uF 10% 35V
C112	1-163-033-91	s	CERAMIC, CHIP 0.022uF 50V
C113	1-163-033-91	s	CERAMIC, CHIP 0.022uF 50V
C114	1-163-033-91	s	CERAMIC, CHIP 0.022uF 50V
C115	1-126-933-11	s	ELECT 100uF 20% 16V
C116	1-126-933-11	s	ELECT 100uF 20% 16V
C117	1-163-033-91	s	CERAMIC, CHIP 0.022uF 50V
C118	1-163-033-91	s	CERAMIC, CHIP 0.022uF 50V
C119	1-126-933-11	s	ELECT 100uF 20% 16V
C121	1-163-227-11	s	CERAMIC, CHIP 10PF 5% 50V
C122	1-163-231-11	s	CERAMIC, CHIP 15pF 5% 50V
C123	1-163-231-11	s	CERAMIC, CHIP 15pF 5% 50V
C124	1-163-033-91	s	CERAMIC, CHIP 0.022uF 50V
C125	1-163-033-91	s	CERAMIC, CHIP 0.022uF 50V
C126	1-163-033-91	s	CERAMIC, CHIP 0.022uF 50V
C127	1-126-933-11	s	ELECT 100uF 20% 16V
C128	1-131-381-00	s	TANTALUM 47uF 10% 10V
C129	1-131-381-00	s	TANTALUM 47uF 10% 10V
C130	1-131-353-00	s	TANTALUM 10uF 10% 35V
C131	1-131-381-00	s	TANTALUM 47uF 10% 10V
C132	1-131-381-00	s	TANTALUM 47uF 10% 10V
C133	1-163-033-91	s	CERAMIC, CHIP 0.022uF 50V
C134	1-163-033-91	s	CERAMIC, CHIP 0.022uF 50V
C135	1-131-353-00	s	TANTALUM 10uF 10% 35V
C136	1-163-033-91	s	CERAMIC, CHIP 0.022uF 50V
C137	1-126-933-11	s	ELECT 100uF 20% 16V
C138	1-163-227-11	s	CERAMIC, CHIP 10PF 5% 50V
C140	1-163-235-11	s	CERAMIC, CHIP 22PF 5% 50V
C141	1-163-231-11	s	CERAMIC, CHIP 15pF 5% 50V
C142	1-163-033-91	s	CERAMIC, CHIP 0.022uF 50V
C143	1-163-033-91	s	CERAMIC, CHIP 0.022uF 50V
C144	1-163-033-91	s	CERAMIC, CHIP 0.022uF 50V
C145	1-163-235-11	s	CERAMIC, CHIP 22PF 5% 50V
C146	1-126-933-11	s	ELECT 100uF 20% 16V
C147	1-126-933-11	s	ELECT 100uF 20% 16V
C148	1-126-933-11	s	ELECT 100uF 20% 16V
C200	1-163-033-91	s	CERAMIC, CHIP 0.022uF 50V
C202	1-164-232-11	s	CERAMIC, CHIP 0.01uF 10% 100V
C203	1-163-099-00	s	CERAMIC, CHIP 18PF 5% 50V
C204	1-163-237-11	s	CERAMIC, CHIP 27PF 5% 50V

(VRA-5P BOARD(UVW-1800P))

Ref. No. or Q'ty	Part No.	SP	Description
C205	1-163-253-11	s	CERAMIC, CHIP 120PF 5% 50V
C206	1-163-253-11	s	CERAMIC, CHIP 120PF 5% 50V
C207	1-126-933-11	s	ELECT 100uF 20% 16V
C208	1-163-251-11	s	CERAMIC, CHIP 100PF 5% 50V
C209	1-163-251-11	s	CERAMIC, CHIP 100PF 5% 50V
C210	1-163-251-11	s	CERAMIC, CHIP 100PF 5% 50V
C211	1-163-251-11	s	CERAMIC, CHIP 100PF 5% 50V
C217	1-163-033-91	s	CERAMIC, CHIP 0.022uF 50V
C218	1-163-133-00	s	CERAMIC, CHIP 470PF 5% 50V
C219	1-163-033-91	s	CERAMIC, CHIP 0.022uF 50V
C220	1-163-139-00	s	CERAMIC, CHIP 820PF 5% 50V
C221	1-163-033-91	s	CERAMIC, CHIP 0.022uF 50V
C222	1-163-033-91	s	CERAMIC, CHIP 0.022uF 50V
C223	1-126-925-11	s	ELECT 470uF 20% 10V
C224	1-126-925-11	s	ELECT 470uF 20% 10V
C225-234	1-163-033-91	s	CERAMIC, CHIP 0.022uF 50V
C238	1-163-033-91	s	CERAMIC, CHIP 0.022uF 50V
C239	1-163-033-91	s	CERAMIC, CHIP 0.022uF 50V
C240	1-126-933-11	s	ELECT 100uF 20% 16V
C241-251	1-163-033-91	s	CERAMIC, CHIP 0.022uF 50V
C252	1-126-933-11	s	ELECT 100uF 20% 16V
C253-258	1-163-033-91	s	CERAMIC, CHIP 0.022uF 50V
C259	1-163-251-11	s	CERAMIC, CHIP 100PF 5% 50V
C260	1-163-251-11	s	CERAMIC, CHIP 100PF 5% 50V
C261	1-126-933-11	s	ELECT 100uF 20% 16V
C262	1-126-933-11	s	ELECT 100uF 20% 16V
C263	1-163-033-91	s	CERAMIC, CHIP 0.022uF 50V
C264	1-163-033-91	s	CERAMIC, CHIP 0.022uF 50V
C265	1-163-251-11	s	CERAMIC, CHIP 100PF 5% 50V
C267	1-163-139-00	s	CERAMIC, CHIP 820PF 5% 50V
C268	1-163-139-00	s	CERAMIC, CHIP 820PF 5% 50V
C269	1-163-251-11	s	CERAMIC, CHIP 100PF 5% 50V
C270	1-164-161-11	s	CERAMIC, CHIP 0.0022uF 10% 100V
C271	1-163-033-91	s	CERAMIC, CHIP 0.022uF 50V
C301	1-126-933-11	s	ELECT 100uF 20% 16V
C302	1-126-933-11	s	ELECT 100uF 20% 16V
C303	1-163-033-91	s	CERAMIC, CHIP 0.022uF 50V
C304	1-163-033-91	s	CERAMIC, CHIP 0.022uF 50V
C305	1-126-933-11	s	ELECT 100uF 20% 16V
C306	1-163-033-91	s	CERAMIC, CHIP 0.022uF 50V
C307	1-163-249-11	s	CERAMIC, CHIP 82pF 5% 50V
C308	1-163-033-91	s	CERAMIC, CHIP 0.022uF 50V
C309	1-163-033-91	s	CERAMIC, CHIP 0.022uF 50V
C310	1-163-235-11	s	CERAMIC, CHIP 22PF 5% 50V
C311	1-163-235-11	s	CERAMIC, CHIP 22PF 5% 50V
C312	1-131-353-00	s	TANTALUM 10uF 10% 35V
C313	1-164-004-11	s	CERAMIC, CHIP 0.1uF 10% 25V
C314	1-163-033-91	s	CERAMIC, CHIP 0.022uF 50V
C316	1-163-125-00	s	CERAMIC, CHIP 220PF 5% 50V
C317	1-163-033-91	s	CERAMIC, CHIP 0.022uF 50V
C318	1-163-033-91	s	CERAMIC, CHIP 0.022uF 50V
C319	1-163-033-91	s	CERAMIC, CHIP 0.022uF 50V
C320	1-126-933-11	s	ELECT 100uF 20% 16V
C321	1-126-933-11	s	ELECT 100uF 20% 16V
C322	1-126-933-11	s	ELECT 100uF 20% 16V
C323	1-163-239-11	s	CERAMIC, CHIP 33PF 5% 50V
C324	1-163-263-11	s	CERAMIC, CHIP 330PF 5% 50V
C325	1-163-121-00	s	CERAMIC, CHIP 150PF 5% 50V
C326	1-164-004-11	s	CERAMIC, CHIP 0.1uF 10% 25V

(VRA-5P BOARD(UVW-1800P))

Ref. No. or Q'ty	Part No.	SP	Description
C327	1-164-004-11	s	CERAMIC, CHIP 0.1uF 10% 25V
C328	1-163-033-91	s	CERAMIC, CHIP 0.022uF 50V
C329	1-163-033-91	s	CERAMIC, CHIP 0.022uF 50V
C330	1-126-933-11	s	ELECT 100uF 20% 16V
C331	1-163-017-00	s	CERAMIC, CHIP 0.0047uF 5% 50V
C332	1-163-017-00	s	CERAMIC, CHIP 0.0047uF 5% 50V
C333	1-163-033-91	s	CERAMIC, CHIP 0.022uF 50V
C334	1-163-033-91	s	CERAMIC, CHIP 0.022uF 50V
C335	1-126-933-11	s	ELECT 100uF 20% 16V
C336	1-163-033-91	s	CERAMIC, CHIP 0.022uF 50V
C337	1-163-033-91	s	CERAMIC, CHIP 0.022uF 50V
C338	1-163-133-00	s	CERAMIC, CHIP 470PF 5% 50V
C339	1-163-251-11	s	CERAMIC, CHIP 100PF 5% 50V
C340	1-163-033-91	s	CERAMIC, CHIP 0.022uF 50V
C341	1-126-933-11	s	ELECT 100uF 20% 16V
C342	1-163-033-91	s	CERAMIC, CHIP 0.022uF 50V
C343	1-163-033-91	s	CERAMIC, CHIP 0.022uF 50V
C344	1-163-121-00	s	CERAMIC, CHIP 150PF 5% 50V
C345	1-163-033-91	s	CERAMIC, CHIP 0.022uF 50V
C346	1-164-004-11	s	CERAMIC, CHIP 0.1uF 10% 25V
C347	1-164-004-11	s	CERAMIC, CHIP 0.1uF 10% 25V
C348	1-163-235-11	s	CERAMIC, CHIP 22PF 5% 50V
C349	1-163-239-11	s	CERAMIC, CHIP 33PF 5% 50V
C350	1-126-933-11	s	ELECT 100uF 20% 16V
C351	1-163-033-91	s	CERAMIC, CHIP 0.022uF 50V
C352	1-163-133-00	s	CERAMIC, CHIP 470PF 5% 50V
C353	1-126-933-11	s	ELECT 100uF 20% 16V
C354	1-163-121-00	s	CERAMIC, CHIP 150PF 5% 50V
C355	1-163-033-91	s	CERAMIC, CHIP 0.022uF 50V
C356	1-163-089-00	s	CERAMIC, CHIP 6PF 50V
C357	1-163-033-91	s	CERAMIC, CHIP 0.022uF 50V
C358	1-164-004-11	s	CERAMIC, CHIP 0.1uF 10% 25V
C359	1-163-033-91	s	CERAMIC, CHIP 0.022uF 50V
C360	1-164-004-11	s	CERAMIC, CHIP 0.1uF 10% 25V
C361	1-163-241-11	s	CERAMIC, CHIP 39PF 5% 50V
C362	1-163-033-91	s	CERAMIC, CHIP 0.022uF 50V
C363	1-163-231-11	s	CERAMIC, CHIP 15pF 5% 50V
C364	1-163-033-91	s	CERAMIC, CHIP 0.022uF 50V
C365	1-126-933-11	s	ELECT 100uF 20% 16V
C366	1-163-263-11	s	CERAMIC, CHIP 330PF 5% 50V
C367	1-163-033-91	s	CERAMIC, CHIP 0.022uF 50V
C368	1-126-933-11	s	ELECT 100uF 20% 16V
C369	1-163-033-91	s	CERAMIC, CHIP 0.022uF 50V
C370	1-163-017-00	s	CERAMIC, CHIP 0.0047uF 5% 50V
C371	1-126-933-11	s	ELECT 100uF 20% 16V
C372	1-163-033-91	s	CERAMIC, CHIP 0.022uF 50V
C373	1-163-033-91	s	CERAMIC, CHIP 0.022uF 50V
C374	1-163-033-91	s	CERAMIC, CHIP 0.022uF 50V
C375	1-163-220-11	s	CERAMIC, CHIP 3PF 50V
C376	1-163-227-11	s	CERAMIC, CHIP 10PF 5% 50V
C377	1-126-933-11	s	ELECT 100uF 20% 16V
C378	1-126-933-11	s	ELECT 100uF 20% 16V
C379	1-163-131-00	s	CERAMIC, CHIP 390PF 5% 50V
C380	1-163-251-11	s	CERAMIC, CHIP 100PF 5% 50V
C381	1-163-033-91	s	CERAMIC, CHIP 0.022uF 50V
C382	1-163-251-11	s	CERAMIC, CHIP 100PF 5% 50V
C383	1-164-004-11	s	CERAMIC, CHIP 0.1uF 10% 25V
C384	1-163-033-91	s	CERAMIC, CHIP 0.022uF 50V
C385	1-163-139-00	s	CERAMIC, CHIP 820PF 5% 50V

(VRA-5P BOARD(UVW-1800P))

Ref. No. or Q'ty	Part No.	SP	Description
C386	1-163-033-91	s	CERAMIC, CHIP 0.022uF 50V
C387	1-163-033-91	s	CERAMIC, CHIP 0.022uF 50V
C388	1-163-251-11	s	CERAMIC, CHIP 100PF 5% 50V
C389	1-126-933-11	s	ELECT 100uF 20% 16V
C390	1-163-033-91	s	CERAMIC, CHIP 0.022uF 50V
C391	1-163-033-91	s	CERAMIC, CHIP 0.022uF 50V
C392	1-163-089-00	s	CERAMIC, CHIP 6PF 50V
C393	1-163-099-00	s	CERAMIC, CHIP 18PF 5% 50V
C394	1-163-241-11	s	CERAMIC, CHIP 39PF 5% 50V
C395	1-126-933-11	s	ELECT 100uF 20% 16V
C396	1-163-102-00	s	CERAMIC, CHIP 24PF 5% 50V
C397	1-163-251-11	s	CERAMIC, CHIP 100PF 5% 50V
C398	1-164-232-11	s	CERAMIC, CHIP 0.01uF 10% 100V
C399	1-163-263-11	s	CERAMIC, CHIP 330PF 5% 50V
C501	1-126-933-11	s	ELECT 100uF 20% 16V
C502	1-126-933-11	s	ELECT 100uF 20% 16V
C503	1-126-933-11	s	ELECT 100uF 20% 16V
C504	1-163-033-91	s	CERAMIC, CHIP 0.022uF 50V
C505	1-163-033-91	s	CERAMIC, CHIP 0.022uF 50V
C506	1-163-102-00	s	CERAMIC, CHIP 24PF 5% 50V
C507	1-163-257-11	s	CERAMIC, CHIP 180PF 5% 50V
C508	1-126-933-11	s	ELECT 100uF 20% 16V
C509	1-126-933-11	s	ELECT 100uF 20% 16V
C510	1-163-033-91	s	CERAMIC, CHIP 0.022uF 50V
C511	1-104-923-11	s	MICA, CHIP 180pF 0.25% 50V
C513	1-163-091-00	s	CERAMIC, CHIP 8PF 50V
C514	1-163-235-11	s	CERAMIC, CHIP 22PF 5% 50V
C515	1-163-091-00	s	CERAMIC, CHIP 8PF 50V
C516	1-163-227-11	s	CERAMIC, CHIP 10PF 5% 50V
C517	1-163-033-91	s	CERAMIC, CHIP 0.022uF 50V
C518	1-163-033-91	s	CERAMIC, CHIP 0.022uF 50V
C519	1-163-033-91	s	CERAMIC, CHIP 0.022uF 50V
C520	1-163-033-91	s	CERAMIC, CHIP 0.022uF 50V
C521	1-131-353-00	s	TANTALUM 10uF 10% 35V
C522	1-163-102-00	s	CERAMIC, CHIP 24PF 5% 50V
C523	1-126-933-11	s	ELECT 100uF 20% 16V
C524	1-163-033-91	s	CERAMIC, CHIP 0.022uF 50V
C525	1-164-004-11	s	CERAMIC, CHIP 0.1uF 10% 25V
C526	1-163-033-91	s	CERAMIC, CHIP 0.022uF 50V
C527	1-163-033-91	s	CERAMIC, CHIP 0.022uF 50V
C528	1-163-033-91	s	CERAMIC, CHIP 0.022uF 50V
C529	1-163-033-91	s	CERAMIC, CHIP 0.022uF 50V
C530	1-163-275-11	s	CERAMIC, CHIP 0.001uF 5% 50V
C531	1-164-161-11	s	CERAMIC, CHIP 0.0022uF 10% 100V
C603	1-126-933-11	s	ELECT 100uF 20% 16V
C604	1-163-033-91	s	CERAMIC, CHIP 0.022uF 50V
C605	1-163-033-91	s	CERAMIC, CHIP 0.022uF 50V
C606	1-163-099-00	s	CERAMIC, CHIP 18PF 5% 50V
C607	1-163-125-00	s	CERAMIC, CHIP 220PF 5% 50V
C608	1-126-933-11	s	ELECT 100uF 20% 16V
C609	1-126-933-11	s	ELECT 100uF 20% 16V
C610	1-163-033-91	s	CERAMIC, CHIP 0.022uF 50V
C611	1-104-923-11	s	MICA, CHIP 180pF 0.25% 50V
C613	1-163-091-00	s	CERAMIC, CHIP 8PF 50V
C614	1-163-227-11	s	CERAMIC, CHIP 10PF 5% 50V
C615	1-163-091-00	s	CERAMIC, CHIP 8PF 50V
C616	1-163-227-11	s	CERAMIC, CHIP 10PF 5% 50V
C617	1-163-033-91	s	CERAMIC, CHIP 0.022uF 50V
C618	1-163-033-91	s	CERAMIC, CHIP 0.022uF 50V

(VRA-5P BOARD(UVW-1800P))

Ref. No. or Q'ty	Part No.	SP	Description
C619	1-163-033-91	s	CERAMIC, CHIP 0.022uF 50V
C620	1-163-033-91	s	CERAMIC, CHIP 0.022uF 50V
C621	1-131-353-00	s	TANTALUM 10uF 10% 35V
C622	1-163-139-00	s	CERAMIC, CHIP 820PF 5% 50V
C623	1-163-139-00	s	CERAMIC, CHIP 820PF 5% 50V
C624	1-163-033-91	s	CERAMIC, CHIP 0.022uF 50V
C625	1-126-933-11	s	ELECT 100uF 20% 16V
C626	1-163-033-91	s	CERAMIC, CHIP 0.022uF 50V
C627	1-163-033-91	s	CERAMIC, CHIP 0.022uF 50V
C628	1-163-033-91	s	CERAMIC, CHIP 0.022uF 50V
C631	1-126-933-11	s	ELECT 100uF 20% 16V
C632	1-163-033-91	s	CERAMIC, CHIP 0.022uF 50V
C803	1-126-933-11	s	ELECT 100uF 20% 16V
C809	1-163-033-91	s	CERAMIC, CHIP 0.022uF 50V
C901	1-126-933-11	s	ELECT 100uF 20% 16V
C902	1-126-933-11	s	ELECT 100uF 20% 16V
C903	1-163-033-91	s	CERAMIC, CHIP 0.022uF 50V
C904	1-163-033-91	s	CERAMIC, CHIP 0.022uF 50V
C905	1-126-933-11	s	ELECT 100uF 20% 16V
C906	1-126-933-11	s	ELECT 100uF 20% 16V
C907	1-163-033-91	s	CERAMIC, CHIP 0.022uF 50V
C908	1-163-033-91	s	CERAMIC, CHIP 0.022uF 50V
C909	1-126-933-11	s	ELECT 100uF 20% 16V
C910	1-163-033-91	s	CERAMIC, CHIP 0.022uF 50V
C911	1-126-933-11	s	ELECT 100uF 20% 16V
C912	1-126-933-11	s	ELECT 100uF 20% 16V
C913	1-163-033-91	s	CERAMIC, CHIP 0.022uF 50V
C914	1-163-033-91	s	CERAMIC, CHIP 0.022uF 50V
C915	1-126-933-11	s	ELECT 100uF 20% 16V
C916	1-163-033-91	s	CERAMIC, CHIP 0.022uF 50V
C917	1-126-933-11	s	ELECT 100uF 20% 16V
C918	1-163-033-91	s	CERAMIC, CHIP 0.022uF 50V
CN101	1-573-782-21	o	CONNECTOR, PHEC 60P, MALE
CN102	1-573-782-21	o	CONNECTOR, PHEC 60P, MALE
CV301	1-141-442-91	s	CAP, TRIMMER 20pF
D101	8-719-941-23	s	DIODE DA204U
D102	8-719-941-23	s	DIODE DA204U
D109	8-719-123-82	s	DIODE 1SS303-T1
D202	8-719-123-82	s	DIODE 1SS303-T1
D301	8-719-041-39	s	DIODE KV1470
D302	8-719-941-23	s	DIODE DA204U
D303	8-719-821-39	s	DIODE 1SV160
D305	8-713-300-88	s	DIODE 1T33C-01
D306	8-719-941-23	s	DIODE DA204U
D307	8-719-911-19	s	DIODE 1SS119
FB201	1-543-309-21	s	BEAD, FERRITE
FL101	1-239-769-11	s	FILTER, LOW-PASS 5MHz
FL102	1-239-313-11	s	FILTER, LOW-PASS 2MHz
FL103	1-239-313-11	s	FILTER, LOW-PASS 2MHz
FL201	1-239-769-11	s	FILTER, LOW-PASS 5MHz
FL202	1-239-801-11	s	FILTER, LOW-PASS 4MHz
IC101	8-759-300-71	s	IC HD14053BFP
IC102	8-759-300-71	s	IC HD14053BFP
IC103	8-759-908-92	s	IC TL084CNS
IC104	8-759-925-76	s	IC SN74HC08ANS
IC201	8-759-925-90	s	IC SN74HC74ANS

(VRA-5P BOARD(UVW-1800P))

Ref. No. or Q'ty	Part No.	SP	Description
IC202	8-759-300-71	s	IC HD14053BFP
IC203	8-759-927-46	s	IC SN74HC00ANS
IC205	8-759-085-99	s	IC MB40568PF-G-BND
IC206	8-759-085-99	s	IC MB40568PF-G-BND
IC207	8-759-035-93	s	IC TC7S32F-TE85L
IC208	8-759-113-97	s	IC UPD42505C-50
IC209	8-759-113-97	s	IC UPD42505C-50
IC210	8-759-513-76	s	IC CXD8161AQ
IC211	8-759-031-84	s	IC TC7S04F
IC212	8-752-329-28	s	IC CXD1151Q
IC213	8-752-363-43	s	IC CXD1171M-1-TH
IC214	8-752-363-43	s	IC CXD1171M-1-TH
IC215	8-759-300-71	s	IC HD14053BFP
IC216	8-759-907-81	s	IC SN74LS221NS
IC218	8-759-925-85	s	IC SN74HC32ANS
IC220	8-759-300-71	s	IC HD14053BFP
IC301	8-759-008-67	s	IC MC14066BF
IC302	8-752-339-04	s	IC CXD2208Q
IC303	8-759-908-92	s	IC TL084CNS
IC304	8-759-906-53	s	IC TL062CPS
IC305	8-759-031-84	s	IC TC7S04F
IC306	8-759-908-92	s	IC TL084CNS
IC307	8-759-031-84	s	IC TC7S04F
IC308	8-759-906-53	s	IC TL062CPS
IC309	8-759-300-71	s	IC HD14053BFP
IC310	8-759-520-55	s	IC CXD8243AM
IC311	8-759-008-67	s	IC MC14066BF
IC312	8-759-907-81	s	IC SN74LS221NS
IC313	8-759-239-58	s	IC TC74HC221AF
IC314	8-759-009-06	s	IC MC14052BF
IC315	8-759-908-15	s	IC TL431CLP
IC316	8-759-908-15	s	IC TL431CLP
IC317	8-759-031-84	s	IC TC7S04F
IC501	1-810-334-11	s	HIC BP-023
IC502	8-759-908-15	s	IC TL431CLP
IC601	1-810-334-11	s	HIC BP-023
IC602	8-759-908-15	s	IC TL431CLP
IC901	8-759-182-84	s	IC PQ05SZ5U
IC902	8-759-822-95	s	IC L79M05T-FA
IC903	8-759-182-84	s	IC PQ05SZ5U
IC904	8-759-172-41	s	IC L78M09T-TL
L101-105	1-410-482-31	s	INDUCTOR 100uH
L107	1-410-482-31	s	INDUCTOR 100uH
L201	1-408-413-00	s	INDUCTOR 22uH
L202	1-410-473-11	s	INDUCTOR 18uH
L203	1-408-418-00	s	INDUCTOR 56uH
L204	1-408-413-00	s	INDUCTOR 22uH
L205	1-410-462-11	s	INDUCTOR 2.2uH
L206	1-408-400-00	s	INDUCTOR 1.8uH
L207	1-410-482-31	s	INDUCTOR 100uH
L208	1-410-482-31	s	INDUCTOR 100uH
L301	1-410-482-31	s	INDUCTOR 100uH
L302	1-410-464-11	s	INDUCTOR 3.3uH
L303	1-410-476-11	s	INDUCTOR 33uH
L304	1-410-476-11	s	INDUCTOR 33uH
L305	1-408-406-00	s	INDUCTOR 5.6uH
L306-314	1-410-482-31	s	INDUCTOR 100uH
L315	1-410-470-11	s	INDUCTOR 10uH

(VRA-5P BOARD(UVW-1800P))

Ref. No. or Q'ty	Part No.	SP	Description
L316	1-408-411-00	s	INDUCTOR 15uH
L317	1-410-476-11	s	INDUCTOR 33uH
L501	1-410-482-31	s	INDUCTOR 100uH
L502	1-410-482-31	s	INDUCTOR 100uH
L503	1-408-419-00	s	INDUCTOR 68uH
L505	1-410-468-11	s	INDUCTOR 6.8uH
L506	1-410-482-31	s	INDUCTOR 100uH
L507	1-410-478-11	s	INDUCTOR 47uH
L603	1-408-420-00	s	INDUCTOR 82uH
L605	1-410-464-11	s	INDUCTOR 3.3uH
L606	1-410-482-31	s	INDUCTOR 100uH
L607	1-408-425-00	s	INDUCTOR 220uH
L608	1-410-482-31	s	INDUCTOR 100uH
L901-905	1-412-533-21	s	INDUCTOR 47uH
LV301	1-406-746-11	s	INDUCTOR, VAR 22uH
Q101	8-729-117-32	s	TRANSISTOR 2SC4177
Q102	8-729-117-32	s	TRANSISTOR 2SC4177
Q103	8-729-140-63	s	TRANSISTOR 2SA1611-M5M6
Q104	8-729-904-41	s	TRANSISTOR FMY3
Q105	8-729-117-32	s	TRANSISTOR 2SC4177
Q106	8-729-140-63	s	TRANSISTOR 2SA1611-M5M6
Q107	8-729-140-63	s	TRANSISTOR 2SA1611-M5M6
Q108	8-729-117-32	s	TRANSISTOR 2SC4177
Q109	8-729-117-32	s	TRANSISTOR 2SC4177
Q110	8-729-117-32	s	TRANSISTOR 2SC4177
Q111	8-729-117-32	s	TRANSISTOR 2SC4177
Q112	8-729-140-63	s	TRANSISTOR 2SA1611-M5M6
Q113	8-729-140-63	s	TRANSISTOR 2SA1611-M5M6
Q114	8-729-117-32	s	TRANSISTOR 2SC4177
Q115	8-729-117-32	s	TRANSISTOR 2SC4177
Q116	8-729-140-63	s	TRANSISTOR 2SA1611-M5M6
Q117-122	8-729-117-32	s	TRANSISTOR 2SC4177
Q123	8-729-422-44	s	TRANSISTOR 2SK663
Q124	8-729-422-44	s	TRANSISTOR 2SK663
Q125	8-729-140-63	s	TRANSISTOR 2SA1611-M5M6
Q126	8-729-117-32	s	TRANSISTOR 2SC4177
Q127	8-729-117-32	s	TRANSISTOR 2SC4177
Q128	8-729-117-32	s	TRANSISTOR 2SC4177
Q129	8-729-117-32	s	TRANSISTOR 2SC4177
Q130	8-729-140-63	s	TRANSISTOR 2SA1611-M5M6
Q131	8-729-117-32	s	TRANSISTOR 2SC4177
Q132	8-729-117-32	s	TRANSISTOR 2SC4177
Q133	8-729-117-32	s	TRANSISTOR 2SC4177
Q201	8-729-117-32	s	TRANSISTOR 2SC4177
Q202	8-729-905-12	s	TRANSISTOR DTA144EU
Q203	8-729-905-18	s	TRANSISTOR DTC144EU
Q204	8-729-140-63	s	TRANSISTOR 2SA1611-M5M6
Q207	8-729-117-32	s	TRANSISTOR 2SC4177
Q209	8-729-140-63	s	TRANSISTOR 2SA1611-M5M6
Q210	8-729-117-32	s	TRANSISTOR 2SC4177
Q211	8-729-117-32	s	TRANSISTOR 2SC4177
Q212	8-729-140-63	s	TRANSISTOR 2SA1611-M5M6
Q213	8-729-117-32	s	TRANSISTOR 2SC4177
Q301	8-729-117-32	s	TRANSISTOR 2SC4177
Q303	8-729-117-32	s	TRANSISTOR 2SC4177
Q305	8-729-117-32	s	TRANSISTOR 2SC4177
Q306	8-729-140-63	s	TRANSISTOR 2SA1611-M5M6
Q307	8-729-140-63	s	TRANSISTOR 2SA1611-M5M6

(VRA-5P BOARD(UVW-1800P))

Ref. No. or Q'ty	Part No.	SP	Description
Q308	8-729-905-18	s	TRANSISTOR DTC144EU
Q309	8-729-905-18	s	TRANSISTOR DTC144EU
Q310	8-729-117-32	s	TRANSISTOR 2SC4177
Q311	8-729-117-32	s	TRANSISTOR 2SC4177
Q312	8-729-140-63	s	TRANSISTOR 2SA1611-M5M6
Q313	8-729-140-63	s	TRANSISTOR 2SA1611-M5M6
Q314	8-729-140-63	s	TRANSISTOR 2SA1611-M5M6
Q315	8-729-140-63	s	TRANSISTOR 2SA1611-M5M6
Q316	8-729-905-18	s	TRANSISTOR DTC144EU
Q317	8-729-140-63	s	TRANSISTOR 2SA1611-M5M6
Q318	8-729-117-32	s	TRANSISTOR 2SC4177
Q319	8-729-140-63	s	TRANSISTOR 2SA1611-M5M6
Q320	8-729-140-63	s	TRANSISTOR 2SA1611-M5M6
Q321	8-729-117-32	s	TRANSISTOR 2SC4177
Q322	8-729-143-07	s	TRANSISTOR 2SA1610-YY33
Q323	8-729-143-07	s	TRANSISTOR 2SA1610-YY33
Q324	8-729-120-28	s	TRANSISTOR 2SC1623-L5L6
Q325	8-729-140-47	s	TRANSISTOR 2SC3735-B34
Q508-512	8-729-117-32	s	TRANSISTOR 2SC4177
Q513	8-729-117-72	s	TRANSISTOR 2SC4178
Q514	8-729-117-72	s	TRANSISTOR 2SC4178
Q515	8-729-117-32	s	TRANSISTOR 2SC4177
Q516	8-729-117-72	s	TRANSISTOR 2SC4178
Q517	8-729-117-72	s	TRANSISTOR 2SC4178
Q518	8-729-140-63	s	TRANSISTOR 2SA1611-M5M6
Q519	8-729-117-72	s	TRANSISTOR 2SC4178
Q520	8-729-117-72	s	TRANSISTOR 2SC4178
Q601	8-729-117-32	s	TRANSISTOR 2SC4177
Q602	8-729-117-32	s	TRANSISTOR 2SC4177
Q603	8-729-117-32	s	TRANSISTOR 2SC4177
Q604-610	8-729-117-72	s	TRANSISTOR 2SC4178
R100	1-216-097-91	s	METAL, CHIP 100k 5% 1/10W
R101	1-216-651-11	s	METAL, CHIP 1K 0.5% 1/10W
R102	1-216-651-11	s	METAL, CHIP 1K 0.5% 1/10W
R103	1-216-651-11	s	METAL, CHIP 1K 0.5% 1/10W
R104	1-216-651-11	s	METAL, CHIP 1K 0.5% 1/10W
R105	1-216-049-91	s	METAL, CHIP 1k 5% 1/10W
R106	1-216-013-00	s	METAL, CHIP 33 5% 1/10W
R107	1-216-097-91	s	METAL, CHIP 100k 5% 1/10W
R108	1-216-097-91	s	METAL, CHIP 100k 5% 1/10W
R109	1-216-025-91	s	METAL, CHIP 100 5% 1/10W
R110	1-216-651-11	s	METAL, CHIP 1K 0.5% 1/10W
R111	1-216-049-91	s	METAL, CHIP 1k 5% 1/10W
R112	1-216-049-91	s	METAL, CHIP 1k 5% 1/10W
R113	1-216-651-11	s	METAL, CHIP 1K 0.5% 1/10W
R114	1-216-651-11	s	METAL, CHIP 1K 0.5% 1/10W
R115	1-216-049-91	s	METAL, CHIP 1k 5% 1/10W
R116	1-216-041-00	s	METAL, CHIP 470 5% 1/10W
R117	1-216-639-11	s	METAL, CHIP 330 0.5% 1/10W
R118	1-216-639-11	s	METAL, CHIP 330 0.5% 1/10W
R119	1-216-041-00	s	METAL, CHIP 470 5% 1/10W
R120	1-216-641-11	s	METAL, CHIP 390 0.5% 1/10W
R121	1-216-057-00	s	METAL, CHIP 2.2K 5% 1/10W
R122	1-216-037-00	s	METAL, CHIP 330 5% 1/10W
R123	1-216-065-00	s	METAL, CHIP 4.7K 5% 1/10W
R124	1-216-049-91	s	METAL, CHIP 1k 5% 1/10W
R125	1-216-065-00	s	METAL, CHIP 4.7K 5% 1/10W
R126	1-216-041-00	s	METAL, CHIP 470 5% 1/10W

(VRA-5P BOARD(UVW-1800P))

Ref. No. or Q'ty	Part No.	SP	Description
R127	1-216-025-91	s	METAL, CHIP 100 5% 1/10W
R128	1-216-065-00	s	METAL, CHIP 4.7K 5% 1/10W
R129	1-216-049-91	s	METAL, CHIP 1k 5% 1/10W
R130	1-216-073-00	s	METAL, CHIP 10K 5% 1/10W
R131	1-216-049-91	s	METAL, CHIP 1k 5% 1/10W
R132	1-216-049-91	s	METAL, CHIP 1k 5% 1/10W
R133	1-216-037-00	s	METAL, CHIP 330 5% 1/10W
R134	1-216-065-00	s	METAL, CHIP 4.7K 5% 1/10W
R135	1-216-657-11	s	METAL, CHIP 1.8K 0.5% 1/10W
R136	1-216-025-91	s	METAL, CHIP 100 5% 1/10W
R137	1-216-057-00	s	METAL, CHIP 2.2K 5% 1/10W
R138	1-216-651-11	s	METAL, CHIP 1K 0.5% 1/10W
R139	1-208-814-11	s	METAL, CHIP 22k 0.5% 1/10W
R140	1-216-651-11	s	METAL, CHIP 1K 0.5% 1/10W
R141	1-216-037-00	s	METAL, CHIP 330 5% 1/10W
R142	1-216-049-91	s	METAL, CHIP 1k 5% 1/10W
R143	1-216-057-00	s	METAL, CHIP 2.2K 5% 1/10W
R144	1-216-037-00	s	METAL, CHIP 330 5% 1/10W
R145	1-216-065-00	s	METAL, CHIP 4.7K 5% 1/10W
R146	1-216-049-91	s	METAL, CHIP 1k 5% 1/10W
R147	1-216-065-00	s	METAL, CHIP 4.7K 5% 1/10W
R148	1-216-121-91	s	METAL, CHIP 1M 5% 1/10W
R149	1-216-057-00	s	METAL, CHIP 2.2K 5% 1/10W
R150	1-216-049-91	s	METAL, CHIP 1k 5% 1/10W
R151	1-216-081-00	s	METAL, CHIP 22K 5% 1/10W
R152	1-216-121-91	s	METAL, CHIP 1M 5% 1/10W
R153	1-216-057-00	s	METAL, CHIP 2.2K 5% 1/10W
R154	1-216-049-91	s	METAL, CHIP 1k 5% 1/10W
R155	1-216-073-00	s	METAL, CHIP 10K 5% 1/10W
R156	1-216-073-00	s	METAL, CHIP 10K 5% 1/10W
R157	1-216-081-00	s	METAL, CHIP 22K 5% 1/10W
R158	1-216-073-00	s	METAL, CHIP 10K 5% 1/10W
R159	1-216-049-91	s	METAL, CHIP 1k 5% 1/10W
R160	1-216-049-91	s	METAL, CHIP 1k 5% 1/10W
R161	1-216-065-00	s	METAL, CHIP 4.7K 5% 1/10W
R162	1-216-037-00	s	METAL, CHIP 330 5% 1/10W
R163	1-216-025-91	s	METAL, CHIP 100 5% 1/10W
R164	1-216-057-00	s	METAL, CHIP 2.2K 5% 1/10W
R165	1-216-651-11	s	METAL, CHIP 1K 0.5% 1/10W
R166	1-208-814-11	s	METAL, CHIP 22k 0.5% 1/10W
R167	1-216-651-11	s	METAL, CHIP 1K 0.5% 1/10W
R168	1-216-037-00	s	METAL, CHIP 330 5% 1/10W
R169	1-216-049-91	s	METAL, CHIP 1k 5% 1/10W
R170	1-216-057-00	s	METAL, CHIP 2.2K 5% 1/10W
R171	1-216-037-00	s	METAL, CHIP 330 5% 1/10W
R172	1-216-065-00	s	METAL, CHIP 4.7K 5% 1/10W
R173	1-216-049-91	s	METAL, CHIP 1k 5% 1/10W
R174	1-216-065-00	s	METAL, CHIP 4.7K 5% 1/10W
R175	1-216-025-91	s	METAL, CHIP 100 5% 1/10W
R176	1-216-049-91	s	METAL, CHIP 1k 5% 1/10W
R177	1-216-025-91	s	METAL, CHIP 100 5% 1/10W
R178	1-216-627-11	s	METAL, CHIP 100 0.5% 1/10W
R179	1-216-295-91	s	RES, CHIP 0
R180	1-216-651-11	s	METAL, CHIP 1K 0.5% 1/10W
R181	1-216-025-91	s	METAL, CHIP 100 5% 1/10W
R182	1-216-049-91	s	METAL, CHIP 1k 5% 1/10W
R183	1-216-295-91	s	RES, CHIP 0
R184	1-216-651-11	s	METAL, CHIP 1K 0.5% 1/10W
R185	1-216-025-91	s	METAL, CHIP 100 5% 1/10W

(VRA-5P BOARD(UVW-1800P))

Ref. No. or Q'ty	Part No.	SP	Description
R186	1-216-049-91	s	METAL, CHIP 1k 5% 1/10W
R187	1-216-295-91	s	RES, CHIP 0
R188	1-216-618-11	s	METAL, CHIP 43 0.50% 1/10W
R189	1-216-025-91	s	METAL, CHIP 100 5% 1/10W
R190	1-216-646-11	s	METAL, CHIP 620 0.5% 1/10W
R193	1-216-097-91	s	METAL, CHIP 100k 5% 1/10W
R200	1-216-651-11	s	METAL, CHIP 1K 0.5% 1/10W
R201	1-216-651-11	s	METAL, CHIP 1K 0.5% 1/10W
R202	1-216-073-00	s	METAL, CHIP 10K 5% 1/10W
R203	1-216-073-00	s	METAL, CHIP 10K 5% 1/10W
R204	1-216-655-11	s	METAL, CHIP 1.5K 0.5% 1/10W
R205	1-216-631-11	s	METAL, CHIP 150 0.5% 1/10W
R206	1-216-655-11	s	METAL, CHIP 1.5K 0.5% 1/10W
R207	1-216-631-11	s	METAL, CHIP 150 0.5% 1/10W
R208	1-216-619-11	s	METAL, CHIP 47 0.5% 1/10W
R209	1-216-619-11	s	METAL, CHIP 47 0.5% 1/10W
R210	1-216-009-00	s	METAL, CHIP 22 5% 1/10W
R211	1-216-013-00	s	METAL, CHIP 33 5% 1/10W
R212	1-216-009-00	s	METAL, CHIP 22 5% 1/10W
R213	1-216-295-91	s	RES, CHIP 0
R216	1-216-013-00	s	METAL, CHIP 33 5% 1/10W
R217	1-216-089-91	s	METAL, CHIP 47k 5% 1/10W
R220	1-218-764-11	s	METAL, CHIP 330K 0.5% 1/10W
R223	1-216-663-11	s	METAL, CHIP 3.3K 0.5% 1/10W
R225	1-216-663-11	s	METAL, CHIP 3.3K 0.5% 1/10W
R226	1-216-081-00	s	METAL, CHIP 22K 5% 1/10W
R227	1-216-065-00	s	METAL, CHIP 4.7K 5% 1/10W
R228	1-216-687-11	s	METAL, CHIP 33K 0.5% 1/10W
R229	1-216-667-11	s	METAL, CHIP 4.7K 0.5% 1/10W
R230	1-216-635-11	s	METAL, CHIP 220 0.5% 1/10W
R231	1-216-635-11	s	METAL, CHIP 220 0.5% 1/10W
R232	1-216-635-11	s	METAL, CHIP 220 0.5% 1/10W
R233	1-216-635-11	s	METAL, CHIP 220 0.5% 1/10W
R234	1-216-049-91	s	METAL, CHIP 1k 5% 1/10W
R236	1-216-049-91	s	METAL, CHIP 1k 5% 1/10W
R238	1-216-073-00	s	METAL, CHIP 10K 5% 1/10W
R239	1-216-073-00	s	METAL, CHIP 10K 5% 1/10W
R240	1-216-295-91	s	RES, CHIP 0
R241	1-216-089-91	s	METAL, CHIP 47k 5% 1/10W
R242	1-216-696-11	s	METAL, CHIP 75K 0.5% 1/10W
R243	1-216-041-00	s	METAL, CHIP 470 5% 1/10W
R244	1-216-041-00	s	METAL, CHIP 470 5% 1/10W
R245	1-216-065-00	s	METAL, CHIP 4.7K 5% 1/10W
R246	1-216-639-11	s	METAL, CHIP 330 0.5% 1/10W
R247	1-216-639-11	s	METAL, CHIP 330 0.5% 1/10W
R248	1-208-812-11	s	METAL, CHIP 18k 0.5% 1/10W
R249	1-216-081-00	s	METAL, CHIP 22K 5% 1/10W
R250	1-216-065-00	s	METAL, CHIP 4.7K 5% 1/10W
R251	1-216-065-00	s	METAL, CHIP 4.7K 5% 1/10W
R252	1-216-049-91	s	METAL, CHIP 1k 5% 1/10W
R253	1-216-097-91	s	METAL, CHIP 100k 5% 1/10W
R254	1-216-639-11	s	METAL, CHIP 330 0.5% 1/10W
R255	1-216-639-11	s	METAL, CHIP 330 0.5% 1/10W
R256	1-216-049-91	s	METAL, CHIP 1k 5% 1/10W
R257	1-216-049-91	s	METAL, CHIP 1k 5% 1/10W
R258	1-216-073-00	s	METAL, CHIP 10K 5% 1/10W
R259	1-216-073-00	s	METAL, CHIP 10K 5% 1/10W
R260	1-216-073-00	s	METAL, CHIP 10K 5% 1/10W
R261	1-216-073-00	s	METAL, CHIP 10K 5% 1/10W

(VRA-5P BOARD(UVW-1800P))

Ref. No. or Q'ty	Part No.	SP	Description
R263-268	1-216-073-00	s	METAL, CHIP 10K 5% 1/10W
R270-279	1-216-073-00	s	METAL, CHIP 10K 5% 1/10W
R280	1-216-695-11	s	METAL, CHIP 68K 0.5% 1/10W
R301	1-216-073-00	s	METAL, CHIP 10K 5% 1/10W
R302	1-216-051-00	s	METAL, CHIP 1.2K 5% 1/10W
R303	1-216-049-91	s	METAL, CHIP 1k 5% 1/10W
R304	1-216-025-91	s	METAL, CHIP 100 5% 1/10W
R305	1-208-806-11	s	METAL, CHIP 10k 0.5% 1/10W
R306	1-208-806-11	s	METAL, CHIP 10k 0.5% 1/10W
R307	1-216-049-91	s	METAL, CHIP 1k 5% 1/10W
R308	1-216-049-91	s	METAL, CHIP 1k 5% 1/10W
R309	1-216-049-91	s	METAL, CHIP 1k 5% 1/10W
R310	1-216-049-91	s	METAL, CHIP 1k 5% 1/10W
R311	1-216-057-00	s	METAL, CHIP 2.2K 5% 1/10W
R312	1-216-057-00	s	METAL, CHIP 2.2K 5% 1/10W
R313	1-216-025-91	s	METAL, CHIP 100 5% 1/10W
R314	1-216-057-00	s	METAL, CHIP 2.2K 5% 1/10W
R315	1-216-073-00	s	METAL, CHIP 10K 5% 1/10W
R316	1-216-073-00	s	METAL, CHIP 10K 5% 1/10W
R317	1-216-049-91	s	METAL, CHIP 1k 5% 1/10W
R318	1-216-049-91	s	METAL, CHIP 1k 5% 1/10W
R319	1-216-049-91	s	METAL, CHIP 1k 5% 1/10W
R320	1-216-049-91	s	METAL, CHIP 1k 5% 1/10W
R321	1-216-097-91	s	METAL, CHIP 100k 5% 1/10W
R322	1-216-049-91	s	METAL, CHIP 1k 5% 1/10W
R323	1-216-646-11	s	METAL, CHIP 620 0.5% 1/10W
R324	1-216-057-00	s	METAL, CHIP 2.2K 5% 1/10W
R325	1-216-057-00	s	METAL, CHIP 2.2K 5% 1/10W
R326	1-216-041-00	s	METAL, CHIP 470 5% 1/10W
R327	1-208-774-11	s	METAL, CHIP 470 0.5% 1/10W
R328	1-216-667-11	s	METAL, CHIP 4.7K 0.5% 1/10W
R329	1-216-065-00	s	METAL, CHIP 4.7K 5% 1/10W
R330	1-216-049-91	s	METAL, CHIP 1k 5% 1/10W
R331	1-208-774-11	s	METAL, CHIP 470 0.5% 1/10W
R332	1-216-065-00	s	METAL, CHIP 4.7K 5% 1/10W
R333	1-216-117-00	s	METAL, CHIP 680K 5% 1/10W
R334	1-216-667-11	s	METAL, CHIP 4.7K 0.5% 1/10W
R335	1-216-073-00	s	METAL, CHIP 10K 5% 1/10W
R336	1-218-764-11	s	METAL, CHIP 330K 0.5% 1/10W
R337	1-218-764-11	s	METAL, CHIP 330K 0.5% 1/10W
R338	1-216-089-91	s	METAL, CHIP 47k 5% 1/10W
R339	1-216-085-00	s	METAL, CHIP 33K 5% 1/10W
R340	1-216-073-00	s	METAL, CHIP 10K 5% 1/10W
R341	1-216-667-11	s	METAL, CHIP 4.7K 0.5% 1/10W
R342	1-216-695-11	s	METAL, CHIP 68K 0.5% 1/10W
R343	1-216-057-00	s	METAL, CHIP 2.2K 5% 1/10W
R344	1-216-085-00	s	METAL, CHIP 33K 5% 1/10W
R345	1-216-085-00	s	METAL, CHIP 33K 5% 1/10W
R346	1-216-073-00	s	METAL, CHIP 10K 5% 1/10W
R347	1-216-049-91	s	METAL, CHIP 1k 5% 1/10W
R348	1-216-065-00	s	METAL, CHIP 4.7K 5% 1/10W
R349	1-216-049-91	s	METAL, CHIP 1k 5% 1/10W
R350	1-216-025-91	s	METAL, CHIP 100 5% 1/10W
R351	1-216-085-00	s	METAL, CHIP 33K 5% 1/10W
R352	1-208-801-11	s	METAL, CHIP 6.2k 0.5% 1/10W
R353	1-216-634-11	s	METAL, CHIP 200 0.5% 1/10W
R354	1-216-663-11	s	METAL, CHIP 3.3K 0.5% 1/10W
R355	1-216-073-00	s	METAL, CHIP 10K 5% 1/10W
R356	1-216-065-00	s	METAL, CHIP 4.7K 5% 1/10W

(VRA-5P BOARD(UVW-1800P))

Ref. No. or Q'ty	Part No.	SP	Description
R357	1-216-121-91	s	METAL, CHIP 1M 5% 1/10W
R358	1-216-117-00	s	METAL, CHIP 680K 5% 1/10W
R359	1-216-635-11	s	METAL, CHIP 220 0.5% 1/10W
R360	1-216-667-11	s	METAL, CHIP 4.7K 0.5% 1/10W
R361	1-216-049-91	s	METAL, CHIP 1k 5% 1/10W
R362	1-216-651-11	s	METAL, CHIP 1K 0.5% 1/10W
R363	1-208-806-11	s	METAL, CHIP 10k 0.5% 1/10W
R364	1-208-806-11	s	METAL, CHIP 10k 0.5% 1/10W
R365	1-216-651-11	s	METAL, CHIP 1K 0.5% 1/10W
R367	1-216-025-91	s	METAL, CHIP 100 5% 1/10W
R368	1-216-651-11	s	METAL, CHIP 1K 0.5% 1/10W
R369	1-216-663-11	s	METAL, CHIP 3.3K 0.5% 1/10W
R370	1-216-049-91	s	METAL, CHIP 1k 5% 1/10W
R371	1-216-635-11	s	METAL, CHIP 220 0.5% 1/10W
R372	1-216-639-11	s	METAL, CHIP 330 0.5% 1/10W
R373	1-216-295-91	s	RES, CHIP 0
R374	1-216-295-91	s	RES, CHIP 0
R375	1-208-812-11	s	METAL, CHIP 18k 0.5% 1/10W
R376	1-216-073-00	s	METAL, CHIP 10K 5% 1/10W
R377	1-208-784-11	s	METAL, CHIP 1.2k 0.5% 1/10W
R378	1-208-810-11	s	METAL, CHIP 15k 0.5% 1/10W
R379	1-216-025-91	s	METAL, CHIP 100 5% 1/10W
R380	1-216-671-11	s	METAL, CHIP 6.8K 0.5% 1/10W
R381	1-216-073-00	s	METAL, CHIP 10K 5% 1/10W
R382	1-216-673-11	s	METAL, CHIP 8.2K 0.5% 1/10W
R383	1-216-673-11	s	METAL, CHIP 8.2K 0.5% 1/10W
R384	1-216-673-11	s	METAL, CHIP 8.2K 0.5% 1/10W
R385	1-216-025-91	s	METAL, CHIP 100 5% 1/10W
R386	1-216-677-11	s	METAL, CHIP 12K 0.5% 1/10W
R387	1-216-657-11	s	METAL, CHIP 1.8K 0.5% 1/10W
R388	1-216-651-11	s	METAL, CHIP 1K 0.5% 1/10W
R389	1-216-651-11	s	METAL, CHIP 1K 0.5% 1/10W
R390	1-208-784-11	s	METAL, CHIP 1.2k 0.5% 1/10W
R391	1-208-784-11	s	METAL, CHIP 1.2k 0.5% 1/10W
R392	1-216-065-00	s	METAL, CHIP 4.7K 5% 1/10W
R393	1-216-663-11	s	METAL, CHIP 3.3K 0.5% 1/10W
R394	1-216-049-91	s	METAL, CHIP 1k 5% 1/10W
R395	1-216-049-91	s	METAL, CHIP 1k 5% 1/10W
R396	1-216-295-91	s	RES, CHIP 0
R397	1-216-295-91	s	RES, CHIP 0
R399	1-216-651-11	s	METAL, CHIP 1K 0.5% 1/10W
R400	1-208-789-11	s	METAL, CHIP 2k 0.5% 1/10W
R401	1-208-784-11	s	METAL, CHIP 1.2k 0.5% 1/10W
R402	1-216-648-11	s	METAL, CHIP 750 0.5% 1/10W
R403	1-216-037-00	s	METAL, CHIP 330 5% 1/10W
R404	1-216-671-11	s	METAL, CHIP 6.8K 0.5% 1/10W
R405	1-208-817-11	s	METAL, CHIP 30k 0.5% 1/10W
R406	1-216-041-00	s	METAL, CHIP 470 5% 1/10W
R407	1-216-133-00	s	METAL, CHIP 3.3M 5% 1/10W
R408	1-216-295-91	s	RES, CHIP 0
R501	1-216-085-00	s	METAL, CHIP 33K 5% 1/10W
R502	1-216-073-00	s	METAL, CHIP 10K 5% 1/10W
R503	1-216-667-11	s	METAL, CHIP 4.7K 0.5% 1/10W
R504	1-216-663-11	s	METAL, CHIP 3.3K 0.5% 1/10W
R505	1-216-065-00	s	METAL, CHIP 4.7K 5% 1/10W
R506	1-216-651-11	s	METAL, CHIP 1K 0.5% 1/10W
R507	1-216-651-11	s	METAL, CHIP 1K 0.5% 1/10W
R508	1-216-065-00	s	METAL, CHIP 4.7K 5% 1/10W
R509	1-216-639-11	s	METAL, CHIP 330 0.5% 1/10W

(VRA-5P BOARD(UVW-1800P))

Ref. No. or Q'ty	Part No.	SP	Description
R510	1-216-661-11	s	METAL, CHIP 2.7K 0.5% 1/10W
R511	1-216-295-91	s	RES, CHIP 0
R512	1-218-184-11	s	METAL, CHIP 997 0.1% 1/16W
R513	1-208-806-11	s	METAL, CHIP 10k 0.5% 1/10W
R514	1-216-635-11	s	METAL, CHIP 220 0.5% 1/10W
R515	1-216-699-11	s	METAL, CHIP 100K 0.5% 1/10W
R516	1-218-922-11	s	METAL, CHIP 3.26K 0.1% 1/16W
R517	1-216-607-11	s	METAL, CHIP 15 0.50% 1/10W
R518	1-216-661-11	s	METAL, CHIP 2.7K 0.5% 1/10W
R519	1-216-057-00	s	METAL, CHIP 2.2K 5% 1/10W
R520	1-216-025-91	s	METAL, CHIP 100 5% 1/10W
R521	1-216-667-11	s	METAL, CHIP 4.7K 0.5% 1/10W
R522	1-216-655-11	s	METAL, CHIP 1.5K 0.5% 1/10W
R523	1-216-687-11	s	METAL, CHIP 33K 0.5% 1/10W
R524	1-216-295-91	s	RES, CHIP 0
R525	1-216-639-11	s	METAL, CHIP 330 0.5% 1/10W
R526	1-208-812-11	s	METAL, CHIP 18k 0.5% 1/10W
R527	1-216-677-11	s	METAL, CHIP 12K 0.5% 1/10W
R528	1-216-648-11	s	METAL, CHIP 750 0.5% 1/10W
R529	1-216-295-91	s	RES, CHIP 0
R530	1-216-687-11	s	METAL, CHIP 33K 0.5% 1/10W
R531	1-208-774-11	s	METAL, CHIP 470 0.5% 1/10W
R532	1-216-667-11	s	METAL, CHIP 4.7K 0.5% 1/10W
R533	1-208-774-11	s	METAL, CHIP 470 0.5% 1/10W
R534	1-216-025-91	s	METAL, CHIP 100 5% 1/10W
R535	1-216-025-91	s	METAL, CHIP 100 5% 1/10W
R536	1-216-057-00	s	METAL, CHIP 2.2K 5% 1/10W
R537	1-216-661-11	s	METAL, CHIP 2.7K 0.5% 1/10W
R538	1-216-657-11	s	METAL, CHIP 1.8K 0.5% 1/10W
R539	1-216-025-91	s	METAL, CHIP 100 5% 1/10W
R540	1-216-663-11	s	METAL, CHIP 3.3K 0.5% 1/10W
R541	1-216-659-11	s	METAL, CHIP 2.2K 0.5% 1/10W
R542	1-216-073-00	s	METAL, CHIP 10K 5% 1/10W
R543	1-216-073-00	s	METAL, CHIP 10K 5% 1/10W
R544	1-216-025-91	s	METAL, CHIP 100 5% 1/10W
R545	1-216-037-00	s	METAL, CHIP 330 5% 1/10W
R546	1-216-037-00	s	METAL, CHIP 330 5% 1/10W
R547	1-208-810-11	s	METAL, CHIP 15k 0.5% 1/10W
R548	1-208-806-11	s	METAL, CHIP 10k 0.5% 1/10W
R549	1-208-789-11	s	METAL, CHIP 2k 0.5% 1/10W
R550	1-216-013-00	s	METAL, CHIP 33 5% 1/10W
R551	1-216-013-00	s	METAL, CHIP 33 5% 1/10W
R552	1-216-065-00	s	METAL, CHIP 4.7K 5% 1/10W
R553	1-216-655-11	s	METAL, CHIP 1.5K 0.5% 1/10W
R554	1-208-814-11	s	METAL, CHIP 22k 0.5% 1/10W
R555	1-216-663-11	s	METAL, CHIP 3.3K 0.5% 1/10W
R556	1-216-666-11	s	METAL, CHIP 4.3K 0.5% 1/10W
R557	1-216-677-11	s	METAL, CHIP 12K 0.5% 1/10W
R558	1-216-065-00	s	METAL, CHIP 4.7K 5% 1/10W
R559	1-216-073-00	s	METAL, CHIP 10K 5% 1/10W
R560	1-216-073-00	s	METAL, CHIP 10K 5% 1/10W
R561	1-216-665-11	s	METAL, CHIP 3.9K 0.5% 1/10W
R562	1-216-049-91	s	METAL, CHIP 1k 5% 1/10W
R563	1-216-025-91	s	METAL, CHIP 100 5% 1/10W
R564	1-208-806-11	s	METAL, CHIP 10k 0.5% 1/10W
R565	1-208-806-11	s	METAL, CHIP 10k 0.5% 1/10W
R601	1-216-085-00	s	METAL, CHIP 33K 5% 1/10W
R602	1-216-073-00	s	METAL, CHIP 10K 5% 1/10W
R603	1-216-667-11	s	METAL, CHIP 4.7K 0.5% 1/10W

(VRA-5P BOARD(UVW-1800P))

Ref. No. or Q'ty	Part No.	SP	Description
R604	1-216-051-00	s	METAL, CHIP 1.2K 5% 1/10W
R605	1-216-663-11	s	METAL, CHIP 3.3K 0.5% 1/10W
R606	1-216-065-00	s	METAL, CHIP 4.7K 5% 1/10W
R607	1-216-651-11	s	METAL, CHIP 1K 0.5% 1/10W
R608	1-216-651-11	s	METAL, CHIP 1K 0.5% 1/10W
R609	1-216-065-00	s	METAL, CHIP 4.7K 5% 1/10W
R610	1-216-635-11	s	METAL, CHIP 220 0.5% 1/10W
R611	1-216-651-11	s	METAL, CHIP 1K 0.5% 1/10W
R612	1-216-622-11	s	METAL, CHIP 62 0.5% 1/10W
R613	1-218-184-11	s	METAL, CHIP 997 0.1% 1/16W
R614	1-208-806-11	s	METAL, CHIP 10k 0.5% 1/10W
R615	1-216-635-11	s	METAL, CHIP 220 0.5% 1/10W
R617	1-218-922-11	s	METAL, CHIP 3.26K 0.1% 1/16W
R618	1-216-295-91	s	RES, CHIP 0
R619	1-216-661-11	s	METAL, CHIP 2.7K 0.5% 1/10W
R620	1-216-025-91	s	METAL, CHIP 100 5% 1/10W
R621	1-216-057-00	s	METAL, CHIP 2.2K 5% 1/10W
R622	1-216-667-11	s	METAL, CHIP 4.7K 0.5% 1/10W
R623	1-216-655-11	s	METAL, CHIP 1.5K 0.5% 1/10W
R624	1-216-687-11	s	METAL, CHIP 33K 0.5% 1/10W
R625	1-216-295-91	s	RES, CHIP 0
R626	1-216-641-11	s	METAL, CHIP 390 0.5% 1/10W
R627	1-208-812-11	s	METAL, CHIP 18k 0.5% 1/10W
R628	1-216-677-11	s	METAL, CHIP 12K 0.5% 1/10W
R629	1-216-651-11	s	METAL, CHIP 1K 0.5% 1/10W
R630	1-216-295-91	s	RES, CHIP 0
R631	1-216-687-11	s	METAL, CHIP 33K 0.5% 1/10W
R632	1-216-648-11	s	METAL, CHIP 750 0.5% 1/10W
R633	1-216-667-11	s	METAL, CHIP 4.7K 0.5% 1/10W
R634	1-216-041-00	s	METAL, CHIP 470 5% 1/10W
R635	1-216-025-91	s	METAL, CHIP 100 5% 1/10W
R636	1-216-073-00	s	METAL, CHIP 10K 5% 1/10W
R637	1-216-025-91	s	METAL, CHIP 100 5% 1/10W
R638	1-216-057-00	s	METAL, CHIP 2.2K 5% 1/10W
R639	1-208-775-11	s	METAL, CHIP 510 0.5% 1/10W
R640	1-216-646-11	s	METAL, CHIP 620 0.5% 1/10W
R641	1-208-775-11	s	METAL, CHIP 510 0.5% 1/10W
R642	1-216-651-11	s	METAL, CHIP 1K 0.5% 1/10W
R643	1-216-057-00	s	METAL, CHIP 2.2K 5% 1/10W
R644	1-216-041-00	s	METAL, CHIP 470 5% 1/10W
R645	1-216-049-91	s	METAL, CHIP 1k 5% 1/10W
R646	1-216-057-00	s	METAL, CHIP 2.2K 5% 1/10W
R647	1-216-049-91	s	METAL, CHIP 1k 5% 1/10W
R648	1-216-025-91	s	METAL, CHIP 100 5% 1/10W
R649	1-216-025-91	s	METAL, CHIP 100 5% 1/10W
R650	1-216-037-00	s	METAL, CHIP 330 5% 1/10W
R651	1-216-037-00	s	METAL, CHIP 330 5% 1/10W
R652	1-216-013-00	s	METAL, CHIP 33 5% 1/10W
R653	1-216-013-00	s	METAL, CHIP 33 5% 1/10W
R654	1-216-667-11	s	METAL, CHIP 4.7K 0.5% 1/10W
R655	1-216-663-11	s	METAL, CHIP 3.3K 0.5% 1/10W
R656	1-216-025-91	s	METAL, CHIP 100 5% 1/10W
R657	1-208-806-11	s	METAL, CHIP 10k 0.5% 1/10W
R658	1-208-806-11	s	METAL, CHIP 10k 0.5% 1/10W
RV101	1-241-760-21	s	RES, ADJ METAL 470
RV102	1-241-760-21	s	RES, ADJ METAL 470
RV103	1-241-762-11	s	RES, ADJ METAL 2.2k
RV104	1-241-760-21	s	RES, ADJ METAL 470
RV105	1-241-759-21	s	RES, ADJ METAL 220

(VRA-5P BOARD(UVW-1800P))

Ref. No. or Q'ty	Part No.	SP	Description
RV201	1-241-784-11	s	RES, ADJ METAL 4.7k
RV202	1-241-785-11	s	RES, ADJ METAL 10k
RV203	1-241-785-11	s	RES, ADJ METAL 10k
RV301	1-241-762-11	s	RES, ADJ METAL 2.2k
RV302	1-241-785-11	s	RES, ADJ METAL 10k
RV303	1-241-784-11	s	RES, ADJ METAL 4.7k
RV304	1-241-784-11	s	RES, ADJ METAL 4.7k
RV305	1-241-784-11	s	RES, ADJ METAL 4.7k
RV306	1-241-762-11	s	RES, ADJ METAL 2.2k
RV501	1-241-761-11	s	RES, ADJ METAL 1k
RV502	1-241-762-11	s	RES, ADJ METAL 2.2k
RV503	1-241-762-11	s	RES, ADJ METAL 2.2k
RV602	1-241-763-11	s	RES, ADJ METAL 4.7k
RV603	1-241-763-11	s	RES, ADJ METAL 4.7k
S201	1-571-275-31	s	SWITCH, SLIDE
X301	1-579-057-11	s	CRYSTAL 17.734475MHz
X302	1-760-183-21	s	CRYSTAL 10.664135MHz

AC BOARD/SOPS-1045(UVW-1800/1600(J,UC))

Ref. No. or Q'ty	Part No.	SP	Description
1pc	⚠ 1-413-889-11	s	REGULATOR, SWITCHING (SOPS-1045)

All of component parts on the AC board are supplied together when you order switching regulator, SOPS-1045. Therefore, all of components parts on the board should be critical to safe operation.

1pc	1-533-217-31	s	HOLDER, FUSE
1pc	1-580-375-11	s	INLET 3P
3pcs	3-899-248-11	s	SCREW, +PSW M3x8
1pc	7-682-961-01	s	SCREW, +PSW4x8
C151	1-161-740-00	s	CERAMIC 470pF 10% 400V
C152	1-161-740-00	s	CERAMIC 470pF 10% 400V
C153	1-161-740-00	s	CERAMIC 470pF 10% 400V
C154	1-161-740-00	s	CERAMIC 470pF 10% 400V
C155	1-136-472-11	s	FILM 0.1uF 20% 250V
C155	1-136-212-12	s	FILM 0.1uF 20% 250V
C156	1-136-472-11	s	FILM 0.1uF 20% 250V
C156	1-136-212-12	s	FILM 0.1uF 20% 250V
CN151	1-564-215-11	o	CONNECTOR 4P, MALE
F151	1-532-746-11	s	FUSE 4A 125V
L151	1-424-353-11	s	FILTER, LINE
L152	1-424-255-11	s	COIL, CHOKE 10uH
L153	1-424-255-11	s	COIL, CHOKE 10uH
L203	1-406-953-11	s	COIL, CHOKE 30uH
R155	1-202-849-00	s	COMP 820k 1/2W 10%
VZ151	1-809-337-41	s	VARISTOR ENC471D-07AW

AC BOARD/SOPS-1046(UVW-1800P/1600P))

Ref. No. or Q'ty	Part No.	SP	Description
1pc	⚠ 1-413-925-12	s	REGULATOR, SWITCHING (SOPS-1046)

All of component parts on the AC board are supplied together when you order switching regulator, SOPS-1046. Therefore, all of components parts on the board should be critical to safe operation.

1pc	1-533-217-31	s	HOLDER, FUSE
1pc	1-580-375-11	s	INLET 3P
3pcs	3-899-248-11	s	SCREW, +PSW M3x8
1pc	7-682-961-01	s	SCREW, +PSW4x8
C151	1-161-742-00	s	CERAMIC 0.0022uF 20% 400V
C152	1-161-742-00	s	CERAMIC 0.0022uF 20% 400V
C153	1-161-742-00	s	CERAMIC 0.0022uF 20% 400V
C154	1-161-742-00	s	CERAMIC 0.0022uF 20% 400V
C155	1-136-472-11	s	FILM 0.1uF 20% 250V
C155	1-136-212-12	s	FILM 0.1uF 20% 250V
C156	1-136-472-11	s	FILM 0.1uF 20% 250V
C156	1-136-212-12	s	FILM 0.1uF 20% 250V
CN151	1-564-215-11	o	CONNECTOR 4P, MALE
F151	1-576-228-11	s	FUSE 2A 250V
L151	1-424-353-11	s	FILTER, LINE
L152	1-424-255-11	s	COIL, CHOKE 10uH
L153	1-424-255-11	s	COIL, CHOKE 10uH
L203	1-406-953-11	s	COIL, CHOKE 30uH
R155	1-202-849-00	s	COMP 820k 10% 1/2W
VZ151	1-809-337-41	s	VARISTOR ENC471D-07AW

M BOARD/SOPS-1045(UVW-1800/1600(J,UC))

Ref. No. or Q'ty	Part No.	SP	Description
1pc	⚠ 1-413-889-11	s	REGULATOR, SWITCHING (SOPS-1045)

All of component parts on the M board are supplied together when you order switching regulator, SOPS-1045.
Therefore, all of components parts on the board should be critical to safe operation.

1pc	1-543-060-00	s	BEAD, FERRITE
1pc	1-543-923-11	s	BEADS, FERRITE
C106	1-136-185-00	s	FILM 0.22uF 20% 250V
C107	1-161-742-00	s	CERAMIC 0.0022uF 20% 400V
C108	1-161-742-00	s	CERAMIC 0.0022uF 20% 400V
C113	1-125-715-11	s	ELECT 820uF 20% 200V
C114	1-136-206-11	s	FILM 0.033uF 10% 630V
C115	1-136-165-00	s	FILM 0.1uF 5% 50V
C116	1-124-478-11	s	ELECT 100uF 20% 25V
C117	1-124-477-11	s	ELECT 47uF 20% 25V
C118	1-130-487-00	s	MYLAR 0.022uF 5% 50V
C119	1-136-153-00	s	FILM 0.01uF 5% 50V
C120	1-130-048-00	s	FILM 220pF 5% 50V
C121	1-136-165-00	s	FILM 0.1uF 5% 50V
C122	1-124-927-11	s	ELECT 4.7uF 20% 100V
C123	1-161-742-00	s	CERAMIC 0.0022uF 20% 400V
C124	1-161-741-00	s	CERAMIC 1000pF 20% AC400V
C125	1-161-741-00	s	CERAMIC 1000pF 20% AC400V
C126	1-162-117-11	s	CERAMIC 100pF 10% 500V
C201	1-164-645-11	s	CERAMIC 1000pF 10% 500V
C202	1-164-645-11	s	CERAMIC 1000pF 10% 500V
C203	1-128-102-11	s	ELECT 1200uF 20% 16V
C204	1-128-585-11	s	ELECT 270uF 20% 16V
C206	1-164-646-11	s	CERAMIC 2200pF 10% 500V
C207	1-164-646-11	s	CERAMIC 2200pF 10% 500V
C208	1-128-102-11	s	ELECT 1200uF 20% 16V
C209	1-126-987-11	s	ELECT 220uF 20% 10V
C211	1-164-646-11	s	CERAMIC 2200pF 10% 500V
C212	1-164-646-11	s	CERAMIC 2200pF 10% 500V
C213	1-128-102-11	s	ELECT 1200uF 20% 16V
C214	1-126-987-11	s	ELECT 220uF 20% 10V
C215	1-136-165-00	s	FILM 0.1uF 5% 50V
C216	1-164-646-11	s	CERAMIC 2200pF 10% 500V
C217	1-164-646-11	s	CERAMIC 2200pF 10% 500V
C218	1-128-102-11	s	ELECT 1200uF 20% 16V
C219	1-126-987-11	s	ELECT 220uF 20% 10V
C220	1-136-165-00	s	FILM 0.1uF 5% 50V
C221	1-164-645-11	s	CERAMIC 1000pF 10% 500V
C222	1-164-645-11	s	CERAMIC 1000pF 10% 500V
C223	1-128-102-11	s	ELECT 1200uF 20% 16V
C225	1-128-584-11	s	ELECT 120uF 20% 16V
C226	1-128-585-11	s	ELECT 270uF 20% 16V
C228	1-128-585-11	s	ELECT 270uF 20% 16V
C230	1-130-489-00	s	MYLAR 0.033uF 5% 50V
C231	1-136-169-00	s	MYLAR 0.22uF 5% 50V
C232	1-130-483-00	s	MYLAR 0.01uF 5% 50V
C233	1-136-157-00	s	FILM, CHIP 0.022uF 5% 50V
CN101	1-564-216-00	o	CONNECTOR, VH 5P, MALE
CN102	1-564-215-11	o	PIN, CONNECTOR 4P
CN103	1-564-321-00	o	CONNECTOR, VH 2P, MALE
CN201	1-564-932-11	o	CONNECTOR 9P, MALE

(M BOARD/SOPS-1045(UVW-1800/1600(J,UC)))

Ref. No. or Q'ty	Part No.	SP	Description
D101	8-719-510-71	s	DIODE D10XB60
D102	8-719-313-16	s	DIODE AU02A
D103	8-719-911-19	s	DIODE 1SS119
D104	8-719-510-26	s	DIODE D1NL20
D105	8-719-510-26	s	DIODE D1NL20
D106	8-719-510-26	s	DIODE D1NL20
D107	8-719-911-19	s	DIODE 1SS119
D108	8-719-109-84	s	DIODE RD5.1ES-B1
D109	8-719-911-19	s	DIODE 1SS119
D110	8-719-109-89	s	DIODE RD5.6ES-B2
D201	8-719-510-12	s	DIODE D10SC4M
D202	8-719-510-39	s	DIODE D10LC20U
D203	8-719-510-39	s	DIODE D10LC20U
D204	8-719-988-31	s	DIODE D10SC6MR
D205	8-719-025-11	s	DIODE D8LC20UR
D206	8-719-027-20	s	DIODE D3S4M-F
D208	8-719-911-19	s	DIODE 1SS119
D209	8-719-109-88	s	DIODE RD5.6ES-B1
D210	8-719-911-19	s	DIODE 1SS119
D211	8-719-110-12	s	DIODE RD9.1ES-B1
D213	8-719-110-42	s	DIODE RD15ES-B3
D214	8-719-110-49	s	DIODE RD18ES-B2
IC101	8-759-520-23	s	IC FA5304P
IC102	8-719-028-92	s	PHOTO-COUPLER PS2652-P-V
IC103	8-719-028-92	s	PHOTO-COUPLER PS2652-P-V
IC103	8-719-820-67	s	PHOTO-COUPLER TLP634GB-LF2
IC201	8-759-604-69	s	IC M50460-052P
IC202	8-759-908-15	s	IC TL431CLP
L101	1-424-389-11	s	FILTER, LINE
L103	1-412-552-11	s	INDUCTOR 2.2mH
L201	1-406-929-11	s	COIL, CHOKE
L202	1-424-254-31	s	COIL, CHOKE 4.7UH
L204	1-424-255-11	s	COIL, CHOKE 10UH
L205	1-424-254-31	s	COIL, CHOKE 4.7UH
L206	1-424-255-11	s	COIL, CHOKE 10UH
L207	1-406-929-11	s	COIL, CHOKE
L208	1-424-255-11	s	COIL, CHOKE 10UH
Q101	8-729-321-75	s	TRANSISTOR 2SK1400A
Q201	8-729-900-80	s	TRANSISTOR DTC114ES
R102	1-217-785-11	s	WIREWOUND 15 5% 5W
R103	1-260-129-91	s	CARBON 330k 1/2W 5%
R104	1-215-902-11	s	METAL 47k 5% 2W
R105	1-215-902-11	s	METAL 47k 5% 2W
R106	1-215-902-11	s	METAL 47k 5% 2W
R107	1-249-404-00	s	CARBON 82 5% 1/4W
R108	1-249-394-11	s	CARBON 12 5% 1/4W
R109	1-249-441-11	s	CARBON 100k 5% 1/4W
R110	1-249-395-11	s	CARBON 15 5% 1/4W
R111	1-249-397-11	s	CARBON 22 5% 1/4W
R112	1-249-381-11	s	CARBON 1 5% 1/4W
R113	1-249-395-11	s	CARBON 15 5% 1/4W
R114	1-249-429-11	s	CARBON 10k 5% 1/4W
R115	1-249-421-11	s	CARBON 2.2k 5% 1/4W
R116	1-247-903-00	s	CARBON 1M 5% 1/4W
R117	1-215-902-11	s	METAL 47k 5% 2W
R118	1-249-436-11	s	CARBON 39k 5% 1/4W
R201-205	1-215-882-00	s	METAL 22 5% 2W

(M BOARD/SOPS-1045(UVW-1800/1600(J,UC)))

Ref. No. or Q'ty	Part No.	SP	Description
R206	1-249-419-11	s	CARBON 1.5k 5% 1/4W
R209	1-215-429-00	s	METAL 2.2k 1% 1/6W
R210	1-215-433-00	s	METAL 3.3k 1% 1/6W
R212	1-249-413-11	s	CARBON 470 5% 1/4W
R213	1-249-405-11	s	CARBON 100 5% 1/4W
R214	1-249-433-11	s	CARBON 22k 5% 1/4W
RV201	1-237-500-21	s	RES, ADJ METAL 1k
RY101	1-515-864-11	s	RELAY
T101	1-423-874-11	s	TRANSFORMER, CONVERTER
T102	1-424-573-11	s	TRANSFORMER, CURRENT

M BOARD/SOPS-1046(UVW-1800P/1600P(EK))

Ref. No. or Q'ty	Part No.	SP	Description
1pc	⚠ 1-413-925-12	s	REGULATOR, SWITCHING (SOPS-1046)

All of component parts on the M board are supplied together when you order switching regulator, SOPS-1046. Therefore, all of components parts on the board should be critical to safe operation.

1pc	1-543-060-00	s	BEAD, FERRITE
1pc	1-543-923-11	s	BEAD, FERRITE
C106	1-136-185-00	s	FILM 0.22uF 20% 250V
C107	1-161-741-00	s	CERAMIC 1000PF 10% AC400V
C108	1-161-741-00	s	CERAMIC 1000PF 10% AC400V
C113	1-125-731-11	s	ELECT 270MF 20% 400V
C114	1-136-206-11	s	FILM 0.033uF 10% 630V
C115	1-136-165-00	s	FILM 0.1uF 5% 50V
C116	1-124-478-11	s	ELECT 100uF 20% 25V
C117	1-124-477-11	s	ELECT 47uF 20% 25V
C118	1-136-157-00	s	FILM 0.022uF 5% 50V
C119	1-136-153-00	s	FILM 0.01uF 5% 50V
C120	1-130-048-00	s	FILM 220pF 5% 50V
C121	1-136-165-00	s	FILM 0.1uF 5% 50V
C122	1-124-927-11	s	ELECT 4.7uF 20% 100V
C123	1-161-742-00	s	CERAMIC 0.0022uF 20% 400V
C124	1-161-742-00	s	CERAMIC 0.0022uF 20% 400V
C125	1-161-742-00	s	CERAMIC 0.0022uF 20% 400V
C126	1-102-002-00	s	CERAMIC 680PF 10% 500V
C201	1-164-645-11	s	CERAMIC 1000pF 10% 500V
C202	1-164-645-11	s	CERAMIC 1000pF 10% 500V
C203	1-128-102-11	s	ELECT 1200uF 20% 16V
C204	1-128-585-11	s	ELECT 270uF 20% 16V
C206	1-164-646-11	s	CERAMIC 2200pF 10% 500V
C207	1-164-646-11	s	CERAMIC 2200pF 10% 500V
C208	1-128-102-11	s	ELECT 1200uF 20% 16V
C209	1-126-987-11	s	ELECT 220uF 20% 10V
C211	1-164-646-11	s	CERAMIC 2200pF 10% 500V
C212	1-164-646-11	s	CERAMIC 2200pF 10% 500V
C213	1-128-102-11	s	ELECT 1200uF 20% 16V
C214	1-126-987-11	s	ELECT 220uF 20% 10V
C215	1-136-165-00	s	FILM 0.1uF 5% 50V
C216	1-164-646-11	s	CERAMIC 2200pF 10% 500V
C217	1-164-646-11	s	CERAMIC 2200pF 10% 500V
C218	1-128-102-11	s	ELECT 1200uF 20% 16V
C219	1-126-987-11	s	ELECT 220uF 20% 10V
C220	1-136-165-00	s	FILM 0.1uF 5% 50V
C221	1-164-645-11	s	CERAMIC 1000pF 10% 500V
C222	1-164-645-11	s	CERAMIC 1000pF 10% 500V
C223	1-128-102-11	s	ELECT 1200uF 20% 16V
C225	1-128-584-11	s	ELECT 120uF 20% 16V
C226	1-128-585-11	s	ELECT 270uF 20% 16V
C228	1-128-585-11	s	ELECT 270uF 20% 16V
C230	1-130-489-00	s	MYLAR 0.033uF 5% 50V
C231	1-136-169-00	s	MYLAR 0.22uF 5% 50V
C232	1-130-483-00	s	MYLAR 0.01uF 5% 50V
C233	1-136-157-00	s	FILM, CHIP 0.022uF 5% 50V
CN101	1-564-216-00	o	CONNECTOR, VH 5P, MALE
CN102	1-564-215-11	o	CONNECTOR 4P, MALE
CN103	1-564-321-00	o	CONNECTOR, VH 2P, MALE
CN201	1-564-932-11	o	CONNECTOR 9P, MALE

(M BOARD/SOPS-1046(UVW-1800P/1600P(EK)))

Ref. No. or Q'ty	Part No.	SP	Description
D101	8-719-510-71	s	DIODE D10XB60
D102	8-719-313-16	s	DIODE AU02A
D103	8-719-911-19	s	DIODE 1SS119
D104	8-719-510-26	s	DIODE D1NL20
D105	8-719-510-26	s	DIODE D1NL20
D106	8-719-313-16	s	DIODE AU02A
D107	8-719-911-19	s	DIODE 1SS119
D108	8-719-109-84	s	DIODE RD5.1ES-B1
D109	8-719-911-19	s	DIODE 1SS119
D110	8-719-109-89	s	DIODE RD5.6ES-B2
D201	8-719-510-12	s	DIODE D10SC4M
D202	8-719-510-39	s	DIODE D10LC20U
D203	8-719-510-39	s	DIODE D10LC20U
D204	8-719-988-31	s	DIODE D10SC6MR
D205	8-719-025-11	s	DIODE D8LC20UR
D206	8-719-027-20	s	DIODE D3S4M-F
D208	8-719-911-19	s	DIODE 1SS119
D209	8-719-109-88	s	DIODE RD5.6ES-B1
D210	8-719-911-19	s	DIODE 1SS119
D211	8-719-110-12	s	DIODE RD9.1ES-B1
D213	8-719-110-42	s	DIODE RD15ES-B3
D214	8-719-110-52	s	DIODE RD20ES-B1
IC101	8-759-520-23	s	IC FA5304P
IC102	8-719-028-92	s	PHOTO-COUPLER PS2652-P-V
IC103	8-719-028-92	s	PHOTO-COUPLER PS2652-P-V
IC103	8-719-820-67	s	PHOTO-COUPLER TLP634GB-LF2
IC201	8-759-604-49	s	IC M5F7909L
IC202	8-759-908-15	s	IC TL431CLP
L101	1-423-974-11	s	FILTER, LINE
L103	1-412-552-11	s	INDUCTOR 2.2mH
L201	1-406-929-11	s	COIL, CHOKE
L202	1-424-254-31	s	COIL, CHOKE 4.7uH
L203	1-406-531-11	s	COIL, CHOKE 30uH
L204	1-424-255-11	s	COIL, CHOKE 10uH
L205	1-424-254-31	s	COIL, CHOKE 4.7uH
L206	1-424-255-11	s	COIL, CHOKE 10uH
L207	1-406-929-11	s	COIL, CHOKE
L208	1-424-255-11	s	COIL, CHOKE 10uH
Q101	8-729-322-18	s	TRANSISTOR 2SK1402A
Q201	8-729-900-80	s	TRANSISTOR DTC114ES
R102	1-217-785-11	s	WIREWOUND 15 5% 5W
R103	1-260-127-11	s	CARBON 220K 5% 1/2W
R104	1-215-904-11	s	METAL 100K 5% 2W
R105	1-215-904-11	s	METAL 100K 5% 2W
R106	1-215-902-11	s	METAL 47K 5% 2W
R107	1-215-374-00	s	METAL 11 1% 1/6W
R108	1-249-394-11	s	CARBON 12 5% 1/4W
R109	1-249-441-11	s	CARBON 100K 5% 1/4W
R110	1-249-390-11	s	CARBON 5.6 5% 1/4W
R111	1-249-397-11	s	CARBON 22 5% 1/4W
R112	1-249-381-11	s	CARBON 1 5% 1/4W
R113	1-249-398-11	s	CARBON 27 5% 1/4W
R114	1-249-429-11	s	CARBON 10K 5% 1/4W
R115	1-249-421-11	s	CARBON 2.2K 5% 1/4W
R116	1-247-903-00	s	CARBON 1M 5% 1/4W
R117	1-215-902-11	s	METAL 47K 5% 2W
R118	1-249-436-11	s	CARBON 39K 5% 1/4W

(M BOARD/SOPS-1046(UVW-1800P/1600P(EK)))

Ref. No. or Q'ty	Part No.	SP	Description
R119	1-260-127-11	s	CARBON 220K 5% 1/2W
R201-205	1-215-882-00	s	METAL 22 5% 2W
R206	1-249-419-11	s	CARBON 1.5K 5% 1/4W
R209	1-215-429-00	s	METAL 2.2K 1% 1/6W
R210	1-215-433-00	s	METAL 3.3K 1% 1/6W
R212	1-249-413-11	s	CARBON 470 5% 1/4W
R213	1-247-807-31	s	CARBON 100 5% 1/4W
R214	1-249-433-11	s	CARBON 22K 5% 1/4W
RV201	1-237-500-21	s	RES, ADJ METAL 1K
RY101	1-515-864-11	s	RELAY
T101	1-426-623-11	s	TRANSFORMER CONVERTER
T102	1-424-573-11	s	TRANSFORMER, CURRENT

FRAME LIST

Ref. No. or Q'ty	Part No.	SP	Description
1pc	A-8260-827-A	s	DRUM ASSY, DBH-40A-R (for UVW-1800P)
1pc	A-8267-658-A	s	UPPER DRUM ASSY, DBR-40-R (for UVW-1800P)
1pc	A-8260-829-A	s	DRUM ASSY, DBH-42A-R (for UVW-1600P)
1pc	A-8267-660-A	s	UPPER DRUM ASSY, DBR-42-R (for UVW-1600P)
1pc	A-8260-972-A	s	DRUM ASSY, DBH-39A-R (for UVW-1800)
1pc	A-8260-973-A	s	UPPER DRUM ASSY, DBR-39-R (for UVW-1800)
1pc	A-8260-976-A	s	DRUM ASSY, DBH-41A-R (for UVW-1600)
1pc	A-8260-977-A	s	UPPER DRUM ASSY, DBR-41-R (for UVW-1600)
1pc	⚠ 1-413-889-11	s	REGULATOR, SWITCHING (SOPS-1045)
1pc	⚠ 1-413-925-12	s	REGULATOR, SWITCHING (SOPS-1046)
1pc	1-690-106-12	s	WIRE, FLEXIBLE CARD 5P
1pc	⚠ 1-810-374-12	s	UNIT, FLD
1pc	1-810-381-11	s	SENSOR, CONDENSATION
H1001	8-825-778-81	s	HEAD, EPS244-2103H(for UVW-1600)
H1001	8-825-778-91	s	HEAD, PS244-2103G (for UVW-1800)
H1002	8-825-554-83	s	HEAD, CTL PS244-21B
H1003	8-825-770-73	s	HEAD, FE EF291-21
L1001	1-543-316-31	s	HEAD, SENSING "TAPE END SENSOR"
L1002	1-543-316-31	s	HEAD, SENSING "TAPE TOP SENSOR"
M1001	1-698-152-11	s	MOTOR, DC (SVD-1449) "THREADING"
M1002	1-698-152-11	s	MOTOR, DC (SVD-1449) "CASSETTE"
M1003	1-698-231-12	s	MOTOR, DC "S-REEL"
M1004	1-698-231-12	s	MOTOR, DC "T-REEL"
M1005	1-698-179-11	s	MOTOR, DC "CAPSTAN"
M1006	1-698-152-11	s	MOTOR, DC (SVD-1449) "POSITION"
PM1001	1-454-338-00	s	SOLENOID "PINCH"
PM1002	1-454-417-41	s	SOLENOID "S-BRAKE"
PM1003	1-454-417-41	s	SOLENOID "T-BRAKE"
S1001	⚠ 1-570-117-31	s	SWITCH, ROCKER "AC POWER"

FRAME, HARNESS, CONNECTOR & CONTACT LIST

Ref. No. or Q'ty	Part No.	SP	Description
to ACE ASSY			
CN921F(for UVW-1800 only)			
	1-565-978-11	o	HOUSING 6P
6pcs	1-565-977-11	s	CONTACT, FEMALE AWG28-32
CN922F	1-568-819-11	o	HOUSING 9P
9pcs	1-565-977-11	s	CONTACT, FEMALE AWG28-32
to AP-31/31A board			
	AP-31: UVW-1800		
	AP-31A: UVW-1600		
CN1F	1-569-196-41	o	HOUSING 3P
1pc	1-569-191-11	o	CONTACT, FEMALE AWG22-26
2pcs	1-569-193-11	o	CONTACT, FEMALE
CN2F	1-569-196-31	o	HOUSING 3P
1pc	1-569-191-11	o	CONTACT, FEMALE AWG22-26
2pcs	1-569-193-11	o	CONTACT, FEMALE
CN3F	1-569-196-11	o	HOUSING 3P
1pc	1-569-191-11	o	CONTACT, FEMALE AWG22-26
2pcs	1-569-193-11	o	CONTACT, FEMALE
to AR-14 board (for UVW-1800 only)			
CN1F	1-569-202-11	o	HOUSING 9P
3pcs	1-569-191-11	o	CONTACT, FEMALE AWG22-26
6pcs	1-569-193-11	o	CONTACT, FEMALE
to AUDIO LEVEL METER			
CN1F	1-559-586-11	o	WIRE, FLEXIBLE CARD 20P
CN2F	1-559-586-11	o	WIRE, FLEXIBLE CARD 20P
to CAPSTAN MOTOR CONTROL BLOCK			
CN8F	1-562-153-11	o	HOUSING 8P
8pcs	1-564-026-00	o	CONTACT, FEMALE AWG26-30
to CASSETTE			
CN930F	1-562-157-11	o	HOUSING 12P
12pcs	1-564-026-00	o	CONTACT, FEMALE AWG26-30
to CP-225/225A board			
	CP-225: UVW-1800		
	CP-225A: UVW-1600		
CN651F	1-562-149-11	o	HOUSING 4P
4pcs	1-564-026-00	o	CONTACT, FEMALE AWG26-30
CN652F	1-562-152-11	o	HOUSING 7P
7pcs	1-564-026-00	o	CONTACT, FEMALE AWG26-30
CN653F	1-562-151-11	o	HOUSING 6P
6pcs	1-564-026-00	o	CONTACT, FEMALE AWG26-30
CN654F	1-562-157-11	o	HOUSING 12P
12pcs	1-564-026-00	o	CONTACT, FEMALE AWG26-30
CN655F	1-562-185-11	o	HOUSING 14P
14pcs	1-564-026-00	o	CONTACT, FEMALE AWG26-30
CN656F	1-562-147-11	o	HOUSING 2P
2pcs	1-564-026-00	o	CONTACT, FEMALE AWG26-30

(FRAME, HARNESS, CONNECTOR & CONTACT LIST)

Ref. No. or Q'ty	Part No.	SP	Description
to CP-226/226A board			
	CP-226: UVW-1800		
	CP-226A: UVW-1600		
CN274F	1-562-152-11	o	HOUSING 7P
7pcs	1-564-026-00	o	CONTACT, FEMALE AWG26-30
CN275F	1-562-151-11	o	HOUSING 6P
6pcs	1-564-026-00	o	CONTACT, FEMALE AWG26-30
CN276F	1-562-147-11	o	HOUSING 2P
2pcs	1-564-026-00	o	CONTACT, FEMALE AWG26-30
to CP-237/237A board			
	CP-237: UVW-1800		
	CP-237A: UVW-1600		
CN532F	1-575-733-11	s	CABLE, FLAT 17P
to DR-214 board			
CN301F	1-558-261-31	s	WIRE, FLEXIBLE CARD 30P
CN302F	1-558-261-31	s	WIRE, FLEXIBLE CARD 30P
CN303F	1-558-261-31	s	WIRE, FLEXIBLE CARD 30P
to DRUM ASSY			
CN1F	1-580-938-11	o	HOUSING 15P
15pcs	1-565-740-11	o	CONTACT, FEMALE AWG24-30
CN901F(for UVW-1800 only)			
	1-565-978-11	o	HOUSING 6P
6pcs	1-565-977-11	s	CONTACT, FEMALE AWG28-32
CN911F	1-569-199-11	o	HOUSING CONNECTOR 6P
2pcs	1-569-192-11	o	CONTACT, FEMALE AWG22-26
4pcs	1-569-194-11	o	CONTACT, FEMALE AWG24-30
CN912F	1-569-199-31	o	HOUSING 6P
2pcs	1-569-192-11	o	CONTACT, FEMALE AWG22-26
4pcs	1-569-194-11	o	CONTACT, FEMALE AWG24-30
to DUS-355 board			
CN934F	1-569-195-11	s	HOUSING 2P
2pcs	1-569-193-11	o	CONTACT, FEMALE
to HP-61/61A board			
	HP-61: UVW-1800		
	HP-61A: UVW-1600		
CN401F	1-562-155-11	o	HOUSING 10P
10pcs	1-564-026-00	o	CONTACT, FEMALE AWG26-30
CN403F	1-562-148-11	o	HOUSING 3P
3pcs	1-564-026-00	o	CONTACT, FEMALE AWG26-30
to KY-249/249A board			
	KY-249: UVW-1800		
	KY-249A: UVW-1600		
CN590F	1-562-958-11	o	HOUSING 15P
15pcs	1-564-026-00	o	CONTACT, FEMALE AWG26-30
CN591F	1-559-586-11	o	WIRE, FLEXIBLE CARD 20P
CN592F	1-562-149-11	o	HOUSING 4P
4pcs	1-564-026-00	o	CONTACT, FEMALE AWG26-30
CN593F	1-559-586-11	o	WIRE, FLEXIBLE CARD 20P

(FRAME, HARNESS, CONNECTOR & CONTACT LIST)

Ref. No. or Q'ty	Part No.	SP	Description
to MB-470/470A board			
	MB-470: UVW-1800		
	MB-470A: UVW-1600		
CN200F	1-562-800-11	o	HOUSING 9P
9pcs	1-562-210-11	o	CONTACT, FEMALE AWG18-22
CN201F	1-562-511-11	o	HOUSING 9P
9pcs	1-562-490-11	o	CONTACT, FEMALE AWG22-28
CN211F	1-562-157-11	o	HOUSING 12P
12pcs	1-564-026-00	o	CONTACT, FEMALE AWG26-30
CN231F	1-751-632-12	s	WIRE, FLEXIBLE CARD 34P
CN232F	1-575-733-11	s	CABLE, FLAT 17P
CN235F	1-562-148-11	o	HOUSING 3P
3pcs	1-564-026-00	o	CONTACT, FEMALE AWG26-30
CN262F	1-562-958-11	o	HOUSING 15P
15pcs	1-564-026-00	o	CONTACT, FEMALE AWG26-30
CN266F	1-562-149-11	o	HOUSING 4P
4pcs	1-564-026-00	o	CONTACT, FEMALE AWG26-30
CN267F	1-562-152-11	o	HOUSING 7P
7pcs	1-564-026-00	o	CONTACT, FEMALE AWG26-30
CN268F	1-562-185-11	o	HOUSING 14P
14pcs	1-564-026-00	o	CONTACT, FEMALE AWG26-30
CN269F	1-562-151-11	o	HOUSING 6P
6pcs	1-564-026-00	o	CONTACT, FEMALE AWG26-30
CN271F	1-562-157-11	o	HOUSING 12P
12pcs	1-564-026-00	o	CONTACT, FEMALE AWG26-30
to MB-471/471A board			
	MB-471: UVW-1800		
	MB-471A: UVW-1600		
CN251F	1-562-508-11	o	HOUSING 6P
9pcs	1-562-490-11	o	CONTACT, FEMALE AWG22-28
CN261F	1-562-157-11	o	HOUSING 12P
12pcs	1-564-026-00	o	CONTACT, FEMALE AWG26-30
CN264F(for UVW-1800 only)			
	1-569-200-31	o	HOUSING 7P
2pcs	1-569-191-11	o	CONTACT, FEMALE AWG22-26
4pcs	1-569-193-11	o	CONTACT, FEMALE
CN265F(for UVW-1800 only)			
	1-562-148-11	o	HOUSING 3P
3pcs	1-564-026-00	o	CONTACT, FEMALE AWG26-30
CN274F	1-562-152-11	o	HOUSING 7P
7pcs	1-564-026-00	o	CONTACT, FEMALE AWG26-30
CN275F	1-562-151-11	o	HOUSING 6P
6pcs	1-564-026-00	o	CONTACT, FEMALE AWG26-30
CN276F(for UVW-1800 only)			
	1-562-151-11	o	HOUSING 6P
6pcs	1-564-026-00	o	CONTACT, FEMALE AWG26-30
CN277F	1-562-149-11	o	HOUSING 4P
4pcs	1-564-026-00	o	CONTACT, FEMALE AWG26-30

(FRAME, HARNESS, CONNECTOR & CONTACT LIST)

Ref. No. or Q'ty	Part No.	SP	Description
to MB-471/471A board			
	MB-471: UVW-1800		
	MB-471A: UVW-1600		
CN278F	1-562-155-11	o	HOUSING 10P
10pcs	1-564-026-00	o	CONTACT, FEMALE AWG26-30
CN281F(for UVW-1800 only)			
	1-751-632-12	s	WIRE, FLEXIBLE CARD 34P
to MS-39/39A board			
	MS-39: UVW-1800		
	MS-39A: UVW-1600		
CN350F	1-562-157-11	o	HOUSING 12P
12pcs	1-564-026-00	o	CONTACT, FEMALE AWG26-30
CN351F	1-562-149-11	o	HOUSING 4P
4pcs	1-564-026-00	o	CONTACT, FEMALE AWG26-30
CN352F	1-569-195-11	s	HOUSING 2P
2pcs	1-569-193-11	o	CONTACT, FEMALE
CN353F	1-562-152-11	o	HOUSING 7P
7pcs	1-564-026-00	o	CONTACT, FEMALE AWG26-30
CN354F	1-569-208-11	o	HOUSING 15P
15pcs	1-569-193-11	o	CONTACT, FEMALE
CN355F	1-562-153-11	o	HOUSING 8P
8pcs	1-564-026-00	o	CONTACT, FEMALE AWG26-30
CN356F	1-751-633-11	s	WIRE, FLEXIBLE CARD 13P
CN357F	1-751-634-11	s	WIRE, FLEXIBLE CARD 13P
CN358F	1-562-151-11	o	HOUSING 6P
6pcs	1-564-026-00	o	CONTACT, FEMALE AWG26-30
CN359F	1-562-149-11	o	HOUSING 4P
4pcs	1-564-026-00	o	CONTACT, FEMALE AWG26-30
CN360F	1-569-197-11	o	HOUSING 4P
4pcs	1-569-193-11	o	CONTACT, FEMALE
CN361F	1-569-196-11	o	HOUSING 3P
1pc	1-569-191-11	o	CONTACT, FEMALE AWG22-26
2pcs	1-569-193-11	o	CONTACT, FEMALE
CN362F	1-558-261-31	s	WIRE, FLEXIBLE CARD 30P
CN363F	1-558-261-31	s	WIRE, FLEXIBLE CARD 30P
CN364F	1-558-261-31	s	WIRE, FLEXIBLE CARD 30P
to PD-35 board			
CN851F	1-562-147-11	o	HOUSING 2P
2pcs	1-564-026-00	o	CONTACT, FEMALE AWG26-30
CN854F	1-562-151-11	o	HOUSING 6P
6pcs	1-564-026-00	o	CONTACT, FEMALE AWG26-30
to PTC-66 board			
CN944F	1-562-149-11	o	HOUSING 4P
4pcs	1-564-026-00	o	CONTACT, FEMALE AWG26-30

(FRAME, HARNESS, CONNECTOR & CONTACT LIST)

Ref. No. or Q'ty	Part No.	SP	Description
to PTC-67 board			
CN941F	1-562-152-11	o	HOUSING 7P
7pcs	1-564-026-00	o	CONTACT, FEMALE AWG26-30
CN942F	1-569-195-21	o	HOUSING 2P
2pcs	1-569-193-11	o	CONTACT, FEMALE
CN943F	1-562-147-11	o	HOUSING 2P
2pcs	1-564-026-00	o	CONTACT, FEMALE AWG26-30
to PTC-68 board			
CN940F	1-562-149-11	o	HOUSING 4P
4pcs	1-564-026-00	o	CONTACT, FEMALE AWG26-30
to RM-126 board			
CN946F	1-751-633-12	s	WIRE, FLEXIBLE CARD 13P
CN947F	1-569-197-11	o	HOUSING 4P
4pcs	1-569-193-11	o	CONTACT, FEMALE
to RM-127 board			
CN951F	1-751-634-12	s	WIRE, FLEXIBLE CARD 13P
CN952F	1-569-197-11	o	HOUSING 4P
4pcs	1-569-193-11	o	CONTACT, FEMALE
to RP-70/70A board			
	RP-70: UVW-1800		
	RP-70A: UVW-1600		
CN1F	1-569-196-11	o	HOUSING 3P
1pc	1-569-192-11	o	CONTACT, FEMALE AWG22-26
2pcs	1-569-194-11	o	CONTACT, FEMALE AWG24-30
CN101F	1-569-196-31	o	HOUSING 3P
1pc	1-569-192-11	o	CONTACT, FEMALE AWG22-26
2pcs	1-569-194-11	o	CONTACT, FEMALE AWG24-30
CN201F	1-569-196-41	o	HOUSING 3P
1pc	1-569-192-11	o	CONTACT, FEMALE AWG22-26
2pcs	1-569-194-11	o	CONTACT, FEMALE AWG24-30
CN301F	1-569-196-21	o	HOUSING 3P
1pc	1-569-192-11	o	CONTACT, FEMALE AWG22-26
2pcs	1-569-194-11	o	CONTACT, FEMALE AWG24-30
to SE-207 board			
CN950F	1-569-619-11	o	HOUSING 4P
4pcs	1-565-977-11	s	CONTACT, FEMALE AWG28-32
to SWITCHING REGULATOR			
CN1F	⚠ 1-562-800-11	o	HOUSING 9P
9pcs	⚠ 1-562-210-11	o	CONTACT, FEMALE AWG18-22
CN101F	⚠ 1-562-286-11	o	HOUSING 5P
2pcs	⚠ 1-562-210-11	o	CONTACT, FEMALE AWG18-22
CN151F	⚠ 1-562-285-11	o	HOUSING 4P
2pcs	⚠ 1-562-210-11	o	CONTACT, FEMALE AWG18-22
to TAPE END SENSOR			
CN938F	1-562-147-11	o	HOUSING 2P
2pcs	1-564-026-00	o	CONTACT, FEMALE AWG26-30

(FRAME, HARNESS, CONNECTOR & CONTACT LIST)

Ref. No. or Q'ty	Part No.	SP	Description
to TAPE TOP SENSOR			
CN939F	1-562-147-11	o	HOUSING 2P
2pcs	1-564-026-00	o	CONTACT, FEMALE AWG26-30
to TR-84 board			
CN945F	1-569-619-11	o	HOUSING 4P
4pcs	1-565-977-11	s	CONTACT, FEMALE AWG28-32
to VR-155 board (for UVW-1800 only)			
CN402F	1-562-151-11	o	HOUSING 6P
6pcs	1-564-026-00	o	CONTACT, FEMALE AWG26-30

18-4.PACKING MATERIALS & ACCESSORIES

Ref. No. or Q'ty	Part No.	SP	Description
1pc	⚠ 1-551-812-11	s	CORD, POWER 3P (for UC)
1pc	⚠ 1-557-161-11	s	CORD, POWER 2P (for J)
1pc	⚠ 1-590-910-11	s	CORD, POWER 3P (for EK)
1pc	1-751-019-81	o	CABLE, D-SUB 9P(RCC5G) 5m
1pc	3-182-362-01	o	SPACER
1pc	3-182-442-02	o	CUSHION (BOTTOM)
1pc	3-182-443-03	o	CUSHION (TOP)
1pc	3-182-233-02	o	INDIVIDUAL CARTON (for UVW-1600(J,UC))
1pc	3-183-334-02	o	INDIVIDUAL CARTON (for UVW-1600(EK))
1pc	3-182-444-02	o	INDIVIDUAL CARTON (for UVW-1800(J,UC))
1pc	3-183-335-02	o	INDIVIDUAL CARTON (for UVW-1800(EK))
1pc	3-704-355-01	o	SHEET (STANDARD), PROTECTION
1pc	3-757-560-03	s	MANUAL, INSTRUCTION (Japanese for UVW-1600(J))
1pc	⚠ 3-757-560-23	s	MANUAL, INSTRUCTION (English, French for UVW-1600(UC))
1pc	3-757-560-43	s	MANUAL, INSTRUCTION (German, Italian for UVW-1600(EK))
1pc	3-757-561-03	s	MANUAL, INSTRUCTION (Japanese for UVW-1800(J))
1pc	⚠ 3-757-561-24	s	MANUAL, INSTRUCTION (English, French for UVW-1800(UC))
1pc	3-757-561-43	s	MANUAL, INSTRUCTION (German, Italian for UVW-1800(EK))
1pc	3-800-983-01	s	INSTRUCTION (for UVW-1800/1600(J))

18-5.OPTIONAL FIXTURES

Part No.	SP	Description
J-6001-820-A	o	DRUM ECCENTRICITY GAUGE (3)
J-6001-830-A	o	DRUM ECCENTRICITY GAUGE (2)
J-6001-840-A	o	DRUM ECCENTRICITY GAUGE (1)
or		
J-6325-530-A	o	DRUM ECCENTRICITY GAUGE (6)
J-6031-820-A	o	MULTI CONNECTOR CABLE (DIBNC)
J-6031-830-A	o	MULTI CONNECTOR CABLE (DOBNC)
J-6080-029-A	o	ADJUSTMENT MIRROR
J-6087-000-A	o	DRUM ECCENTRICITY GAUGE (5)
J-6150-960-A	o	REEL MOTOR SHAFT SLANTNESS CHECK FIXTURE
J-6152-450-A	o	WIRE CLEARANCE GAUGE
J-6320-680-A	o	REEL TABLE HEIGHT GAUGE
J-6320-880-A	o	CASSETTE BASE PLATE (L)
J-6321-500-A	o	TAPE GUIDE ADJUSTMENT DRIVER
J-6332-780-A	o	EXTENSION BOARD, EX-278
J-6332-790-A	o	EXTENSION BOARD, EX-279
J-6335-790-A	o	DEVIATION CHECKER, EW579 (for UVW-1800(J,UC))
J-6335-800-A	o	DEVIATION CHECKER, EW580 (for UVW-1800P(EK))
J-6381-380-A	o	S CONNECTOR CABLE, EW703
2-034-697-00	o	CLEANING PIECE
3-703-360-09	o	PARALLEL PIN
7-661-018-18	o	OIL
7-662-010-04	o	GREASE, SGL-505 (20 g)
7-700-736-01	o	L-SHAPED HEXAGONAL WRENCH (d:1.27 mm)
7-700-736-05	o	L-SHAPED HEXAGONAL WRENCH (d:1.5 mm)
7-700-736-06	o	L-SHAPED HEXAGONAL WRENCH (d:0.89 mm)
8-960-096-01	o	ALIGNMENT TAPE, CR2-1B
8-960-096-41	o	ALIGNMENT TAPE, CR5-1B
8-960-096-51	o	ALIGNMENT TAPE, CR2-1B PS
8-960-096-91	o	ALIGNMENT TAPE, CR5-1B PS
8-960-097-45	o	ALIGNMENT TAPE, CR8-1A
8-960-098-45	o	ALIGNMENT TAPE, CR8-1A PS
8-960-096-86	o	ALIGNMENT TAPE, CR8-1B PS
9-911-053-00	o	THICKNESS GAUGE
9-919-573-01	o	CLEANING FLUID
STANDARD PRODUCTS		TENTEL METER (T2-H7-SLC)

UVW-1800
UVW-1800P
UVW-1600
UVW-1600P (J, UC, EK)
9-977-551-22 (1)

Sony Corporation
Communication System Solutions Network Company

Printed in Japan
2000. 10 08