Service Manual

Pioneer

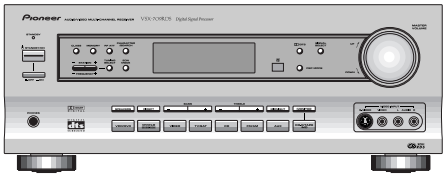

ORDER NO.
RRV2274

AUDIO/VIDEO MULTI-CHANNEL RECEIVER

VSX-709RDS
VSX-609RDS

THIS MANUAL IS APPLICABLE TO THE FOLLOWING MODEL(S) AND TYPE(S).

Type	Model		Power Requirement	Remarks
	VSX-709RDS	VSX-609RDS		
MYXJIEW	○	○	AC220-230V	
MYXJIGR	○	○	AC220-230V	
MVXJI	○	○	AC230V	

CONTENTS

1. SAFETY INFORMATION ····· 2
2. EXPLODED VIEWS AND PARTS LIST ····· 3
3. BLOCK DIAGRAM AND SCHEMATIC DIAGRAM ····· 8
4. PCB CONNECTION DIAGRAM ····· 28
5. PCB PARTS LIST ····· 43
6. ADJUSTMENT ····· 48
7. GENERAL INFORMATION ····· 49
   7.1 DISASSEMBLY ····· 49
   7.2 PARTS ····· 50
      7.2.1 IC ····· 50
      7.2.2 DISPLAY ····· 55
8. PANEL FACILITIES AND SPECIFICATIONS ····· 57

PIONEER CORPORATION 4-1, Meguro 1-chome, Meguro-ku, Tokyo 153-8654, Japan
PIONEER ELECTRONICS SERVICE, INC. P.O. Box 1760, Long Beach, CA 90801-1760, U.S.A.
PIONEER EUROPE N.V. Haven 1087, Keetberglaan 1, 9120 Melsele, Belgium
PIONEER ELECTRONICS ASIACENTRE PTE. LTD. 253 Alexandra Road, #04-01, Singapore 159936

Ⓒ PIONEER CORPORATION 2000

T – ZZK MAR. 2000 Printed in Japan

1. SAFETY INFORMATION

This service manual is intended for qualified service technicians ; it is not meant for the casual do-it-yourselfer. Qualified technicians have the necessary test equipment and tools, and have been trained to properly and safely repair complex products such as those covered by this manual.
Improperly performed repairs can adversely affect the safety and reliability of the product and may void the warranty. If you are not qualified to perform the repair of this product properly and safely, you should not risk trying to do so and refer the repair to a qualified service technician.

WARNING
This product contains lead in solder and certain electrical parts contain chemicals which are known to the state of California to cause cancer, birth defects or other reproductive harm.

Health & Safety Code Section 25249.6 – Proposition 65

NOTICE
(FOR CANADIAN MODEL ONLY)
Fuse symbols (fast operating fuse) and/or (slow operating fuse) on PCB indicate that replacement parts must be of identical designation.

REMARQUE
(POUR MODÈLE CANADIEN SEULEMENT)
Les symboles de fusible (fusible de type rapide) et/ou (fusible de type lent) sur CCI indiquent que les pièces de remplacement doivent avoir la même désignation.

(FOR USA MODEL ONLY)

1. SAFETY PRECAUTIONS

The following check should be performed for the continued protection of the customer and service technician.

LEAKAGE CURRENT CHECK

Measure leakage current to a known earth ground (water pipe, conduit, etc.) by connecting a leakage current tester such as Simpson Model 229-2 or equivalent between the earth ground and all exposed metal parts of the appliance (input/output terminals, screwheads, metal overlays, control shaft, etc.). Plug the AC line cord of the appliance directly into a 120V AC 60Hz outlet and turn the AC power switch on. Any current measured must not exceed 0.5mA.

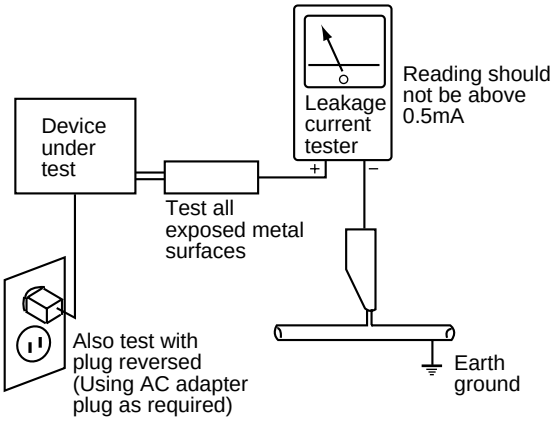

AC Leakage Test

ANY MEASUREMENTS NOT WITHIN THE LIMITS OUTLINED ABOVE ARE INDICATIVE OF A POTENTIAL SHOCK HAZARD AND MUST BE CORRECTED BEFORE RETURNING THE APPLIANCE TO THE CUSTOMER.

2. PRODUCT SAFETY NOTICE

Many electrical and mechanical parts in the appliance have special safety related characteristics. These are often not evident from visual inspection nor the protection afforded by them necessarily can be obtained by using replacement components rated for voltage, wattage, etc. Replacement parts which have these special safety characteristics are identified in this Service Manual.

Electrical components having such features are identified by marking with a ⚠ on the schematics and on the parts list in this Service Manual.
The use of a substitute replacement component which does not have the same safety characteristics as the PIONEER recommended replacement one, shown in the parts list in this Service Manual, may create shock, fire, or other hazards.

Product Safety is continuously under review and new instructions are issued from time to time. For the latest information, always consult the current PIONEER Service Manual. A subscription to, or additional copies of, PIONEER Service Manual may be obtained at a nominal charge from PIONEER.

2. EXPLODED VIEWS AND PARTS LIST

NOTES:
- *Parts marked by "NSP" are generally unavailable because they are not in our Master Spare Parts List.*
- *The ⚠ mark found on some component parts indicates the importance of the safety factor of the part. Therefore, when replacing, be sure to use parts of identical designation.*
- *Screws adjacent to ▼ mark on the product are used for disassembly.*

2.1 PACKING

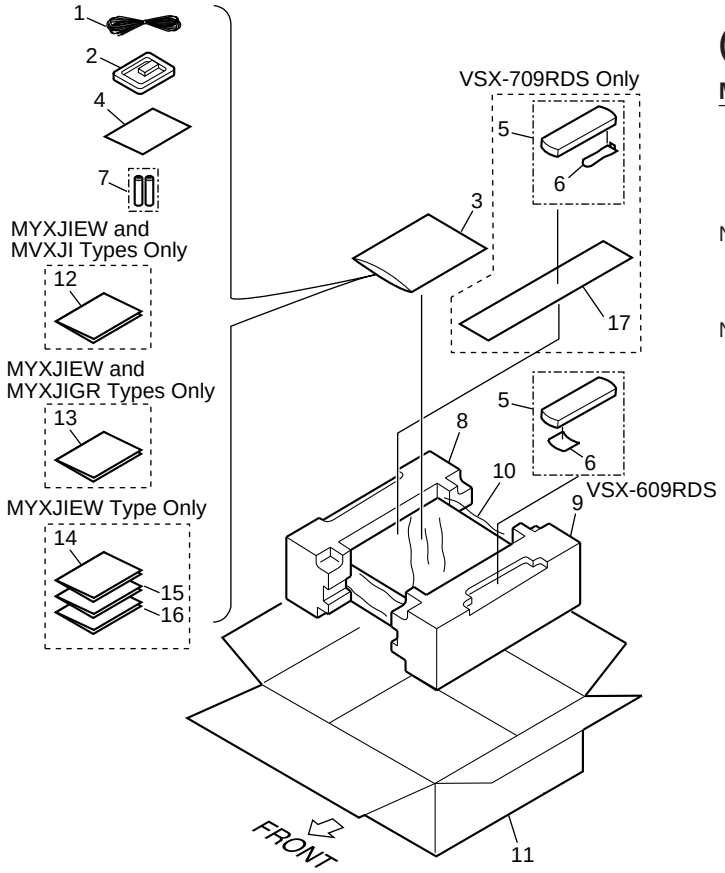

(1) PACKING PARTS LIST

Mark	No.	Description	Part No.
	1	FM Wire Antenna	ADH7005
	2	AM Loop Antenna	ATB7009
	3	Polyethylene Bag (0.03 × 230 × 340)	Z21-038
NSP	4	Warranty Card	ARY7022
	5	Remote Control Unit	See Contrast table (2)
	6	Battery Cover	See Contrast table (2)
NSP	7	Dry Cell Battery	See Contrast table (2)
	8	Left Pad	AHA7263
	9	Right Pad	AHA7264
	10	Packing Sheet	AHG7069
	11	Packing Case	See Contrast table (2)
	12	Operating Instructions (English)	See Contrast table (2)
	13	Operating Instructions (German)	See Contrast table (2)
	14	Operating Instructions (Spanish/Portuguese)	See Contrast table (2)
	15	Operating Instructions (Italian/French)	See Contrast table (2)
	16	Operating Instructions (Dutch/Swedish)	See Contrast table (2)
	17	RC Holder	See Contrast table (2)

(2) CONTRAST TABLE

VSX-709RDS/MYXJIEW, MYXJIGR, MVXJI, VSX-609RDS/MYXJIEW, MYXJIGR and MVXJI are constructed the same except for the following :

Mark	No.	Symbol and Description	Part No.						Remarks
			VSX-709RDS			VSX-609RDS			
			/MYXJIEW	/MYXJIGR	/MVXJI	/MYXJIEW	/MYXJIGR	/MVXJI	
	5	Remote Control Unit	AXD7249	AXD7249	AXD7249	AXD7247	AXD7247	AXD7247	
	6	Battery Cover	AZN7826	AZN7826	AZN7826	AZA7378	AZA7378	AZA7378	
NSP	7	Dry Cell Battery (LR6, AA)	VEM1021	VEM1021	VEM1021	Not used	Not used	Not used	
NSP	7	Dry Cell Battery (R6P, AA)	Not used	Not used	Not used	VEM-013	VEM-013	VEM-013	
	11	Packing Case	AHD7832	AHD7832	AHD7832	AHD7831	AHD7831	AHD7831	
	12	Operating Instructions (English)	ARB7215	Not used	ARB7215	ARB7215	Not used	ARB7215	
	13	Operating Instructions (German)	ARC7273	ARC7273	Not used	ARC7273	ARC7273	Not used	
	14	Operating Instructions (Spanish/Portuguese)	ARC7274	Not used	Not used	ARC7274	Not used	Not used	
	15	Operating Instructions (Italian/French)	ARC7275	Not used	Not used	ARC7275	Not used	Not used	
	16	Operating Instructions (Dutch/Swedish)	ARC7276	Not used	Not used	ARC7276	Not used	Not used	
	17	RC Holder	AHB7035	AHB7035	AHB7035	Not used	Not used	Not used	

2.2 EXTERIOR SECTION

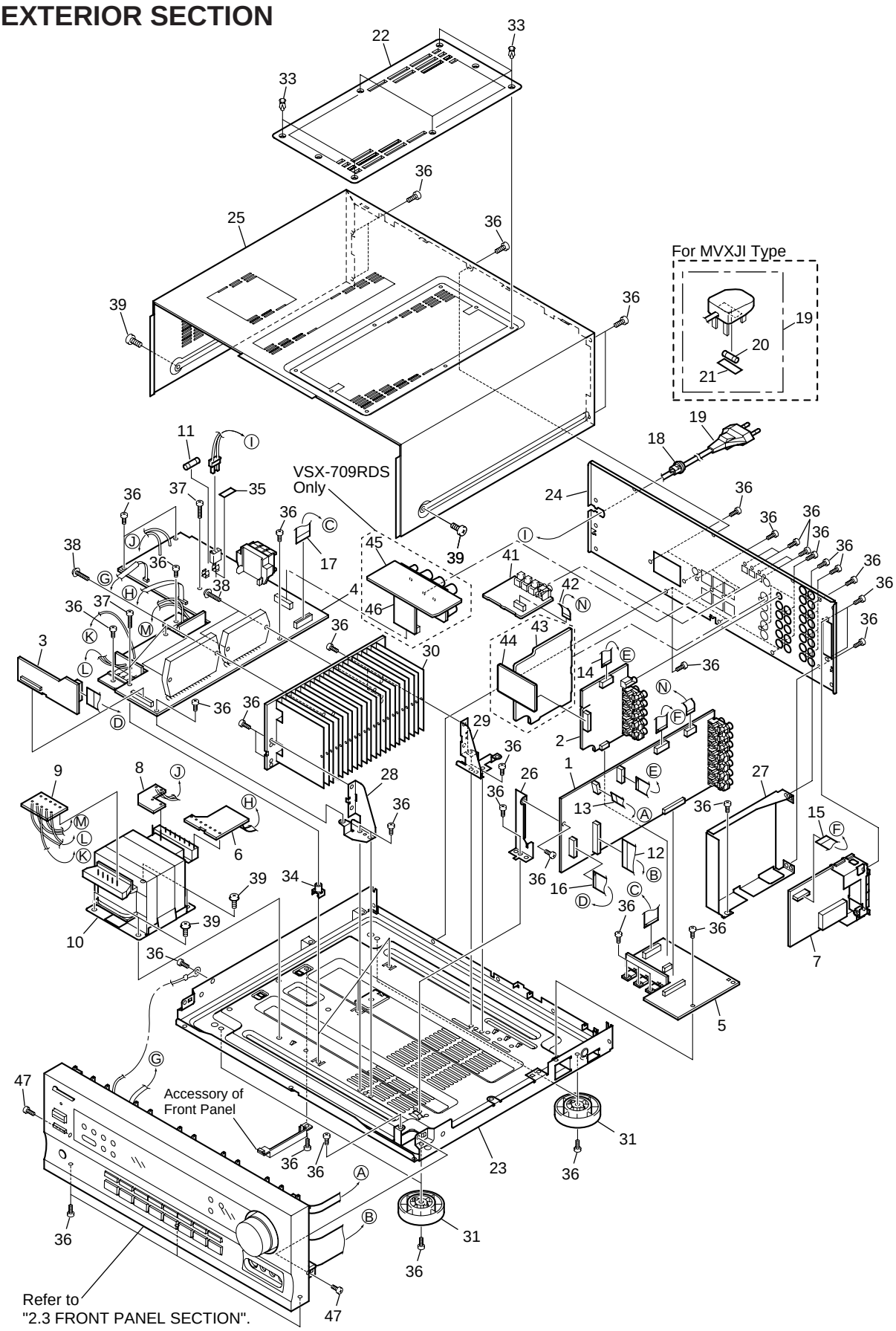

(1) EXTERIOR SECTION PARTS LIST

Mark	No.	Description	Part No.
	1	D.D & INPUT Assy	See Contrast table (2)
	2	VIDEO&6CH IN Assy	See Contrast table (2)
NSP	3	AMP INPUT Assy	AWX7382
	4	AMP&PRIMARY Assy	See Contrast table (2)
	5	REGULATOR Assy	AWX7467
	6	TRANS 2 Assy	AWX7468
	7	FM/AM TUNER Unit	AXX7048
NSP	8	TRANS 1 Assy	AWX7390
NSP	9	TRANS 3 Assy	AWX7392
⚠	10	Power Transformer (AC230V)	ATS7259
⚠	11	Fuse (FU1 : T2.5A)	REK1026
	12	FFC (J31 : 32P/180 BD 60V)	ADD7222
		(D.D & INPUT CN102 ↔ FRONT CN402)	
	13	FFC (J32 : 19P/200 BD 60V)	ADD7221
		(D.D & INPUT CN103 ↔ FRONT CN401)	
	14	FFC (J33 : 13P/200 BD 60V)	ADD7220
		(D.D & INPUT CN104 ↔ VIDEO&6CH IN CN303)	
	15	FFC (J34 : 13P/80 BD 60V)	ADD7189
		(D.D & INPUT CN105 ↔ FM/AM TUNER CN1)	
	16	FFC (J35 : 17P/90 BD 60V)	ADD7219
		(D.D & INPUT CN106 ↔ AMP INPUT CN290)	
	17	FFC (J36 : 22P/80 BD 60V)	ADD7224
		(REGULATOR CN801 ↔ AMP&PRIMARY CN53)	
	18	Strain Relief	CM-22B
⚠	19	AC Power Cord	See Contrast table (2)
⚠	20	Fuse (T5A)	See Contrast table (2)
	21	Fuse Holder	See Contrast table (2)
	22	Top Cover 808	AME7375
NSP	23	Under Base 409	ANA7094
	24	Rear Panel	See Contrast table (2)
	25	Bonnet Case	AZN7779
	26	PCB Angle	ANG7253
	27	Shield R3	ANG7277
	28	Heat Sink Angle F	ANG7251
	29	Heat Sink Angle R	ANG7252
NSP	30	Heat Sink 0.8	ANH7110
	31	Insulator	PNW2766
	32	• • • • • •	
	33	Push Rivet	AEC7025
	34	PCB Mold	AMR2533
NSP	35	Fuse Card	AAX7277
	36	Screw	BBZ30P080FMC
	37	Screw	BBZ30P200FMC
	38	Screw	ABA7043
	39	Screw	FBT40P080FZK
	40	• • • • • •	
	41	DIGITAL IN Assy	See Contrast table (2)
	42	FFC (J37 : 6P/150 BD 60V)	ADD7223
		(D.D & INPUT CN1501 ↔ DIGITAL IN CN1901)	
	43	S. VIDEO Assy	See Contrast table (2)
	44	BOARD TO BOARD Assy	See Contrast table (2)
	45	LARGE SP Assy	See Contrast table (2)
	46	LARGE SP CONNECTION Assy	See Contrast table (2)
	47	Screw	IBZ30P080FMC

(2) CONTRAST TABLE

VSX-709RDS/MYXJIEW, MYXJIGR, MVXJI, VSX-609RDS/MYXJIEW, MYXJIGR and MVXJI are constructed the same except for the following :

Mark	No.	Symbol and Description	Part No.						Remarks
			VSX-709RDS			VSX-609RDS			
			/MYXJIEW	/MYXJIGR	/MVXJI	/MYXJIEW	/MYXJIGR	/MVXJI	
	1	D.D & INPUT Assy	AWX7464	AWX7464	AWX7464	AWX7497	AWX7497	AWX7497	
	2	VIDEO&6CH IN Assy	AWX7458	AWX7458	AWX7458	AWX7474	AWX7474	AWX7474	
	4	AMP&PRIMARY Assy	AWX7484	AWX7484	AWX7484	AWX7478	AWX7478	AWX7478	
⚠	19	AC Power Cord	VDG1061	VDG1061	VDG1063	VDG1061	VDG1061	VDG1063	
⚠	20	Fuse (T5A)	Not used	Not used	PEK1003	Not used	Not used	PEK1003	
	21	Fuse Holder	Not used	Not used	VKR1003	Not used	Not used	VKR1003	
	24	Rear Panel	ANC7897	ANC7897	ANC7897	ANC7896	ANC7896	ANC7896	
	41	DIGITAL IN Assy	AWX7461	AWX7461	AWX7461	AWX7505	AWX7505	AWX7505	
	43	S. VIDEO Assy	AWX7462	AWX7462	AWX7462	Not used	Not used	Not used	
	44	BOARD TO BOARD Assy	AWX7463	AWX7463	AWX7463	Not used	Not used	Not used	
	45	LARGE SP Assy	AWX7510	AWX7510	AWX7510	Not used	Not used	Not used	
	46	LARGE SP CONNECTION Assy	AWX7504	AWX7504	AWX7504	Not used	Not used	Not used	

2.3 FRONT PANEL SECTION

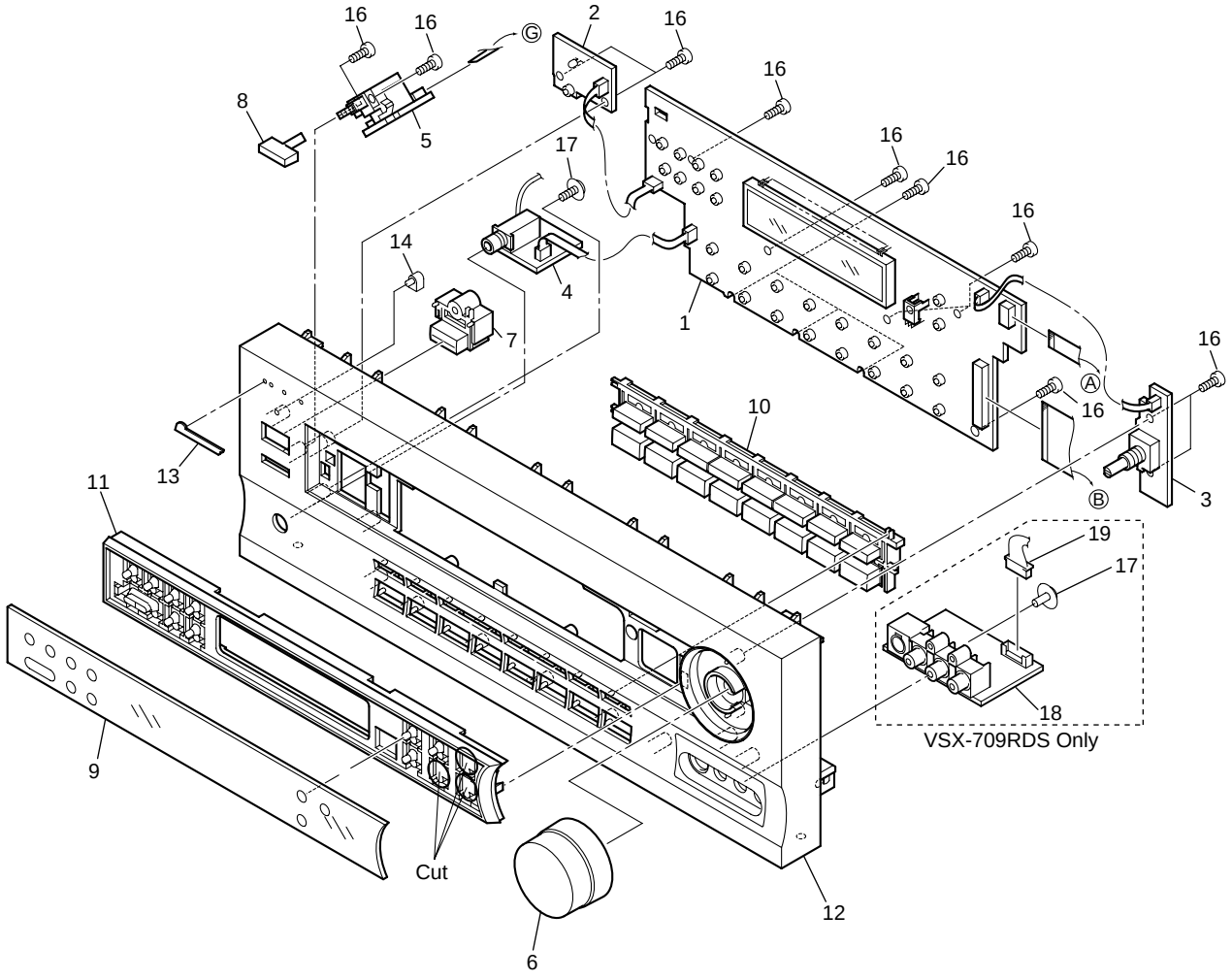

(1) FRONT PANEL SECTION PARTS LIST

Mark	No.	Description	Part No.
	1	FRONT Assy	See Contrast table (2)
	2	POWER SW Assy	AWX7385
NSP	3	R. ENCODER Assy	AWX7386
NSP	4	H.P. Assy	AWX7556
	5	MECHA SW Assy	AWX7443
	6	Volume Knob	AAB7179
	7	Power Button	AAD7440
	8	Power Button M	AAD7442
	9	Window	AAK7721
	10	F Button	See Contrast table (2)
	11	Sub Panel	AAD7552
	12	F Panel	See Contrast table (2)
	13	Name Plate	PAM1776
	14	LED Lens	PNW2019
	15	• • • • • •	
	16	Screw	PPZ30P080FMC
	17	Screw	ABA7009
	18	FRONT VIDEO Assy	See Contrast table (2)
	19	8P Shield Cable	See Contrast table (2)

(2) CONTRAST TABLE

VSX-709RDS/MYXJIEW, MYXJIGR, MVXJI, VSX-609RDS/MYXJIEW, MYXJIGR and MVXJI are constructed the same except for the following :

Mark	No.	Symbol and Description	Part No.						Remarks
			VSX-709RDS			VSX-609RDS			
			/MYXJIEW	/MYXJIGR	/MVXJI	/MYXJIEW	/MYXJIGR	/MVXJI	
	1	FRONT Assy	AWX7459	AWX7459	AWX7459	AWX7477	AWX7477	AWX7477	
	10	F Button	AAD7564	AAD7564	AAD7564	AAD7562	AAD7562	AAD7562	
	12	F Panel	AMB7677	AMB7677	AMB7677	AMB7675	AMB7675	AMB7675	
	18	FRONT VIDEO Assy	AWX7460	AWX7460	AWX7460	Not used	Not used	Not used	
	19	8P Shield Cable	ADX7306	ADX7306	ADX7306	Not used	Not used	Not used	

3. BLOCK DIAGRAM AND SCHEMATIC DIAGRAM

3.1 BLOCK DIAGRAM

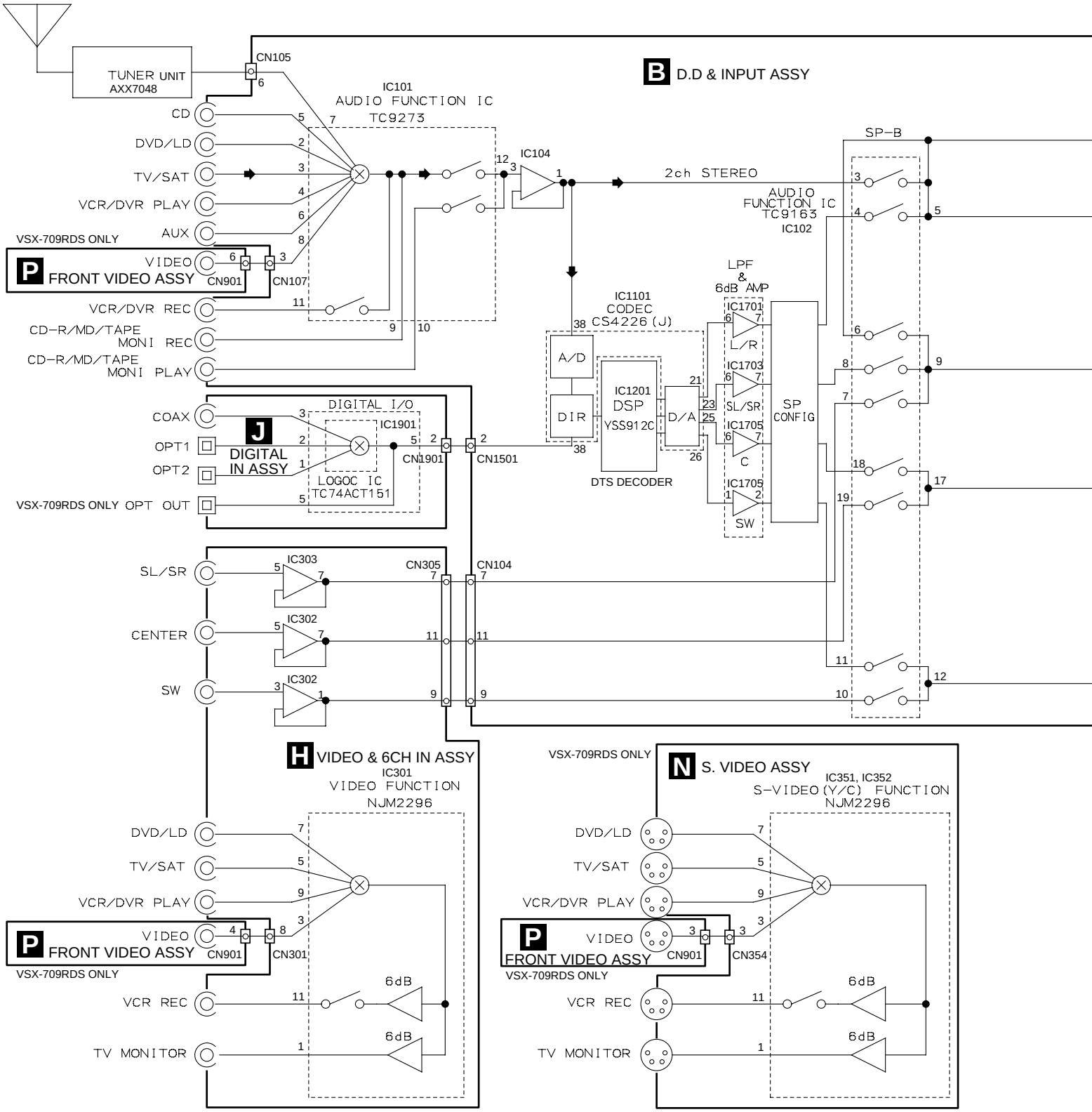

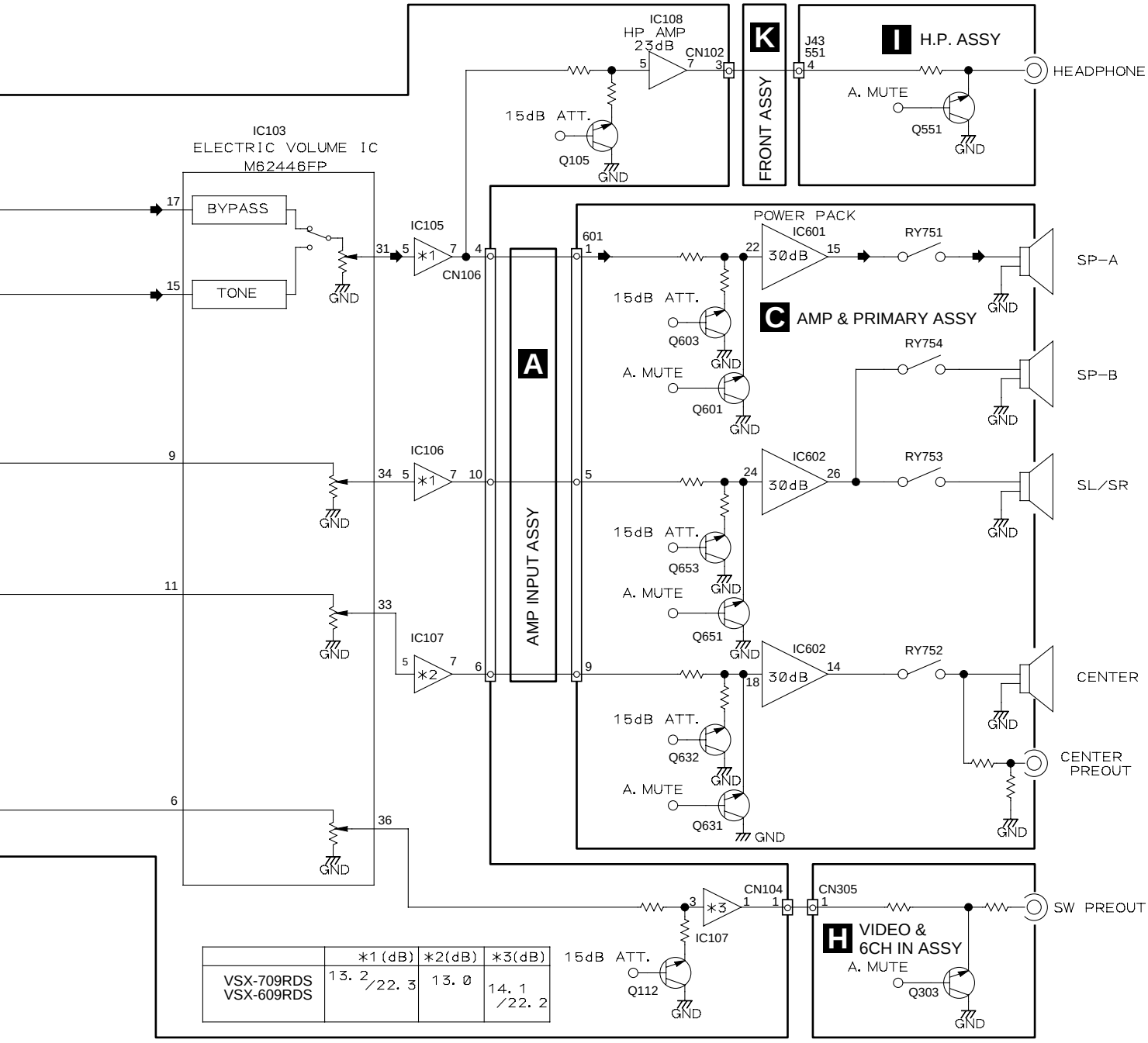

	*1(dB)	*2(dB)	*3(dB)
VSX-709RDS VSX-609RDS	13.2/22.3	13.0	14.1/22.2

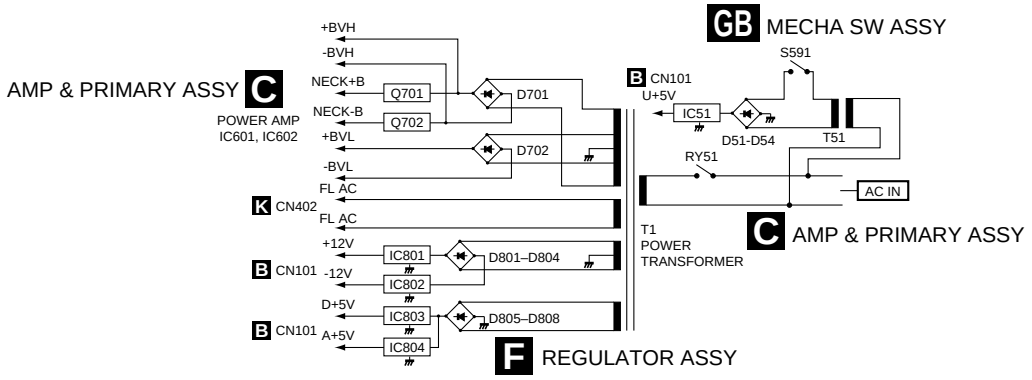

3.2 OVERALL WIRING CONNECTION DIAGRAM and AMP INPUT ASSY

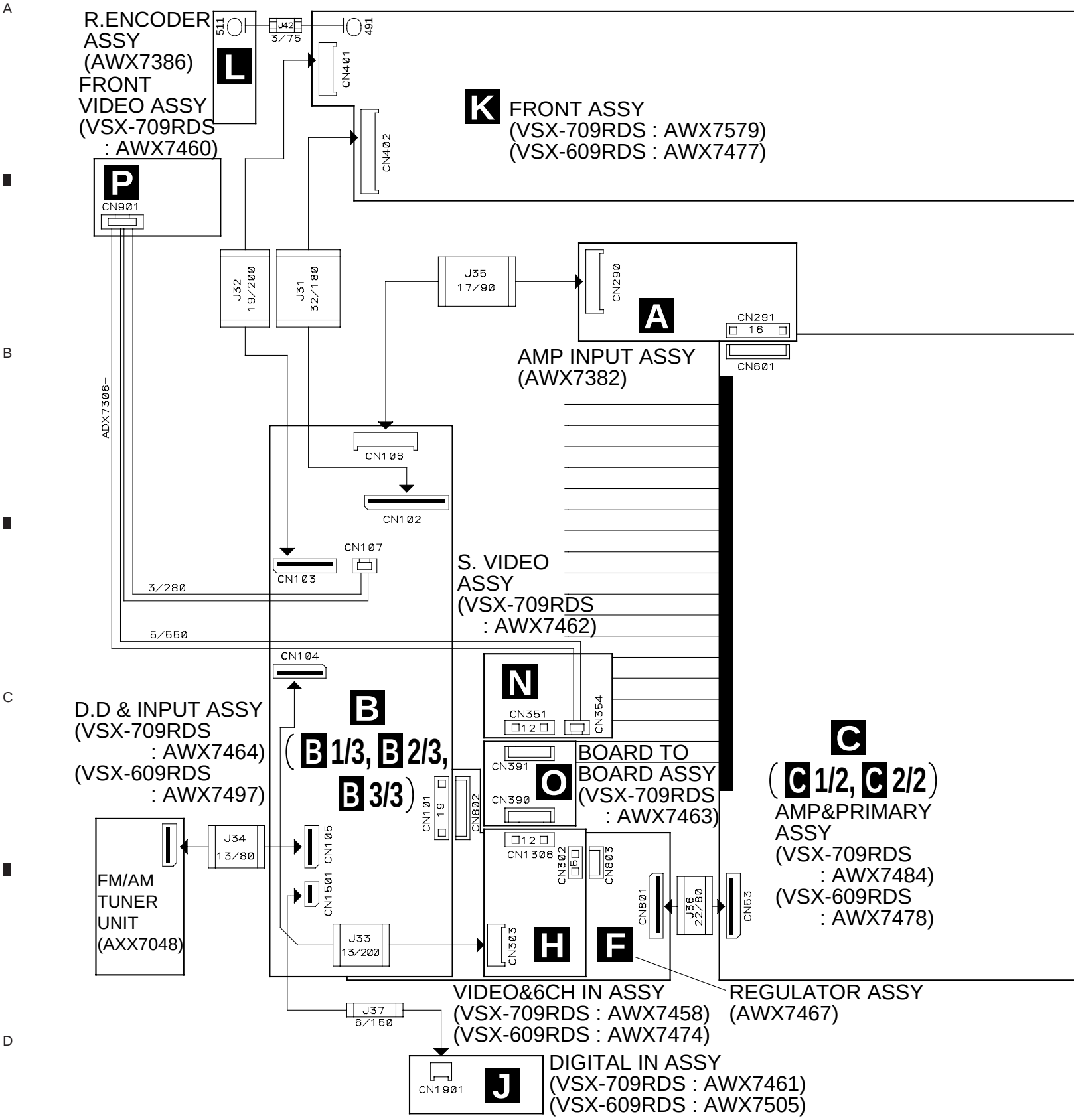

Note : When ordering service parts, be sure to refer to "EXPLODED VIEWS and PARTS LIST" or "PCB PARTS LIST".

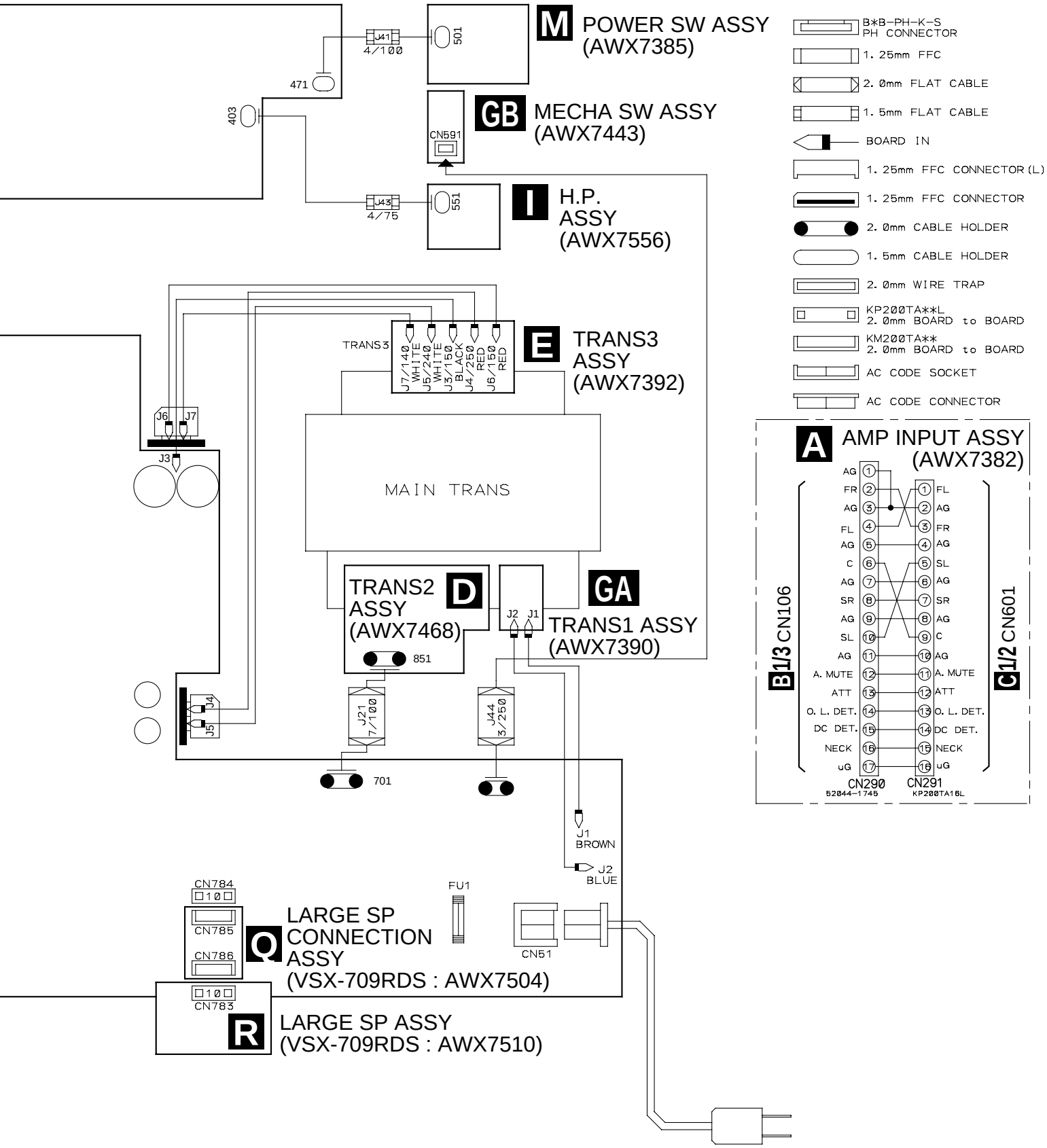

3.3 D.D & INPUT (1/3) ASSY

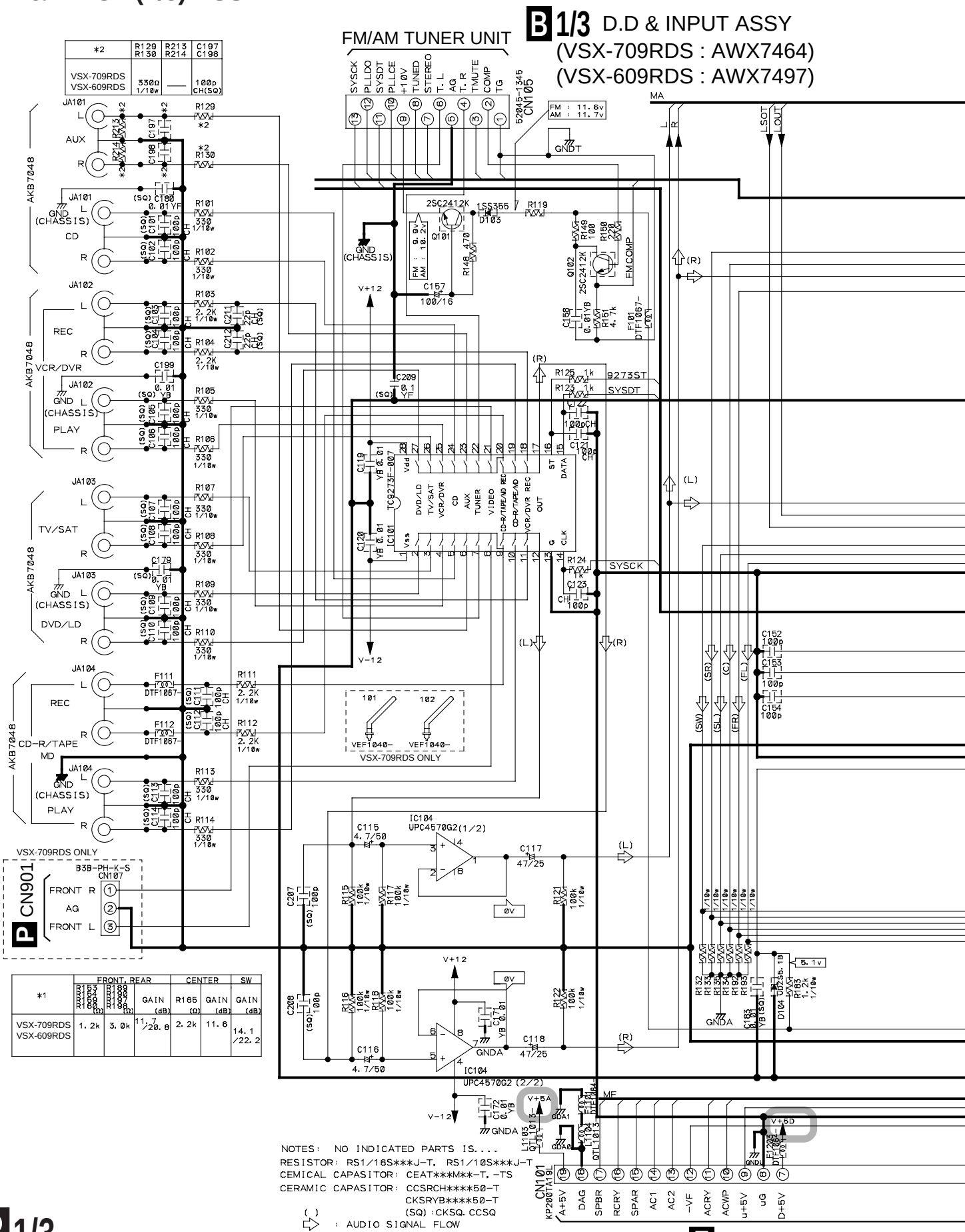

: The power supply is shown with the marked box.

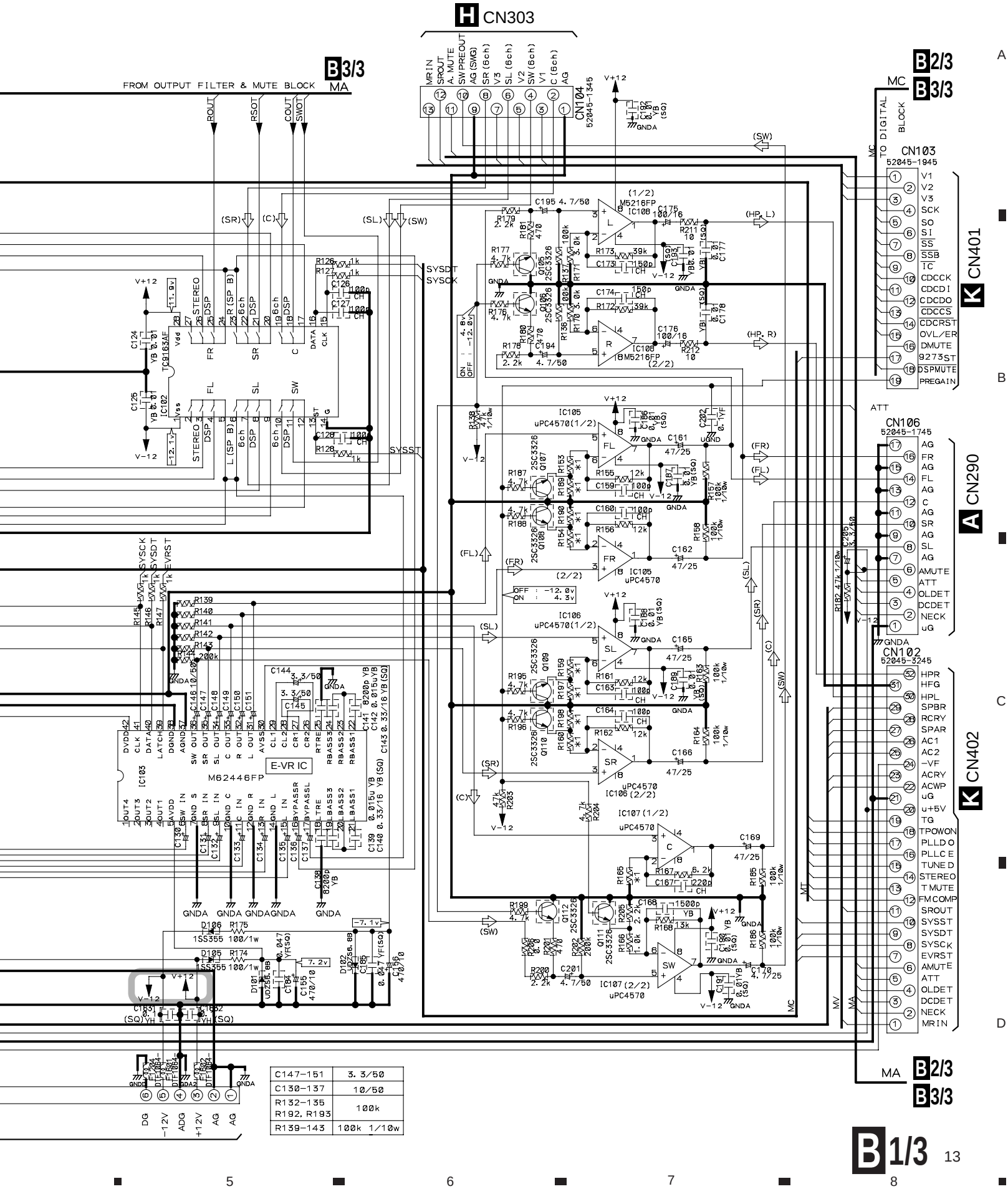

C147–151	3. 3/50
C130–137	10/50
R132–135 R192, R193	100k
R139–143	100k 1/10w

3.4 D.D & INPUT ASSY (2/3)

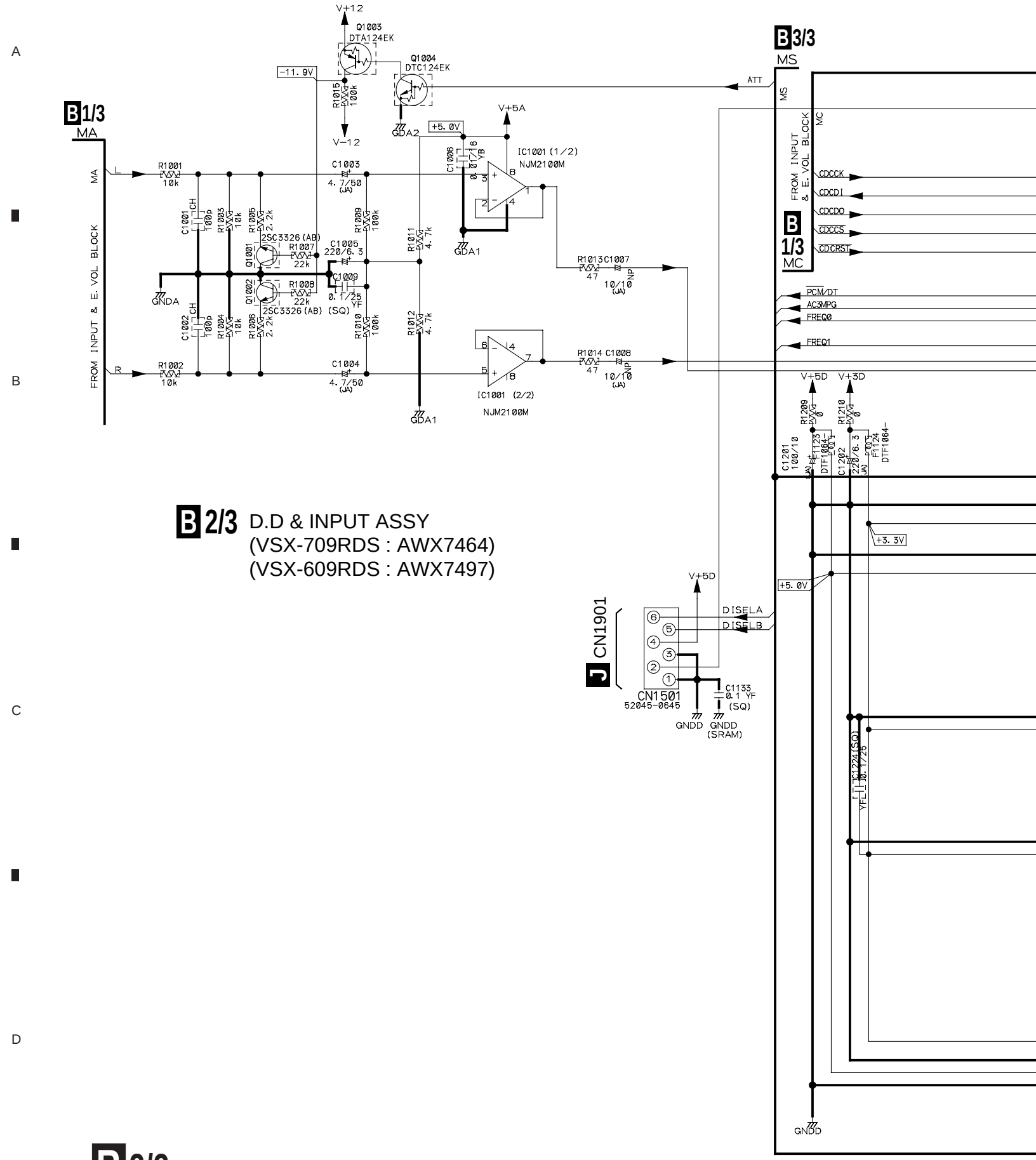

: The power supply is shown with the marked box.

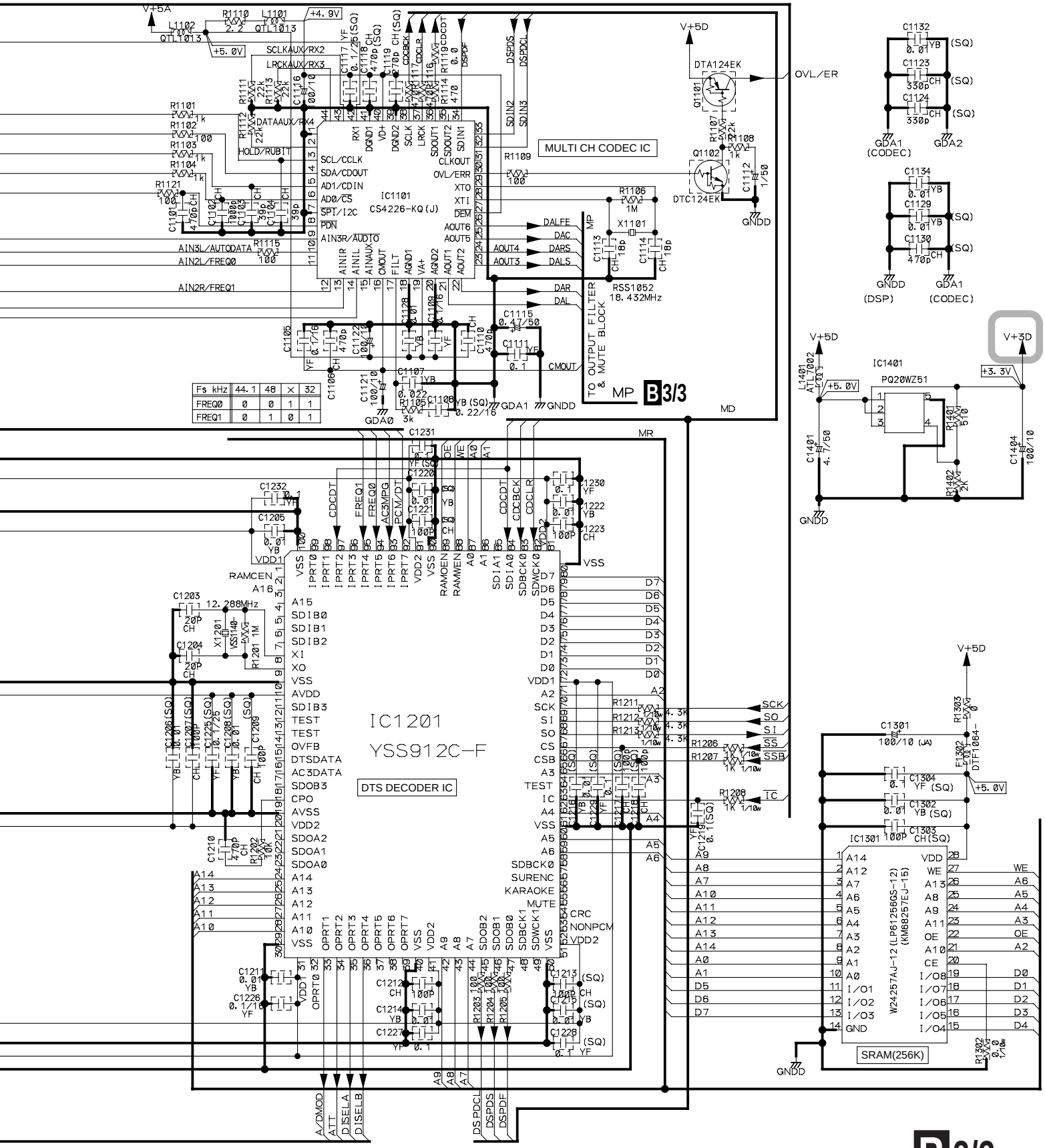

Fs kHz	44.1	48	×	32
FREQ0	0	0	1	1
FREQ1	0	1	0	1

3.5 D.D & INPUT ASSY (3/3)

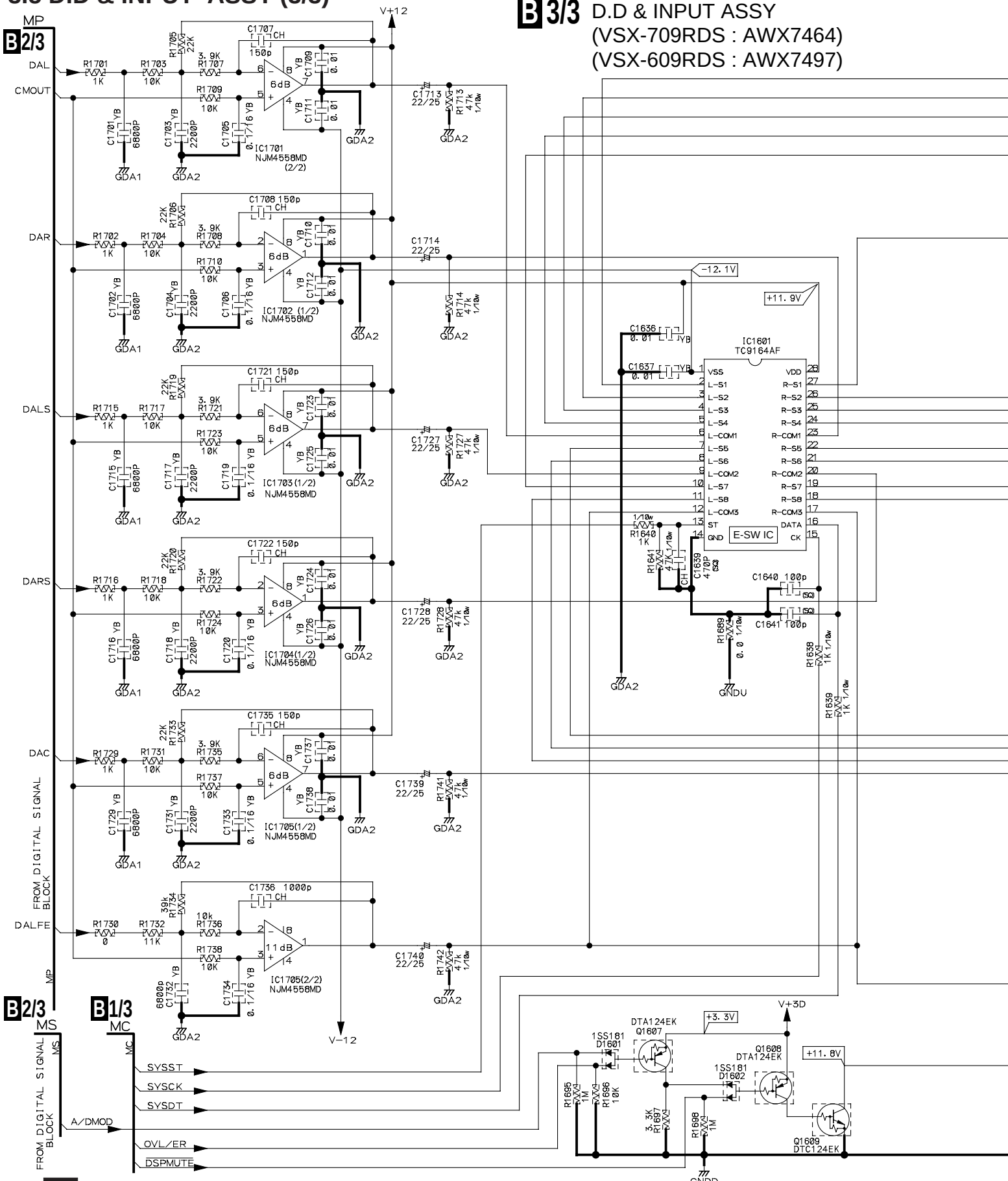

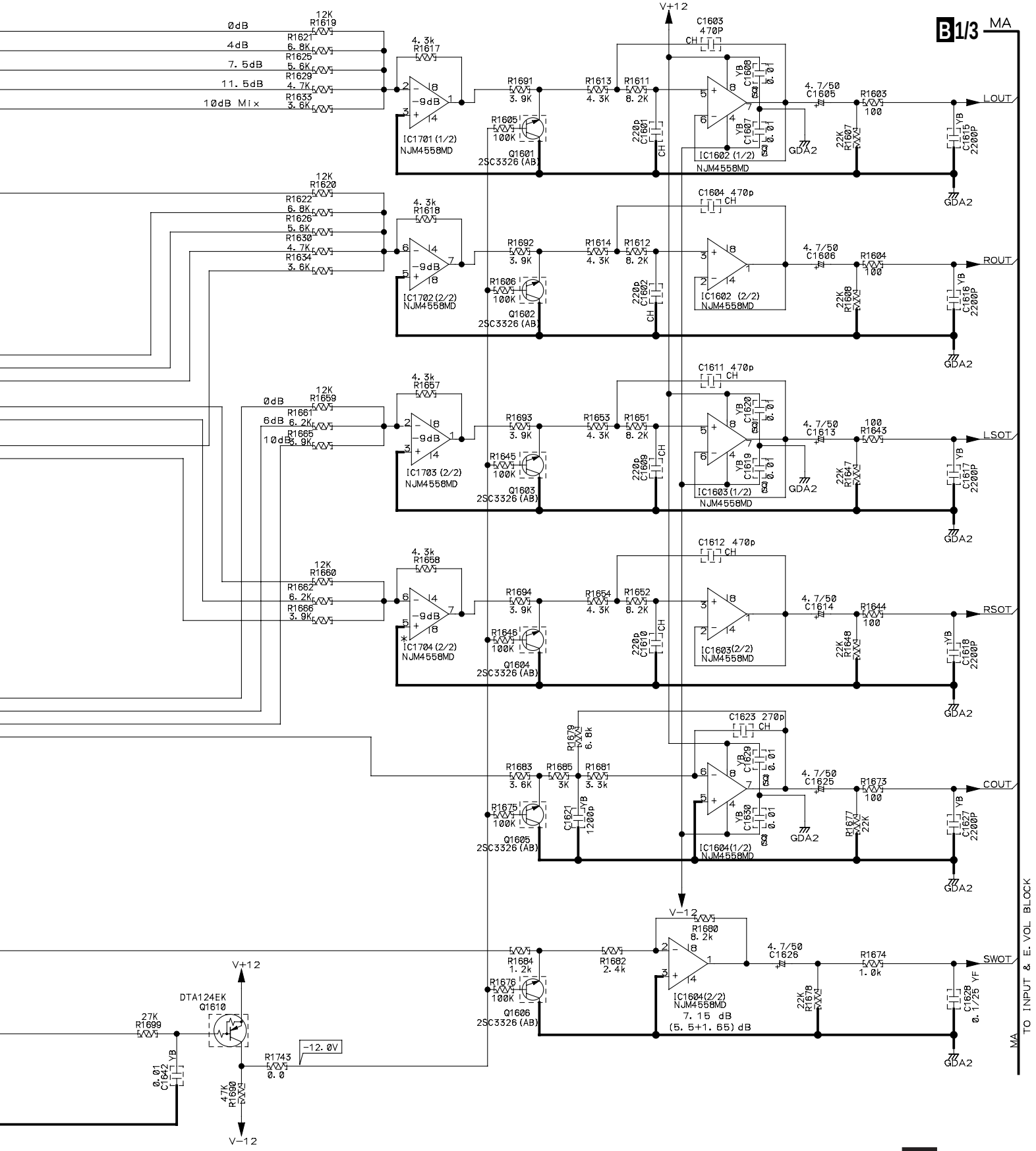
B1/3 MA
V+12
V-12
0dB
4dB
7.5dB
11.5dB
10dB Mix
6dB
10dB
IC1701 (1/2) NJM4558MD
IC1702 (2/2) NJM4558MD
IC1703 (2/2) NJM4558MD
IC1704 (2/2) NJM4558MD
IC1602 (1/2) NJM4558MD
IC1602 (2/2) NJM4558MD
IC1603 (1/2) NJM4558MD
IC1603 (2/2) NJM4558MD
IC1604 (1/2) NJM4558MD
IC1604 (2/2) NJM4558MD
7.15 dB
(5.5+1.65) dB
Q1601 2SC3326 (AB)
Q1602 2SC3326 (AB)
Q1603 2SC3326 (AB)
Q1604 2SC3326 (AB)
Q1605 2SC3326 (AB)
Q1606 2SC3326 (AB)
DTA124EK Q1610
-12.0V
LOUT
ROUT
LSOT
RSOT
COUT
SWOT
GDA2
TO INPUT & E. VOL BLOCK
MA

3.6 AMP&PRIMARY (1/2), TRANS2 and TRANS3 ASSYS

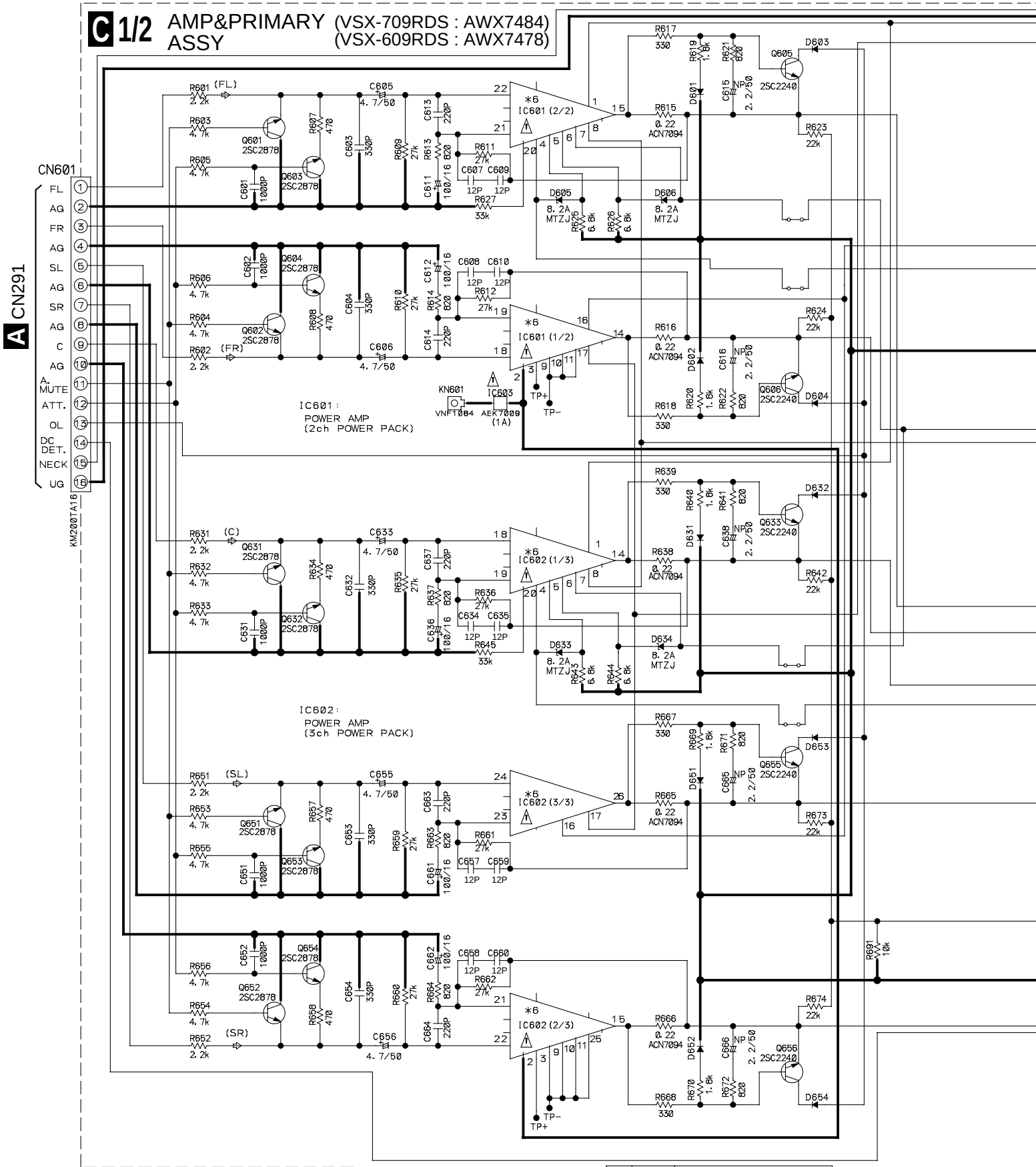

*4	R751, 752, 755, 761, 762	100 1/4W

*5	C751, 752, 755, 761, 762	0.22	YA
	C753, 754, 756, 763, 764	0.22	YA
	D751, 753, 755, 757		1SS133-T

*6	IC601	PAC010A
	IC602	PAC011A

*7	VSX-609RDS C757, 758, 759 C765, 766, 767, 768	CQMBA 472J50-T
	VSX-709RDS C765, 766, 767, 768 C781, 782, 783	

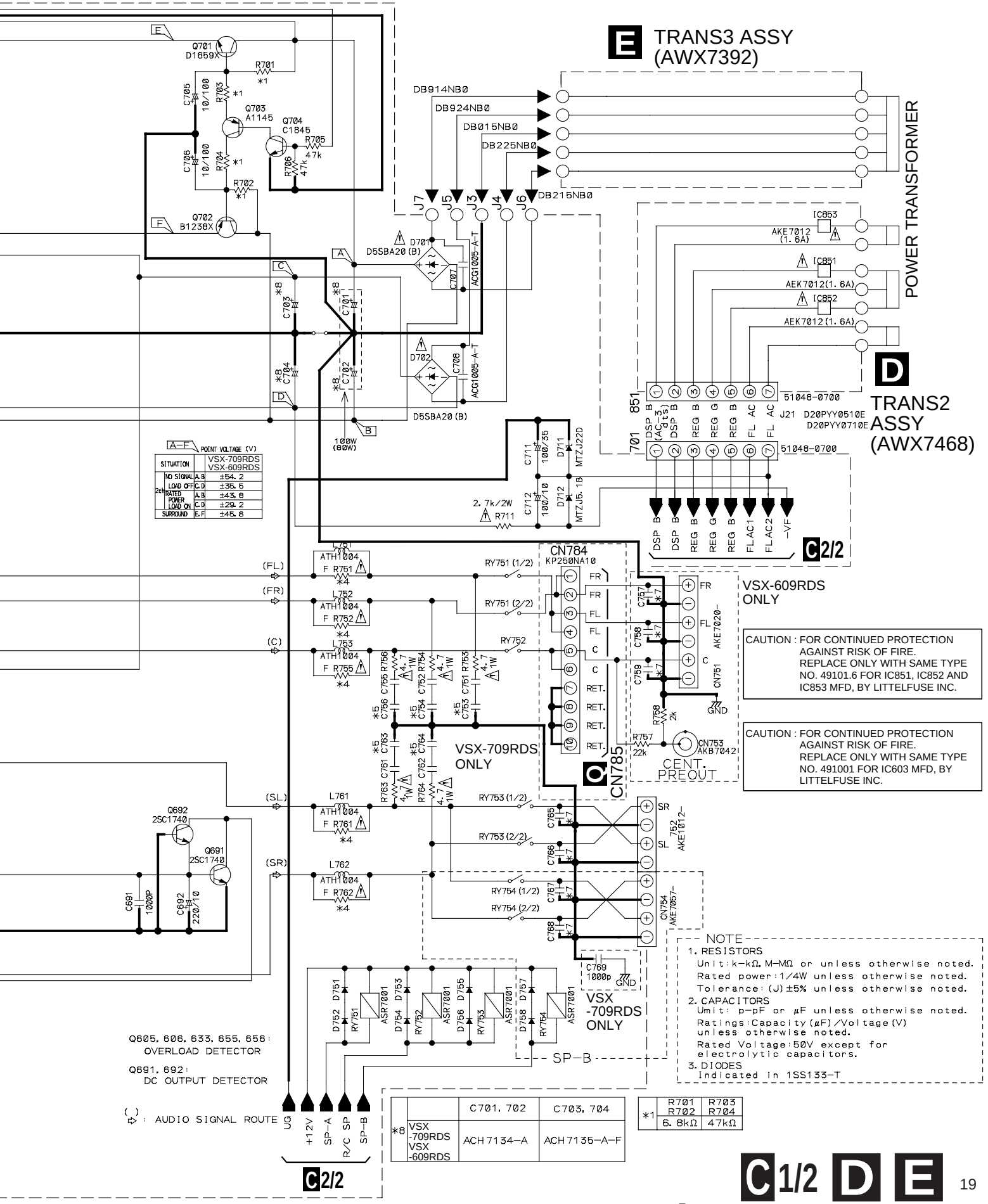
E
TRANS3 ASSY
(AWX7392)
POWER TRANSFORMER
DB914NB0
DB924NB0
DB015NB0
DB225NB0
DB215NB0
J7
J5
J3
J4
J6
D
TRANS2
ASSY
(AWX7468)
IC853
AKE7012
(1.6A)
IC851
AEK7012(1.6A)
IC852
AEK7012(1.6A)
51048-0700
J21
D20PYY0510E
D20PYY0710E
DSP B
DSP B
REG B
REG G
REG B
FL AC
FL AC
C2/2
CN784
KP250NA10
FR
FL
C
RET.
VSX-609RDS
ONLY
CAUTION : FOR CONTINUED PROTECTION
AGAINST RISK OF FIRE.
REPLACE ONLY WITH SAME TYPE
NO. 49101.6 FOR IC851, IC852 AND
IC853 MFD, BY LITTELFUSE INC.
CAUTION : FOR CONTINUED PROTECTION
AGAINST RISK OF FIRE.
REPLACE ONLY WITH SAME TYPE
NO. 491001 FOR IC603 MFD, BY
LITTELFUSE INC.
VSX-709RDS
ONLY
CN785
CENT.
PREOUT
CN753
AKB7042
SR
SL
AKE1012
CN754
AKE7057
VSX
-709RDS
ONLY
SP-B
NOTE
1. RESISTORS
Unit:k-kΩ, M-MΩ or unless otherwise noted.
Rated power:1/4W unless otherwise noted.
Tolerance:(J)±5% unless otherwise noted.
2. CAPACITORS
Umit: p-pF or μF unless otherwise noted.
Ratings:Capacity(μF)/Voltage(V)
unless otherwise noted.
Rated Voltage:50V except for
electrolytic capacitors.
3. DIODES
Indicated in 1SS133-T
Q605, 606, 633, 655, 656:
OVERLOAD DETECTOR
Q691, 692:
DC OUTPUT DETECTOR
( ) : AUDIO SIGNAL ROUTE
UG
+12V
SP-A
R/C SP
SP-B
C2/2
POINT VOLTAGE (V)
SITUATION
VSX-709RDS
VSX-609RDS
NO SIGNAL
LOAD OFF
RATED POWER
LOAD ON
SURROUND
±54.2
±35.5
±43.8
±29.2
±45.6
C701, 702
C703, 704
ACH7134-A
ACH7135-A-F
R701
R702
R703
R704
6.8kΩ
47kΩ
C1/2
D
E

3.7 AMP&PRIMARY (2/2), REGULATOR, TRANS1 and MECHA SW ASSYS

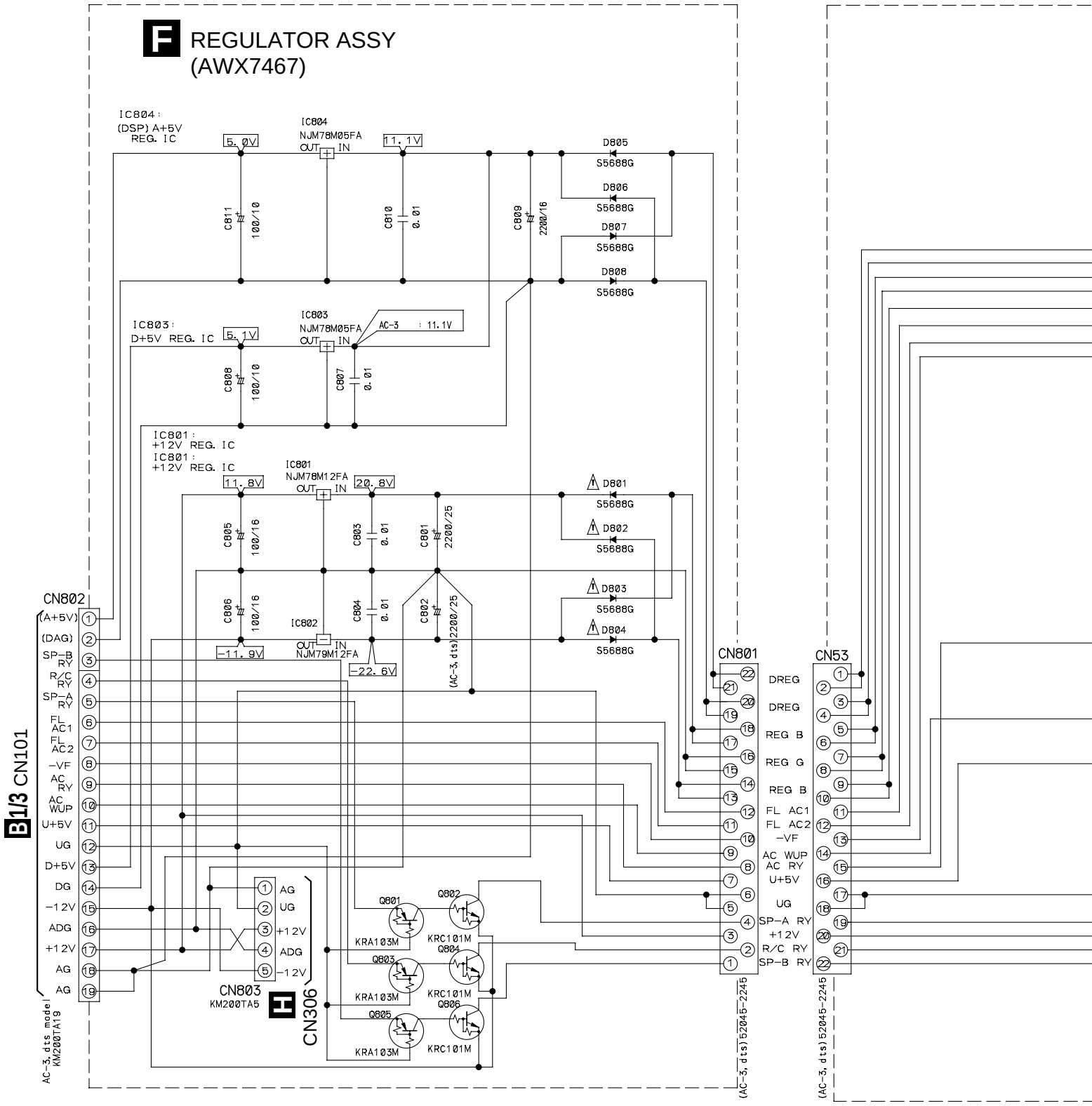

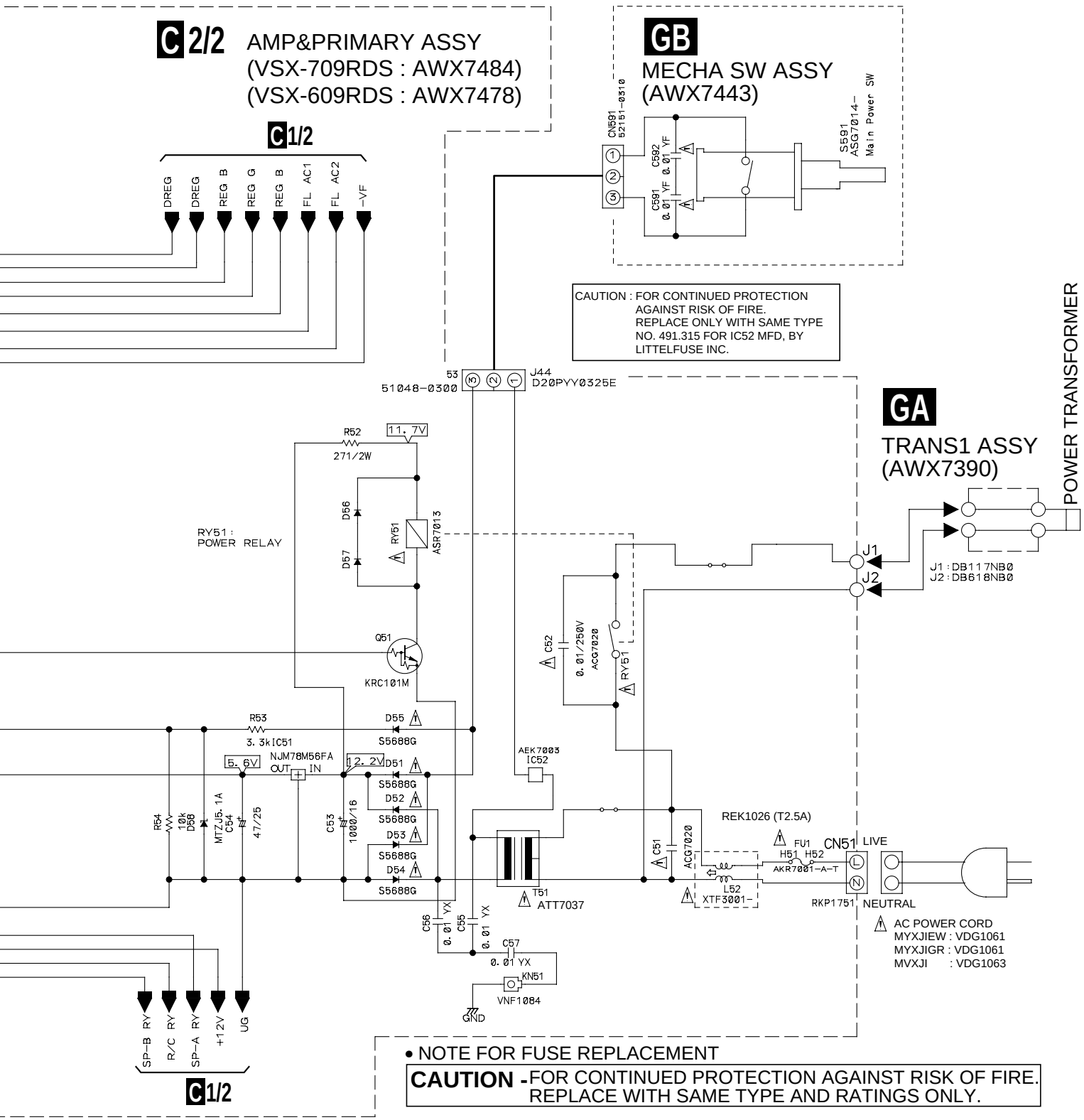
C 2/2 AMP&PRIMARY ASSY
(VSX-709RDS : AWX7484)
(VSX-609RDS : AWX7478)
C 1/2
DREG
DREG
REG B
REG G
REG B
FL AC1
FL AC2
-VF
GB
MECHA SW ASSY
(AWX7443)
CN591
52151-0310
C592
0.01 YF
C591
0.01 YF
S591
ASG7014-
Main Power SW
CAUTION : FOR CONTINUED PROTECTION
AGAINST RISK OF FIRE.
REPLACE ONLY WITH SAME TYPE
NO. 491.315 FOR IC52 MFD, BY
LITTELFUSE INC.
POWER TRANSFORMER
53
51048-0300
J44
D20PYY0325E
GA
TRANS1 ASSY
(AWX7390)
J1
J2
J1 : DB117NB0
J2 : DB618NB0
R52
271/2W
11.7V
D56
D57
RY51
ASR7013
RY51 :
POWER RELAY
Q51
KRC101M
C52
0.01/250V
ACG7020
RY51
R53
3.3kI C51
D55
S5688G
5.6V
NJM78M56FA
OUT
IN
12.2V
D51
S5688G
D52
S5688G
D53
S5688G
D54
S5688G
AEK7003
IC52
R54
10k
D58
MTZJ5.1A
C54
47/25
C53
1000/16
T51
ATT7037
C51
ACG7020
REK1026 (T2.5A)
FU1
H51 H52
AKR7001-A-T
CN51
LIVE
L52
XTF3001-
RKP1751
NEUTRAL
AC POWER CORD
MYXJIEW : VDG1061
MYXJIGR : VDG1061
MVXJI : VDG1063
C56
0.01 YX
C55
0.01 YX
C57
0.01 YX
KN51
VNF1084
GND
SP-B RY
R/C RY
SP-A RY
+12V
UG
C 1/2
• NOTE FOR FUSE REPLACEMENT
CAUTION - FOR CONTINUED PROTECTION AGAINST RISK OF FIRE.
REPLACE WITH SAME TYPE AND RATINGS ONLY.

3.8 VIDEO&6CH IN, H. P. and DIGITAL IN ASSYS

H

VIDEO&6CH IN ASSY
(VSX-709RDS : AWX7458)
(VSX-609RDS : AWX7474)

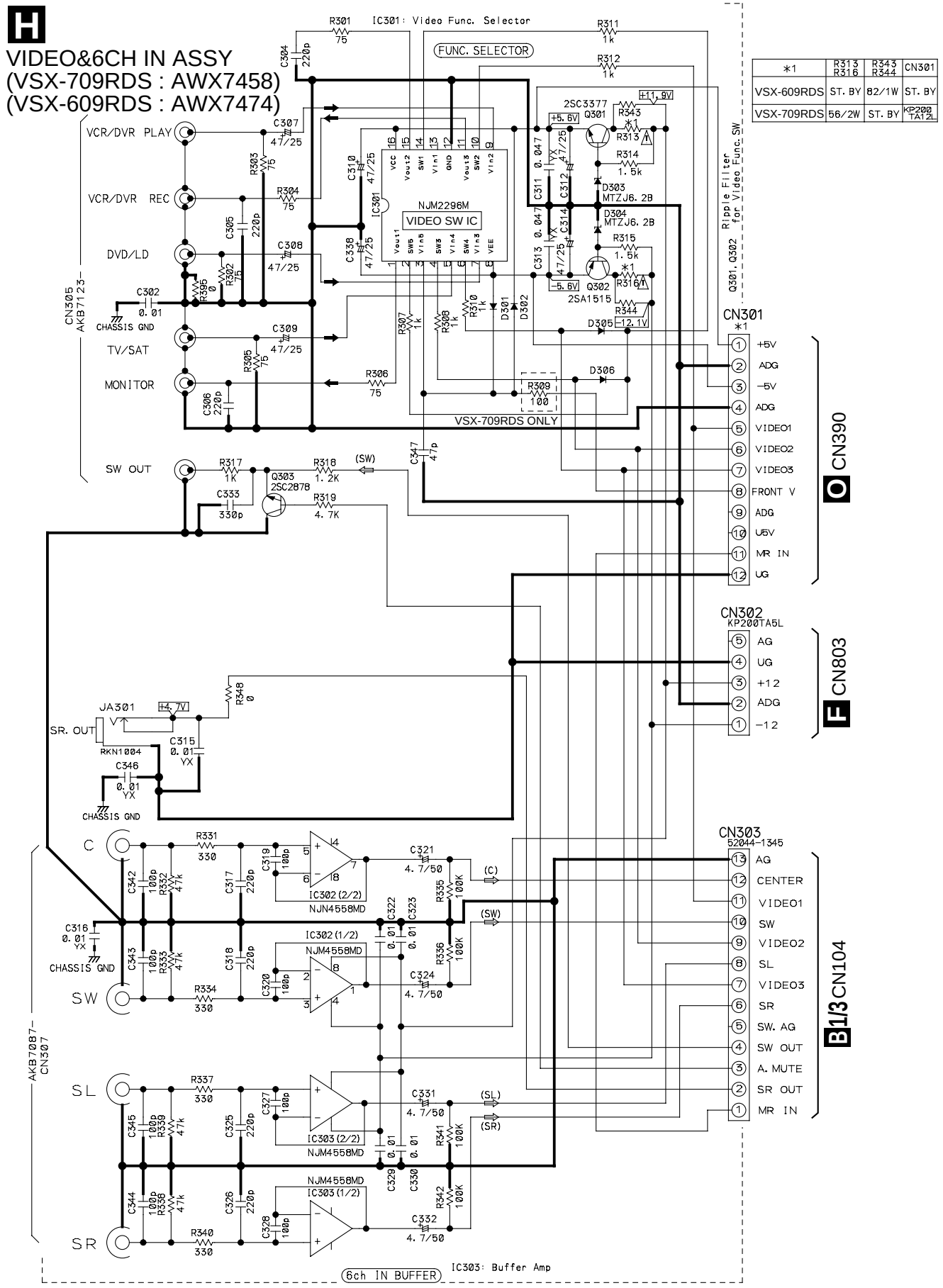

*1	R313 R318	R343 R344	CN301
VSX-609RDS	ST. BY	82/1W	ST. BY
VSX-709RDS	56/2W	ST. BY	KP200 TA12L

NJM2296D control port status

SW1	SW2	SW3	SW4	SW5	Vout1	Vout2	Vout3
1	0	(1)	0	1	Vin2	Vin2	mute
1	1	(1)	0	1	Vin3	Vin3	Vin3
1	1	0	1	1	Vin4	Vin4	Vin4
1	1	1	1	1	Vin5	Vin5	Vin5
0	0	(0)	(0)	0	mute	mute	mute

VIN 2. VCR/DVR
VIN 3. DVD/LD
VIN 4. TV/SAT
VIN 5. FRONT VIDEO

Vout1. MONITOR out
Vout2. MR out
Vout3. VCR/DVR out

NOTE

1. RESISTORS
   Unit: k-kΩ, M-MΩ or Ω unless otherwise noted.
   Rated power: 1/10W unless otherwise noted.
   Tolerance: (J)±5% unless otherwise noted.
2. CAPACITORS
   Unit: p-pF or μF unless otherwise noted.
   Ratings: Capacity(μF)/Voltage(V) unless otherwise noted.
   Rated Voltage: 50V expect for electrolytic capacitors.
3. DIODES
   Indicated in 1SS355-TRB

← Video Signal Flow
⇦ Audio Signal Flow

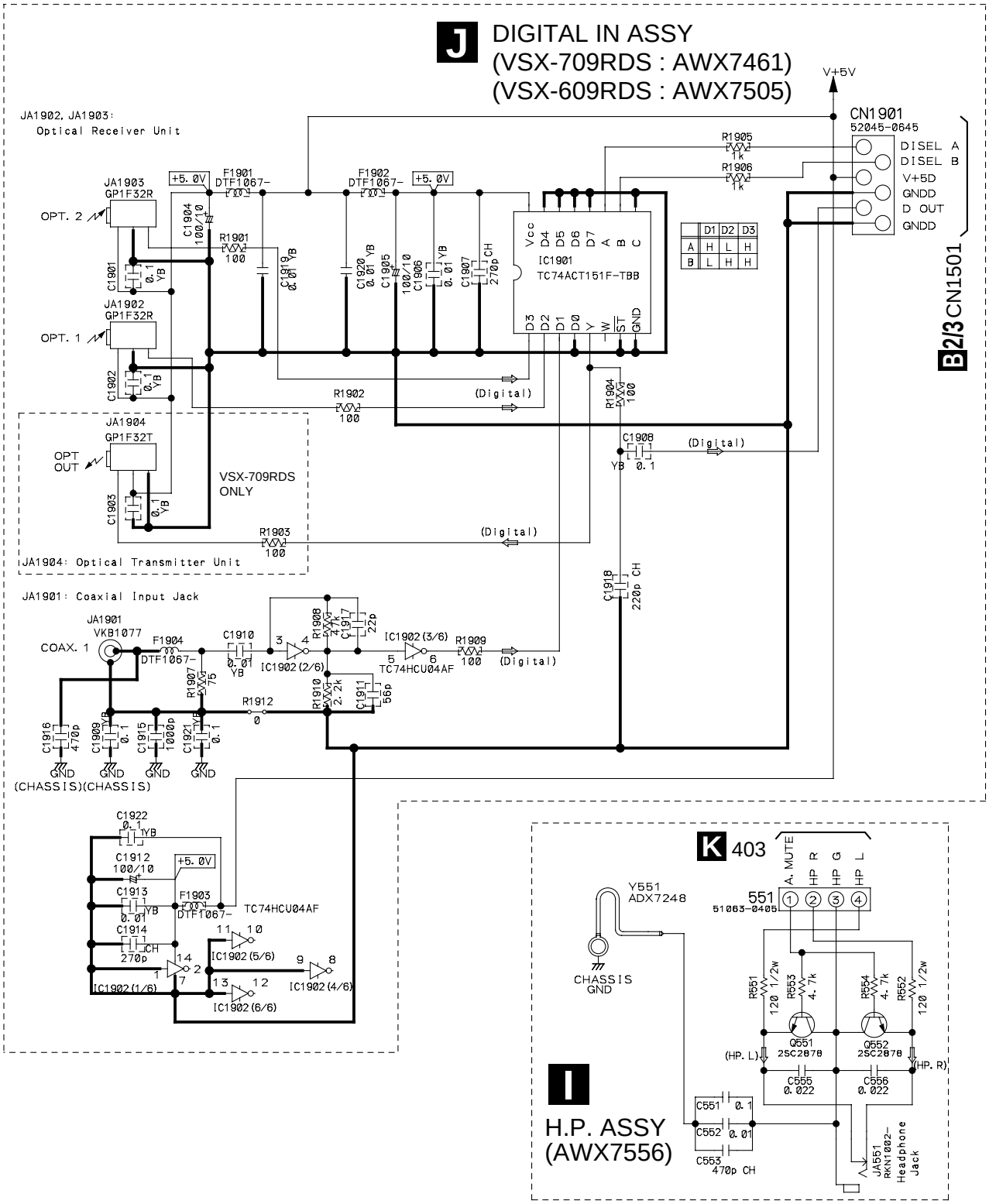

3.9 FRONT, R. ENCODER and POWER SW ASSYS

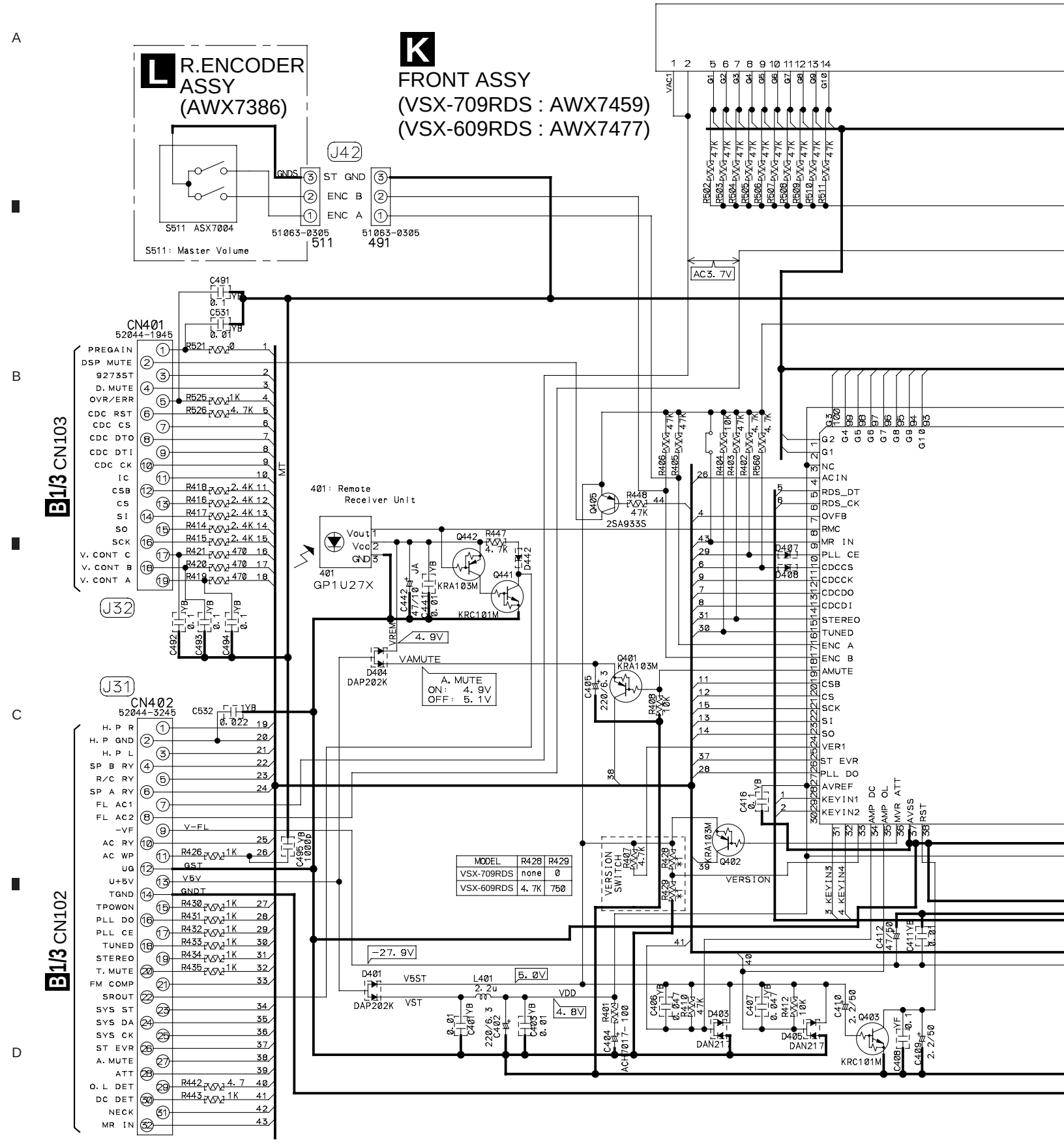

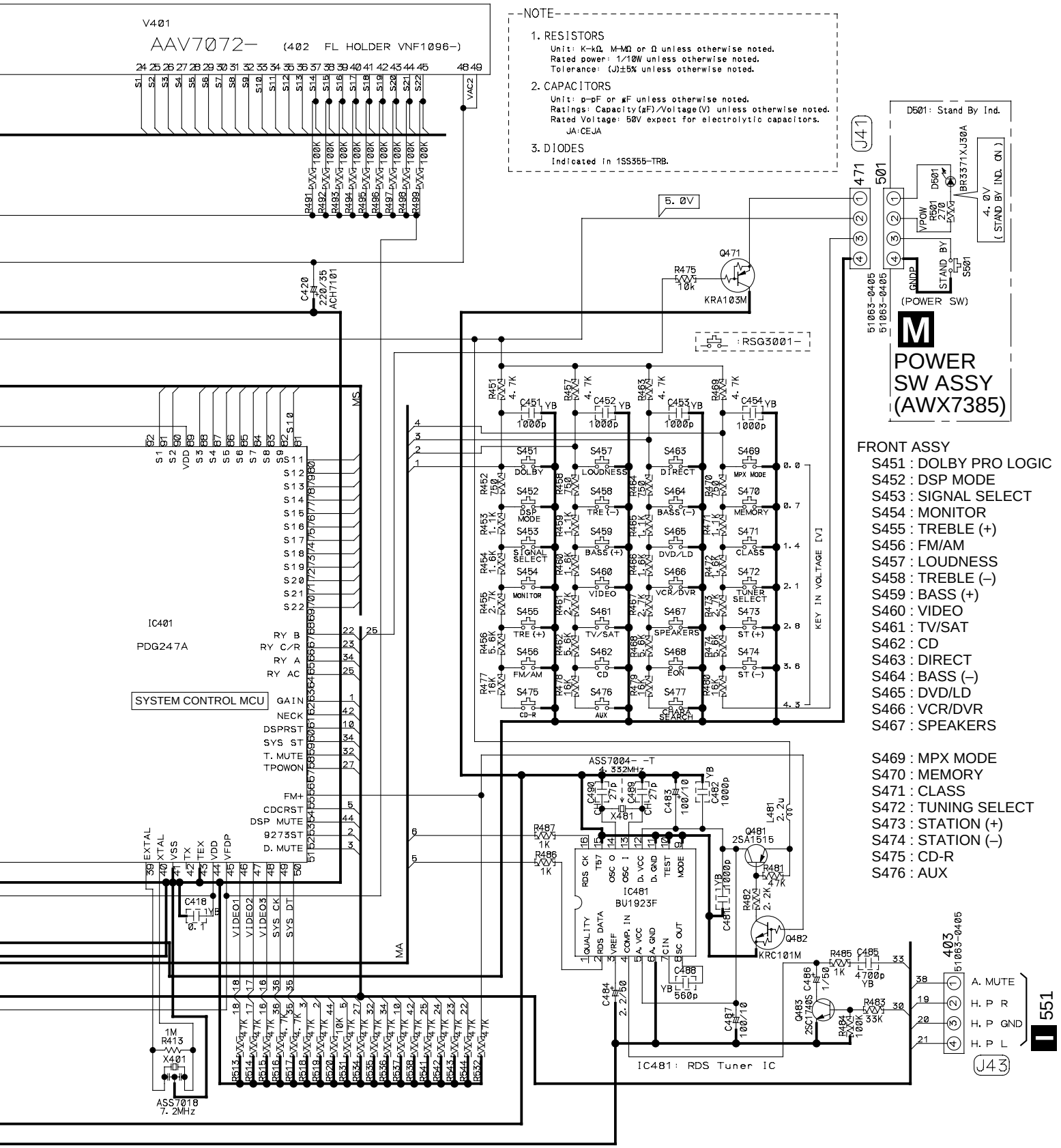

FRONT ASSY

S451 : DOLBY PRO LOGIC
S452 : DSP MODE
S453 : SIGNAL SELECT
S454 : MONITOR
S455 : TREBLE (+)
S456 : FM/AM
S457 : LOUDNESS
S458 : TREBLE (–)
S459 : BASS (+)
S460 : VIDEO
S461 : TV/SAT
S462 : CD
S463 : DIRECT
S464 : BASS (–)
S465 : DVD/LD
S466 : VCR/DVR
S467 : SPEAKERS

S469 : MPX MODE
S470 : MEMORY
S471 : CLASS
S472 : TUNING SELECT
S473 : STATION (+)
S474 : STATION (–)
S475 : CD-R
S476 : AUX

3.10 S. VIDEO, BOARD TO BOARD, FRONT VIDEO, LARGE SP CONNECTION and LARGE SP ASSYS

NJM2296D control port status

SW1	SW2	SW3	SW4	SW5	Vout1	Vout2	Vout3
1	0	(1)	0	1	Vin2	Vin2	mute
1	1	(1)	0	1	Vin3	Vin3	Vin3
1	1	0	1	1	Vin4	Vin4	Vin4
1	1	1	1	1	Vin5	Vin5	Vin5
0	0	(0)	(0)	0	mute	mute	mute

VIN 2. VCR/DVR
VIN 3. DVD/LD
VIN 4. TV/SAT
VIN 5. FRONT VIDEO

Vout1. MONITOR out
Vout2. MR out
Vout3. VCR/DVR out

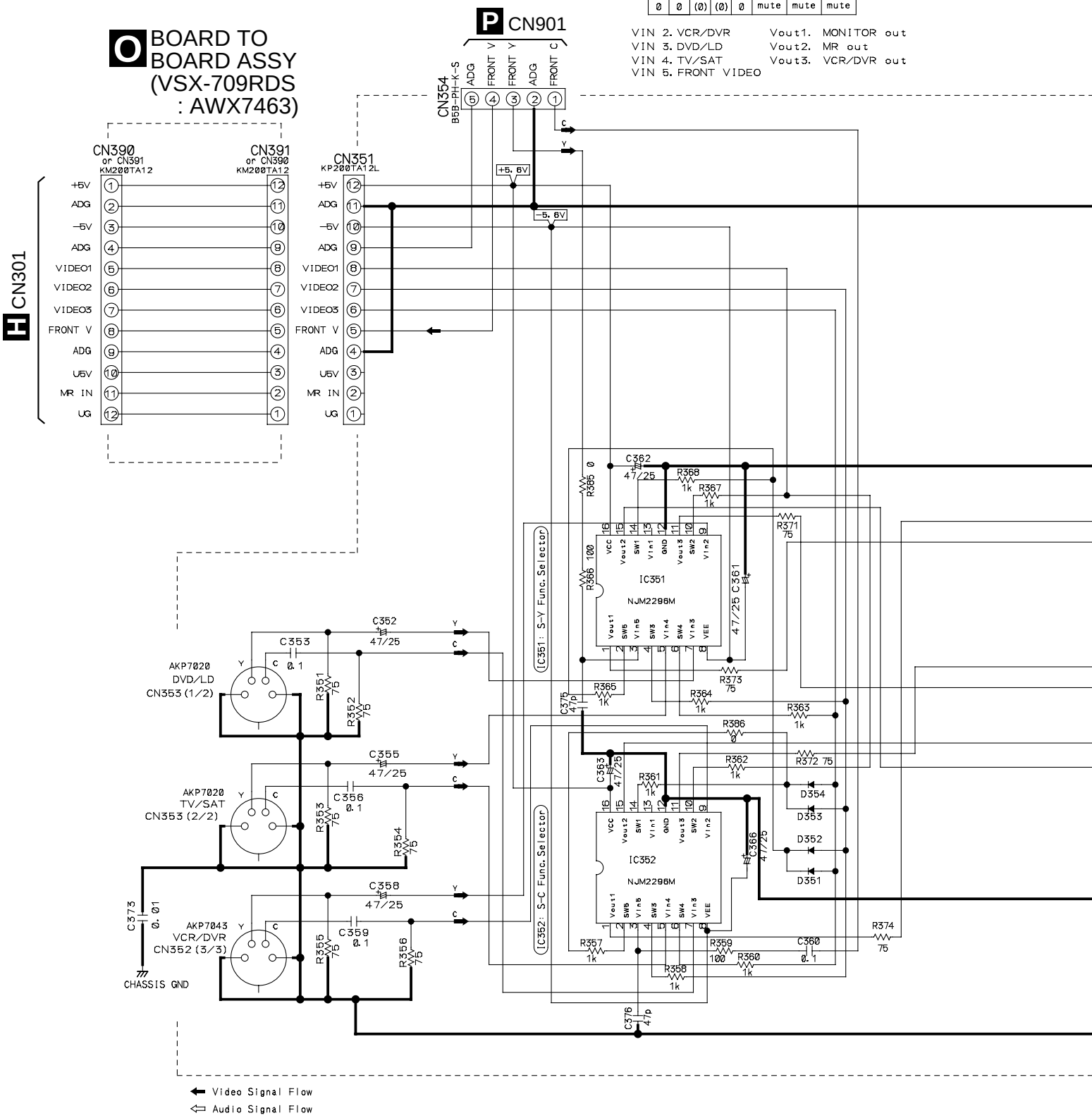

NOTE

1. RESISTORS
   Unit: k-kΩ, M-MΩ or Ω unless otherwise noted.
   Rated power: 1/10W unless otherwise noted.
   Tolerance: (J)±5% unless otherwise noted.
2. CAPACITORS
   Unit: p-pF or μF unless otherwise noted.
   Ratings: Capacity(μF)/Voltage(V) unless otherwise noted.
   Rated Voltage: 50V expect for electrolytic capacitors.
3. DIODES
   Indicated in 1SS355-TRB

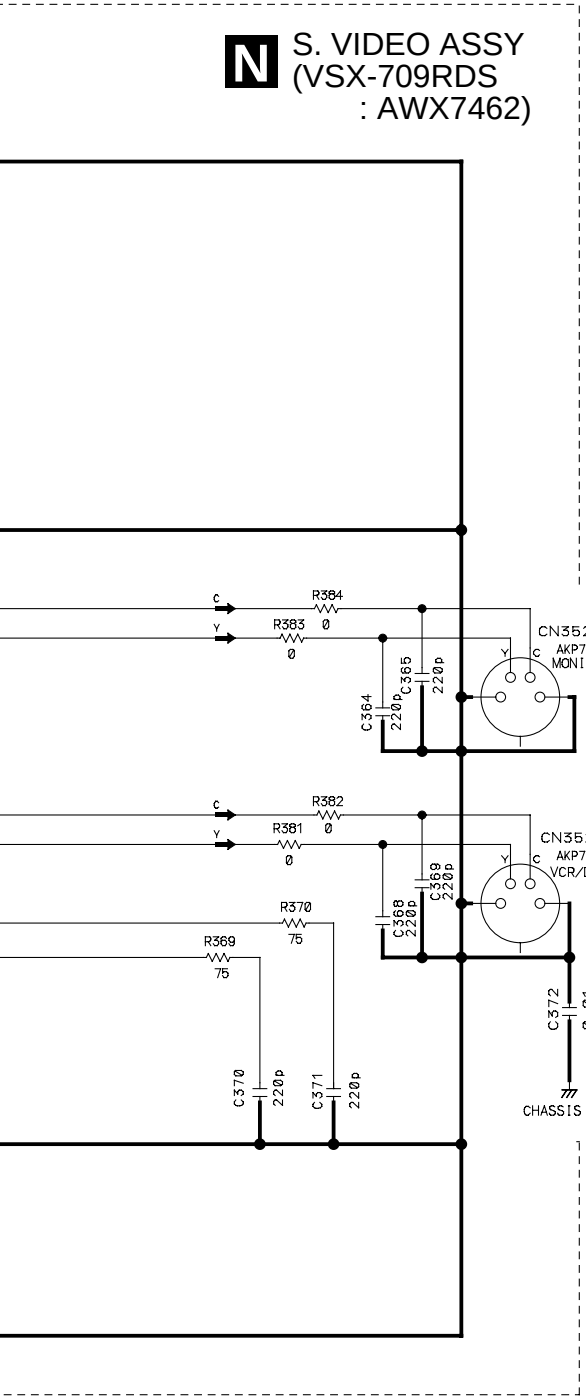

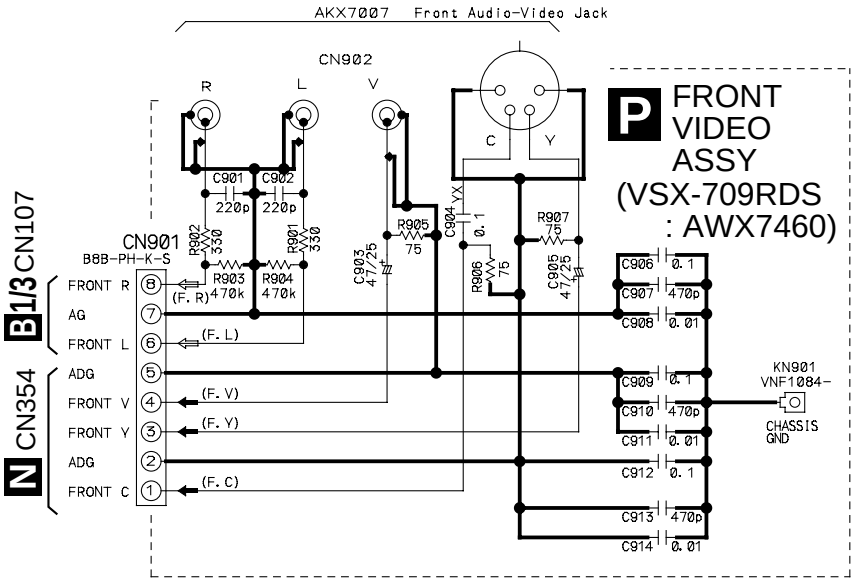

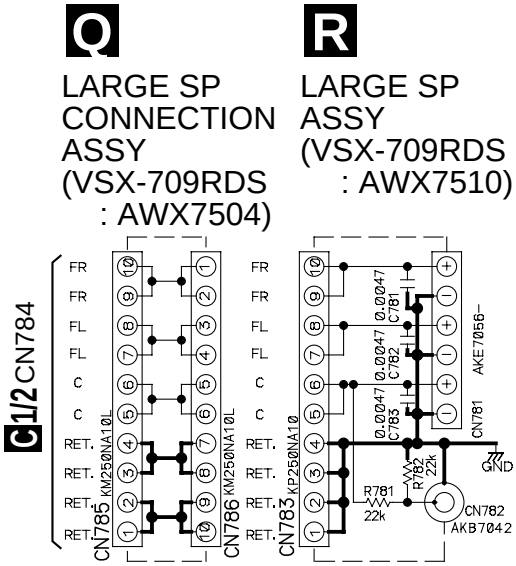

4. PCB CONNECTION DIAGRAM

NOTE FOR PCB DIAGRAMS :

1. Part numbers in PCB diagrams match those in the schematic diagrams.
2. A comparison between the main parts of PCB and schematic diagrams is shown below.

Symbol In PCB Diagrams	Symbol In Schematic Diagrams	Part Name
B C E	B C E B C E	Transistor
B C E	B C E B C E	Transistor with resistor
D G S	D G S D G S	Field effect transistor
		Resistor array
		3-terminal regulator

3. The parts mounted on this PCB include all necessary parts for several destinations.
   For further information for respective destinations, be sure to check with the schematic diagram.
4. View point of PCB diagrams.

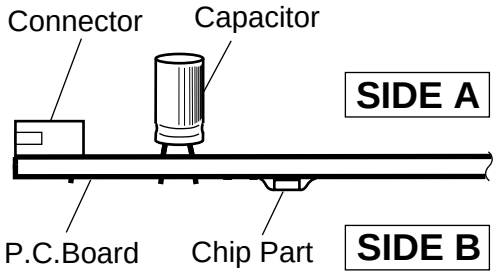

4.1 DIGITAL IN ASSY

J DIGITAL IN ASSY

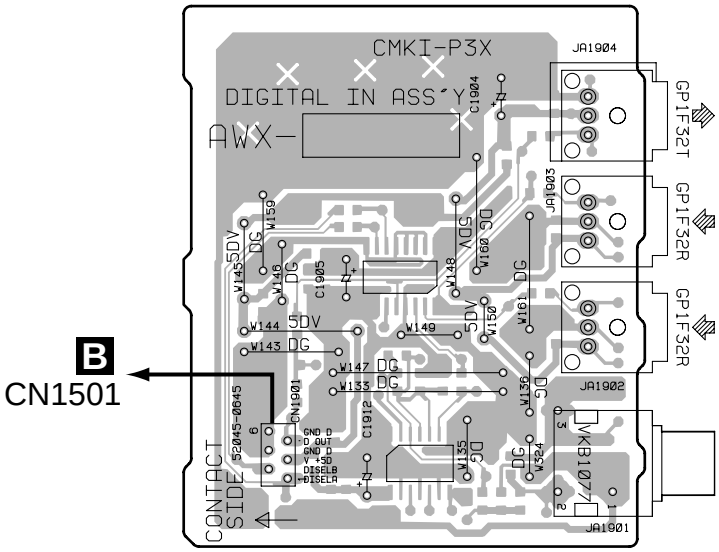

(ANP7341-A)

SIDE A

J DIGITAL IN ASSY

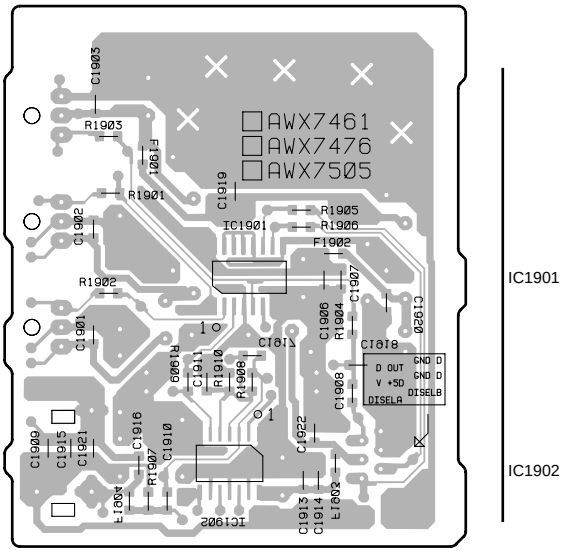

(ANP7341-A)

SIDE B

4.2 TRANS2, TRANS3, REGULATOR and TRANS1 ASSYS

F REGULATOR ASSY

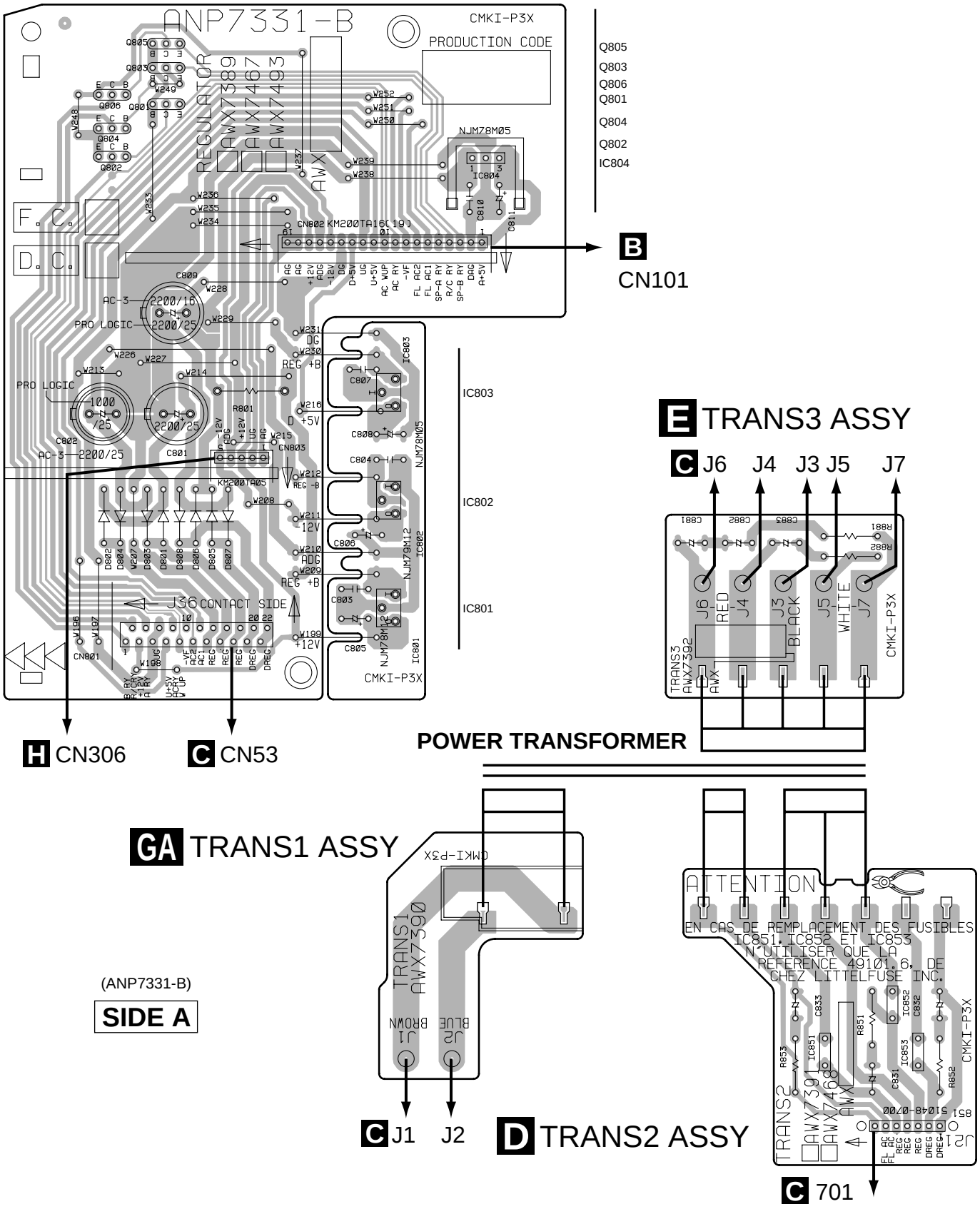

(ANP7331-B)

SIDE A

4.3 AMP INPUT and AMP&PRIMARY ASSYS

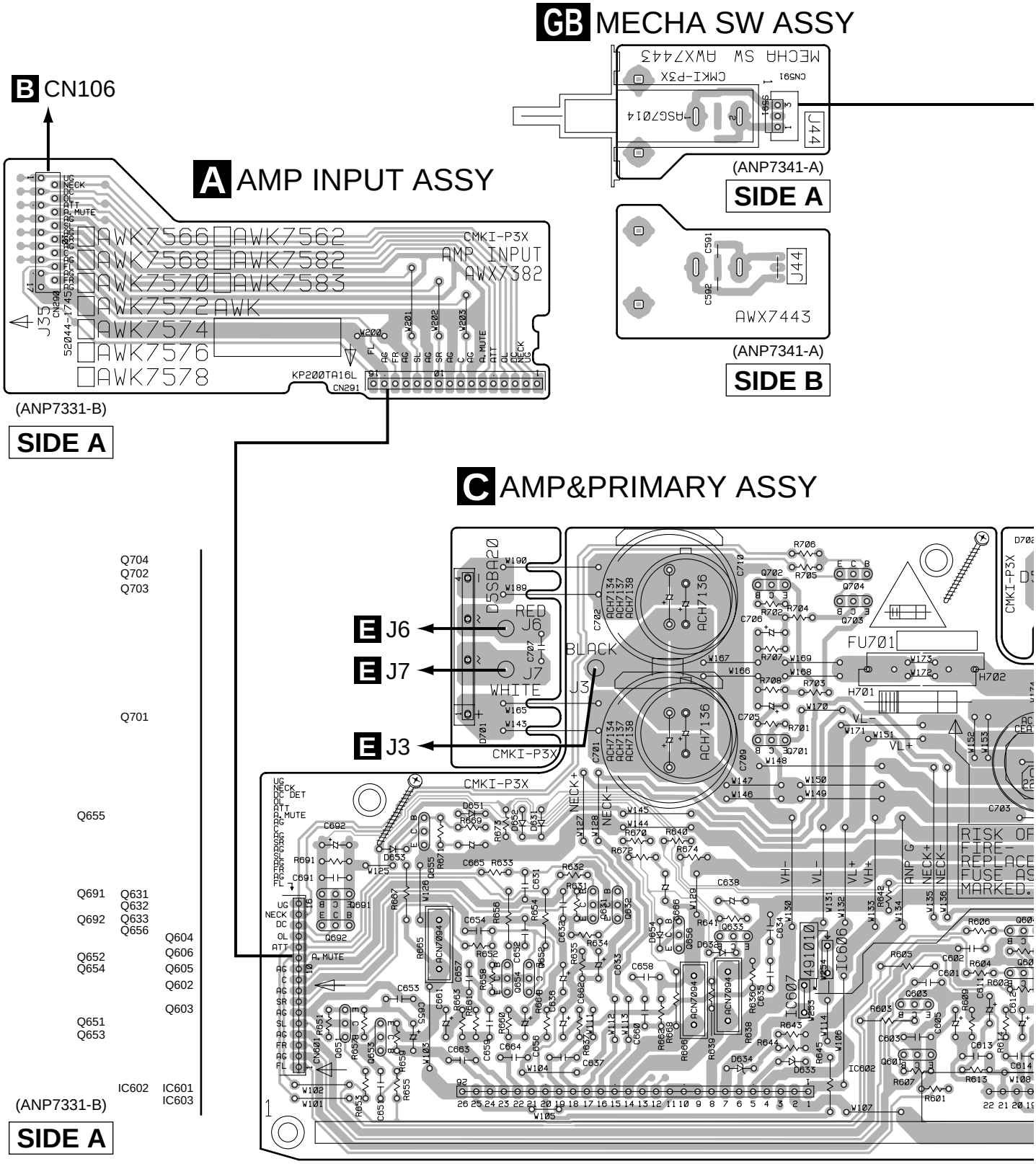

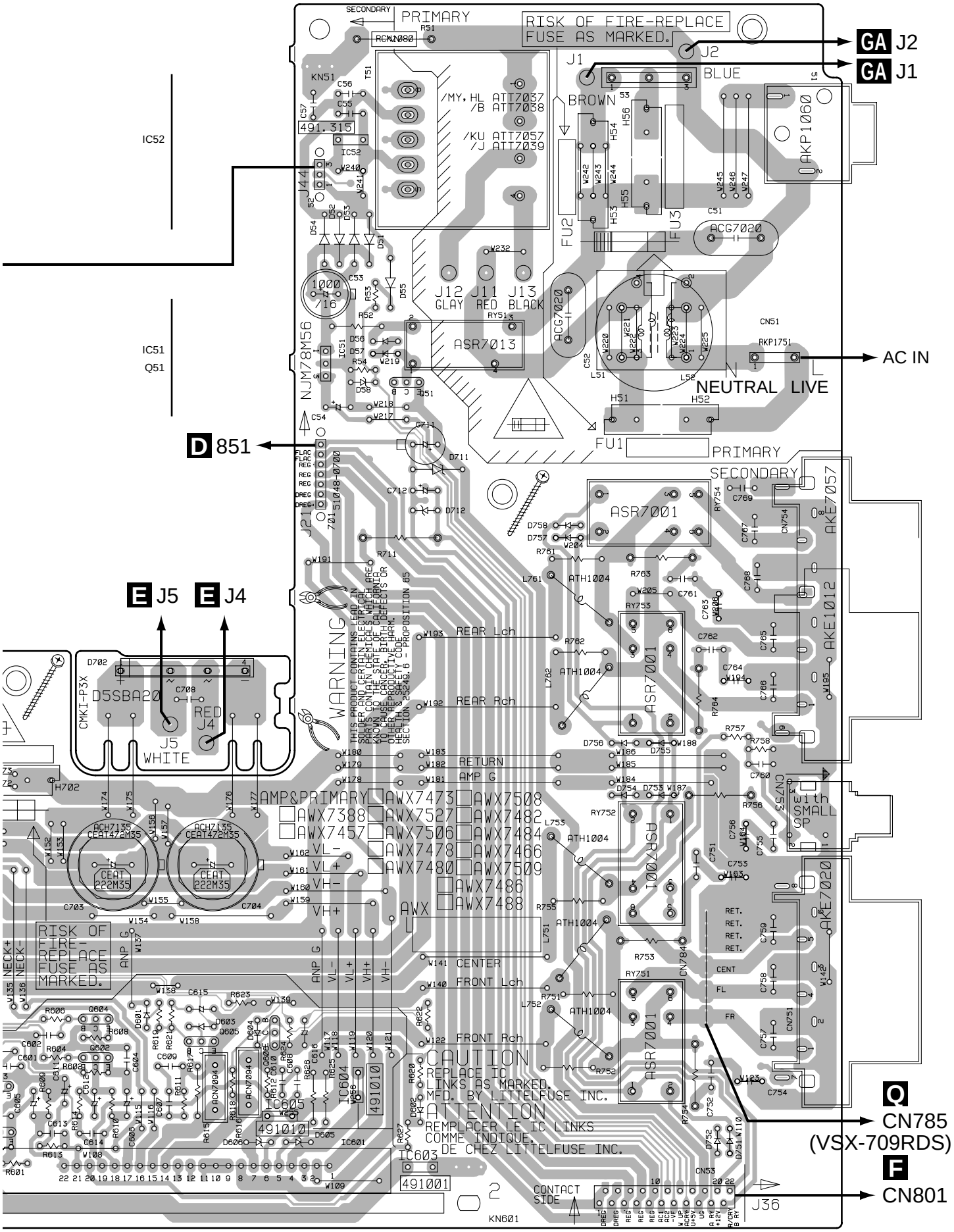
GA J2
GA J1
AC IN
NEUTRAL LIVE
D 851
E J5
E J4
Q
CN785
(VSX-709RDS)
F
CN801
PRIMARY
SECONDARY
RISK OF FIRE-REPLACE FUSE AS MARKED.
WARNING
CAUTION
ATTENTION
REMPLACER LE IC LINKS COMME INDIQUE. DE CHEZ LITTELFUSE INC.
REAR Lch
REAR Rch
RETURN
AMP G
CENTER
FRONT Lch
FRONT Rch
CONTACT SIDE
IC52
IC51
Q51
J12 GLAY
J11 RED
J13 BLACK
J1
J2
BROWN
BLUE
J5 WHITE
J4 RED
ASR7013
ASR7001
AKP1060
AKE7057
AKE1012
AKE7020
ACG7020
NJM78M56
D5SBA20
CMKI-P3X
CEAT222M35
ACH7135
491010
491001
IC604
IC605
IC603
IC601
J36
KN601
CN753 with SMALL SP

4.4 D.D & INPUT ASSY

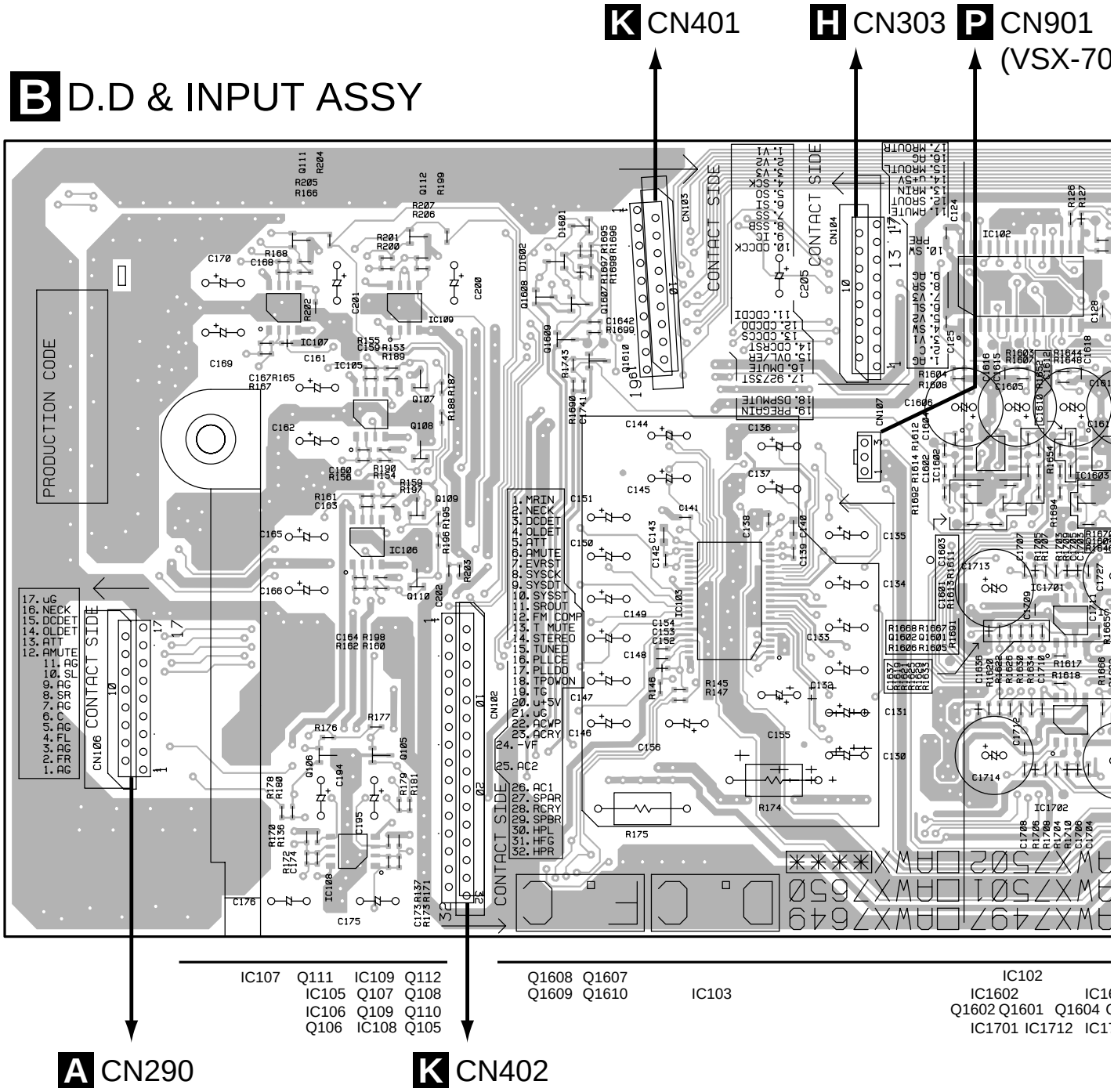

CN901
(VSX-709RDS)

FM/AM TUNER UNIT

J CN1901

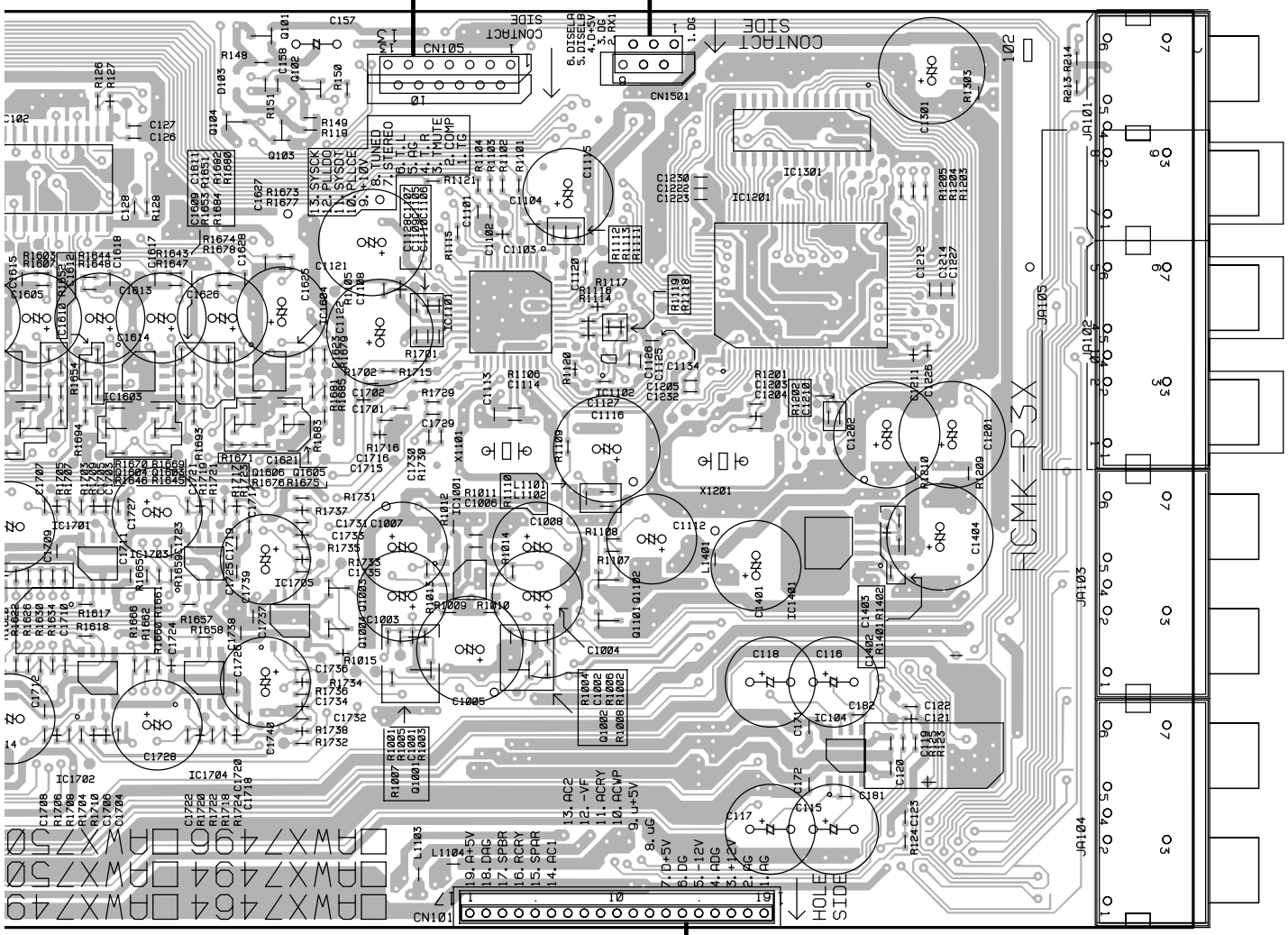

F CN802

B D.D & INPUT ASSY

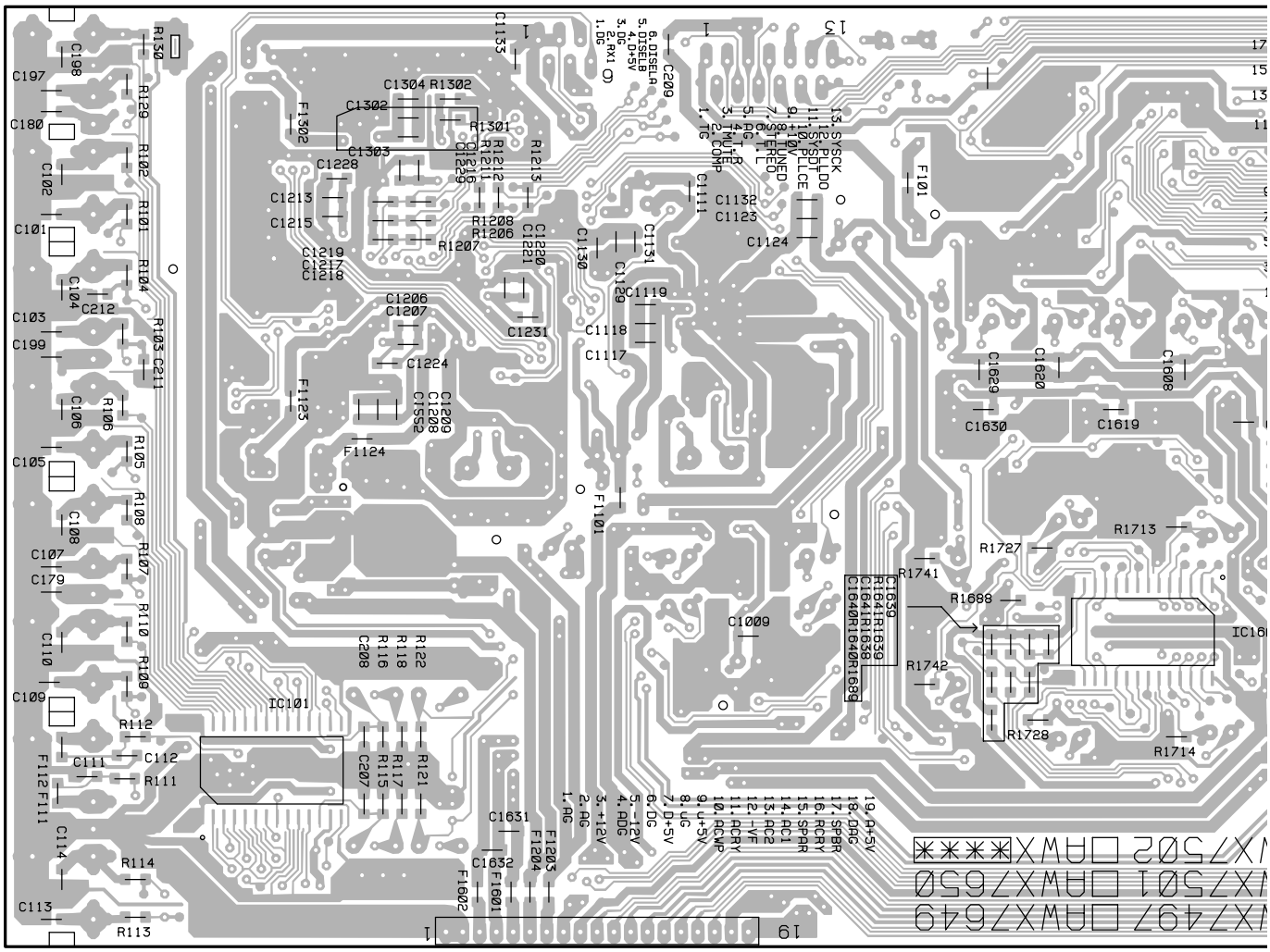

IC101 IC1801

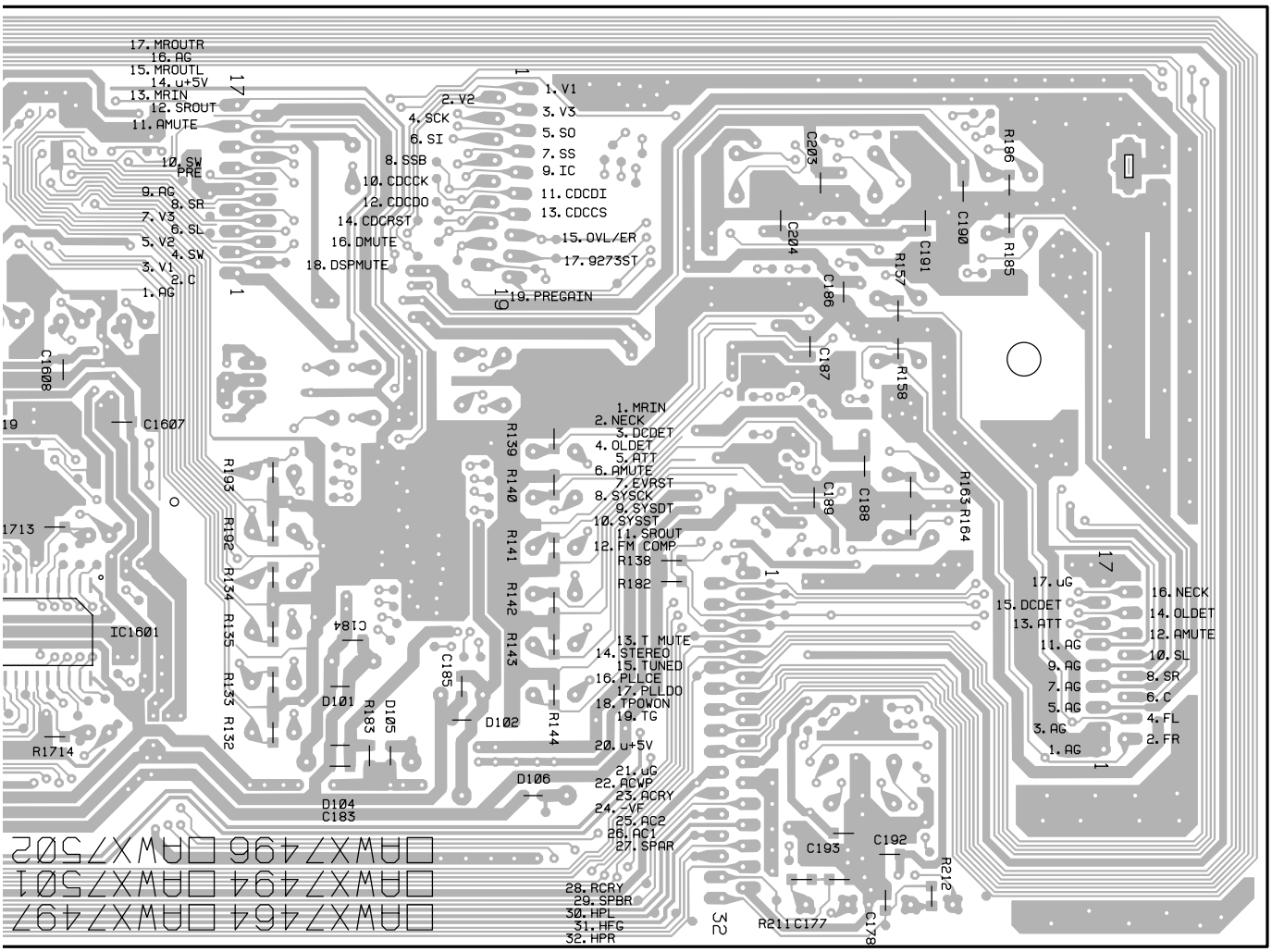

C1801

(ANP7342-B)

SIDE B

4.5 H.P., FRONT, R.ENCODER and POWER SW ASSYS

K FRONT ASSY

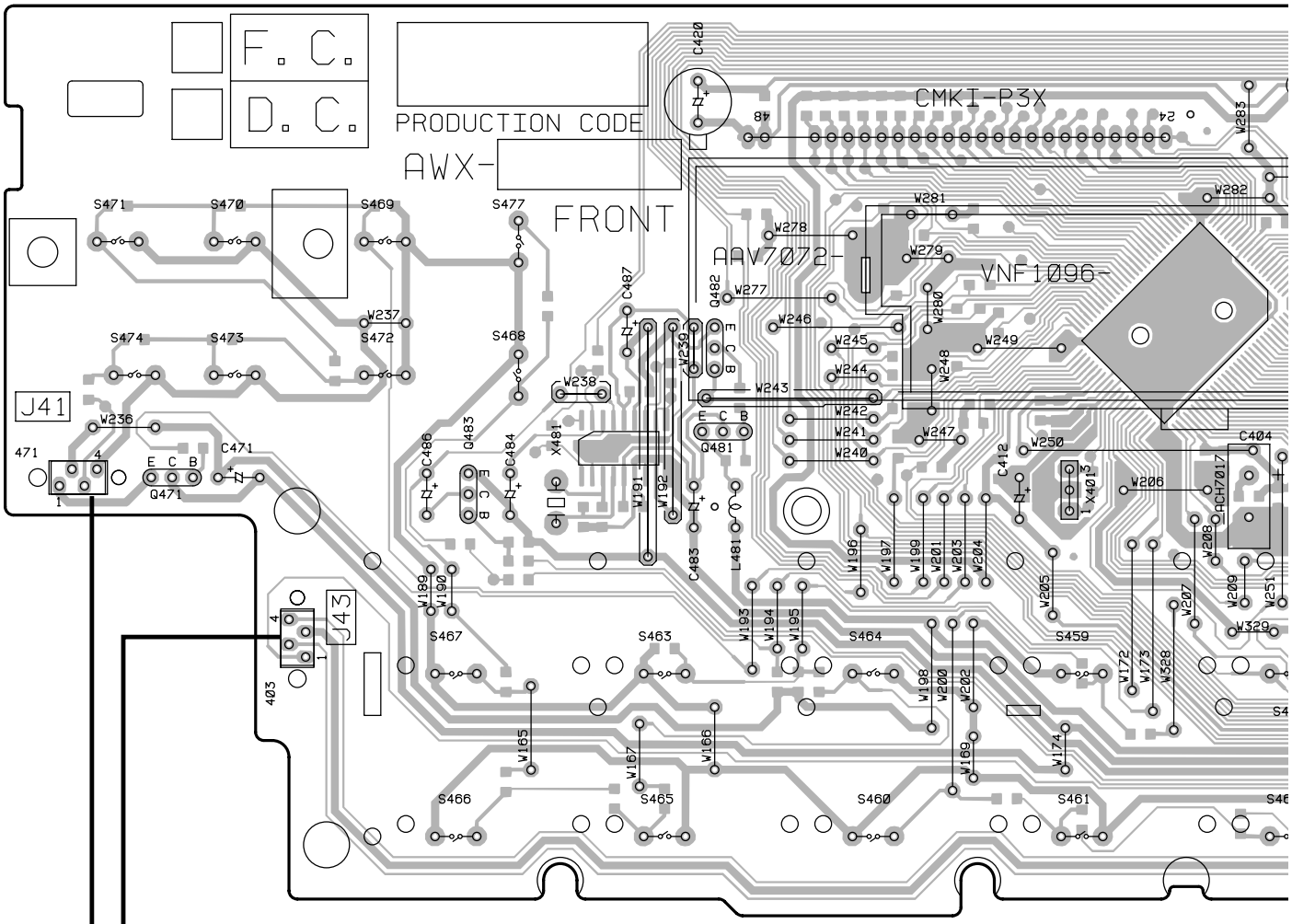

I H.P. ASSY

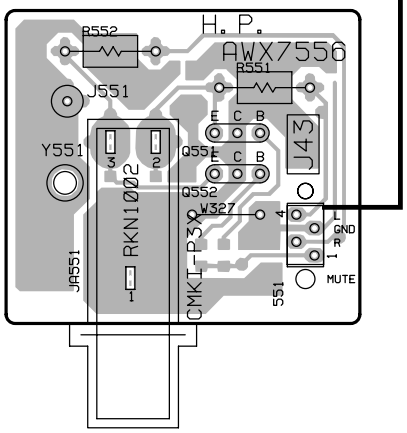

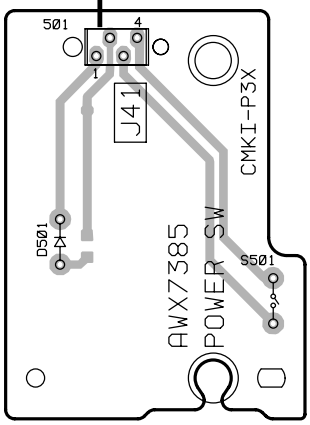

M POWER SW ASSY

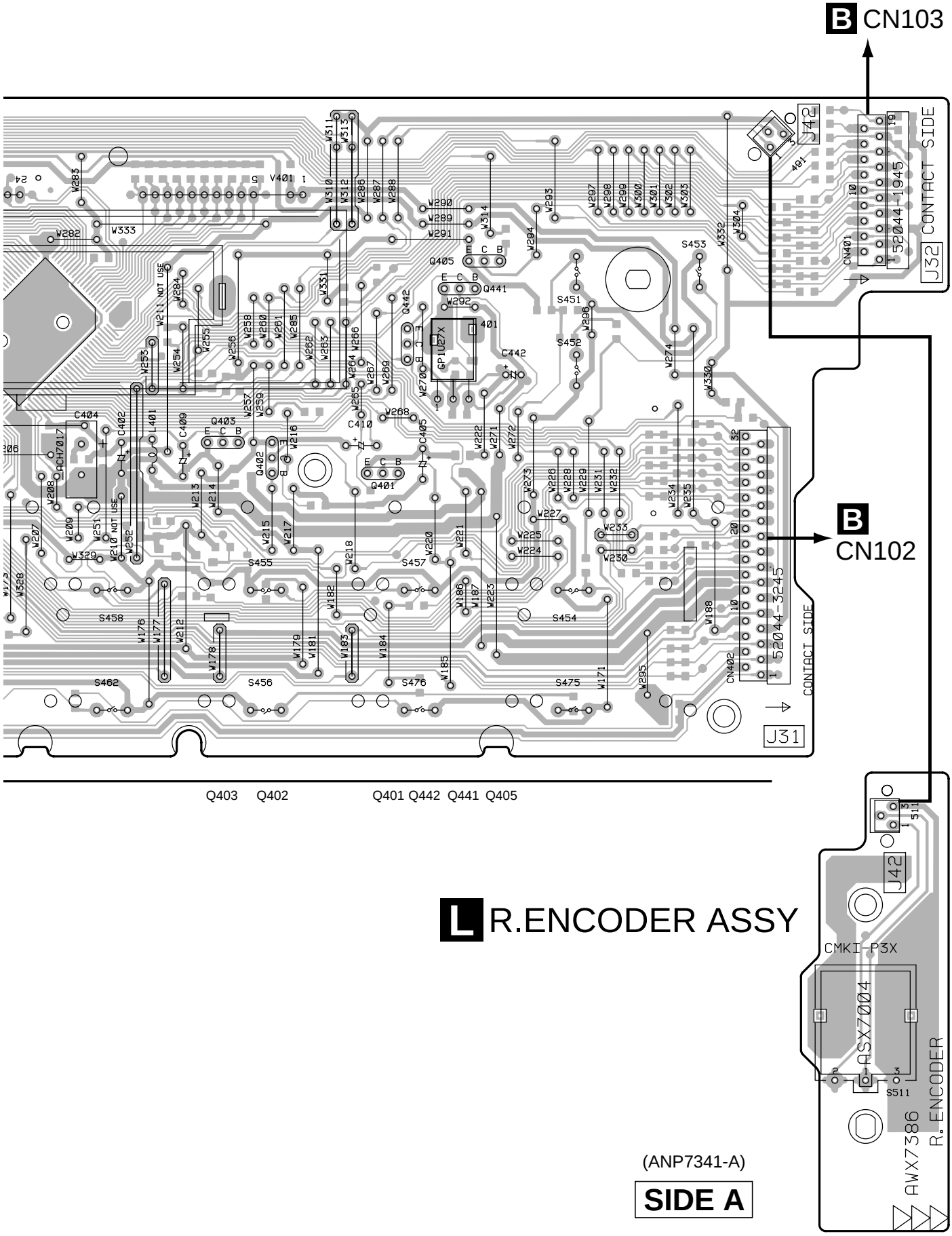

L R.ENCODER ASSY

(ANP7341-A)

SIDE A

K L

K FRONT ASSY

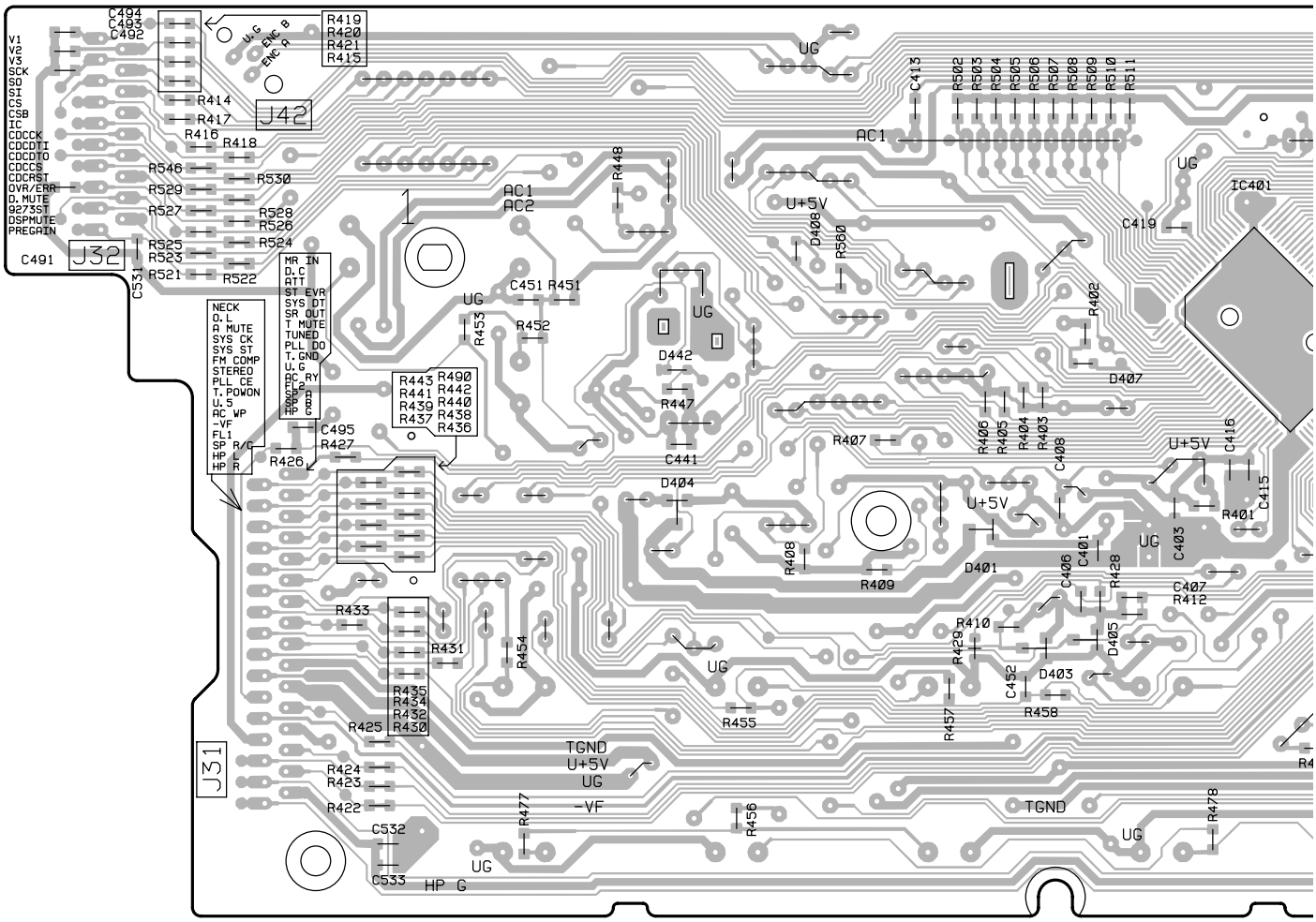

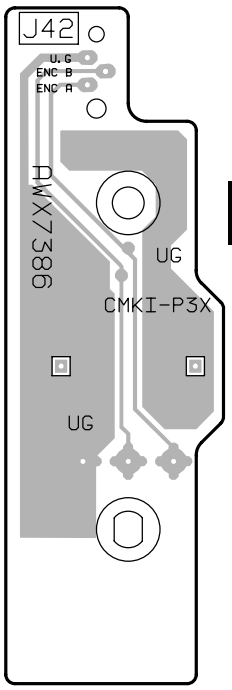

L R.ENCODER ASSY

(ANP7341-A)

SIDE B

A

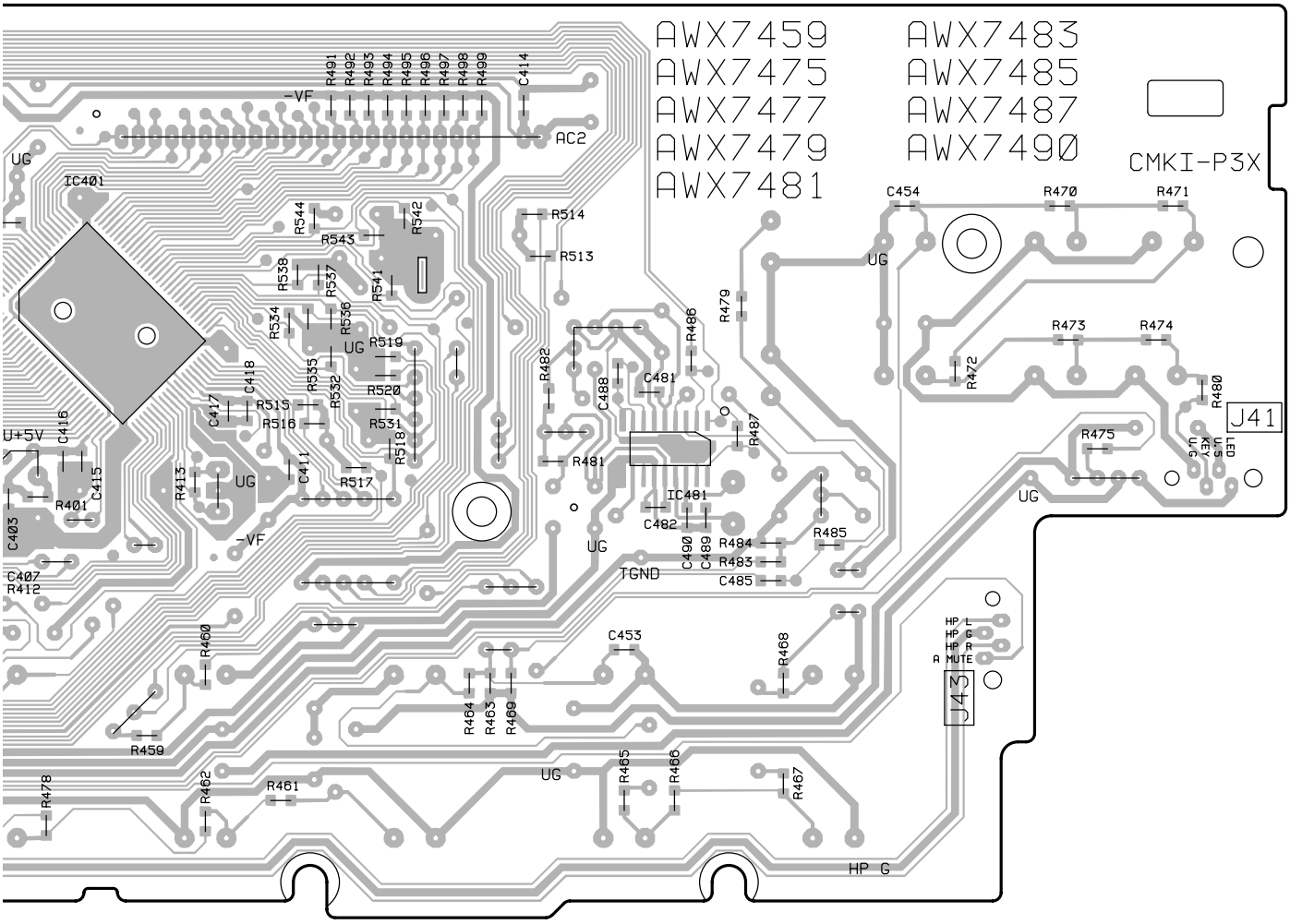

B

C

I H.P. ASSY

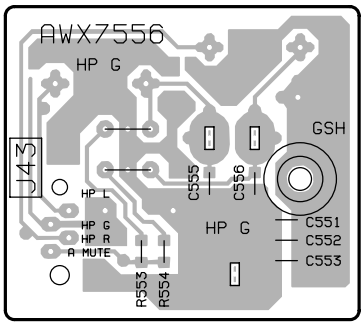

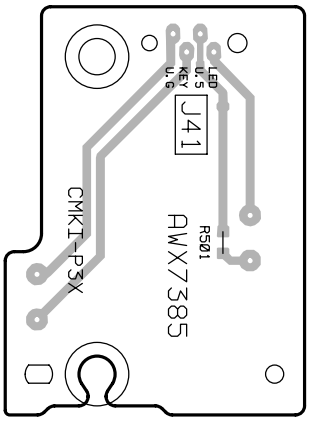

D

M POWER SW ASSY

4.6 VIDEO&6CH IN ASSY

H VIDEO&6CH IN ASSY

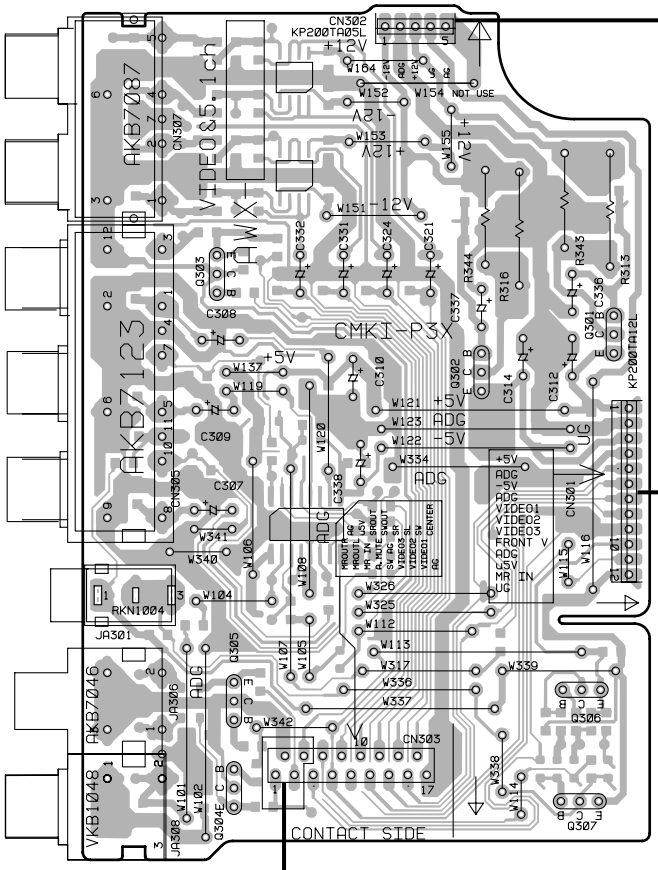

F
CN803

(ANP7341-A)
SIDE A

O
CN390
(VSX-709RDS)

B
CN104

H VIDEO&6CH IN ASSY

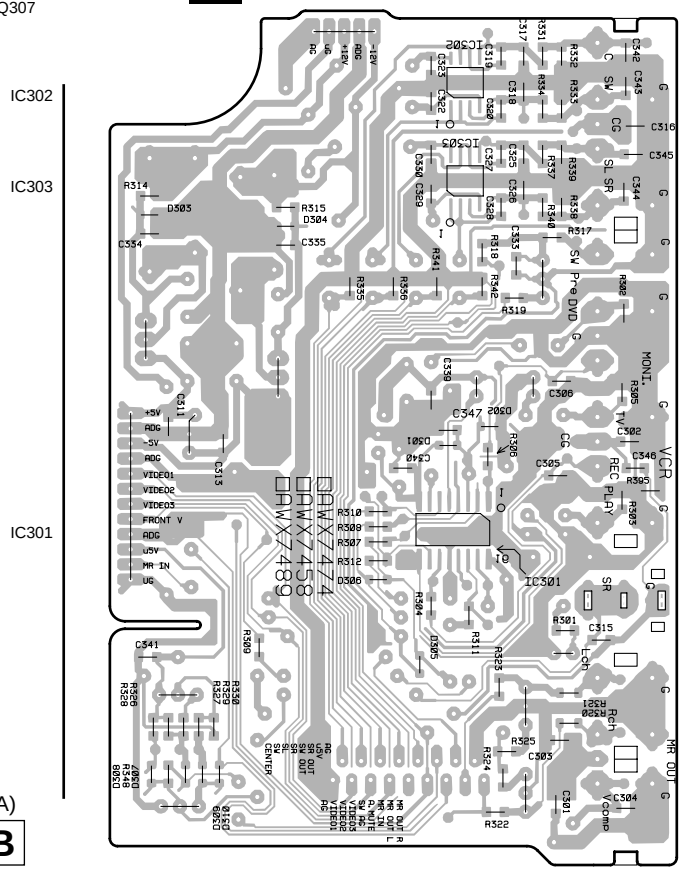

(ANP7341-A)
SIDE B

4.7 S.VIDEO, BOARD TO BOARD and FRONT VIDEO ASSYS

P FRONT VIDEO ASSY

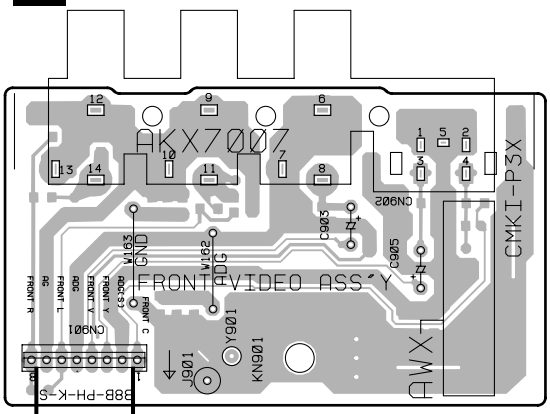

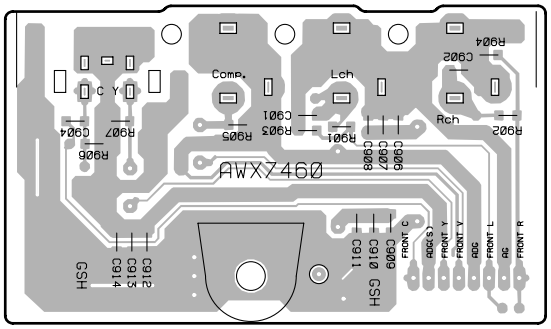

B CN107

N S. VIDEO ASSY

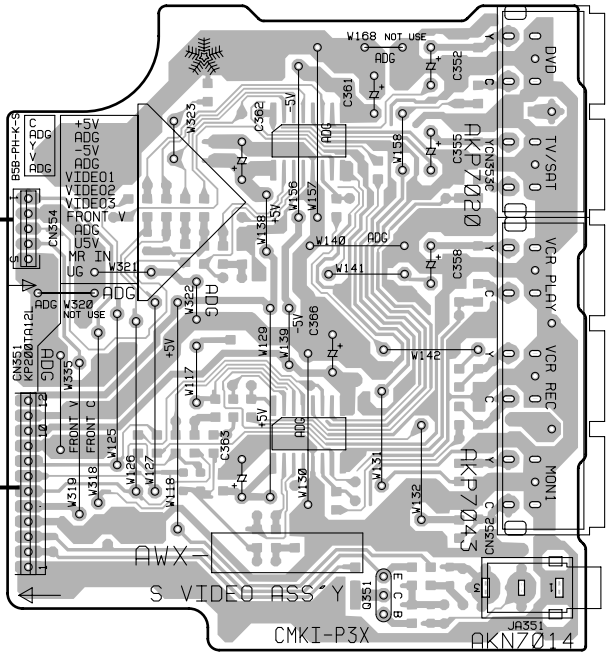

Q351

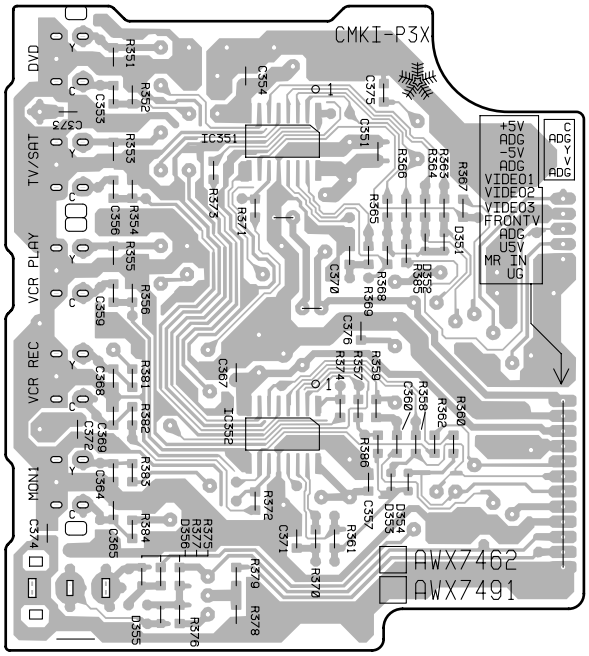

IC351 IC352

O BOARD TO BOARD ASSY

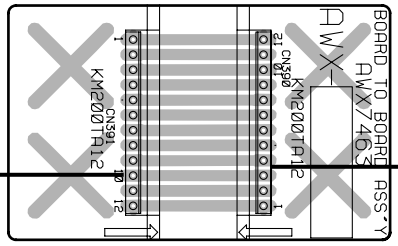

H CN301

(ANP7341-A)
SIDE A

(ANP7341-A)
SIDE B

4.8 LARGE SP CONNECTION and LARGE SP ASSYS

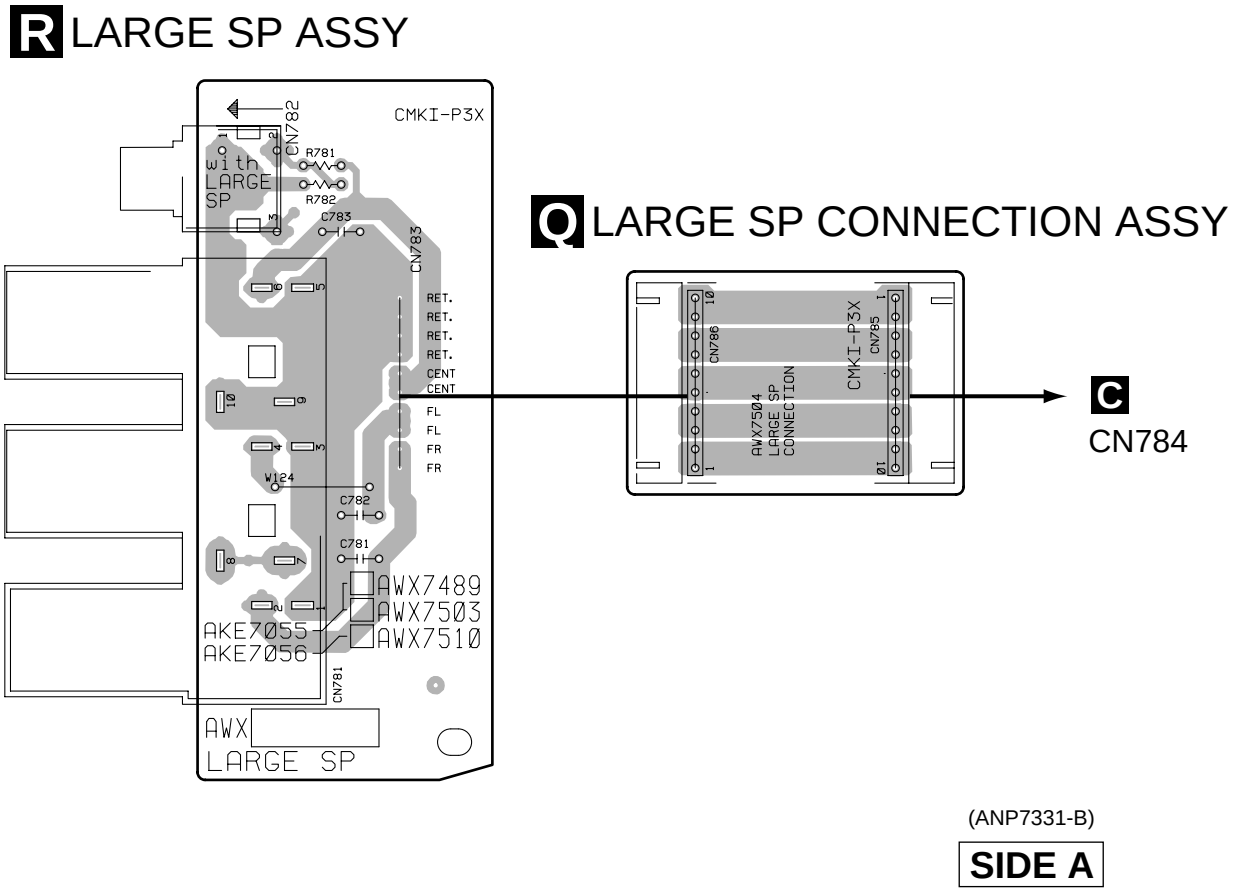

5. PCB PARTS LIST

NOTES: ●*The ⚠ mark found on some component parts indicates the importance of the safety factor of the part. Therefore, when replacing, be sure to use parts of identical designation.*

●*When ordering resistors, first convert resistance values into code form as shown in the following examples.*

Ex.1 When there are 2 effective digits (any digit apart from 0), such as 560 ohm and 47k ohm (tolerance is shown by J=5%, and K=10%).

560 Ω → 56×10^1 → 561 ..... RD1/4PU [5][6][1] J
47k Ω → 47×10^3 → 473 ..... RD1/4PU [4][7][3] J
0.5 Ω → R50 ..... RN2H [R][5][0] K
1 Ω → 1R0 ..... RS1P [1][R][0] K

Ex.2 When there are 3 effective digits (such as in high precision metal film resistors).

5.62k Ω → 562×10^1 → 5621 ..... RN1/4PC [5][6][2][1] F

■ CONTRAST OF PCB ASSEMBLIES

Mark	Symbol and Description	Part No.		Remarks
		VSX-709RDS /MYXJIEW, MYXJIGR, MVXJI	VSX-609RDS /MYXJIEW, MYXJIGR, MVXJI	
NSP	COMPLEX ASSY	AWK7573	AWK7567	
	├─ POWER SW ASSY	AWX7385	AWX7385	
NSP	├─ R.ENCODER ASSY	AWX7386	AWX7386	
	├─ MECHA SW ASSY	AWX7443	AWX7443	
	├─ VIDEO&6CH IN ASSY	AWX7458	AWX7474	
	├─ FRONT ASSY	AWX7459	AWX7477	
	├─ FRONT VIDEO ASSY	AWX7460	Not used	
	├─ DIGITAL IN ASSY	AWX7461	AWX7505	
	├─ S. VIDEO ASSY	AWX7462	Not used	
	├─ BOARD TO BOARD ASSY	AWX7463	Not used	
NSP	└─ H.P. ASSY	AWX7556	AWX7556	
NSP	AMP&PS ASSY	AWK7574	AWK7568	
NSP	├─ AMP INPUT ASSY	AWX7382	AWX7382	
	├─ REGULATOR ASSY	AWX7467	AWX7467	
	├─ TRANS2 ASSY	AWX7468	AWX7468	
NSP	├─ TRANS1 ASSY	AWX7390	AWX7390	
NSP	├─ TRANS3 ASSY	AWX7392	AWX7392	
	├─ AMP&PRIMARY ASSY	AWX7484	AWX7478	
	├─ LARGE SP CONNECTION ASSY	AWX7504	Not used	
	└─ LARGE SP ASSY	AWX7510	Not used	
	D.D & INPUT ASSY	AWX7464	AWX7497	

B D.D & INPUT ASSY

AWX7497 and AWX7464 are constructed the same except for the following :

Mark	Symbol and Description	Part No.		Remarks
		AWX7464	AWX7497	
	CN107 3P CONNECTOR POST	B3B-PH-K-S	Not used	
	101, 102 PCB BINDER	VEF1040	Not used	

H VIDEO&6CH IN ASSY

AWX7474 and AWX7458 are constructed the same except for the following :

Mark	Symbol and Description	Part No.		Remarks
		AWX7458	AWX7474	
	R309	RS1/10S101J	Not used	
	R313, R316	RS2LMF560J	Not used	
	R343, R344	Not used	RS1LMF820J	
	CN301 12P SOCKET	KP200TA12L	Not used	

C AMP&PRIMARY ASSY

AWX7478 and AWX7484 are constructed the same except for the following :

Mark	Symbol and Description	Part No.		Remarks
		AWX7484	AWX7478	
	C757–C759	Not used	CQMBA472J50	
	C769	CKCYB102K50	Not used	
	R757	Not used	RD1/4PU223J	
	R758	Not used	RD1/4PU222J	
	CN751 SPEAKER TERMINAL 6-P	Not used	AKE7020	
	CN753 PIN JACK 1-P	Not used	AKB7042	
	CN784 10P SOCKET	KP250NA10	Not used	

J DIGITAL IN ASSY

AWX7505 and AWX7461 are constructed the same except for the following :

Mark	Symbol and Description	Part No.		Remarks
		AWX7461	AWX7505	
	C1903	CKSQYB104K25	Not used	
	R1903	RS1/10S101J	Not used	
	JA1904 OPTICAL LINK OUT	GP1F32T	Not used	

K FRONT ASSY

AWX7477 and AWX7459 are constructed the same except for the following :

Mark	Symbol and Description	Part No.		Remarks
		AWX7459	AWX7477	
	R428	Not used	RS1/10S472J	
	R429	RS1/10S0R0J	RS1/10S751J	

■ PCB PARTS LIST FOR VSX-709RDS UNLESS OTHERWISE NOTED

Mark	No.	Description	Part No.
A	**AMP INPUT ASSY**		
	OTHERS		
	CN290	17P CONNECTOR	52044-1745
	CN291	16P SOCKET	KP200TA16L
B	**D.D & INPUT ASSY**		
	SEMICONDUCTORS		
	IC1101		CS4226-KQ(J)
	IC1301		KM68257EJ-15
	IC108		M5216FP
	IC103		M62446FP
	IC1001		NJM2100M
	IC1602–IC1604,IC1701–IC1705		NJM4558MD
	IC1401		PQ20WZ51
	IC102		TC9163AF
	IC1601		TC9164AF
	IC101		TC9273F-007
	IC104–IC107		UPC4570G2
	IC1201		YSS912C
	Q101, Q102		2SC2412K
	Q1001, Q1002, Q105–Q112		2SC3326
	Q1601–Q1606		2SC3326
	Q1003, Q1101, Q1607, Q1608, Q1610		DTA124EK
	Q1004, Q1102, Q1609		DTC124EK
	D1601, D1602		1SS181
	D103, D105, D106		1SS355
	D104		UDZS5.1B
	D101, D102		UDZS6.8B
	COILS AND FILTERS		
	L1401	CHIP SOLID INDUCTOR	ATL7002
	F1101, F1123, F1124, F1203, F1204		DTF1064
	F1302, F1601, F1602	CHIP BEAD	DTF1064
	F101, F111, F112	CHIP BEAD	DTF1067
	L1101–L1104	CHIP SOLID INDUCTOR	QTL1013
	CAPACITORS		
	C101–C114, C1207, C1209, C1213		CCSQCH101J50
	C1217, C1218, C1221, C1303		CCSQCH101J50
	C1640, C1641, C197, C198		CCSQCH101J50
	C207, C208		CCSQCH101J50
	C211, C212		CCSQCH220J50
	C1119		CCSQCH271J50
	C1123, C1124		CCSQCH331J50
	C1118, C1130, C1639		CCSQCH471J50
	C1001, C1002, C121, C1212, C122		CCSRCH101J50
	C1223, C123, C126–C128		CCSRCH101J50

Mark	No.	Description	Part No.
	C152–C154, C159, C160		CCSRCH101J50
	C163, C164		CCSRCH101J50
	C1102, C1736		CCSRCH102J50
	C1707, C1708, C1721, C1722, C173		CCSRCH151J50
	C1735, C174		CCSRCH151J50
	C1113, C1114		CCSRCH180J50
	C1203, C1204		CCSRCH200J50
	C1601, C1602, C1609, C1610, C167		CCSRCH221J50
	C1623		CCSRCH271J50
	C1103, C1104		CCSRCH390J50
	C1101, C1106, C1110, C1210		CCSRCH471J50
	C1603, C1604, C1611, C1612		CCSRCH471J50
	C130–C137, C146		CEAT100M50
	C1116, C1121, C1122, C1201, C1404		CEAT101M10
	C157, C175, C176		CEAT101M16
	C1112		CEAT1R0M50
	C1713, C1714, C1727, C1728		CEAT220M25
	C1739, C1740		CEAT220M25
	C1005, C1202		CEAT221M6R3
	C144, C145, C147–C151, C205		CEAT3R3M50
	C117, C118, C161, C162		CEAT470M25
	C165, C166, C169		CEAT470M25
	C155, C156		CEAT471M10
	C1003, C1004, C115, C116, C1401		CEAT4R7M50
	C1605, C1606, C1613, C1614		CEAT4R7M50
	C1625, C1626, C170, C194, C195		CEAT4R7M50
	C201		CEAT4R7M50
	C1115		CEATR47M50
	C1301		CEJA101M10
	C1007, C1008		CEJANP100M10
	C1129, C1132, C1206, C1208		CKSQYB103K50
	C1215, C1216, C1220, C1302		CKSQYB103K50
	C1607, C1608, C1619, C1620		CKSQYB103K50
	C1629, C1630, C177–C180, C183		CKSQYB103K50
	C186–C193, C199		CKSQYB103K50
	C1108		CKSQYB224K16
	C140, C143		CKSQYB334K16
	C1009, C1111, C1117, C1133, C1219		CKSQYF104Z25
	C1224, C1225, C1228, C1229, C1231		CKSQYF104Z25
	C1304, C1631, C1632, C209		CKSQYF104Z25
	C184, C185		CKSQYF473Z50
	C1006, C1128, C1134, C119, C120		CKSRYB103K50
	C1205, C1211, C1214, C1222		CKSRYB103K50
	C124, C125, C158, C1636, C1637		CKSRYB103K50
	C1642, C1709, C171, C1710–C1712		CKSRYB103K50
	C172, C1723–C1726, C1737, C1738		CKSRYB103K50
	C1705, C1706, C1719, C1720		CKSRYB104K16
	C1733, C1734		CKSRYB104K16
	C1621		CKSRYB122K50
	C168		CKSRYB152K50
	C139, C142		CKSRYB153K50
	C1615–C1618, C1627, C1703, C1704		CKSRYB222K50
	C1717, C1718, C1731		CKSRYB222K50
	C1107		CKSRYB223K50
	C1701, C1702, C1715, C1716, C1729		CKSRYB682K50
	C1732		CKSRYB682K50
	C138, C141		CKSRYB822K50
	C1105, C1109, C1226, C1227, C1230		CKSRYF104Z16
	C1232, C202		CKSRYF104Z16
	C1628		CKSRYF104Z50

Mark	No.	Description	Part No.
RESISTORS			
	R1302, R1689		RS1/10S0R0J
	R211, R212		RS1/10S100J
	R1206–R1208, R1638–R1640		RS1/10S102J
	R115–R118, R121, R122		RS1/10S104J
	R132–R135, R139–R143		RS1/10S104J
	R157, R158, R163, R164		RS1/10S104J
	R185, R186, R192, R193		RS1/10S104J
	R183		RS1/10S122J
	R144		RS1/10S204J
	R103, R104, R111, R112		RS1/10S222J
	R101, R102, R105–R110		RS1/10S331J
	R113, R114, R129, R130		RS1/10S331J
	R1211–R1213		RS1/10S472J
	R138, R1641, R1713, R1714		RS1/10S473J
	R1727, R1728, R1741, R1742, R182		RS1/10S473J
⚠	R174, R175		RS1LMF101J
	Other Resistors		RS1/16S□□□J
OTHERS			
	CN1501	CONNECTOR 6P	52045-0645
	CN104, CN105	13P CONNECTOR	52045-1345
	CN106	17P CONNECTOR	52045-1745
	CN103	19P CONNECTOR	52045-1945
	CN102	32P CONNECTOR	52045-3245
	JA101–JA104	PIN JACK(4P)	AKB7048
	CN107	3P CONNECTOR POST	B3B-PH-K-S
	CN101	19P SOCKET	KP200TA19L
	101, 102	PCB BINDER	VEF1040
	X1101	CRYSTAL RESONATOR (18.432MHz)	RSS1052
	X1201	CRYSTAL RESONATOR (12.288MHz)	VSS1140

C AMP&PRIMARY ASSY

Mark	No.	Description	Part No.
SEMICONDUCTORS			
⚠	IC52	PROTECTOR (315mA)	AEK7003
⚠	IC603	PROTECTOR (1A)	AEK7009
	IC51		NJM78M56FA
⚠	IC601		PAC010A
⚠	IC602		PAC011A
	Q703		2SA1145
	Q702		2SB1238X
	Q691, Q692		2SC1740S
	Q704		2SC1845
	Q605, Q606, Q633, Q655, Q656		2SC2240
	Q601–Q604, Q631, Q632		2SC2878
	Q651–Q654		2SC2878
	Q701		2SD1859X
	Q51		KRC101M
	D56, D57, D601–D604		1SS133
	D631, D632, D651–D654		1SS133
	D751–D758		1SS133
⚠	D701, D702		D5SBA20(B)
	D711		MTZJ22D
	D58		MTZJ5.1A
	D712		MTZJ5.1B
	D605, D606, D633, D634		MTZJ8.2A
⚠	D51–D55		S5688G

Mark	No.	Description	Part No.
COILS AND FILTERS			
	L751–L753, L761, L762		ATH1004
⚠	L52		XTF3001
SWITCHES AND RELAYS			
	RY751–RY754		ASR7001
⚠	RY51	JOE LOWPOWER RELAY	ASR7013
CAPACITORS			
	C707, C708	(0.01µF/AC250V)	ACG1005
⚠	C51, C52	(10000pF/AC250V)	ACG7020
	C701, C702	(4700µF/63V)	ACH7134
	C703, C704	(3300µF/42V)	ACH7135
	C607–C610, C634, C635		CCCSL120J50
	C657–C660		CCCSL120J50
	C613, C614, C637, C663, C664		CCCSL221J50
	C615, C616, C638, C665, C666		CEANP2R2M50
	C705, C706		CEAT100M2A
	C712		CEAT101M10
	C611, C612, C636, C661, C662		CEAT101M16
	C711		CEAT101M35
	C53		CEAT102M16
	C692		CEAT221M10
	C54		CEAT470M25
	C605, C606, C633, C655, C656		CEAT4R7M50
	C751–C756, C761–C764		CFTYA224J50
	C55–C57		CGCYX103M25
	C601, C602, C631, C651, C652		CKCYB102K50
	C691, C769		CKCYB102K50
	C603, C604, C632, C653, C654		CKCYB331K50
	C765–C768		CQMBA472J50
RESISTORS			
⚠	R615, R616, R638, R665, R666	(0.22Ω/5W)	ACN7094
⚠	R52		RD1/2PM270J
⚠	R751, R752, R755, R761, R762		RD1/4PMF101J
⚠	R753, R754, R756, R763, R764		RS1LMF4R7J
⚠	R711		RS2LMF272J
	Other Resistors		RD1/4PU□□□J
OTHERS			
	53	3P CABLE HOLDER	51048-0300
	701	7P CABLE HOLDER	51048-0700
	CN53	22P CONNECTOR	52045-2245
	CN754	SPEAKER TERMINAL 8-P	AKE7057
	H51, H52	FUSE CLIP	AKR7001
⚠	T51	STANDBY TRANSFORMER	ATT7037
	J44	3P JUMPER WIRE	D20PYY0325E
	CN601	16P PLUG	KM200TA16
	CN784	10P SOCKET	KP250NA10
	CN51	AC CODE SOCKET	RKP1751
	KN51, KN601	EARTH METAL FITTING	VNF1084

D TRANS2 ASSY

Mark	No.	Description	Part No.
SEMICONDUCTORS			
⚠	IC851–IC853	PROTECTOR (1.6A)	AEK7012
OTHERS			
	851	7P CABLE HOLDER	51048-0700

E TRANS3 ASSY

TRANS3 ASSY has no service part.

F REGULATOR ASSY

Mark	No.	Description	Part No.
SEMICONDUCTORS			
	IC803, IC804		NJM78M05FA
	IC801		NJM78M12FA
	IC802		NJM79M12FA
	Q801, Q803, Q805		KRA103M
	Q802, Q804, Q806		KRC101M
⚠	D801–D808		S5688G
CAPACITORS			
	C808, C811		CEAT101M10
	C805, C806		CEAT101M16
	C809		CEAT222M16
	C801, C802		CEAT222M25
	C803, C804, C807, C810		CGCYX103M25
OTHERS			
	CN801	22P CONNECTOR	52045-2245
	CN802	19P PLUG	KM200TA19
	CN803	5P PLUG	KM200TA5

GA TRANS1 ASSY

TRANS1 ASSY has no service part.

GB MECHA SW ASSY

Mark	No.	Description	Part No.
SWITCHES AND RELAYS			
	S591		ASG7014
CAPACITORS			
	C591, C592		CKSQYF103Z50
OTHERS			
	CN591		52151-0310

H VIDEO&6CH IN ASSY

Mark	No.	Description	Part No.
SEMICONDUCTORS			
	IC301		NJM2296M
	IC302, IC303		NJM4558MD
	Q302		2SA1515
	Q303		2SC2878
	Q301		2SC3377
	D301, D302, D305, D306		1SS355
	D303, D304		UDZS6.2B
CAPACITORS			
	C319, C320, C327, C328		CCSQCH101J50
	C342–C345		CCSQCH101J50
	C347		CCSQCH470J50
	C307–C310, C312, C314, C338		CEAT470M25
	C321, C324, C331, C332		CEAT4R7M50

Mark	No.	Description	Part No.
	C302, C315, C316, C322, C323		CKSQYB103K50
	C329, C330		CKSQYB103K50
	C346		CKSQYB104K16
	C304–C306, C317, C318		CKSQYB221K50
	C325, C326		CKSQYB221K50
	C333		CKSQYB331K50
	C311, C313		CKSQYB473K50
RESISTORS			
⚠	R313, R316		RS2LMF560J
	Other Resistors		RS1/10S□□□J
OTHERS			
	CN303	13P CONNECTOR	52044-1345
	CN307	PIN JACK(4P)	AKB7087
	CN305	6P PIN JACK	AKB7123
	CN301	12P SOCKET	KP200TA12L
	CN302	5P SOCKET	KP200TA5L
	JA301	JACK	RKN1004

I H.P. ASSY

Mark	No.	Description	Part No.
SEMICONDUCTORS			
	Q551, Q552		2SC2878
CAPACITORS			
	C553		CCSQCH471J50
	C552		CKSQYB103K50
	C551		CKSQYB104K16
	C555, C556		CKSQYB223K50
RESISTORS			
⚠	R551, R552		RS1/2LMF121J
	Other Resistors		RS1/10S□□□J
OTHERS			
	551	CABLE HOLDER(4P)	51063-0405
	JA551	JACK	RKN1002

J DIGITAL IN ASSY

Mark	No.	Description	Part No.
SEMICONDUCTORS			
	IC1901		TC74ACT151F
	IC1902		TC74HCU04AF
COILS AND FILTERS			
	F1901–F1904	CHIP BEAD	DTF1067
CAPACITORS			
	C1917		CCSQCH220J50
	C1918		CCSQCH221J50
	C1907, C1914		CCSQCH271J50
	C1916		CCSQCH471J50
	C1911		CCSQCH560J50
	C1904, C1905, C1912		CEAT101M10
	C1915		CKSQYB102K50
	C1906, C1910, C1913, C1919, C1920		CKSQYB103K50
	C1922		CKSQYB103K50
	C1901–C1903, C1908, C1909, C1921		CKSQYB104K25
RESISTORS			
	All Resistors		RS1/10S□□□J
OTHERS			
	CN1901	CONNECTOR 6P	52045-0645
	JA1902,JA1903	OPTICAL RECEIV MOD.	GP1F32R
	JA1904	OPTICAL LINK OUT	GP1F32T
	JA1901	JACK	VKB1077

K FRONT ASSY

Mark	No.	Description	Part No.
SEMICONDUCTORS			
	IC481		BU1923F
	IC401		PDG247B
	Q481		2SA1515
	Q405		2SA933S
	Q483		2SC1740S
	Q401, Q402, Q442, Q471		KRA103M
	Q403, Q441, Q482		KRC101M
	D407, D408, D442		1SS355
	D403, D405		DAN217
	D401, D404		DAP202K
COILS AND FILTERS			
	L401, L481		LFEA2R2J
SWITCHES AND RELAYS			
	S451–S477		XSG3001
CAPACITORS			
	C404	(0.047F/5.5V)	ACH7017
	C420	(220µF/35V)	ACH7101
	C489, C490		CCSQCH270J50
	C483, C487		CEAT101M10
	C486		CEAT1R0M50
	C402, C405		CEAT221M6R3
	C409, C410, C484		CEAT2R2M50
	C412		CEAT470M50
	C442		CEJA470M10
	C451–C454, C481, C482, C495		CKSQYB102K50
	C401, C403, C411, C441, C531		CKSQYB103K50
	C408, C416, C418, C491–C494		CKSQYB104K16
	C532		CKSQYB223K25
	C485		CKSQYB472K50
	C406, C407		CKSQYB473K16
	C488		CKSQYB561K50
RESISTORS			
	All Resistors		RS1/10S□□□J
OTHERS			
	491	CABLE HOLDER(3P)	51063-0305
	403, 471	CABLE HOLDER(4P)	51063-0405
	CN401	19P CONNECTOR	52044-1945
	CN402	32P CONNECTOR	52044-3245
	V401	FL TUBE	AAV7072
	X481	CRYSTAL RESONATOR (4.332MHz)	ASS7004
	X401	CERAMIC RESONATOR (7.2MHz)	ASS7018
	401	REMOTE RECEIVER UNIT	GP1U27X

Mark	No.	Description	Part No.

L R.ENCODER ASSY

SWITCHES AND RELAYS

	S511	ASX7004

OTHERS

	511	CABLE HOLDER(3P)	51063-0305

M POWER SW ASSY

SEMICONDUCTORS

	D501	BR3371XJ30A

SWITCHES AND RELAYS

	S501	XSG3001

RESISTORS

	All Resistors	RS1/10S□□□J

OTHERS

	501	CABLE HOLDER(4P)	51063-0405

N S. VIDEO ASSY

SEMICONDUCTORS

	IC351, IC352	NJM2296M
	D351–D354	1SS355

CAPACITORS

	C375, C376	CCSQCH470J50
	C352, C355, C358, C361–C363	CEAT470M25
	C366	CEAT470M25
	C372, C373	CKSQYB103K50
	C353, C356, C359, C360	CKSQYB104K25
	C364, C365, C368–C371	CKSQYB221K50

RESISTORS

	All Resistors	RS1/10S□□□J

OTHERS

	CN353	MINI DIN SOCKET 2P	AKP7020
	CN352	MINI DIN SOCKET 3P	AKP7043
	CN354	CONNECTOR POST	B5B-PH-K-S
	CN351	12P SOCKET	KP200TA12L

O BOARD TO BOARD ASSY

OTHERS

	CN390, CN391	12P PLUG	KM200TA12

P FRONT VIDEO ASSY

CAPACITORS

	C903, C905	CEAT470M25
	C908, C911, C914	CKSQYB103K50
	C904, C906, C909, C912	CKSQYB104K25
	C901, C902	CKSQYB221K50
	C907, C910, C913	CKSQYB471K50

RESISTORS

	All Resistors	RS1/10S□□□J

OTHERS

	CN902	PIN JACK(4P)	AKX7007
	KN901	EARTH METAL FITTING	VNF1084

Q LARGE SP CONNECTION ASSY

OTHERS

	CN785, CN786	10P PLUG	KM250NA10L

R LARGE SP ASSY

CAPACITORS

	C781–C783	CQMBA472J50

RESISTORS

	All Resistors	RD1/4PU□□□J

OTHERS

	CN782	PIN JACK 1P	AKB7042
	CN781	SPEAKER TERMINAL 6P	AKE7056
	CN783	10P SOCKET	KP250NA10

6. ADJUSTMENT

There is no information to be shown in this chapter.

7. GENERAL INFORMATION

7.1 DISASSEMBLY

■ Diagnosis

Note : This photograph shows other models.
However, the work method is the same.

① Remove the Bonnet (seven screws).

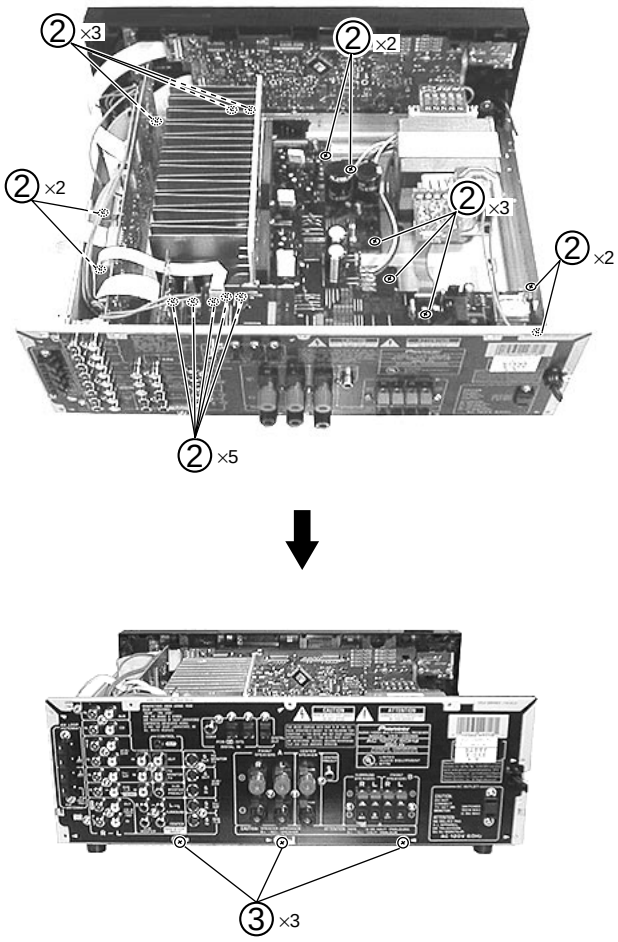

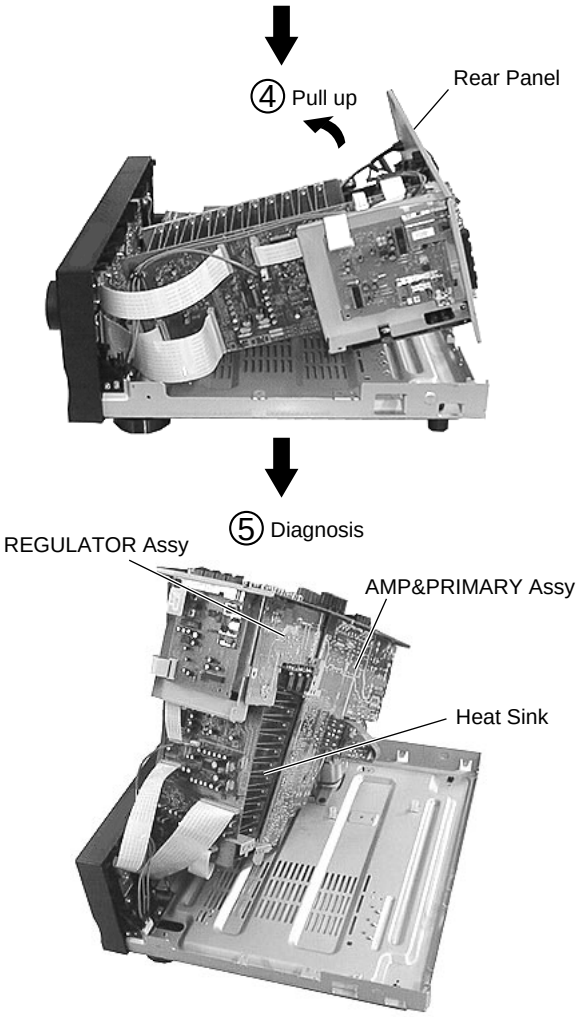

■ PCB Location

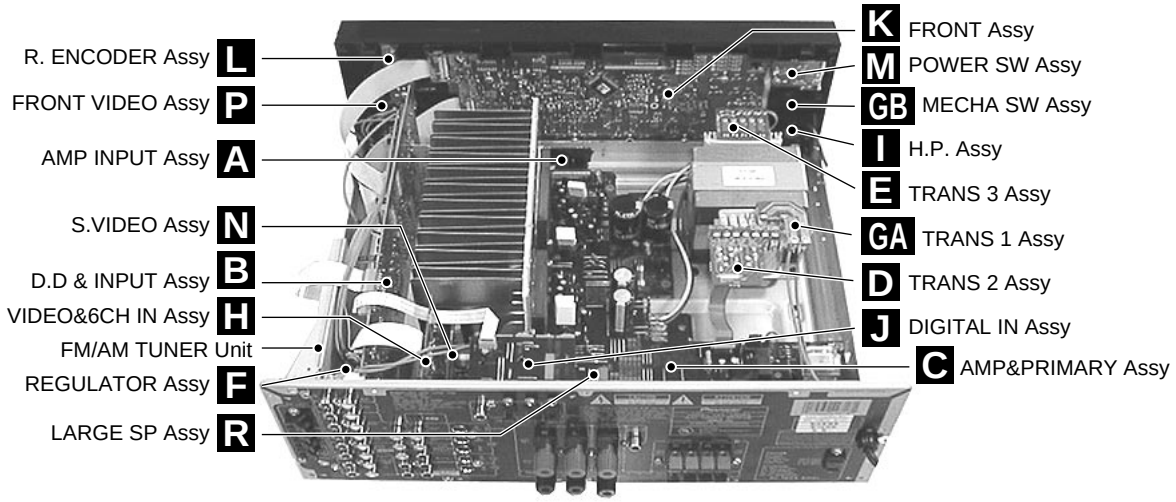

7.2 PARTS

7.2.1 IC

• The information shown in the list is basic information and may not correspond exactly to that shown in the schematic diagrams.

■ PDG247A (FRONT ASSY : IC401)

• System Control MCU

● Pin Arrangement (Top View)

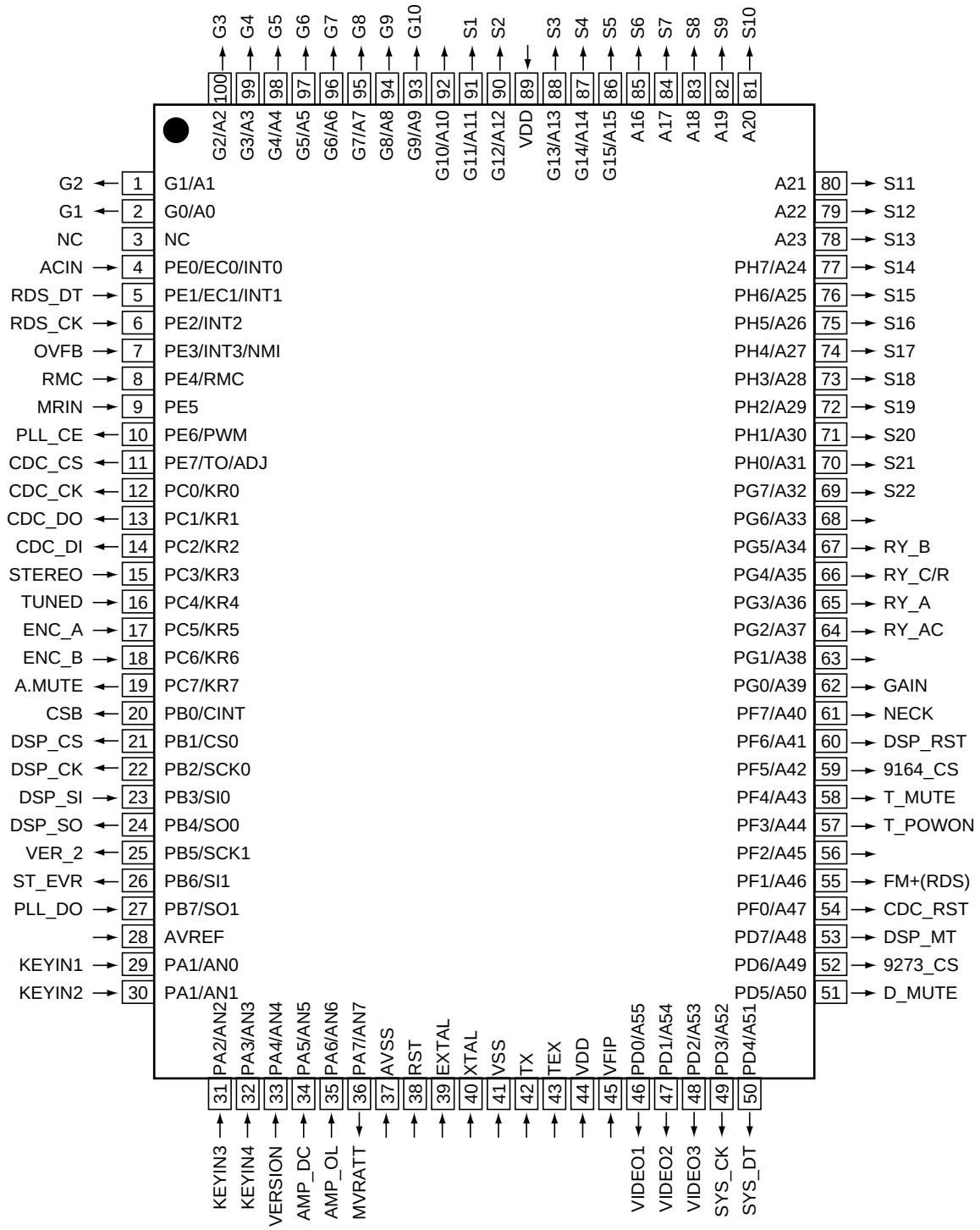

● Pin Function

No.	Pin Name	I/O	Pin Function	Active
1	G2	O	Grid output 2	H
2	G1	O	Grid output 1	H
3	NC	–	Connect to VDD	
4	ACIN	I	AC pulse input	
5	RDS_DT	I	Serial control DATA signal of RDS communication	
6	RDS_CK	I	Serial control CLOCK signal of RDS communication	
7	DIRLOCK	I	ERR/OVER input from CODEC	
8	RMC	I	Remote control signal input (no-carrier signal)	
9	MRIN	I	MULTI-ROOM input	
10	PLL_CE	O	Chip select signal for communication with LC72131 (tuner)	H
11	CDC_CS	O	CODEC chip serect	
12	CDC_CK	O	CODEC, TC9164 control clock	
13	CDC_DO	O	CODEC, TC9164 control data output	
14	CDC_DI	I	Data input from CODEC	
15	STEREO	I	Stereo/Monoral signal judgment signal	
16	TUNED	I	TUNED information	
17	ENC_A	I	Rotary encoder signal input A	
18	ENC_B	I	Rotary encoder signal input B	
19	AMUTE	O	Audio mute	L
20	CSB	O	Chip select for control of YSS912 sub DSP	L
21	DSP_CS	O	Chip select for control of YSS912 main DSP	L
22	DSP_CK	O	Clock signal for communication with YSS912	H
23	DSP_SI	I	DATA input for communication with YSS912	
24	DSP_SO	O	DATA output signal for communication with YSS912	H
25	VER_2	I	Destination switch 2	
26	ST_EVR	O	Strobe signal for communication with electric volume IC	H
27	PLL_DO	I	Data input signal for communication with LC72131 (tuner)	
28	AVref	–	Connect to VDD	
29	KEYIN1	I	Key input A/D conversion port 1	
30	KEYIN2	I	Key input A/D conversion port 2	
31	KEYIN3	I	Key input A/D conversion port 3	
32	KEYIN4	I	Key input A/D conversion port 4	
33	VER 1	I	Destination switch (A/D input)	
34	AMP_DC	I	DC abnormality detection of protection circuit (L : Abnormality detection)	L
35	AMP_OL	I	Over-load detection of protection circuit (L : Abnormality detection)	L
36	MVRATT	O	ATT control of master volume (L : Less than -15dB)	H
37	AVSS	–	Connect to VSS	
38	RST	–	Reset	
39	EXTAL	–	Connect to the oscillator (7.2MHz)	
40	XTAL	–		
41	VSS	–	Connect to VSS	
42	TX	–	Open	
43	TEX	–	Connect to VSS	
44	VDD	–	+5V	
45	VFDP	–	-30V	
46	VIDEO1	O	NJM2296D control	H
47	VIDEO2			
48	VIDEO3			
49	SYS_DT	O	Data signal for communication with M62446, TC9163, TC9164 and PLL	H
50	SYS_CK	O	Clock signal for communication with M62446, TC9163, TC9164 and PLL	H

No.	Pin Name	I/O	Pin Function	Active
51	D_MUTE	O	Digital mute (Not used)	H
52	9273_CS	O	TC9273 Chip select	H
53	DSP_MT	O	DSP mute (ASSY mute)	H
54	CDC_RST	O	CODEC reset	H
55	FM+(RDS)	O	Tr switch ON/OFF for power supply of RDS decoder (L : AM, power OFF , H : Other)	H
56		O	Not used	
57	T_POWON	O	Tuner module ON/OFF (North America model only)	H
58	T_MUTE	O	Tuner mute	H
59	9164 CS	O	TC9163, TC9164 Chip select	H
60	DSP_RST	O	YSS912 reset	
61	NECK_SEL	O	5.1ch, surround mode and A+B Stereo : H / Stereo : L	H/L
62	GAIN_SEL	O	Gain select (5.1ch and Stereo of analog input : H)	H
63		O	Not used	H
64	RY_AC	O	AC relay ON/OFF	H
65	RY_A	O	Speaker A relay ON/OFF	H
66	RY_C/R	O	Rear/Center Speaker relay ON/OFF	H
67		O	Not used	H
68		O	Not used	H
69	S22	O	Segment output 22	H
70	S21		Segment output 21	
71	S20		Segment output 20	
72	S19		Segment output 19	
73	S18		Segment output 18	
74	S17		Segment output 17	
75	S16		Segment output 16	
76	S15		Segment output 15	
77	S14		Segment output 14	
78	S13		Segment output 13	
79	S12		Segment output 12	
80	S11		Segment output 11	
81	S10		Segment output 10	
82	S9		Segment output 9	
83	S8		Segment output 8	
84	S7		Segment output 7	
85	S6		Segment output 6	
86	S5		Segment output 5	
87	S4		Segment output 4	
88	S3		Segment output 3	
89	VDD	–	5V	
90	S2	O	Segment output 2	H
91	S1		Segment output 1	
92			Not used (Fixed Vfdp)	
93	G10	O	Grid output 10	H
94	G9		Grid output 9	
95	G8		Grid output 8	
96	G7		Grid output 7	
97	G6		Grid output 6	
98	G5		Grid output 5	
99	G4		Grid output 4	
100	G3		Grid output 3	

■ M62446FP (D.D & INPUT ASSY : IC103)

• **Sound Controller IC (Volume and Tone Control)**

● **Block Diagram**

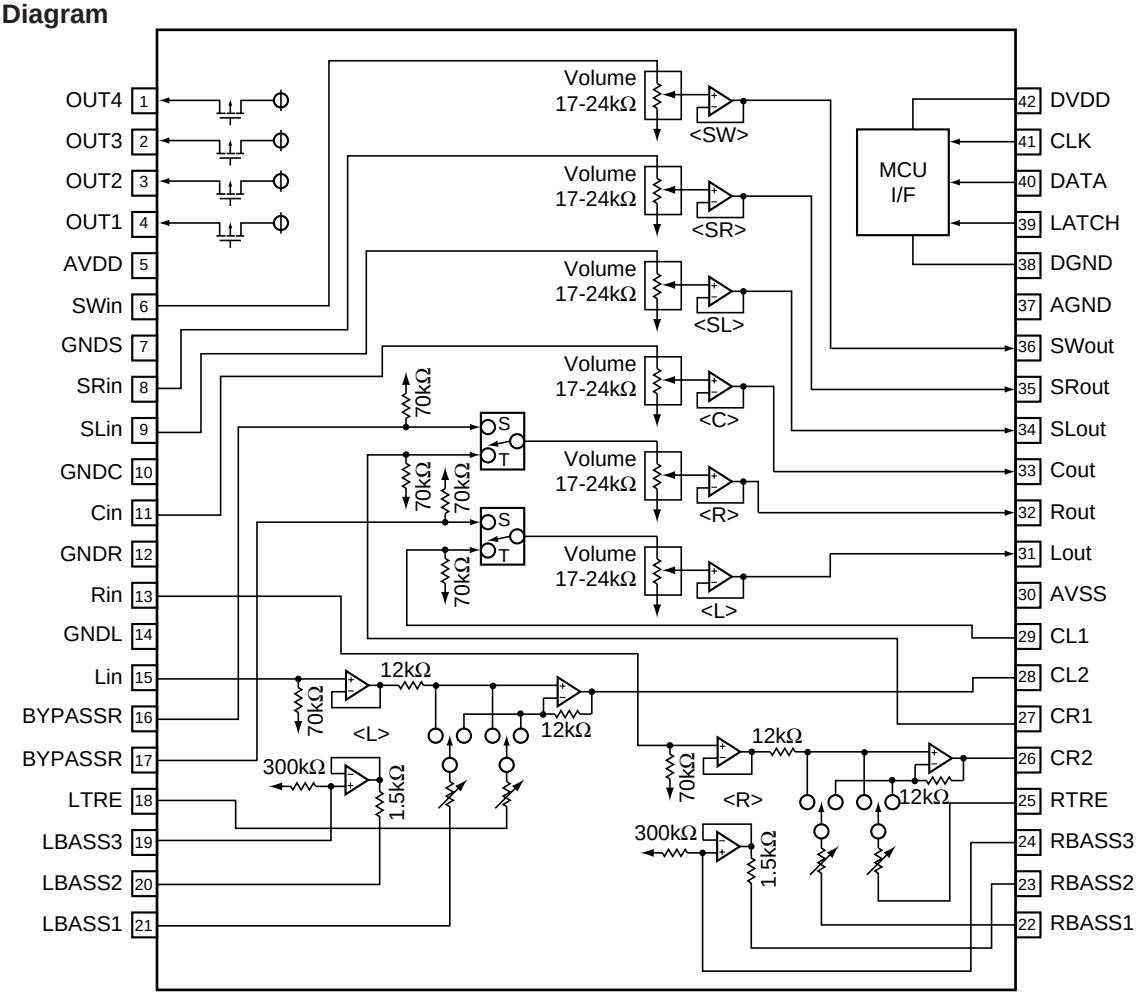

● **Pin Function**

No.	Pin Name	Function
1	OUT4	Output port (open drain of PchTr)
2	OUT3	
3	OUT2	
4	OUT1	
5	AVDD	Analog positive power supply port
7	GNDS	GND (connect to analog ground)
10	GNDC	
12	GNDR	
14	GNDL	
6	SWin	Volume input
8	SRin	
9	SLin	
11	Cin	
36	SWout	Volume output
35	SRout	
34	SLout	
33	Cout	
13	Rin	TONE input
15	Lin	
16	BYPASSR	L and R Volume input at bypass
17	BYPASSL	
31	Lout	L output
32	Rout	R output

No.	Pin Name	Function
18	LTRE	TONE TREBLE frequency control port
25	RTRE	
19	LBASS3	TONE BASS frequency control port
24	RBASS3	
20	LBASS2	
23	RBASS2	
21	LBASS1	
22	RBASS1	
26	CR2	TONE output port
28	CL2	
27	CR1	L and R volume input
29	CL1	
31	Lout	L output
32	Rout	R output
30	AVSS	Analog negative power supply port
37	AGND	Analog ground port
38	DGND	Digital ground port
39	LATCH	Latch input port
40	DATA	Data input port
41	CLK	Clock input port for data transmission
42	DVDD	Digital power supply port

■ W24257AJ-12 (D.D & INPUT ASSY : IC1301)

• **32K × 8 High-Speed CMOS Static RAM**

● Block Diagram

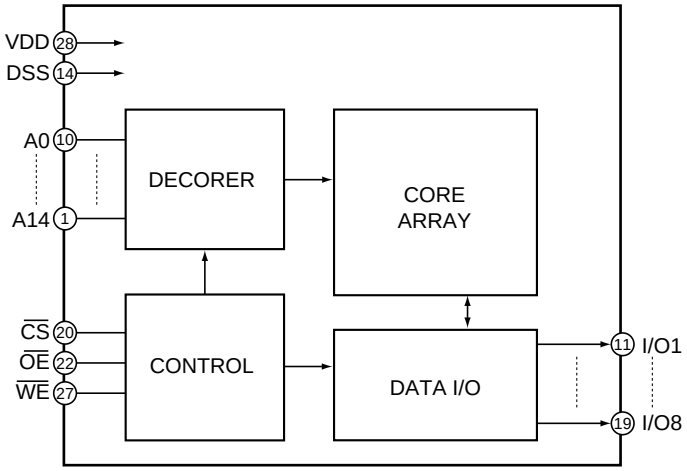

● Pin Function

No.	Pin Name	Function
1	A14	Addres Inputs
2	A12	
3	A7	
4	A6	
5	A5	
6	A4	
7	A3	
8	A2	
9	A1	
10	A0	
21	A10	
23	A11	
24	A9	
25	A8	
26	A13	
11	I/O1	Data Inputs/Outputs
12	I/O2	
13	I/O3	
15	I/O4	
16	I/O5	
17	I/O6	
18	I/O7	
19	I/O8	
14	Vss	Ground
20	CS	Chip Select Input
22	OE	Output Enable Input
27	WE	Write Enable Input
28	Vdd	Power Supply

■ TC9273F-007 (D.D & INPUT ASSY : IC101)

• **Analog Switch Array**

● Block Diagram

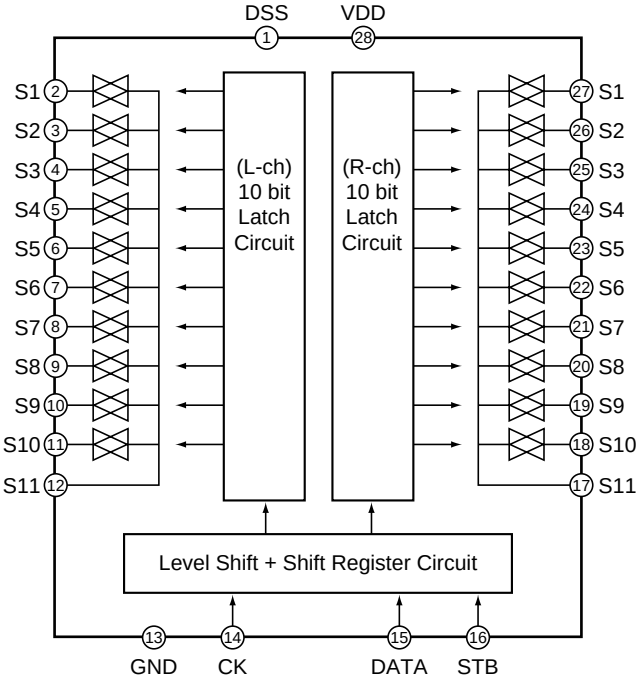

● Pin Function

No.	Pin Name	Function
1	VSS	Minus Power Supply
2, 27	S1	Input and Output
3, 26	S2	
4, 25	S3	
5, 24	S4	
6, 23	S5	
7, 22	S6	
8, 21	S7	
9, 20	S8	
10, 19	S9	
21, 18	S10	
26, 17	S11	
13	GND	Digital Ground
14	CK	Clock Input
15	DATA	Data Input
16	STB	Strobe Input
28	VDD	Plus Power Supply

7.2.2 DISPLAY

■ AAV7072 (FRONT ASSY : V401)

- **FL DISPLAY**

● **Pin Assignment**

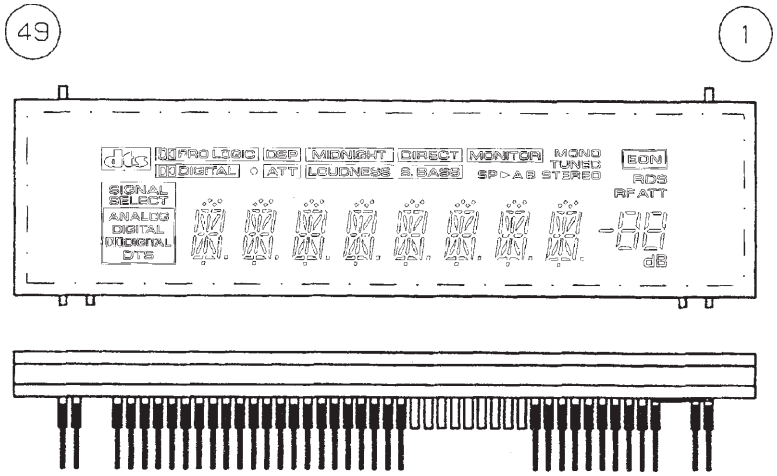

● **Pin Connection**

PIN NO.	49	48	47	46	45	44	43	42	41	40	39	38	37	36	35	34	33	32	31	30	29	28	27	26	25	24	23	22	21	20	19	18	17	16	15	14	13	12	11	10	9	8	7	6	5	4	3	2	1
CONNECTION	F2	F2	NP	NP	P21	P22	P20	P19	P18	P17	P16	P15	P14	P13	P12	P11	P10	P9	P8	P7	P6	P5	P4	P3	P2	P1	NX	NX	NX	NX	NX	NX	NX	NX	NX	10G	9G	8G	7G	6G	5G	4G	3G	2G	1G	NP	NP	F1	F1

NOTE 1) F1,F2 --- Filament
2) NP ------ No pin
3) NX ------ No extend pin
4) DL ------ Datum Line
5) 1G~10G --- Grid

● **Grid Assignment**

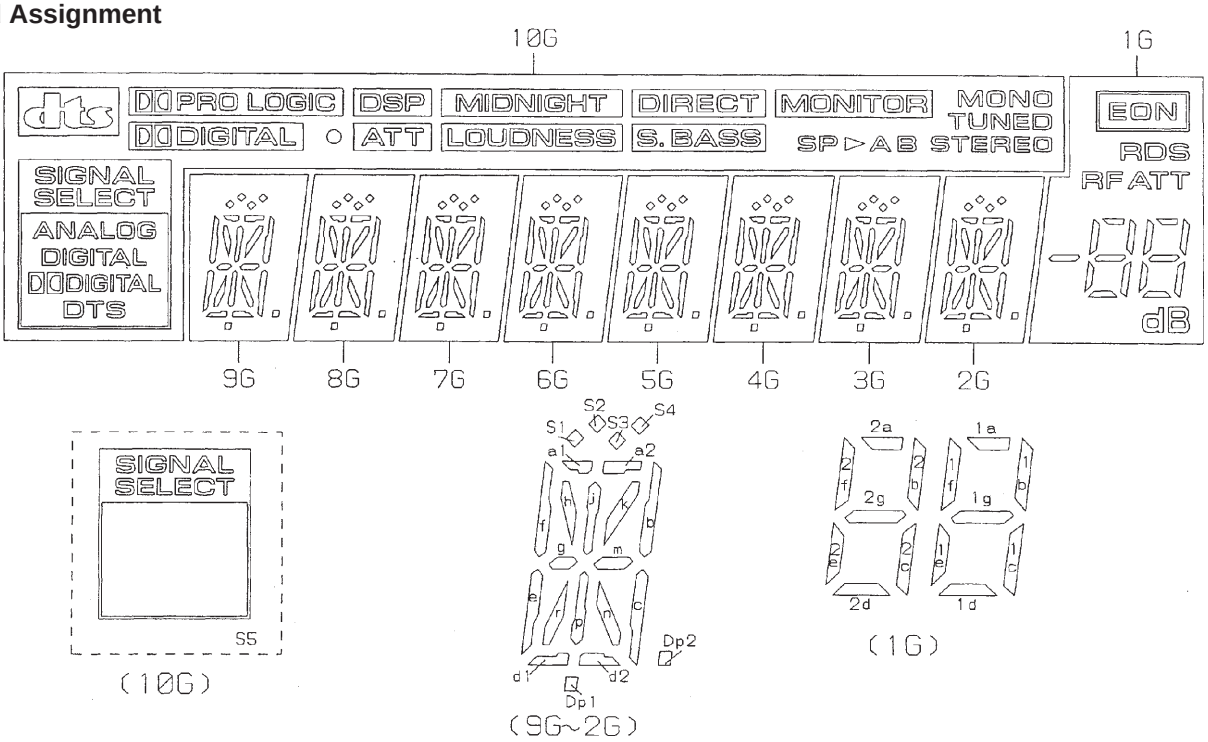

● Anode Connection

	10G	9G	8G	7G	6G	5G	4G	3G	2G	1G
P1	STEREO	a1	a1	a1	a1	a1	a1	a1	a1	dB
P2	TUNED	a2	a2	a2	a2	a2	a2	a2	a2	2a
P3	MONO	h	h	h	h	h	h	h	h	2b
P4	B	j	j	j	j	j	j	j	j	2f
P5	A	k	k	k	k	k	k	k	k	2g
P6	SP ▷	b	b	b	b	b	b	b	b	2c
P7	MONITOR	f	f	f	f	f	f	f	f	2e
P8	S. BASS	m	m	m	m	m	m	m	m	2d
P9	DIRECT	g	g	g	g	g	g	g	g	1a
P10	LOUDNESS	c	c	c	c	c	c	c	c	1b
P11	MIDNIGHT	e	e	e	e	e	e	e	e	1f
P12	ATT	r	r	r	r	r	r	r	r	1g
P13	DSP	p	p	p	p	p	p	p	p	1c
P14	○	n	n	n	n	n	n	n	n	1e
P15	DIGITAL	d1	d1	d1	d1	d1	d1	d1	d1	1d
P16	PRO LOGIC	d2	d2	d2	d2	d2	d2	d2	d2	⬭
P17	DTS	Dp2	Dp2	Dp2	Dp2	Dp2	Dp2	Dp2	Dp2	RDS
P18	DIGITAL	Dp1	Dp1	Dp1	Dp1	Dp1	Dp1	Dp1	Dp1	RF ATT
P19	DIGITAL	S1	S1	S1	S1	S1	S1	S1	S1	EON
P20	ANALOG	S4	S4	S4	S4	S4	S4	S4	S4	(EON)
P21	S5	S2	S2	S2	S2	S2	S2	S2	S2	–
P22	dts	S3	S3	S3	S3	S3	S3	S3	S3	–

8. PANEL FACILITIES AND SPECIFICATIONS

8.1 PANEL FACILITIES

Front Panel

This illustration shows the VSX-709RDS model.

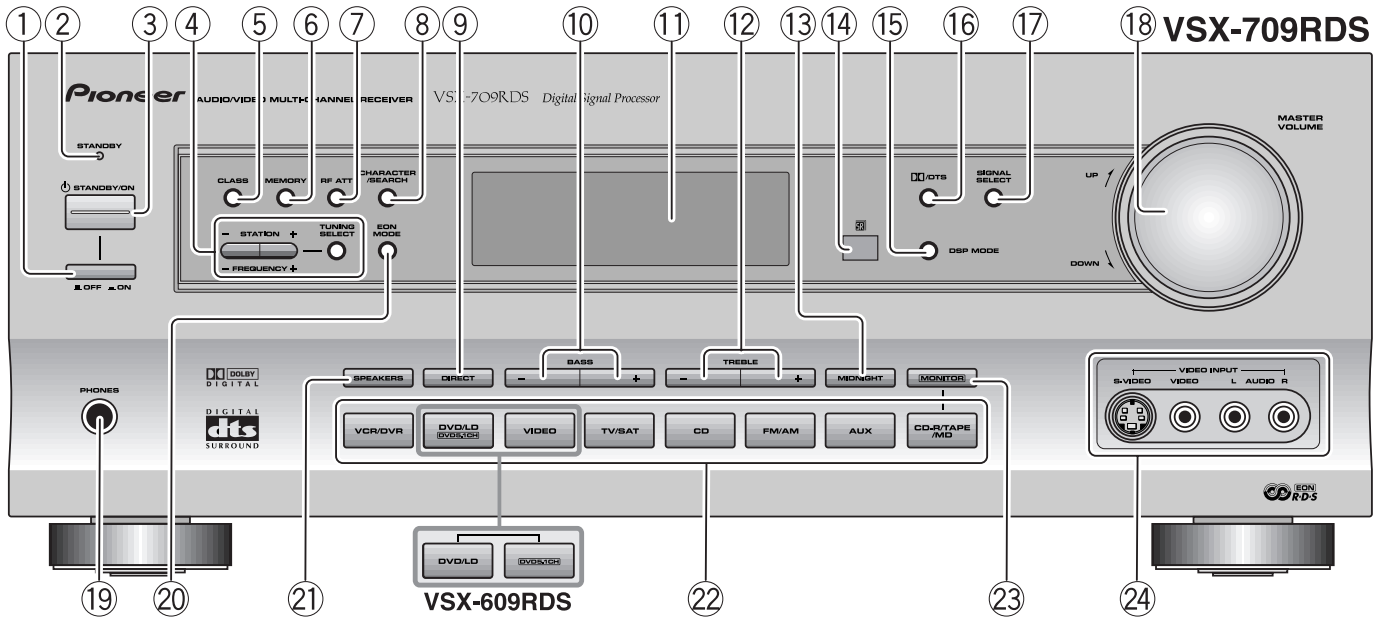

① **OFF/ ON (Main power) button**

If the button is OFF (), the power of the receiver is shut off and the STANDBY/ON button (③) on the receiver or the remote control do not function. Pressing the button again will turn the receiver ON () and the receiver enters the standby mode. In the standby mode, you can turn on the receiver using the STANDBY/ON button (③) on the receiver or the remote control.

② **STANDBY indicator**

Lights when the receiver is in standby mode (note that the receiver consumes a small amount of power (1 W) in standby mode).

③ **STANDBY/ON button**

Switches the receiver between on and standby (note that the receiver consumes a small amount of power (1 W) in standby mode).

④ **TUNING SELECT button**

Switches between station memory and frequency select modes.

STATION (+/–) buttons

Selects station memories when using the tuner.

FREQUENCY (+/–) buttons

Selects the frequency when using the tuner.

⑤ **CLASS button**

Switches between the three banks (classes) of station memories.

⑥ **MEMORY button**

Press to memorize a station for recall using the STATION (+/–) buttons.

⑦ **RF ATT button**

Use to lower the input level of a radio signal that is too powerful or contain interference thus causing the receiver to distort

⑧ **CHARACTER/SEARCH button**

Use to search for different program types in RDS mode. It is also used to input station names.

⑨ **DIRECT button**

Use to switch Direct playback on or off. This mode bypasses the tone controls and channel levels for the most accurate reproduction of a program source.

⑩ **BASS (+/–) buttons**

Use to increase/decrease bass (within a range of – 6 dB to 6 dB in 2 dB steps).

⑪ **Display**

⑫ **TREBLE (+/–) buttons**

Use to increase/decrease treble (within a range of – 6 dB to 6 dB in 2 dB steps).

⑬ **MIDNIGHT button**

Use when listening to movie soundtracks at low volume. This feature will enable you to hear quiet sounds and not get jolted by loud or sudden sound effects.

⑭ **Remote sensor ()**

Receives the signals from the remote control.

⑮ **DSP MODE button**

Use to switch between the various DSP modes available (**HALL1, HALL 2, JAZZ, DANCE, THEATER1, THEATER 2**) and **DSP off**. Use to create different surround sound effects from any stereo source.

⑯ **DD /DTS button**

Use to switch between the various Dolby/DTS surround modes.

⑰ **SIGNAL SELECT button**

Use to select between an analog or digital signal.

⑱ **MASTER VOLUME**

Use to set the overall listening volume.

⑲ **PHONES jack**
Use to connect headphones but this does not switch the speakers off.

⑳ **EON MODE button**
Use to search for different programs that are transmitting traffic or news information (this search method is called EON).

㉑ **SPEAKERS button**
Use to switch the speaker system A → B → A+B → off.

㉒ **Function buttons**
Use to select a source for playback or recording.

㉓ **MONITOR button**
Press to switch tape monitoring on/off.

㉔ **VIDEO INPUT jacks (VSX-709RDS only)**
Connect a video camera, video game system, etc. to the VIDEO INPUT jacks.

Display

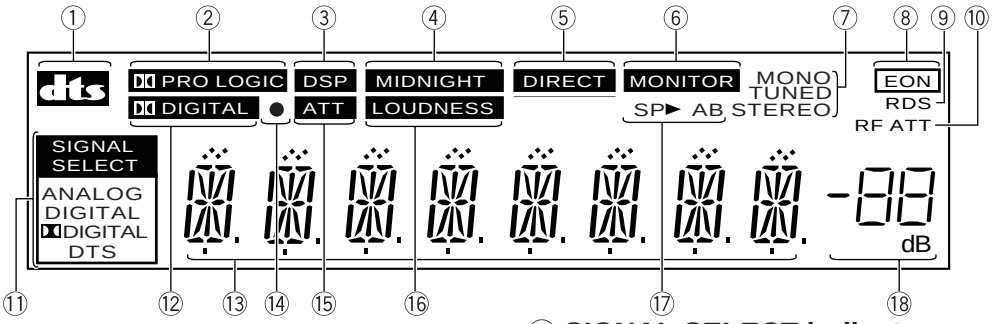

① **dts indicator**
Lights when DTS mode is being used.

② **PRO LOGIC indicator**
When the (Dolby)/DTS mode of the receiver is on, this lights to indicate playback of a two channel source.

③ **DSP indicator**
Lights when any Advanced Theater or DSP mode is selected.

④ **MIDNIGHT indicator**
Lights when Midnight listening mode is in use.

⑤ **DIRECT indicator**
Lights when Direct playback is ON. This function bypasses all tone, balance, DSP and Dolby Surround effects.

⑥ **MONITOR indicator**
Lights when **MONITOR** is selected to hear a recording as it's being made.

⑦ **Tuner indicators**
MONO:
Lights when the mono mode is set using the MPX button.
TUNED:
Lights when a broadcast is being received.
STEREO:
Lights when a stereo FM broadcast is being received in Auto stereo mode.

⑧ **EON indicator**
The box around EON indicator lights to inform you that the currently tuned station carries the EON data service. When the EON mode is set, the EON indicator light†s, but during actual reception of an EON broadcast the EON indicator will flash. An empty box in the EON indicator spot means it is possible to pick up an EON broadcast but the receiver has not been set to do so (this will only appear when RDS is switched on).

⑨ **RDS indicator**
Lights when an RDS broadcast is received.

⑩ **RF ATT indicator**
Lights when the RF ATT is on.

⑪ **SIGNAL SELECT indicators**
Light to indicate the type of input signal assigned for the current component (see "Front Panel", ⑰, SIGNAL SELECT).
ANALOG : Lights when an analog signal is selected.
DIGITAL : Lights when a digital audio signal is selected.
DIGITAL : Lights when a Dolby Digital signal is played.
DTS: Lights when a source with DTS audio signals is played.

⑫ **DIGITAL indicator**
When the (Dolby)/DTS mode of the receiver is on, this lights to indicate playback of a Dolby Digital signal. However PRO LOGIC lights during 2 channel playback of Dolby Digital.

⑬ **Character display**
Shows the radio frequency or function (DVD/LD, CD, etc.) receiver is using .

⑭ **● (Overload) indicator**
This lights when an analog signal is too strong (the SIGNAL SELECT needs to be on ANALOG). It indicates the sound is distorting and the signal should be reduced.

⑮ **ATT indicator**
Lights when ATT is used to attenuate (reduce) the level of the input signal (can only be used in ANALOG mode).

⑯ **LOUDNESS indicator**
Lights when the LOUDNESS, used to boost the bass and treble in quiet listening, is on.

⑰ **SP ► AB (Speakers) indicator**
Shows if the speaker system is on or not. SP ►A and/or B means speakers are switched on. SP ► means speakers are switched off.

⑱ **Master volume level display**
Shows the overall volume level. Volume level is maintained even when the power is off. – – – dB indicates the minimum level, and 0 dB indicates the maximum level.

- Depending on the level settings you make for individual channels, the MAX level can range between –10 dB and 0 dB.

Remote Control (VSX-709RDS)

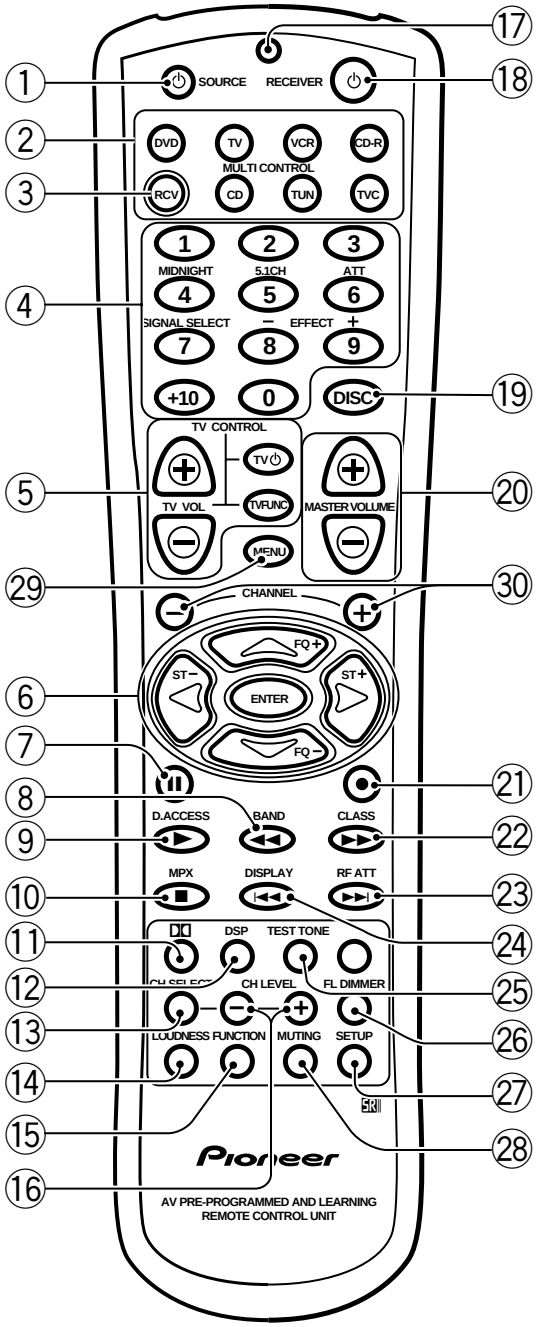

① **SOURCE ⏻ button**

Use to turn on/off other components connected to the receiver.

② **MULTI CONTROL buttons**

Use to put the receiver/remote control in the stated mode. For other equipment controls, see Controlling the Rest of Your System.

③ **RCV button**

Use this button when setting up the surround sound for the receiver.

④ **Number/Mode buttons**

Use the number buttons to select the radio frequency in tuner Direct access mode or the tracks in CD, DVD mode etc.

Also, buttons marked with the following names have special functions. If you try to use one of these functions but the display flashes it means that function cannot be used in the current mode (for example DSP modes cannot be used when 5.1 CH setting is on).

MIDNIGHT
Use to put receiver in Midnight mode. To use first press the RCV button then operate this button.

5.1 CH
When the DVD/LD or DVD 5.1 CH function is selected each press switches the DVD/LD input between DVD/LD and DVD 5.1 CH. To use first press the RCV button then operate this button.

ATT
Use to attenunate (lower) the level of an analog input signal and prevent distortion. To use first press the RCV button then operate this button.

SIGNAL SELECT
Use to select the proper signal (analog, digital) for the source you are inputting. To use first press the RCV button then operate this button.

EFFECT +/– buttons
Use to adjust the amount of effect in different DSP sound modes or advanced listening modes. To use, first press the RCV button then operate this button.

⑤ **TV CONTROL buttons**

The following five sets of buttons are dedicated TV controls.

TV VOL +/– buttons
Use to adjust the volume on your TV.

TV ⏻ button
Use to turn on the power of the TV.

TV FUNC button
Use select the TV function.

⑥ **◄ ► ▲▼ (FQ +/–, ST +/–) & ENTER buttons**

Use these arrow buttons when setting up your surround sound system (see pages 15 – 20). These buttons are also used to control DVD menus/options. The FQ +/– buttons can be used to find radio frequencies. The ST +/– buttons can be used to select the stations of memorized radio frequencies.

⑦ **II button**

Use to pause other components.

⑧ ◄◄ **button (BAND)**
Use to fast reverse search on CD etc.
Also use to switch between the AM and FM band when in TUNER mode.

⑨ ► **button (D. ACCESS)**
Use to play other components. Also use to directly access a radio station by pressing the number of the station you want.

⑩ ■ **button (MPX)**
Use to stop other components. Also use to switch between auto stereo and mono reception of FM broadcasts. If the signal is weak then switching to MONO will improve the sound quality.

⑪ **button**
Use to put receiver in Dolby Digital, Dolby Surround and DTS modes. To use first press the RCV button then operate this button.

⑫ **DSP button**
Use to put receiver in one of the DSP modes. To use first press the RCV button then operate this button.

⑬ **CH SELECT**
Use to select a speaker when setting up the surround sound of the receiver. To use, first press the RCV button, then operate this button.

⑭ **LOUDNESS button**
Use to switch on the loudness. This feature is useful for getting good bass and treble sounds listening at low volumes.

⑮ **FUNCTION button**
Use to select the playback or recording source. This button lets you cycle through the different functions of the receiver in the following order: CD, tuner (FM/AM), AUX, CD-R/TAPE/MD, VCR/DVR, DVD/LD, VIDEO and TV/SAT.

⑯ **CH LEVEL +/– buttons**
Use to adjust the output level of the selected channel(s).

⑰ **LED display**
This display flashes when a command is sent from the remote control to the receiver. It also flashes at other times, for example, when teaching the receiver preset codes.

⑱ **RECEIVER ⏻ button**
This switches the receiver between STANDBY mode and power ON.

⑲ **DISC button**
Only used when controlling other components.

⑳ **MASTER VOLUME +/– buttons**
Use to set the overall listening volume.

㉑ ● **button**
Use to record with other components.

㉒ ►► **button (CLASS)**
Use to fast forward search on CDs etc. Also use the CLASS feature to switch between the three banks (classes) of station memories.

㉓ ►►I **button (RF ATT)**
Use to skip forward tracks on CD players etc. Also use to lower the input level of a radio signal.

㉔ I◄◄ **button (DISPLAY)**
Use to skip backward tracks on CD players etc. Also use to display the RDS information.

㉕ **TEST TONE**
Use to sound the TEST TONE when setting up the surround sound of the receiver. To use, first press the RCV button, then operate this button.

㉖ **FL DIMMER button**
Use to make the fluorescent display (FL) dimmer or brighter. There are three brightness settings as well as an off setting.

㉗ **SETUP button**
Use this button when setting up the remote control to control other components.

㉘ **MUTING button**
Use to mute the sound or restore the sound if it has been muted.

㉙ **MENU button**
Use to access different menus associated with your DVD player.

㉚ **CHANNEL +/– buttons**
Use to change channels on your TV.

Remote Control (VSX-609RDS)

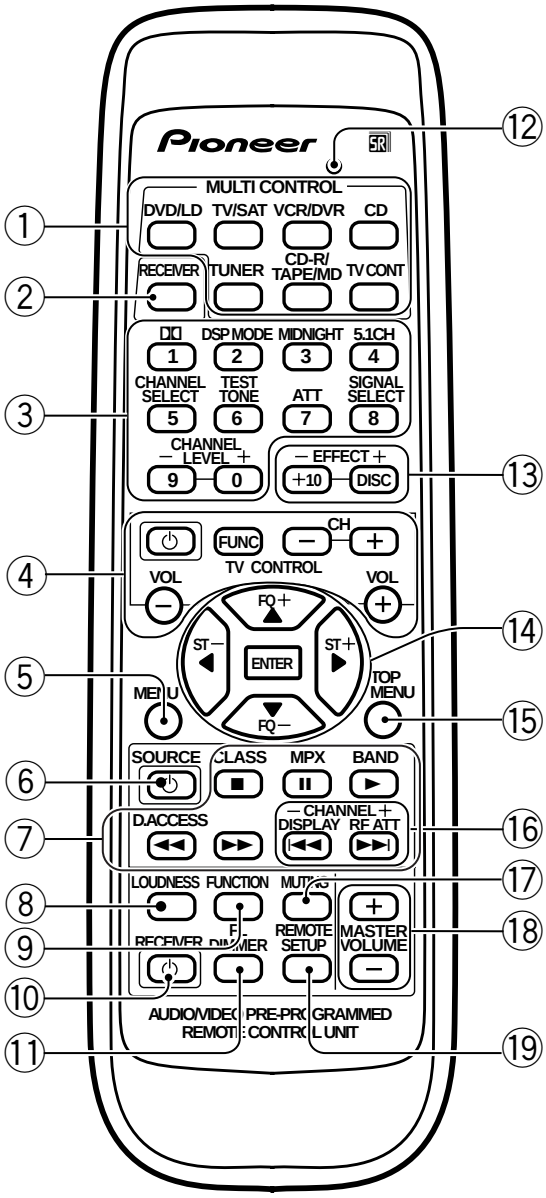

① **MULTI CONTROL buttons**

Use to put the receiver/remote control in the stated mode. For other equipment controls, see Controlling the Rest of Your System.

② **RECEIVER button**

Use this button when setting up the surround sound for the receiver.

③ **Number/Mode buttons**

Use the number buttons to select the radio frequency in tuner Direct access mode or the tracks in CD, DVD mode etc.

Also, buttons marked with the following names have special functions. If you try to use one of these functions but the display flashes it means that function cannot be used in the current mode (for example DSP modes cannot be used when 5.1 CH setting is on).

DD

Use to put receiver in Dolby Digital, Dolby Surround and DTS modes. To use first press the RECEIVER button then operate this button.

DSP MODE

Use to put receiver in one of the DSP modes. To use first press the RECEIVER button then operate this button.

MIDNIGHT

Use to put receiver in Midnight mode. To use, first press the RECEIVER button, then operate this button.

5.1 CH

When the DVD/LD or DVD 5.1 CH function is selected each press switches the DVD/LD input between DVD/LD and DVD 5.1 CH. To use, first press the RECEIVER button, then operate this button.

CHANNEL SELECT

Use to select a speaker when setting up the surround sound of the receiver. To use, first press the RECEIVER button, then operate this button.

TEST TONE

Use to sound the TEST TONE when setting up the surround sound of the receiver. To use, first press the RECEIVER button, then operate this button.

ATT

Use to attenunate (lower) the level of an analog input signal and prevent distortion. To use, first press the RECEIVER button, then operate this button.

CHANNEL LEVEL +/–

Use to set up the levels of the surround sound of the receiver. To use, first press the RECEIVER button, then operate this button.

SIGNAL SELECT

Use to select the proper signal (analog, digital) for the source your are inputting. To use, first press the RECEIVER button, then operate this button.

④ **TV CONTROL buttons**

The following four sets of buttons are dedicated TV controls.

FUNC button

Use to select the TV function.

⏻ button

Use to turn on the power of the TV.

CH +/– buttons

Use to change channels on your TV.

VOL +/– buttons

Use to adjust the volume on your TV.

⑤ **MENU button**

Use to access different menus associated with your DVD player.

⑥ **SOURCE ⏻ button**

Use to turn on/off other components connected to the receiver.

⑦ **The following buttons are both controls for other components (like a DVD player) and dedicated tuner controls. The tuner controls are explained here. You can use them after you have pushed the TUNER MULTI CONTROL button.**

CLASS button

Use to switch between the three banks (classes) of station memories.

MPX button

Use to switch between auto stereo and mono reception of FM broadcasts. If the signal is weak then switching to MONO will improve the sound quality. Also, this is the pause button for CDs, tapes, DVDs, etc.

BAND button

Use to switch between the AM and FM band when in TUNER mode.

D. ACCESS button

Use to directly access a radio station by pressing the number of the station you want.

⑧ **LOUDNESS button**

Use to switch on the loudness. This feature is useful for getting good bass and treble sounds listening at low volumes.

⑨ **FUNCTION button**

Use to select the playback or recording source. This button lets you cycle through the different functions of the receiver in the following order: CD, tuner (FM/AM), AUX, CDR/TAPE/MD, VCR/DVR, DVD/LD, DVD 5.1 CH., and TV/SAT.

⑩ **RECEIVER ⏻ button**

This switches the receiver between STANDBY mode and power ON.

⑪ **FL DIMMER button**

Use this button to make the fluorescent display (FL) dimmer or brighter. There are three brightness settings as well as an off setting.

⑫ **LED display**

This display flashes when a command is sent from the remote control to the receiver. It also flashes at other times, for example when teaching the receiver preset codes.

⑬ **EFFECT +/– buttons**

Use to adjust the amount of effect in different DSP sound modes or advanced listening modes.

⑭ **◄ ► ▲▼ (FQ +/–, ST +/–) & ENTER buttons**

Use these arrow buttons when setting up your surround sound system (see pages 15 – 20). These buttons are also used to control DVD menus/options and for deck 1 of a double cassette deck player. The FQ +/– buttons can be used to find radio frequencies. The ST +/– buttons can be used to select the stations of memorized radio frequencies.

⑮ **TOP MENU button**

In DVD mode this button brings you to the top or most fundamental menu.

⑯ **CHANNEL +/– buttons (|◄◄/DISPLAY, ►►|/RF ATT)**

Use to select the stations of memorized radio frequencies. Also use to skip tracks backward or forward on CDs, DVDs, etc. Also use to display the RDS information (DISPLAY) and use to lower the input level of a radio signal (RF ATT).

⑰ **MUTING button**

Use to mute the sound or restore the sound if it has been muted.

⑱ **MASTER VOLUME +/– buttons**

Use to set the overall listening volume.

⑲ **REMOTE SETUP button**

Use this button when setting up the remote control to control other components.

Audio Components

To begin set up connect your audio components to the jacks as shown below. These are all analog connections and your analog audio components (cassette deck etc.) use these jacks. Remember that for components you want to record with you need to hook up four plugs (a set of stereo ins and a set of stereo outs), but for components that only play you only need to hook up one set of stereo plugs (two plugs). To use Digital sources features you must hook up your digital components to the digital inputs, but it is also a good idea to hook up your digital components to analog audio jacks. If you want to record to/from digital components (like an MD) to/from analog components you must hook up your digital equipment with these analog connections.

Memo

- **Only the VSX-709RDS has S-video jacks and optical digital out jack.**
- **The arrows indicate the direction of the audio signal.**

VSX-709RDS

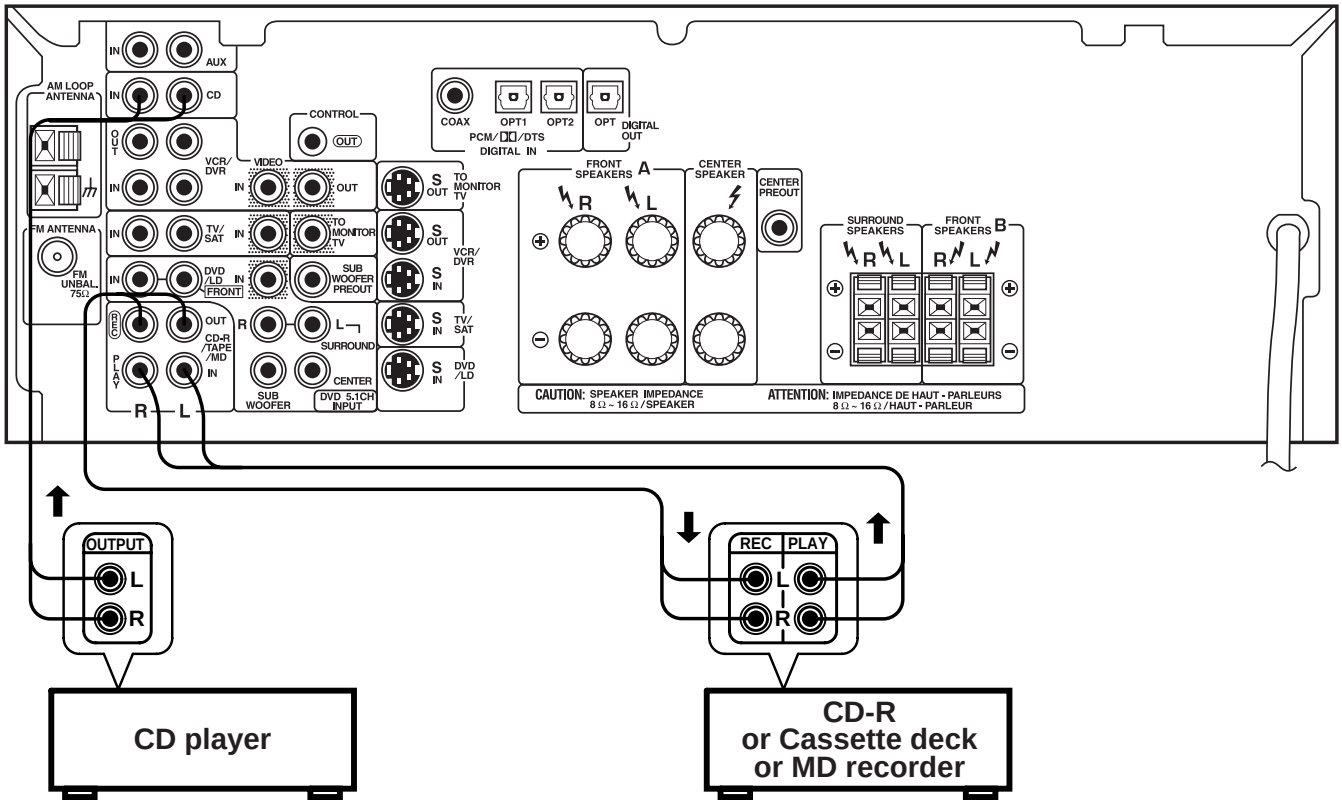

■ Audio cords

Use audio cords (not supplied) to connect the audio components.

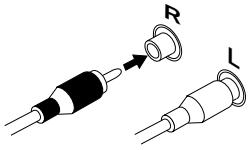

Connect red plugs to R (right) and white plugs to L (left).
Be sure to insert completely.

Cassette deck placement

Depending on where the cassette deck is placed, noise may occur during playback of your cassette deck which is caused by leakage flux from the transformer in the receiver. If you experience noise, move the cassette deck farther away from the receiver.

8.2 SPECIFICATIONS

Amplifier Section

Continuous Power Output (STEREO MODE)
FRONT ..... 80 W + 80 W (DIN 1 kHz, THD 0.9 %, 8Ω)

Continuous Power Output (SURROUND MODE)
FRONT ..... 80 W/ch (1 kHz, THD 0.9 %, 8Ω)
CENTER ..... 80 W (1 kHz, THD 0.9 %, 8Ω)
SURROUND ..... 80 W/ch (1 kHz, THD 0.9 %, 8Ω)

- Above specifications are applicable when the power supply is 230V.

Input (Sensitivity/Impedance)
VCR/DVR, DVD/LD, TV/SAT, CD, AUX,
CD-R/TAPE/MD (, VIDEO) ..... 200 mV/47 kΩ
Frequency Response
VCR/DVR, DVD/LD, TV/SAT, CD, AUX,
CD-R/TAPE/MD (, VIDEO) ..... 5 Hz to 100,000 Hz $^{+0}_{-3}$ dB
Output (Level/Impedance)
VCR/DVR, CD-R/TAPE/MD ..... 200 mV/2.2 kΩ
Tone Control
BASS ..... ± 6 dB (100 Hz)
TREBLE ..... ± 6 dB (10 kHz)
LOUDNESS ..... +9 dB/+9 dB (100 Hz/10 kHz)
Signal-to-Noise Ratio
[DIN (Continuous rated power output/50 mW)]
VCR/DVR, DVD/LD, TV/SAT, CD, AUX,
CD-R/TAPE/MD (, VIDEO) ..... 88 dB/64 dB

VIDEO Section

Input (Sensitivity/Impedance)
VCR/DVR, TV/SAT, DVD/LD (, VIDEO) ..... 1 Vp-p/75 Ω
Output (Level/Impedance)
VCR/DVR, TO MONITOR TV ..... 1 Vp-p/75 Ω
Frequency Response
VCR/DVR, TV/SAT, DVD/LD (, VIDEO)
→ TO MONITOR TV ..... 5 Hz to 7 MHz $^{+0}_{-3}$ dB
Signal-to-Noise Ratio ..... 55 dB

FM Tuner Section

Frequency Range ..... 87.5 MHz to 108 MHz
Usable Sensitivity ..... Mono: 15.2 dBf, IHF (1.6 µV/75 Ω)
50 dB Quieting Sensitivity ..... Mono: 20.2 dBf
Stereo: 41.2 dBf
Sensitivity (DIN) ..... Mono: 1.1 µV (S/N 26 dB)
Stereo: 50 µV (S/N 46 dB)
Signal-to-Noise Ratio ..... Mono: 76 dB (at 85 dBf)
Stereo: 72 dB (at 85 dBf)
Signal-to-Noise Ratio (DIN) ..... Mono: 62 dB
Stereo: 58 dB
Distortion ..... Stereo: 0.6 % (1 kHz)
Alternate Channel Selectivity ..... 70 dB (400 kHz)
Stereo Separation ..... 40 dB (1 kHz)
Frequency Response ..... 30 Hz to 15 kHz (± 1dB)
Antenna Input ..... 75 Ω unbalanced

AM Tuner Section

Frequency Range ..... 531 kHz to 1,602 kHz
Sensitivity (IHF, Loop antenna) ..... 350 µV/m
Selectivity ..... 30 dB
Signal-to-Noise Ratio ..... 50 dB
Antenna ..... Loop antenna

Miscellaneous

Power Requirements
UK model ..... AC 230 V, 50/60 Hz
European model ..... AC 220 – 230 V, 50/60 Hz
Power Consumption ..... 220 W
Power Consumption in Standby mode ..... 1.0 W
Dimensions
VSX-709RDS ..... 420 (W) × 158 (H) × 401 (D) mm
VSX-609RDS ..... 420 (W) × 158 (H) × 391 (D) mm
Weight (without package)
VSX-709RDS ..... 8.4 kg
VSX-609RDS ..... 8.4 kg

Furnished Parts

FM Antenna 1
AM Loop Antenna 1
Dry Cell Batteries
VSX-709RDS (SIZE “AA” (IEC LR6)) 2
VSX-609RDS (SIZE “AA” (IEC R6P)) 2
Remote Control Unit 1
Operating Instructions 1

NOTE:
Specifications and the design are subject to possible modifications without notice, due to improvements.

Manufactured under license from Digital Theater Systems, Inc. US Pat. No. 5,451,942 and other worldwide patents issues and pending. “DTS” and “DTS Digital Surround” are trademarks of Digital Theater Systems, Inc. © 1996 Digital Theater Systems, Inc. All right reserved.

Manufactured under license from Dolby Laboratories. “Dolby”, “Pro Logic” and the double-D symbol are trademarks of Dolby Laboratories. Confidential unpublished works. © 1992 - 1997 Dolby Laboratories. All rights reserved.

Accessories

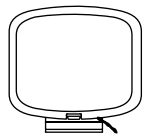

AM loop antenna
(ATB7009)

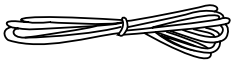

FM wire antenna
(ADH7005)

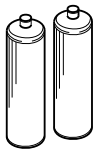

VSX-609RDS:
AA size IEC R6P batteries (x2)
VSX-709RDS:
AA size IEC LR6 batteries (x2)

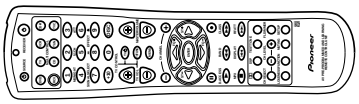

VSX-709RDS
Remote control unit
(AXD7249)

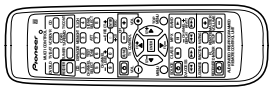

VSX-609RDS
Remote control unit
(AXD7247)