SERVICE MANUAL

M720T / M730T / M728T / M729T

notebook

Notebook Computer

M720T/M728T/M729T/M730T

Service Manual

Notice

The company reserves the right to revise this publication or to change its contents without notice. Information contained herein is for reference only and does not constitute a commitment on the part of the manufacturer or any subsequent vendor. They assume no responsibility or liability for any errors or inaccuracies that may appear in this publication nor are they in anyway responsible for any loss or damage resulting from the use (or misuse) of this publication.

This publication and any accompanying software may not, in whole or in part, be reproduced, translated, transmitted or reduced to any machine readable form without prior consent from the vendor, manufacturer or creators of this publication, except for copies kept by the user for backup purposes.

Brand and product names mentioned in this publication may or may not be copyrights and/or registered trademarks of their respective companies. They are mentioned for identification purposes only and are not intended as an endorsement of that product or its manufacturer.

Version 1.0
July 2008

Trademarks

Intel, **Celeron** and **Intel Core** are trademarks of Advanced Micro Devices, Inc.
Windows® is a registered trademark of Microsoft Corporation.
Other brand and product names are trademarks and./or registered trademarks of their respective companies.

About this Manual

This manual is intended for service personnel who have completed sufficient training to undertake the maintenance and inspection of personal computers.

It is organized to allow you to look up basic information for servicing and/or upgrading components of the ***M720T/ M728T/M729T/M730T*** series notebook PC.

The following information is included:

Chapter 1, Introduction, provides general information about the location of system elements and their specifications.
Chapter 2, Disassembly, provides step-by-step instructions for disassembling parts and subsystems and how to upgrade elements of the system.

Appendix A, Part Lists
Appendix B, Schematic Diagrams

FCC Statement

(Federal Communications Commission)

You are cautioned that changes or modifications not expressly approved by the party responsible for compliance could void the user's authority to operate the equipment.

Warning

Use only shielded cables to connect I/O devices to this equipment. You are cautioned that changes or modifications not expressly approved by the manufacturer for compliance with the above standards could void your authority to operate the equipment.

If your purchase option includes both **Wireless LAN** and **3.5G** modules, then the appropriate antennas will be installed. Note that In order to comply with FCC RF exposure compliance requirements, the antenna must not be co-located or operate in conjunction with any other antenna or transmitter.

This equipment has been tested and found to comply with the limits for a Class B digital device, pursuant to Part 15 of the FCC Rules. These limits are designed to provide reasonable protection against harmful interference in a residential installation. This equipment generates, uses and can radiate radio frequency energy and, if not installed and used in accordance with the instructions, may cause harmful interference to radio communications. However, there is no guarantee that interference will not occur in a particular installation. If this equipment does cause harmful interference to radio or television reception, which can be determined by turning the equipment off and on, the user is encouraged to try to correct the interference by one or more of the following measures:

- Re orient or relocate the receiving antenna.
- Increase the separation between the equipment and receiver.
- Connect the equipment into an outlet on a circuit different from that to which the receiver is connected.
- Consult the service representative or an experienced radio/TV technician for help.

Operation is subject to the following two conditions:

1. This device may not cause interference.
   And
2. This device must accept any interference, including interference that may cause undesired operation of the device.

FCC RF Radiation Exposure Statement:

1. This Transmitter must not be co-located or operating in conjunction with any other antenna or transmitter.
2. This equipment complies with FCC RF radiation exposure limits set forth for an uncontrolled environment. This equipment should be installed and operated with a minimum distance of 20 centimeters between the radiator and you body.

IMPORTANT SAFETY INSTRUCTIONS

Follow basic safety precautions, including those listed below, to reduce the risk of fire, electric shock and injury to persons when using any electrical equipment:

1. Do not use this product near water, for example near a bath tub, wash bowl, kitchen sink or laundry tub, in a wet basement or near a swimming pool.
2. Avoid using a telephone (other than a cordless type) during an electrical storm. There may be a remote risk of electrical shock from lightning.
3. Do not use the telephone to report a gas leak in the vicinity of the leak.
4. Use only the power cord and batteries indicated in this manual. Do not dispose of batteries in a fire. They may explode. Check with local codes for possible special disposal instructions.
5. This product is intended to be supplied by a Listed Power Unit (DC Output 19V, 3.42A OR 18.5V, 3.5A (**65W**) minimum AC/DC Adapter).

CAUTION

Always disconnect all telephone lines from the wall outlet before servicing or disassembling this equipment.

TO REDUCE THE RISK OF FIRE, USE ONLY NO. 26 AWG OR LARGER, TELECOMMUNICATION LINE CORD

This Computer's Optical Device is a Laser Class 1 Product

Instructions for Care and Operation

The notebook computer is quite rugged, but it can be damaged. To prevent this, follow these suggestions:

1. **Don't drop it, or expose it to shock.** If the computer falls, the case and the components could be damaged.

Do not expose the computer to any shock or vibration.	*Do not place it on an unstable surface.*	*Do not place anything heavy on the computer.*
		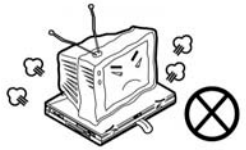

2. **Keep it dry, and don't overheat it.** Keep the computer and power supply away from any kind of heating element. This is an electrical appliance. If water or any other liquid gets into it, the computer could be badly damaged.

Do not expose it to excessive heat or direct sunlight.	*Do not leave it in a place where foreign matter or moisture may affect the system.*	*Don't use or store the computer in a humid environment.*	*Do not place the computer on any surface which will block the vents.*

3. **Follow the proper working procedures for the computer**. Shut the computer down properly and don't forget to save your work. Remember to periodically save your data as data may be lost if the battery is depleted.

Do not turn off the power until you properly shut down all programs.	*Do not turn off any peripheral devices when the computer is on.*	*Do not disassemble the computer by yourself.*	*Perform routine maintenance on your computer.*

4. **Avoid interference.** Keep the computer away from high capacity transformers, electric motors, and other strong magnetic fields. These can hinder proper performance and damage your data.
5. **Take care when using peripheral devices**.

Use only approved brands of peripherals.	*Unplug the power cord before attaching peripheral devices.*
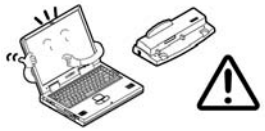	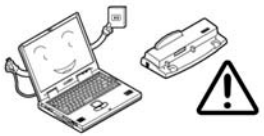

Power Safety

The computer has specific power requirements:

- Only use a power adapter approved for use with this computer.
- Your AC adapter may be designed for international travel but it still requires a steady, uninterrupted power supply. If you are unsure of your local power specifications, consult your service representative or local power company.
- The power adapter may have either a 2-prong or a 3-prong grounded plug. The third prong is an important safety feature; do not defeat its purpose. If you do not have access to a compatible outlet, have a qualified electrician install one.
- When you want to unplug the power cord, be sure to disconnect it by the plug head, not by its wire.
- Make sure the socket and any extension cord(s) you use can support the total current load of all the connected devices.
- Before cleaning the computer, make sure it is disconnected from any external power supplies.

Do not plug in the power cord if you are wet.	*Do not use the power cord if it is broken.*	*Do not place heavy objects on the power cord.*
		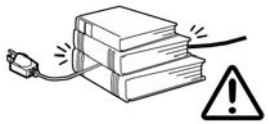

Power Safety Warning

Before you undertake any upgrade procedures, make sure that you have turned off the power, and disconnected all peripherals and cables (including telephone lines). It is advisable to also remove your battery in order to prevent accidentally turning the machine on.

Battery Precautions

- Only use batteries designed for this computer. The wrong battery type may explode, leak or damage the computer.
- Do not remove any batteries from the computer while it is powered on.
- Do not continue to use a battery that has been dropped, or that appears damaged (e.g. bent or twisted) in any way. Even if the computer continues to work with a damaged battery in place, it may cause circuit damage, which may possibly result in fire.
- Recharge the batteries using the notebook's system. Incorrect recharging may make the battery explode.
- Do not try to repair a battery pack. Refer any battery pack repair or replacement to your service representative or qualified service personnel.
- Keep children away from, and promptly dispose of a damaged battery. Always dispose of batteries carefully. Batteries may explode or leak if exposed to fire, or improperly handled or discarded.
- Keep the battery away from metal appliances.
- Affix tape to the battery contacts before disposing of the battery.
- Do not touch the battery contacts with your hands or metal objects.

Battery Disposal

The product that you have purchased contains a rechargeable battery. The battery is recyclable. At the end of its useful life, under various state and local laws, it may be illegal to dispose of this battery into the municipal waste stream. Check with your local solid waste officials for details in your area for recycling options or proper disposal.

Caution

Danger of explosion if battery is incorrectly replaced. Replace only with the same or equivalent type recommended by the manufacturer. Discard used battery according to the manufacturer's instructions.

Related Documents

You may also need to consult the following manual for additional information:

User's Manual on CD

This describes the notebook PC's features and the procedures for operating the computer and its ROM-based setup program. It also describes the installation and operation of the utility programs provided with the notebook PC.

Contents

Introduction 1-1

Overview 1-1
System Specifications 1-2
. 1-4
External Locator - Top View with LCD Panel Open 1-5
External Locator - Front & Right side Views 1-6
External Locator - Left Side & Rear View 1-7
External Locator - Bottom View 1-8
Mainboard Overview - Top (Key Parts) 1-9
Mainboard Overview - Bottom (Key Parts) 1-10
Mainboard Overview - Top (Connectors) 1-11
Mainboard Overview - Bottom (Connectors) 1-12

Disassembly 2-1

Overview 2-1
Maintenance Tools 2-2
Connections 2-2
Maintenance Precautions 2-3
Disassembly Steps 2-4
Removing the Battery 2-5
Removing the Hard Disk Drive 2-6
Removing the Optical (CD/DVD) Device 2-8
Removing the System Memory (RAM) 2-10
Removing the Inverter Board 2-12
Removing the Processor 2-13
Removing the Wireless LAN Module 2-15
Removing the Bluetooth Module 2-16
Removing the Keyboard 2-17
Removing the Modem 2-18

Part Lists A-1

Part List Illustration Location A-2
Top with Fingerprint (M720T) A-3
Top without Fingerprint (M720T) A-4
Bottom (M720T) A-5
LCD (M720T) A-6
HDD (M720T) A-7
COMBO (M720T) A-8
DVD-Dual Drive (M720T) A-9
Top with Fingerprint (M728T) A-10
Top without Fingerprint (M728T) A-11
Bottom (M728T) A-12
LCD (M728T) A-13
HDD (M728T) A-14
COMBO (M728T) A-15
DVD-Dual Drive (M728T) A-16
Top with Fingerprint (M729T) A-17
Top without Fingerprint (M729T) A-18
Bottom (M729T) A-19
LCD (M729T) A-20
HDD (M729T) A-21
COMBO (M729T) A-22
DVD-Dual Drive (M729T) A-23
Top with Fingerprint (M730T) A-24
Top without Fingerprint (M730T) A-25
Bottom (M730T) A-26
LCD (M730T) A-27
HDD (M730T) A-28
COMBO (M730T) A-29
DVD-Dual Drive (M730T) A-30

Schematic Diagrams.....B-1

System Block Diagram B-2
Intel Penryn (Socket-P) 1/2 ..... B-3
Intel Penryn (Socket-P) 2/2 ..... B-4
Cantiga 1/6 - Host B-5
Cantiga 2/6 - VGA, CRT B-6
Cantiga 3/6 - DDR B-7
Cantiga 4/6 - Power B-8
Cantiga 5/6 - Power B-9
Cantiga 6/6 - GND B-10
DDRII CHANNEL A B-11
DDRII CHANNEL B B-12
Panel, Inverter, CRT B-13
ICH9-M 1/5 - SATA B-14
ICH9-M 2/5 - PCIE, PCI, USB B-15
ICH9-M 3/5 - GPIO, PWR Management B-16
ICH9-M 4/5 - Power B-17
ICH9-M 5/5 - GND B-18
Clock Generator B-19
Multi I/O, ODD, CCD, BT, TPM B-20
New Card, Mini PCIE B-21
LED, FAN, TP, FP, USB B-22
JMB385 Card Reader B-23
PCI-E LAN RTL8111C B-24
Audio Codec ALC662 ..... B-25
Audio AMP2056 ..... B-26
KBC-ITE IT8512E B-27
System Power, LED BKLT B-28
Power VDD3, VDD5 ..... B-29
Power 1.5VS, 1.05VS, 3.3V, 5V B-30
Power 1.8V, 0.9VSM B-31
Power VCORE B-32
Power AC-IN, Charger B-33
Multi I/O Board 1/2 ..... B-34
Multi I/O Board 2/2 ..... B-35
Finger Printer Board B-36
Click Board B-37
M730T ODD Bridge Board B-38
M730T Audio Board B-39
Power Sequence Diagram B-40
Power Sequence v3.0 ..... B-41

Chapter 1: Introduction

Overview

This manual covers the information you need to service or upgrade the ***M720T/M728T/M729T/M730T*** series notebook computer. Information about operating the computer (e.g. getting started, and the *Setup* utility) is in the *User's Manual*. Information about drivers (e.g. VGA & audio) is also found in *User's Manual*. That manual is shipped with the computer.

Operating systems (e.g. *Windows XP, Windows Vista,* etc.) have their own manuals as do application software (e.g. word processing and database programs). If you have questions about those programs, you should consult those manuals.

The ***M720T/M728T/M729T/M730T*** series notebook is designed to be upgradeable. See ***"Disassembly" on page 2 - 1*** for a detailed description of the upgrade procedures for each specific component. Please note the warning and safety information indicated by the " " symbol.

The balance of this chapter reviews the computer's technical specifications and features.

System Specifications

Feature	Specification	
Processor	Intel® Core™2 Duo Processor 35W - (478-pin) Micro-FC-PGA Package - Socket-P **T9400/ T9600**	45nm (45 Nanometer) Process Technology 6MB On-die L2 Cache & 1006MHz FSB 2.53/ 2.8 GHz
	Intel® Core™2 Duo Processor 25W - (478-pin) Micro-FC-PGA Package - Socket-P **P8400/ P8600**	45nm (45 Nanometer) Process Technology 3MB On-die L2 Cache & 1006MHz FSB 2.4/ 2.53 GHz
Core Logic	Intel GM45 + ICH9M Chipset	
LCD	**M720T/M728T/M729T:** 12.1" WXGA (1280 * 800) TFT LCD	**M730T:** 13.3" WXGA (1280 * 800) TFT LCD
Memory	64-bit Wide **DDRII (DDR2**) Data Channel Supports Dual Channel **DDRII (DDR2**) SDRAM Two 200 Pin SO-DIMM Sockets Supporting **DDRII (DDR2**) **667MHz/800MHz** RAM Modules Memory Expandable up to 4GB (1024/2048 MB **DDR2** Modules)	
Video Adapter	**Intel GM45 Integrated Video** High Preference 3D/2D Graphic Accelerator Supports Dynamic Video Memory Technology DVMT (up to **256MB** dynamically allocated from system memory where needed) Supports DirectX10 3D Graphics Engine Accelerator	
Security	Security (Kensington® Type) Lock Slot Fingerprint ID Reader Module (**Factory Option**)	BIOS Password Trusted Platform Module
BIOS	One 32Mb SPI Flash ROM	Phoenix™ BIOS
Storage	One Changeable 12.7mm(h) **SATA** (Serial) Optical Device (CD/DVD) Type Drive (see ***"Optional" on page 1 - 4***) Easy Changeable 2.5" 9.5 mm (h) **SATA** (Serial) HDD	
Audio	High Definition Audio (HDA) Compliant with Microsoft UAA (Universal Audio Architecture)	Direct Sound 3D™ Compatible 2 * Built-In Speakers Built-In Microphone
Keyboard & Pointing Device	Winkey Keyboard	Built-In TouchPad with Scrolling Function

Feature	Specification
Interface	Three USB 2.0 Ports One Headphone-Out Jack One Microphone-In Jack One S/PDIF Out Jack One Internal Microphone One RJ-11 Modem Jack One RJ-45 LAN Jack One DC-In Jack One External Monitor Port
Card Reader	Embedded 7-in-1 Card Reader (MS/ MS Pro/ SD/ Mini SD/ MMC/ RS MMC/ MS Duo) **Note:** MS Duo/ Mini SD/ RS MMC Cards require a PC adapter
ExpressCard Slot	One ExpressCard/34(54) Slot
Communication *Note: The **3.5G and Intel Turbo Memory Modules** cannot coexist. There is only one slot available for **either** of these **factory option** modules.	10M/ 100/ 1000Mb Base-TX Ethernet LAN Azalia 56K Modem V.90 & V.92 Compliant Intel® WiFi Link 5300 Series (3*3 - 802.11a/g/n) Wireless LAN Mini-Card Module (**Option**) Intel® WiFi Link 5100 Series (1*2 - 802.11a/g/n) Wireless LAN Mini-Card Module (**Option**) 3rd Party 802.11b/g Wireless LAN Mini-Card Module with USB interface (**Option**) Bluetooth 2.0 + EDR (Enhanced Data Rate) Module (**Factory Option**) 1.3M or 2.0M Pixel PC Camera Module with USB interface (**Factory Option**) **3.5G Module** (see sidebar): *UMTS/HSPDA-based 3.5G Mini-Card Module with USB Interface (Factory **Option**) Quad-band GSM/GPRS (850 MHz, 900 MHz, 1800 MHz, 1900 MHz) UMTS WCDMA FDD (2100 MHz) **UMTS Modes** Note that UMTS modes CAN NOT be used in North America.
Power Management	Supports ACPI 3.0 Supports Wake on LAN Supports Resume from Modem Ring
Power	Full Range AC/DC Adapter AC Input 100 - 240V, DC Output 50 - 60Hz, 19V, 3.42A or 18.5V, 3.5A (**65** Watts)
Battery	4 Cell Smart Lithium-Ion Battery Pack, 14.8V/2.4AH 8 Cell Smart Lithium-Ion Battery Pack, 14.8V/4.4AH (**Option**)

Feature	Specification	
Environmental Spec	Temperature Operating: 5°C - 35°C Non-Operating: -20°C - 60°C	Relative Humidity Operating: 20% - 80% Non-Operating: 10% - 90%
Dimensions & Weight	**M720T/M728T/M729T:** 299mm (w) * 219mm (d) * 26.5-35.7mm (h) 1.88 kg With 4 Cell Battery and ODD	**M730T:** 310mm (w) * 233mm (d) * 30-36mm (h) 2.0 kg With 4 Cell Battery and ODD
Optional *Note: The **3.5G and Intel Turbo Memory Modules** cannot coexist. There is only one slot available for **either** of these **factory option** modules.	**Optical Drive Module Options:** SATA DVD/CD-RW Combo Drive Module SATA DVD Dual (Super Multi) Drive Module Intel® WiFi Link 5300 Series (3*3 - 802.11a/g/n) Wireless LAN Mini-Card Module Intel® WiFi Link 5100 Series (1*2 - 802.11a/g/n) Wireless LAN Mini-Card Module 3rd Party 802.11b/g Wireless LAN Mini-Card Module with USB interface 8 Cell Smart Lithium-Ion Battery Pack 1.3M or 2.0M Pixel USB PC Camera Module (**Factory Option**) Bluetooth 2.0 + EDR (Enhanced Data Rate) Module (**Factory Option**)	Fingerprint ID Reader Module (**Factory Option**) *Intel Turbo Memory (Robson) NAND Flash Memory Card Module (**Factory Option**) **OR** *UMTS/HSPDA-based 3.5G Module with Mini Card Interface (**Factory Option**) Quad-band GSM/GPRS (850 MHz, 900 MHz, 1800 MHz, 1900 MHz) UMTS WCDMA FDD (2100 MHz) **UMTS Modes** Note that UMTS modes CAN NOT be used in North America.

External Locator - Top View with LCD Panel Open

M720T/M728T/M729T

M730T

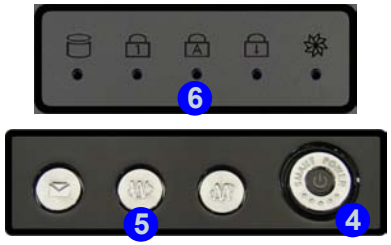

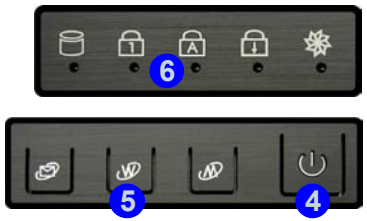

Figure 1
Top View

1. Optional Built-In PC Camera
2. LCD
3. Speakers
4. Power Button
5. Hot Key Buttons
6. LED Status Indicators
7. Keyboard
8. Touchpad & Buttons
9. LED Power & Communication Indicators
10. Fingerprint (Optional)
11. Built-In Microphone

***Note**: This model may have either a fingerprint module or card reader module, depending on your purchase configuration.

External Locator - Front & Right side Views

Figure 2
Front Views

1. LED Power & Communication Indicators
2. 7-in-1 Card Reader
3. S/PDIF-Out Jack
4. Microphone-In Jack
5. Headphone-Out Jack

Figure 3
Right Side Views

1. Optical Device Drive Bay
2. USB 2.0 Port
3. RJ-11 Phone Jack
4. Security Lock Slot

External Locator - Left Side & Rear View

Figure 4
Left Side View

1. DC-In Jack
2. RJ-45 LAN Jack
3. External Monitor Port
4. Vent/Fan Intake/ Outlet
5. 2 * USB 2.0 Ports
6. ExpressCard Slot

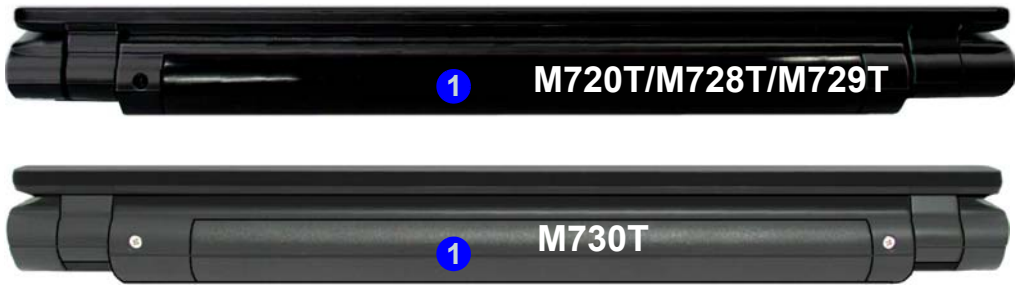

Figure 5
Rear View

1. Battery

External Locator - Bottom View

Figure 6
Bottom View

1. Battery (M730T 8 Cell Battery Pictured)
2. Hard Disk Bay Cover (3.5G Module Location)
3. RAM & CPU Bay Cover
4. Vent/Fan Intake/ Outlet (**M730T** Only)
5. Speakers (**M730T** Only)

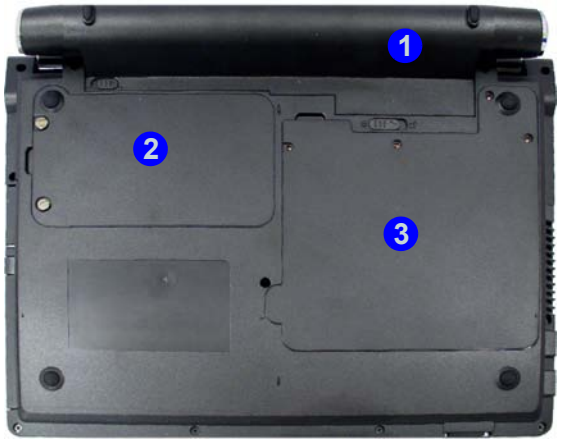

M720T/M728T/M729T

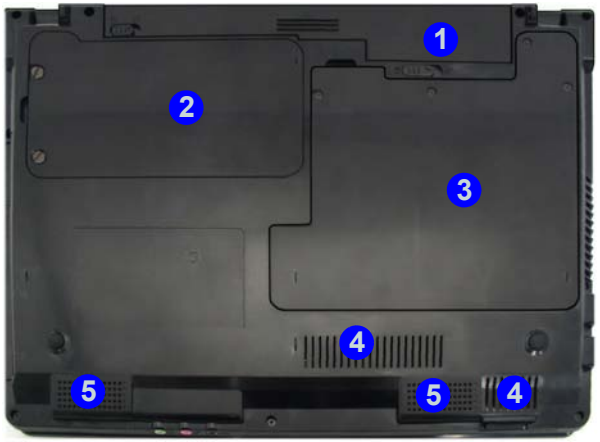

M730T

Overheating

To prevent your computer from overheating make sure nothing blocks the vent/fan intakes while the computer is in use.

Mainboard Overview - Top (Key Parts)

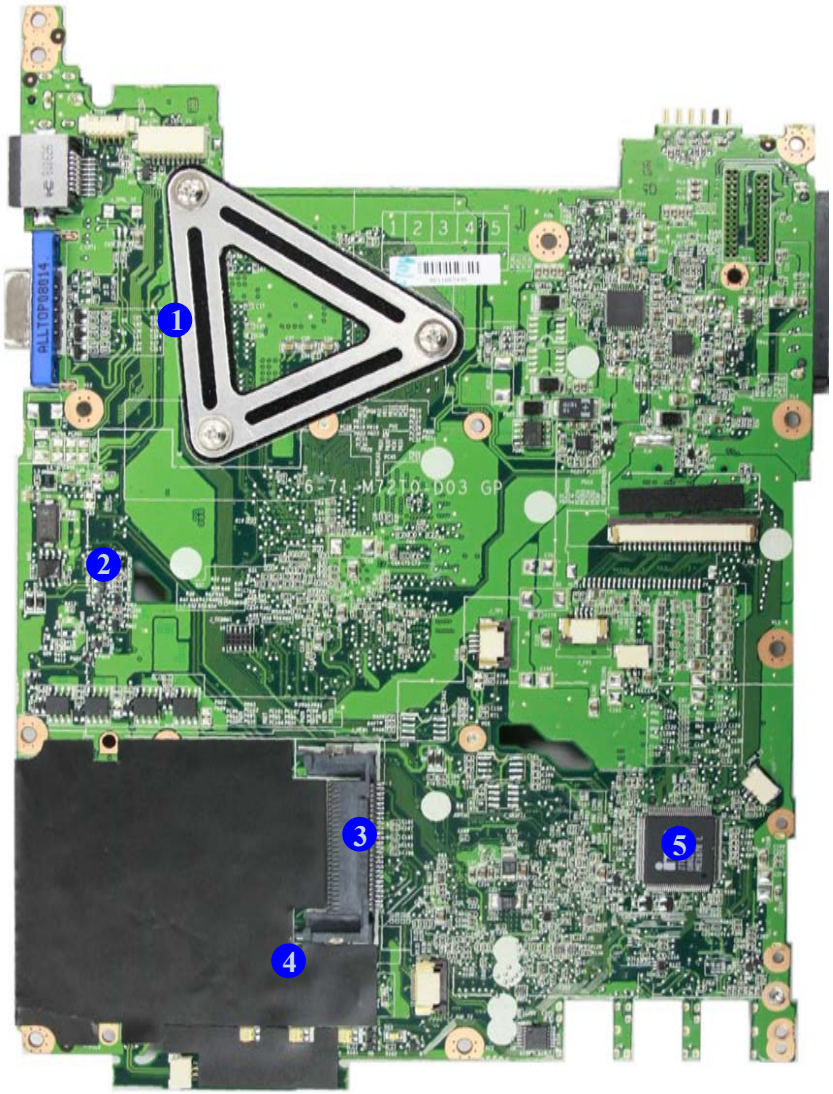

Figure 7
Mainboard Top Key Parts

1. Transformer
2. VT6103L
3. ExpressCard Connector
4. ENE MR510
5. KBC ITE IT8512E

Mainboard Overview - Bottom (Key Parts)

Figure 8
Mainboard Bottom Key Parts

1. CPU Socket (no CPU installed)
2. Northbridge
3. Memory Slots DDR2 SO-DIMM
4. ICS
5. Card Reader Socket
6. Southbridge
7. Audio Codec
8. Mini-Card Connector (WLAN Module)

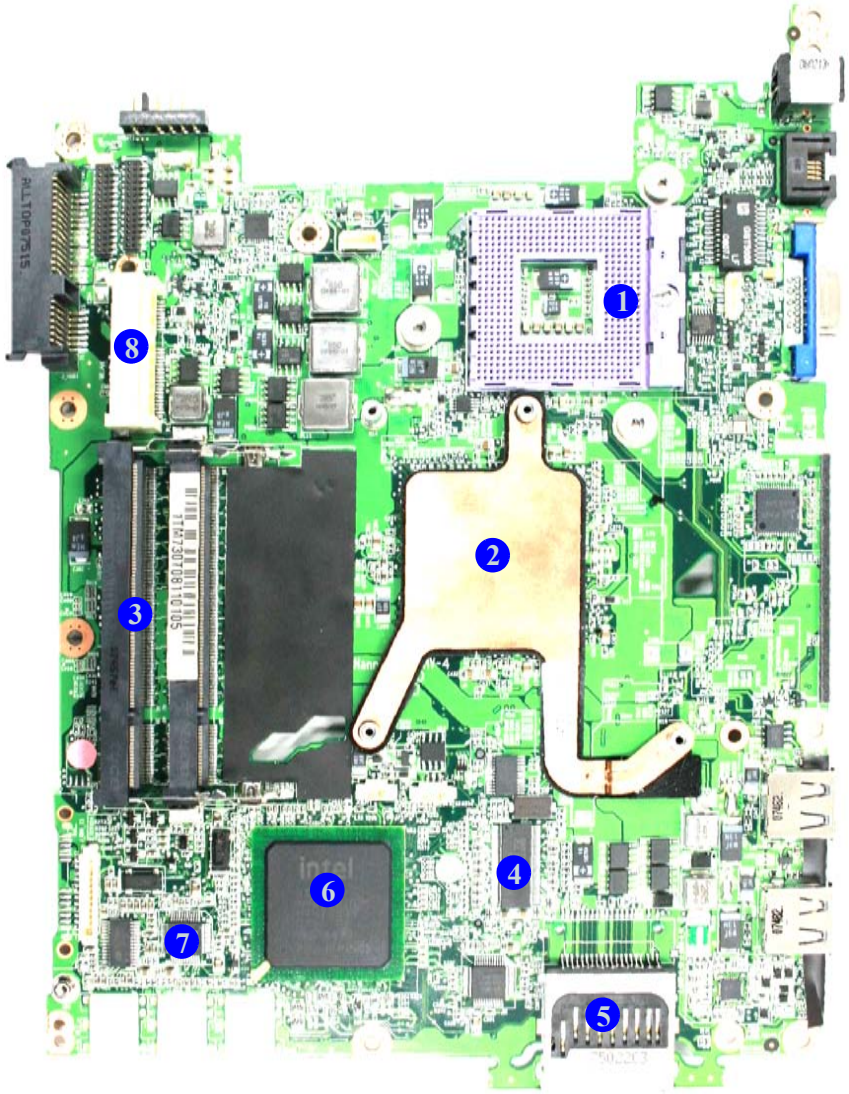

Mainboard Overview - Top (Connectors)

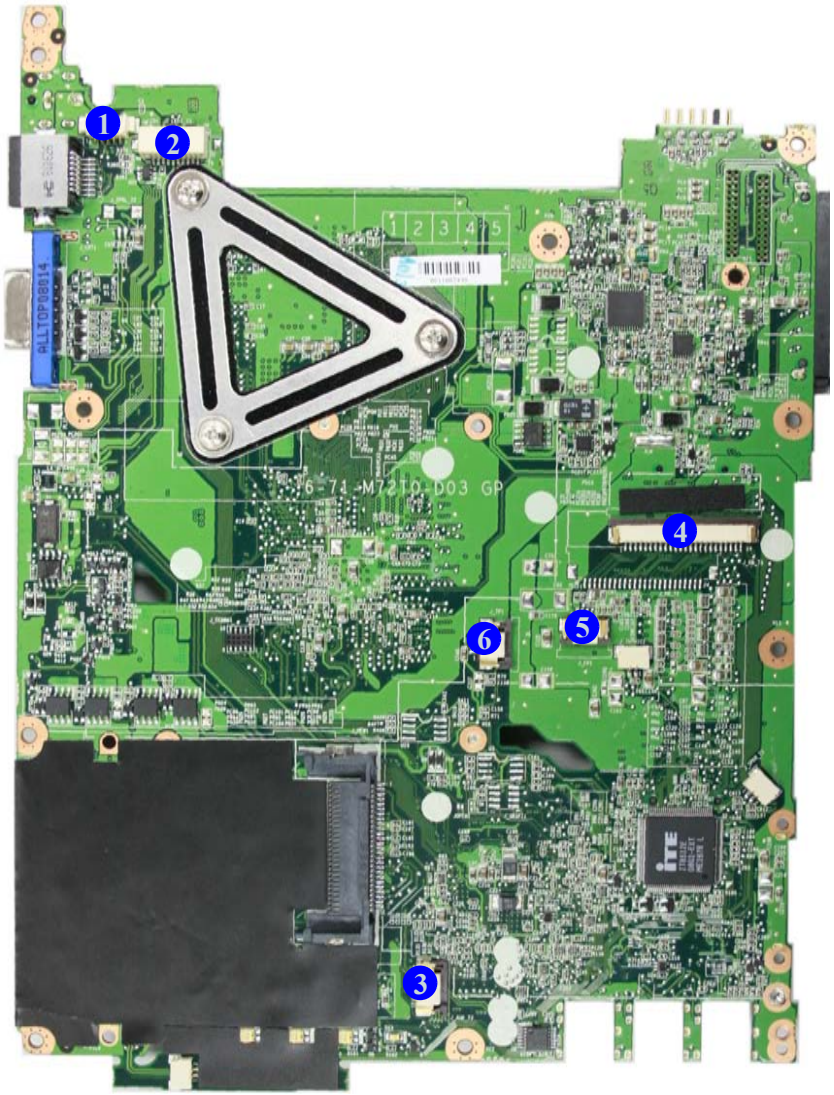

Figure 9
Mainboard Top Connectors

1. Hot-key Connector
2. LCD Cable Connector
3. Keyboard Cable Connector
4. Audio Board Connector
5. Microphone Cable Connector
6. TouchPad Cable Connector

Mainboard Overview - Bottom (Connectors)

Figure 10
Mainboard Bottom Connectors

1. BT Cable Connector
2. Multi Board Connector
3. CD-ROM Connector
4. HDD Connector
5. CMOS Bat. Connector
6. CPU Fan Cable Connector
7. DC-In Jack
8. USB Port

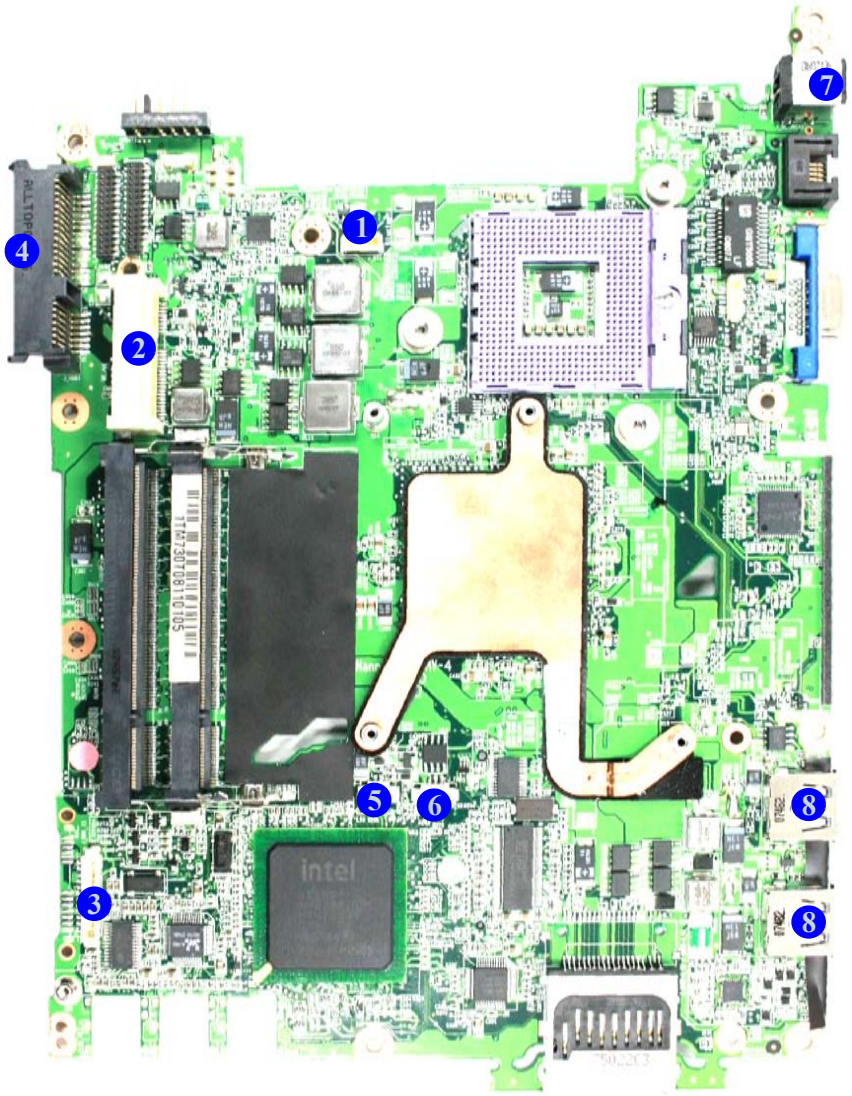

Chapter 2: Disassembly

Overview

This chapter provides step-by-step instructions for disassembling the ***M720T/M728T/M729T/M730T*** series notebook's parts and subsystems. When it comes to reassembly, reverse the procedures (unless otherwise indicated).

We suggest you completely review any procedure before you take the computer apart.

Procedures such as upgrading/replacing the RAM, optical device and hard disk are included in the User's Manual but are repeated here for your convenience.

To make the disassembly process easier each section may have a box in the page margin. Information contained under the figure # will give a synopsis of the sequence of procedures involved in the disassembly procedure. A box with a lists the relevant parts you will have after the disassembly process is complete. **Note**: The parts listed will be for the disassembly procedure listed ONLY, and not any previous disassembly step(s) required. Refer to the part list for the previous disassembly procedure. The amount of screws you should be left with will be listed here also.

A box with a will also provide any possible helpful information. A box with a contains warnings.

An example of these types of boxes are shown in the sidebar.

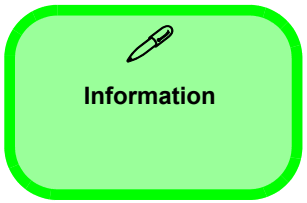

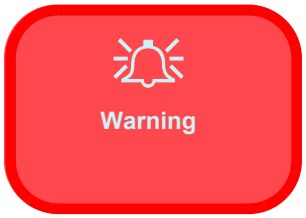

NOTE: All disassembly procedures assume that the system is turned **OFF**, and disconnected from any power supply (the battery is removed too).

Maintenance Tools

The following tools are recommended when working on the notebook PC:

- M3 Philips-head screwdriver
- M2.5 Philips-head screwdriver (magnetized)
- M2 Philips-head screwdriver
- Small flat-head screwdriver
- Pair of needle-nose pliers
- Anti-static wrist-strap

Connections

Connections within the computer are one of four types:

Locking collar sockets for ribbon connectors	To release these connectors, use a small flat-head screwdriver to gently pry the locking collar away from its base. When replacing the connection, make sure the connector is oriented in the same way. The pin1 side is usually not indicated.
Pressure sockets for multi-wire connectors	To release this connector type, grasp it at its head and gently rock it from side to side as you pull it out. Do not pull on the wires themselves. When replacing the connection, do not try to force it. The socket only fits one way.
Pressure sockets for ribbon connectors	To release these connectors, use a small pair of needle-nose pliers to gently lift the connector away from its socket. When replacing the connection, make sure the connector is oriented in the same way. The pin1 side is usually not indicated.
Board-to-board or multi-pin sockets	To separate the boards, gently rock them from side to side as you pull them apart. If the connection is very tight, use a small flat-head screwdriver - use just enough force to start.

Maintenance Precautions

The following precautions are a reminder. To avoid personal injury or damage to the computer while performing a removal and/or replacement job, take the following precautions:

1. **Don't drop it**. Perform your repairs and/or upgrades on a stable surface. If the computer falls, the case and other components could be damaged.
2. **Don't overheat it**. Note the proximity of any heating elements. Keep the computer out of direct sunlight.
3. **Avoid interference**. Note the proximity of any high capacity transformers, electric motors, and other strong magnetic fields. These can hinder proper performance and damage components and/or data. You should also monitor the position of magnetized tools (i.e. screwdrivers).
4. **Keep it dry**. This is an electrical appliance. If water or any other liquid gets into it, the computer could be badly damaged.
5. **Be careful with power**. Avoid accidental shocks, discharges or explosions.
   - Before removing or servicing any part from the computer, turn the computer off and detach any power supplies.
   - When you want to unplug the power cord or any cable/wire, be sure to disconnect it by the plug head. Do not pull on the wire.
6. **Peripherals** – Turn off and detach any peripherals.
7. **Beware of static discharge**. ICs, such as the CPU and main support chips, are vulnerable to static electricity. Before handling any part in the computer, discharge any static electricity inside the computer. When handling a printed circuit board, do not use gloves or other materials which allow static electricity buildup. We suggest that you use an anti-static wrist strap instead.
8. **Beware of corrosion**. As you perform your job, avoid touching any connector leads. Even the cleanest hands produce oils which can attract corrosive elements.
9. **Keep your work environment clean**. Tobacco smoke, dust or other air-born particulate matter is often attracted to charged surfaces, reducing performance.
10. **Keep track of the components**. When removing or replacing any part, be careful not to leave small parts, such as screws, loose inside the computer.

Power Safety Warning

Before you undertake any upgrade procedures, make sure that you have turned off the power, and disconnected all peripherals and cables (including telephone lines). It is advisable to also remove your battery in order to prevent accidentally turning the machine on.

Cleaning

Do not apply cleaner directly to the computer, use a soft clean cloth.
Do not use volatile (petroleum distillates) or abrasive cleaners on any part of the computer.

Disassembly Steps

The following table lists the disassembly steps, and on which page to find the related information. **PLEASE PERFORM THE DISASSEMBLY STEPS IN THE ORDER INDICATED.**

To remove the Battery:

1. Remove the battery *page 2 - 5*

To remove the HDD:

1. Remove the battery *page 2 - 5*
2. Remove the HDD *page 2 - 6*

To remove the Optical Device:

1. Remove the battery *page 2 - 5*
2. Remove the Optical device *page 2 - 8*

To remove the System Memory:

1. Remove the battery *page 2 - 5*
2. Remove the system memory *page 2 - 10*

To remove the Inverter Board:

1. Remove the battery *page 2 - 5*
2. Remove the inverter board *page 2 - 12*

To remove and install a Processor:

1. Remove the battery *page 2 - 5*
2. Remove the processor *page 2 - 13*

To remove the Wireless LAN Module:

1. Remove the battery *page 2 - 5*
2. Remove the wireless LAN *page 2 - 15*

To remove the Bluetooth Module:

1. Remove the battery *page 2 - 5*
2. Remove the Bluetooth *page 2 - 16*

To remove the Keyboard:

1. Remove the battery *page 2 - 5*
2. Remove the keyboard *page 2 - 17*

To remove the Modem:

1. Remove the battery *page 2 - 5*
2. Remove the HDD *page 2 - 6*
3. Remove the system memory *page 2 - 10*
4. Remove the Optical device *page 2 - 8*
5. Remove the processor *page 2 - 13*
6. Remove the keyboard *page 2 - 17*
7. Remove the modem *page 2 - 18*

Removing the Battery

1. Turn the computer **off**, and turn it over.
2. Slide the latch 1 in the direction of the arrow.
3. Slide the latch 2 in the direction of the arrow, and hold it in place.
4. Slide the battery 3 in the direction of the arrow 4.

Figure 1
Battery Removal

a. Slide the latch and hold in place.
b. Slide the battery in the direction of the arrow.

a.

b.

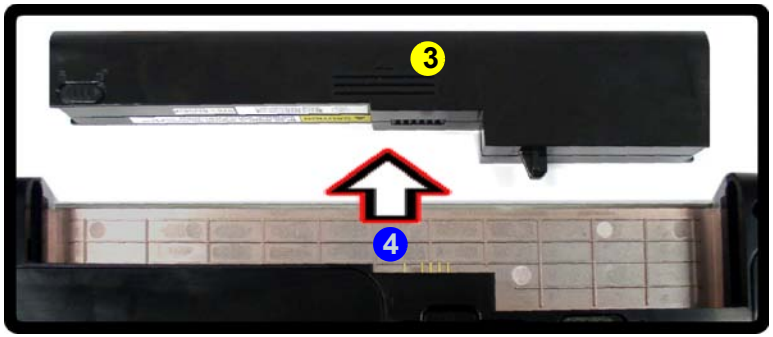

3. Battery

Removing the Hard Disk Drive

The hard disk drive can be taken out to accommodate other 2.5" serial (SATA) hard disk drives with a height of 9.5mm (h). Follow your operating system's installation instructions, and install all necessary drivers and utilities (as outlined in **Chapter 4 of the User's Manual**) when setting up a new hard disk.

Figure 2
HDD Assembly Removal

a. Locate the HDD bay cover and remove the screw(s).

Hard Disk Upgrade Process

1. Turn **off** the computer, and remove the battery (*page 2 - 5*).
2. Locate the hard disk bay cover and remove screw 1 & 2.

a.

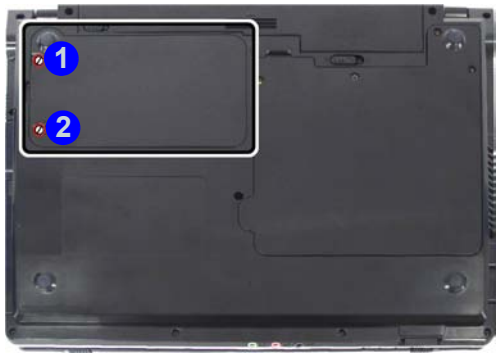

Note:

Only one model is pictured here, however the component locations are the same for both models.

- 2 Screws

HDD System Warning

New HDD's are blank. Before you begin make sure:

You have backed up any data you want to keep from your old HDD.

You have all the CD-ROMs and FDDs required to install your operating system and programs.

If you have access to the internet, download the latest application and hardware driver updates for the operating system you plan to install. Copy these to a removable medium.

3. Remove the hard disk bay cover 3.
4. Grip the tab and slide the hard disk in the direction of arrow 4.
5. Lift the hard disk out of the bay 5.
6. Remove the screw 6 & 7 and the adhesive cover 8 from the hard disk 9.
7. Reverse the process to install a new hard disk (do not forget to replace all the screws and covers).

Figure 3
HDD Assembly Removal (cont'd.)

b. Remove the HDD bay cover.
c. Grip the tab and slide the HDD in the direction of the arrow.
d. Lift the HDD assembly out of the bay.
e. Remove the screw and adhesive cover.

b.

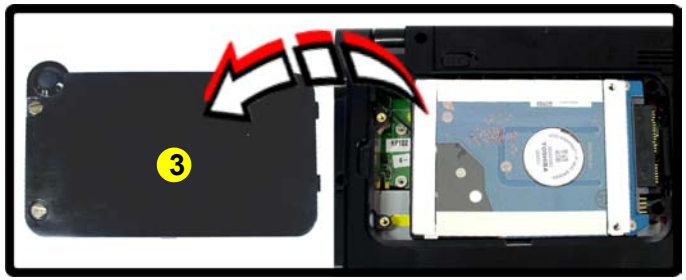

c.

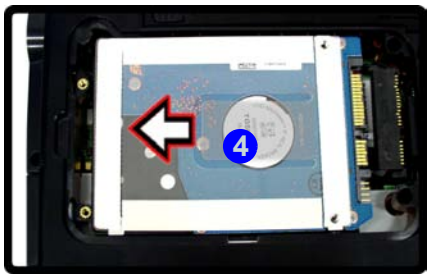

d.

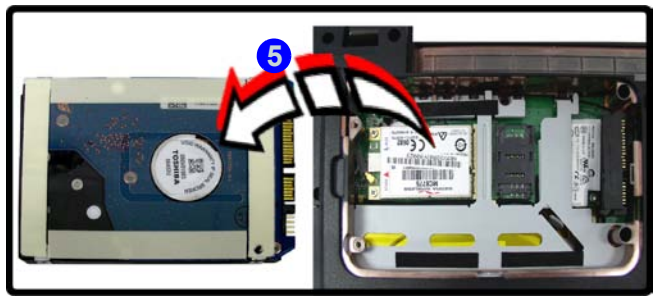

e.

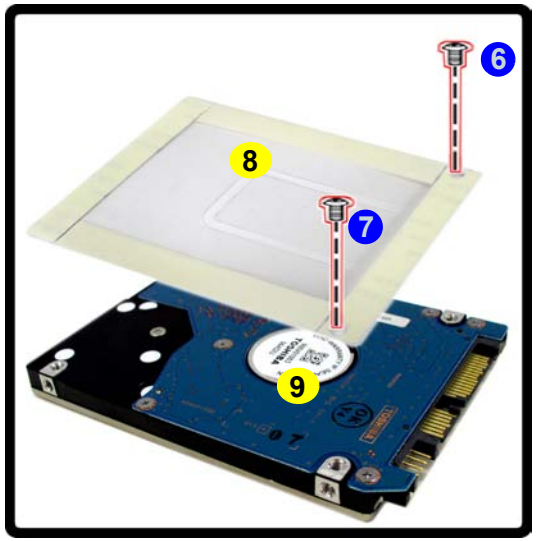

3. HDD Bay Cover
7. Adhesive Cover
8. HDD

- 2 Screws

Figure 4
Optical Device Removal

a. Remove the screws.
b. Disconnect the fan cable and remove the cover.
c. Remove the screw.
d. Push the optical device out off the computer at point 8.

Removing the Optical (CD/DVD) Device

1. Turn **off** the computer, and remove the battery (*page 2 - 5*).
2. **M720T/M728T/M729T: (see over for M730T)** Locate the component bay cover 1 and remove screws 2 - 5.
3. Carefully (**a fan and cable are attached to the under side of the cover**) lift up the bay cover.
4. Carefully disconnect the fan cable 6, and remove the cover 1.
5. Remove the screw at point 7, and use a screwdriver to carefully push out the optical device 9 at point 8.
6. Insert the new device and carefully slide it into the computer (the device only fits one way. DO NOT FORCE IT; The screw holes should line up).
7. Restart the computer to allow it to automatically detect the new device.

a.

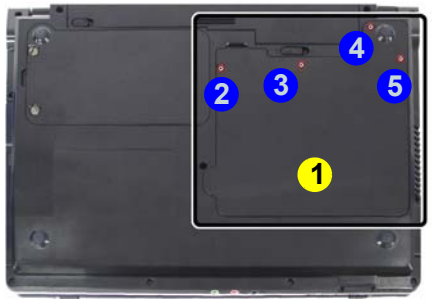

c.

M720T/M728T/M729T

b.

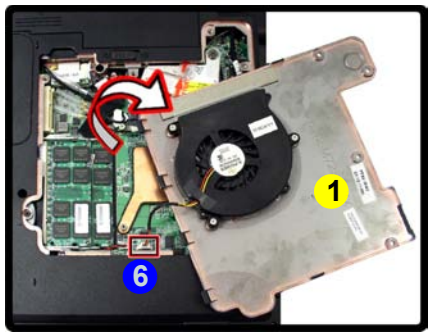

d.

1. Component Bay Cover
9. Optical Device

- 5 Screws

8. **M730T:** Locate the component bay cover 1 and remove screws 2 & 5.
9. Carefully (**a fan and cable are attached to the under side of the cover**) lift up the bay cover.
10. Carefully disconnect the fan cable 6 and remove the bay cover 1.
11. Remove the screw at point 7, and use a screwdriver to carefully push out the optical device 9 at point 8.
12. Insert the new device and carefully slide it into the computer (the device only fits one way. DO NOT FORCE IT; The screw holes should line up).
13. Restart the computer to allow it to automatically detect the new device.

Figure 5
Optical Device Removal (cont'd.)

e. Remove the screws.
f. Disconnect the fan cable and remove the cover.
g. Remove the screw.
h. Push the optical device out off the computer at point 8.

e.

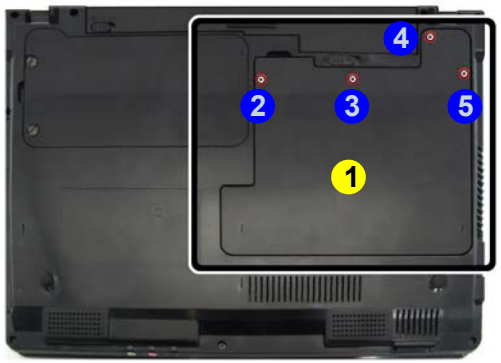

M730T

g.

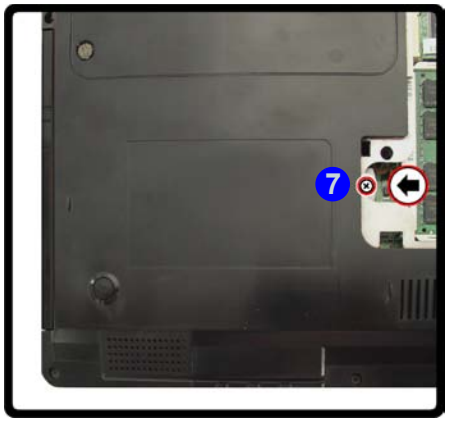

f.

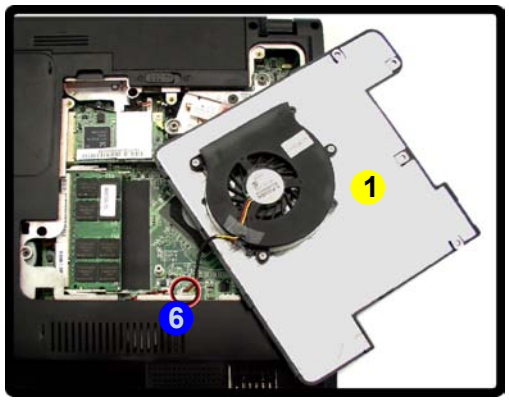

h.

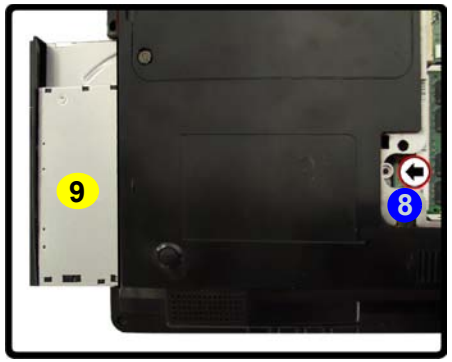

1. HDD Bay Cover
8. Optical Device

- 4 Screws

Figure 6
RAM Module Removal

a. Remove the screws.
b. Remove the cover.

Removing the System Memory (RAM)

The computer has two memory sockets for 200 pin Small Outline Dual In-line Memory Modules (SO-DIMM) supporting **DDR2** 667/800MHz. The main memory can be expanded up to 4GB. The SO-DIMM modules supported are 1024MB, and 2048MB and **DDRII** Modules. The total memory size is automatically detected by the POST routine once you turn on your computer.

Memory Upgrade Process

1. Turn **off** the computer, remove the battery (*page 2 - 5*).
2. Locate the component bay cover 1, and remove screws 2 - 5.
3. Carefully (**a fan and cable are attached to the under side of the cover**) lift up the bay cover.
4. Carefully disconnect the fan cable 6, and remove the cover 1.

Contact Warning

Be careful not to touch the metal pins on the module's connecting edge. Even the cleanest hands have oils which can attract particles, and degrade the module's performance.

a.

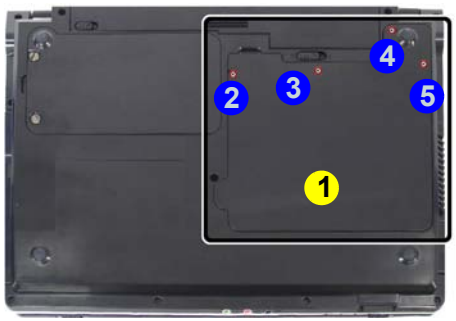

M720T/M728T/M729T

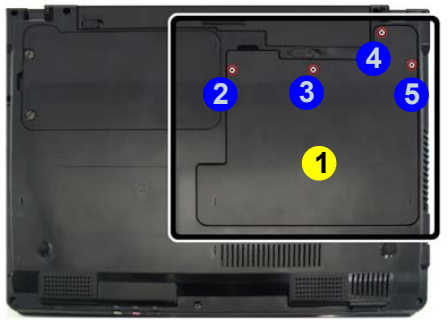

M730T

b.

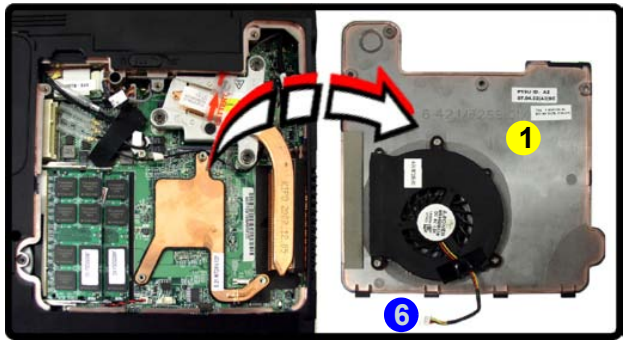

1. Component Bay Cover

- 3 Screws

Note:

Only one model is pictured here, however the component locations are the same for both models.

5. Gently pull the two release latches (7 & 8) on the sides of the memory socket in the direction indicated by the arrows (***Figure 7c***).

c.

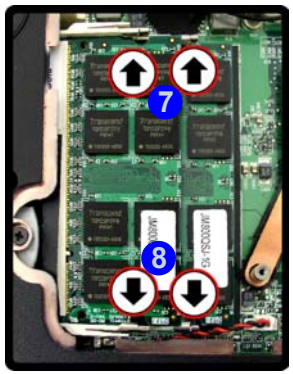

d.

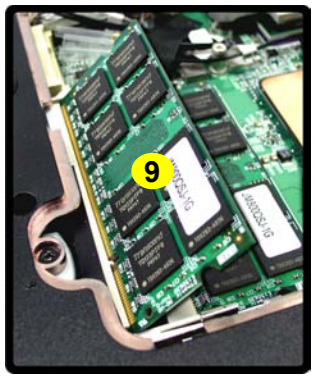

Figure 7
RAM Module Removal (cont'd.)

c. Pull the release latch(es).
d. Remove the module(s).

6. The RAM module(s) 9 will pop-up (***Figure 7d***), and you can then remove it.
7. Pull the latches to release the second module if necessary.
8. Insert a new module holding it at about a 30° angle and fit the connectors firmly into the memory slot.
9. The module's pin alignment will allow it to only fit one way. Make sure the module is seated as far into the slot as it will go. DO NOT FORCE the module; it should fit without much pressure.
10. Press the module in and down towards the mainboard until the slot levers click into place to secure the module.
11. Replace the bay cover and screws (**make sure you reconnect the fan cable before screwing down the bay cover**).

e.

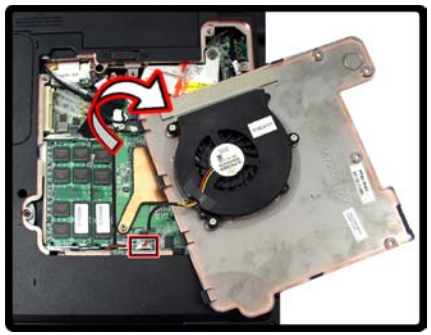

Note:

Only one model is pictured here, however the component locations are the same for both models.

9. RAM Module(s)

12. Restart the computer to allow the BIOS to register the new memory configuration as it starts up.

Figure 8
Inverter Board Removal

a. Remove the 6 screws and unsnap the LCD front panel module from the back.
b. Remove the screw and discharge the remaining power from the inverter board and lift the board up slightly.
c. Disconnect the cables from the inverter.
d. Remove the inverter.

Removing the Inverter Board

1. Turn **off** the computer, and remove the battery (*page 2 - 5*).
2. Remove any rubber covers, screws 1 - 6 (*Figure 8a*), then run your finger around the middle of the frame to carefully unsnap the LCD front panel module 7 from the back.
3. Discharge the remaining system power (see *"Inverter Power Warning"* below).
4. Remove screws 8 - 9 (*Figure 8b*) from the inverter, and carefully lift the inverter board up slightly.
5. Disconnect cables 10 & 11 (*Figure 8c*) from the inverter, then remove the inverter 12 (*Figure 8d*) from the top case assembly.

a.

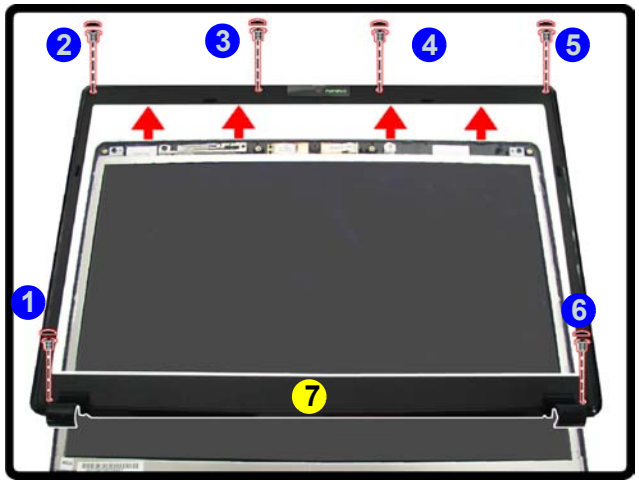

b.

c.

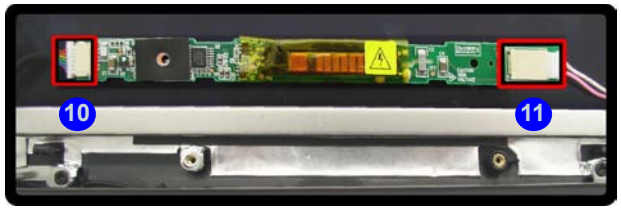

d.

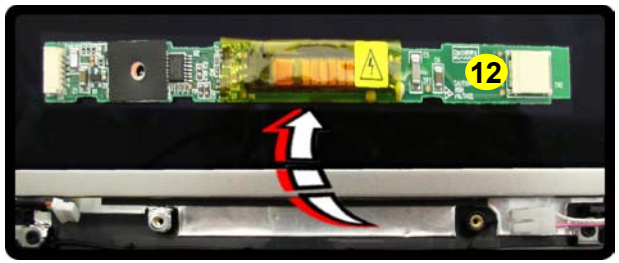

7. LCD Front Panel
12. Inverter Board

- 8 Screws

Inverter Power Warning

In order to prevent a short circuit when removing the inverter it is necessary to discharge any remaining system power. To do so, press the computer's power button for a few seconds before disconnecting the inverter cable.

Removing the Processor

1. Turn **off** the computer, and remove the battery (*page 2 - 5*) and the CPU/RAM bay cover (*page 2 - 10*).
2. The CPU heat sink will be visible at point 1 on the mainboard.
3. Loosen screws 2 - 4 from the heat sink in the order indicated.
4. Carefully lift up the heat sink 5 (*Figure c*) off the computer.

a.

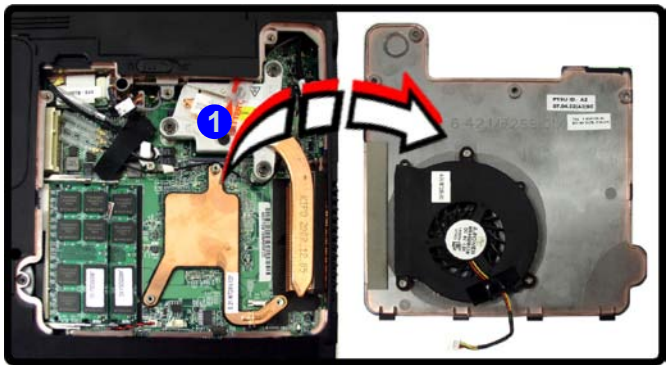

c.

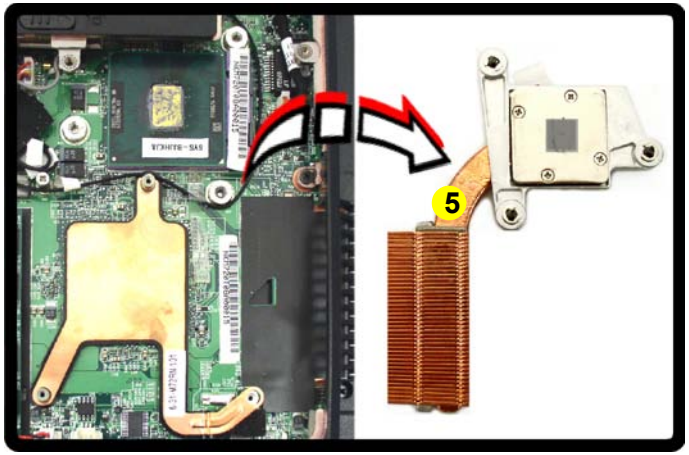

Note:

Only one model is pictured here, however the component locations are the same for both models.

b.

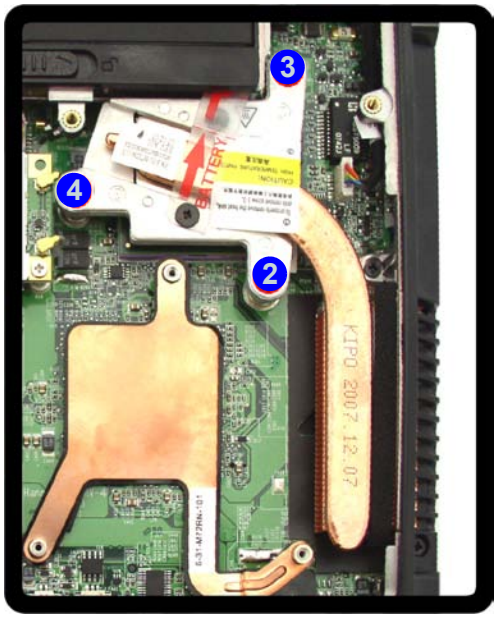

Figure 9
Processor Removal

a. Remove the cover and locate the heat sink.
b. Remove the 3 screws in the order indicated.
c. Remove the heat sink.

5. Heat Sink

Figure 10
Processor Removal Sequence

d. Turn the release latch to unlock the CPU.
e. Lift the CPU out of the socket.

5. Turn the release latch 6 towards the unlock symbol, to release the CPU (***Figure d***).
6. Carefully (it may be hot) lift the CPU 7 up out of the socket (***Figure e***).
7. Reverse the process to install a new CPU.
8. When re-inserting the CPU, pay careful attention to the pin alignment, it will fit only one way (DO NOT FORCE IT!).

d.

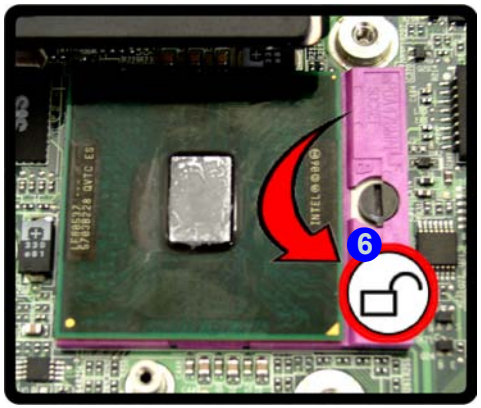

Unlock

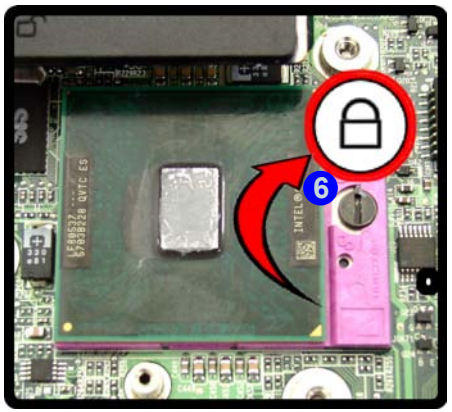

Lock

e.

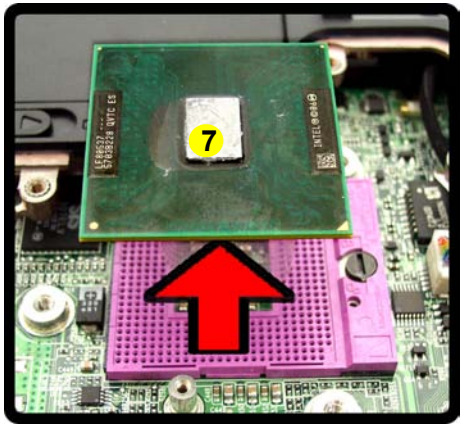

Caution

The heat sink, and CPU area in general, contains parts which are subject to high temperatures. Allow the area time to cool before removing these parts.

7. CPU

Removing the Wireless LAN Module

1. Turn **off** the computer, remove the battery (*page 2 - 5*) and the component bay cover (*page 2 - 10*).
2. The Wireless LAN module will be visible at point 1 on the mainboard.
3. Carefully disconnect cables 2 - 3, then remove screw 4 from the module socket.
4. The Wireless LAN module 5 will pop-up.
5. Lift the Wireless LAN module (*Figure 11d*) up and off the computer.

a.

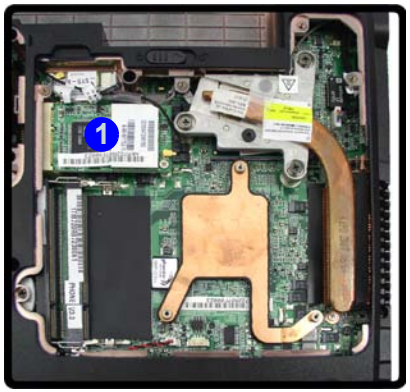

Note:

Only one model is pictured here, however the component locations are the same for both models.

b.

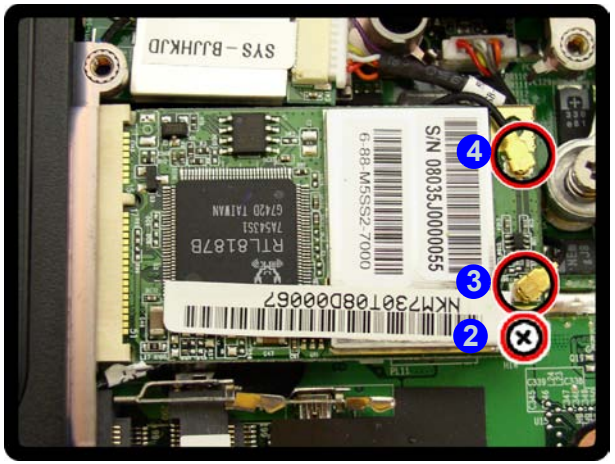

c.

d.

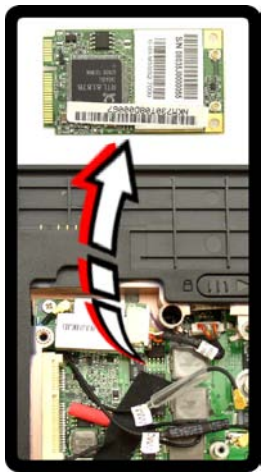

Figure 11
Wireless LAN Module Removal

a. Remove the cover.
b. Disconnect the cables and remove the screw.
c. The WLAN module will pop up.
d. Lift the WLAN module out.

Note: Make sure you reconnect the antenna cable to "1" + "2" socket (*Figure b*).

5. WLAN Module.

- 1 Screw

Figure 12
Bluetooth Removal

a. Remove the cover and locate the Bluetooth module.
b. Remove the screw and disconnect the cable and seperate the connector.
c. Lift the Bluetooth module out.

Removing the Bluetooth Module

1. Turn **off** the computer, remove the battery (*page 2 - 5*).
2. The Bluetooth module will be visible at point 1 on the mainboard.
3. Remove screw 2 and carefully disconnect the cable 3 and separate the module from the connector 4.
4. Lift the Bluetooth module 5 up and off the computer.

a.

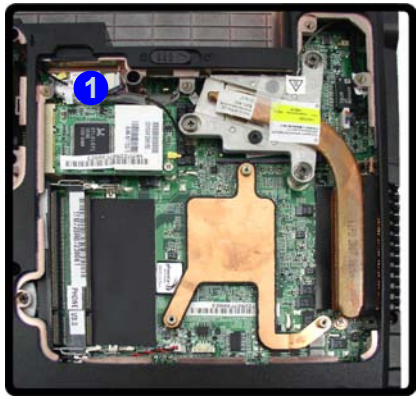

b.

Note:

Only one model is pictured here, however the component locations are the same for both models.

c.

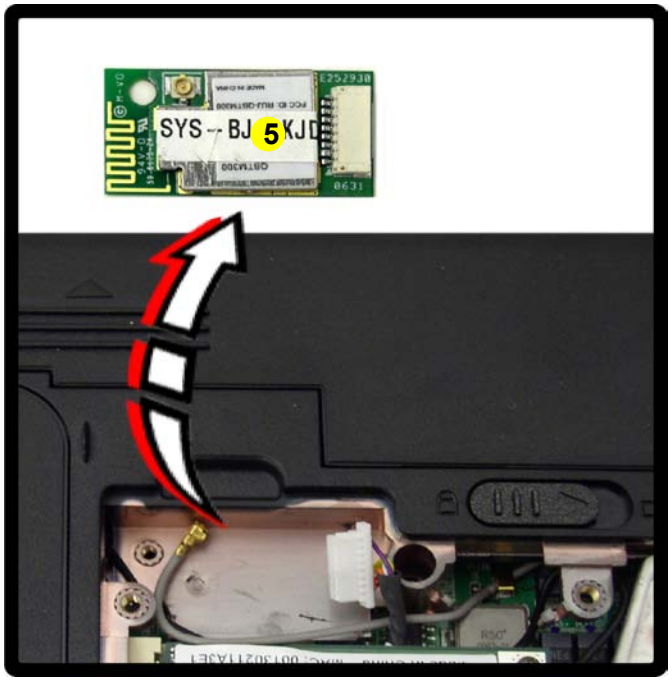

5. Bluetooth Module

- 1 Screw

Removing the Keyboard

1. Turn **off** the computer, and remove the battery (*page 2 - 5*).
2. Press the **three** keyboard latches at the top of the keyboard to elevate the keyboard from its normal position (you may need to use a small screwdriver to do this).
3. Carefully lift the keyboard up, being careful not to bend the keyboard ribbon cable (*Figure 13b*).
4. Disconnect the keyboard ribbon cable 4 from the locking collar socket 5.
5. Carefully lift up the keyboard 6 (*Figure 13c*) off the computer.

Figure 13
Keyboard Removal

a. Press the three latches to release the keyboard.
b. Lift the keyboard up and disconnect the cable from the locking collar.
c. Remove the keyboard.

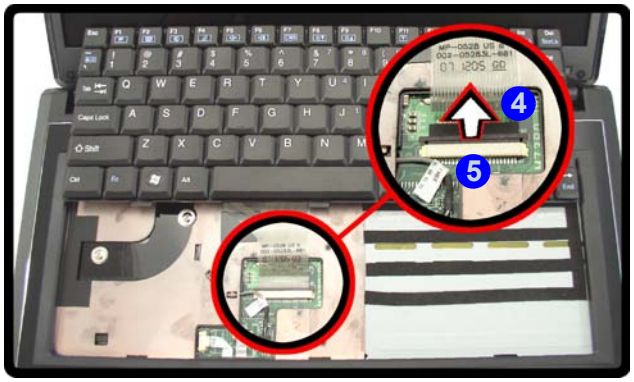

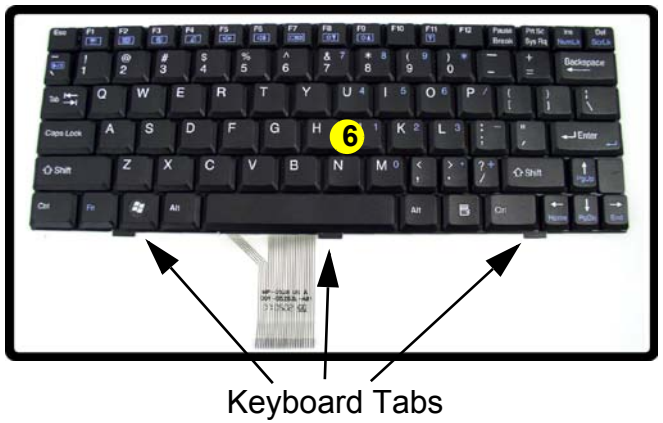

Re-Inserting the Keyboard

When re-inserting the keyboard firstly align the **three** keyboard tabs at the bottom of the keyboard with the slots in the case.

6. Keyboard Module.

Removing the Modem

Figure 14
Modem Removal

a. Disconnect the connectors from under the keyboard.
b. Remove the screws.
c. Remove the screws and disconnect the connectors from the mainboard.
d. Remove the top case.

1. Turn **off** the computer, remove the battery (***page 2 - 5***), HDD (***page 2 - 6***), component bay cover (***page 2 - 10***), optical device (***page 2 - 8***), CPU (***page 2 - 13***), bluetooth (***page 2 - 16***) and keyboard (***page 2 - 17***).
2. Disconnect the connectors 1 - 3 from under the keyboard and turn it over.
3. Remove screws 4 - 5 from the rear of the computer.

a.

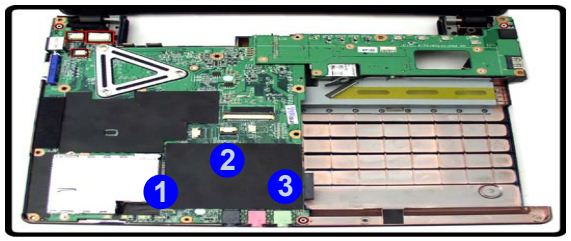

b.

4. Remove the screws 6 - 21 from the bottom case and disconnect the connectors 22 - 23 on the mainboard.
5. Carefully lift up the top case 24 off the computer.

c.

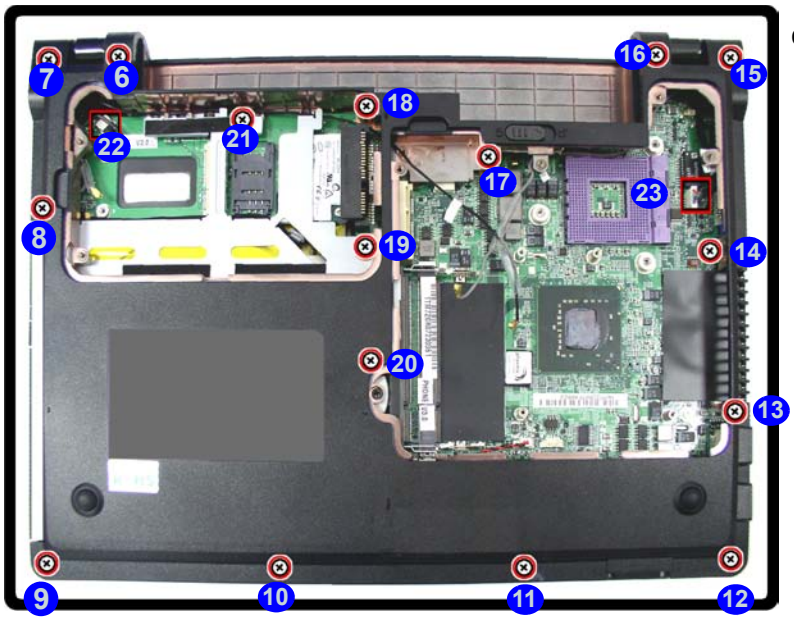

d.

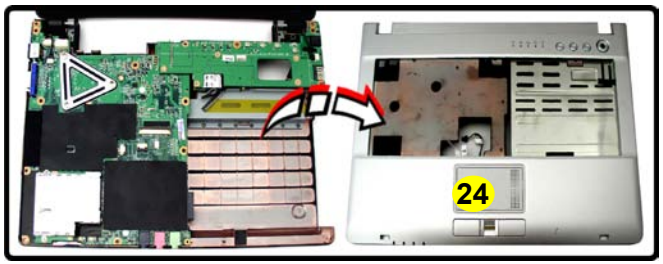

24. Top Case

- 18 Screws

6. Remove screws 25 - 27 and disconnect the connectors 28 - 30 from the mainboard.
7. Separate the bottom case 31 from the mainboard 32 and turn it over.
8. Remove the screws 33 - 34 and disconnect the connector 35 from the modem.
9. Lift the modem 37 up off the socket 36.

e.

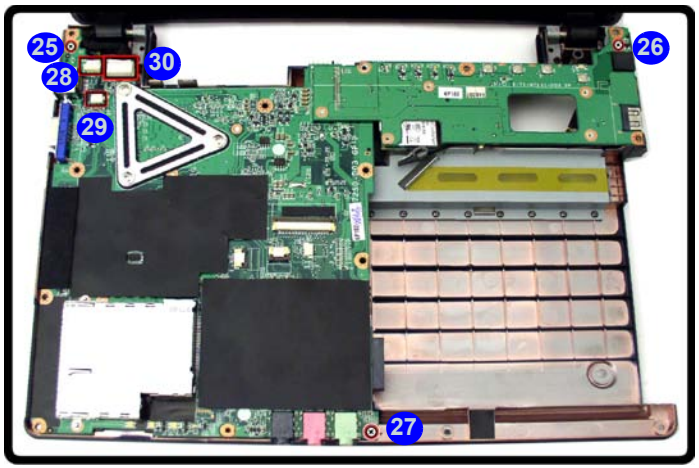

g.

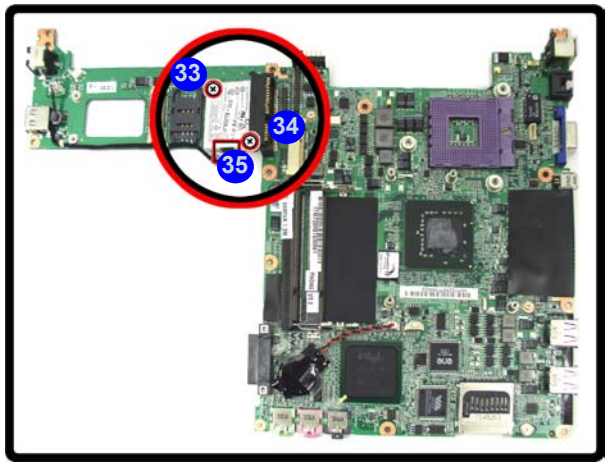

f.

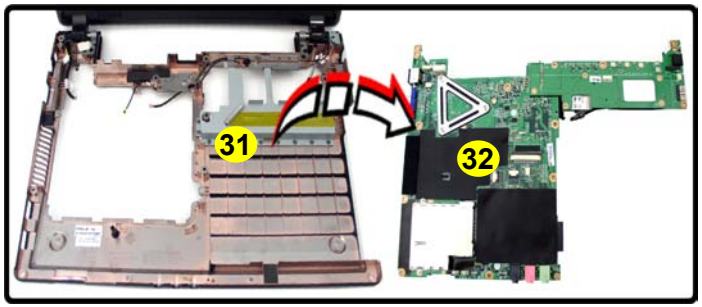

h.

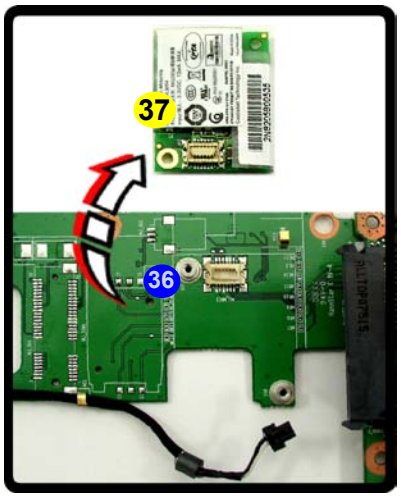

Figure 15
Modem Removal Sequence

e. Remove the screws and and disconnect the connectors.
f. Separate the bottom case from the mainboard.
g. Remove the screws and and disconnect the connector.
h. Lift the modem up off the socket.

31. Bottom Case
32. Main Board
37. Modem

- 5 Screws

Appendix A: Part Lists

This appendix breaks down the ***M720T/M728T/M729T/M730T*** series notebook's construction into a series of illustrations. The component part numbers are indicated in the tables opposite the drawings.

Note: This section indicates the *manufacturer's* part numbers. Your organization may use a different system, so be sure to cross-check any relevant documentation.

Note: Some assemblies may have parts in common (especially screws). However, the part lists DO NOT indicate the total number of duplicated parts used.

Note: Be sure to check any update notices. The parts shown in these illustrations are appropriate for the system at the time of publication. Over the product life, some parts may be improved or re-configured, resulting in *new* part numbers.

Part List Illustration Location

The following table indicates where to find the appropriate part list illustration.

Table A- 1
Part List Illustration Location

Parts	M720T	M728T	M729T	M730T
Top with Fingerprint	*page A - 3*	*page A - 10*	*page A - 17*	*page A - 24*
Top without Fingerprint	*page A - 4*	*page A - 11*	*page A - 18*	*page A - 25*
Bottom	*page A - 5*	*page A - 12*	*page A - 19*	*page A - 26*
LCD	*page A - 6*	*page A - 13*	*page A - 20*	*page A - 27*
HDD	*page A - 7*	*page A - 14*	*page A - 21*	*page A - 28*
COMBO	*page A - 8*	*page A - 15*	*page A - 22*	*page A - 29*
DVD-Dual Drive	*page A - 9*	*page A - 16*	*page A - 23*	*page A - 30*

Top with Fingerprint (M720T)

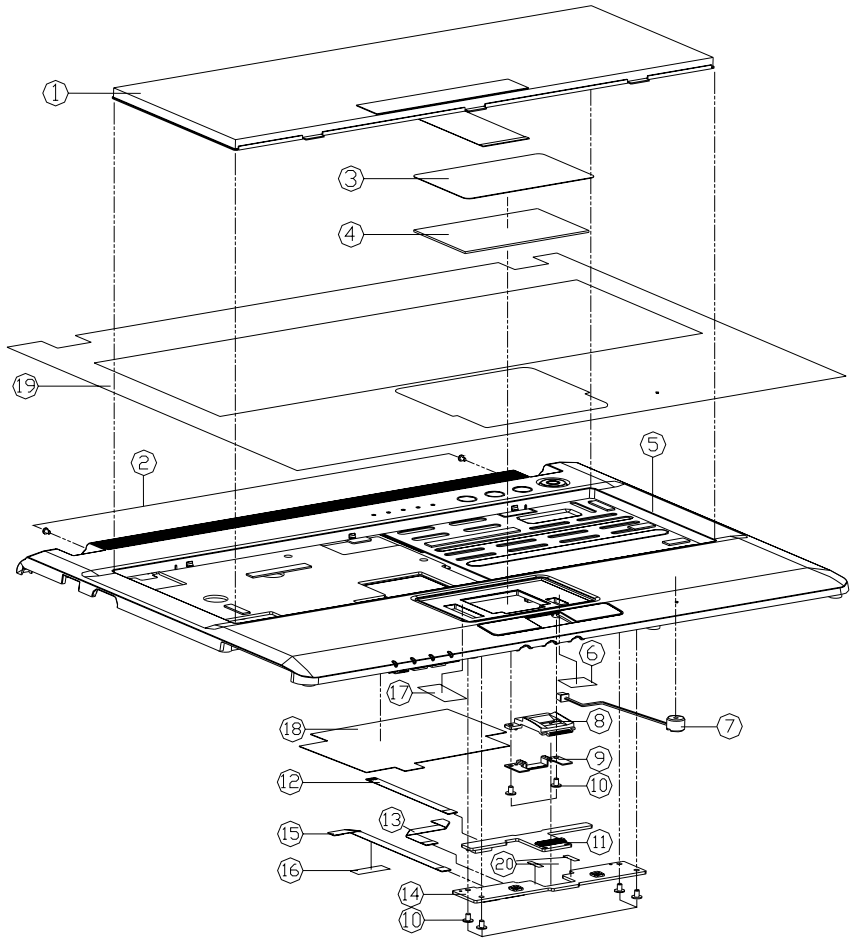

ITEM	PART NAME	PART NO	REMARK
1	K/B USA MP-05283US-4303 M720S	6-80-M72S0-011-1	FOR M720T/M722T
1	K/B USA MP-05283US-4302 M721S	6-80-M7210-011-1	FOR M721T
2	SCREW M2*3L K1 NI ICT NY	6-35-B1120-3RA	
3	TOUCH PAD MYLAR 8835 M720S	6-40-M72S2-011	FOR M720T
3	TOUCH PAD MYLAR 8835 M721S	6-40-M7212-011	FOR M721T
3	TOUCH PAD MYLAR 8835 M725S	6-40-M72S2-010	FOR M722T
4	TOUCH PAD TM61PDZIR389 M660JE	6-49-M66E2-010	
5	TOP CASE MODULE(W/KB FLOATING) M720T	6-39-M72T2-012	FOR M720T
5	TOP CASE MODULE(W/KB FLOATING) M721T	6-39-M7212-112	FOR M721T
5	TOP CASE MODULE(W/KB FLOATING) M722T	6-39-M7222-112	FOR M722T
6	TOUCH PAD GROUND AL FOIL(17*9) FOR EMI,AL	6-47-M55G2-010	
7	[illegible]	6-23-EM55G-011	
8	GP KNOB CENTER PC+ABS(CK7240) M720S	6-42-M72S2-031-1	FOR M720T
8	GP KNOB CENTER PC+ABS(CK7240) M721S	6-42-M7212-030	FOR M721T
8	GP KNOB CENTER PC+ABS(CK7240) M722S	6-42-M7222-030	FOR M722T
9	FINGER BRACKET MODULE M720S	6-33-M72S2-201	
10	SCREW M2*3L K1 NI ICT GTY-PATCH	6-35-B1120-3RE	
11	FINGERPRINT BOARD V10A M720T	6-77-M72TF-D01A	
12	FFC CABLE FOR FINGERPRINT TO M/B 4P M720S	6-43-M72S0-030	
13	FFC CABLE FOR TOUCH PAD TO M/B 12P M720S	6-43-M72S0-010	
14	CLICK BOARD V10 M720T	6-77-M72T2-D01	
15	FFC CABLE FOR CLICK TO M/B 4P M720S	6-43-M72S0-020	
16	TAPE MYLAR (C),MYLAR M550J	6-40-M55J2-030	
17	TOUCH PAD GROUND AL FOIL(22*14) FOR EMI,AL	6-47-M55G2-020	
18	[illegible] FOR TOP CASE M720T	6-47-M72T2-010	
19	TOP CASE PROTECT MYLAR (8835) M725S	6-40-M7212-024	
20	[illegible]	6-40-M729S-011	

Figure A - 1
Top with Fingerprint (M720T)

Top without Fingerprint (M720T)

Figure A - 2
Top without Fingerprint (M720T)

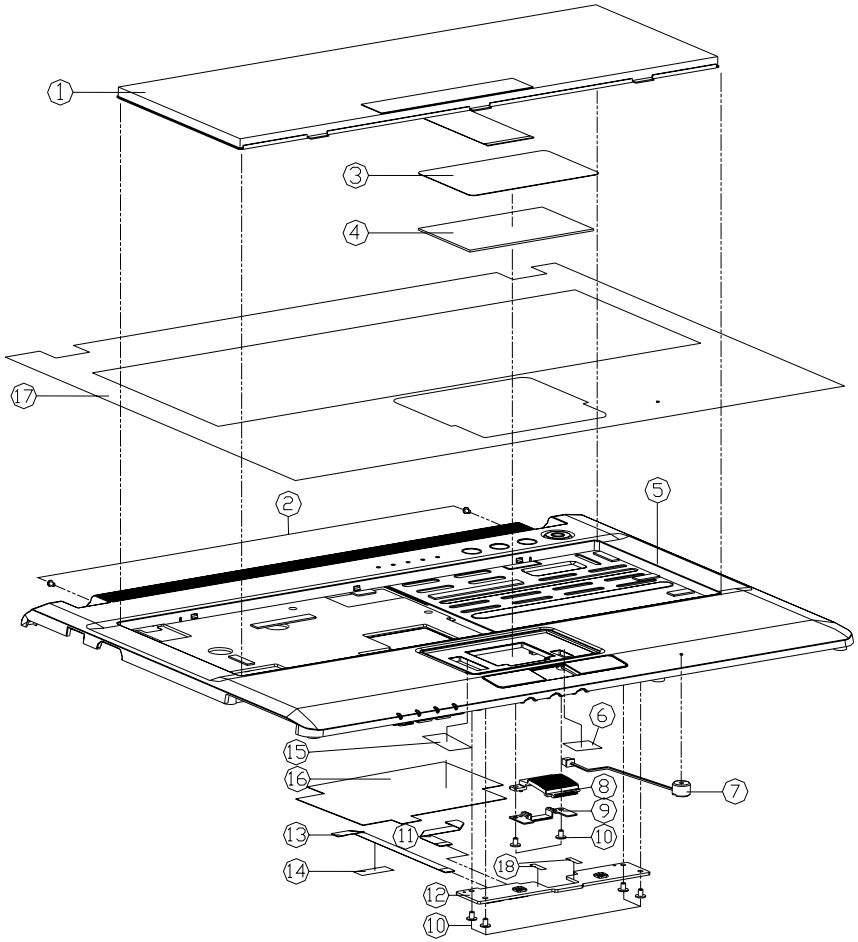

ITEM	PART NAME	PART NO	REMARK
1	K/B USA MP-05283US-4303 M720S 黑色 無鉛	6-80-M72S0-011-1	FOR M720T/M722T
1	K/B USA MP-05283US-4302 M721S白色 無鉛	6-80-M7210-011-1	FOR M721T
2	SCREW M2*3L K1 NI ICT NY 無鉛	6-35-B1120-3RA	
3	TOUCH PAD MYLAR 8B35 M720S 無鉛	6-40-M72S2-011	FOR M720T
3	TOUCH PAD MYLAR 8B35 M721S 無鉛	6-40-M7212-011	FOR M721T
3	TOUCH PAD MYLAR 8B35 M722S 無鉛	6-40-M7252-010	FOR M722T
4	TOUCH PAD TM61PDZ1R389 M660JE 無鉛	6-49-M66E2-010	
5	TOP CASE MODULE(U)KB FLOATING) M720T 無鉛	6-39-M72T2-012	FOR M720T
5	TOP CASE MODULE(U)KB FLOATING) M721T 無鉛	6-39-M7212-112	FOR M721T
5	TOP CASE MODULE(U)KB FLOATING) M722T 無鉛	6-39-M7222-112	FOR M722T
6	TOUCH PAD GROUND AL 17*9 無鉛	6-47-M55G2-010	
7	MIC GRIP(SCREW)(FIL-U) DIV(2V 2K W/CABLE(TY) L=[illegible] 無鉛	6-23-EM55G-011	
8	GP KNOB CENTER DUMMY PC+ABS(CX7240) M720S 無鉛	6-42-M72S2-041-1	FOR M720T
8	GP KNOB CENTER DUMMY PC+ABS(CX7240) M721S 無鉛	6-42-M7212-040	FOR M721T
8	GP KNOB CENTER DUMMY PC+ABS(CX7240) M722S 無鉛	6-42-M7222-040	FOR M722T
9	FINGER BRACKET MODULE M720S 無鉛	6-33-M72S2-201	
10	SCREW M2*3L K1 NI ICT GTY-PATCH 無鉛	6-35-B1120-3RE	
11	FFC CABLE FOR TOUCH PAD TO M/B 12P M720S 無鉛	6-43-M72S0-010	
12	CLICK BOARD V2.0 FOR M720T 無鉛	6-77-M72T2-D01	
13	FFC CABLE FOR CILCK TO M/B 4P M720S 無鉛	6-43-M72S0-020	
14	TAPE MYLAR (C),MYLAR M550J 無鉛	6-40-M55J2-030	
15	TOUCH PAD GROUND AL FOIL(22*14) FOR EMI,AL 無鉛	6-47-M55G2-020	
16	銅箔 FOR TOP CASE M720T 無鉛	6-47-M72T2-010	
17	TOP CASE PROTECT MYLAR (付貨 8B35) M721S 無鉛	6-40-M7212-024	
18	CLICK BOARD MYLAR PCFRED+TEMPA(M720T)(注意付貨)M729R 無鉛	6-40-M729S-011	

Bottom (M720T)

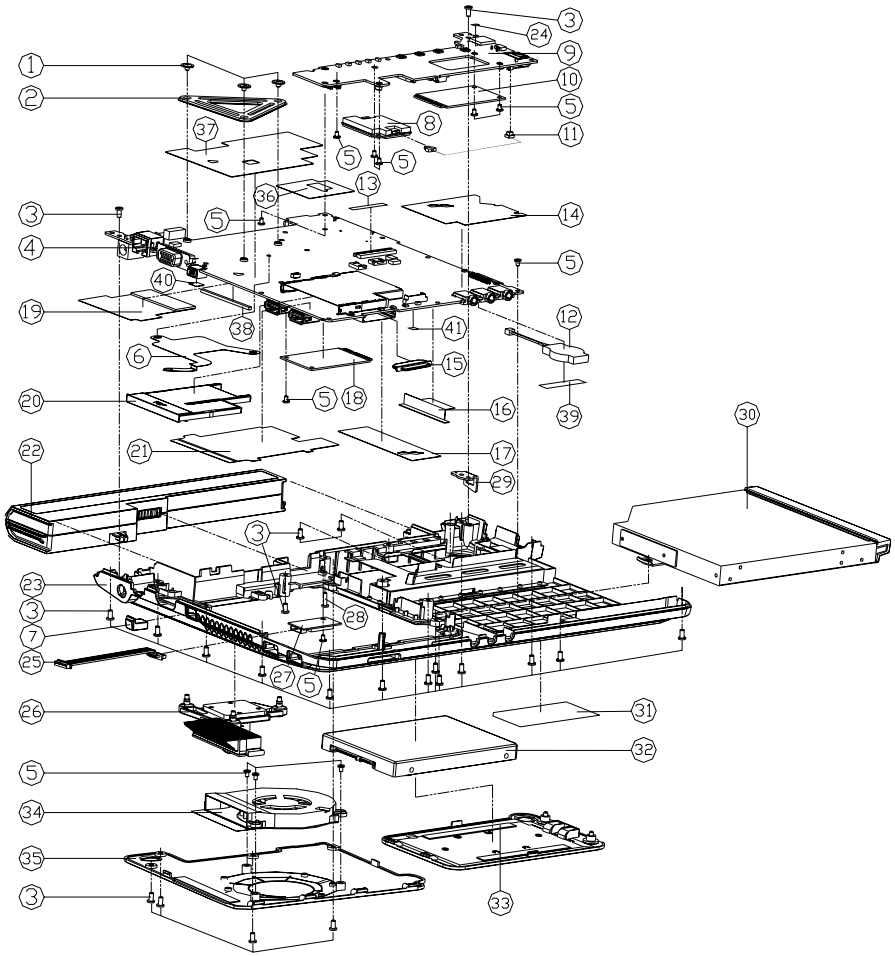

ITEM	PART NAME	PART NO	REMARK
1	[illegible]	6-35-41025-2R5	
2	CPU SUPPORTER MODULE AL M720S	6-33-M72SS-011	
3	SCREW M2.5*5L K1 BK/Z ICT NY	6-35-B6125-5RA	
4	MAIN BOARD V3.0A M720T	6-77-M72T0-D03A	
5	SCREW M2*3L K1 NI ICT NY	6-35-B1120-3RA	
6	NORTH BRIDGE HEATSINK MODULE (CU) M720R	6-31-M72RN-101	
7	1394 RUBBER M720S	6-47-M72SP-010	
8	[illegible]	6-88-L39T1-5300	
9	MULTI I/O BOARD V3.0A (W/3G) M720T	6-77-M72T1-D03A	
9	MULTI I/O BOARD V3.0A (W/O 3G) M720T	6-77-M72T1-D03A-1	
10	WCDMA HSDPA MC8775 SIERRAWIRELESS MINI-CARD USB 3.5G	6-88-M72SW-720	(OPTION)
11	WIRE CABLE FOR RJ-11 TO MDC 2P M720S	6-43-M72SU-010	(OPTION)
12	[illegible]	6-23-22015-P2C	
13	M520G K/B CONN MYLAR	6-40-M52GS-060	
14	MAIN BOARD AL FOIL M730T	6-40-M73TS-0D0	
15	M520G CARD READER RUBBER	6-47-M52G8-010	
16	DDR DDD BKT MYLAR PCI(FR83+TERADKA75OF) M720S	6-40-M72SZ-010	
17	DDR MYLAR FR83 M730T	6-40-M73TS-060	
18	(SAMPLE)WLAN 802.11A+G+N INTEL SHIRLEY PE	6-S88-M72T2-4211	
18	WLAN 802.11A+G+N INTEL SHIRLEY PEAK 1X2 M	6-88-M72T2-4240	(OPTION)
18	(SAMPLE)WLAN 802.11A+G+N INTEL SHIRLEY PEA	6-S88-M72T2-4241	(OPTION)
18	WLAN 802.11BG AW-GU702海華MINI-CARD USB RT	6-88-M5SS2-7000	(OPTION)
19	NORTH BRIDGE MYLAR (FR83+TERADKA75OF) M730T	6-40-M73TS-021	
20	DUMMY NEW CARD PC+ABS TN120R	6-42-T12R3-011	
21	NEW CARD MYLAR(FR83+TERADKA75OF)M730T	6-40-M73TS-050	
22	BKP S LI 14.8V/2.4Ah 4SP SIMPLO(SDI) 18650/12PKG M720S	6-87-M72SS-4DF2	
22	BKP S LI 14.8V/4.4Ah 4SP SIMPLO(SDI) 18650/12PKG M720S	6-87-M72SS-4D42	
22	BKP S LI 14.8V/2.4Ah 4SP GUY(PANASONIC 2299-CL2D3SQ4)	6-87-M72SS-5DF2	
23	BOTTOM CASE MODULE (BOSS) M720S	6-39-M72S3-018	
24	SPEAKER CABLE PASTE (FR83+SOUND) M720S	6-40-M72S3-010	
25	WIRE CABLE FOR BLUETOOTH TO M/B 8P M720S	6-43-M72SB-010	
26	HEAT SINK MODULE M720S( )	6-31-M72SN-103	
27	BLUETOOTH V2.0 DBT-120 (NG) GCOM 8 PIN USB	6-88-M5S45-620	(OPTION)
27	BLUETOOTH V2.0 GUBTC-42M-NS- 8 PIN U	6-88-M5S45-390	(OPTION)
28	SCREW M2*8L K1 BK/Z ICT NY	6-35-B6120-8R0	
29	LOCK BRACKET SECC M720S	6-33-M72S3-010	
30	SATA DVD SUPER MULTI 24X/8X SNO	6-79-M72TQ-000	
30	SATA DVD COMBO 24X/8X SNDCCR1890S) ASS'Y	6-79-M72TX-000	
31	PRODUCT LABEL FOR M720T	6-45-M72T3-010	
31	PRODUCT LABEL FOR M725T	6-45-M725T-010	
31	PRODUCT LABEL FOR M721T	6-45-M721T-010	
31	PRODUCT LABEL FOR M722T	6-45-M722T-010	
31	PRODUCT LABEL FOR M728T	6-45-M728T-010	
31	PRODUCT LABEL FOR M729T	6-45-M729T-010	
32	W/O HDD ASS'Y M720S	6-79-M72SJ-010	
33	HDD COVER MODULE M720S	6-42-M72SJ-103	
34	FAN MODULE M720S	6-31-M72SS-103	
35	CPU COVER MODULE M720T	6-42-M72TS-100	
36	RJ11 PCB CONNECT MYLAR FOR MB (FR83+TERADKA75OF) M720T	6-40-M73TS-040	
37	MYLAR FOR MB (FR83+TERADKA75OF) M730T	6-40-M73TS-010	
38	MYLAR-1 FOR MB (50*2*1.65) PC M720S	6-40-M72SS-051	
39	TAPE MYLAR (A),MYLAR W550J	6-40-M55J2-010	
40	PROTECT MB MYLAR FR83 M720S	6-40-M72SS-040	

Figure A - 3
Bottom (M720T)

LCD (M720T)

Figure A - 4
LCD (M720T)

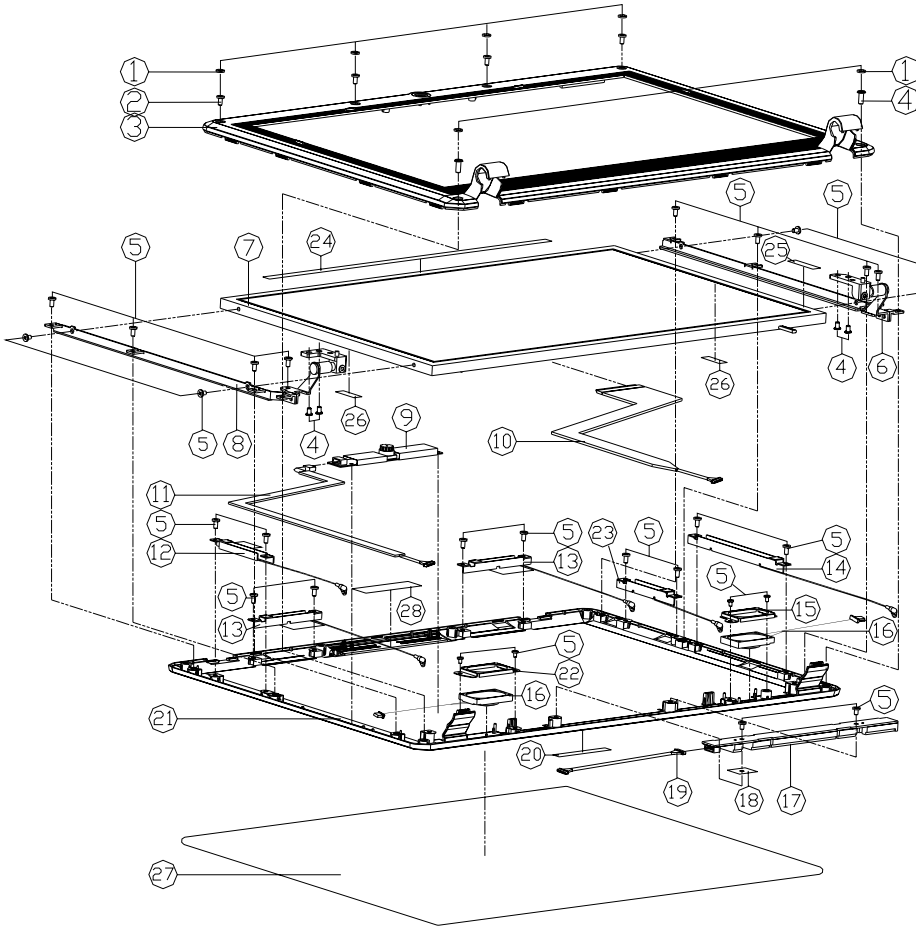

ITEM	PART NAME	PART NO	REMARK
1	LCD FRONT COVER SCREW HOLE RUBBER M720S	6-47-M72S1-021	
2	SCREW M2*4L I BZ ICT GTY-PATCH (T-0.8 D-4)	6-35-C6120-4RB	
3	LCD FRONT COVER MODULE M720T	6-39-M72T1-011	
4	SCREW M2.5*5L KI BK/Z ICT NY	6-35-B6125-5RA	
5	SCREW M2*3L KI NI ICT GTY-PATCH	6-35-B1120-3RE	
6	LCD HINGE R SECC M720T	6-33-M72T1-011	
7	LCD 12.1" WXGA TOSHIBA LTD12EXVV (H/W:3)	6-50-FC255-T00	
7	LCD 12.1" WXGA AU B121EW03 V.4 (GLARE TYPE	6-50-FC255-G03	
7	LCD 12.1" WXGA BOE (HYDIS) HT121WX2-103 GL	6-50-FC252-H00	
8	LCD HINGE L SECC M720T	6-33-M72T1-021	
9	UVC CAMERA BISON FIX BN25M57300 H/W:003	6-88-M5E4C-4921	
9	UVC CAMERA BISON FIX BN25457-300 2M M54S	6-88-M5E4C-4913	
9	CCD RUBBER SILICONE M720S	6-47-M72ST-010	W/O CCD
10	WIRE CABLE FOR LCD TO M/B 20P M720S	6-43-M72S1-012	
11	WIRE CABLE FOR CCD TO M/B 5P M720S	6-43-M72ST-012	
12	ANTENNA BLUETOOTH 2.4G/5G PIFA W	6-23-7M72S-020	<OPTION>
13	ANTENNA WLAN 2.4G/5G PIFA W.I	6-23-7M72S-030	
14	[illegible] M720S	6-23-7M72T-010	<OPTION>
15	SPEAKER FIXTURE-R	6-33-M300T-031	
16	[illegible]	6-23-5M72S-020	
17	INVERTER MODULE ROA NITAC DA-5408-CV62NL	6-76-M6R6R-010	
17	[illegible]	6-76-M660R-011	
18	MYLAR FOR INVERTER (34*13.4*0.4) M66N	6-40-M66NS-060	
19	WIRE CABLE FOR INVERTER TO M/B 6P M720S	6-43-M72SR-012	
20	FOR M54G (LOGO(STYLE-NOTE)	6-45-M54G1-020	
21	LCD BACK COVER MODULE M720T	6-39-M72T1-021	
21	LCD BACK COVER AUTO-LOCK MODULE M72S	6-39-M7211-120	
21	LCD BACK COVER AUTO-LOCK MODULE M722S	6-39-M7221-120	
22	SPEAKER FIXTURE-L	6-33-M300T-041	
23	[illegible]	6-23-7M72T-040	
24	SPONGE(200*5*0.5) FOR BACK CASE M720S	6-47-0019A-153	
25	M520N MYLAR FOR CCD BACK CASE	6-40-M52N1-010	
26	PORON (100*5*0.6) FOR BACK CASE M720S	6-47-00191-103	
27	[illegible]	6-40-00151-M70	
28	M520N MYLAR FOR CCD BACK CASE	6-40-M52N1-010	

HDD (M720T)

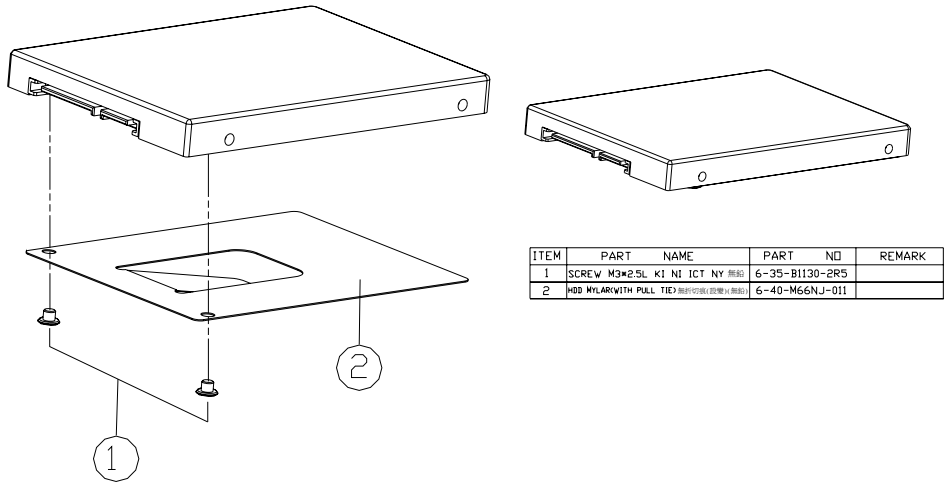

ITEM	PART NAME	PART NO	REMARK
1	SCREW M3*2.5L KI NI ICT NY 無鉛	6-35-B1130-2R5	
2	HDD MYLAR WITH PULL TIE 無折切版(設變)(無鉛)	6-40-M66NJ-011	

Figure A - 5
HDD (M720T)

COMBO (M720T)

Figure A - 6
COMBO (M720T)

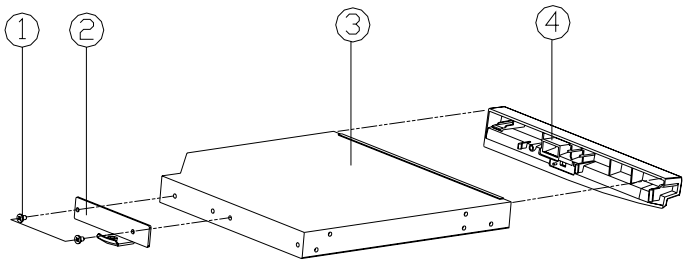

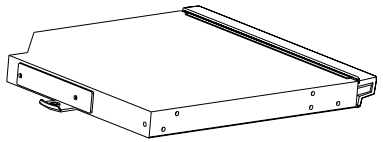

ITEM	PART NAME	PART NO	REMARK
1	SCREW M2*3L NI NI ICT GTY-PATCH	6-35-B1120-3RE	
2	CD-ROM LOCK BRACKET SECC M720S	6-33-M72SZ-010	
3	SATA DVD SUPER MULTI 5 1/4" 24X/8X 12.7MM AD-7560S SNI	6-85-90724-C00	
3	SATA DVD COMBO 5 1/4" 24X/8X 12.7MM TSST T	6-85-90724-T00	
4	COMBO & BEZEL MODULE	6-42-M72SX-102-1	

DVD-Dual Drive (M720T)

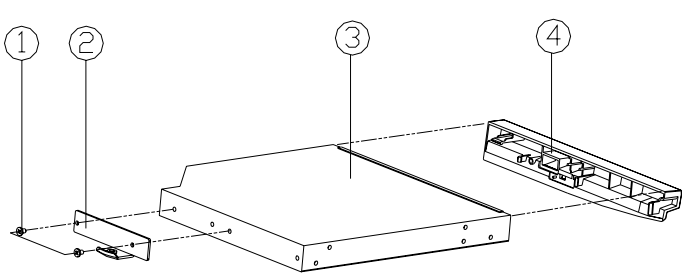

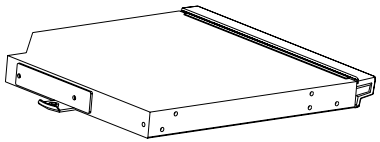

ITEM	PART NAME	PART NO	REMARK
1	SCREW M2*3L K1 NI ICT GTY-PATCH 無鉛	6-35-B1120-3RE	
2	CD-ROM LOCK BRACKET SECC M720S 無鉛	6-33-M72SZ-010	
3	SATA DVD SUPER MULTI 5 1/4" 24X/8X 12.7MM AD-7560S SNO 無鉛	6-85-A0724-C00	
3	SATA DVD SUPER MULTI 5 1/4 24X/8X 12.7MM 無鉛	6-85-A0724-T01	
4	SUPER MULTI G-BEZEL MODULE (解點高度降低 0.05) M720S 空帶)無鉛	6-42-M72SQ-202-1	

Figure A - 7
DVD-Dual Drive (M720T)

A.Part Lists

Top with Fingerprint (M728T)

Figure A - 8
Top with Fingerprint (M728T)

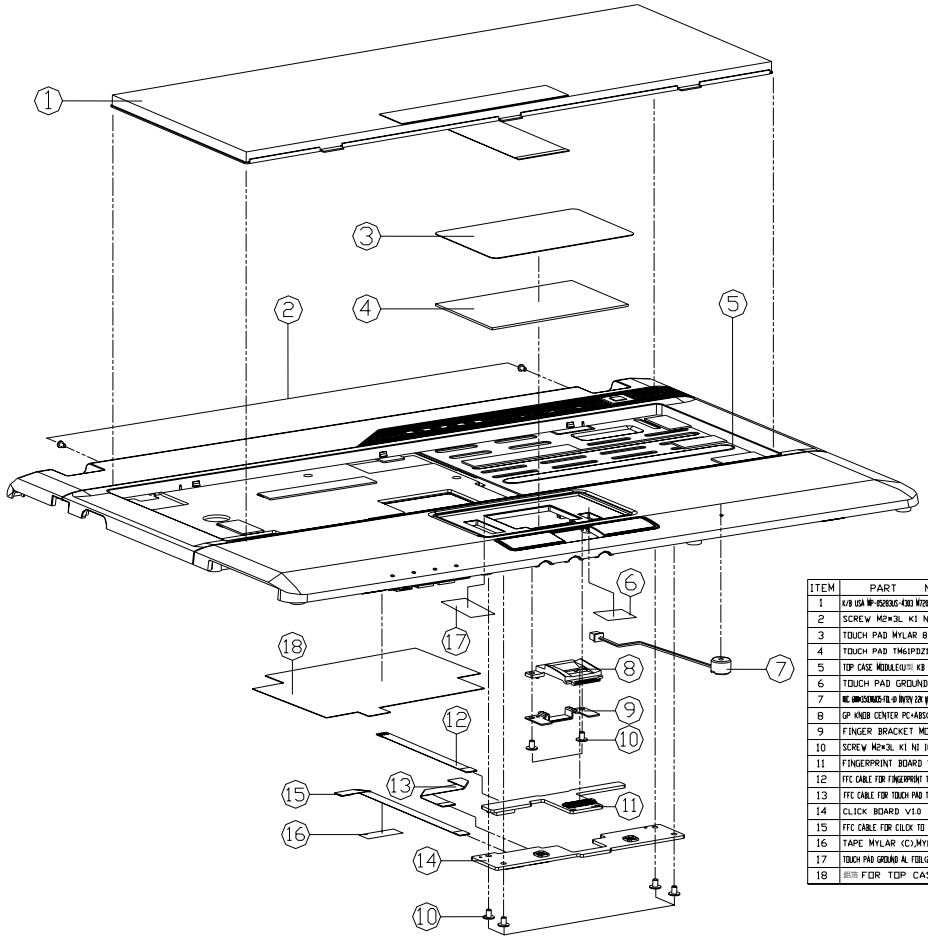

ITEM	PART NAME	PART NO	REMARK
1	K/B USA MP-05283US-4303 M720S 黑色 WITH VIST 無鉛	6-80-M72S0-011-1	
2	SCREW M2*3L K1 N1 ICT NY 無鉛	6-35-B1120-3RA	
3	TOUCH PAD MYLAR 8B35 M725S 無鉛	6-40-M7252-010	
4	TOUCH PAD TM61PDZ1R389 M660JE 無鉛	6-49-M66E2-010	
5	TOP CASE MODULE(U型 KB FLOATING) M725S 無鉛	6-39-M7252-015	
6	TOUCH PAD GROUND AL 17*9 無鉛	6-47-M55G2-010	
7	MIC 6MM×5X4X6X5-FIL-D INVEN 22K W/CABLE(TYP L=6MM M55G 無鉛	6-23-EM55G-011	
8	GP KNOB CENTER PC+ABS(CX7240) M722S 無鉛	6-42-M7222-030	
9	FINGER BRACKET MODULE M720S 無鉛	6-33-M72S2-201	
10	SCREW M2*3L K1 N1 ICT GTY-PATCH 無鉛	6-35-B1120-3RE	
11	FINGERPRINT BOARD V1.0A M720T 無鉛	6-77-M72TF-D01A	
12	FFC CABLE FOR FINGERPRINT TO M/B 4P M720S 無鉛	6-43-M72S0-030	
13	FFC CABLE FOR TOUCH PAD TO M/B 12P M720S 無鉛	6-43-M72S0-010	
14	CLICK BOARD V1.0 M720T 無鉛	6-77-M72T2-D01	
15	FFC CABLE FOR CILCK TO M/B 4P M720S 無鉛	6-43-M72S0-020	
16	TAPE MYLAR (C),MYLAR M550J 無鉛	6-40-M55J2-030	
17	TOUCH PAD GROUND AL FOIL(22*14) FOR EMI,AL 無鉛	6-47-M55G2-020	
18	銘牌 FOR TOP CASE M720T 無鉛	6-47-M72T2-010	

Top without Fingerprint (M728T)

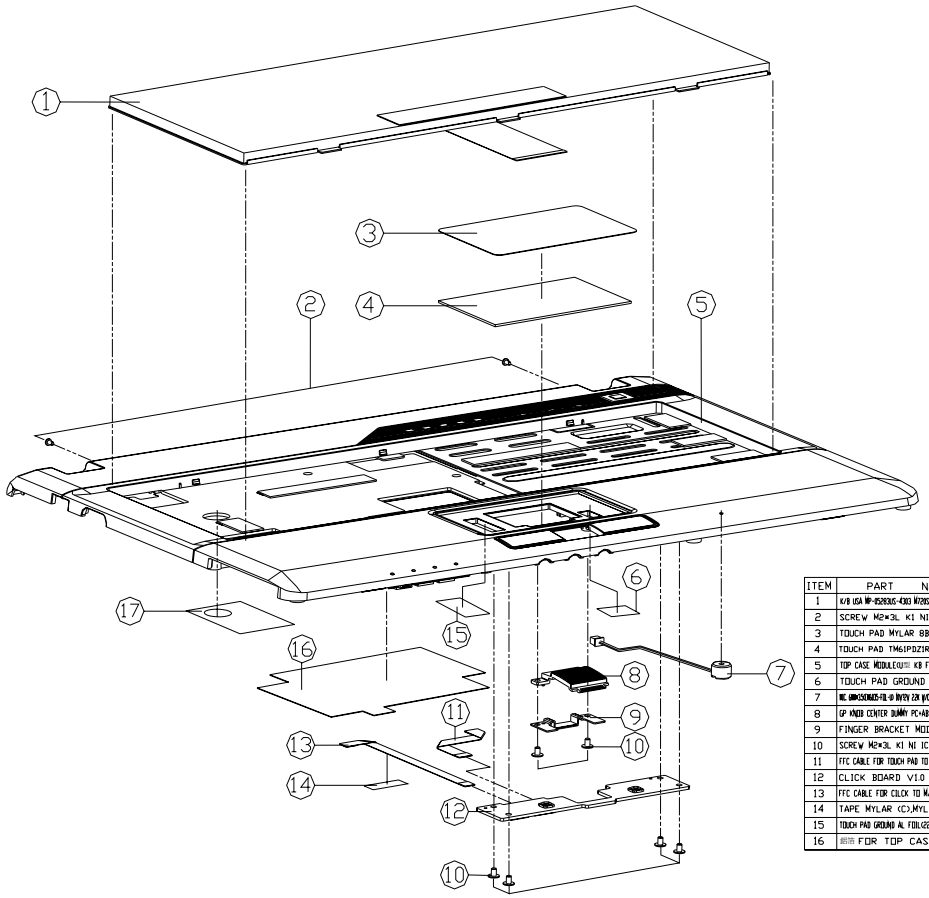

ITEM	PART NAME	PART NO	REMARK
1	K/B USA MP-0528305-4303 M720S 黑色 WITH VIST 無鉛	6-80-M72S0-011-1	
2	SCREW M2*3L K1 NI ICT NY 無鉛	6-35-B1120-3RA	
3	TOUCH PAD MYLAR 8835 M725S 無鉛	6-40-M7252-010	
4	TOUCH PAD TM61PDZ1R389 M660JE 無鉛	6-49-M66E2-010	
5	TOP CASE MODULE(U)型 KB FLOATING) M725S無鉛	6-39-M7252-015	
6	TOUCH PAD GROUND AL 17*9 無鉛	6-47-M55G2-010	
7	MC GMM-15C0605-FIL-D INVEN 22K V(CABLE(T)) L=8000 M55G 無鉛	6-23-EM55G-011	
8	GP KNOB CENTER DUMMY PC+ABS(CX7240) M722S 無鉛	6-42-M7222-040	
9	FINGER BRACKET MODULE M720S 無鉛	6-33-M72S2-201	
10	SCREW M2*3L K1 NI ICT GTY-PATCH 無鉛	6-35-B1120-3RE	
11	FFC CABLE FOR TOUCH PAD TO M/B 12P M720S 無鉛	6-43-M72S0-010	
12	CLICK BOARD V1.0 M720T 無鉛	6-77-M72T2-D01	
13	FFC CABLE FOR CLICK TO M/B 4P M720S 無鉛	6-43-M72S0-020	
14	TAPE MYLAR (C),MYLAR M550J 無鉛	6-40-M55J2-030	
15	TOUCH PAD GROUND AL FOIL(22*14) FOR EMI,AL 無鉛	6-47-M55G2-020	
16	鉛筆 FOR TOP CASE M720T 無鉛	6-47-M72T2-010	

Figure A - 9
Top without Fingerprint (M728T)

Bottom (M728T)

Figure A - 10
Bottom (M728T)

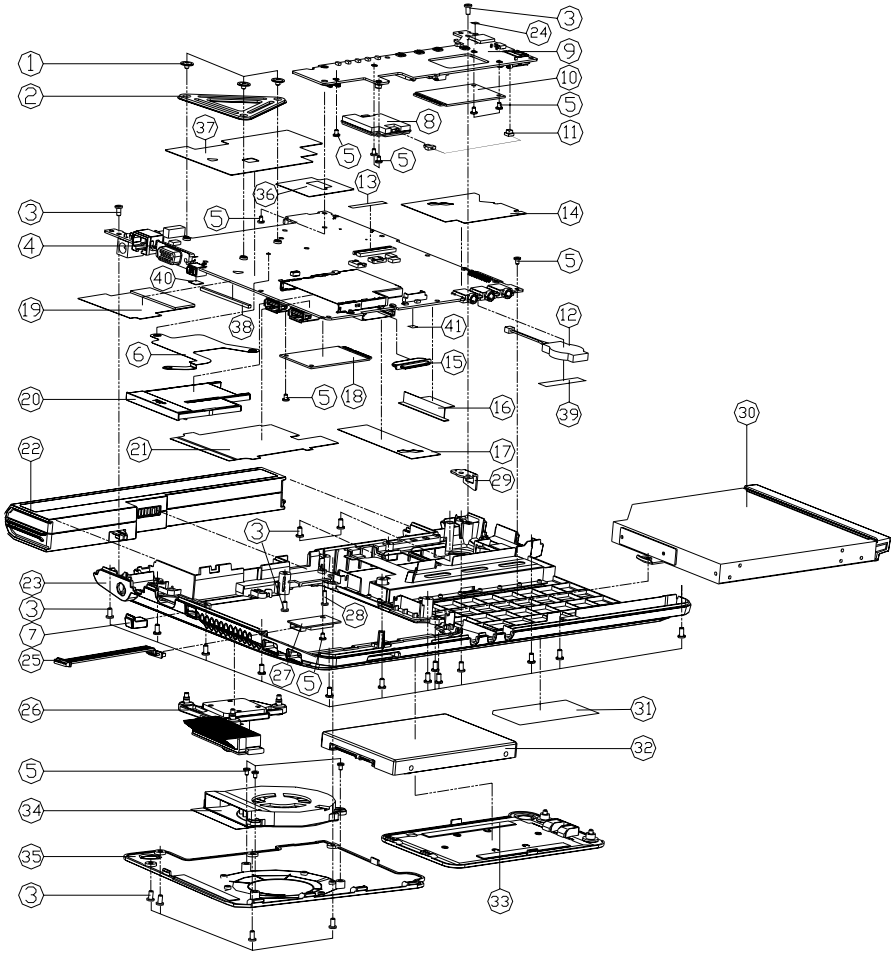

ITEM	PART NAME	PART NO	REMARK
1	M35-41025-2R5-DSCREW M2.5*2.5L,BLK,ICT,W/WASHY WALL-047 無鉛	6-35-41025-2R5	
2	CPU SUPPORTER MODULE AL M720S 無鉛	6-33-M72SS-011	
3	SCREW M2.5*5L K1 BK/Z ICT NY 無鉛	6-35-B6125-5RA	
4	MAIN BOARD V3.0A M720T 無鉛	6-77-M72T0-D03A	
5	SCREW M2*3L K1 NI ICT NY 無鉛	6-35-B1120-3RA	
6	NORTH BRIDGE HEATSINK MODULE (CU) M720R 無鉛	6-31-M72RN-101	
7	1394 RUBBER M720S 無鉛	6-47-M72SP-010	
8	[illegible] 無鉛	6-88-L39T1-5300	
9	MULTI I/O BOARD V3.0A (W/3G) M720T 無鉛	6-77-M72T1-D03A	
9	MULTI I/O BOARD V3.0A (W/O 3G) M720T 無鉛	6-77-M72T1-D03A-1	
10	WCDMA HSDPA MC8775 SIERRAWIRELESS MINI-CARD USB 3.5G 無鉛	6-88-M72SW-720	(OPTION)
11	WIRE CABLE FOR RJ-11 TO MDC 2P M720S 無鉛	6-43-M72SU-010	(OPTION)
12	[illegible] 無鉛	6-23-22015-P2C	
13	M520G K/B CONN MYLAR 無鉛	6-40-M52GS-060	
14	MAIN BOARD AL FOIL M730T 無鉛	6-40-M73TS-0D0	
15	M520G CARD READER RUBBER 無鉛	6-47-M52G8-010	
16	DDR ODD BKT MYLAR PC(FR83+TERADKA750F) M720S 無鉛	6-40-M72SZ-010	
17	DDR MYLAR FR83 M730T 無鉛	6-40-M73TS-060	
18	(SAMPLE)WLAN 802.11A+G+N INTEL SHIRLEY PE 無鉛	6-S88-M72T2-4211	
18	WLAN 802.11A+G+N INTEL SHIRLEY PEAK 1X2 NI 無鉛	6-88-M72T2-4240	(OPTION)
18	(SAMPLE)WLAN 802.11A+G+N INTEL SHIRLEY PEA 無鉛	6-S88-M72T2-4241	(OPTION)
18	WLAN 802.11BG AW-GU702 [illegible] MINI-CARD USB RT 無鉛	6-88-M5SS2-7000	(OPTION)
19	NORTH BRIDGE MYLAR (FR83+TERADKA750F) M730T 無鉛	6-40-M73TS-021	
20	DUMMY NEW CARD PC+ABS TN120R 無鉛	6-42-T12R3-011	
21	NEW CARD MYLAR(FR83+TERADKA750F)M730T 無鉛	6-40-M73TS-050	
22	BATP S LI 14.8V/24AH 4S2P SMP/SAMSUNG 980C/T3980 M720S 無鉛	6-87-M72SS-4DF2	
22	BATP S LI 14.8V/24AH 4S2P SMP/SAMSUNG 980C/T3980 M720S 無鉛	6-87-M72SS-4D42	
22	BATP S LI 14.8V/24AH 4S2P GLW/PANASONIC 2299-CL2280A24 無鉛	6-87-M72SS-5DF2	
23	BOTTOM CASE MODULE (BOSS [illegible]) M720S 無鉛	6-39-M72S3-018	
24	SPEAKER CABLE PASTE (FR83+5011N) M720S 無鉛	6-40-M72S3-010	
25	WIRE CABLE FOR BLUETOOTH TO M/B 8P M720S 無鉛	6-43-M72SB-010	
26	HEAT SINK MODULE M720S([illegible]) 無鉛	6-31-M72SN-103	
27	BLUETOOTH V2.0 GUBTC800 (N6) OCOM 8 PIN USB 無鉛	6-88-M5S45-620	(OPTION)
27	BLUETOOTH V2.0 GUBTCR42M-NS-[illegible] 8 PIN U 無鉛	6-88-M5S45-390	(OPTION)
28	SCREW M2*8L K1 BK/Z ICT NY 無鉛	6-35-B6120-8R0	
29	LOCK BRACKET SECC M720S 無鉛	6-33-M72S3-010	
30	SATA DVD SUPER MULTI 24X/8X SNO 無鉛	6-79-M72TQ-000	
30	SATA DVD COMBO 24X/8X SNO(CRX890S) ASSY 無鉛	6-79-M72TX-000	
31	PRODUCT LABEL FOR M720T 無鉛	6-45-M72T3-010	
31	PRODUCT LABEL FOR M725T 無鉛	6-45-M725T-010	
31	PRODUCT LABEL FOR M721T 無鉛	6-45-M721T-010	
31	PRODUCT LABEL FOR M722T 無鉛	6-45-M722T-010	
31	PRODUCT LABEL FOR M728T 無鉛	6-45-M728T-010	
31	PRODUCT LABEL FOR M729T 無鉛	6-45-M729T-010	
32	W/O HDD ASS'Y M720S 無鉛	6-79-M72SJ-010	
33	HDD COVER MODULE M720S 無鉛	6-42-M72SJ-103	
34	FAN MODULE M720S 無鉛	6-31-M72SS-103	
35	CPU COVER MODULE M720T 無鉛	6-42-M72TS-100	
36	RJ11 PCB CONNECT MYLAR FOR MB (FR83+TERADKA750F) M730T 無鉛	6-40-M73TS-040	
37	MYLAR FOR MB (FR83+TERADKA750F) M730T 無鉛	6-40-M73TS-010	
38	MYLAR-1 FOR MB (50*2*1.65) PC M720S 無鉛	6-40-M72SS-051	
39	TAPE MYLAR (A),MYLAR M550J 無鉛	6-40-M55J2-010	
40	PROTECT MB MYLAR FR83 M720S 無鉛	6-40-M72SS-040	

LCD (M728T)

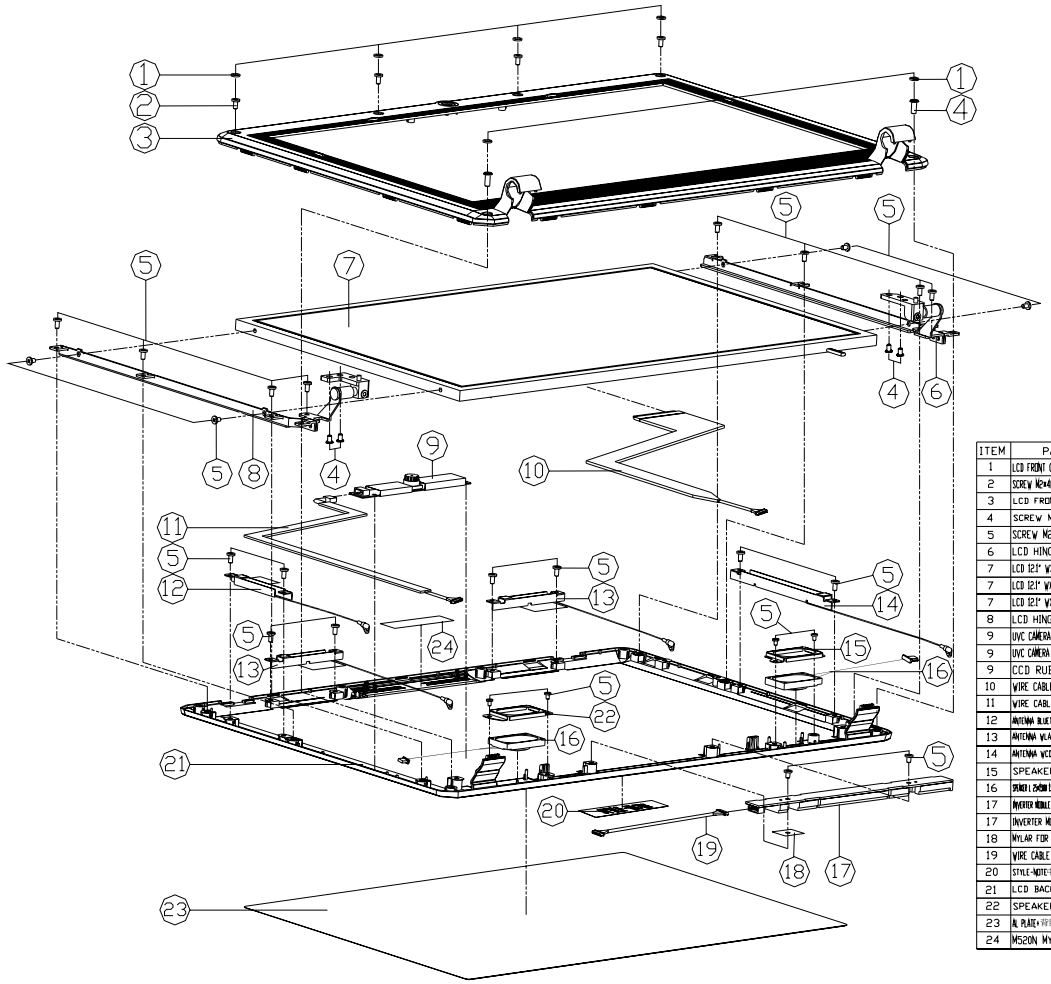

ITEM	PART NAME	PART NO	REMARK
1	LCD FRONT COVER SCREW HOLE RUBBER M720S 無鉛	6-47-M72S1-021	
2	SCREW M2*4L 1 BZ ICT GTY-PATCH (T=0.8 D=4) 無鉛	6-35-C6120-4RB	
3	LCD FRONT COVER MODULE M720T 無鉛	6-39-M72T1-011	
4	SCREW M2.5*5L K1 BK/Z ICT NY 無鉛	6-35-B6125-5RA	
5	SCREW M2*3L K1 N1 ICT GTY-PATCH 無鉛	6-35-B1120-3RE	
6	LCD HINGE R DIE CASTING M720S 無鉛	6-33-M72S1-011	
7	LCD 12.1" WXGA TOSHIBA LTD121EXVV (H/W:3) 無鉛	6-50-FC255-T00	
7	LCD 12.1" WXGA AU B121EW03 V.4 (GLARE TYPE 無鉛	6-50-FC255-G03	
7	LCD 12.1" WXGA BOE (HYDIS) HT121WX2-103 GL 無鉛	6-50-FC252-H00	
8	LCD HINGE L DIE CASTING M720S 無鉛	6-33-M72S1-021	
9	UVC CAMERA BISON FIX BN35M4S733000 H/W:003 無鉛	6-88-M5E4C-4921	
9	UVC CAMERA BISON FIX BN3524S7-000 2M M540S 無鉛	6-88-M5E4C-4913	
9	CCD RUBBER SILICONE M720S 無鉛	6-47-M72ST-010	W/O CCD
10	WIRE CABLE FOR LCD TO M/B 20P M720S 無鉛	6-43-M72S1-012	
11	WIRE CABLE FOR CCD TO M/B 5P M720S 無鉛	6-43-M72ST-012	
12	ANTENNA BLUETOOTH 2.4G/5G PIFA BT 灰色 精華 M720S 無鉛	6-23-7M72S-020	<OPTION>
13	ANTENNA WLAN 2.4G/5G PIFA WL1 黑色 精華 M720S 無鉛	6-23-7M72S-030	
14	ANTENNA WCDMA 3G PIFA (黑色) 5MM 精華 M720S 無鉛	6-23-7M72S-011	<OPTION>
15	SPEAKER FIXTURE-R 無鉛	6-33-M300T-031	
16	SPEAKER L 25*20M 1.5W 8P FG-25M2R2 W/CABLE 2P AWG28 6MM 高低溫 M720S 無鉛	6-23-5M72S-020	
17	INVERTER MODULE 1A SUMIDA TWS-400-9650M660R(SUMIDA-E) M660R0 無鉛	6-76-M660R-011	
17	INVERTER MODULE RDA MITAC DA-1A08-CVD2NL 無鉛	6-76-M6R6R-010	
18	MYLAR FOR INVERTER (14*10.4*0.4) M660N 無鉛	6-40-M66NS-060	
19	WIRE CABLE FOR INVERTER TO M/B 6P M720S 無鉛	6-43-M72SR-012	
20	STYLE-NOTE中性LOGOX電腦薄膜鍍光鉛M740S(除鍍)無鉛	6-45-M74S1-012-1	
21	LCD BACK COVER MODULE M728R 無鉛	6-39-M7281-022	
22	SPEAKER FIXTURE-L 無鉛	6-33-M300T-041	
23	AL PLATE+背膠 =0.20MM AL FOR LCD BACK COVER M728R 無鉛	6-33-M7281-011	
24	M520N MYLAR FOR CCD BACK CASE 無鉛	6-40-M52N1-010	

Figure A - 11
LCD
(M728T)

HDD (M728T)

Figure A - 12
HDD
(M728T)

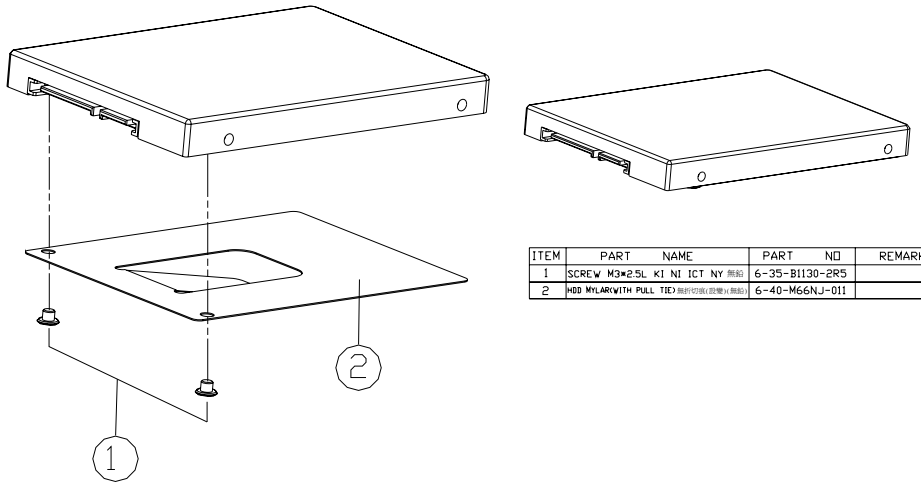

ITEM	PART NAME	PART NO	REMARK
1	SCREW M3*2.5L KI NI ICT NY 無鉛	6-35-B1130-2R5	
2	HDD MYLAR(WITH PULL TIE) 無折切痕(設變)(無鉛)	6-40-M66NJ-011	

COMBO (M728T)

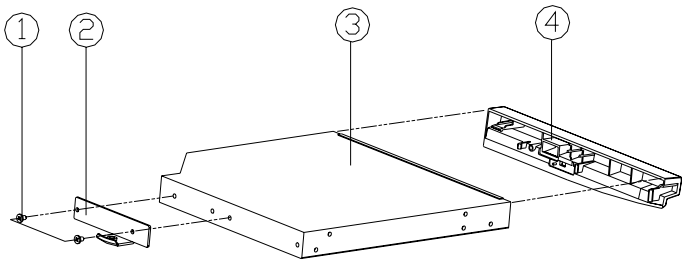

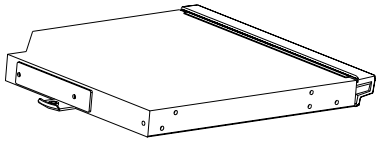

ITEM	PART NAME	PART NO	REMARK
1	SCREW M2*3L K1 NI ICT GTY-PATCH	6-35-B1120-3RE	
2	CD-ROM LOCK BRACKET SECC M720S	6-33-M72SZ-010	
3	SATA DVD SUPER MULTI 5 1/4" 24X/8X 12.7MM AD-7586S SMD	6-85-90724-C00	
3	SATA DVD COMBO 5 1/4" 24X/8X 12.7MM TSST T	6-85-90724-T00	
4	COMBO C-BEZEL MODULE	6-42-M72SX-102-1	

Figure A - 13
COMBO (M728T)

DVD-Dual Drive (M728T)

Figure A - 14
DVD-Dual Drive (M728T)

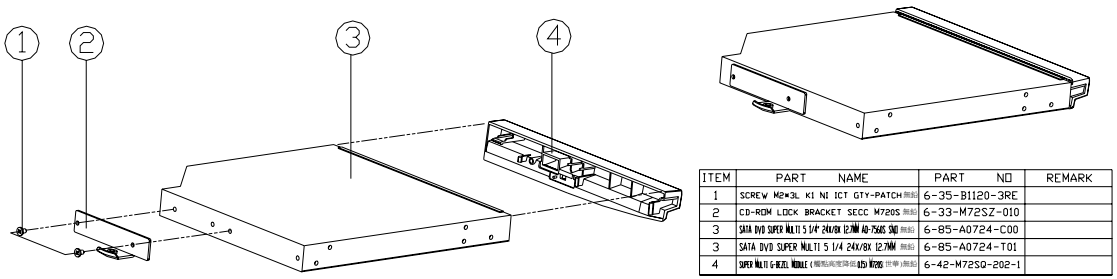

ITEM	PART NAME	PART NO	REMARK
1	SCREW M2*3L K1 NI ICT GTY-PATCH	6-35-B1120-3RE	
2	CD-ROM LOCK BRACKET SECC M720S	6-33-M72SZ-010	
3	SATA DVD SUPER MULTI 5 1/4" 24X/8X 12.7MM AD-7566S SNQ	6-85-A0724-C00	
3	SATA DVD SUPER MULTI 5 1/4 24X/8X 12.7MM	6-85-A0724-T01	
4	SUPER MULTI 6-BEZEL MODULE	6-42-M72SQ-202-1	

Top with Fingerprint (M729T)

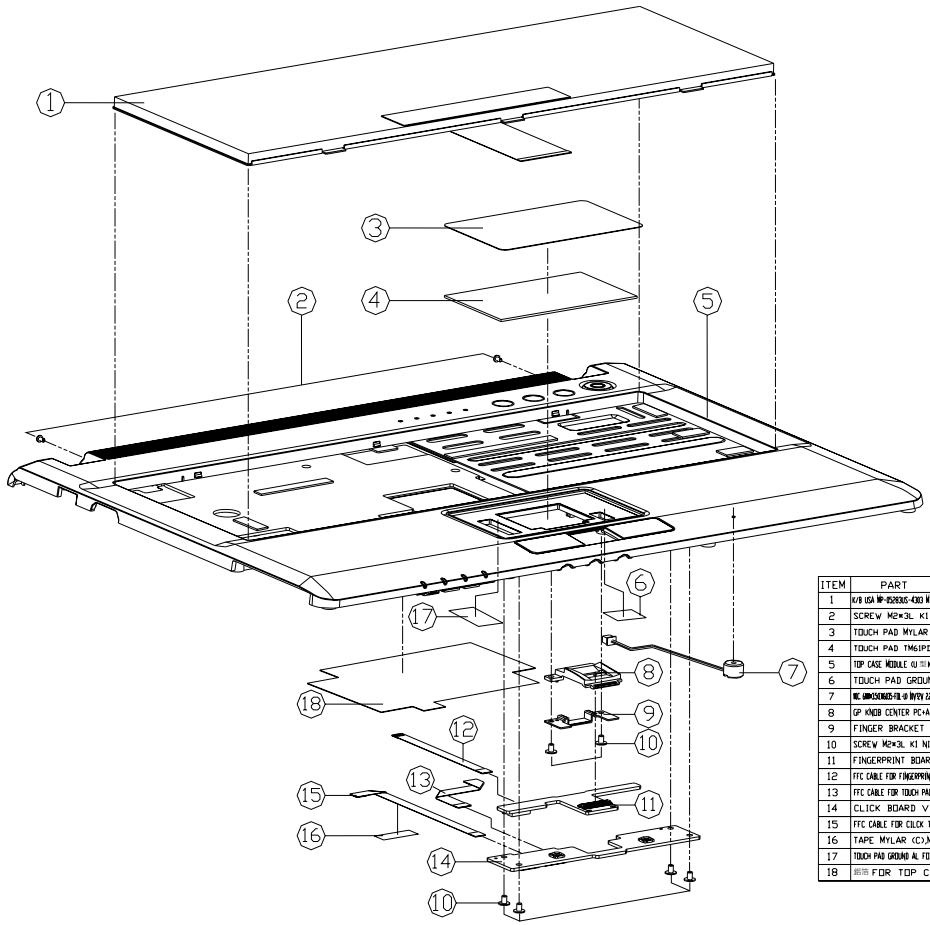

ITEM	PART NAME	PART NO	REMARK
1	K/B USA MP-1528GUS-4303 M720S 黑色 WITH VIST 無鉛	6-80-M72S0-011-1	
2	SCREW M2*3L K1 N1 ICT NY 無鉛	6-35-B1120-3RA	
3	TOUCH PAD MYLAR 8B35 M725S 無鉛	6-40-M72S2-010	
4	TOUCH PAD TM61PDZ1R389 M660JE 無鉛	6-49-M66E2-010	
5	TOP CASE MODULE (U 型 KB FLOATING) M729R 無鉛	6-39-M7292-014	
6	TOUCH PAD GROUND AL 17*9 無鉛	6-47-M55G2-010	
7	WC GMM-1S(DIGIS-FIL-D) MYRY 2X (VCAL(F)) L-BAR M55G 無鉛	6-23-EM55G-011	
8	GP KNOB CENTER PC+ABS(CM6140) M729R 無鉛	6-42-M7292-040	
9	FINGER BRACKET MODULE M720S 無鉛	6-33-M72S2-201	
10	SCREW M2*3L K1 N1 ICT GTY-PATCH 無鉛	6-35-B1120-3RE	
11	FINGERPRINT BOARD V1.0A M720T 無鉛	6-77-M72TF-D01A	
12	FFC CABLE FOR FINGERPRINT TO M/B 4P M720S 無鉛	6-43-M72S0-030	
13	FFC CABLE FOR TOUCH PAD TO M/B 12P M720S 無鉛	6-43-M72S0-010	
14	CLICK BOARD V1.0 M720T 無鉛	6-77-M72T2-D01	
15	FFC CABLE FOR CLICK TO M/B 4P M720S 無鉛	6-43-M72S0-020	
16	TAPE MYLAR (C),MYLAR M550J 無鉛	6-40-M55J2-030	
17	TOUCH PAD GROUND AL FOIL(22*14) FOR EMI,AL 無鉛	6-47-M55G2-020	
18	鋁箔 FOR TOP CASE M720T 無鉛	6-47-M72T2-010	

Figure A - 15
Top with Fingerprint (M729T)

Top without Fingerprint (M729T)

Figure A - 16
Top without Fingerprint (M729T)

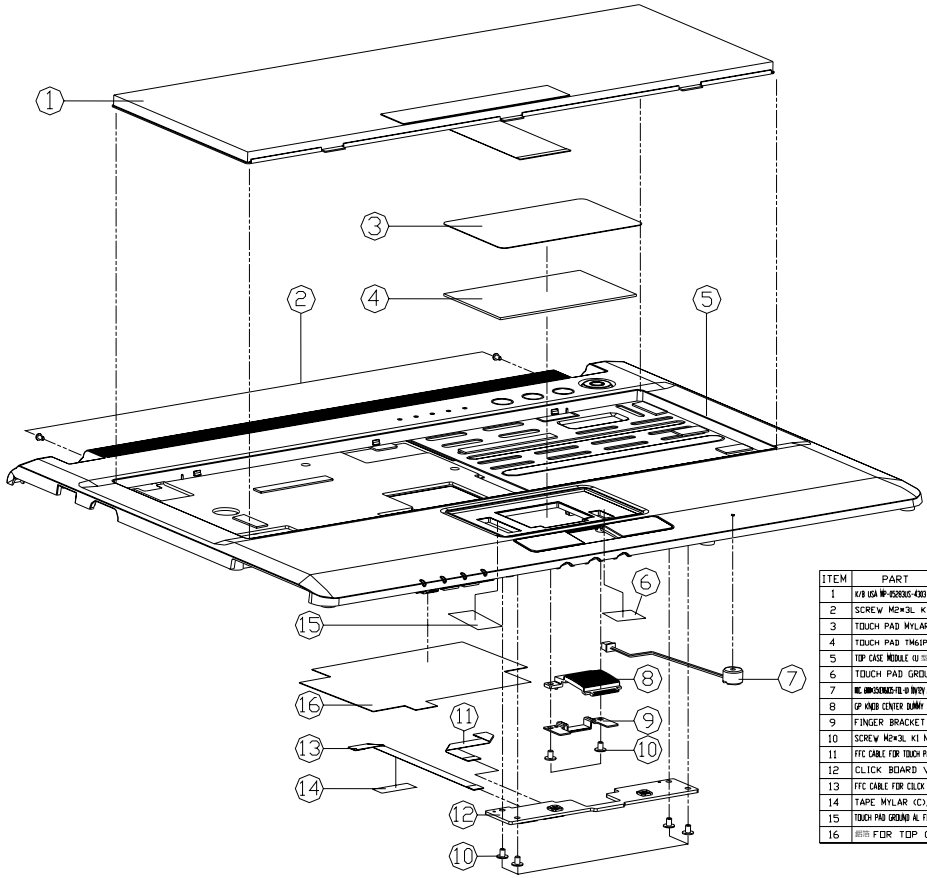

ITEM	PART NAME	PART NO	REMARK
1	K/B USA W/ =52830G-43X3 M720S 黑色 WITH VIST 無鉛	6-80-M72S0-011-1	
2	SCREW M2*3L KI NI ICT NY 無鉛	6-35-B1120-3RA	
3	TOUCH PAD MYLAR 8835 M722S 無鉛	6-40-M7252-010	
4	TOUCH PAD TM61PDZ1R389 M660JE 無鉛	6-49-M66E2-010	
5	TOP CASE MODULE (U 黑K/B FLOATING) M729R 無鉛	6-39-M7292-014	
6	TOUCH PAD GROUND AL 17*9 無鉛	6-47-M55G2-010	
7	RF ANTENNA 2.4GHz-5G-U INVEE ZR 鍍CABLE(TH L=80MM M2X4L 無鉛	6-23-EM55G-011	
8	CP KNOB CENTER DUMMY PC+ABS(C36140) M729R 無鉛	6-42-M7292-010	
9	FINGER BRACKET MODULE M720S 無鉛	6-33-M72S2-201	
10	SCREW M2*3L KI NI ICT GTY-PATCH 無鉛	6-35-B1120-3RE	
11	FFC CABLE FOR TOUCH PAD TO M/B 12P M720S 無鉛	6-43-M72S0-010	
12	CLICK BOARD V1.0 M720T 無鉛	6-77-M72T2-D01	
13	FFC CABLE FOR CLICK TO M/B 4P M720S 無鉛	6-43-M72S0-020	
14	TAPE MYLAR (C),MYLAR M550J 無鉛	6-40-M55J2-030	
15	TOUCH PAD GROUND AL FOIL(22*14) FOR EMI&L 無鉛	6-47-M55G2-020	
16	鋼片 FOR TOP CASE M720T 無鉛	6-47-M72T2-010	

Bottom (M729T)

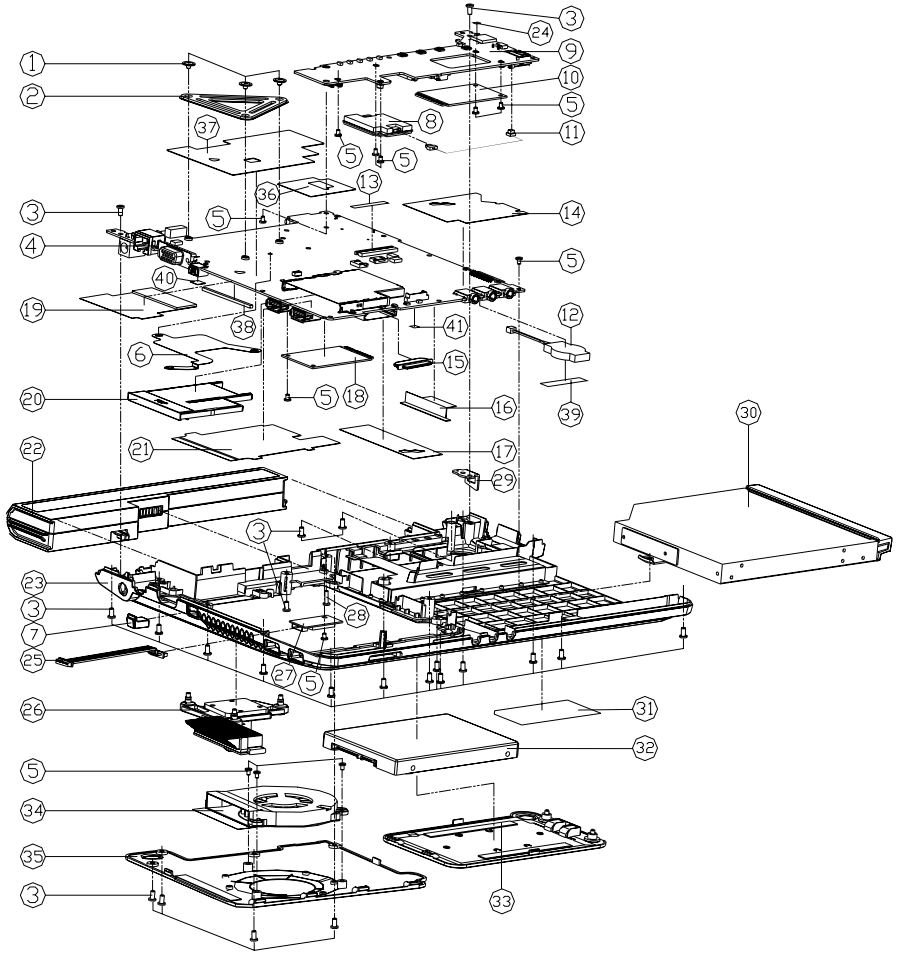

ITEM	PART NAME	PART NO	REMARK
1	[illegible]	6-35-41025-2R5	
2	CPU SUPPORTER MODULE AL M720S	6-33-M72SS-011	
3	SCREW M2.5*5L K1 BK/Z ICT NY	6-35-B6125-5RA	
4	MAIN BOARD V3.0A M720T	6-77-M72T0-D03A	
5	SCREW M2*3L K1 NI ICT NY	6-35-B1120-3RA	
6	NORTH BRIDGE HEATSINK MODULE (CU) M720R	6-31-M72RN-101	
7	1394 RUBBER M720S	6-47-M72SP-010	
8	[illegible]	6-88-L39T1-5300	
9	MULTI I/O BOARD V3.0A (W/3G) M720T	6-77-M72T1-D03A	
9	MULTI I/O BOARD V3.0A (W/O 3G) M720T	6-77-M72T1-D03A-1	
10	[illegible]	6-88-M72SW-720	<OPTION>
11	WIRE CABLE FOR RJ-11 TO MDC 2P M720S	6-43-M72SU-010	<OPTION>
12	[illegible]	6-23-22015-P2C	
13	M520G K/B CONN MYLAR	6-40-M52GS-060	
14	MAIN BOARD AL FOIL M730T	6-40-M73TS-0D0	
15	M520G CARD READER RUBBER	6-47-M52G8-010	
16	DDR IDD BK1 MYLAR PCOFR83+TERADKA75OF) M720S	6-40-M72SZ-010	
17	DDR MYLAR FR83 M730T	6-40-M73TS-060	
18	<SAMPLE>WLAN 802.11A+G+N INTEL SHIRLEY PE	6-S88-M72T2-4211	
18	WLAN 802.11A+G+N INTEL SHIRLEY PEAK 1X2 M	6-88-M72T2-4240	<OPTION>
18	<SAMPLE>WLAN 802.11A+G+N INTEL SHIRLEY PEA	6-S88-M72T2-4241	<OPTION>
18	WLAN 802.11BG AW-GU702 MINI-CARD USB RT	6-88-M55S2-7000	<OPTION>
19	NORTH BRIDGE MYLAR (FR83+TERADKA75OF) M730T	6-40-M73TS-021	
20	DUMMY NEW CARD PC+ABS TN120R	6-42-T12R3-011	
21	NEW CARD MYLAR(FR83+TERADKA75OF)M730T	6-40-M73TS-050	
22	[illegible]	6-87-M72SS-4DF2	
22	[illegible]	6-87-M72SS-4D42	
22	[illegible]	6-87-M72SS-5DF2	
23	BOTTOM CASE MODULE (ROSS) M720S	6-39-M72S3-018	
24	SPEAKER CABLE PASTE (FR83+5010N) M720S	6-40-M72S3-010	
25	WIRE CABLE FOR BLUETOOTH TO M/B 6P M720S	6-43-M72SB-010	
26	HEAT SINK MODULE M720S( )	6-31-M72SN-103	
27	BLUETOOTH V2.0 (BTC4038 ONLY) (CCM & PIN USB	6-88-M5S45-620	<OPTION>
27	BLUETOOTH V2.0 (BTC4042M-NS- 4 PIN U	6-88-M5S45-390	<OPTION>
28	SCREW M2*8L K1 BK/Z ICT NY	6-35-B6120-8R0	
29	LOCK BRACKET SECC M720S	6-33-M72S3-010	
30	SATA DVD SUPER MULTI 24X/8X SNO	6-79-M72TQ-000	
30	SATA DVD COMBO 24X/8X SNDCCR8905) ASS'Y	6-79-M72TX-000	
31	PRODUCT LABEL FOR M720T	6-45-M72T3-010	
31	PRODUCT LABEL FOR M725T	6-45-M725T-010	
31	PRODUCT LABEL FOR M721T	6-45-M721T-010	
31	PRODUCT LABEL FOR M722T	6-45-M722T-010	
31	PRODUCT LABEL FOR M728T	6-45-M728T-010	
31	PRODUCT LABEL FOR M729T	6-45-M729T-010	
32	W/O HDD ASS'Y M720S	6-79-M72SJ-010	
33	HDD COVER MODULE M720S	6-42-M72SJ-103	
34	FAN MODULE M720S	6-31-M72SS-103	
35	CPU COVER MODULE M720T	6-42-M72TS-100	
36	[illegible]	6-40-M73TS-040	
37	MYLAR FOR MB (FR83+TERADKA75OF) M730T	6-40-M73TS-010	
38	MYLAR-1 FOR MB (50*2*165) PC M720S	6-40-M72SS-051	
39	TAPE MYLAR (A),MYLAR M550J	6-40-M55J2-010	
40	PROTECT MB MYLAR FR83 M720S	6-40-M72SS-040	

Figure A - 17
Bottom (M729T)

LCD (M729T)

Figure A - 18
LCD
(M729T)

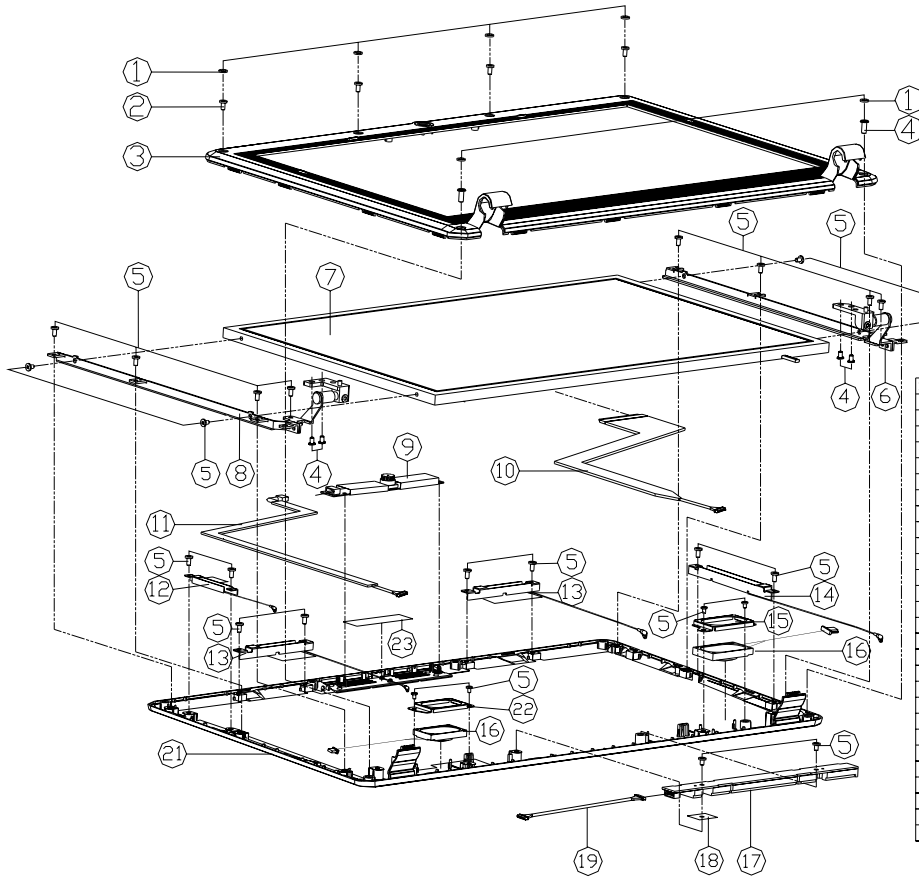

ITEM	PART NAME	PART NO	REMARK
1	LCD FRONT COVER SCREW HOLE RUBBER M720S 無鉛	6-47-M72S1-021	
2	SCREW M2*4L 1 BZ ICT GTY-PATCH (T=0.8 D=4) 無鉛	6-35-C6120-4RB	
3	LCD FRONT COVER MODULE M720T 無鉛	6-39-M72T1-011	
4	SCREW M2.5*5L KI BK/Z ICT NY 無鉛	6-35-B6125-5RA	
5	SCREW M2*3L KI NI ICT GTY-PATCH 無鉛	6-35-B1120-3RE	
6	LCD HINGE R DIE CASTING M720S 無鉛	6-33-M72S1-011	
7	LCD 12.1" WXGA TOSHIBA LT0120EXVV (H/W3) 無鉛	6-50-FC255-T00	
7	LCD 12.1" WXGA AU B121EW03 V.4 (GLARE TYPE 無鉛	6-50-FC255-G03	
7	LCD 12.1" WXGA BOE (HYDIS) HT121WX2-103 GL 無鉛	6-50-FC252-H00	
8	LCD HINGE L DIE CASTING M720S 無鉛	6-33-M72S1-021	
9	UVC CAMERA BISON FIX BN35M4S733010 H/W003 無鉛	6-88-M5E4C-4921	
9	UVC CAMERA BISON FIX BN35245T-000 2M M540S 無鉛	6-88-M5E4C-4913	
9	CCD RUBBER SILICONE M720S 無鉛	6-47-M72ST-010	W/O CCD
10	WIRE CABLE FOR LCD TO M/B 20P M720S 無鉛	6-43-M72S1-012	
11	WIRE CABLE FOR CCD TO M/B 5P M720S 無鉛	6-43-M72ST-012	
12	ANTENNA BLUETOOTH 2.4G/5G PIFA BT 灰色 暗黑 M720S 無鉛	6-23-7M72S-020	<OPTION>
13	ANTENNA WLAN 2.4G/5G PIFA WL1 灰色 暗黑 M720S 無鉛	6-23-7M72S-030	
14	ANTENNA WCDMA 3G PIFA (灰色) 5MM 暗黑 M720S 無鉛	6-23-7M72S-011	<OPTION>
15	SPEAKER FIXTURE-R 無鉛	6-33-M300T-031	
16	SPEAKER 1.2W/8ohm 1.5W 8ohm 2W/8ohm W/CABLE 2P MAG20 6000 NOTES 無鉛	6-23-5M72S-020	
17	INVERTER MODULE 1A SUNDA TYS-400-9G5000G6GR0MF-E) M660R0 無鉛	6-76-M660R-011	
17	INVERTER MODULE RDA MITAC DA-1A08-CV02ML 無鉛	6-76-M6R6R-010	
18	MYLAR FOR INVERTER (14*10.4*0.4) M660N 無鉛	6-40-M66NS-060	
19	WIRE CABLE FOR INVERTER TO M/B 6P M720S 無鉛	6-43-M72SR-012	
20	STYLE-NOTE 中性 LOGO 電鍍 鍍鉻 鍍鎳 鍍鈕 M740S 電鍍 無鉛	6-45-M74S1-012-1	
21	LCD BACK COVER MODULE M729R POSITIVO 無鉛	6-39-M7291-022	
22	SPEAKER FIXTURE-L 無鉛	6-33-M300T-041	
23	M520N MYLAR FOR CCD BACK CASE 無鉛	6-40-M52N1-010	

HDD (M729T)

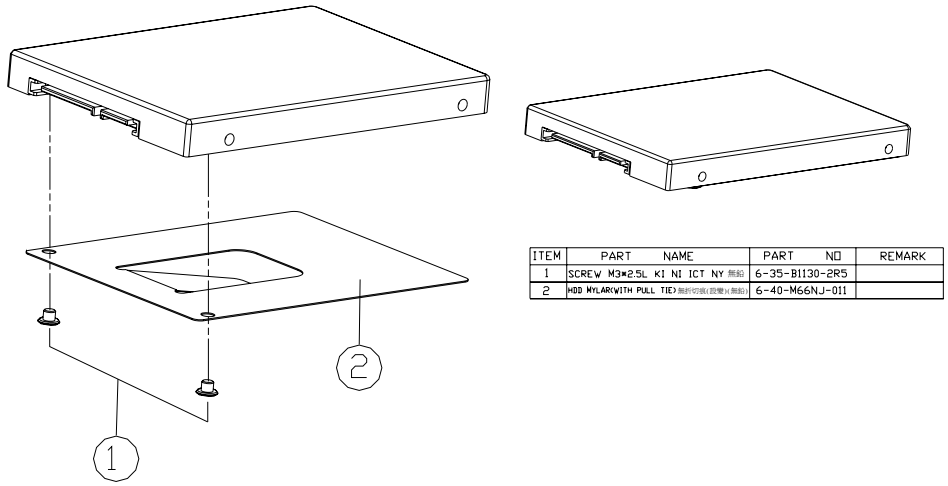

ITEM	PART NAME	PART NO	REMARK
1	SCREW M3*2.5L KI NI ICT NY	6-35-B1130-2R5	
2	HDD MYLAR WITH PULL TIE	6-40-M66NJ-011	

Figure A - 19
HDD
(M729T)

COMBO (M729T)

Figure A - 20
COMBO (M729T)

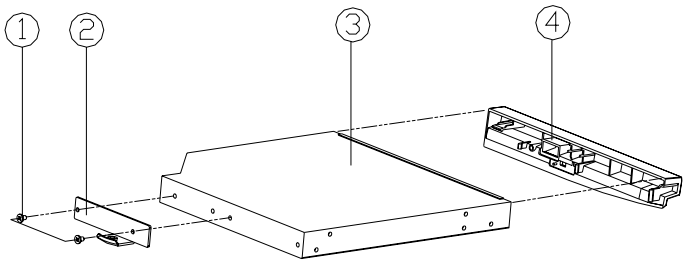

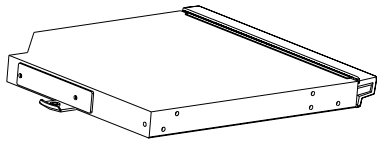

ITEM	PART NAME	PART NO	REMARK
1	SCREW M2*3L NI NI ICT GTY-PATCH	6-35-B1120-3RE	
2	CD-ROM LOCK BRACKET SECC M720S	6-33-M72SZ-010	
3	SATA DVD SUPER MULTI 5 1/4" 24X/8X 12.7MM AD-7560S SNB	6-85-90724-C00	
3	SATA DVD COMBO 5 1/4" 24X/8X 12.7MM TSST T	6-85-90724-T00	
4	COMBO & BEZEL MODULE	6-42-M72SX-102-1	

DVD-Dual Drive (M729T)

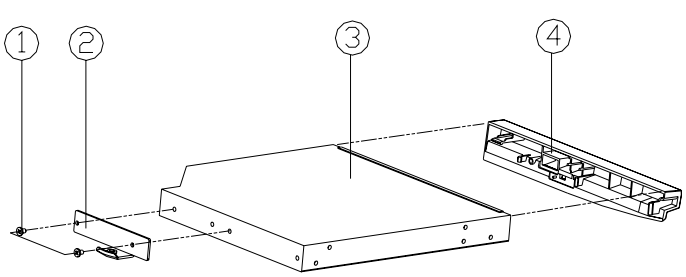

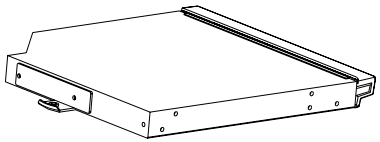

ITEM	PART NAME	PART NO	REMARK
1	SCREW M2*3L K1 NI ICT GTY-PATCH 無鉛	6-35-B1120-3RE	
2	CD-ROM LOCK BRACKET SECC M720S 無鉛	6-33-M72SZ-010	
3	SATA DVD SUPER MULTI 5 1/4" 24X/8X 12.7MM AD-7560S SNO 無鉛	6-85-A0724-C00	
3	SATA DVD SUPER MULTI 5 1/4 24X/8X 12.7MM 無鉛	6-85-A0724-T01	
4	SUPER MULTI G-BEZEL MODULE (解點高度降低 0.05) M720S 空帶)無鉛	6-42-M72SQ-202-1	

Figure A - 21
DVD-Dual Drive (M729T)

Top with Fingerprint (M730T)

Figure A - 22
Top with Fingerprint (M730T)

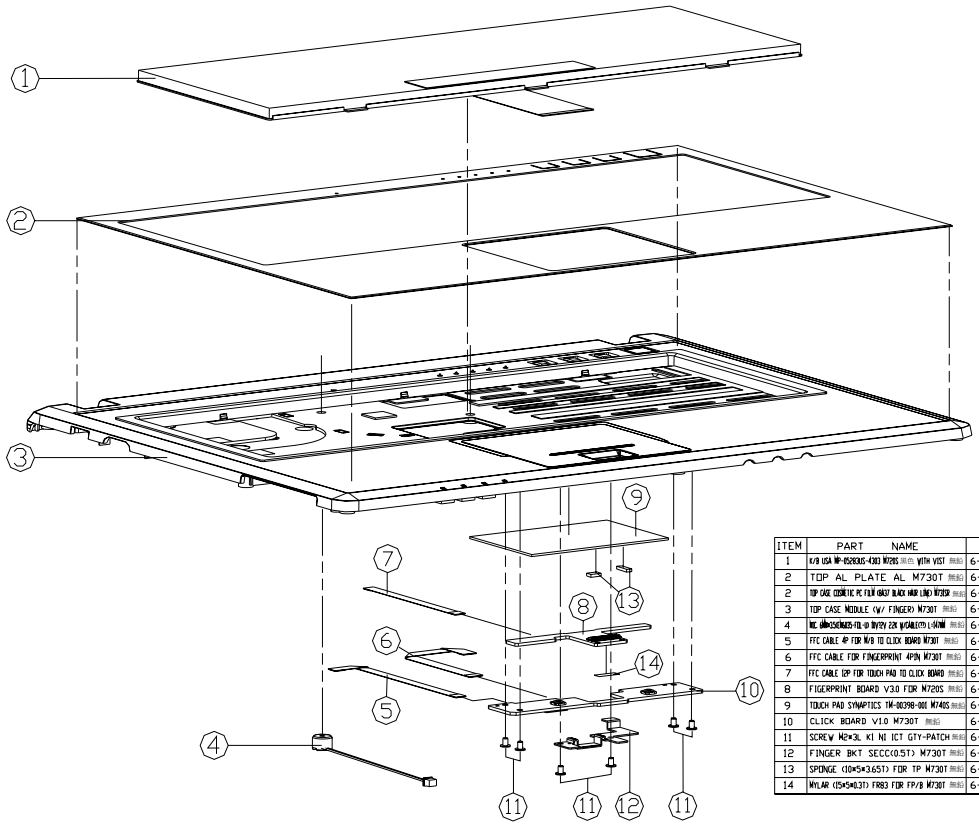

ITEM	PART NAME	PART NO	REMARK
1	K/B USA MP-1528GUS-4303 M720S 黑色 WITH VIST 無鉛	6-80-M72S0-011-1	
2	TOP AL PLATE AL M730T 無鉛	6-33-M73T2-022	FOR M730T/SR
2	TOP CASE COSMETIC PC FILM 0.6A37 BLACK HAIR LINE) M731SR 無鉛	6-40-M73R2-011	FOR M731SR
3	TOP CASE MODULE (W/ FINGER) M730T 無鉛	6-39-M73T2-112	
4	MIC (AM-0556MG05-FIL-U) DIY2V 22K W/CABLE(T7) L:(AMM 無鉛	6-23-EM73T-011	
5	FFC CABLE 4P FOR M/B TO CLICK BOARD M730T 無鉛	6-43-M73T0-030	
6	FFC CABLE FOR FINGERPRINT 4PIN M730T 無鉛	6-43-M73TF-010	
7	FFC CABLE 12P FOR TOUCH PAD TO CLICK BOARD 無鉛	6-43-M73T0-021	
8	FIGERPRINT BOARD V3.0 FOR M720S 無鉛	6-77-M72SF-D03	
9	TOUCH PAD SYNAPTICS TM-00398-001 M740S 無鉛	6-49-M74S2-010	
10	CLICK BOARD V1.0 M730T 無鉛	6-77-M73T2-D01	
11	SCREW M2*3L KI NI ICT GTY-PATCH 無鉛	6-35-B1120-3RE	
12	FINGER BKT SECC(0.5T) M730T 無鉛	6-33-M73T2-012	
13	SPONGE (10*5*3.65T) FOR TP M730T 無鉛	6-47-0019A-10D	
14	MYLAR (15*5*0.3T) FR83 FOR FP/B M730T 無鉛	6-40-M73TS-0C0	

Top without Fingerprint (M730T)

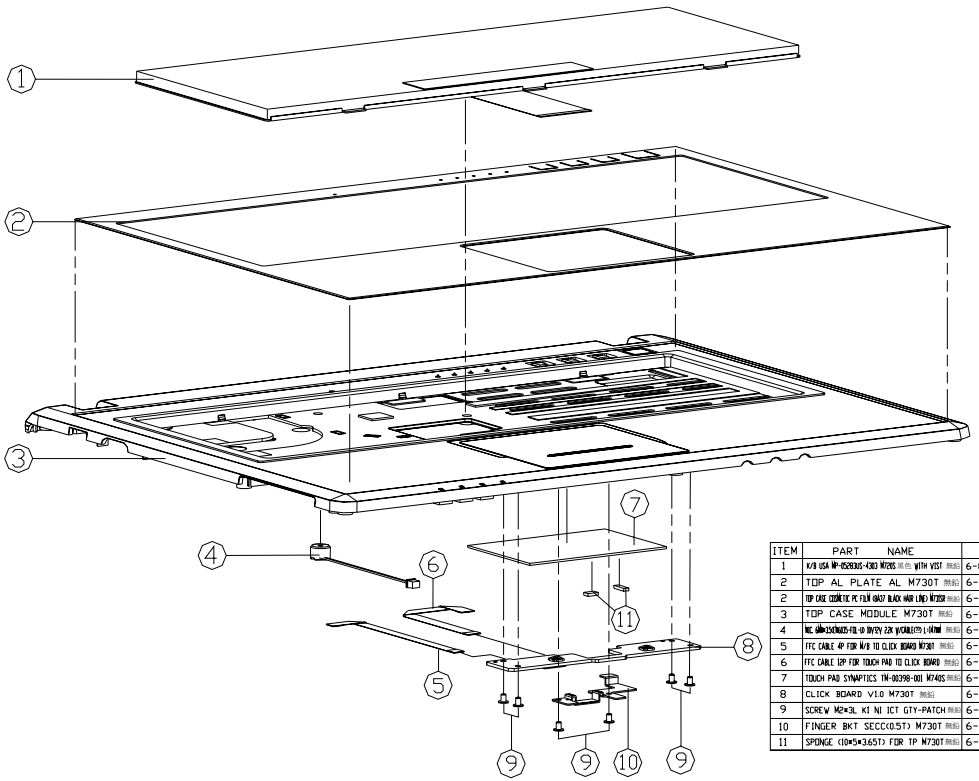

ITEM	PART NAME	PART NO	REMARK
1	K/B USA MP-05283US-4303 M726S WITH VIST	6-80-M72S0-011-1	
2	TOP AL PLATE AL M730T	6-33-M73T2-022	FOR M730T/SR
2	TOP CASE COSMETIC PC FILM (BA37 BLACK HAIR LINE) M731SR	6-40-M73R2-011	FOR M731SR
3	TOP CASE MODULE M730T	6-39-M73T2-012	
4	MIC (AMM3500N605-FOL-0 DIV12V 22K W/CABLE(?) L=(4)mm	6-23-EM73T-011	
5	FFC CABLE 4P FOR M/B TO CLICK BOARD M730T	6-43-M73T0-030	
6	FFC CABLE 12P FOR TOUCH PAD TO CLICK BOARD	6-43-M73T0-021	
7	TOUCH PAD SYNAPTICS TM-00398-001 M740S	6-49-M74S2-010	
8	CLICK BOARD V1.0 M730T	6-77-M73T2-D01	
9	SCREW M2*3L K1 NI ICT GTY-PATCH	6-35-B1120-3RE	
10	FINGER BKT SECC(0.5T) M730T	6-33-M73T2-012	
11	SPONGE (10*5*3.65T) FOR TP M730T	6-47-0019A-10D	

Figure A - 23
Top without Fingerprint (M730T)

Bottom (M730T)

Figure A - 24
Bottom (M730T)

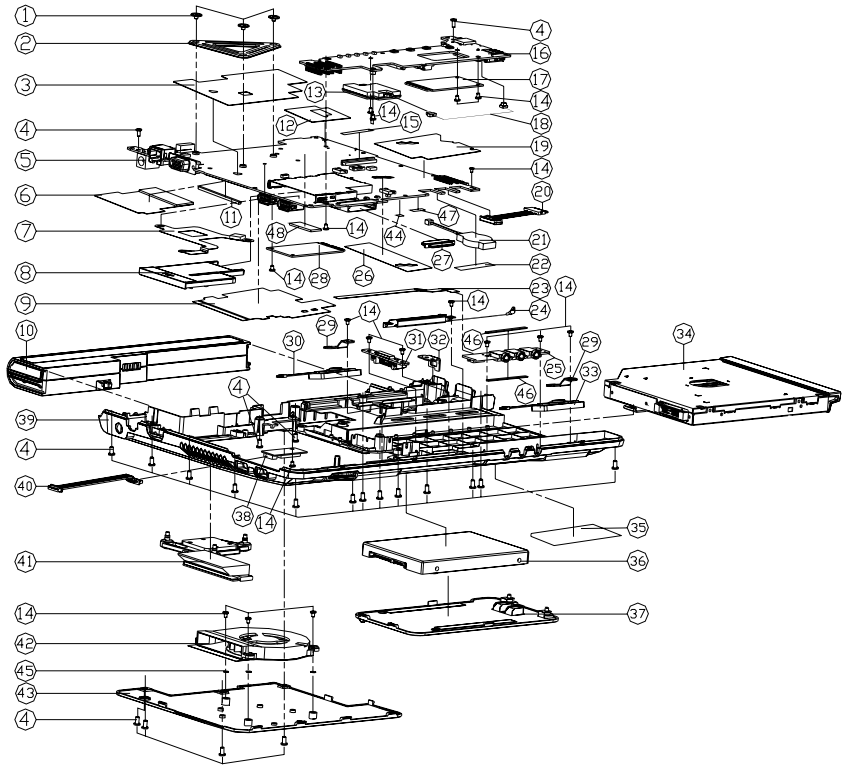

ITEM	PART NAME	PART NO	REMARK
1	[illegible]	6-35-41025-2R5	
2	[illegible]	6-33-M72SS-011	
3	MYLAR FOR MB (FR83+TERADYA75F) M730T	6-40-M73TS-010	
4	SCREW M2.5*6L K BZ ICT	6-35-82125-6R0	
5	MAIN BOARD V3.0A M730T	6-77-M73T0-D03A	
6	NORTH BRIDGE MYLAR (FR83+TERADYA75F) M730T	6-40-M73TS-021	
7	NORTH BRIDGE HEATSINK MODULE (CU) M720R	6-31-M72RN-101	
8	DUMMY NEW CARD PC+ABS TN120R	6-42-T12R3-011	
9	[illegible]	6-40-M73TS-0B0	
10	[illegible]	6-87-M72SS-4DF2	
10	[illegible]	6-87-M72SS-4D42	
10	[illegible]	6-87-M72SS-5DF2	
11	MYLAR-1 FOR MB (50*24*165) PC M720S	6-40-M72SS-051	
12	[illegible]	6-40-M73TS-040	
13	[illegible]	6-88-L39T1-5300	
14	SCREW M2*3L KI NI ICT NY	6-35-B1120-3RA	
15	M520G K/B CONN MYLAR	6-40-M52GS-060	
16	MULTI I/O BOARD V3.0A (W/3G)M730T	6-77-M73TI-D03A	
16	MULTI I/O BOARD V3.0 (W/O 3G)M730T	6-77-M73TI-D03A-1	
17	[illegible]	6-88-M72SW-720	(OPTION)
18	WIRE CABLE FOR RJ-11 TO MDC 2P M720S	6-43-M72SU-010	(OPTION)
19	MAIN BOARD AL FOIL M730T	6-40-M73TS-0D0	
20	CABLE FOR H/D TO SATA ODD 10PIN M730T	6-43-M73TZ-011	
21	[illegible]	6-23-22015-P2C	
22	[illegible]	6-40-M73TS-0A0	
23	FFC CABLE 30P FOR H/D TO AUDIO BOARD M730T	6-43-M73T0-011-1	
24	[illegible]	6-23-7M73T-041	
25	AUDIO BOARD V2.0 M730T	6-77-M73TB-D02A	
26	DDR MYLAR FR83 M730T	6-40-M73TS-060	
27	CARD READER RUBBER(SILICON RUBBER) M730T	6-47-M73TB-010	
28	[illegible]	6-88-M5SS2-7000	(OPTION)
28	[illegible]	6-88-M72T2-4210	(OPTION)
28	[illegible]	6-88-M72T2-4240	(OPTION)
28	[illegible]	6-S88-M72T2-4210	(OPTION)
28	[illegible]	6-S88-M72T2-4211	(OPTION)
28	[illegible]	6-S88-M72T2-4241	(OPTION)
28	[illegible]	6-988-M747Z-4200-1	(OPTION)
29	SPEAKER BRACKET SECC M730T	6-33-M73T3-021	
30	[illegible]	6-23-5M73T-022	
31	ODD BRIDGE BOARD V2.0 M730T	6-77-M73TN-D02	
32	LOCK BRACKET SECC M730T	6-33-M73T3-010	
33	[illegible]	6-23-5M73T-011	
34	SATA DVD SUPER MULTI 24X/8X TSSH15-L622D ASSY	6-79-M730T00D-000	
34	SATA DVD COMBO 24X/8X SN-208CB/RBNS) ASSY	6-79-M730T00X-000	
35	PRODUCT LABEL M730T	6-45-M73T3-010	
35	PRODUCT LABEL M731T	6-45-M731T-010	
36	W/O HDD ASS'Y M730T	6-79-M730T00J-010	
37	HDD COVER MODULE M730T	6-42-M73TJ-102	
38	BLUETOOTH V2.0 QD1D00 (W/O DCIN & PIN USB	6-88-M5S45-620	(OPTION)
38	BLUETOOTH V2.0 QD1TC0420-NS	6-88-M5S45-390	(OPTION)
39	BOTTOM CASE MODULE M730T	6-39-M73T3-012	
40	WIRE CABLE FOR BLUETOOTH TO H/D 8P M720S	6-43-M72SB-010	
41	HEAT SINK MODULE M720S	6-31-M72SN-103	
42	FAN MODULE M720S	6-31-M72SS-103	
43	CPU COVER MODULE M730T	6-42-M73TS-102	
44	PROTECT MB MYLAR FR83 M720S	6-40-M72SS-040	
45	PORON-L32 (84.2*11) FOR FAN M730T	6-47-M73TS-020	
46	PORON FOR MB (37*25*4) PORON M730T	6-47-M73TS-010	
47	MYLAR FOR MB (55*48.2*0.1 (FR83+TERADYA75F) M730T	6-40-M73TS-090	
48	SPONGE (235*10*2.3T) (24.3*5 FOR MB M730T	6-47-0019A-235	

LCD (M730T)

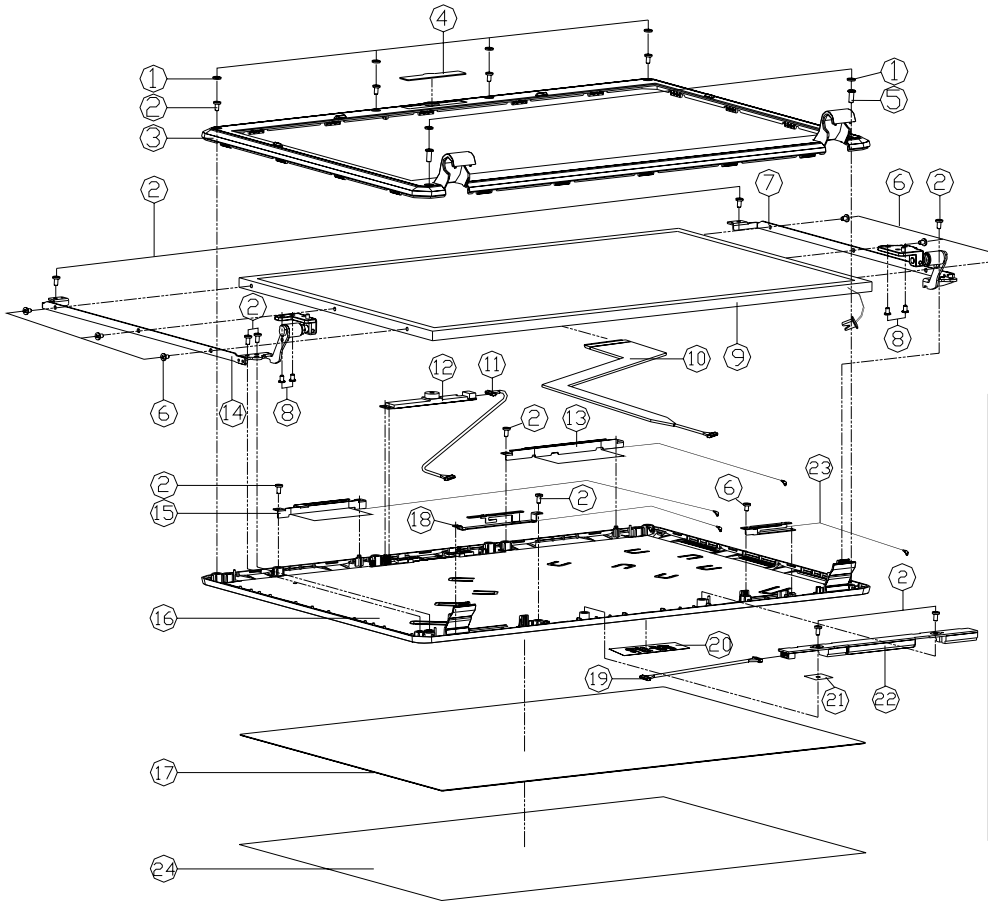

ITEM	PART NAME	PART NO	REMARK
1	LCD FRONT COVER SCREW HOLE RUBBER M72XS	6-47-M72S1-021	
2	SCREW M2*4L I BZ ICT GTY-PATCH (T=0.8 D=4)	6-35-C6120-4RB	
3	LCD FRONT COVER MODULE M730T	6-39-M73T1-012	
4	CCD COSMETIC PLATE PMMA M730T	6-42-M73TT-010	W/CCD
4	CCD MYLAR FR700 M730T	6-40-M73TT-010	W/O CCD
5	SCREW M2.5*5L K1 BK/Z ICT NY	6-35-B6125-5RA	
6	SCREW M2*4L I BZ ICT GTY-PATCH (T=0.8 D=4)	6-35-C6120-4RB	
7	LCD HINGE R SECC+SK7+ZN M730T	6-33-M73T1-021	
8	SCREW M2.5*6L K BZ ICT	6-35-82125-6R0	
9	LCD 13.3" WXGA AU B133EW01 V3 (GLARE TYPE) SSM	6-50-G8255-G00	
10	WIRE CABLE FOR LCD 13" AU B133EW01 V3 (GLARE TYPE) M730T	6-43-M73T1-011	
11	WIRE CABLE M/B TO CCD M730T	6-43-M73TT-011	
12	UVC CAMERA BISSIN FIX BM2864S7-000 1.3M M740T	6-88-M740C-4921	
12	UVC CAMERA BISSIN FIX BM2864S7-000 2M M740T	6-88-M740C-4911	
13	ANTENNA X-08.4915/5815/5725MHz PIFA 3dBi 200MM M730T	6-23-7M73T-050	(OPTION)
14	LCD HINGE L SECC+SK7+ZN M730T	6-33-M73T1-032	
15	ANTENNA WLAN+BLUETOOTH 2.4/5.1/5.8 PIFA 1dBi 300MM M730T	6-23-7M73T-031	(OPTION)
16	LCD BACK COVER MODULE M730T	6-39-M73T1-022	
17	BACK COVER COSMETIC PLATE AL M730T	6-33-M73T1-011	
18	ANTENNA WLAN+BLUETOOTH 2.4/5.1/5.8 PIFA 1dBi 300MM M730T	6-23-7M73T-021	
19	CABLE FOR INVERTER M730T	6-43-M73TR-011	
20	STYLE-NOTE LOGO	6-45-M74S1-012-1	
21	MYLAR FOR INVERTER (14*10.4*0.4) M66SN	6-40-M66NS-060	
22	INVERTER MODULE FOR SAMSUNG	6-76-M660R-011	
22	INVERTER MODULE RSA M17AC DA-2A08-CV02NL	6-76-M6R6R-010	
23	ANTENNA BLUETOOTH 2.4/5.1 PIFA 1dBi 245MM M730T	6-23-7M73T-011	
24	BACK COVER PROTECT MYLAR (88.35) M730T	6-40-M73T1-020	

Figure A - 25
LCD (M730T)

HDD (M730T)

Figure A - 26
HDD
(M730T)

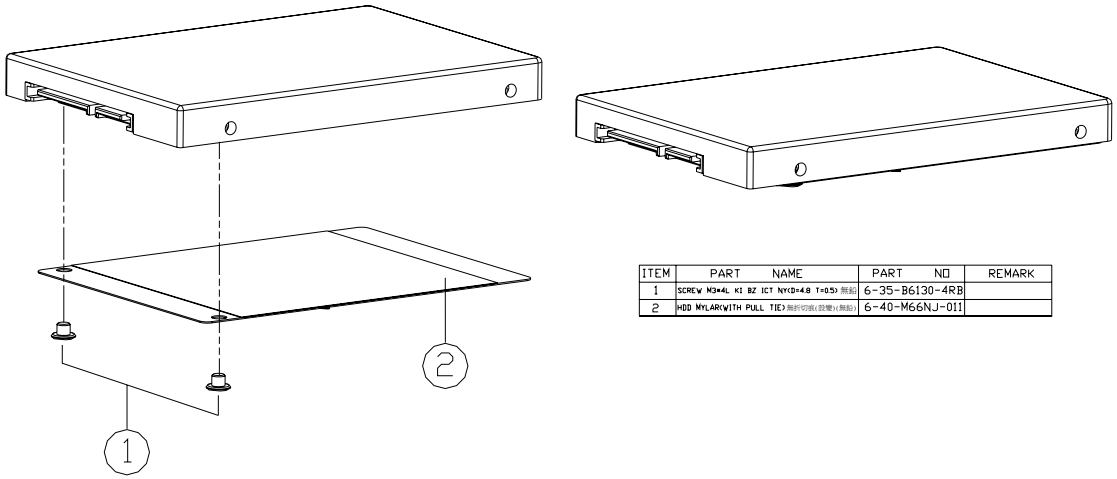

ITEM	PART NAME	PART NO	REMARK
1	SCREW M3*4L KI BZ ICT NY(D=4.8 T=0.5) 無鉛	6-35-B6130-4RB	
2	HDD MYLAR(WITH PULL TIE)無折切板(設電)(無鉛)	6-40-M66NJ-011	

COMBO (M730T)

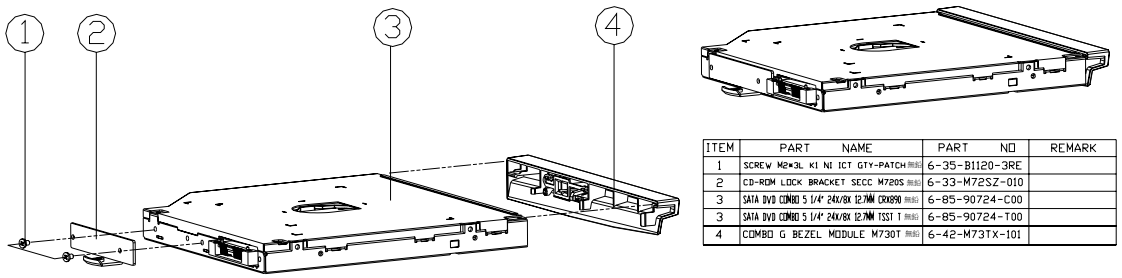

ITEM	PART NAME	PART NO	REMARK
1	SCREW M2*3L K I NI ICT GTY-PATCH	6-35-B1120-3RE	
2	CD-ROM LOCK BRACKET SECC M720S	6-33-M72SZ-010	
3	SATA DVD COMBO 5 1/4" 24X/8X 12.7MM CRX890	6-85-90724-C00	
3	SATA DVD COMBO 5 1/4" 24X/8X 12.7MM TSST T	6-85-90724-T00	
4	COMBO G BEZEL MODULE M730T	6-42-M73TX-101	

Figure A - 27
COMBO (M730T)

DVD-Dual Drive (M730T)

Figure A - 28
DVD-Dual Drive (M730T)

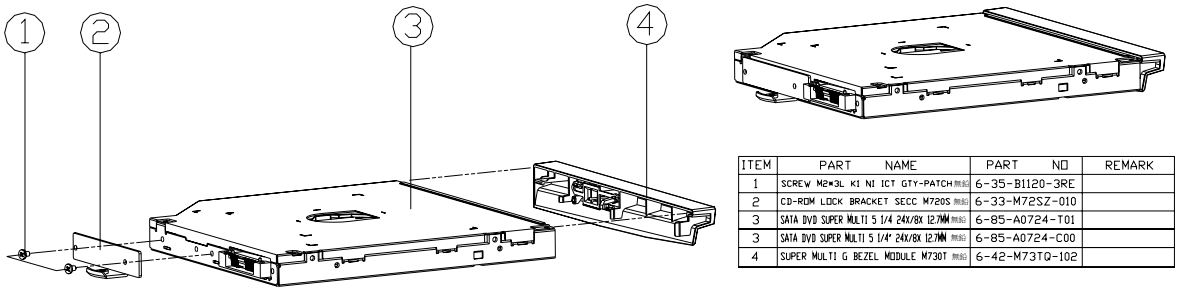

ITEM	PART NAME	PART NO	REMARK
1	SCREW M2*3L K1 NI ICT GTY-PATCH	6-35-B1120-3RE	
2	CD-ROM LOCK BRACKET SECC M720S	6-33-M72SZ-010	
3	SATA DVD SUPER MULTI 5 1/4 24X/8X 12.7MM	6-85-A0724-T01	
3	SATA DVD SUPER MULTI 5 1/4" 24X/8X 12.7MM	6-85-A0724-C00	
4	SUPER MULTI G BEZEL MODULE M730T	6-42-M73TQ-102	

Appendix B: Schematic Diagrams

This appendix has circuit diagrams of the ***M720T/M728T/M729T/M730T*** notebook's PCB's. The following table indicates where to find the appropriate schematic diagram.

Diagram - Page	Diagram - Page	Diagram - Page
System Block Diagram - Page B - 2	*ICH9-M 3/5 - GPIO, PWR Management - Page B - 16*	*Power 1.5VS, 1.05VS, 3.3V, 5V - Page B - 30*
Intel Penryn (Socket-P) 1/2 - Page B - 3	*ICH9-M 4/5 - Power - Page B - 17*	*Power 1.8V, 0.9VSM - Page B - 31*
Intel Penryn (Socket-P) 2/2 - Page B - 4	*ICH9-M 5/5 - GND - Page B - 18*	*Power VCORE - Page B - 32*
Cantiga 1/6 - Host - Page B - 5	*Clock Generator - Page B - 19*	*Power AC-IN, Charger - Page B - 33*
Cantiga 2/6 - VGA, CRT - Page B - 6	*Multi I/O, ODD, CCD, BT, TPM - Page B - 20*	*Multi I/O Board 1/2 - Page B - 34*
Cantiga 3/6 - DDR - Page B - 7	*New Card, Mini PCIE - Page B - 21*	*Multi I/O Board 2/2 - Page B - 35*
Cantiga 4/6 - Power - Page B - 8	*LED, FAN, TP, FP, USB - Page B - 22*	*Finger Printer Board - Page B - 36*
Cantiga 5/6 - Power - Page B - 9	*JMB385 Card Reader - Page B - 23*	*Click Board - Page B - 37*
Cantiga 6/6 - GND - Page B - 10	*PCI-E LAN RTL8111C - Page B - 24*	*M730T ODD Bridge Board - Page B - 38*
DDRII CHANNEL A - Page B - 11	*Audio Codec ALC662 - Page B - 25*	*M730T Audio Board - Page B - 39*
DDRII CHANNEL B - Page B - 12	*Audio AMP2056 - Page B - 26*	*Power Sequence Diagram - Page B - 40*
Panel, Inverter, CRT - Page B - 13	*KBC-ITE IT8512E - Page B - 27*	*Power Sequence v3.0 - Page B - 41*
ICH9-M 1/5 - SATA - Page B - 14	*System Power, LED BKLT - Page B - 28*	
ICH9-M 2/5 - PCIE, PCI, USB - Page B - 15	*Power VDD3, VDD5 - Page B - 29*	

Table B - 1
Schematic Diagrams

Version Note

The schematic diagrams in this chapter are based upon version 6-7P-M72T6-005. If your mainboard (or other boards) are a later version, please check with the Service Center for updated diagrams (if required).

System Block Diagram

Sheet 1 of 40
System Block Diagram

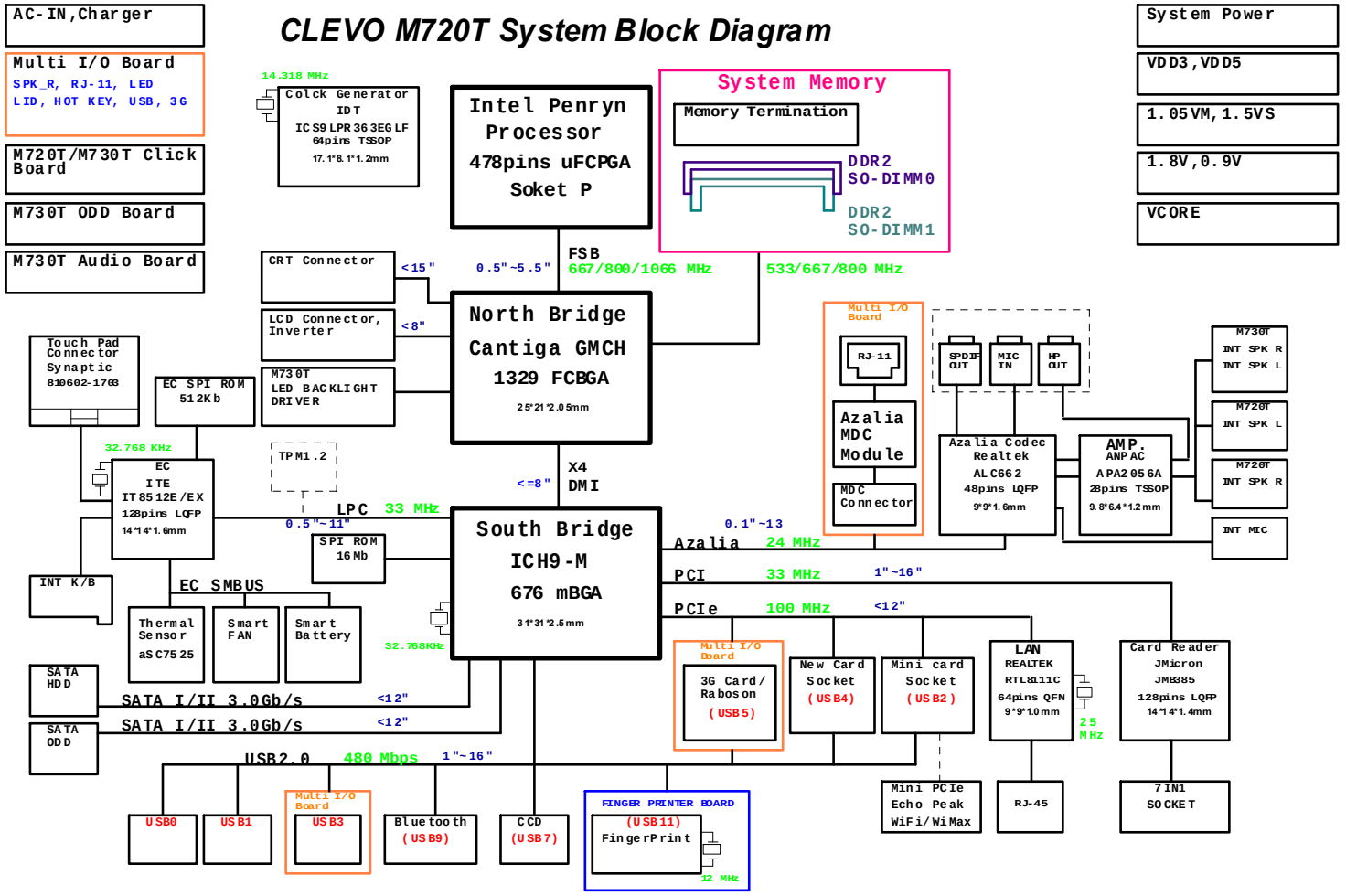

Intel Penryn (Socket-P) 1/2

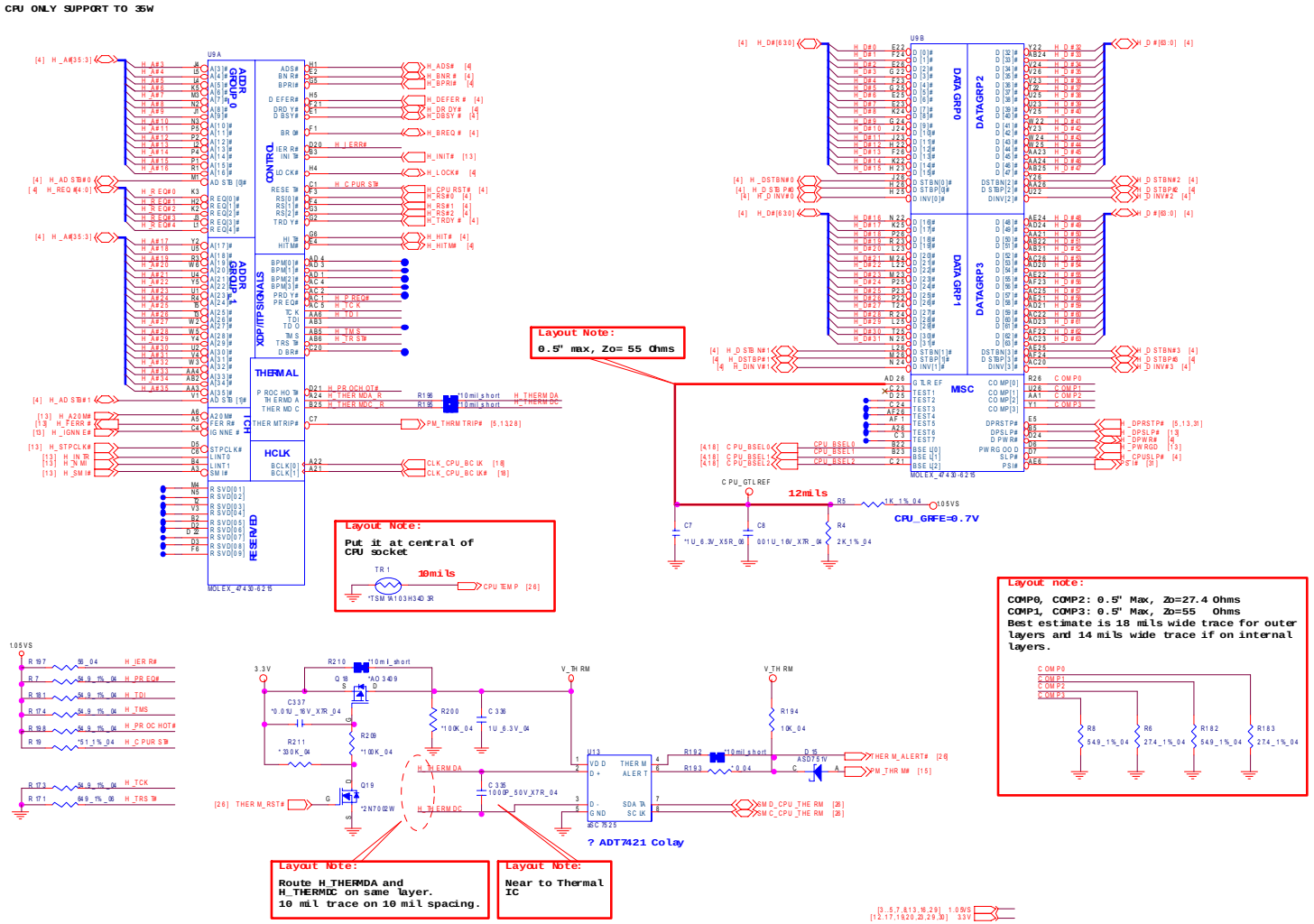

Sheet 2 of 40
Intel Penryn
(Socket-P) 1/2

Intel Penryn (Socket-P) 2/2

Sheet 3 of 40
Intel Penryn
(Socket-P) 2/2

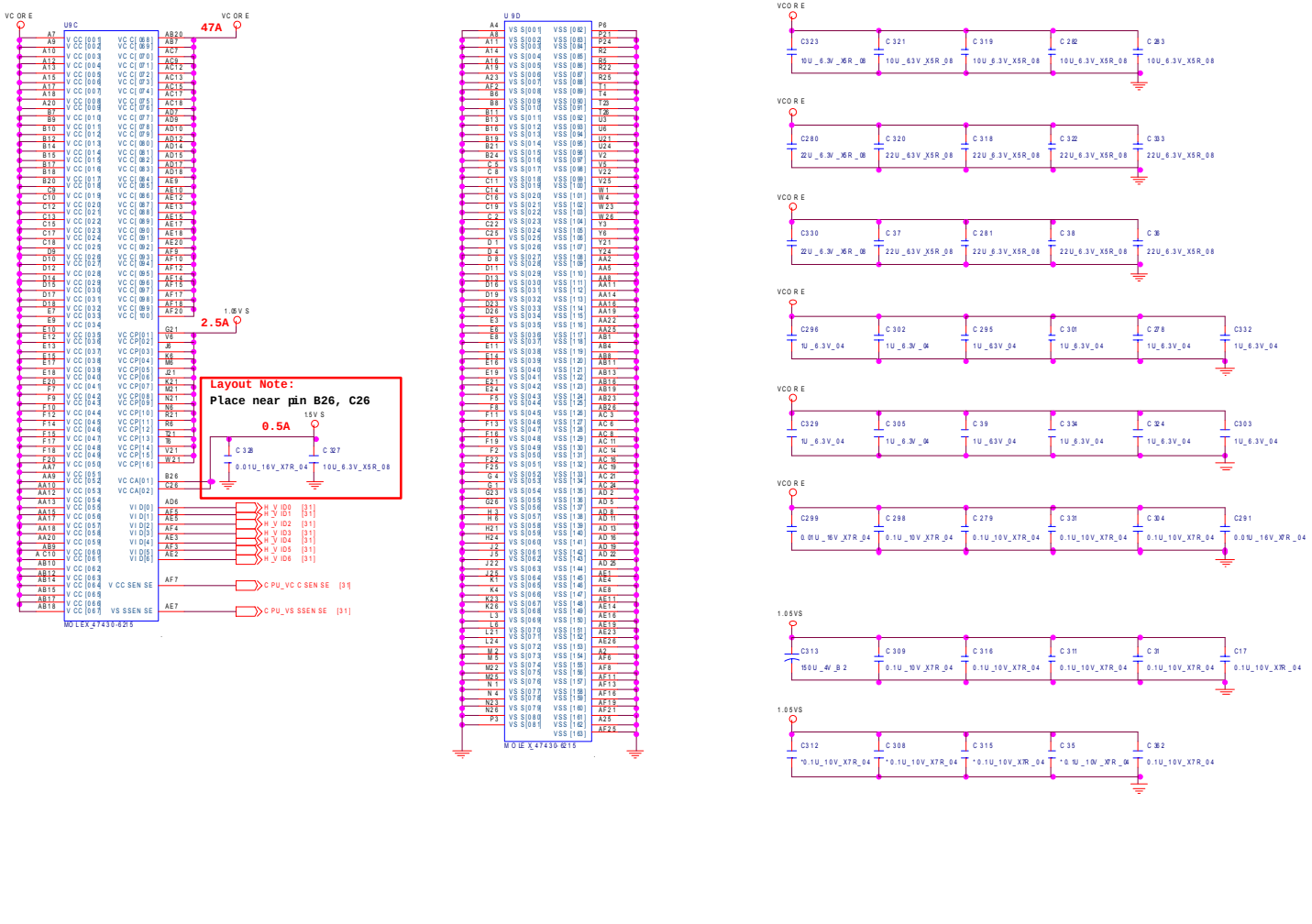

Cantiga 1/6 - Host

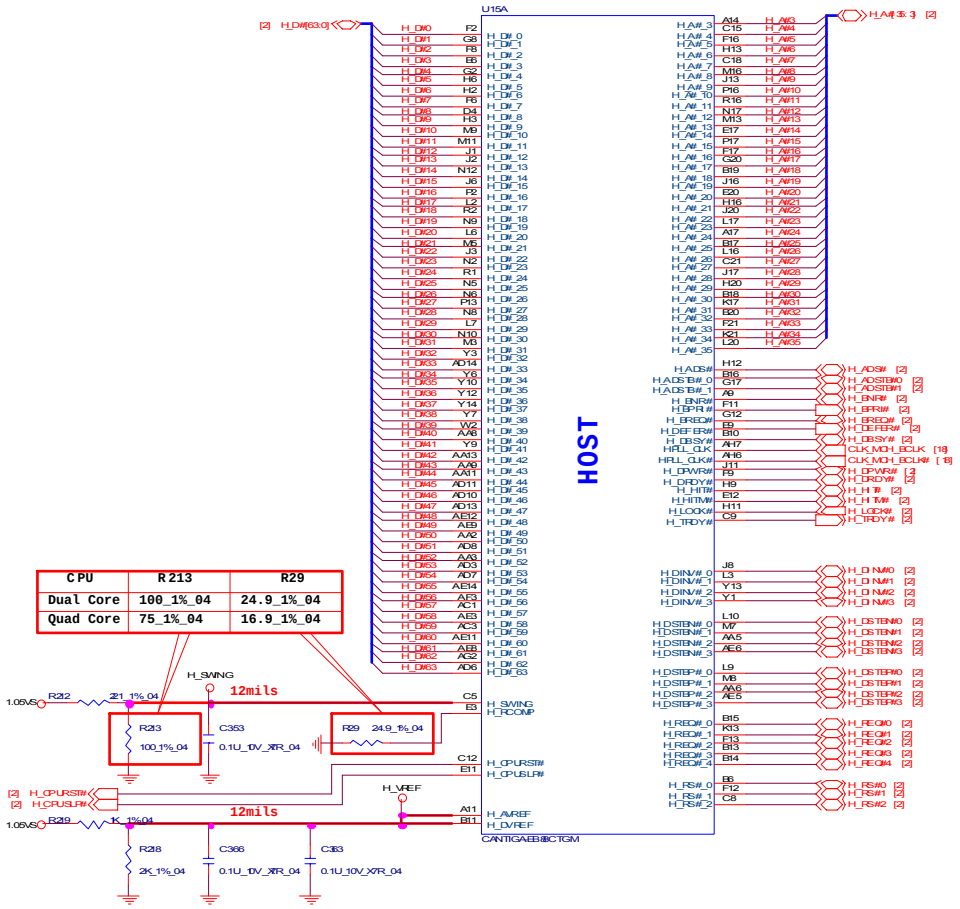

CPU	R213	R29
Dual Core	100_1%_04	24.9_1%_04
Quad Core	75_1%_04	16.9_1%_04

CPU_BSEL[2:0] (FSB) DAEFULT SETTING			
	CPU_BSEL2	CPU_BSEL1	CPU_BSEL0
266	L	L	L
200	L	H	L
166	L	H	H

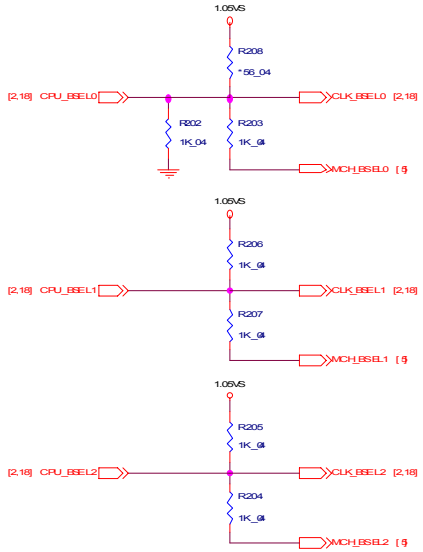

Sheet 4 of 40
Cantiga 1/6 - Host

Cantiga 2/6 - VGA, CRT

Sheet 5 of 40
Cantiga 2/6 - VGA, CRT

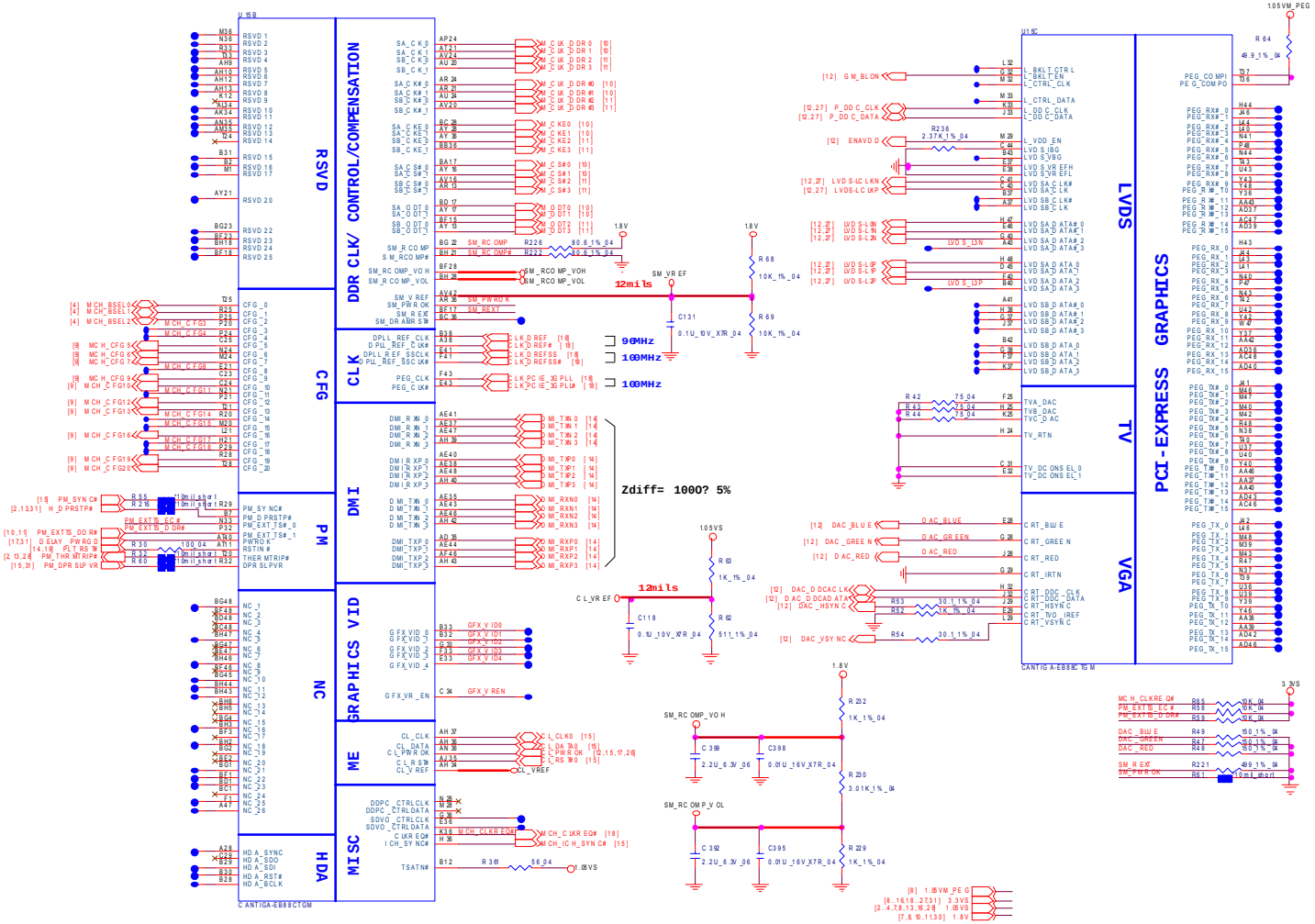

Cantiga 3/6 - DDR

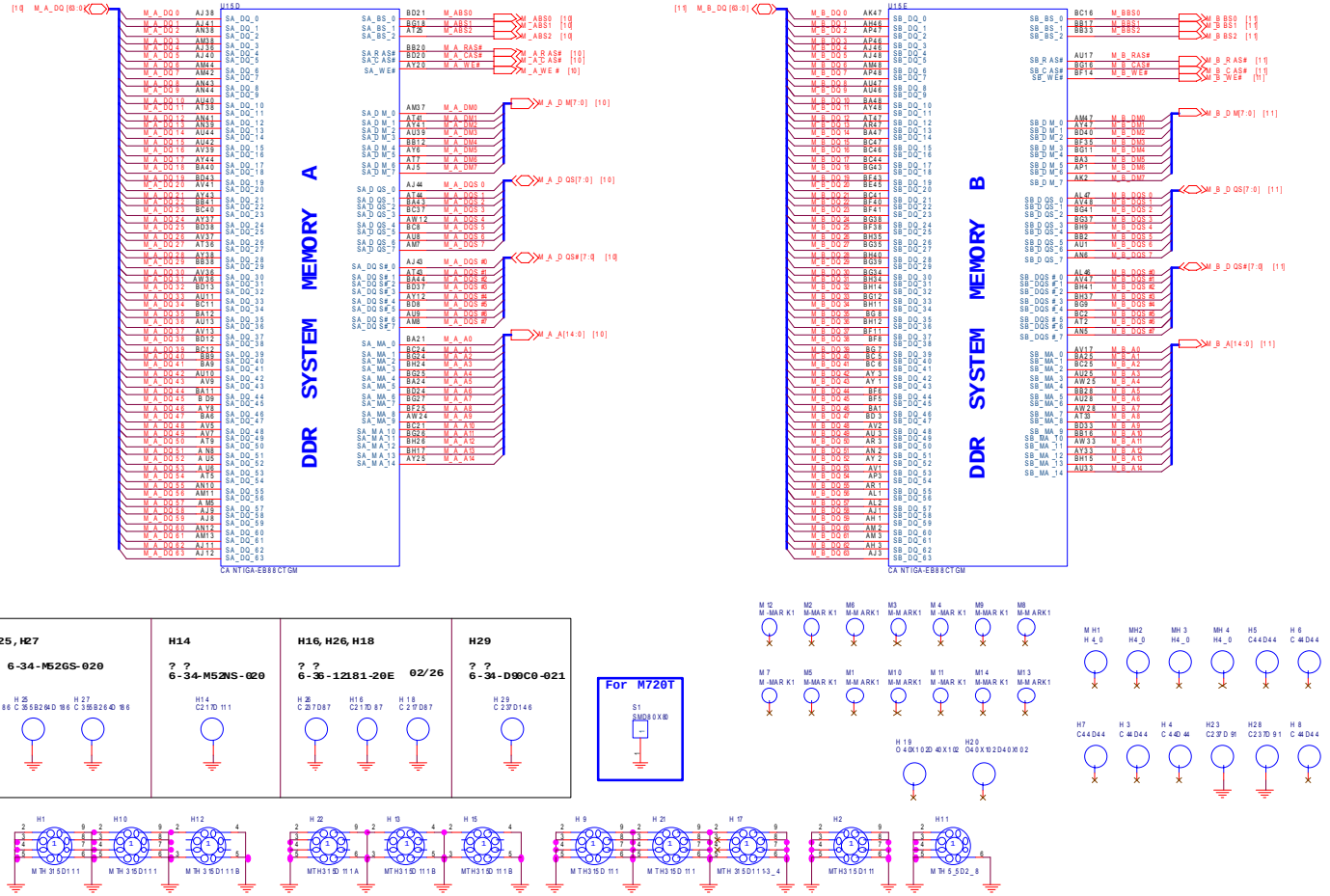

Sheet 6 of 40
Cantiga 3/6 -DDR

Cantiga 4/6 - Power

Sheet 7 of 40
Cantiga 4/6 - Power

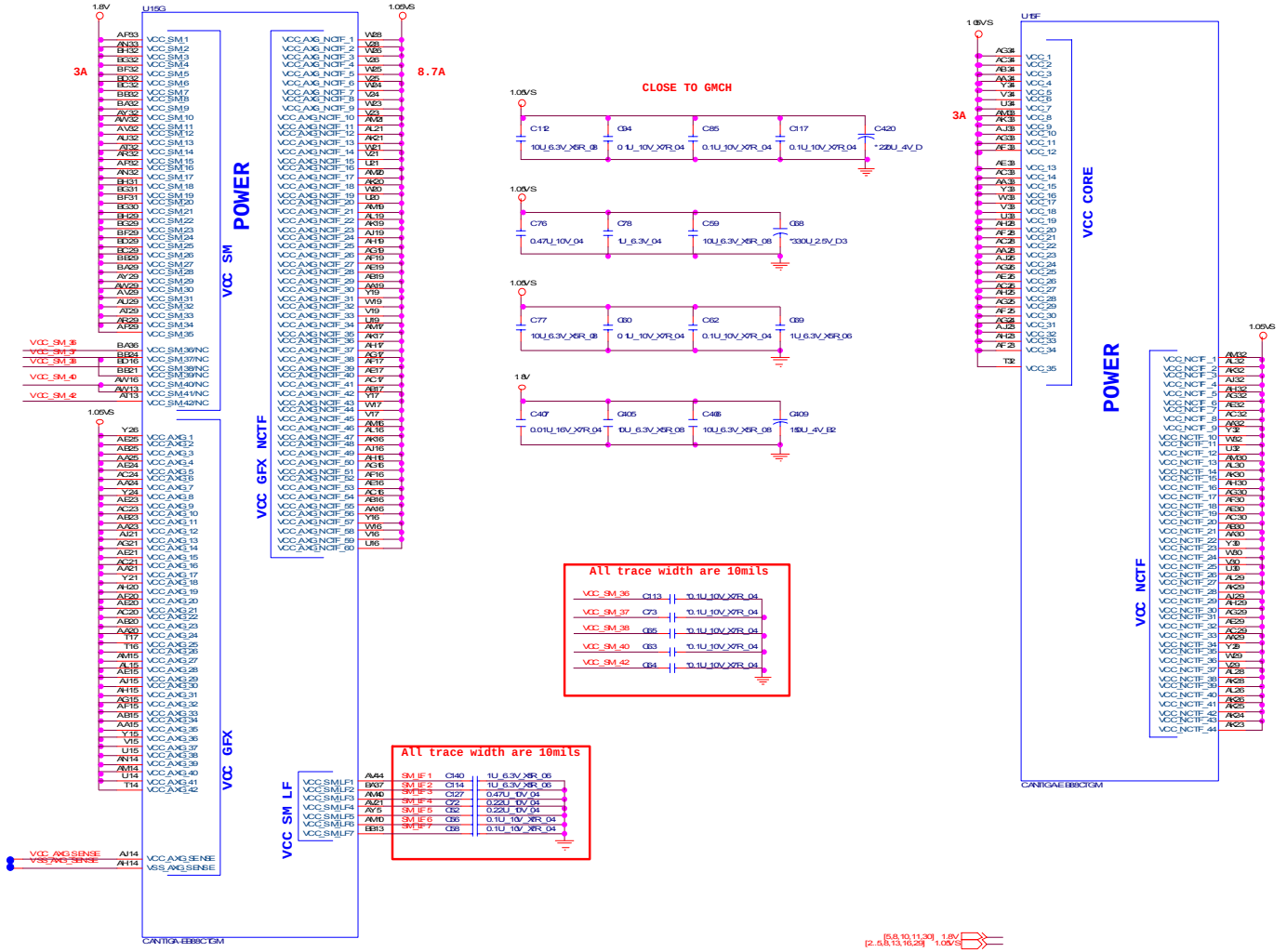

Cantiga 5/6 - Power

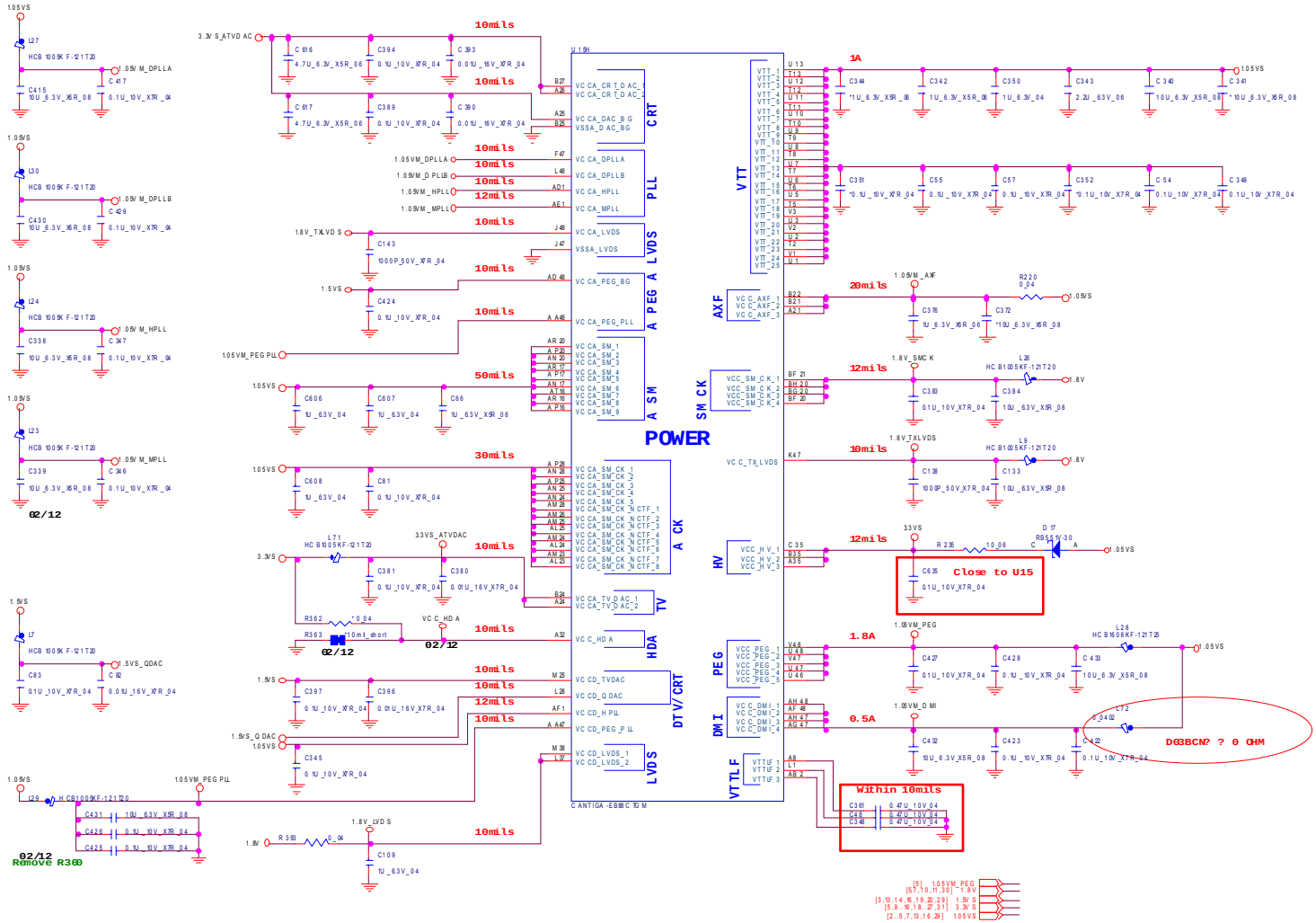

Sheet 8 of 40
Cantiga 5/6 - Power

Cantiga 6/6 - GND

Sheet 9 of 40
Cantiga 6/6 - GND

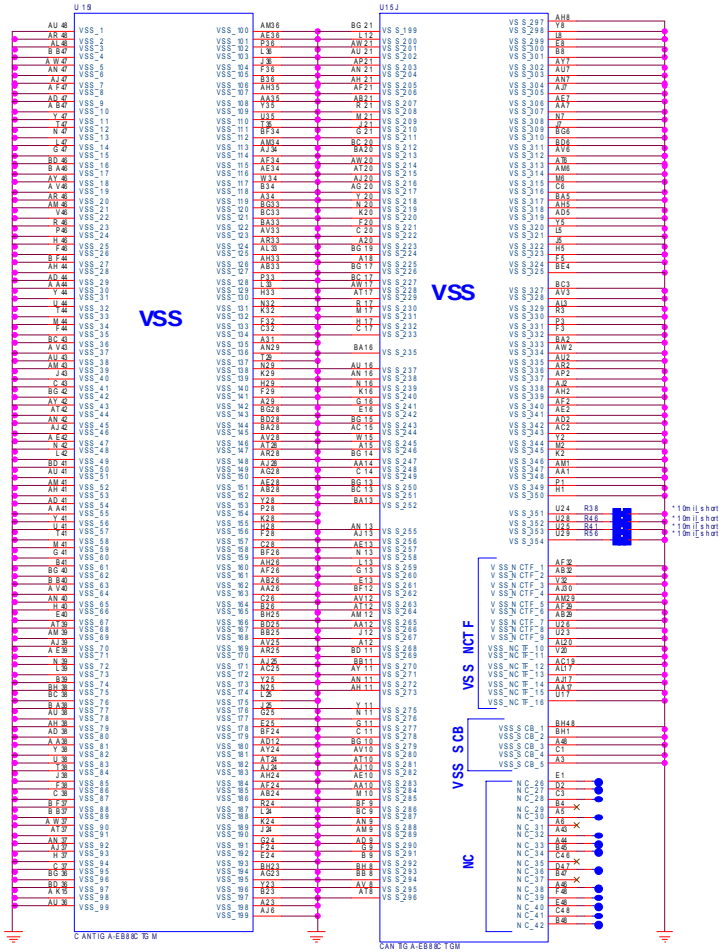

DDRII CHANNEL A

SO-DIMM 1

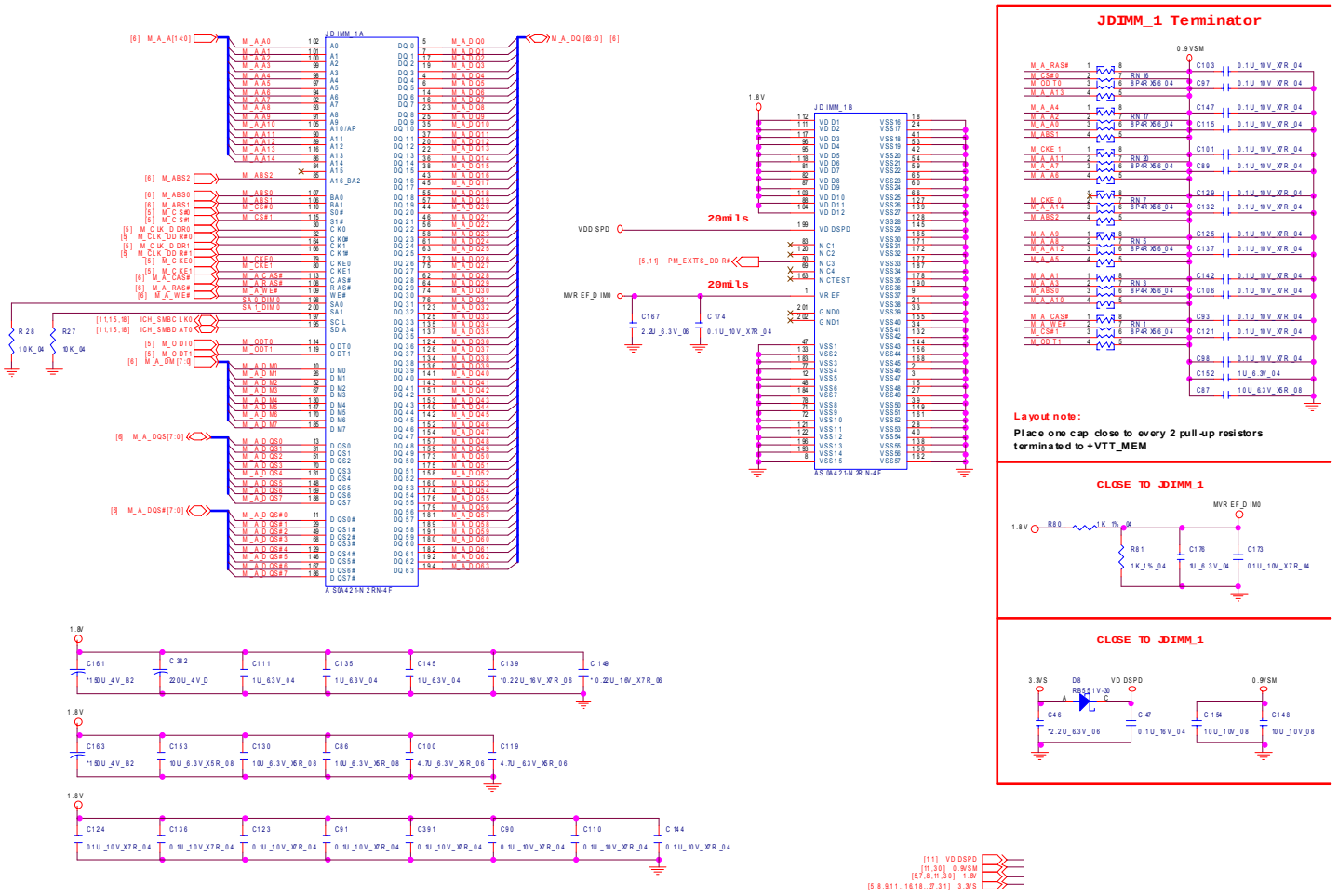

Sheet 10 of 40
DDRII CHANNEL A

DDRII CHANNEL B

Sheet 11 of 40
DDRII CHANNEL B

SO-DIMM 2

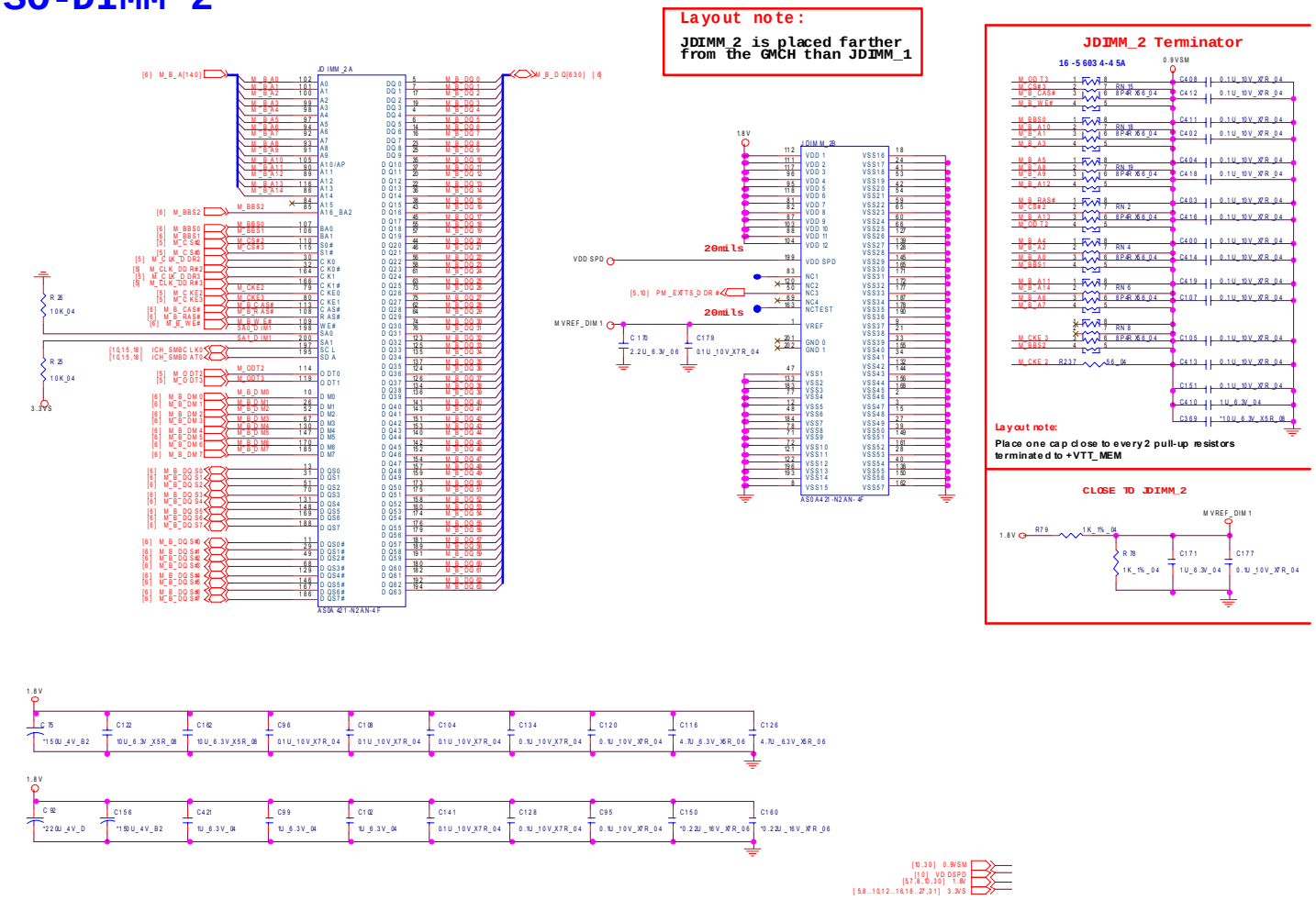

Panel, Inverter, CRT

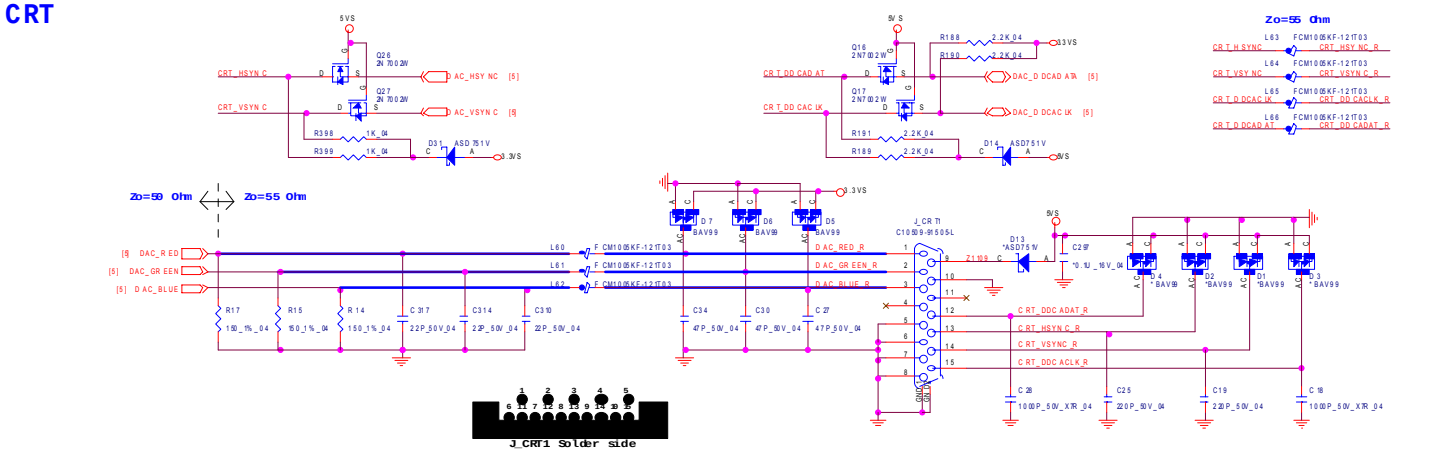

Sheet 12 of 40
Panel, Inverter, CRT

ICH9-M 1/5 - SATA

Sheet 13 of 40
ICH9-M 1/5 - SATA

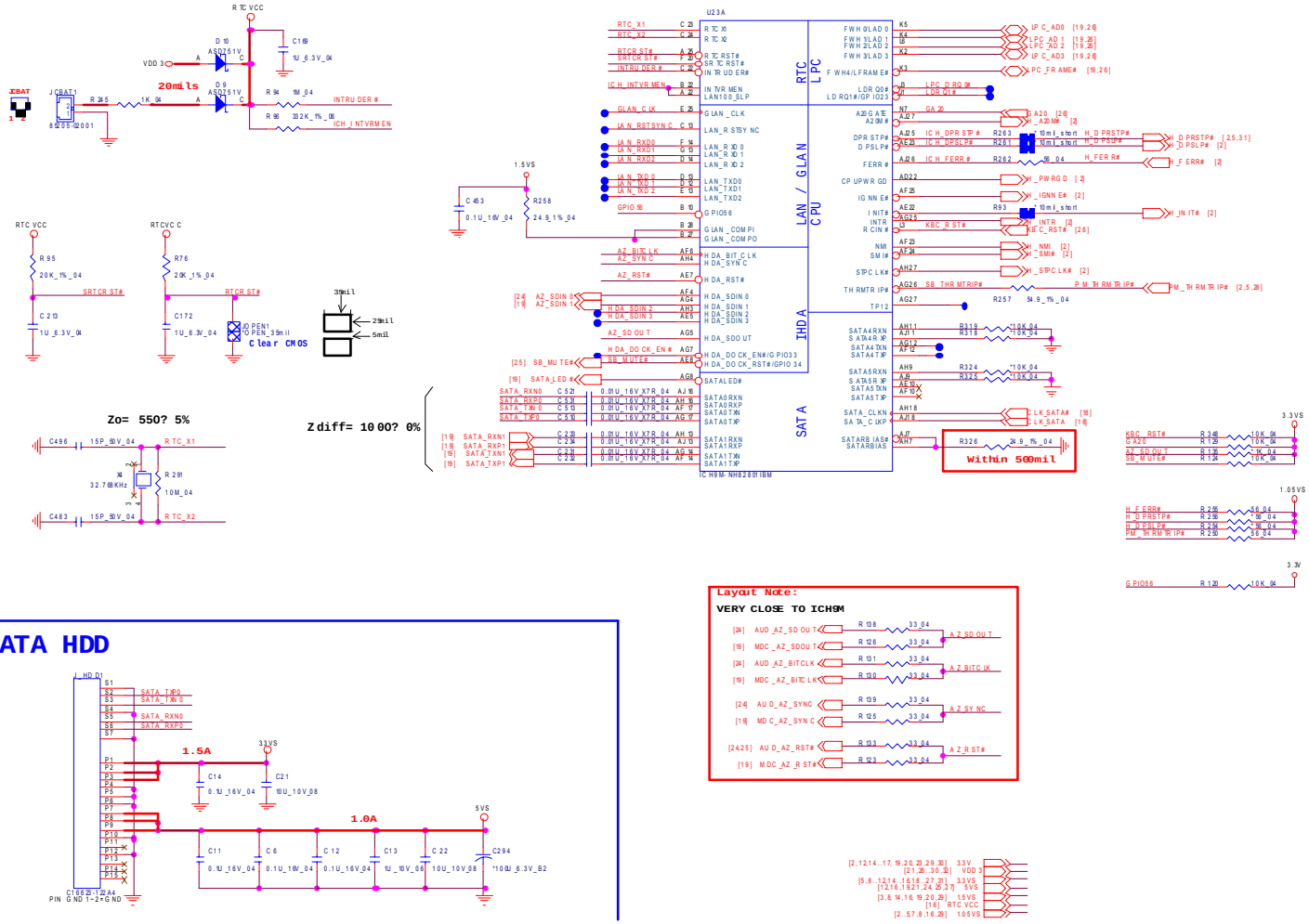

ICH9-M 2/5 - PCIE, PCI, USB

Boot BIOS Strap			
	Strap	PCI_GNT#0	SPI_CS1#
SPI	01	Stuff	No stuff
PCI	10	No stuff	Stuff
LPC(default)	11	No stuff	No stuff

PCI_GNT#3	A16 swap override Strap
Stuff	Enable
No stuff	Disable Default

SPI_SI	iTPM Enable
Stuff	Enable Default
No stuff	Disable

CLGPIO5	iTPM Enable
HIGH	Enable Default
LOW	Disable

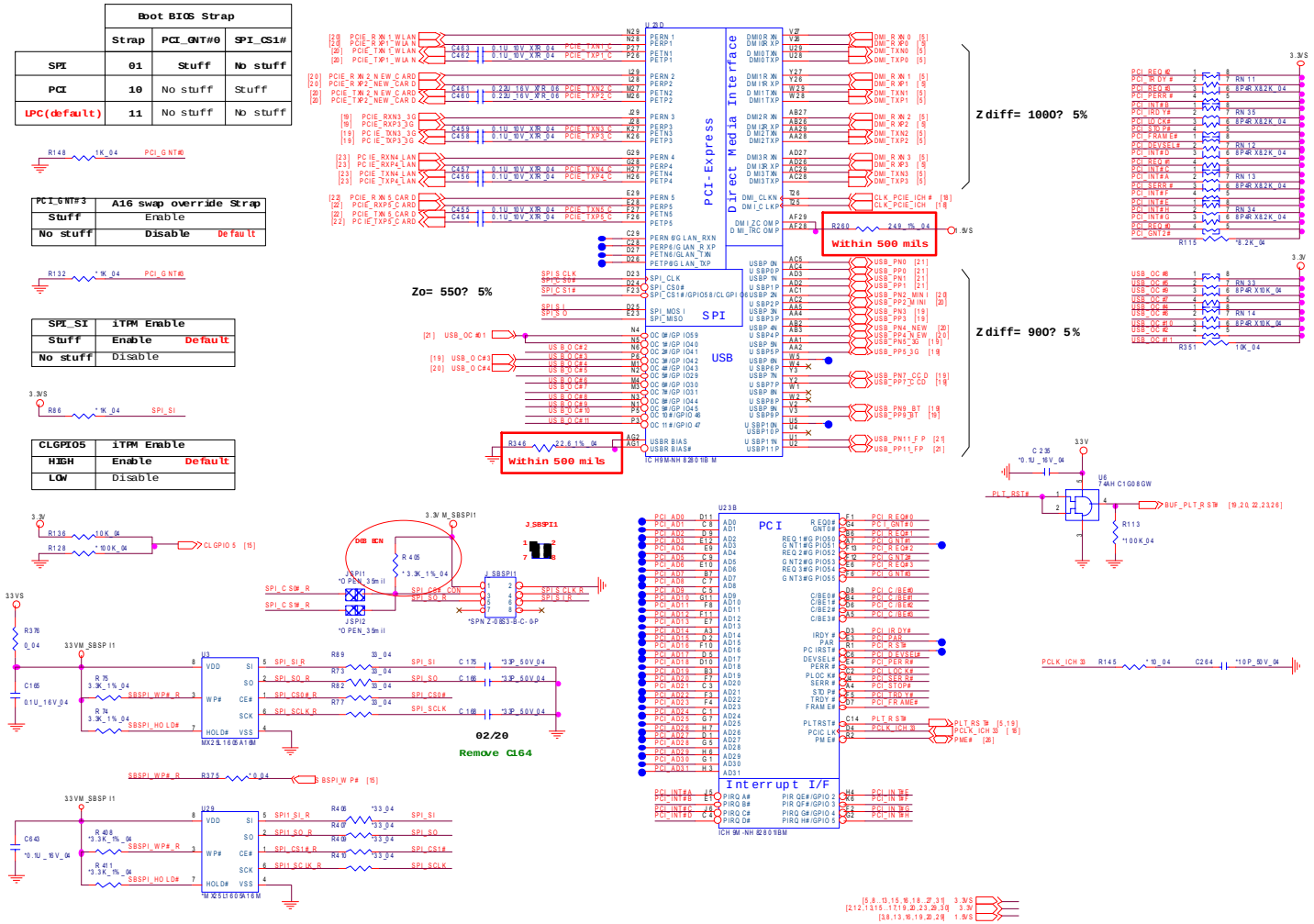

Sheet 14 of 40
ICH9-M 2/5 - PCIE, PCI, USB

ICH9-M 3/5 - GPIO, PWR Management

Sheet 15 of 40
ICH9-M 3/5 - GPIO, PWR Mangement

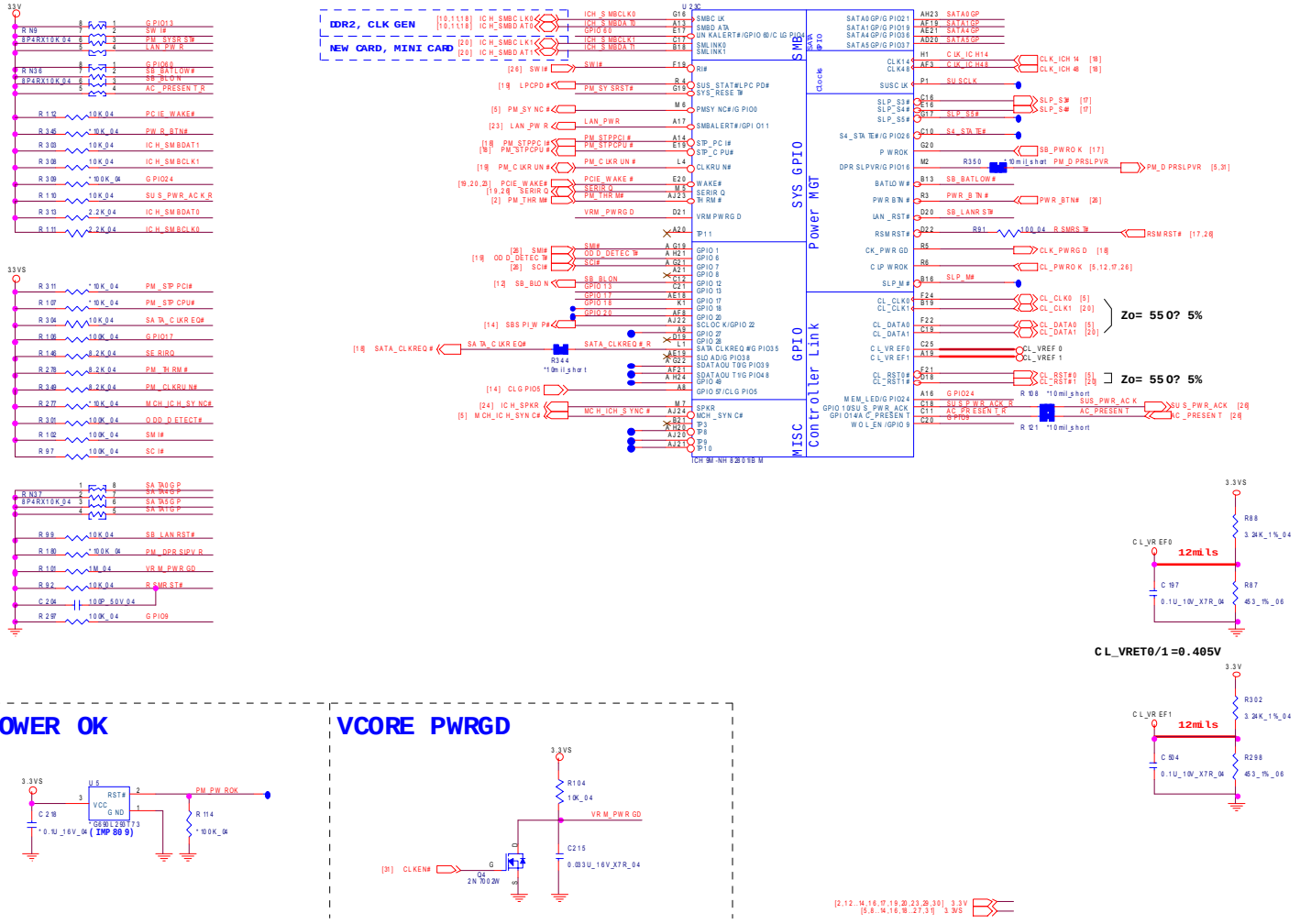

ICH9-M 4/5 - Power

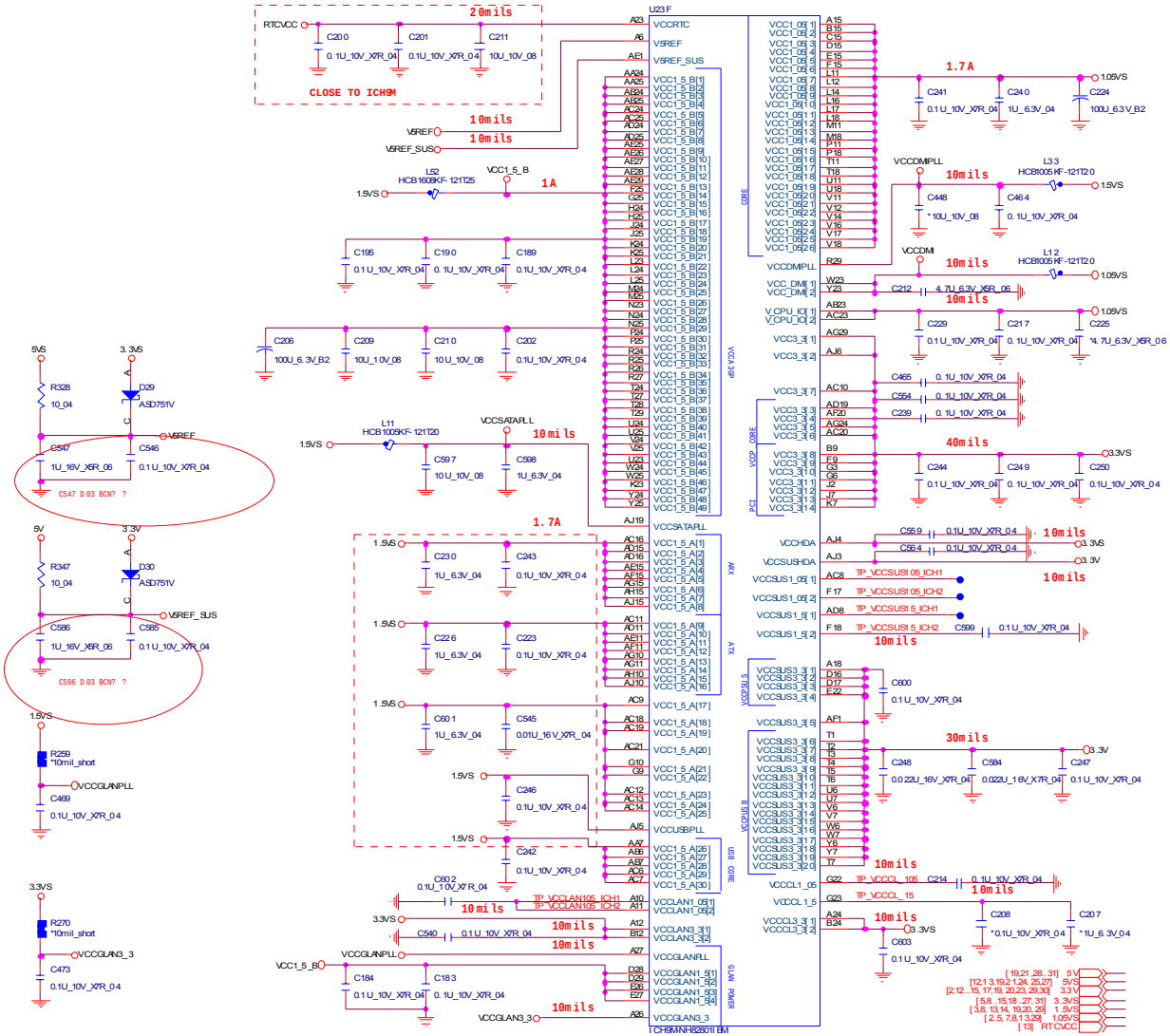

ICH9-M 5/5 - GND

Sheet 17 of 40
ICH9-M 5/5 - GND

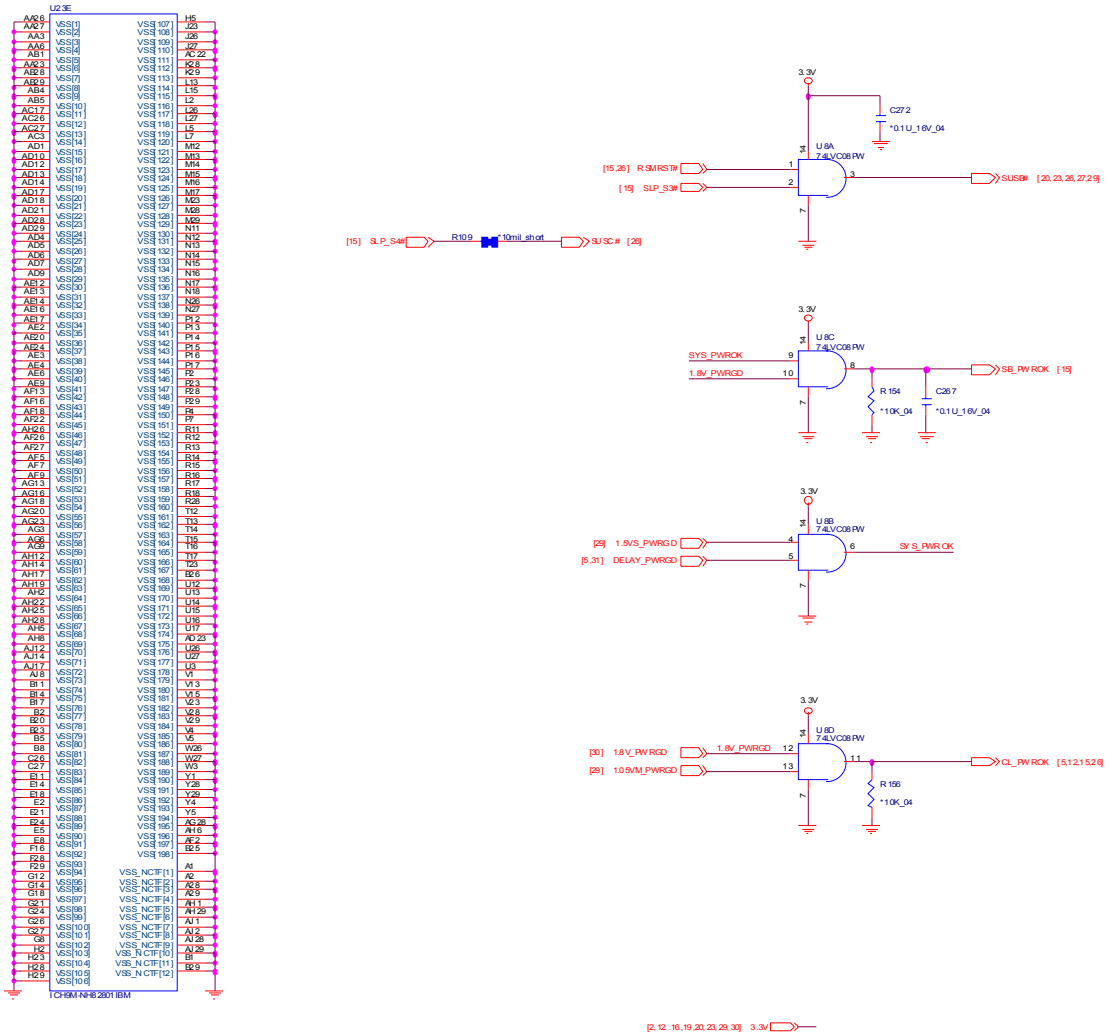

Clock Generator

CLOCK GENERATOR

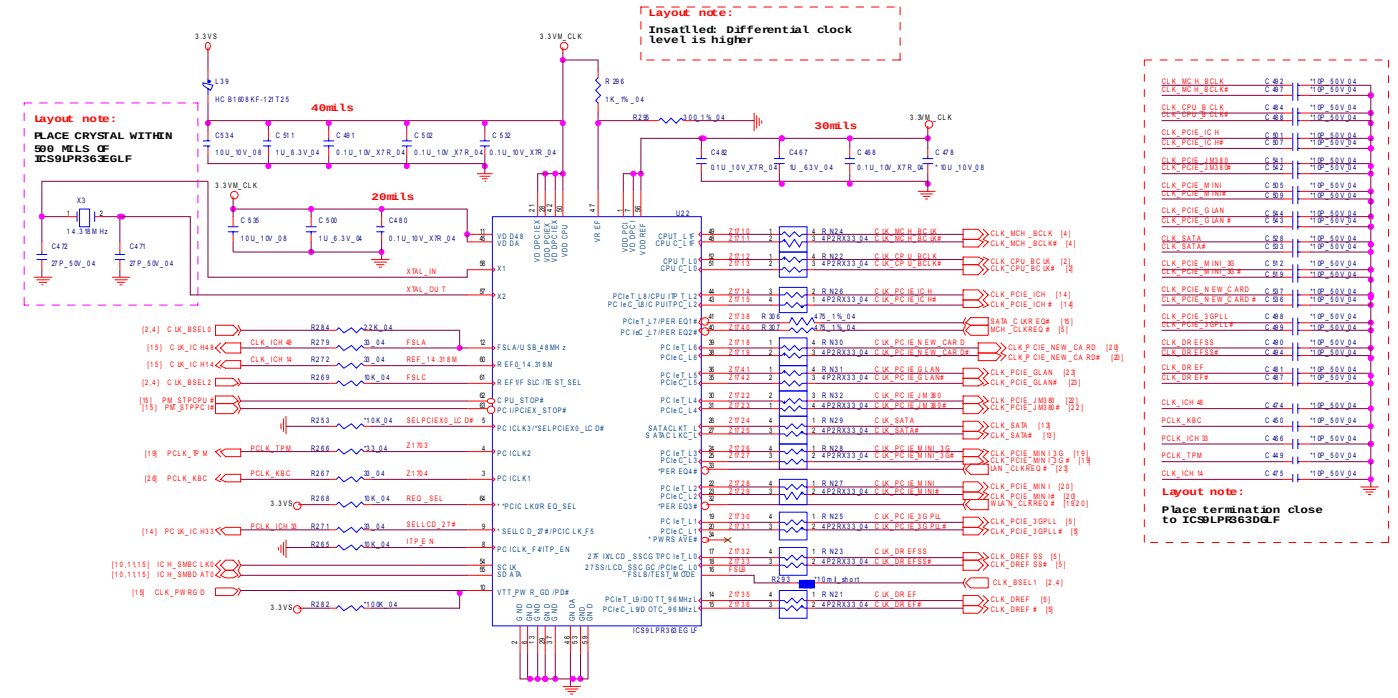

FSLC	FSLB	FSLA	CKS05	
BSEL2	BSEL1	BSEL0	Host Clock Frequency	
0	0	0	266 MHz	1066 MHz
0	1	0	200 MHz	800 MHz
0	1	1	166 MHz	667 MHz

Red words must be controlled by BIOS			
SATA_CLKREQ# (PEREQ1#)	PCIECLK 6 (NEW CARD) SATACLK	MCH_CLKREQ# (PEREQ2#)	PCIECLK 1 (3GPLL) PCIECLK 8 (ICH)
WLAN_CLKREQ# (PEREQ3#)	PCIECLK 2 (MINI) PCIECLK 4 (JM385)	LAN_CLKREQ# (PEREQ4#)	PCIECLK 3 (MINI_3G) PCIECLK 5 (GLAN)

Pin5	Pin9	Pin14/15	Pin17/18	
SELPCIEX0_LCD#/ PCI3 = 0 (low)	SELLCD_27#=0 SELLCD_27#=1	PCIEX9 DOT96	27FIX/SS LCD(96MHz)	
SELPCIEX0_LCD#/ PCI3 = 1 (high)	SELLCD_27#=0 SELLCD_27#=1	PCIEX9 DOT96	PCIEX0 PCIEX0	Default

Sheet 18 of 40
Clock Generator

Multi I/O, ODD, CCD, BT, TPM

Sheet 19 of 40
Multi I/O, ODD, CCD, BT, TPM

SATA ODD

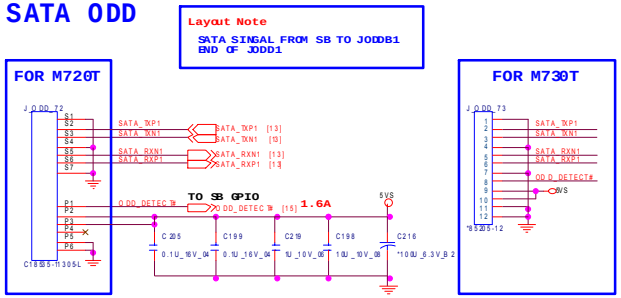

TPM 1.2

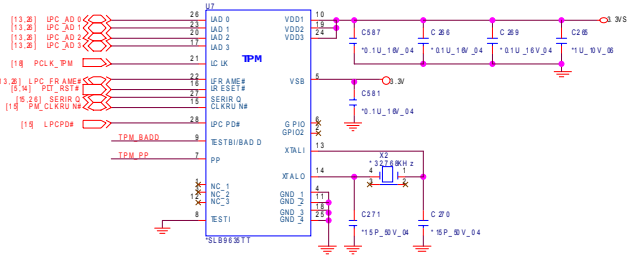

Asserted before entering S3
LPC reset timing:
LPCPD# inactive to LRST# inactive 32-96us

TPM_PP	HI : ACCESS	
	LOW : NORMAL	(Default)
TPM_BADD	HI : 4E / 4F h	(Default)
	LOW : 2E / 2F h	

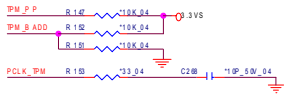

Bluetooth

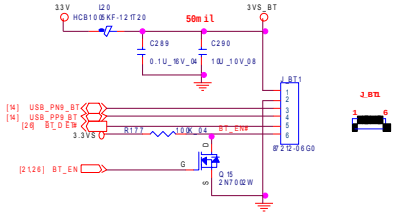

MULTI I/O CONN

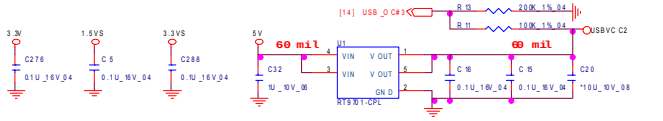

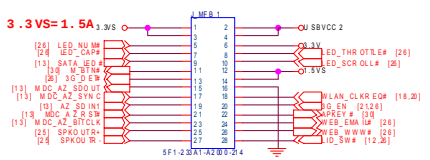

CCD

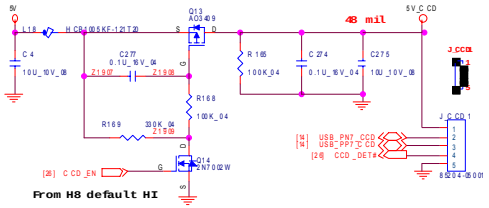

New Card, Mini PCIE

NEW CARD

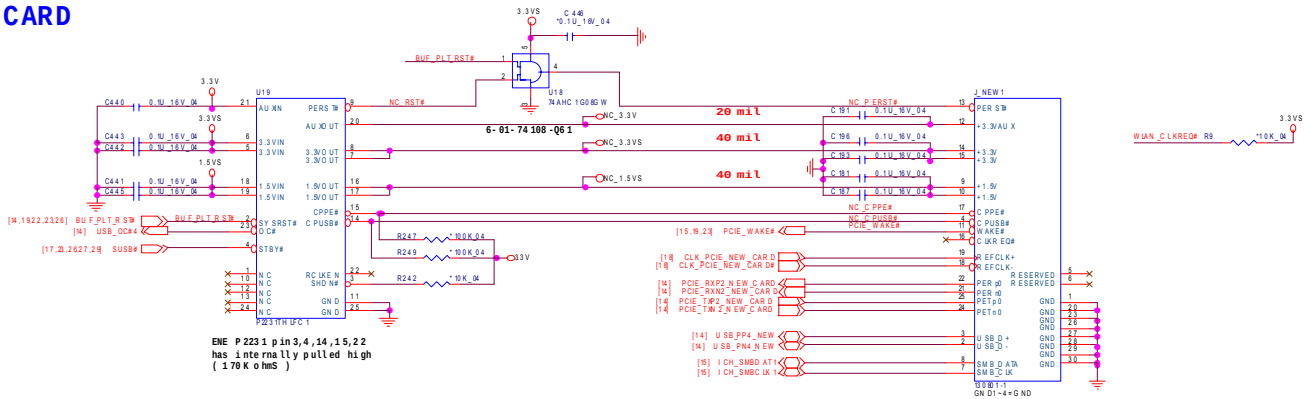

Sheet 20 of 40
New Card,
Mini PCIE

MINI CARD

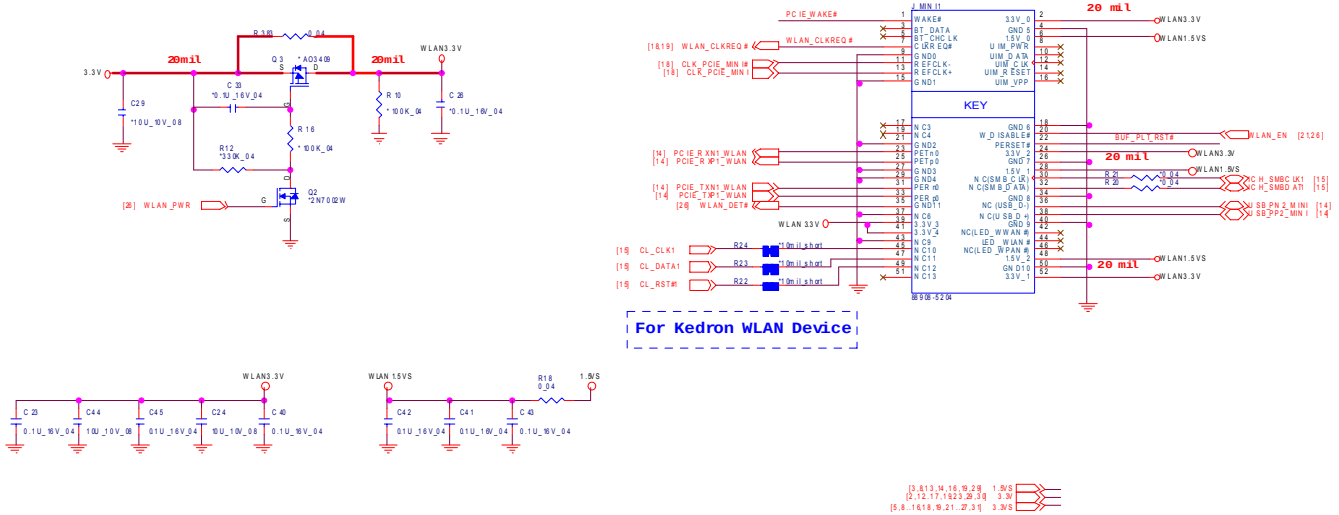

LED, FAN, TP, FP, USB

Sheet 21 of 40
LED, FAN, TP, FP, USB

LED

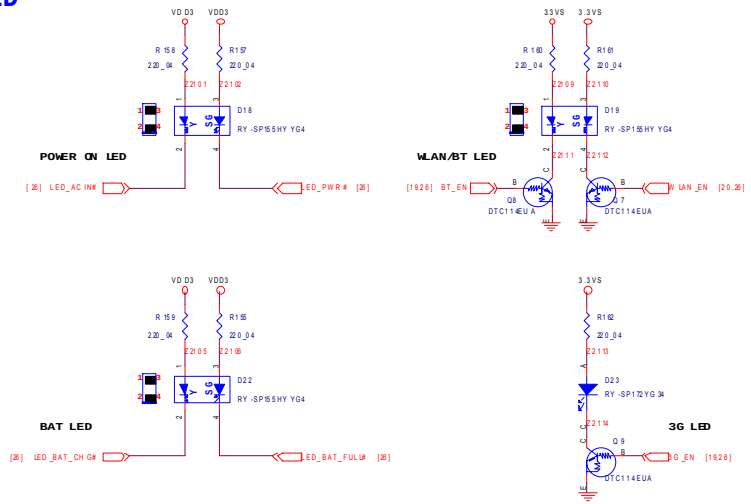

FAN CONTROL

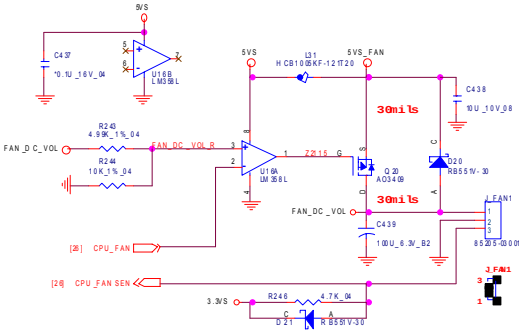

FP CONN

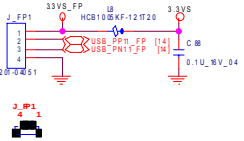

USB PORT

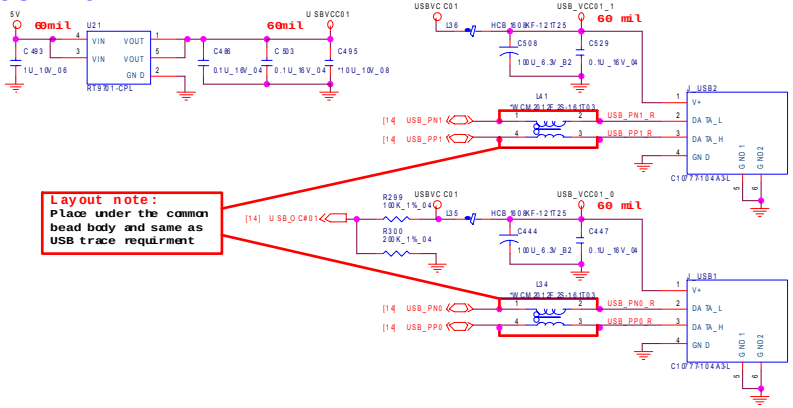

CLICK CONN

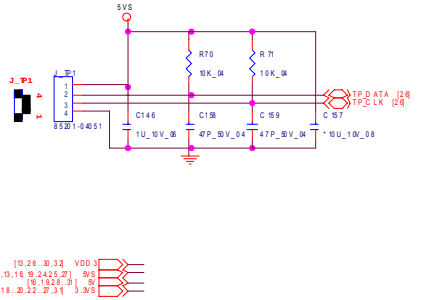

JMB385 Card Reader

JMB385 CARD READER

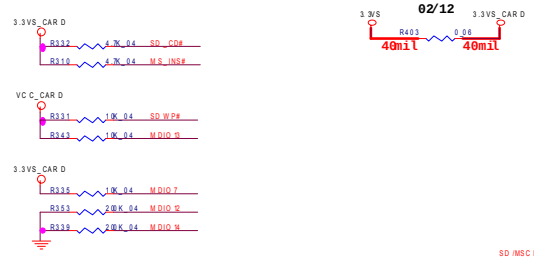

	HIGH	LOW
MDIO7	On Borad	Add-in Card
MDIO12	CR1_PCTLN High Active	CR1_PCTLN Low Active
MDIO14	CR1_LEDN High Active	CR1_LEDN Low Active

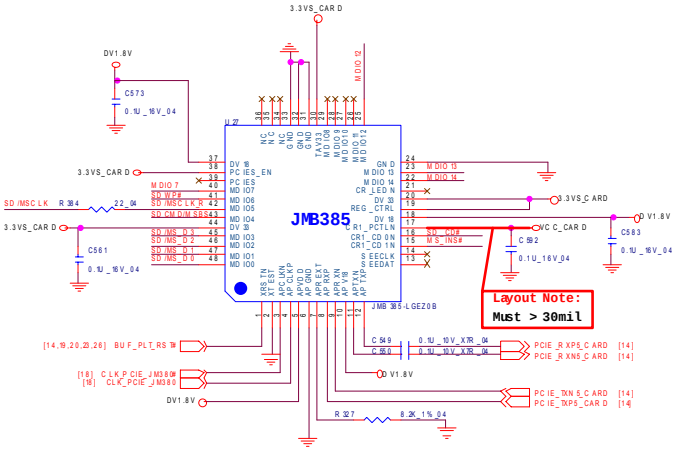

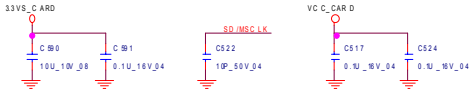

Near Cardreader CONN

M720T Card Reader Connector

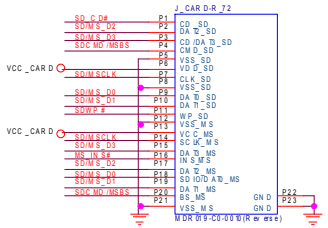

M730T Card Reader Connector

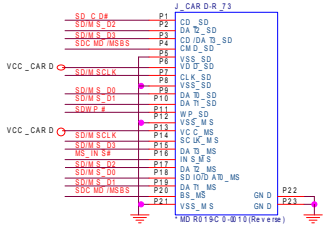

Layout note:
Very closed between pin 19 and pin 20

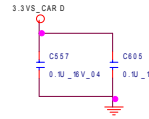

Layout note:
Very closed to pin 5(Trace width/length: 20mil/<120mil)

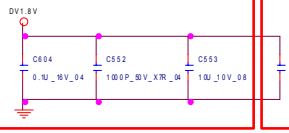

Layout note:
Very closed between pin 10

Sheet 22 of 40
JMB385 Card Reader

PCI-E LAN RTL8111C

Sheet 23 of 40
PCI-E LAN
RTL8111C

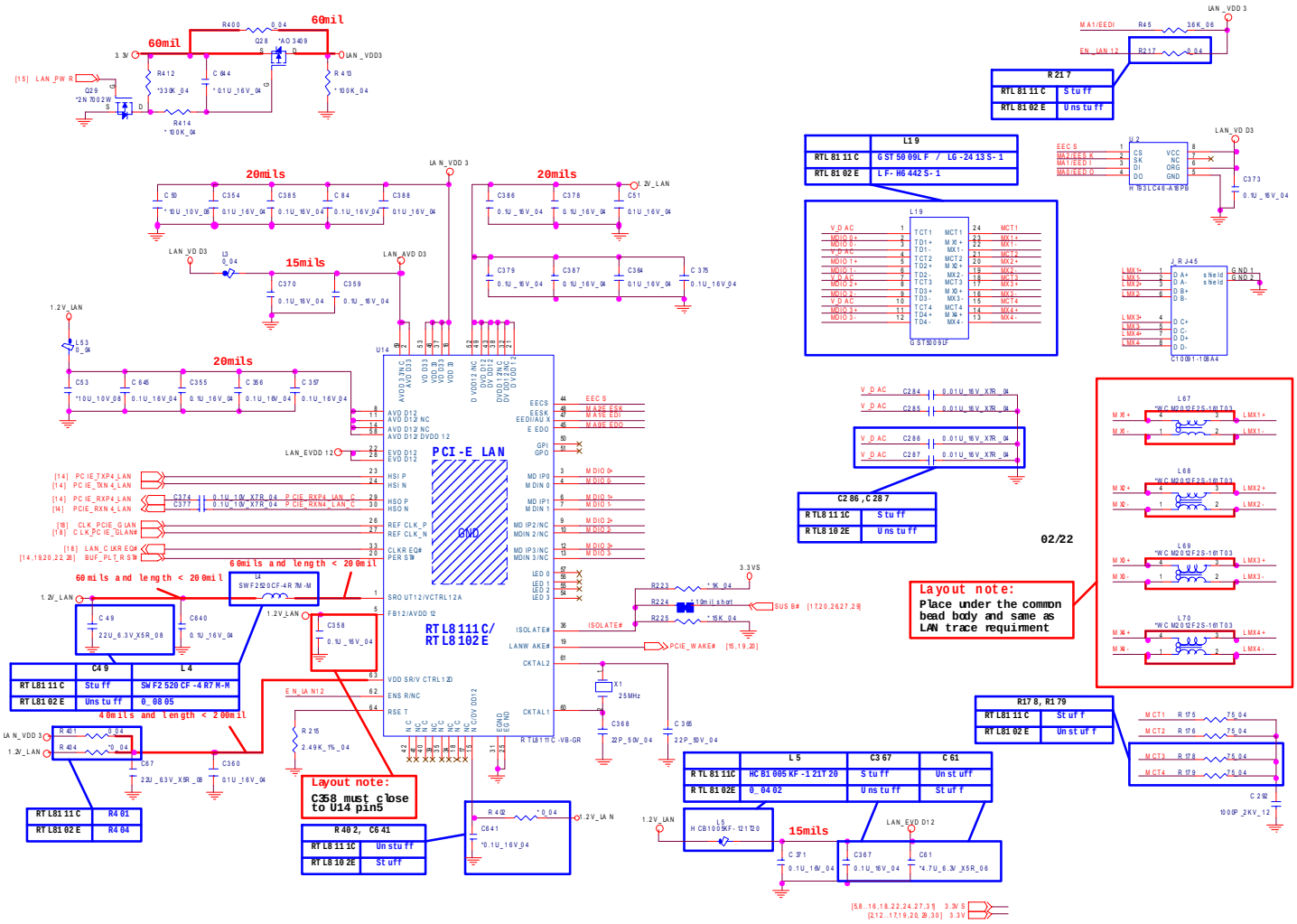

Audio Codec ALC662

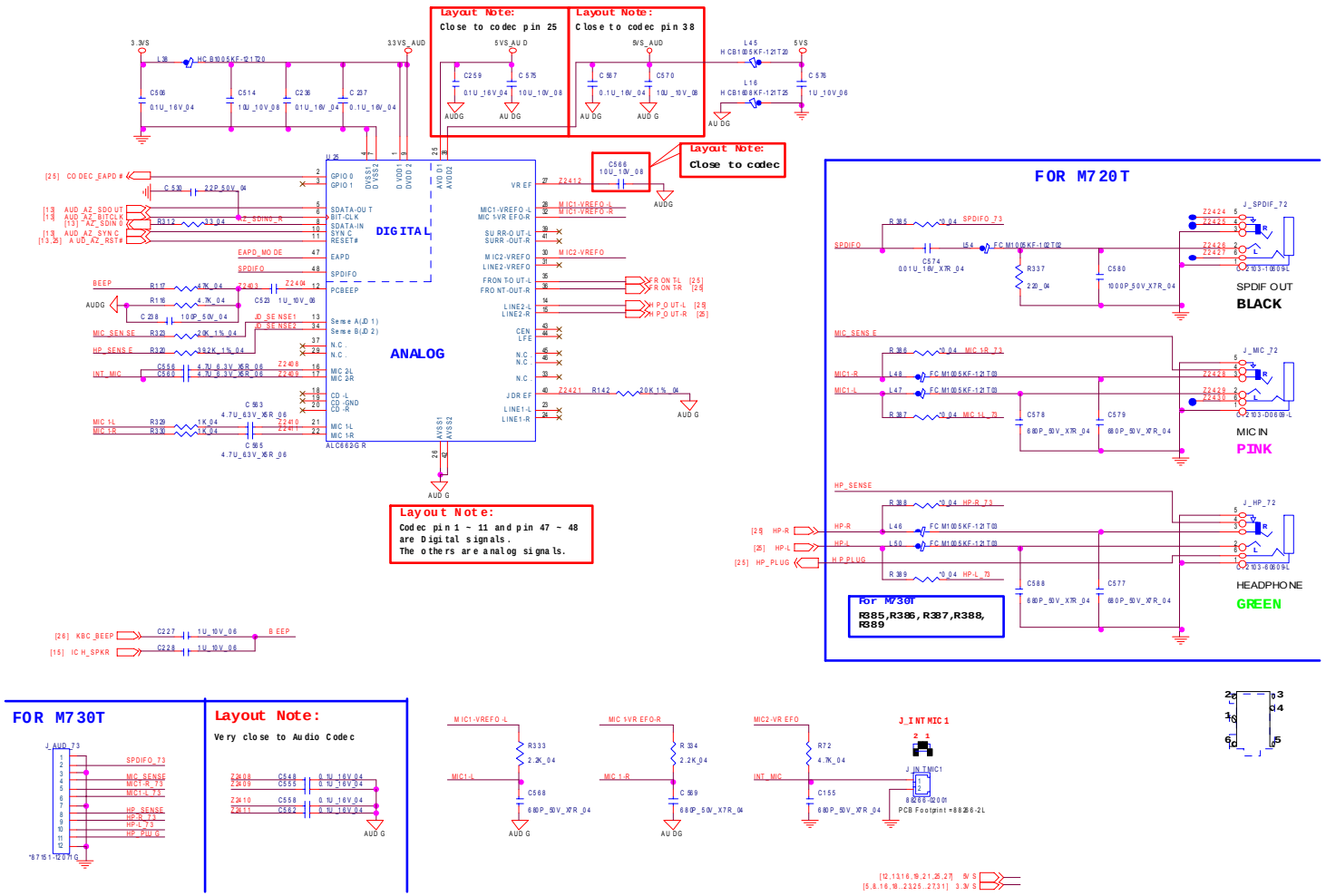

Sheet 24 of 40
Audio Codec
ALC662

Audio AMP2056

Sheet 25 of 40
Audio AMP2056

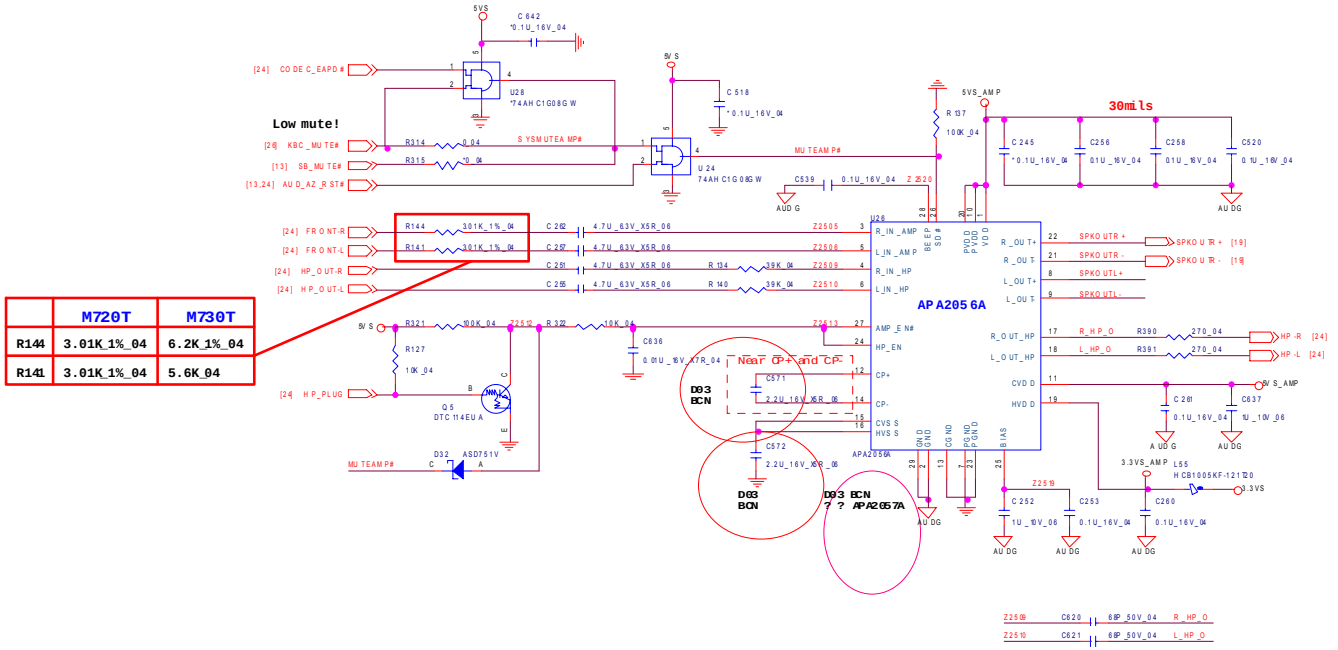

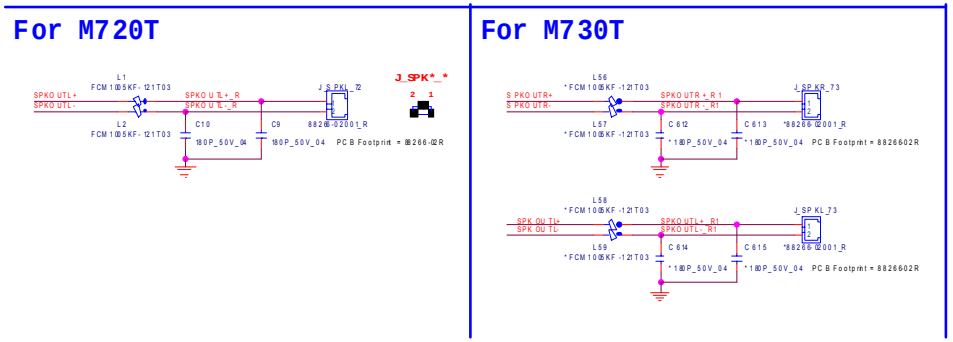

KBC-ITE IT8512E

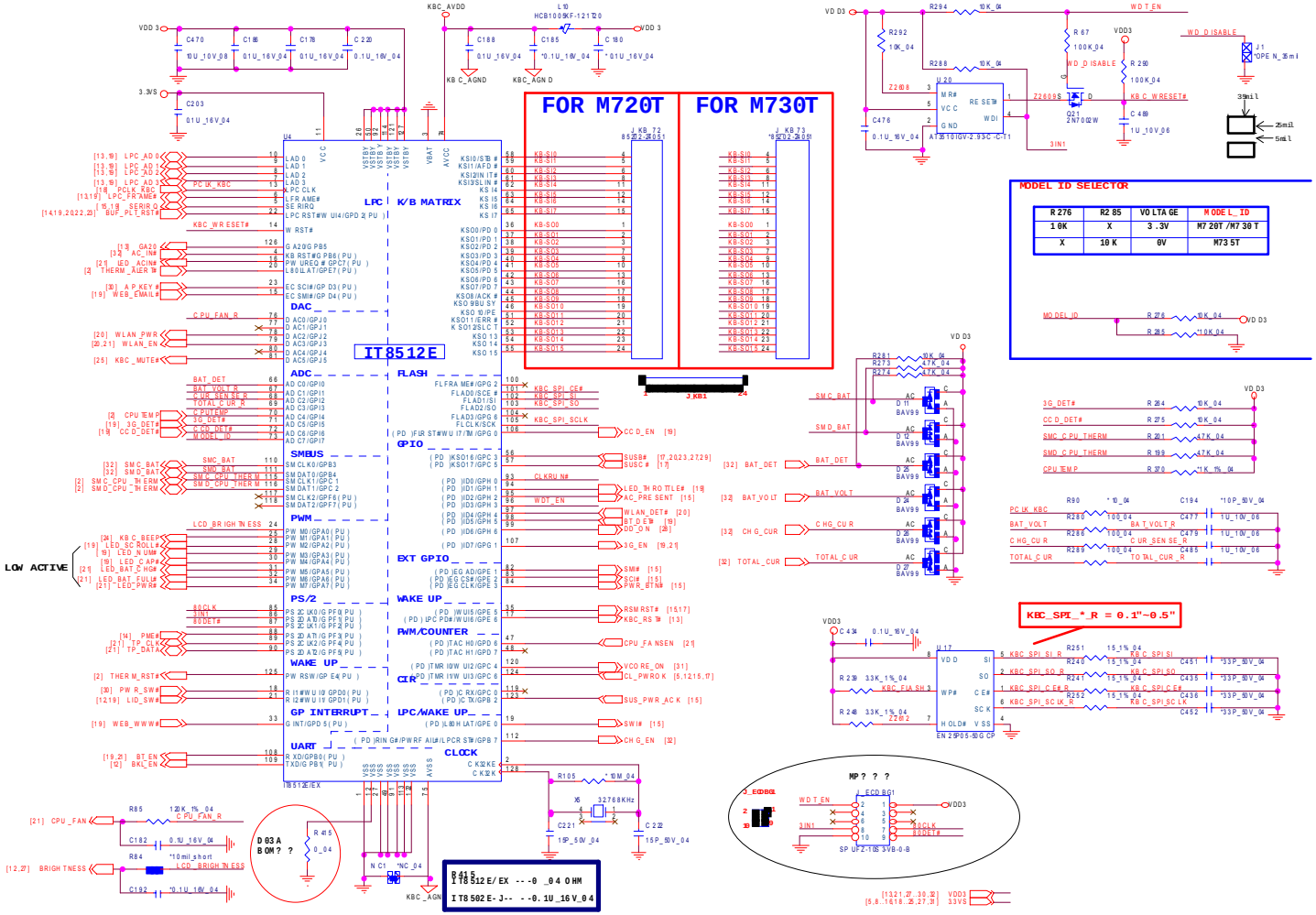

Sheet 26 of 40
KBC-ITE IT8512E

System Power, LED BKLT

Sheet 27 of 40
System Power,
LED BKLT

5VS, 3.3VS

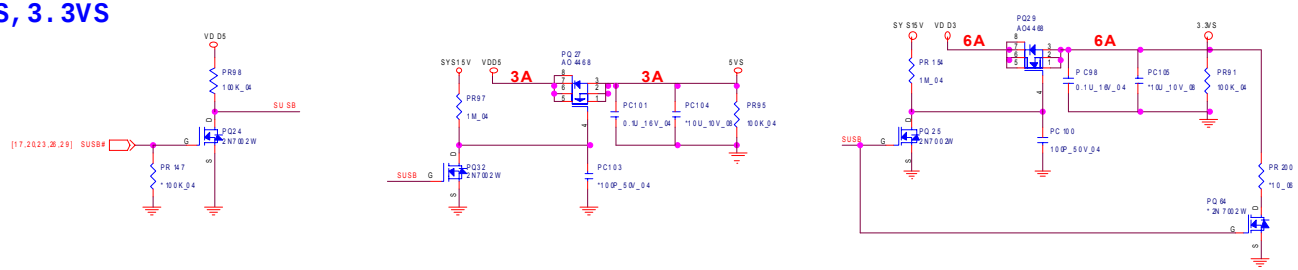

M735T LED PANEL BACKLIGHT DRIVER

SEL1	SEL2	SEL3	LEDx Output
0	0	0	Only LED1 on
1	0	0	LED1 throgh LED2 on
0	1	0	LED1 throgh LED3 on
1	1	0	LED1 throgh LED4 on
0	0	0	LED1 throgh LED5 on
1	0	1	LED1 throgh LED6 on
0	1	1	LED1 throgh LED7 on
1	1	1	LED1 throgh LED8 on

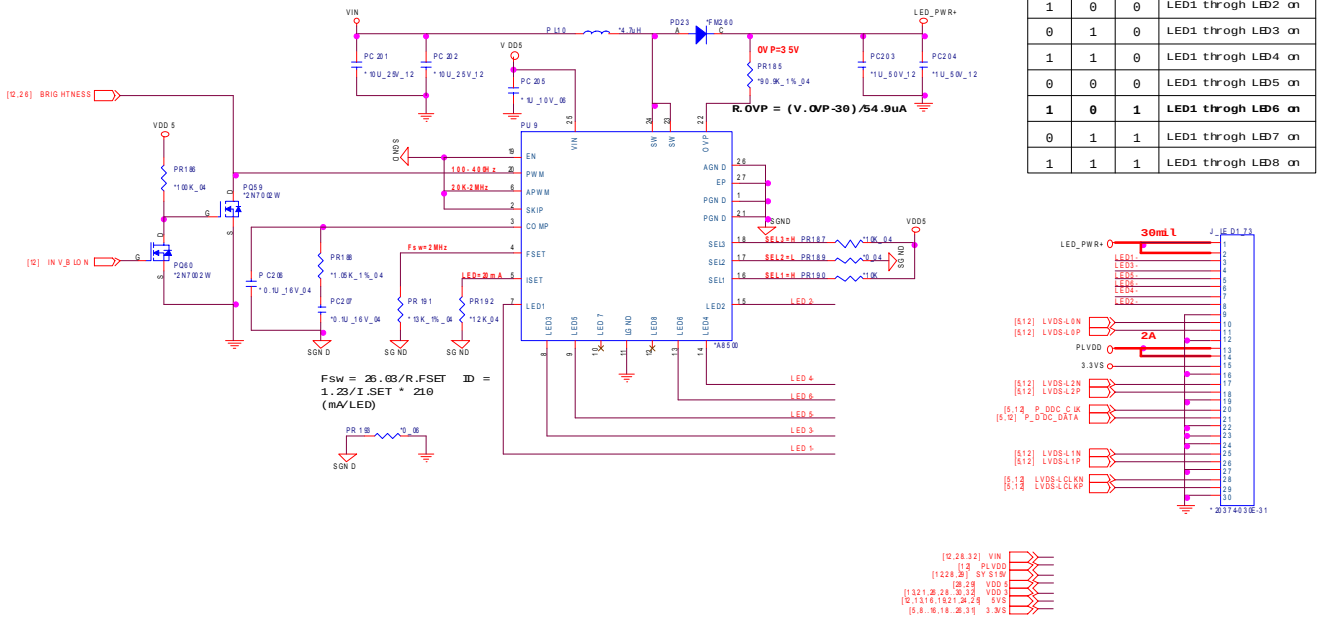

Power VDD3, VDD5

VDD3,VDD5

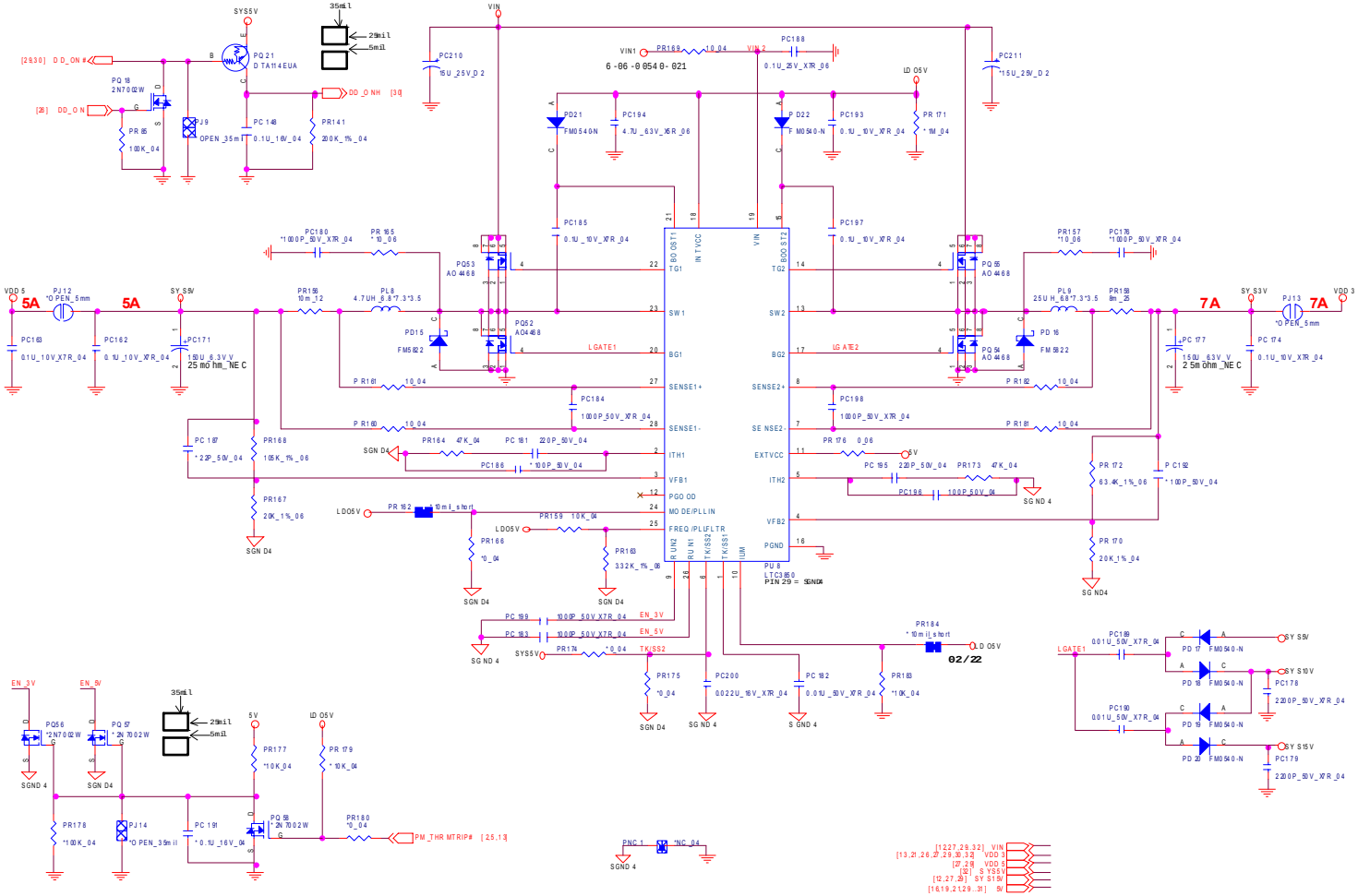

Sheet 28 of 40
Power VDD3, VDD5

Power 1.5VS, 1.05VS, 3.3V, 5V

Sheet 29 of 40
Power 1.5VS,
1.05VS, 3.3V, 5V

1.05VS

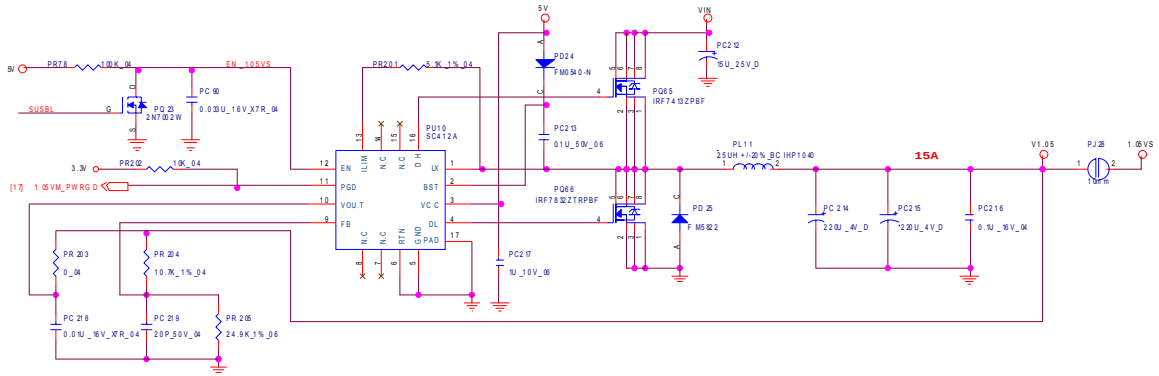

1.5V

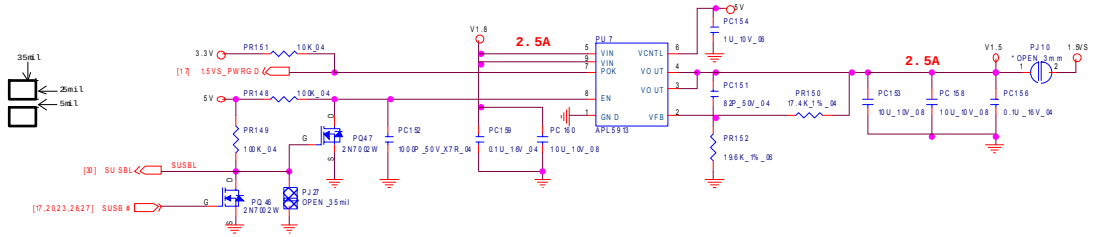

3.3V,5V

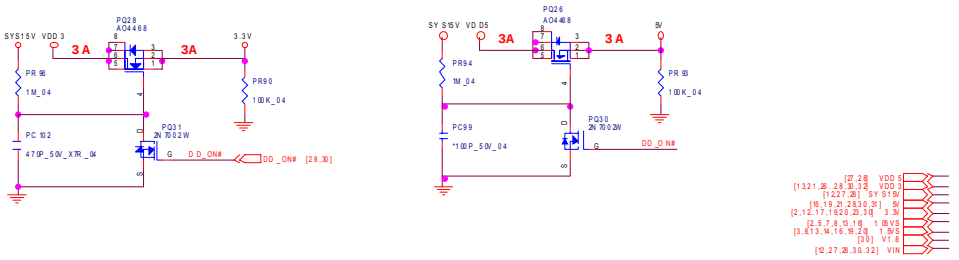

Power 1.8V, 0.9VSM

1.8V,0.9VSM

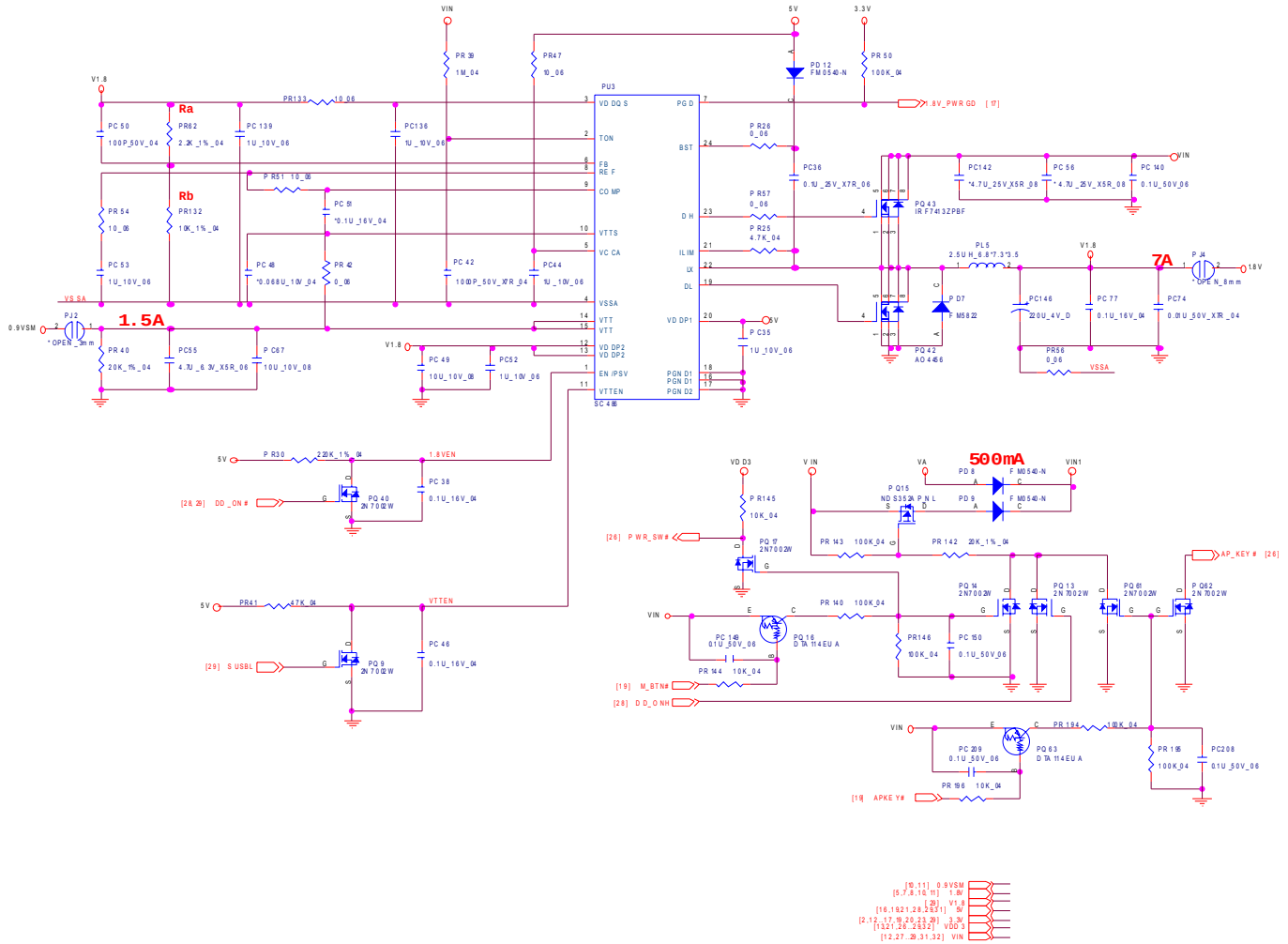

Sheet 30 of 40
Power 1.8V,
0.9VSM

Power VCORE

Sheet 31 of 40
Power VCORE

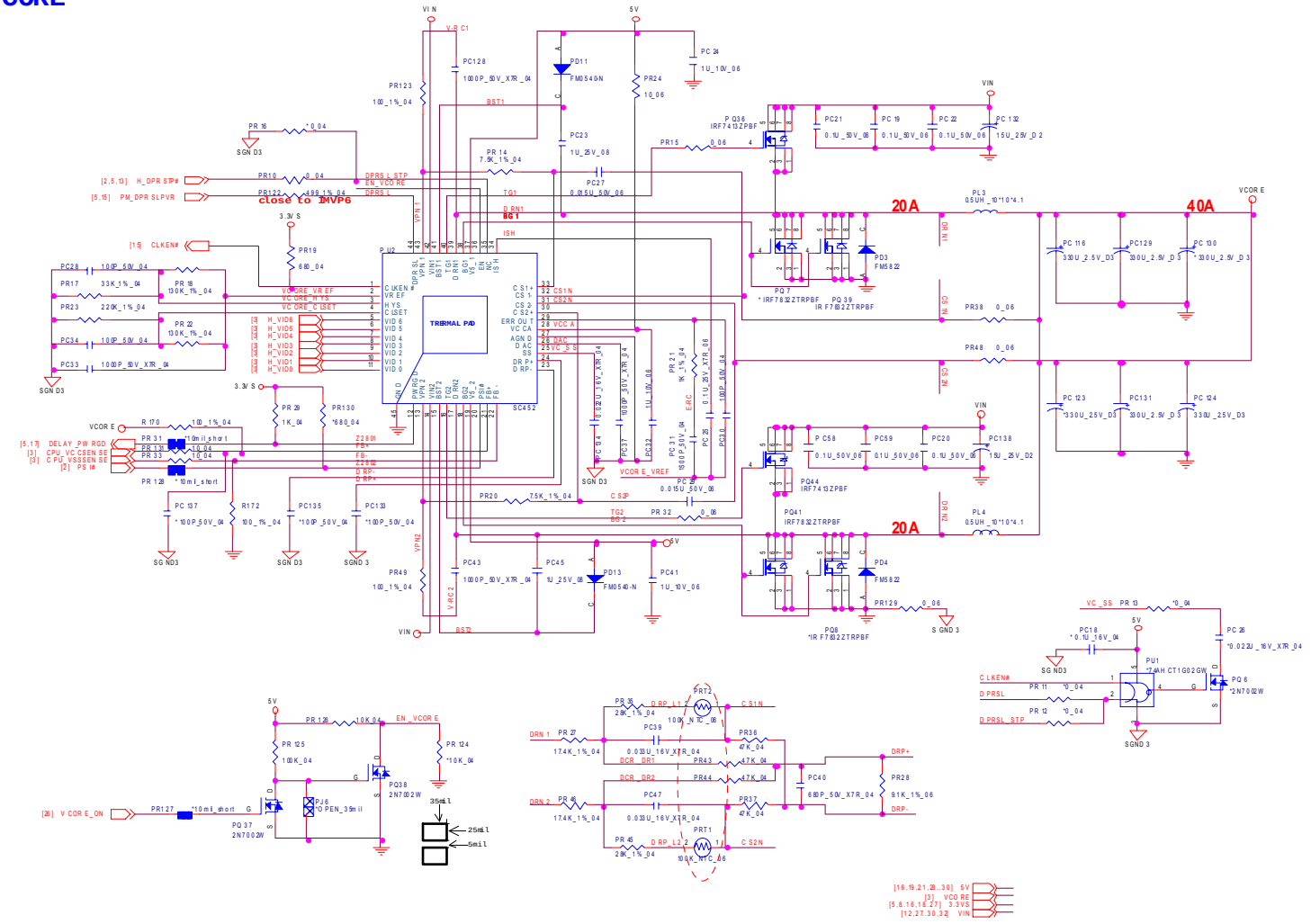

Power AC-IN, Charger

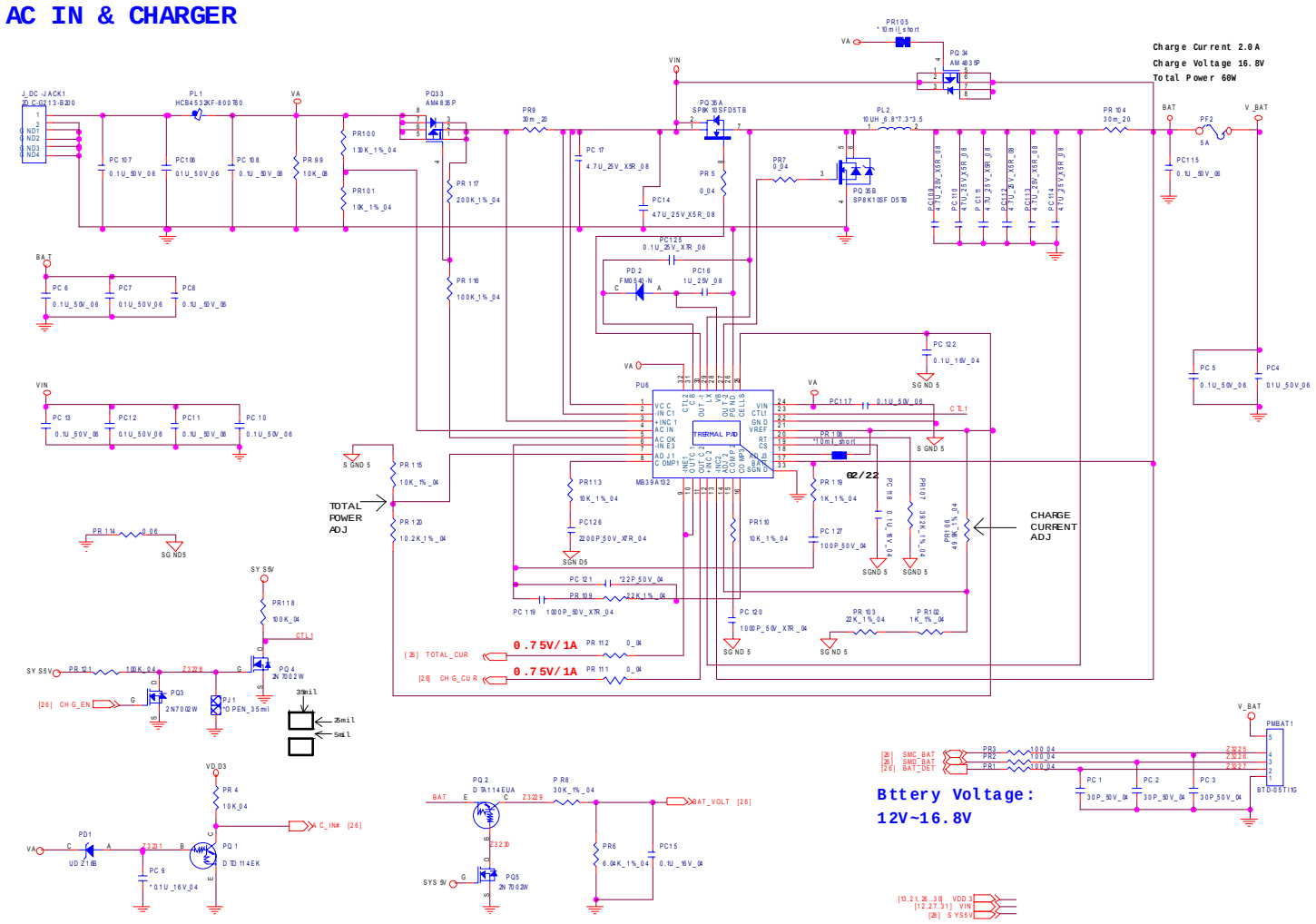

Sheet 32 of 40
Power AC-IN, Charger

Multi I/O Board 1/2

Sheet 33 of 40
Multi I/O Board 1/2

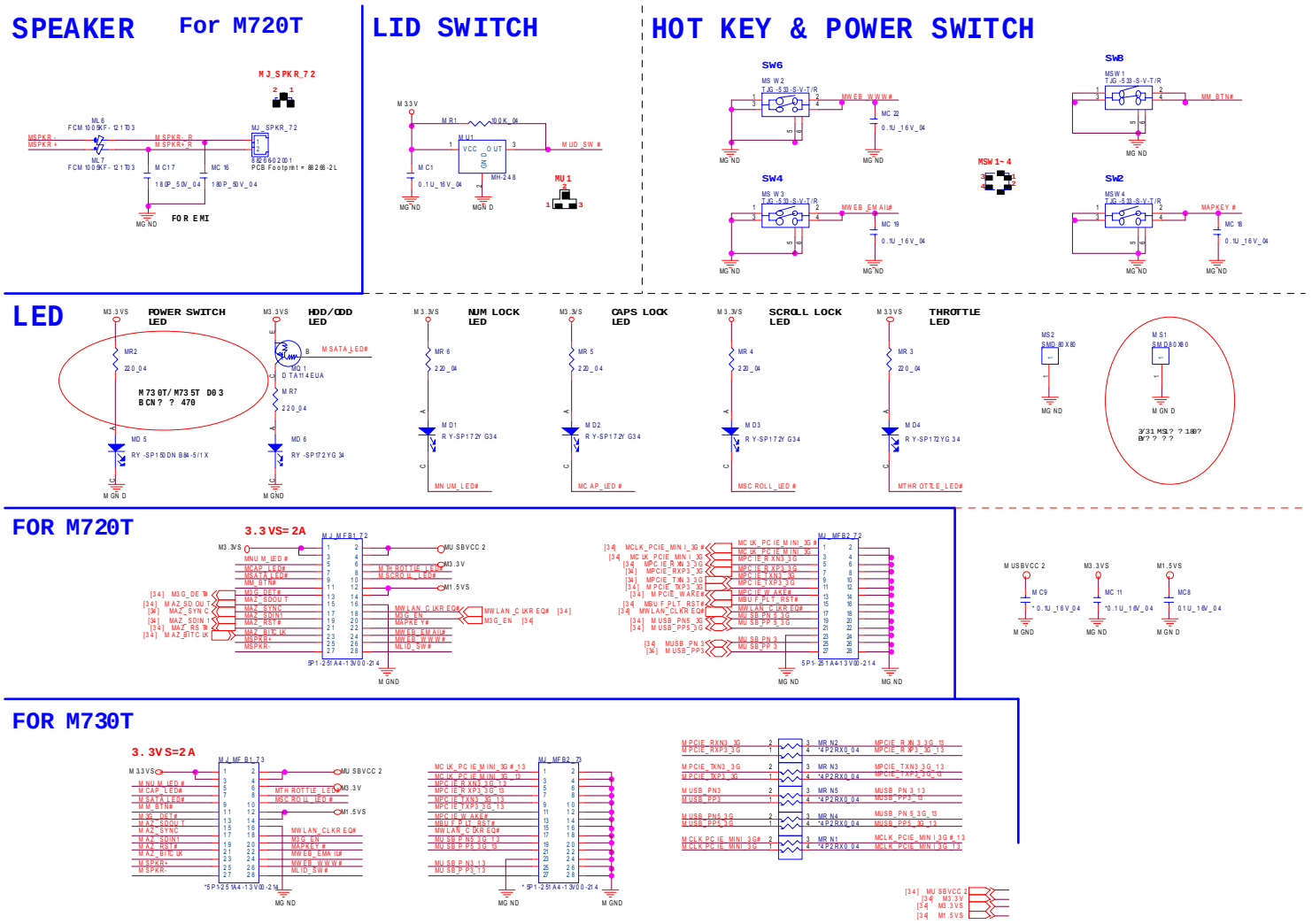

Multi I/O Board 2/2

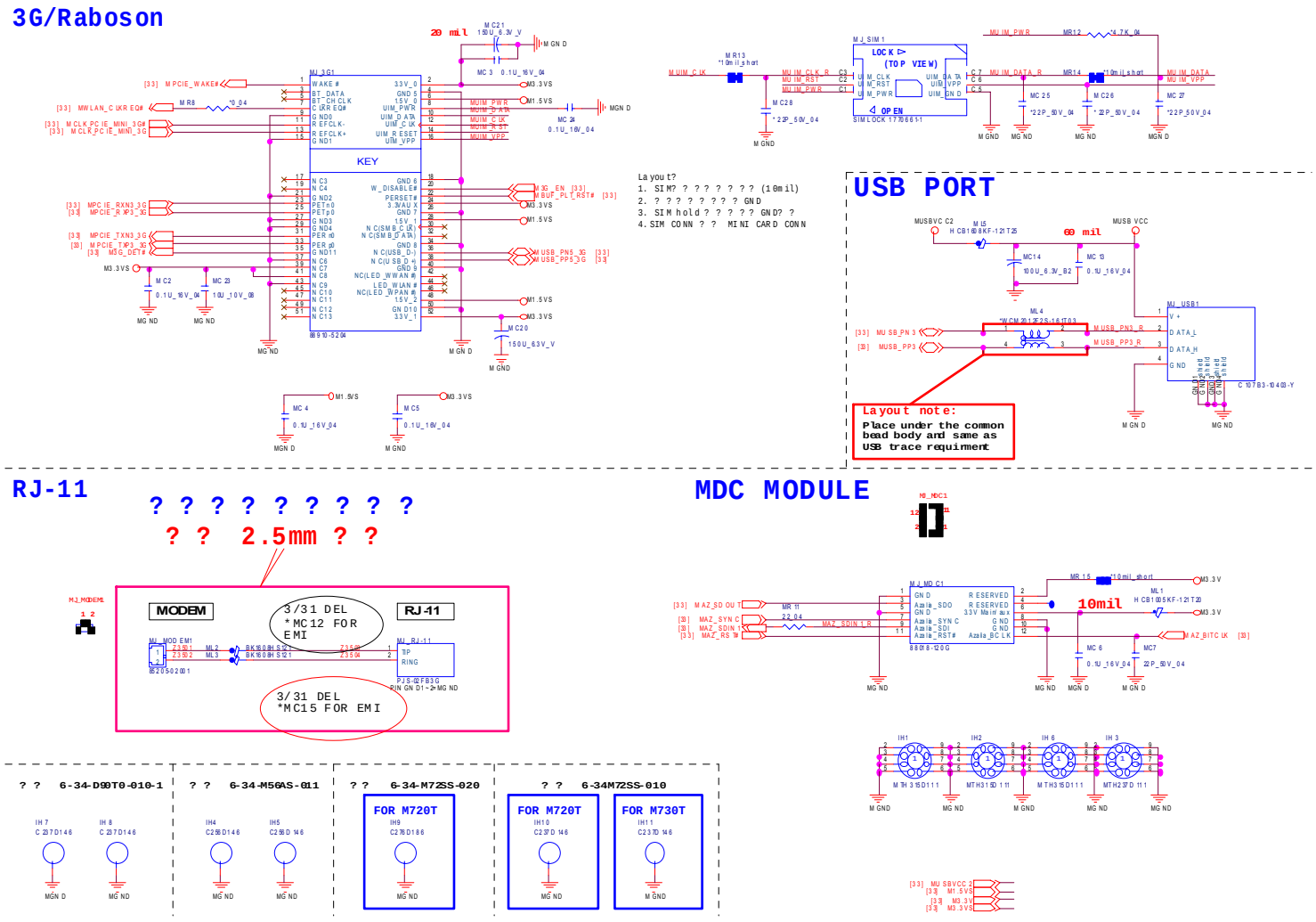

Sheet 34 of 40
Multi I/O Board 2/2

Finger Printer Board

Sheet 35 of 40
Finger Printer
Board

Finger Printer

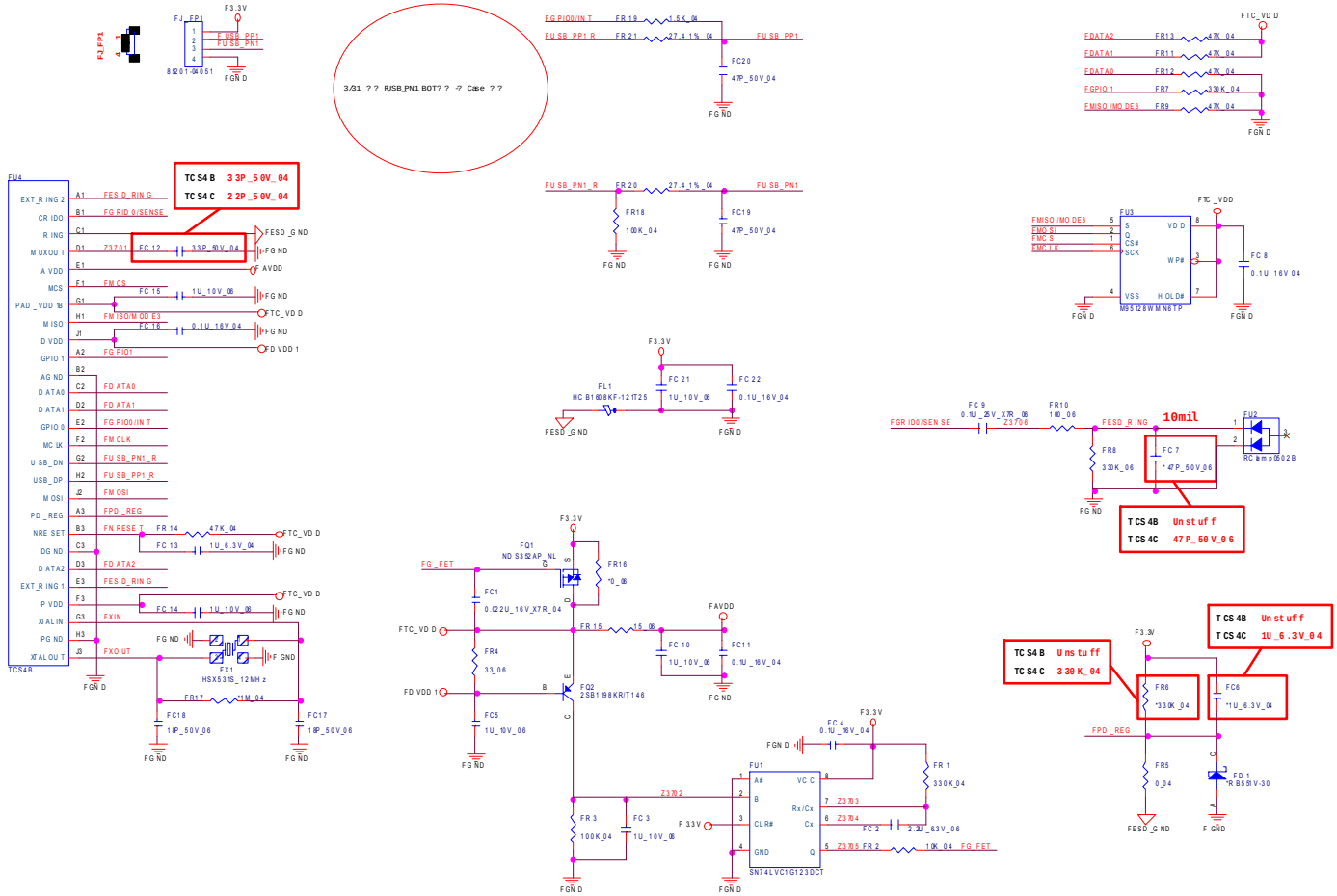

Click Board

CLICK BOARD

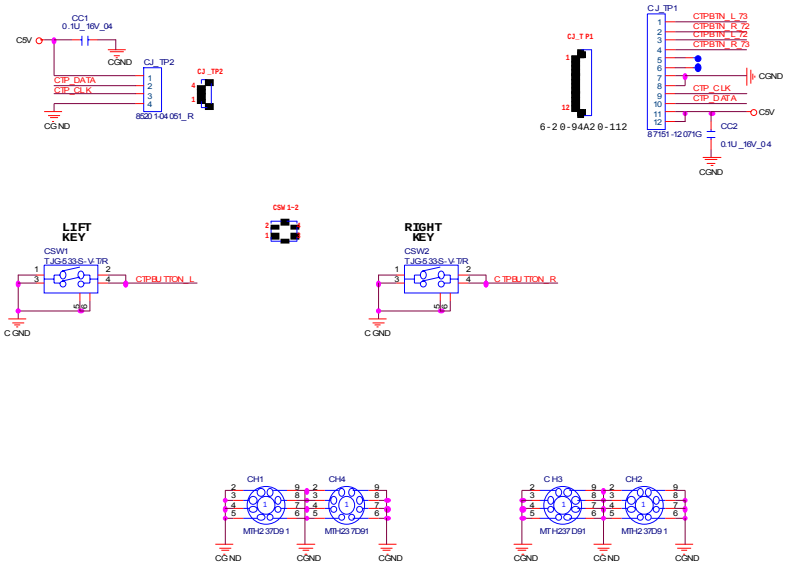

Sheet 36 of 40
Click Board

For M720T	For M730T
	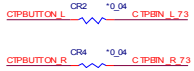

M730T ODD Bridge Board

M730T ODD BRIDGE BOARD

Sheet 37 of 40
M730T ODD Bridge Board

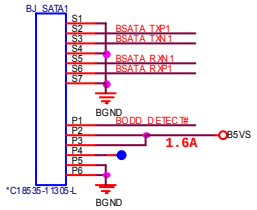

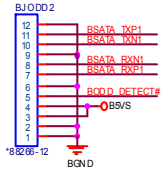

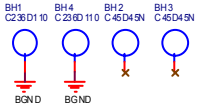

M730T Audio Board

M730T AUDIO BRIDGE BOARD

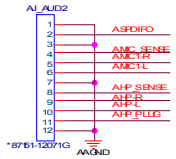

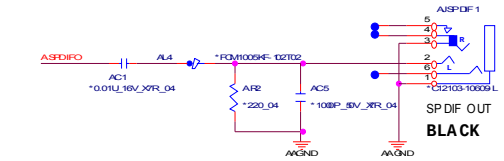

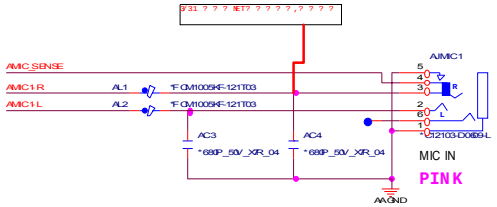

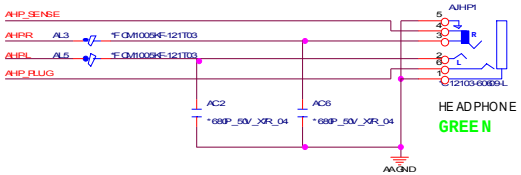

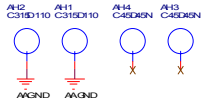

Sheet 38 of 40
M730T Audio Board

Power Sequence Diagram

Sheet 39 of 40
Power Sequence Diagram

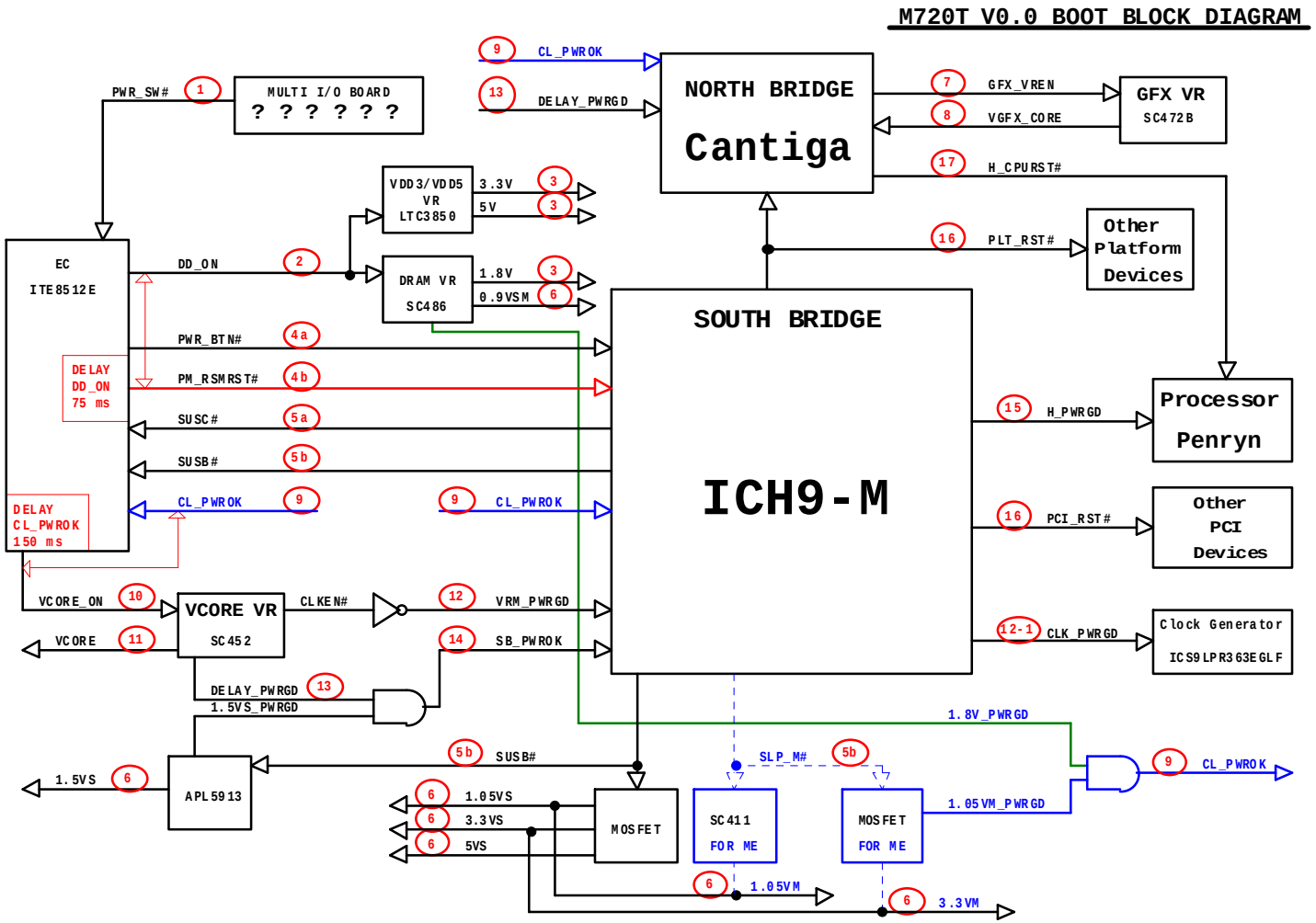

Power Sequence v3.0

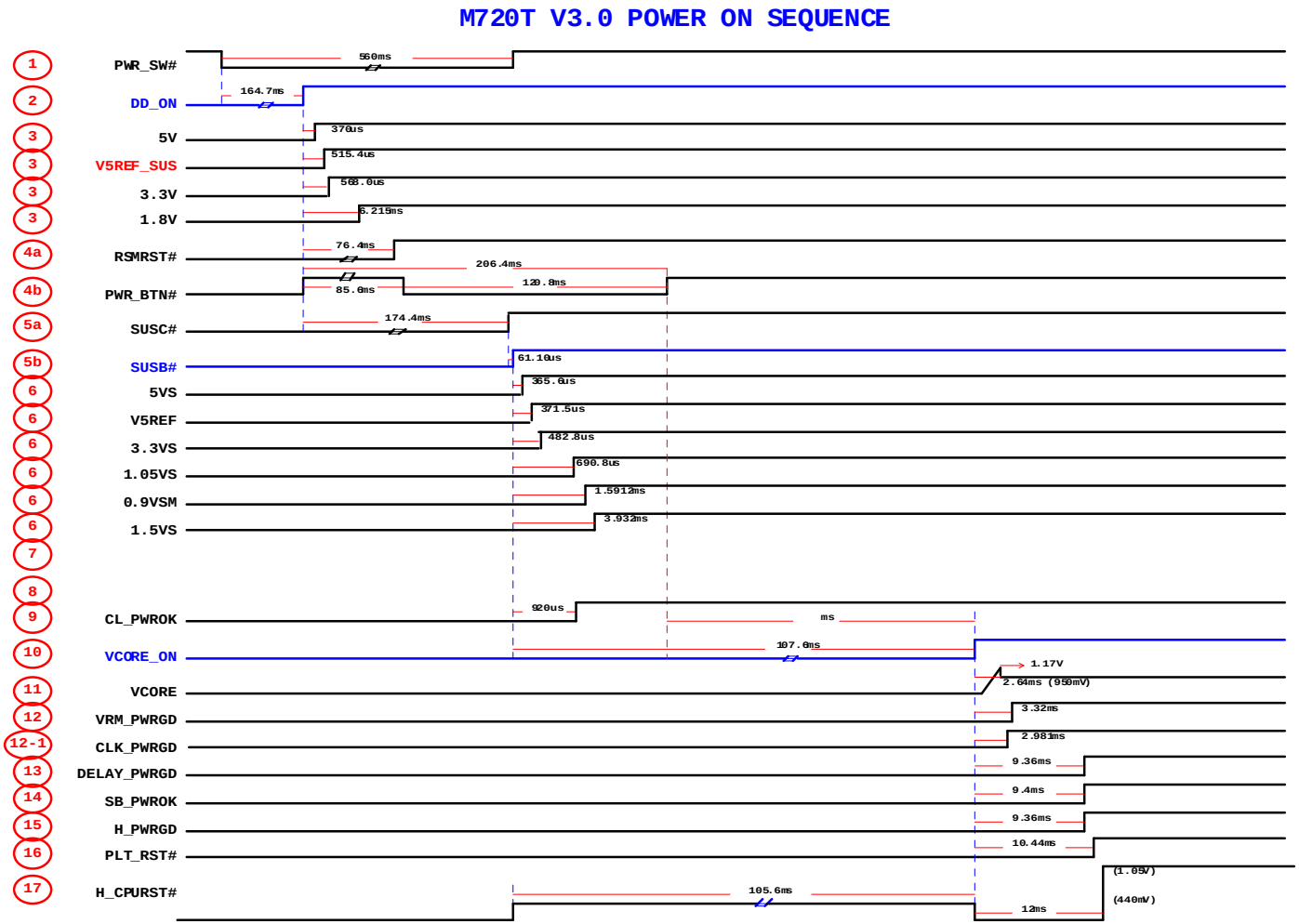

Sheet 40 of 40
Power Sequence
v3.0