PHQAA

Marseille 10R/10RG

LA-6832P REV 0.2 Schematic

Intel Processor(Sandy Bridge) / PCH(Cougar Point)
2010-09-03 Rev 0.1

Security Classification	Compal Secret Data		
Issued Date	2010/09/03	Deciphered Date	2012/12/31

THIS SHEET OF ENGINEERING DRAWING IS THE PROPRIETARY PROPERTY OF COMPAL ELECTRONICS, INC. AND CONTAINS CONFIDENTIAL AND TRADE SECRET INFORMATION. THIS SHEET MAY NOT BE TRANSFERED FROM THE CUSTODY OF THE COMPETENT DIVISION OF R&D DEPARTMENT EXCEPT AS AUTHORIZED BY COMPAL ELECTRONICS, INC. NEITHER THIS SHEET NOR THE INFORMATION IT CONTAINS MAY BE USED BY OR DISCLOSED TO ANY THIRD PARTY WITHOUT PRIOR WRITTEN CONSENT OF COMPAL ELECTRONICS, INC.

Compal Electronics, Inc.

Title: *Cover Page*

Size	Document Number	Rev
B	PHQAA LA-6832P M/B	0.2

Date: Thursday, October 07, 2010 Sheet 1 of 45

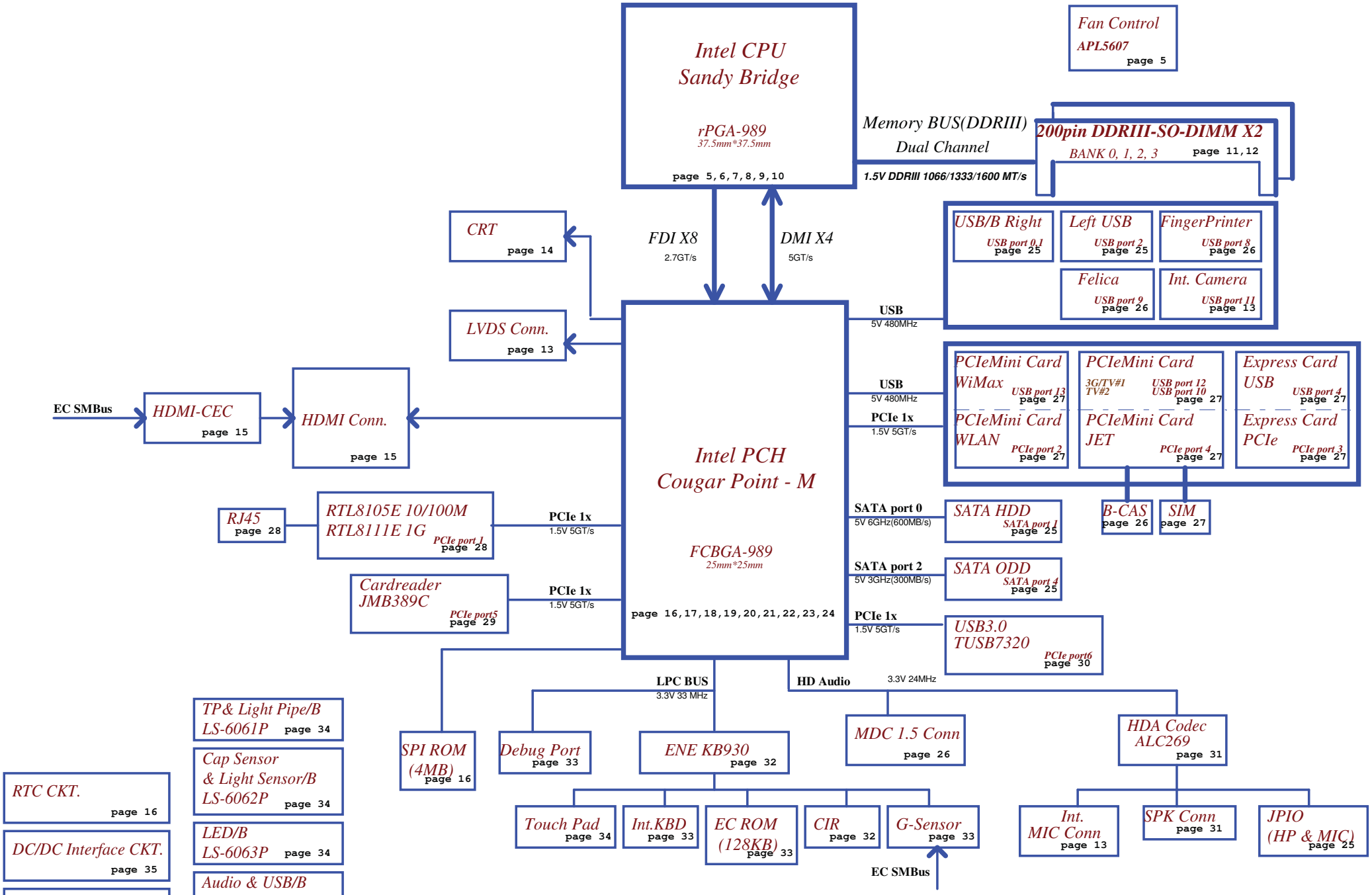

Security Classification	Compal Secret Data		
Issued Date	2010/09/03	Deciphered Date	2012/12/31

THIS SHEET OF ENGINEERING DRAWING IS THE PROPRIETARY PROPERTY OF COMPAL ELECTRONICS, INC. AND CONTAINS CONFIDENTIAL AND TRADE SECRET INFORMATION. THIS SHEET MAY NOT BE TRANSFERED FROM THE CUSTODY OF THE COMPETENT DIVISION OF R&D DEPARTMENT EXCEPT AS AUTHORIZED BY COMPAL ELECTRONICS, INC. NEITHER THIS SHEET NOR THE INFORMATION IT CONTAINS MAY BE USED BY OR DISCLOSED TO ANY THIRD PARTY WITHOUT PRIOR WRITTEN CONSENT OF COMPAL ELECTRONICS, INC.

Compal Electronics, Inc.

Title: **Block Diagram**

Size | Document Number: **PHQAA LA-6832P M/B** | Rev 0.2

Date: Thursday, October 07, 2010 | Sheet 2 of 45

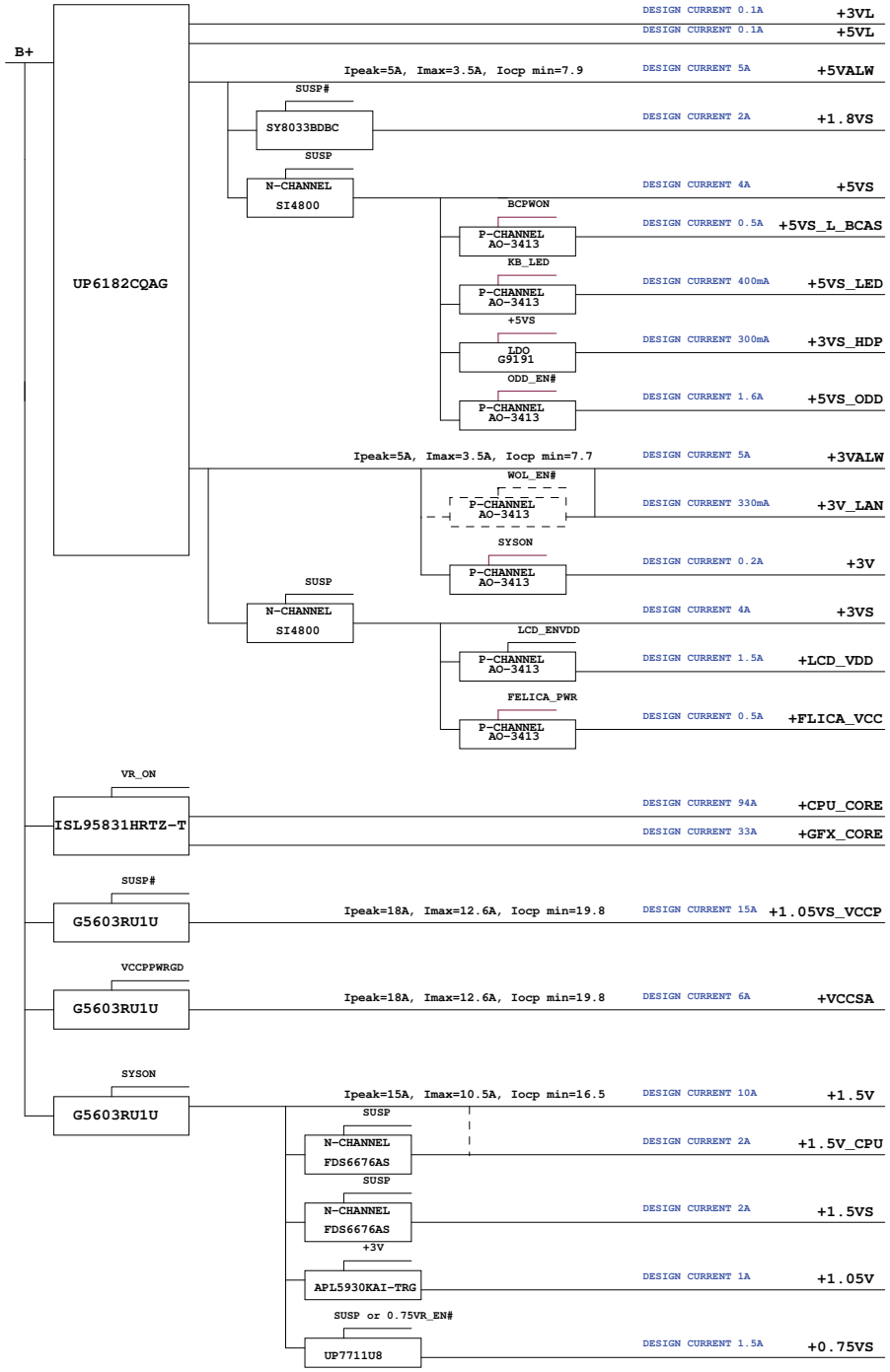

Security Classification	Compal Secret Data		
Issued Date	2010/09/03	Deciphered Date	2012/12/31

THIS SHEET OF ENGINEERING DRAWING IS THE PROPRIETARY PROPERTY OF COMPAL ELECTRONICS, INC. AND CONTAINS CONFIDENTIAL AND TRADE SECRET INFORMATION. THIS SHEET MAY NOT BE TRANSFERED FROM THE CUSTODY OF THE COMPETENT DIVISION OF R&D DEPARTMENT EXCEPT AS AUTHORIZED BY COMPAL ELECTRONICS, INC. NEITHER THIS SHEET NOR THE INFORMATION IT CONTAINS MAY BE USED BY OR DISCLOSED TO ANY THIRD PARTY WITHOUT PRIOR WRITTEN CONSENT OF COMPAL ELECTRONICS, INC.

Compal Electronics, Inc.

Title: **Power Tree**

Size | Document Number: **PHQAA LA-6832P M/B** | Rev 0.3

Date: Thursday, October 07, 2010 | Sheet 3 of 45

Voltage Rails

(O MEANS ON X MEANS OFF)

power plane / State	+RTCVCC	B+	+5VL +3VL	+5VALW +3VALW +VSB	+1.5V	+5VS +3VS +1.8VS +1.5VS +1.05VS +0.75VS +CPU_CORE +VGA_CORE +GFX_CORE +VTT +VRAM_1.5VS +3VS_DGPU +1.05VS_DGPU
S0	O	O	O	O	O	O
S1	O	O	O	O	O	O
S3	O	O	O	O	O	X
S5 S4/AC	O	O	O	O	X	X
S5 S4/ Battery only	O	O	O	X	X	X
S5 S4/AC & Battery don't exist	O	X	X	X	X	X

BTO Option Table

Function	HDMI				CPU		
description	HDMI				Arrandale	Clarksfield	
explain	UMA	Discrete/ Optimus	COMMON	CEC	Arrandale	Clarksfield	Clarksfield with S3 Power Saving
BTO	IHDMI@	DHDMI@	HDMI@	CEC@	M1@	M3@	PSM3@

Function	MINI PCI-E SLOT			LAN		Fingerprint	Modem	CIR	KB Light
description	SLOT2		SLOT1	LAN		Fingerprint	Modem	CIR	KB Light
explain	3G	TV Tuner	WIMAX	10/100M	Giga	Fingerprint	Modem	CIR	KB Light
BTO	3G@	TV@	WIMAX@	8105E@	8111E@	FP@	MDC@	CIR@	KBL@

Function	Felica	BLUE TOOTH	G-SENSOR	SKU		LVDS			Camera & Mic
description	Felica	BLUE TOOTH	G-SENSOR	SKU		3D Panel			Camera & Mic
explain	Felica	BLUE TOOTH	G-SENSOR	Discrete	Optimus	Discrete		Optimus	Camera & Mic
BTO	FELICA@	BT@	GSENSOR@	DIS@	OPT@	3D@	NO3D@	OPTFH@	CAM@

Function	S3 Power Saving		GPU					
description	S3 Power Saving		N11P & N11E			N11M		
explain	No Power Saving	Power Saving	VRAM	N11P	N11E	N11M-GE1	N11M-GE2	N11M-OP1
BTO	NOPS@	PS@	8PCS@	N11P@	N11E@	N11MGE1@	N11MGE2@	N11MOP@

Function	Card reader		New Card
description	JMB385C/389C		New Card
explain	JMB385C	JMB389C	New Card
BTO	JMB385@	JMB389@	NEW@

PCH SM Bus Address

Power	Device	HEX	Address
+3VS	DDR SO-DIMM 0	A0 H	1010 0000 b
+3VS	DDR SO-DIMM 1	A4 H	1010 0100 b
+3VS	Clock Generator	D2 H	1101 0010 b
+3VS	New Card		
+3VS	WLAN/WIMAX		
+3VS	Clock Generator		
+3VS	3G		

EC SM Bus1 Address

Power	Device	HEX	Address
+3VL	Smart Battery	16 H	0001 0110 b
+3VL	HDMI-CEC	34 H	0011 0100 b

Power	Device	HEX	Address
+3VL	Cap. Sensor		Virtual I2C

EC SM Bus2 Address

Power	Device	HEX	Address
+3VS	PCH	96 H	1001 0110 b
+3VS	NVIDIA GPU	9A H	1001 1010 b
+3VS	G-Sensor	40 H	0100 0000 b
+3VS	Light Sensor	52 H	0101 0010 b

STATE / SIGNAL	SLP_S3#	SLP_S4#	SLP_S5#
Full ON	HIGH	HIGH	HIGH
S1(Power On Suspend)	HIGH	HIGH	HIGH
S3 (Suspend to RAM)	LOW	HIGH	HIGH
S4 (Suspend to Disk)	LOW	LOW	HIGH
S5 (Soft OFF)	LOW	LOW	LOW
G3	LOW	LOW	LOW

Security Classification	Compal Secret Data		
Issued Date	2010/09/03	Deciphered Date	2012/12/31

THIS SHEET OF ENGINEERING DRAWING IS THE PROPRIETARY PROPERTY OF COMPAL ELECTRONICS, INC. AND CONTAINS CONFIDENTIAL AND TRADE SECRET INFORMATION. THIS SHEET MAY NOT BE TRANSFERED FROM THE CUSTODY OF THE COMPETENT DIVISION OF R&D DEPARTMENT EXCEPT AS AUTHORIZED BY COMPAL ELECTRONICS, INC. NEITHER THIS SHEET NOR THE INFORMATION IT CONTAINS MAY BE USED BY OR DISCLOSED TO ANY THIRD PARTY WITHOUT PRIOR WRITTEN CONSENT OF COMPAL ELECTRONICS, INC.

Compal Electronics, Inc.

Title: ***Notes List***

Size: Custom | Document Number: **PHQAA LA-6832P M/B** | Rev: 0.2

Date: Thursday, October 07, 2010 | Sheet 4 of 45

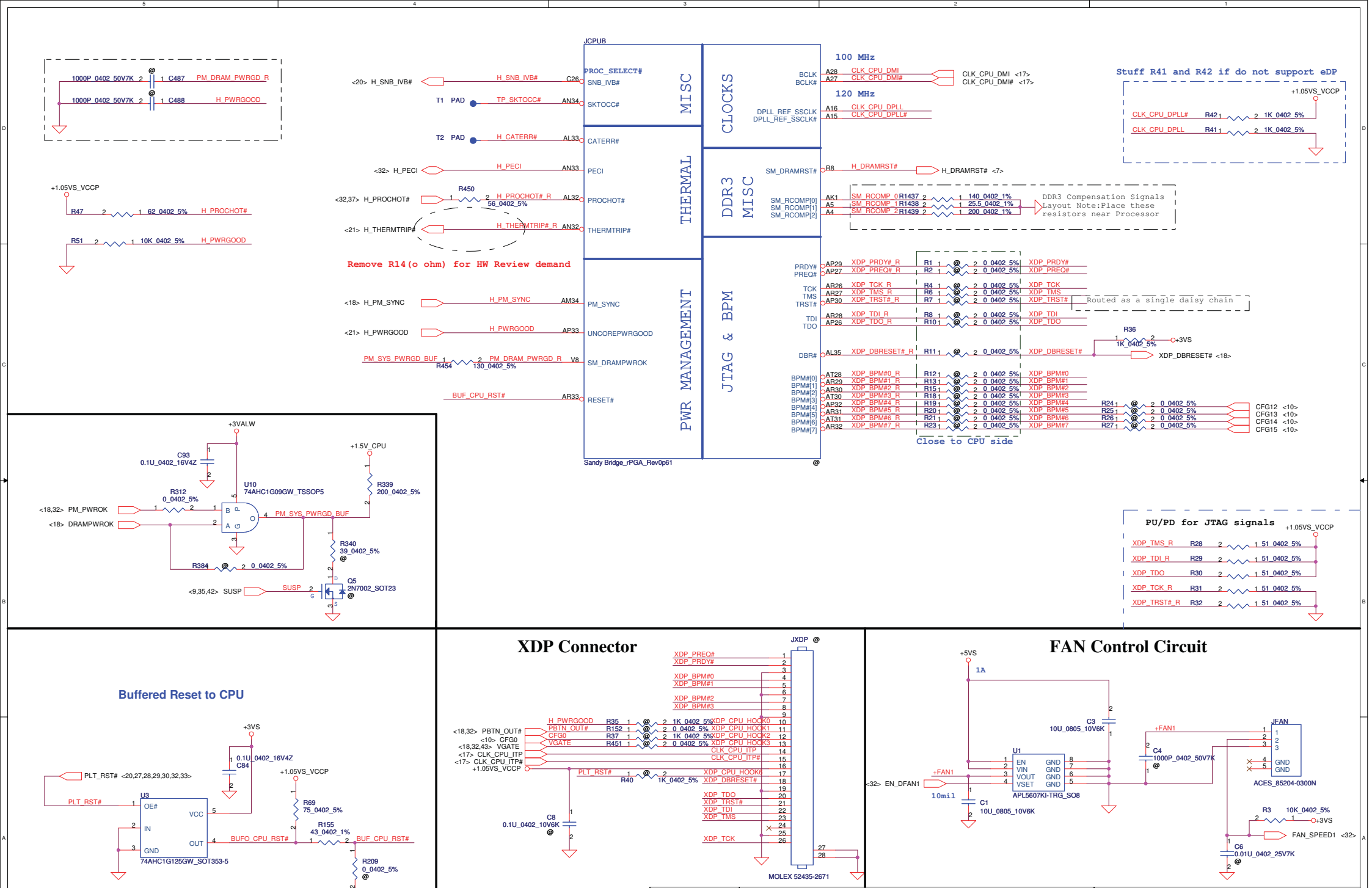

Security Classification	Compal Secret Data		
Issued Date	2010/09/03	Deciphered Date	2012/12/31

THIS SHEET OF ENGINEERING DRAWING IS THE PROPRIETARY PROPERTY OF COMPAL ELECTRONICS, INC. AND CONTAINS CONFIDENTIAL AND TRADE SECRET INFORMATION. THIS SHEET MAY NOT BE TRANSFERRED FROM THE CUSTODY OF THE COMPETENT DIVISION OF R&D DEPARTMENT EXCEPT AS AUTHORIZED BY COMPAL ELECTRONICS, INC. NEITHER THIS SHEET NOR THE INFORMATION IT CONTAINS MAY BE USED BY OR DISCLOSED TO ANY THIRD PARTY WITHOUT PRIOR WRITTEN CONSENT OF COMPAL ELECTRONICS, INC.

Compal Electronics, Inc.

Title: *Sandy Bridge_JTAG/XDP/FAN*

Size: Custom | Document Number: **PHQAA LA-6832P M/B** | Rev: 0.2

Date: Thursday, October 07, 2010 | Sheet 5 of 45

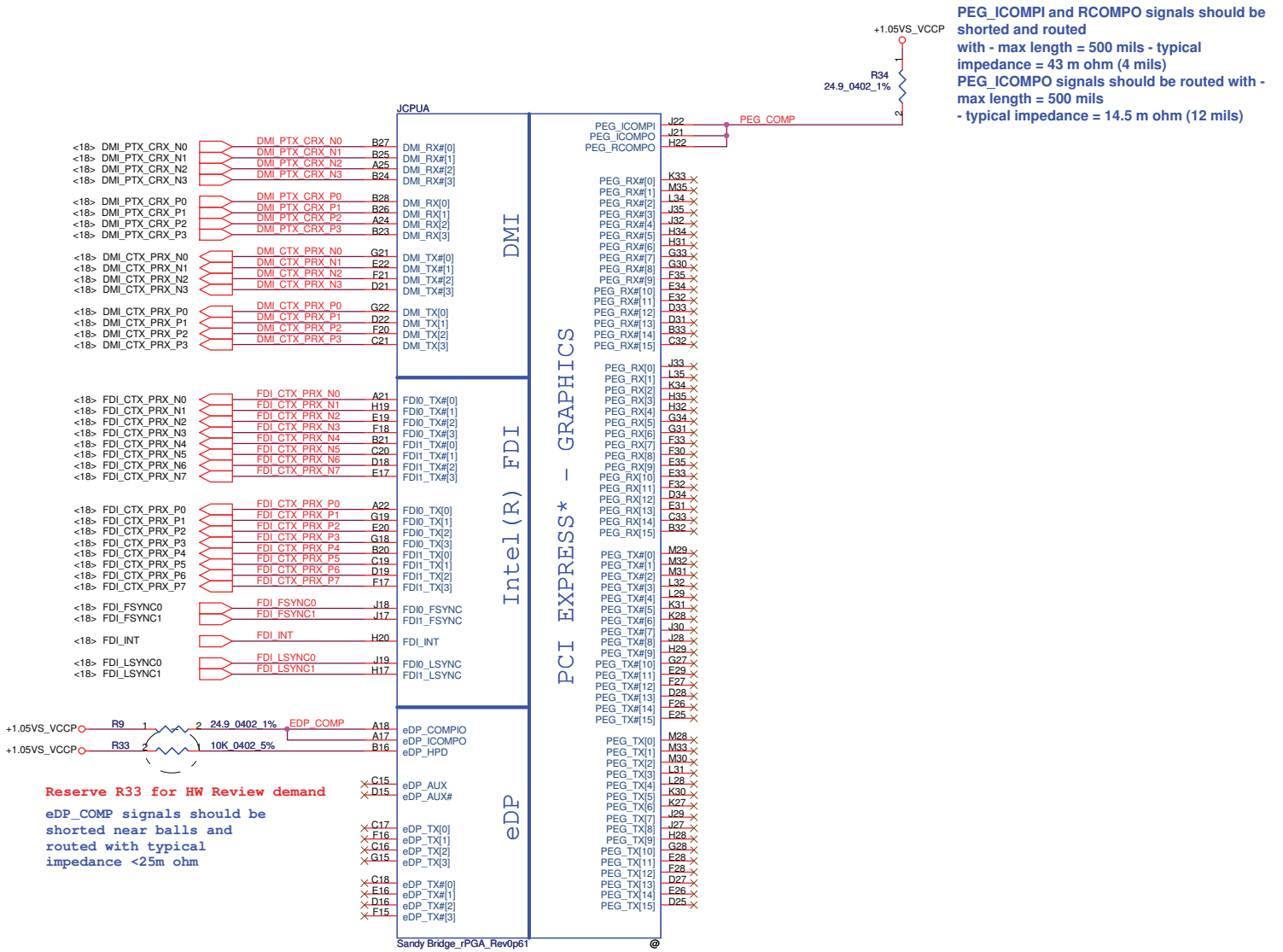

Security Classification	Compal Secret Data		
Issued Date	2010/09/03	Deciphered Date	2012/12/31

THIS SHEET OF ENGINEERING DRAWING IS THE PROPRIETARY PROPERTY OF COMPAL ELECTRONICS, INC. AND CONTAINS CONFIDENTIAL AND TRADE SECRET INFORMATION. THIS SHEET MAY NOT BE TRANSFERED FROM THE CUSTODY OF THE COMPETENT DIVISION OF R&D DEPARTMENT EXCEPT AS AUTHORIZED BY COMPAL ELECTRONICS, INC. NEITHER THIS SHEET NOR THE INFORMATION IT CONTAINS MAY BE USED BY OR DISCLOSED TO ANY THIRD PARTY WITHOUT PRIOR WRITTEN CONSENT OF COMPAL ELECTRONICS, INC.

Compal Electronics, Inc.

Title: ***Sandy Bridge_DMI/PEG/FDI***

Size: Custom | Document Number: **PHQAA LA-6832P M/B** | Rev: 0.2

Date: Thursday, October 07, 2010 | Sheet 6 of 45

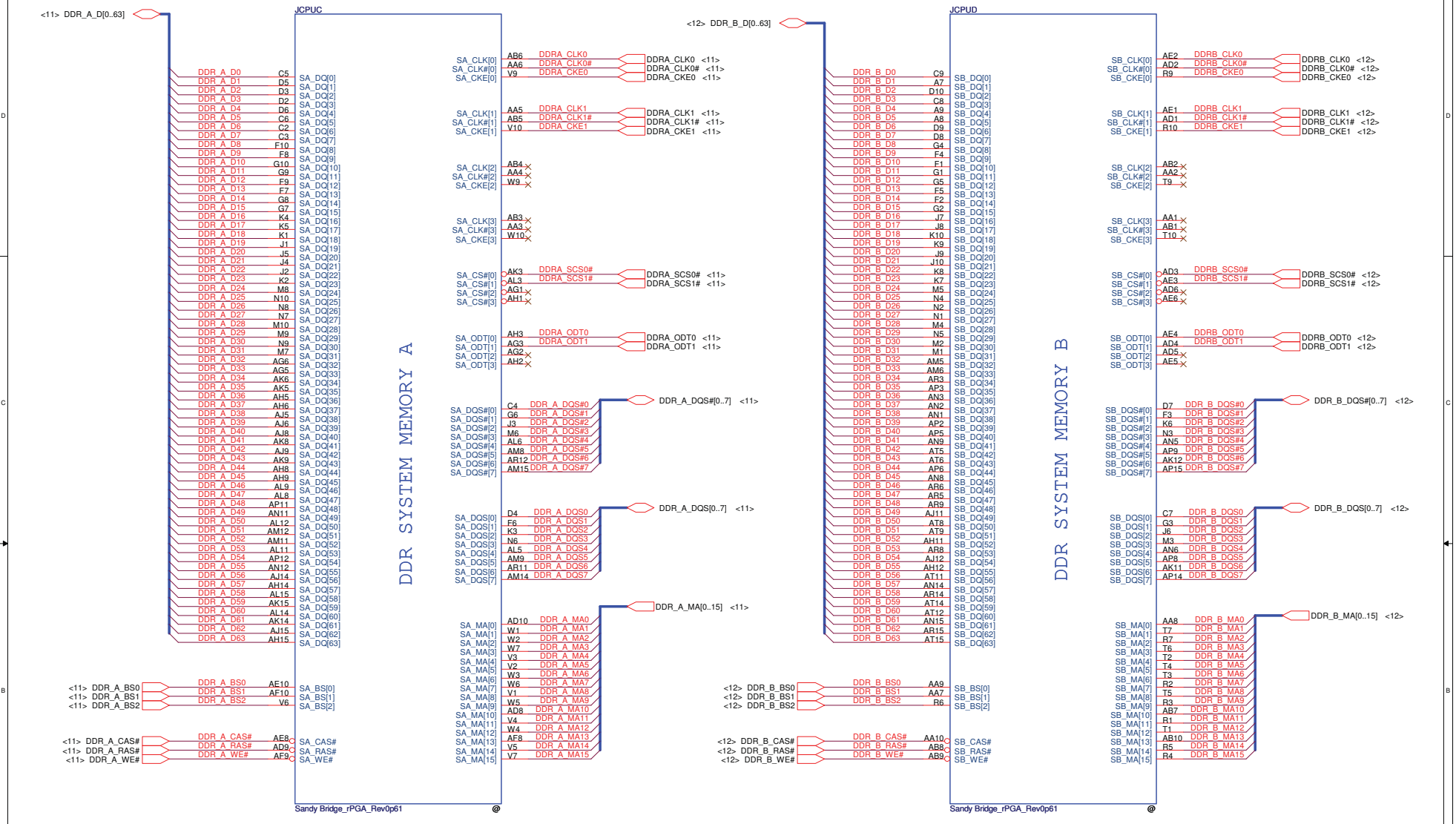

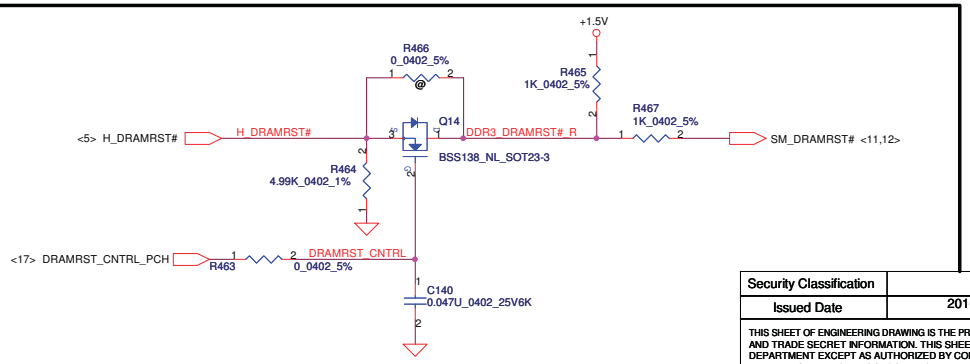

Security Classification	Compal Secret Data		
Issued Date	2010/09/03	Deciphered Date	2012/12/31

THIS SHEET OF ENGINEERING DRAWING IS THE PROPRIETARY PROPERTY OF COMPAL ELECTRONICS, INC. AND CONTAINS CONFIDENTIAL AND TRADE SECRET INFORMATION. THIS SHEET MAY NOT BE TRANSFERRED FROM THE CUSTODY OF THE COMPETENT DIVISION OF R&D DEPARTMENT EXCEPT AS AUTHORIZED BY COMPAL ELECTRONICS, INC. NEITHER THIS SHEET NOR THE INFORMATION IT CONTAINS MAY BE USED BY OR DISCLOSED TO ANY THIRD PARTY WITHOUT PRIOR WRITTEN CONSENT OF COMPAL ELECTRONICS, INC.

Compal Electronics, Inc.

Title: ***Sandy Bridge_DDR3***

Size: Custom | Document Number: **PHQAA LA-6832P M/B** | Rev: 0.2

Date: Thursday, October 07, 2010 | Sheet 7 of 45

POWER

JCPUF

94A (Quad Core 45W)
53A (SV 35W)

8.5A

+CPU_CORE

CORE SUPPLY

PEG AND DDR

SVID

SENSE LINES

Sandy Bridge_rPGA_Rev0p61

+1.05VS_VCCP Decoupling:
2X 330U (6m ohm), 12X 22U

TOP Socket Cavity x 7

Bottom Socket Cavity x 5

ESR 9mohm

Co-lay for Cost Down Plan

+CPU_CORE Decoupling:
4X 470U (4m ohm), 16X 22U, 10X 10U

Bottom Socket Cavity

Top Socket Edge

9/02 Remove C126, C131 by Power Demand

Top Socket Cavity

Pull high resistor on VR side

Close to CPU

Close to CPU

Co-Lay with C2, C5, C7, C9

Bottom Socket Edge

9/02 Add C898 3Pin Bulk Cap by Power Demand

9/02 Change C890, C891, C894 from SGA00005R00 to SGA00004X80 for Power demand

Security Classification	Compal Secret Data			Compal Electronics, Inc.
Issued Date	2010/09/03	Deciphered Date	2012/12/31	Title: Sandy Bridge_POWER-1
				Size: Custom; Document Number: PHQAA LA-6832P M/B; Rev: 0.2
				Date: Thursday, October 07, 2010; Sheet 8 of 45

THIS SHEET OF ENGINEERING DRAWING IS THE PROPRIETARY PROPERTY OF COMPAL ELECTRONICS, INC. AND CONTAINS CONFIDENTIAL AND TRADE SECRET INFORMATION. THIS SHEET MAY NOT BE TRANSFERED FROM THE CUSTODY OF THE COMPETENT DIVISION OF R&D DEPARTMENT EXCEPT AS AUTHORIZED BY COMPAL ELECTRONICS, INC. NEITHER THIS SHEET NOR THE INFORMATION IT CONTAINS MAY BE USED BY OR DISCLOSED TO ANY THIRD PARTY WITHOUT PRIOR WRITTEN CONSENT OF COMPAL ELECTRONICS, INC.

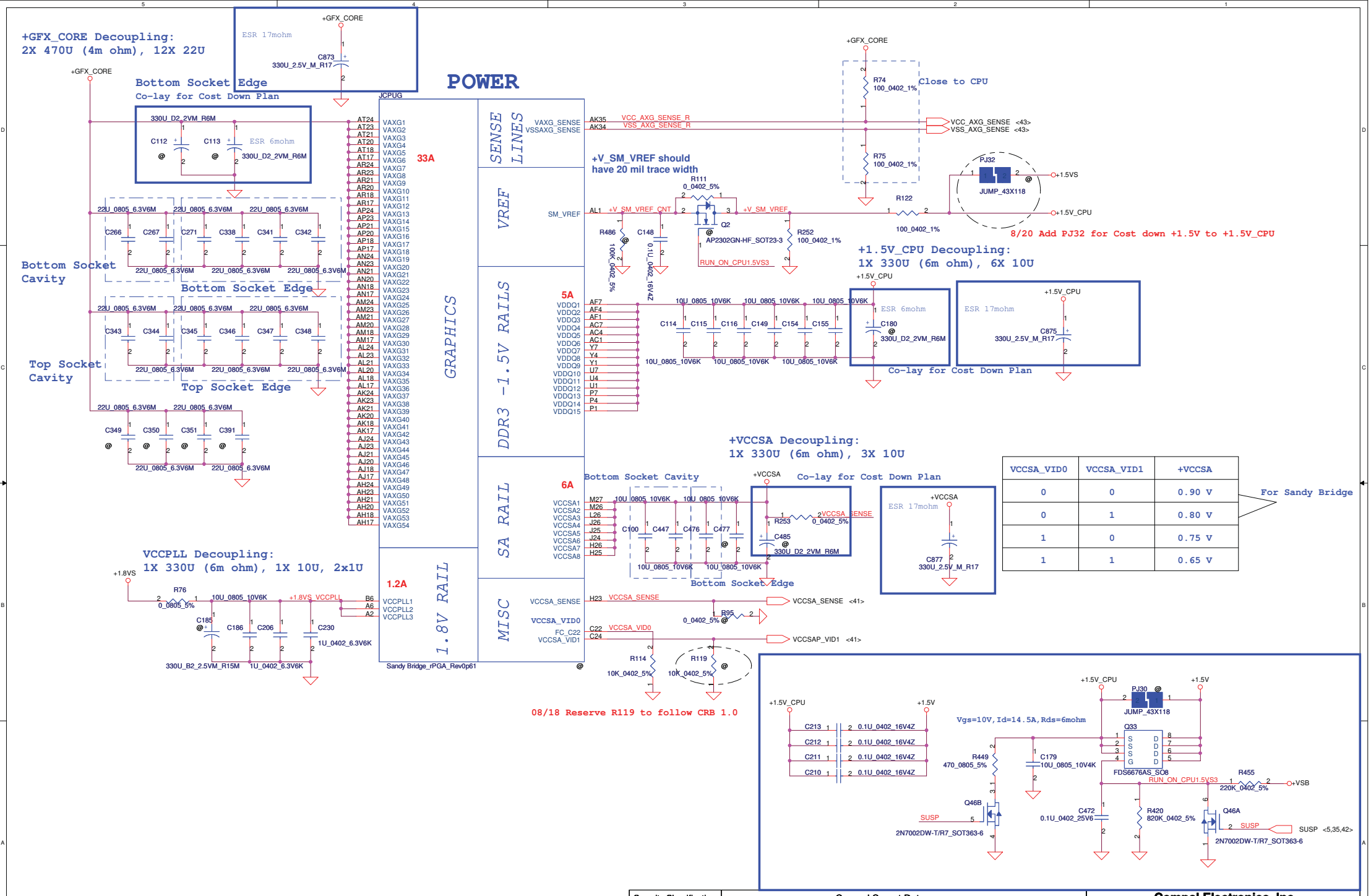

VCCSA_VID0	VCCSA_VID1	+VCCSA
0	0	0.90 V
0	1	0.80 V
1	0	0.75 V
1	1	0.65 V

For Sandy Bridge

Security Classification	Compal Secret Data		
Issued Date	2010/09/03	Deciphered Date	2012/12/31

THIS SHEET OF ENGINEERING DRAWING IS THE PROPRIETARY PROPERTY OF COMPAL ELECTRONICS, INC. AND CONTAINS CONFIDENTIAL AND TRADE SECRET INFORMATION. THIS SHEET MAY NOT BE TRANSFERED FROM THE CUSTODY OF THE COMPETENT DIVISION OF R&D DEPARTMENT EXCEPT AS AUTHORIZED BY COMPAL ELECTRONICS, INC. NEITHER THIS SHEET NOR THE INFORMATION IT CONTAINS MAY BE USED BY OR DISCLOSED TO ANY THIRD PARTY WITHOUT PRIOR WRITTEN CONSENT OF COMPAL ELECTRONICS, INC.

Compal Electronics, Inc.

Title: *Sandy Bridge_POWER-2*

Size: Custom | Document Number: **PHQAA LA-6832P M/B** | Rev: 0.2

Date: Thursday, October 07, 2010 | Sheet 9 of 45

CFG Straps for Processor

(CFG[17:0] internal pull high to VCCIO)

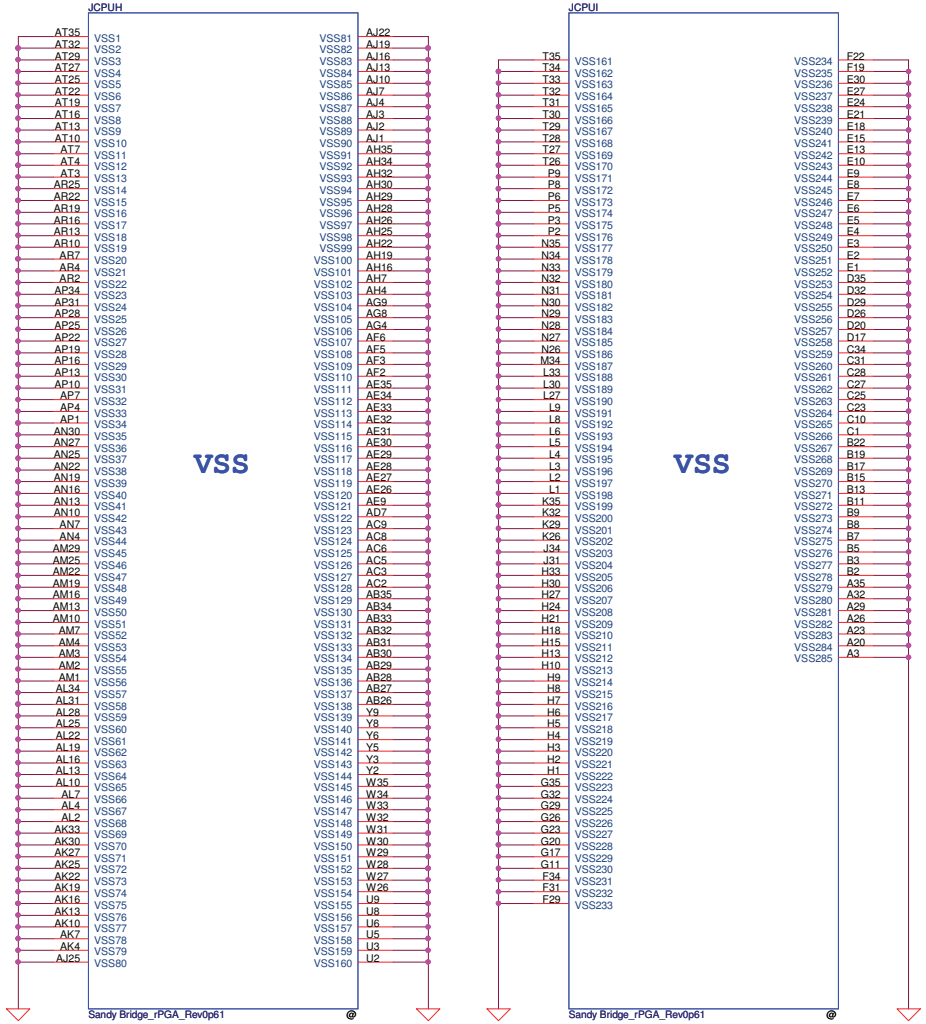

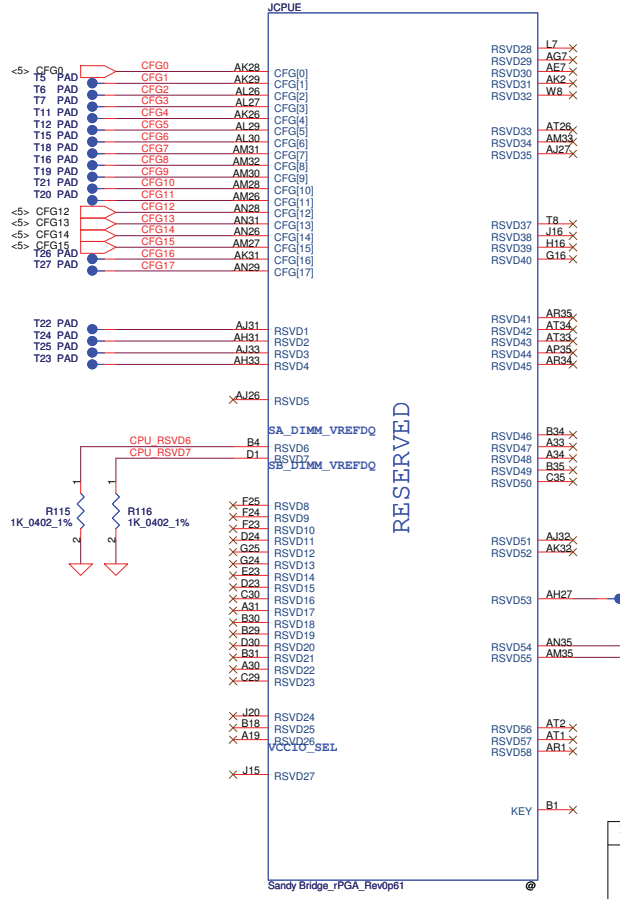

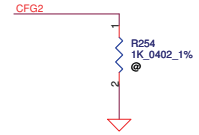

PEG Static Lane Reversal - CFG2 is for the 16x	
CFG2	* 1: Normal Operation; Lane # definition matches socket pin map definition 0:Lane Reversed

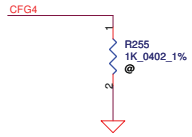

Embedded Display Port Presence Strap	
CFG4	* 1 : Disabled; No Physical Display Port attached to Embedded Display Port 0 : Enabled; An external Display Port device is connected to the Embedded Display Port

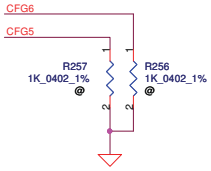

PCIE Port Bifurcation Straps	
CFG[6:5]	*11: (Default) x16 - Device 1 functions 1 and 2 disabled 10: x8, x8 - Device 1 function 1 enabled ; function 2 disabled 01: Reserved - (Device 1 function 1 disabled ; function 2 enabled) 00: x8,x4,x4 - Device 1 functions 1 and 2 enabled

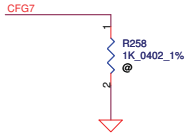

PEG DEFER TRAINING	
CFG7	1: (Default) PEG Train immediately following xxRESETB de assertion 0: PEG Wait for BIOS for training

Security Classification	Compal Secret Data		
Issued Date	2010/09/03	Deciphered Date	2012/12/31

THIS SHEET OF ENGINEERING DRAWING IS THE PROPRIETARY PROPERTY OF COMPAL ELECTRONICS, INC. AND CONTAINS CONFIDENTIAL AND TRADE SECRET INFORMATION. THIS SHEET MAY NOT BE TRANSFERED FROM THE CUSTODY OF THE COMPETENT DIVISION OF R&D DEPARTMENT EXCEPT AS AUTHORIZED BY COMPAL ELECTRONICS, INC. NEITHER THIS SHEET NOR THE INFORMATION IT CONTAINS MAY BE USED BY OR DISCLOSED TO ANY THIRD PARTY WITHOUT PRIOR WRITTEN CONSENT OF COMPAL ELECTRONICS, INC.

Compal Electronics, Inc.

Title: *Sandy Bridge_GND/RSVD/CFG*

Size: Custom | Document Number: PHQAA LA-6831P M/B | Rev: 0.2

Date: Thursday, October 07, 2010 | Sheet 10 of 45

DDR3 SO-DIMM A
Reverse Type

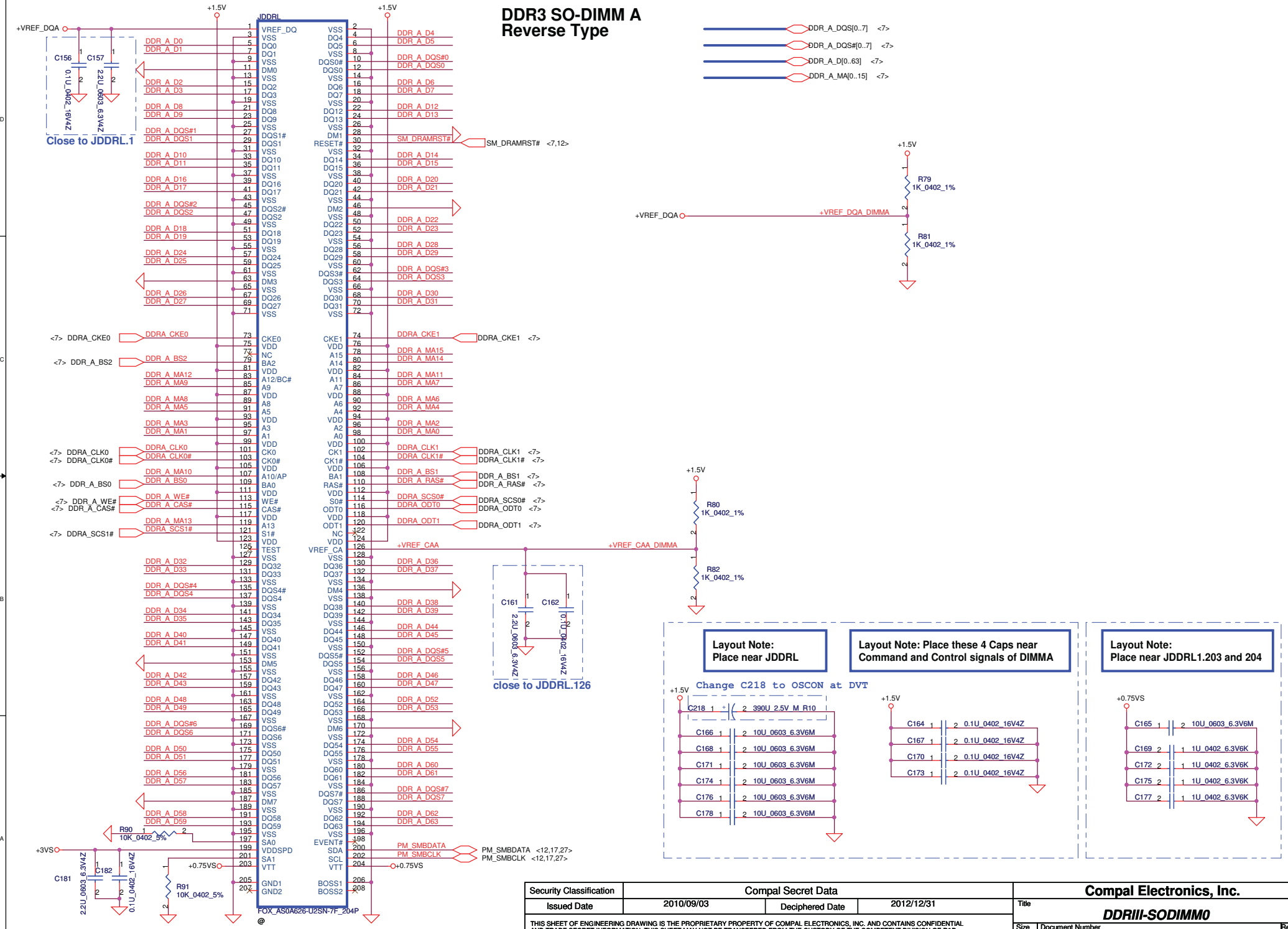

Security Classification	Compal Secret Data		
Issued Date	2010/09/03	Deciphered Date	2012/12/31

THIS SHEET OF ENGINEERING DRAWING IS THE PROPRIETARY PROPERTY OF COMPAL ELECTRONICS, INC. AND CONTAINS CONFIDENTIAL AND TRADE SECRET INFORMATION. THIS SHEET MAY NOT BE TRANSFERED FROM THE CUSTODY OF THE COMPETENT DIVISION OF R&D DEPARTMENT EXCEPT AS AUTHORIZED BY COMPAL ELECTRONICS, INC. NEITHER THIS SHEET NOR THE INFORMATION IT CONTAINS MAY BE USED BY OR DISCLOSED TO ANY THIRD PARTY WITHOUT PRIOR WRITTEN CONSENT OF COMPAL ELECTRONICS, INC.

Compal Electronics, Inc.

Title: ***DDRIII-SODIMM0***

Size: Custom | Document Number: **PHQAA LA-6832P M/B** | Rev: 0.2

Date: Thursday, October 07, 2010 | Sheet 11 of 45

Reverse Type
DDR3 SO-DIMM B

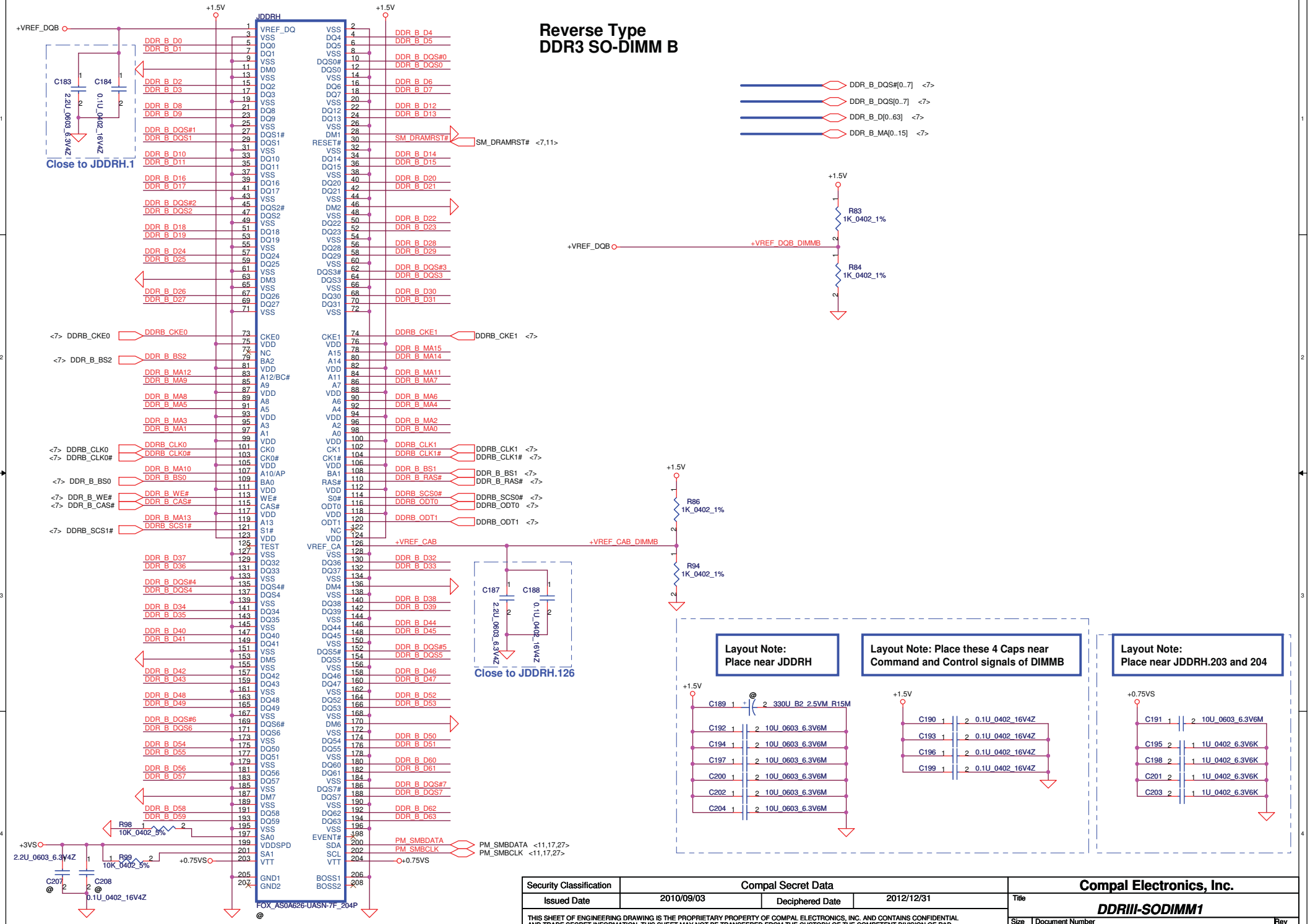

Security Classification	Compal Secret Data		
Issued Date	2010/09/03	Deciphered Date	2012/12/31

THIS SHEET OF ENGINEERING DRAWING IS THE PROPRIETARY PROPERTY OF COMPAL ELECTRONICS, INC. AND CONTAINS CONFIDENTIAL AND TRADE SECRET INFORMATION. THIS SHEET MAY NOT BE TRANSFERED FROM THE CUSTODY OF THE COMPETENT DIVISION OF R&D DEPARTMENT EXCEPT AS AUTHORIZED BY COMPAL ELECTRONICS, INC. NEITHER THIS SHEET NOR THE INFORMATION IT CONTAINS MAY BE USED BY OR DISCLOSED TO ANY THIRD PARTY WITHOUT PRIOR WRITTEN CONSENT OF COMPAL ELECTRONICS, INC.

Compal Electronics, Inc.

Title: ***DDRIII-SODIMM1***

Size: Custom | Document Number: **PHQAA LA-6832P M/B** | Rev: 0.2

Date: Thursday, October 07, 2010 | Sheet 12 of 45

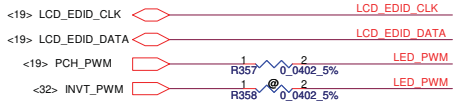

Close to LVDS Connector

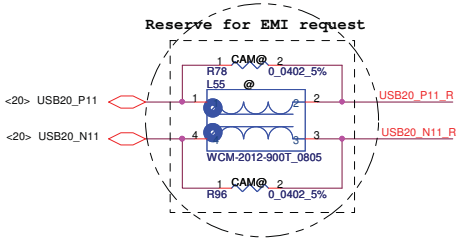

8/20 Swap USB20_P11 and USB20_N11 for layout request

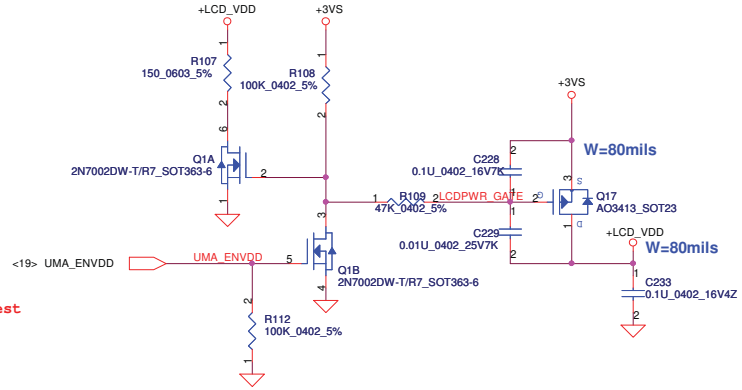

LCD/PANEL BD. Conn.

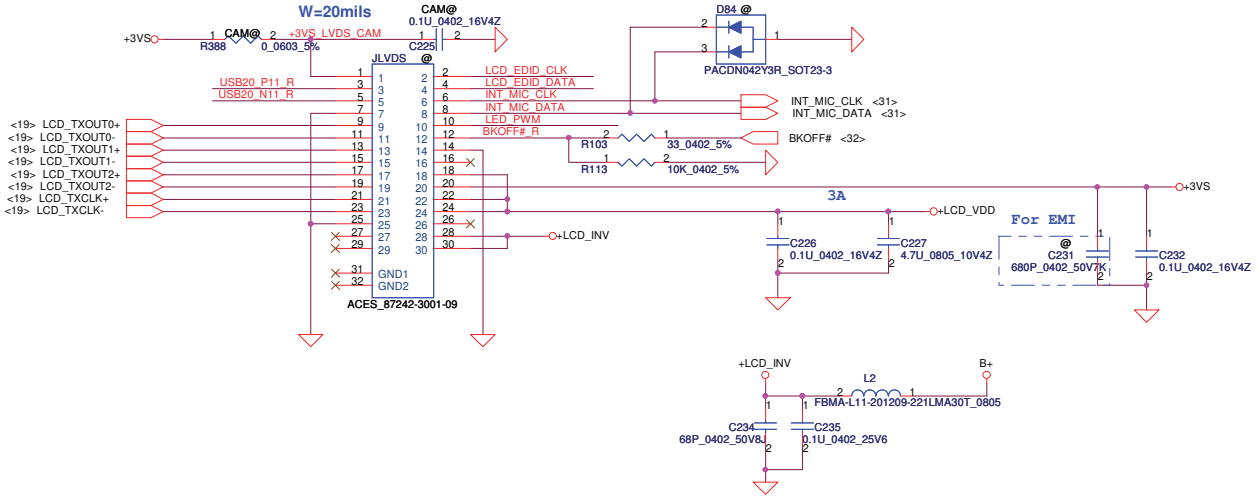

Security Classification	Compal Secret Data		
Issued Date	2010/09/03	Deciphered Date	2012/12/31

THIS SHEET OF ENGINEERING DRAWING IS THE PROPRIETARY PROPERTY OF COMPAL ELECTRONICS, INC. AND CONTAINS CONFIDENTIAL AND TRADE SECRET INFORMATION. THIS SHEET MAY NOT BE TRANSFERED FROM THE CUSTODY OF THE COMPETENT DIVISION OF R&D DEPARTMENT EXCEPT AS AUTHORIZED BY COMPAL ELECTRONICS, INC. NEITHER THIS SHEET NOR THE INFORMATION IT CONTAINS MAY BE USED BY OR DISCLOSED TO ANY THIRD PARTY WITHOUT PRIOR WRITTEN CONSENT OF COMPAL ELECTRONICS, INC.

Compal Electronics, Inc.

Title: *LVDS/eDP*

Size: Custom | Document Number: **PHQAA LA-6832P M/B** | Rev: 0.2

Date: Thursday, October 07, 2010 | Sheet 13 of 45

CRT CONNECTOR

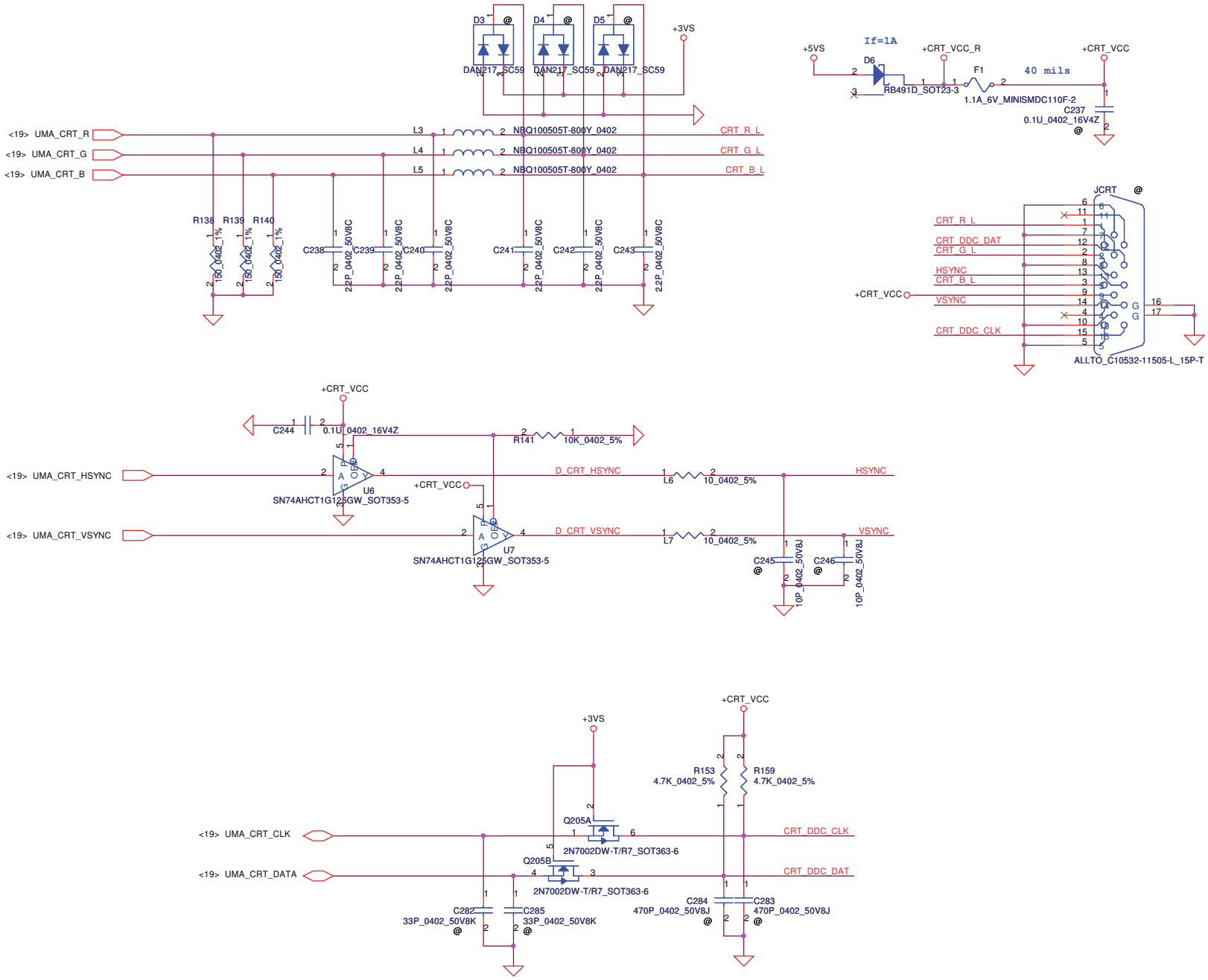

Security Classification	Compal Secret Data		
Issued Date	2010/09/03	Deciphered Date	2012/12/31

THIS SHEET OF ENGINEERING DRAWING IS THE PROPRIETARY PROPERTY OF COMPAL ELECTRONICS, INC. AND CONTAINS CONFIDENTIAL AND TRADE SECRET INFORMATION. THIS SHEET MAY NOT BE TRANSFERED FROM THE CUSTODY OF THE COMPETENT DIVISION OF R&D DEPARTMENT EXCEPT AS AUTHORIZED BY COMPAL ELECTRONICS, INC. NEITHER THIS SHEET NOR THE INFORMATION IT CONTAINS MAY BE USED BY OR DISCLOSED TO ANY THIRD PARTY WITHOUT PRIOR WRITTEN CONSENT OF COMPAL ELECTRONICS, INC.

Compal Electronics, Inc.

Title: *CRT*

Size | Document Number: **PHQAA LA-6832P M/B** | Rev: 0.2

Date: Thursday, October 07, 2010 | Sheet 14 of 45

HDMI CEC Controller

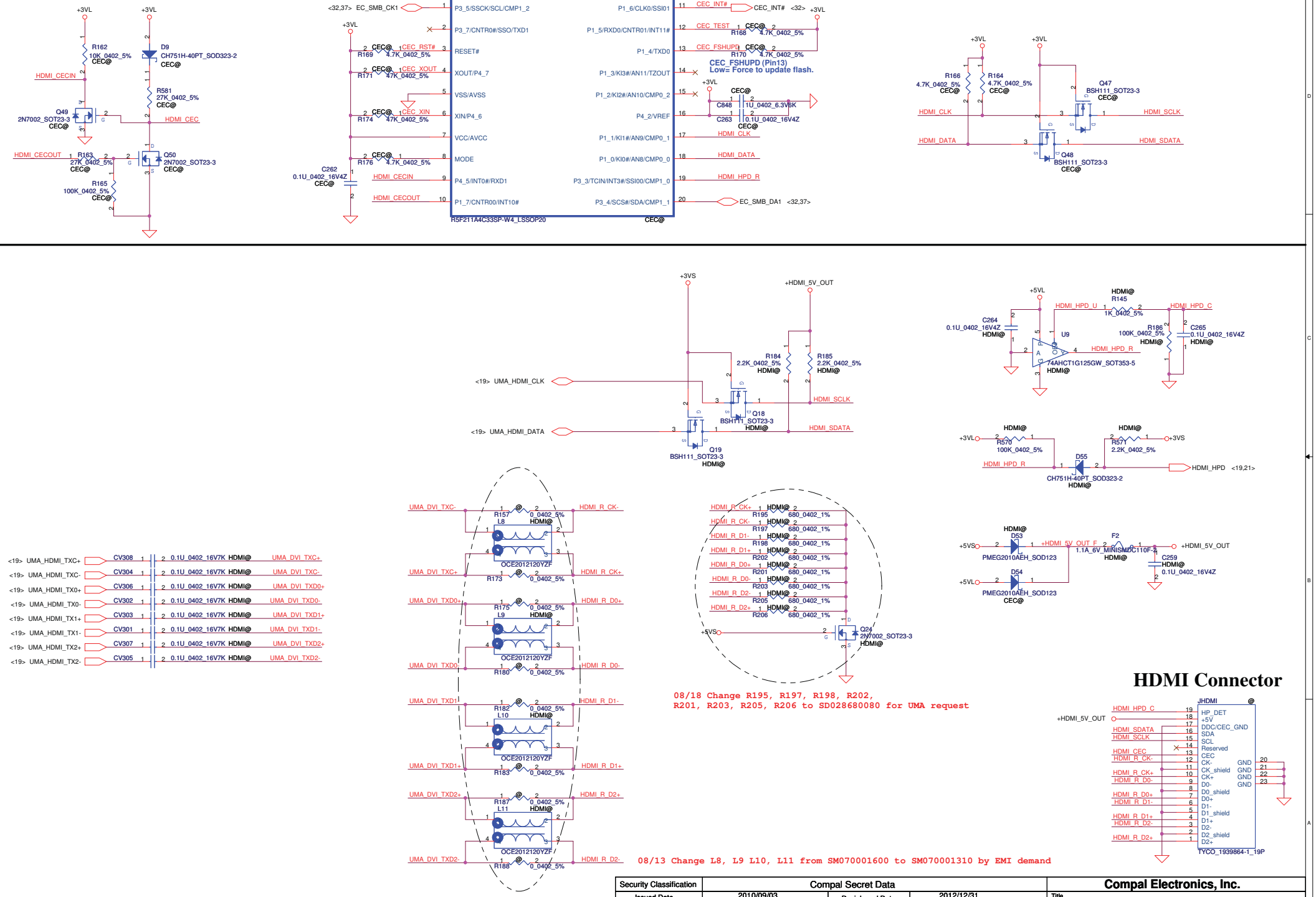

HDMI Connector

Security Classification	Compal Secret Data		
Issued Date	2010/09/03	Deciphered Date	2012/12/31

THIS SHEET OF ENGINEERING DRAWING IS THE PROPRIETARY PROPERTY OF COMPAL ELECTRONICS, INC. AND CONTAINS CONFIDENTIAL AND TRADE SECRET INFORMATION. THIS SHEET MAY NOT BE TRANSFERED FROM THE CUSTODY OF THE COMPETENT DIVISION OF R&D DEPARTMENT EXCEPT AS AUTHORIZED BY COMPAL ELECTRONICS, INC. NEITHER THIS SHEET NOR THE INFORMATION IT CONTAINS MAY BE USED BY OR DISCLOSED TO ANY THIRD PARTY WITHOUT PRIOR WRITTEN CONSENT OF COMPAL ELECTRONICS, INC.

Compal Electronics, Inc.

Title: ***HDMI Conn./CEC***

Size	Document Number	Rev
	PHQAA LA-6832P M/B	0.2

Date: Thursday, October 07, 2010 | Sheet 15 of 45

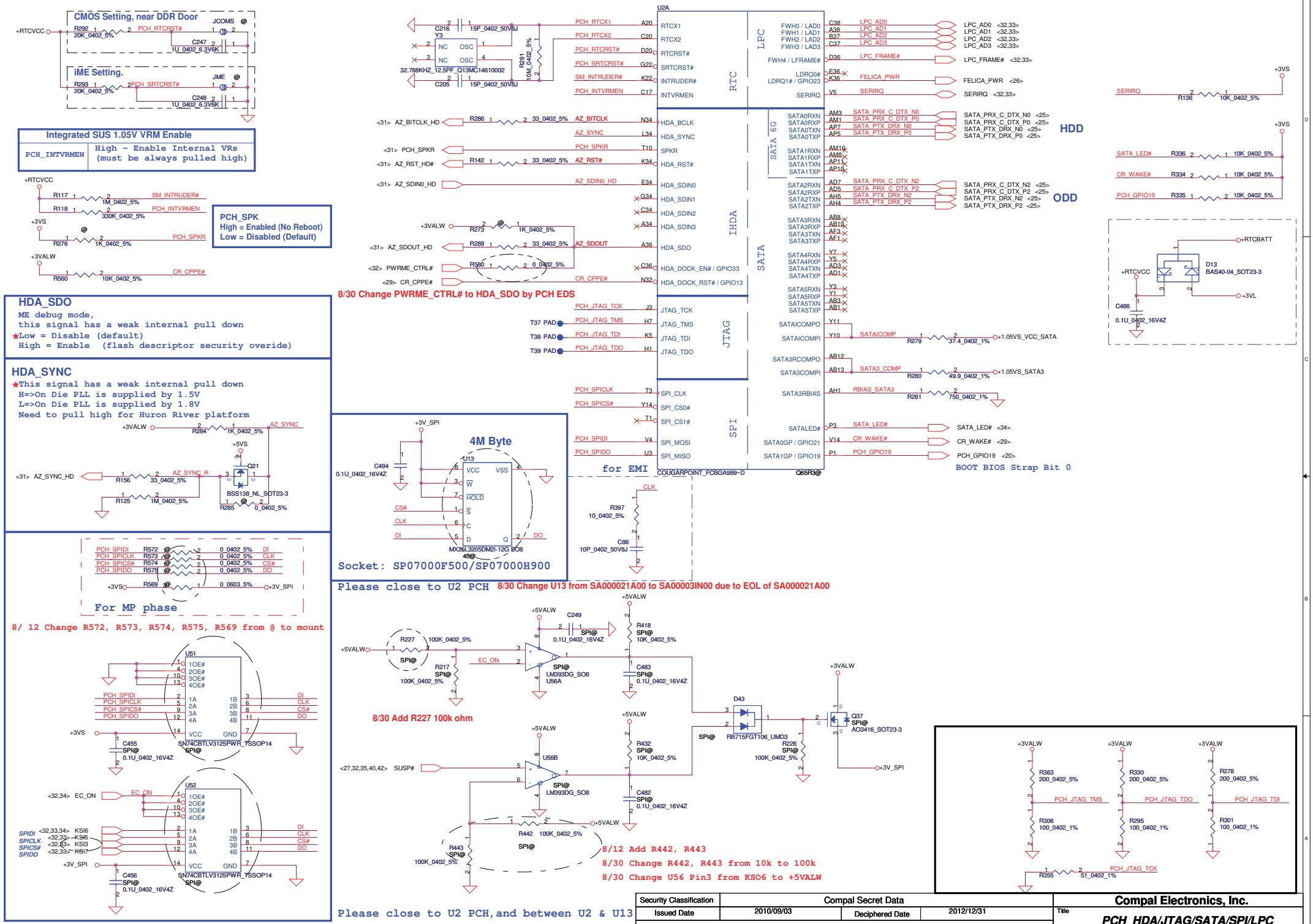

Security Classification	Compal Secret Data		
Issued Date	2010/09/03	Deciphered Date	2012/12/31

THIS SHEET OF ENGINEERING DRAWING IS THE PROPRIETARY PROPERTY OF COMPAL ELECTRONICS, INC. AND CONTAINS CONFIDENTIAL AND TRADE SECRET INFORMATION. THIS SHEET MAY NOT BE TRANSFERED FROM THE CUSTODY OF THE COMPETENT DIVISION OF R&D DEPARTMENT EXCEPT AS AUTHORIZED BY COMPAL ELECTRONICS, INC. NEITHER THIS SHEET NOR THE INFORMATION IT CONTAINS MAY BE USED BY OR DISCLOSED TO ANY THIRD PARTY WITHOUT PRIOR WRITTEN CONSENT OF COMPAL ELECTRONICS, INC.

Compal Electronics, Inc.

Title: **PCH_HDA/JTAG/SATA/SPI/LPC**

Size: Custom | Document Number: **PHQAA LA-6832P M/B** | Rev: 0.2

Date: Thursday, October 07, 2010 | Sheet 16 of 45

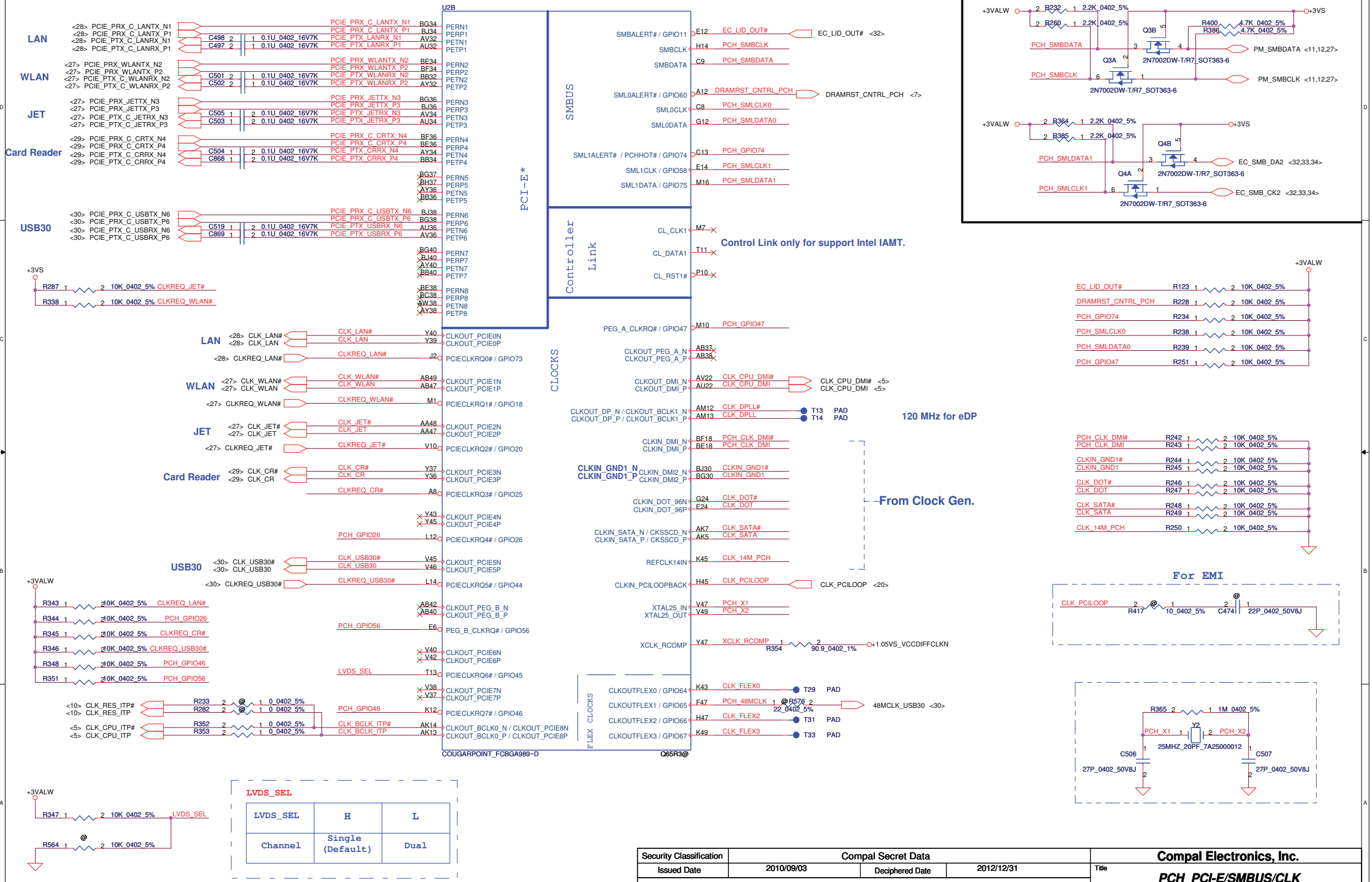

LVDS_SEL	H	L
Channel	Single (Default)	Dual

Security Classification	Compal Secret Data		
Issued Date	2010/09/03	Deciphered Date	2012/12/31

THIS SHEET OF ENGINEERING DRAWING IS THE PROPRIETARY PROPERTY OF COMPAL ELECTRONICS, INC. AND CONTAINS CONFIDENTIAL AND TRADE SECRET INFORMATION. THIS SHEET MAY NOT BE TRANSFERED FROM THE CUSTODY OF THE COMPETENT DIVISION OF R&D DEPARTMENT EXCEPT AS AUTHORIZED BY COMPAL ELECTRONICS, INC. NEITHER THIS SHEET NOR THE INFORMATION IT CONTAINS MAY BE USED BY OR DISCLOSED TO ANY THIRD PARTY WITHOUT PRIOR WRITTEN CONSENT OF COMPAL ELECTRONICS, INC.

Compal Electronics, Inc.

Title: *PCH_PCI-E/SMBUS/CLK*

Size: Custom | Document Number: **PHQAA LA-6832P M/B** | Rev: 0.2

Date: Thursday, October 07, 2010 | Sheet 17 of 45

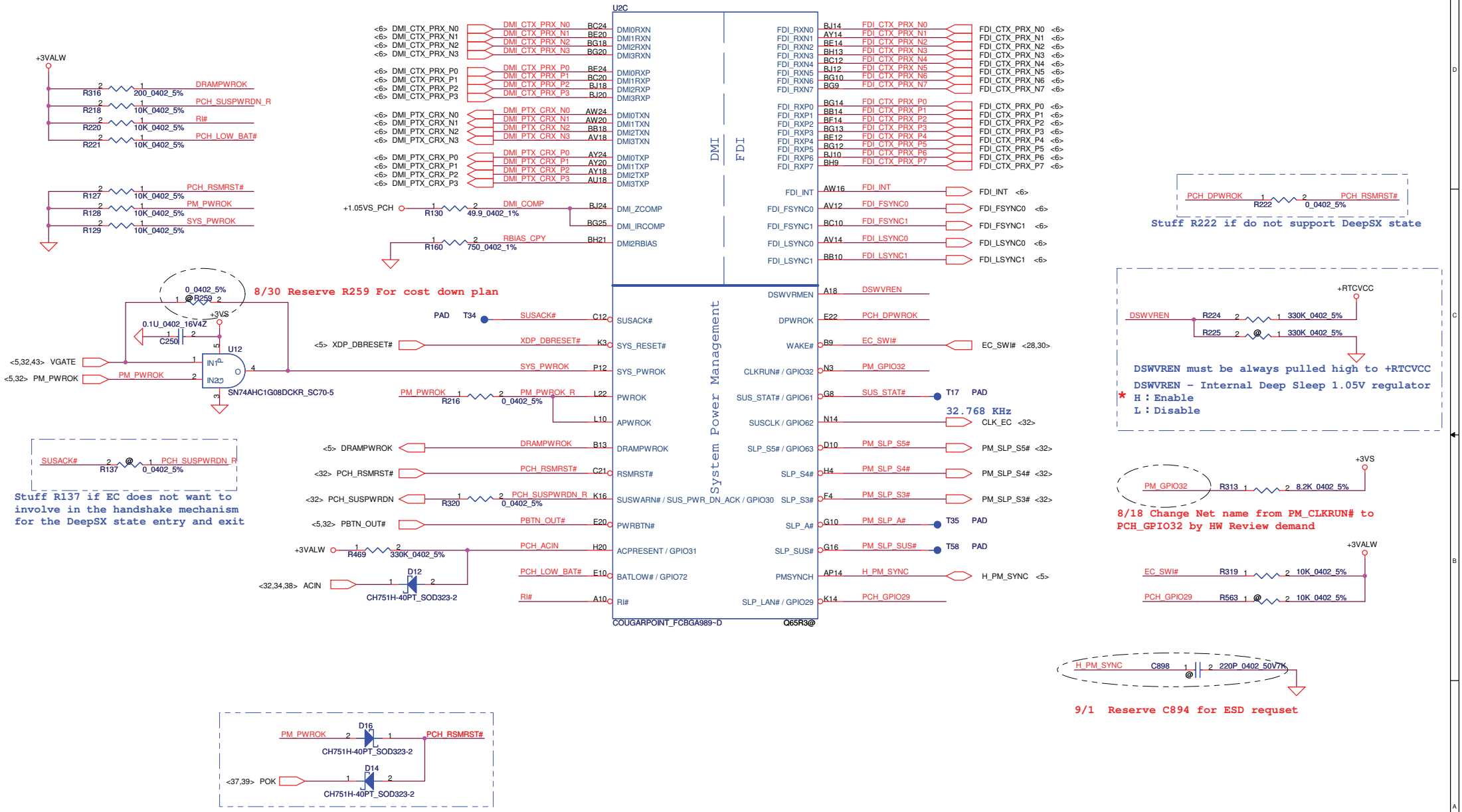

Security Classification	Compal Secret Data		
Issued Date	2010/09/03	Deciphered Date	2012/12/31

THIS SHEET OF ENGINEERING DRAWING IS THE PROPRIETARY PROPERTY OF COMPAL ELECTRONICS, INC. AND CONTAINS CONFIDENTIAL AND TRADE SECRET INFORMATION. THIS SHEET MAY NOT BE TRANSFERED FROM THE CUSTODY OF THE COMPETENT DIVISION OF R&D DEPARTMENT EXCEPT AS AUTHORIZED BY COMPAL ELECTRONICS, INC. NEITHER THIS SHEET NOR THE INFORMATION IT CONTAINS MAY BE USED BY OR DISCLOSED TO ANY THIRD PARTY WITHOUT PRIOR WRITTEN CONSENT OF COMPAL ELECTRONICS, INC.

Compal Electronics, Inc.

Title: *PCH_DMI/FDI/PM*

Size: Custom | Document Number: **PHQAA LA-6832P M/B** | Rev: 0.2

Date: Thursday, October 07, 2010 | Sheet 18 of 45

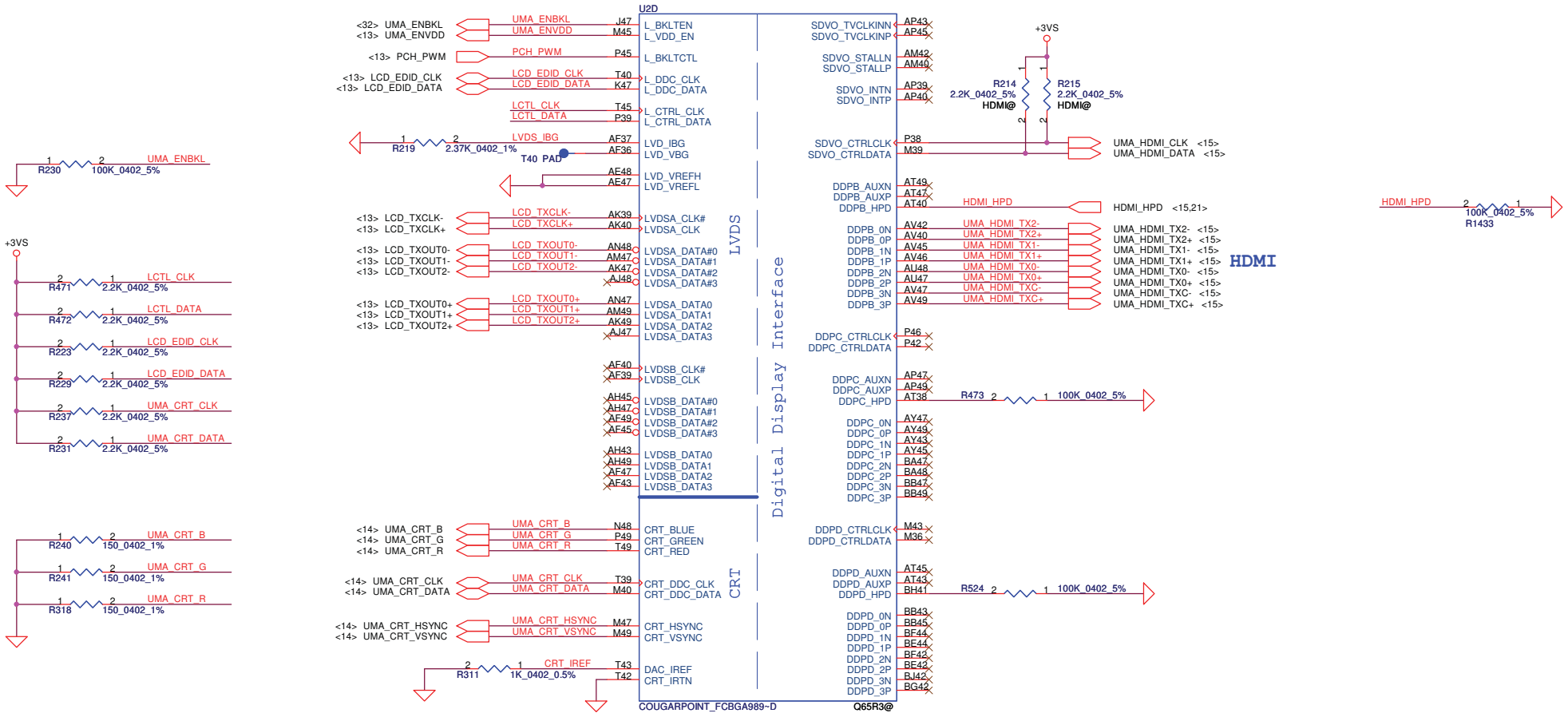

Security Classification	Compal Secret Data		
Issued Date	2010/09/03	Deciphered Date	2012/12/31

THIS SHEET OF ENGINEERING DRAWING IS THE PROPRIETARY PROPERTY OF COMPAL ELECTRONICS, INC. AND CONTAINS CONFIDENTIAL AND TRADE SECRET INFORMATION. THIS SHEET MAY NOT BE TRANSFERED FROM THE CUSTODY OF THE COMPETENT DIVISION OF R&D DEPARTMENT EXCEPT AS AUTHORIZED BY COMPAL ELECTRONICS, INC. NEITHER THIS SHEET NOR THE INFORMATION IT CONTAINS MAY BE USED BY OR DISCLOSED TO ANY THIRD PARTY WITHOUT PRIOR WRITTEN CONSENT OF COMPAL ELECTRONICS, INC.

Compal Electronics, Inc.

Title: ***PCH_CRT/LVDS/HDMI***

Size: Custom | Document Number: **PHQAA LA-6832P M/B** | Rev: 0.2

Date: Thursday, October 07, 2010 | Sheet 19 of 45

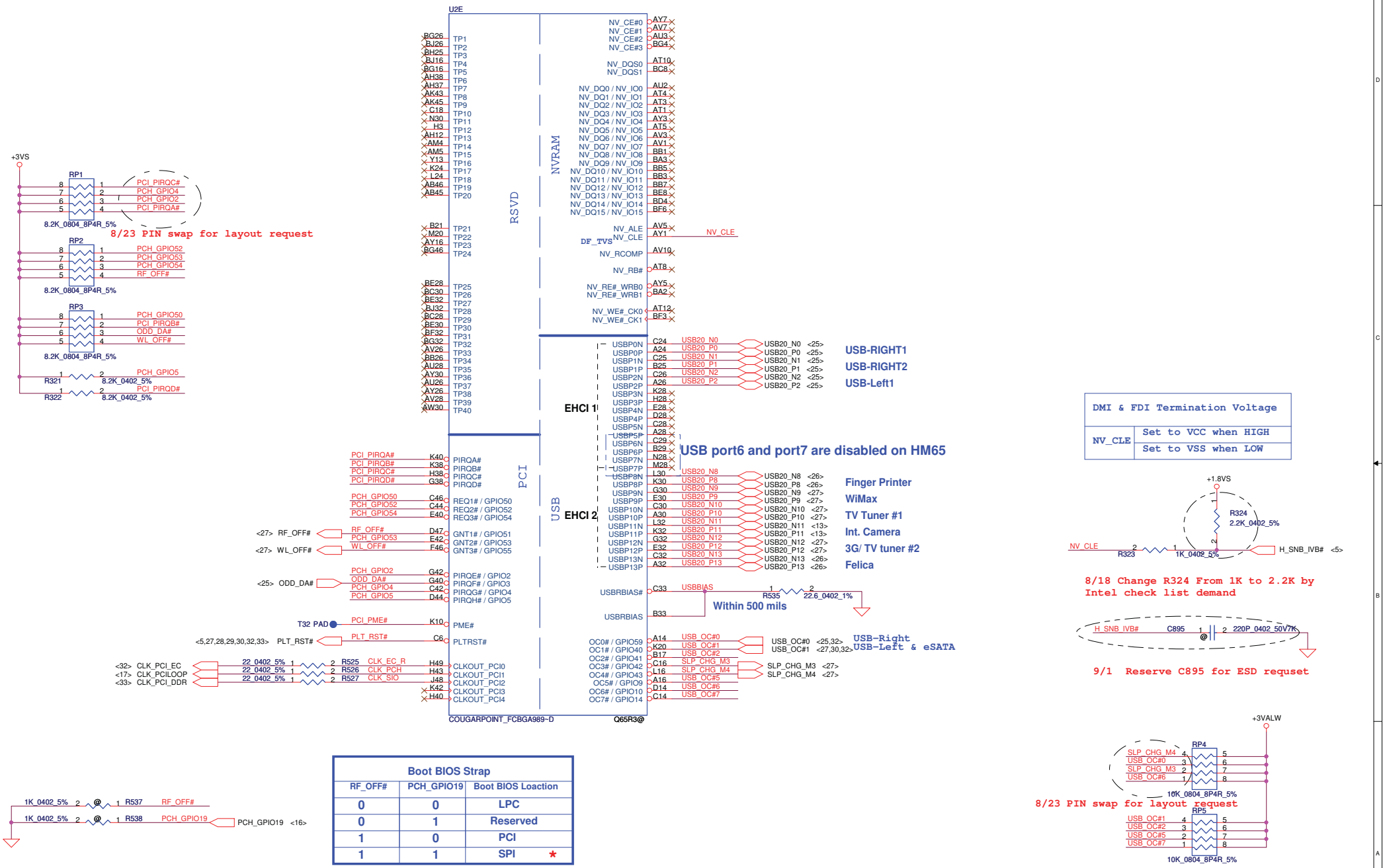

DMI & FDI Termination Voltage	
NV_CLE	Set to VCC when HIGH
	Set to VSS when LOW

Boot BIOS Strap		
RF_OFF#	PCH_GPIO19	Boot BIOS Loaction
0	0	LPC
0	1	Reserved
1	0	PCI
1	1	SPI ★

A16 Swap Override Strap	
WL_OFF# ★	Low= A16 swap override Enable High= A16 swap override Disable

Security Classification	Compal Secret Data		
Issued Date	2010/09/03	Deciphered Date	2012/12/31

THIS SHEET OF ENGINEERING DRAWING IS THE PROPRIETARY PROPERTY OF COMPAL ELECTRONICS, INC. AND CONTAINS CONFIDENTIAL AND TRADE SECRET INFORMATION. THIS SHEET MAY NOT BE TRANSFERED FROM THE CUSTODY OF THE COMPETENT DIVISION OF R&D DEPARTMENT EXCEPT AS AUTHORIZED BY COMPAL ELECTRONICS, INC. NEITHER THIS SHEET NOR THE INFORMATION IT CONTAINS MAY BE USED BY OR DISCLOSED TO ANY THIRD PARTY WITHOUT PRIOR WRITTEN CONSENT OF COMPAL ELECTRONICS, INC.

Compal Electronics, Inc.

Title: ***PCH_PCI/USB/NAND***

Size: Custom | Document Number: **PHQAA LA-6832P M/B** | Rev: 0.2

Date: Thursday, October 07, 2010 | Sheet 20 of 45

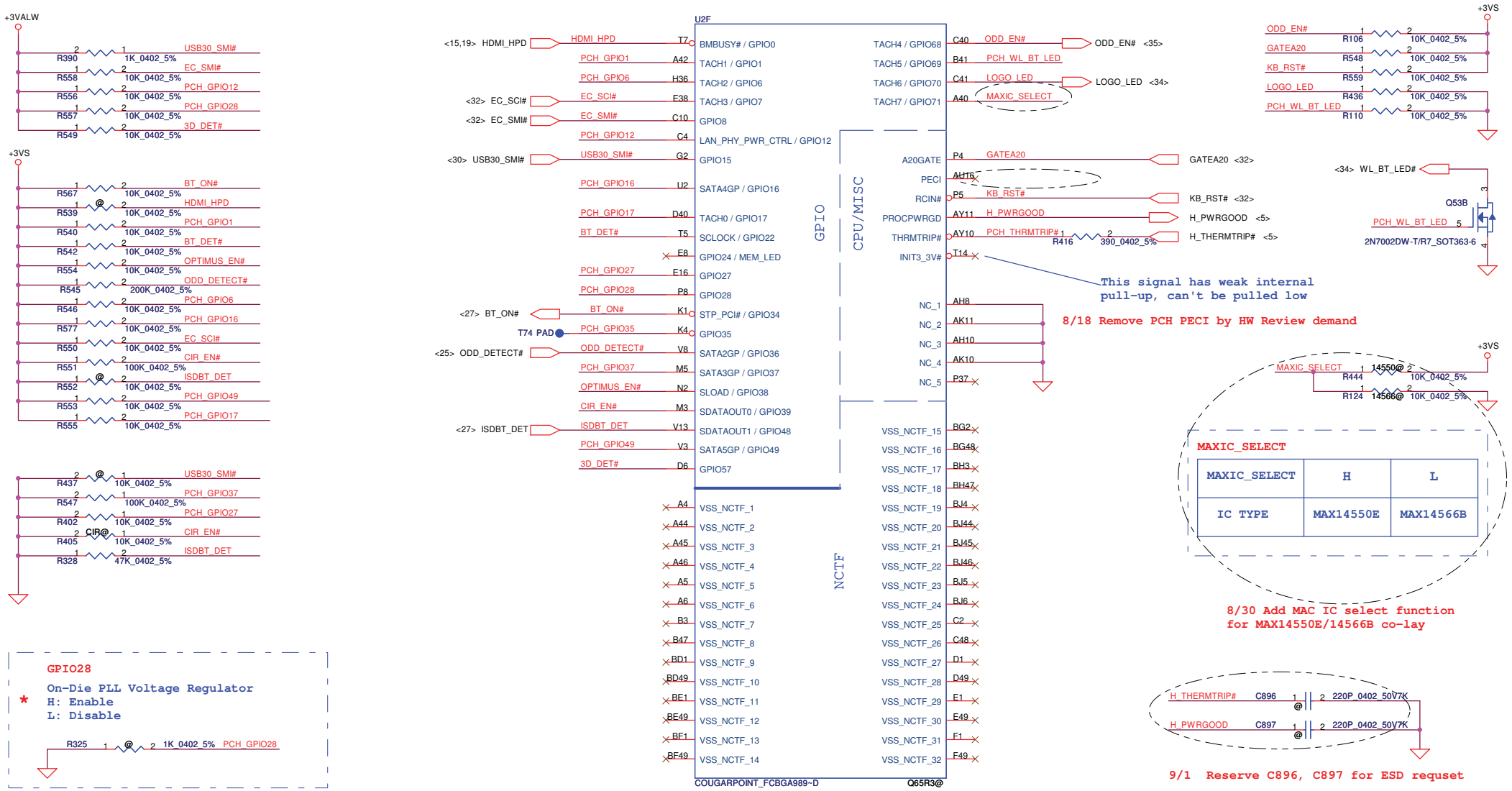

MAXIC_SELECT	H	L
IC TYPE	MAX14550E	MAX14566B

OPTIMUS_EN#	H	L
SKU	Discrete	Optimus

Security Classification	Compal Secret Data		
Issued Date	2010/09/03	Deciphered Date	2012/12/31

THIS SHEET OF ENGINEERING DRAWING IS THE PROPRIETARY PROPERTY OF COMPAL ELECTRONICS, INC. AND CONTAINS CONFIDENTIAL AND TRADE SECRET INFORMATION. THIS SHEET MAY NOT BE TRANSFERED FROM THE CUSTODY OF THE COMPETENT DIVISION OF R&D DEPARTMENT EXCEPT AS AUTHORIZED BY COMPAL ELECTRONICS, INC. NEITHER THIS SHEET NOR THE INFORMATION IT CONTAINS MAY BE USED BY OR DISCLOSED TO ANY THIRD PARTY WITHOUT PRIOR WRITTEN CONSENT OF COMPAL ELECTRONICS, INC.

Compal Electronics, Inc.

Title: *PCH_CPU/GPIO*

Size: B | Document Number: **PHQAA LA-6832P M/B** | Rev: 0.2

Date: Thursday, October 07, 2010 | Sheet 21 of 45

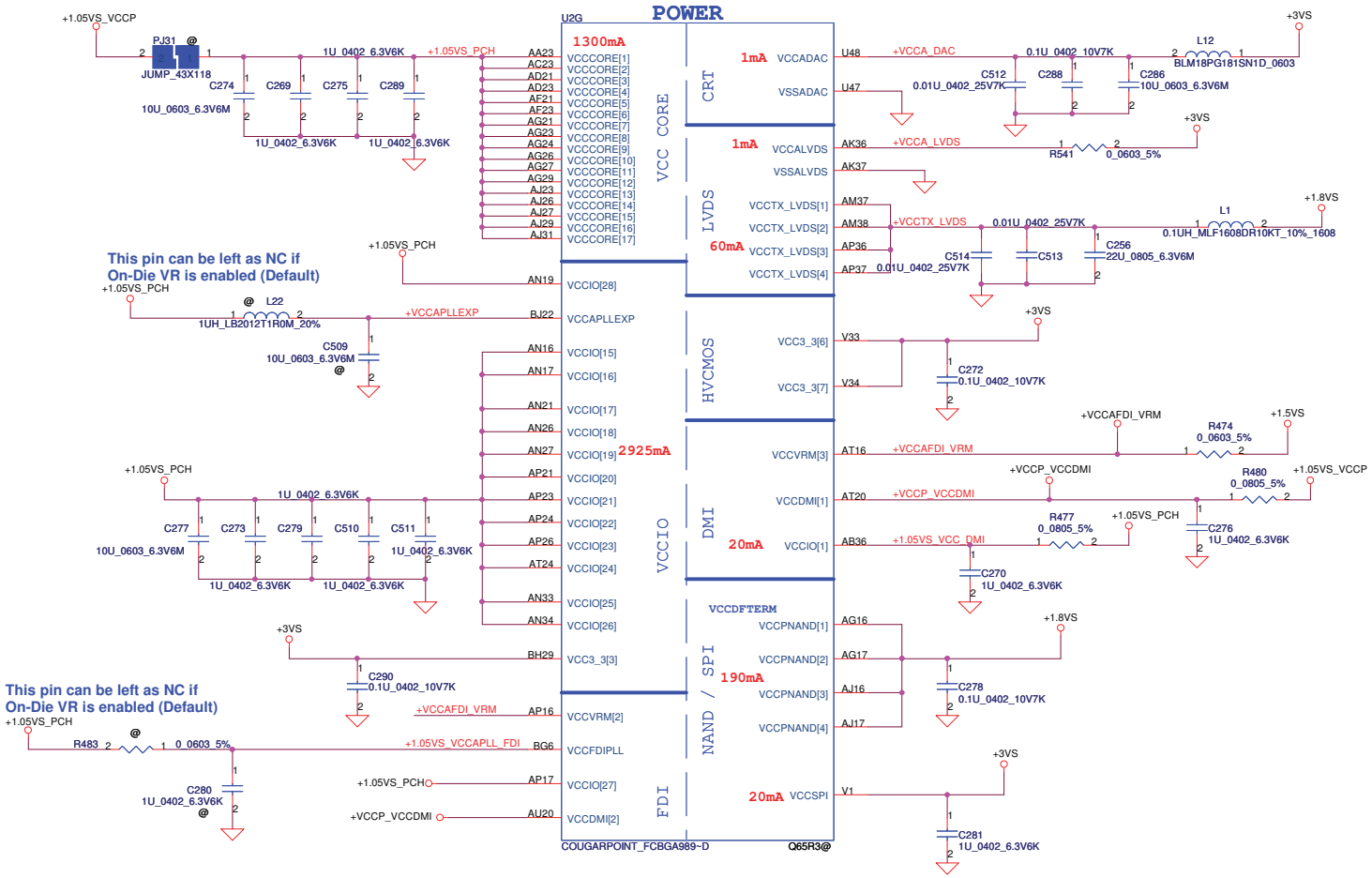

PCH Power Rail Table

Voltage Rail	Voltage	S0 Iccmax Current (A)
V_PROC_IO	1.05	0.001
V5REF	5	0.001
V5REF_SUS	5	0.001
VCC3_3	3.3	0.266
VCCADAC	3.3	0.001
VCCADPLLA	1.05	0.08
VCCADPLLB	1.05	0.08
VCCCORE	1.05	1.3
VCCDMI	1.05	0.042
VCCIO	1.05	2.925
VCCASW	1.05	1.01
VCCSPI	3.3	0.02
VCCDSW	3.3	0.002
VCCDFTERM	1.8	0.19
VCCRTC	3.3	6 uA
VCCSUS3_3	3.3	0.97
VCCSusHDA	3.3 / 1.5	0.01
VCCVRM	1.5	0.16
VCCCLKDMI	1.05	0.02
VCCSSC	1.05	0.095
VCCDIFFCLKN	1.05	0.055
VCCALVDS	3.3	0.001
VCCTX_LVDS	1.8	0.06

Security Classification	Compal Secret Data		
Issued Date	2010/09/03	Deciphered Date	2012/12/31

THIS SHEET OF ENGINEERING DRAWING IS THE PROPRIETARY PROPERTY OF COMPAL ELECTRONICS, INC. AND CONTAINS CONFIDENTIAL AND TRADE SECRET INFORMATION. THIS SHEET MAY NOT BE TRANSFERED FROM THE CUSTODY OF THE COMPETENT DIVISION OF R&D DEPARTMENT EXCEPT AS AUTHORIZED BY COMPAL ELECTRONICS, INC. NEITHER THIS SHEET NOR THE INFORMATION IT CONTAINS MAY BE USED BY OR DISCLOSED TO ANY THIRD PARTY WITHOUT PRIOR WRITTEN CONSENT OF COMPAL ELECTRONICS, INC.

Compal Electronics, Inc.

Title: *PCH_POWER-1*

Size: Custom | Document Number: **PHQAA LA-6832P M/B** | Rev: 0.2

Date: Thursday, October 07, 2010 | Sheet 22 of 45

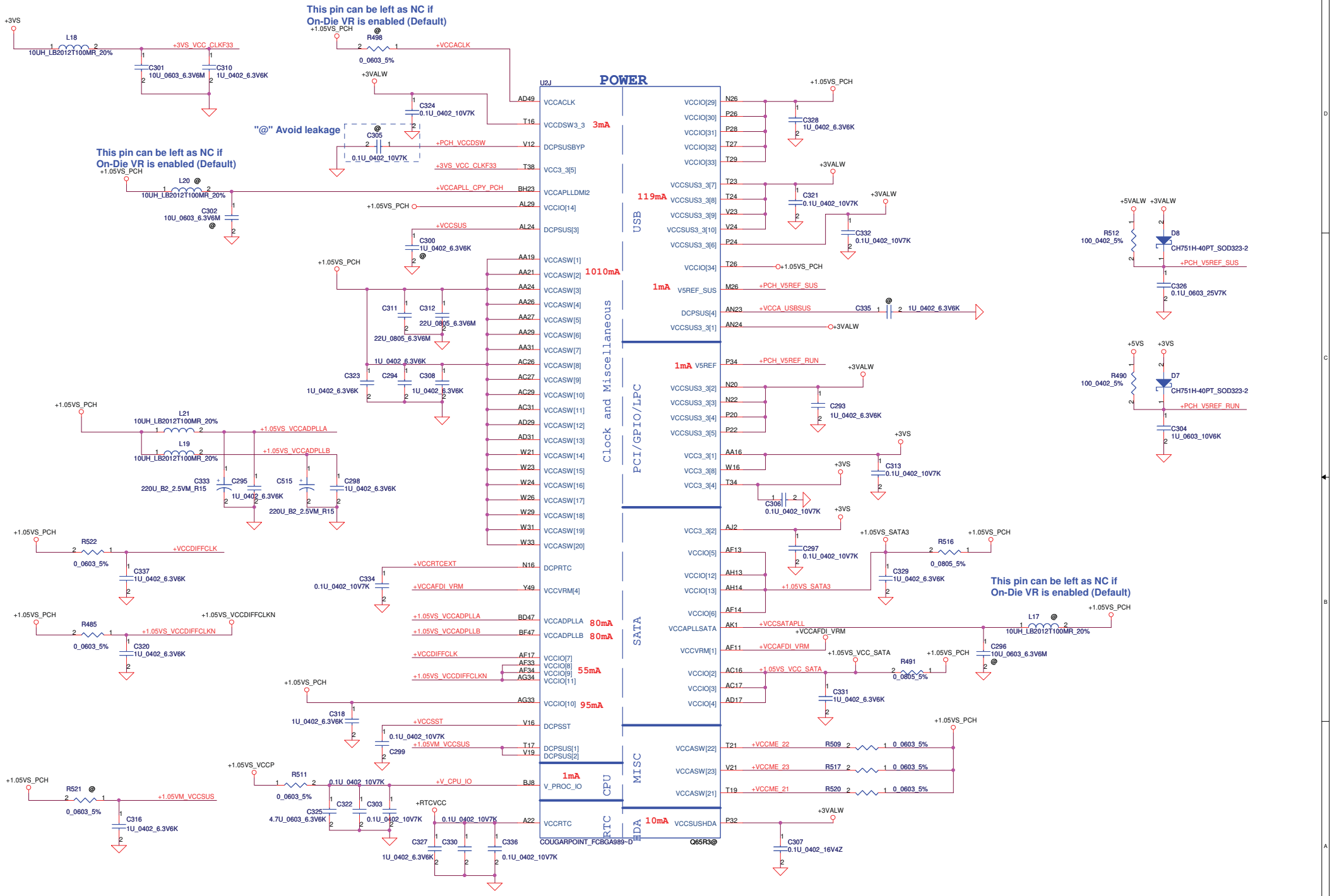

Security Classification	Compal Secret Data		
Issued Date	2010/09/03	Deciphered Date	2012/12/31

THIS SHEET OF ENGINEERING DRAWING IS THE PROPRIETARY PROPERTY OF COMPAL ELECTRONICS, INC. AND CONTAINS CONFIDENTIAL AND TRADE SECRET INFORMATION. THIS SHEET MAY NOT BE TRANSFERED FROM THE CUSTODY OF THE COMPETENT DIVISION OF R&D DEPARTMENT EXCEPT AS AUTHORIZED BY COMPAL ELECTRONICS, INC. NEITHER THIS SHEET NOR THE INFORMATION IT CONTAINS MAY BE USED BY OR DISCLOSED TO ANY THIRD PARTY WITHOUT PRIOR WRITTEN CONSENT OF COMPAL ELECTRONICS, INC.

Compal Electronics, Inc.

Title: *PCH_POWER-2*

Size: Custom | Document Number: **PHQAA LA-6832P M/B** | Rev: 0.2

Date: Thursday, October 07, 2010 | Sheet 23 of 45

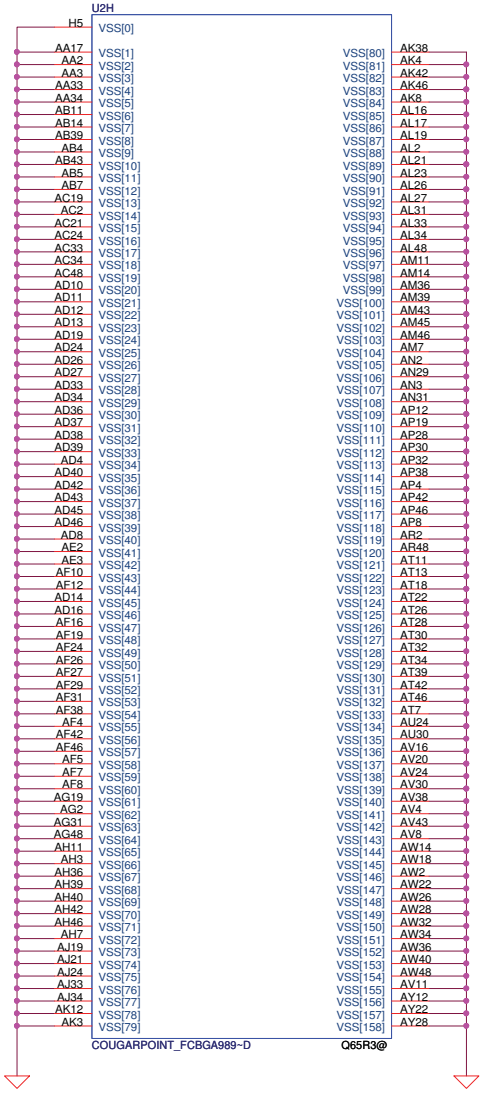

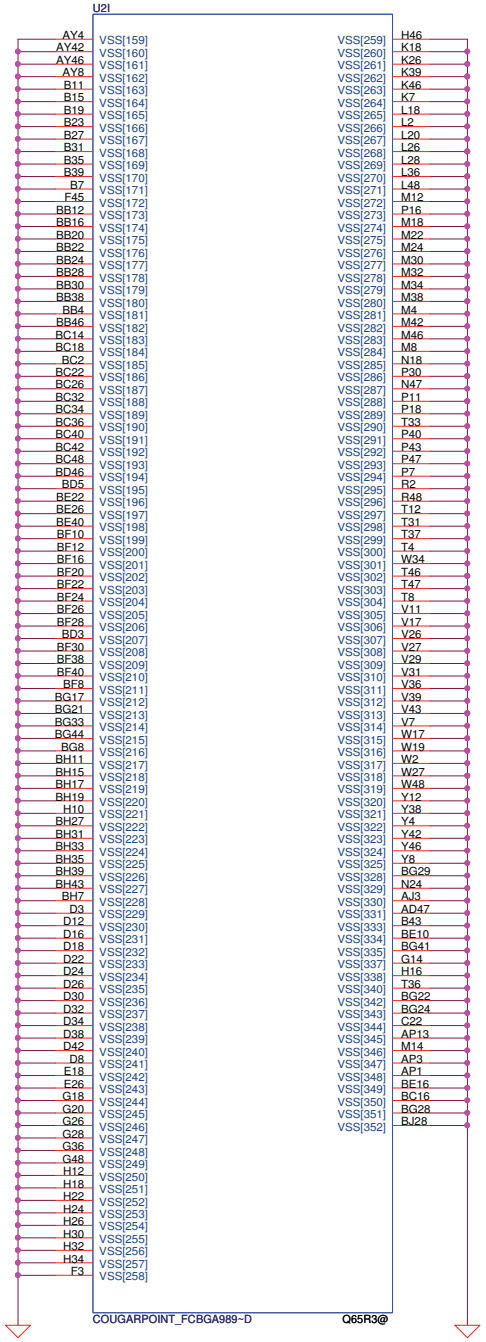

Security Classification	Compal Secret Data		
Issued Date	2010/09/03	Deciphered Date	2012/12/31

THIS SHEET OF ENGINEERING DRAWING IS THE PROPRIETARY PROPERTY OF COMPAL ELECTRONICS, INC. AND CONTAINS CONFIDENTIAL AND TRADE SECRET INFORMATION. THIS SHEET MAY NOT BE TRANSFERED FROM THE CUSTODY OF THE COMPETENT DIVISION OF R&D DEPARTMENT EXCEPT AS AUTHORIZED BY COMPAL ELECTRONICS, INC. NEITHER THIS SHEET NOR THE INFORMATION IT CONTAINS MAY BE USED BY OR DISCLOSED TO ANY THIRD PARTY WITHOUT PRIOR WRITTEN CONSENT OF COMPAL ELECTRONICS, INC.

Compal Electronics, Inc.

Title: ***PCH_GND***

Size: Custom | Document Number: **PHQAA LA-6832P M/B** | Rev: 0.2

Date: Thursday, October 07, 2010 | Sheet 24 of 45

SATA HDD Conn.

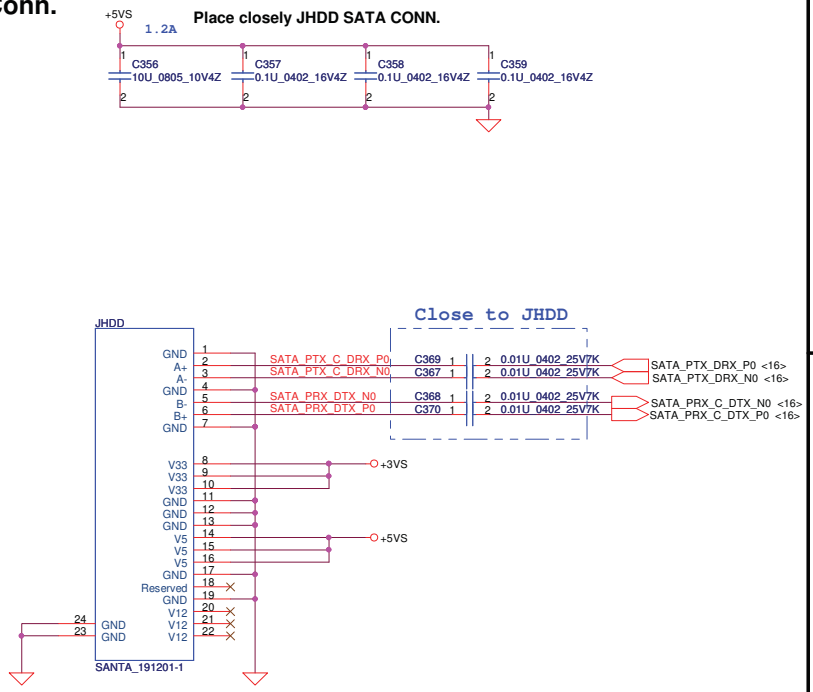

SATA ODD Conn

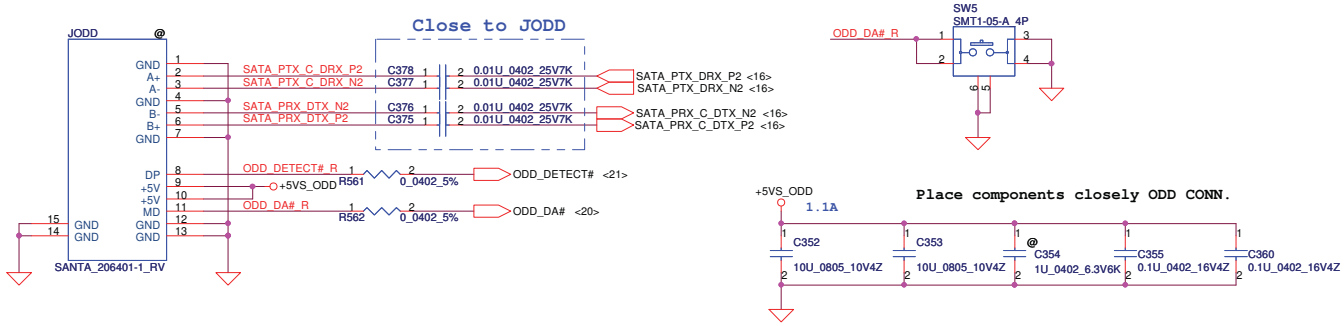

USB Board@ Right Side

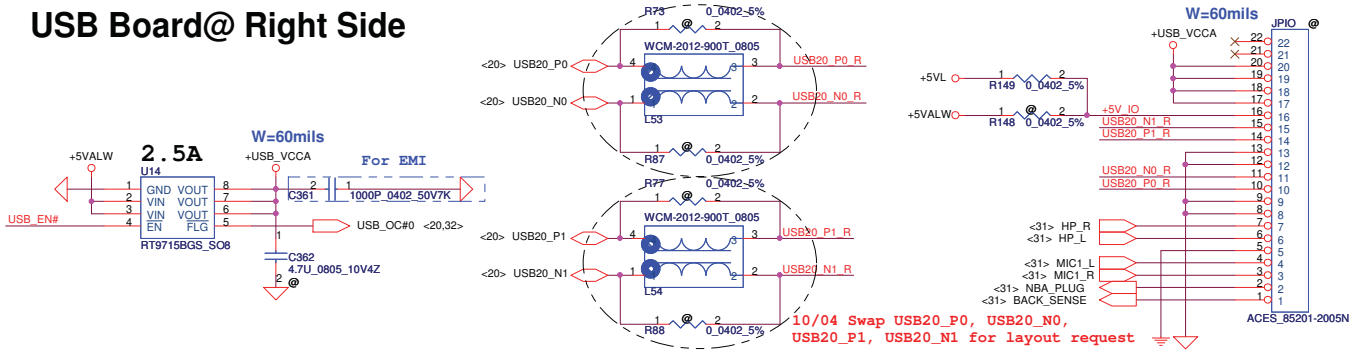

USB Board@ Left Side

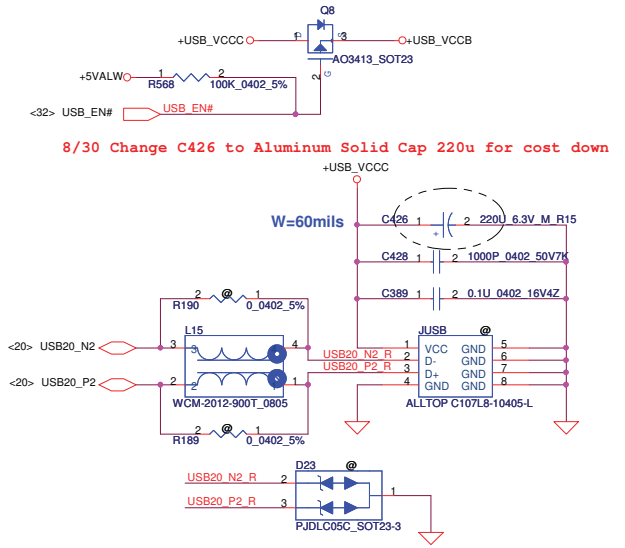

Security Classification	Compal Secret Data		
Issued Date	2010/09/03	Deciphered Date	2012/12/31

THIS SHEET OF ENGINEERING DRAWING IS THE PROPRIETARY PROPERTY OF COMPAL ELECTRONICS, INC. AND CONTAINS CONFIDENTIAL AND TRADE SECRET INFORMATION. THIS SHEET MAY NOT BE TRANSFERED FROM THE CUSTODY OF THE COMPETENT DIVISION OF R&D DEPARTMENT EXCEPT AS AUTHORIZED BY COMPAL ELECTRONICS, INC. NEITHER THIS SHEET NOR THE INFORMATION IT CONTAINS MAY BE USED BY OR DISCLOSED TO ANY THIRD PARTY WITHOUT PRIOR WRITTEN CONSENT OF COMPAL ELECTRONICS, INC.

Compal Electronics, Inc.

Title: **SATA-HDD/ODD/USB**

Size | Document Number: **PHQAA LA-6832P M/B** | Rev: 0.2

Date: Thursday, October 07, 2010 | Sheet 25 of 45

Screw cap for ESD request

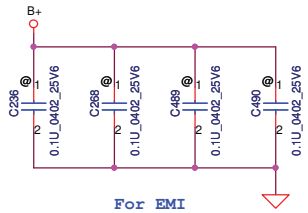

B-CAS Circuit

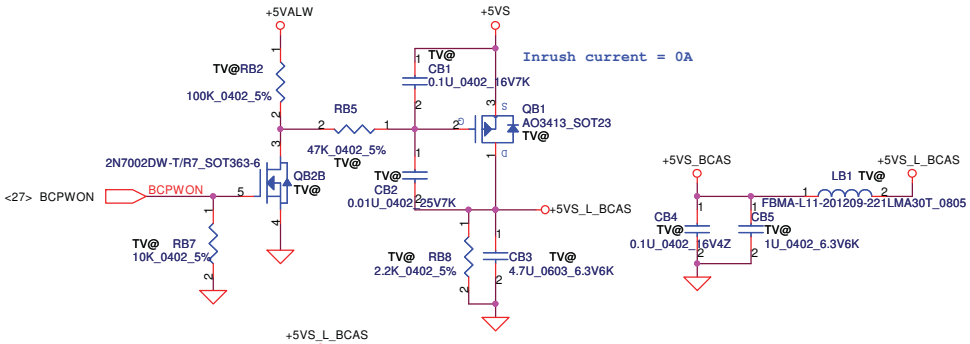

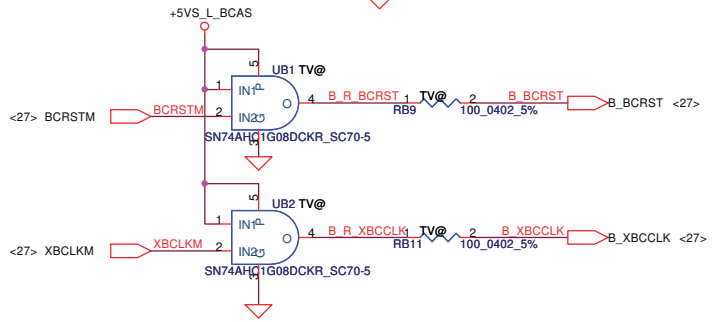

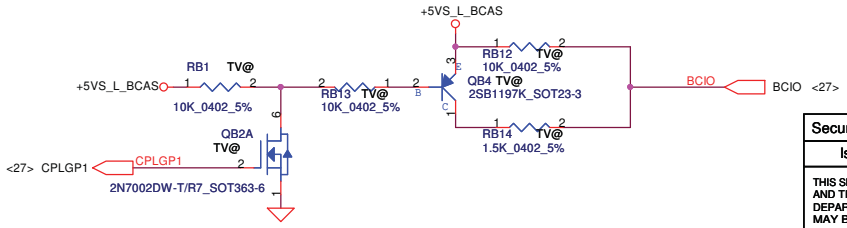

Felica

Reserve +3VS Felica by Customer demand.
2010/09/27

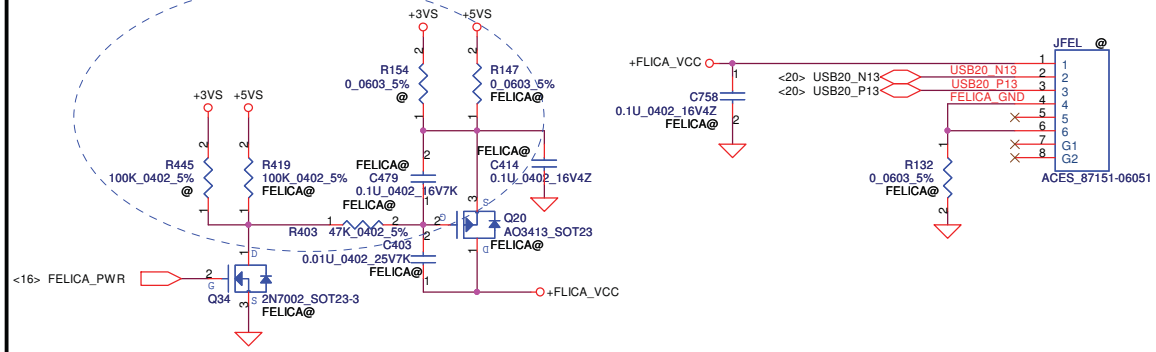

Finger printer

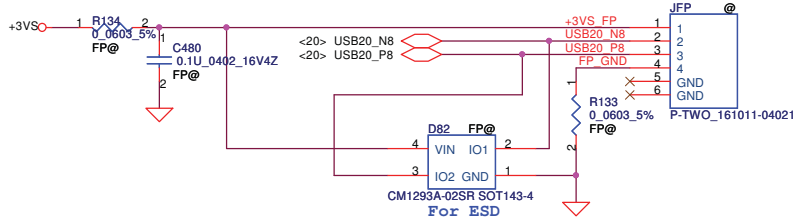

Security Classification	Compal Secret Data		
Issued Date	2010/09/03	Deciphered Date	2012/12/31

THIS SHEET OF ENGINEERING DRAWING IS THE PROPRIETARY PROPERTY OF COMPAL ELECTRONICS, INC. AND CONTAINS CONFIDENTIAL AND TRADE SECRET INFORMATION. THIS SHEET MAY NOT BE TRANSFERED FROM THE CUSTODY OF THE COMPETENT DIVISION OF R&D DEPARTMENT EXCEPT AS AUTHORIZED BY COMPAL ELECTRONICS, INC. NEITHER THIS SHEET NOR THE INFORMATION IT CONTAINS MAY BE USED BY OR DISCLOSED TO ANY THIRD PARTY WITHOUT PRIOR WRITTEN CONSENT OF COMPAL ELECTRONICS, INC.

Compal Electronics, Inc.

Title: IR/FP/B-CAS/Felica

Size | Document Number: PHQAA LA-6832P M/B | Rev 0.2

Date: Thursday, October 07, 2010 | Sheet 26 of 45

Slot 1 Half PCIe Mini Card-WLAN/ WiMax

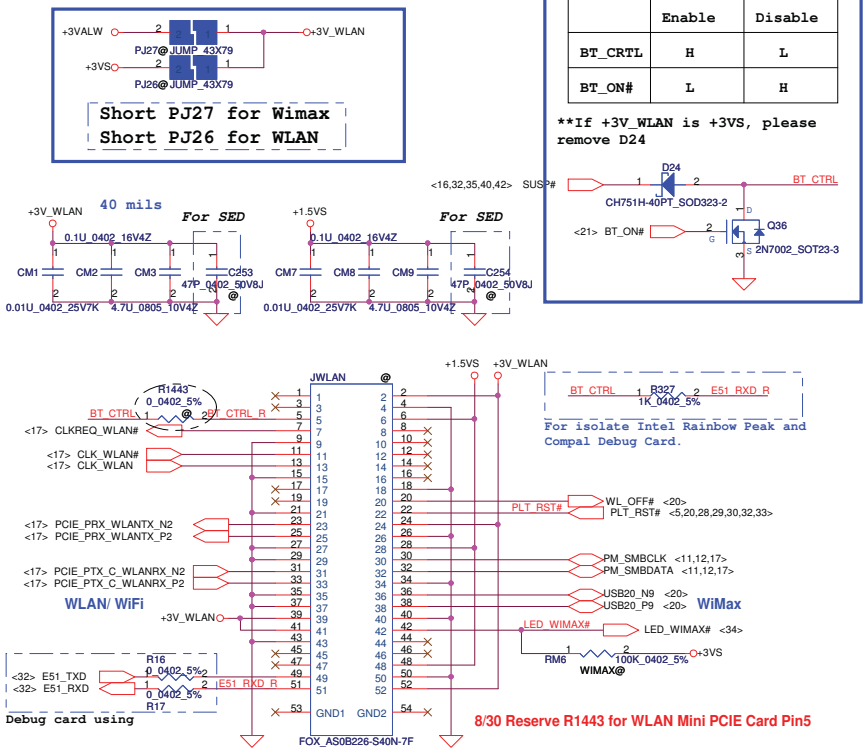

Slot 2 Full PCIe Mini Card- 3G/ TV Tuner
Half PCIe Mini Card- JET

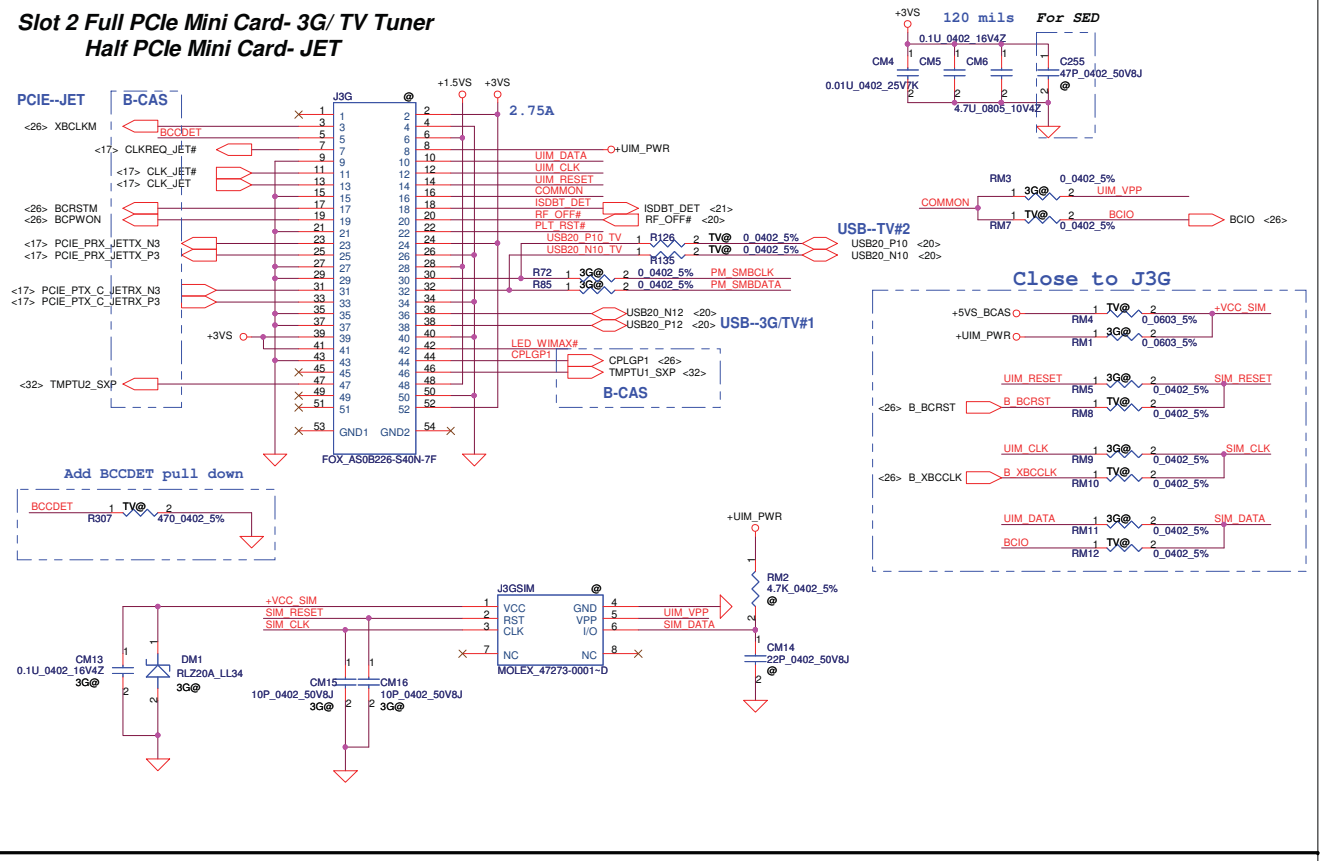

USB Sleep & Charge
Auto-Mode
Mode3/Mode4

MAX14566B		
CB0 SLP_CHG#	CB1 (CEN#) SLP_CHG_M3	STATUS
0	0	AUTO MODE
0	1	Force Dedicated charger mode (MODE3)
1	X	Pass-Through (USB) Mode: Connect DP/DM to TDP/TDM

MAX14566E	
CB: SLP_CHG#	STATUS
0	AUTO MODE
1	Pass-Through (USB) Mode: Connect DP/DM to TDP/TDM

MAX14550E		
CB0 SLP_CHG_M4	CB1 SLP_CHG_M4	STATUS
0	0	AUTO MODE
0	1	MODE3
1	0	MODE4
1	1	Pass-Through (USB) Mode: Connect DP/DM to TDP/TDM

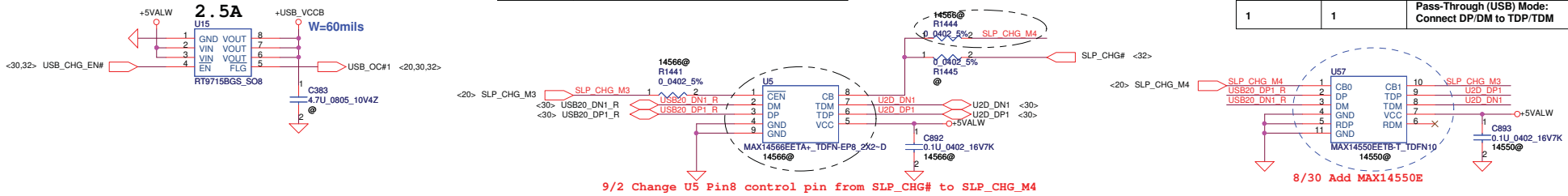

9/2 Change U5 Pin8 control pin from SLP_CHG# to SLP_CHG_M4

9/2 Add 14566@ & 14550@

Security Classification	Compal Secret Data		
Issued Date	2010/09/03	Deciphered Date	2012/12/31

THIS SHEET OF ENGINEERING DRAWING IS THE PROPRIETARY PROPERTY OF COMPAL ELECTRONICS, INC. AND CONTAINS CONFIDENTIAL AND TRADE SECRET INFORMATION. THIS SHEET MAY NOT BE TRANSFERED FROM THE CUSTODY OF THE COMPETENT DIVISION OF R&D DEPARTMENT EXCEPT AS AUTHORIZED BY COMPAL ELECTRONICS, INC. NEITHER THIS SHEET NOR THE INFORMATION IT CONTAINS MAY BE USED BY OR DISCLOSED TO ANY THIRD PARTY WITHOUT PRIOR WRITTEN CONSENT OF COMPAL ELECTRONICS, INC.

Compal Electronics, Inc.

Title: PCIe-WLAN/JET/3G/TV/NewCard

Size | Document Number: PHQAA LA-6832P M/B | Rev 0.2

Date: Thursday, October 07, 2010 | Sheet 27 of 45

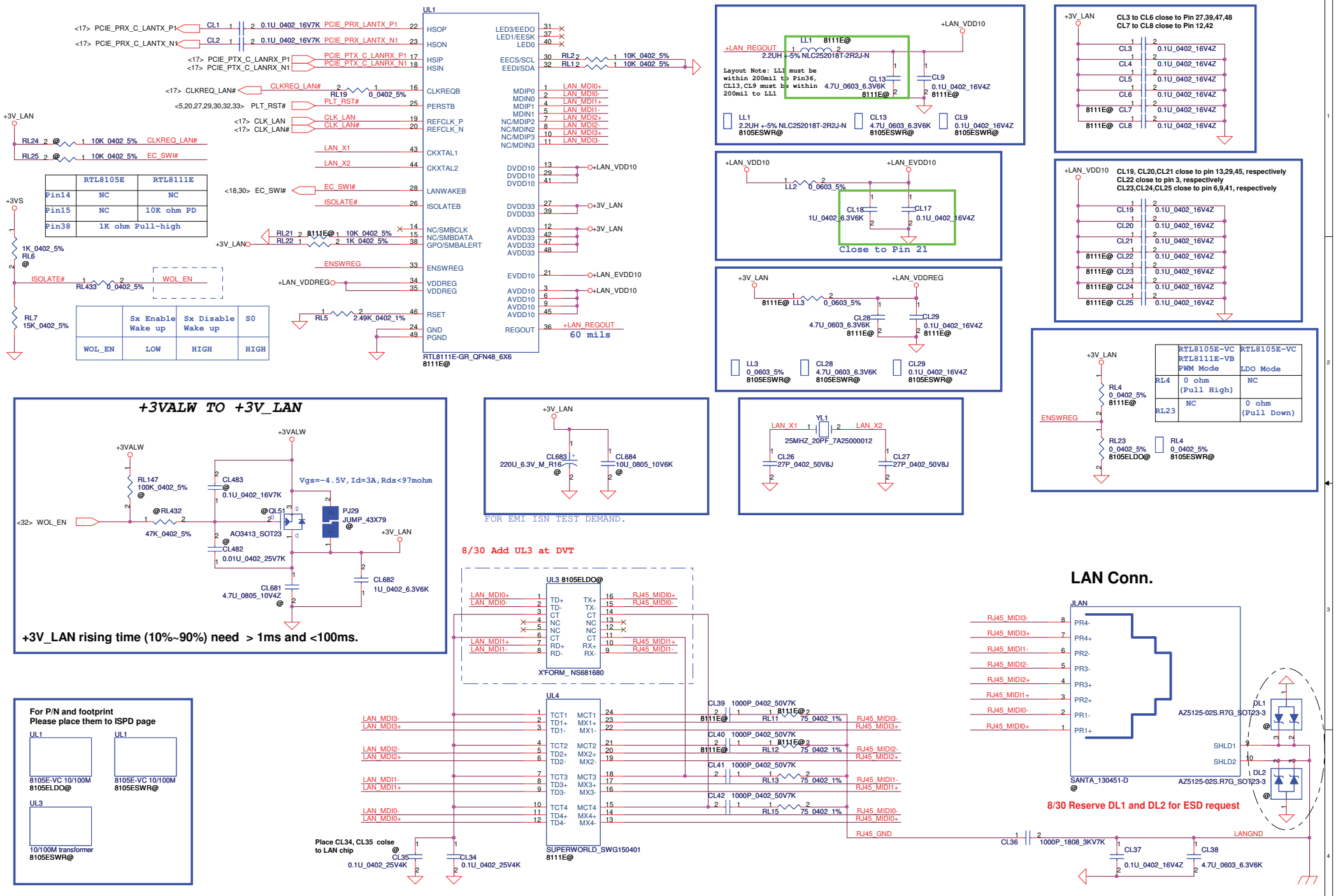

	RTL8105E	RTL8111E
Pin14	NC	NC
Pin15	NC	10K ohm PD
Pin38	1K ohm Pull-high	

	Sx Enable Wake up	Sx Disable Wake up	S0
WOL_EN	LOW	HIGH	HIGH

	RTL8105E-VC RTL8111E-VB PWM Mode	RTL8105E-VC LDO Mode
RL4	0 ohm (Pull High)	NC
RL23	NC	0 ohm (Pull Down)

Security Classification	Compal Secret Data		
Issued Date	2010/09/03	Deciphered Date	2012/12/31

THIS SHEET OF ENGINEERING DRAWING IS THE PROPRIETARY PROPERTY OF COMPAL ELECTRONICS, INC. AND CONTAINS CONFIDENTIAL AND TRADE SECRET INFORMATION. THIS SHEET MAY NOT BE TRANSFERED FROM THE CUSTODY OF THE COMPETENT DIVISION OF R&D DEPARTMENT EXCEPT AS AUTHORIZED BY COMPAL ELECTRONICS, INC. NEITHER THIS SHEET NOR THE INFORMATION IT CONTAINS MAY BE USED BY OR DISCLOSED TO ANY THIRD PARTY WITHOUT PRIOR WRITTEN CONSENT OF COMPAL ELECTRONICS, INC.

Compal Electronics, Inc.

Title: PCIe-LAN-RTL8105E/8111E

Size: Custom | Document Number: PHQAA LA-6832P M/B | Rev: 0.2

Date: Thursday, October 07, 2010 | Sheet 28 of 45

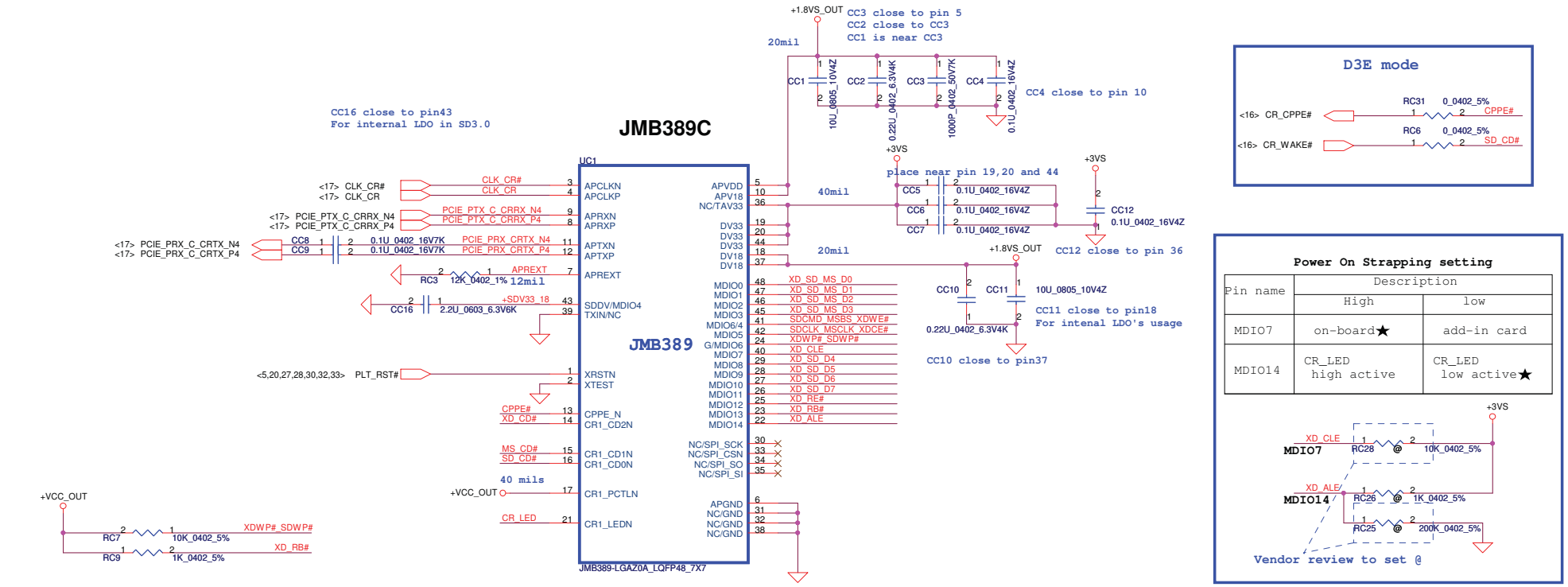

D3E mode

Power On Strapping setting

Pin name	Description	
	High	low
MDIO7	on-board★	add-in card
MDIO14	CR_LED high active	CR_LED low active★

5 in 1 Card Reader

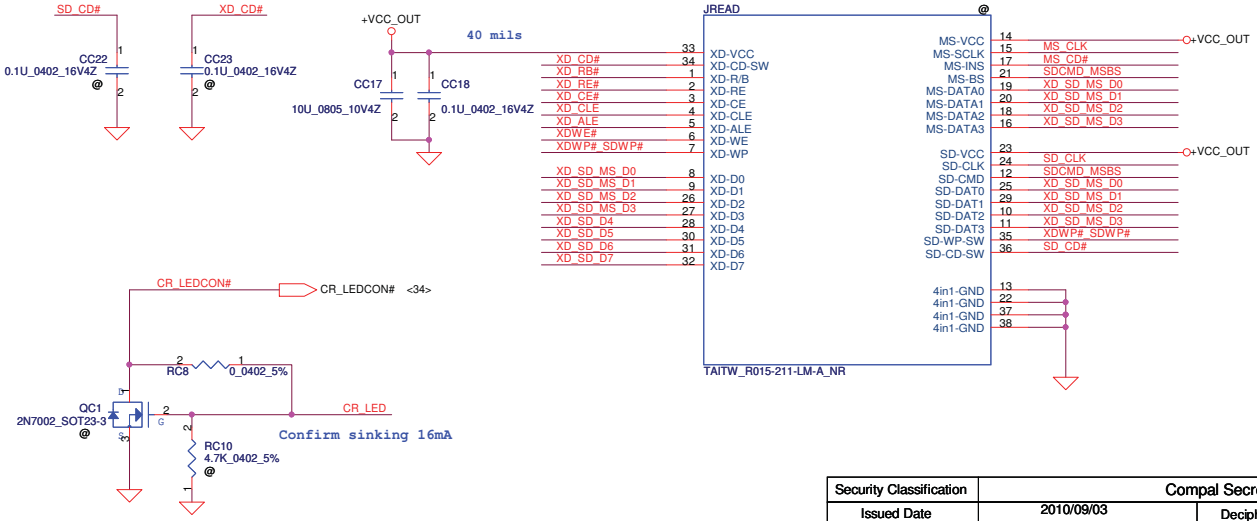

Add RC24 and RC17 close to UC1 for xD issue

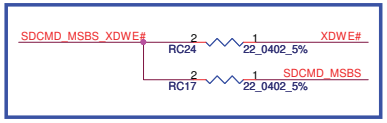

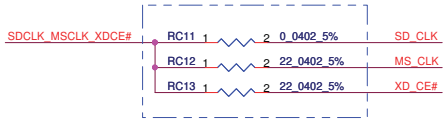

Reserved for EMI,close to UC1.42

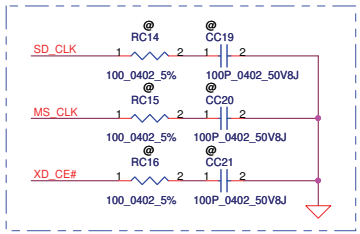

Reserved for EMI,close to JREAD

Security Classification	Compal Secret Data		
Issued Date	2010/09/03	Deciphered Date	2012/12/31

THIS SHEET OF ENGINEERING DRAWING IS THE PROPRIETARY PROPERTY OF COMPAL ELECTRONICS, INC. AND CONTAINS CONFIDENTIAL AND TRADE SECRET INFORMATION. THIS SHEET MAY NOT BE TRANSFERED FROM THE CUSTODY OF THE COMPETENT DIVISION OF R&D DEPARTMENT EXCEPT AS AUTHORIZED BY COMPAL ELECTRONICS, INC. NEITHER THIS SHEET NOR THE INFORMATION IT CONTAINS MAY BE USED BY OR DISCLOSED TO ANY THIRD PARTY WITHOUT PRIOR WRITTEN CONSENT OF COMPAL ELECTRONICS, INC.

Compal Electronics, Inc.

Title: **PCIe-CardReader JMB389**

Size: Custom | Document Number: **PHQAA LA-6832P M/B** | Rev: 0.2

Date: Thursday, October 07, 2010 | Sheet 29 of 45

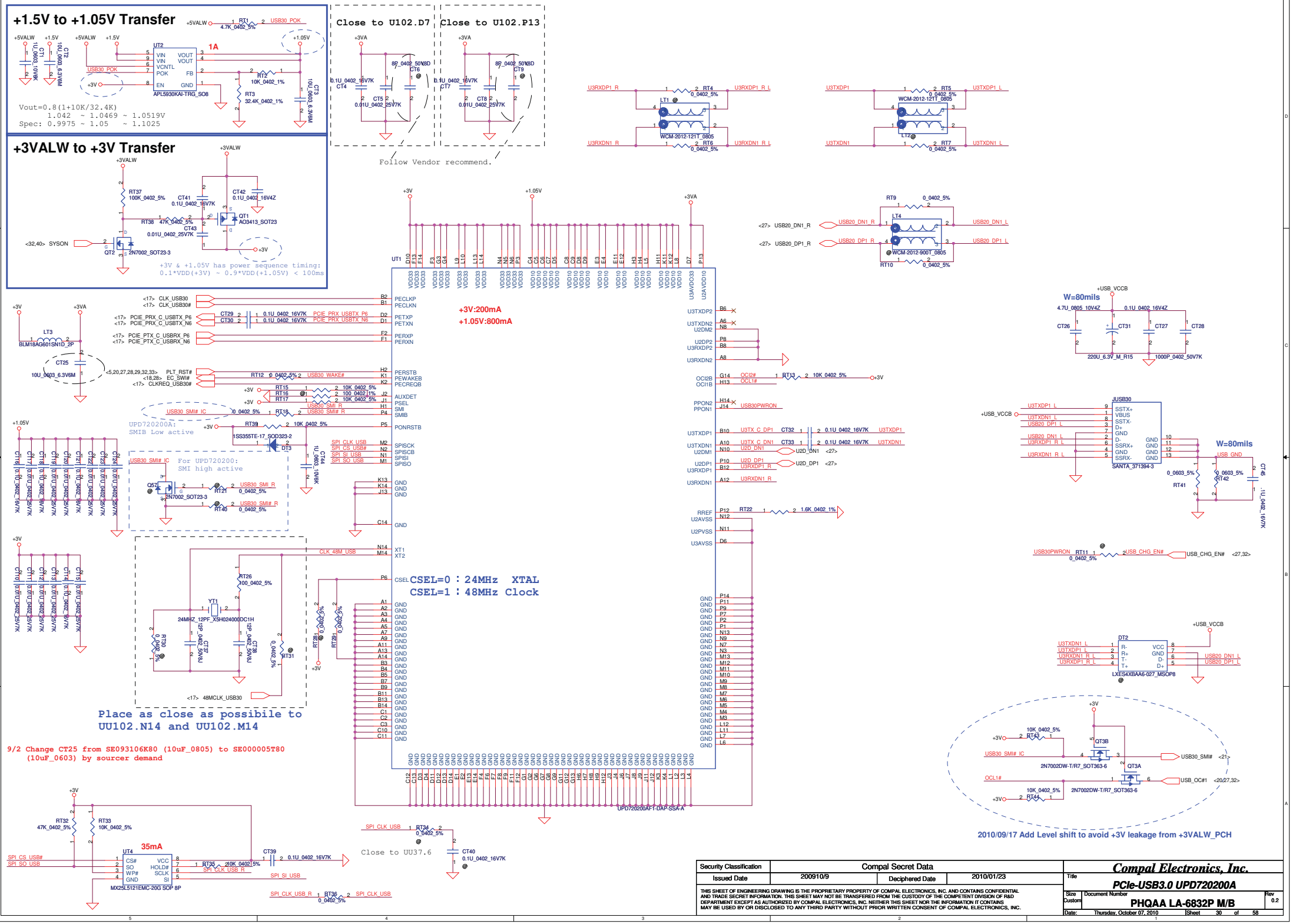

Security Classification	Compal Secret Data		
Issued Date	200910/9	Deciphered Date	2010/01/23

THIS SHEET OF ENGINEERING DRAWING IS THE PROPRIETARY PROPERTY OF COMPAL ELECTRONICS, INC. AND CONTAINS CONFIDENTIAL AND TRADE SECRET INFORMATION. THIS SHEET MAY NOT BE TRANSFERED FROM THE CUSTODY OF THE COMPETENT DIVISION OF R&D DEPARTMENT EXCEPT AS AUTHORIZED BY COMPAL ELECTRONICS, INC. NEITHER THIS SHEET NOR THE INFORMATION IT CONTAINS MAY BE USED BY OR DISCLOSED TO ANY THIRD PARTY WITHOUT PRIOR WRITTEN CONSENT OF COMPAL ELECTRONICS, INC.

Compal Electronics, Inc.

Title: PCIe-USB3.0 UPD720200A

Size: Custom | Document Number: PHQAA LA-6832P M/B | Rev: 0.2

Date: Thursday, October 07, 2010 | Sheet 30 of 58

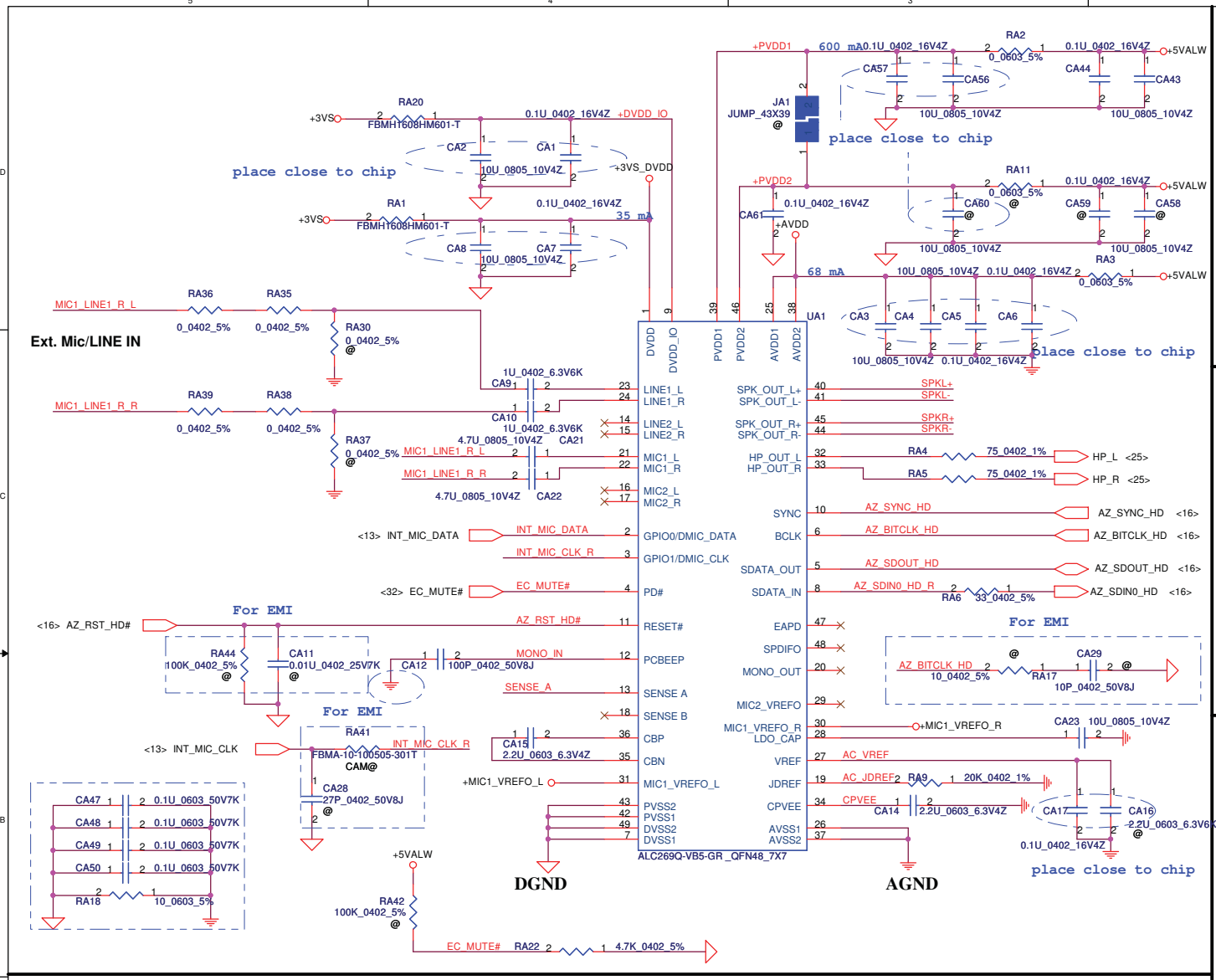

Speaker Connector

placement near Audio Codec

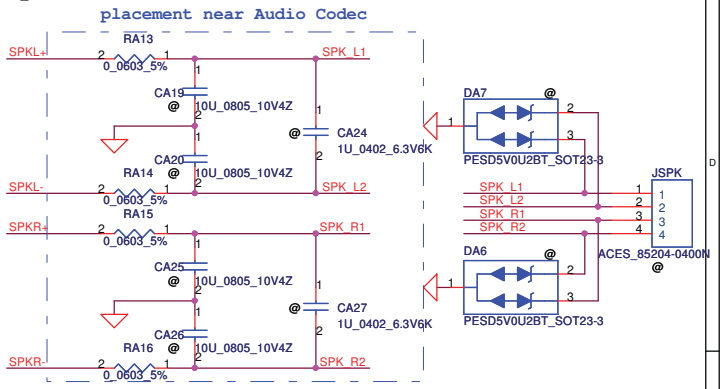

EC Beep

PCI Beep

Beep sound

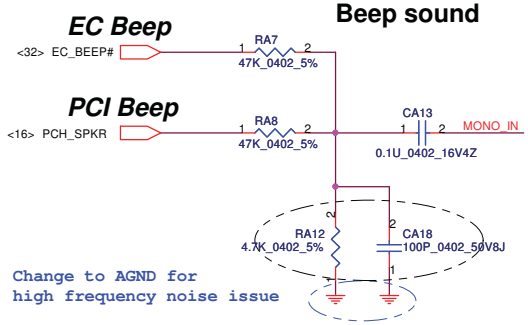

9/1 Change RA12 from 10k to 4.7kohm and CA18 from 0.1uF to 100pF for Beep by A51 demand.

Ext.MIC/LINE IN JACK

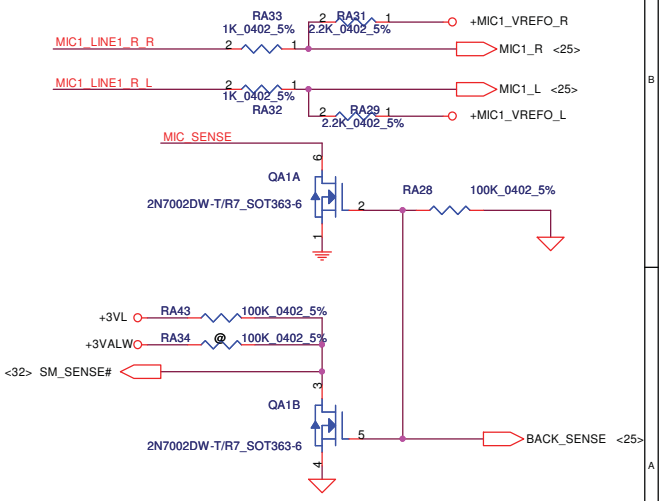

Sense Pin	Impedance	Codec Signals	Function
SENSE A	39.2K	PORT-I (PIN 32, 33)	Headphone out
	20K	PORT-B (PIN 21, 22)	Ext. MIC
	10K	PORT-C (PIN 23, 24)	
	5.1K	(PIN 48)	
SENSE B	39.2K	PORT-E (PIN 14, 15)	
	20K	PORT-F (PIN 16, 17)	
	10K	PORT-H (PIN 20)	

place close to chip

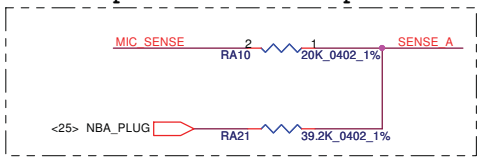

Security Classification	Compal Secret Data		
Issued Date	2010/09/03	Deciphered Date	2012/12/31

THIS SHEET OF ENGINEERING DRAWING IS THE PROPRIETARY PROPERTY OF COMPAL ELECTRONICS, INC. AND CONTAINS CONFIDENTIAL AND TRADE SECRET INFORMATION. THIS SHEET MAY NOT BE TRANSFERED FROM THE CUSTODY OF THE COMPETENT DIVISION OF R&D DEPARTMENT EXCEPT AS AUTHORIZED BY COMPAL ELECTRONICS, INC. NEITHER THIS SHEET NOR THE INFORMATION IT CONTAINS MAY BE USED BY OR DISCLOSED TO ANY THIRD PARTY WITHOUT PRIOR WRITTEN CONSENT OF COMPAL ELECTRONICS, INC.

Compal Electronics, Inc.

Title: HDA-ALC269/HP/MIC

Size | Document Number: PHQAA LA-6832P M/B | Rev 0.2

Date: Thursday, October 07, 2010 | Sheet 31 of 45

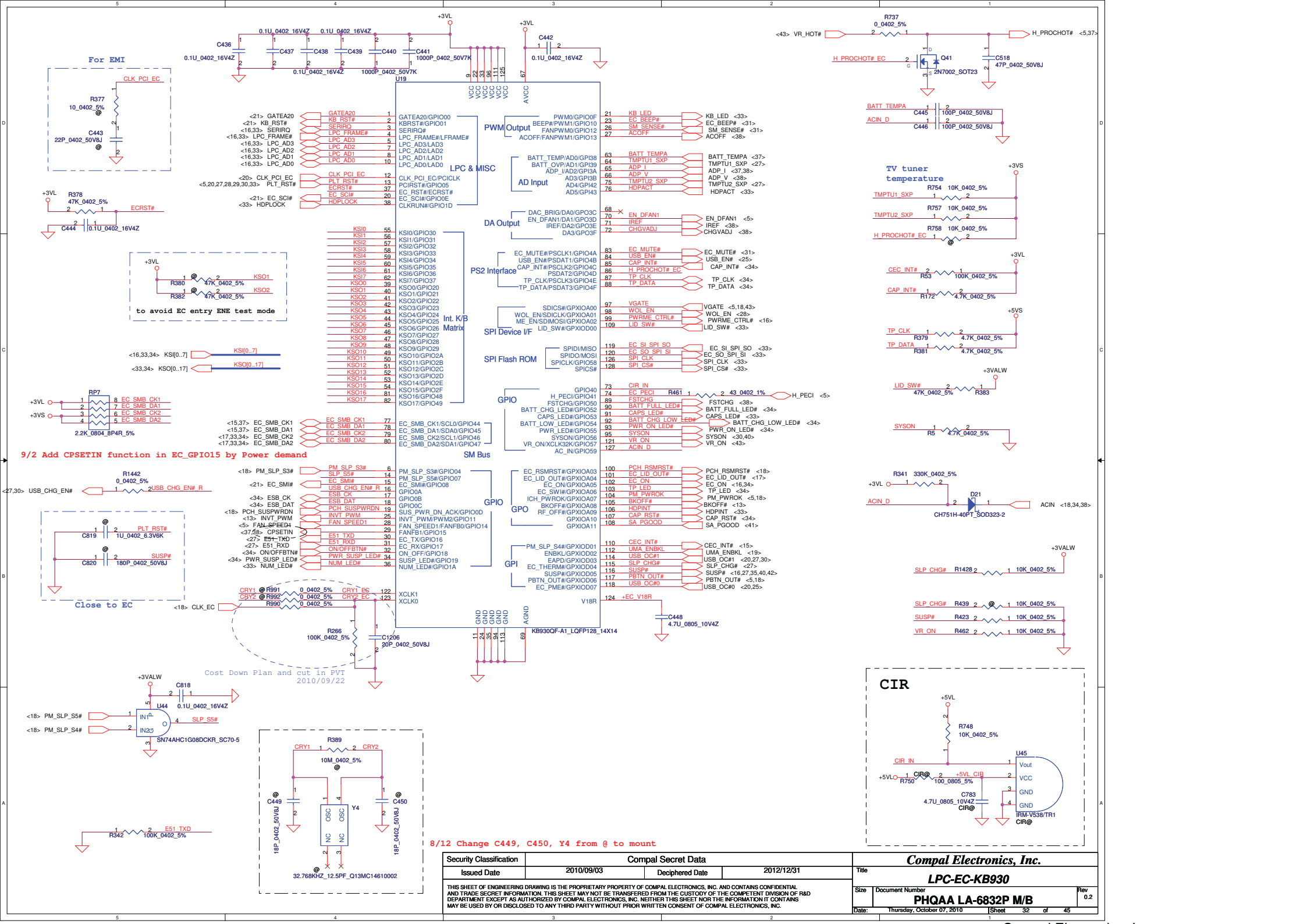

Security Classification	Compal Secret Data		
Issued Date	2010/09/03	Deciphered Date	2012/12/31

THIS SHEET OF ENGINEERING DRAWING IS THE PROPRIETARY PROPERTY OF COMPAL ELECTRONICS, INC. AND CONTAINS CONFIDENTIAL AND TRADE SECRET INFORMATION. THIS SHEET MAY NOT BE TRANSFERED FROM THE CUSTODY OF THE COMPETENT DIVISION OF R&D DEPARTMENT EXCEPT AS AUTHORIZED BY COMPAL ELECTRONICS, INC. NEITHER THIS SHEET NOR THE INFORMATION IT CONTAINS MAY BE USED BY OR DISCLOSED TO ANY THIRD PARTY WITHOUT PRIOR WRITTEN CONSENT OF COMPAL ELECTRONICS, INC.

Compal Electronics, Inc.

Title: **LPC-EC-KB930**

Size | Document Number: **PHQAA LA-6832P M/B** | Rev: 0.2

Date: Thursday, October 07, 2010 | Sheet 32 of 45

SPI Flash (256KB)

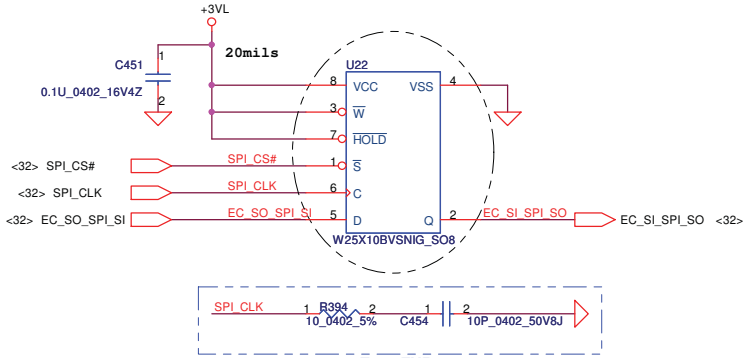

8/30 Change U22 From SA00003GK00 to SA00003GM10 due to EOL of SA00003GK00

9/03 Change U22 change to SA00003FL10

Lid SW

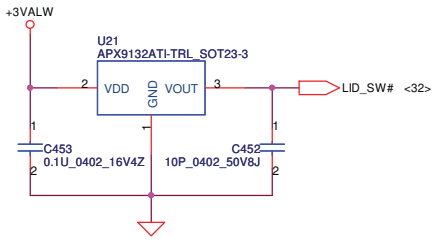

LPC Debug Port

Place the PAD under DDR DIMM.

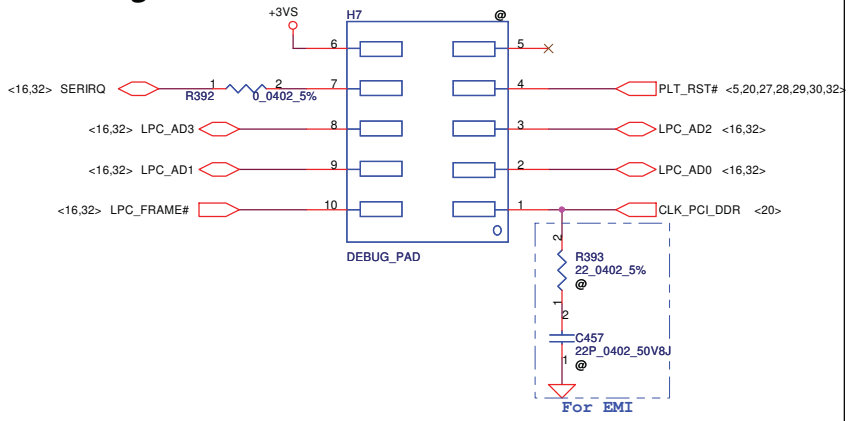

Keyboard LED

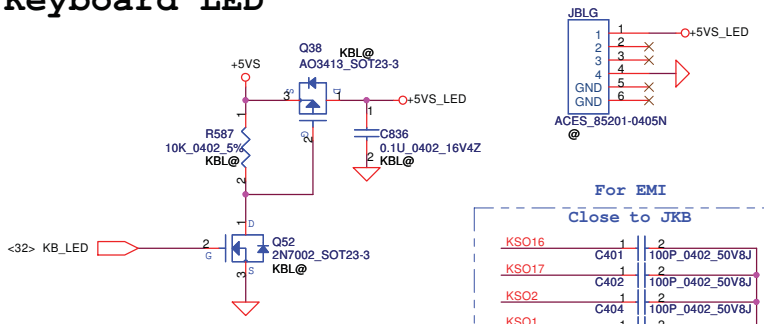

KEYBOARD CONN.

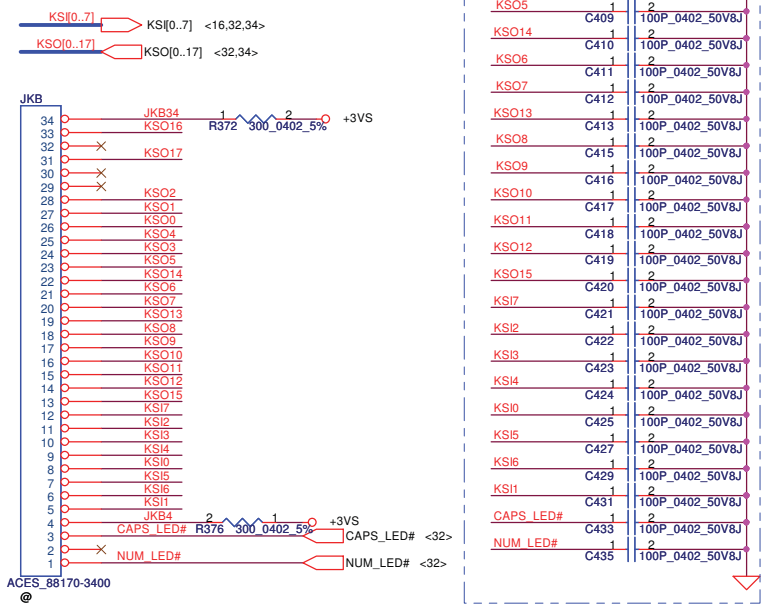

G-Sensor

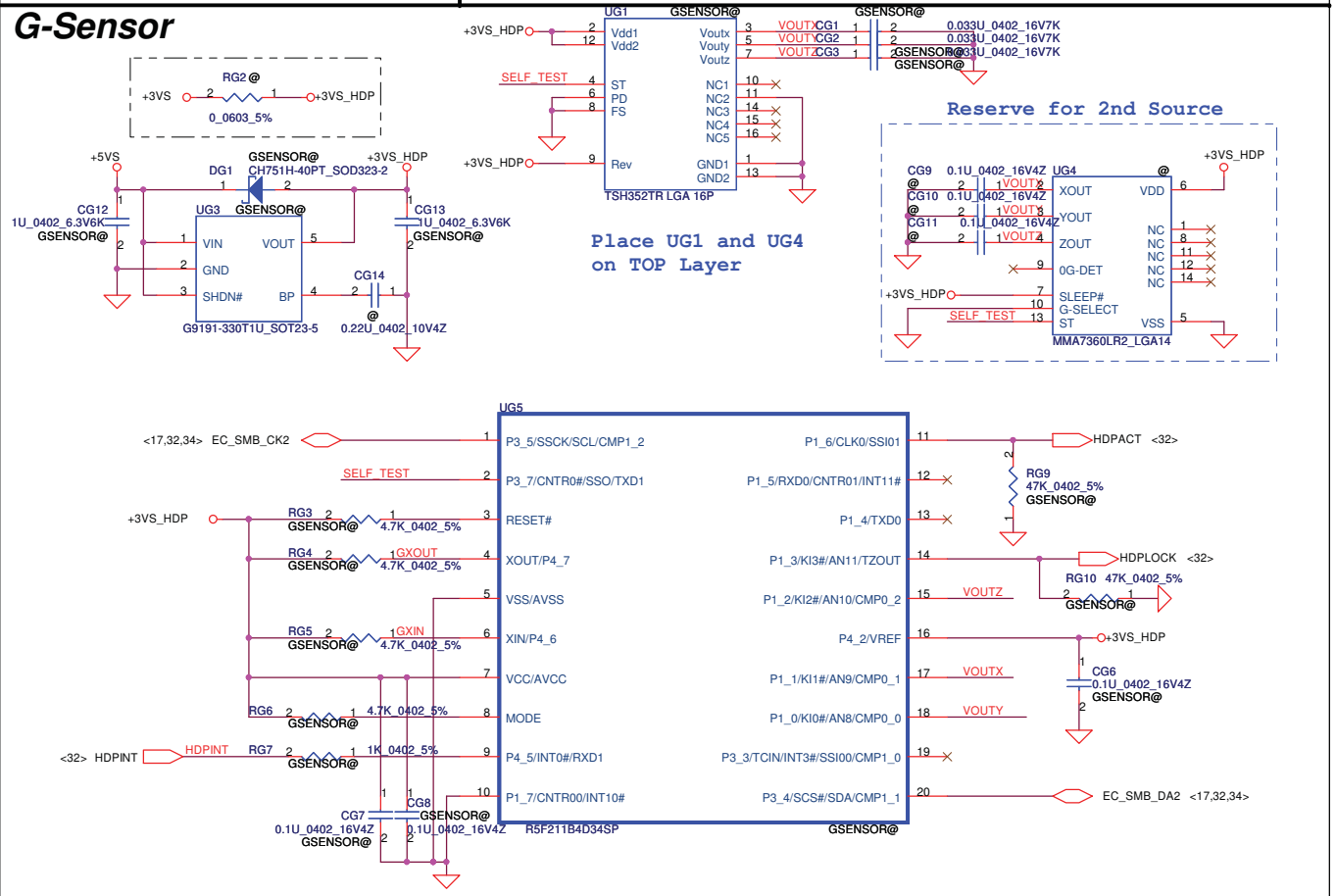

Security Classification	Compal Secret Data		
Issued Date	2010/09/03	Deciphered Date	2012/12/31

THIS SHEET OF ENGINEERING DRAWING IS THE PROPRIETARY PROPERTY OF COMPAL ELECTRONICS, INC. AND CONTAINS CONFIDENTIAL AND TRADE SECRET INFORMATION. THIS SHEET MAY NOT BE TRANSFERED FROM THE CUSTODY OF THE COMPETENT DIVISION OF R&D DEPARTMENT EXCEPT AS AUTHORIZED BY COMPAL ELECTRONICS, INC. NEITHER THIS SHEET NOR THE INFORMATION IT CONTAINS MAY BE USED BY OR DISCLOSED TO ANY THIRD PARTY WITHOUT PRIOR WRITTEN CONSENT OF COMPAL ELECTRONICS, INC.

Compal Electronics, Inc.

Title: SPI ROM/LID/Debug/KB/G-Sen

Size | Document Number: PHQAA LA-6832P M/B | Rev 0.2

Date: Thursday, October 07, 2010 | Sheet 33 of 45

Power Button

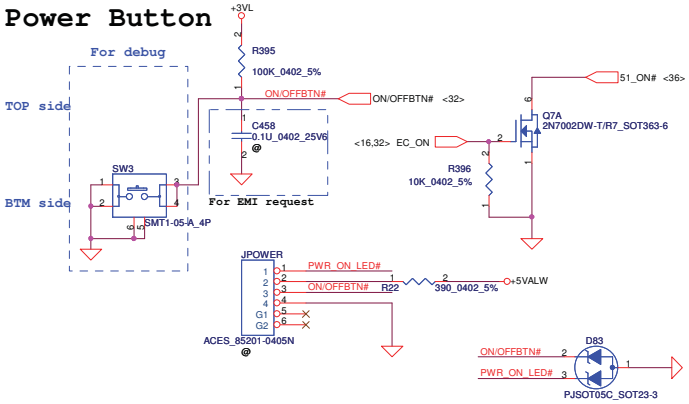

Caps Sensor/Light Sensor Conn.

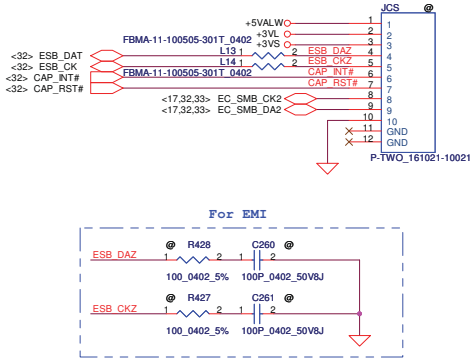

Touchpad & Light Pipe Connector

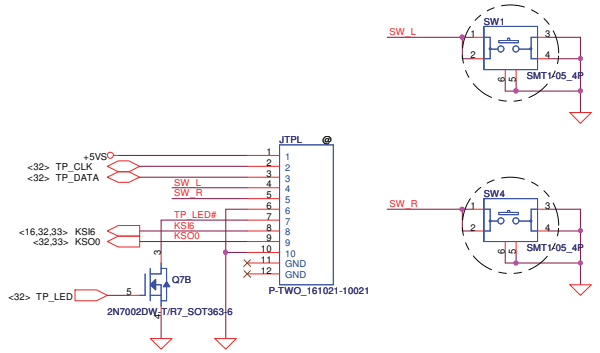

8/30 Change SW1, SW4 to SN100002Y00

DC-IN LED

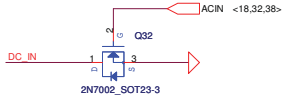

WiMAX LED

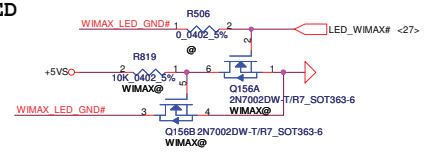

HDD LED

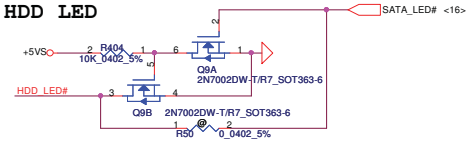

Logo LED

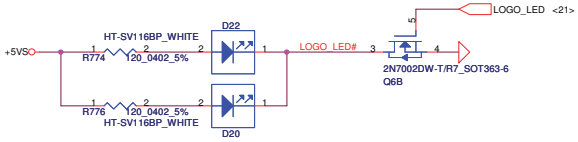

Screw Hole

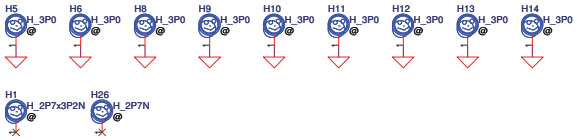

CPU

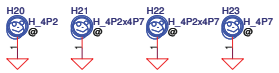

MINI CARD -- 3G

MINI CARD -- WLAN

PCB Fedical Mark PAD

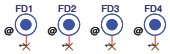

LED/B Connector

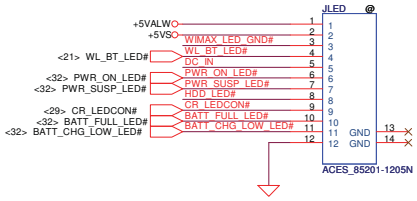

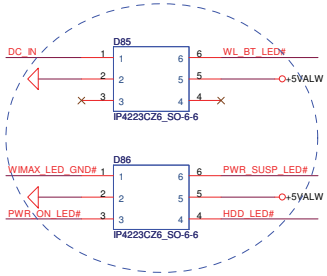

For ESD Demand
2010/10/01

ISPD

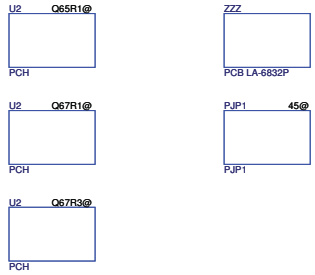

Security Classification	Compal Secret Data		
Issued Date	2010/09/03	Deciphered Date	2012/12/31

THIS SHEET OF ENGINEERING DRAWING IS THE PROPRIETARY PROPERTY OF COMPAL ELECTRONICS, INC. AND CONTAINS CONFIDENTIAL AND TRADE SECRET INFORMATION. THIS SHEET MAY NOT BE TRANSFERED FROM THE CUSTODY OF THE COMPETENT DIVISION OF R&D DEPARTMENT EXCEPT AS AUTHORIZED BY COMPAL ELECTRONICS, INC. NEITHER THIS SHEET NOR THE INFORMATION IT CONTAINS MAY BE USED BY OR DISCLOSED TO ANY THIRD PARTY WITHOUT PRIOR WRITTEN CONSENT OF COMPAL ELECTRONICS, INC.

Compal Electronics, Inc.

Title: PWR/Cap./TP/LED/LP/LS/Screw

Size | Document Number: PHQAA LA-6832P M/B | Rev 0.2

Date: Thursday, October 07, 2010 | Sheet 34 of 45

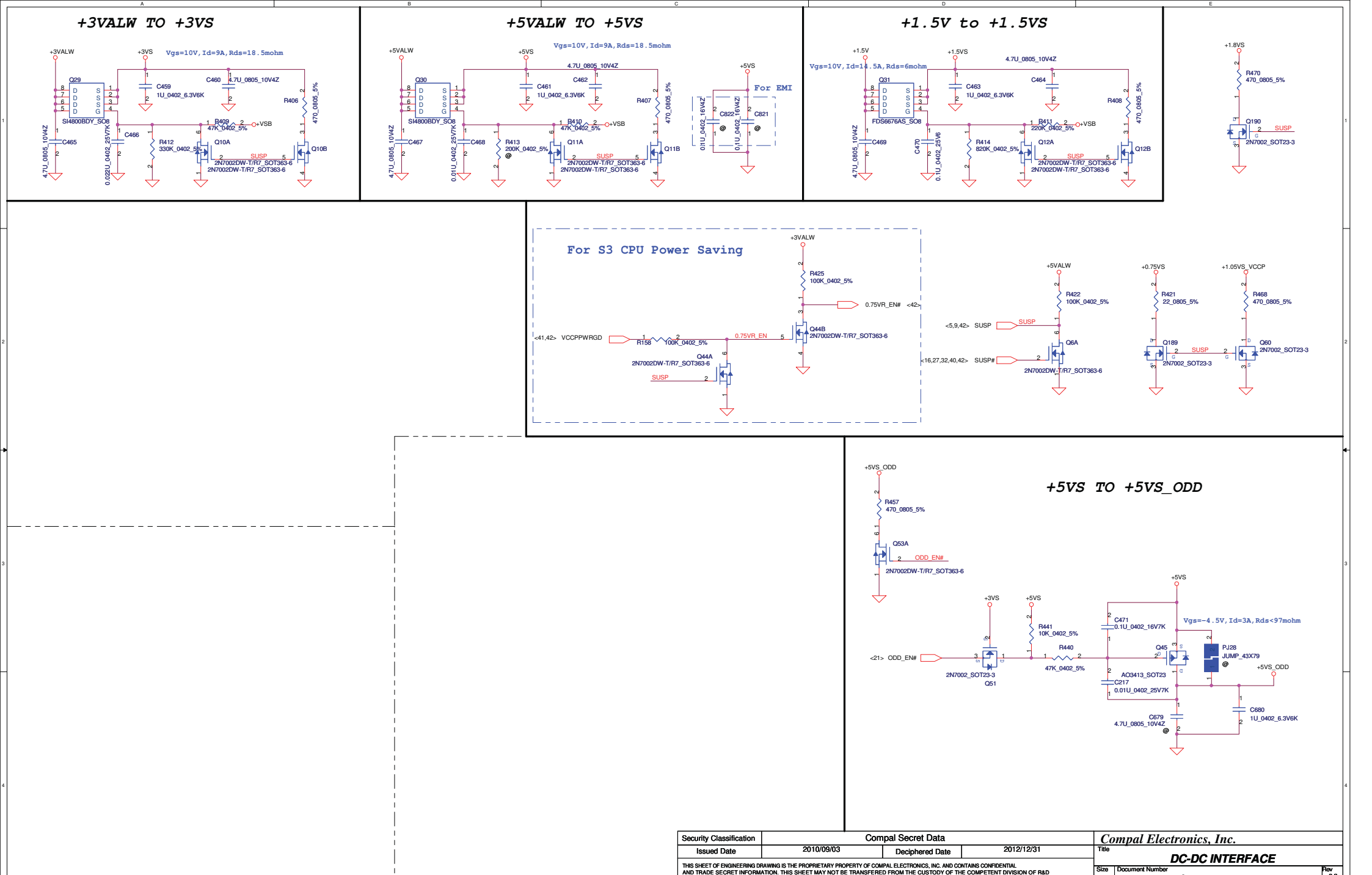

Security Classification	Compal Secret Data		
Issued Date	2010/09/03	Deciphered Date	2012/12/31

THIS SHEET OF ENGINEERING DRAWING IS THE PROPRIETARY PROPERTY OF COMPAL ELECTRONICS, INC. AND CONTAINS CONFIDENTIAL AND TRADE SECRET INFORMATION. THIS SHEET MAY NOT BE TRANSFERED FROM THE CUSTODY OF THE COMPETENT DIVISION OF R&D DEPARTMENT EXCEPT AS AUTHORIZED BY COMPAL ELECTRONICS, INC. NEITHER THIS SHEET NOR THE INFORMATION IT CONTAINS MAY BE USED BY OR DISCLOSED TO ANY THIRD PARTY WITHOUT PRIOR WRITTEN CONSENT OF COMPAL ELECTRONICS, INC.

Compal Electronics, Inc.

Title: DC-DC INTERFACE

Size | Document Number: PHQAA LA-6832P M/B | Rev: 0.2

Date: Thursday, October 07, 2010 | Sheet 35 of 45

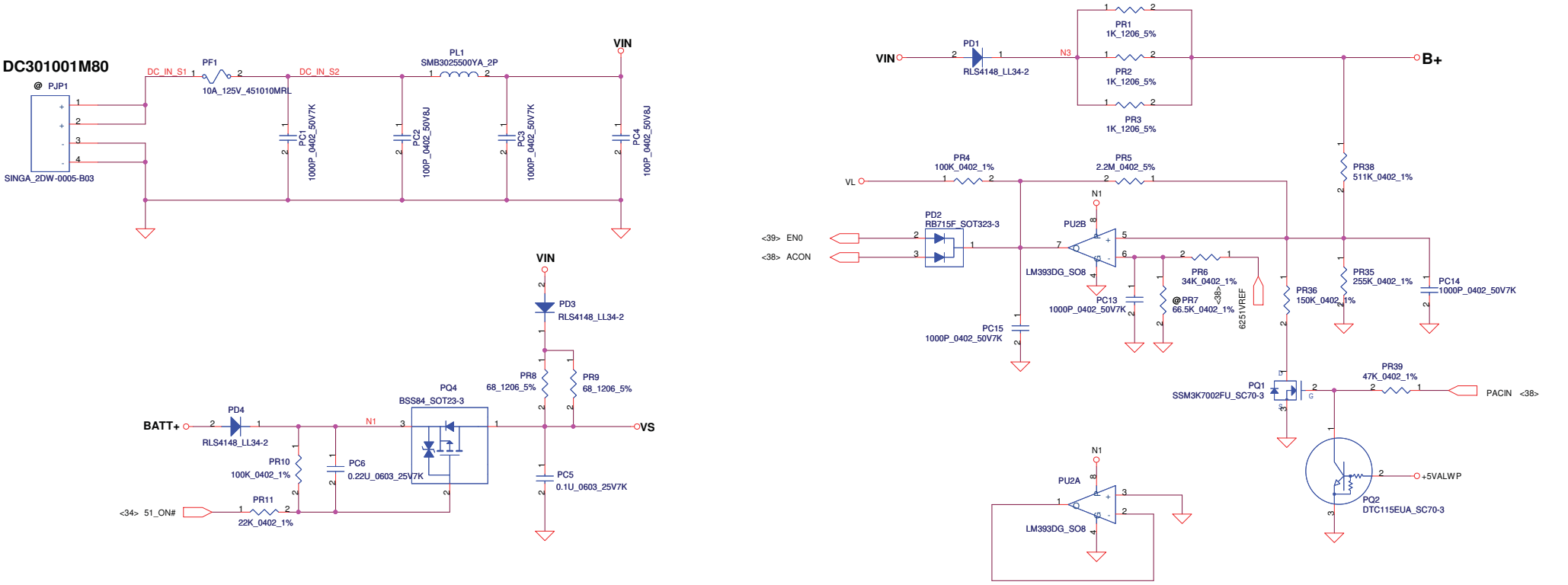

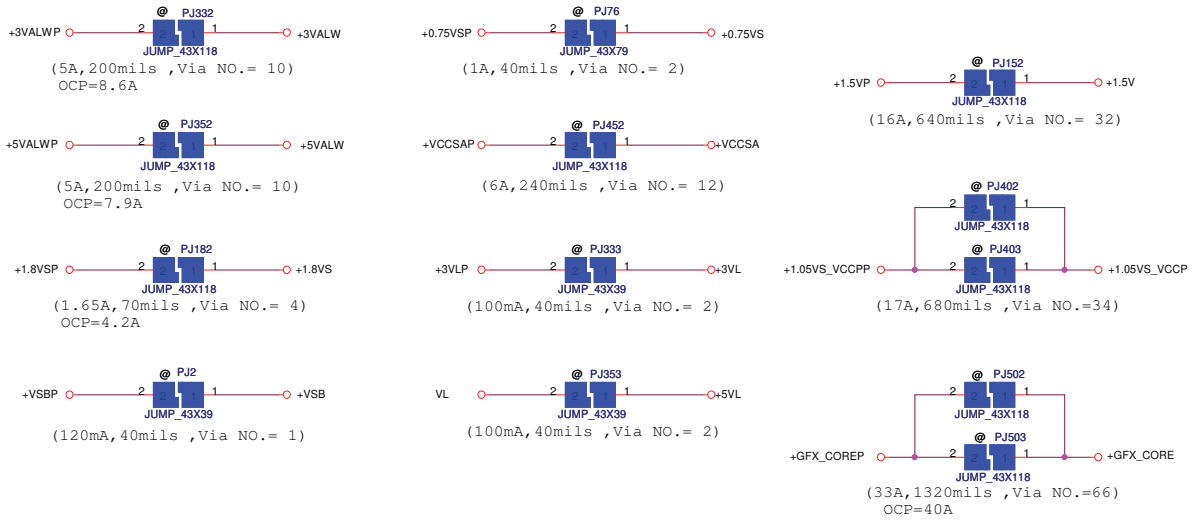

RTC Battery

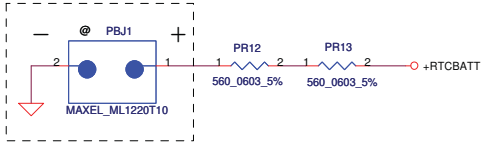

SP093MX0000

ACIN

Precharge detector	Min.	typ.	Max.
H-->L	14.42V	14.74V	15.23V
L-->H	15.39V	15.88V	16.39V

Security Classification	Compal Secret Data			Compal Electronics, Inc.
Issued Date	2009/11/13	Deciphered Date	2009/04/28	Title: *DCIN/VIN DECTOR*
				Size / Document Number: NHQAA LA-6831P M/B — Rev 0.1
				Date: Thursday, October 07, 2010 — Sheet 36 of 58

THIS SHEET OF ENGINEERING DRAWING IS THE PROPRIETARY PROPERTY OF COMPAL ELECTRONICS, INC. AND CONTAINS CONFIDENTIAL AND TRADE SECRET INFORMATION. THIS SHEET MAY NOT BE TRANSFERED FROM THE CUSTODY OF THE COMPETENT DIVISION OF R&D DEPARTMENT EXCEPT AS AUTHORIZED BY COMPAL ELECTRONICS, INC. NEITHER THIS SHEET NOR THE INFORMATION IT CONTAINS MAY BE USED BY OR DISCLOSED TO ANY THIRD PARTY WITHOUT PRIOR WRITTEN CONSENT OF COMPAL ELECTRONICS, INC.

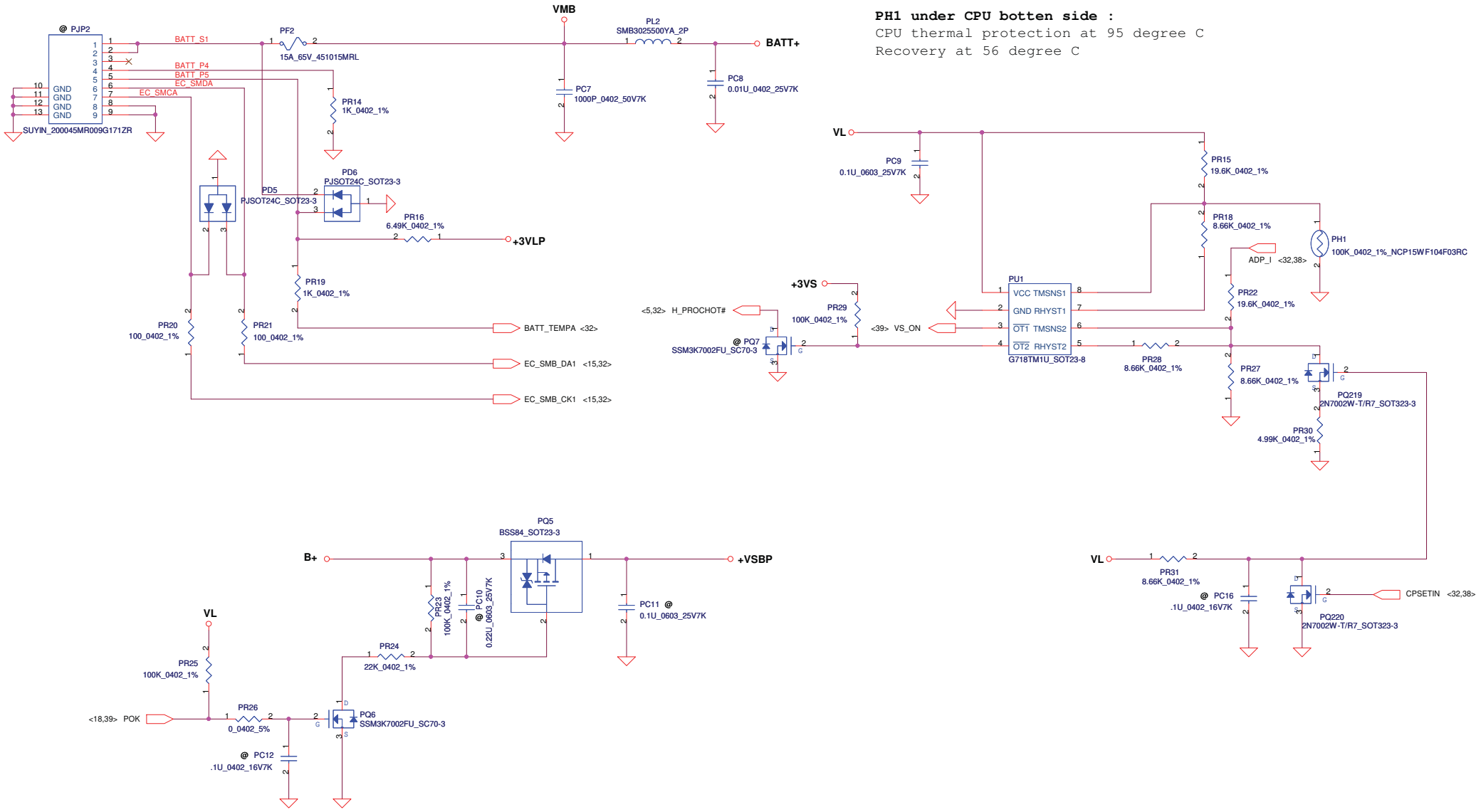

Security Classification	Compal Secret Data		
Issued Date	2009/11/13	Deciphered Date	2009/04/28

THIS SHEET OF ENGINEERING DRAWING IS THE PROPRIETARY PROPERTY OF COMPAL ELECTRONICS, INC. AND CONTAINS CONFIDENTIAL AND TRADE SECRET INFORMATION. THIS SHEET MAY NOT BE TRANSFERED FROM THE CUSTODY OF THE COMPETENT DIVISION OF R&D DEPARTMENT EXCEPT AS AUTHORIZED BY COMPAL ELECTRONICS, INC. NEITHER THIS SHEET NOR THE INFORMATION IT CONTAINS MAY BE USED BY OR DISCLOSED TO ANY THIRD PARTY WITHOUT PRIOR WRITTEN CONSENT OF COMPAL ELECTRONICS, INC.

Compal Electronics, Inc.

Title: **BATTERY CONN / OTP**

Size | Document Number: **NHQAA LA-6831P M/B** | Rev 0.1

Date: Thursday, October 07, 2010 | Sheet 37 of 58

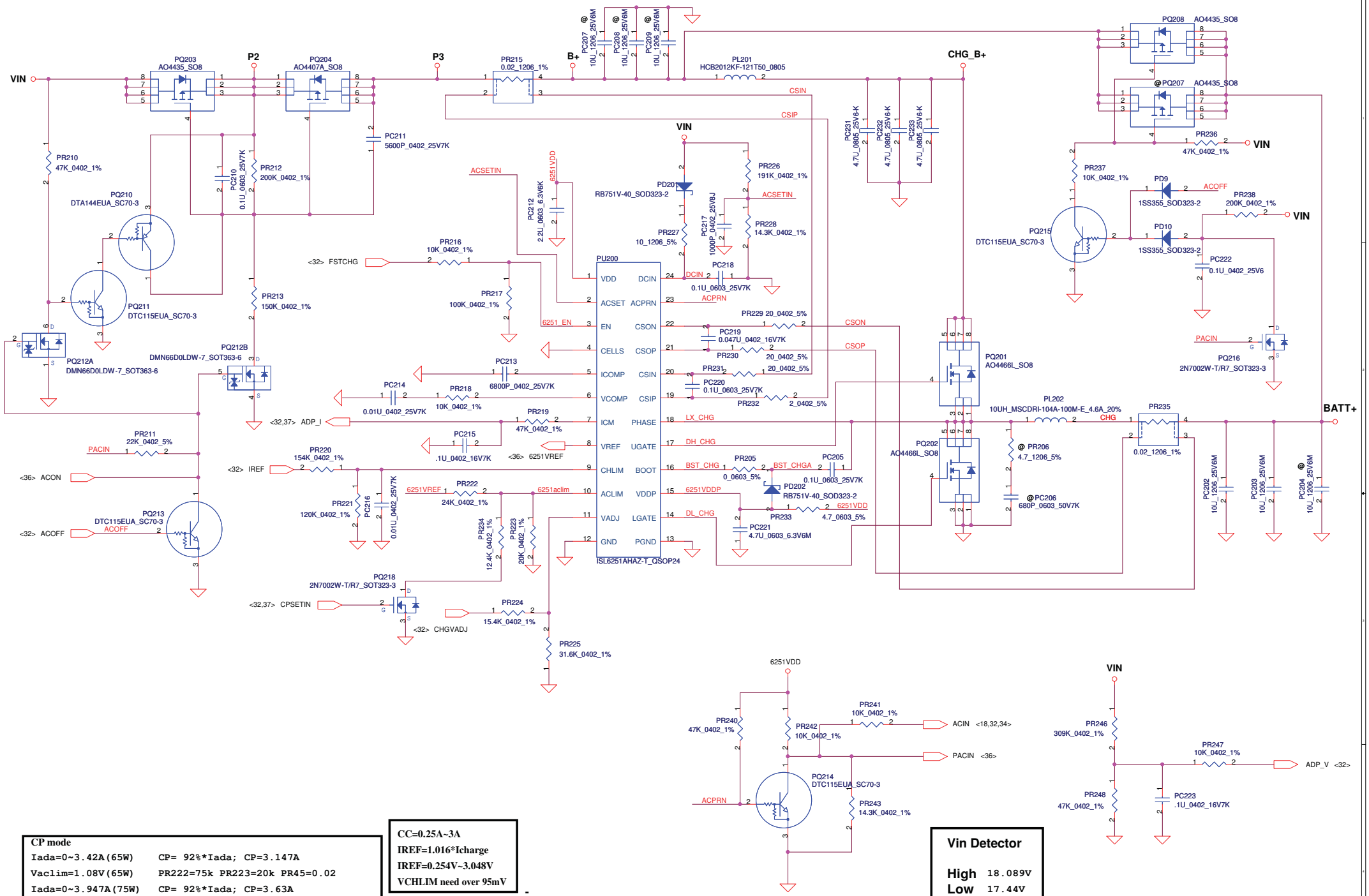

CP mode

Iada=0~3.42A(65W)	CP= 92%*Iada; CP=3.147A
Vaclim=1.08V(65W)	PR222=75k PR223=20k PR45=0.02
Iada=0~3.947A(75W)	CP= 92%*Iada; CP=3.63A
Vaclim=0.736V(75W)	PR222=24k PR223=20k PR45=0.02
Iada=0~4.737A(90W)	CP= 92%*Iada; CP=4.36A
Vaclim=0.736V(90W)	PR222=53.6k PR223=20k PR45=0.015
Iada=0~6.316A(120W)	CP= 92%*Iada; CP=5.81A
Vaclim=0.736V(120W)	PR222=8.25k PR223=26.7k PR45=0.015

CC=0.25A~3A
IREF=1.016*Icharge
IREF=0.254V~3.048V
VCHLIM need over 95mV

CHGVADJ=(Vcell-4)*9.445

Vcell	CHGVADJ
4V	0V
4.2V	1.882V
4.35V	3.2935V

Vin Detector

High	18.089V
Low	17.44V

Security Classification	Compal Secret Data		
Issued Date	2010/01/25	Deciphered Date	2009/04/28

THIS SHEET OF ENGINEERING DRAWING IS THE PROPRIETARY PROPERTY OF COMPAL ELECTRONICS, INC. AND CONTAINS CONFIDENTIAL AND TRADE SECRET INFORMATION. THIS SHEET MAY NOT BE TRANSFERED FROM THE CUSTODY OF THE COMPETENT DIVISION OF R&D DEPARTMENT EXCEPT AS AUTHORIZED BY COMPAL ELECTRONICS, INC. NEITHER THIS SHEET NOR THE INFORMATION IT CONTAINS MAY BE USED BY OR DISCLOSED TO ANY THIRD PARTY WITHOUT PRIOR WRITTEN CONSENT OF COMPAL ELECTRONICS, INC.

Compal Electronics, Inc.

Title: **CHARGER**

Size: Custom | Document Number: NHQAA LA-6831P M/B | Rev: 0.1

Date: Thursday, October 07, 2010 | Sheet 38 of 58

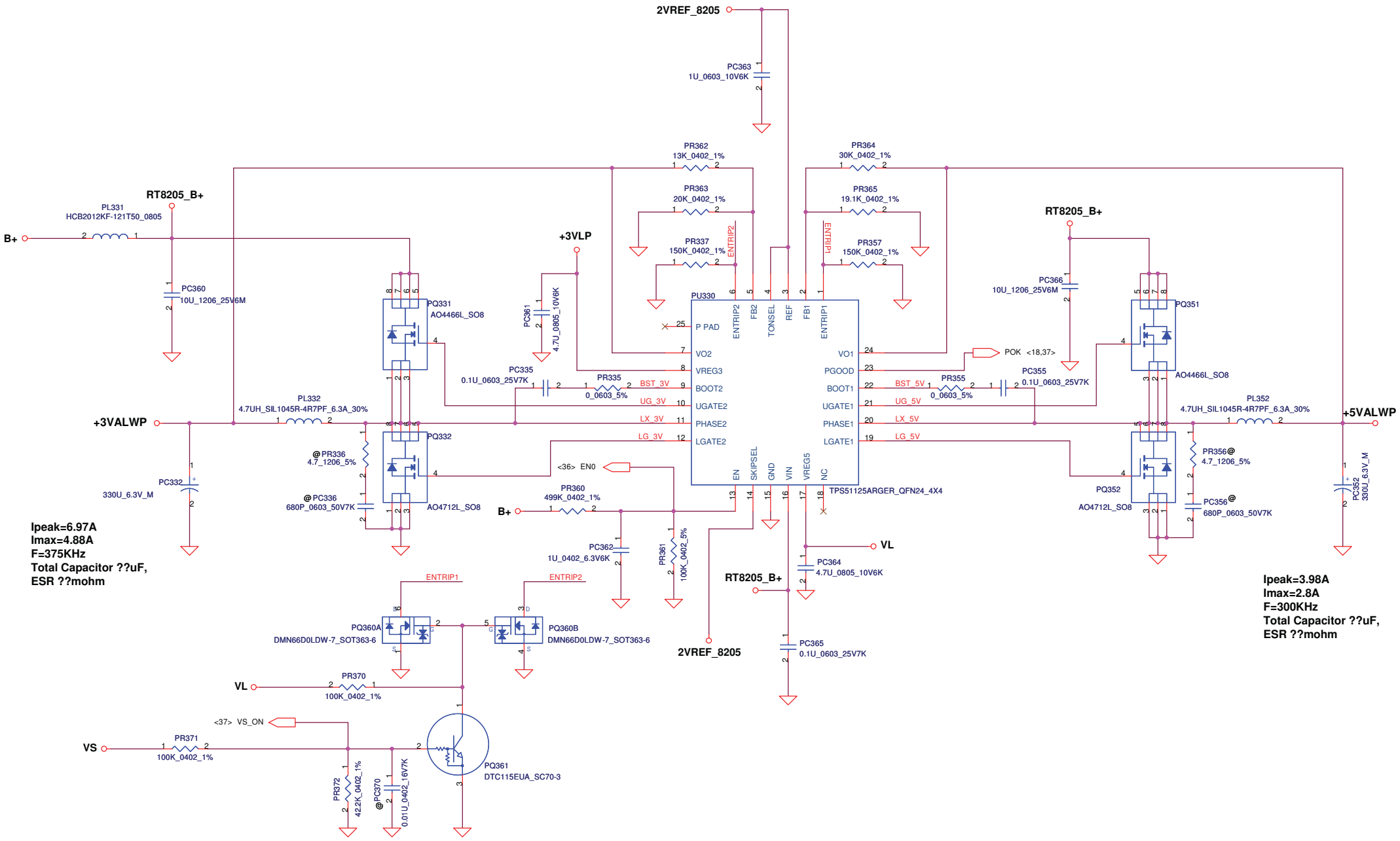

Security Classification	Compal Secret Data			Compal Electronics, Inc.
Issued Date	2009/11/13	Deciphered Date	2009/04/28	Title: *3VALWP/5VALWP*
				Size / Document Number: NHQAA LA-6831P M/B — Rev: 0.1
				Date: Thursday, October 07, 2010 — Sheet 39 of 58

THIS SHEET OF ENGINEERING DRAWING IS THE PROPRIETARY PROPERTY OF COMPAL ELECTRONICS, INC. AND CONTAINS CONFIDENTIAL AND TRADE SECRET INFORMATION. THIS SHEET MAY NOT BE TRANSFERED FROM THE CUSTODY OF THE COMPETENT DIVISION OF R&D DEPARTMENT EXCEPT AS AUTHORIZED BY COMPAL ELECTRONICS, INC. NEITHER THIS SHEET NOR THE INFORMATION IT CONTAINS MAY BE USED BY OR DISCLOSED TO ANY THIRD PARTY WITHOUT PRIOR WRITTEN CONSENT OF COMPAL ELECTRONICS, INC.

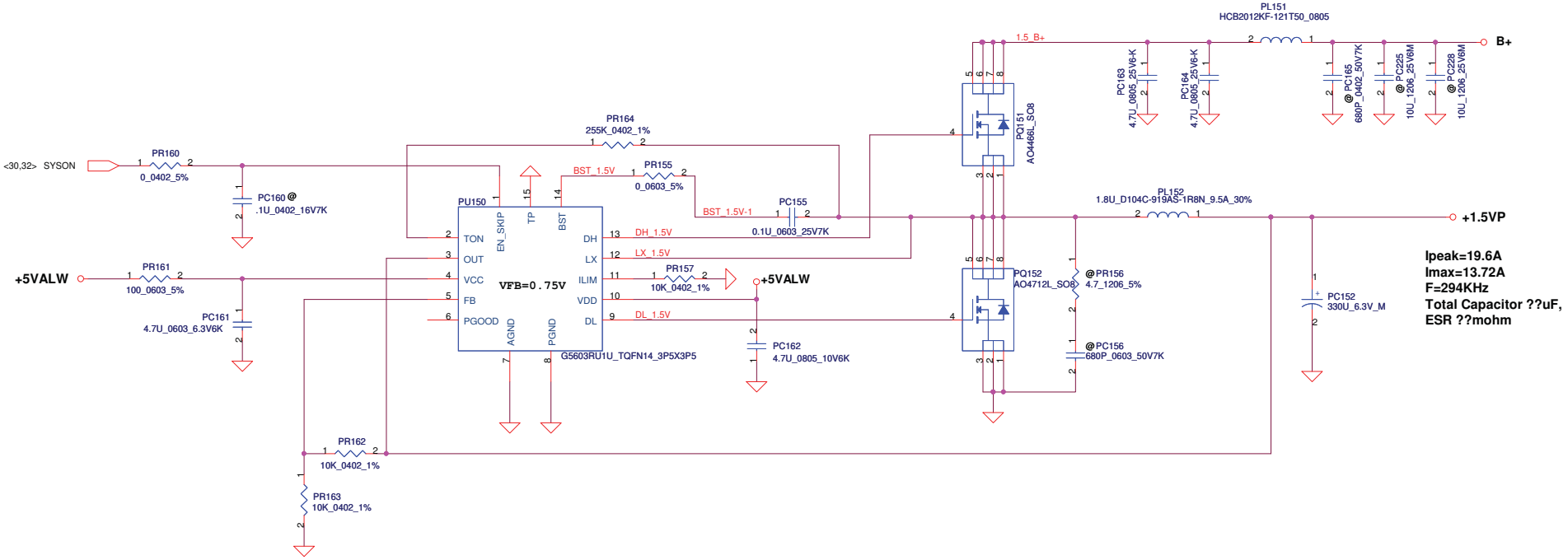

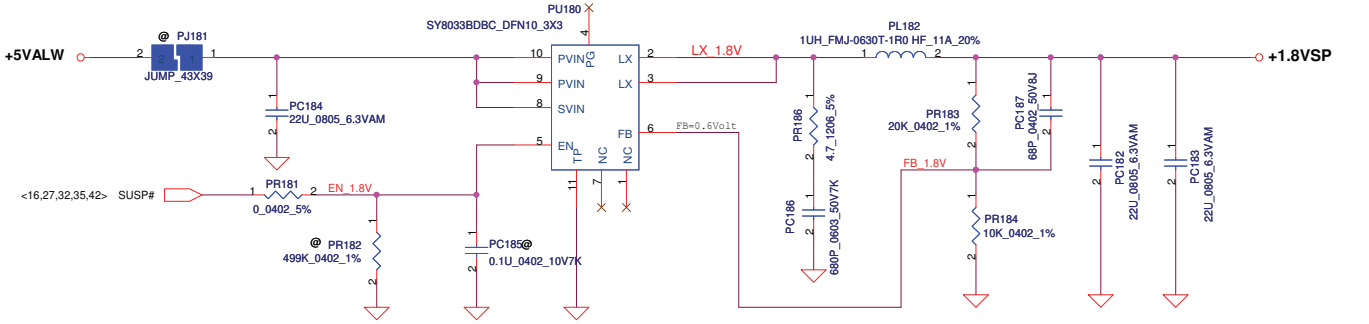

Security Classification	Compal Secret Data		
Issued Date	2010/01/25	Deciphered Date	2009/04/28

THIS SHEET OF ENGINEERING DRAWING IS THE PROPRIETARY PROPERTY OF COMPAL ELECTRONICS, INC. AND CONTAINS CONFIDENTIAL AND TRADE SECRET INFORMATION. THIS SHEET MAY NOT BE TRANSFERED FROM THE CUSTODY OF THE COMPETENT DIVISION OF R&D DEPARTMENT EXCEPT AS AUTHORIZED BY COMPAL ELECTRONICS, INC. NEITHER THIS SHEET NOR THE INFORMATION IT CONTAINS MAY BE USED BY OR DISCLOSED TO ANY THIRD PARTY WITHOUT PRIOR WRITTEN CONSENT OF COMPAL ELECTRONICS, INC.

Compal Electronics, Inc.

Title: ***+1.5VP/+1.8VSP***

Size: Custom | Document Number: **NHQAA LA-6831P M/B** | Rev: 0.1

Date: Thursday, October 07, 2010 | Sheet 40 of 58

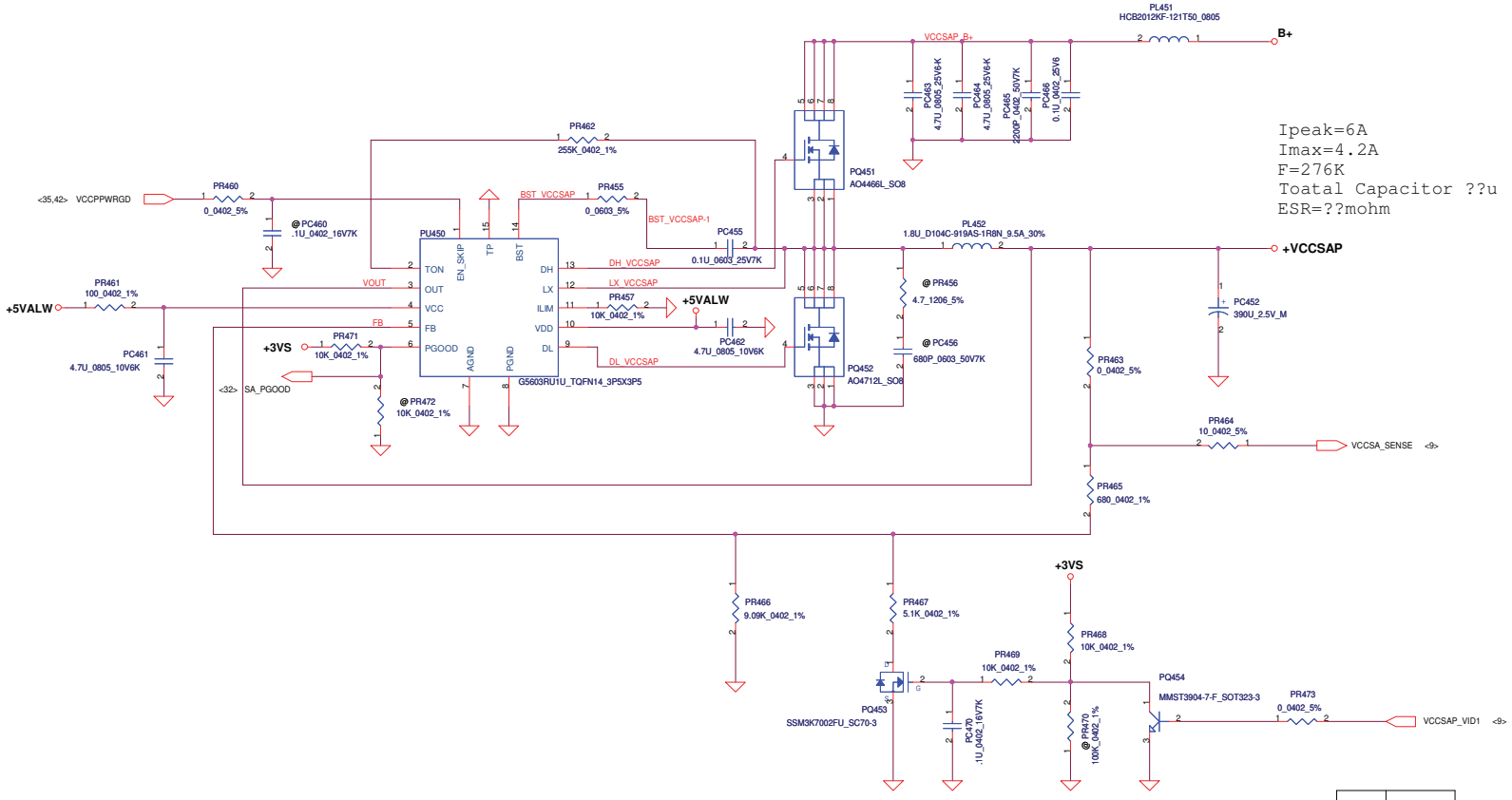

Ipeak=6A
Imax=4.2A
F=276K
Toatal Capacitor ??u
ESR=??mohm

VID1	+VCCSAP
1	0.8V
0	0.9V

THIS SHEET OF ENGINEERING DRAWING IS THE PROPRIETARY PROPERTY OF COMPAL ELECTRONICS, INC. AND CONTAINS CONFIDENTIAL AND TRADE SECRET INFORMATION. THIS SHEET MAY NOT BE TRANSFERED FROM THE CUSTODY OF THE COMPETENT DIVISION OF R&D DEPARTMENT EXCEPT AS AUTHORIZED BY COMPAL ELECTRONICS, INC. NEITHER THIS SHEET NOR THE INFORMATION IT CONTAINS MAY BE USED BY OR DISCLOSED TO ANY THIRD PARTY WITHOUT PRIOR WRITTEN CONSENT OF COMPAL ELECTRONICS, INC.

Security Classification	Compal Secret Data			Compal Electronics, Inc.
Issued Date	2010/01/25	Deciphered Date	2009/04/28	Title: *+VCCSAP/+1.0VSDGPUP*
				Size: C; Document Number: NHQAA LA-6831P M/B; Rev: 0.1
				Date: Thursday, October 07, 2010; Sheet 41 of 58

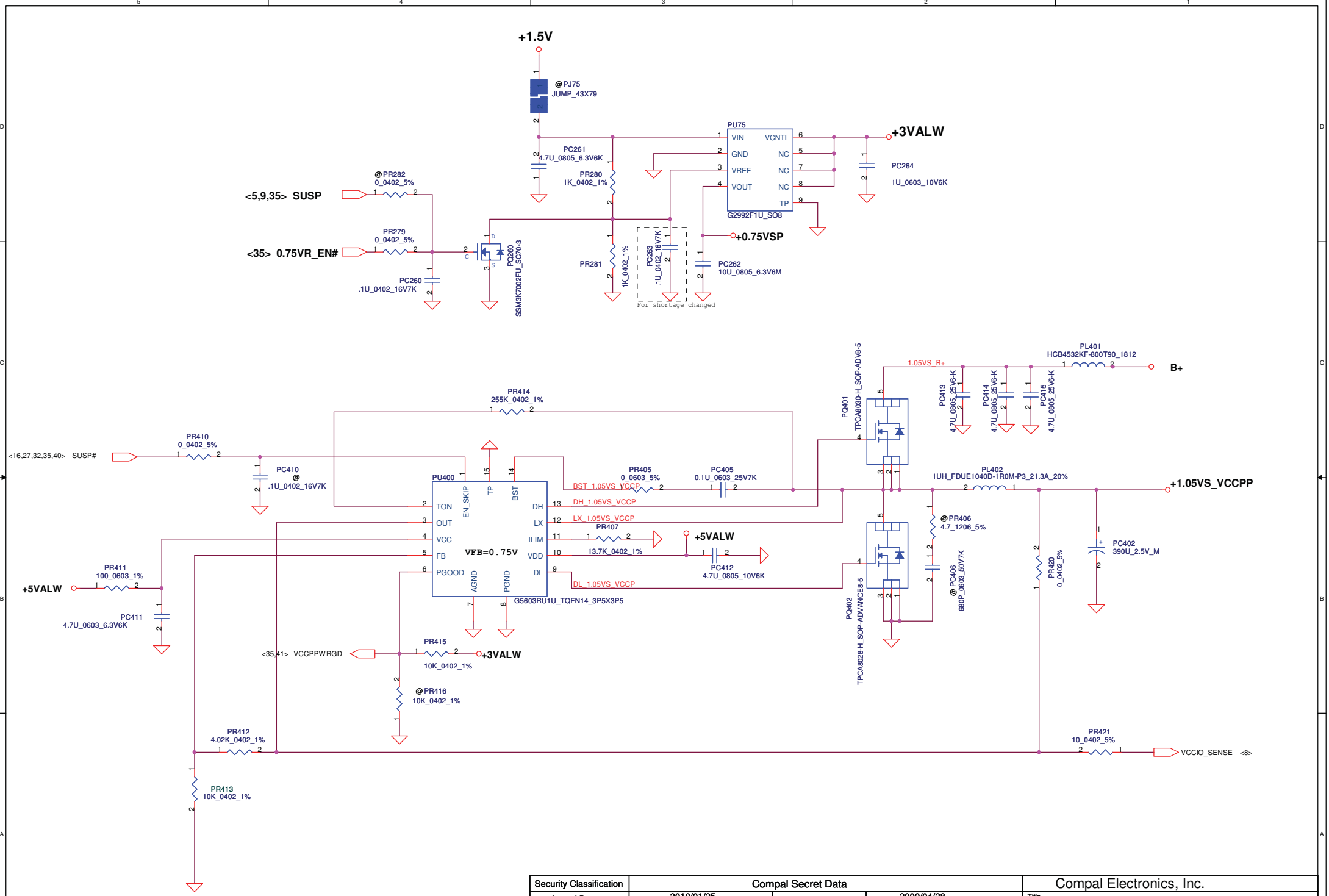

Security Classification	Compal Secret Data		
Issued Date	2010/01/25	Deciphered Date	2009/04/28

THIS SHEET OF ENGINEERING DRAWING IS THE PROPRIETARY PROPERTY OF COMPAL ELECTRONICS, INC. AND CONTAINS CONFIDENTIAL AND TRADE SECRET INFORMATION. THIS SHEET MAY NOT BE TRANSFERED FROM THE CUSTODY OF THE COMPETENT DIVISION OF R&D DEPARTMENT EXCEPT AS AUTHORIZED BY COMPAL ELECTRONICS, INC. NEITHER THIS SHEET NOR THE INFORMATION IT CONTAINS MAY BE USED BY OR DISCLOSED TO ANY THIRD PARTY WITHOUT PRIOR WRITTEN CONSENT OF COMPAL ELECTRONICS, INC.

Compal Electronics, Inc.

Title: ***+1.05VS_VCCP/+0.75VSP***

Size: Custom | Document Number: **NHQAA LA-6831P M/B** | Rev: 0.1

Date: Thursday, October 07, 2010 | Sheet 42 of 58

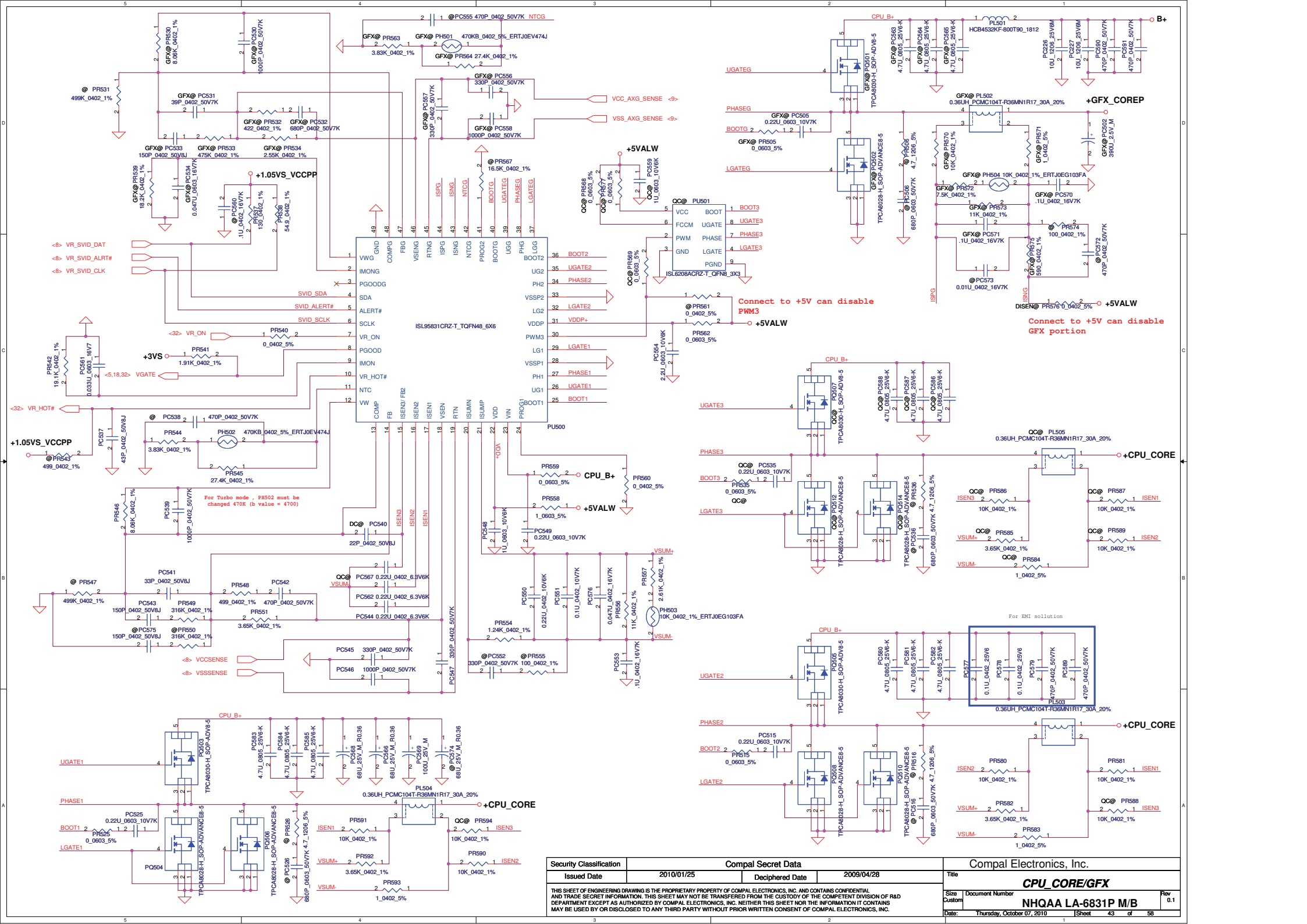

Security Classification	Compal Secret Data		
Issued Date	2010/01/25	Deciphered Date	2009/04/28

THIS SHEET OF ENGINEERING DRAWING IS THE PROPRIETARY PROPERTY OF COMPAL ELECTRONICS, INC. AND CONTAINS CONFIDENTIAL AND TRADE SECRET INFORMATION. THIS SHEET MAY NOT BE TRANSFERED FROM THE CUSTODY OF THE COMPETENT DIVISION OF R&D DEPARTMENT EXCEPT AS AUTHORIZED BY COMPAL ELECTRONICS, INC. NEITHER THIS SHEET NOR THE INFORMATION IT CONTAINS MAY BE USED BY OR DISCLOSED TO ANY THIRD PARTY WITHOUT PRIOR WRITTEN CONSENT OF COMPAL ELECTRONICS, INC.

Compal Electronics, Inc.

Title: **CPU_CORE/GFX**

Size: Custom | Document Number: **NHQAA LA-6831P M/B** | Rev: 0.1

Date: Thursday, October 07, 2010 | Sheet 43 of 58

NO	DATE	PAGE	MODIFICATION LIST	PURPOSE
1.	2010/09/07	P37-PWR_BATTERY CONN / OTP	Remove PQ7 SSM3K7002FU	Adapter protect circuit not ready
2.	2010/09/07	P40-PWR-+1.5VP/+1.8VSP	Change PQ152 to AO4712L	Use same part number
3.	2010/09/07	P41-PWR_+VCCSAP	Change PQ452 to AO4712L	Use same part number
4.	2010/09/07	P40-PWR-+1.5VP/+1.8VSP	Change PQ151 to AO446L	Use same part number
5.	2010/09/07	P53-PWR_+VCCSAP	Change PQ451 to AO446L	Use same part number
6.	2010/09/07	P50-PWR-CHARGER	Change PQ201,PQ202 to AO4466L	Use same part number
7.	2010/09/07	P50-PWR-CHARGER	Change PQ203 to AO4435L and remove PQ207	For UMA SKU
8.	2010/09/07	P50-PWR-CHARGER	Add PR234 12.4k	For DC and QC CP setting
9.	2010/09/07	P55-PWR-CPU_CORE/GFX	Add PR560 0 Ohm	Set CPU VBOOT to 0V
10.	2010/09/07	P50-PWR-CHARGER	Add PR222 24k and PR223 20k	For CP setting
11.	2010/09/07	P55-PWR-CPU_CORE/GFX	Add PR544 3.83k,PR545 27.4k,PH502 470k	Add CPU NTC NET
12.	2010/09/07	P55-PWR-CPU_CORE/GFX	Change PR551 from 3.83k to 3.65k	For CPU_CORE load line
12.	2010/09/07	P55-PWR-CPU_CORE/GFX	Change PC550 0.33u to 0.22u and add PC551 0.1u	For shortage issue

Security Classification	Compal Secret Data		
Issued Date	2009/11/13	Deciphered Date	2009/04/28

THIS SHEET OF ENGINEERING DRAWING IS THE PROPRIETARY PROPERTY OF COMPAL ELECTRONICS, INC. AND CONTAINS CONFIDENTIAL AND TRADE SECRET INFORMATION. THIS SHEET MAY NOT BE TRANSFERED FROM THE CUSTODY OF THE COMPETENT DIVISION OF R&D DEPARTMENT EXCEPT AS AUTHORIZED BY COMPAL ELECTRONICS, INC. NEITHER THIS SHEET NOR THE INFORMATION IT CONTAINS MAY BE USED BY OR DISCLOSED TO ANY THIRD PARTY WITHOUT PRIOR WRITTEN CONSENT OF COMPAL ELECTRONICS, INC.

Compal Electronics, Inc.

Title: **Power PIR**

Size | Document Number: **NHQAA LA-6831P M/B** | Rev: 0.1

Date: Thursday, October 07, 2010 | Sheet 44 of 58

HW PIR (Product Improve Record)

NWQAA LA-6832P SCHEMATIC CHANGE LIST
REVISION CHANGE: 0.1
GERBER-OUT DATE: 2010/09/03

NO Item	DATE Date	PAGE Page	MODIFICATION LIST Component	Solution	PURPOSE Request
1)	07/21		Delete	3D@,DHDMI@,DIS@,EDP@,NO3D@,OPT@,UMA@	For low cost Huron River
2)	08/11			Update room	
3)	08/11	09	Change	R119 change to @	
4)	08/12	16	Add	R442, R443	For SPI debug circuit
5)	08/12	16	Change	R572, R573, R574, R575, R569 from @ to mount	For SPI debug circuit
6)	08/12	20	Remove	USB20_P3/N3 from PCH	Don't need USB20/30 BTO
7)	08/12	30	Remove	DT1, JUSB20, RT14, RT20, RT23, RT24	Don't need USB20/30 BTO
8)	08/12	32	Change	C449, C450, Y4 from @ to mount	
9)	08/13	15	Change	L8, L9 L10, L11 from SM070001600 to SM070001310	For EMI demand
10)	08/13	30	Change	RT11 to @	
11)	08/13	30	Change	RT19 to USB30@	
12)	08/13	30	Change	CT3 from SE000005TN0 to SE000005T80	
13)	08/13	30	Remove	RT25, RT27	Don't need USB20/30 BTO
14)	08/17	5	Remove	R14	For HW Review demand
15)	08/18	6	Reserve	R33	For HW Review demand
16)	08/18	9	Reserve	R119	To follow CRB 1.0
17)	08/18	11	Remove	R92, R89	For HW Review demand
18)	08/18	12	Remove	R93, R97	For HW Review demand
19)	08/18	26	Reserve	C236, C268, C490	For HW Review demand
20)	08/18	15	Remove	R435, R438, R453(0 ohm)	
21)	08/18	15	Change	R195, R197, R198, R202, R201, R203, R205, R206 to SD028680080	
22)	08/18	15	Remove	R207	For HW Review demand
23)	08/18	18	Change	Net name from PM_CLKRUN# to PCH_GPIO32	For HW Review demand
24)	08/18	20	Change	R324 From 1K to 2.2K	For Intel check list demand
25)	08/18	21	Remove	PCH PECI signal	By HW Review demand
26)	08/18	25	Remove	C363, C364, C365, C366	By HW Review demand
27)	08/18	30	Change	UT4 to SA00004600	For CIC demand
28)	08/18	30	Change	USB30@ to always mount	Due to no BTO USB20/30.
29)	08/18	27	Remove	all new card function	
30)	08/20	9	Add	PJ32	For Cost down +1.5V to +1.5V_CPU
31)	08/20	13	Swap	USB20_P11 and USB20_N11	For layout request
32)	08/20	25	Swap	USB20_P0, USB20_N0, USB20_P1, USB20_N1	For layout request
33)	08/23			Update Power schematic	
34)	08/23	20	Swap	PCI_PIRQC#, PCH_GPIO4, PCH_GPIO2, PCI_PIRQA#	For layout request
35)	08/23	20	Swap	SLP_CHG_M3, SLP_CHG_M4, USB_OC#0	For layout request
36)	08/30	18	Reserve	R259	For cost down plan
37)	08/30		Change	USB3.0 Connector	For ME demand
38)	08/30	21	Add	USB Sleep & Charge MAXIC_Select pin in GPIO71(Remove T73)	For MAX14550E/14566B co-lay
39)	08/30	25	Change	C426 to Aluminum Solid Cap 220u	For cost down
40)	08/30	27	Add	USB Sleep & Charge IC: MAX14550E	
41)	08/30	28	Add	16pin X'form for cost down, and P/N is SP050006E00	For cost down
42)	08/30	28	Change	PWRME_CTRL# from PCH_GPIO33 to HDA_SDO	By Intel spec
43)	08/30	16	Change	U53 PIN 9 from KSI4 to KSI3	
44)	08/30	16	Change	R442, R443 from 10k to 100k	
45)	08/30	16	Change	U56 Pin3 from KSO6 to +5VALW	
46)	08/30	16	Add	R227 100k ohm	
47)	08/30	28	Reserve	D85 and D86	For ESD request
48)	08/30	30	Swap	U3RXDN1_R_L, U3RXDN1_R_L, U3RXDP1_R, U3RXDP1_R_L	For layout request
49)	08/30	16	Change	U13 from SA000021A00 to SA00003IN00	Due to EOL of SA000021A00
50)	08/30	27	Reserve	R1443 for WLAN Mini PCIE Card Pin5	
51)	08/30	33	Change	U22 From SA00003GK00 to SA00003GM10	Due to EOL of SA00003GK00
52)	08/30	34	Change	SW1, SW4 to SN100002Y00	
53)	09/01	28	Add	LL5 for ISN test	For EMI demand
54)	09/01	31	Change	RA12 from 10k to 4.7kohm and CA18 from 0.1uF to 100pF	For Beep by A51 demand.
55)	09/01	32	Add	CPSETIN to power	For 65W/75W select
56)	09/01	18,20,21	Reserve	C894, C895, C896, C897	For ESD request
57)	09/02	08	Remove, add	C126, C131 and add C898 3Pin Bulk Cap	By Power Demand
58)	09/02	27	Add	14566@ & 14550@	
59)	09/02	27	Change	U5 Pin8 control pin from SLP_CHG# to SLP_CHG_M4	
60)	09/02	33	Change	EC ROM size from 256KB(SA00003GM10) to 128KB(SA00003FL10)	
61)	09/02	11	Change	C165,C166,C168,C171,C174,C176,C178 from SE093106M80 to SE000005T80	For sourcer demand
62)	09/02	12	Change	C191,C192,C194,C197,C200,C202,C204 from SE093106M80 to SE000005T80	For sourcer demand
63)	09/02		Change	CT25 from SE093106K80 (10uF_0805) to SE000005T80 (10uF_0603)	For sourcer demand
64)	09/03	08	Change	C890, C891, C894 from SGA00005R00 to SGA00004X80	For Power demand
65)	09/06	33	Change	U22 change to SA00003FL10	
66)	09/06	28	Delete	UL4 8105ELDO@ and 8105ESWR@	

Security Classification	Compal Secret Data		
Issued Date	200910/9	Deciphered Date	2010/01/23

THIS SHEET OF ENGINEERING DRAWING IS THE PROPRIETARY PROPERTY OF COMPAL ELECTRONICS, INC. AND CONTAINS CONFIDENTIAL AND TRADE SECRET INFORMATION. THIS SHEET MAY NOT BE TRANSFERED FROM THE CUSTODY OF THE COMPETENT DIVISION OF R&D DEPARTMENT EXCEPT AS AUTHORIZED BY COMPAL ELECTRONICS, INC. NEITHER THIS SHEET NOR THE INFORMATION IT CONTAINS MAY BE USED BY OR DISCLOSED TO ANY THIRD PARTY WITHOUT PRIOR WRITTEN CONSENT OF COMPAL ELECTRONICS, INC.

Compal Electronics, Inc.

Title: *HW-PIR*

Size: Custom | Document Number: NHQAA LA-6831P M/B | Rev: 0.1

Date: Thursday, October 07, 2010 | Sheet 57 of 57

www.s-manuals.com