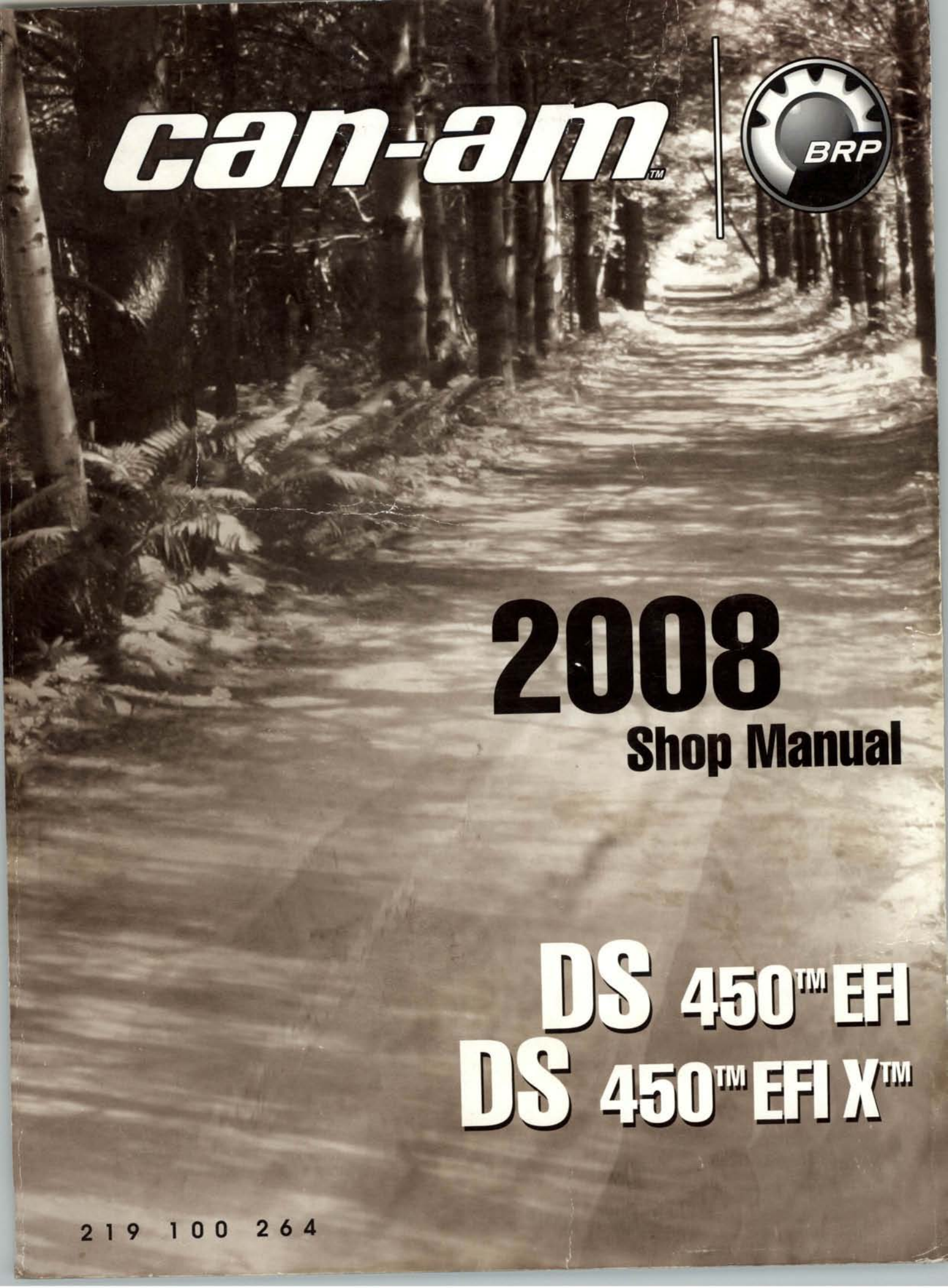
can-am™
BRP
2008
Shop Manual
DS 450™ EFI
DS 450™ EFI X™
219 100 264

2008
Shop Manual

DS 450™
DS 450™ X

can-am

Legal deposit:

National Library of Quebec
National Library of Canada 2007

Printed in Canada

Technical Publications
Bombardier Recreational Products Inc. (BRP)
Valcourt (Quebec) Canada

TABLE OF CONTENTS

TABLE OF CONTENTS

TABLE OF CONTENTS

TABLE OF CONTENTS

TABLE OF CONTENTS

PRESEASON PREPARATION

Prior to use vehicle, proper vehicle preparation is required after a storage period.

Any worn, broken or damaged parts found during the storage procedure should have been replaced. If not, proceed with the replacement.

Using the maintenance chart, performed items in the column indicated: **EVERY 100 HOURS OR 5000 KM (3100 mi) OR 1 YEAR**.

A: ADJUST
C: CLEAN
I: INSPECT
L: LUBRICATE
R: REPLACE

PART/TASK	10 HOURS OR 30 DAYS OR 400 KM (250 mi) (The initial maintenance is very important and must not be neglected.)	EVERY 25 HOURS OR 1250 KM (800 mi)	EVERY 50 HOURS OR 2500 KM (1600 mi)	EVERY 100 HOURS OR 5000 KM (3100 mi) OR 1 YEAR (1)	EVERY 200 HOURS OR 10000 KM (6200 mi) OR 2 YEAR	REFER TO
ENGINE/TRANSMISSION						
Engine/transmission oil level	Every ride					
Engine/transmission oil and filter	R	R				LUBRICATION SYSTEM
Oil reservoir strainer				C		

vmr2008-004-001_a

1. *Use this column*

Furthermore, proceed with the following:

Vehicles Prepared as per Storage Procedure

Remove rag from muffler.

Test drive vehicle to confirm proper operation.

Vehicles Not Prepared as per Storage Procedure

Replace engine oil and filter.

Drain fuel tank and fill with fresh fuel.

Test drive vehicle to confirm proper operation.

Protect the vehicle with a cover to prevent dust accumulation during storage.

CAUTION: The vehicle has to be stored in a cool and dry place. If vehicle is stored outside, it must be covered with an opaque tarpaulin. This will prevent sun rays and grime from affecting plastic components and vehicle finish.

SPECIAL PROCEDURES

SERVICE PRODUCTS

Description	Part Number	Page
XP-S Lube	293 600 016	9

TURN OVER

When vehicle is turned over or stays tilted on the side, put the vehicle back on its wheels, then wait 3 to 5 minutes before starting the engine.

Inspect air filter housing drain tube for oil accumulation, if any oil is found, clean air filter and air filter housing. Refer to *AIR INTAKE SYSTEM* section.

Check oil level in oil tank and refill if necessary.

Start engine and let it run, around 1 minute, then stop engine. Check oil level immediately, refer to *LUBRICATION SYSTEM* section for proper procedure.

ATV IMMERSION

ATV Submerged for a Long Time (More than One Hour)

Engine

Disassemble engine to clean the internal parts and check if there is no rust or corrosion on any internal parts. Refer to *ENGINE* sections.

Drain air filter housing then clean and dry air filter.

Remove muffler and empty it. Let muffler dry then reinstall it on the vehicle.

Fuel System

Flush fuel tank and refill with new gas.

Lubricate the throttle body. Refer to *ELECTRONIC FUEL INJECTION.*

Chassis

Look for water in:

- Brake system (replace brake fluid)
- Chain tensioner.

Lubricate all cables. Check if the cables operate properly.

Lubricate suspension arms and swing arm.

Lubricate drive chain.

Spray all metal parts with XP-S Lube (P/N 293 600 016).

ATV Submerged for a Short Time (Less than One Hour)

Fuel System

Drain air filter housing then clean and dry air filter.

Look for water in fuel tank, in doubt, flush fuel tank and refill with new gas.

Engine

Check if engine oil is contaminated (oil will be milky). If so, perform the following instructions:

Drain engine oil.

Refill engine at the proper level with the recommended oil. Crank engine several times.

Remove spark plugs.

Add a small quantity of engine oil in cylinder (approximately 2 teaspoonfuls). Do not reinstall spark plugs at this moment.

Check condition of spark plugs. If spark plugs appear good reinstall them, if not install new ones.

Start the engine and allow it to run at idle speed until the engine reaches its operating temperature.

Stop the engine.

Change engine oil and filter.

NOTE: Change oil as many times as necessary, until there is no white appearance in engine oil.

Chassis

Lubricate all cables. Check if the cables operate properly.

Lubricate suspension arms and swing arm.

Lubricate drive chain.

Spray all metal parts with XP-S Lube (P/N 293 600 016).

TECHNICAL GUIDELINES (ENGINE)

The following charts are provided to help in diagnosing the probable source of troubles. It should be used as a guideline.

COOLING SYSTEM

Symptom: HIGH ENGINE OPERATING TEMPERATURE

1. **Low coolant level.**
   - *Check condition of hoses and hose clamps fixation. Tighten or replace.*
   - *Check if hoses are pinched or if the routing is good. Change the routing, repair or replace.*
   - *Check coolant drain screw on water pump housing. Tighten and/or replace sealing washer.*
   - *Check gaskets on water pump, cylinder head and cylinder. Tighten or replace.*
   - *Check leak indicator hole (located in clutch cover) if coolant leaks. Replace seal, refer to COOLING SYSTEM.*
   - *Check if the self-bleeding system nipples on radiator or cylinder head are blocked. Clean or replace.*
   - *Check engine oil for contamination (white appearance). Overhaul engine and repair.*
2. **Clogged radiator.**
   - *Check radiator fins for dirt or damages. Clean or replace.*
3. **Defective cooling fan.**
   - *Check if the cooling fan fuse is burnt. Replace.*
   - *Check if cooling fan motor turns. Replace.*
   - *Check condition of wires and connector. Repair or replace.*
4. **Defective thermostat (does not open when engine gets hot).**
   - *Replace thermostat. Refer to COOLING SYSTEM section.*
5. **Defective water pump.**
   - *Check water pump impeller for broken wings. Replace*
   - *Check if the spring pin retaining impeller is damaged. Replace.*
6. **Faulty temperature sensor.**
   - *Check if temperature sensor works properly. Replace.*
7. **Defective intermediate gear (less coolant supply).**
   - *Check if intermediate gear (located behind clutch cover) is worn out or broken. Replace.*
   - *Check if intermediate gear is clipped correctly onto needle pin.*

LUBRICATION SYSTEM

Symptom: LOW OR NO OIL PRESSURE

1. **Low oil level.**
   - *Check condition of hoses and hose clamps fixation. Tighten or replace.*
   - *Check if the hoses are pinched. Change the routing, repair or replace.*
   - *Check oil drain plugs (engine and oil tank). Tighten and/or replace sealing washer.*
   - *Check O-rings and gaskets. Replace damaged parts.*
   - *Check crankcase screws tightening. Tighten to recommended torque.*
   - *Check crankcase for cracks or other damages. Replace crankcase.*
   - *Check leak indicator hole (located in clutch cover) if oil leaks. Replace seal, refer to COOLING SYSTEM.*

Symptom: LOW OR NO OIL PRESSURE (cont'd)

2. **Clogged oil filter.**
   - *Check the condition of the oil filter. Change engine oil and filter.*
3. **Clogged oil tank strainer.**
   - *Check if oil tank connector and oil tank strainer are clogged. Clean and replace engine oil and filter.*
4. **Faulty oil pressure regulator valve.**
   - *Check regulator valve housing cleanliness. Clean and/or replace.*
   - *Check regulator valve spring condition. Clean and/or replace spring.*
5. **Defective oil pump.**
   - *Check engine oil. Incorrect oil being used. Replace damaged parts and use BRP recommended oil.*
   - *Check condition of gears driving oil pump. Replace defective gear(s).*
   - *Check if oil pump is seized. Search and repair the cause (oil leakage and/or air inclusion). Replace oil pump.*
   - *Check oil pump rotor for wear. Replace oil pump shaft.*
6. **Engine components damages or broken.**
   - *Perform a leak down test. Repair or replace defective parts.*
   - *Check for a broken piston ring. Replace.*
   - *Check piston rings for heavy wear. Replace.*

Symptom: OIL CONTAMINATION (WHITE APPEARANCE)

1. **Defective water pump seals.**
   - *Check leak indicator hole (located in clutch cover) if coolant/oil leaks. Replace seal, refer to COOLING SYSTEM.*
2. **Cylinder head/cylinder leakage.**
   - *Check screws and nuts tightening. Tighten to recommended torque.*
   - *Check gaskets for leaking or damages. Tighten or replace.*

CLUTCH

Symptom: THE CLUTCH "SLIPS"

1. **Clutch cable is not adjusted correctly.**
   - *Adjust clutch cable. Refer to CLUTCH section to adjust it.*
2. **Engine oil is not to specifications.**
   - *Drain engine oil and refill with the recommended oil.*
3. **Clutch springs too soft.**
   - *Check clutch springs condition. Replace all springs.*
4. **Clutch friction plates worn or distorted.**
   - *Check clutch friction plate condition. Replace.*

Symptom: THE CLUTCH DOES NOT "DISENGAGE"

1. **Clutch is not adjusted correctly.**
   - *Adjust clutch. Refer to CLUTCH section to adjust it.*
2. **Engine oil is not to specifications.**
   - *Drain engine oil and refill with the recommended oil.*

Symptom: THE CLUTCH DOES NOT "DISENGAGE" (cont'd)

3. **Clutch discs stuck together.**
   - *Clean or replace.*
4. **Clutch discs or support plate distorted.**
   - *Replace.*
5. **Clutch parts are worn out or damaged.**
   - *Check clutch condition. Replace worn out or damaged parts.*

CYLINDER HEAD AND CYLINDER

Symptom: UNUSUAL ENGINE NOISE AND/OR VIBRATION AT IDLE SPEED

1. **Incorrect valve clearance.**
   - *Adjust valve clearance.*
2. **Faulty decompressor (located on exhaust camshaft).**
   - *Check decompressor spring operation. Replace it if necessary.*
   - *Check if decompressor is stuck. Clean and/or replace decompressor mechanism.*
3. **Faulty chain tensioner.**
   - *Check chain tensioner spring for wear or damages. Replace.*
   - *Check chain tensioner operation. Replace defective parts.*
4. **Check engine oil pressure.**
   - *Check items 1 to 6 of LOW OR NO OIL PRESSURE.*

Symptom: UNUSUAL ENGINE NOISE AND/OR VIBRATIONS WHILE OPERATING

1. **Check items 1 to 4 of UNUSUAL ENGINE NOISE AND/OR VIBRATION AT IDLE SPEED.**
2. **Faulty chain guides.**
   - *Check chain guides for wear. Replace*
3. **Timing chain and sprockets.**
   - *Check sprocket screws tightening. Tighten to recommended torque.*
   - *Check sprockets for wear or other damages. Replace chain and sprockets.*
   - *Check if the timing chain is stretched. Replace chain and sprockets.*
4. **Broken valve spring.**
   - *Check valve springs condition. Replace defective parts.*
5. **Camshaft wear.**
   - *Check camshaft for heavy wear. Replace.*

CRANKSHAFT AND BALANCER SHAFT

Symptom: UNUSUAL ENGINE NOISE AND/OR VIBRATIONS

1. **Misalignment of crankshaft and balance shaft.**
   - *Check if marks on balancer shaft and crankshaft are aligned. Readjust position of balancer shaft and crankshaft.*
2. **Crankshaft bearing failure.**
   - *Check crankshaft bearings for damages. Replace crankshaft and bearings.*

Symptom: UNUSUAL ENGINE NOISE AND/OR VIBRATIONS (cont'd)

3. **Balance shaft bearing failure.**
   - *Check balance shaft bearings for damages. Replace bearings.*
4. **Damaged connecting rod.**
   - *Check if the connecting rod big end clearance is within specifications. Repair and/or replace.*
   - *Check the connecting rod small end bearing condition. Replace damaged and/or worn out part(s).*

GEARBOX

Symptom: UNUSUAL ENGINE NOISE AND/OR VIBRATIONS

1. **Low oil level.**
   - *Check items 1 of LOW OR NO OIL PRESSURE in LUBRICATION SYSTEM above in this section.*
2. **Gearbox parts failure.**
   - *Check gears for wear or broken tooth. Replace defective parts.*
   - *Check if main shaft and clutch shaft bearings turn freely and smoothly. Replace bearing(s).*
   - *Check condition of needle bearings on main shaft and on clutch shaft. Replace defective part(s).*

Symptom: GEAR(S) IS (ARE) HARD TO SHIFT

1. **Poor quality or inadequate engine oil.**
   - *Check engine oil. Incorrect oil being used. Replace with BRP recommended oil.*
2. **Engine idle speed too high.**
   - *Check throttle cable adjustment.*
   - *Check bypass idle valve and connectors.*
3. **Poor clutch adjustment.**
   - *Adjust clutch cable.*
4. **Damaged clutch components.**
   - *Check clutch plates wear and warpage. Replace clutch plates.*
   - *Check clutch release shaft and its bearing. Replace defective part(s).*
5. **Faulty inner shifting parts.**
   - *Check alignment of shift shaft with shift drum. Adjust shift shaft.*
   - *Check shift gears for wear or broken tooth. Replace defective parts.*
   - *Check for bent shift fork claws. Replace shift fork.*
   - *Check engagement pins for wear or other damages. Replace pins.*
   - *Check shift drum tracks for heavy wear. Replace shift drum.*

DIAGNOSTIC FLOW CHART

FUEL SYSTEM

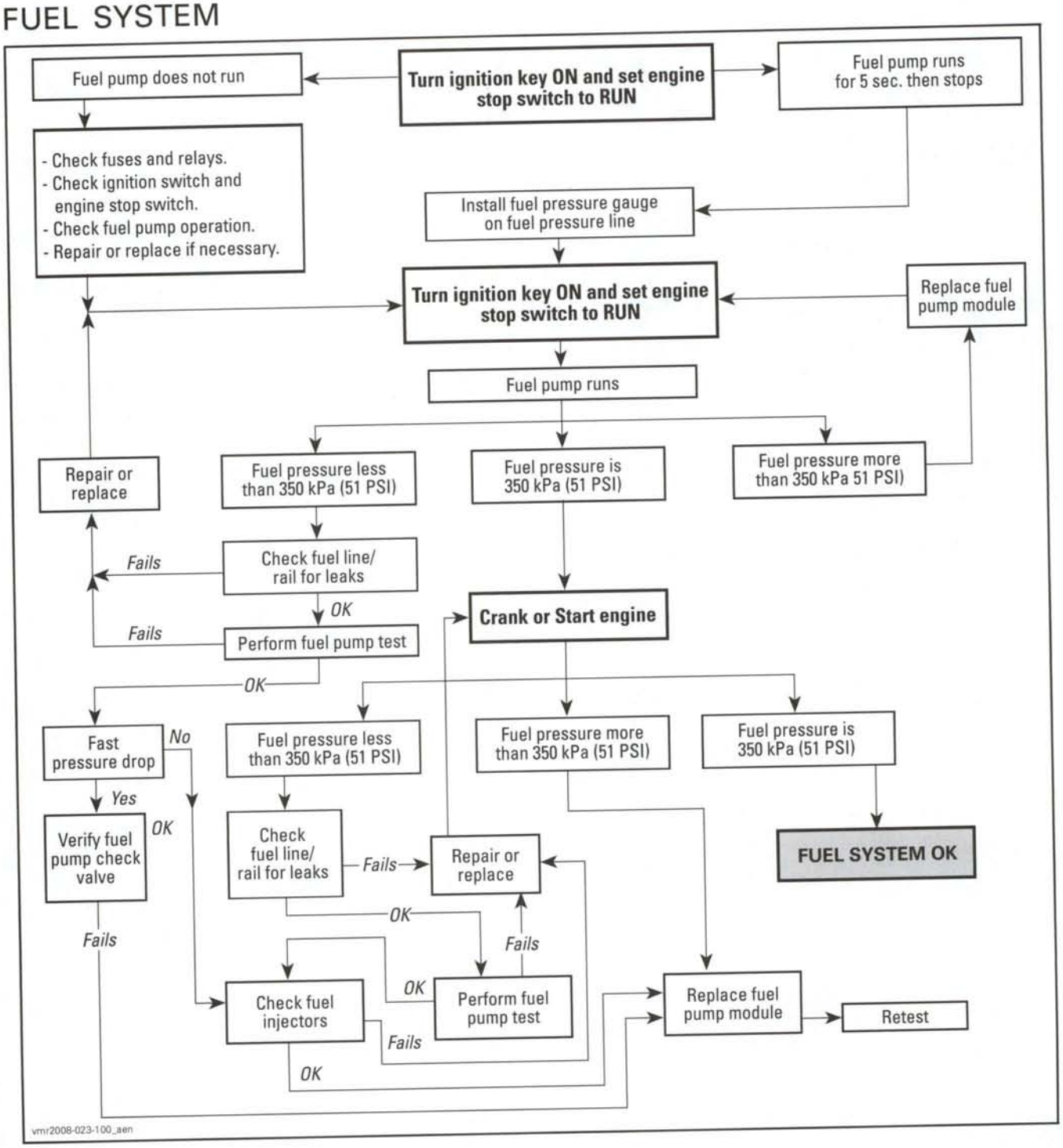

ENGINE REMOVAL AND INSTALLATION

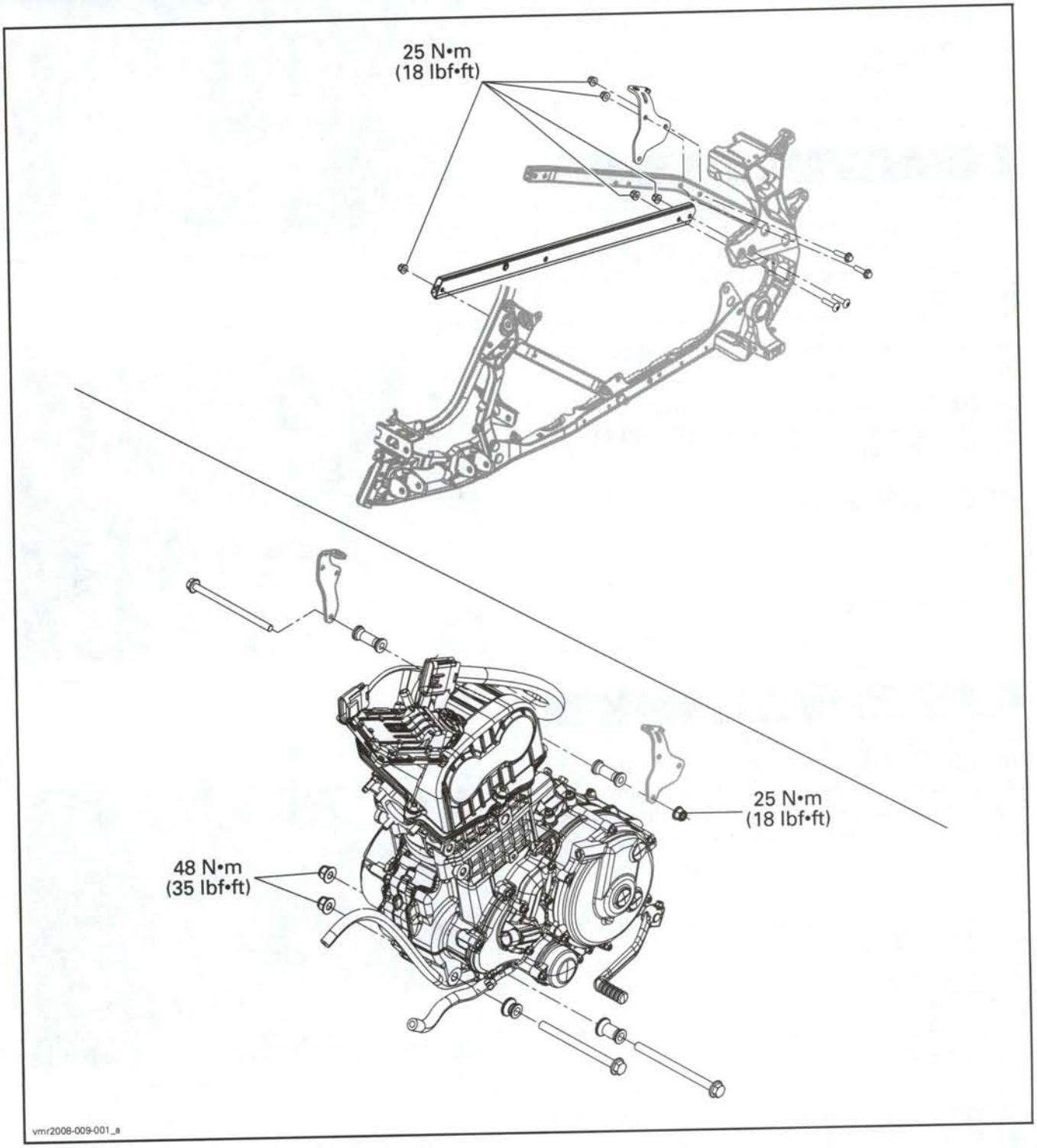

GENERAL

During assembly/installation, use the torque values and service products as in the exploded view.

Clean threads before applying a threadlocker. Refer to *SELF-LOCKING FASTENERS* and *LOCTITE APPLICATION* at the beginning of this manual for complete procedure.

⚠ WARNING

Torque wrench tightening specifications must be strictly adhered to.
Locking devices (ex: locking tabs, elastic stop nuts, cotter pin, etc.) must be replaced with new ones.

Hoses or cables removed or disconnected must be installed and routed at the same place.

CAUTION: Locking ties that had to be removed during a procedure, must be replaced and installed at the same place.

PROCEDURES

ENGINE

Engine Removal

Disconnect the BLACK (-) cable from battery, then the RED (+) cable.

⚠ WARNING

Always disconnect battery cables exactly in the specified order, the BLACK (-) cable first. It is recommended to disconnect electrical connections prior to disconnecting fuel lines.

Remove the front body assembly. Refer to *BODY* section.

Drain engine oil, see procedure in *LUBRICATION SYSTEM* section.

Drain engine coolant, see procedure in *COOLING SYSTEM* section.

Release drive chain tension. Refer to *DRIVE CHAIN/REAR AXLE* section.

Unplug the magneto connector (triangular Deutsch connector with 3 YELLOW wires). This connector is located between air filter housing and engine.

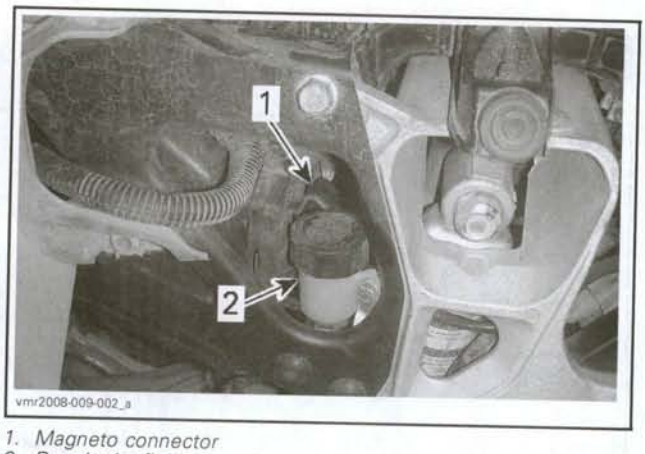

1. Magneto connector
2. Rear brake fluid reservoir

Remove front sprocket protector.

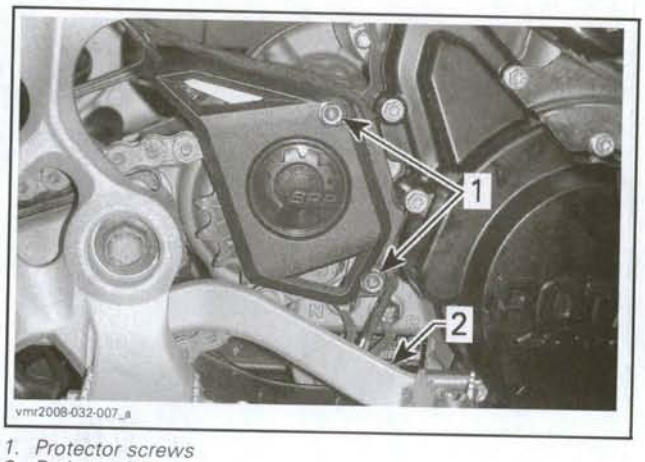

1. Protector screws
2. Brake pedal

Remove chain guard.

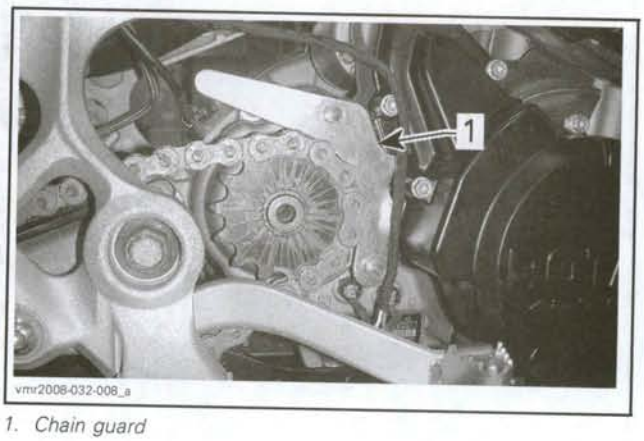

1. Chain guard

Unscrew connectors from indicator switches.

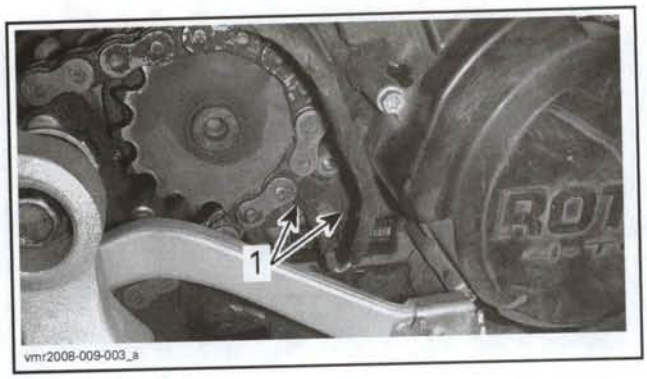

1. Indicator switches

Remove the front sprocket and discard the circlip.

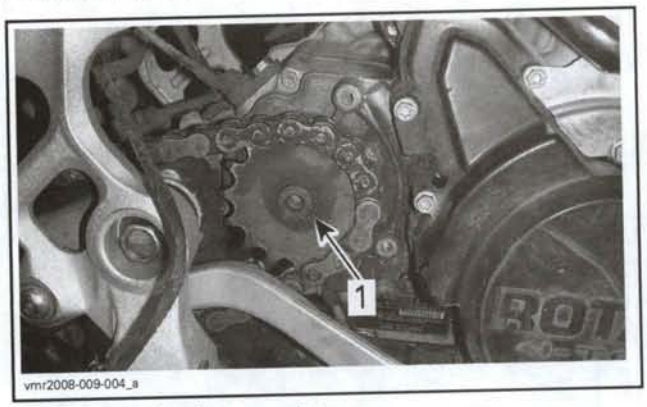

1. Circlip securing front sprocket

Remove the lower protector.

1. Lower protector
2. Clutch cover

Unscrew and remove exhaust pipe. Refer to *EXHAUST SYSTEM* section for complete procedure.

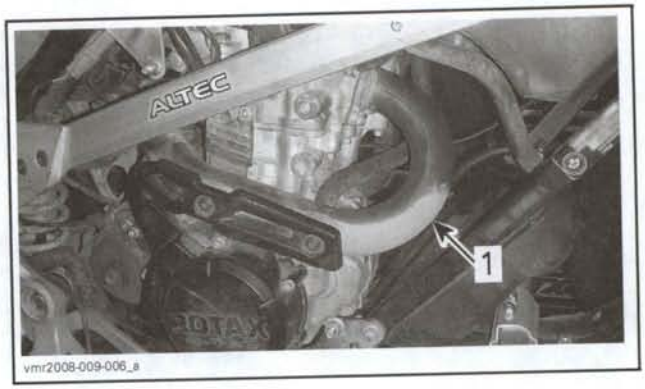

1. Exhaust pipe

Disconnect the crankcase vent tube.

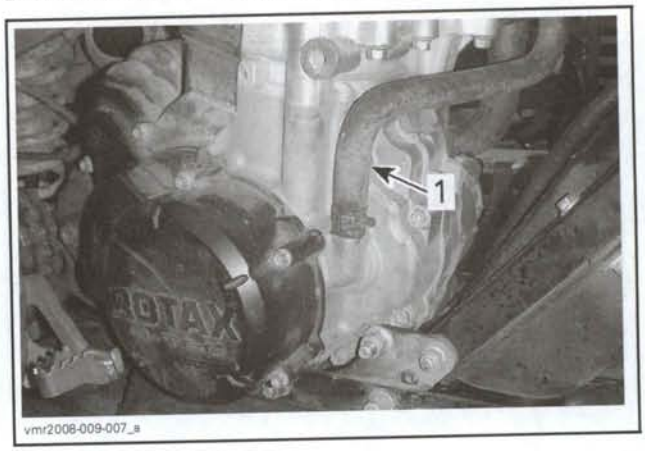

1. Crankcase vent tube

Disconnect the cooling hose from the cylinder.

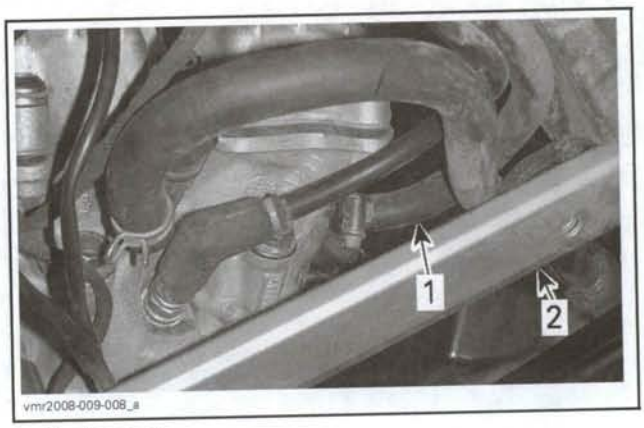

1. Cooling hose
2. RH side member

Disconnect the breather hose from cylinder head.

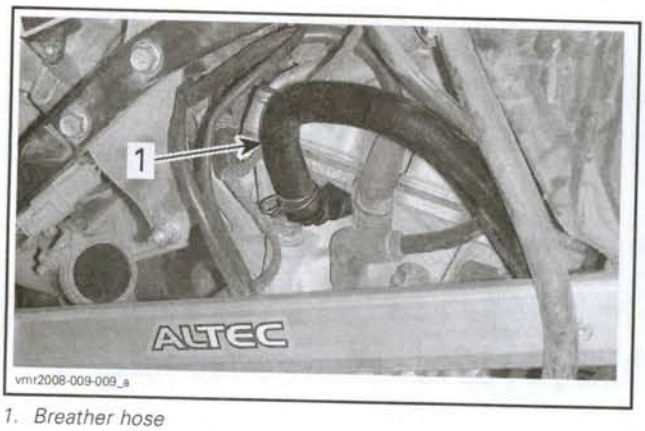

1. Breather hose

Unplug spark plug cables.

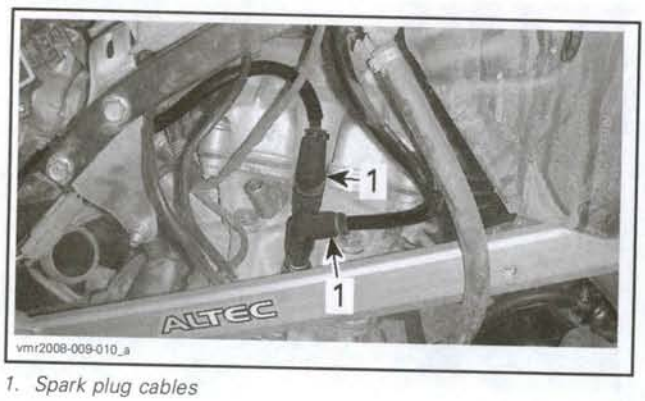

1. Spark plug cables

Cut all locking ties securing wiring harness on RH side member.

Unscrew starter cable from starter.

1. Starter cable

Remove the coolant reservoir bolt and move reservoir aside to make room.

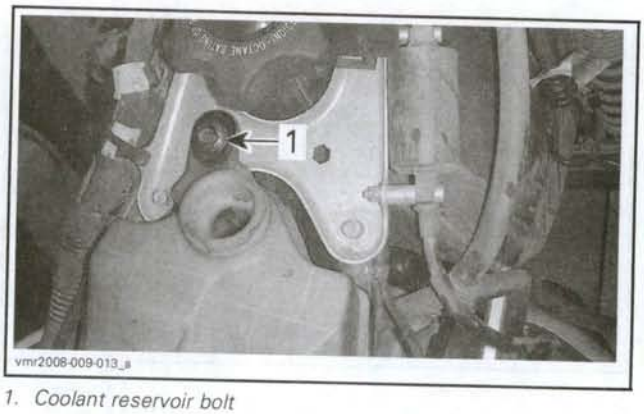

1. Coolant reservoir bolt

Remove bolts securing upper engine supports to frame.

Remove the RH upper engine support.

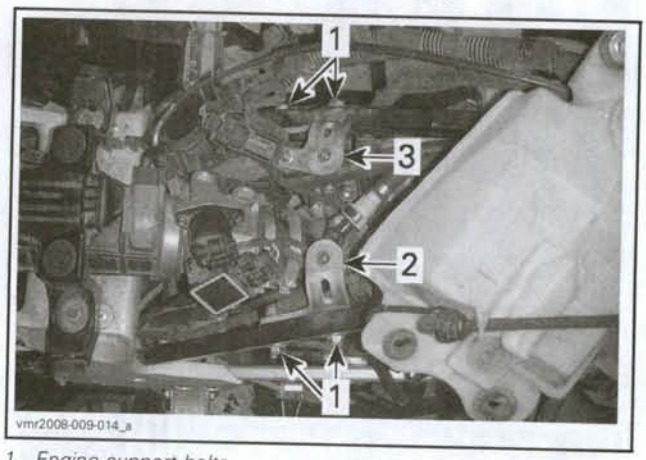

1. Engine support bolts
2. RH upper engine support
3. LH upper engine support

Unplug the trigger coil connector.

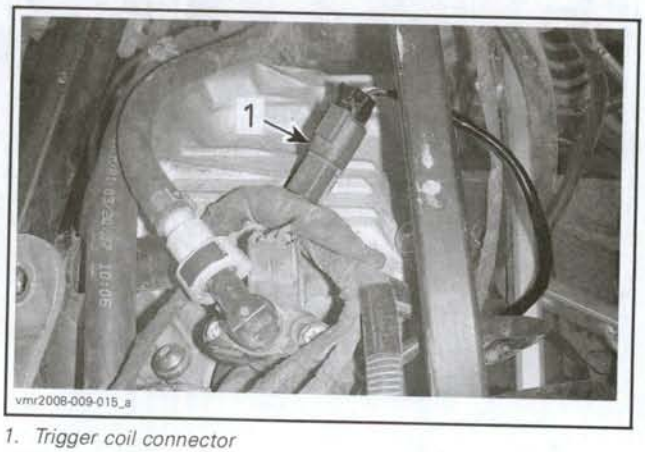

1. Trigger coil connector

Remove screws securing the air intake adapter to cylinder head. Discard the air intake adapter seal.

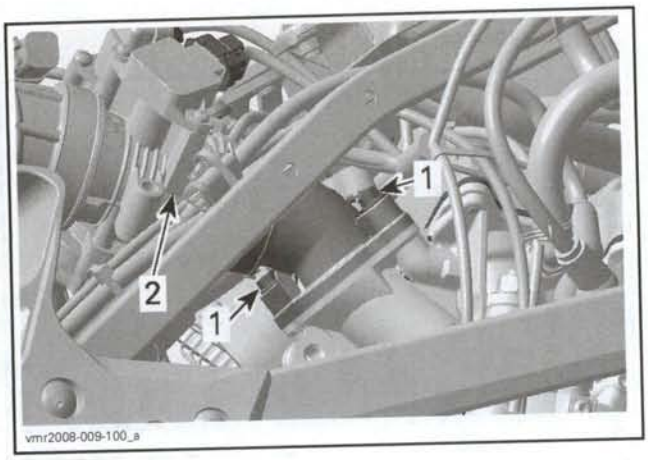

1. *Intake adapter screws*
2. *Throttle body*

Remove the LH lower protector.

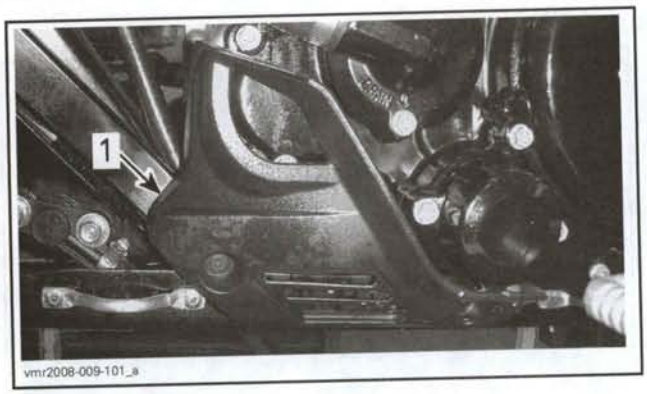

1. *LH lower protector*

Remove the shock absorber upper bolt.

1. *Shock absorber upper bolt*

Remove screws securing the LH side member.

Remove the LH side member from the vehicle.

SCREW BEHIND SHOCK ABSORBER
1. *Side member front screw*

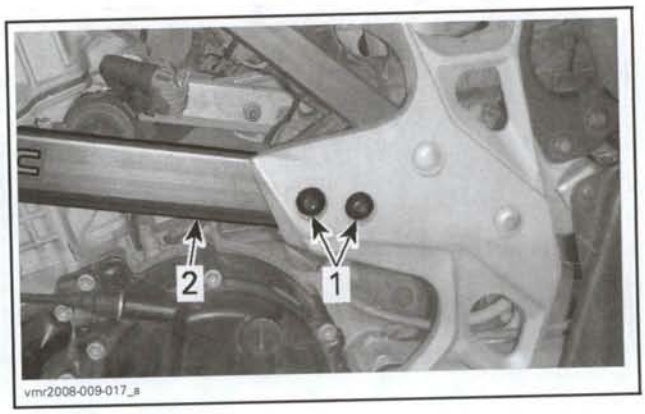

1. *Side member rear screws*
2. *Side member*

Cut all locking ties holding wiring harness to upper bar of frame.

Remove screws securing headlamps regulator.

1. *Headlamp regulator screws*

Remove the ground wire from starter.

1. Ground wire

Disconnect the thermostat hose from cylinder.

1. Thermostat

Disconnect cooling hose from water pump.

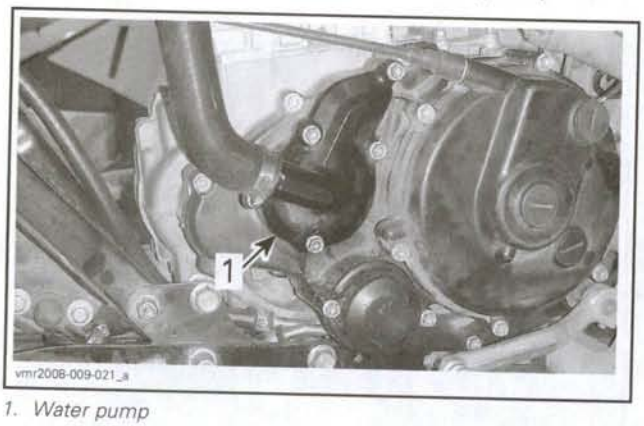

1. Water pump

Remove the clutch cover. Refer to *CLUTCH* section for complete procedure.

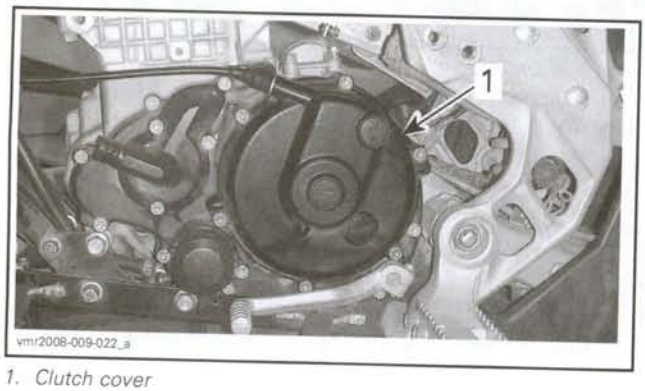

1. Clutch cover

Disconnect the oil tank inlet hose.

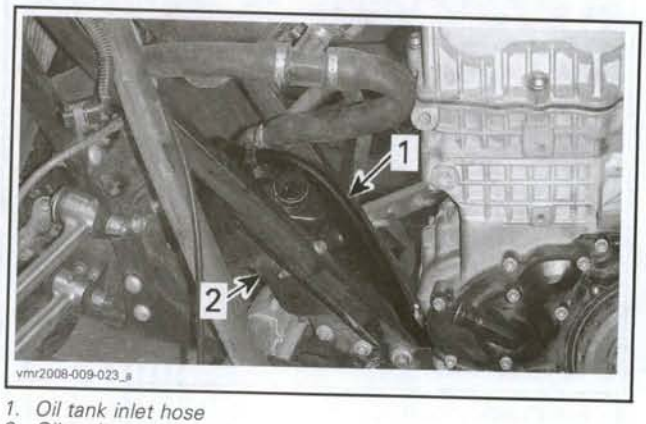

1. Oil tank inlet hose
2. Oil tank

Unscrew the oil tank outlet fitting from oil tank. Discard O-ring.

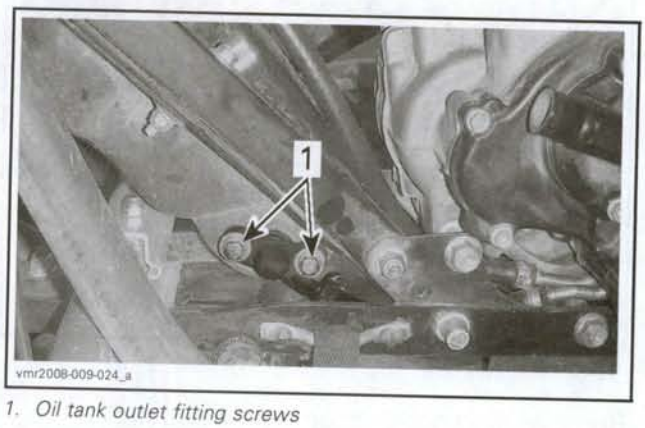

1. Oil tank outlet fitting screws

Remove bolts securing oil tank to frame.

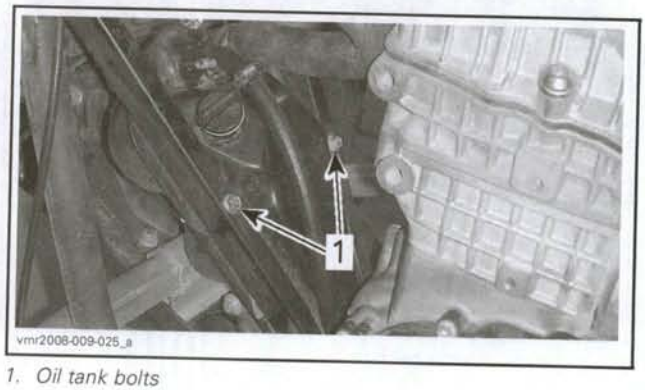

1. Oil tank bolts

Remove bolt securing bell crank lever to swing arm.

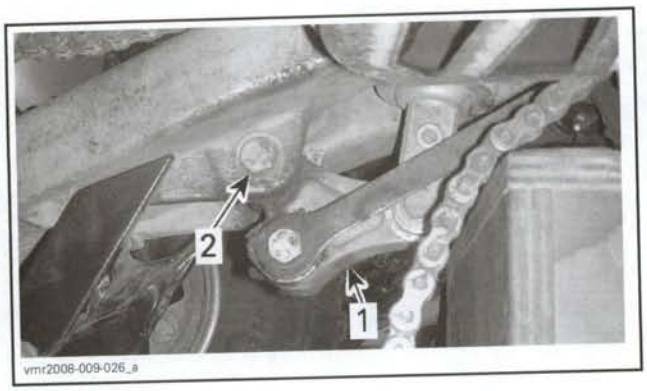

1. Bell crank lever
2. Bolt to be removed

Unscrew and remove the swing arm bolt.

1. Nut securing swing arm bolt

Remove front and lower engine bolts.

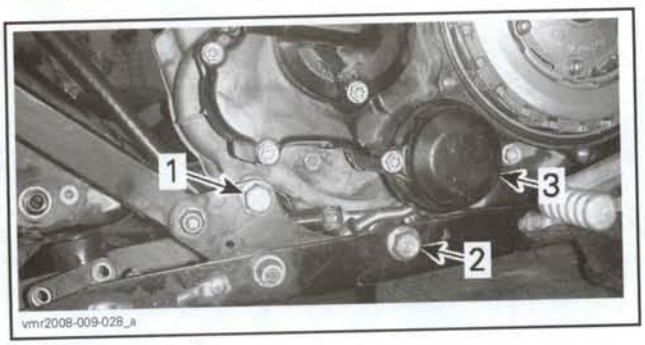

1. Front engine bolt
2. Lower engine bolt
3. Oil filter cover

Remove the shifter from engine.

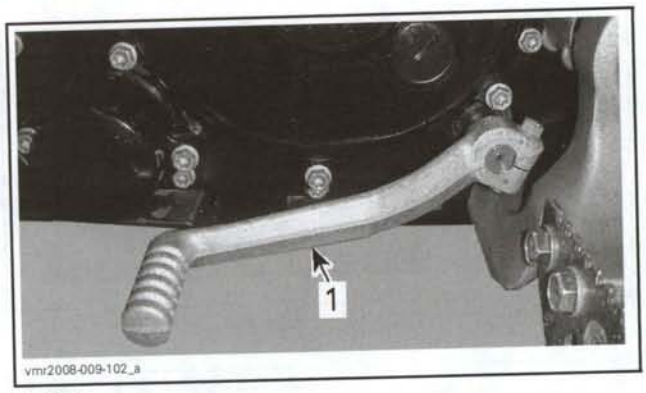

1. Shifter

From the RH side, push cylinder head to unplug the coolant temperature sensor (CTS).

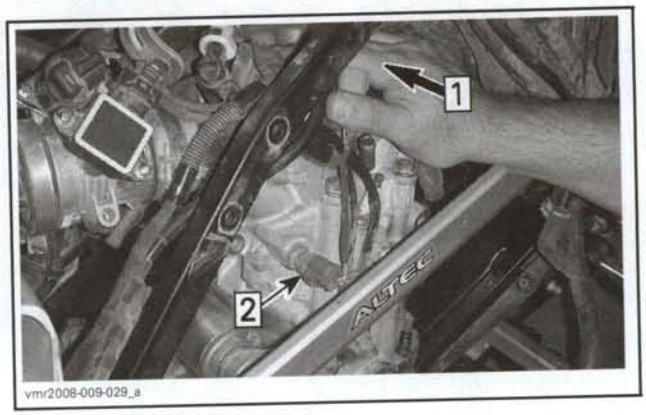

Step 1: Push on cylinder head
Step 2: Unplug CTS connector

From the LH side, remove engine from vehicle.

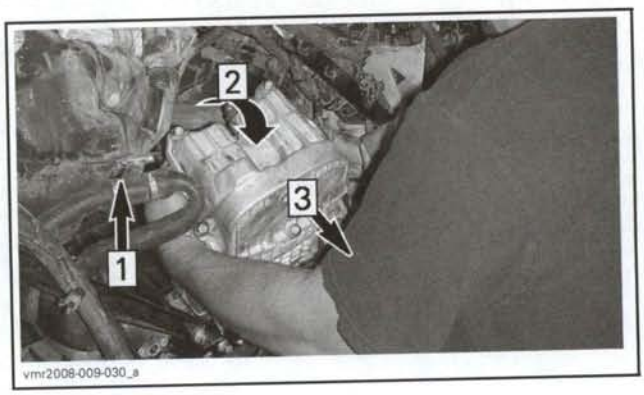

Step 1: Lift engine
Step 2: Tilt cylinder head
Step 3: Remove engine

Engine Installation

The installation is the reverse of the removal procedure. However, pay attention to the following.

To install engine spacers at the bottom of engine, use the following procedure:

- Cut the head of two bolts M10 x 75 mm.

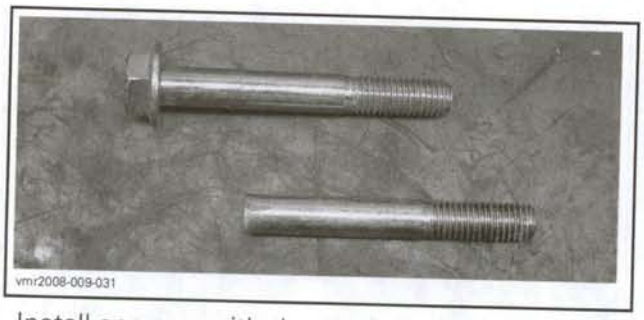
vmr2008-009-031

- Install spacers with the cut bolts.

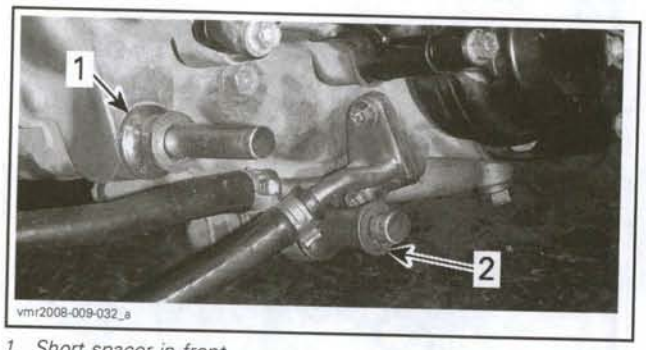

vmr2008-009-032_a

1. Short spacer in front
2. Long spacer at the bottom

- Route oil hoses underneath the front of engine.
- Insert the bottom of engine into the lower brace of frame.
- Position engine in frame.
- On RH side, plug the CTS connector.
- Install front and lower engine bolts.

NOTE: Install all other bolts retaining engine before tightening them.

Install a **NEW** air intake adapter seal.

Install a **NEW** front sprocket circlip.

Use a **NEW** O-ring when installing oil tank outlet fitting. Apply engine oil on O-ring.

Install all other removed parts.

AIR INTAKE SYSTEM

SERVICE PRODUCTS

Description	Part Number	Page
air filter oil	219 700 340	26
air filter cleaner	219 700 341	26

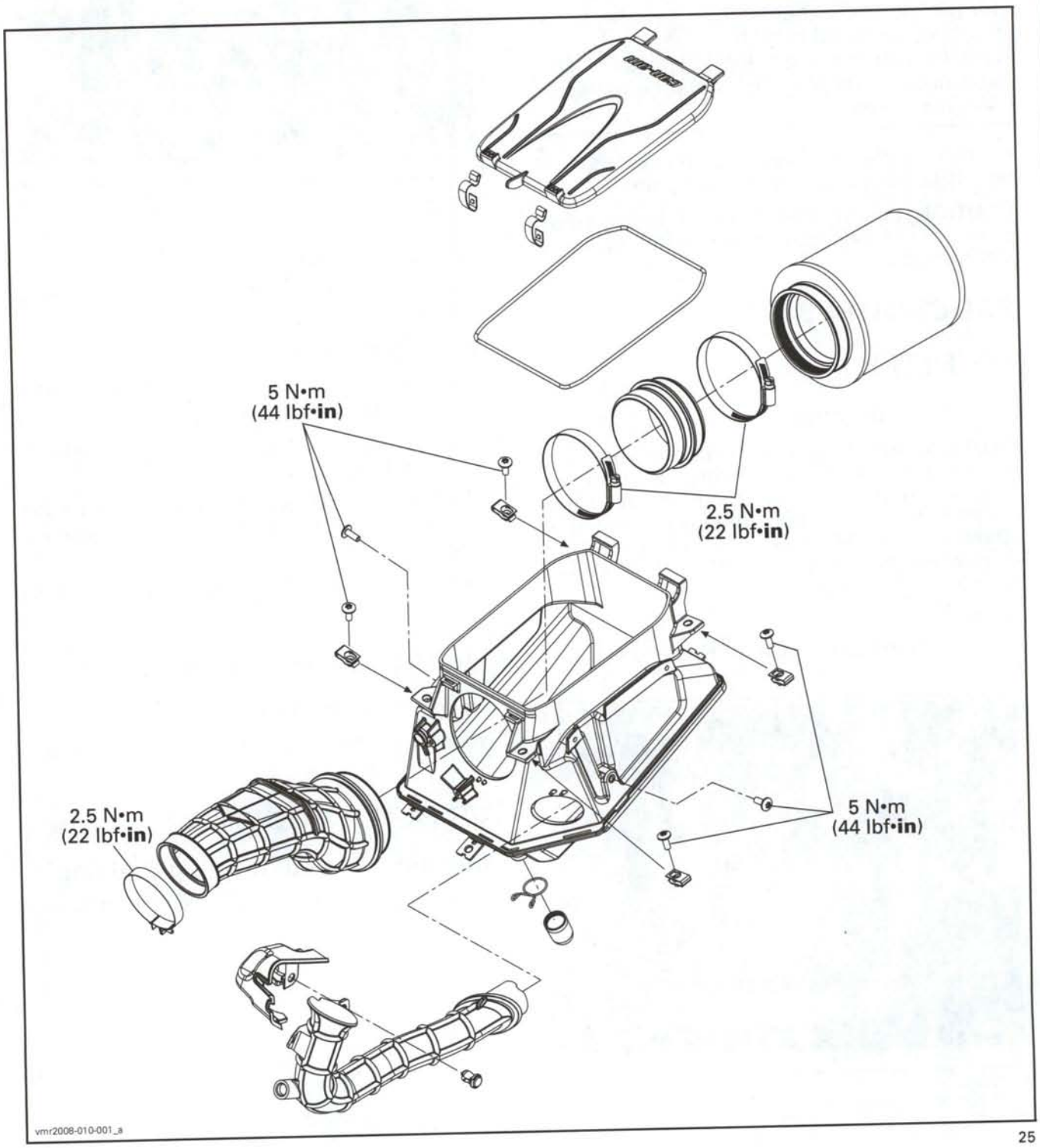

GENERAL

During assembly/installation, use the torque values and service products as in the exploded view.

Clean threads before applying a threadlocker. Refer to *SELF-LOCKING FASTENERS* and *LOCTITE APPLICATION* at the beginning of this manual for complete procedure.

⚠ WARNING

Torque wrench tightening specifications must be strictly adhered to.
Locking devices (e.g.: locking tabs, elastic stop nuts, cotter pin, etc.) must be replaced with new ones.

Hoses or cables removed or disconnected must be installed and routed at the same place.

CAUTION: Locking ties removed during a procedure must be replaced and installed at the same location.

PROCEDURES

AIR FILTER

Air Filter Removal

CAUTION: Never remove or modify any component in the air filter housing. Always use genuine parts or suitable equivalent when replacing air filter. The engine is calibrated to operate specifically with these components. Otherwise, engine performance degradation or damage can occur.

Remove seat.

Release clamps and remove air filter housing cover.

1. *Clamps*
2. *Air filter housing cover*

Loosen clamp and remove filter.

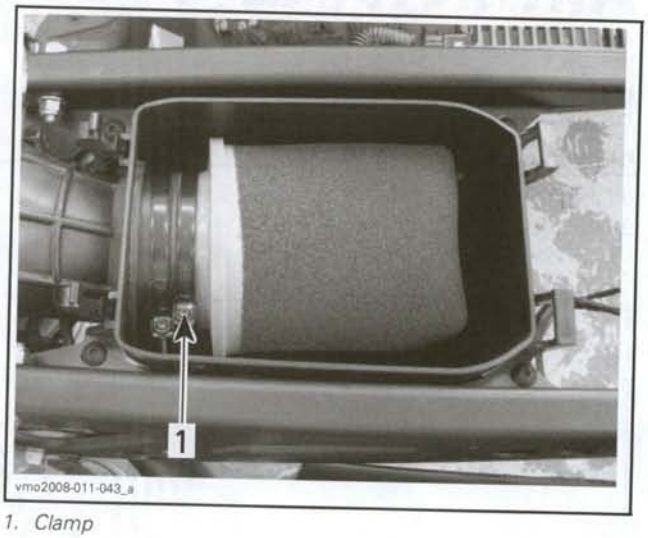

1. *Clamp*

Air Filter Cleaning

Pour air filter cleaner (P/N 219 700 341) or an equivalent into a bucket.

Put the filter in to soak.

While filter soaks, clean inside of air filter housing.

Rinse air filter with warm water.

Squeeze foam to remove excess water and let dry air filter thoroughly.

NOTE: Slight dust may be cleaned using a low-pressure airgun. Blow compressed air backward of operating air flow.

If air filter element is damaged, replace with a new one.

When the filter is dried, re-oil with air filter oil (P/N 219 700 340) or an equivalent.

Air Filter Installation

Properly reinstall removed parts in the reverse order of their removal.

AIR FILTER HOUSING

Air Filter Housing Cleaning/Draining

Periodically inspect air filter housing drain tube for liquid or deposits.

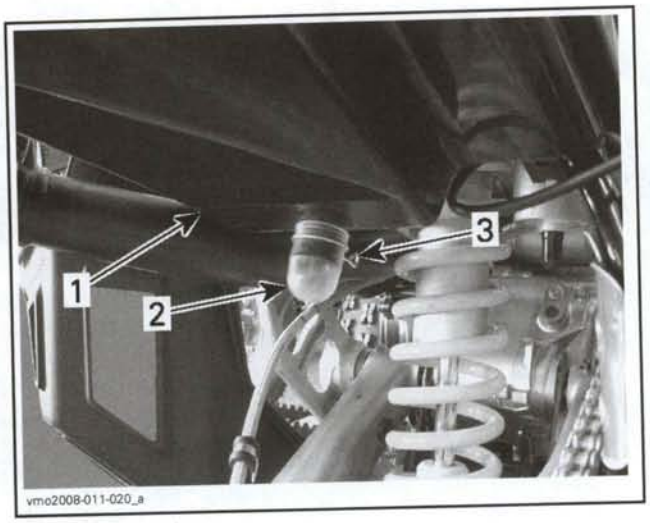

1. *Air filter housing*
2. *Drain tube*
3. *Clamp*

NOTE: If vehicle is used in dusty area, inspect more frequently than specified in *MAINTENANCE CHART.*

If liquid/deposits are found, squeeze and remove the clamp. Pull drain tube out then empty it.

CAUTION: Do not start engine when liquid or deposits are found in the drain tube.

When liquid/deposits are found, the air filter must be inspected and dried or replaced depending on its condition.

NOTE: After air filter installation, you can find a small quantity of air filter oil in the drain tube.

Air Filter Housing Removal

Remove seat.

Remove the front body assembly. Refer to *BODY* section.

Remove battery. Refer to *CHARGING SYSTEM* section.

Disconnect all wires from the starting solenoid. Refer to *STARTING SYSTEM* section.

Remove plastic rivet securing the air intake hose deflector.

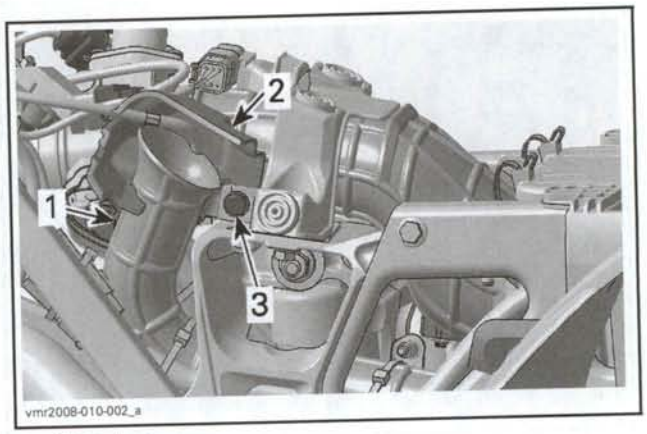

1. *Air intake hose*
2. *Deflector*
3. *Plastic rivet*

Cut locking ties holding air intake hose and crankcase vent tube.

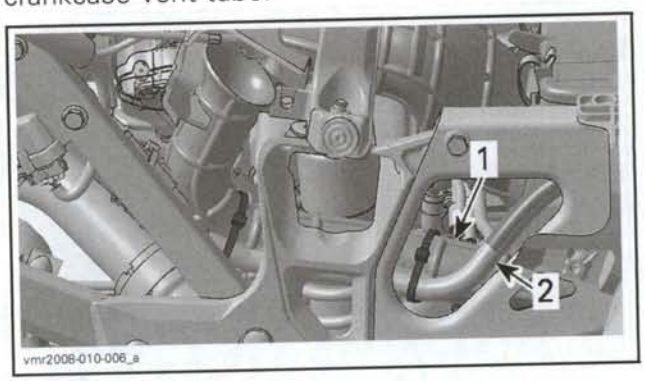

1. *Air intake vent hose*
2. *Crankcase vent tube*

Loosen clamp securing air intake hose to throttle body.

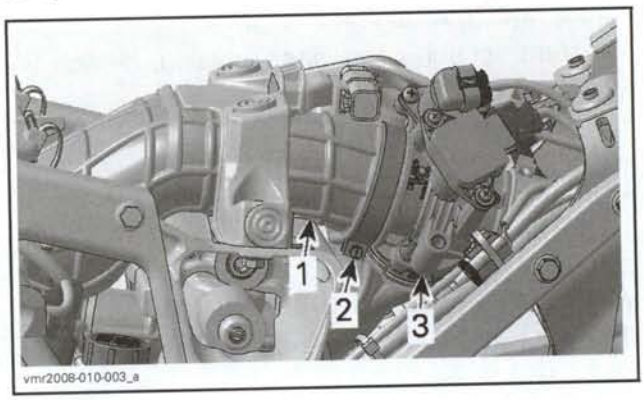

1. *Air intake hose*
2. *Clamp*
3. *Throttle body*

Underneath rear fender, remove screws securing air filter housing to rear frame extension.

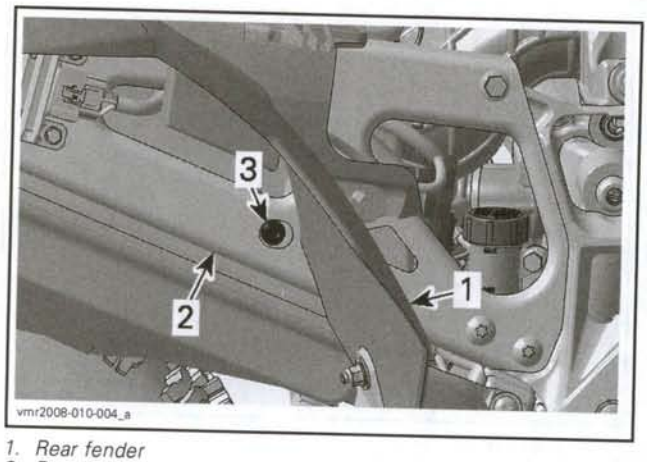

1. *Rear fender*
2. *Rear frame extension*
3. *Remove this screw (one each side)*

From the top, remove air filter housing screws.

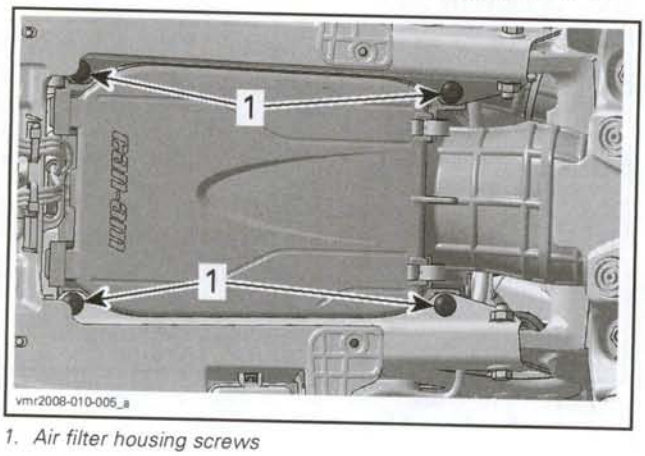

1. *Air filter housing screws*

Remove air filter housing cover.

Lower the housing and pull it rearward.

On front section of air filter housing, detach the following connectors:

- AAPTS connector
- Magneto connector
- Rear brake light switch connector.

Remove air filter housing from vehicle.

Air Filter Housing Installation

The installation is the reverse of the removal procedure.

EXHAUST SYSTEM

SERVICE PRODUCTS

Description	Part Number	Page
Loctite 271 (red)	293 800 005	32

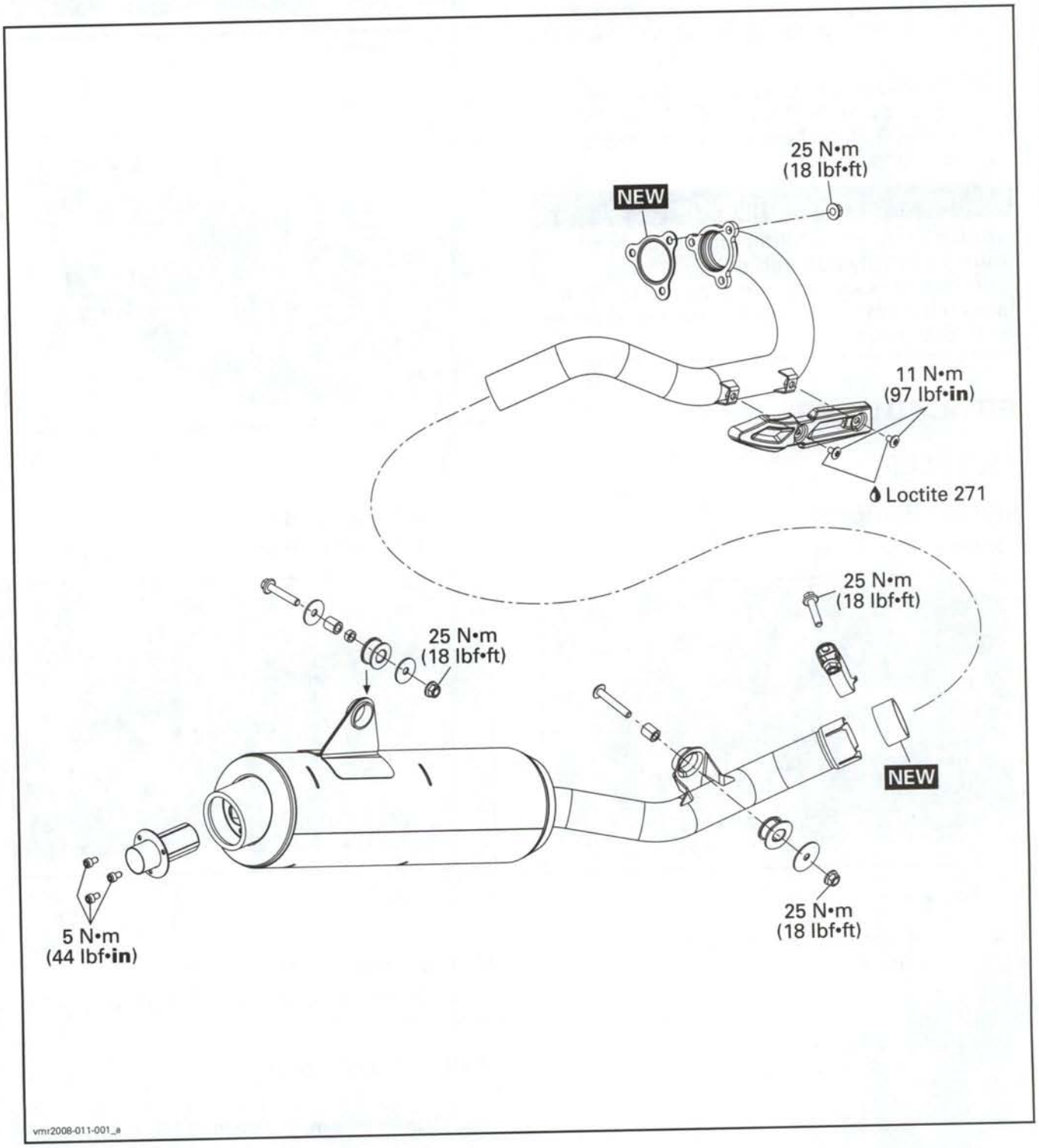

GENERAL

⚠ WARNING

To avoid potential burns, never touch exhaust system immediately after the engine is stopped, as it can be very hot. Let engine and exhaust system cool down before performing any servicing.

During assembly/installation, use the torque values and service products as in the exploded views.

Clean threads before applying a threadlocker. Refer to *SELF-LOCKING FASTENERS* and *LOCTITE APPLICATION* at the beginning of this manual for complete procedure.

⚠ WARNING

Torque wrench tightening specifications must be strictly adhered to.
Locking devices (e.g.: locking tabs, elastic stop nuts, cotter pin, etc.) must be replaced with new ones.

PROCEDURES

MUFFLER

Muffler Removal

Loosen muffler clamp.

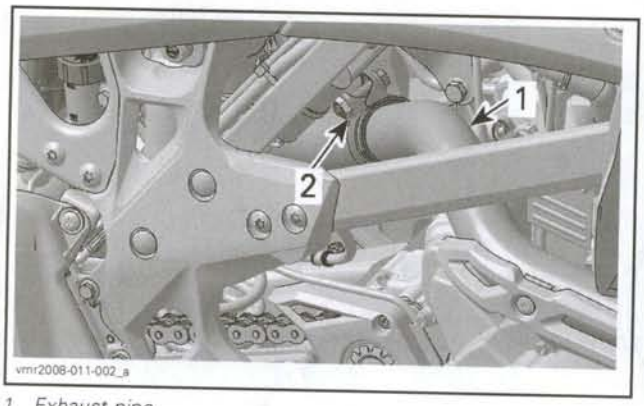

1. Exhaust pipe
2. Muffler clamp

Over the LH foot protector, remove screw securing muffler pipe to frame.

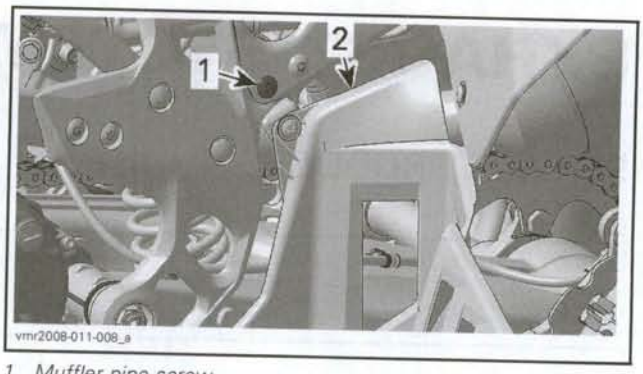

1. Muffler pipe screw
2. LH foot protector

Remove muffler screw.

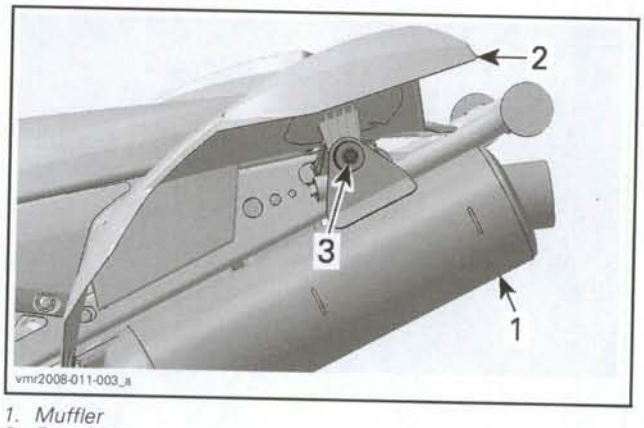

1. Muffler
2. Rear fender
3. Muffler screw

Pull muffler rearward to remove it.

Discard the gasket at the end of exhaust pipe.

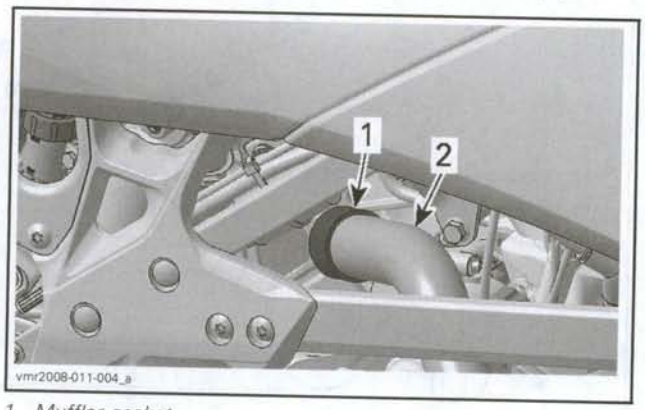

1. Muffler gasket
2. Exhaust pipe

Muffler Inspection

Check muffler for cracks or other damages. Replace if necessary.

Muffler Installation

For the installation, reverse the removal procedure. However, pay attention to the following.

Install a **NEW** muffler gasket.

First, tighten muffler screw.

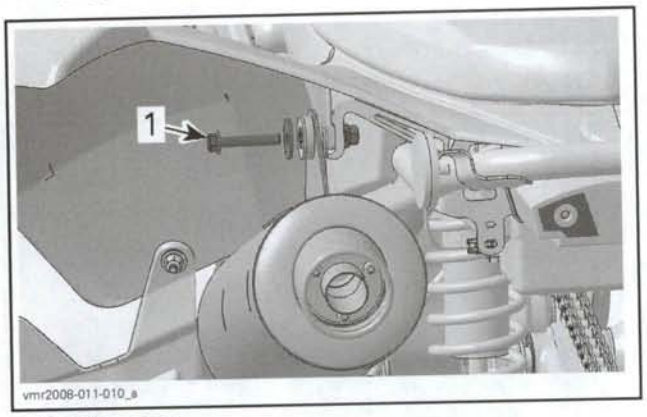

1. Muffler screw

Then the muffler pipe screw.

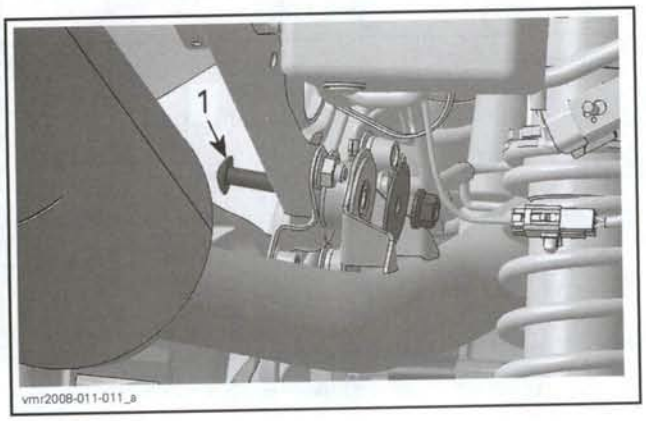

1. Muffler pipe screw

And finally, the muffler clamp.

EXHAUST PIPE

Exhaust Pipe Removal

Unscrew nuts securing exhaust pipe to exhaust port.

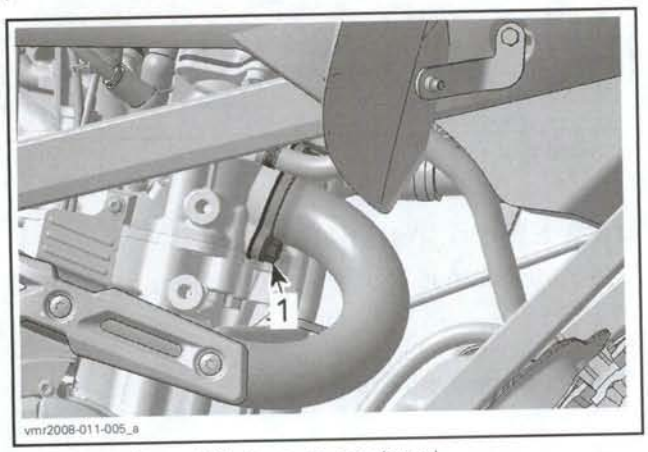

1. Exhaust pipe nut (2 other nuts not shown)

Loosen muffler clamp.

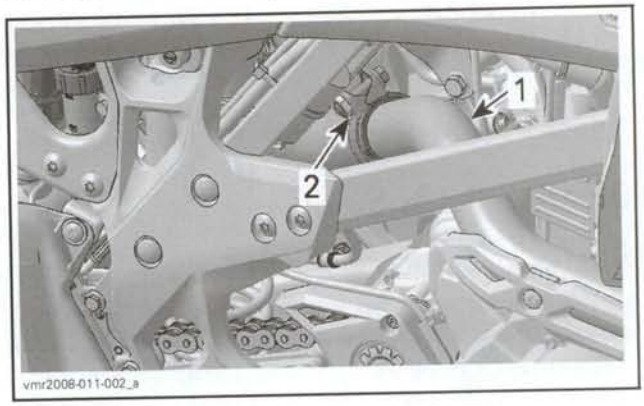

1. Exhaust pipe
2. Muffler clamp

Pull exhaust pipe forward to remove it.

Discard the muffler gasket and the exhaust gasket.

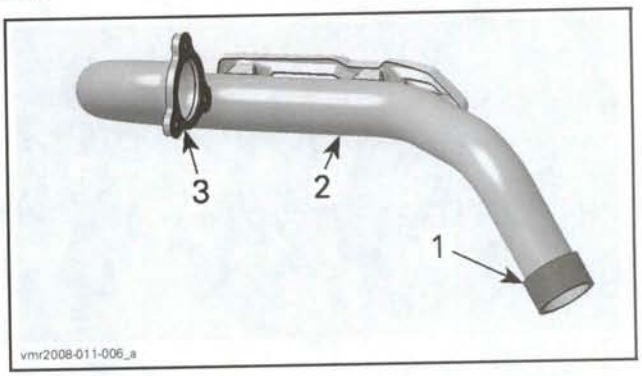

1. Muffler gasket
2. Exhaust pipe
3. Exhaust gasket

If necessary, remove heat shield from the exhaust pipe.

NOTE: Heat screws to break the threadlocker.

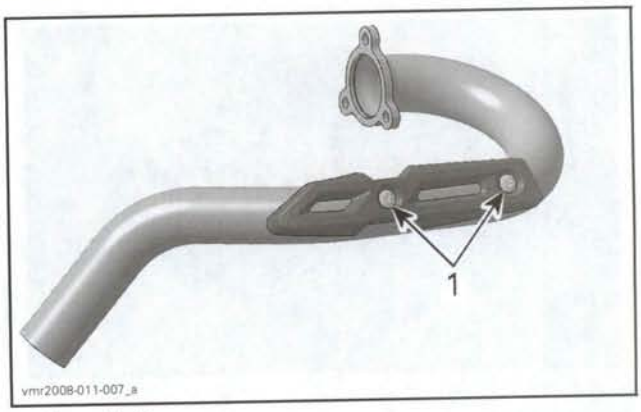

1. Heat shield screws

Exhaust Pipe Inspection

Check exhaust pipe for cracks or other damages. Replace if necessary.

Exhaust Pipe Installation

For the installation, reverse the removal procedure. However, pay attention to the following.

Install NEW gaskets.

Tighten exhaust pipe nut then the muffler clamp.

SPARK ARRESTER

Spark Arrester Removal

⚠ WARNING

Never perform this operation immediately after the engine has run, exhaust system is very hot.

Remove the spark arrester screws from the muffler.

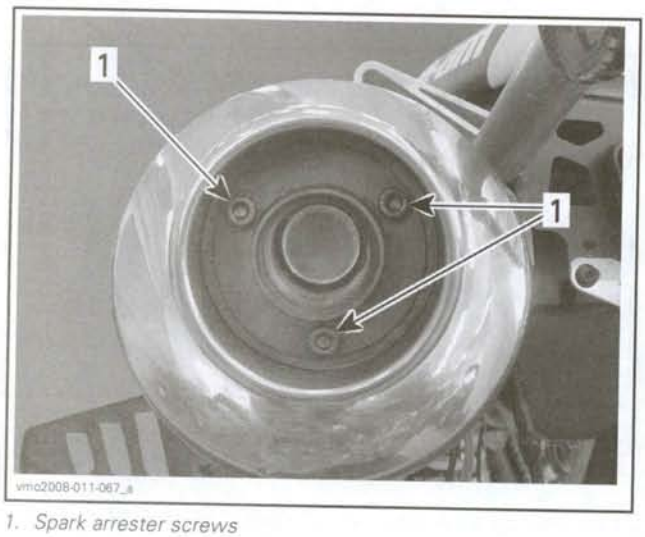

1. Spark arrester screws

Pull spark arrester out of muffler.

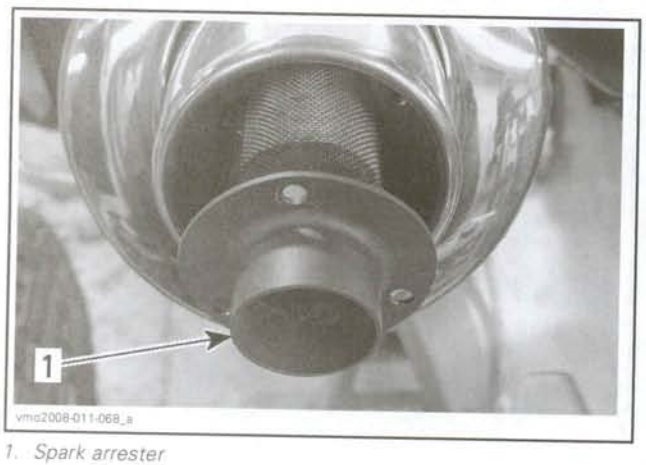

1. Spark arrester

Spark Arrester Cleaning

Remove carbon deposits from the spark arrester using a brush.

NOTE: Use a soft brush and be careful to avoid damaging spark arrester.

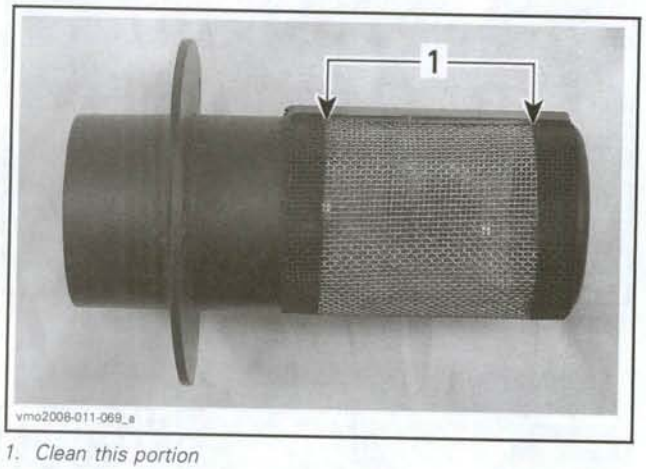

1. Clean this portion

Replace spark arrester if it is damaged.

Spark Arrester Installation

For installation, reverse the removal procedure.

HEAT SHIELD

Heat Shield Removal

Apply heat on heat shield screws to break the threadlocker.

Remove screws then the heat shield.

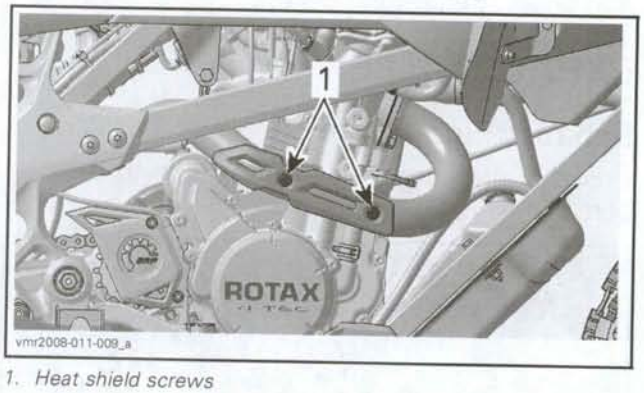

1. Heat shield screws

Heat Shield Installation

The installation is the reverse of the removal procedure.

Apply Loctite 271 (red) (P/N 293 800 005) on threads of heat shield screws.

LUBRICATION SYSTEM

SERVICE TOOLS

Description	Part Number	Page
adapter hose	529 035 652	40
pressure gauge	529 035 709	40
timing chain tensioner adapter	529 036 079	40

SERVICE PRODUCTS

Description	Part Number	Page
XP-S 5W 40 synthetic oil	293 600 039	36
Loctite 243 (blue)	293 800 060	39

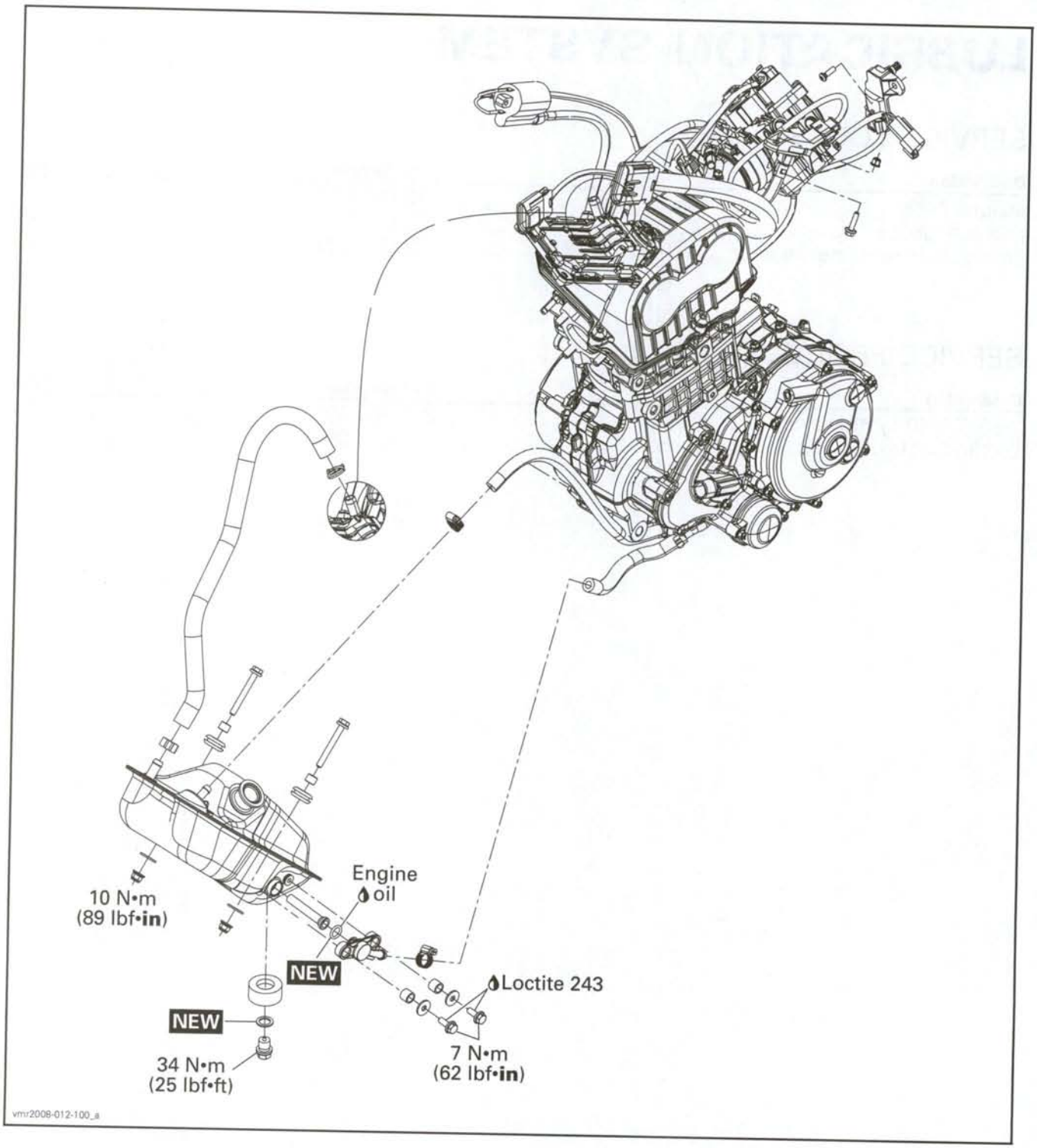
10 N•m
(89 lbf•in)
Engine
oil
NEW
Loctite 243
NEW
34 N•m
(25 lbf•ft)
7 N•m
(62 lbf•in)
vmr2008-012-100_a

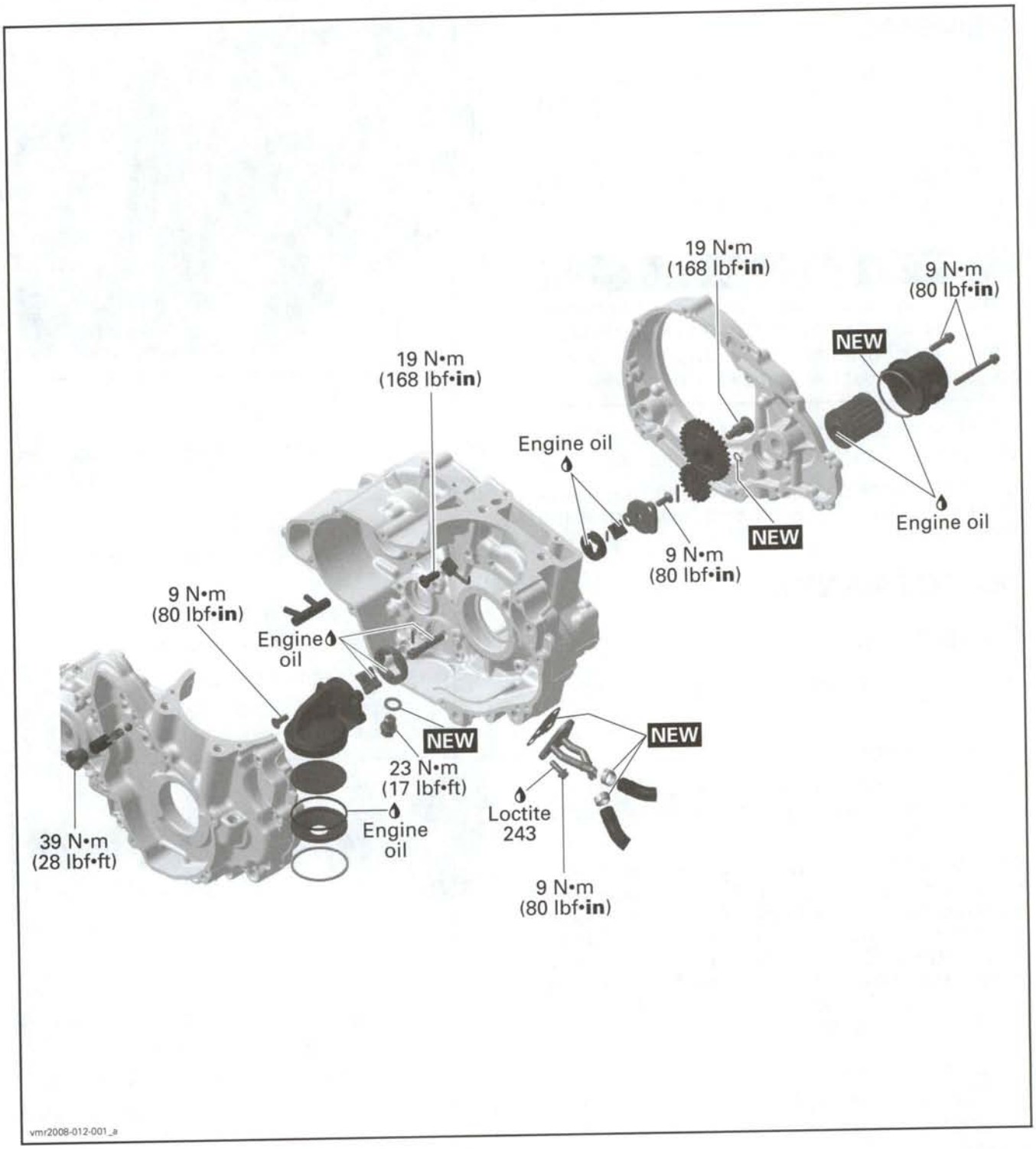
19 N•m
(168 lbf•in)
9 N•m
(80 lbf•in)
NEW
19 N•m
(168 lbf•in)
Engine oil
Engine oil
NEW
9 N•m
(80 lbf•in)
9 N•m
(80 lbf•in)
Engine
oil
NEW
NEW
23 N•m
(17 lbf•ft)
Loctite
243
Engine
oil
39 N•m
(28 lbf•ft)
9 N•m
(80 lbf•in)
vmr2008-012-001_a

GENERAL

During assembly/installation, use the torque values and service products as in the exploded views.

Clean threads before applying a threadlocker. Refer to *SELF-LOCKING FASTENERS* and *LOCTITE APPLICATION* at the beginning of this manual for complete procedure.

⚠ WARNING

Torque wrench tightening specifications must be strictly adhered to. Locking devices (e.g.: locking tabs, elastic stop nuts, cotter pins, etc.) must be replaced with new ones.

Hoses or cables removed or disconnected must be installed and routed at the same place.

CAUTION: Locking ties removed during a procedure must be replaced and installed at the same location.

MAINTENANCE

ENGINE OIL

NOTE: Same oil lubricate engine and transmission.

Recommended Oil

Use only the XP-S 5W 40 synthetic oil (P/N 293 600 039). This is a special synthetic oil formulated for wet clutch type gearbox.

CAUTION: The XP-S 5W 40 synthetic oil is specially formulated and tested for the severe requirements of this engine. Do not use other synthetic oil, synthetic blend oil or oil additives in Can-Am ATV wet clutch equipped vehicles. There is no known equivalent on the market for the moment. If a high quality equivalent were available, it could be used.

Engine Oil Level Verification

Use the oil tank dipstick to check the oil level in the engine. The engine oil tank is located in front of engine.

CAUTION: Check level frequently and refill if necessary. Do not overfill. Operating the engine with an improper level may severely damage engine and transmission. Wipe off any spillage.

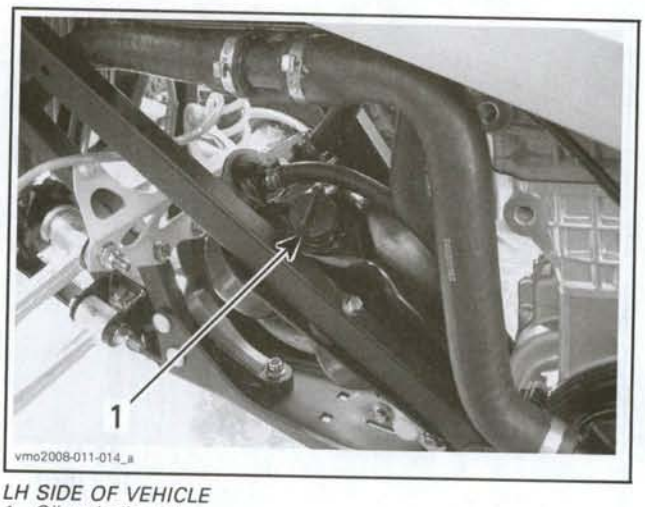

LH SIDE OF VEHICLE
1. Oil tank dipstick

With vehicle on a level surface, start engine and let it running at idle, around 1 minute, then stop engine.

NOTE: To obtain a precise reading of the engine oil level, make sure engine is at normal operating temperature.

Check oil level as follows:

- Unscrew dipstick out and wipe clean.
- Screw dipstick until it bottoms.
- Remove dipstick and check oil level. It should be near or equal to the upper mark.

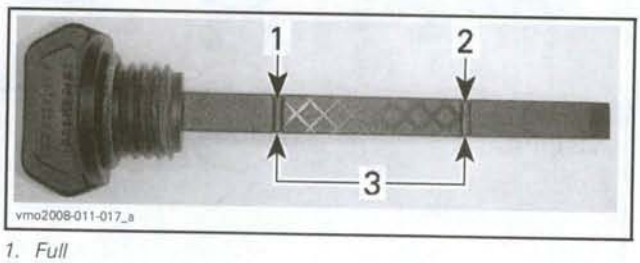

1. Full
2. Add
3. Operating range

To add oil, remove the dipstick. Place a funnel into the oil tank opening to avoid spillage.

Add a small amount of oil and recheck oil level.

Repeat the operation until oil level reaches the dipstick's upper mark. **Do not overfill.**

Properly tighten dipstick.

Engine Oil Replacement

Prior to changing the engine oil, ensure vehicle is on a level surface and engine is warm.

⚠ WARNING

The engine oil can be very hot. Wait until engine oil is warm.

Remove oil tank cap.

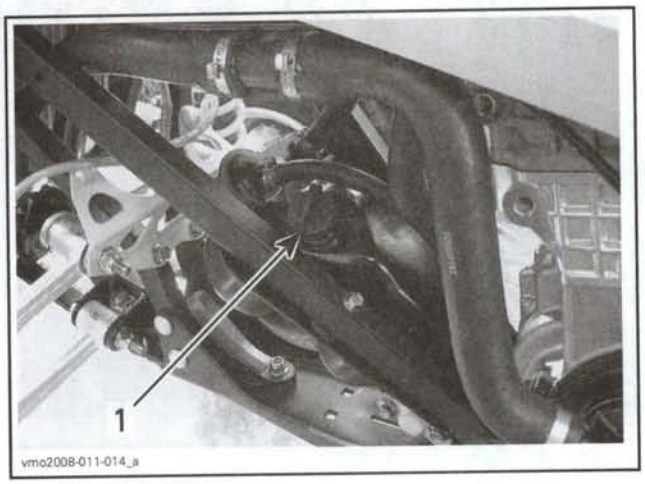

1. Engine/transmission oil tank cap

Clean drain plugs area.

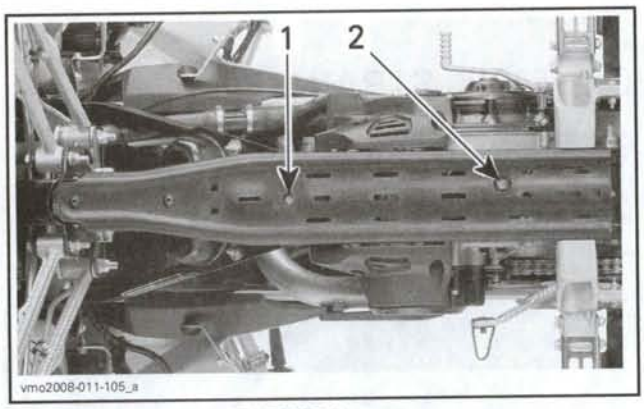

UNDERNEATH VIEW OF VEHICLE
1. Oil tank drain plug
2. Engine drain plug

Place a drain pan under oil tank.

Remove oil tank drain plug. Discard sealing washer.

NOTE: Allow enough time for oil to flow out.

Move drain pan under engine drain plug.

Remove engine drain plug. Discard sealing washer.

NOTE: Allow enough time for oil to flow out.

Clean magnetic drain plug from metal shavings and residue. Presence of debris gives an indication of failure inside the engine. Check engine to correct the problem.

Install **NEW** sealing washers on drain plugs.

CAUTION: Never use a sealing washer a second time. Always replace with a new one.

Install and tighten drain plugs.

Replace *OIL FILTER*, see procedure further in this section.

In accordance with the maintenance chart, clean the *OIL TANK STRAINER*. See further in this section for the procedure.

Wipe out any oil spillage.

Refill oil tank at the proper level with the recommended oil.

Reinstall oil dipstick in oil tank.

Start engine and let idle for a few minutes.

Ensure there are no leaks.

Stop engine and check oil level. Refill as necessary.

Dispose oil and filter as per your local environmental regulations.

OIL FILTER

LH SIDE OF VEHICLE
1. Oil filter cover

Oil Filter Removal

Clean oil filter area.

Remove oil filter cover screws.

Remove oil filter cover with O-ring. Discard O-ring.

Remove oil filter.

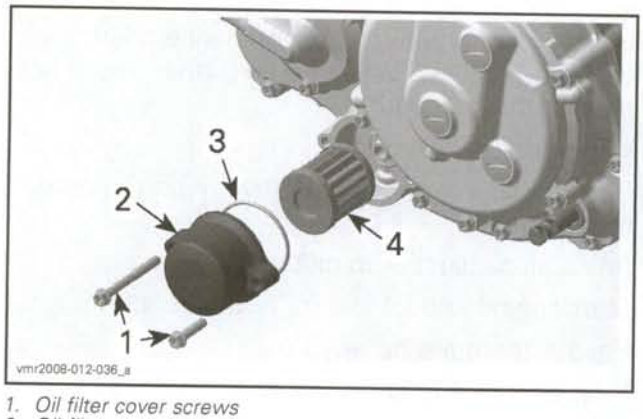

1. *Oil filter cover screws*
2. *Oil filter cover*
3. *O-ring*
4. *Oil filter*

Dispose filter as per your local environmental regulations.

Oil filter Installation

The installation is the reverse of the removal procedure. Pay attention to the following details.

Check the oil filter inlet and outlet orifices in the clutch cover for dirt and contaminations.

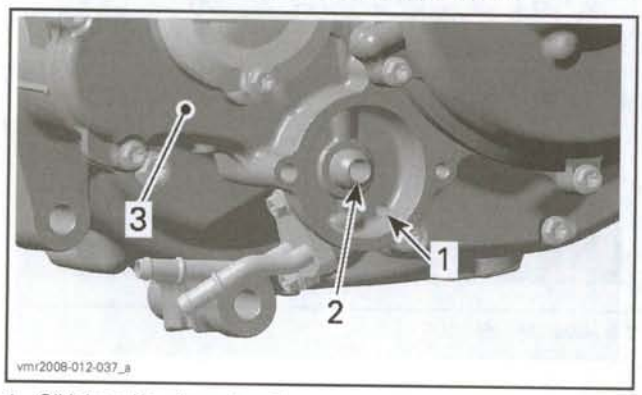

1. *Oil inlet orifice from the oil pressure pump*
2. *Oil outlet orifice to the engine lubrication system*
3. *Clutch cover*

Install a **NEW** O-ring on oil filter cover.

Apply engine oil on filter and on filter cover O-ring.

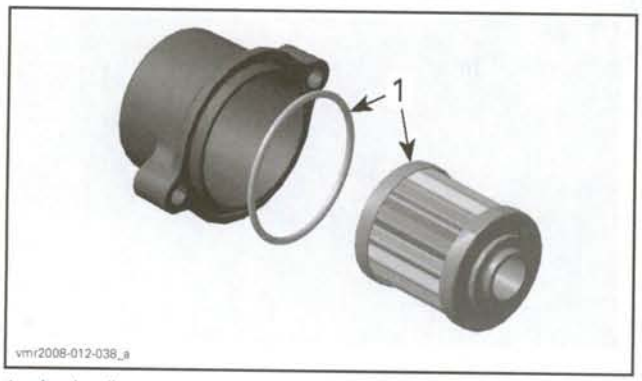

1. *Apply oil*

Install cover using proper screw length as shown.

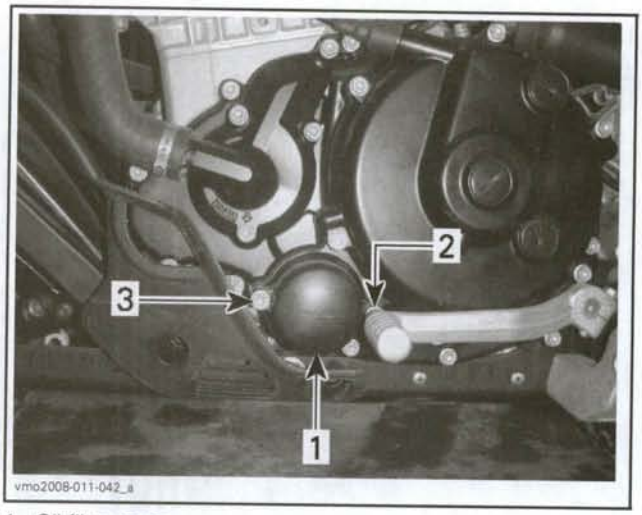

1. *Oil filter cover*
2. *Screw 25 mm*
3. *Screw 55 mm*

Replace engine oil. Refer to *ENGINE OIL REPLACEMENT.*

OIL TANK STRAINER

Oil Tank Strainer Removal

Drain engine oil, refer to *ENGINE OIL REPLACEMENT* at the beginning of this section.

Remove screws retaining the oil tank outlet fitting.

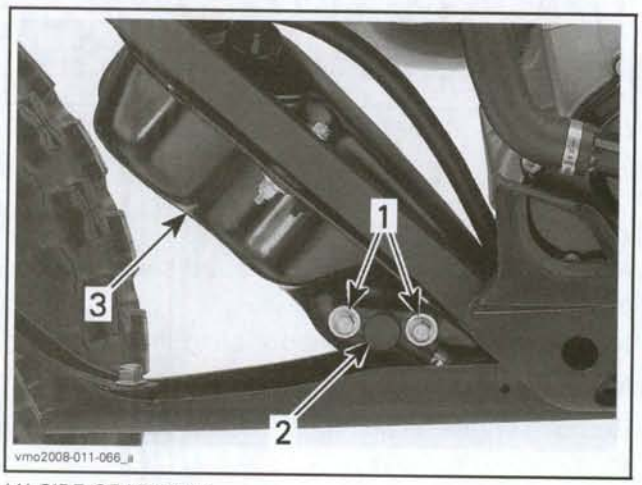

LH SIDE OF VEHICLE
1. *Retaining screws*
2. *Tank outlet fitting*
3. *Oil tank*

Remove oil tank strainer behind outlet fitting.

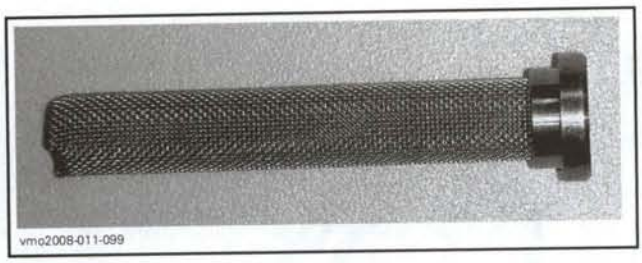

STRAINER

Oil Tank Strainer Cleaning

Clean oil tank strainer with a parts cleaner then use an air gun to dry it.

Oil Tank Strainer Inspection

Check condition of strainer mesh. Replace as required.

Oil Tank Strainer Installation

For installation, reverse the removal procedure.

Wipe out any oil spillage on oil tank.

Install a **NEW** O-ring on the outlet fitting.

Apply engine oil on O-ring.

Apply Loctite 243 (blue) (P/N 293 800 060) on outlet fitting screws.

Carefully reinstall all previously removed parts.

CAUTION: Take care not to damage O-ring while inserting outlet fitting into oil tank.

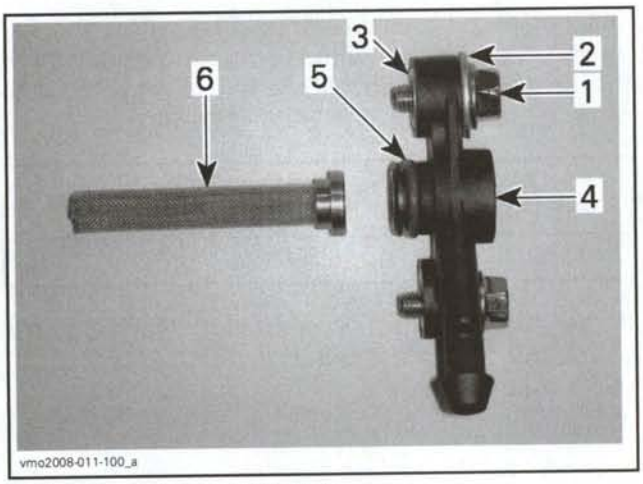

TYPICAL OIL OUTLET ASSEMBLY
1. *Outlet fitting screw*
2. *Washer*
3. *Insert*
4. *Outlet fitting*
5. *O-ring*
6. *Strainer*

INSPECTION

ENGINE OIL PRESSURE

From LH side of vehicle, remove the plug screw of timing chain tensioner and discard the sealing washer.

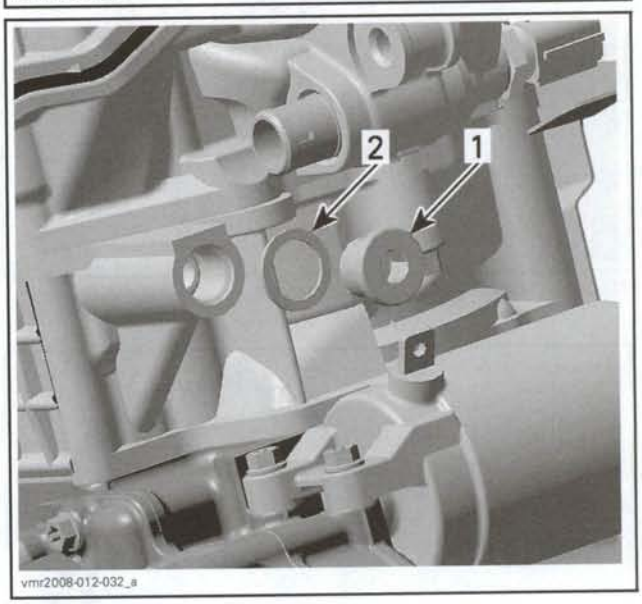

1. *Plug screw for timing chain tensioner*
2. *Sealing washer*

CAUTION: Do not remove timing chain tensioner.

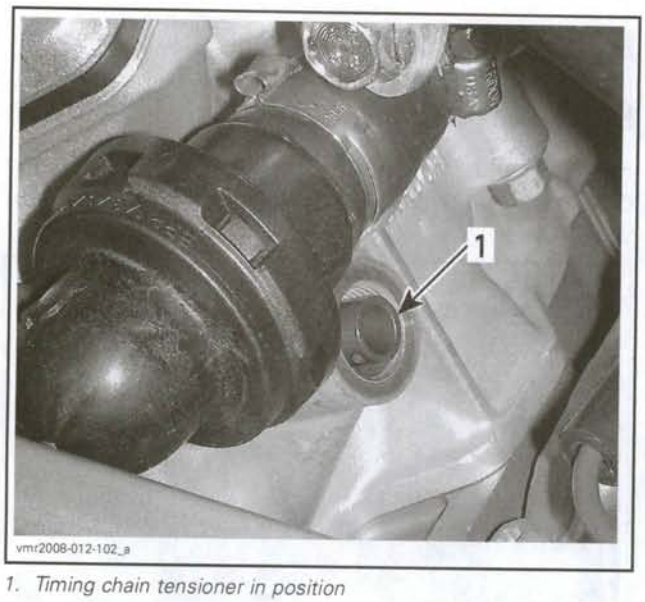

1. Timing chain tensioner in position

Install the timing chain tensioner adapter (P/N 529 036 079) on the adapter hose (P/N 529 035 652).

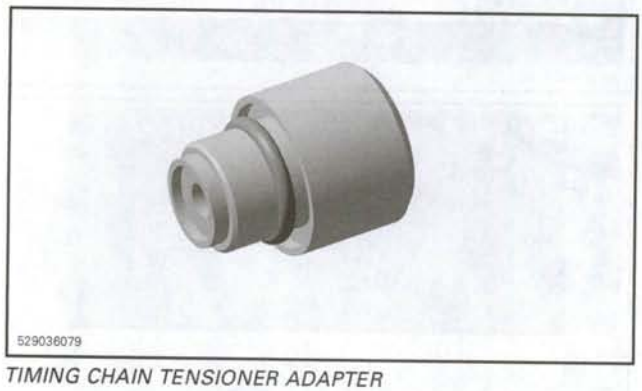

TIMING CHAIN TENSIONER ADAPTER

TIMING CHAIN TENSIONER ADAPTER WITH ADAPTER HOSE

Install adapter hose on the pressure gauge (P/N 529 035 709).

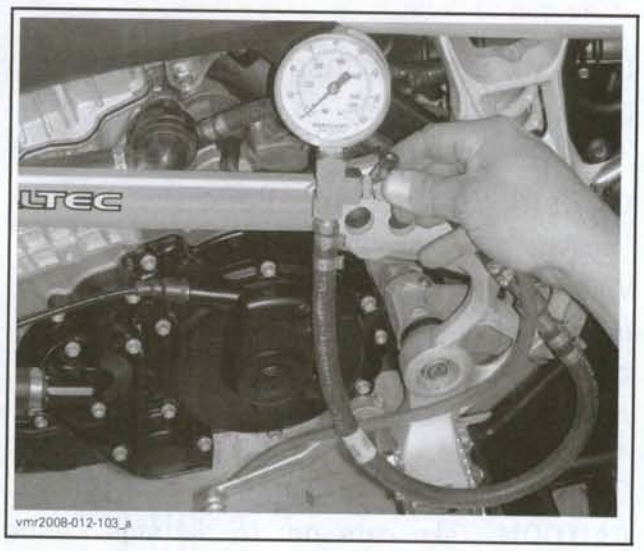

Start engine.

The engine oil pressure should be within the following specification with the recommended oil at the proper level and with a warm engine (minimum oil temperature of 80°C (176°F).

OIL PRESSURE	AT IDLE	5000 RPM
Minimum	80 kPa (12 PSI)	200 kPa (29 PSI)

If the engine pressure is out of specifications, check the points described in *TROUBLESHOOTING* section.

Remove engine oil pressure test tools.

Using a **NEW** sealing washer, install the plug screw over timing chain tensioner.

PROCEDURES

OIL TANK

Oil Tank Removal

Drain oil tank, refer to *ENGINE OIL REPLACEMENT* at the beginning of this section.

Disconnect the oil tank inlet hose.

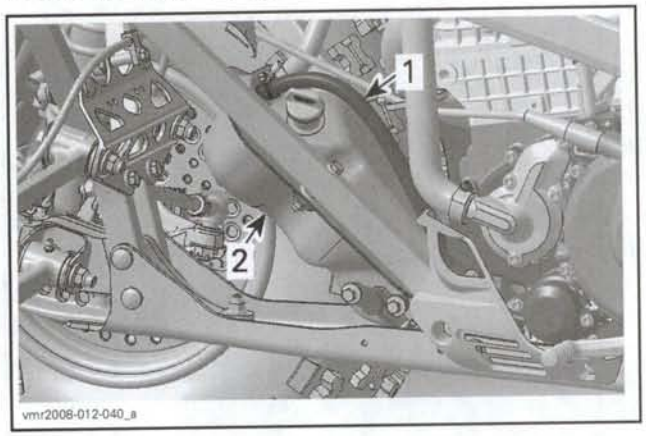

1. *Oil tank inlet hose*
2. *Oil tank*

Remove the crankcase vent tube from the oil tank.

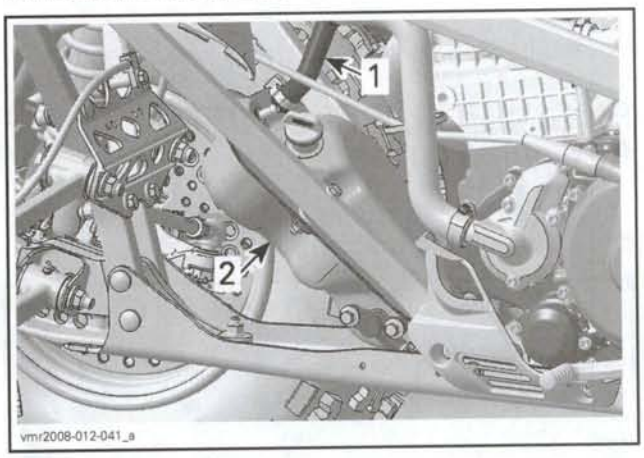

1. *Crankcase vent tube*
2. *Oil tank*

Unscrew the oil tank outlet fitting from oil tank. Discard O-ring.

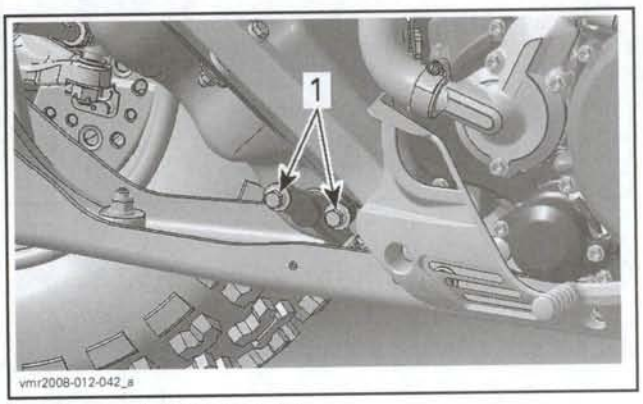

1. *Oil tank outlet fitting screws*

Remove bolts securing oil tank to frame.

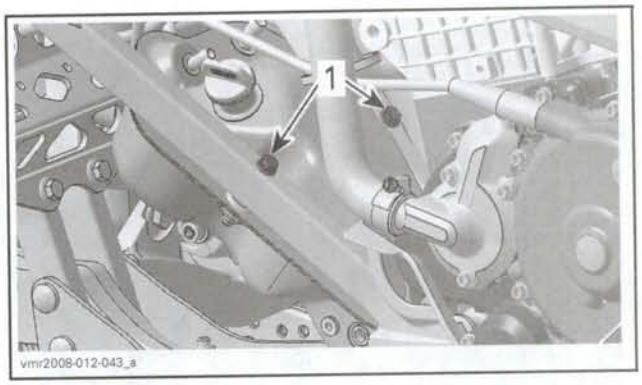

1. *Oil tank bolts*

Withdraw oil tank from frame.

Oil Tank Installation

The installation is the reverse of the removal procedure.

Refill oil tank with recommended oil and at the proper level. Refer to *ENGINE OIL REPLACEMENT* at the beginning of this section.

OIL HOSE CONNECTOR

The oil hose connector is located on the crankcase, clutch side.

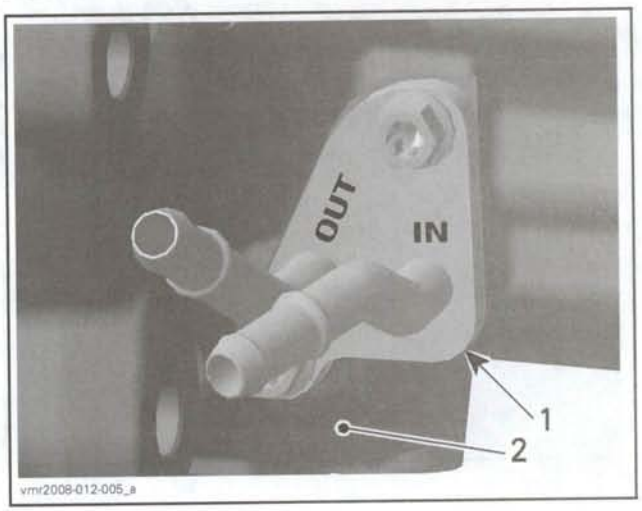

1. *Oil hose connector*
2. *Crankcase, clutch side*

Oil Hose Connector Removal

Drain engine oil, refer to *ENGINE OIL REPLACEMENT* at the beginning of this section.

Remove plastic protector on LH side of engine.

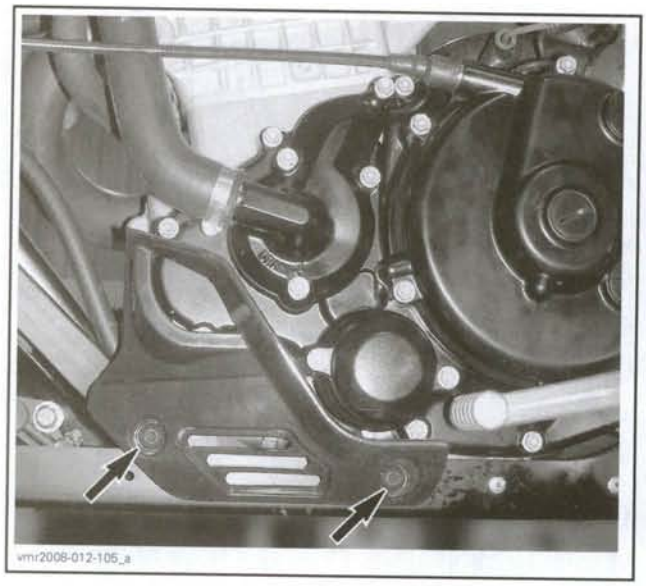

Remove oil hoses from connector.

Remove screws securing the oil hose connector to engine.

Remove oil hose connector.

Discard the gasket.

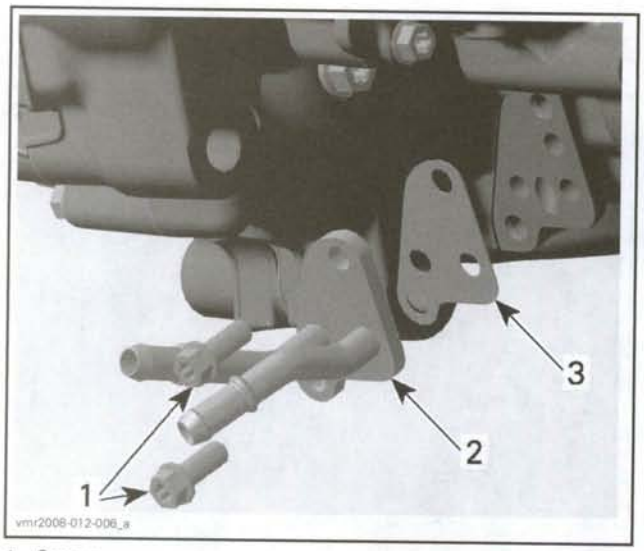

1. *Screws*
2. *Oil hose connector*
3. *Gasket*

Oil Hose Connector Inspection

Clean oil hose connector with a parts cleaner, then use an air gun and dry the parts.

Check if tubes on the oil hose connector are bent or damaged. Replace if necessary.

Oil Hose Connector Installation

For installation, reverse the removal procedure. Pay attention to the following details.

Install a **NEW** connector gasket.

Install hoses to connector.

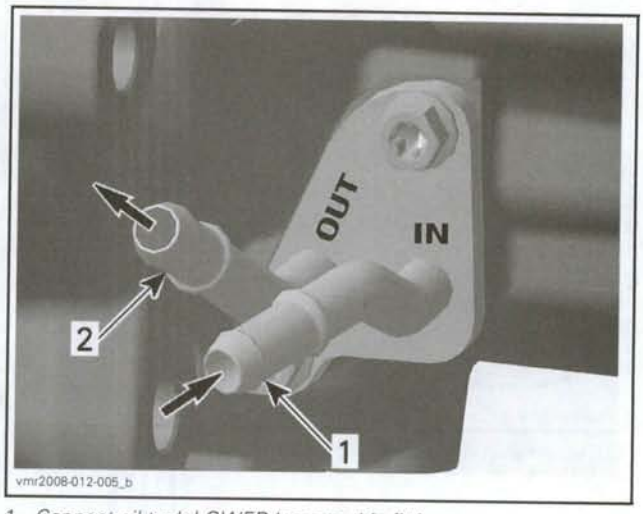

1. *Connect oil tank LOWER hose to this fitting*
2. *Connect oil tank UPPER hose to this fitting*

Reinstall plastic protector on LH side of engine.

ENGINE OIL PRESSURE REGULATOR

The engine oil pressure regulator is located in the crankcase on the magneto side.

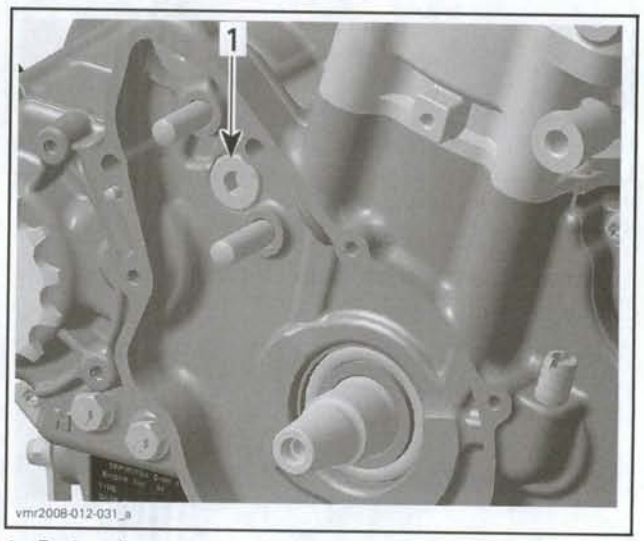

1. *Engine oil pressure regulator location*

Oil Pressure Regulator Removal

Drain engine oil, refer to *ENGINE OIL REPLACEMENT* at the beginning of this section.

Refer to *MAGNETO/STARTER* section and remove the following parts:

- Magneto cover and gasket
- Rotor
- Starter drive intermediate gear
- Friction clutch.

Remove plug screw and gasket ring. Discard gasket ring.

Pull out oil pressure regulator.

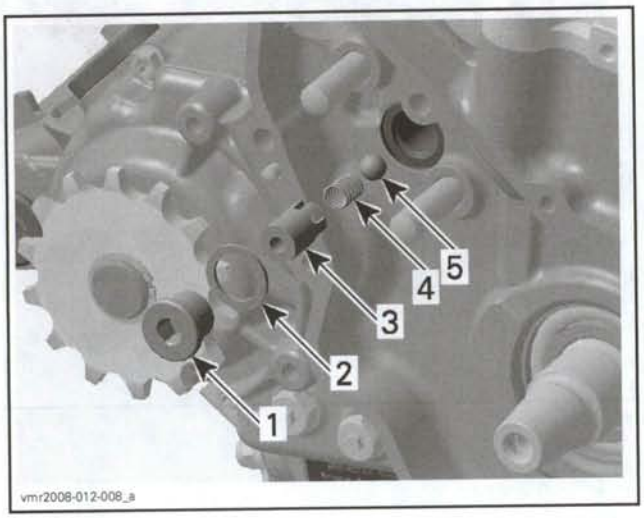

1. *Plug screw*
2. *Gasket ring*
3. *Pressure regulator housing*
4. *Compression spring*
5. *Ball*

Oil Pressure Regulator Inspection

Inspect pressure regulator housing for scoring or other damages and check if housing moves easily in crankcase bore.

Check compression spring for squareness and for free length.

SPRING FREE LENGTH	
NEW NOMINAL	15 mm (.591 in)
SERVICE LIMIT	14 mm (.551 in)

Replace worn or damaged components.

Clean bore and thread in the crankcase from metal shavings and other contaminations.

Oil Pressure Regulator Installation

For installation, reverse the removal procedure. Pay attention to the following details.

Before installing the plug screw, press on pressure regulator housing a few times to check if the oil pressure regulator works properly.

Install a **NEW** gasket ring on plug screw. Ensure gasket ring is installed properly to allow the opening of the oil pressure regulator at the proper oil pressure.

OIL PRESSURE PUMP

The oil pressure pump is located in the crankcase on the clutch side.

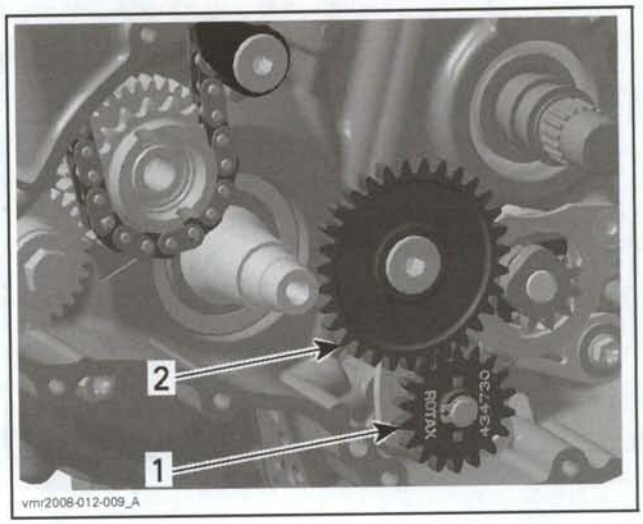

1. *Oil pressure pump gear*
2. *Oil pump intermediate gear*

Oil Pressure Pump Removal

Referring to *CLUTCH* section, remove the following:

- Clutch cover
- Clutch drum.

Remove oil pump intermediate gear.

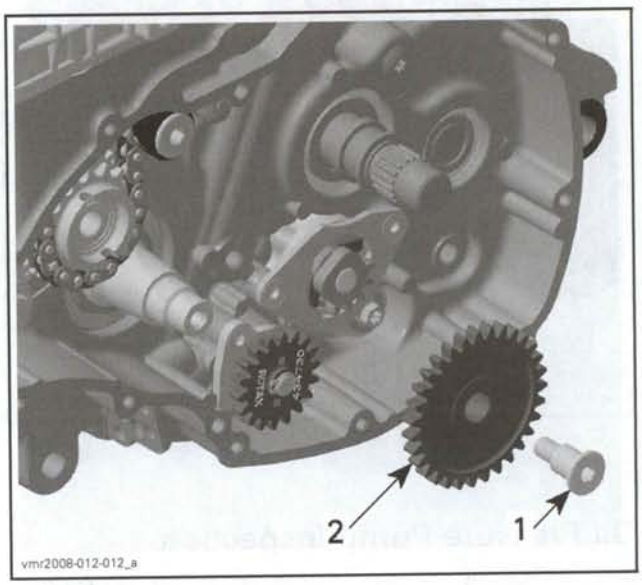

1. *Bearing screw*
2. *Intermediate gear*

Remove snap ring retaining oil pump gear.

Pull out the oil pump gear.

Remove the needle pin.

Remove the oil pump cover.

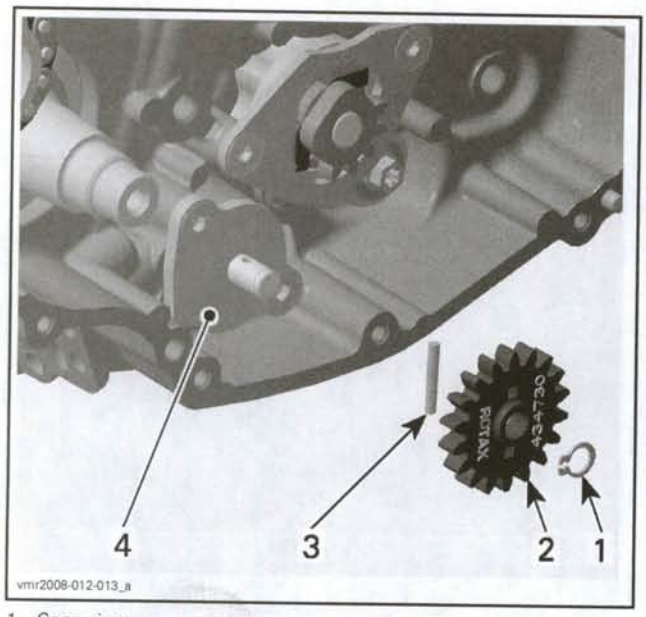

1. *Snap ring*
2. *Oil pump gear*
3. *Needle pin*
4. *Oil pump cover*

Remove the outer rotor.

Remove the inner rotor.

Remove the needle pin.

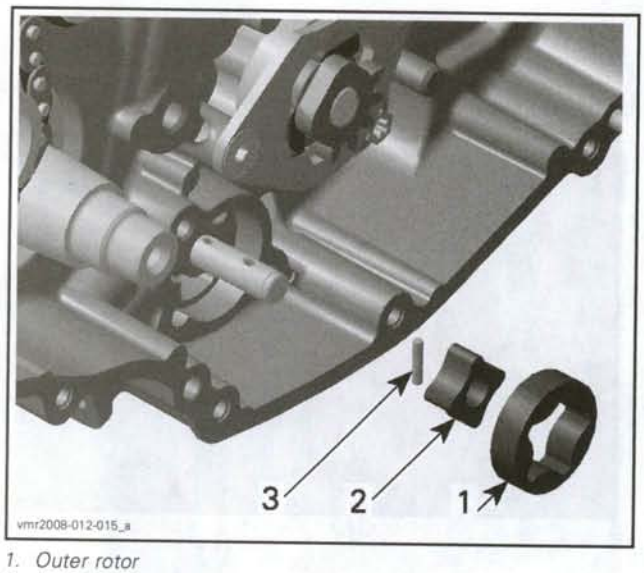

1. *Outer rotor*
2. *Inner rotor*
3. *Needle pin*

Oil Pressure Pump Inspection

Inspect oil pump for marks or other damages. Check for scratches in crankcase between outer rotor and oil pump bore. If so, replace damaged parts.

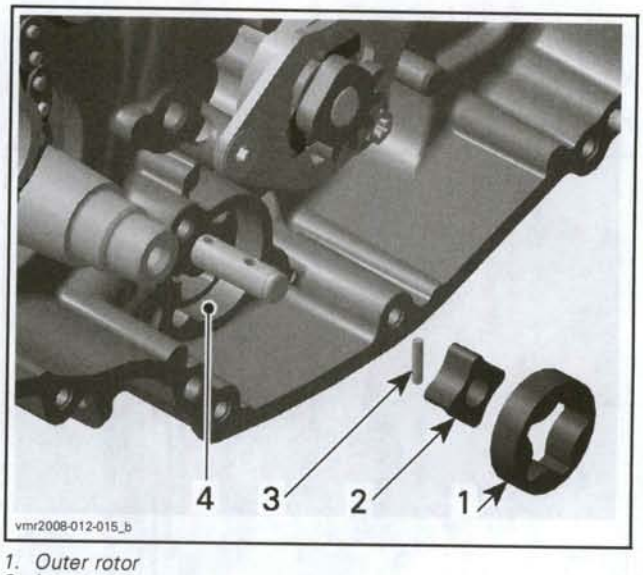

1. *Outer rotor*
2. *Inner rotor*
3. *Needle pin*
4. *Oil pump bore*

Check inner rotor for corrosion pin holes or other damages. If so, replace oil pressure pump inner and outer rotor.

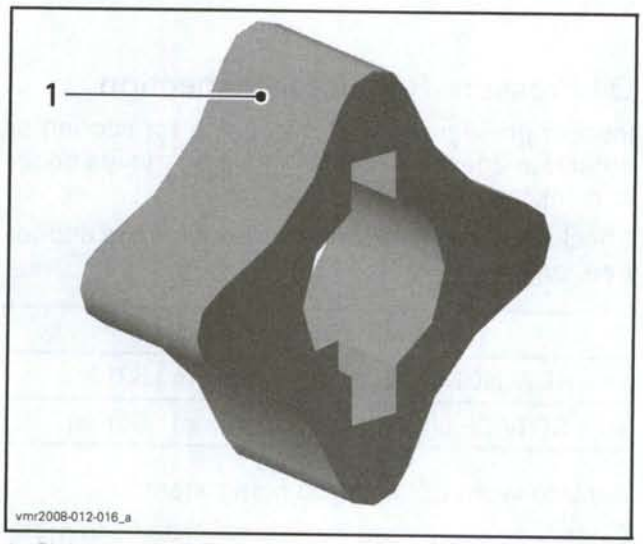

1. *Pitting on the teeth*

Using a feeler gauge, measure the clearance of outer rotor and inner rotor as shown.

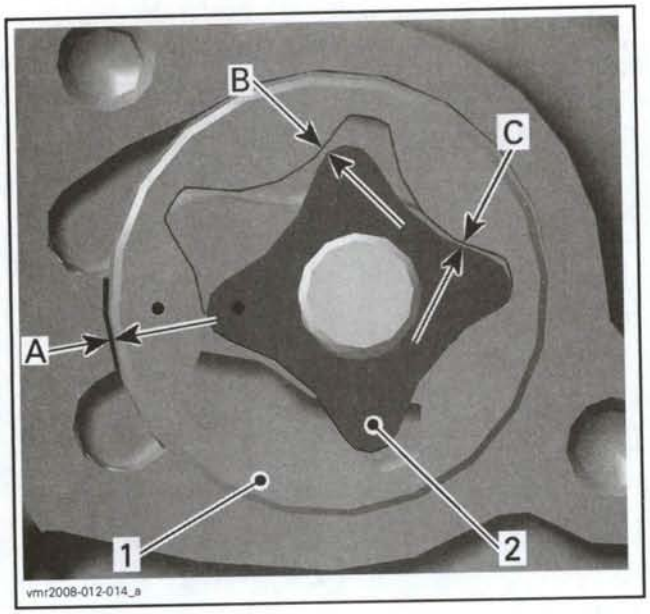

1. *Outer rotor*
2. *Inner rotor*

OUTER AND INNER ROTOR CLEARANCE	
SERVICE LIMIT	
A	0.25 mm (0.009 in)
B	
C	

If clearance of inner and outer rotors exceeds the tolerance, replace oil pump.

Measure outer rotor thickness and oil pump bore depth.

If clearance between outer rotor and its bore in crankcase exceeds the tolerance, replace the complete oil pump assembly and/or the crankcase.

Using a depth gauge, measure the axial clearance of the oil pump as shown.

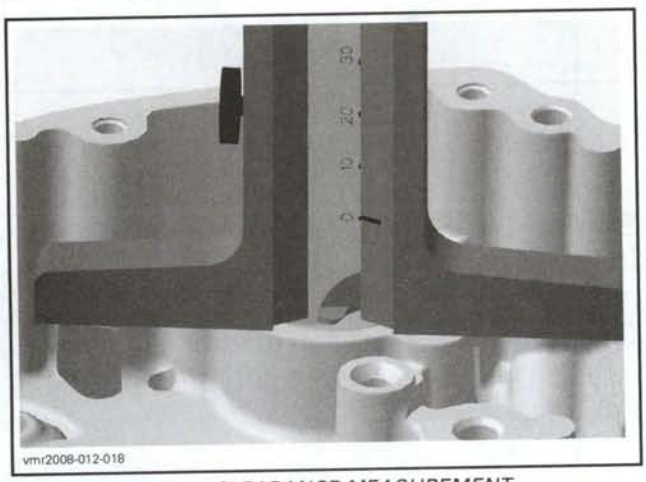

OIL PUMP — AXIAL CLEARANCE MEASUREMENT

Check oil pump cover for damages and for surface straightness with a straight edge.

Difference between measurements should not exceed 0.2 mm (.008 in).

If damaged or out of tolerance, replace the complete oil pump assembly.

NOTE: When the axial clearance of the oil pump assembly increases, the oil pressure decreases.

Oil Pressure Pump Installation

For installation, reverse the removal procedure. Pay attention to the following details.

CAUTION: At installation of needle pin and inner rotor, take care not to drop the needle pin and lose it in the crankcase.

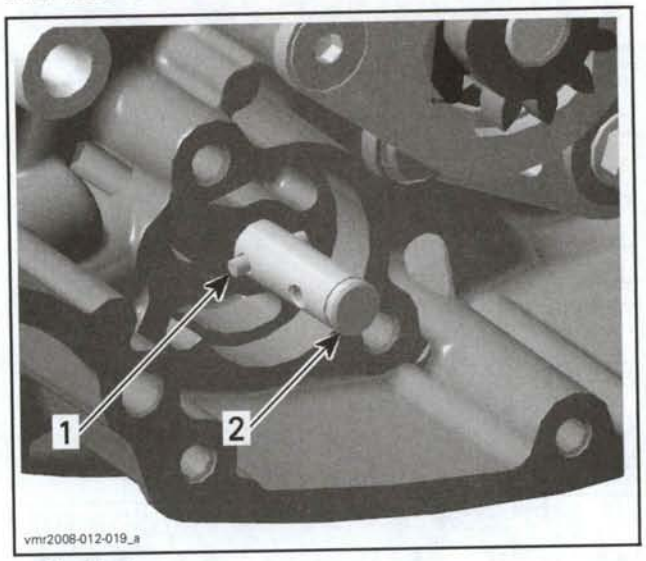

1. *Needle pin*
2. *Oil pump shaft*

Markings on inner and outer rotors must be visible.

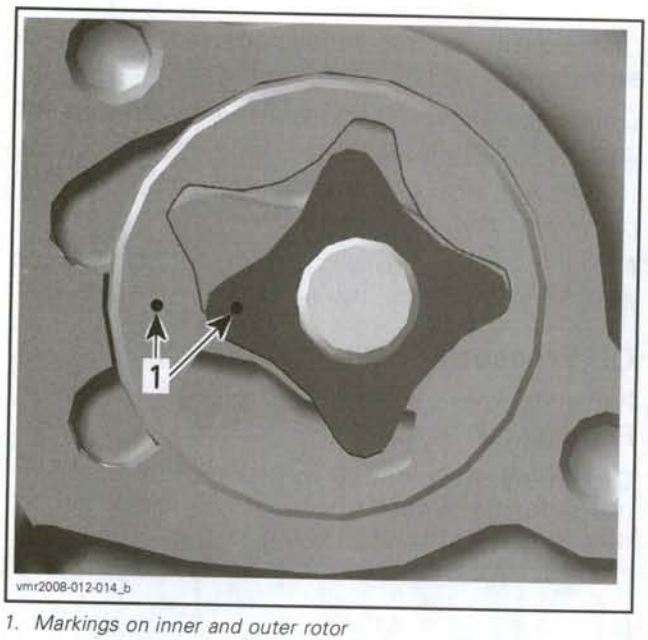

1. Markings on inner and outer rotor

Coat inner and outer rotors with oil.

After installation of the remaining parts, check for smooth operation of the oil pump assembly.

After engine is completely reassembled, start engine and make sure oil pressure is within specifications (refer to *ENGINE OIL PRESSURE* above).

ENGINE OIL STRAINER

The engine oil strainer is located inside the crankcase, on the clutch side.

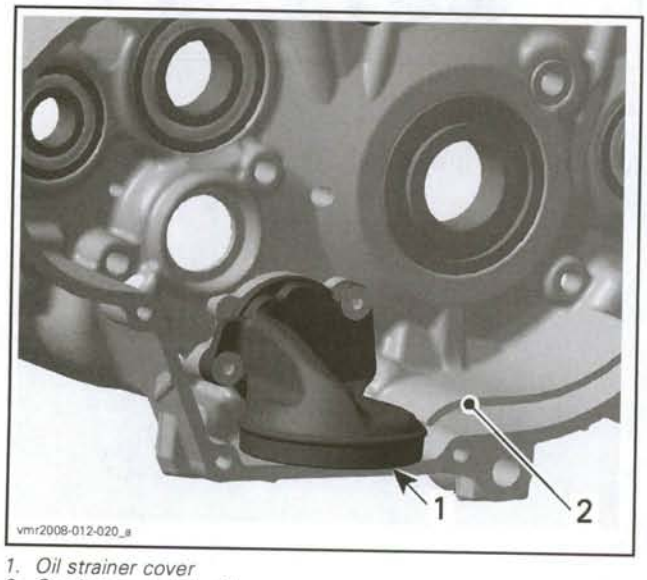

1. Oil strainer cover
2. Crankcase, clutch side

Engine Oil Strainer Removal

Split crankcase. Refer to *CRANKCASE/CRANKSHAFT* section.

Unscrew the bolts retaining the oil strainer cover.

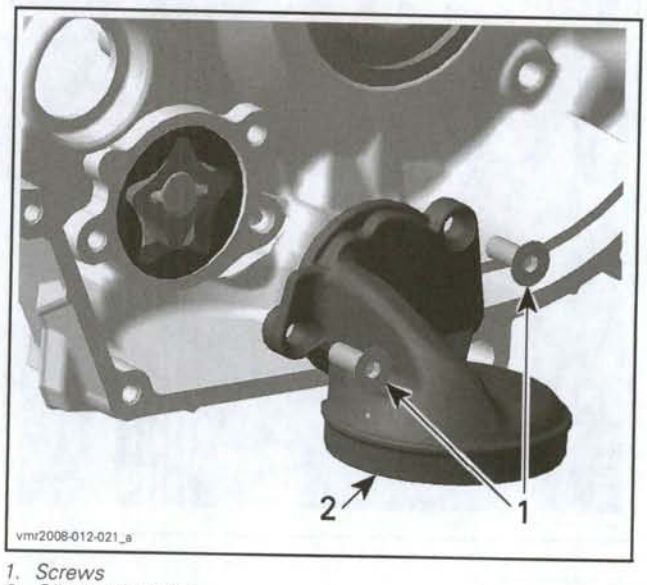

1. Screws
2. Oil strainer cover

Remove snap ring retaining the oil strainer.

Remove the oil collector with the O-ring.

Remove the strainer.

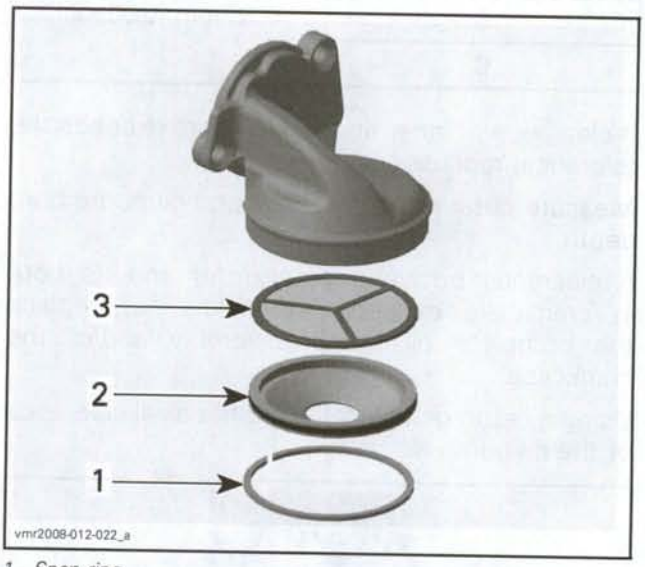

1. Snap ring
2. Oil collector with O-ring
3. Oil strainer

Engine Oil Strainer Cleaning and Inspection

Clean engine oil strainer and cover with a parts cleaner then use an air gun to dry it.

Inspect O-ring on oil collector for damages. Replace if necessary.

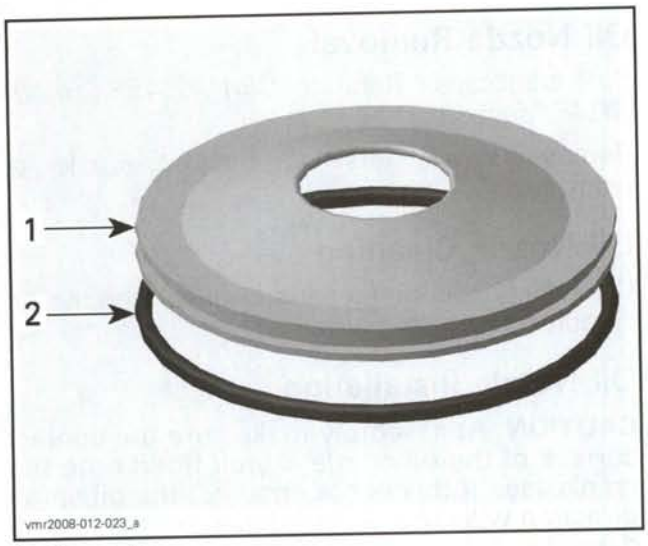

1. *Oil collector*
2. *O-ring*

Check engine oil strainer for damage and change if necessary.

Engine Oil Strainer Installation

For installation, reverse the removal procedure.

OIL SUCTION PUMP

The oil suction pump is located inside the crankcase, under the oil strainer cover.

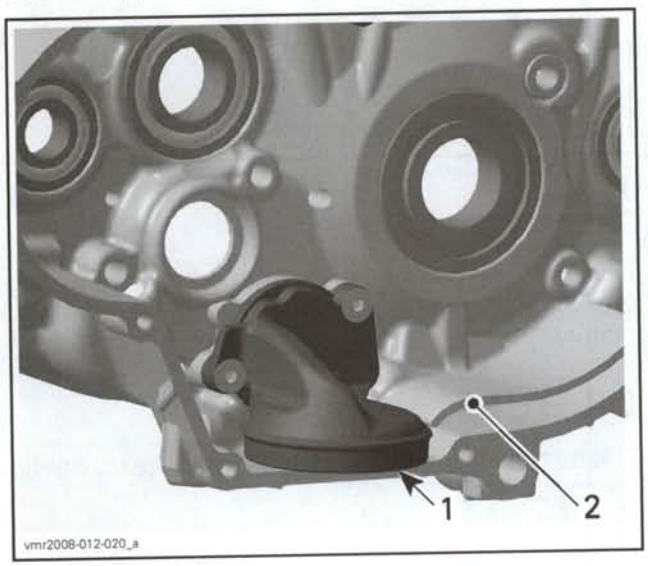

1. *Oil strainer cover*
2. *Crankcase, clutch side*

Oil Suction Pump Removal

Remove *OIL PRESSURE PUMP*, see procedure above in this section.

Split crankcase. Refer to *CRANKCASE/CRANKSHAFT* section.

Remove *ENGINE OIL STRAINER COVER*, see procedure above in this section.

Remove outer and inner rotors.

Remove the needle pin.

Pull out the oil pump shaft.

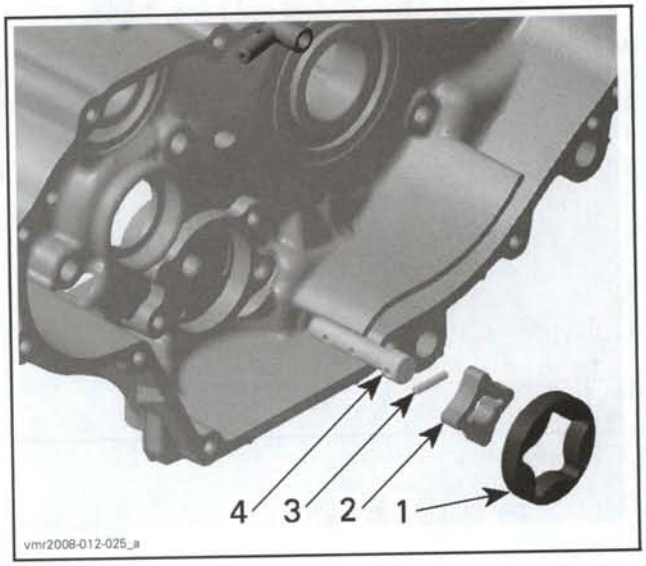

1. *Outer rotor*
2. *Inner rotor*
3. *Needle pin*
4. *Oil pump shaft*

Oil Suction Pump Inspection

Inspect oil pump for marks or other damages. Check for scratches in crankcase between outer rotor and oil pump bore. If so, replace damaged parts.

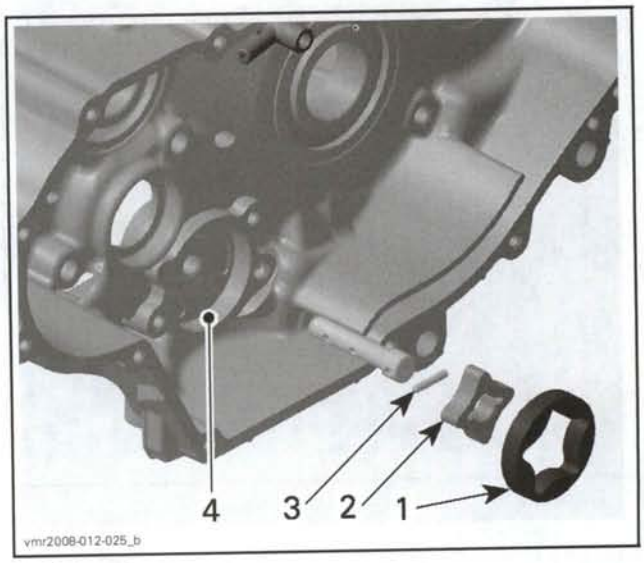

1. *Outer rotor*
2. *Inner rotor*
3. *Needle pin*
4. *Oil pump bore*

For inner and outer rotor inspection refer to *OIL PRESSURE PUMP* above.

Check oil pump shaft and surface of oil strainer cover for scratches or other damages.

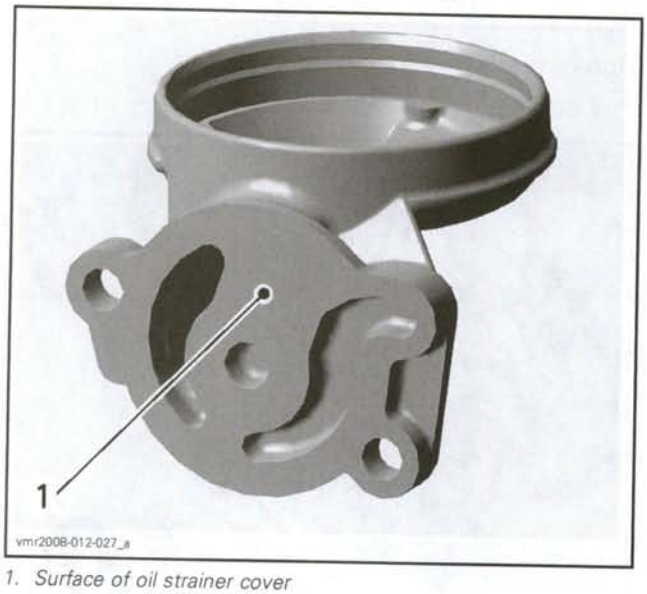

1. Surface of oil strainer cover

Replace parts if necessary.

Oil Suction Pump Installation

For installation, reverse the removal procedure.

OIL NOZZLE

The oil nozzle is located inside the crankcase, clutch side.

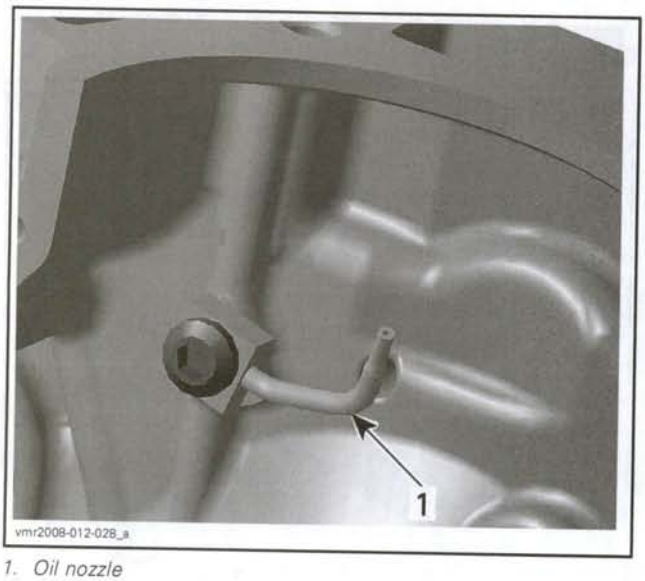

1. Oil nozzle

NOTE: If the engine has to be dismantled within the scope of repair work, take this opportunity to clean the oil nozzle.

Oil Nozzle Removal

Split crankcase. Refer to *CRANKCASE/CRANKSHAFT* section.

Remove screw retaining the oil nozzle to crankcase.

Oil Nozzle Cleaning

Clean oil nozzle with a parts cleaner, then use an air gun and dry the parts.

Oil Nozzle Installation

CAUTION: At assembly make sure the contact surface of the oil nozzle is well fitted onto the crankcase. If this is not ensured, the oil spray direction will change, causing potential engine damage.

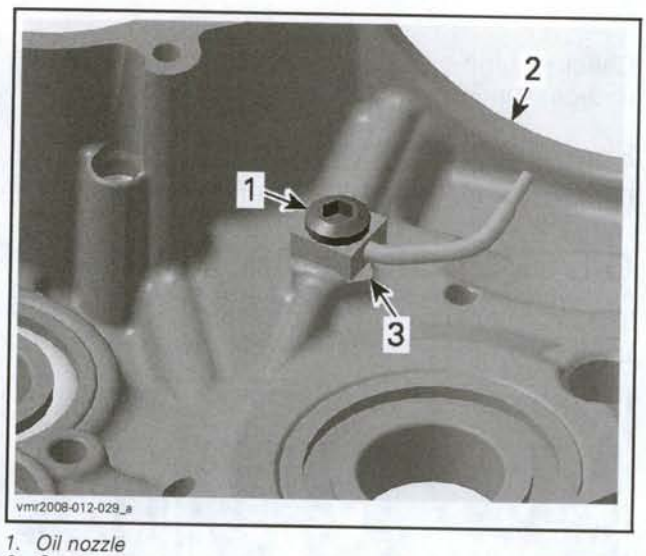

1. Oil nozzle
2. Crankcase
3. Contact surface

NOTE: If the oil nozzle is damaged or bent during work in the crankcase, it must be replaced immediately.

OIL TUBE

The oil tube is located inside the crankcase, on the magneto side.

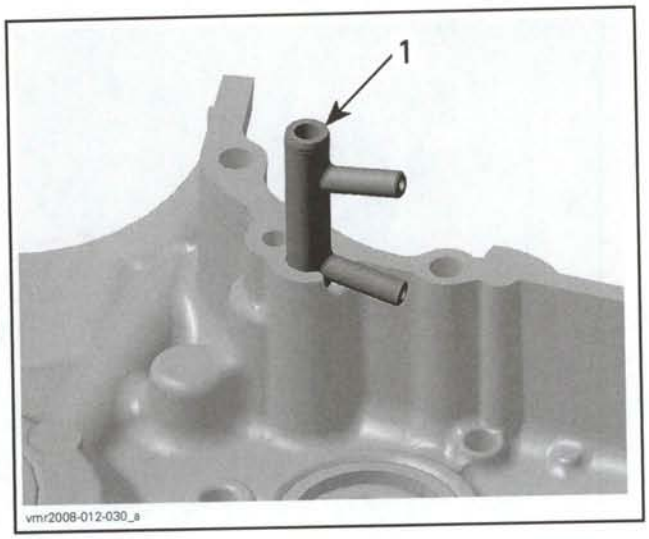

1. Oil tube

NOTE: If the engine has to be dismantled within the scope of repair work, take this opportunity to clean the oil tube.

Oil Tube Removal

Split crankcase. Refer to *CRANKCASE/CRANKSHAFT* section.

Oil Tube Inspection

Clean oil tube with a parts cleaner, then use an air gun and dry the parts.

Oil Tube Installation

For installation, reverse the removal procedure.

COOLING SYSTEM

SERVICE TOOLS

Description	Part Number	Page
Oetiker pliers	295 000 070	54
small hose pincher	295 000 076	57
handle	420 877 650	64
vacuum/pressure pump kit	529 021 800	54
large hose pincher	529 032 500	57
oil seal pusher	529 035 757	64
suction pump	529 035 880	57
test cap	529 035 991	54
water pump seal installer	529 036 077	64
bearing installer	529 036 078	63

SERVICE PRODUCTS

Description	Part Number	Page
BRP premixed coolant	219 700 362	55
Loctite 243 (blue)	293 800 060	64
Dow Corning 111	413 707 000	64

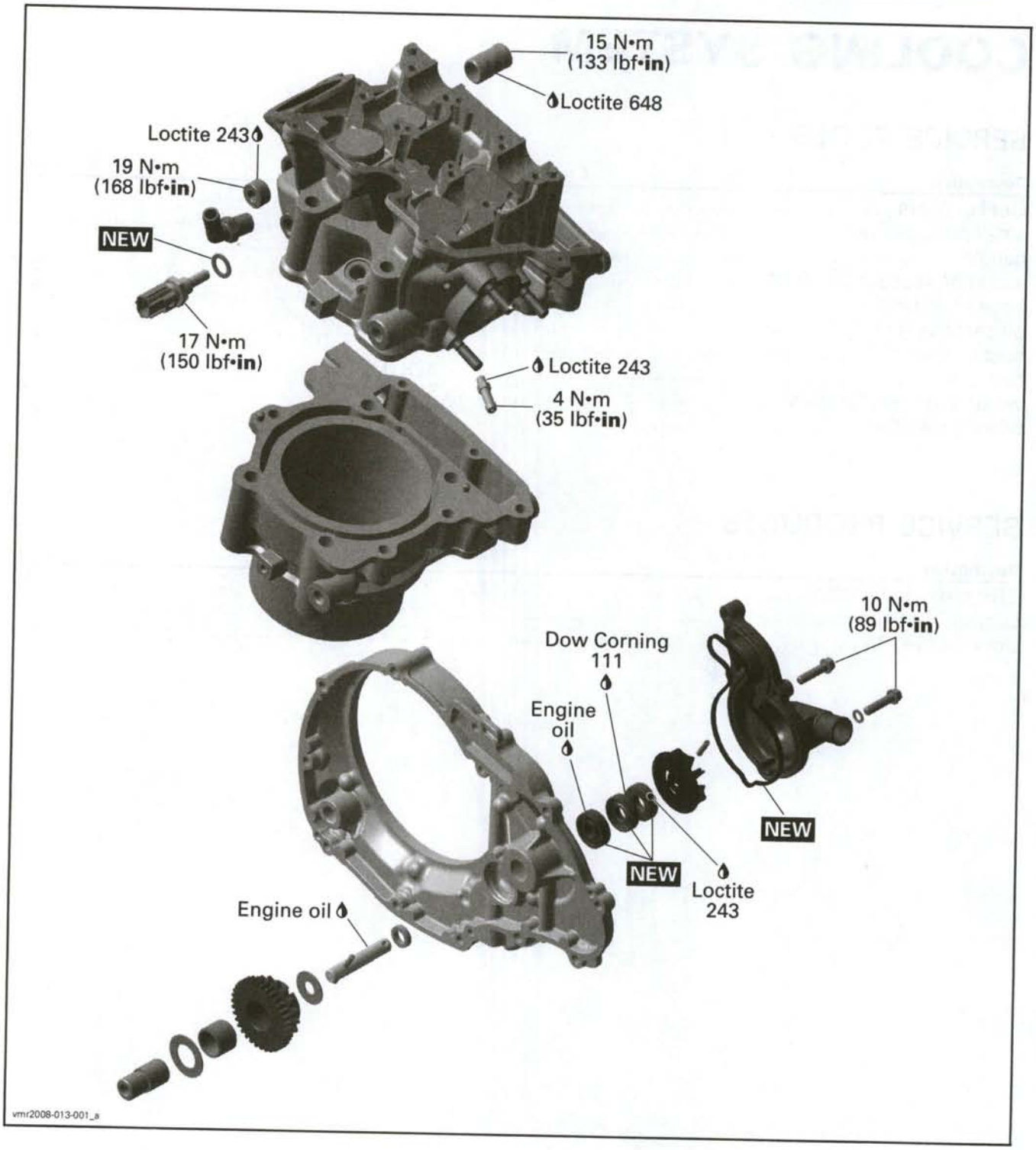
15 N•m
(133 lbf•in)
Loctite 648
Loctite 243
19 N•m
(168 lbf•in)
NEW
17 N•m
(150 lbf•in)
Loctite 243
4 N•m
(35 lbf•in)
10 N•m
(89 lbf•in)
Dow Corning
111
Engine
oil
NEW
NEW
Loctite
243
Engine oil
vmr2008-013-001_a

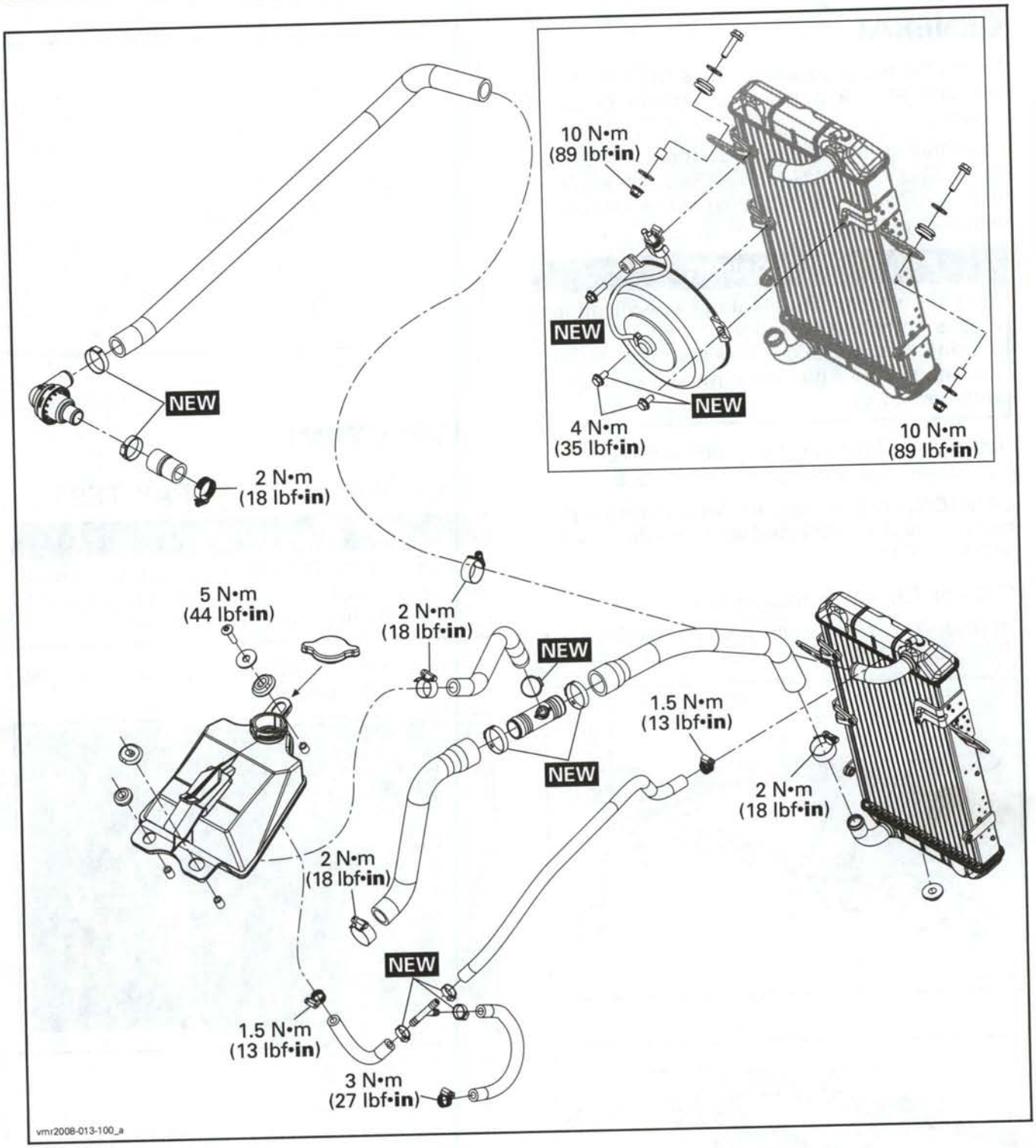
10 N•m
(89 lbf•in)
NEW
NEW
4 N•m
(35 lbf•in)
10 N•m
(89 lbf•in)
NEW
2 N•m
(18 lbf•in)
5 N•m
(44 lbf•in)
2 N•m
(18 lbf•in)
NEW
1.5 N•m
(13 lbf•in)
NEW
2 N•m
(18 lbf•in)
2 N•m
(18 lbf•in)
NEW
1.5 N•m
(13 lbf•in)
3 N•m
(27 lbf•in)
vmr2008-013-100_a

GENERAL

During assembly/installation, use the torque values and service products as in the exploded views.

Clean threads before applying a threadlocker. Refer to *SELF-LOCKING FASTENERS* and *LOCTITE APPLICATION* at the beginning of this manual for complete procedure.

⚠ WARNING

Torque wrench tightening specifications must strictly be adhered to.
Locking devices (e.g.: locking tabs, elastic stop nuts, cotter pin, etc.) must be replaced with new ones.

Hoses or cables removed or disconnected must be installed and routed at the same place.

CAUTION: Locking ties removed during a procedure must be replaced and installed at the same location.

Oetiker Clamp Replacement

To secure or cut Oetiker clamps, use Oetiker pliers (P/N 295 000 070).

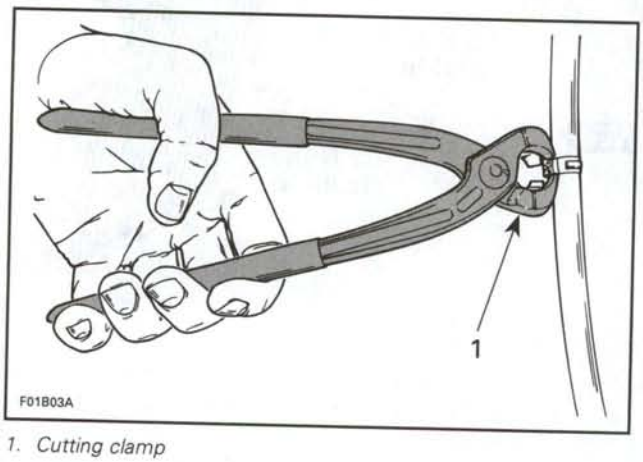

1. Cutting clamp

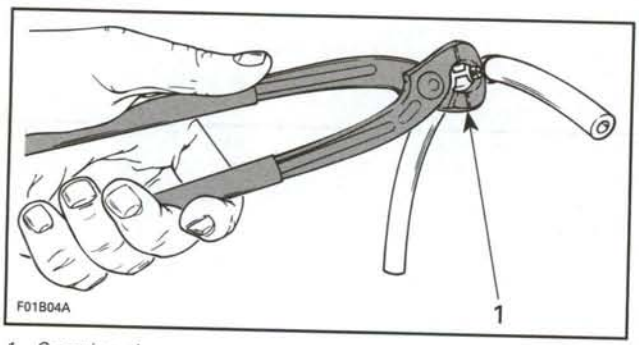

1. Securing clamp

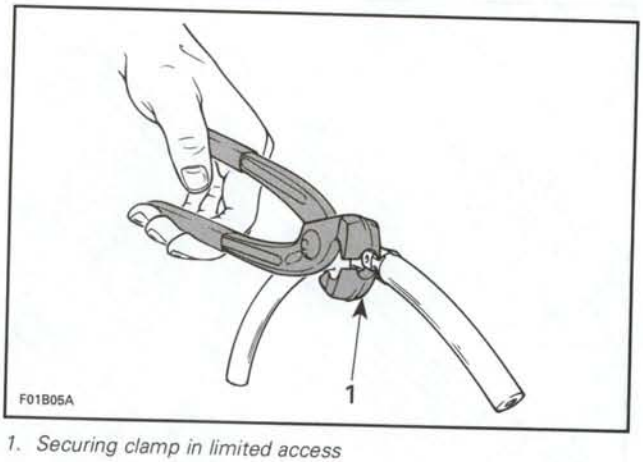

1. Securing clamp in limited access

INSPECTION

COOLING SYSTEM LEAK TEST

⚠ WARNING

In order to avoid getting burned, do not remove the coolant tank cap or loosen the engine drain plug if the engine is hot.

Remove access cover to reach coolant tank cap. Refer to *BODY* section.

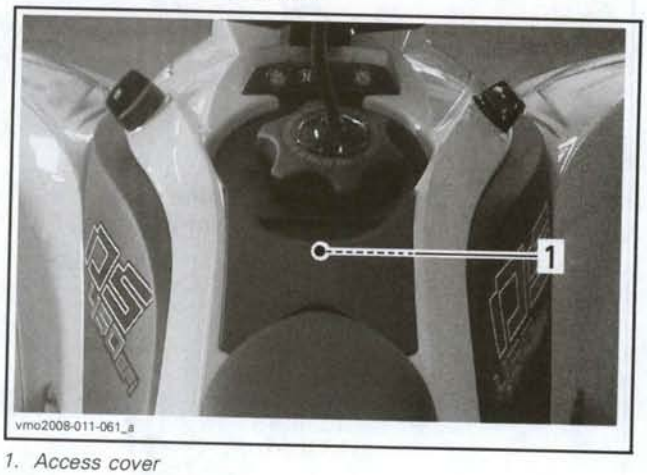

1. Access cover

Remove coolant tank cap.

Install the test cap (P/N 529 035 991) on filler neck of coolant tank.

Pressurize all system through coolant tank to 110 kPa (16 PSI) by using the pump included in the vacuum/pressure pump kit (P/N 529 021 800).

Check all hoses, radiator and cylinder/base for coolant leaks. Spray a soapy water solution and look for air bubbles.

Inspection

Check general condition of hoses and clamp tightness.

Check the leak indicator hole if there is oil or coolant.

NOTE: Leaking coolant indicates a damaged seal on water pump side. Leaking oil indicates a damaged inner seal on oil pump side. If either seal is leaking, both seals must be replaced at the same time. Refer to *WATER PUMP SHAFT, SEALS AND BEARING* in this section.

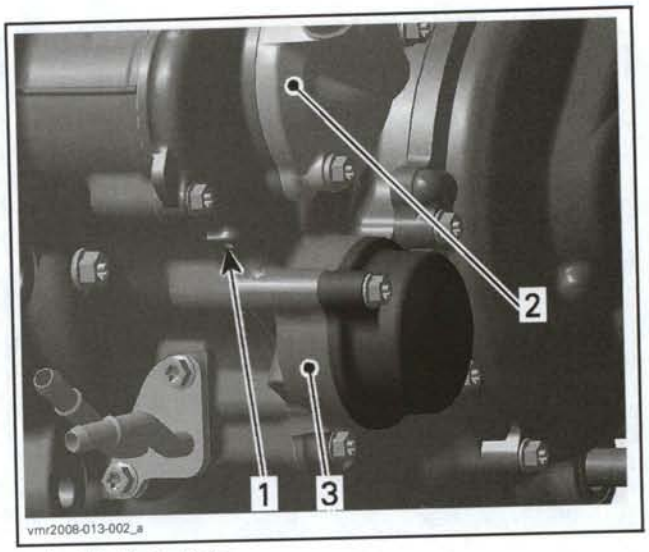

1. *Leak indicator hole*
2. *Water pump housing*
3. *Clutch cover*

MAINTENANCE

COOLANT REPLACEMENT

⚠ WARNING

To avoid potential burns, do not remove the coolant tank cap or loosen the cooling drain plug if the engine is hot.

Recommended Coolant

Use BRP premixed coolant (P/N 219 700 362) or a blend of 50% antifreeze with 50% water.

To prevent antifreeze deterioration, always use the same brand. Never mix different brands unless cooling system is completely flushed and refilled.

CAUTION: To prevent rust formation or freezing condition, always replenish the system with the BRP premixed coolant or with 50% antifreeze and 50% water. Do not use tap water, straight antifreeze or straight water in the system. Tap water contains minerals and impurities which build up in the system. During cold weather, straight water causes the system to freeze while straight antifreeze thickens (like slush ice) and does not have the same efficiency. Always use ethylene glycol antifreeze containing corrosion inhibitors specifically recommended for aluminum engines.

Draining the System

Remove access cover to reach coolant tank cap. Refer to *BODY* section.

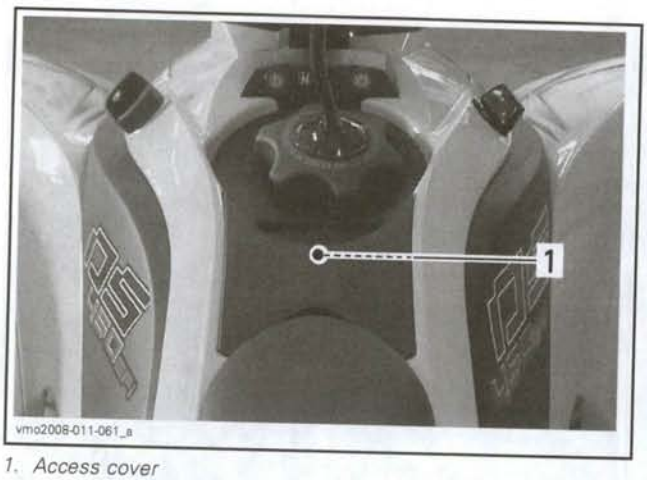

1. Access cover

Install a drain pan under vehicle.

Partially unscrew drain plug on water pump cover.

Remove coolant tank cap.

When cooling system is drained, remove drain plug completely.

Install a **NEW** gasket ring.

Torque drain plug.

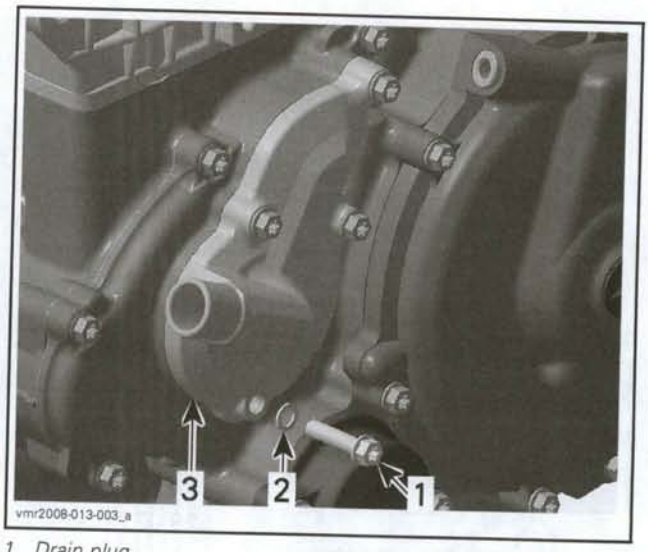

1. Drain plug
2. Gasket ring
3. Water pump cover

Refilling the System

Ensure vehicle is on a flat surface and engine is cold.

Fill tank until coolant reaches level marks (small ribs).

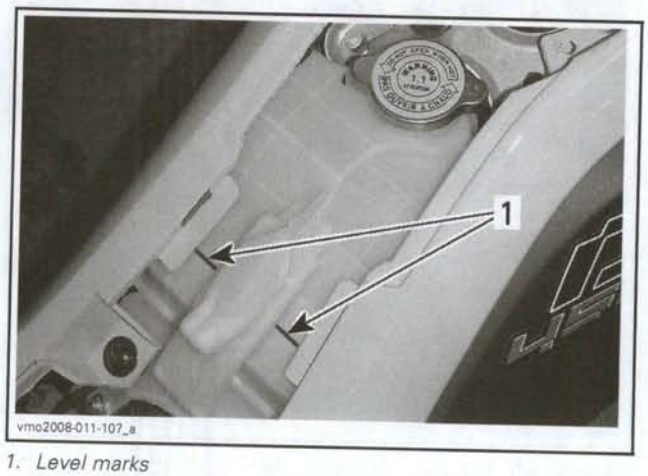

1. Level marks

Install coolant tank cap.

Run engine until thermostat opens, then stop engine.

Let engine cool down.

Recheck coolant level and top up if necessary.

NOTE: Check coolant concentration (freezing point) with proper tester each year or every 50 hours or when vehicle reaches 2500 km (1600 mi).

PROCEDURES

COOLANT TANK CAP

Coolant Tank Cap Test

Using a pressure cap tester, check the efficiency of coolant tank cap. If the efficiency is weak, install a new 110 kPa (16 PSI) cap (do not exceed this pressure).

COOLANT TANK

Coolant Tank Removal

Remove the front body assembly. Refer to *BODY* section.

Remove screw securing the front of coolant tank.

1. Coolant tank front screw

Lift coolant tank and install a small hose pincher (P/N 295 000 076) on coolant tank inlet hose.

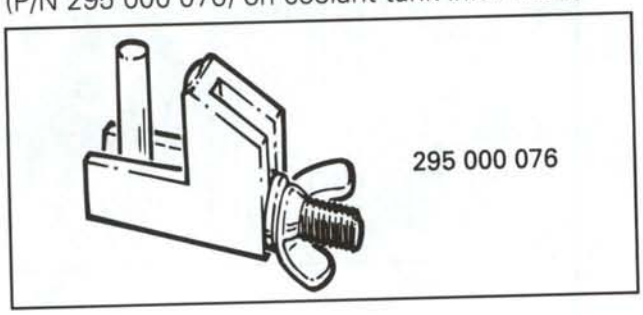

1. Inlet hose from radiator and cylinder head

Install a large hose pincher (P/N 529 032 500) on coolant tank outlet hose.

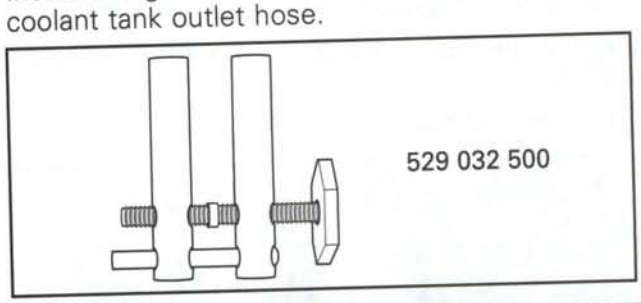

1. Outlet hose toward water pump

Using the suction pump (P/N 529 035 880), siphon coolant tank.

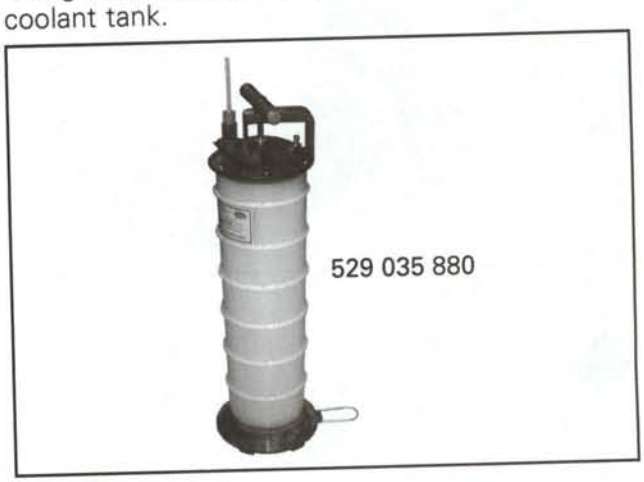

Loosen clamps securing hoses underneath coolant tank.

Remove coolant tank.

Coolant Tank Installation

The installation is the reverse of the removal procedure.

Refill coolant tank as described in *REFILLING THE SYSTEM* above in this section.

RADIATOR

Radiator Removal

Drain cooling system as described in *DRAINING THE SYSTEM* above in this section.

Remove the front body assembly. Refer to *BODY* section.

Remove both radiator mouldings.

1. *LH radiator moulding screw*
2. *LH radiator moulding*

Disconnect the bottom hose from radiator.

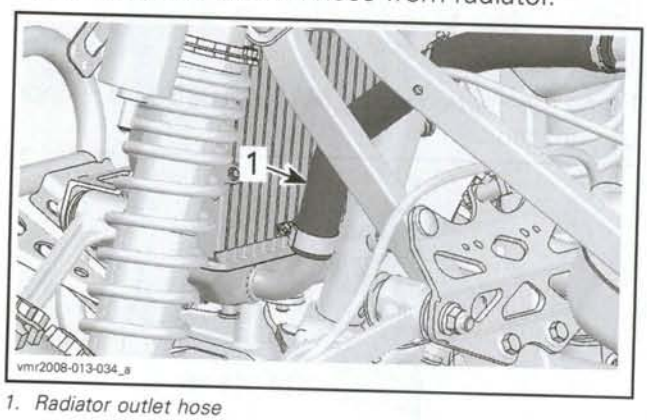

1. *Radiator outlet hose*

Disconnect the bleeding hose from the top of radiator.

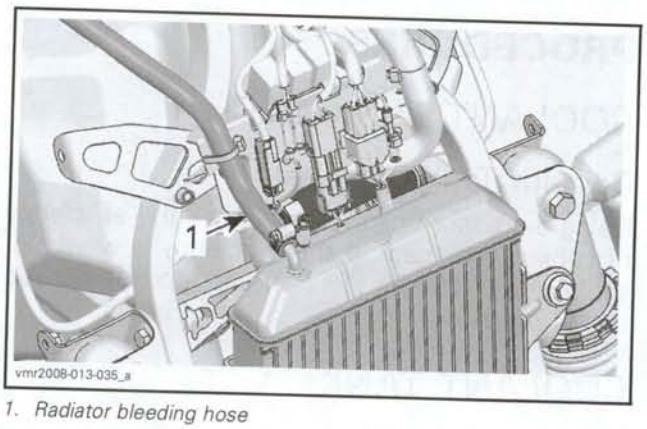

1. *Radiator bleeding hose*

Disconnect upper radiator hose.

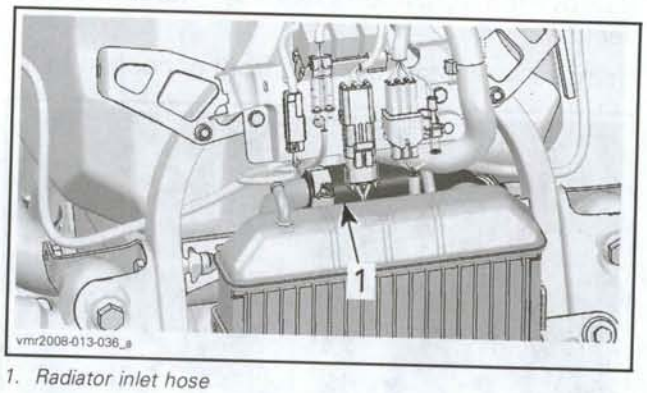

1. *Radiator inlet hose*

Unscrew radiator mounting bolts.

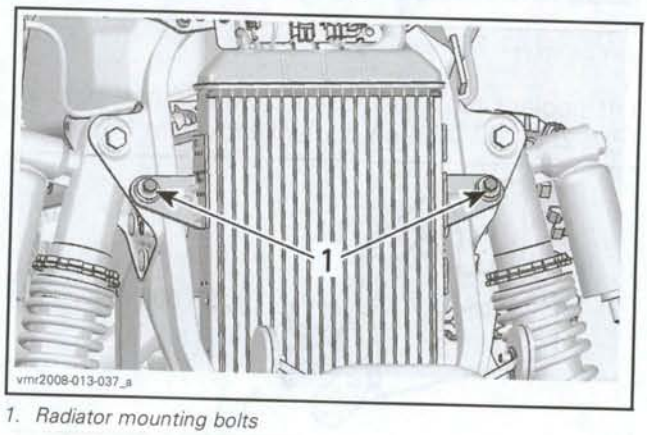

1. *Radiator mounting bolts*

Unplug cooling fan connector.

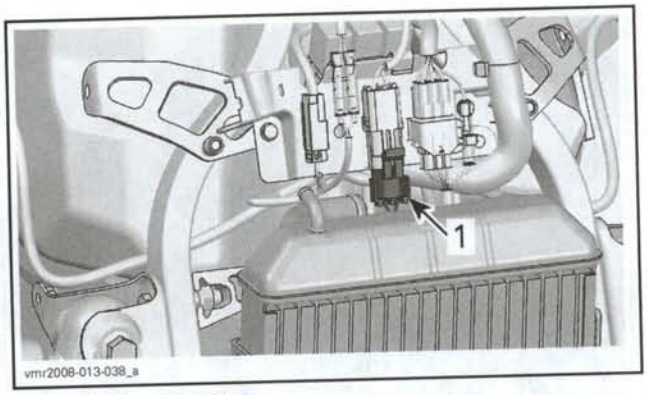

1. Cooling fan connector

Remove radiator from vehicle.

Remove *COOLING FAN* from radiator, see procedure further in this section.

Radiator Installation

The installation is the reverse of the removal procedure.

COOLING FAN

Cooling Fan Test with B.U.D.S.

Connect B.U.D.S. Refer to *COMMUNICATION TOOLS/B.U.D.S. SOFTWARE* section.

In B.U.D.S., select **Activation** folder then the **1st** page.

Press on the **Cooling Fan** button to activate it.

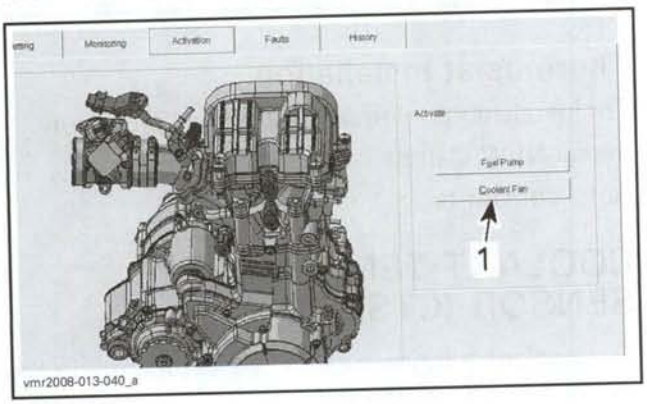

1. Activate fan here

If cooling fan works, check coolant temperature sensor (CTS).

If the cooling fan does not work, check the 20 A fuse. If fuse is good, check the cooling fan relay.

Cooling Fan Relay Test

Remove the front body assembly. Refer to *BODY* section.

Remove the cooling fan relay.

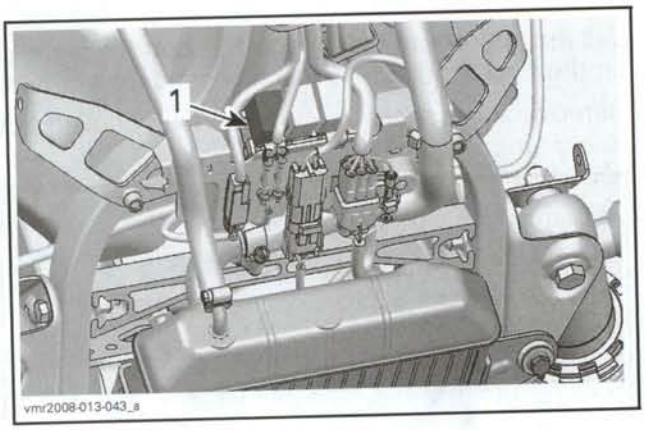

1. Fan relay

Install a jumper wire end between pins 3 and 5.

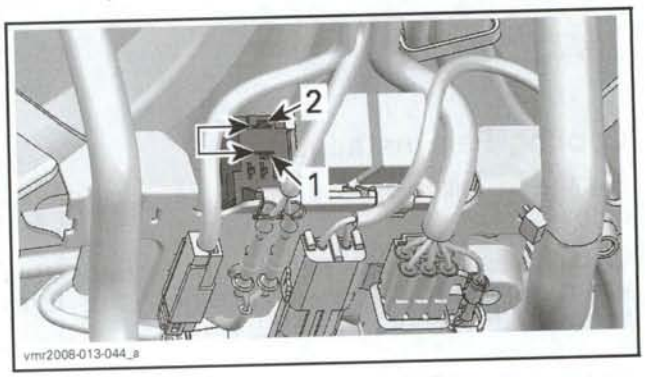

1. Pin 3
2. Pin 5

If the fan works correctly, replace the relay.

If the fan does not work, check the wiring harness and connectors between relay support, fuse box and cooling fan.

If the fan does not work after all tests, replace it.

Cooling Fan Removal

Remove the front body assembly. Refer to *BODY* section.

Unscrew radiator mounting bolts.

Unplug fan connector.

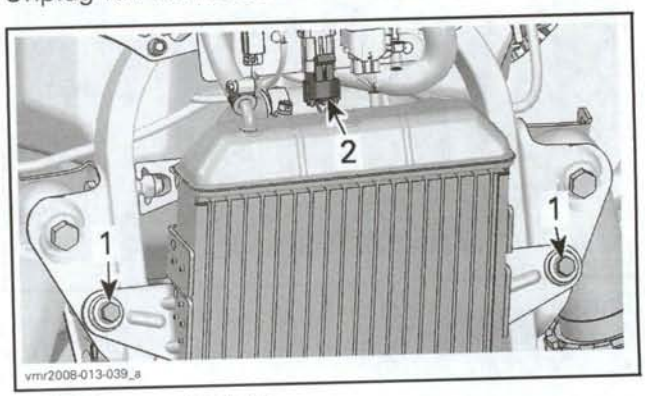

1. Radiator mounting bolts
2. Cooling fan connector

Lift the radiator to disengage the bottom pin and tilt the top of radiator to reach cooling fan screws.

Remove and discard screws securing cooling fan to radiator.

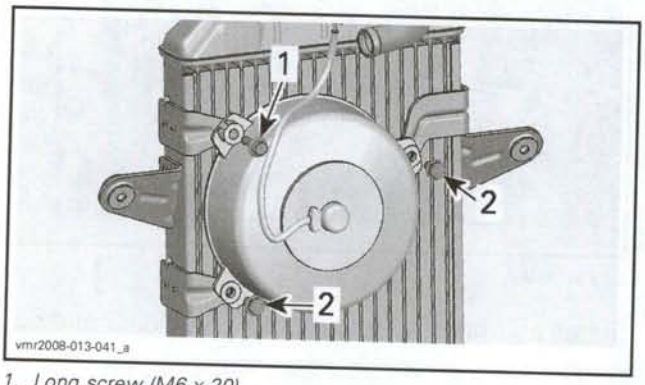

1. Long screw (M6 x 20)
2. Short screws (M6 x 12)

Cooling Fan Installation

For the installation, reverse the removal procedure.

CAUTION: To avoid damaging radiator fins when tightening screws, position the long screw in the LH upper hole.

THERMOSTAT

The thermostat is a single action type.

Thermostat Removal

The thermostat is located on the LH side of engine inside a plastic housing.

Partially drain coolant until approximately 1 L (1 quart) flowed out. Refer to *COOLANT REPLACEMENT.*

Cut Oetiker clamps.

Pull out thermostat housing. Catch spilled coolant.

Thermostat Test

To check thermostat, put housing in water and heat water. Thermostat should begin to open when water temperature reaches 75°C (167°F).

If the thermostat is defective, always replace it with a **NEW** one.

⚠ WARNING

When the thermostat housing is opened, its watertightness is greatly affected under pressure and a leak can cause severe burns.

Thermostat Installation

For installation, reverse the removal procedure.

Install **NEW** clamps using Oetiker pliers.

Refill coolant tank.

COOLANT TEMPERATURE SENSOR (CTS)

The coolant temperature sensor is located on the cylinder head, spark plug side.

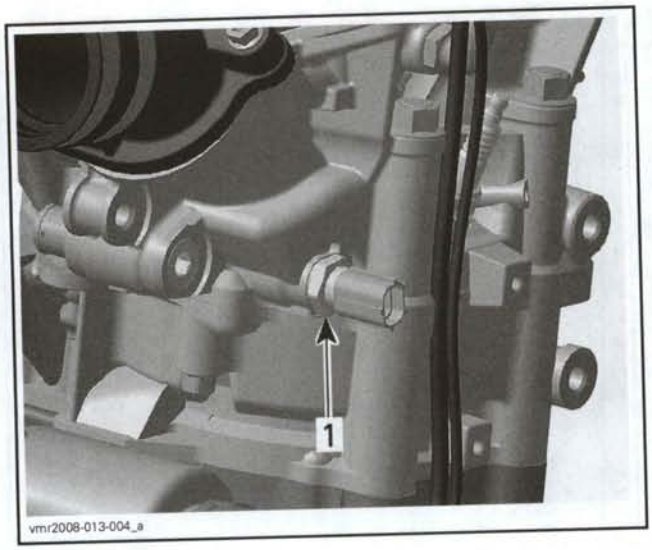

1. Coolant temperature sensor

Refer to *ELECTRONIC FUEL INJECTION* section for testing and replacement procedures of the coolant temperature sensor (CTS).

WATER PUMP HOUSING

The water pump housing is located on the engine, clutch side.

Water Pump Housing Removal

⚠ WARNING

To avoid potential burns, do not remove the coolant tank cap or loosen the cooling drain plug if the engine is hot.

Drain cooling system. Refer to *COOLANT REPLACEMENT* in this section.

Remove radiator outlet hose from water pump housing.

Remove screws retaining water pump housing.

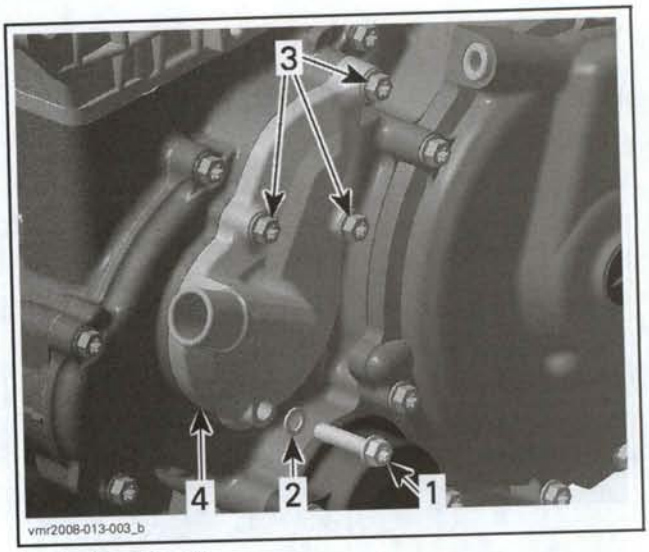

1. Cooling drain plug
2. Sealing ring
3. Screws
4. Water pump cover

Water Pump Housing Inspection

Check if gasket is brittle, hard or damaged and replace as necessary.

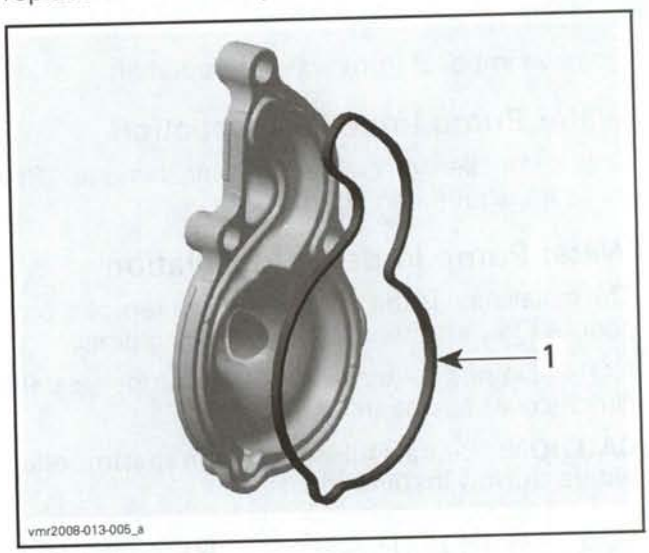

1. Gasket

Water Pump Housing Installation

The installation is the opposite of the removal procedure.

CAUTION: To prevent leaking, take care that the gasket is exactly in groove when you reinstall the water pump housing.

Tighten screws of water pump housing in a criss-crossed sequence.

WATER PUMP IMPELLER

Water Pump Impeller Removal

Remove water pump housing.

Use a proper punch to remove spring pin.

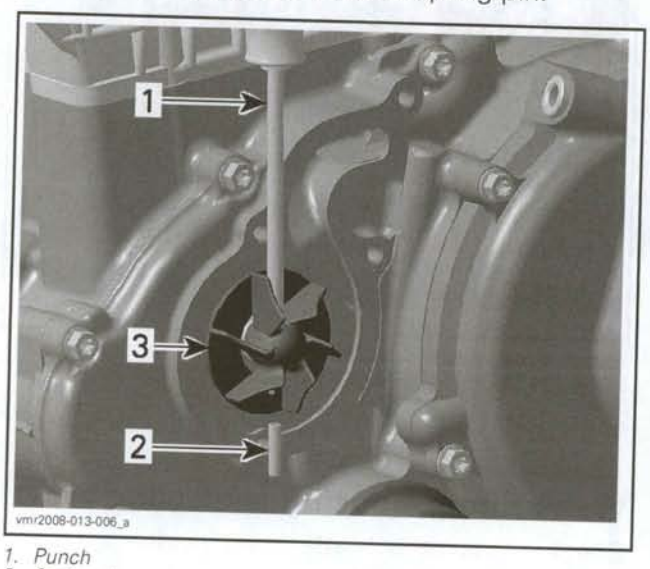

1. *Punch*
2. *Spring pin*
3. *Impeller*

Remove impeller from water pump shaft.

Water Pump Impeller Inspection

Check impeller for cracks or other damage. Replace impeller if damaged.

Water Pump Impeller Installation

The installation is the opposite of the removal procedure. Pay attention to the following detail.

NOTE: Do not drive spring pin into impeller until clutch cover has been installed.

CAUTION: Be careful not to damage impeller wings during installation.

WATER PUMP SHAFT, BEARING AND SEALS

Water Pump Shaft Removal

Drain engine oil. Refer to *LUBRICATION SYSTEM* section.

Drain cooling system. Refer to *COOLANT REPLACEMENT* in this section.

Remove water pump cover and impeller.

Remove clutch cover retaining screws and pull clutch cover.

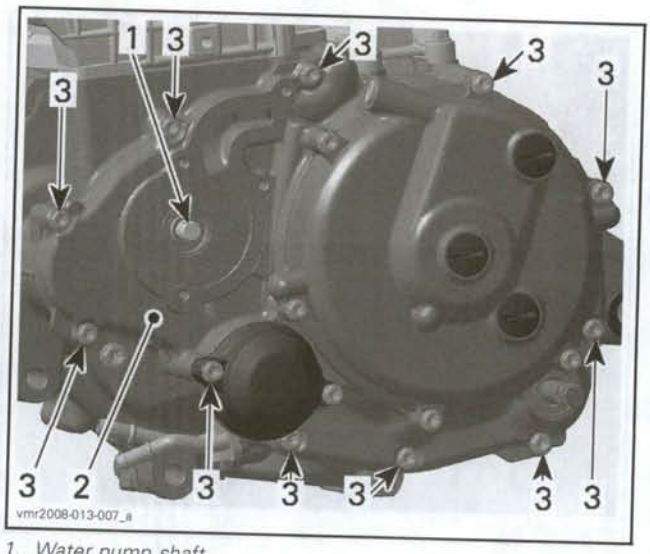

1. *Water pump shaft*
2. *Clutch cover*
3. *Clutch cover retaining screws*

CAUTION: When removing the clutch cover take care not to loose the thrust washers on the water pump shaft and shift shaft.

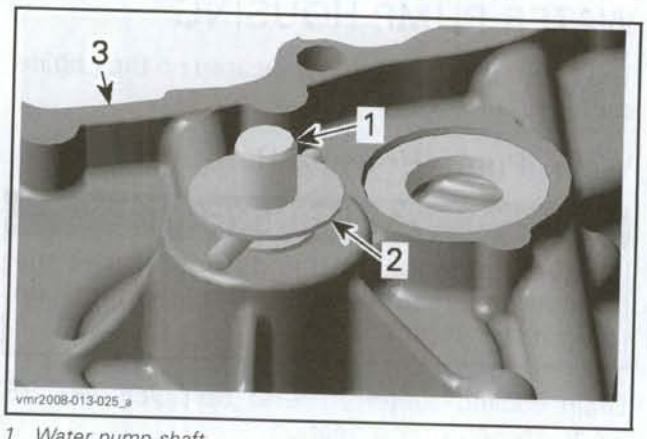

1. *Water pump shaft*
2. *Thrust washer*
3. *Clutch cover*

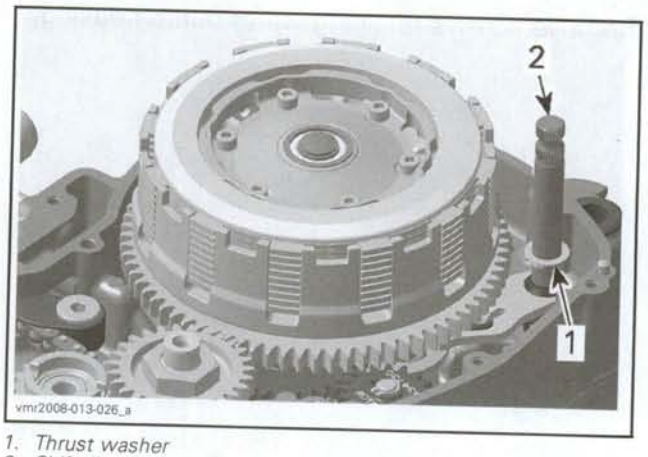

1. *Thrust washer*
2. *Shift shaft*

Pull water pump shaft and distance sleeve from inside out.

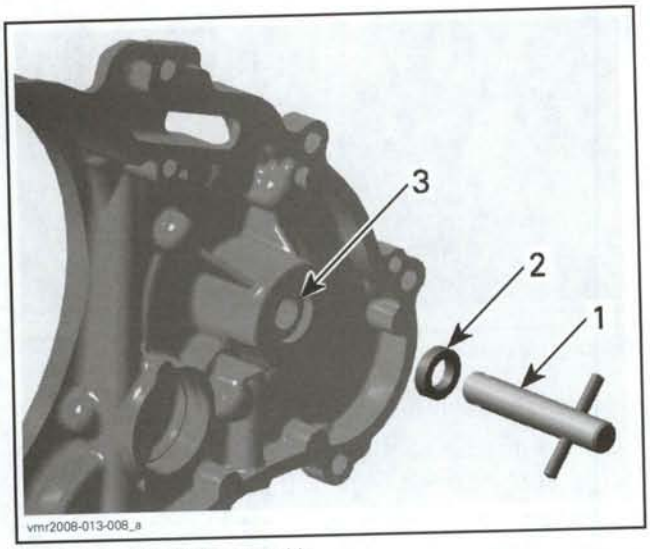

1. *Water pump shaft assembly*
2. *Distance sleeve*
3. *Ball bearing*

Water Pump Shaft Inspection

Inspect water pump shaft and pin for wear and damage. Replace if damaged.

NOTE: When replacing water pump shaft, always replace together with oil seals.

Water Pump Bearing Inspection

Check if bearing turns freely and smoothly.

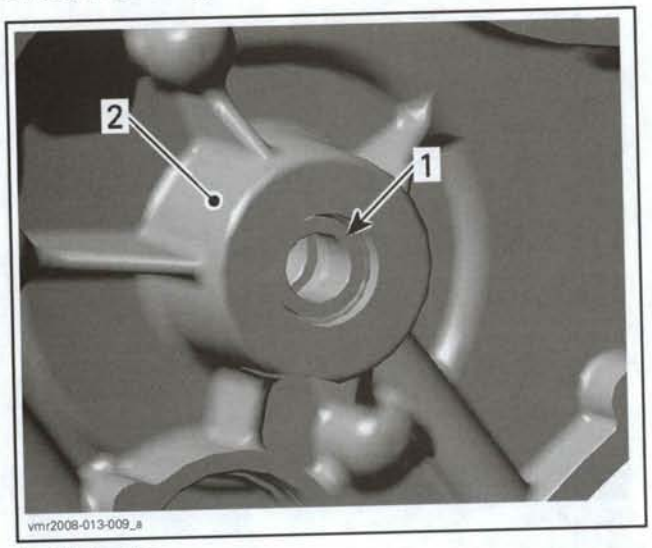

1. *Ball bearing*
2. *Clutch cover*

Water Pump Bearing and Seals Removal

To remove bearing and seals, push them out of clutch cover using a 10 mm socket.

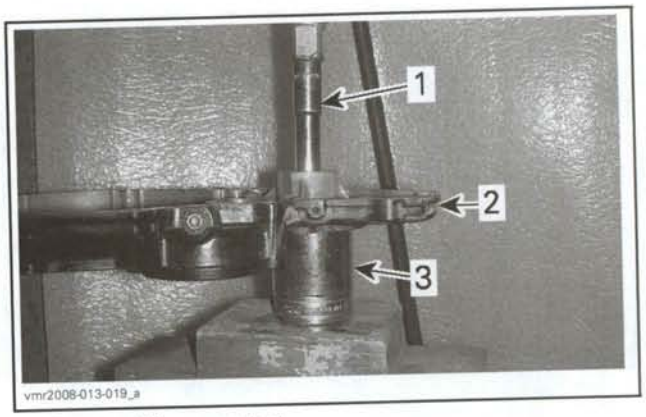

1. *Extractor (10 mm socket)*
2. *Clutch cover*
3. *Support (36 mm socket)*

Check if leak indicator orifice in clutch cover is free. If necessary use a parts cleaner, then use an air gun to dry it.

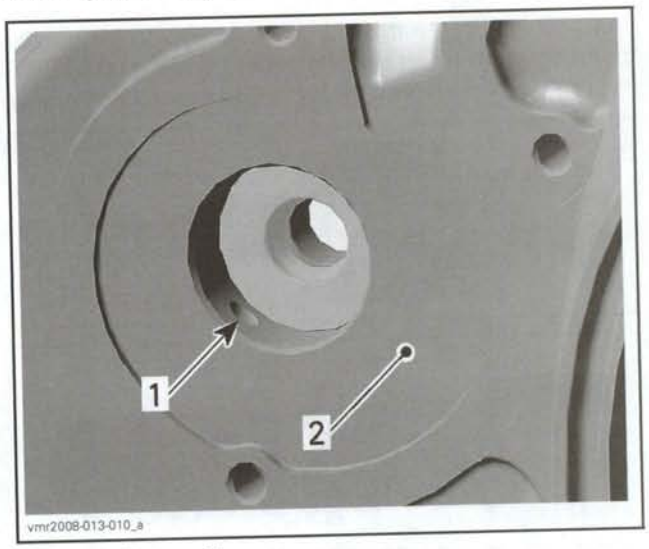

1. *Leak indicator orifice*
2. *Clutch cover*

Water Pump Bearing Installation

Use a press and the bearing installer (P/N 529 036 078) for installing ball bearing.

NOTE: Never use a hammer to install ball bearing, use press machine only to avoid damaging the press fit area of the oil seals.

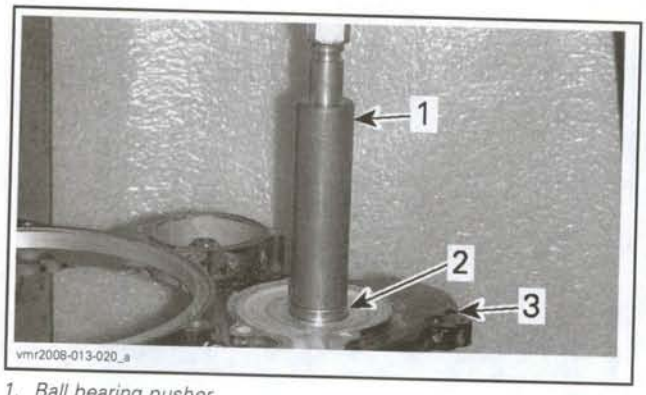

1. *Ball bearing pusher*
2. *Ball bearing*
3. *Clutch cover*

Water Pump Inner Seal Installation

NOTE: Never use oil in the press fit area of the oil seals.

Install inner oil seal, sealing lip facing towards the bearing, with the oil seal pusher (P/N 529 035 757) and the handle (P/N 420 877 650) firmly into place.

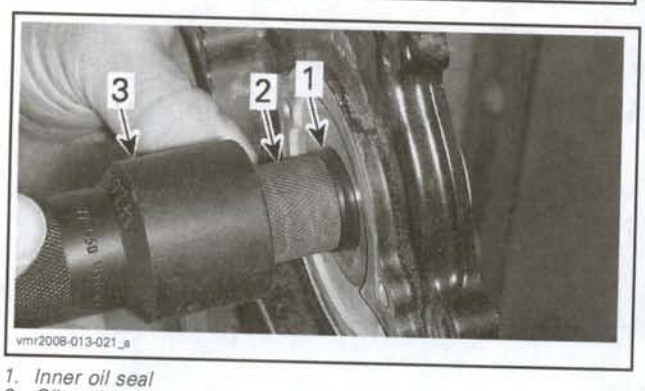

1. *Inner oil seal*
2. *Oil seal pusher*
3. *Handle*

Water Pump Outer Seal Installation

Apply Loctite 243 (blue) (P/N 293 800 060) on the outer diameter of oil seal.

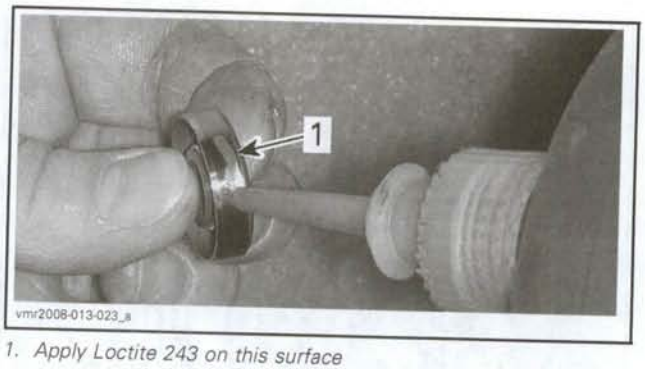

1. *Apply Loctite 243 on this surface*

Use press machine only to install outer oil seal.

Install outer oil seal with a press and the water pump seal installer (P/N 529 036 077).

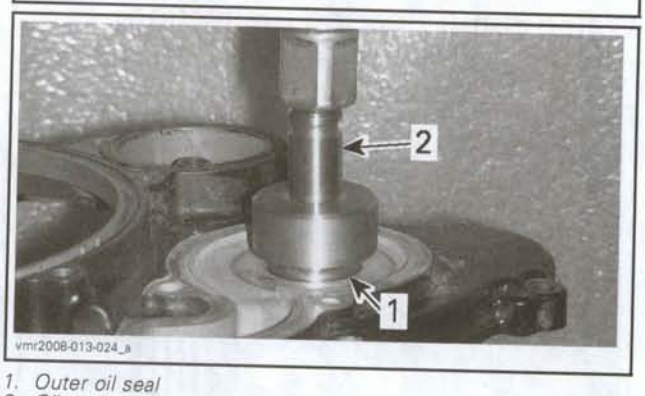

1. *Outer oil seal*
2. *Oil seal pusher*

Fill cavity between oil seals with Dow Corning 111 (P/N 413 707 000).

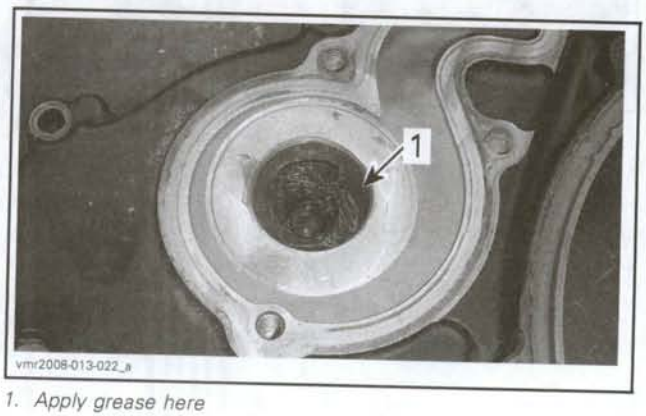

1. *Apply grease here*

Water Pump Shaft Installation

Apply engine oil on the water pump shaft and install water pump shaft together with distance sleeve into clutch cover.

NOTE: Do not drive spring pin into impeller until clutch cover has been installed.

Place thrust washer on water pump shaft and fit clutch cover on crankcase.

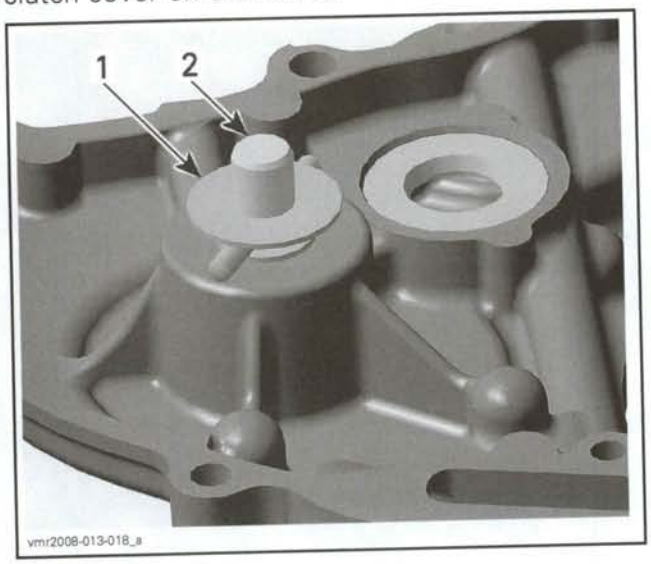

1. *Thrust washer*
2. *Water pump shaft*

Take care, that the pin in the water pump shaft engages in the slot of the intermediate gear.

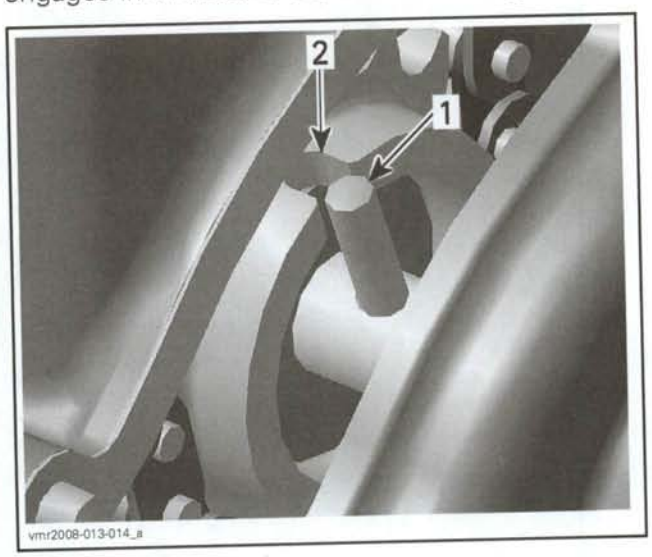

1. *Pin in water pump shaft*
2. *Slot in intermediate gear*

If a gap is visible between clutch cover and housing, do not force the cover. Remove it and recheck pin alignment.

MAGNETO/STARTER

SERVICE TOOLS

Description	Part Number	Page
magneto puller	529 035 748	76
Fluke 111 multimeter	529 035 868	80
magneto harness adapter	529 036 016	72
crankshaft locking tool	529 036 107	76

SERVICE PRODUCTS

Description	Part Number	Page
dielectric grease	293 550 004	83
Super Lube grease	293 550 030	82
Loctite 243 (blue)	293 800 060	75
Loctite 5910	293 800 081	70, 76
pulley flange cleaner	413 701 809	77
Bombardier gasket remover	413 708 500	70
Loctite 648 (green)	413 711 400	77, 79

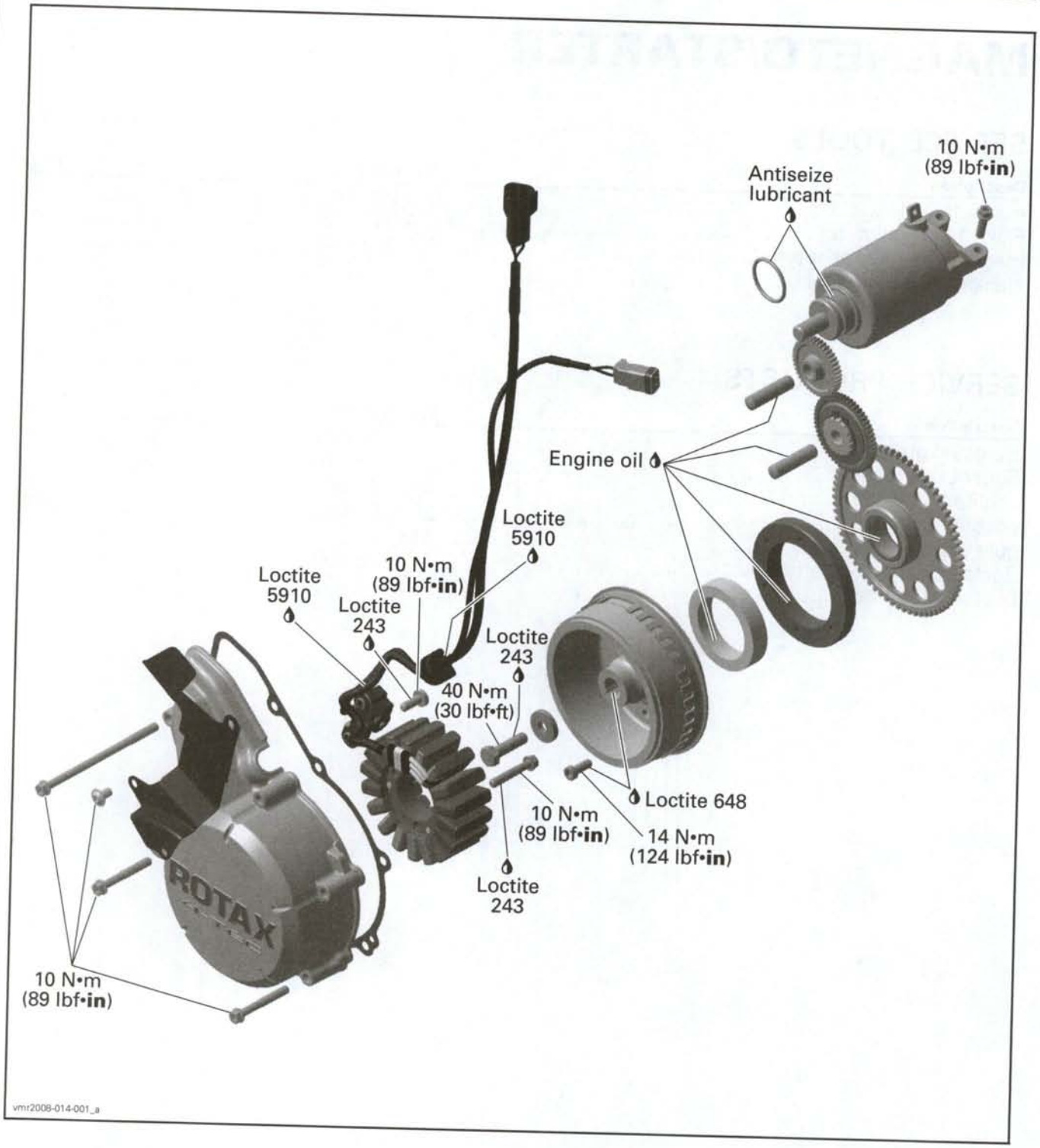
10 N•m
(89 lbf•in)
Antiseize
lubricant
Engine oil
Loctite
5910
10 N•m
(89 lbf•in)
Loctite
5910
Loctite
243
Loctite
243
40 N•m
(30 lbf•ft)
Loctite 648
10 N•m
(89 lbf•in)
14 N•m
(124 lbf•in)
Loctite
243
10 N•m
(89 lbf•in)
ROTAX
vmr2008-014-001_a

GENERAL

⚠ WARNING

Always disconnect BLACK (-) cable first and reconnect last.

The engine removal is not necessary to work on the magneto system.

During assembly/installation, use the torque values and service products as in the exploded views.

Clean threads before applying a threadlocker. Refer to *SELF-LOCKING FASTENERS AND LOCTITE APPLICATION* at the beginning of this manual for complete procedure.

⚠ WARNING

Torque wrench tightening specifications must strictly be adhered to.
Locking devices (ex: locking tabs, elastic stop nuts, self-locking fasteners, cotter pin, etc.) must be installed or replaced with new ones where specified. If the efficiency of a locking device is impaired, it must be renewed.

PROCEDURES

MAGNETO COVER

Magneto Cover Removal

Remove seat. Refer to *BODY*.

Disconnect stator connector.

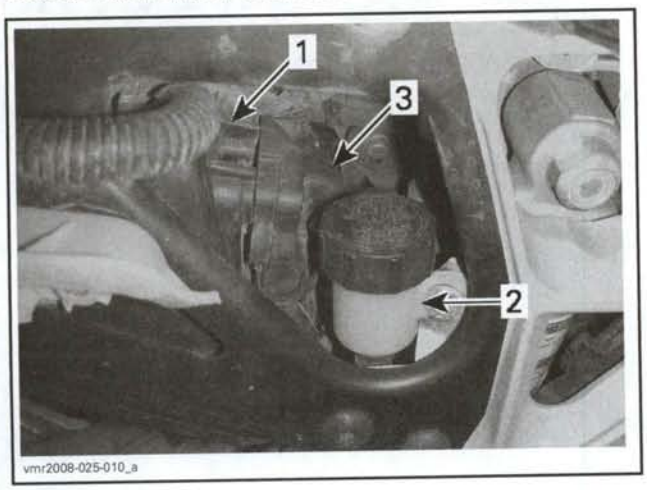

RIGHT SIDE VIEW
1. *Air inlet silencer*
2. *Brake fluid reservoir*
3. *Stator connector*

Disconnect CPS connector.

RH SIDE OF VEHICLE

Safely lift RH side to tilt vehicle as much as possible. This will minimize oil loss.

Remove protection shield screws.

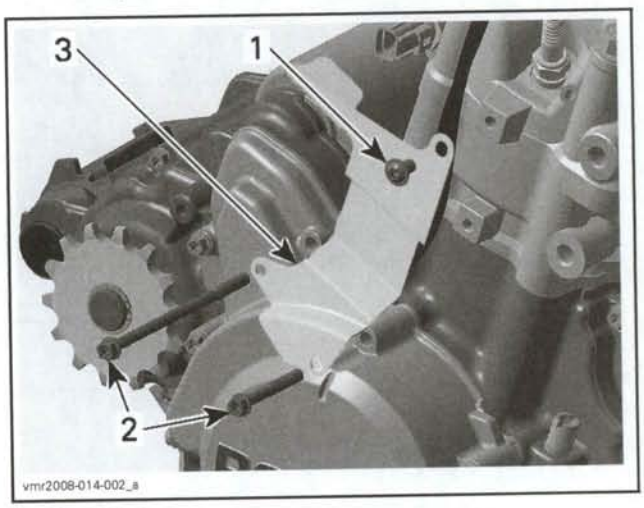

1. *Top screw*
2. *Bottom screws*
3. *Protection shield*

Slide out shield towards bottom as shown.

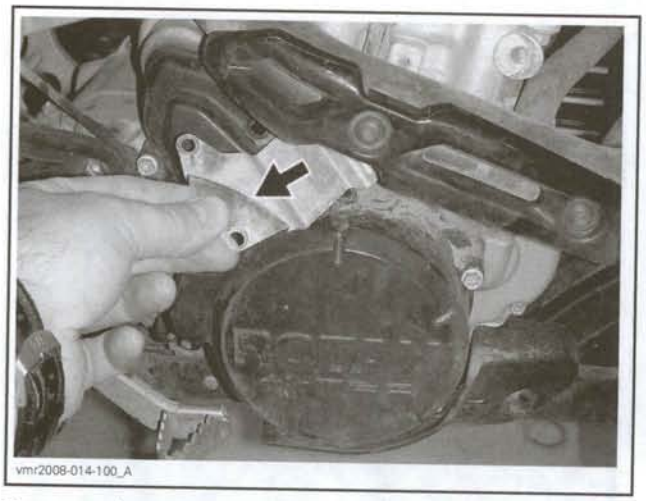
vmr2008-014-100_A

Remove bottom protector.

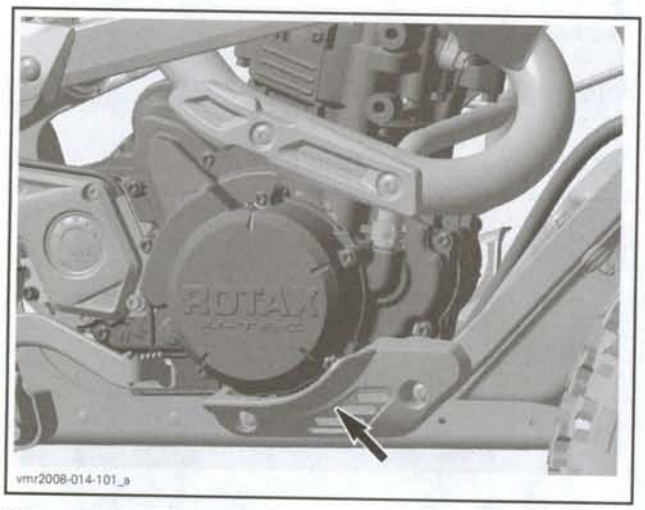

vmr2008-014-101_a

Clean magneto cover area.

Place an oil pan under magneto area to catch oil spillage.

Remove magneto cover.

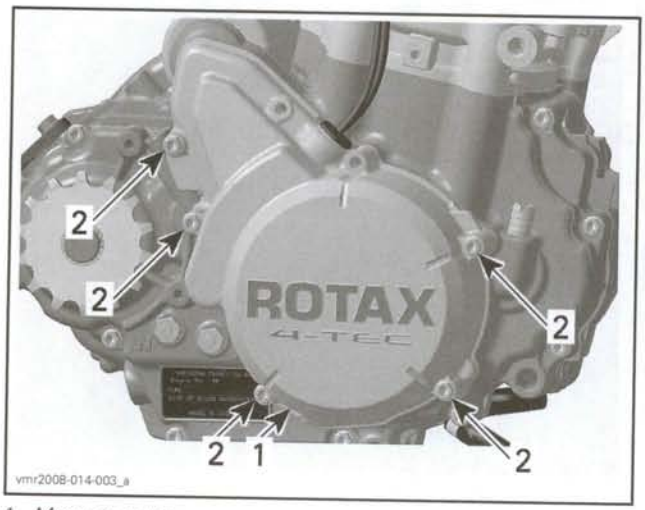

vmr2008-014-003_a

1. *Magneto cover*
2. *Retaining screws*

Pull off magneto cover.

Magneto Cover Inspection

Check magneto cover for cracks or other damage. Replace if necessary.

Clean all metal component in a non-ferrous metal cleaner. Use Bombardier gasket remover (P/N 413 708 500), or suitable equivalent.

⚠ WARNING

Wear safety glasses and work in a well ventilated area when working with strong chemical products. Also wear suitable non-absorbent gloves to protect your hands.

Magneto Cover Installation

For installation, reverse the removal procedure. However, pay attention to the following.

Ensure dowel pins are in place.

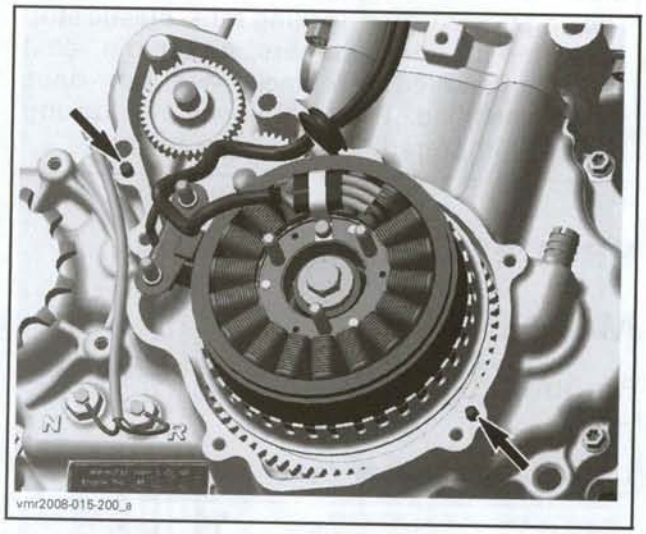
vmr2008-015-200_a

Replace magneto cover gasket.

Apply Loctite 5910 (P/N 293 800 081) on stator cable grommet.

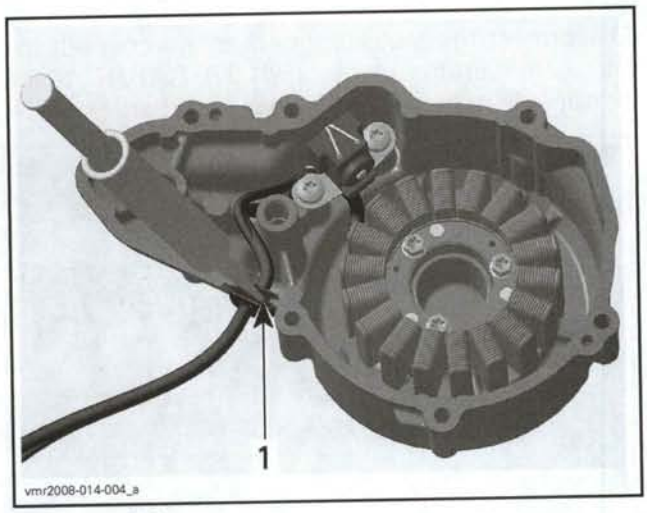

1. Loctite 5910

Follow the shown tightening sequence for the magneto cover screws.

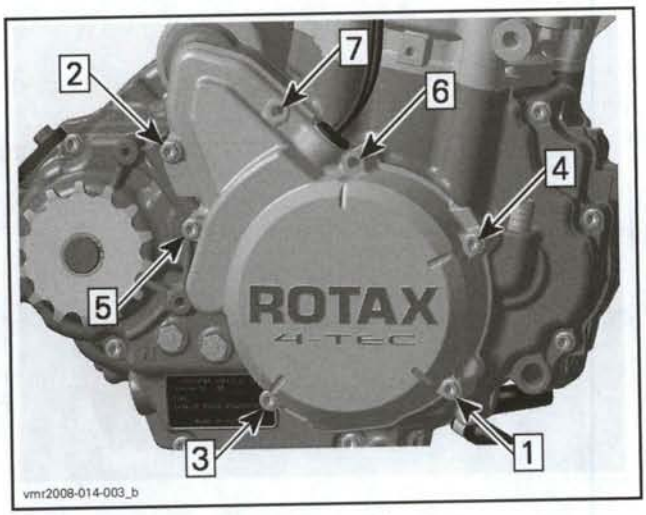

Top up engine with engine oil.

CRANKSHAFT POSITION SENSOR (CPS)

⚠ WARNING

Never unplug CPS connector while engine is running.

CPS Test

Refer to *ELECTRONIC FUEL INJECTION.*

CPS Replacement

CPS is replaced with the stator. Refer to *STATOR* for the procedure.

STATOR

Stator Continuity Test

Test at Voltage Regulator/Rectifier Connector

Disconnect the voltage regulator connector.

1. Disconnect voltage regulator/rectifier

Set multimeter to Ω.

Connect multimeter between each pair of YELLOW wires.

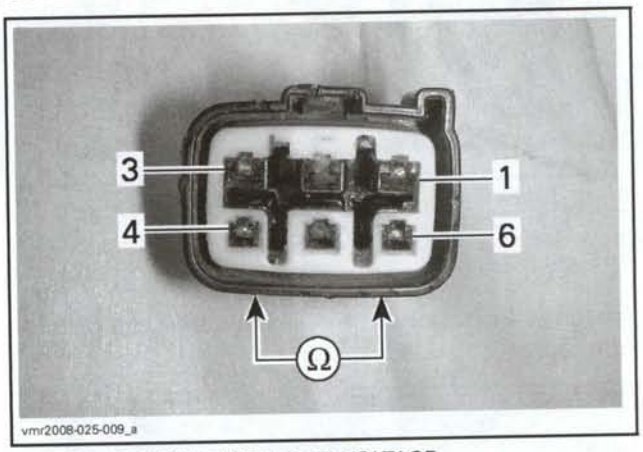

STATOR CONTINUITY TEST AT VOLTAGE REGULATOR/RECTIFIER CONNECTOR

Read resistance as per following table.

STATOR CONTINUITY TEST AT VOLTAGE REGULATOR/RECTIFIER	
YELLOW WIRES (EACH PAIR)	RESISTANCE @ 20°C (69°F)
Pins 4 and 5	0.1 - 1 Ω
Pins 4 and 6	
Pins 5 and 6	

If a reading is out of specification, repeat test at stator connector.

Test at Stator Connector

Locate the stator connector ahead of the air inlet silencer, and to the left of the brake fluid reservoir.

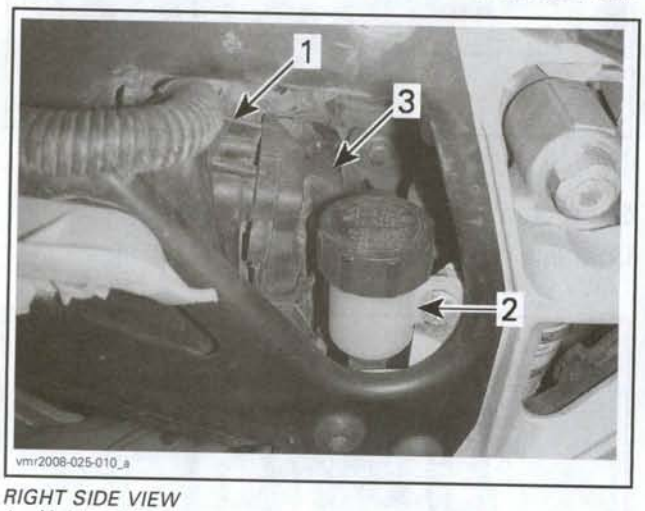

RIGHT SIDE VIEW
1. *Air inlet silencer*
2. *Brake fluid reservoir*
3. *Stator connector*

Reach in from behind the vehicle and remove the connector from its support.

STATOR CONNECTOR

Disconnect the stator connector and connect the magneto harness adapter (P/N 529 036 016) to the stator side only, not to the rear main harness side.

1. *Adapter connected to stator harness only*
2. *Rear main harness not connected to adapter*

Measure the resistance between each pair of wires.

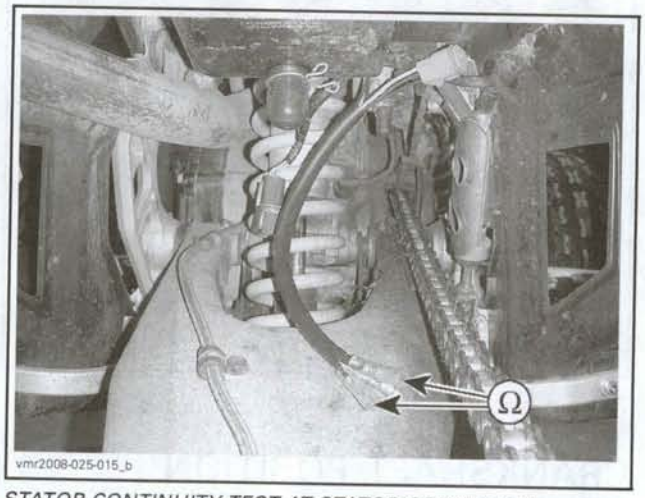

STATOR CONTINUITY TEST AT STATOR CONNECTOR

STATOR CONTINUITY TEST AT STATOR CONNECTOR	
TEST PROBES	RESISTANCE @ 20°C (69°F)
YELLOW and BLACK/YELLOW wires	0.1 - 1 Ω
YELLOW and BLACK wires	
BLACK and BLACK/YELLOW wires	

If a resistance reading is not as specified, replace the stator.

If resistance readings are good at the stator connector but not at the voltage regulator/rectifier connector, repair or replace the rear main harness wiring as required.

Stator Insulation Test

Test at Voltage Regulator/Rectifier Connector

Disconnect the voltage regulator/rectifier connector.

1. Disconnect voltage regulator/rectifier connector

Set multimeter to Ω.

Connect multimeter between any YELLOW wire and chassis ground.

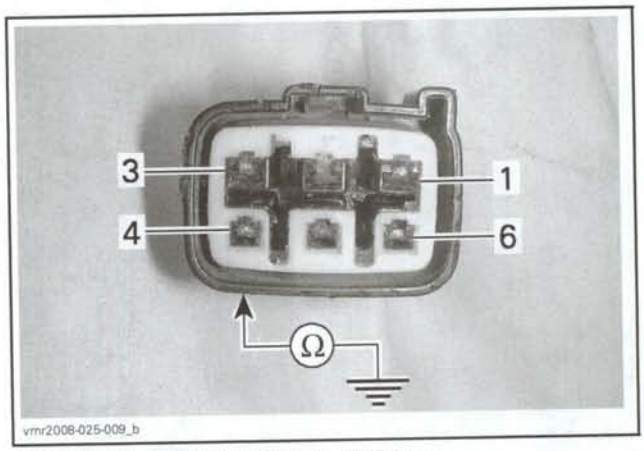

STATOR INSULATION TEST AT VOLTAGE REGULATOR/RECTIFIER CONNECTOR

Read resistance.

STATOR INSULATION TEST AT VOLTAGE REGULATOR/RECTIFIER	
PROBE POSITIONS	RESISTANCE @ 20°C (69°F)
Any YELLOW wire and chassis ground	Infinity (open circuit)

If there is a resistance or continuity, repeat test at stator connector.

Test at Stator Connector

Disconnect the stator connector and install the three pin stator harness adaptor as in the previous stator continuity test.

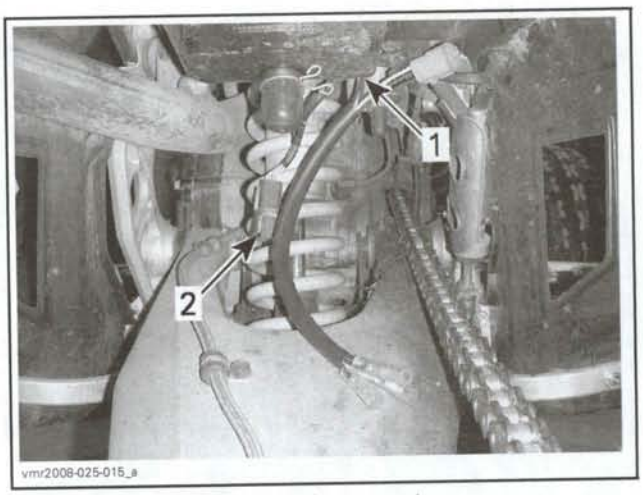

1. Adapter connected to stator harness only
2. Rear main harness not connected to adapter

Repeat stator insulation test measuring the resistance between each adaptor wire and ground.

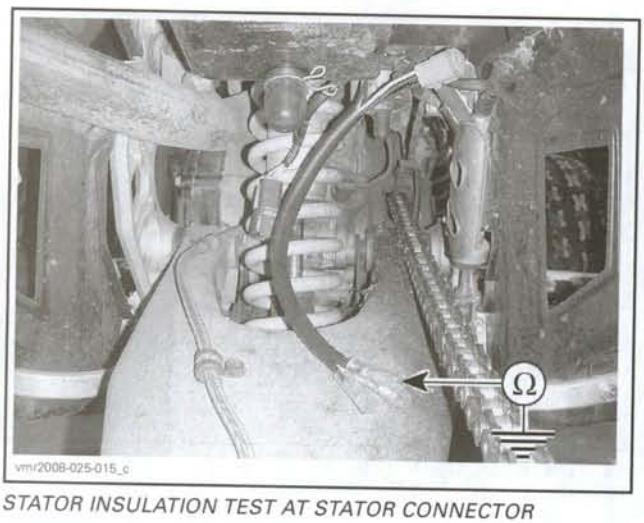

STATOR INSULATION TEST AT STATOR CONNECTOR

STATOR INSULATION TEST AT STATOR CONNECTOR		
PROBE POSITIONS		RESISTANCE @ 20°C (69°F)
YELLOW wire	Chassis ground	Infinity (open circuit)
BLACK/YELLOW wire		
BLACK wire		

If resistance readings are as specified, repair or replace connector or wiring between the stator connector and the voltage regulator connector.

If a resistance reading is not as specified, the stator or the wiring is shorted to ground and needs to be repaired or replaced.

Reinstall removed connectors.

Stator Output Voltage Test

Test at Voltage Regulator/Rectifier Connector

Disconnect the voltage regulator connector.

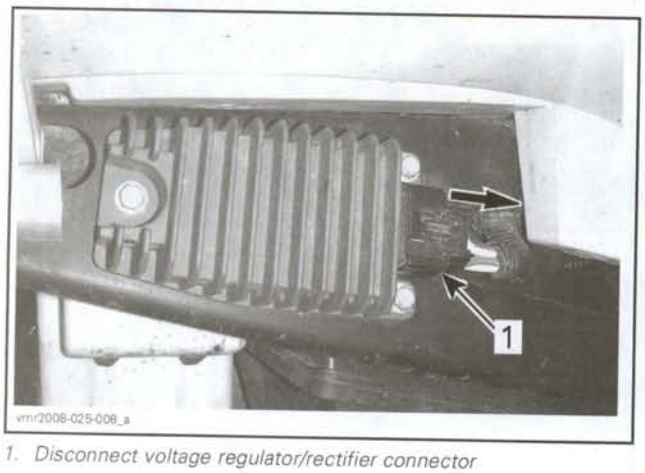

1. *Disconnect voltage regulator/rectifier connector*

Set multimeter to Vac scale.

Start engine.

Connect multimeter between each pair of YELLOW wires.

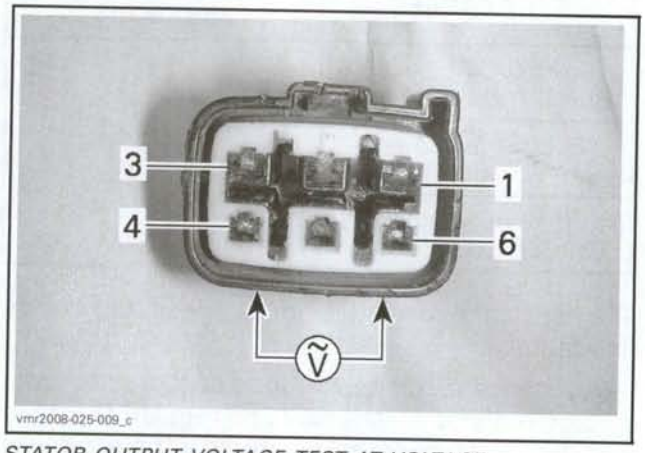

STATOR OUTPUT VOLTAGE TEST AT VOLTAGE REGULATOR/RECTIFIER CONNECTOR

Read voltage.

STATOR OUTPUT VOLTAGE TEST AT VOLTAGE REGULATOR/RECTIFIER		
TEST ENGINE SPEED	TERMINAL	VOLTAGE
4000 RPM	4 and 5	50 Vac minimum
	4 and 6	
	5 and 6	

If voltage is lower than specification, repeat test at stator connector.

Test at Stator Connector

Disconnect the stator connector.

Install the three pin stator harness adaptor connecting only to the stator harness side. Do not connect to the main rear harness side.

1. *Adapter connected to stator harness only*
2. *Rear main harness not connected to adapter*

Start engine.

Repeat the stator output voltage test measuring the AC voltage between each pair of wires.

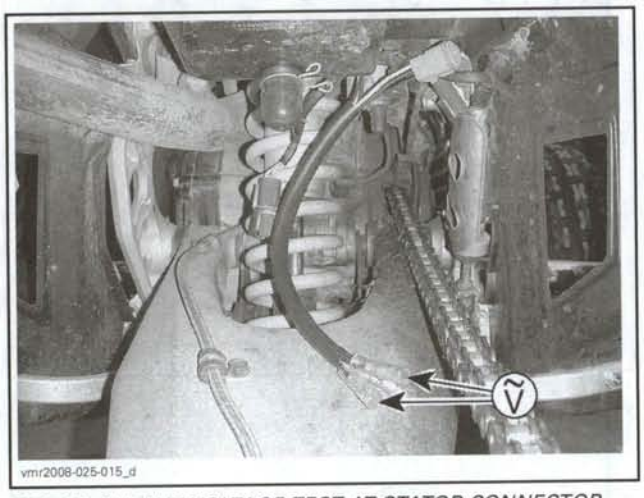

STATOR OUTPUT VOLTAGE TEST AT STATOR CONNECTOR

STATOR OUTPUT VOLTAGE TEST AT STATOR CONNECTOR		
TEST ENGINE SPEED	TEST PROBES	VOLTAGE
4000 RPM	YELLOW and BLACK/YELLOW wires	50 Vac minimum
	YELLOW and BLACK wires	
	BLACK and BLACK/YELLOW wires	

If voltage readings are as specified, repair or replace connector or wiring between stator connector and the voltage regulator connector.

If voltage readings are not as specified, repair or replace wiring, connector, or stator as required.

Install removed connectors.

Stator Removal

Remove the magneto cover. Refer to *MAGNETO COVER* above.

Remove gasket.

Remove retaining screws of stator.

Pull out stator and CPS.

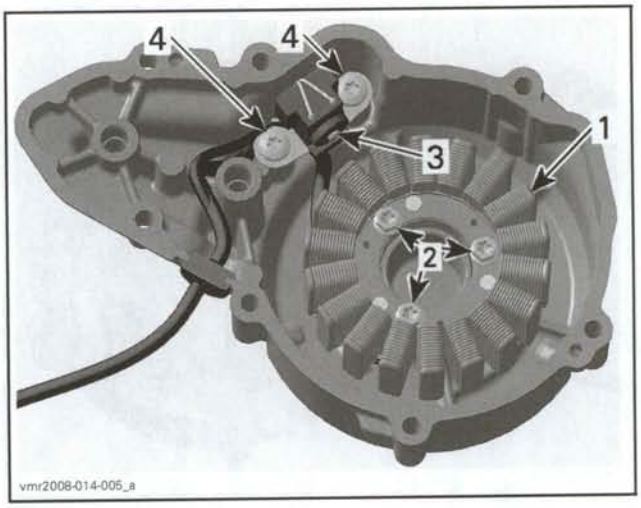

1. *Stator*
2. *Stator retaining screws*
3. *CPS*
4. *CPS retaining screws*

Stator Inspection

Check stator and CPS condition. If damaged replace it.

Check if stator and CPS wires are brittle, hard or otherwise damaged.

Stator Installation

For installation, reverse the removal procedure. Pay attention to the following details.

Align stator with the notch in magneto cover.

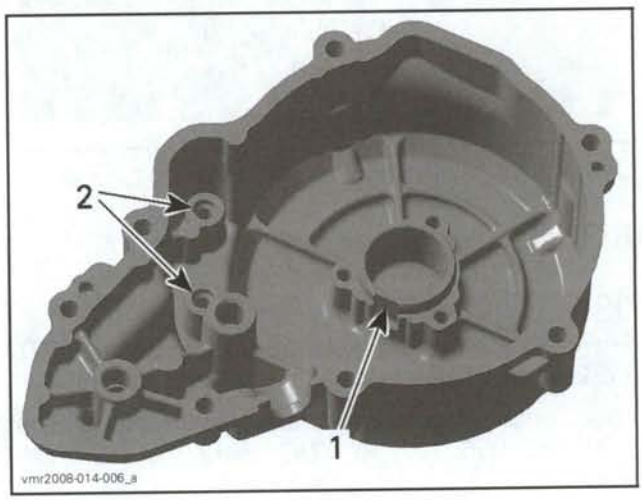

1. *Notch for stator*
2. *Threads for CPS*

Apply Loctite 243 (blue) (P/N 293 800 060) on screw threads then secure CPS.

CAUTION: When installing the CPS, position the stator wiring harness as shown.

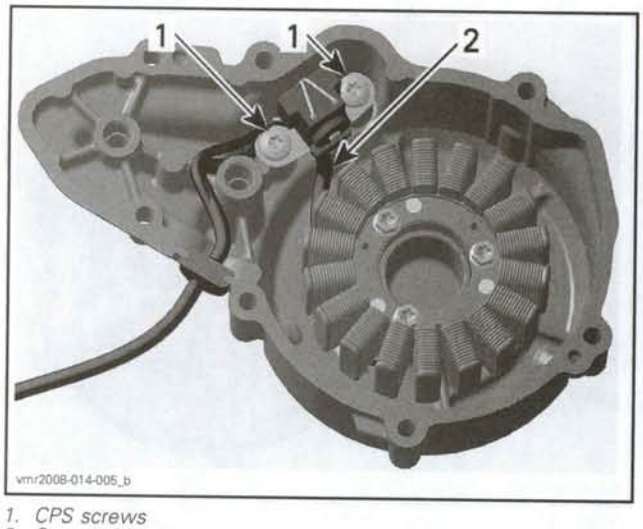

1. *CPS screws*
2. *Stator wiring harness*

Apply Loctite 5910 (P/N 293 800 081) between CPS and magneto cover as shown.

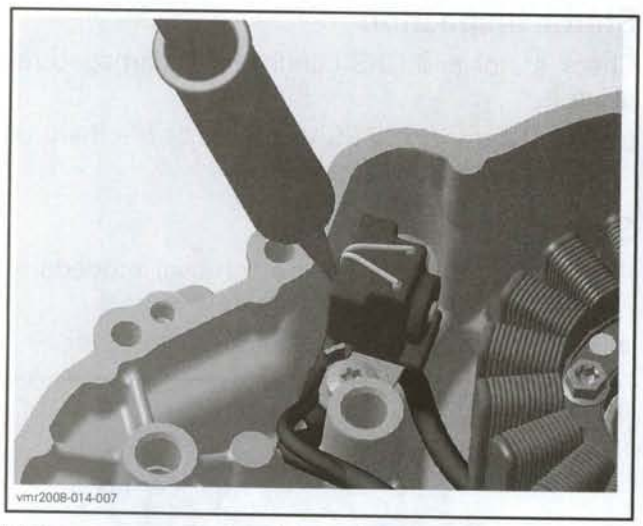

Use a new gasket and install magneto cover.

ROTOR

Rotor Removal

Remove magneto cover. Refer to *MAGNETO COVER* above.

Lock crankshaft with crankshaft locking tool (P/N 529 036 107) at TDC. Refer to *BOTTOM END.*

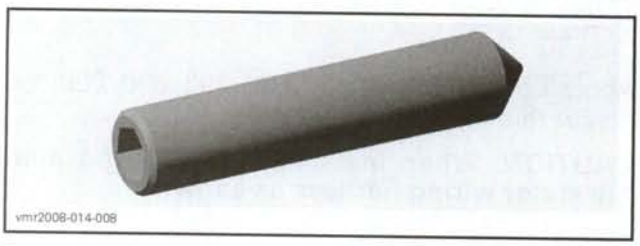

Remove rotor retaining screw.

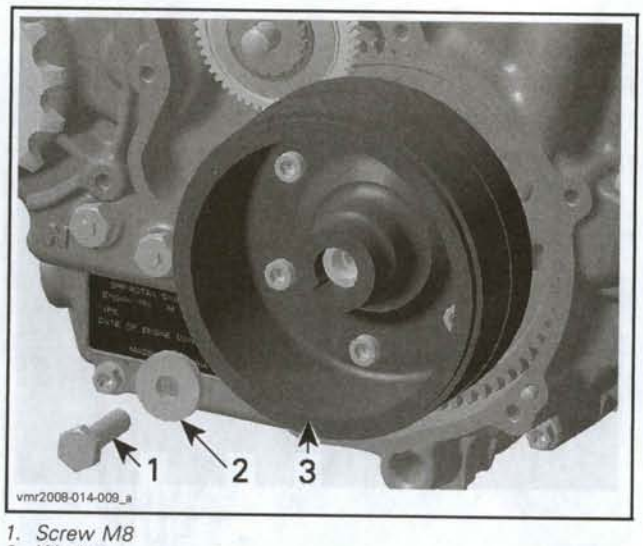

1. *Screw M8*
2. *Washer*
3. *Rotor*

Use the screw from the magneto puller (P/N 529 035 748).

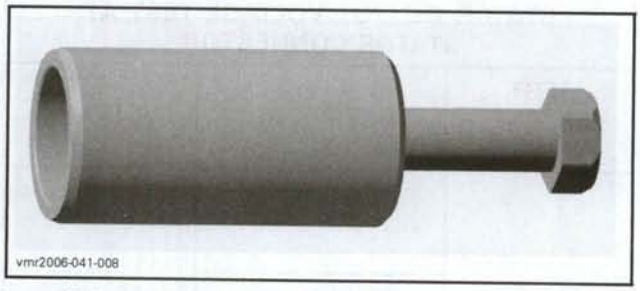

Install the puller screw in rotor.

NOTE: Apply grease on screw threads and screw tip to prevent damage to the threads during removal.

Tighten puller screw to remove rotor.

The rotor is mounted with Loctite 648 and will be stuck on the crankshaft. Proceed as follows to release rotor.

- Use a heat gun and heat rotor.
- Tighten puller screw. Do not overtighten to avoid damaging threads.
- Tap the head of puller screw with a hammer. Rotor should pop out.
- Continue tightening puller screw to remove rotor.

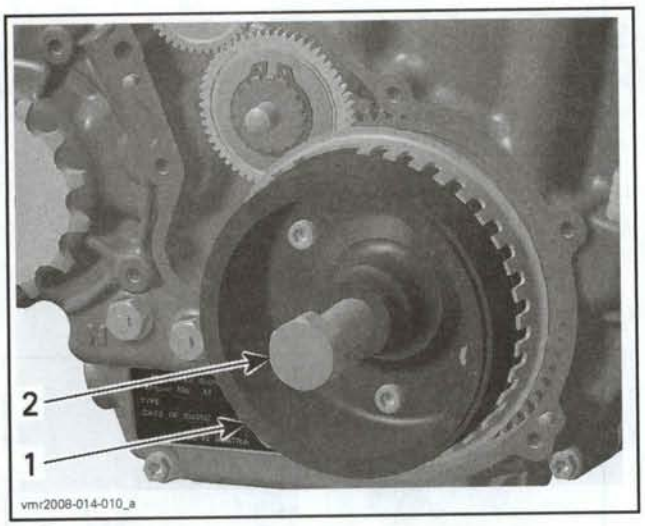

1. Rotor
2. Screw of magneto puller (P/N 529 035 748)

Rotor Inspection

Check inner side of rotor for scratches or other damage.

Check woodruff key and keyway for wear or damages.

Check if trigger wheel teeth are bent or otherwise damaged.

Measure trigger wheel teeth diameter at different locations. Maximum allowed diameter is 114.5 mm (4.51 in). Otherwise, check for bent teeth.

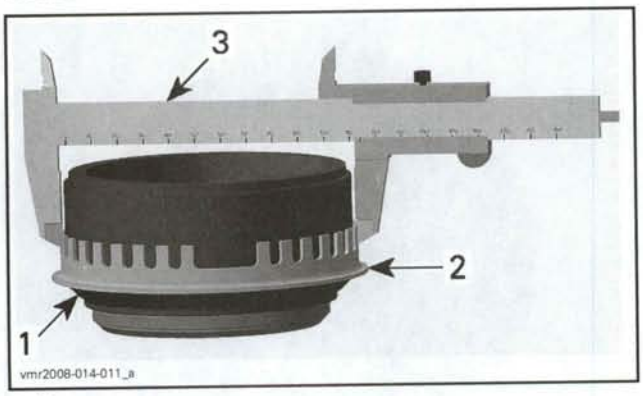

1. Rotor
2. Trigger wheel
3. Maximum 114.5 mm (4.51 in)

Replace parts as necessary.

Rotor Installation

For installation, reverse the removal procedure. Pay attention to the following details.

Clean crankshaft taper and rotor with pulley flange cleaner (P/N 413 701 809).

CAUTION: Taper on crankshaft and rotor must be free of grease.

Apply a light coat of Loctite 648 (green) (P/N 413 711 400) to taper on rotor.

Apply engine oil on sprag clutch and sprag clutch gear needle bearing.

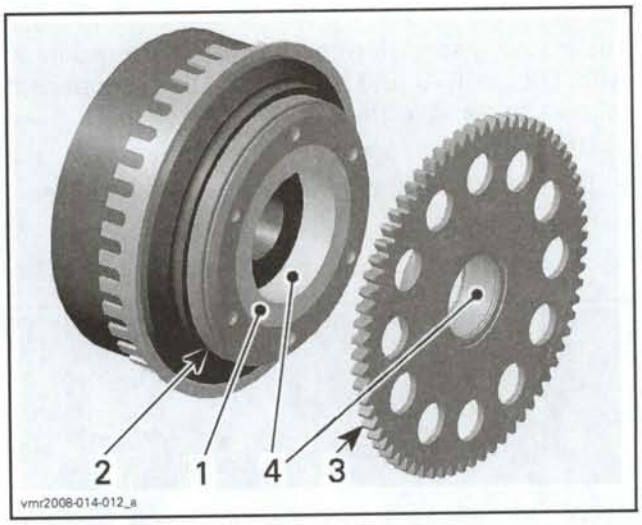

1. Sprag clutch
2. Sprag clutch housing
3. Sprag clutch gear
4. Apply engine oil here

Slide rotor onto crankshaft. The woodruff key and groove must be aligned.

Rotate friction clutch clockwise to enable the sprag clutch to slide on the bushing of sprag clutch gear.

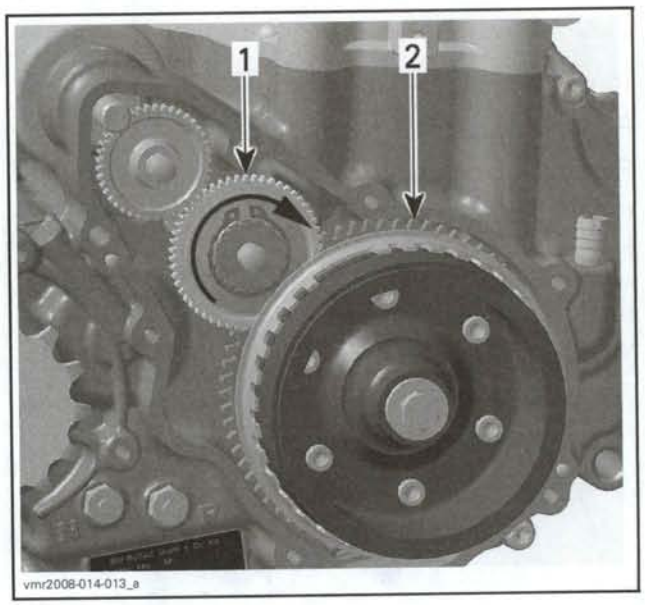

1. Friction clutch
2. Sprag clutch gear

SPRAG CLUTCH

Sprag Clutch Removal

Remove magneto cover (refer to *MAGNETO COVER* above).

The housing screws of sprag clutch are mounted with Loctite 648 and will be stuck. Proceed as follows to remove them.

- Use a heat gun and heat screw heads.
- Tap the head of screw heads with a hammer.
- Remove screws.

Loosen and remove sprag clutch housing screws.

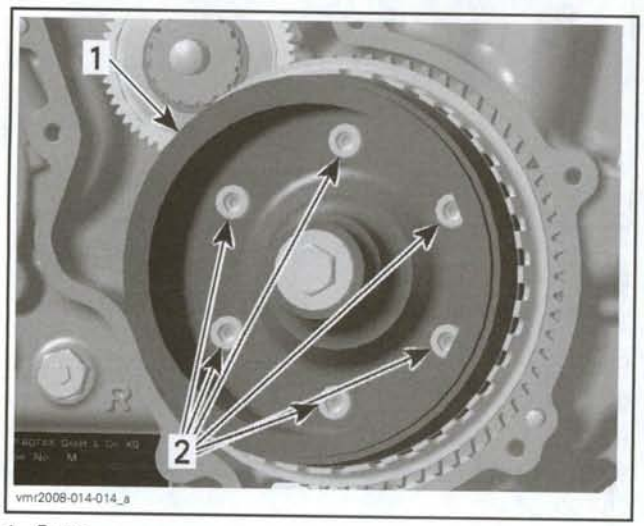

1. *Rotor*
2. *Sprag clutch housing screws*

Remove rotor, refer to *ROTOR* above.

Remove sprag clutch housing.

Remove sprag clutch from sprag clutch housing.

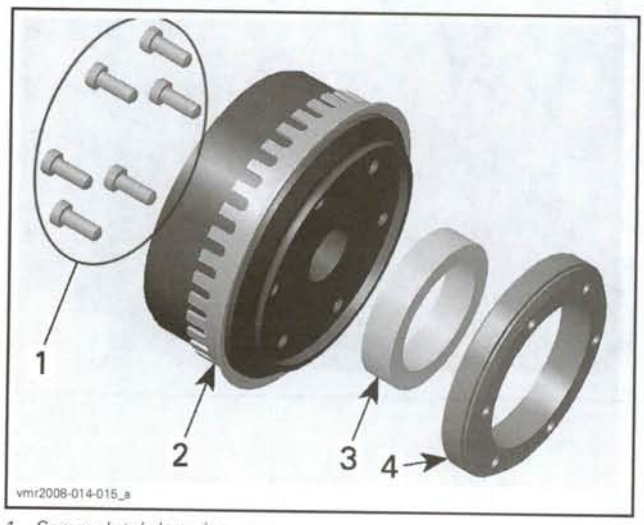

1. *Sprag clutch housing screws*
2. *Rotor*
3. *Sprag clutch*
4. *Sprag clutch housing*

Sprag Clutch Inspection

Inspect sprag clutch and sprag clutch housing for wear and damage.

Check the bushing of the sprag clutch gear.

Perform a functional test of the sprag clutch as follows.

Hold sprag clutch and rotate gear clockwise.

Gear must rotate freely.

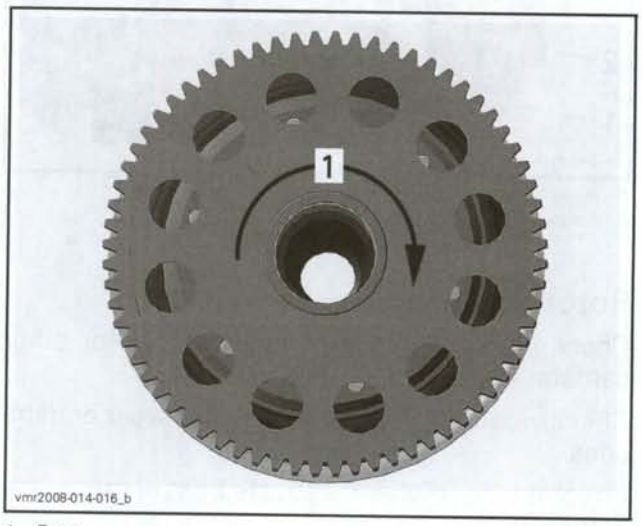

1. *Free*

Hold sprag clutch and rotate gear counterclockwise.

Gear clutch must lock.

1. *Lock*

Otherwise, replace sprag clutch and gear together.

Sprag Clutch Installation

For installation, reverse the removal procedure.

Apply Loctite 648 (green) (P/N 413 711 400) on threads of sprag clutch housing screws.

Loosely install screws.

Apply engine oil on sprag clutch and sprag clutch gear needle bearing.

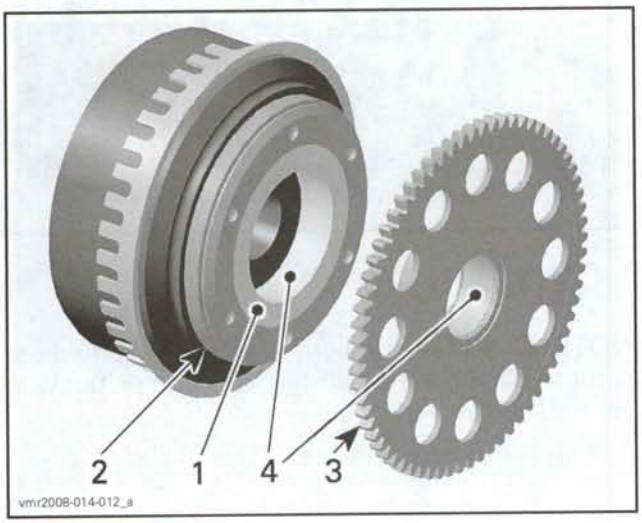

1. *Sprag clutch*
2. *Sprag clutch housing*
3. *Sprag clutch gear*
4. *Apply engine oil here*

SPRAG CLUTCH GEAR

Sprag Clutch Gear Removal

Remove rotor (refer to *ROTOR* above) and sprag clutch gear together with friction clutch.

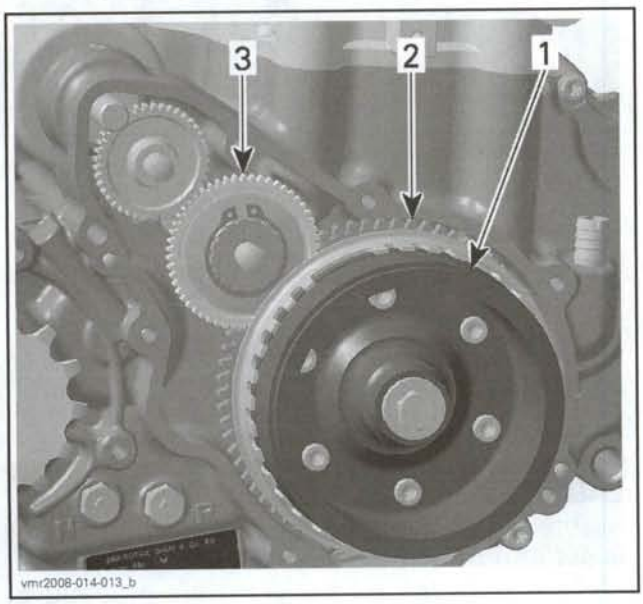

1. *Rotor*
2. *Sprag clutch gear*
3. *Friction clutch*

Pull sprag clutch gear from the rotor.

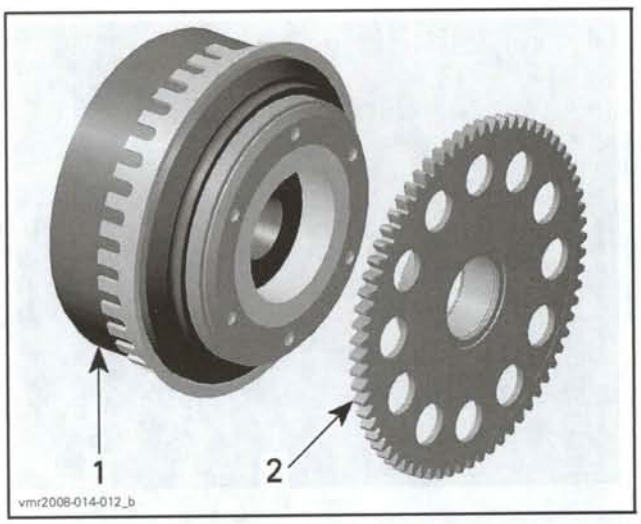

1. *Rotor*
2. *Sprag clutch gear*

Sprag Clutch Gear Inspection

Inspect gear, especially teeth and sprag clutch bushing for wear and other damage.

Check needle bearing condition. Replace sprag clutch gear if necessary.

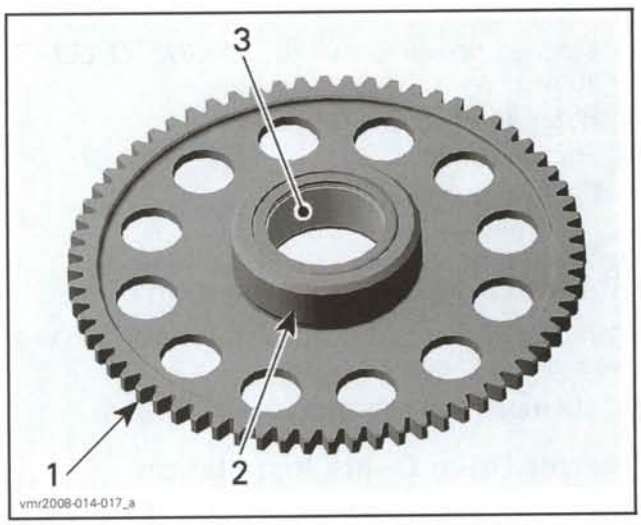

1. *Teeth*
2. *Bushing*
3. *Needle bearing*

Sprag Clutch Gear Installation

The installation is the reverse of the removal procedure. Pay attention to the following detail.

Apply engine oil on needle bearing and bushing of sprag clutch gear.

STARTER DRIVE GEARS

The starter drive gears are located on the engine MAG side behind the magneto cover.

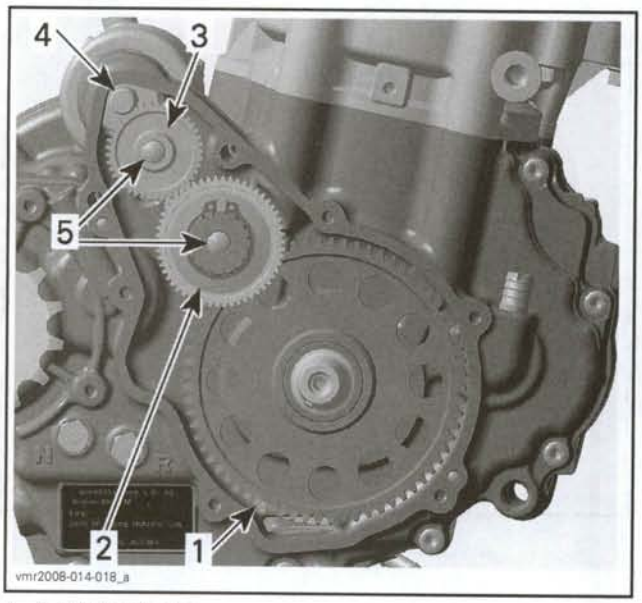

1. *Sprag clutch gear*
2. *Friction clutch*
3. *Intermediate gear*
4. *Starter gear*
5. *Location pins*

Starter Drive Gears Removal

Remove:

- Magneto cover (refer to *MAGNETO COVER* above)
- Rotor (refer to *ROTOR* above)
- Friction clutch
- Sprag clutch gear
- Intermediate gear.

Starter Drive Gears Inspection

Inspect starter drive gears and location pins for wear and damage.

Replace parts as necessary.

Starter Drive Gears Installation

The installation is the reverse of the removal procedure.

Apply engine oil on the location pins.

STARTER

Starter Voltage Test

Locate PF1 fuse holder on the LH side of the vehicle.

Remove PF1 fuse holder cover.

Remove the 15 A injector and ignition fuse to prevent engine from starting.

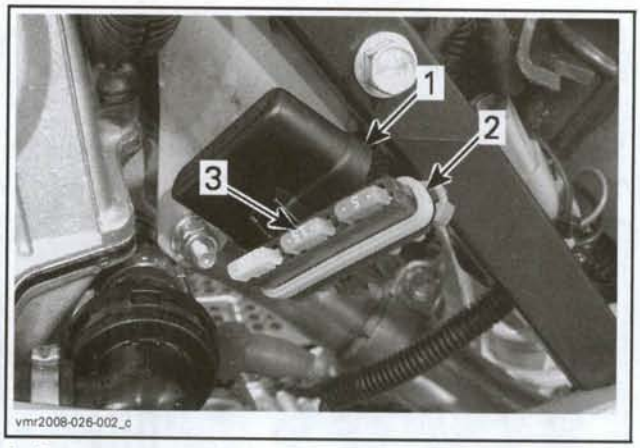

1. *Fuse cover*
2. *PF1 fuse holder*
3. *Injector/ignition fuse*

NOTE: Check engine light will flash when power is turned "ON". Starter will crank engine but with an initial delay of 1 or 2 seconds.

Locate the starter on the LH side of the engine.

Pull back RED rubber protector from starter terminal.

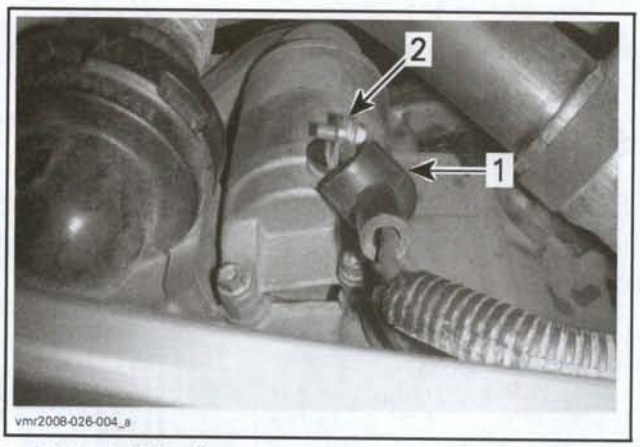

1. *Pull back RED rubber protector*
2. *Starter terminal*

Remove seat.

Set the Fluke 111 multimeter (P/N 529 035 868) to Vdc.

Measure battery voltage at battery terminals.

Set parking brake.

Set transmission to neutral "N".

⚠ WARNING

Before starting engine, ensure parking brake is set and transmission is selected to neutral "N". Failure to comply with this procedure may result in severe injury and possible loss of life.

Press the start button and measure for battery voltage between the starter terminal and engine ground as the starter is cranking.

NOTE: Battery voltage will drop approximately 2 Vdc and fluctuate with starter cranking load.

STARTER VOLTAGE TEST		
RED PROBE	BLACK PROBE	MEASUREMENT
Starter terminal	Engine ground	Battery voltage - 2 Vdc (fluctuating)

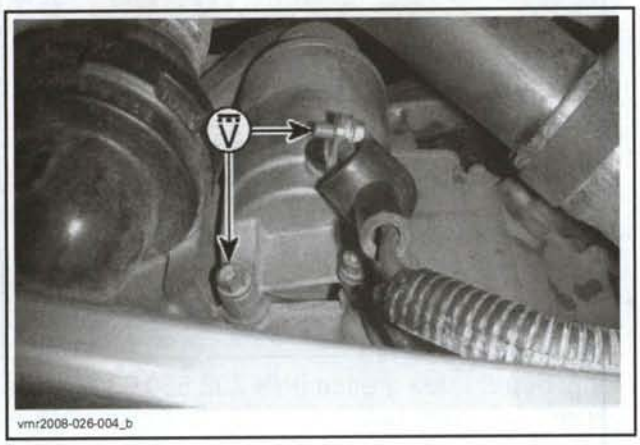

STARTER VOLTAGE TEST

If you obtained close to battery voltage at the starter terminal and the starter does not rotate, replace the starter.

If you do not obtain close to battery voltage (- 2 Vdc) at the starter terminal, carry out a *SOLENOID DYNAMIC TEST.*

If the starter solenoid dynamic test is good, carry out a *STARTER CABLE CONTINUITY TEST.*

Starter Cable Continuity Test

Disconnect and remove battery from vehicle for access to starter solenoid, refer to *CHARGING SYSTEM* section.

Carry out a continuity test of the starter cable as per following table.

NOTE: An abnormally high resistance may be attributable to loose, dirty, or corroded connections.

STARTER CABLE CONTINUITY TEST		
RED PROBE	BLACK PROBE	MEASUREMENT
Starter terminal	Solenoid starter terminal	Close to 0 Ω (continuity)

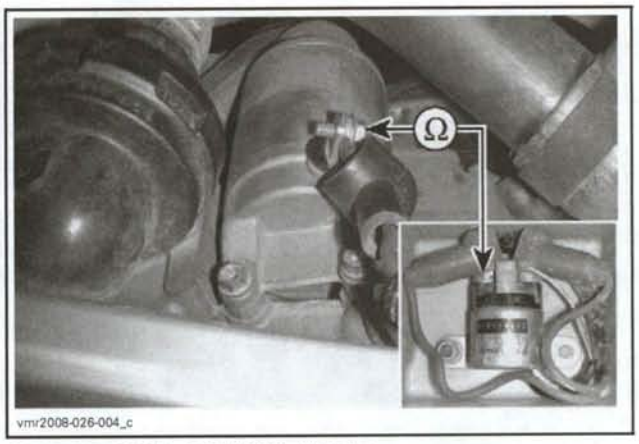

STARTER CABLE CONTINUITY TEST

Clean, repair, or replace wiring and connections between starter and solenoid as required.

Starter Removal

Make sure the ignition switch is in the "OFF" position.

Disconnect the BLACK (-) battery cable from the battery.

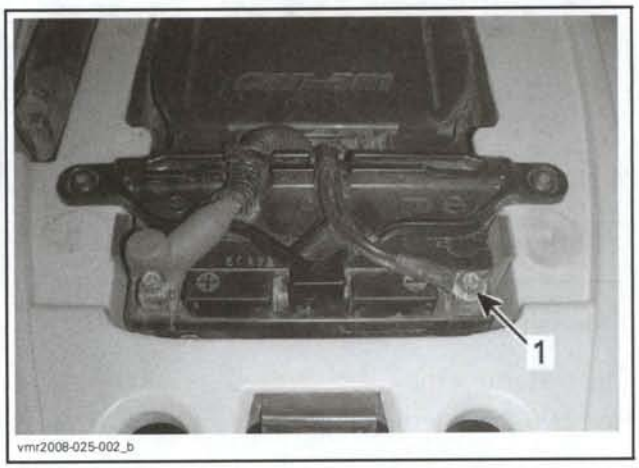

1. Disconnect BLACK (-) battery cable

⚠ WARNING

Always disconnect BLACK (-) battery cable first and reconnect last.

Remove the magneto cover, refer to *MAGNETO COVER* in this section.

Remove the starter intermediate gear.

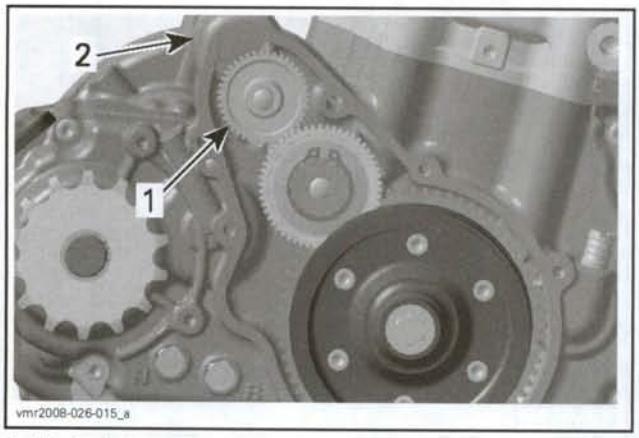

1. Starter intermediate gear
2. Starter

Pull back the red rubber protector from starter terminal.

Disconnect the starter power cable.

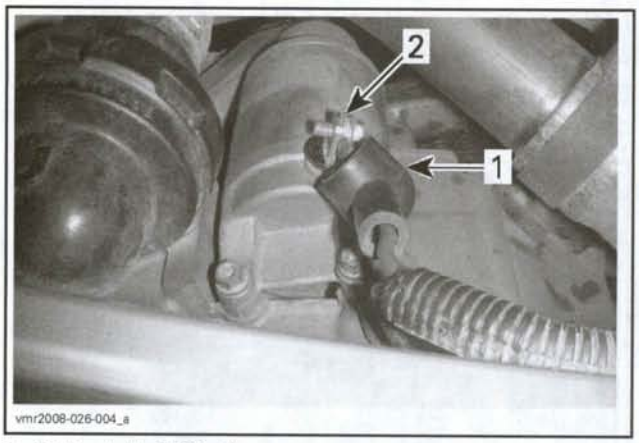

1. Pull back the REDrubber protector
2. Remove starter power cable

Clean starter area.

Remove the starter mounting screws.

NOTE: Note position of engine ground for installation.

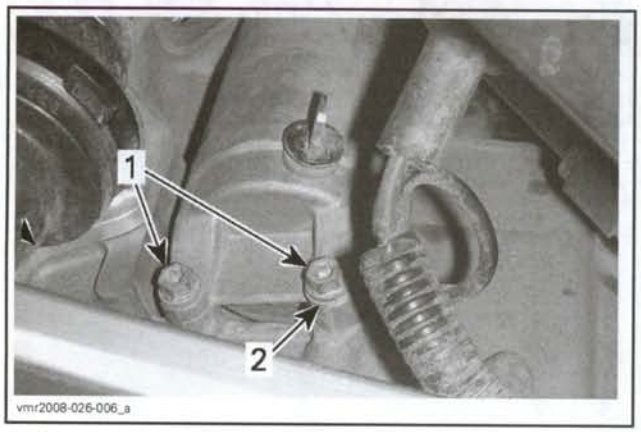

1. Remove starter mounting screws
2. Ground cable

Pull starter out from crankcase.

Starter Installation

Installation is the reverse of the removal procedure. However, pay particular attention to the following.

Ensure starter and engine mating surfaces are free of debris. Serious problems may arise if the starter is not properly aligned.

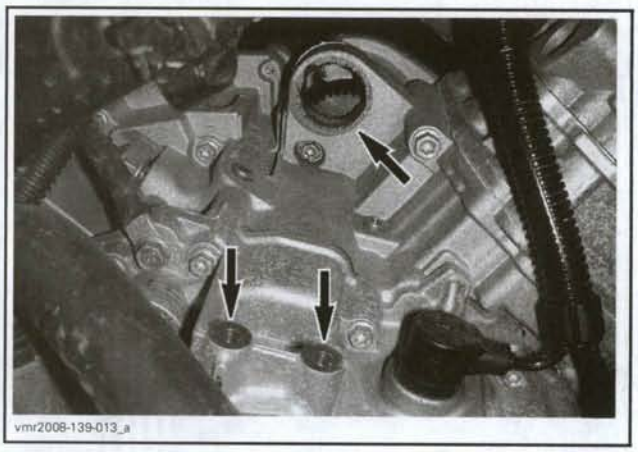

Apply Super Lube grease (P/N 293 550 030) to the starter "O" ring seal.

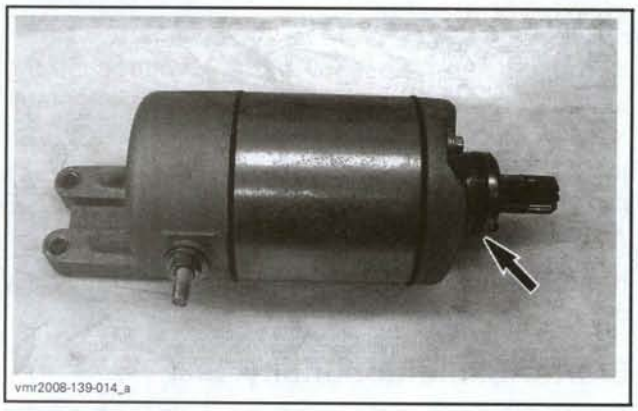

TYPICAL

Insert starter in crankcase and install both mounting screws and engine ground loosely.

Install starter intermediate gear.

NOTE: When installing starter intermediate gear, lubricate intermediate gear shaft with the recommended engine oil.

Install magneto cover with a new gasket, refer to *MAGNETO COVER* in this section.

Torque starter screws to 9 N•m (89 lbf•**in**).

Connect the starter power cable to the starter and torque nut to 4 N•m (53 lbf•**in**).

Apply dielectric grease (P/N 293 550 004) on starter terminal and nut before installing the RED protective cover.

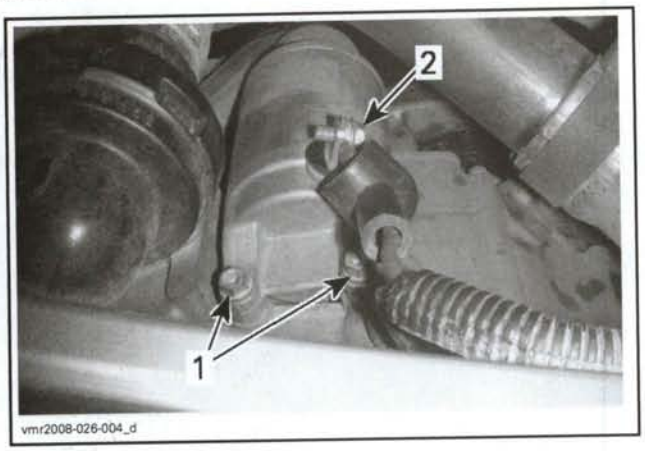

1. Torque starter mounting screws
2. Apply dielectric grease

Connect the BLACK (-) battery cable.

⚠ WARNING

Always connect the RED (+) starter cable first, then the BLACK (-) battery cable last. Whenever connecting the RED (+) cable to the starter motor, always make sure the BLACK (-) battery cable is disconnected to prevent electric shock.

Test starter operation.

CYLINDER HEAD/CYLINDER

SERVICE TOOLS

Description	Part Number	Page
engine leak down test kit	529 035 661	90
spring compressor	529 035 724	102
compressor cup	529 036 073	102
valve guide remover	529 036 074	106
valve guide installer	529 036 075	107
circlip installer	529 036 083	110
camshaft timing device	529 036 084	96

SERVICE TOOLS – OTHER SUPPLIER

Description	Part Number	Page
Snap-on piston ring compressor tool	RC-980	101
Snap-on valve holder	VL2	105
Snap-on valve stem seal pliers	YA 8230	104

SERVICE PRODUCTS

Description	Part Number	Page
Loctite 243 (blue)	293 800 060	96
Loctite 5910	293 800 081	101
Molykote G-n	420 297 433	107

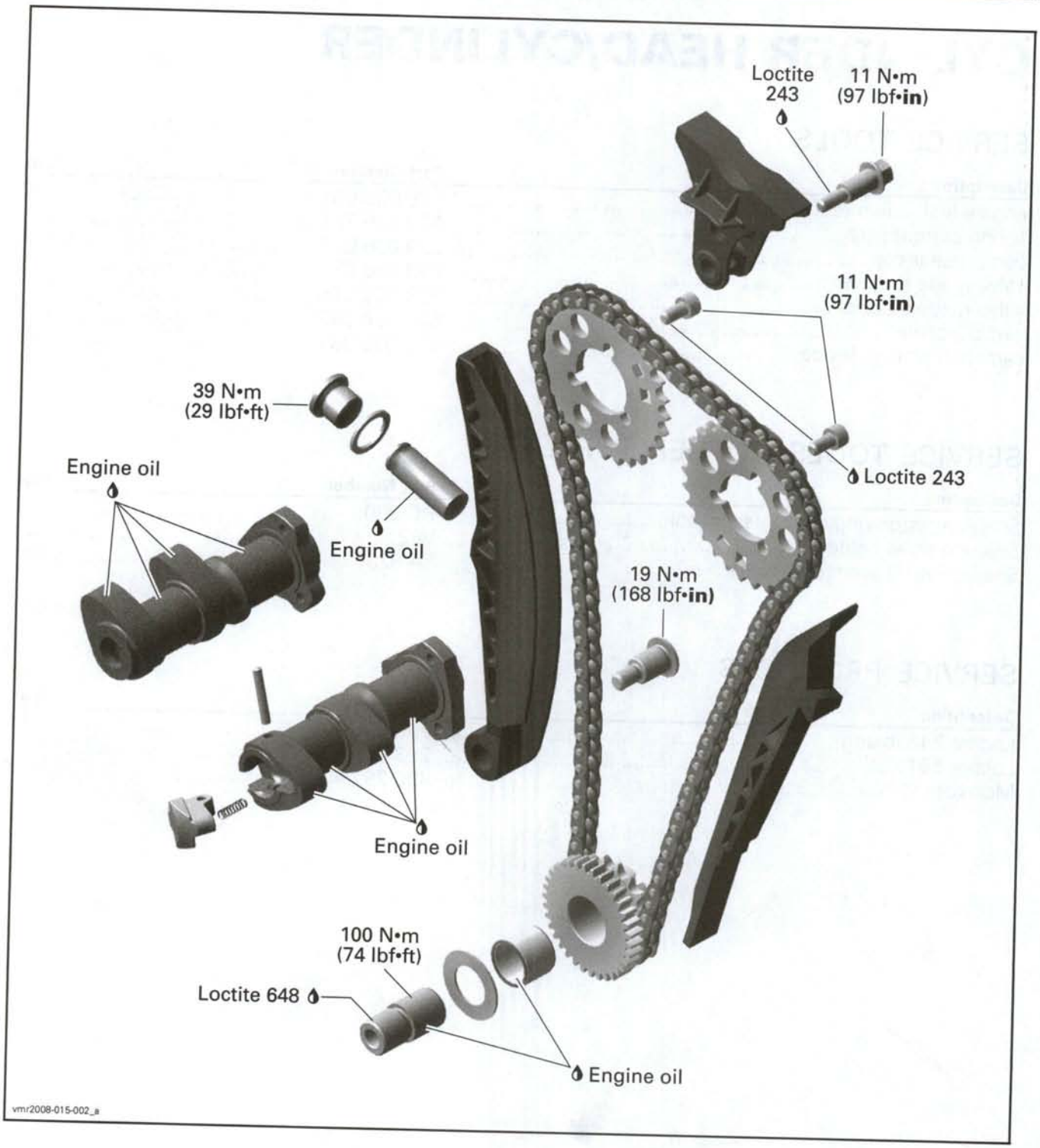
Loctite 243
11 N•m (97 lbf•in)
11 N•m (97 lbf•in)
Loctite 243
39 N•m (29 lbf•ft)
Engine oil
Engine oil
19 N•m (168 lbf•in)
Engine oil
100 N•m (74 lbf•ft)
Loctite 648
Engine oil
vmr2008-015-002_a

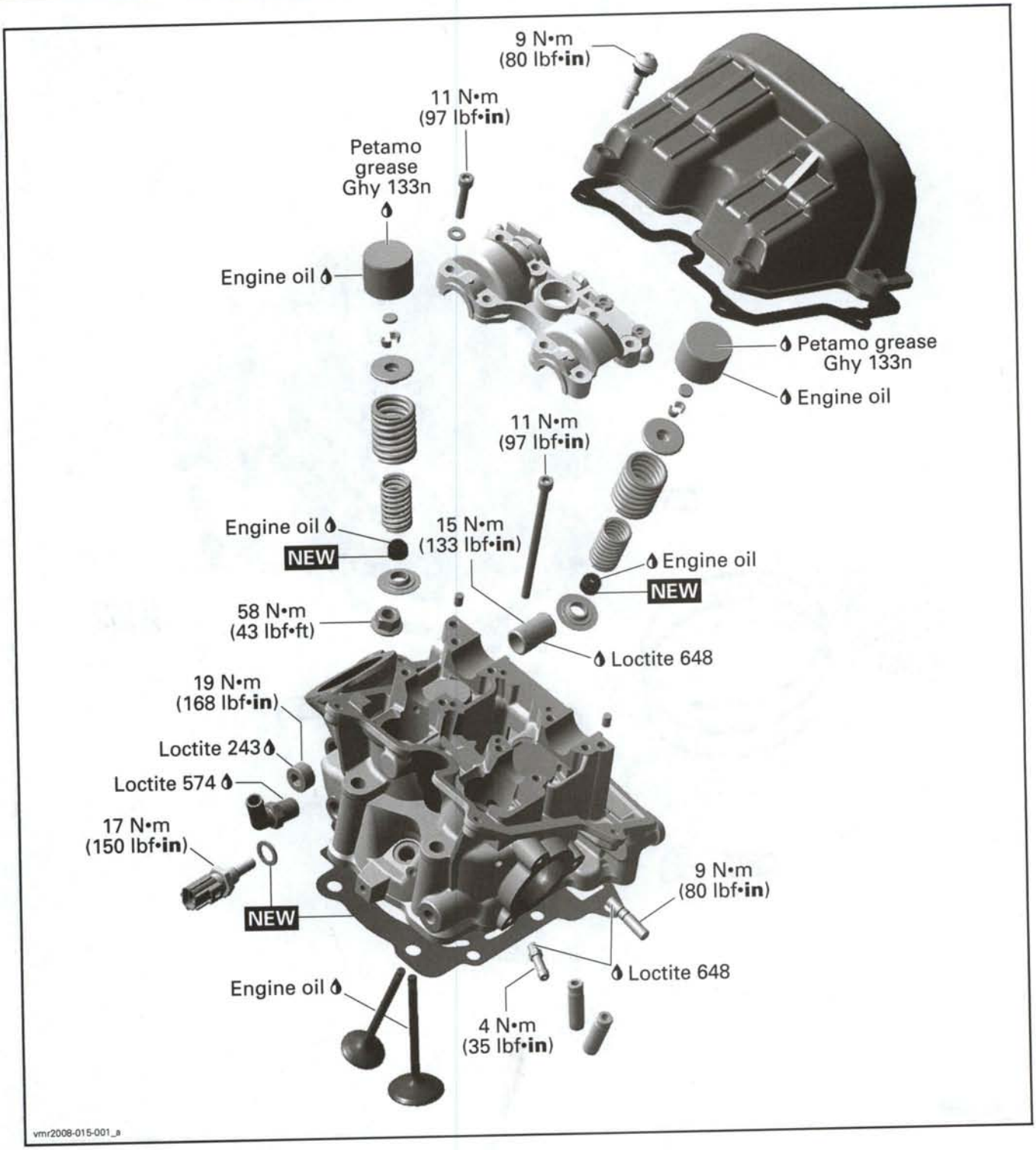
9 N•m
(80 lbf•in)
11 N•m
(97 lbf•in)
Petamo
grease
Ghy 133n
Engine oil
Petamo grease
Ghy 133n
Engine oil
11 N•m
(97 lbf•in)
Engine oil
NEW
15 N•m
(133 lbf•in)
Engine oil
NEW
58 N•m
(43 lbf•ft)
Loctite 648
19 N•m
(168 lbf•in)
Loctite 243
Loctite 574
17 N•m
(150 lbf•in)
NEW
9 N•m
(80 lbf•in)
Loctite 648
Engine oil
4 N•m
(35 lbf•in)
vmr2008-015-001_a

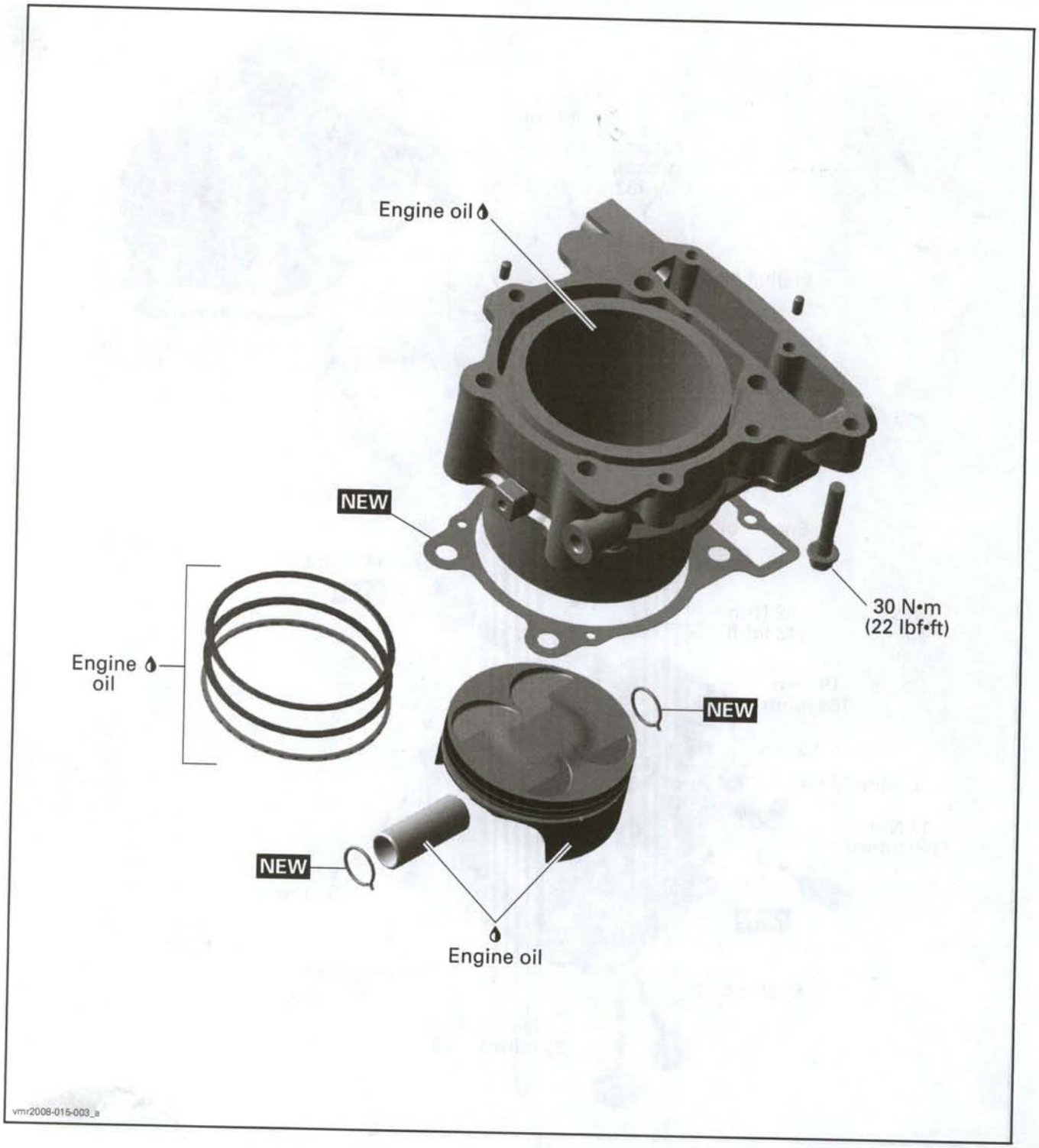
Engine oil
NEW
30 N•m
(22 lbf•ft)
Engine oil
NEW
NEW
Engine oil
vmr2008-015-003_a

GENERAL

NOTE: When diagnosing an engine problem, always perform the cylinder leak test. This will help pinpoint a problem. Refer to *LEAK TEST* in this section for procedures.

The engine removal is not necessary to work on the following parts:

- Valve cover
- Timing chain tensioner
- Camshaft timing gear
- Camshaft
- Valve lifter bucket.

For timing chain replacement refer to *CRANKCASE/CRANKSHAFT* section.

NOTE: For a better understanding, some illustrations are taken with engine out of vehicle.

Always disconnect BLACK (-) cable from the battery, then RED (+) cable before working on the engine.

⚠ WARNING

Always disconnect BLACK (-) cable first and reconnect last.

During assembly/installation, use the torque values and service products as in the exploded views.

Clean threads before applying a threadlocker. Refer to *SELF-LOCKING FASTENERS* and *LOCTITE APPLICATION* at the beginning of this manual for complete procedure.

⚠ WARNING

Torque wrench tightening specifications must be strictly adhered to.
Locking devices (e.g.: locking tabs, elastic stop nuts, cotter pin, etc.) must be replaced with new ones.

Hoses or cables removed or disconnected must be installed and routed at the same place.

CAUTION: Locking ties removed during a procedure must be replaced and installed at the same location.

When disassembling parts that are duplicated in the engine, (e.g.: valves, springs, etc.), it is strongly recommended to note their position and to keep the parts of the same assembly as a "group". If you find a defective component, it will be much easier to find the cause of the failure. Since parts were break-in together during the engine operation, they will keep their matched fit when parts are reassemble together within their "group".

MAINTENANCE

VALVE CLEARANCE

NOTE: Check and adjust valve clearance only on a cold engine.

Valve Clearance Inspection

Remove *VALVE COVER*. See procedure in this section.

Bring crankshaft to TDC of compression stroke. Refer to *CRANKSHAFT LOCKING PROCEDURE* in the *CRANKCASE/CRANKSHAFT* section.

Use a feeler gauge and check valve clearance (intake and exhaust).

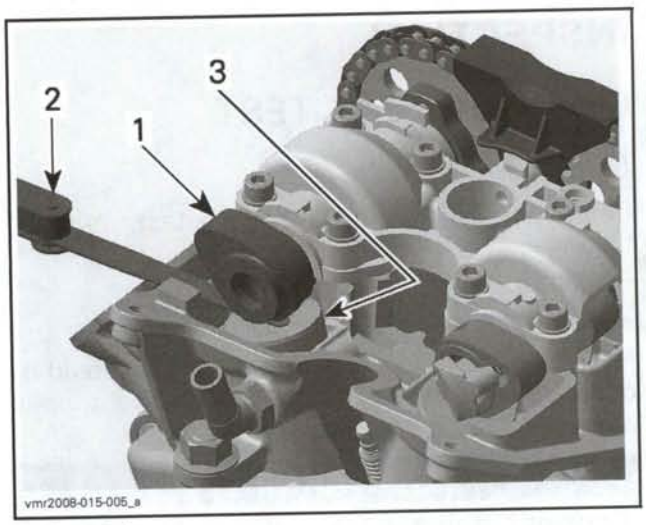

1. *Camshaft*
2. *Feeler gauge*
3. *Valve lift bucket*

VALVE CLEARANCE	
EXHAUST	0.22 to 0.30 mm (.0087 to .0118 in)
INTAKE	0.11 to 0.19 mm (.0043 to .0075 in)

Adjust valve clearance if out of specification.

NOTE: To ease valve adjustment procedure, note each valve clearance prior to proceed.

Valve Clearance Adjustment

Adjust valve clearance by replacing the adjustment shim of the respective valve.

NOTE: When replacing the adjustment shims, crankshaft must be locked at ignition TDC.

Refer to appropriate procedures in this section to remove the following parts:
- Timing chain tensioner
- Camshaft timing gears
- Camshaft
- Valve lifter bucket.

Remove adjustment shim and check its thickness with a micrometer.

Choose the proper adjustment shim thickness to reach the specified valve clearance.

New shim thickness = Recorded valve clearance – Adjustment specification + Old shim thickness

After parts reassembly, check again valve clearance.

Install removed parts using their recommended installation instructions.

INSPECTION

CYLINDER LEAK TEST

General

Before performing the cylinder leak test, verify the following:
- Clamp(s) tightness
- Radiator and hoses condition.

NOTE: For best accuracy, the leak test should be done with the engine at normal operating temperature.

⚠ WARNING

Prevent burning yourself due to handling on the hot engine.

Preparation

Remove the bottom spark plug. Refer to *IGNITION SYSTEM* section.

Remove *VALVE COVER*. See procedure in this section.

Bring the piston to TDC of compression stroke. Refer to *CRANKSHAFT LOCKING PROCEDURE* in the *CRANKCASE/CRANKSHAFT* section.

Leak Test

Install a gauge adaptor of the engine leak down test kit (P/N 529 035 661) into previously cleaned spark plug hole.

Connect the leak down tester to an adequate air supply.

Set needle of measuring gauge to zero.

NOTE: All testers have specific instructions on gauge operation and required pressure. Refer to manufacturer's instructions.

Supply combustion chamber with air pressure.

1. Gauge adaptor
2. Leak tester
3. Air supply hose

Gently tap on each valve lifter buckets to remove carbon deposits from valves.

Note the amount or percentage of leakage (depending on tester).

LEAKAGE PERCENTAGE	ENGINE CONDITION
0% to 15%	Excellent condition
16% to 25%	Good condition
26% to 40%	Fair condition; reduced engine performance
41% and higher	Poor condition, diagnose and repair engine

Diagnosis

Listen to for air leaks.

- Air escaping on intake port/throttle body means leaking intake valve(s).
- Air escaping on exhaust port means leaking exhaust valve(s).
- Air bubbles out of radiator means leaking cylinder head gasket.
- Air/coolant escaping from cylinder/head means damaged gasket(s) and/or loosened screws (refer to *CYLINDER HEAD* further in this section).
- Air escaping into crankcase area means excessively worn cylinder and/or broken piston rings (refer to *CYLINDER* and *PISTON RINGS* further in this section).
- Air/oil escaping from crankcase means damaged gasket and/or loosened screws (refer to *CRANKCASE/CRANKSHAFT* section).

Repair Tips

- Blue exhaust gas means damaged/worn piston rings or valve stem seals
- White exhaust gas means damaged cylinder head gasket
- Radiator cap opening without overheat means damaged cylinder head gasket.

Assembly

Reverse the preparation procedure.

PROCEDURES

VALVE COVER

Valve Cover Removal (Engine in Vehicle)

Remove seat.

Use B.U.D.S. and depressurize fuel system. Refer to *FUEL TANK/FUEL PUMP* section.

Remove front body assembly. Refer to *BODY* section.

RH Side of Vehicle

Disconnect crankcase vent hose.

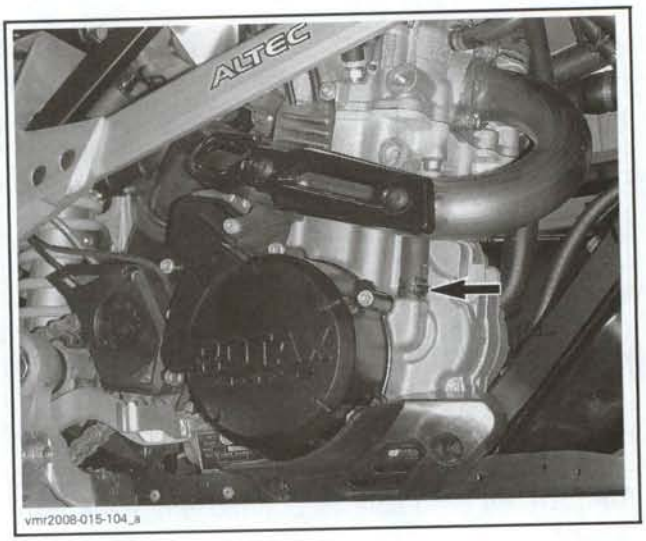

vmr2008-015-104_a

LH Side of Vehicle

Remove coolant tank retaining screw.


vmr2008-015-100_a

Move tank away to make room. You may use a locking tie to hold tank.


vmr2008-015-101_a

Cut locking ties holding engine harness to frame.


vmr2008-015-101_b

Remove retaining screws of headlight power regulator.


vmr2008-015-102

Disconnect engine harness connectors and ECM connector. Refer to *ELECTRICAL FUEL INJECTION (EFI)* section.


vmr2008-015-103_a

Move crankcase vent hose away to free valve cover area.


vmr2008-015-105_a


vmr2008-015-106

Disconnect fuel rail quick connector.


vmr2008-015-107_a

Move headlight power regulator away, toward ECM.

Move engine harness away, toward seat area.

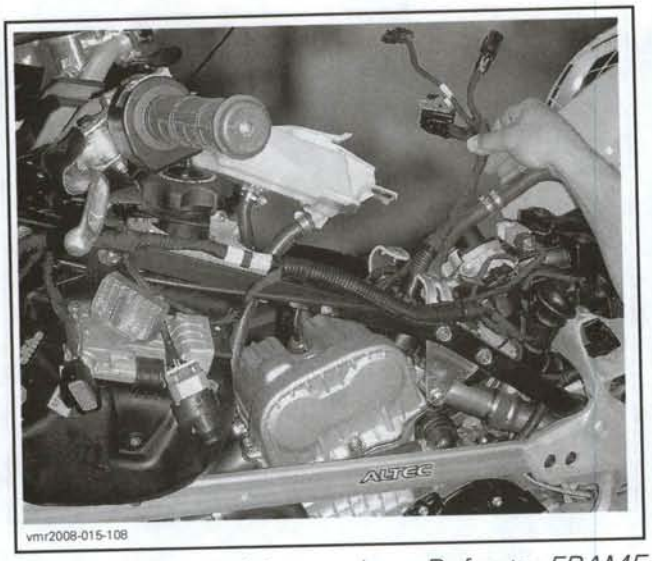

vmr2008-015-108

Remove the LH side member. Refer to *FRAME* section.

Completely remove valve cover screws.

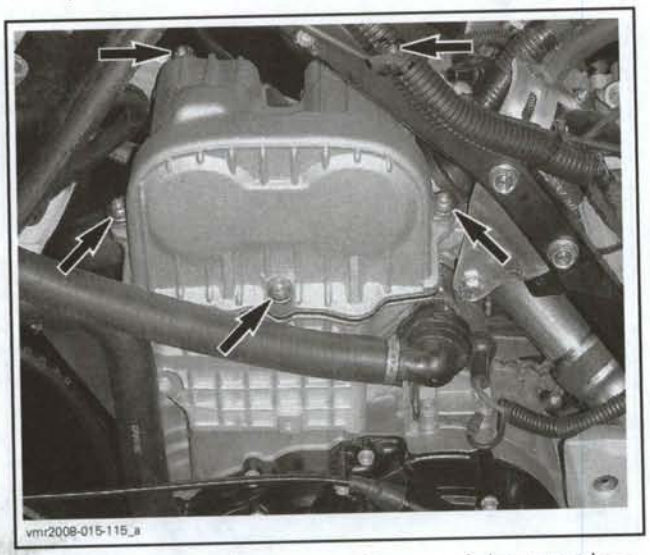
vmr2008-015-115_a

Gently pull out valve cover. Be careful not to damage gasket.

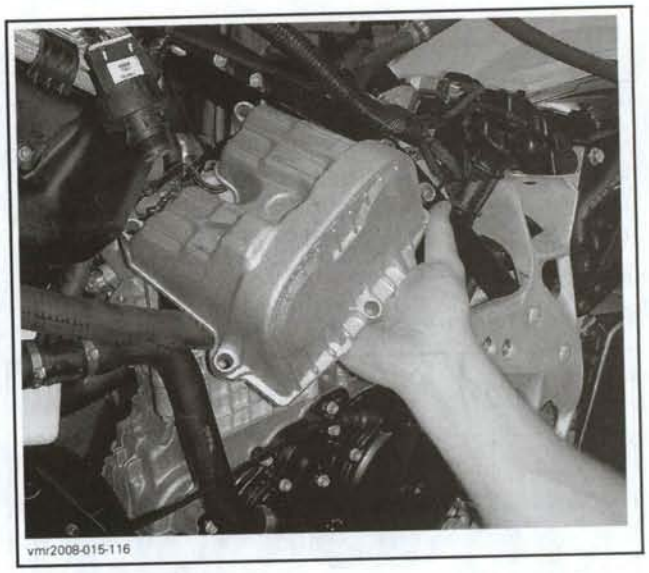
vmr2008-015-116

Valve Cover Removal (Engine Removed)

Unscrew cover retaining screws.

Remove the cover with the gasket.

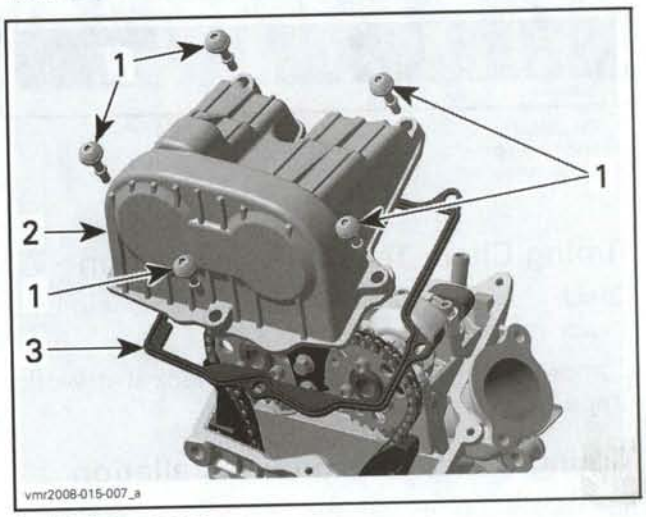

vmr2008-015-007_a

1. *Retaining screws*
2. *Valve cover*
3. *Valve cover gasket*

Valve Cover Inspection

Check the valve cover for cracks or other damages.

Check if the gasket is brittle, hard or otherwise damaged.

Replace all defective parts.

Valve Cover Installation

For installation reverse the removal procedure.

Take care that the gasket is located properly into the groove in the cover.

TIMING CHAIN TENSIONER

Timing Chain Tensioner Removal

NOTE: Make sure that the crankshaft is set at TDC compression stroke. Refer to *CRANKSHAFT LOCKING PROCEDURE* in the *CRANKCASE/CRANKSHAFT* section.

Remove plug screw and gasket ring.

Pull out chain tensioner.

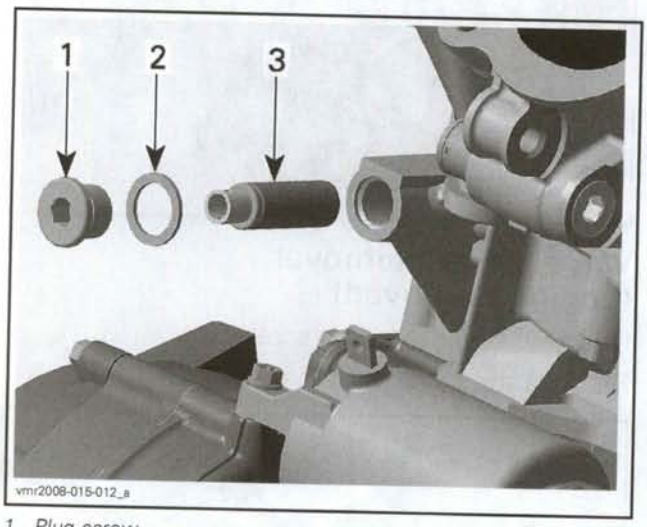

1. *Plug screw*
2. *Gasket ring*
3. *Chain tensioner*

Timing Chain Tensioner Inspection

Check chain tensioner for free movement in bore and/or for scoring.

Compress chain tensioner and check if it works properly.

Timing Chain Tensioner Installation

For installation reverse the removal procedure.

CAMSHAFT TIMING GEAR

Camshaft Timing Gear Removal

Remove *VALVE COVER*. See procedure in this section.

Lock crankshaft to TDC of compression stroke. Refer to *CRANKSHAFT LOCKING PROCEDURE* in the *CRANKCASE/CRANKSHAFT* section.

Loosen camshaft timing gear screws.

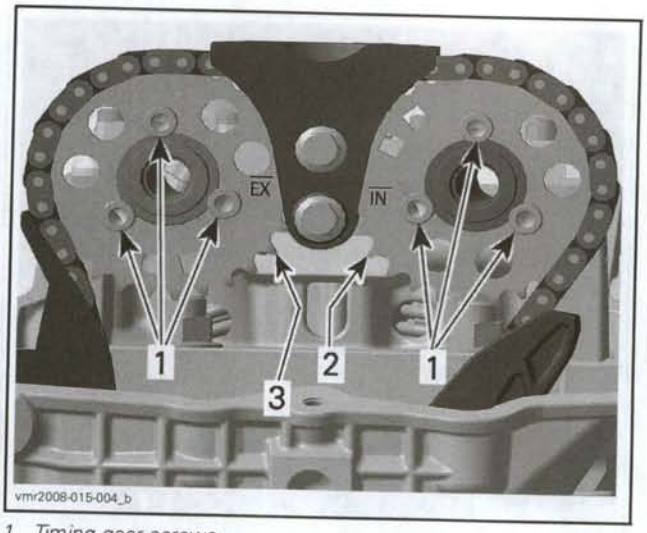

1. *Timing gear screws*
2. *Timing gear (intake)*
3. *Timing gear (exhaust)*

Remove *CHAIN TENSIONER*. See procedure in this section.

Remove upper chain guide.

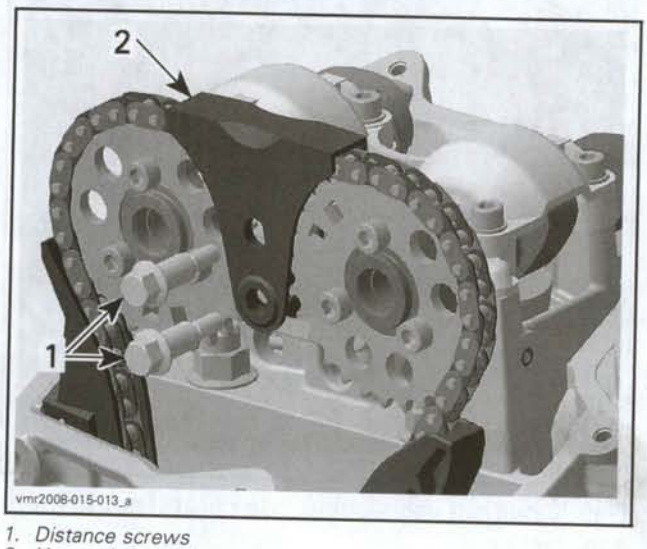

1. *Distance screws*
2. *Upper chain guide*

Remove timing chain guide.

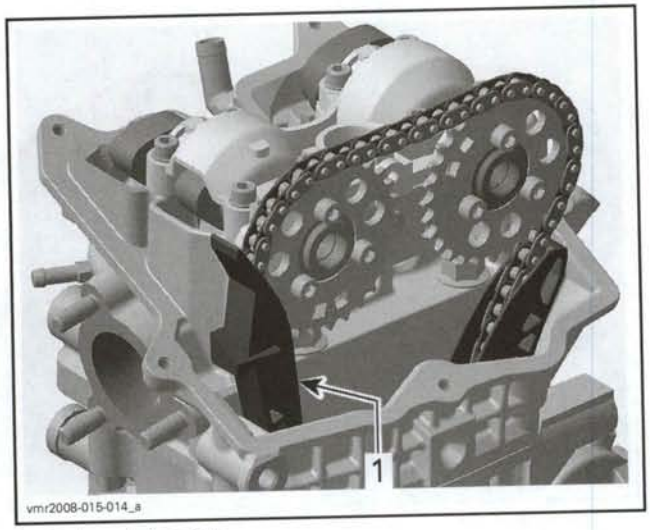

1. Timing chain guide

Remove camshaft timing gear screws.

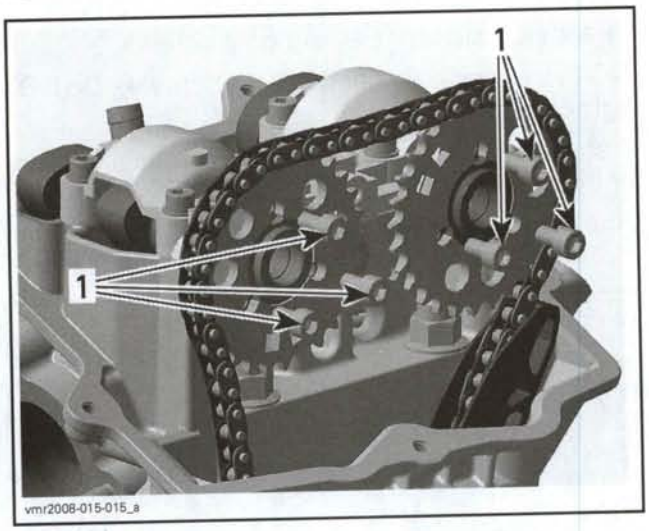

1. Timing gear screws

Remove camshaft timing gears.

NOTE: Secure timing chain with a securing wire.

Camshaft Timing Gear Inspection

Check camshaft timing gears for wear or deterioration.

If a gear is worn or damaged, replace it as a set (both camshaft timing gears, intermediate gear and timing chain).

Upper Chain Guide

Inspect also upper chain guide for wear. Replace if necessary.

Camshaft Timing Gear Installation (Top End Repair Only)

The installation is the reverse of the removal procedure. However, pay attention to the following.

NOTE: Make sure that crankshaft is locked to TDC.

Install timing gears on camshafts so that marks "IN" on intake and "EX" on exhaust camshaft are aligned.

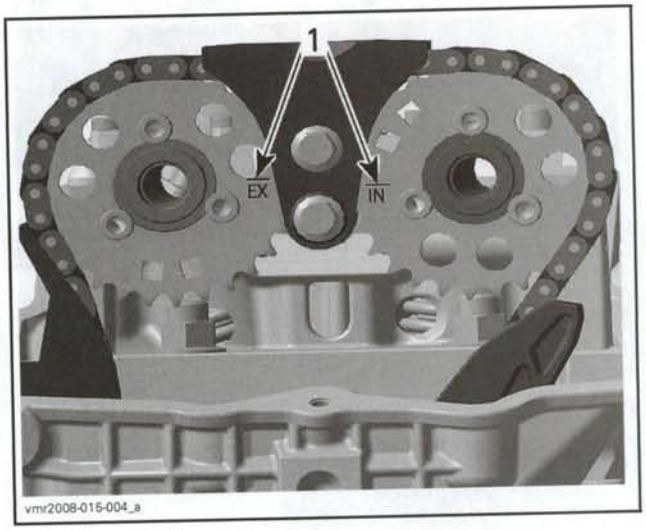

1. Marks on timing gears

Install the *TIMING CHAIN TENSIONER*. See procedure in this section.

Recheck timing gears alignment after the installation of timing chain tensioner.

Camshaft Timing Gear Installation (Complete Engine Repair)

CAUTION: To achieve proper camshaft timing after a complete engine tear down, the following procedure must be strictly followed.

NOTE: Timing chain drive gears must be installed, but the control gear must not be tightened. Refer to *TIMING GEARS INSTALLATION* in *CRANKCASE/CRANKSHAFT* section.

Put timing gear on exhaust camshaft.

Position gear so that the "EX" mark is parallel with the camshaft holder split line.

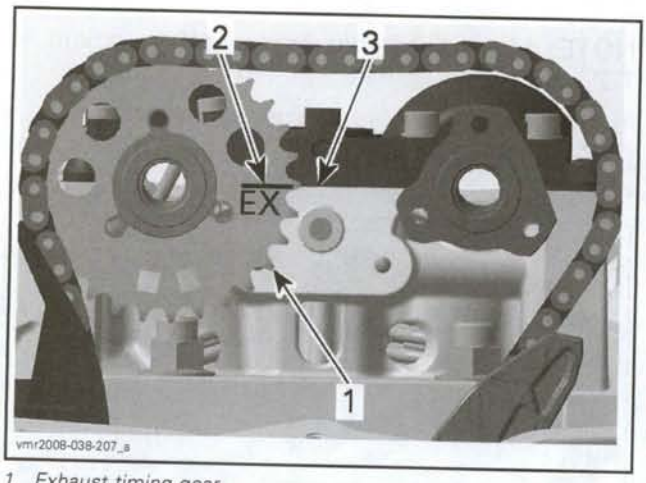

1. *Exhaust timing gear*
2. *Mark "EX"*
3. *Split line of camshaft holder*

Install the camshaft timing device (P/N 529 036 084).

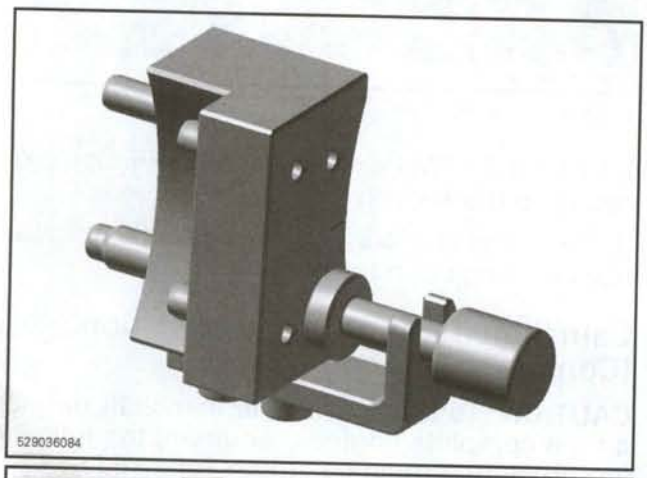

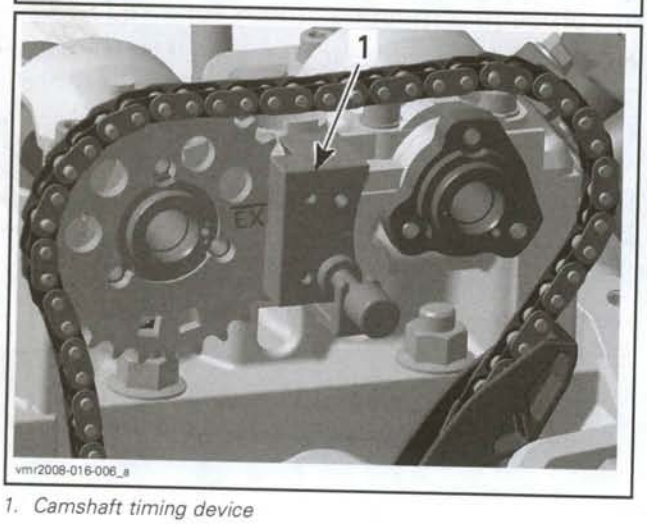

1. *Camshaft timing device*

Install timing gear on intake camshaft.

Position gear so that so that "IN" mark is aligned with the mark on the timing device.

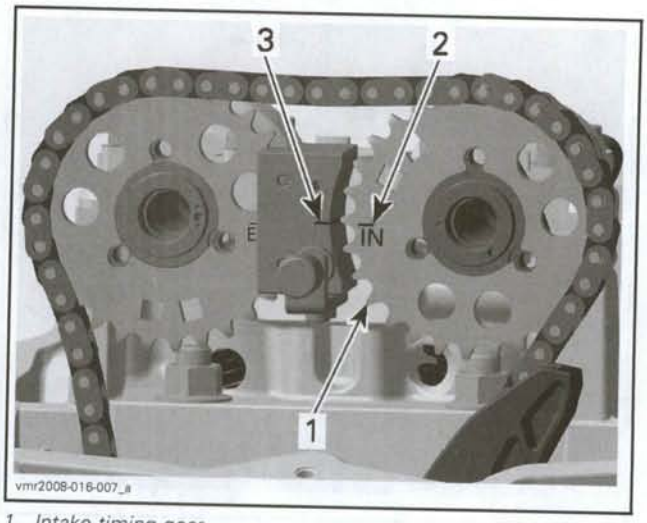

1. *Intake timing gear*
2. *Mark "IN"*
3. *Mark on camshaft timing device*

Apply Loctite 243 (blue) (P/N 293 800 060) on threads of camshaft timing gear screws.

NOTE: Temporarily hand tighten screws. Do NOT tighten yet.

Install timing chain guide and timing chain tensioner (refer to *TIMING CHAIN AND TENSION GUIDE*.

Apply Loctite 243 (blue) (P/N 293 800 060) on control gear screw and torque it to 40 N•m (30 lbf•ft).

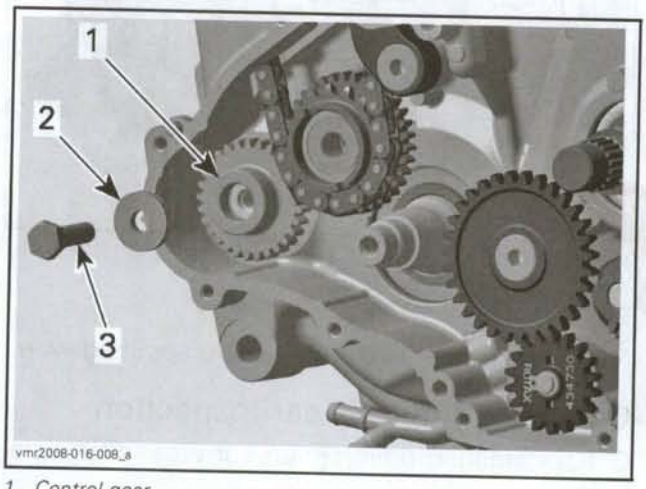

1. *Control gear*
2. *Washer*
3. *Control gear screw*

Torque timing gear screws to 11 N•m (97 lbf•**in**).

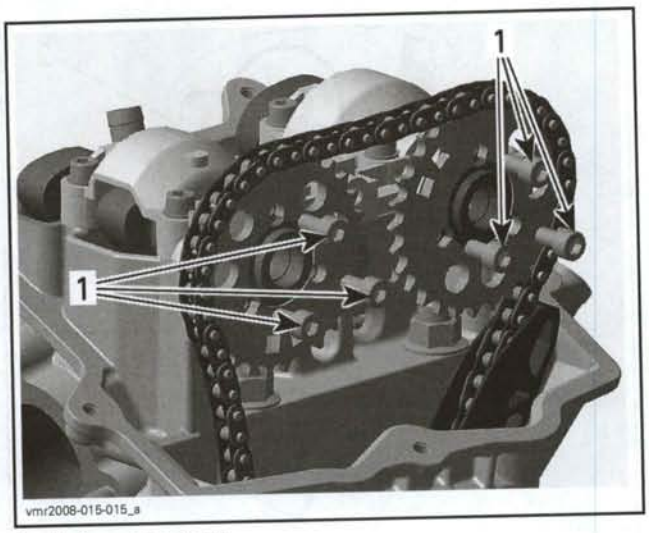

1. Timing gear screws

Install upper chain guide and remaining removed parts.

CAMSHAFT

Camshaft Removal

NOTE: Before removing camshaft, measure the decompressor valve lift. See procedure in *CAMSHAFT INSPECTION* further in this section.

Remove *VALVE COVER*. See procedure in this section.

Lock crankshaft to TDC of compression stroke. Refer to *CRANKSHAFT LOCKING PROCEDURE* in the *CRANKCASE/CRANKSHAFT* section.

Remove:
- Timing chain tensioner
- Upper chain guide
- Timing chain guide
- Camshaft timing gears.

Secure timing chain with a retaining wire.

Remove camshaft holder.

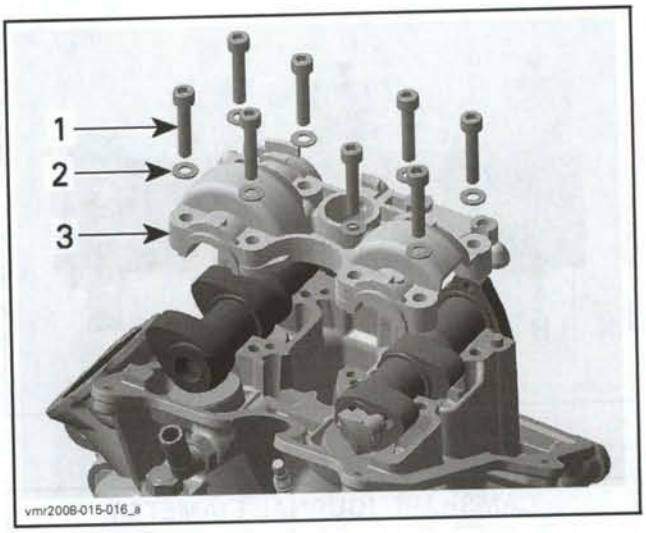

1. Retaining screws
2. Washers
3. Camshaft holder

Remove exhaust and intake camshafts.

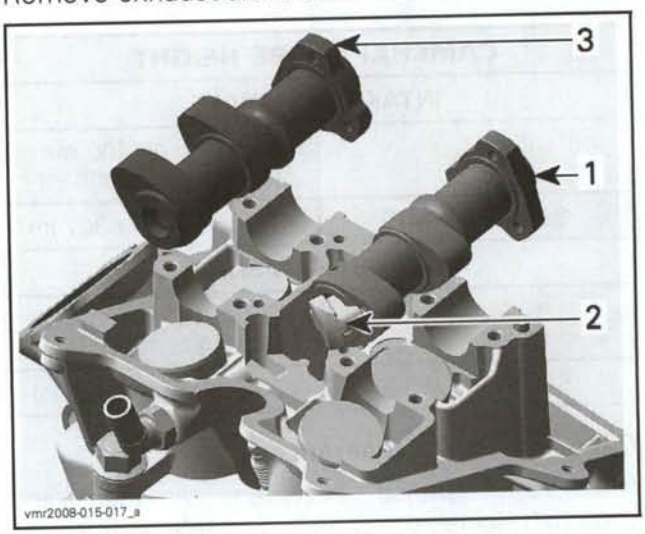

1. Exhaust camshaft
2. Decompressor
3. Intake camshaft

Camshaft Inspection

Check each lobe and bearing journal for scoring, scuffing, cracks, or other signs of wear.

Measure camshaft bearing journals diameter and lobes height, using a micrometer.

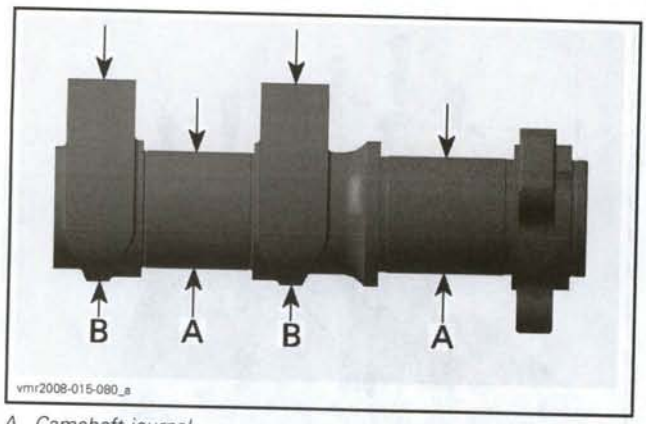

A. Camshaft journal
B. Camshaft lobe

CAMSHAFT JOURNAL DIAMETER	
NEW	23.967 to 23.980 mm (.9436 to .9441 in)
SERVICE LIMIT	23.950 mm (.9429 in)

CAMSHAFT LOBE HEIGHT	
INTAKE CAMSHAFT	
NEW	40.200 to 40.400 mm (1.5827 to 1.5905 in)
SERVICE LIMIT	40.150 mm (1.5807 in)
EXHAUST CAMSHAFT	
NEW	40.499 to 40.699 mm (1.5944 to 1.6023 in)
SERVICE LIMIT	40.450 mm (1.5925 in)

Camshaft Radial Clearance

Measure clearance between camshaft and camshaft holder, using a plastic feeler gauge.

NOTE: The plastic feeler gauge is available at automotive parts retailer.

- Place the camshaft in the cylinder head and apply a plastic-gauge on the camshaft bearing journal.

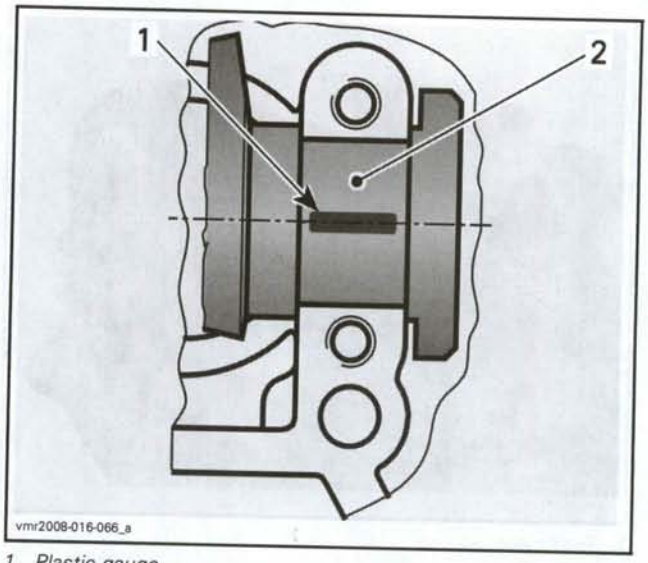

1. Plastic gauge
2. Camshaft bearing journal

- Install camshaft holder in the proper position and tighten bearing cover screws to specified torque.
- Unfasten camshaft holder.
- Measure the maximum width of the pressed plastic gauge with the corresponding graduated scale.

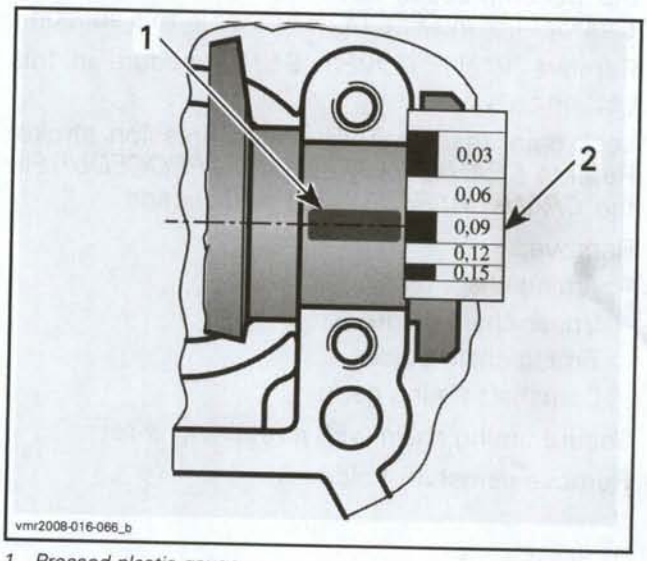

1. Pressed plastic gauge
2. Graduated scale

CLEARANCE BETWEEN CAMSHAFT AND CAMSHAFT HOLDER	
SERVICE LIMIT	0.06 mm (.0024 in)

For measurement of camshaft bearing bore refer to *CYLINDER HEAD* below.

Decompressor Inspection

Check if centrifugal weight of decompressor moves easily and returns to its starting position. If necessary, replace exhaust camshaft.

NOTE: Never stretch spring to avoid altering the defined spring force.

Measure the lift of the decompressor on the valve lifter bucket.

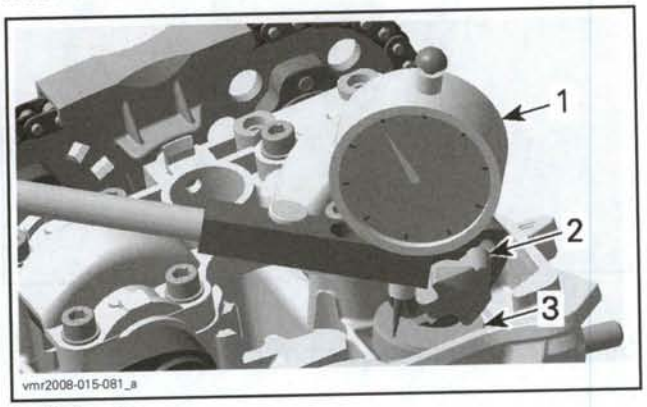

1. *Dial gauge*
2. *Centrifugal weight*
3. *Valve lifter bucket*

DECOMPRESSOR — VALVE LIFT	
NOMINAL	0.65 to 0.90 mm (.0256 to .0354 in)

If valve lift is out of specification and/or spring does not work properly, replace camshaft assembly.

Camshaft Installation

Installation is the reverse order of removal. However, pay attention to the following.

Lubricate camshaft and camshaft holders with engine oil before placing them into cylinder head.

Fit camshaft holder and tighten down as per following described sequence.

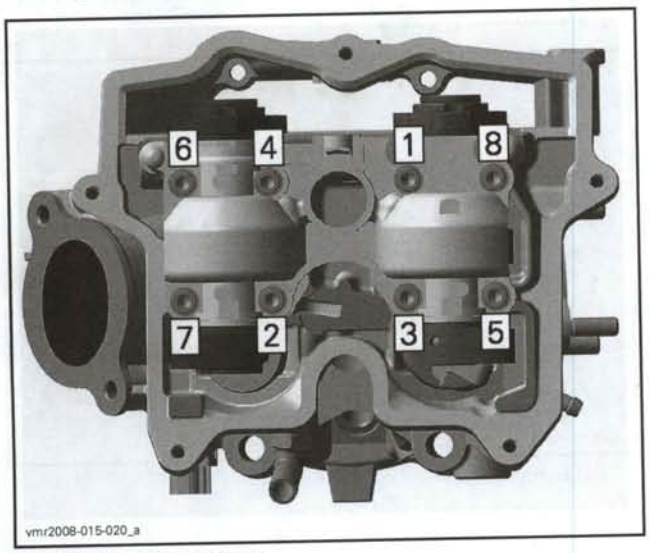

TIGHTENING SEQUENCE

NOTE: After bearing cover installation check if camshafts turn easily.

Check *VALVE CLEARANCE*. See procedure in this section.

VALVE LIFTER BUCKET

Valve Lifter Bucket Removal

Remove *CAMSHAFT*, see procedure in this section.

Use a magnet and lift valve lifter bucket.

CAUTION: Adjustment shim could be stuck in valve lifter bucket. Take care not to lose adjustment shim.

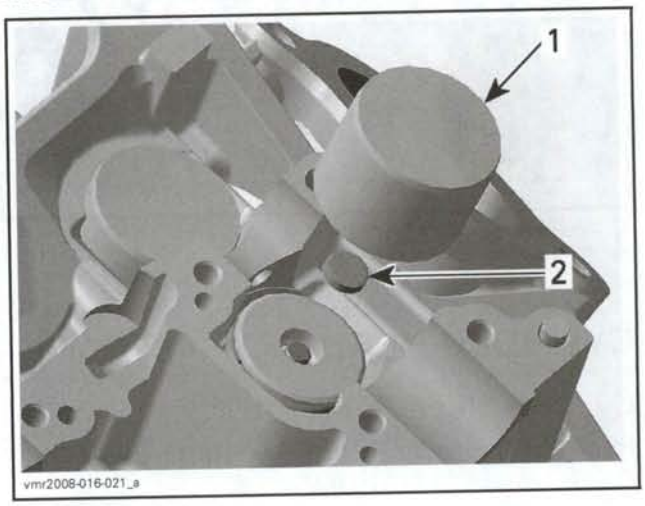

1. *Valve lifter bucket*
2. *Adjustment shim*

Valve Lifter Bucket Inspection

Check surface of valve lifter bucket for scoring or other damages.

Measure diameter of valve lifter bucket. If diameter is out of specification replace it.

VALVE LIFTER BUCKET DIAMETER	
NEW	33.459 to 33.475 mm (1.3173 to 1.3179 in)
SERVICE LIMIT	33.440 mm (1.3165 in)

Measure valve lifter bucket radial clearance. If clearance exceeds specified tolerance, replace valve lifter bucket and measure radial clearance again.

VALVE LIFTER BUCKET RADIAL CLEARANCE	
SERVICE LIMIT	0.08 mm (.0032 in)

Valve Lifter Bucket Installation

The installation is the reverse of the removal procedure. However, pay attention to the following.

CAUTION: Place adjustment shim properly in place before installing valve lifter bucket.

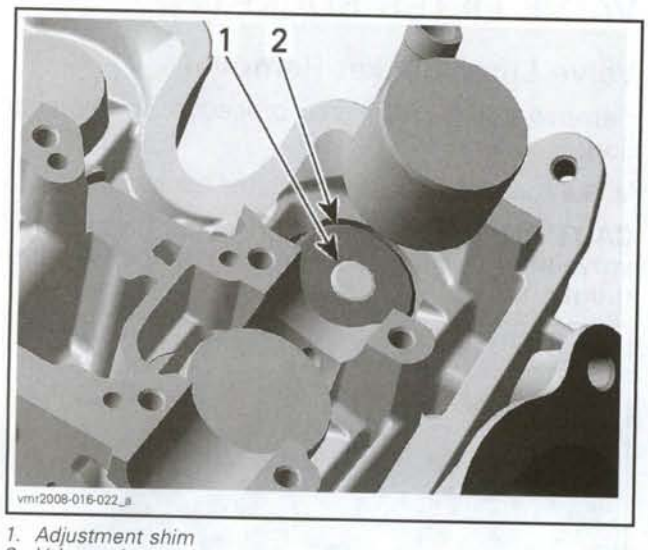

1. *Adjustment shim*
2. *Valve spring retainer*

CYLINDER HEAD

Cylinder Head Removal

Remove engine from vehicle. Refer to *ENGINE REMOVAL/INSTALLATION* section.

Referring at this section, remove the following:
- Valve cover
- Chain tensioner
- Camshafts.

First remove M6 cylinder head screws.

Then remove M10 cylinder head nuts.

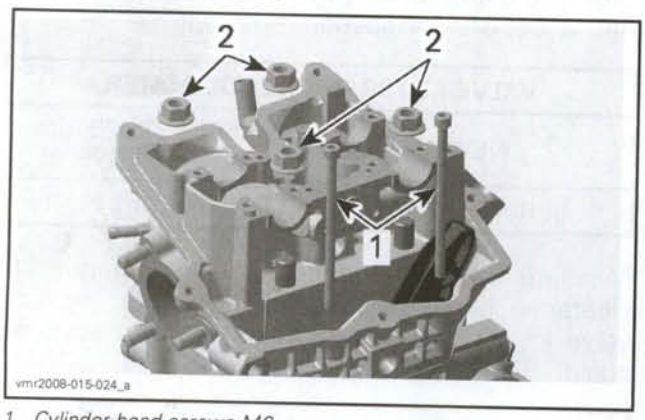

1. *Cylinder head screws M6*
2. *Cylinder head nuts M10*

Pull cylinder head with cylinder from crankcase.

Remove cylinder screws M8.

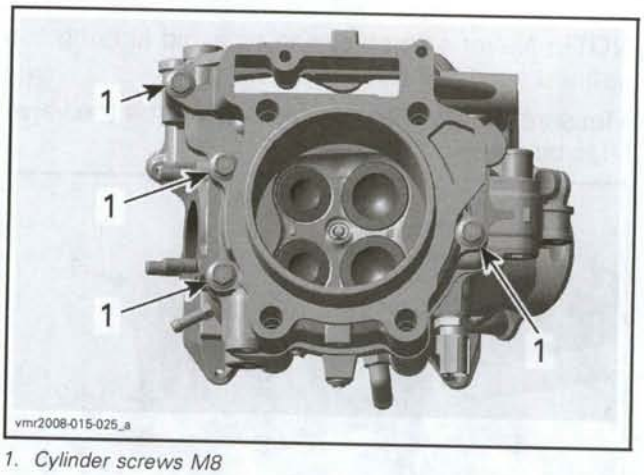

1. *Cylinder screws M8*

Separate cylinder head from cylinder.

Remove cylinder head gasket and scrape remaining residues.

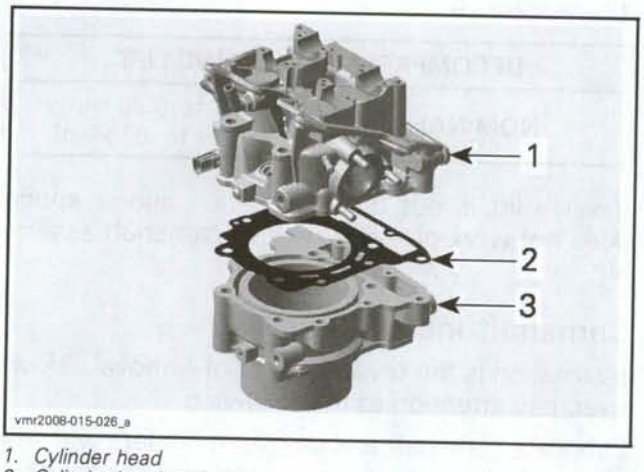

1. *Cylinder head*
2. *Cylinder head gasket*
3. *Cylinder*

Remove cylinder base gasket and scrape remaining residues.

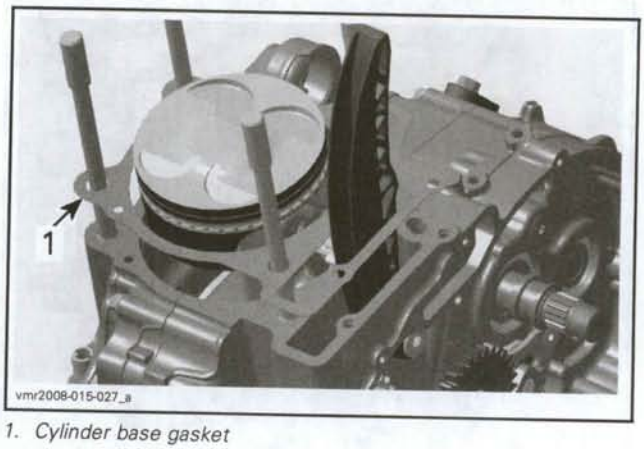

1. *Cylinder base gasket*

Cylinder Head Inspection

Check for cracks between valve seats or other damages, if so, replace cylinder head.

Clean oil support through cylinder head from contamination.

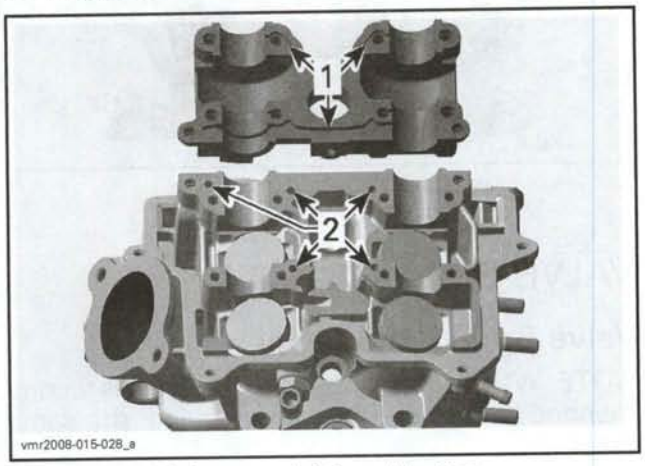

1. Oil ducts to lubricate camshaft journal bearings
2. Oil bores

Check valve lifter bucket bore for wear or scoring.

Check camshaft journal bearing bores for wear or scoring.

To measure the camshaft journal bearing bores, install camshaft holder according to the specified torque and measure diameter with a bore gauge.

CAMSHAFT JOURNAL BEARING (CAMSHAFT HOLDER INSTALLED)	
NEW	24.007 to 24.020 mm (.9452 to .9457 in)
SERVICE LIMIT	24.040 mm (.9461 in)

Cylinder Head Installation

For installation, reverse the removal procedure. Pay attention to the following details.

Assemble cylinder and cylinder head using a **NEW** gasket.

Install cylinder screws M8 and pre-tighten them to 15 N•m (133 lbf•**in**) according to following tightening sequence.

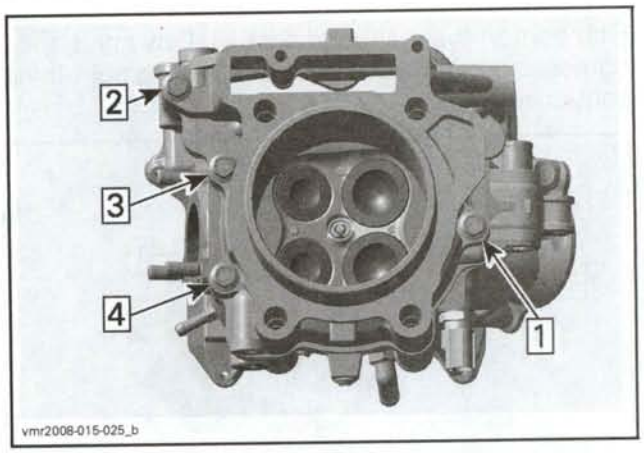

Apply Loctite 5910 (P/N 293 800 081) on crankcase sealing surface in the areas crankcase gasket/cylinder base gasket, chain duct and cooling circuit as shown in the following illustration.

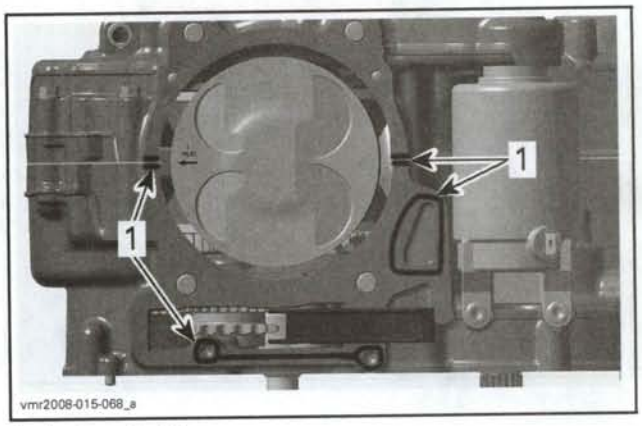

1. Apply sealant here

Apply engine oil in the bottom area of the cylinder bore, piston rings and also on the band of the piston ring compressor.

Install the piston ring compressor such as the Snap-on piston ring compressor tool (P/N RC-980)on piston.

Slide timing chain through chain duct, then slide cylinder with cylinder head over piston.

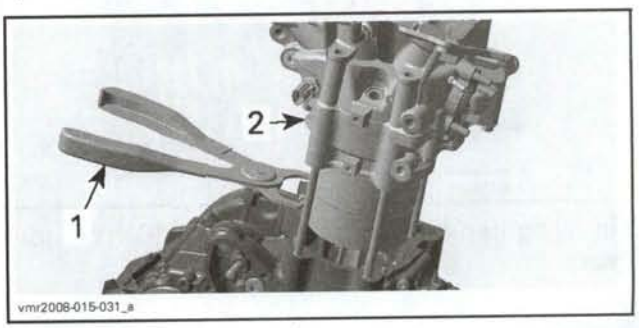

1. Piston ring compressor tool
2. Cylinder with cylinder head assembly

First tighten cylinder head nuts M10 by hand, then tighten them according to the following tightening sequence.

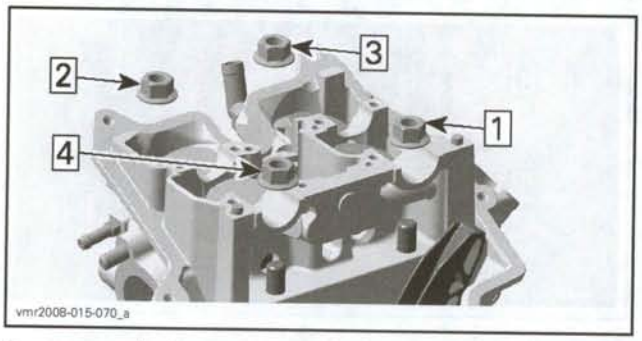

Torque cylinder screws M8 underneath intake port.

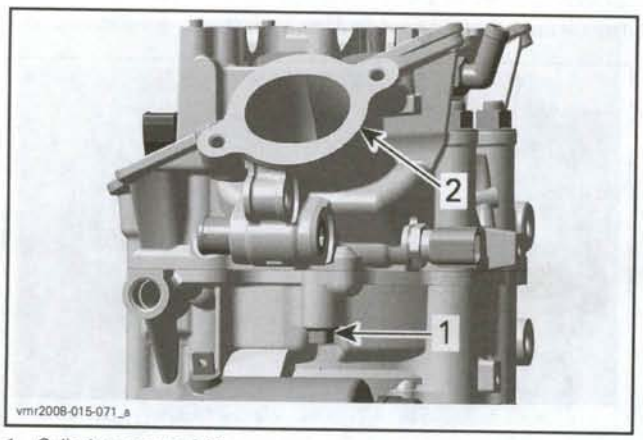

1. Cylinder screws M8
2. Intake port

Then torque cylinder screws M8 underneath exhaust port according to the following tightening sequence.

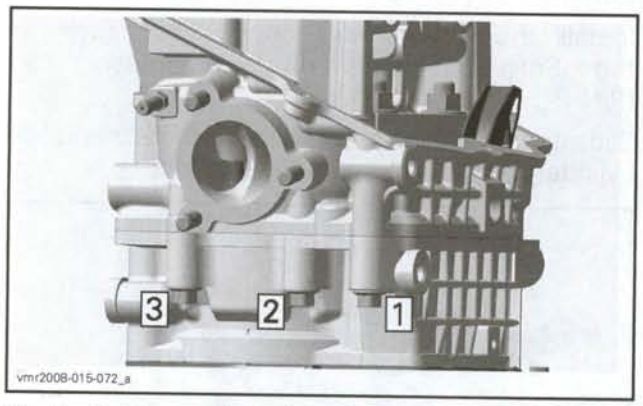

Finally tighten cylinder head screws M6 in cylinder head.

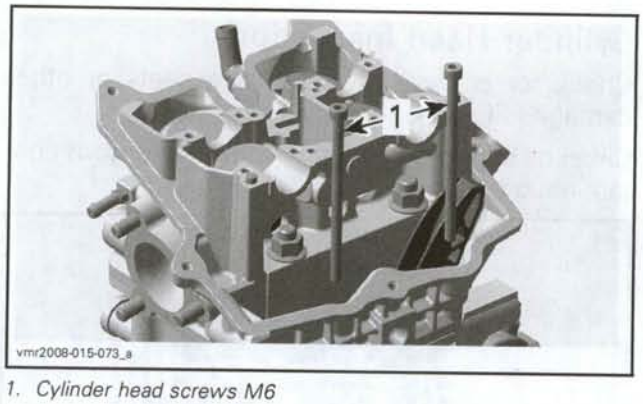

1. Cylinder head screws M6

VALVE SPRINGS

Valve Springs Removal

NOTE: Whenever valves are removed, it is recommended to replace valve stem seal at the same time.

Remove:
- Cylinder head
- Camshafts
- Valve lifter buckets and adjustment shims.

Compress valve spring, use the spring compressor (P/N 529 035 724) and the compressor cup (P/N 529 036 073).

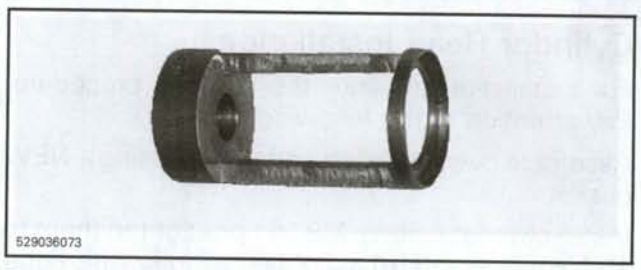

Remove valve cotters.

Remove spring compressor, valve spring retainer and outer and inner valve spring.

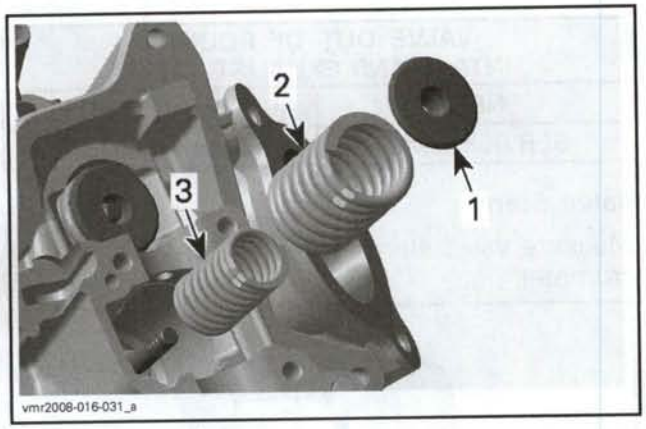

1. *Valve spring retainer*
2. *Outer valve spring*
3. *Inner valve spring*

Valve Springs Inspection

Check valve spring for rust or corrosion and free length.

VALVE SPRING FREE LENGTH	
INNER VALVE SPRING	
NEW	39.24 mm (1.5449 in)
SERVICE LIMIT	38.00 mm (1.4961 in)
OUTER VALVE SPRING	
NEW	41.97 mm (1.6524 in)
SERVICE LIMIT	40.50 mm (1.5945 in)

Valve Springs Installation

For installation reverse the removal procedure. Pay attention to the following details.

Colored area of the valve springs must be placed on top.

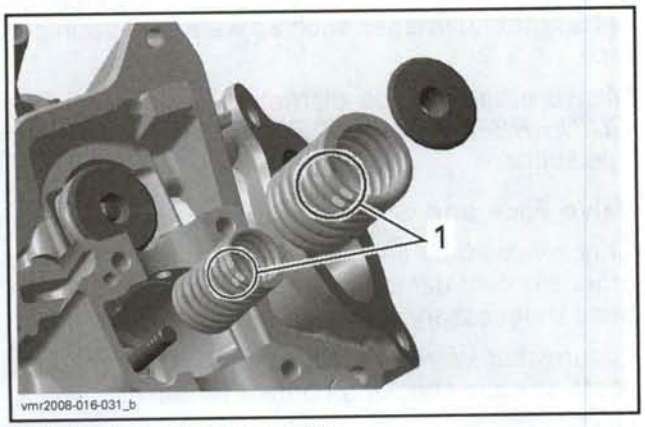

1. *Colored area of the valve spring*

To ease installation of cotters apply some oil or grease on them, so that they remain in place while releasing the spring.

Install valve cotters. Make sure valve cotters are properly engaged into valve stem grooves.

CAUTION: Improperly locked valve springs will cause engine damage.

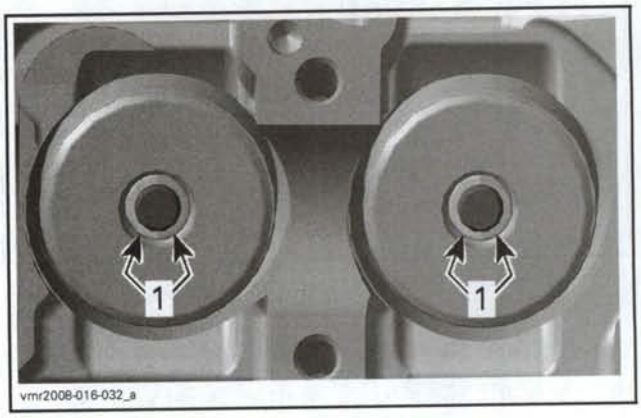

1. *Valve cotters*

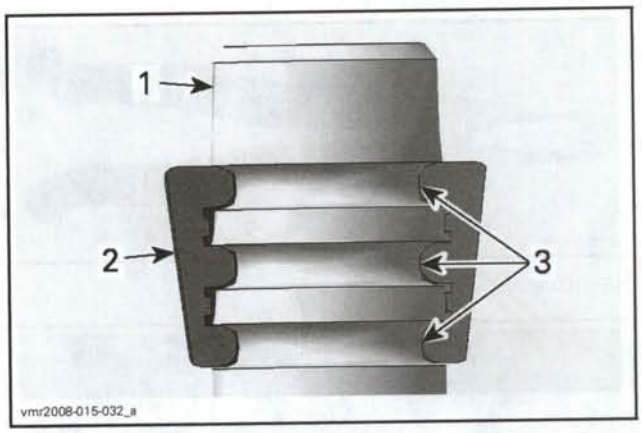

1. *Valve stem*
2. *Valve cotter*
3. *Valve stem grooves*

After springs are installed, ensure it is properly locked by tapping on valve stem end with a soft hammer so that valve opens and closes a few times.

VALVE

Valve Removal

Remove *VALVE SPRINGS*, see procedure in this section.

Push the valve stem, then pull valves out of cylinder head.

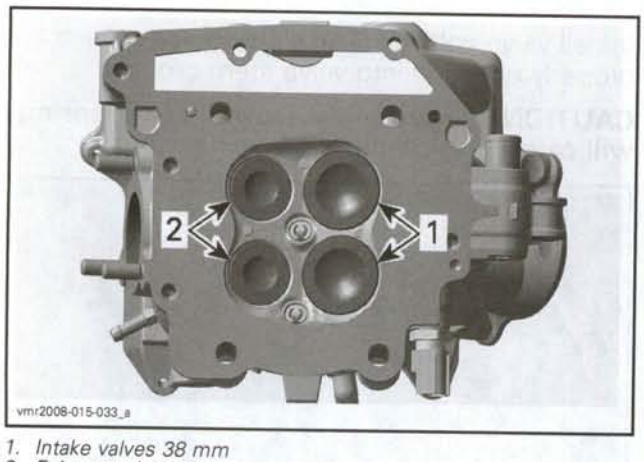

1. Intake valves 38 mm
2. Exhaust valves 31 mm

Valve Stem Seal Removal

Remove and discard valve stem seal with special pliers such as the Snap-on valve stem seal pliers (P/N YA 8230).

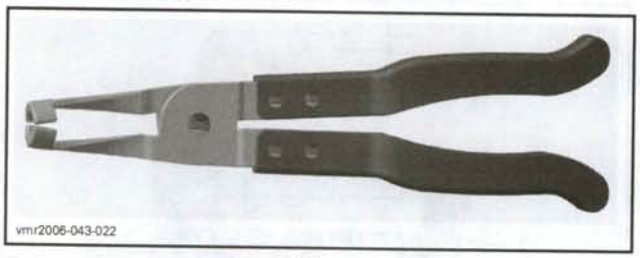

Remove valve spring shim.

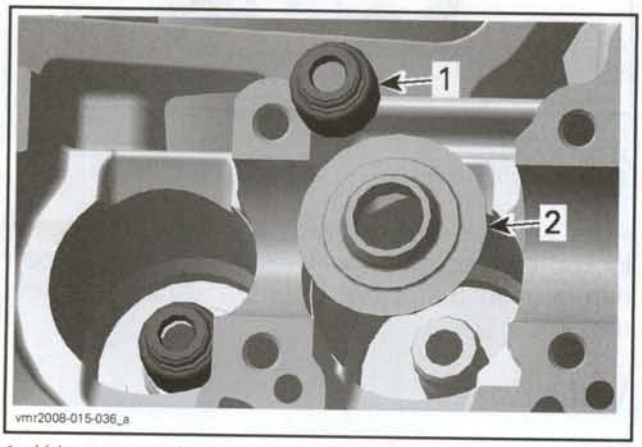

1. Valve stem seal
2. Valve spring shim

Valve Inspection

Valve

Inspect valve surface, check for abnormal stem wear and bending. If out of specification, replace by a new one.

VALVE OUT OF ROUND INTAKE AND EXHAUST VALVE	
NEW	0.005 mm (.0002 in)
SERVICE LIMIT	0.06 mm (.0024 in)

Valve Stem

Measure valve stem in three places using a micrometer.

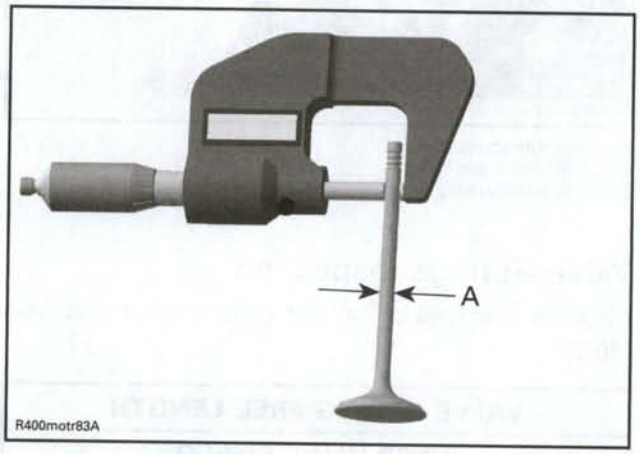

A. Valves stem diameter

VALVE STEM DIAMETER	
INTAKE VALVE	
NEW	5.961 to 5.975 mm (.2347 to .2352 in)
SERVICE LIMIT	5.950 mm (.2343 in)
EXHAUST VALVE	
NEW	5.946 to 5.960 mm (.2341 to .2346 in)
SERVICE LIMIT	5.935 mm (.2337 in)

Change valve if valve stem is out of specification or has other damages such as wear or friction surface.

Measure valve guide diameter. Refer to *VALVE GUIDE REPLACEMENT PROCEDURE* further in this section.

Valve Face and Seat

Check valve face and seat for burning, pitting and other signs of damage. Replace valve or cylinder head if necessary.

Ensure that valves seat properly. Apply marking paste to ease checking contact pattern.

NOTE: The location of contact area should be in center of valve face.

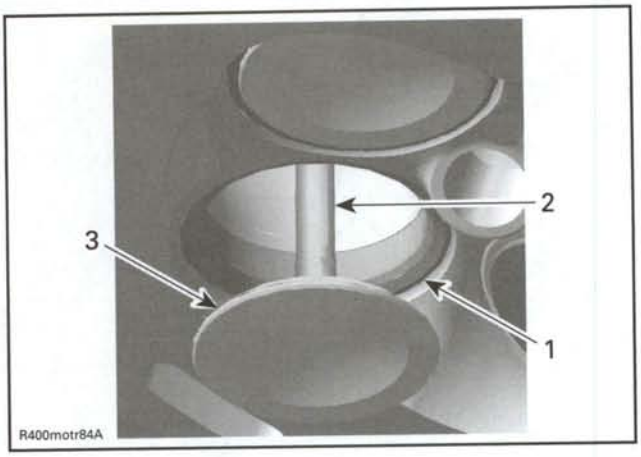

1. Valve seat
2. Exhaust valve contaminated area
3. Valve face (contact surface to valve seat)

Apply some lapping compound to valve face and work valve on its seat with a lapping tool such as the Snap-on valve holder (P/N VL2).

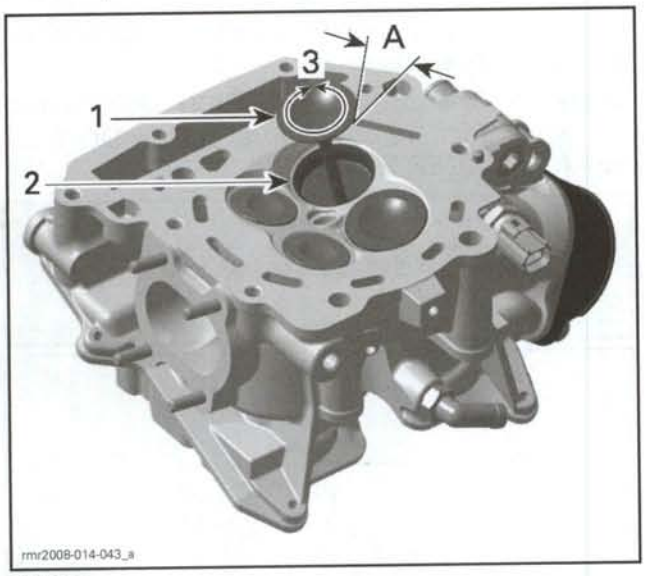

TYPICAL
1. Valve seat
2. Valve face (contact surface to valve seat)
3. Turn valve while pushing against cylinder head
A. Valve seat angle 45°

Repeat procedure until valve seat/valve face fits together.

Measure valve seat width, using a caliper.

VALVE SEAT CONTACT WIDTH	
INTAKE VALVE	
NEW	1.00 to 1.40 mm (.0394 to .0551 in)
SERVICE LIMIT	1.60 mm (.0630 in)
EXHAUST VALVE	
NEW	1.25 to 1.55 mm (.0492 to .0610 in)
SERVICE LIMIT	1.80 mm (.0709 in)

If valve seat contact width is too wide, too narrow or has dark spots, replace the cylinder head.

Valve Installation

For installation reverse the removal procedure. Pay attention to the following details.

Install valve spring shim.

Install a **NEW** valve stem seal whenever valve is removed.

Apply engine oil on valve stem.

Carefully slide a valve stem through cylinder head and valve stem seal.

CAUTION: Be careful when valve stem is passed through sealing lips of valve stem seal.

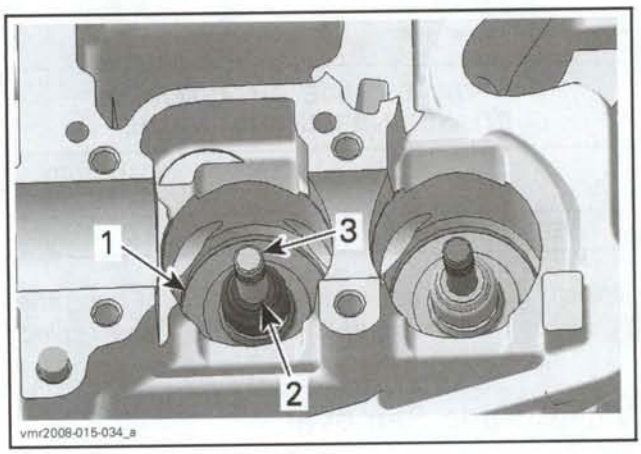

1. Valve spring shim
2. Sealing lips of valve stem seal
3. Valve stem

Install valve springs. See procedure in this section.

Install all other removed parts.

VALVE GUIDE

Disassembly

Using procedures described in this section, remove the following parts:

- Cylinder head
- Valve springs
- Valves (including valve stem seal and shim).

Valve Guide Inspection

Measure valve guide in three places using a small bore gauge.

NOTE: Clean valve guide to remove carbon deposits before measuring.

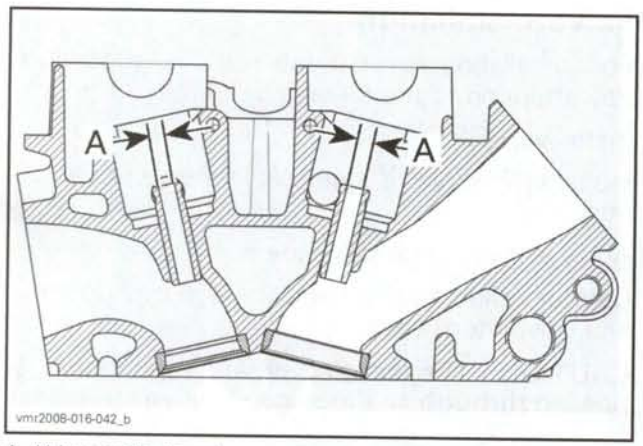

A. Valves guide diameter

VALVE GUIDE DIAMETER INTAKE AND EXHAUST VALVE	
NEW	6.006 to 6.018 mm (.2365 to .2369 in)
SERVICE LIMIT	6.050 mm (.2382 in)

If valve guide is out of specification or has other damages such as wear or friction surface, replace it.

Valve Guide Removal

The sharp edge near the top of the valve guide must be removed using a special reamer. Otherwise the sharp edge will foul the valve guide hole in the head and destroy the head when removing the valve guide.

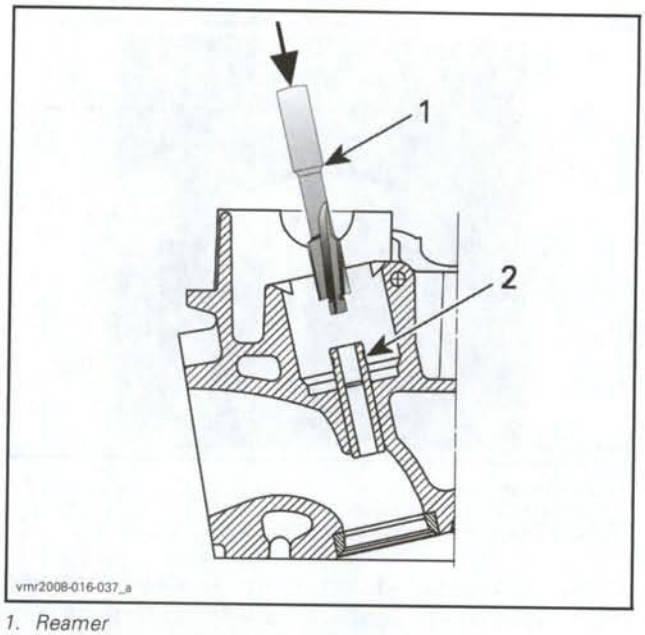

1. Reamer
2. Valve guide, sharp edge

Clean valve guide area from contamination before removing valve guide.

Using the valve guide remover (P/N 529 036 074) and a hammer, remove valve guide. **DO NOT HEAT CYLINDER HEAD.**

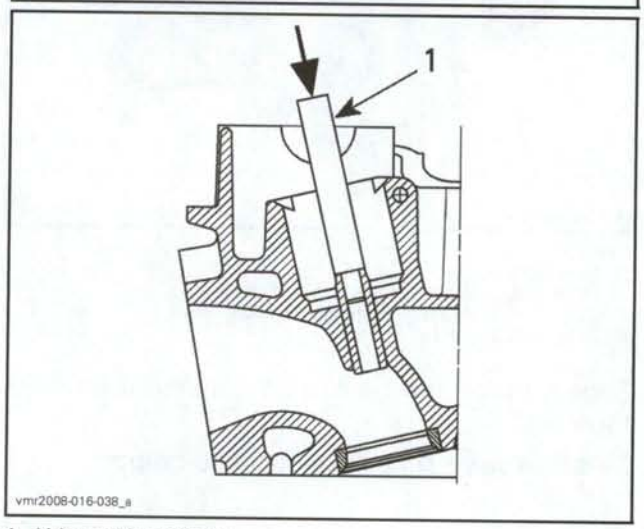

1. Valve guide remover

Check the valve guide bore in the head for scoring or other damage. If any signs of galling are visible in the bore, the cylinder head must be replaced.

Valve Guide Installation

For installation, reverse the removal procedure. Pay attention to the following details.

Intake and exhaust valve guides are different. Intake valve guide has a longer chamfer.

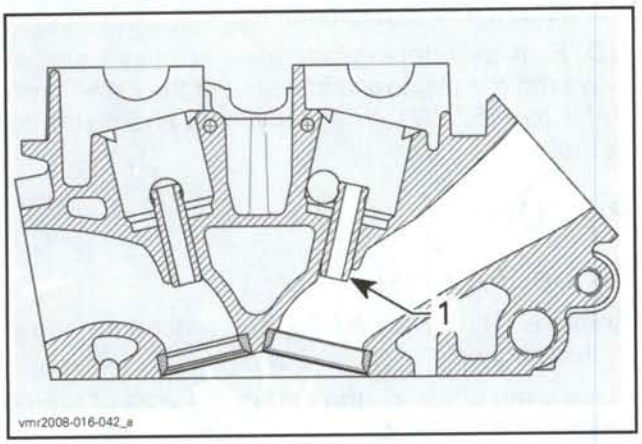

1. Longer chamfer on intake valve guide

Clean the valve guide bore before installing the NEW valve guide into cylinder head.

NOTE: Apply Molykote G-n (P/N 420 297 433) on valve guide and in valve guide bore, prior to install it into the cylinder head.

Use the valve guide installer (P/N 529 036 075) to install valve guide.

CAUTION: Push valve guide in the cold cylinder head as per following illustration.

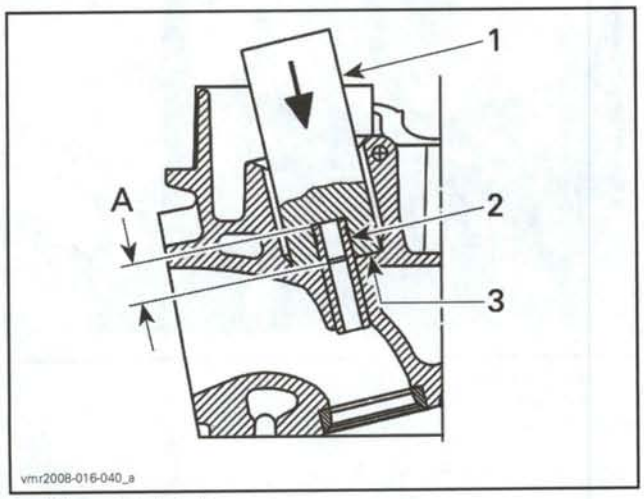

1. Valve guide installer
2. Valve guide
3. Thrust surface of cylinder head
A. Measurement from thrust surface to valve guide top

VALVE GUIDE MEASUREMENT "A"	
NEW	13.10 to 13.50 mm (.5157 to .5315 in)

Valve has guide to be adjusted in diameter by using a reamer.

NOTE: Ensure to turn reamer in the right direction. Use cutting oil and make brakes to clean reamer/valve guide from metal shavings.

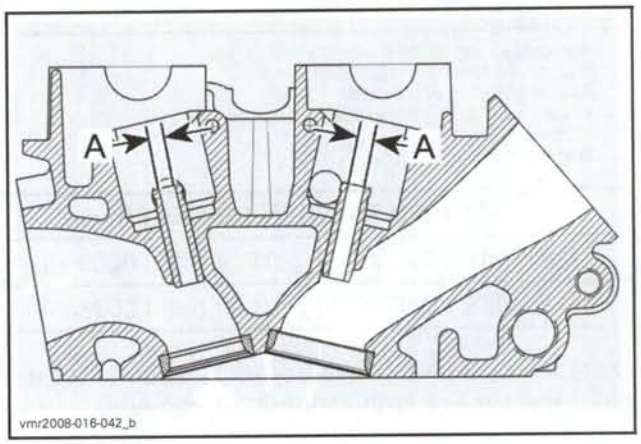

A. Valve guide diameter

VALVE GUIDE DIAMETER INTAKE AND EXHAUST VALVE	
NEW	6.006 to 6.018 mm (.2365 to .2369 in)

NOTE: After valve guide installation, ensure valve seats properly against cylinder head. Refer to *VALVE INSPECTION* in this section.

CYLINDER

Cylinder Removal

For cylinder removal refer to *CYLINDER HEAD REMOVAL* above.

NOTE: If the cylinder head does not have to be disassembled, do not separate cylinder head from cylinder.

Cylinder Inspection

Check cylinder for cracks, scoring and wear ridges on the top and bottom of the cylinder.

Cylinder Taper

Measure cylinder bore and if it is out of specifications, replace cylinder and piston ring set.

Measure cylinder bore at 3 recommended positions. See the following illustration.

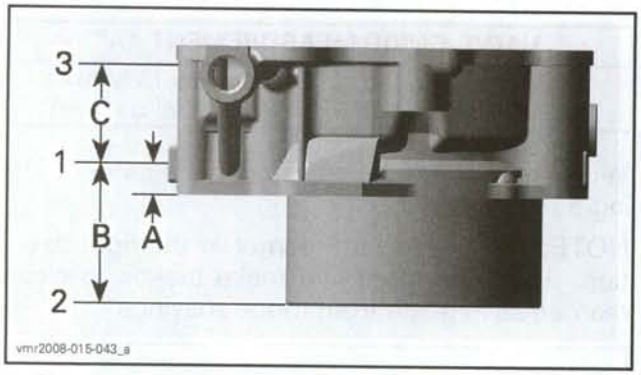

1. First measuring of diameter
2. Second measuring of diameter
3. Third measuring of diameter
A. 16 mm (.630 in) from cylinder bottom
B. 44 mm (1.730 in)
C. 38 mm (1.500 in)

CYLINDER TAPER IN DIAMETER	
MAXIMUM NEW	0.024 mm (.0009 in)
SERVICE LIMIT	0.090 mm (.0035 in)

Distance between measurements should not exceed the service limit mentioned above.

Cylinder Out of Round

Measure cylinder diameter in piston axis direction from top of cylinder. Take another measurement 90° from first one and compare.

NOTE: Use the same measuring points like described in *CYLINDER TAPER* above.

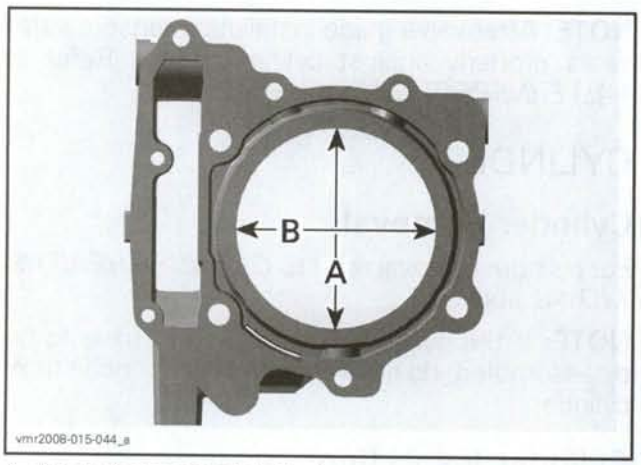

A. Perpendicular to crankshaft axis
B. Parallel to crankshaft axis

CYLINDER OUT OF ROUND	
MAXIMUM NEW	0.015 mm (.0006 in)
SERVICE LIMIT	0.020 mm (.0008 in)

Chain Tensioner Hole

Ensure that chain tensioner and hole in the cylinder are in perfect condition.

Cylinder Installation

For cylinder installation refer to *CYLINDER HEAD INSTALLATION* in this section.

NOTE: If cylinder replacement is necessary, always replace cylinder and piston at the same time. Refer to *PISTON* to match cylinder and piston together.

PISTON

Piston Removal

Remove *CYLINDER HEAD*, see procedure above in this section.

Place a rag under piston and in the area of timing chain compartment.

Remove and discard only one piston circlip.

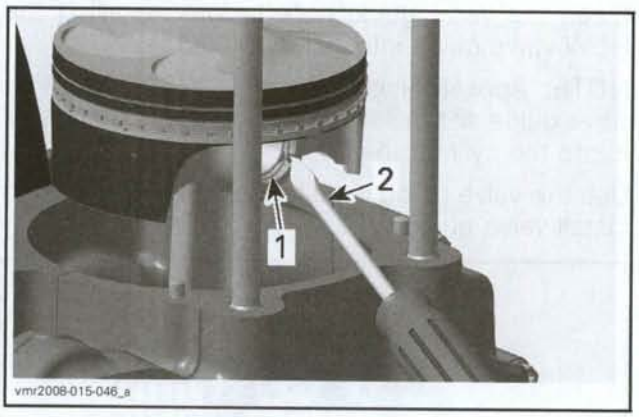

1. Piston circlip
2. Special shaped screw driver

Push piston pin out of piston.

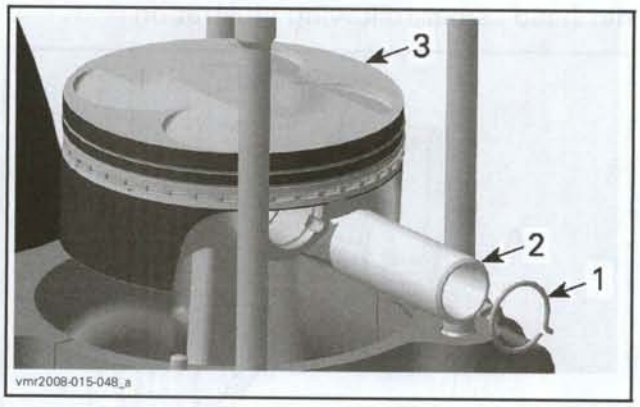

1. Piston circlip
2. Piston pin
3. Piston

Detach piston from connecting rod.

NOTE: Take care to avoid touching the oil spray nozzle with the connecting rod.

Piston Inspection

Piston

Inspect piston for scoring, cracking or other damages. Replace piston and piston rings if necessary.

Using a micrometer, measure piston at 10 mm (.394 in) perpendicularly (90°) to piston pin.

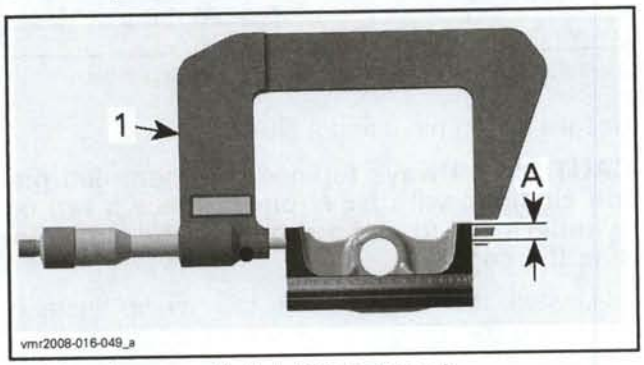

1. Measuring perpendicularly (90°) to piston pin
A. 10 mm (.394 in)

The measured dimension should be as described in the following table. If not, replace piston.

PISTON MEASUREMENT	
SIZE "1" / "A"	
NEW	96.930 to 96.960 mm (3.8161 to 3.8173 in)
SERVICE LIMIT	96.910 mm (3.8153 in)
SIZE "2" / "B"	
NEW	96.940 to 96.970 mm (3.8165 to 3.8177 in)
SERVICE LIMIT	96.920 mm (3.8157 in)

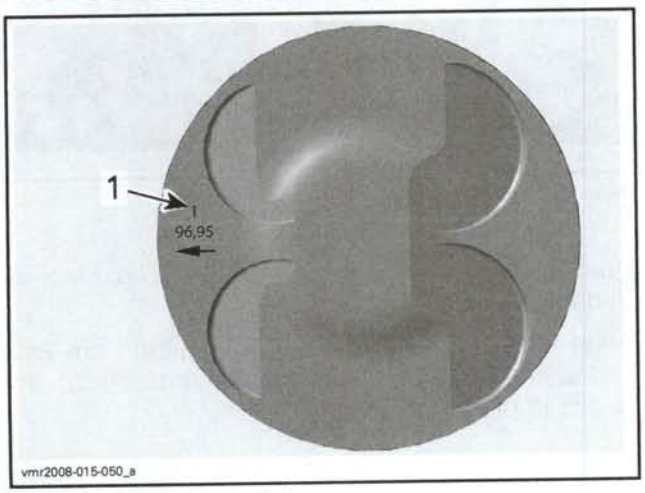

1. Size code "1" or "2" of piston

NOTE: If the wear limit is exceeded, a new piston must be used or the cylinder, complete with piston, has to be replaced.

Piston/Cylinder Clearance

Adjust and lock a micrometer to the piston dimension. Make sure piston is within specification.

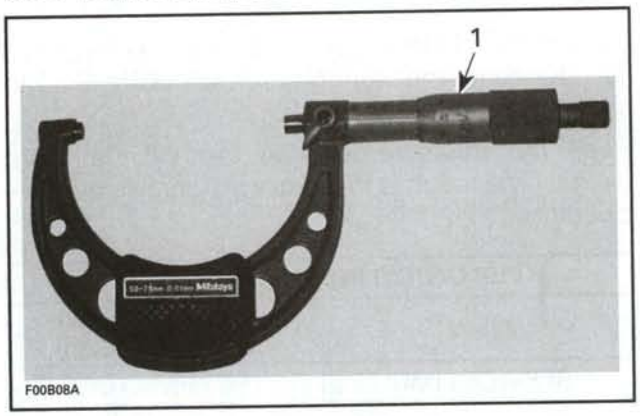

1. Micrometer set to the piston dimension

With the micrometer set to the dimension, adjust a cylinder bore gauge to the micrometer dimension and set the indicator to 0 (zero).

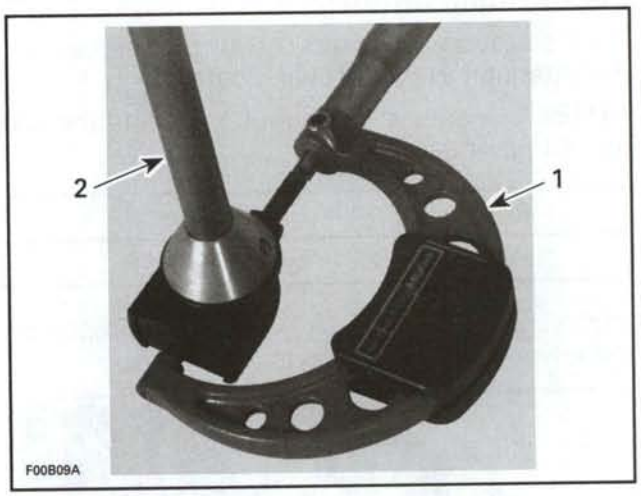

1. Use the micrometer to set the cylinder bore gauge
2. Dial bore gauge

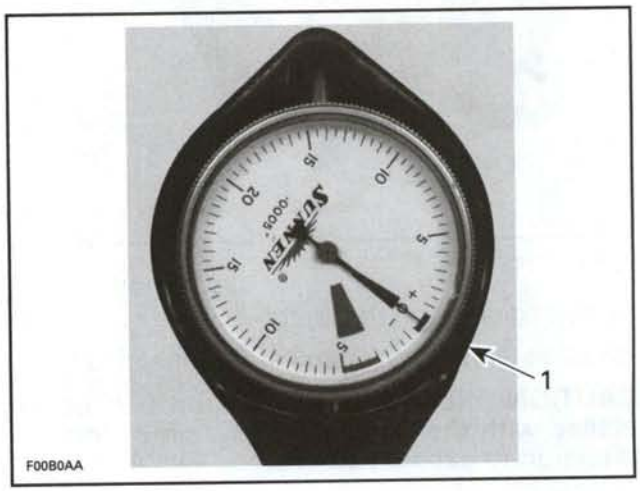

TYPICAL
1. Indicator set to 0 (zero)

NOTE: Make sure the cylinder bore gauge indicator is set exactly at the same dimension as with the micrometer, otherwise the reading will be false.

Position the dial bore gauge 20 mm (.787 in) above cylinder base, measuring perpendicularly (90°) to piston pin axis.

Read the measurement on the cylinder bore gauge. The result is the exact piston/cylinder wall clearance.

PISTON/CYLINDER CLEARANCE	
NEW	0.040 to 0.085 mm (.0016 to .0033 in)
SERVICE LIMIT	0.090 mm (.0035 in)

If clearance exceeds specified tolerance, replace piston by a new one and measure piston/cylinder clearance again.

Piston Installation

For installation, reverse the removal procedure. Pay attention to the following details.

NOTE: Take special care when matching the piston with cylinder:

Piston size "1" — cylinder size "A"
Piston size "2" — cylinder size "B"

The cylinder size code "A" or "B" is stamped on the lower side of the cylinder.

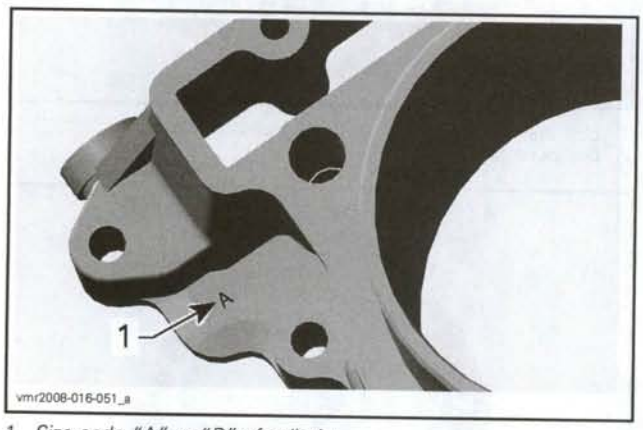

1. Size code "A" or "B" of cylinder

Apply engine oil on the piston pin.

Insert piston pin into piston and connecting rod.

CAUTION: Take care that piston will be installed with the punched arrow on piston top direction to exhaust valves.

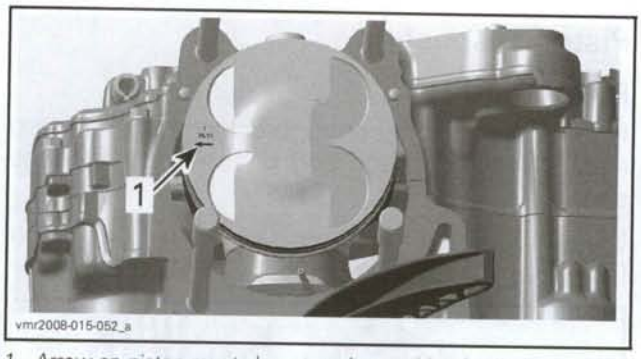

1. Arrow on piston must show to exhaust side of cylinder

Secure piston pin using a NEW circlip.

CAUTION: Always replace disassembled piston circlip(s) with NEW ones. Place a rag on cylinder base to avoid dropping the circlip inside the engine.

To install the circlip, use the circlip installer (P/N 529 036 083).

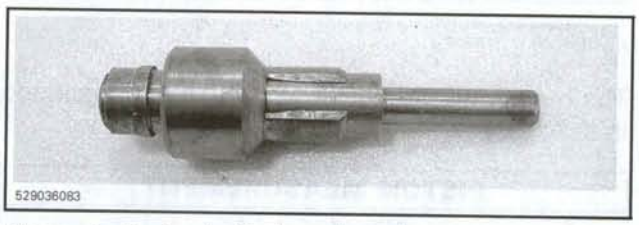

Place circlip in circlip installer sleeve.

Align circlip hook with circlip installer sleeve groove.

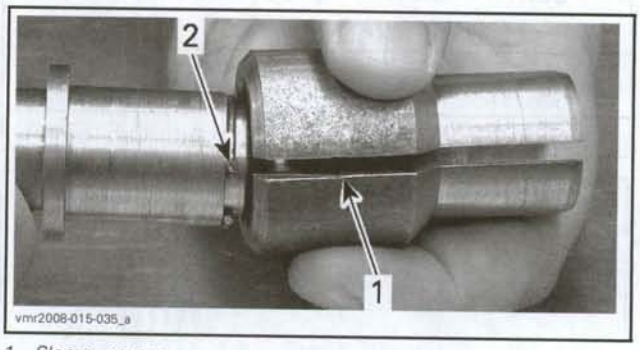

1. Sleeve groove
2. Circlip hook

Push circlip installer handle until circlip reaches middle of circlip installer sleeve.

Align circlip installer sleeve with piston pin axis and push circlip installer handle until circlip engages in piston groove.

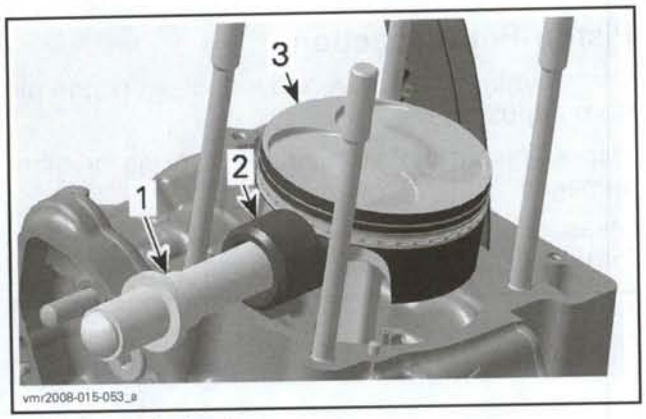

1. Circlip installer handle
2. Circlip installer sleeve
3. Piston

NOTE: Take care that the hook of the piston circlip is positioned properly.

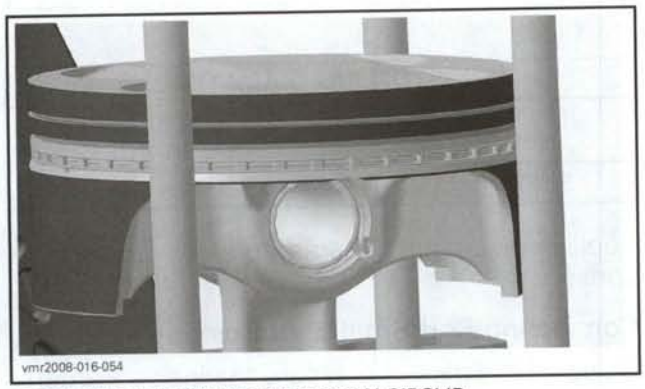

CORRECT POSITION OF THE PISTON CIRCLIP

PISTON RINGS

Piston Rings Removal

Remove:
- Cylinder head
- Piston.

Piston Rings Inspection

Using a feeler gauge measure each ring/piston groove clearance. If the clearance is too large, the piston and the piston rings should be replaced.

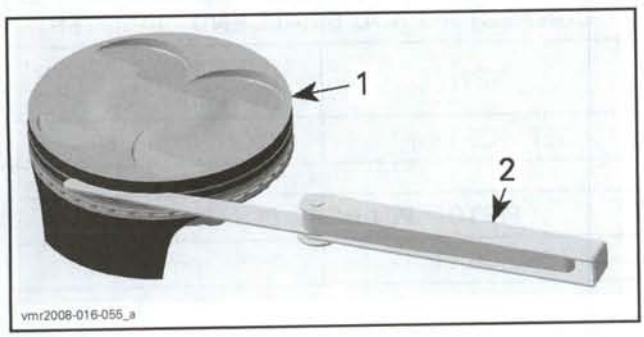

1. Piston
2. Feeler gauge

RING/PISTON GROOVE CLEARANCE	
UPPER COMPRESSION RING	
NEW	0.025 to 0.070 mm (.0010 to .0028 in)
SERVICE LIMIT	0.120 mm (.0047 in)
LOWER COMPRESSION RING	
NEW	0.025 to 0.070 mm (.0010 to .0028 in)
SERVICE LIMIT	0.120 mm (.0047 in)
OIL SCRAPER RING	
NEW	0.015 to 0.060 mm (.0006 to .0024 in)
SERVICE LIMIT	0.100 mm (.0039 in)

Measure ring end gap.

RING END GAP	
UPPER COMPRESSION RING	
NEW	0.15 to 0.40 mm (.0059 to .0157 in)
SERVICE LIMIT	1.00 mm (.0394 in)
LOWER COMPRESSION RING	
NEW	0.15 to 0.40 mm (.0059 to .0157 in)
SERVICE LIMIT	1.00 mm (.0394 in)
OIL SCRAPER RING	
NEW	0.15 to 0.35 mm (.0059 to .0138 in)
SERVICE LIMIT	1.00 mm (.0394 in)

To measure the ring end gap place the ring in the cylinder in the area of 8 to 16 mm (.315 to .630 in) from top of cylinder.

NOTE: In order to correctly position the ring in the cylinder, use piston as a pusher.

Using a feeler gauge, check ring end gap. Replace ring if gap exceeds above described specified tolerance.

Piston Rings Installation

Using fingers only, install the oil scraper ring first with marking "O" on top.

NOTE: First install spring and then the ring of oil scraper ring.

Using a ring expander, install the lower compression ring with the stamping "E" and "TOP " facing up, then the upper compression ring with the stamping "E" and "TOP" facing up.

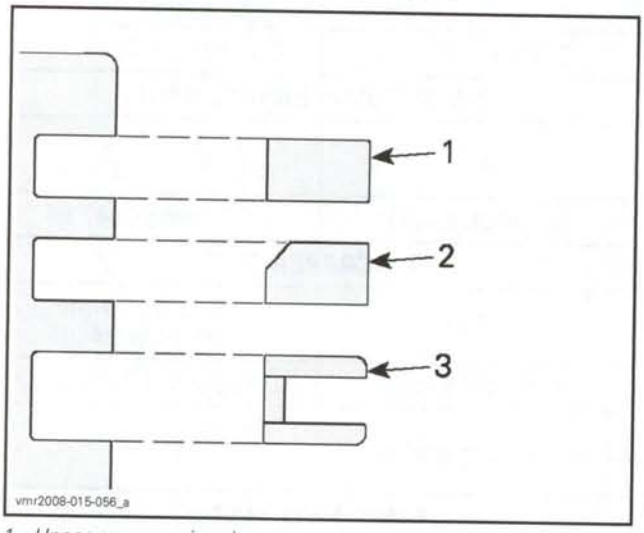

1. *Upper compression ring*
2. *Lower compression ring*
3. *Oil scraper ring*

Check that rings rotate smoothly after installation.

Space the piston ring end gaps 120° apart and do not align the gaps with the piston pin bore or the thrust side axis.

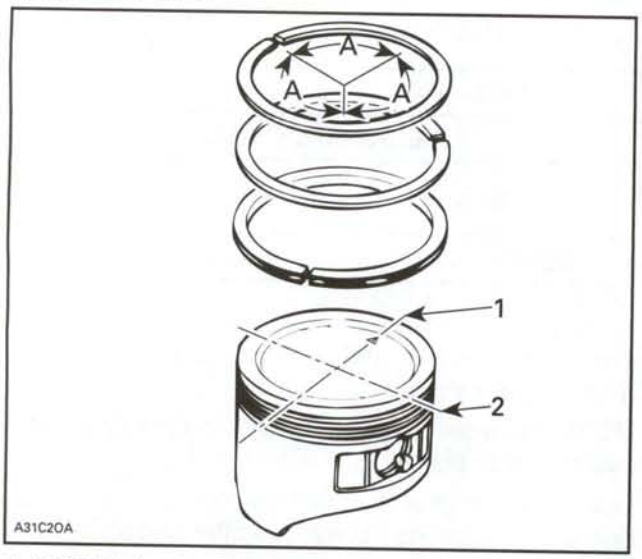

1. *DO NOT align ring gap with piston thrust side axis*
2. *DO NOT align ring gap with piston pin bore axis*

A. 120°

PISTON PIN

Piston Pin Removal

For piston pin removal see *PISTON* above.

Piston Pin Inspection

Using synthetic abrasive woven, clean piston pin from deposits.

Inspect piston pin for scoring, cracking or other damages.

Measure piston pin. See the following illustration for the proper measurement positions.

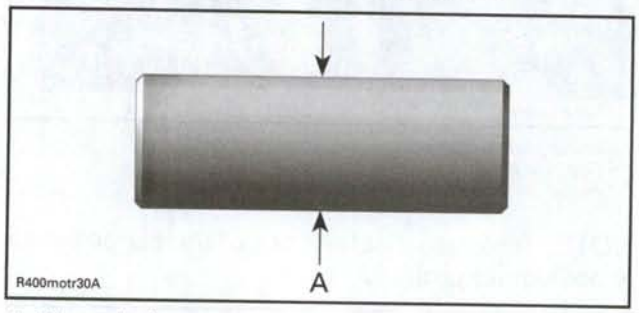

A. Piston pin diameter

PISTON PIN DIAMETER	
NEW	19.996 to 20.000 mm (.7872 to .7874 in)
SERVICE LIMIT	19.990 mm (.7870 in)

Replace piston pin if diameter is out of specifications.

Connecting Rod Small End Bushing

Using a bore gauge, measure the inside diameter of connecting rod small end bushing.

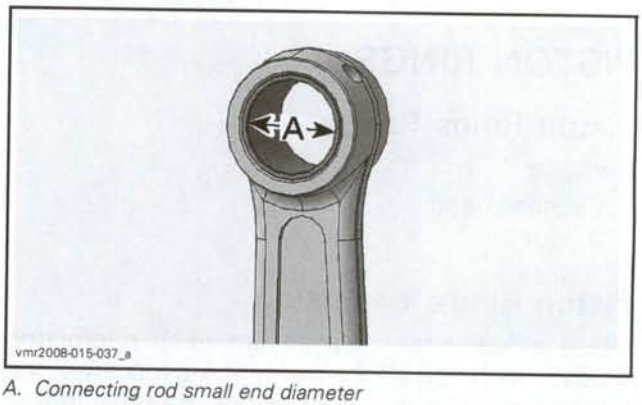

A. Connecting rod small end diameter

CONNECTING ROD SMALL END DIAMETER	
NEW	20.015 to 20.025 mm (.7880 to .7884 in)
SERVICE LIMIT	20.040 mm (.7890 in)

PISTON PIN BORE CLEARANCE	
SERVICE LIMIT	0.050 mm (.0020 in)

Piston Pin Installation

For installation, reverse the removal procedure. Pay attention to the following details.

NOTE: Take care that the hook of the piston circlip is positioned properly.

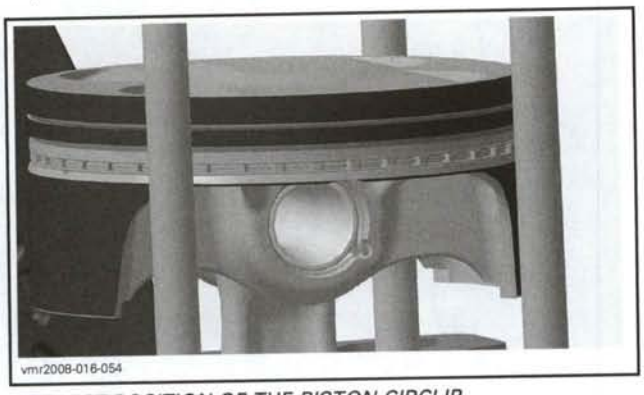

CORRECT POSITION OF THE PISTON CIRCLIP

CRANKCASE/CRANKSHAFT

SERVICE TOOLS

Description	Part Number	Page
crankshaft protector	420 876 557	125
handle	420 877 650	124
bolt M16 x 1,5 x 65 mm	529 035 549	120
oil seal installer	529 035 854	117
bearing heater	529 035 969	125
protection sleeve	529 036 068	117
oil seal installer	529 036 069	124
crankshaft locking tool	529 036 107	128
blind hole bearing puller set	529 036 117	123

SERVICE TOOLS – OTHER SUPPLIER

Description	Part Number	Page
bearing splitter	1123	124

SERVICE PRODUCTS

Description	Part Number	Page
pulley flange cleaner	413 701 809	118, 121

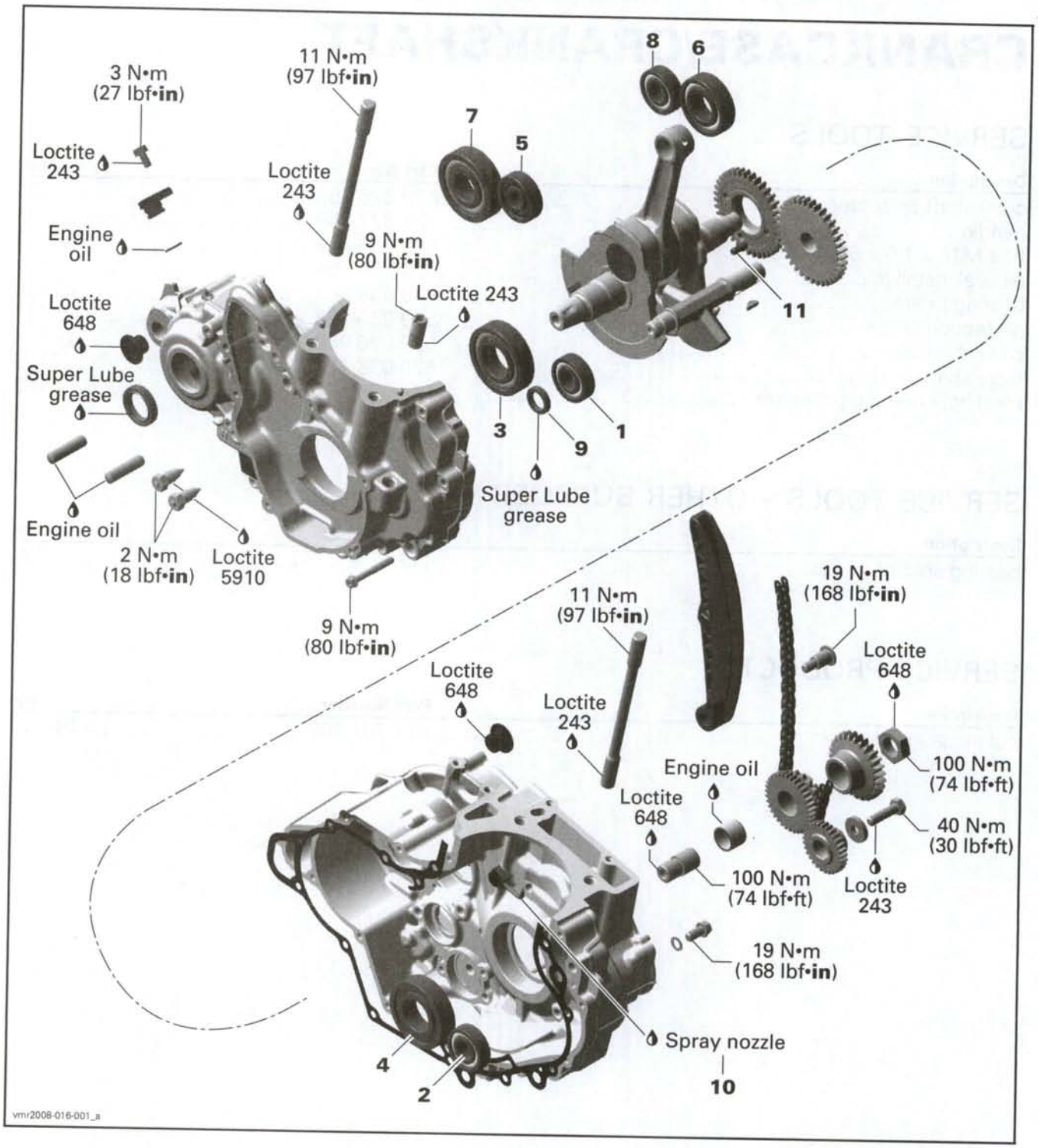
3 N•m
(27 lbf•in)
Loctite
243
Engine
oil
Loctite
648
Super Lube
grease
Engine oil
2 N•m
(18 lbf•in)
Loctite
5910
11 N•m
(97 lbf•in)
Loctite
243
9 N•m
(80 lbf•in)
9 N•m
(80 lbf•in)
Loctite 243
Super Lube
grease
8
6
7
5
11
3
9
1
Loctite
648
11 N•m
(97 lbf•in)
Loctite
243
19 N•m
(168 lbf•in)
Loctite
648
100 N•m
(74 lbf•ft)
Engine oil
Loctite
648
40 N•m
(30 lbf•ft)
100 N•m
(74 lbf•ft)
Loctite
243
19 N•m
(168 lbf•in)
Spray nozzle
10
4
2
vmr2008-016-001_a

GENERAL

During assembly/installation, use the torque values and service products as in the exploded views.

Clean threads before applying a threadlocker. Refer to SELF-LOCKING FASTENERS and LOCTITE APPLICATION at the beginning of this manual for complete procedure.

⚠ WARNING

Torque wrench tightening specifications must strictly be adhered to.

PROCEDURES

MAIN SHAFT OIL SEAL

The main shaft oil seal can be removed without removing the engine from the vehicle.

Main Shaft Oil Seal Removal

Replace oil seal if it leaks, is brittle, hard or damaged.

Remove front sprocket and O-ring, refer to *FRONT SPROCKET* in the *DRIVE SYSTEM* section.

Remove oil seal.

NOTE: A small flat screw driver can be used to remove oil seal.

CAUTION: Be careful not to score main shaft and/or seat of oil seal in crankcase.

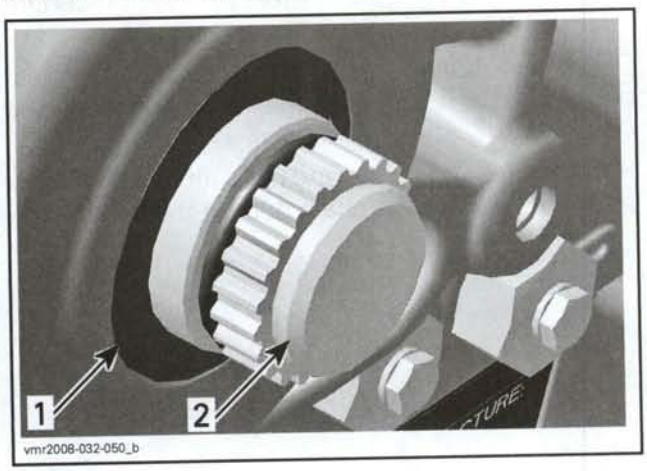

1. *Oil seal*
2. *Main shaft*

Main Shaft and Bearing Inspection

Check if running surface of main shaft is grooved. Replace if necessary, refer to *GEARBOX*.

Check bearing behind oil seal for contamination and/or metal shavings. Replace bearing if necessary.

Main Shaft Oil Seal Installation

Install protection sleeve (P/N 529 036 068) on main shaft. Apply some oil on sleeve to protect the seal.

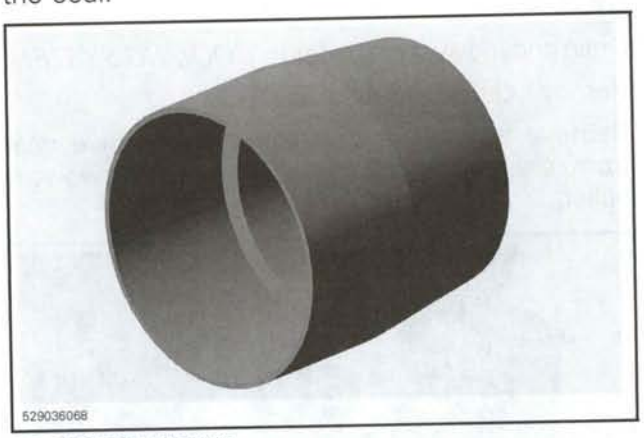

PROTECTION SLEEVE

Use oil seal installer (P/N 529 035 854) and push seal until it bottoms.

OIL SEAL INSTALLER

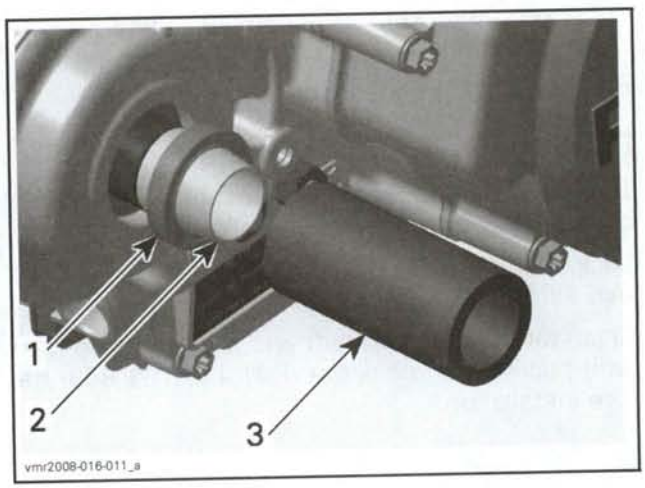

1. *Oil seal*
2. *Oiled protection sleeve*
3. *Oil seal installer*

PRIMARY DRIVE GEAR

Primary Drive Gear Removal

Engine removal from vehicle is not necessary.

Lock crankshaft at TDC, see *CRANKSHAFT LOCKING PROCEDURE* in *CRANKSHAFT* below.

Drain lubrication system, refer to *LUBRICATION SYSTEM.*

Drain cooling system, refer to *COOLING SYSTEM.*

Remove clutch, refer to *CLUTCH.*

Remove hex nut and detach primary drive gear from crankshaft by using a standard two-way puller.

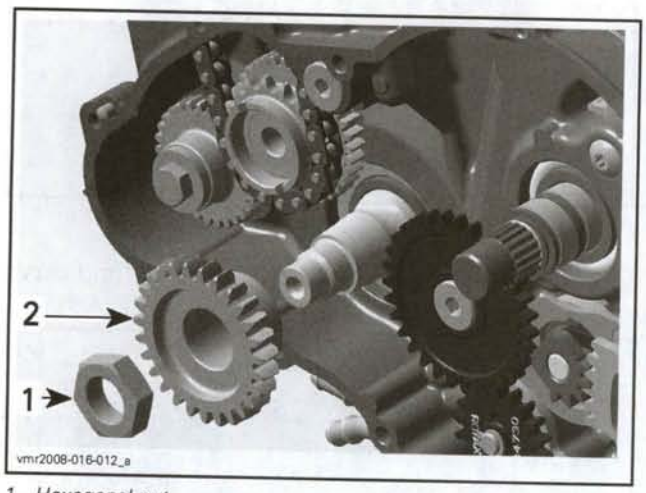

1. Hexagonal nut
2. Primary drive gear

Primary Drive Gear Inspection

Inspect the primary drive gear for chipped, worn or broken gear teeth. Check also mating gear of clutch drum.

Replace parts if necessary.

Primary Drive Gear Installation

The installation is the reverse of the removal procedure. Pay attention to the following details.

Lock crankshaft at TDC, see *CRANKSHAFT LOCKING PROCEDURE* in *CRANKSHAFT* below.

Clean tapers of crankshaft and primary drive gear with pulley flange cleaner (P/N 413 701 809) before installation.

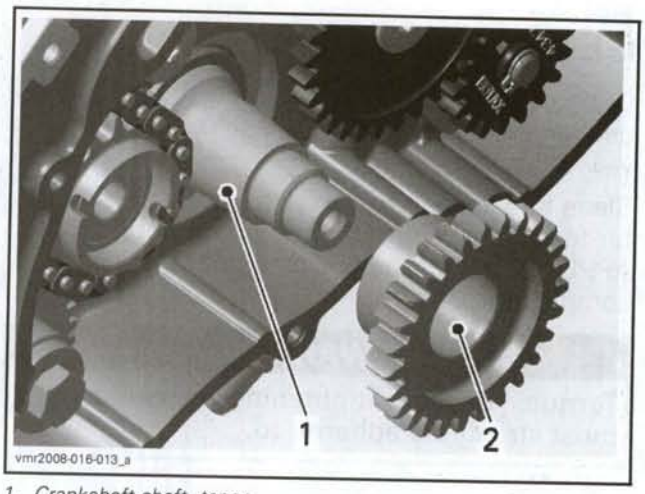

1. Crankshaft shaft, taper
2. Primary drive gear, taper

Properly install gear and nut.

TIMING CHAIN AND CHAIN TENSIONER GUIDE

Timing Chain and Chain Tensioner Guide Removal

CAUTION: Crankshaft must be locked at TDC of compression stroke, refer to *CRANKSHAFT* for the *CRANKSHAFT LOCKING PROCEDURE.*

Remove:

- Valve cover
- Timing chain tensioner
- Upper chain guide, timing gears and chain guide, refer to *CYLINDER HEAD/CYLINDER*
- Primary drive gear, refer to the procedure above.

Disengage timing chain from intermediate gear and remove it through the chain duct of the crankcase.

Remove bearing screw and take out chain tensioner guide through the chain duct of the cylinder.

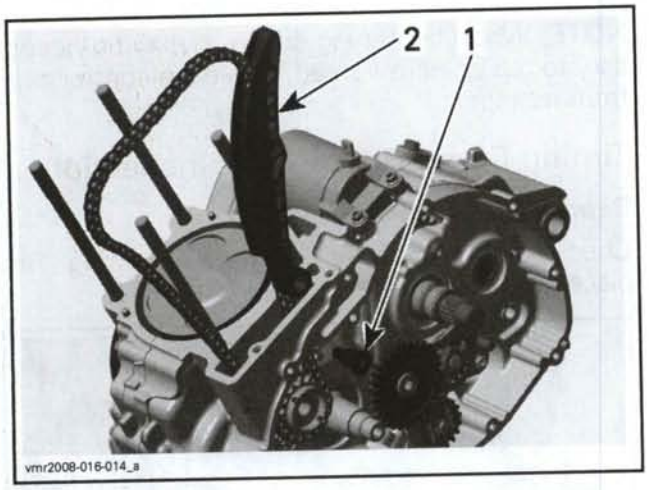

1. Bearing screw
2. Chain tensioner guide

Timing Chain and Chain Tensioner Guide Inspection

Timing Chain

NOTE: Check timing chain on camshaft timing gear for excessive radial play.

Check chain links condition for wear or other damage.

Measure timing chain length. Mark 21 pins on chain and measure the distance at the outer diameter of pins.

NOTE: Ensure to eliminate play in chain while measuring.

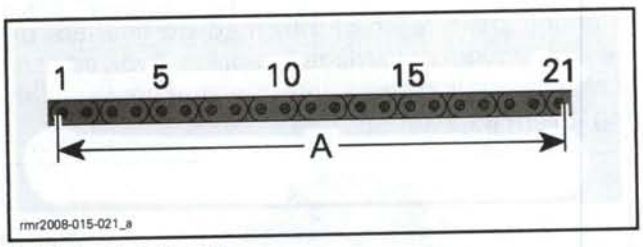

A. Timing chain length

TIMING CHAIN LENGTH (DISTANCE OF 21 PINS)	
SERVICE LIMIT	165.2 mm (6.504 in)

If chain is out of specification, excessively worn or damaged, replace it as a set (camshaft timing gears, intermediate gear and timing chain).

Chain Tensioner Guide

Check the chain tensioner guide for wear, cracks or other damage. Replace if necessary.

Timing Chain and Chain Tensioner Guide Installation

The installation is the reverse of the removal procedure. However, pay attention to the following.

To adjust the camshaft timing correctly refer to *TIMING CHAIN DRIVE GEARS INSTALLATION* in this section.

CAUTION: Improperly adjusted valve timing will damage engine components.

TIMING CHAIN DRIVE GEARS

Timing Chain Drive Gears Removal

CAUTION: Crankshaft must be locked at TDC of compression stroke, refer to *CRANKSHAFT LOCKING PROCEDURE* above.

Remove:
- Valve cover
- Timing chain tensioner
- Timing gears and chain guide, refer to *CYLINDER HEAD/CYLINDER*
- Primary drive gear, refer to the procedure above
- Timing chain.

Withdraw intermediate gear, needle bearing and thrust washer of bearing pin.

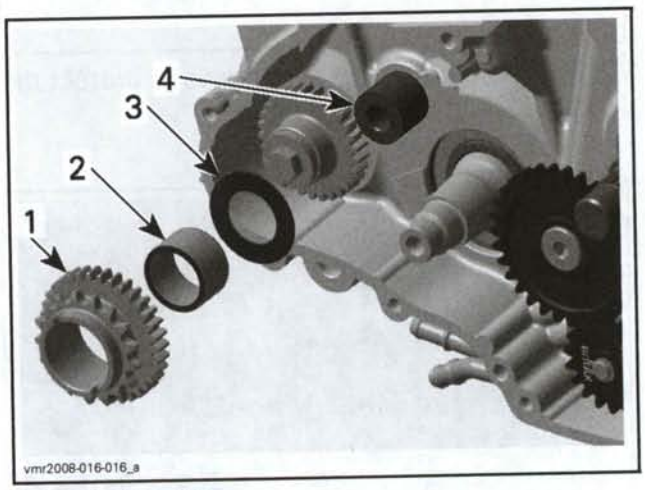

1. Intermediate gear
2. Needle bearing
3. Thrust washer
4. Bearing pin

Remove retaining screw and washer of control gear.

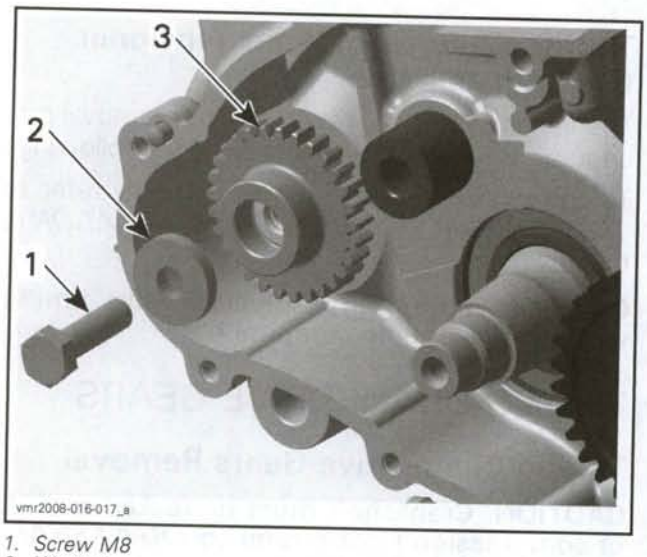

1. *Screw M8*
2. *Washer*
3. *Control gear*

Use the bolt M16 x 1,5 x 65 mm (P/N 529 035 549) to remove control gear.

Apply grease on the screw threads to protect the threads during removal.

Install puller in control gear.

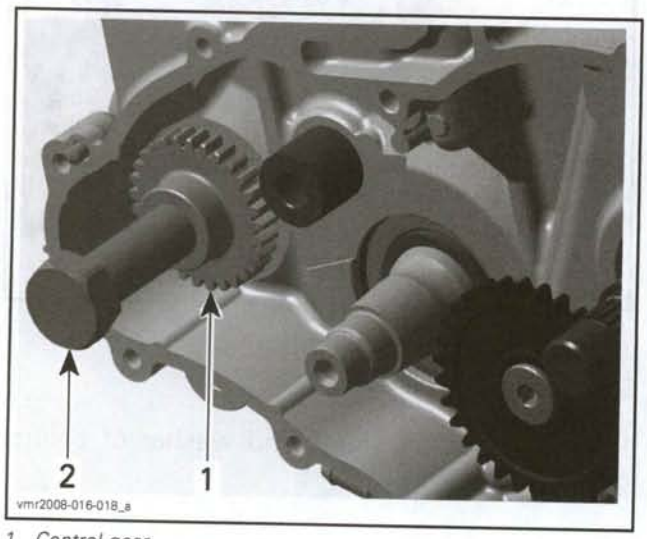

1. *Control gear*
2. *Puller (P/N 529 035 549)*

Tighten screw to extract control gear.

NOTE: When tightening screw, it may be necessary to tap on screw head to release control gear from its taper.

Timing Chain Drive Gears Inspection

Bearing Pin

Check bearing pin surface for wear or scoring. Replace if necessary.

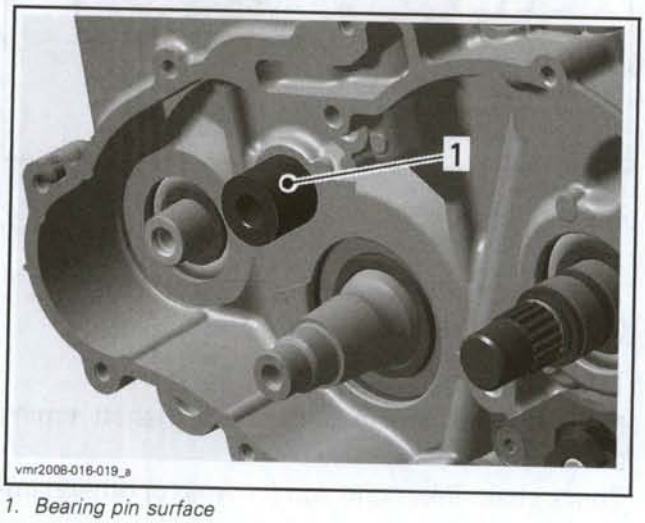

1. *Bearing pin surface*

Intermediate Gear

Inspect the intermediate gear for chipped, worn or broken gear teeth.

Check intermediate gear for worn or scoured bearing surface.

If timing chain teeth of intermediate gear are excessively worn or damaged, replace involved parts (camshaft timing gears, intermediate gear and timing chain) as a set.

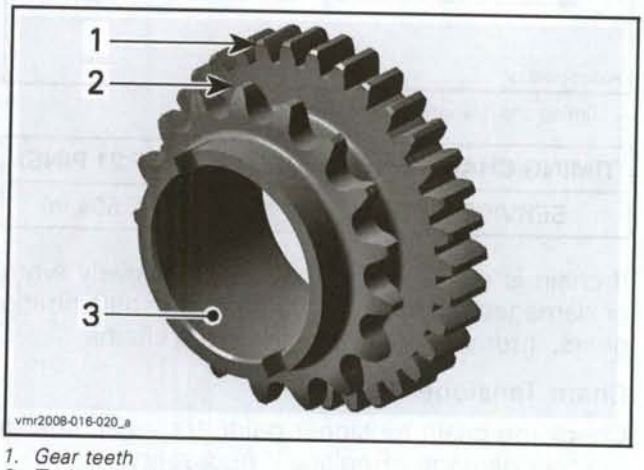

1. *Gear teeth*
2. *Timing chain teeth*
3. *Bearing surface*

Control Gear

Inspect the control gear for chipped, worn or broken gear teeth.

Replace parts if necessary.

Timing Chain Drive Gears Installation

Clean tapers of balancer shaft and control gear with pulley flange cleaner (P/N 413 701 809) and put gear on balancer shaft.

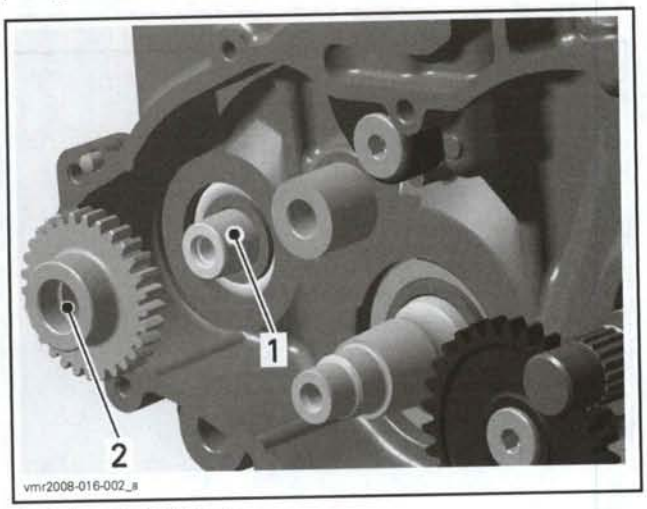

1. *Balancer shaft, taper*
2. *Control gear, taper*

NOTE: For proper camshaft timing, do not tighten control gear yet.

CAUTION: Improperly adjusted valve timing will damage engine components.

Place thrust washer, needle bearing and intermediate gear on bearing pin.

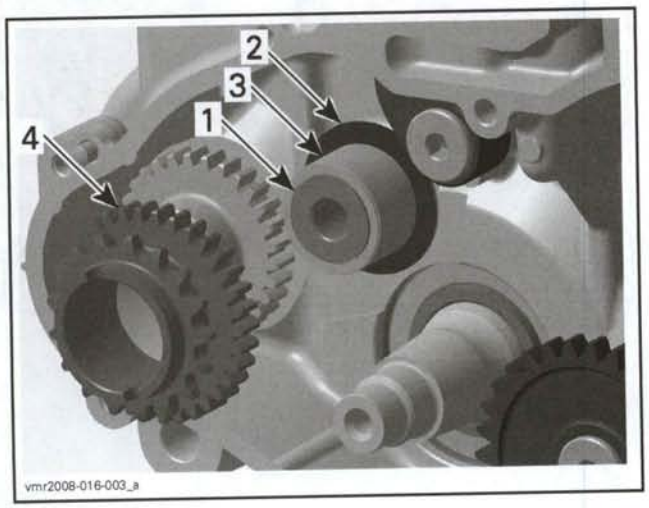

1. *Bearing pin*
2. *Thrust washer*
3. *Needle bearing*
4. *Intermediate gear*

Engage timing chain on intermediate gear.

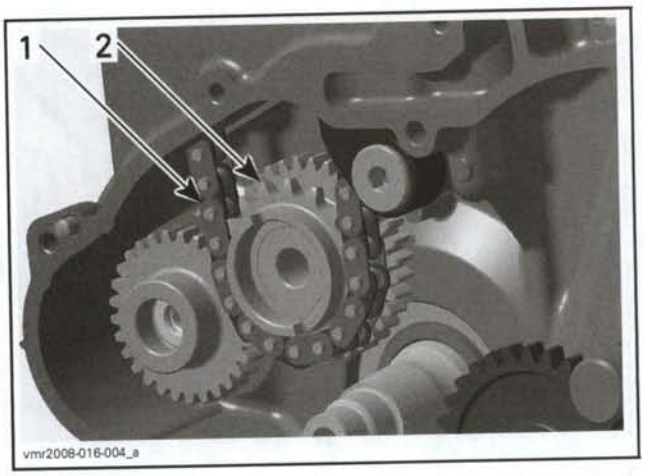

1. *Timing chain*
2. *Intermediate gear*

Install camshaft timing gears prior to finalize timing chain drive gears installation. Refer to *CYLINDER HEAD/CYLINDER* section.

CRANKCASE

Crankcase Disassembly

Drain lubrication system, refer to *LUBRICATION SYSTEM*.

Drain cooling system, refer to *COOLING SYSTEM*.

Remove:

- Engine from vehicle, refer to *ENGINE REMOVAL/INSTALLATION*.
- Front sprocket, refer to *DRIVE SYSTEM*.
- Cylinder head and cylinder, refer to *CYLINDER HEAD/CYLINDER*.
- Magneto cover and rotor, refer to *MAGNETO/STARTER*.
- Electric starter drive gears and electric starter, refer to *MAGNETO/STARTER* and *STARTING SYSTEM*.
- Clutch, refer to *CLUTCH*.
- Primary drive gear, refer to *PRIMARY DRIVE GEAR*.
- Timing chain and chain tensioner guide, refer to *TIMING CHAIN AND CHAIN TENSIONER GUIDE*.
- Shift shaft, tooth segment and index washer, refer to *GEARBOX*.

NOTE: Oil pump removal from crankcase is not mandatory, but recommended to see condition of oil pump (refer to *LUBRICATION SYSTEM*).

Remove retaining screws of crankcase.

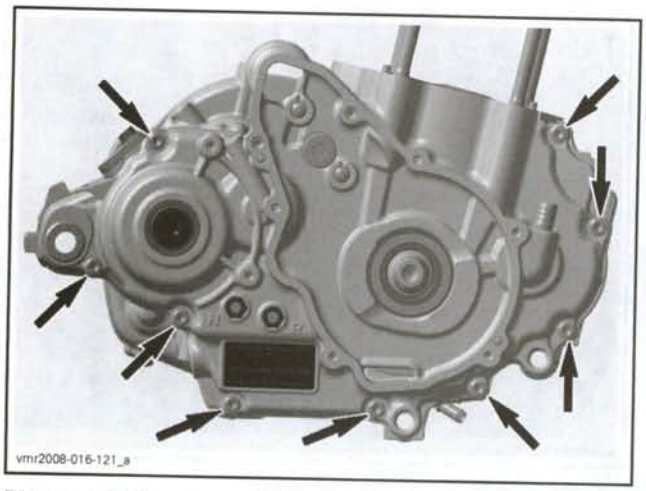

Place crankcase with magneto side against a wooden rack.

Use a soft hammer to separate crankcase halves.

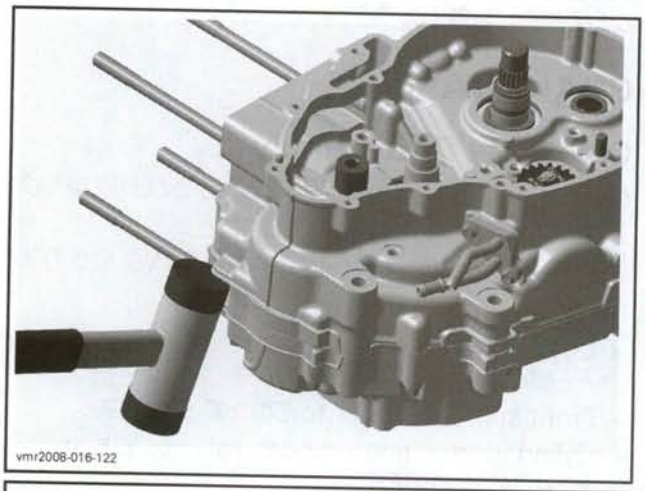

Remove shifting system and gearbox, refer to *GEARBOX*.

Withdraw crankshaft and balancer shaft.

Crankcase Inspection

Clean crankcase halves from contaminations using a parts cleaner and dry them with compressed air.

Clean oil passages with compressed air to make sure that they are not clogged.

⚠ WARNING

Wear safety goggles to avoid eye injuries.

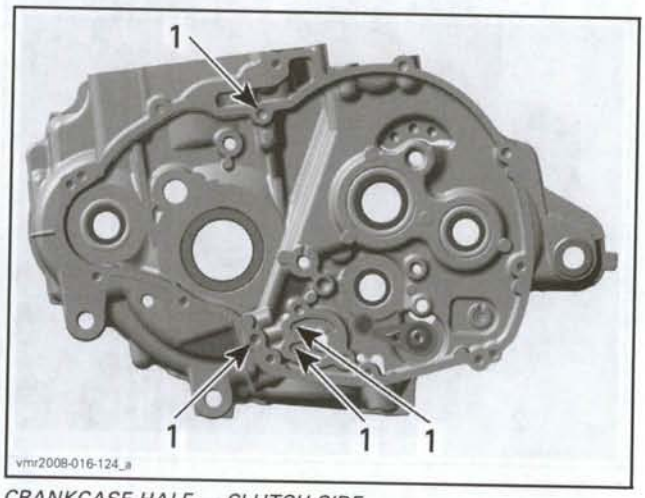

CRANKCASE HALF — CLUTCH SIDE
1. Check oil supply holes

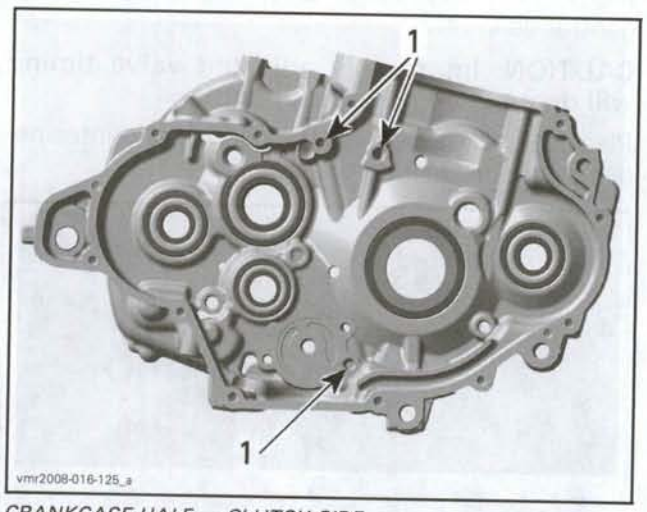

CRANKCASE HALF — CLUTCH SIDE
1. Check oil supply holes

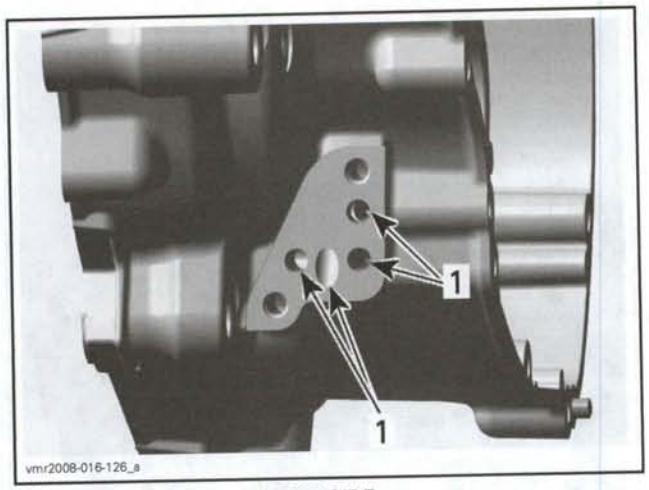

CRANKCASE HALF — CLUTCH SIDE
1. Check oil supply holes

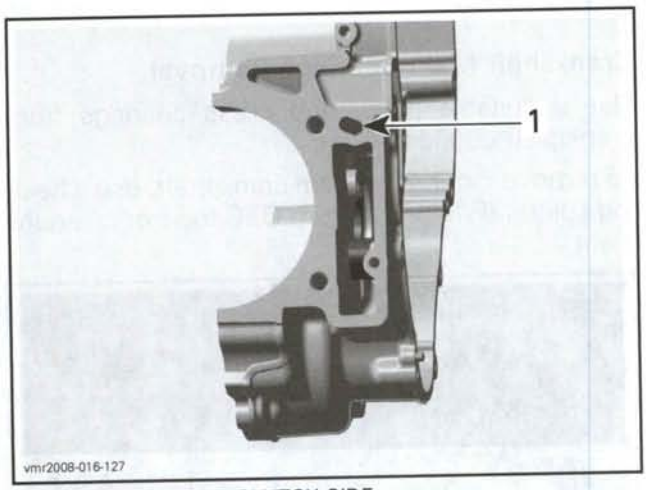

CRANKCASE HALF — CLUTCH SIDE
1. Check oil supply holes

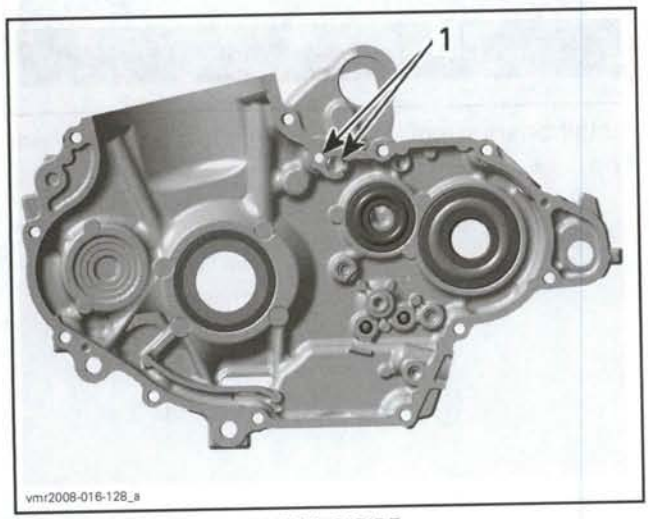

CRANKCASE HALF — MAGNETO SIDE
1. Check oil supply holes

Check crankcase halves for cracks or other damage. Replace if necessary.

Ball Bearings

Check ball bearings of balancer shaft (**no. 1** and **no. 2**), countershaft (**no. 5** and **no. 6**) and main shaft (**no. 7** and **no. 8**) for excessive play and smooth operation. Replace if necessary.

Crankshaft Main Bearings

Check crankshaft roller bearings (**no. 3** and **no. 4**) for excessive play and smooth operation. Replace if necessary.

Inspect inner rings of crankshaft roller bearings for wear or scoring. Replace if necessary.

NOTE: Always replace inner ring and roller bearing at the same time.

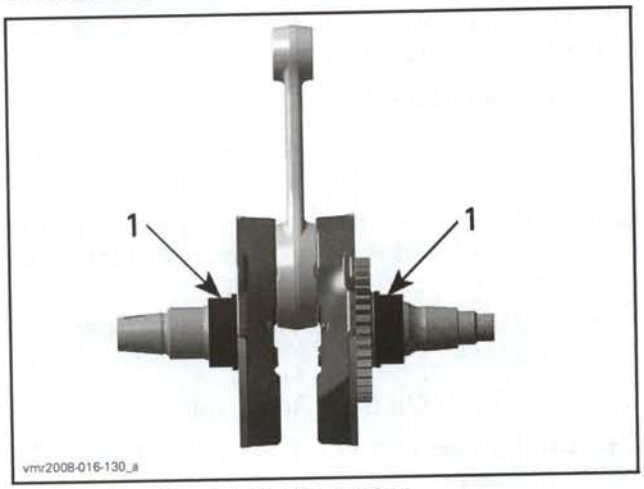

1. Inner rings of crankshaft roller bearings

Balancer Shaft Oil Seal

Check oil seal **no. 9** if leaking, brittle, hard or otherwise damaged. Replace if necessary.

Bearings and Oil Seal Replacement Procedure

Ball Bearings Removal

To remove ball bearing **no. 1** (balancer shaft) and **no. 5** (counter shaft) use a blind hole bearing puller from blind hole bearing puller set (P/N 529 036 117).

For all other bearings use a suitable puller and press bearings from outside in.

Ball Bearings Installation

Unless otherwise instructed, never use a hammer to install bearings. Use a press only.

CAUTION: Ball bearings have to be installed with closed bearing cage towards outside of engine.

Use a suitable pusher for installing ball bearings into crankcase.

Balancer Shaft Oil Seal Removal

Remove ball bearing **no. 1** to get access to the balancer shaft oil seal.

Use a screwdriver to remove oil seal from crankcase.

CAUTION: Take care not to damage oil seal area.

Balancer Shaft Oil Seal Installation

To install the oil seal **no. 9** use oil seal installer (P/N 529 036 069) and handle (P/N 420 877 650).

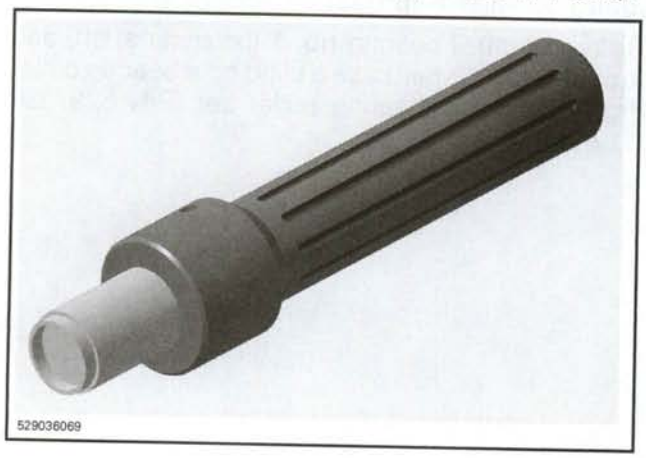

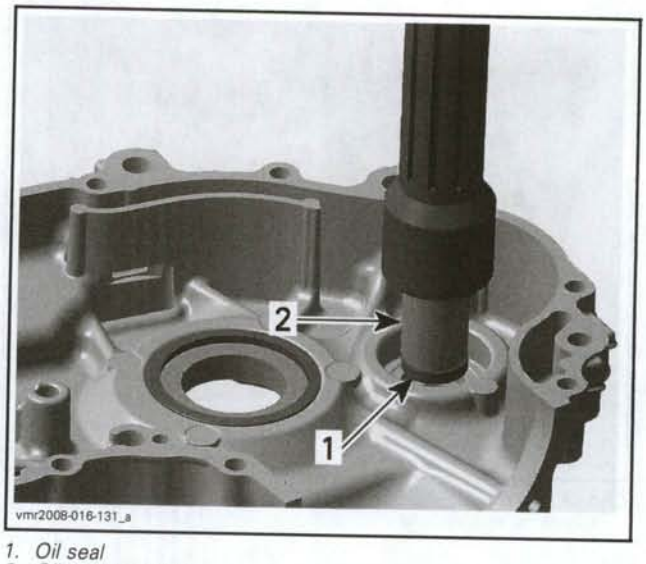

1. Oil seal
2. Oil seal installer

Crankshaft Main Bearings Removal

Use a suitable puller and press bearings from crankcase outside in.

To remove inner rings from crankshaft, use a bearing splitter (P/N 1123) from OTC tools or an equivalent.

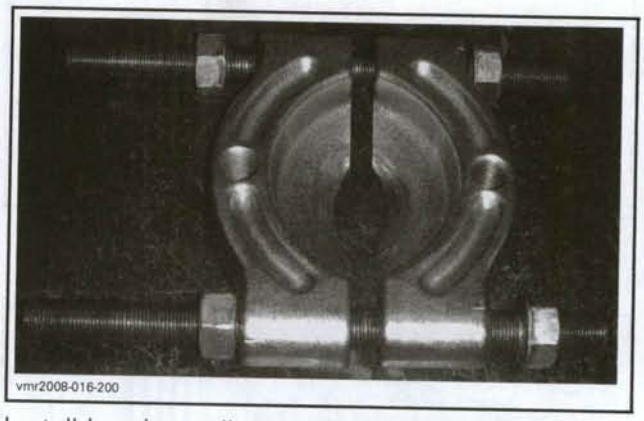

Install bearing splitter on crankshaft against inner ring.

PARTIAL CRANKSHAFT SHOWN
1. Inner ring
2. Bearing splitter

Partly tighten splitter to create a pulling force on inner ring. Do not overtighten.

Use a propane torch and heat inner ring to "unstick" it from crankshaft.

CAUTION: Do not use a welding torch to heat inner ring. Too much heat might adversely affect the crankshaft heat treatment.

PARTIAL CRANKSHAFT SHOWN

Keep on tightening splitter to pull inner ring until splitter is fully engaged under inner ring.

Install crankshaft protector (P/N 420 876 557) to the end of crankshaft.

Use a press and press out inner ring. Heat inner ring again if necessary.

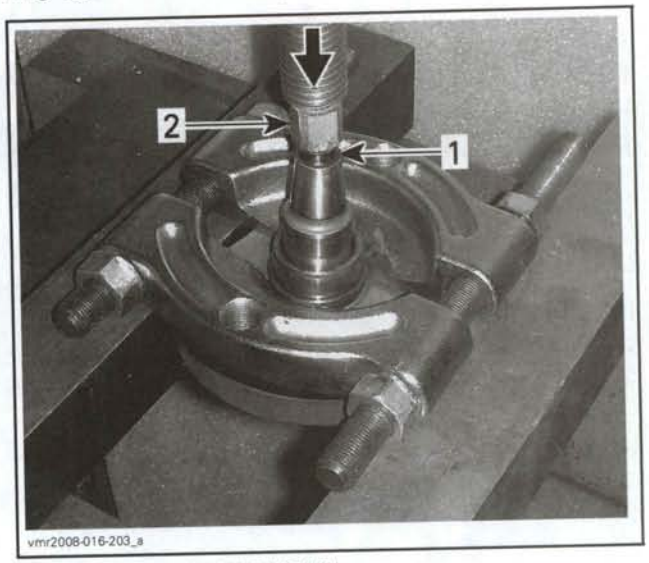

PARTIAL CRANKSHAFT SHOWN
1. Crankshaft protector
2. Press

⚠ WARNING

Always wear heat resistant safety gloves when handling hot parts to avoid burning yourself.

Crankshaft Main Bearings Installation

Unless otherwise instructed, never use a hammer to install bearings. Use a press only.

Use a suitable installer for installing outer ring of crankshaft main bearings onto crankcase.

NOTE: To install the inner ring on crankshaft, it is required to heat it so that it expands for the installation. Then, it will be put on crankshaft where it will freely slide down. To finish, a press will be used to properly bottom the inner ring.

Heat up the inner ring to 100°C (212°F) using a bearing heater (P/N 529 035 969).

NOTE: It takes approximately 11 minutes to heat up the inner ring to the recommended temperature.

Turn inner ring upside down several times during the heating process to properly distribute the heat.

⚠ WARNING

Do not touch heated ring with bare hands. Wear heat resisting gloves before handling the heated ring.

Install a M8 or M10 screw and nut between the crankwebs. Unscrew nut to apply a slight pressure against crankwebs to prevent misaligning the crankshaft while pressing in the inner ring.

When inner ring temperature is reached, take ring and drop it onto crankshaft with the flanged edge down.

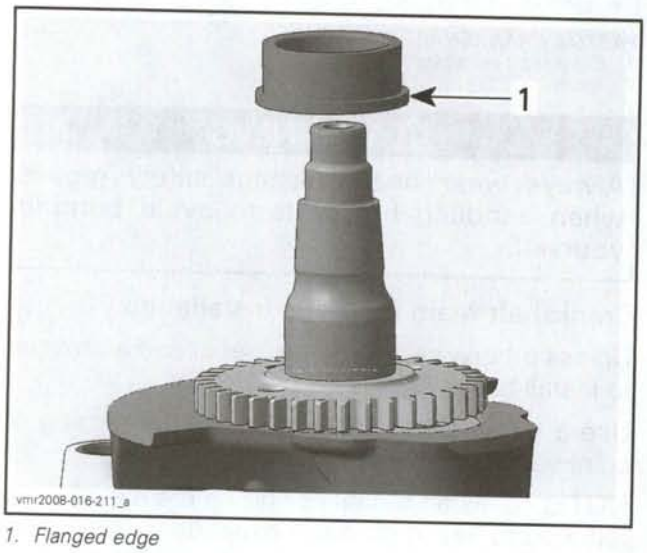

1. *Flanged edge*

Use a suitable installer and press inner ring on crankshaft until it bottoms.

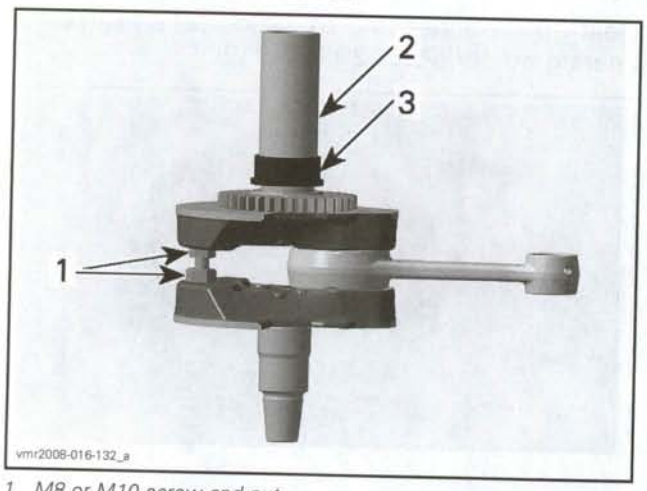

1. *M8 or M10 screw and nut*
2. *Pusher*
3. *Inner ring*

Crankcase Assembly

The assembly of the crankcase is essentially the reverse of the disassembly procedure.

However pay attention to following details.

Install a new crankcase gasket.

CAUTION: Temporarily secure connecting rod to the front of crankcase. Otherwise connecting rod will crush the oil spray nozzle no. 10.

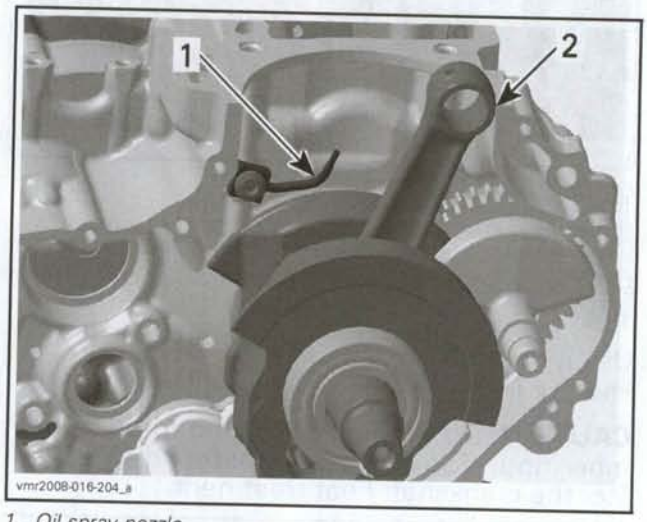

1. *Oil spray nozzle*
2. *Secure connecting rod here*

For installation of balancer shaft (matching the balance drive) refer to *BALANCER SHAFT* below.

BALANCER SHAFT

Balancer Shaft Removal

Refer to *CRANKCASE*.

Balancer Shaft Inspection

Check main journal diameter of balancer shaft for wear.

BALANCER SHAFT MAIN JOURNAL	
NEW	16.985 to 16.994 mm (.6687 to .6691 in)
SERVICE LIMIT	16.950 mm (.6673 in)

Inspect the balance shaft gear for chipped, worn or broken teeth. Replace if necessary.

NOTE: If any imperfection is detected, replace also the crankshaft gear, refer to *CRANKSHAFT* below.

Balancer Shaft Installation

The installation is the reverse of the removal procedure. However, pay attention to the following details.

CAUTION: Temporarily secure connecting rod to the front of crankcase. Otherwise connecting rod will crush the oil spray nozzle no. **10**.

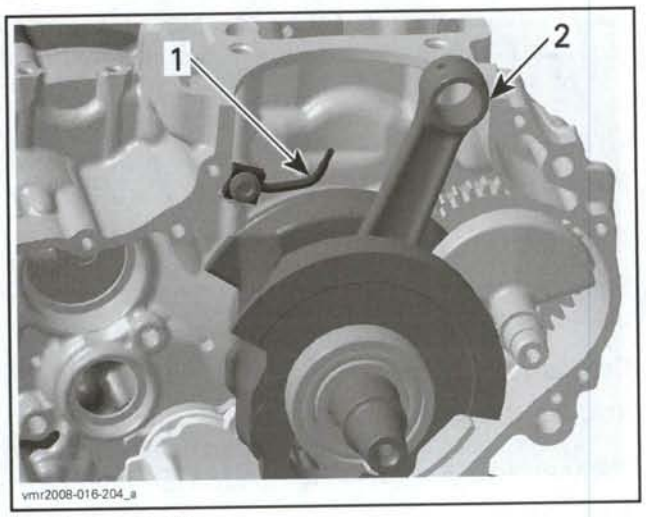

1. Oil spray nozzle
2. Secure connecting rod here

Align crankshaft mark between the 2 marks on balance drive gear.

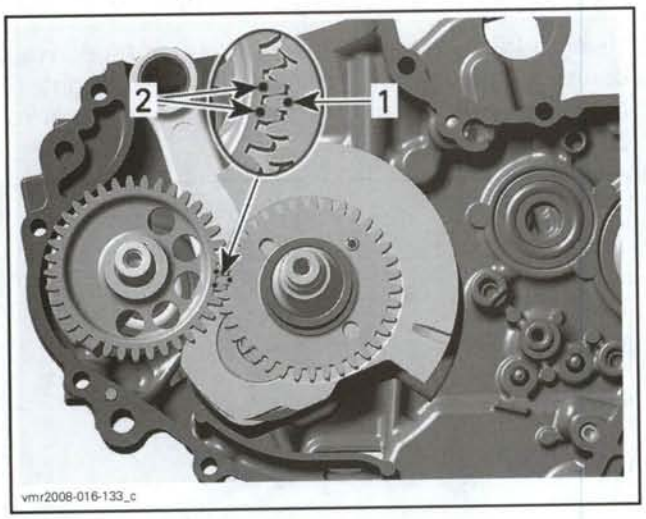

1. Crankshaft mark
2. Balance drive gear marks

CRANKSHAFT

Crankshaft Locking Procedure

Remove both spark plugs. Refer to *IGNITION SYSTEM*.

Remove access screw.

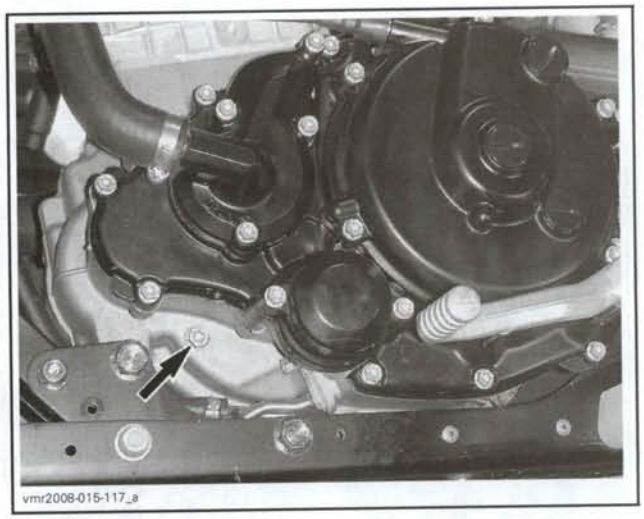

Use a screwdriver to feel the groove when the crankshaft is aligned with the hole.

1. Screwdriver

Turning Crankshaft from Magneto Cover

Remove magneto cover. Refer to *MAGNETO/STARTER*.

Use a 13 mm nut and turn crankshaft.

CAUTION: Turn only clockwise to avoid loosening of magneto flywheel screw.

Turning Crankshaft using Rear Wheels

Alternately, crankshaft can be turned from rear wheels.

Lift and secure rear of vehicle.

Set transmission to 5th gear.

Bring crankshaft to TDC by turning rear wheels forward.

Locating the TDC of the Compression Stroke

Remove valve cover, refer to *VALVE COVER* in the *CYLINDER HEAD/CYLINDER* section.

Rotate crankshaft until marks on intake and exhaust camshaft timing gear are aligned. This is the compression stroke.

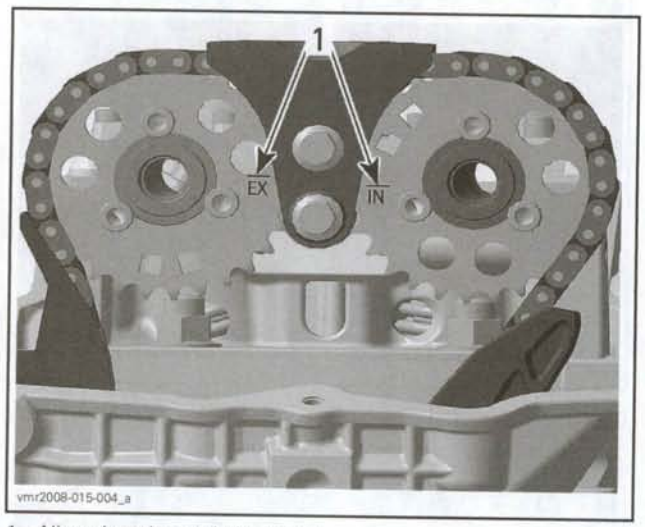

1. Aligned marks on timing gears

Locking Crankshaft

When crankshaft is at the right position, lock crankshaft at TDC using the crankshaft locking tool (P/N 529 036 107).

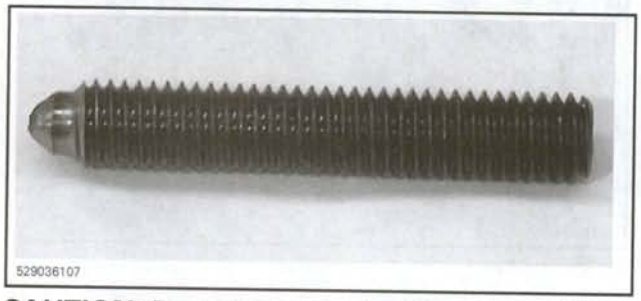

CAUTION: Do not use the locking tool of **Outlander models**. It will not fit properly on crankshaft.

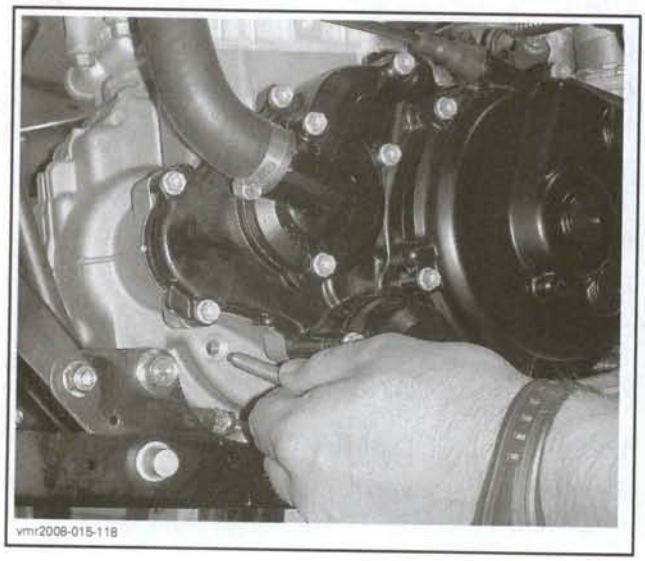

Screw the crankshaft locking tool in and try to rotate the crankshaft. If it does not turn, tighten the locking tool.

NOTE: When the job will be completed, check oil level and refill if necessary since some oil came out of access hole.

Crankshaft Removal

Refer to *CRANKCASE*.

Crankshaft Inspection

For crankshaft main bearing inspection and replacement refer to *CRANKCASE* above.

Crankshaft Gear

Inspect the crankshaft gear for chipped, worn or broken teeth. Replace if necessary, refer to *CRANKSHAFT GEAR REPLACEMENT PROCEDURE* below.

NOTE: If any imperfection is detected, replace also the balance shaft gear, refer to *BALANCE SHAFT* above.

Connecting Rod Big End Axial Play

Using a feeler gauge, measure distance between connecting rod and crankshaft counterweight. If the distance exceeds the specified tolerance, replace the crankshaft.

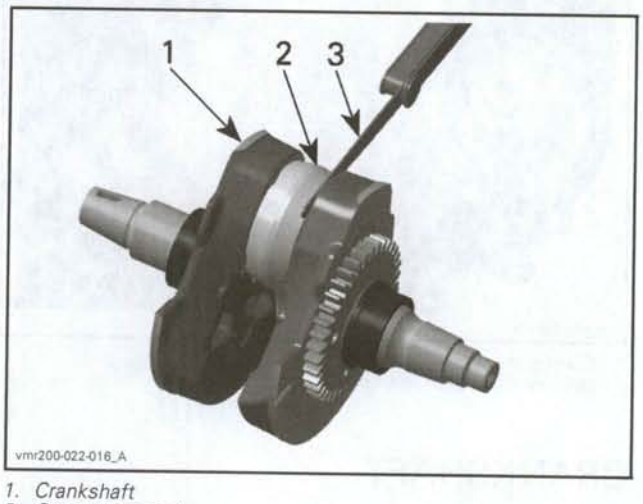

1. Crankshaft
2. Connecting rod
3. Feeler gauge

CONNECTING ROD BIG END AXIAL PLAY	
NEW	0.317 to 0.643 mm (.0125 to .0253 in)
SERVICE LIMIT	0.700 mm (.0276 in)

Connecting Rod Big End Radial Play

Place crankshaft in a centering device.

Move connecting rod small end upside down and measure radial clearance using a dial gauge.

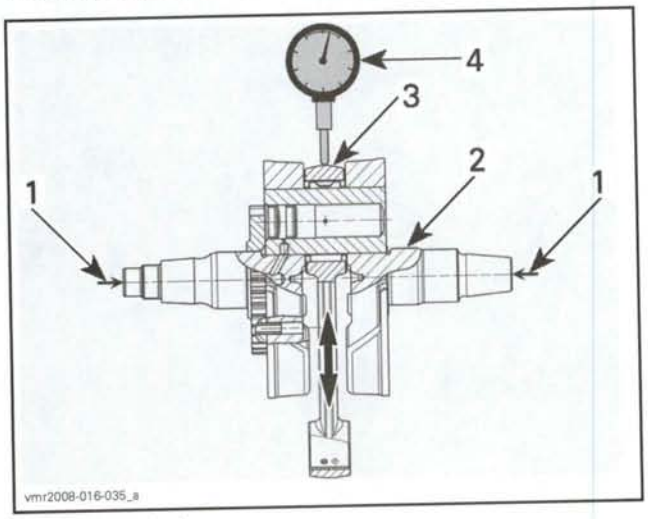

1. *Centering device*
2. *Crankshaft*
3. *Connecting rod*
4. *Dial gauge*

CONNECTING ROD BIG END RADIAL PLAY	
NEW	0.010 to 0.022 mm (.0004 to .0009 in)
SERVICE LIMIT	0.050 mm (.0020 in)

Connecting Rod Small End Bushing

Measure inside diameter of connecting rod small end bushing.

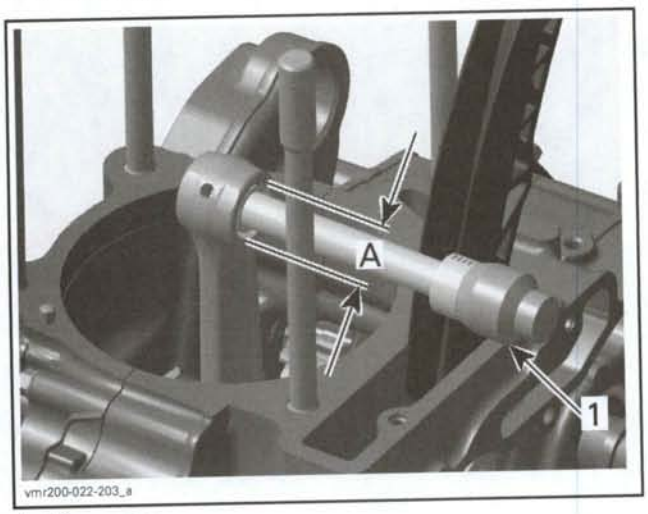

1. *Micrometer*
A. *Connecting rod small end diameter*

CONNECTING ROD SMALL END DIAMETER	
NEW	20.015 to 20.025 mm (.7880 to .7884 in)
SERVICE LIMIT	20.040 mm (.7890 in)

PISTON PIN BORE CLEARANCE	
SERVICE LIMIT	0.050 mm (.0020 in)

Crankshaft Gear Replacement Procedure

Crankshaft Gear Removal

CAUTION: If crankshaft gear was removed once, replace it by a new one.

Remove crankshaft main bearing and the inner ring on PTO side.

Use two M8 bolts to extract crankshaft gear.

Partly tighten M8 bolts to create a pulling force on crankshaft gear. Do not overtighten.

Use a propane torch and heat crankshaft gear to "unstick" it from crankshaft.

CAUTION: Do not use a welding torch to heat crankshaft gear. Too much heat might adversely affect the crankshaft heat treatment.

Keep on tightening M8 bolts to pull out crankshaft gear.

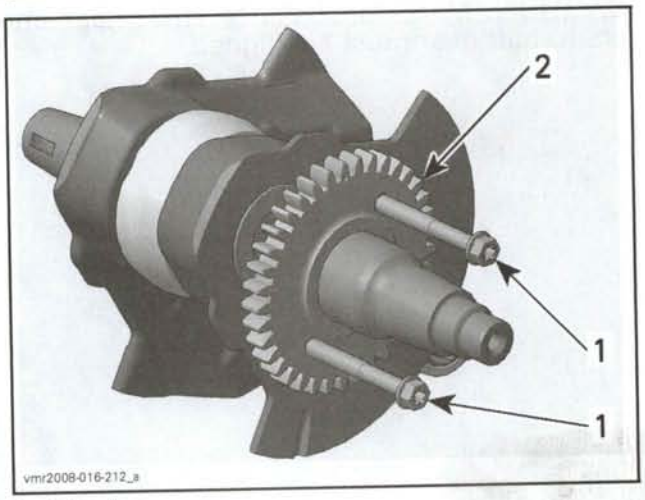

1. *M8 bolts*
2. *Crankshaft gear*

Crankshaft Gear Installation

CAUTION: The roller pin no. 11 must not protrude from bore in crankshaft gear.

For inner ring installation on crankshaft refer to *BEARINGS AND OIL SEAL REPLACEMENT PROCEDURE* in *CRANKCASE* above.

Crankshaft Installation

The installation is the reverse of the removal procedure. However, pay attention to following details.

CAUTION: Temporarily secure connecting rod to the front of crankcase. Otherwise connecting rod will crush the oil spray nozzle no. **10**.

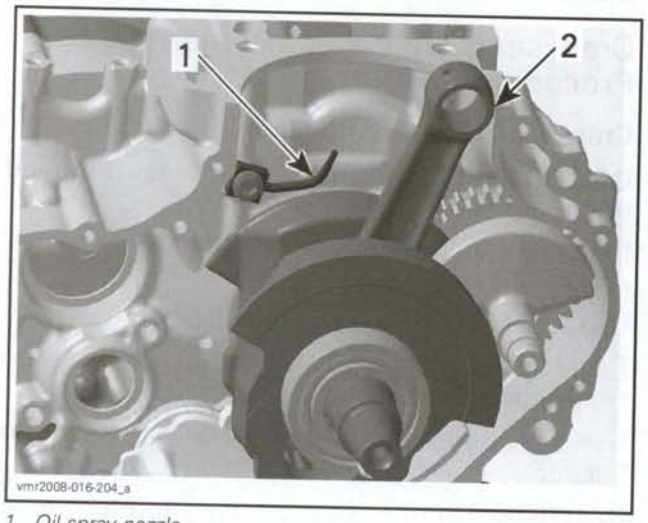

1. Oil spray nozzle
2. Secure connecting rod here

For installation, refer to *BALANCER SHAFT* installation.

CAUTION: Marks on balance shaft gear and crankshaft gear must be aligned.

CLUTCH

SERVICE TOOLS

Description	Part Number	Page
clutch spanner	529 035 647	141, 144
oil seal installer	529 036 070	146
protection sleeve	529 036 071	146
clutch adjustment wrench	529 036 076	135

SERVICE PRODUCTS

Description	Part Number	Page
Super Lube grease	293 550 030	138
Loctite 518	293 800 038	138, 145–146
Loctite 243 (blue)	293 800 060	138
Loctite 648 (green)	413 711 400	143

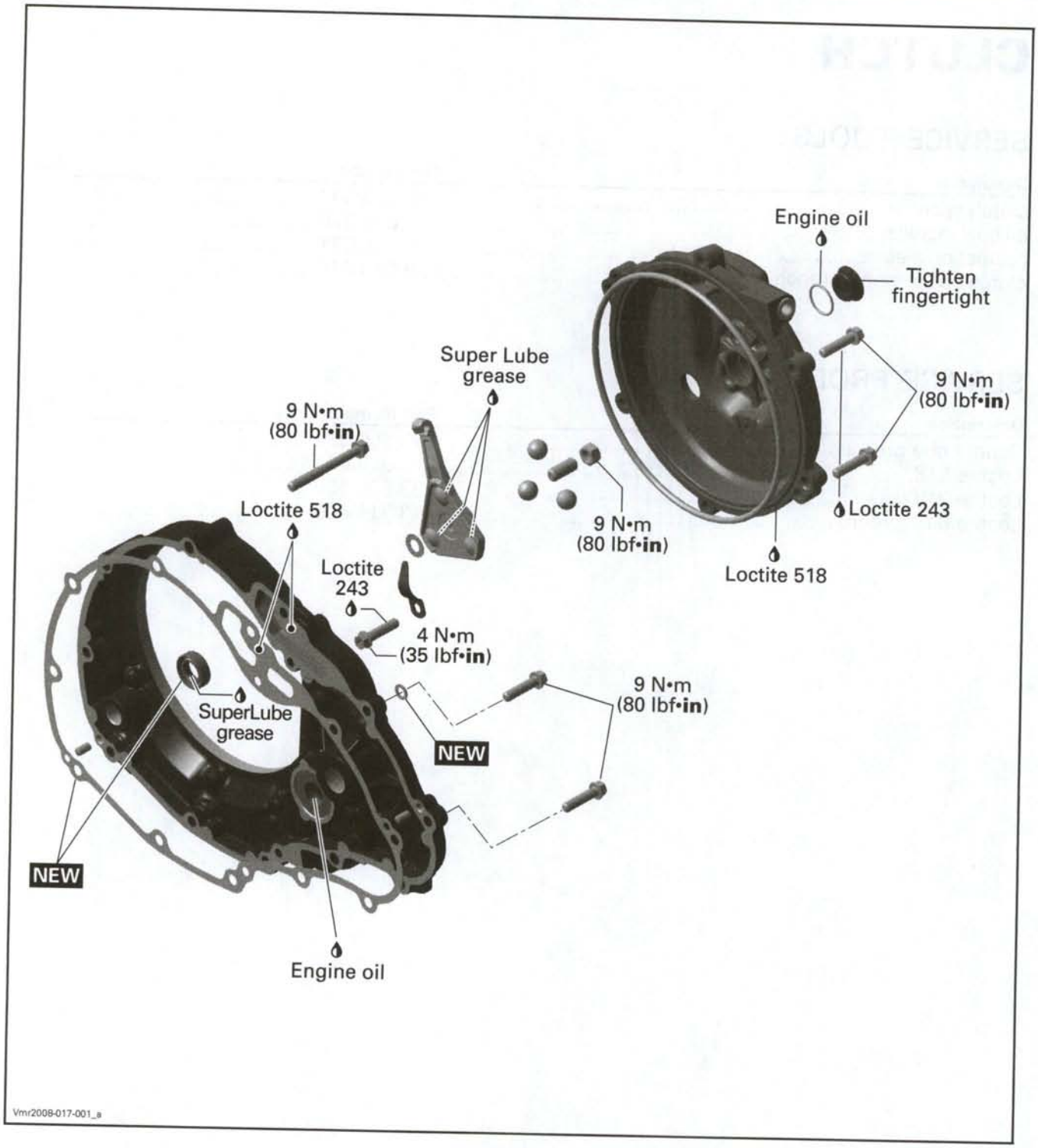
Engine oil
Tighten fingertight
Super Lube grease
9 N•m (80 lbf•in)
9 N•m (80 lbf•in)
Loctite 518
9 N•m (80 lbf•in)
Loctite 243
Loctite 518
Loctite 243
4 N•m (35 lbf•in)
9 N•m (80 lbf•in)
SuperLube grease
NEW
NEW
Engine oil
Vmr2008-017-001_a

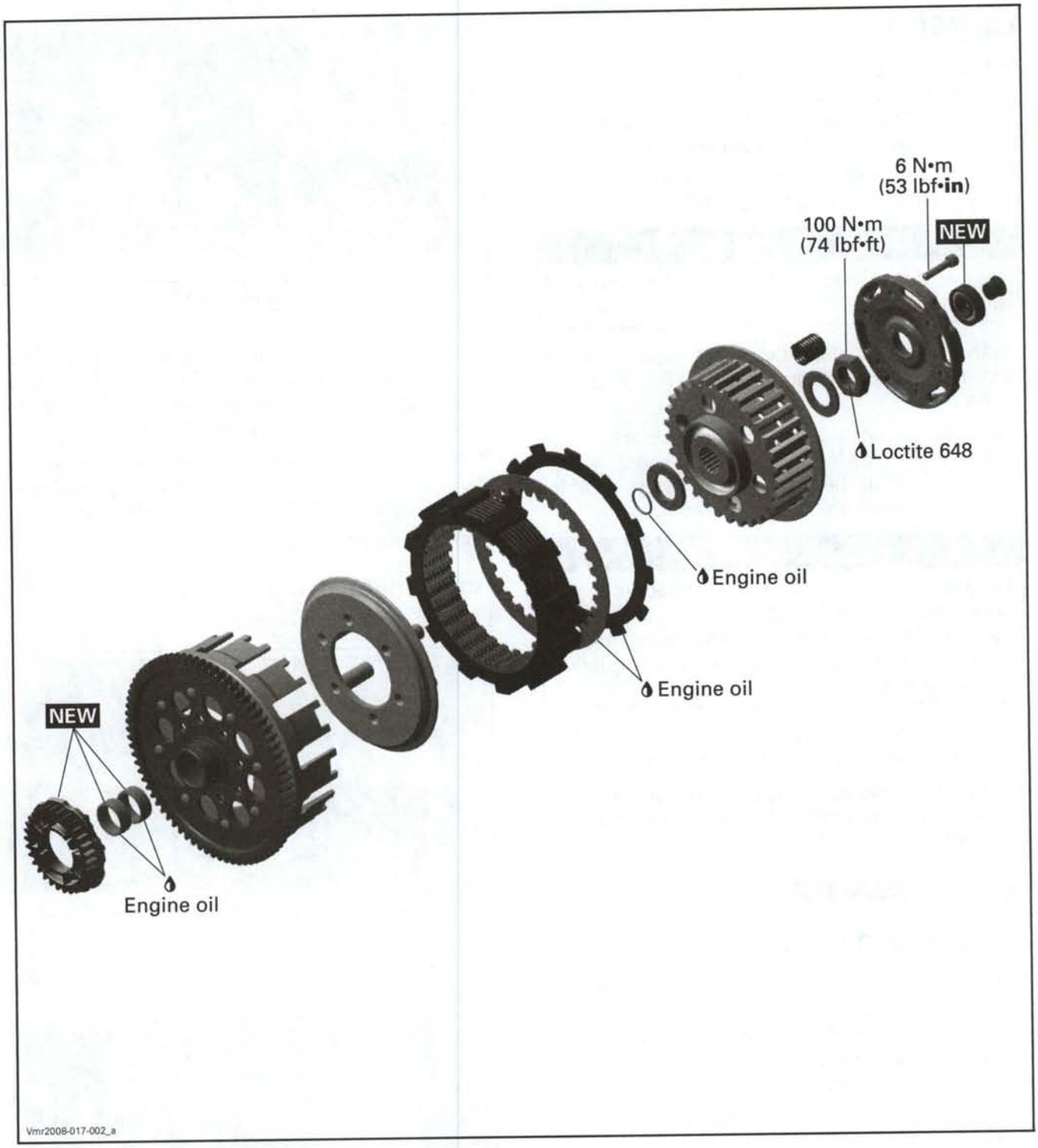
6 N•m
(53 lbf•in)
100 N•m
(74 lbf•ft)
NEW
Loctite 648
Engine oil
Engine oil
NEW
Engine oil
Vmr2008-017-002_a

GENERAL

NOTE: For a better understanding, the following illustrations are taken with engine out of vehicle. To perform the following instructions, it is not necessary to remove engine from vehicle.

Always disconnect the BLACK (-) wire from the battery before working the engine.

⚠ WARNING

Always disconnect BLACK (-) cable first and reconnect last.

During assembly/installation, use the torque values and service products as in the exploded views.

Clean threads before applying a threadlocker. Refer to *SELF-LOCKING FASTENERS* and *LOCTITE APPLICATION* at the beginning of this manual for complete procedure.

⚠ WARNING

Torque wrench tightening specifications must strictly be adhered to.
Locking devices (e.g.: locking tabs, elastic stop nuts, cotter pin, etc.) must be replaced with new ones.

Hoses or cables removed or disconnected must be installed and routed at the same place.

CAUTION: Locking ties removed during a procedure must be replaced and installed at the same location.

MAINTENANCE

CLUTCH ADJUSTMENT

NOTE: The **X package model** is equipped with a quick cable adjuster, therefore, there is no lock nut with this type of adjuster. Procedure for the clutch cable are the same for both types except that details regarding the lock nut must be ignore.

The clutch lever nominal free play is 10 to 15 mm (3/8 to 5/8 in), refer to next photo.

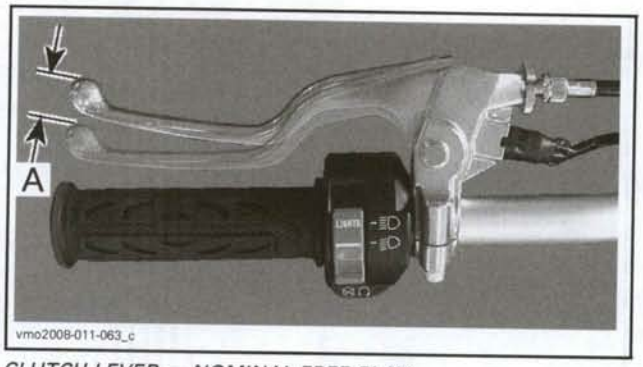

CLUTCH LEVER — NOMINAL FREE PLAY
A. 10 to 15 mm (3/8 to 5/8 in)

If there is too much free play (more than 15 mm (5/8 in), adjustment can be performed at the handlebar using clutch lever cable adjuster. Refer to *ADJUSTMENT AT CLUTCH LEVER* below.

If free play is lost, then clutch release cover screw must be adjusted for enough free play. Refer to *ADJUSTMENT AT CLUTCH COVER* further.

Perform adjustments accordingly.

Adjustment at Clutch Lever

Loosen cable adjuster lock nut.

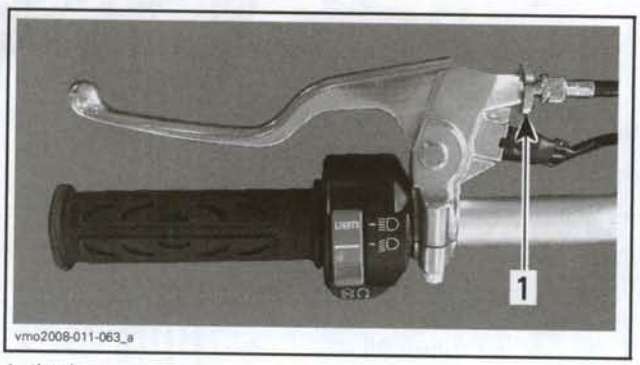

1. Lock nut

Turn cable adjuster until proper dimension is obtained.

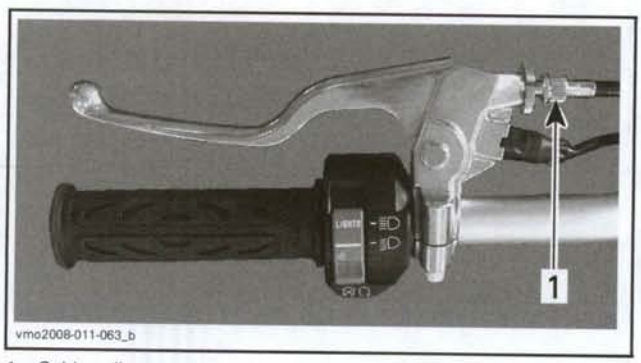

1. Cable adjuster

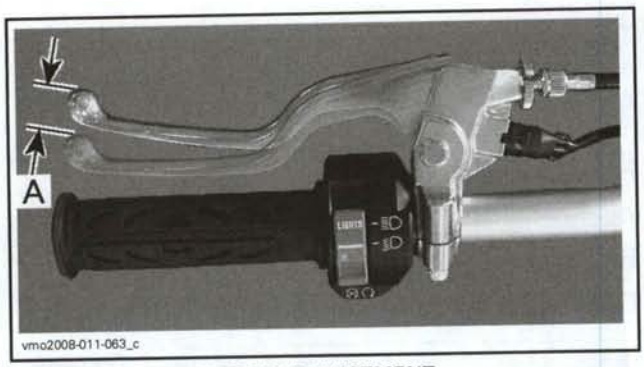

CLUTCH LEVER — PROPER ADJUSTMENT
A. 10 to 15 mm (3/8 to 5/8 in)

Tighten cable adjuster lock nut when proper adjustment is obtained.

Adjustment at Clutch Cover

CAUTION: When adjustment of the clutch release cover screw is needed, it means that the clutch plates have worn. Therefore, it is strongly recommended to take a few minutes to inspect clutch plates condition.

Fully unscrew cable adjustment lock nut.

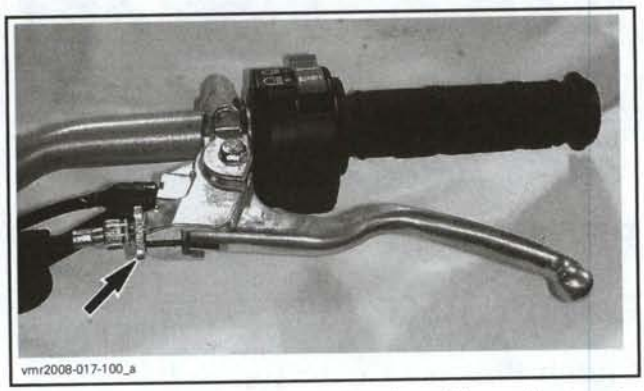

Fully screw and tighten clutch cable adjuster to provide maximum free play.

Loosen cable adjuster lock nut.

Remove clutch cover access plug.

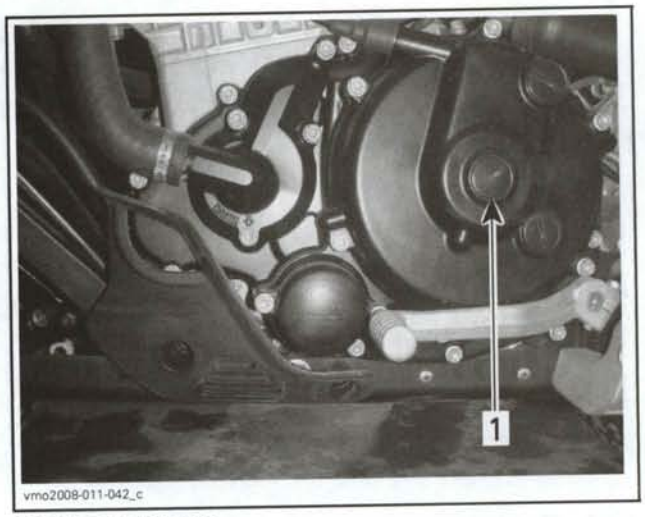

LH SIDE OF ENGINE
1. Access plug

Install the clutch adjustment wrench (P/N 529 036 076) onto lock nut.

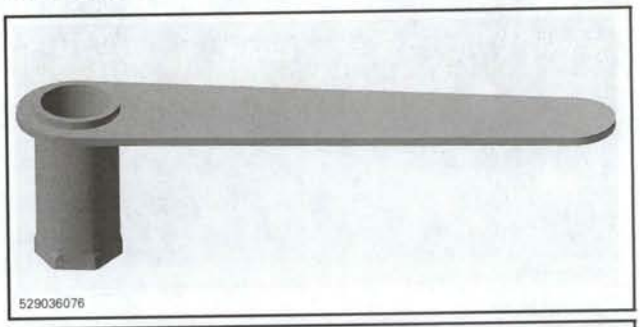

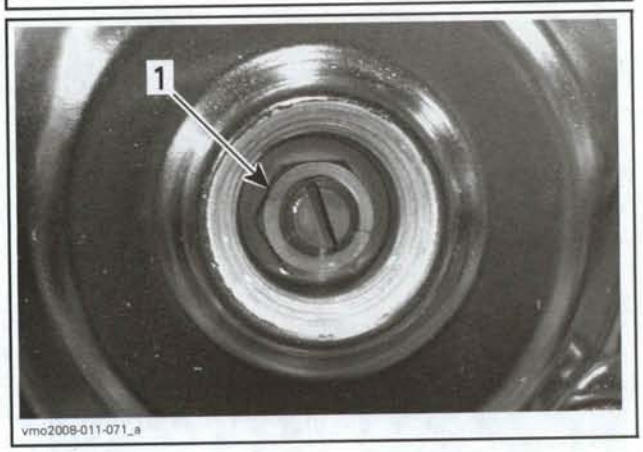

1. Lock nut

Hold adjustment screw using a flat screwdriver, then loosen lock nut counterclockwise.

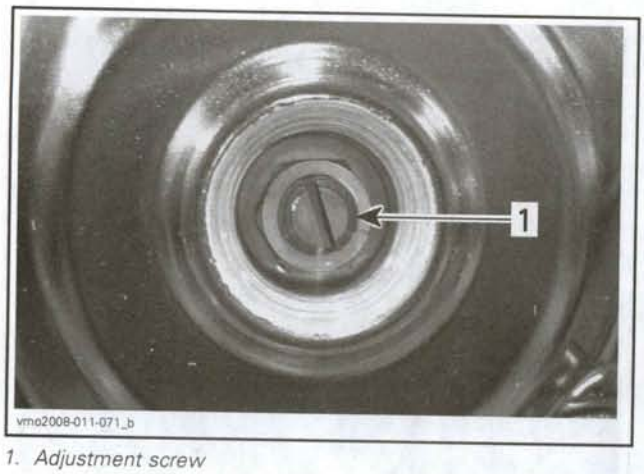

1. Adjustment screw

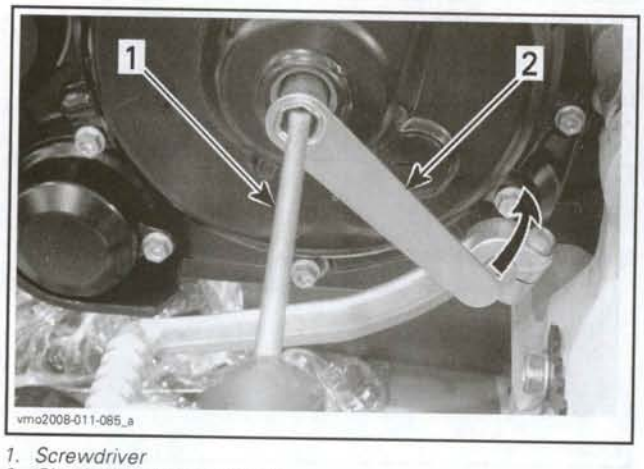

1. Screwdriver
2. Clutch adjustment wrench

By using the screwdriver, gently turn clutch adjuster screw clockwise to locate the point of contact with release bearing, then turn screw out (counterclockwise) 3/8 to 1/2 turn from contact point.

Hold adjustment screw using the flat screwdriver, then tighten lock nut clockwise using special tool.

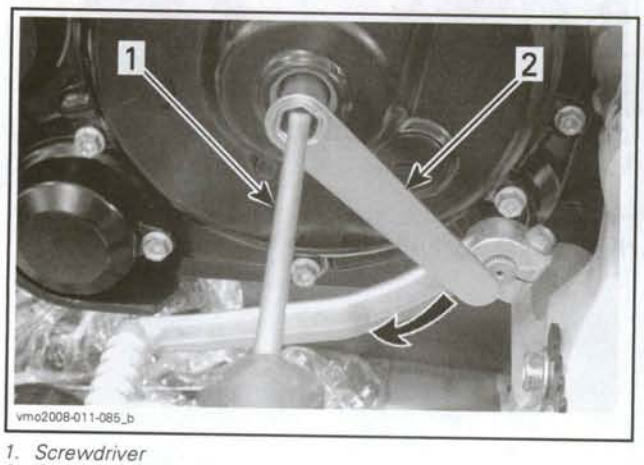

1. Screwdriver
2. Clutch adjustment wrench

To confirm proper adjustment, gently push on adjustment screw using a finger, a small play should be felt, if not, perform adjustment again.

CAUTION: A premature clutch disk wear may occur if adjustment is too tight.

Apply engine oil on access plug O-ring.

Reinstall access plug.

CAUTION: Do not over torque.

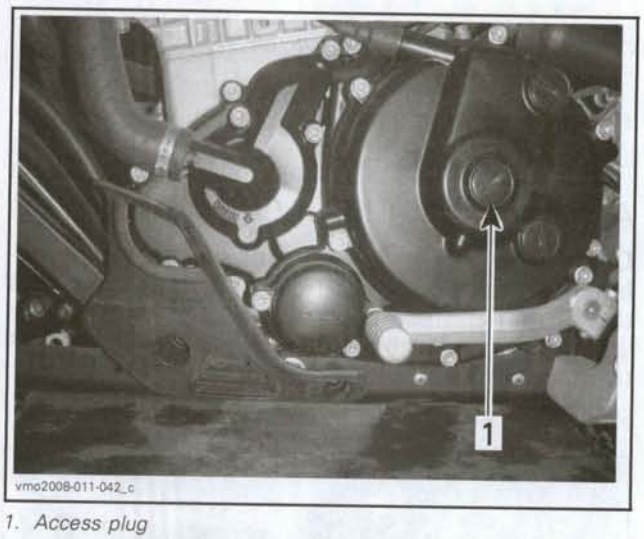

1. Access plug

Properly adjust clutch lever. Refer to *ADJUSTMENT AT CLUTCH LEVER* above.

PROCEDURES

CLUTCH RELEASE COVER

Clutch Release Cover Removal

Drain engine oil. Refer to *LUBRICATION SYSTEM* section.

Remove shifter from engine.

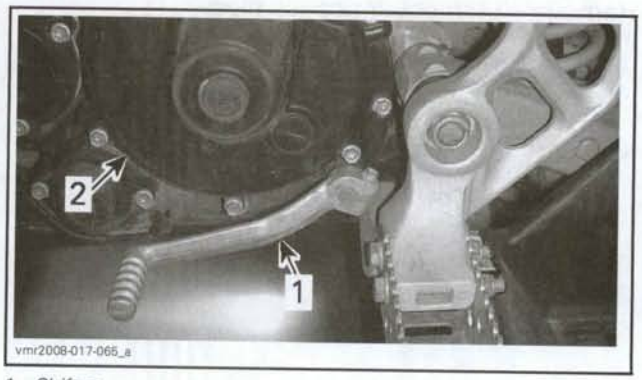

1. Shifter
2. Clutch release cover

Unscrew and remove clutch release cover screws and withdraw cover.

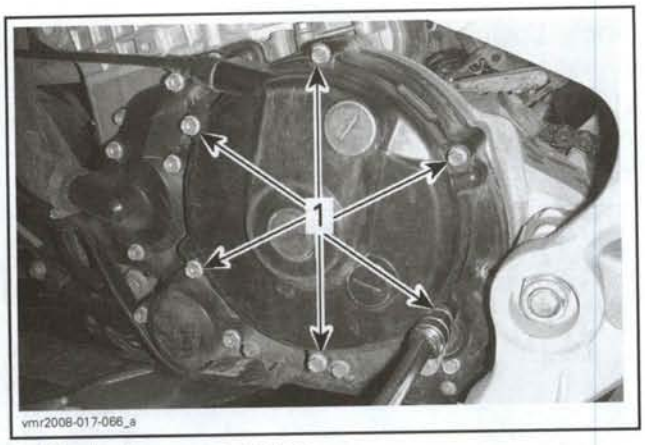

1. Clutch release cover screws

Discard the clutch release cover gasket.

Clutch Release Cover Disassembly

Disengage clutch cable.

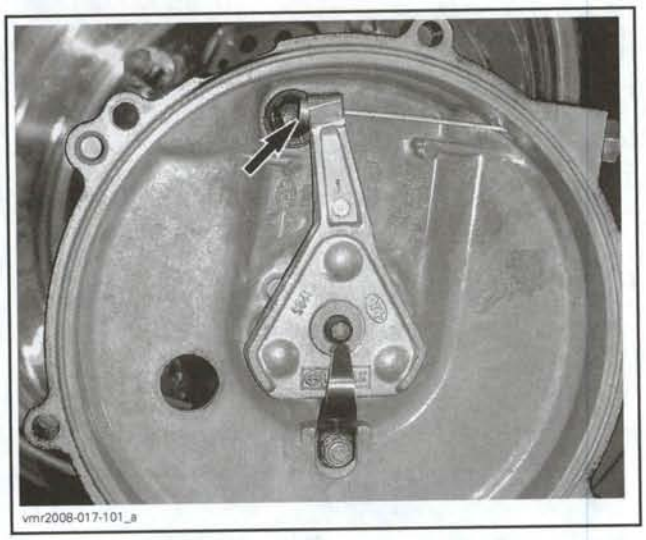

From the inside of the clutch release cover, remove the following:

- Leaf spring
- Thrust washer
- Clutch release cam
- Adjustment screw
- Locking nut
- Balls.

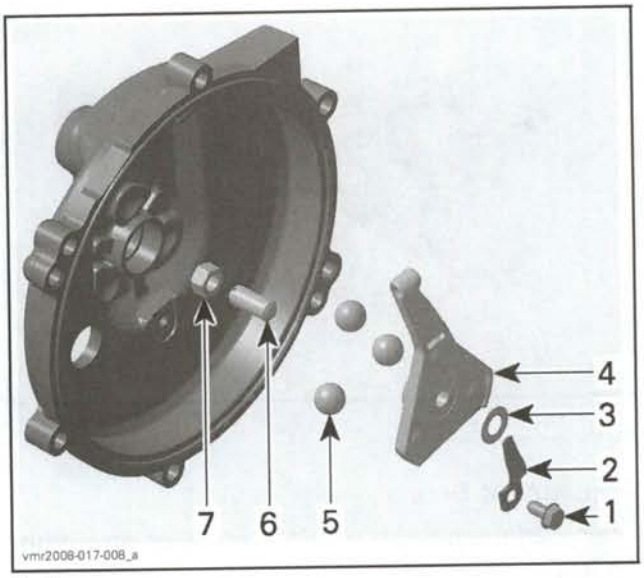

1. Screw
2. Leaf spring
3. Thrust washer
4. Clutch release cam
5. Balls
6. Adjustment screw
7. Locking nut

Clutch Release Cover Inspection

Clutch Release Cover

Check ramps for wear.

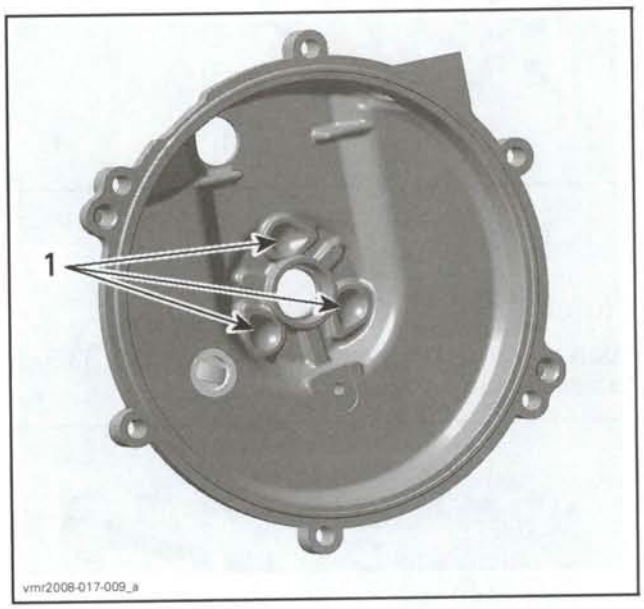

1. Ramps

Clutch Release Cam

Check ramps and cable engagement areas for wear.

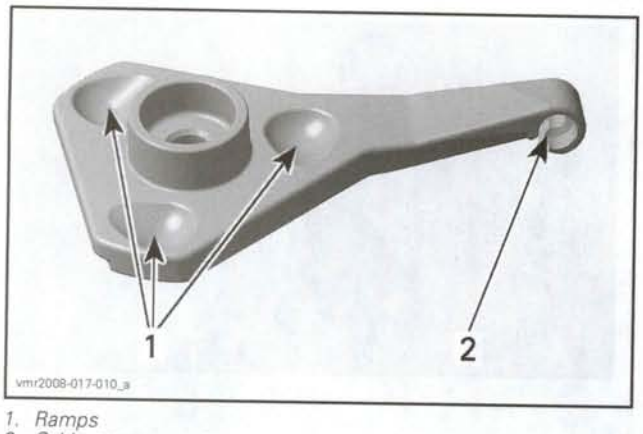

1. *Ramps*
2. *Cable engagement*

Adjustment Screw

Check adjustment screw for wear or any other damage.

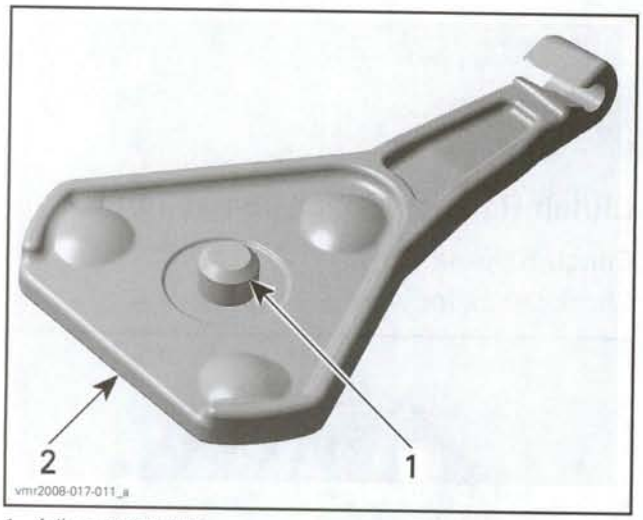

1. *Adjustment screw*
2. *Clutch release cam*

Clutch Release Cover Assembly

Apply Super Lube grease (P/N 293 550 030) in ramps of clutch release cam.

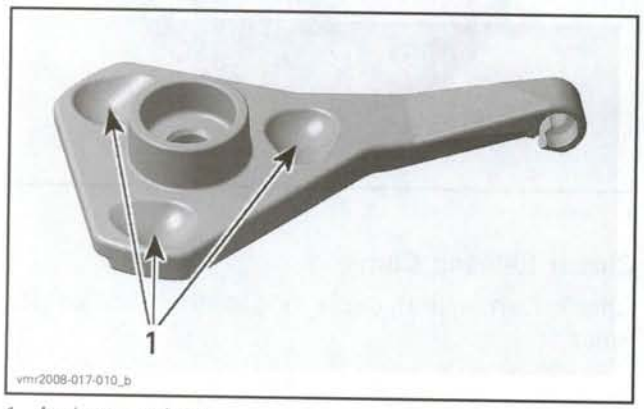

1. *Apply grease here*

Apply Loctite 243 (blue) (P/N 293 800 060) on threads of the leaf spring screw.

When fitting the release cam, make sure that the end of the leaf spring rests neatly on the thrust washer and does not touch the adjustment screw.

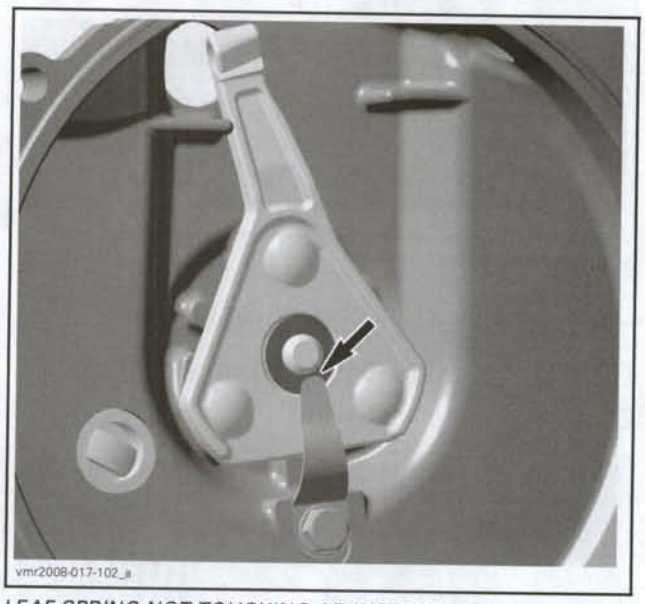

LEAF SPRING NOT TOUCHING ADJUSTMENT SCREW

Check clutch release cam for easy movement.

Clutch Release Cover Installation

Apply a proper amount of Loctite 518 (P/N 293 800 038) in the groove of the clutch release cover to retain the gasket.

Install a **NEW** clutch release cover gasket.

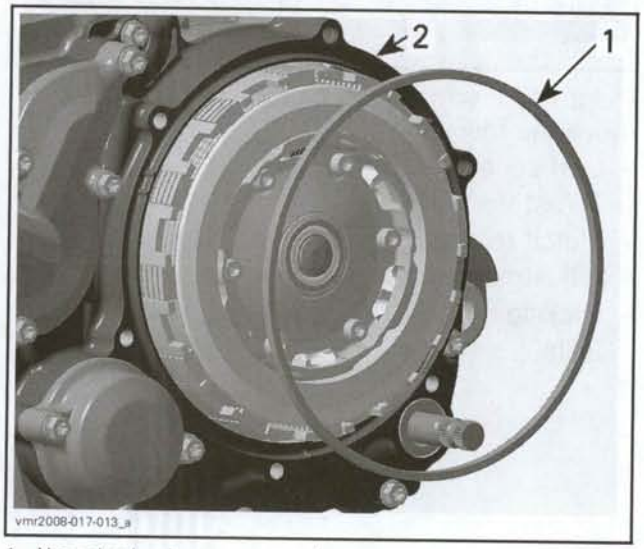

1. *New clutch release cover gasket*
2. *Clutch cover*

Apply Loctite 243 (blue) (P/N 293 800 060) on threads of clutch release cover screws.

Tighten clutch release cover screws in a crisscross sequence.

Install shifter.

Perform the *CLUTCH ADJUSTMENT*, see procedure at the beginning of this section.

CLUTCH CABLE

Clutch Cable Removal

At Engine

Remove the *CLUTCH RELEASE COVER*, see procedure above in this section.

Disengage clutch cable.

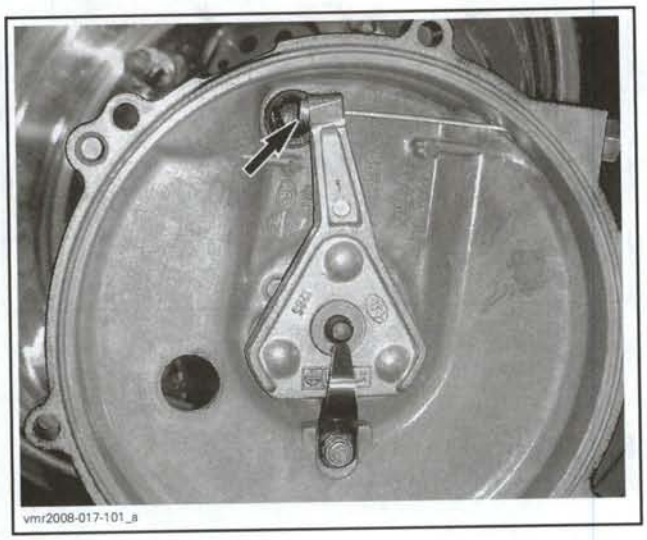

At Handlebar

Remove the front body assembly. Refer to *BODY* section.

Loosen cable adjuster lock nut.

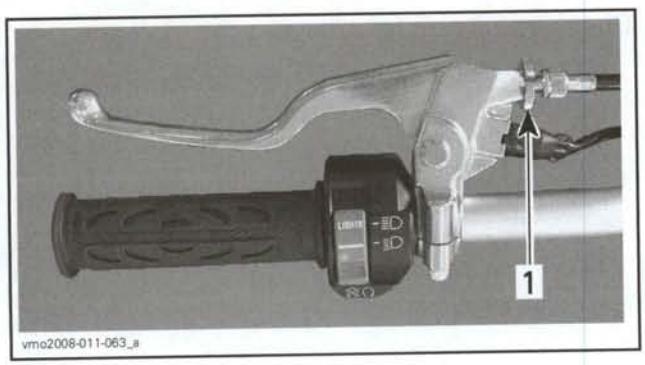

1. Lock nut

Turn cable adjuster until proper dimension is obtained.

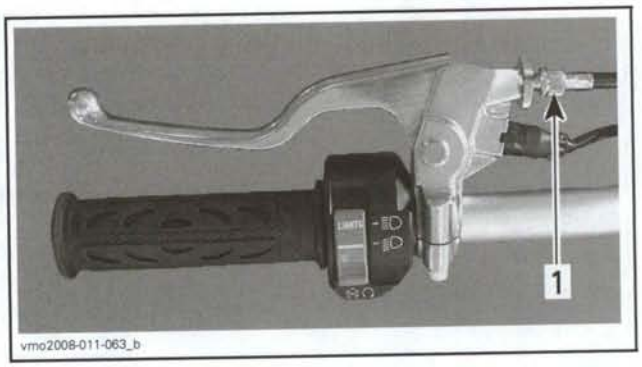

1. Cable adjuster

Detach clutch cable end from clutch lever.

Cut all locking ties securing the clutch cable.

Remove the cable from the vehicle noting its correct routing.

Clutch Cable Installation

The installation is the reverse of the removal procedure.

Proceed with the clutch cable adjustment.

CLUTCH LEVER

Clutch Lever Removal

NOTE: If the clutch lever is not replaced, omit the next steps concerning the clutch switch connectors and clutch cable removal.

Remove the front body assembly to reach clutch switch connectors. Refer to *BODY* section.

Unplug clutch switch connectors.

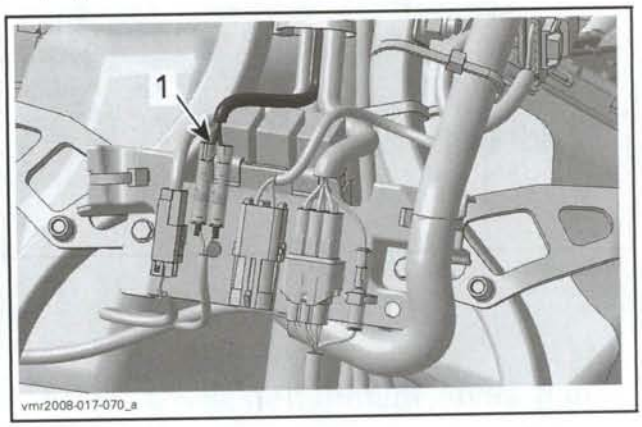

1. Clutch switch connectors

Loosen cable adjuster lock nut.

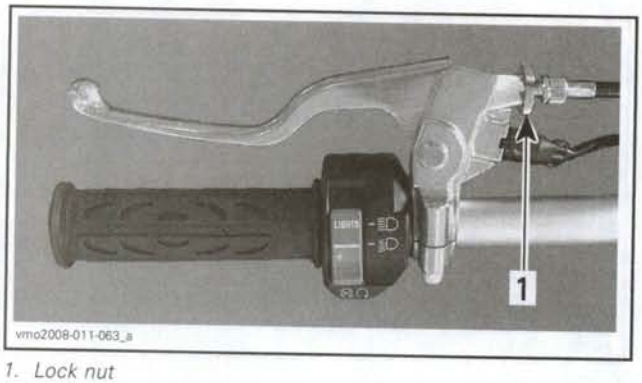

1. Lock nut

Turn cable adjuster until proper dimension is obtained.

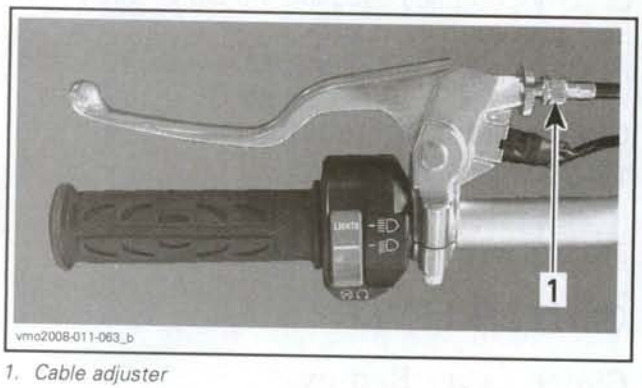

1. Cable adjuster

Detach clutch cable from clutch lever.

Remove screws securing clutch lever to handlebar.

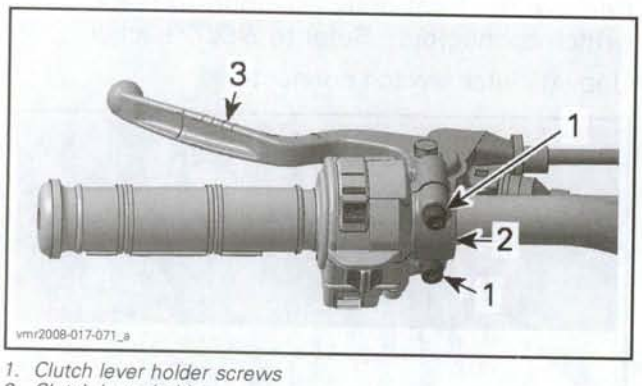

1. Clutch lever holder screws
2. Clutch lever holder
3. Clutch lever

Clutch Lever Installation

The installation is the reverse of the removal procedure.

NOTE: If clutch lever has been replaced, perform a clutch cable adjustment. See procedure above in this section.

RETAINING PLATE AND CLUTCH SPRING

Retaining Plate and Clutch Spring Removal

Remove *CLUTCH RELEASE COVER*, see procedure above in this section.

Unfasten screws crosswise and remove retaining plate and clutch spring.

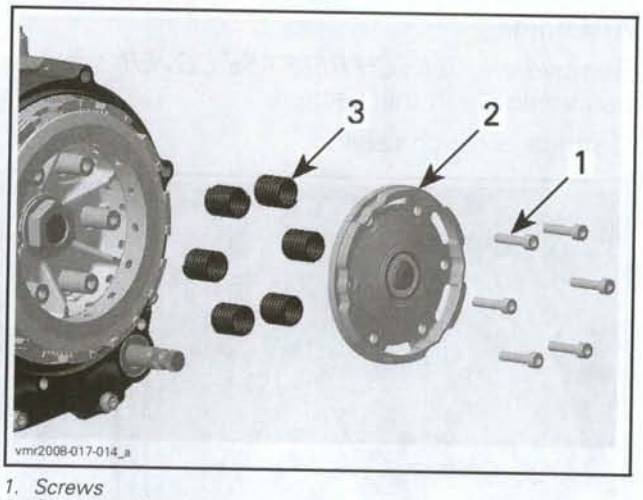

1. Screws
2. Retaining plate
3. Clutch springs

Retaining Plate and Clutch Spring Inspection

Retaining Plate

Check retaining plate for crack or other damage. Change if necessary.

Check if the retaining plate bearing turns smoothly and freely. Replace if necessary.

Check thrust hub for wear or other damage.

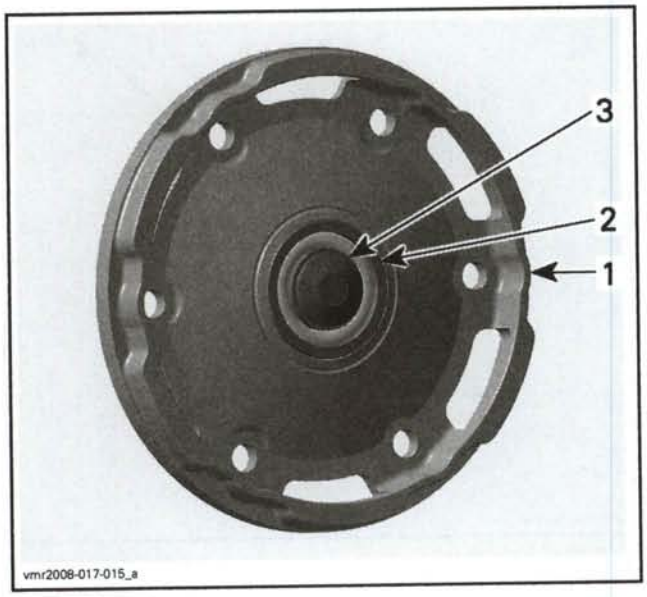

1. *Retaining plate*
2. *Bearing*
3. *Thrust hub*

Clutch Spring

Measure each clutch spring free length.

CLUTCH SPRING FREE LENGTH	
NEW	33.70 to 34.50 mm (1.327 to 1.358 in)
SERVICE LIMIT	31.60 mm (1.244 in)

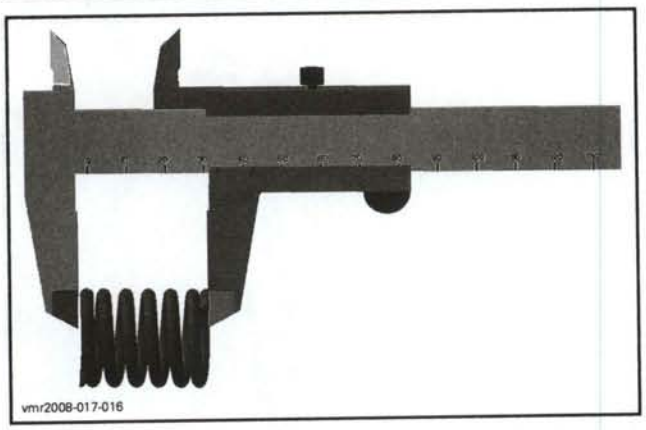

Retaining Plate and Clutch Spring Installation

For installation, reverse the removal procedure.

Perform the *CLUTCH ADJUSTMENT*, see procedure at the beginning of this section.

CLUTCH

Clutch Removal

Remove *RETAINING PLATE AND CLUTCH SPRINGS*, see procedure above in this section.

Using the clutch spanner (P/N 529 035 647) and a 27 mm socket, remove clutch hub nut and spring washer.

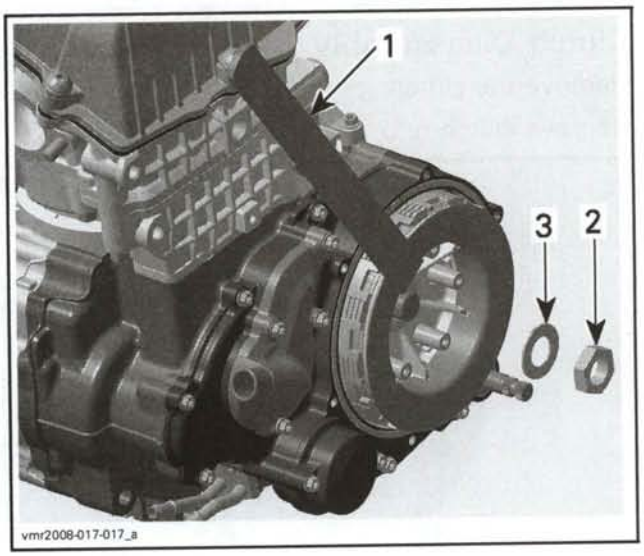

1. *Clutch spanner*
2. *Clutch hub nut*
3. *Spring washer*

Install a clutch spring using a retaining plate screw with an appropriate washer.

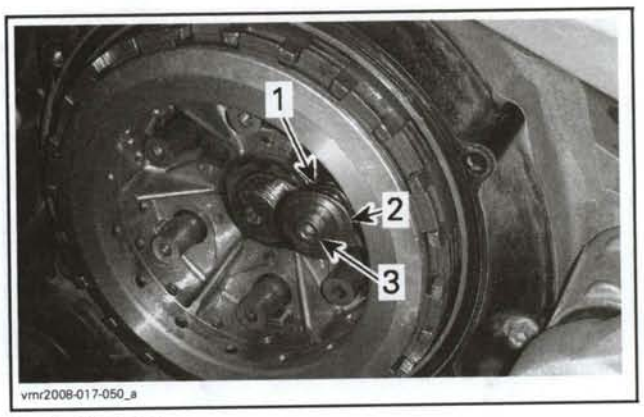

1. *Clutch spring*
2. *Washer*
3. *Retaining plate screw*

Withdraw clutch hub assembly.

Clutch Disassembly

Remove the clutch spring.

Remove clutch hub.

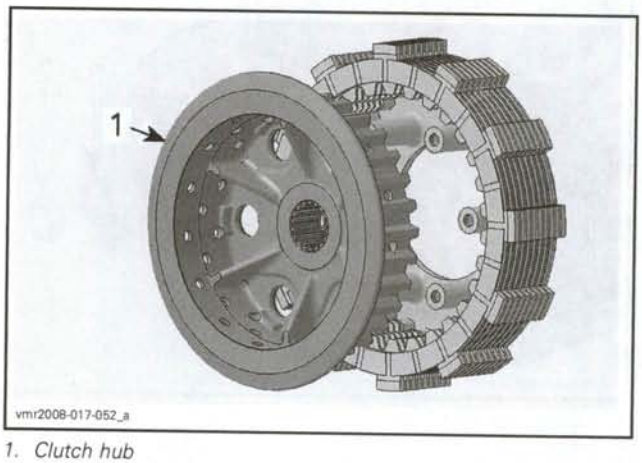

1. Clutch hub

Remove clutch and friction plates from the inner plate.

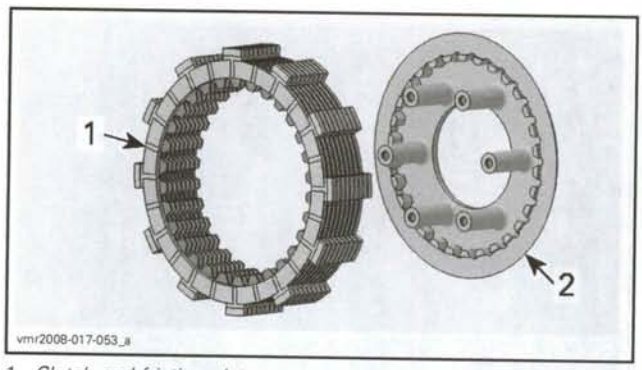

1. Clutch and friction plates
2. Inner plate

Clutch Inspection

Clutch Hub

Check the splines and the flat surface for grooves, wear or other damage.

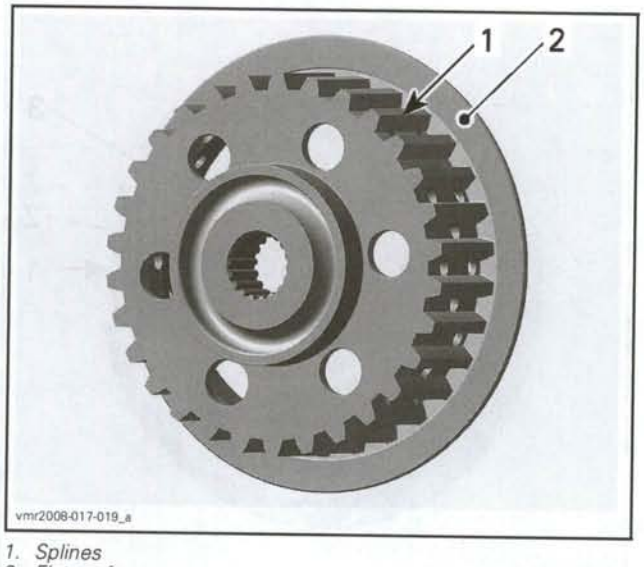

1. Splines
2. Flat surface

Friction Plate

Measure friction plate thickness.

Even if one friction plate is worn out, replace all friction plates.

FRICTION PLATE THICKNESS	
NEW	2.52 to 2.68 mm (.100 to .106 in)
SERVICE LIMIT	2.45 mm (.096 in)

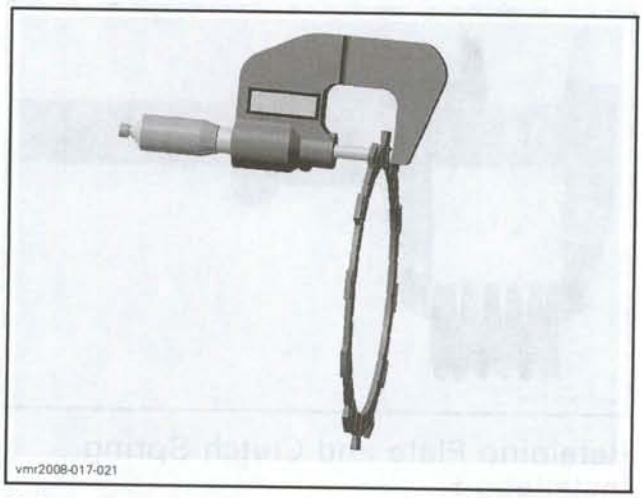

Using a feeler gauge, check friction plate warpage.

Place friction plate on a flat surface and tip with a finger on plate to find maximum warpage.

FRICTION PLATE WARPAGE	
SERVICE LIMIT	0.15 mm (.006 in)

Clutch Plate

Using a feeler gauge, check clutch plate warpage.

Place clutch plate on a flat surface and tip with a finger on plate to find maximum warpage.

CLUTCH PLATE WARPAGE	
SERVICE LIMIT	0.15 mm (.006 in)

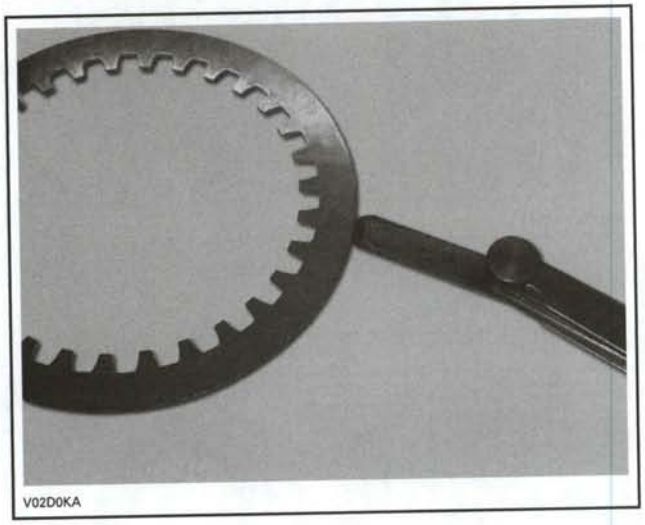

Inner Plate

Check inner plate for damaged spring towers and dirty or stripped threads.

Check the flat surface on the inner plate for wear or damage.

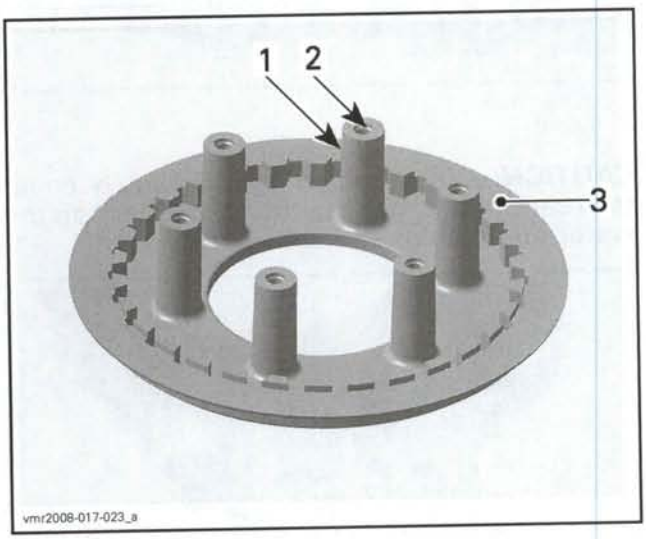

1. *Spring tower*
2. *Threads*
3. *Flat surface*

Clutch Assembly

Thoroughly lubricate new clutch plates with engine oil before assembly to prevent clutch plates burning during break in period.

Preassemble the friction and clutch plates together with the inner plate onto the clutch hub.

Align the tabs of the friction plates and secure the clutch assembly in place with a clutch spring.

NOTE: Take care that the inner splines of the inner plate slip into the outer splines of the clutch hub.

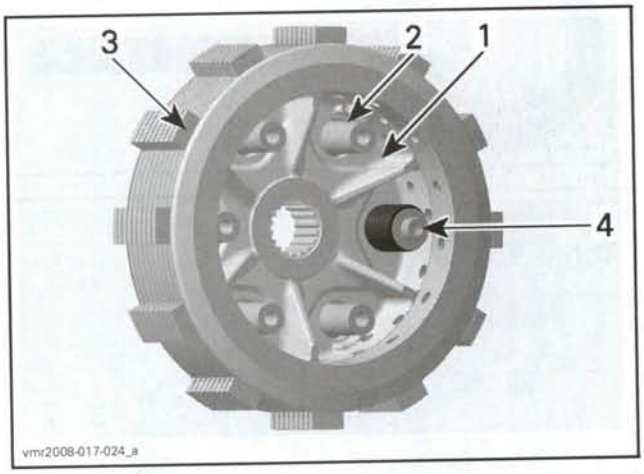

1. *Clutch hub*
2. *Inner plate*
3. *Friction plates tabs*
4. *Clutch spring, flat washer and retaining plate screw*

Clutch Installation

Install clutch assembly into clutch drum.

Position the tabs of the outer friction plate so that it fits into the shorter slots of the clutch drum.

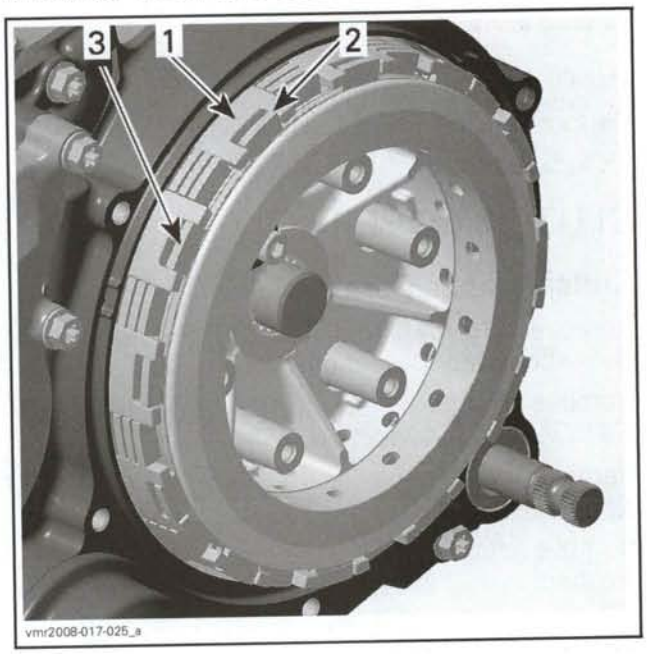

1. *Clutch drum*
2. *Shorter slot*
3. *Outer friction plate*

Apply Loctite 648 (green) (P/N 413 711 400) on threads of clutch hub nut.

Install the spring washer.

Using the clutch spanner (P/N 529 035 647) and a 27 mm socket, tighten clutch hub nut.

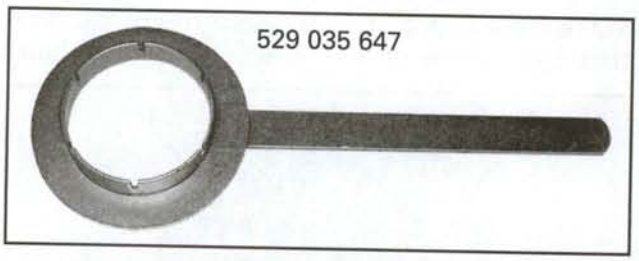

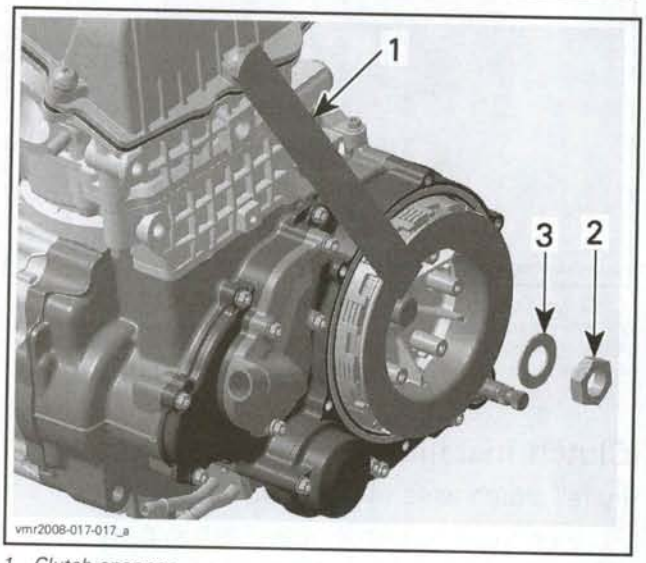

1. *Clutch spanner*
2. *Clutch hub nut*
3. *Spring washer*

Install all other removed parts.

Perform the *CLUTCH ADJUSTMENT*, see procedure at the beginning of this section.

CLUTCH COVER

Clutch Cover Removal

Remove *CLUTCH RELEASE COVER*, see procedure above in this section.

Remove oil filter cover and filter, refer to *LUBRICATION SYSTEM* section.

Remove water pump cover. Refer to *COOLING SYSTEM* section.

Remove clutch cover screws. Discard sealing washer.

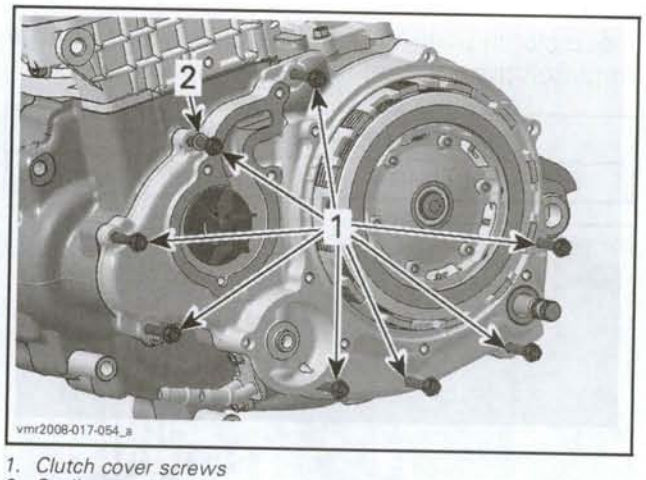

1. *Clutch cover screws*
2. *Sealing washer*

Remove clutch cover and discard the gasket.

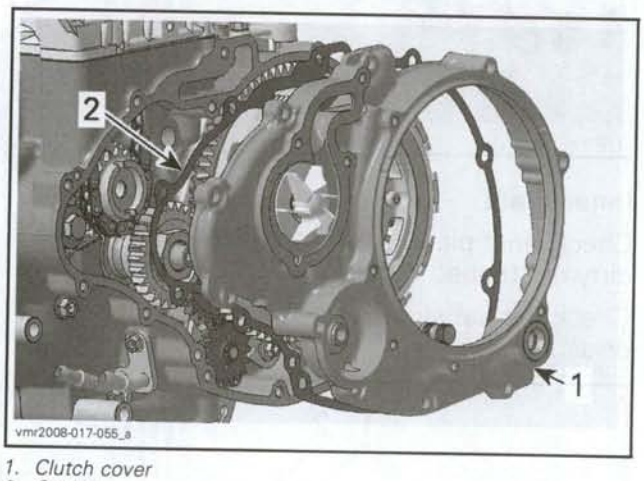

1. *Clutch cover*
2. *Gasket*

CAUTION: When removing the clutch cover take care not to lose the thrust washers on the water pump shaft and shift shaft.

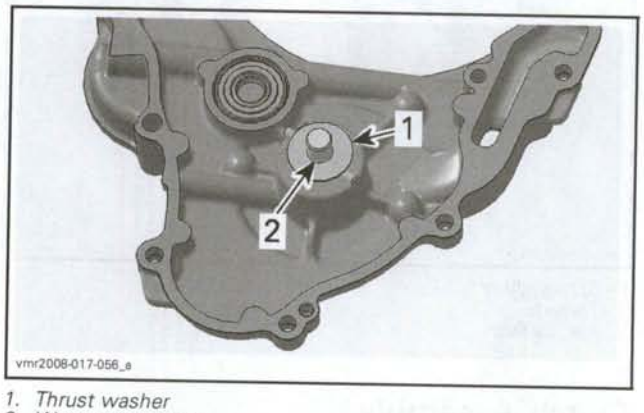

1. *Thrust washer*
2. *Water pump shaft*

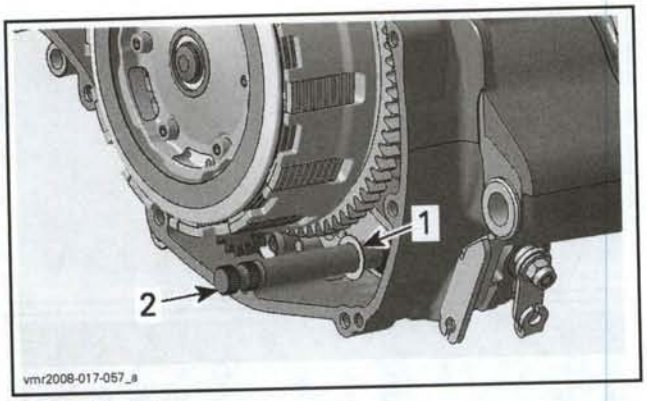

1. Thrust washer
2. Shift shaft

Clutch Cover Inspection

Check the clutch cover for cracks or other damage. Replace cover if damaged.

Clean oil filter chamber and oil orifice to the crankshaft support bearing from contaminations with part cleaner, then use an air gun and dry it.

Inspect visually crankshaft support bearing for seizure or wear.

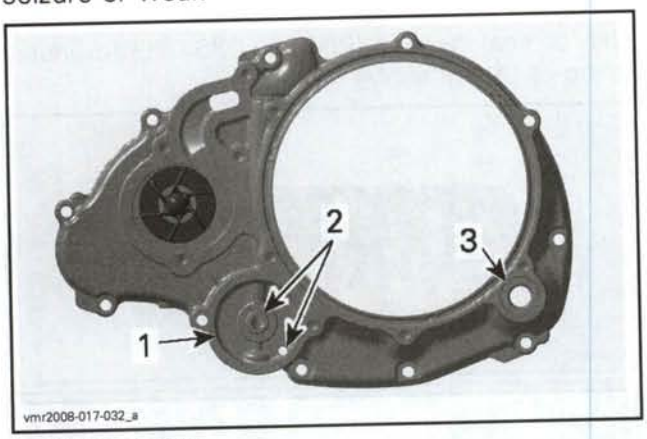

1. Oil filter chamber
2. Oil orifices
3. Shift shaft oil seal

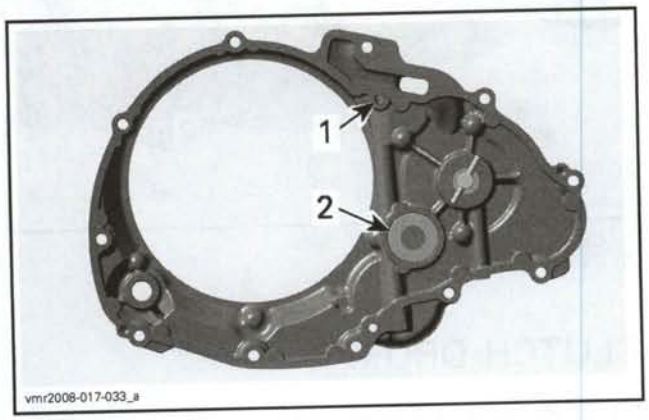

1. Oil orifice
2. Crankshaft support bearing

Bearing Sleeve (for Crankshaft)

Check if bearing sleeve is in proper position.

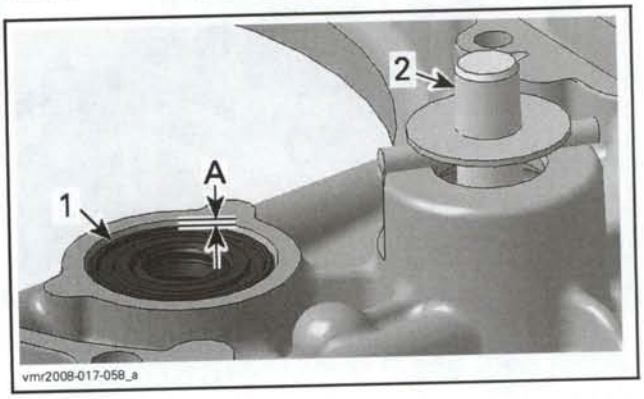

1. Bearing sleeve
2. Water pump shaft
A. Minimum 2.6 mm (.102 in)

Shift Shaft Oil Seal

Check if shift shaft oil seal is brittle, hard or damaged. Replace if necessary.

The shift shaft oil seal can be removed without clutch cover removal. Use a small flat screwdriver for removal.

CAUTION: Avoid scoring clutch cover bore or shift shaft during oil seal removal.

Clutch Cover Installation

For installation, reverse the removal procedure. However pay attention to following.

Apply Loctite 518 (P/N 293 800 038) on clutch cover as shown in the following illustration.

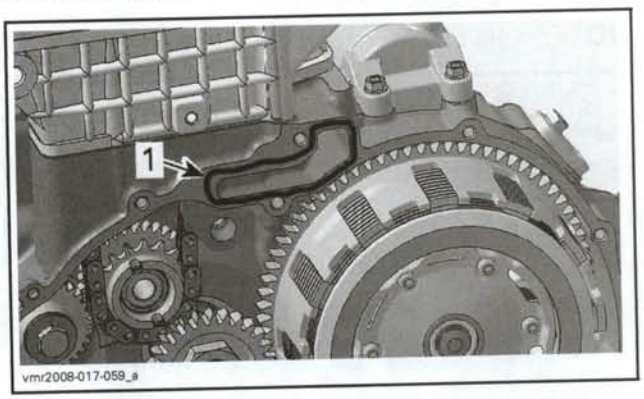

1. Apply Loctite 518 here

Install a **NEW** clutch cover gasket.

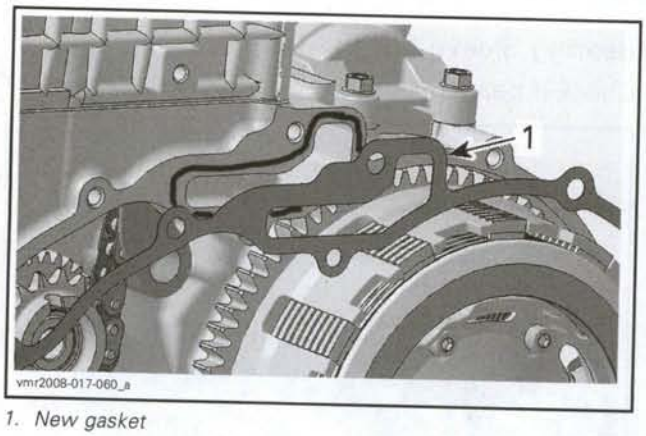

1. New gasket

Apply Loctite 518 (P/N 293 800 038) on gasket as shown in the following illustration.

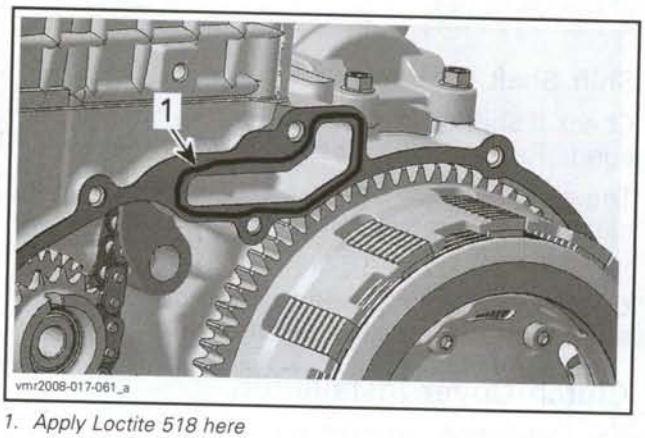

1. Apply Loctite 518 here

Install the clutch cover. Pay attention do not damage or move gasket during installation.

Install clutch cover screws.

NOTE: Install new sealing washer on screw.

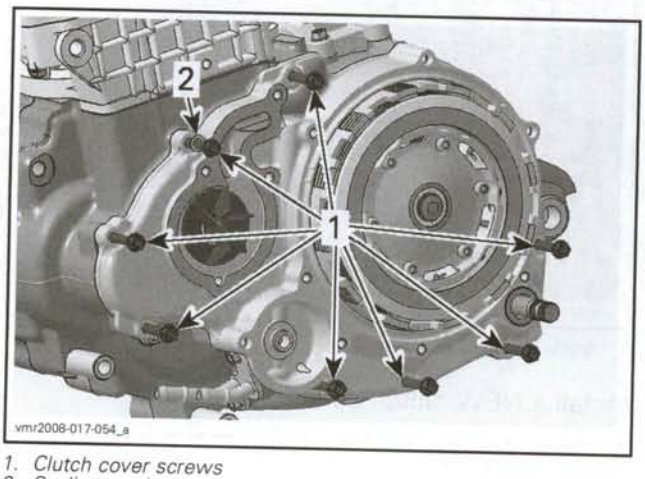

1. Clutch cover screws
2. Sealing washer

Shift Shaft Oil Seal

Put the protection sleeve (P/N 529 036 071) on shift shaft and position oil seal on shaft.

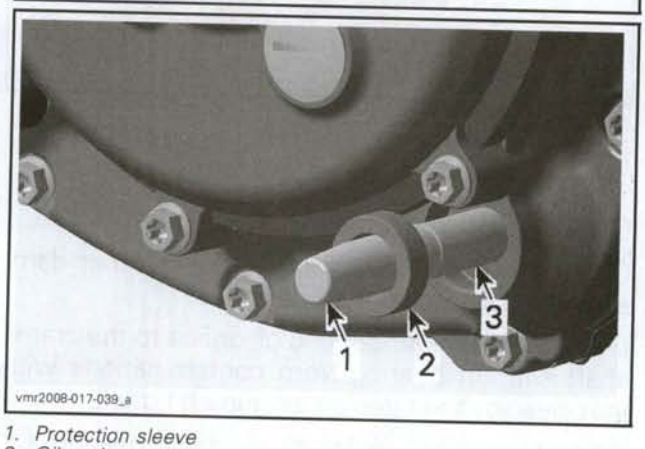

1. Protection sleeve
2. Oil seal
3. Shift shaft

Use oil seal installer (P/N 529 036 070) for installation of the oil seal.

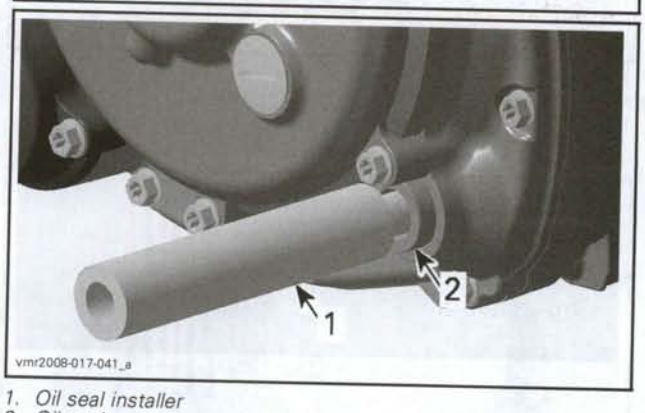

1. Oil seal installer
2. Oil seal

CLUTCH DRUM

Clutch Drum Removal

Remove the *CLUTCH COVER*, see procedure above in this section.

Remove *CLUTCH*, see procedure above in this section.

Remove thrust washer then the clutch drum.

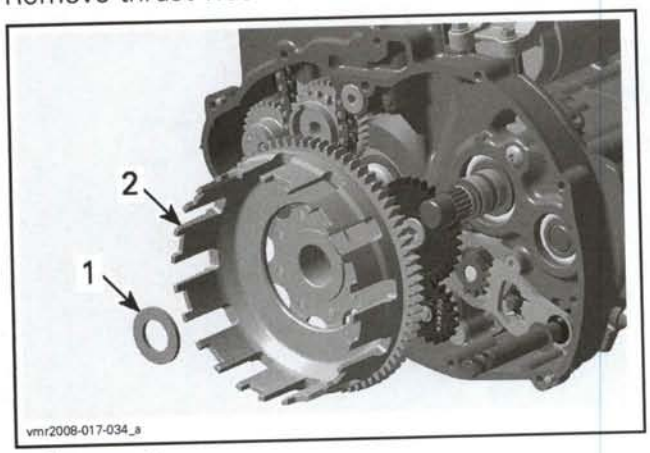

1. *Thrust washer*
2. *Clutch drum*

Clutch Drum Inspection

Check needle bearings for:

- Wear
- Pitting
- Crack.

If necessary replace both needle bearings.

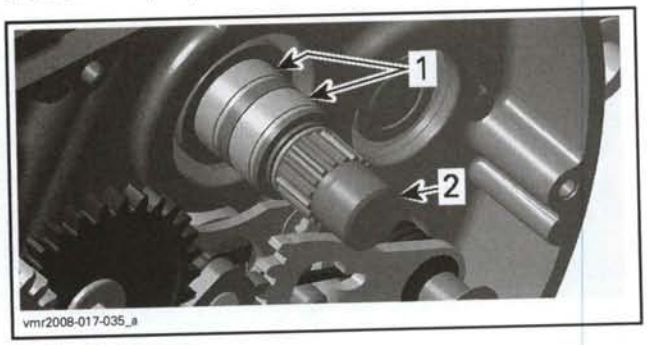

1. *Needle bearings*
2. *Clutch shaft*

Check if O-ring on clutch shaft is:

- Brittle
- Hard
- Otherwise damaged.

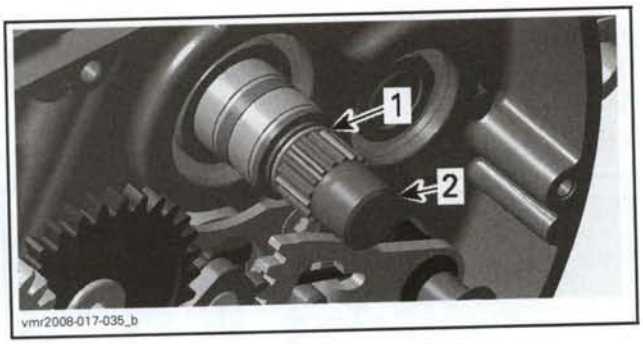

1. *O-ring*
2. *Clutch shaft*

Replace as required.

Check slots of clutch basket for steps, damage or wear caused by friction plates.

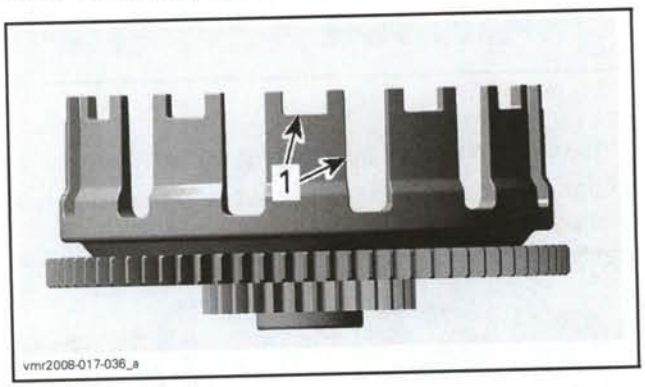

1. *Clutch basket slots*

Replace the clutch hub if one of slots is damaged.

Inspect primary drive gear and oil pump drive gear for:

- Chipped teeth
- Worm teeth
- Broken teeth.

1. *Primary drive gear*
2. *Oil pump drive gear*

Replace the clutch hub and oil pump gear if the primary drive gear is damaged.

Replace the oil pump drive gear if any damage is detected. Perform the following to replace the gear.

- Break gear locking tabs then pull gear.

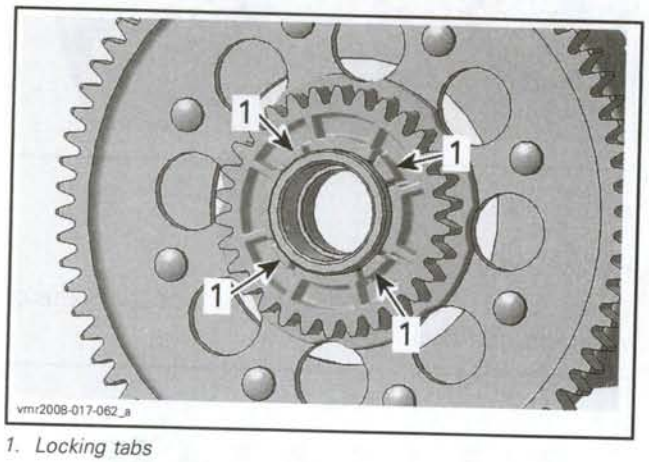

1. Locking tabs

- Insert the **NEW** oil pump gear on clutch hub.
- Align oil pump drive gear dowels with clutch hub holes.

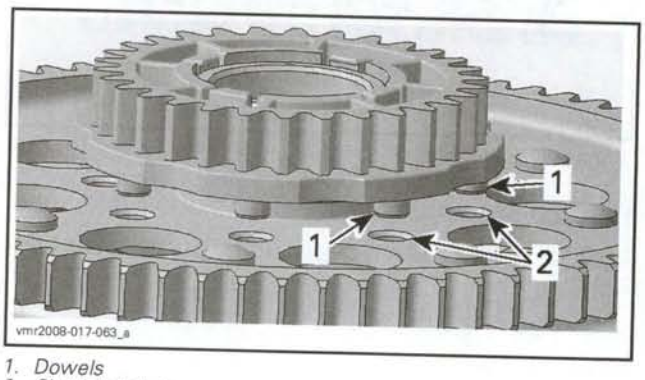

1. Dowels
2. Clutch hub holes

- Press down the gears until locking tabs are snapped into clutch hub groove.

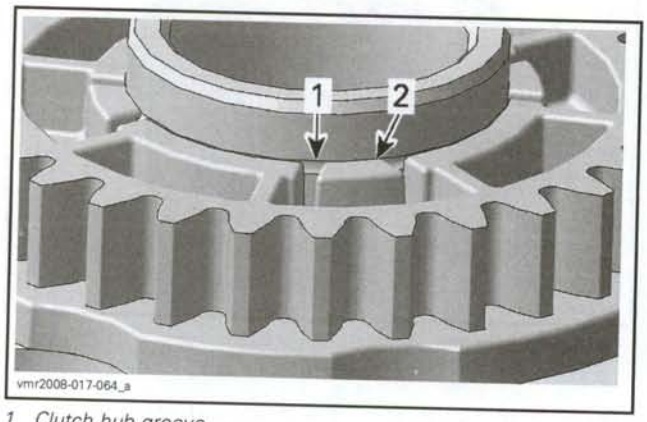

1. Clutch hub groove
2. Gear locking tab

Clutch Drum Installation

For installation reverse the removal procedure.

GEARBOX

SERVICE TOOLS

Description	Part Number	Page
oil seal protection sleeve	529 036 068	160

SERVICE PRODUCTS

Description	Part Number	Page
Loctite 243 (blue)	293 800 060	155
Loctite 5910	293 800 081	152

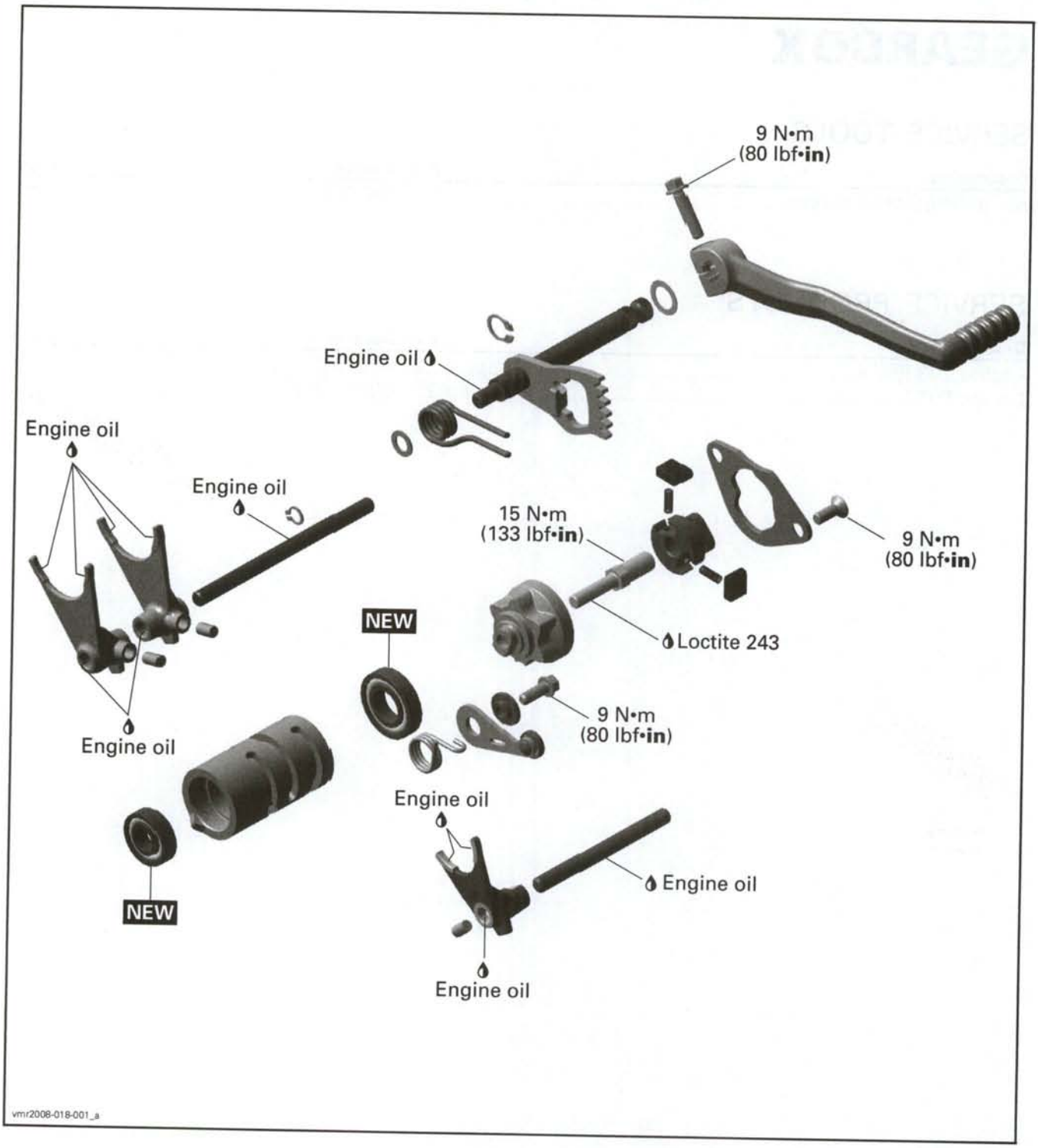
9 N•m
(80 lbf•in)
Engine oil
Engine oil
Engine oil
Engine oil
15 N•m
(133 lbf•in)
9 N•m
(80 lbf•in)
NEW
Loctite 243
9 N•m
(80 lbf•in)
Engine oil
Engine oil
Engine oil
NEW
Engine oil
vmr2008-018-001_a

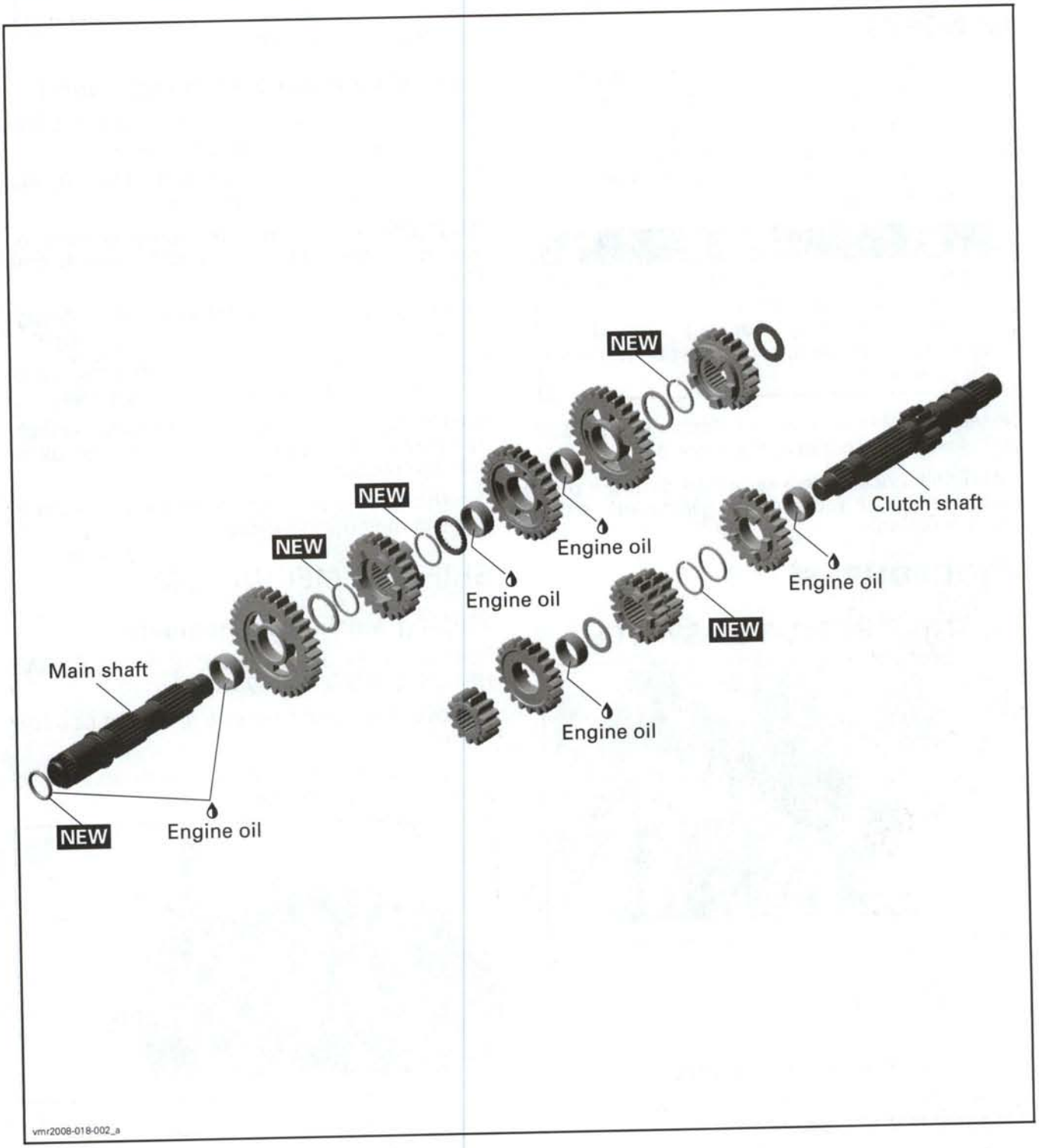
NEW
NEW
NEW
NEW
Engine oil
Engine oil
Engine oil
Engine oil
Clutch shaft
Main shaft
NEW
Engine oil
vmr2008-018-002_a

GENERAL

During assembly/installation, use the torque values and service products as in the exploded view.

Clean threads before applying a threadlocker. Refer to *SELF-LOCKING FASTENERS* and *LOCTITE APPLICATION* at the beginning of this manual for complete procedure.

⚠ WARNING

Torque wrench tightening specifications must be strictly adhered to.
Locking devices (e.g.: locking tabs, elastic stop nuts, cotter pins, etc.) must be replaced with new ones.

Hoses or cables removed or disconnected must be installed and routed at the same place.

CAUTION: Locking ties removed during a procedure must be replaced and installed at the same location.

PROCEDURES

NEUTRAL INDICATOR SWITCH

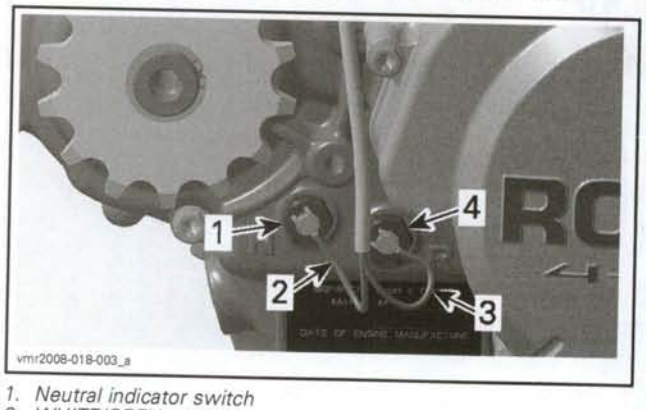

1. *Neutral indicator switch*
2. *WHITE/GREY wire*
3. *ORANGE/GREY wire*
4. *Indicator switch (plug)*

Neutral Indicator Switch Test

Check if the neutral indicator switch works properly as per following procedure:

Disconnect wire from switch.

Put gearbox in neutral position.

Use a multimeter to measure the resistance from the indicator switch to the engine ground.

If the resistance is infinite "OL", replace the indicator switch.

Neutral Indicator Switch Removal

Remove screw retaining indicator switch wire.

Unscrew indicator switch.

Neutral Indicator Switch Installation

For installation reverse the removal procedure. However, pay attention to the following.

Apply carefully some Loctite 5910 (P/N 293 800 081) on indicator switch threads.

CAUTION: Ensure not to apply sealant on switch plunger, as it will lead to switch malfunction.

Take care not to damage indicator switch threads during installation.

Tighten switch carefully until its head leans against the crankcase. Tighten to 2 N•m (18 lbf•**in**).

CAUTION: Do not over tight indicator switch. The threaded portion of switch could break inside crankcase.

If both switches are removed, make sure to install wires in their original location.

SHIFTING MECHANISM

Shifting Mechanism Removal

Remove engine from vehicle. Refer to *ENGINE REMOVAL/INSTALLATION* section.

Remove clutch cover and clutch, refer to *CLUTCH* section.

Remove shift shaft assembly with spring and washers from crankcase.

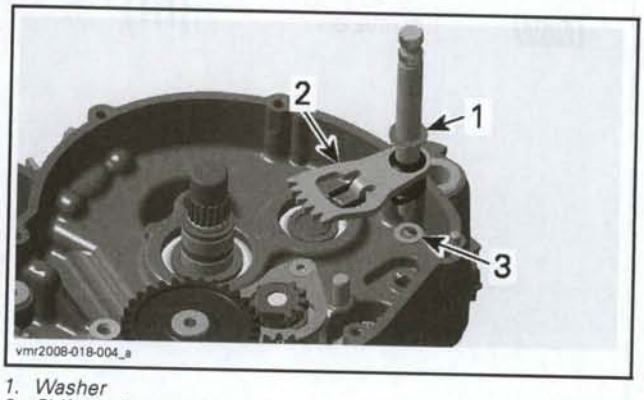

1. *Washer*
2. *Shift shaft assembly*
3. *Washer*

Remove oil pump intermediate gear.

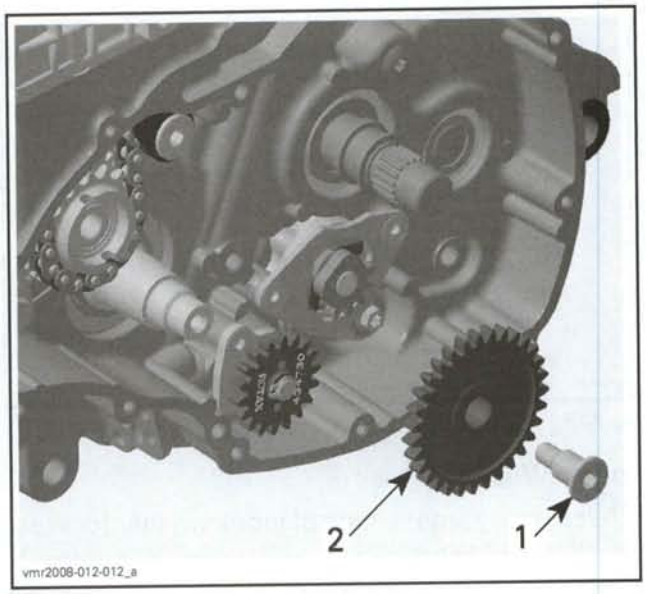

1. Bearing bolt
2. Intermediate gear

Unscrew screws retaining the disengagement gate to the crankcase.

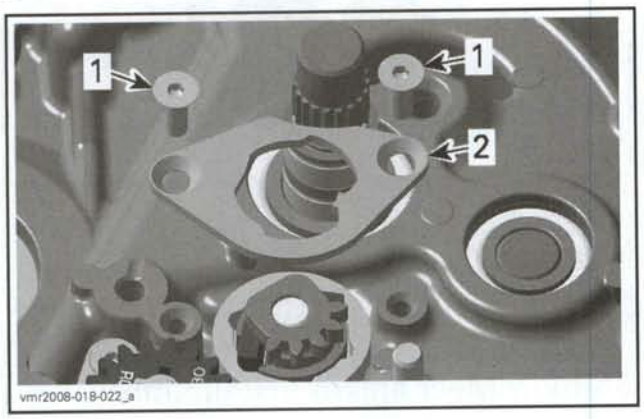

1. Screws
2. Disengagement gate

Hold pawls and remove tooth segment.

CAUTION: Pawl springs are loaded and will pop outside of tooth segment if pawls are not held during tooth segment removal.

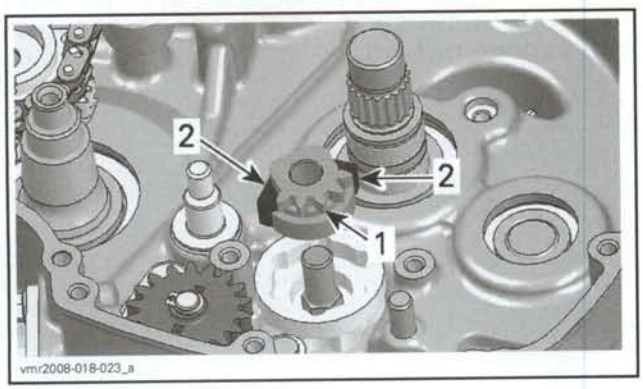

1. Tooth segment
2. Pawls

Unscrew and remove bearing pin.

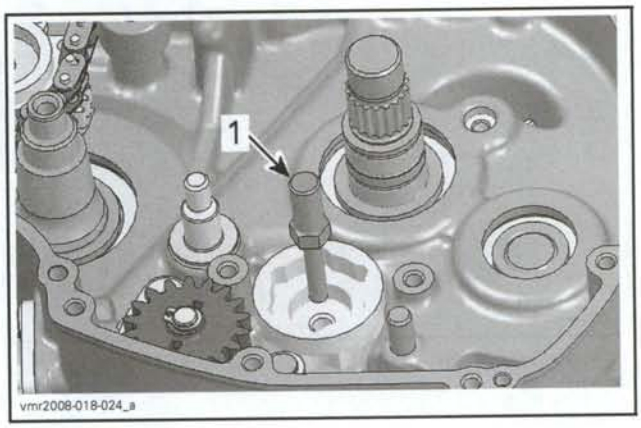

1. Bearing pin

Insert a flat screwdriver in the slot of index lever.

Turn screwdriver counterclockwise and remove index washer.

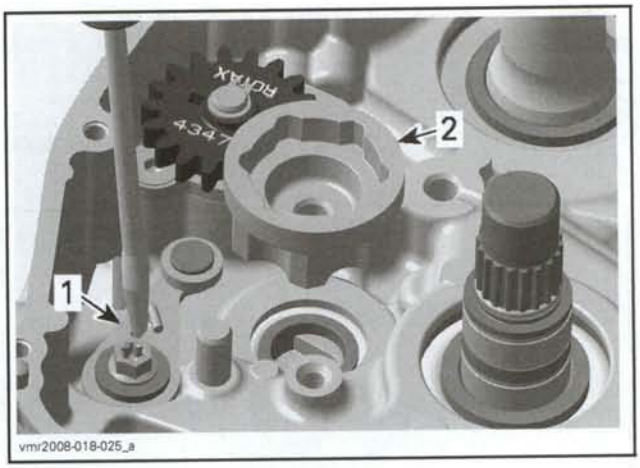

1. Index lever
2. Index washer

Remove:
- Index lever screw
- Step ring
- Index lever
- Index spring.

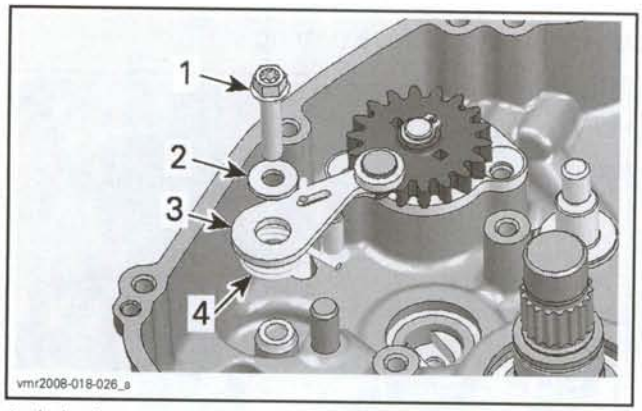

1. *Index lever screw*
2. *Step ring*
3. *Index lever*
4. *Index spring*

Shifting Mechanism Inspection

Shift shaft

Check shift shaft for worn splines or other damages.

Tooth Segment, Springs and Pawls

Check teeth of tooth segment for wear. Replace if necessary.

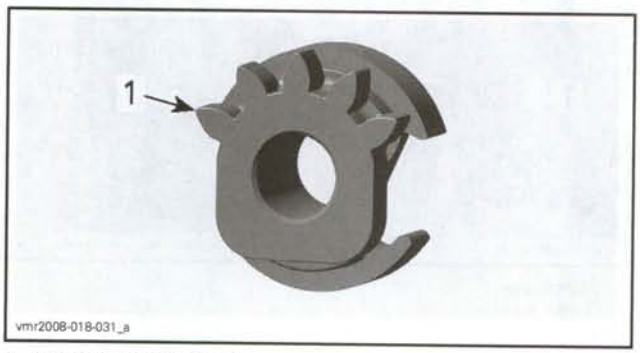

1. *Teeth of tooth segment*

Inspect squared edges of pawls for wear. Replace as required.

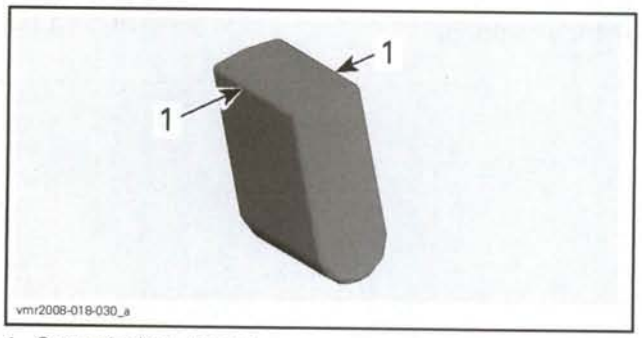

1. *Squared edges of pawl*

Check springs for squareness or bending.

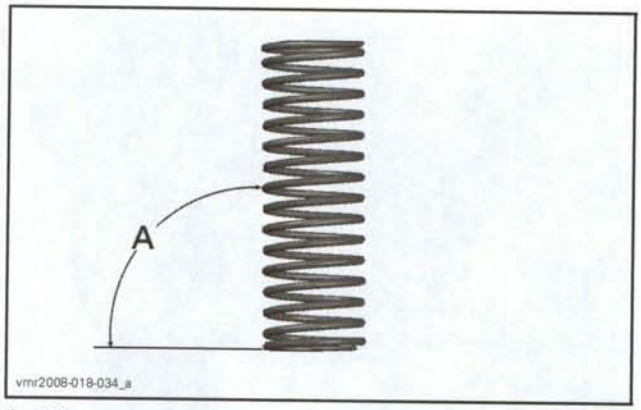

A. *90 °*

Index Washer

Check engagement slots of index washer for wear or other damages.

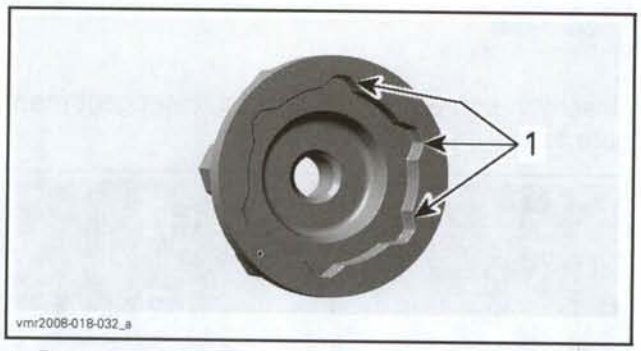

1. *Engagement slots*

Index Lever

Index lever and roller of index lever must move freely. Replace if necessary.

Shifting Mechanism Installation

The installation is the reverse of the removal procedure. However, pay attention to the following.

Apply engine oil on moving parts when installing components.

Install pawls into tooth segment.

CAUTION: Take care that during installation of pawl into tooth segment the spring does not get wedged or bent.

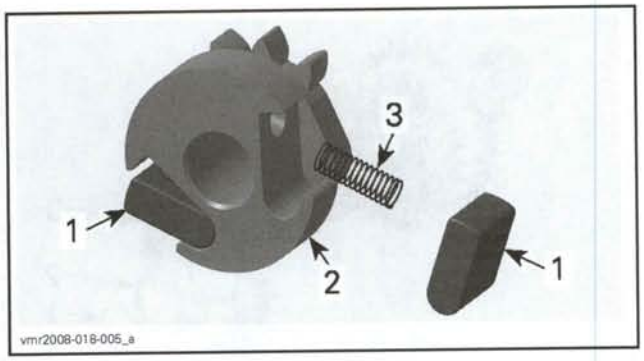

1. *Pawls*
2. *Tooth segment*
3. *Spring*

Apply Loctite 243 (blue) (P/N 293 800 060) on the lower threads of the bearing pin.

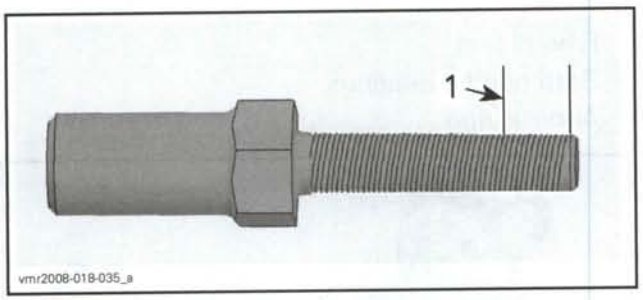

1. *Apply threadlocker in this section*

When installation of shifting mechanism is finished check if gears engage precisely and shifting system works properly.

GEARBOX

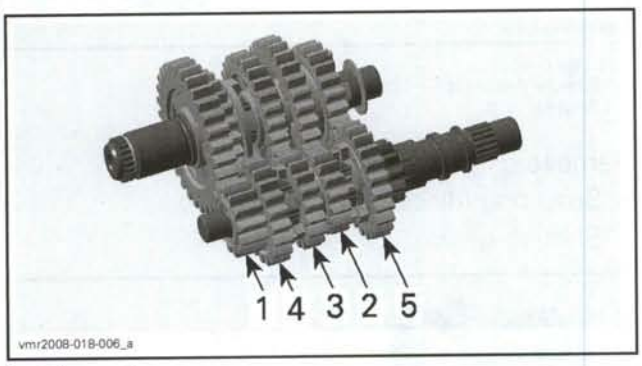

1. *1st speed*
2. *2nd speed*
3. *3rd speed*
4. *4th speed*
5. *5th speed*

Gearbox Removal

Remove the *SHIFTING MECHANISM*, see procedure above in this section.

Remove cylinder with cylinder head, refer to *CYLINDER HEAD/CYLINDER* section.

Split the crankcase. Refer to *CRANKCASE/CRANKSHAFT* section.

Remove both shift fork shafts from shift forks.

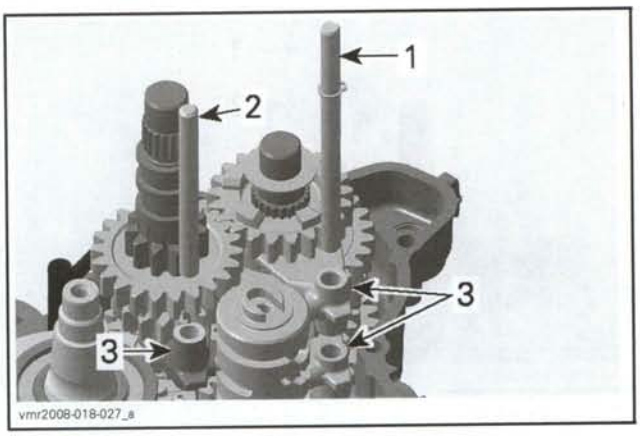

1. *Long shift fork shaft (with a retaining ring)*
2. *Short shift fork shaft*
3. *Shift forks*

Disengage shift forks from shift drum.

Remove shift drum and bearing.

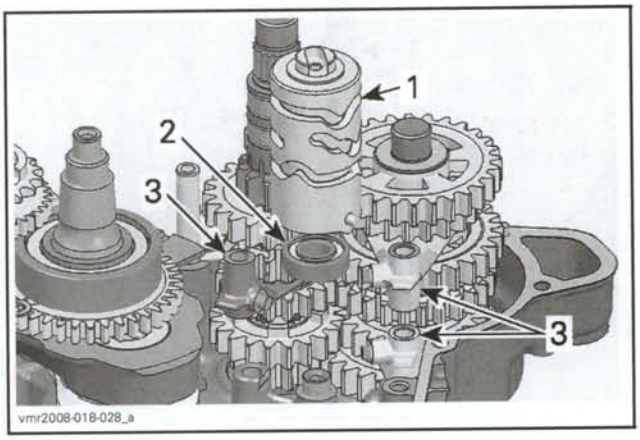

1. *Shift drum*
2. *Bearing*
3. *Shift forks*

Finally remove shift forks with engagement pins from gearbox.

CAUTION: Shift fork engagement pins have only a sliding fit to the shift fork. Take care not to lose the shift fork engagement pins during removal.

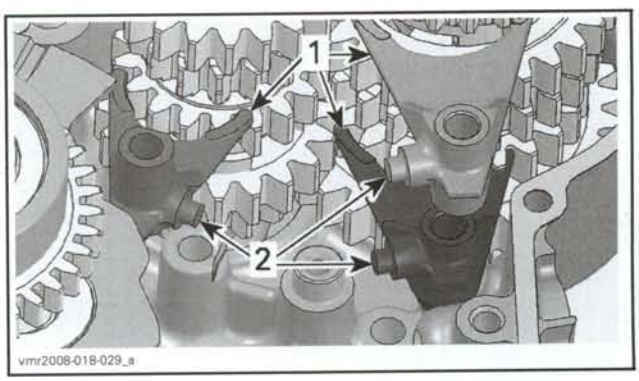

1. *Shift forks*
2. *Engagement pins*

Remove the 5th gear from the main shaft.

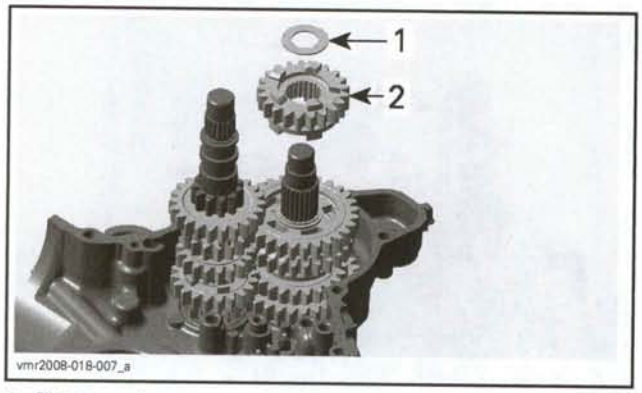

1. *Thrust washer*
2. *Shifting gear, 5th gear*

Using a soft hammer, tap main shaft to assist withdrawing main shaft assembly together with clutch shaft assembly.

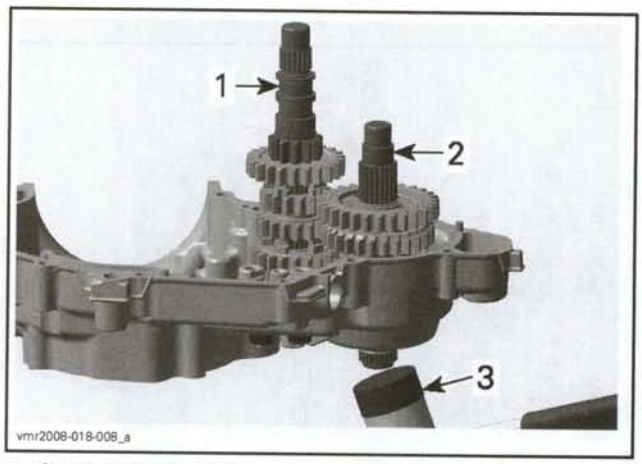

1. *Clutch shaft assembly*
2. *Main shaft assembly*
3. *Soft hammer*

Gearbox Disassembly

NOTE: Snap rings should be removed using retaining ring pliers only. These pliers avoid to damage other parts around snap rings.

Main Shaft

Remove:
- Snap ring (discard)
- Thrust washer
- Free pinion.

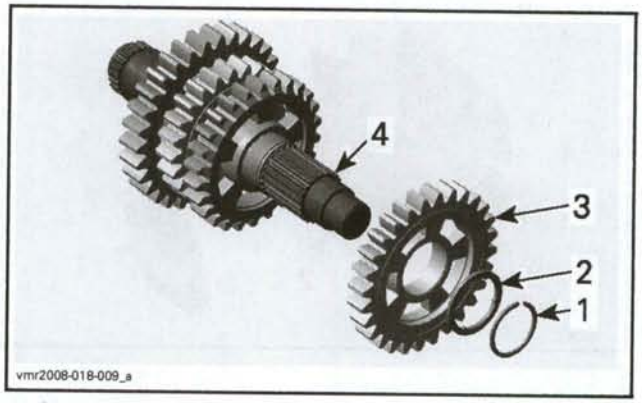

1. *Snap ring*
2. *Thrust washer*
3. *Free pinion*
4. *Main shaft assembly*

Remove:
- Free pinion
- Both needle bearings
- Angular ring.

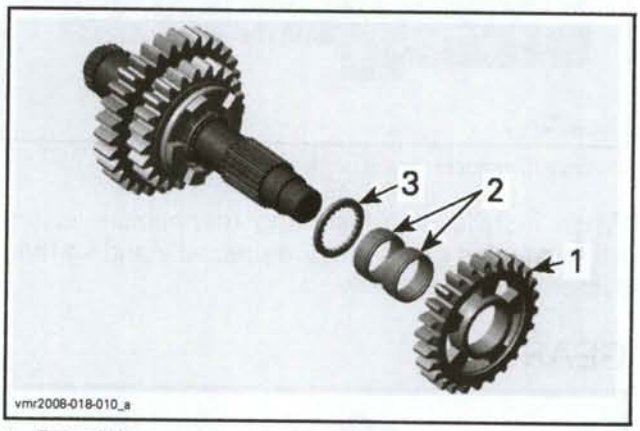

1. *Free pinion*
2. *Needle bearings*
3. *Angular ring*

Remove:
- Snap ring (discard)
- Shifting gear.

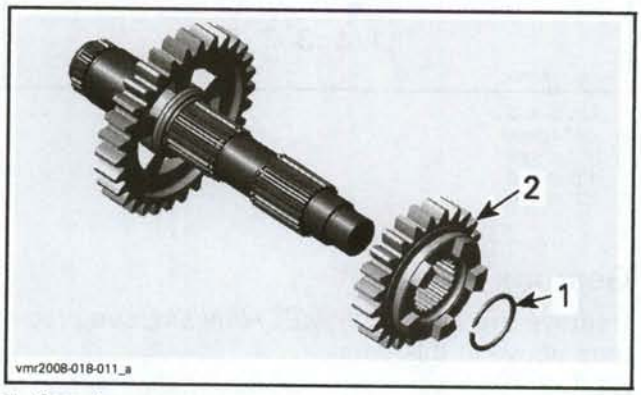

1. *Snap ring*
2. *Shifting gear*

Remove:
- Snap ring (discard)
- Thrust washer
- Free pinion
- Needle bearing.

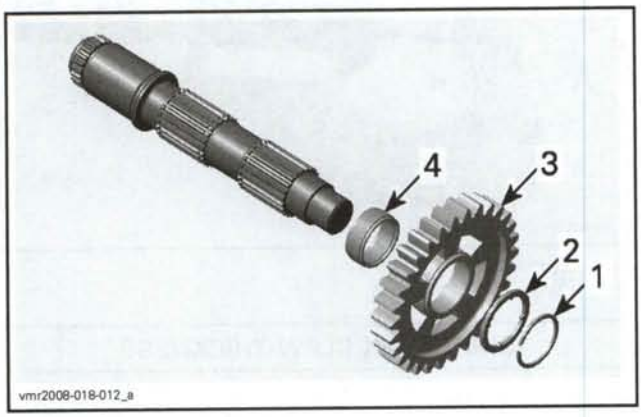

1. *Snap ring*
2. *Thrust washer*
3. *Free pinion*
4. *Needle bearing*

Clutch Shaft

Withdraw from clutch shaft:
- Fixed gear
- Free pinion
- Needle bearing
- Thrust washer
- Shifting gear.

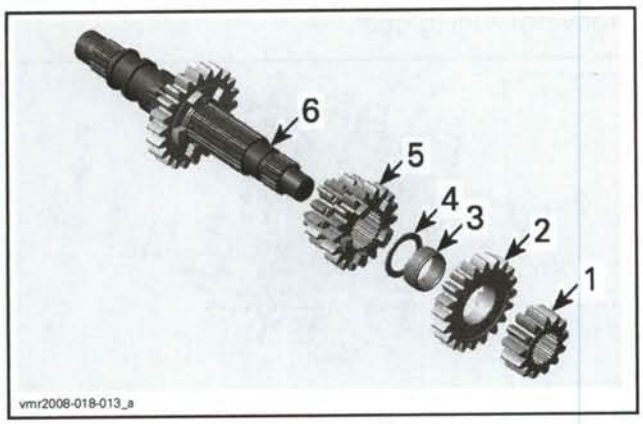

1. *Fixed gear*
2. *Free pinion*
3. *Needle bearing*
4. *Thrust washer*
5. *Shifting gear*
6. *Clutch shaft assembly*

Remove from clutch shaft:
- Snap ring (discard)
- Thrust washer
- Free pinion
- Needle bearing.

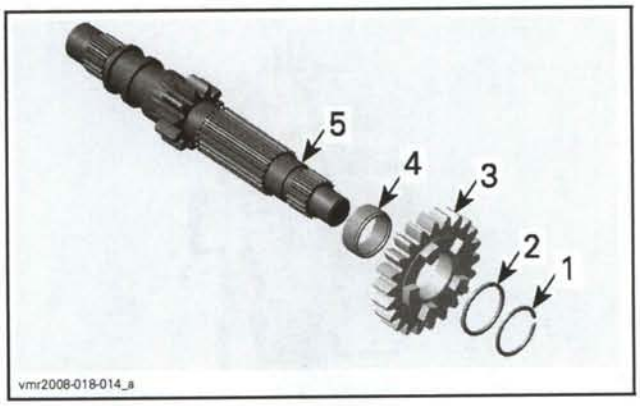

1. *Snap ring*
2. *Thrust washer*
3. *Free pinion*
4. *Needle bearing*
5. *Clutch shaft*

Gearbox Inspection

Always verify for the following when inspecting gearbox components:
- Gear teeth damage
- Worn or scoured bearing surfaces
- Rounded engagement dogs and slots
- Worn shift fork engagement groove
- Worn splines on shafts and gears.

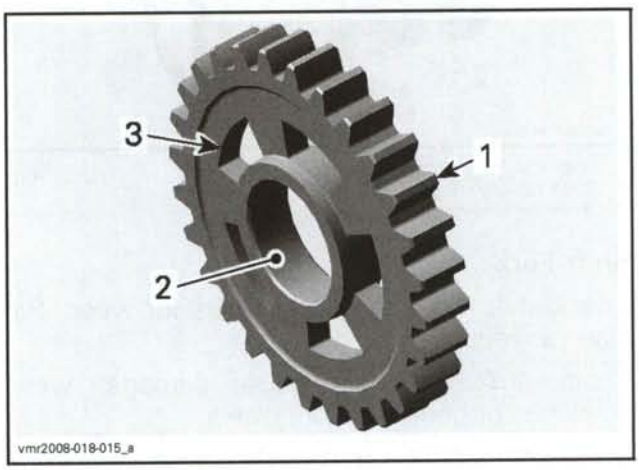

1. *Teeth*
2. *Bearing surface*
3. *Engagement slot*

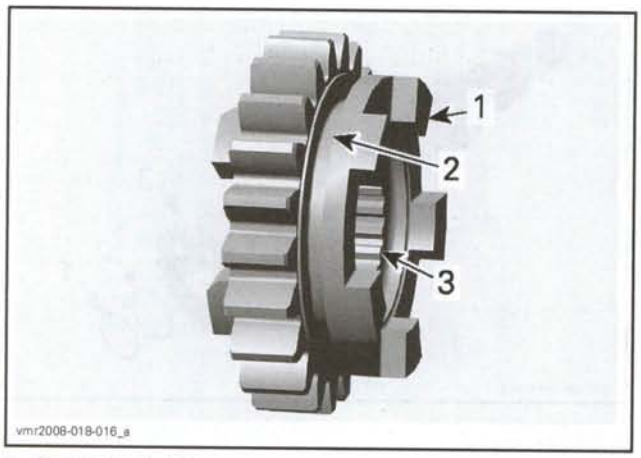

1. Engagement dog
2. Shift fork engagement groove
3. Inner splines

Shift Drum

Check shift drum tracks for scouring or heavy wear, like rounded engagement slots and contact notch.

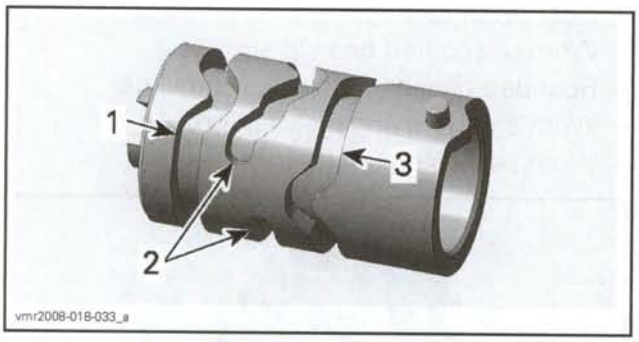

1. Track for 2nd gear shift fork
2. Track for 4th/5th gear shift fork
3. Track for 1st/3rd gear shift fork

Shift Fork

Check shift fork engagement pins for wear. Replace as required.

Check shift forks for visible damage, wear, scratches or bent shift fork claws.

Measure the shift fork claw thickness.

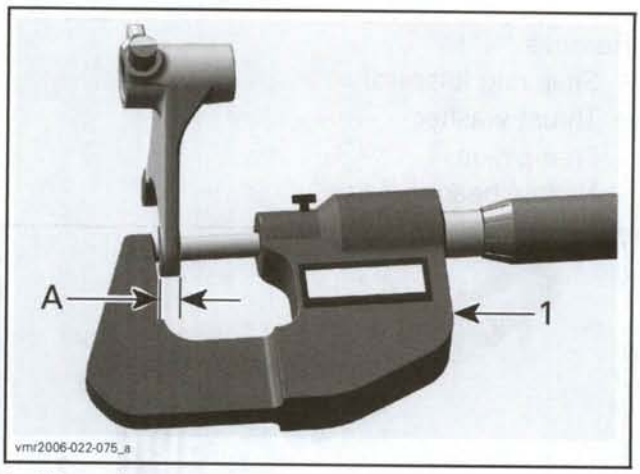

1. Micrometer
A. Shift fork claw thickness

SHIFT FORK CLAW THICKNESS	
NEW	3.54 to 3.60 mm (.1394 to .1417 in)
SERVICE LIMIT	3.40 mm (.134 in)

Shift Fork shaft

Check shift shaft for:
- Bending
- Wear
- Other damages.

Gears

Measure the width of shift fork engagement groove of sliding gears.

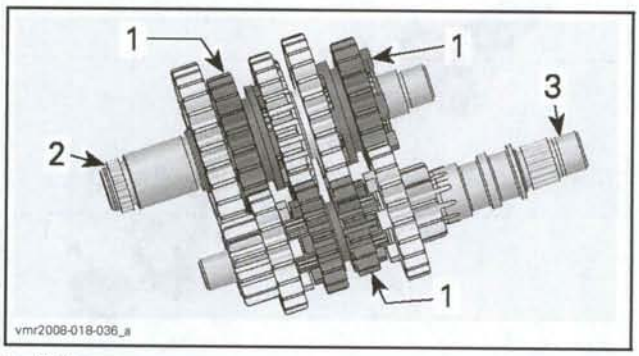

1. Sliding gears
2. Main shaft
3. Clutch shaft

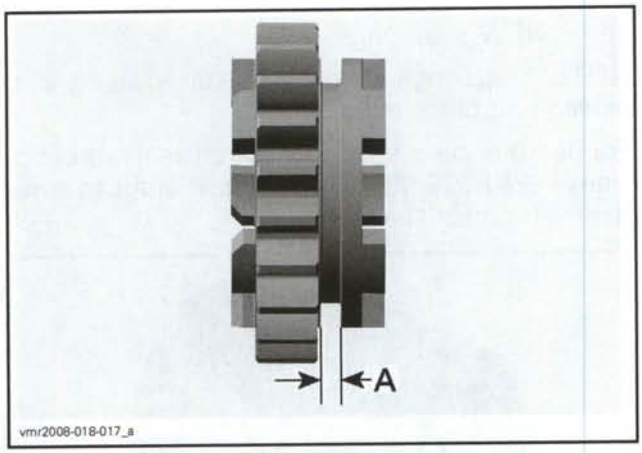

A. Width of shift fork engagement groove

WIDTH OF SHIFT FORK ENGAGEMENT GROOVE	
NEW	3.70 to 3.80 mm (.1457 to .1496 in)
SERVICE LIMIT	4.00 mm (.157 in)

Check free pinions for wear.

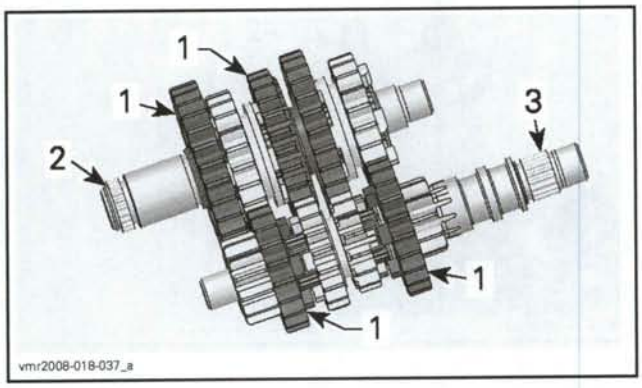

1. *Free pinion*
2. *Main shaft*
3. *Clutch shaft*

Measure the inner diameter of free pinions.

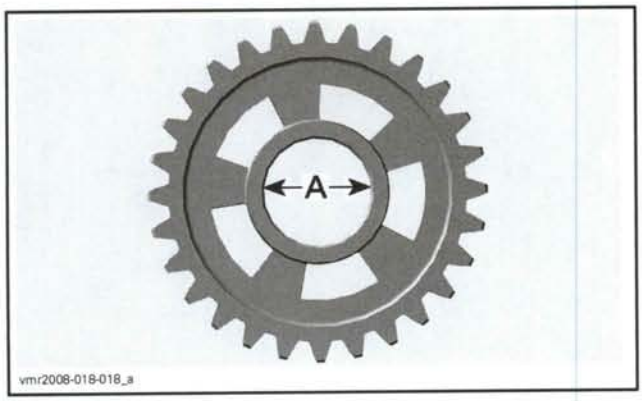

A. Diameter free pinion bearing

DIAMETER FREE PINION	
CLUTCH SHAFT	
NEW	24.007 to 24.020 mm (.9452 to .9457 in)
SERVICE LIMIT	24.025 mm (.9458 in)
MAIN SHAFT	
NEW	25.007 to 25.020 mm (.9845 to .9850 in)
SERVICE LIMIT	25.025 mm (.9852 in)

Main Shaft

Check main shaft for wear.

Check taper grooves and annular grooves of shafts. Annular grooves must have sharp edges.

Check splines for wear and/or damages.

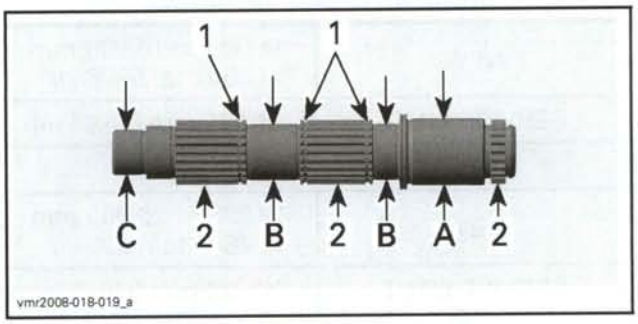

1. *Grooves*
2. *Splines*

A. Magneto side journal
B. Free pinion bearing
C. Clutch side journal

MAIN SHAFT	
MAGNETO SIDE JOURNAL	
NEW	24.991 to 25.000 mm (.9839 to .9843 in)
SERVICE LIMIT	24.970 mm (.9831 in)
FREE PINION BEARING	
NEW	20.935 to 21.065 mm (.8242 to .8293 in)
SERVICE LIMIT	20.920 mm (.8236 in)
CLUTCH SIDE JOURNAL	
NEW	16.985 to 16.994 mm (.6687 to .6691 in)
SERVICE LIMIT	16.960 mm (.6677 in)

Clutch Shaft

Check clutch shaft for wear.

Check taper grooves and annular grooves of shafts. Annular grooves must have sharp edges.

Check splines for wear and/or damages.

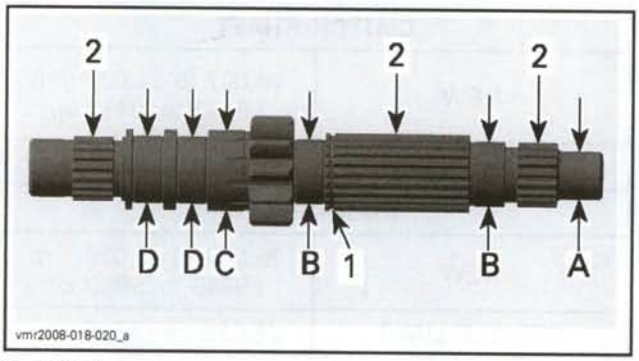

1. Groove
2. Splines
A. Magneto side journal
B. Free pinion bearing
C. Clutch side journal
D. Clutch drum bearing

CLUTCH SHAFT	
MAGNETO SIDE JOURNAL	
NEW	14.989 to 15.000 mm (.5901 to .5906 in)
SERVICE LIMIT	14.970 mm (.5894 in)
FREE PINION BEARING	
NEW	19.935 to 20.065 mm (.7848 to .7900 in)
SERVICE LIMIT	19.920 mm (.7843 in)
CLUTCH SIDE JOURNAL	
NEW	24.980 to 24.993 mm (.9835 to .9840 in)
SERVICE LIMIT	24.960 mm (.9827 in)
CLUTCH DRUM BEARING	
NEW	20.935 to 21.065 mm (.8242 to .8293 in)
SERVICE LIMIT	20.920 mm (.8236 in)

Replace gears only together with the corresponding meshing gears.

Ball Bearings

When gearbox is removed check gearbox ball bearings for contamination and/or metal shavings. Check if bearings turn freely and smoothly. Replace if necessary, refer to *CRANKCASE/CRANKSHAFT* section.

Gearbox Assembly

For assembly, reverse the disassembly procedures. Pay attention to the following details.

Apply engine oil on moving parts when assembling and installing components.

Install **NEW** snap rings.

NOTE: Snap rings should be installed using a retaining ring pliers only.

For gearbox installation, put the oil seal protection sleeve (P/N 529 036 068) on main shaft to avoid damaging main shaft oil seal.

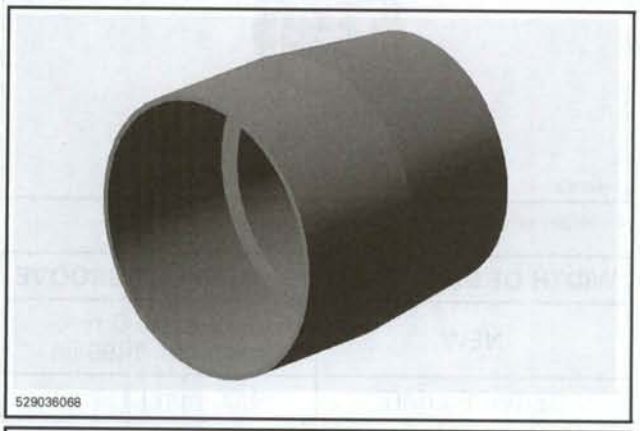

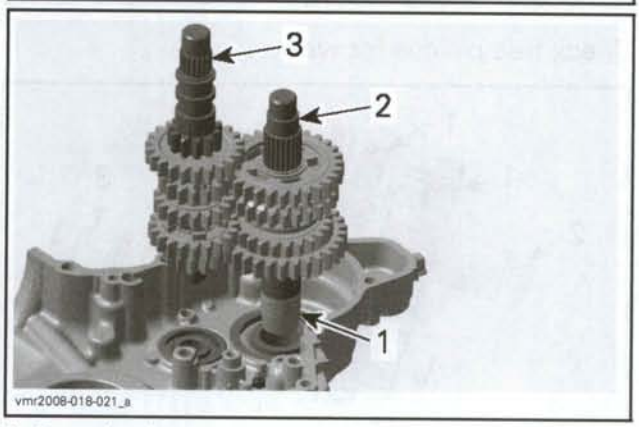

1. Protection sleeve
2. Main shaft
3. Clutch shaft

Seat shafts fully home by tapping them into place with a plastic hammer.

OVERVIEW

Engine Management System (EMS)

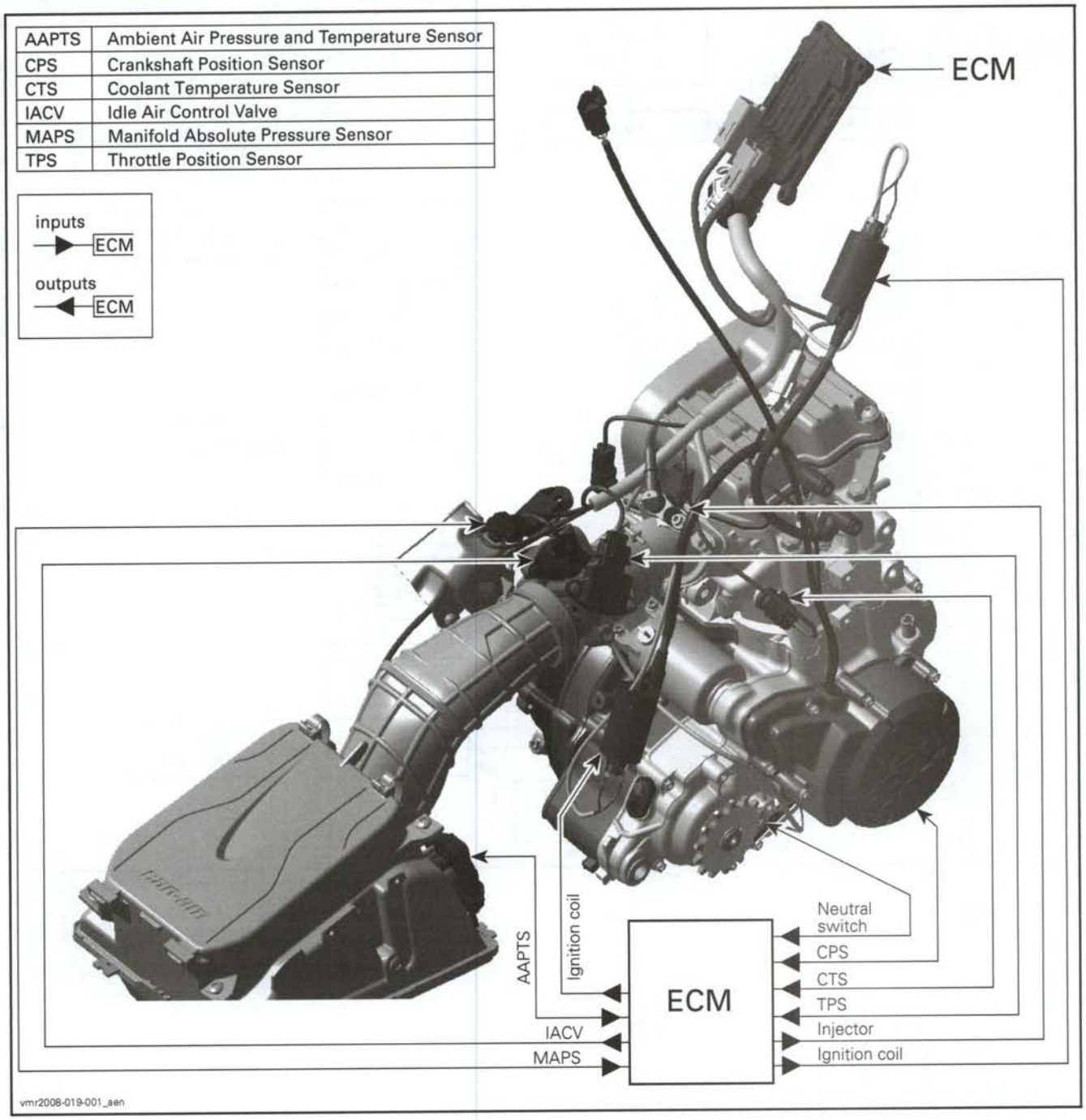

AAPTS	Ambient Air Pressure and Temperature Sensor
CPS	Crankshaft Position Sensor
CTS	Coolant Temperature Sensor
IACV	Idle Air Control Valve
MAPS	Manifold Absolute Pressure Sensor
TPS	Throttle Position Sensor

Power Distribution

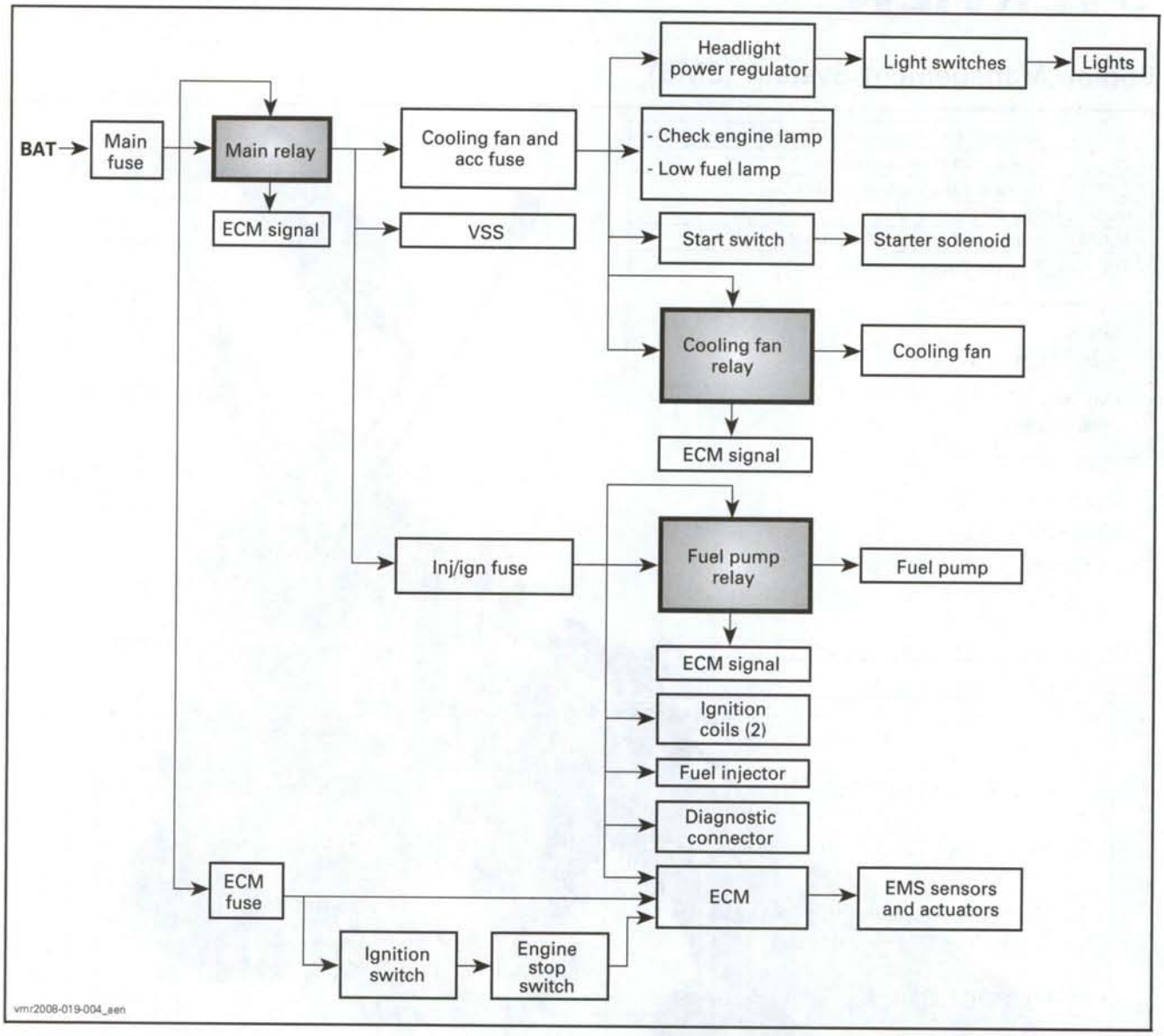

ECM Interaction with the Electrical System

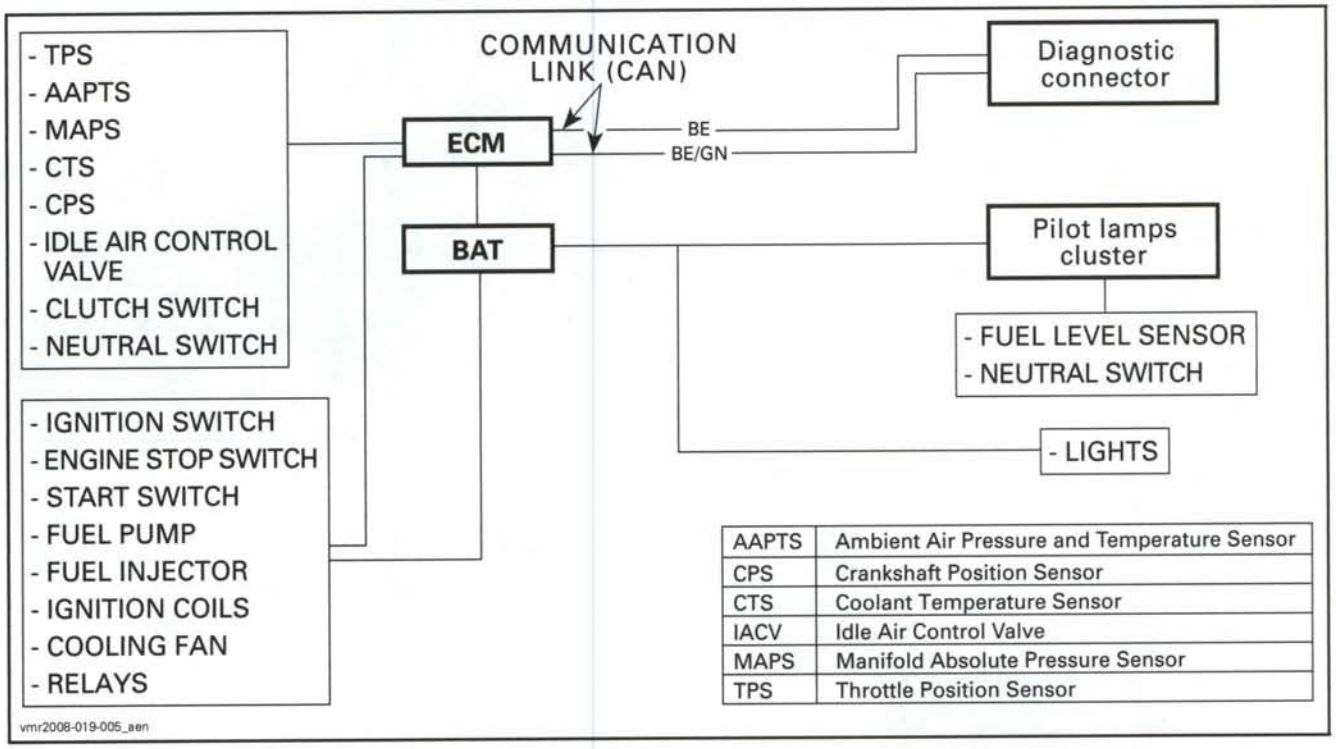

AAPTS	Ambient Air Pressure and Temperature Sensor
CPS	Crankshaft Position Sensor
CTS	Coolant Temperature Sensor
IACV	Idle Air Control Valve
MAPS	Manifold Absolute Pressure Sensor
TPS	Throttle Position Sensor

ECM Inputs/Outputs

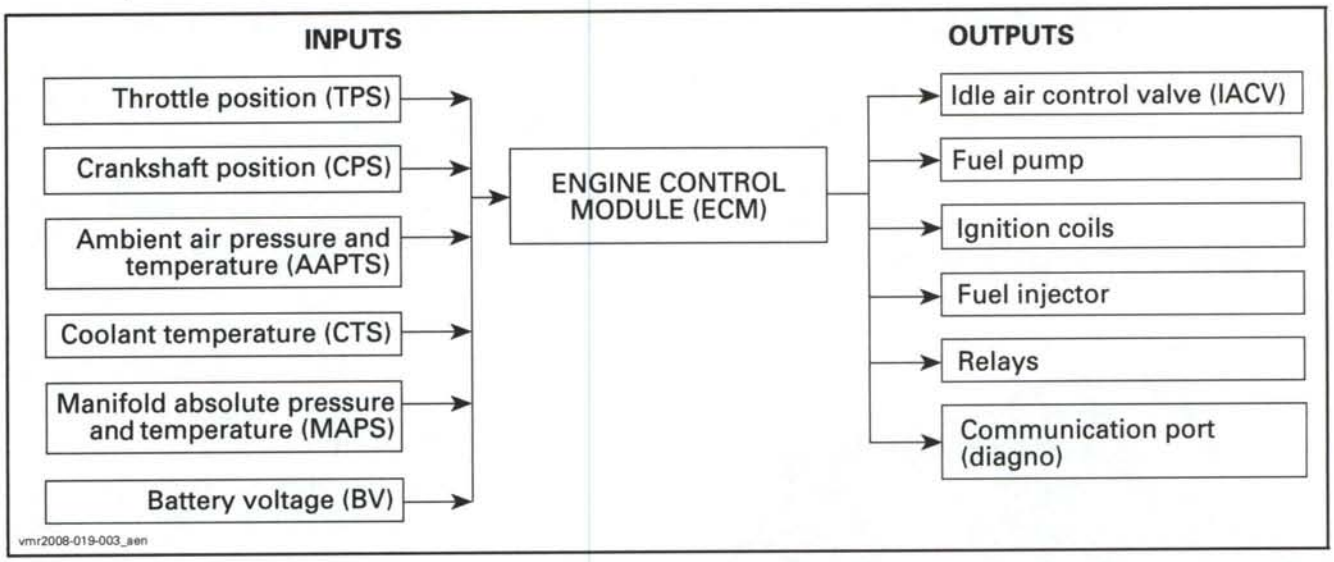

SYSTEM DESCRIPTION

A highly advanced engine management system (EMS) has been used to ensure a high power output with cleaner combustion.

There are 4 main systems that are controlled by the engine management system (EMS):

1. Electronic fuel injection (EFI)
2. Ignition system
3. Starting system
4. Cooling system.

CONTROLLER AREA NETWORK (CAN)

A communication link (CAN lines) is used to communicate with the B.U.D.S. software. Refer to *COMMUNICATION TOOLS/B.U.D.S. SOFTWARE*. CAN lines consist of a pair of wires (WHITE/BEIGE and BEIGE/GREEN).

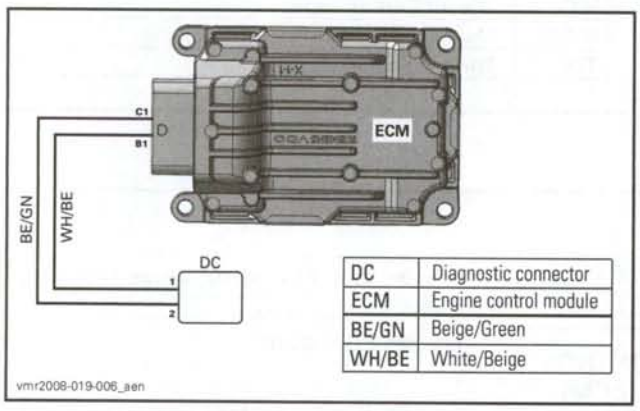

DC	Diagnostic connector
ECM	Engine control module
BE/GN	Beige/Green
WH/BE	White/Beige

ENGINE CONTROL MODULE (ECM)

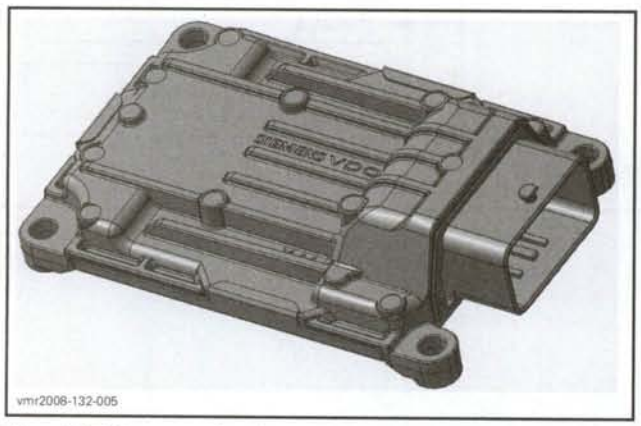

The ECM controls the electrical system and the engine management functions, by processing the information given by various sensors.

The ECM is located behind the LH side panel.

ECM LOCATION

Engine RPM Limiter

The ECM will limit the maximum engine speed when vehicle shifter is in:

- Forward position
- Neutral position.

The ECM uses the CPS and the neutral switch for this function.

Drowned Mode (Flooded Engine)

If engine is fuel-flooded and does not start, this special mode can be activated to prevent fuel injection and ignition while cranking. Proceed as follows to activate it.

With ignition key in ignition switch while engine is stopped, press and HOLD throttle lever at WOT position.

Press the start button. The mode is now on.

Releasing throttle lever will bring back the normal mode.

Monitoring System

The ECM monitors the electronic components of the fuel injection system and also parts of the electrical system.

For more information, refer to *MONITORING SYSTEM/FAULT CODES*.

Limp Home Mode

The ECM may automatically set default parameters to the engine management to ensure the adequate operation of the engine if a component of the fuel injection system is not operating properly. The engine will operate with reduced performance to protect the engine. In more severe cases, the engine RPM will be limited, also to protect the engine.

These performance-reduced modes allow the rider to go back home which would not be otherwise possible without this advanced system. Refer to the *MONITORING SYSTEM/FAULT CODES*.

Diagnostic Mode

The ECM features a self-diagnostic mode when ignition key is turned on. However, some components need the engine to be running so that they can be monitored. Some problems will turn on a warning lamp or will set the engine in limp home mode. Refer to *MONITORING SYSTEM/FAULT CODES* section for more information.

POWER DISTRIBUTION

Three relays are used to distribute power to different components:

- Main relay
- Fuel pump relay
- Cooling fan relay.

Relays are located under the front fascia.


vmr2008-019-007_a

The ECM provides the trigger signal to activate each relay individually.

When ignition key is turned ON and engine stop switch is in RUN position, the main relay and the fuel pump relay are energized.

While starting the engine the fan relay is temporary disabled to make all power available for the starter, the fuel pump and the EMS.

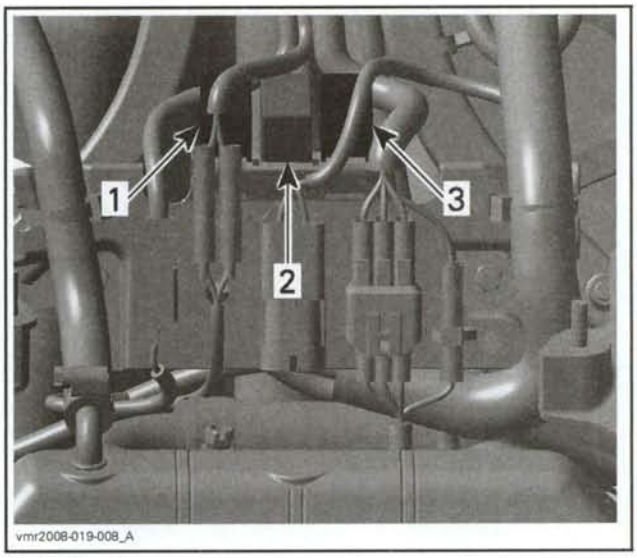

vmr2008-019-008_A

1. *Cooling fan*
2. *Main*
3. *Fuel pump*

Refer to the illustrations at the beginning of the section for a complete overview of the power distribution.

COMMUNICATION TOOLS/B.U.D.S. SOFTWARE

SERVICE TOOLS

Description	Part Number	Page
Optional extension cable	529 035 697	167
MPI-2	529 036 018	167
Diagnostic cable	710 000 851	167

MULTI-PURPOSE INTERFACE-2 (MPI-2)

PART REQUIRED
PC computer
B.U.D.S. software Use latest version compatible with the DS 450 available on BOSSWeb
MPI-2 (P/N 529 036 018) 
Optional extension cable (P/N 529 035 697) 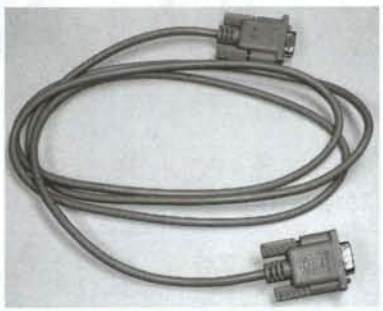
Diagnostic cable (P/N 710 000 851) 

MPI-2 Power Supply

The MPI-2 uses the PC computer USB port for for its power supply.

Connections with Vehicle

⚠ WARNING

If the computer you are using is connected to the power outlet, there is a potential risk of electrocution when working in contact with water. Be careful not to touch water while working with the computer.

Remove seat and locate communication connector.


vmr2008-020-001_a

Unplug communication connector.

Connect diagnostic cable to vehicle connector.


vmr2008-020-002_a

Connect remaining connector to MPI-2 connector.

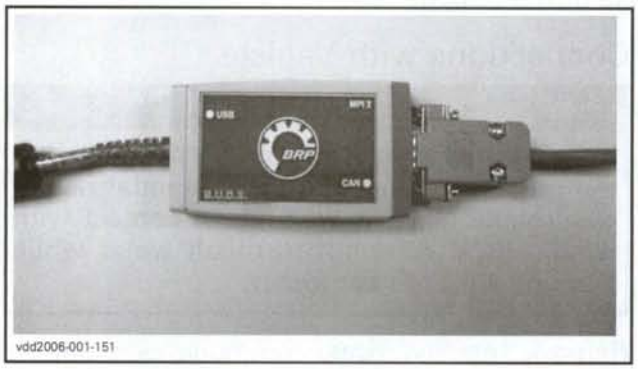
vdd2006-001-151

Connect remaining MPI-2 connector to the USB port of a PC (personal computer).


mmr2006-079-200

Use B.U.D.S. software as described further in *B.U.D.S. SOFTWARE.*

B.U.D.S. SOFTWARE

B.U.D.S. (Bombardier Utility and Diagnostic Software) is designed to allow electrical component inspection, to diagnose and monitor components and to carry out settings such as the closed throttle and idle actuator.

For more information pertaining to the use of the B.U.D.S. software, use its help which contains detailed information on its functions.

Ensure the appropriate connections are done for B.U.D.S.

Ensure to use the latest B.U.D.S. version compatible with the DS 450 available on BOSSWeb.

Turn ignition switch ON and set engine stop switch to RUN to activate the communication.

Start B.U.D.S.

Select the protocol **Kw2000 (500K)**.

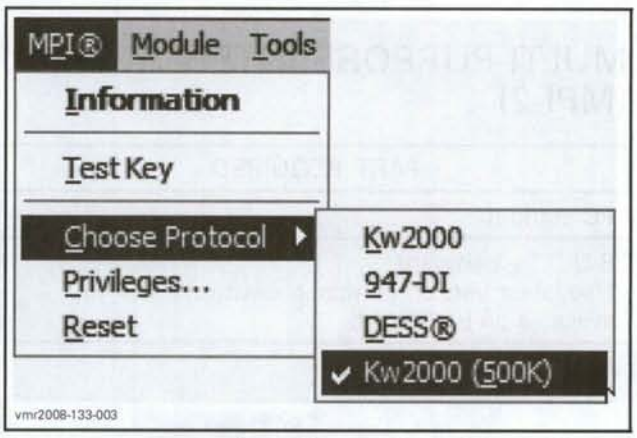

vmr2008-133-003

Ensure the status bar shows **Kw2000 500K** with the number 1 to its right. If not, refer to *COMMUNICATION PROBLEMS* below.

NOTE: Number 1 means that one "ECU" is connected (ECM).

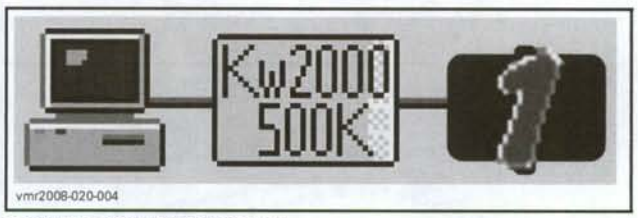

vmr2008-020-004

CONNECTION SUCCESSFUL

Transfer data from the ECM to B.U.D.S. by clicking the **Read Data** button in B.U.D.S.

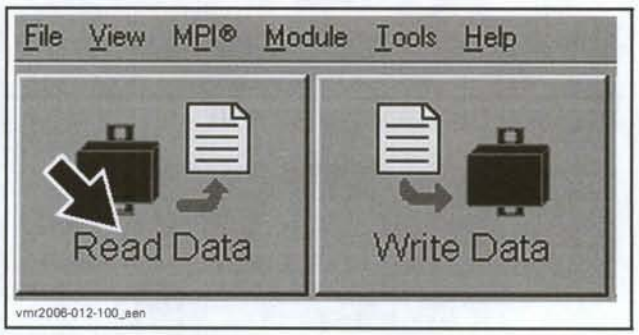

vmr2008-012-100_aen

When finished, transfer data from B.U.D.S. to the ECM by clicking the **Write Data** button in B.U.D.S.

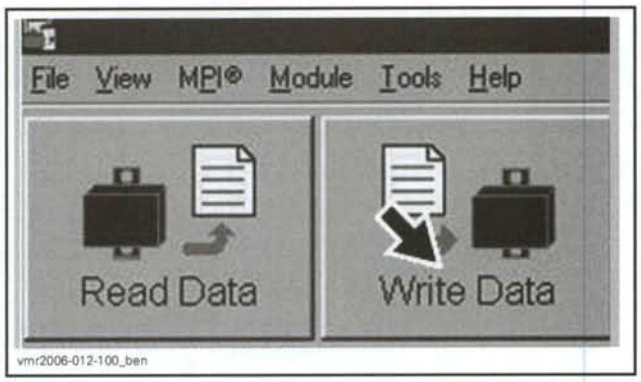

Disconnect MPI connections and reconnect vehicle harness in protective cap.

NOTE: There is a 120 Ω resistor in protective cap to minimize the possibility of communication error.

Changes in ECM

Anytime a change is brought in ECM through B.U.D.S., there will be an **EMS Tracking** message that will say **Remove key from vehicle**. When this occurs, remove the key from ignition switch and wait until the message disappears (it lasts approximately 30 seconds after key removal).

Communication Problems

If an **X** is shown, this means there is no communication between the MPI and the ECM.

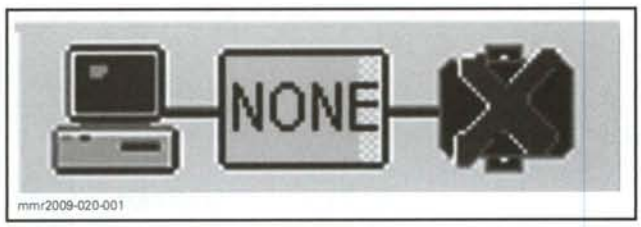

The possible causes are:

- Wrong protocol is used.
- ECM is not communicating with the MPI.

MONITORING SYSTEM/FAULT CODES

MONITORING SYSTEM

The EMS features a monitoring system that self-diagnose its electronic components (control modules, sensors and actuators) to ascertain they are not faulty or defective. This mode comes active when ignition key is turned on.

NOTE: Some components need the engine to be running so that they can be monitored (fuel injectors for example).

When a malfunction is currently detected, the ECM:

- Sets an active fault code.
- Adapts the proper protection strategy according to the failure.
- Sends out signals to the check engine pilot lamp to inform the rider of a particular condition.

When a minor fault occurs, the check engine pilot lamp will turn on. The fault may disappear automatically when the ignition key is turned off and kept off until ECM turns off, then turned back on.

When an important fault occurs, the check engine light will flash.

In the following situations, engine RPM will be limited.

CONDITION		MAXIMUM RPM
High engine temperature	From 111 to 119°C (232 to 246°F)	10250
	From 120 to 130°C (248 to 266°F)	8750
	Above 130°C (266°F)	7000
Limp home mode		5500
Low or high battery voltage		10250
Safety fuel cut-off (TPS or internal memory error)		7000

When the fault is not active anymore, its status is changed from active to occurred and it is stored in the ECM. Stored fault codes are kept in the ECM even if the battery is disconnected.

Verify if the check engine pilot lamp is ON or blinks. If so, use the B.U.D.S. software and look for fault codes to diagnose the trouble.

The following components or functions are monitored.

COMPONENT
EMS (TPS, CPS, AAPTS, MAPS, CTS, IACV, neutral switch, ignition coil and fuel injector)
Battery voltage
Engine RPM
CAN
ECM
Starter solenoid
Fuel pump
Cooling fan
Relays

FAULT CODES

The fault codes recorded in the ECM can be checked by using the software B.U.D.S.

Many fault codes at the same time is likely to be burnt fuse(s) or a faulty relay.

For more information pertaining to the fault codes (state, count, first, etc.) and report, refer to B.U.D.S. online help.

When using the service action suggested in the Fault section of B.U.D.S., the circuits are referred to as ECM pins A1-1, which means the wiring between the ECM pin A1 and the sensor pin 1.

IMPORTANT: After a problem has been solved, ensure to clear the fault(s) in the ECM using the B.U.D.S. software. This will properly reset the appropriate counter(s) and will also record that the problem has been fixed in the ECM memory.

TPS (Throttle Position Sensor) Faults

Faults which are reported in B.U.D.S. fall into two groups: TPS faults and adaptation faults. These are displayed on the B.U.D.S. system as TPS OUT OF RANGE and TPS ADAPTATION FAILURE.

TPS "OUT OF RANGE" Fault

It is caused by the sensor reading going out of its allowable range. This fault can occur during the whole range of movement of the throttle.

To diagnose this fully, it is recommended to operate the throttle through its full range. It is also recommended to release the throttle quickly as this may also reveal a fault that is intermittent.

POSSIBLE CAUSES	ACTION
Check if connector is disconnected from TPS	Fix.
Check if sensor is loose	Tighten and reset **Closed Throttle and Idle Actuator**.
Inspect sensor for damage or corrosion	Replace and reset **Closed Throttle and Idle Actuator**.
Inspect wiring (voltage test)	Repair.
Inspect wiring and sensor (resistance test)	If bad wiring, repair. If bad TPS, replace and reset **Closed Throttle and Idle Actuator**.
Test sensor operation (wear test)	Replace and reset **Closed Throttle and Idle Actuator**.

TPS "ADAPTATION FAILURE" Fault

It is caused by the idle position moving out of an acceptable range.

Following problems can be caused by a TPS "Adaptation Failure":

- Idle speed is out of range.
- Engine stops when throttle is released quickly.
- Engine runs inconsistent in low partload or low RPM.

POSSIBLE CAUSES	ACTION
Sensor has been replaced and TPS closed position not reset	Reset **Closed Throttle and Idle Actuator**.
Throttle body has been replaced and TPS closed position not reset	Reset **Closed Throttle and Idle Actuator**.
ECM has been replaced and TPS closed position not reset	Reset **Closed Throttle and Idle Actuator**.
Throttle cable too tight	Tighten and reset **Closed Throttle and Idle Actuator**.
Sensor is loose	Tighten and reset **Closed Throttle and Idle Actuator**.
Throttle bracket is loose	Tighten and reset **Closed Throttle and Idle Actuator**.
Idle speed screw (tamper proof) worn or loose	Change throttle body.
Idle bypass valve replaced but not reset	Reset **Closed Throttle and Idle Actuator** using B.U.D.S.

Fault Code P1600 — CAN communication information 208 missing

Gauge missing, faulty or not connected properly. If no gauge is installed on the vehicle, this code is normal and has no adverse effect. You can ignore it.

Fault Code P1601 — CAN communication information 514 missing

Gauge missing, faulty or not connected properly. If no gauge is installed on the vehicle, this code is normal and has no adverse effect. You can ignore it.

FAULT CODE TABLE

FAULT CODE	DESCRIPTION	POSSIBLE FAULT	ACTION
107	Manifold absolute pressure sensor signal shorted to GND or open	Faulty MAPS sensor - disconnected connector - faulty terminals - cut wires - dirty sensor - shorted wire - disconnected sensor power	Make sure sensor's connector is fully inserted. Check for approximately 5 volts between sensor connector pins 1 and 2. Check circuits between MAPS pins and ECM pins A1-1,G2-2 and F2-3 if open or shorted to GND.
108	Manifold absolute pressure sensor signal shorted to battery 12 V	Faulty MAPS sensor - disconnected connector - faulty terminals - cut wires - dirty sensor - shorted wire - disconnected sensor power	Make sure sensor's connector is fully inserted. Check for approximately 5 volts between sensor connector pins 1 and 2. Check circuits between MAPS pins and ECM pins A1-1,G2-2 and F2-3 if shorted to 12 V.
112	Air intake silencer pressure and temperature sensor signal shorted to GND	Faulty AAPTS sensor - disconnected connector - faulty terminals - cut wires - shorted wire to GND	Check for disconnected air temperature on the intake. Check the air temperature sensor for approximately 2511 ohms at 20°C. Replace the sensor if necessary. Check circuits between sensor pin 2 and ECM pin F3, between C3-1 and between A1-3.
113	Air intake silencer pressure and temperature sensor signal shorted to battery 12 V or open	Faulty AAPTS sensor - disconnected connector - faulty terminals - cut wires - shorted wire to battery	Check for disconnected air temperature sensor on the intake. Check the air temperature sensor for approximately 2511 ohms at 20°C. Replace the sensor if necessary. Check circuits between sensor pin 2 and ECM pin F3, between C3-1 and between A1-3.
114	Air intake silencer pressure and temperature sensor signal switched intermittent fault	Faulty AAPTS sensor - partially disconnected connector - faulty terminals - cut wires - incoherent change in temperature reading	Check for disconnected air temperature sensor on the intake. Check the air temperature sensor for approximately 2510,6 ohms at 20°C. Replace the sensor if necessary. Check circuits between Sensor pin 2 and ECM pin F3, between C3-1 and between A1-3
115	Coolant temperature too high	Refer to **Engine** and/or **Cooling System** Service Manual section	Refer to **Engine** and/or **Cooling System** Service Manual section.
116	Coolant temperature sensor signal implausible low temperature	Faulty CTS sensor - disconnected connector - faulty terminals - cut wires - shorted wire - reading of cold temperature while engine is running and as gone over 72°C (162°F)	Check sensor resistor value between 1800 and 2200 at 22°C. Check circuits between sensor pins and ECM pin F4-1 and C3-2. Replace sensor if necessary. Refer to Service Manual for complete cooling system testing procedure.
117	Coolant temperature sensor signal shorted to battery 12 V	Faulty CTS sensor - disconnected connector - faulty terminals - cut wires - shorted wire	Check sensor resistor value between 1800 and 2200 ohm at 22°C. Check circuits between sensor pins and ECM pin F4-1 and C3-2.
118	Coolant temperature sensor signal shorted to GND or disconnected	Faulty CTS sensor - disconnected connector - faulty terminals - cut wires - shorted wire	Check for disconnected engine temperature sensor. Check sensor resistor value between 1800 and 2200 ohm at 22°C. Check circuits between sensor pins and ECM pin F4-1 and C3-2.

FAULT CODE	DESCRIPTION	POSSIBLE FAULT	ACTION
119	Coolant temperature sensor intermittent fault	Faulty CTS sensor - partially disconnected connector - faulty terminals - cut wires - shorted wire - change in temperature too high from the sensed temperature	Check for disconnected engine temperature sensor. Check sensor resistor value between 1800 ohm and 2200 at 22°C. Check circuits between sensor pins and ECM pin F4-1 and C3-2.
122	Throttle position sensor shorted to GND or open	Faulty TPS - disconnected connector - faulty terminals - cut wires - shorted wire to GND - sensor voltage missing	Check circuits between TPS pins and ECM pins A1-1, G3-3 and G2-2. Refer to the Service Manual for complete throttle position sensor testing procedure.
123	Throttle position sensor shorted to battery 12 V	Faulty TPS sensor - disconnected connector - faulty terminals - cut wires - shorted wire to battery	Check circuits between TPS pins and ECM pins A1-1, G3-3 and G2-2. Refer to the Service Manual for complete throttle position sensor testing procedure.
230	Fuel pump relay disconnected	Faulty relay - faulty terminal under the relay or at engine connector - Dirt stuck on relay blades and/or terminals - wires from the ECM to the relay cut	Check INJ/IGN fuse. Look for damaged or disconnected fuel pump relay, damaged circuit wires, damaged connectors or damaged ECM output pins. Check circuit from relay pin 1 to ECM pin J1. Check circuit from relay pin 2 to ECM INJ/IGN fuse.
231	Fuel pump relay signal pin shorted to GND	Faulty relay - faulty terminal under the relay or at engine connector - Dirt or water stuck on relay blades and/or terminals - wires from the ECM to the relay shorted to a GND	Check for damaged or disconnected fuel pump relay, damaged circuit wires, damaged connectors or damaged ECM output pins. Check circuit from relay pin 1 to ECM pin J1.
232	Fuel pump relay signal pin shorted to battery 12 V	Faulty relay - faulty terminal under the relay or at engine connector - Dirt stuck on relay blades and/or terminals - wires from the ECM to the relay shorted to a power source	Check for damaged or disconnected fuel pump relay, damaged circuit wires, damaged connectors or damaged ECM output pins. Check circuit from relay pin 1 to ECM pin J1.
261	Injector signal shorted to GND	Faulty injector - water and/or dirt in injector connector - shorted wires	Check for approximately 12,2 ohms on injector. Check circuit between injector pin 1 and ECM L4 if shorted to GND.
262	Injector signal shorted to battery 12 V	Faulty injector - water and/or dirt in injector connector - shorted wires	Check for approximately 12,2 ohms on injector. Check circuit between injector pin 1 and ECM L4 if shorted to 12 V.
267	Starter solenoid not connected	Faulty solenoid - faulty terminal at solenoid or at engine connector - Dirt stuck on solenoid blades and/or terminals - wires from the ECM to the solenoid cut	Check cooling fan and acc. fuse. Look for damaged or disconnected starter solenoid, damaged circuit wires, damaged connectors or damaged ECM output pins. Check circuit from solenoid ORANGE/BROWN wireto ECM pin L3.
268	Starter solenoid shorted to GND	Faulty solenoid - faulty terminal at solenoid or at engine connector - Dirt or water stuck on solenoid blades and/or terminals - wires from the ECM to the solenoid shorted to a GND	Check for damaged or disconnected starter solenoid, damaged circuit wires, damaged connectors or damaged ECM output pins. Check circuit from solenoid ORANGE/BROWN wire to ECM pin L3.

FAULT CODE	DESCRIPTION	POSSIBLE FAULT	ACTION
269	Starter solenoid shorted to battery 12 V	Faulty solenoid - faulty terminal at solenoid or at engine connector - Dirt stuck on solenoid blades and/or terminals - wires from the ECM to the solenoid shorted to a power source	Check for damaged or disconnected starter solenoid, damaged circuit wires, damaged connectors or damaged ECM output pins. Check circuit from solenoid ORANGE/BROWN wire to ECM pin L3.
335	RPM signal lost	Damaged encoder wheel - damaged CPS - metal dirt stuck on CPS - CPS wires damaged and/or shorted to the engine or frame - squeezed CPS wires between the magneto cover and engine	Check circuit between CPS and ECM pin E1 and D1. Check CPS coil resistor value approx. 260 ohm. Check CPS AC voltage value approx. 0,95 V. Check CPS wires. Check if CPS is dirty with metal particle. Check encoder wheel.
336	RPM signal fault	Damaged encoder wheel - damaged CPS - metal dirt stuck on CPS - CPS wires damaged and/or shorted to the engine or frame - squeezed CPS wires between the magneto cover and engine	Check circuit between CPS and ECM pin E1 and D1. Check CPS coil resistor value approx. 260 ohm. Check CPS AC voltage value approx. 0,95 V. Check CPS wires. Check if CPS is dirty with metal particle. Check encoder wheel.
339	RPM signal fault	Damaged encoder wheel - damaged CPS - metal dirt stuck on CPS - CPS wires damaged and/or shorted to the engine or frame - squeezed CPS wires between the magneto cover and engine	Check circuit between CPS and ECM pin E1 and D1. Check CPS resistor value approx. 260 ohm. Check CPS AC voltage value approx. 0,95 V. Check CPS wires. Check if CPS is dirty with metal particle. Check encoder wheel.
351	Ignition coil signal shorted to battery 12 V	Faulty primary ignition coil - wire shorted to battery 12 V	Check for 1 +/-0.5 ohm between ignition coil pins. Check circuit between ignition coil (-) and ECM pin M1 and M2 if shorted to 12 V.
480	Engine cooling fan relay disconnected	Faulty relay - faulty terminal under the relay or at engine connector - Dirt stuck on relay blades and/or terminals - wires from the ECM to the relay cut	Check cooling fan and acc. fuse. Look for damaged or disconnected cooling fan relay, damaged connectors or damaged ECM output pins. Check circuit from relay pin 1 to ECM pin B3. Check circuit from relay pin 1 to cooling fan and acc. fuse.
484	Engine cooling fan relay signal pin shorted to battery 12 V	Faulty relay - faulty terminal under the relay or at engine connector - Dirt stuck on relay blades and/or terminals - wires from the ECM to the relay shorted to a power source	Check cooling fan and acc. fuse. Check for damaged or disconnected cooling fan relay, damaged circuit wires, damaged connectors or damaged ECM output pins. Check circuit from relay pin 1 to ECM pin B3.
485	Engine cooling fan relay signal pin shorted to GND or disconnected	Faulty relay - faulty terminal under the relay or at engine connector - Dirt or water stuck on relay blades and/or terminals - wires from the ECM to the relay shorted to a GND	Check for damaged or disconnected cooling fan relay, damaged circuit wires, damaged connectors or damaged ECM output pins. Check circuit from relay pin 1 to ECM pin B3.
508	Idle air control valve pin(s) shorted to battery 12 V	Faulty IACV - disconnected connector - faulty terminals - cut wires - shorted wire	Make sure IACV connector is fully inserted. Check circuits between idle valve motor pins and ECM pins D3-1, E4-2, C4-3 and D4-4.

FAULT CODE	DESCRIPTION	POSSIBLE FAULT	ACTION
509	Idle air control valve pin(s) disconnected or shorted to GND	Faulty IACV - disconnected connector - faulty terminals - cut wires - shorted wire	Make sure IACV connector is fully inserted. Check circuits between idle valve motor pins and ECM pins D3-1, E4-2, C4-3 and D4-4.
560	Throttle position sensor 5 V power supply pin shorted to battery 12 V	Shorted wire - faulty TPS sensor	Check circuits between TPS pin 1, MAPS pin 1, AAPTS pin 3 and ECM pin A1. Check TPS, MAPS and AAPTS sensors.
561	Throttle position sensor 5 V power supply pin shorted to GND or open	Shorted wire - faulty TPS sensor	Check circuits between TPS pin 1, MAPS pin 1, AAPTS pin 3 and ECM pin A1. Check TPS, MAPS and AAPTS sensors.
562	Battery voltage under 8 V at main relay voltage input	Battery voltage too low - disconnected connector - faulty terminals - cut wires	Check battery voltage for 12 to 13 volts with engine stopped. Check battery voltage for 13.8 to 15.0 volts with engine idling. Check connections on magneto and voltage regulator. Validate voltage path between battery and main relay.
563	Battery voltage over 16 V at main relay voltage input	Battery voltage too high - faulty voltage regulator -faulty magneto	Check battery voltage for 13.8 to 15.0 volts with engine idling. Replace voltage regulator if necessary.
600	CAN communication port off	CAN communication port shorted - Incompatible CAN communicating component connected on CAN port	Check for damage circuit between diagnostic connector 1 and 2 and ECM B1 and C1. Replace gauge if necessary. Test with disconnected gauge.
615	Starter solenoid not connected	Faulty solenoid - faulty terminal at solenoid or at engine connector - Dirt stuck on solenoid blades and/or terminals - wires from the ECM to the solenoid cut	Check cooling fan and acc. fuse. Look for damaged or disconnected starter solenoid, damaged circuit wires, damaged connectors or damaged ECM output pins. Check circuit from solenoid ORANGE/BROWN wire to ECM pin L3.
616	Starter solenoid shorted to GND	Faulty solenoid - faulty terminal at solenoid or at engine connector - Dirt or water stuck on solenoid blades and/or terminals - wires from the ECM to the solenoid shorted to a GND	Check for damaged or disconnected starter solenoid, damaged circuit wires, damaged connectors or damaged ECM output pins. Check circuit from solenoid ORANGE/BROWN wire to ECM pin L3.
617	Starter solenoid shorted to battery 12 V	Faulty solenoid - faulty terminal at solenoid or at engine connector - Dirt stuck on solenoid blades and/or terminals - wires from the ECM to the solenoid shorted to a power source	Check for damaged or disconnected starter solenoid, damaged circuit wires, damaged connectors or damaged ECM output pins. Check circuit from solenoid ORANGE/BROWN wire to ECM pin L3.
650	Indicator lamp shorted to battery 12 V	Faulty pilot lamp - faulty terminal or at engine connector - Dirt stuck on terminals - wires from the ECM to the relay shorted to a power source	Check if lamp is connected. Check for damaged circuit between pilot lamp and ECM K4. Check for damaged circuit between pilot lamp and battery. Replace if necessary.
651	Indicator lamp shorted to GND	Faulty pilot lamp - faulty terminal or at engine connector - Dirt stuck on terminals - wires from the ECM to the relay shorted to a GND	Check if lamp is connected. Check for damaged circuit between pilot lamp and ECM K4. Check for damaged circuit between pilot lamp and battery. Replace if necessary.

FAULT CODE	DESCRIPTION	POSSIBLE FAULT	ACTION
652	Indicator lamp disconnected	Lamp missing, disconnected or faulty	Check if lamp is connected. Check for damaged circuit between pilot lamp and ECM K4. Check for damaged circuit between pilot lamp and battery. Replace if necessary.
821	Neutral switch fault	Faulty switch - disconnected connector - faulty terminals - cut wires - shorted wire	Check circuit between neutral switch and ECM H4. Check switch. Check pilot lamp circuit.
1104	Throttle position sensor out of range at first initialization	Faulty TPS sensor - disconnected connector - faulty terminals - cut wires - shorted wire	Check cable adjustment. Check circuit between ECM and TPS: A1-1, G2-2 and G3-3. Make sure throttle plate is against throttle stop. Reset the ECM 3 times (ON-OFF-ON X3).
1107	Manifold absolute pressure sensor shorted to GND or open circuit	Faulty MAPS sensor - Dirty sensor - connector loose - short wire	Make sure sensor's connector is fully inserted. Clean the sensor. Check circuit AAPTS A1-3 and D2-4.
1108	Manifold absolute pressure sensor shorted to battery 12 V	Faulty MAPS sensor - Dirty sensor - water or dirt in the connector- shorted wire	Make sure sensor's connector is fully inserted. Clean the sensor. Check circuit AAPTS C3-1 and D2-4.
1263	Injector disconnected	Faulty injector - cut wires - faulty terminals	Check for approximately 12 ohms on injector. Check circuit between injector pin 1 and ECM L4 if open.
1335	RPM signal too high (12000)	Damaged encoder wheel - damaged CPS - metal dirt stuck on CPS - CPS wires damaged and/or shorted to the engine or frame - squeezed CPS wires between the magneto cover and engine - tampered engine	Check circuit between CPS and ECM pin E1 and D1. Check CPS coil resistor value approx. 260 ohm. Check CPS AC voltage value approx 1 V. Check CPS wires. Check if CPS is dirty with metal particle. Check encoder wheel.
1351	Ignition coil disconnected	Faulty primary ignition coil - disconnected coils - cut wires - faulty terminals	Check for 1 +/-0.5 ohm between ignition coil pins. Check circuit between Ignition coil (-) and ECM pin M1 and M2. Check circuit between ignition coil (+) and fuse.
1562	Battery voltage under 8 V at key switch voltage input	Battery voltage too low - disconnected connector - faulty terminals - cut wires	Check battery voltage for 12 to 13 volts with engine stopped. Check battery voltage for 13.8 to 15.0 volts with engine idling. Check connections on magneto and voltage regulator.
1563	Battery voltage over 16 V at key switch voltage input	Battery voltage too high - faulty voltage regulator - faulty magneto	Check battery voltage for 13.8 to 15.0 volts with engine idling. Replace voltage regulator if necessary.
1600	CAN communication information 208 missing	Gauge missing, faulty or not connected properly	Check for damage circuit between diagnostic connector 1 and 2 and ECM B1 and C1. Replace gauge if necessary.
1601	CAN communication information 514 missing	Gauge missing, faulty or not connected properly	Check for damage circuit between diagnostic connector 1 and 2 and ECM B1 and C1. Replace gauge if necessary.

ELECTRONIC FUEL INJECTION (EFI)

SERVICE TOOLS

Description	Part Number	Page
tachometer	529 014 500	182
Fluke 115 multimeter	529 035 868	185–186, 191–192, 198–200, 202–207, 209
ECM adapter	529 036 085	184–186, 192, 198, 200, 204, 206–207, 209

SERVICE PRODUCTS

Description	Part Number	Page
Loctite 243	293 800 060	200
Gunk Intake Medic	Not sold by BRP	201

GENERAL

SYSTEM DESCRIPTION

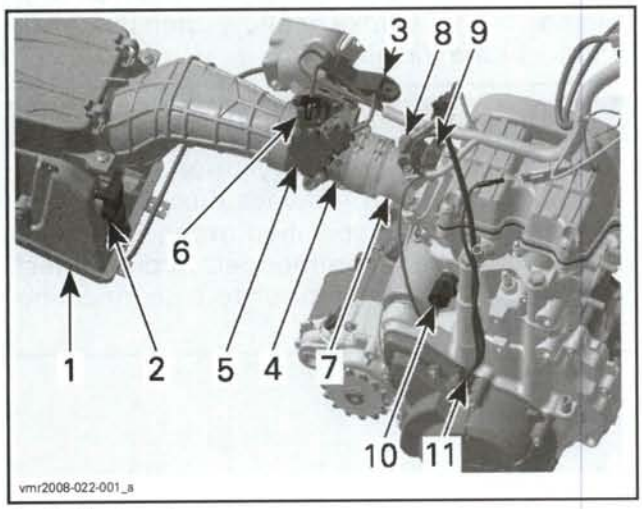

1. *Air filter housing*
2. *Ambient air pressure and temperature sensor (AAPTS)*
3. *Manifold absolute pressure sensor (MAPS)*
4. *Throttle body*
5. *Throttle position sensor (TPS)*
6. *Idle air control valve (IACV)*
7. *Intake manifold*
8. *Fuel rail*
9. *Injector*
10. *Coolant temperature sensor*
11. *Crankshaft position sensor*

The ECM is the central point of the engine management system. It reads the signals from different sensors which indicate engine operating conditions at micro-second intervals.

The ECM reads the inputs from the sensors, makes computations, uses pre-determined parameters and activates the outputs to the injector.

Signals from sensors are used by the ECM to determine the injection parameters (fuel maps required for optimum air-fuel ratio. The EMS uses the AAPTS to improve engine operation in high altitude area.

Air Induction

Air flows through the air filter housing mounted under the seat. It contains an air filter that prevent dust and particles from being drawn into the engine.

Ambient air temperature is measured in the air filter housing.

Air is then drawn through the throttle body mounted on the engine intake side.

Air pressure is measured in the intake manifold through a tube connected to the manifold.

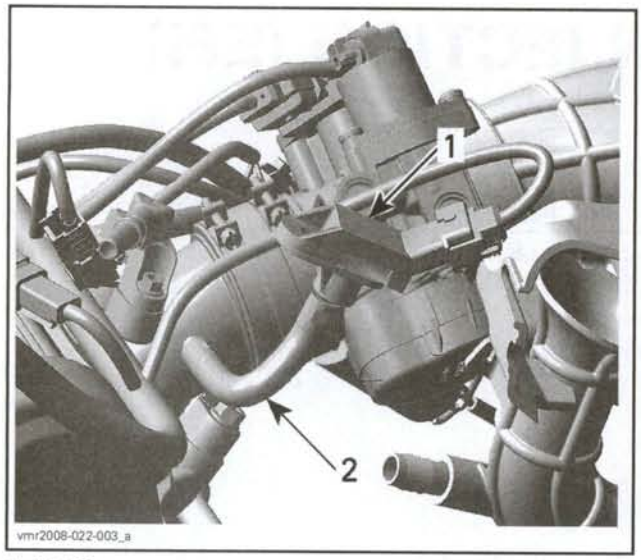

1. MAPS
2. MAPS tube connected to intake manifold

Air then flows through the intake manifold to the combustion chamber.

Throttle Body

The 46 mm throttle body is connected to the intake manifold. Fitted on the throttle body, there is the TPS and the idle air control valve which allows the ECM to control the idle speed while the throttle plate is closed.

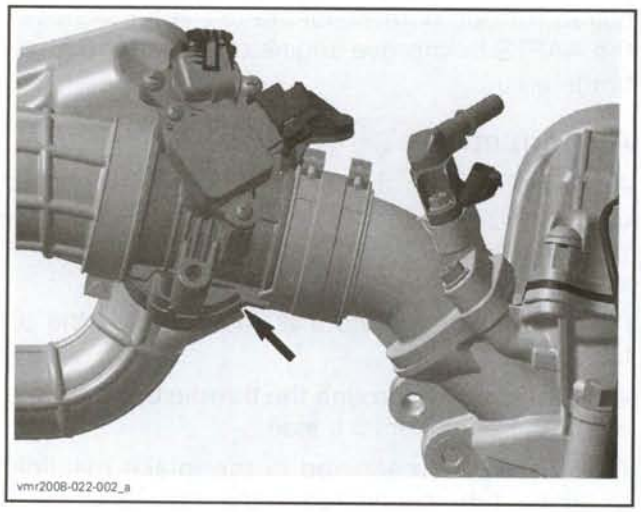

Intake Manifold

The intake manifold is connected to the engine cylinder head. It provides support for the throttle body, fuel injector and the fuel rail.

The air intake manifold is a resonator between the throttle body and the air intake at the cylinder head.

Fuel Rail

One fuel rail is mounted on the intake manifold. The fuel rail ensures all the time, that enough fuel can be delivered to the fuel injector. The fuel rail is fed by the fuel pump with the properly regulated fuel pressure.

Fuel Injector

One fuel injector is used to inject fuel into the intake port of the cylinder head.

GENERAL RECOMMENDATIONS

Engine problems are not necessarily related to the electronic fuel injection system.

It is important to ensure the engine is in proper operating condition and the electrical system is not at fault.

When replacing a component, always check its operation after installation.

Fuel System

⚠ WARNING

Fuel is flammable and explosive under certain conditions. Ensure work area is well ventilated. Do not smoke or allow open flames or sparks in the vicinity.

⚠ WARNING

Always disconnect battery prior to working on the fuel system. Always disconnect battery exactly in the specified order, BLACK (-) cable first. It is recommended to disconnect electrical connections prior to disconnecting fuel lines.

⚠ WARNING

Fuel lines remain under pressure at all times. Always proceed with care and use appropriate safety equipment when working on pressurized fuel system. Wear safety glasses. Proceed with care when removing/installing pressure test equipment or disconnecting fuel line connections. Use the B.U.D.S. software to release fuel pressure prior to removing a hose. Cover the fuel line connection with an absorbent shop rag. Slowly disconnect the fuel hose to minimize spilling. Wipe off any fuel spillage in the engine compartment. Do not allow fuel to spill on hot engine parts and/or on electrical connectors. Never use a hose pincher on injection system high pressure hoses. Replace any damaged or deteriorated fuel lines.

⚠ WARNING

Always perform the fuel pressure test if any component has been removed. A pressure test must be done before turning the ignition key to ON and setting the engine stop switch to RUN. The fuel pump is activated each time in these conditions. After performing a fuel pressure test, use the valve on the fuel pressure gauge to release the pressure (if so equipped).

Electrical System

It is important to check that the electrical system is functioning properly:

- Battery
- Fuses
- Relay(s)
- Ground connections
- Wiring connectors.

Never use a battery charger to substitute temporarily the battery as it may cause the ECM (engine control module) to work erratically or not to work at all.

Ensure that all electronic components are genuine. Any modification on the wiring harness may lead to generate fault codes or bad operation.

NOTE: For diagnostics purposes, use B.U.D.S. software. See *MONITORING SYSTEM/FAULT CODES* subsection.

Check related-circuit fuse solidity and condition with an ohmmeter. Visual inspection could lead to false results.

After a problem has been solved, ensure to clear the fault code(s) in the ECM using the B.U.D.S. software. Refer to *MONITORING SYSTEM/FAULT CODES* subsection.

⚠ WARNING

Some EMS components are continuously powered by the battery when ignition key is turned on and engine stop switch is set in RUN position. The ECM switches the circuit to the ground to complete the electrical circuits it controls. Take this into account when troubleshooting. Always disconnect the battery prior to disconnecting any electric or electronic parts.

Electrical Connectors

Pay particular attention to ensure that pins are not out of their connectors or out of shape.

Make sure terminals are properly crimped on wires and fastened in housing, and that they are free of corrosion or moisture.

When probing terminals, pay attention not to bend the terminal as this could bring a loose connection that would be difficult to troubleshoot.

Pay attention to the following:

- ECM connectors: Do not apply dielectric grease or any other lubricant.
- Other connectors: Apply a silicon-based dielectric grease or other appropriate lubricant.

Resistance Measurement

When measuring the resistance with an ohmmeter, all values are given for a temperature of 20°C (68°F). The resistance value of a resistance varies with the temperature. The resistance value for usual resistor or windings (such as injectors) **increases** as the temperature increases. However, our temperature sensors are NTC types (Negative Temperature Coefficient) and work the opposite which means that the resistance value **decreases** as the temperature increases. Take it into account when measuring at temperatures different from 20°C (68°F). Use the proper table for resistance variation relative to temperature for **temperature** sensors. See the specific sensor.

The resistance value of a temperature sensor may test good at a certain temperature but it might be defective at other temperatures. If in doubt, try a new sensor.

Also remember this validates the operation of the sensor at room temperature. It does not validate the over temperature functionality. To test it, the sensor could be removed from the engine and heated with a heat gun while it is still connected to the harness to see if the ECM will detect the high temperature condition and generate a fault code.

BASIC ADJUSTMENTS

IDLE SPEED

The idle speed is **not adjustable**. The ECM controls the idle speed of the engine.

CAUTION: Never attempt to adjust the sealed idle stop screw. It is calibrated at the factory. If the screw adjustment is changed, the throttle body must be replaced.

If desired, the engine RPM can be verified with a tachometer (P/N 529 014 500).

Install the tachometer wire on spark plug cable.


vmr2008-022-029

CLOSED THROTTLE AND IDLE ACTUATOR RESET

NOTE: This operation performs a reset of the values in the ECM.

This reset is very important. The setting of the TPS will determine the basic parameters for all fuel mapping and several ECM calculations and the setting of the idle air control valve will determine the basic parameters for the idle speed control of the engine.

Closed throttle and idle actuator reset must be done if:

- TPS is loosened, removed or replaced.
- Throttle body is replaced.
- IACV is replaced.
- ECM is replaced.

CAUTION: An improperly set TPS or idle air control valve may lead to poor engine performance and emission compliance could possibly be affected. In addition, improper idle air control valve reset may lead to poor engine starting, improper idle (too low or too high) and engine stop on deceleration.

Use the B.U.D.S. software to perform this adjustment.

Remove throttle body cover and ensure the throttle cam of throttle body rests against set screw without any tension in the cable.

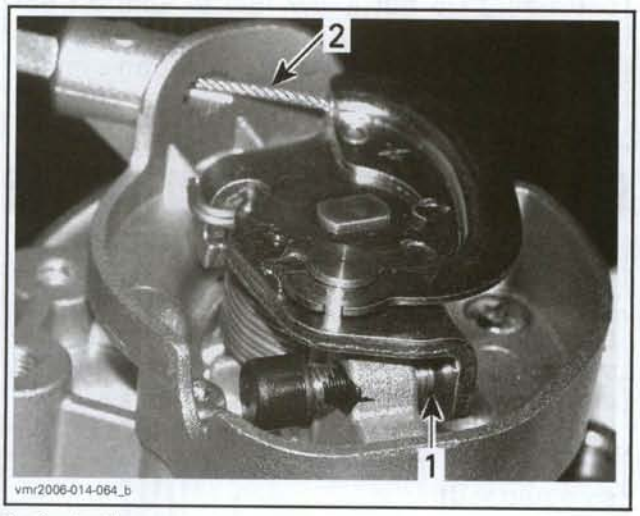

vmr2006-014-064_b

1. Contact here
2. Free-play here

Open throttle approximately one quarter then quickly release. Repeat 2 - 3 times to settle throttle plate. If stopper does not rest against its stop lever, check throttle cable adjustment. Refer to *STEERING SYSTEM.*

To reset valve and TPS, click on the **Reset** button in the **Setting** section of B.U.D.S.

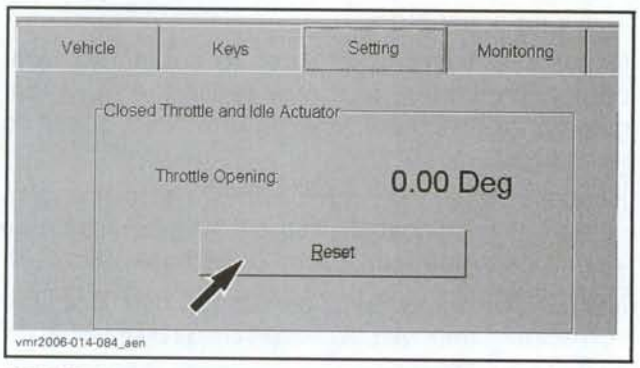

vmr2006-014-084_aen

NOTE: No message will be displayed if operation is successful or wrong. If throttle was opened more than 3°, a non-zero value will be displayed when ECM will be read. An error code will appear after 5 ECM starts.

Start engine and make sure it operates normally through its full engine RPM range. If fault codes appear, refer to *MONITORING SYSTEM/FAULT CODES* section for more information.

PROCEDURES

ENGINE CONTROL MODULE (ECM)

ECM LOCATION

NOTE: Prior to replacing an ECM, ensure to conduct all testing procedures.

ECM Connector Removal

To reach ECM connector, remove front body ass'y. Refer to *BODY*.

Push and hold the locking tab.

Rotate connector lock until it stops.

Pull out connector.

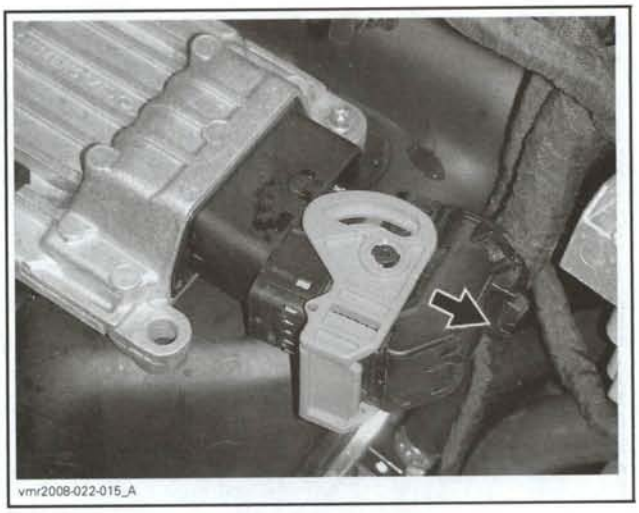

ECM Connector Installation

Fully open connector lock.

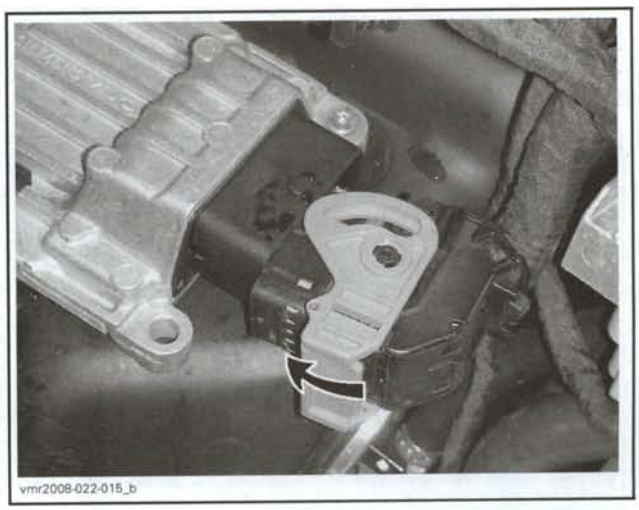

Install connector to ECM.

Rotate connector lock until it snaps locked.

1. Locked here

ECM Connector Probing

The most recommended and safest method to probe ECM connector terminals is to use the ECM adapter (P/N 529 036 085). This tool will prevent deforming or enlarging terminals which would lead to bad ECM terminal contact creating intermittent or permanent problems.

Disconnect the ECM connector and reconnect on the tool connector. Probe required terminals directly in the tool holes.

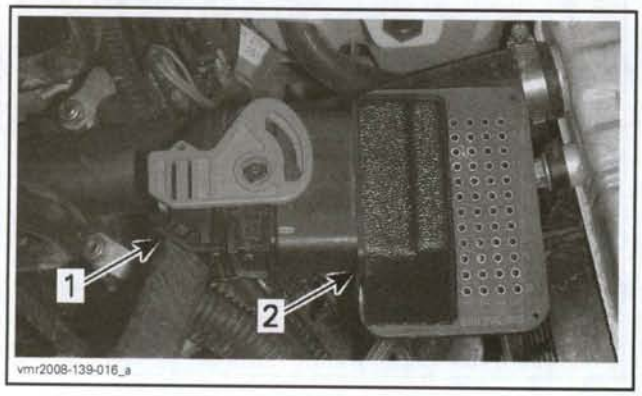

1. ECM connector
2. ECM adapter

CAUTION: Never probe directly on ECM harness connector. This could change the shape or enlarge the terminals and create intermittent or permanent contact problems.

Power Supply to ECM

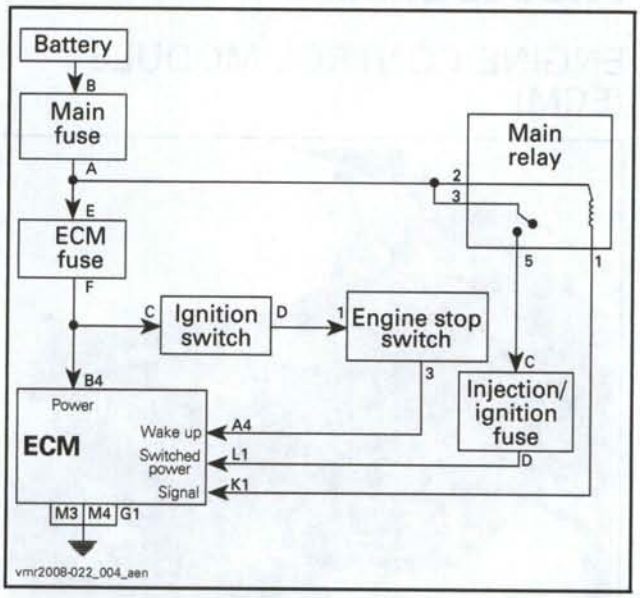

When engine stop switch is set to STOP **or** ignition key is turned OFF, ECM will turn off after approximately 30 seconds. All the electrical system will then be cut-off.

Troubleshooting

Turn ignition key to ON **AND** set engine stop switch to RUN.

QUICK INDICATION THAT ECM IS NOT WORKING (assuming the observed component is working)
Fuel pump does not turn on for approx. 5 seconds (when turning key on and setting engine stop switch to RUN).
Tail light does not turn on.

If ECM does not turn on, check the following.

Ensure battery power is good.

Check main fuse, ECM fuse and injector/ignition fuse.

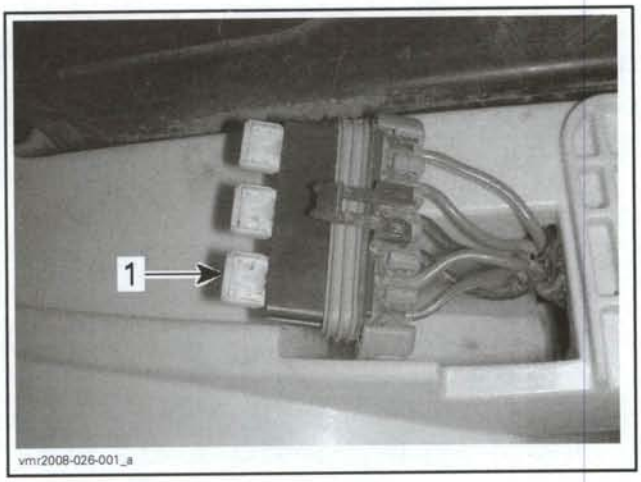

UNDER SEAT
1. Main fuse

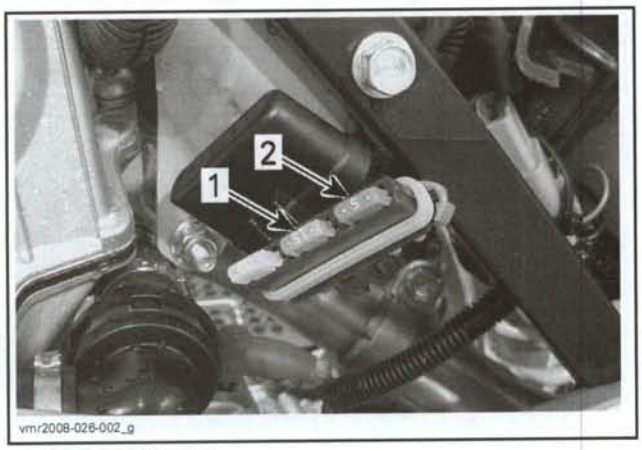

LH SIDE OF ENGINE
1. Injector/ignition fuse
2. ECM fuse

If fuses test good, carry out all the following tests.

ECM Grounds Test

Disconnect ECM connector.

Install ECM adapter (P/N 529 036 085) on ECM connector.

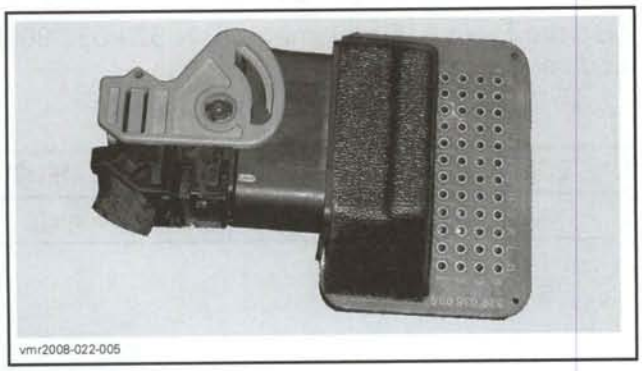

Use the Fluke 115 multimeter (P/N 529 035 868) and select Ω.

Check continuity of ground connections as follows.

ECM CONNECTOR PIN	BATTERY	MEASUREMENT
G1	Battery ground post	Close to 0 Ω (continuity)
M3		
M4		

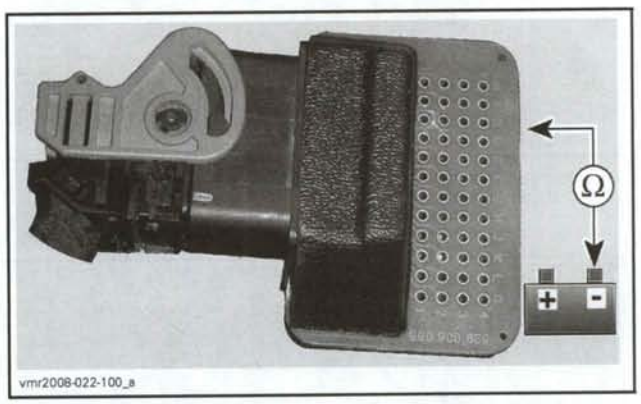

If test succeeded, ECM grounds are adequate.

If test failed, ensure wiring and connectors are good and repair or replace as necessary. If wiring and connectors are good, check the following grounds.

TEST PROBES		CONTINUITY TEST
Wiring harness ground terminal to engine	Bare metallic part of frame	Close to 0 Ω
Wiring harness ground terminal to frame		
Battery ground terminal	Battery ground post	

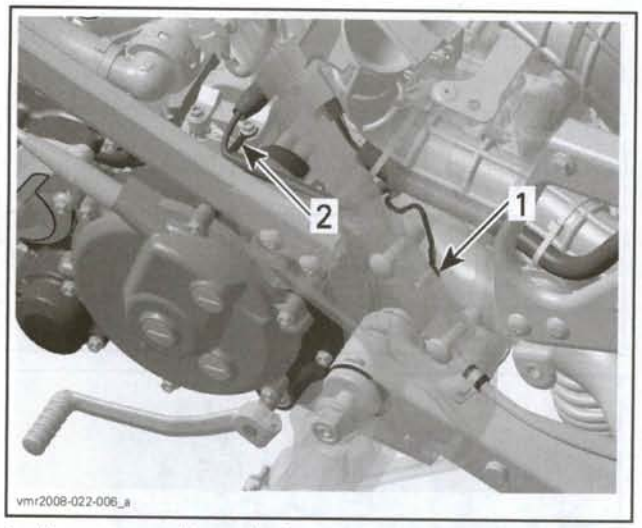

1. *Harness ground to engine (at starter motor)*
2. *Wiring harness ground to frame*

1. *Battery ground connection*

ECM Power Circuit Test

Disconnect ECM connector.

Install ECM adapter (P/N 529 036 085) on ECM connector.

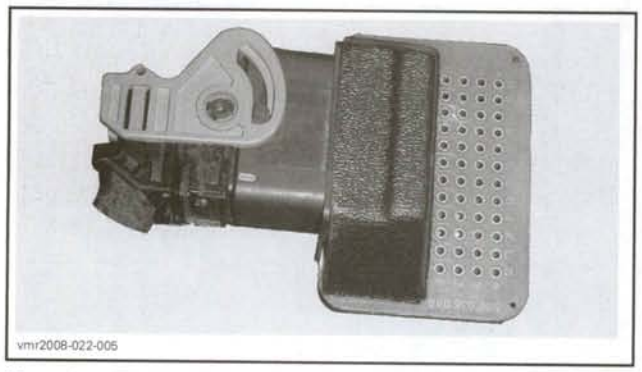

Use the Fluke 115 multimeter (P/N 529 035 868) and select Vdc.

Check voltage as follows.

ECM CONNECTOR PIN		MEASUREMENT
B4	G1	Battery voltage

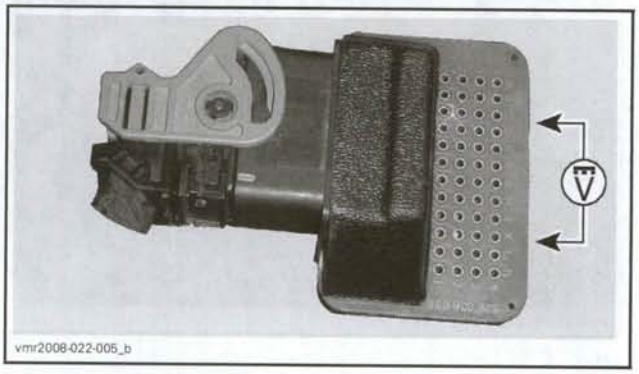

If voltage is out of specification, check wiring and connectors from battery to ECM.

If voltage is as per specification, carry out the *ECM WAKE UP CIRCUIT TEST.*

ECM Wake Up Circuit Test

Turn ignition key to ON.

Set engine stop switch to RUN.

Use the Fluke 115 multimeter (P/N 529 035 868) and select Vdc.

Check voltage as follows.

ECM CONNECTOR PIN		MEASUREMENT
A4	G1	Battery voltage

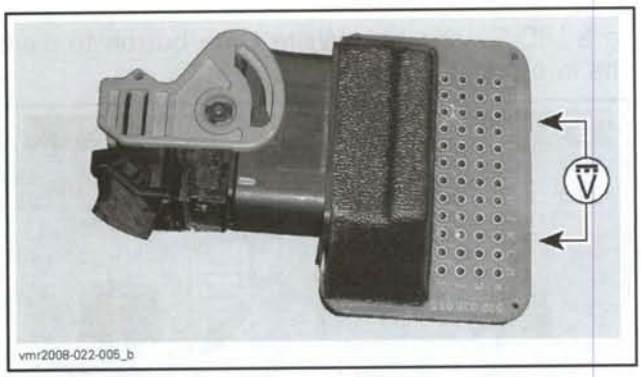
vmr2008-022-005_b

If voltage is out of specification, check wiring and connectors from ECM fuse to ECM through ignition and engine stop switches. Refer to *IGNITION SYSTEM*.

If voltage is as per specification, carry out the *ECM MAIN RELAY CIRCUIT TEST*.

ECM Main Relay Circuit Test

Remove front body ass'y. Refer to *BODY*.

Pull out the main relay from its socket.

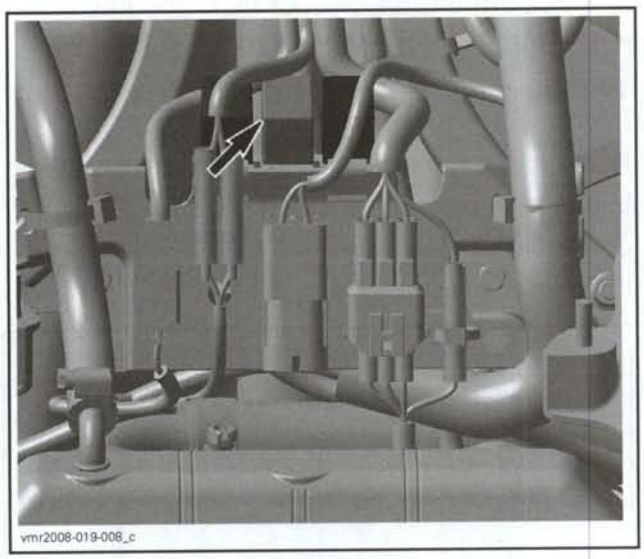
vmr2008-019-008_c

Remove a neighboring relay and temporarily install to the main relay location.

If ECM is now working, replace the faulty main relay with a new one.

If ECM still does not work:

- Check control circuit wiring and connectors from main fuse through the relay socket to ECM.
- Check power circuit wiring and connectors from main fuse through the relay socket and through the injector/ignition fuse to ECM.

If faulty, repair or replace wiring and connectors.

If everything tested good but ECM does not work, try a new ECM. Refer to *ECM REPLACEMENT*.

ECM Removal

NOTE: If ECM is removed for replacement, refer first to *ECM REPLACEMENT* further.

Remove seat. Refer to *BODY*.

Disconnect battery cables.

⚠ WARNING

Battery BLACK negative cable must always be disconnected first and connected last.

Remove front body ass'y. Refer to *BODY*.

Disconnect ECM connector. Refer to *ECM CONNECTOR REMOVAL*.

Unscrew retaining screws and remove the ECM from vehicle.

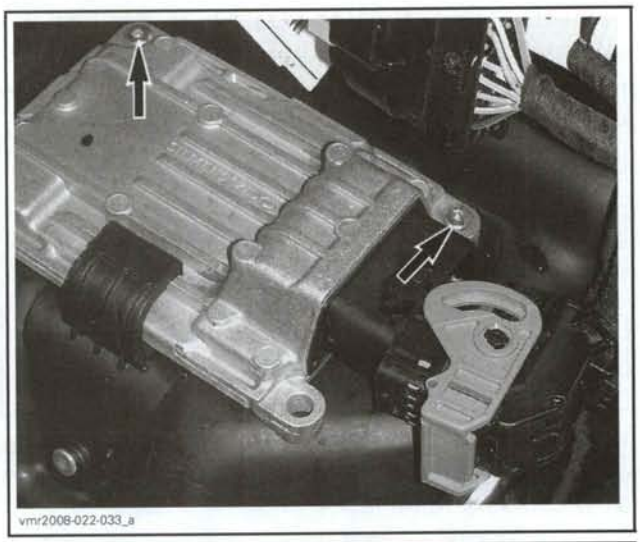
vmr2008-022-033_a

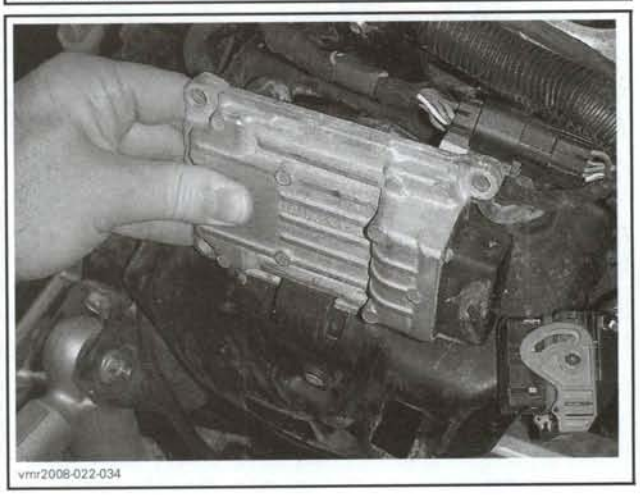
vmr2008-022-034

ECM Installation

Install the new ECM to the vehicle.

Reconnect ECM connector.

If a new ECM is installed, transfer/enter data and perform the required resets to the new ECM. Refer to *ECM REPLACEMENT* below.

ECM Replacement

To transfer/enter data to the new ECM, there are 2 possible methods.

- If the faulty ECM **can** be read with B.U.D.S., refer to *ECM AUTOMATED DATA TRANSFER.*
- If the faulty ECM **cannot** be read with B.U.D.S., refer to *ECM MANUAL ENTRY.*

ECM Automated Data Transfer

To transfer the previous ECM recorded information to the new ECM, use the B.U.D.S. software and proceed as follows.

In B.U.D.S., click the **Read Data** button to load the information from the faulty ECM.

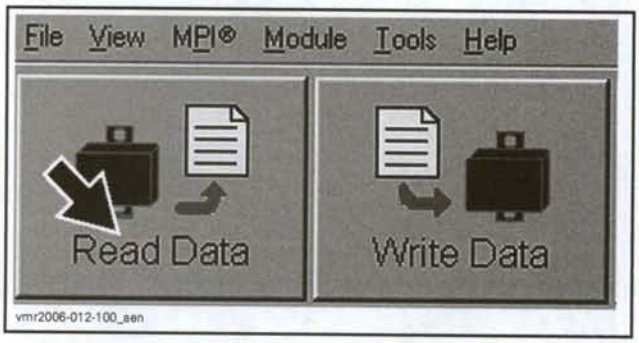

Keep B.U.D.S. running while replacing ECMs. The data will remain stored in the PC computer as long as B.U.DS. is running.

Remove the faulty ECM.

Install and connect the new ECM.

From B.U.D.S., choose **ECM**, **Replace** under **Module**.

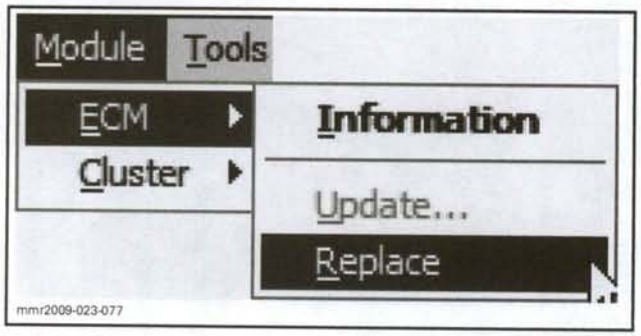

B.U.D.S will automatically write the data from the PC computer into the new ECM.

Go to the **Setting** tab.

Reset the **Closed Throttle and Idle Actuator**. Refer to *CLOSED THROTTLE RESET.*

In B.U.D.S., click the **Write Data** button to save the information to ECM.

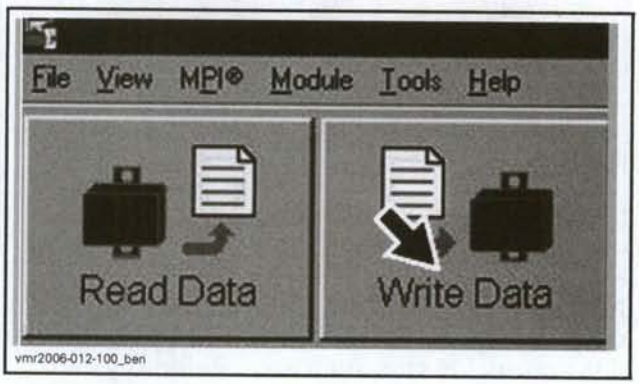

Reinstall remaining removed parts.

ECM Manual Data Entry

First, data needs to be collected.

There are 2 possible methods to collect the required information.

- Use B.U.D.S. software and get the data from a saved **.mpem** file on your PC computer.
- Collect the information from the vehicle.

1st Collecting Method: Get the Data from a Saved .mpem File

Remove the faulty ECM.

Install and connect the new ECM.

Use B.U.D.S. software.

Click on the **Open** button.

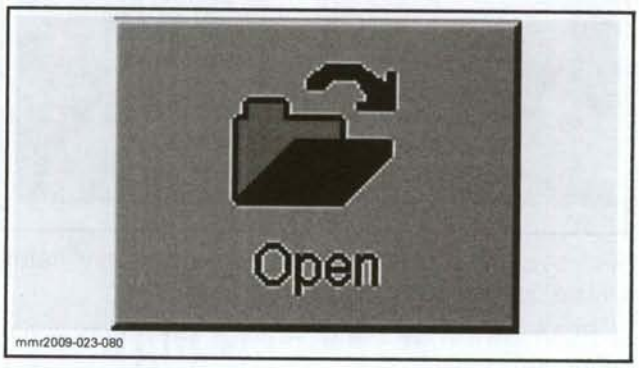

Click once on the **Folder Up** button in the **Open** box.

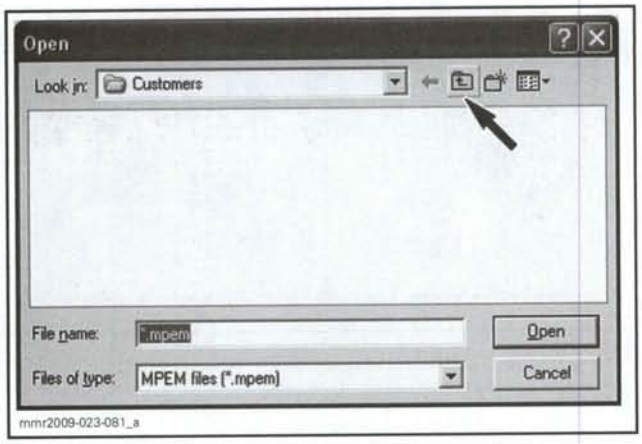

Double click on the **AutoSave** folder.

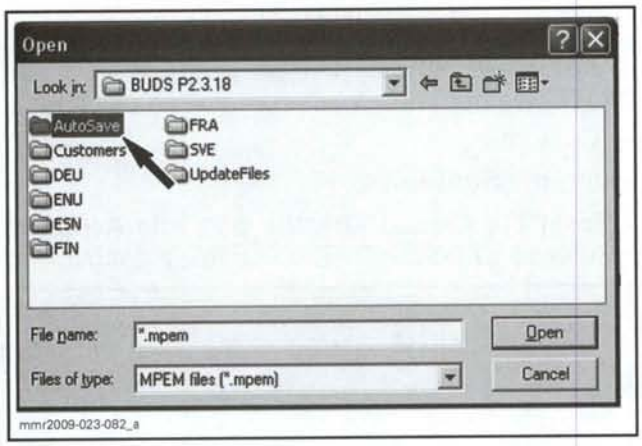

NOTE: You may have to go to another **AutoSave** folder from a previous version of B.U.D.S.

Choose the latest file saved for this specific vehicle.

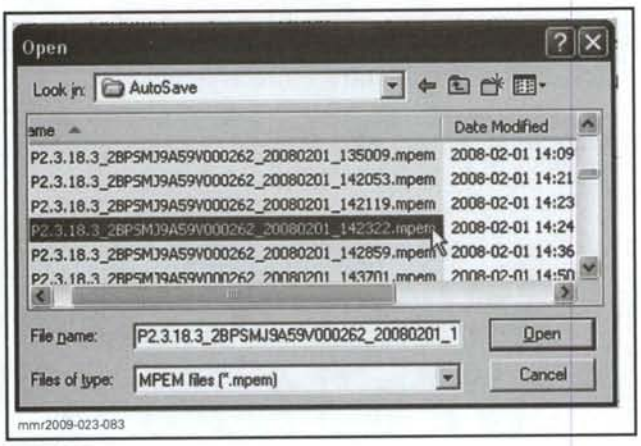

TYPICAL

IMPORTANT: Ensure to use the file that specifically matches the vehicle you are servicing.

NOTE: The file name structure is as follows:
B.U.D.S. version_V.I.N._date read (yyyymmdd)_hour read (hhmmss).mpem
Example: **P2.3.18.3_2BPSMJ9A59V000262_20080201_142322.mpem** B.U.D.S. version = P2.3.18.3 V.I.N. = 2BPSMJ9A59V000262 Date file was read = 2008-02-01 Hour file was read = 14h 23m 22s

Go to the **Vehicle** tab and record the following information.

- Vehicle (V.I.N.) number
- Engine number (without the leading "M")
- Model number
- Customer.

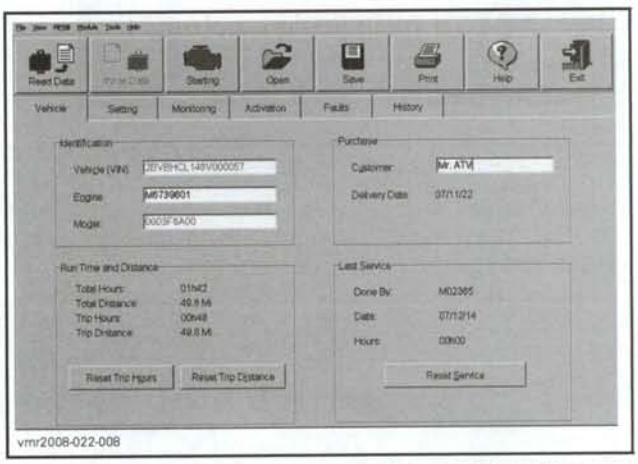

Enter data into ECM as detailed in *ENTERING THE COLLECTED INFORMATION INTO THE ECM* further.

2nd Collecting Method: Collect the Information from the Vehicle

- Remove the faulty ECM.
- Install and connect the new ECM.
- Record vehicle serial number and model number.

1. Vehicle serial number location

TYPICAL — VEHICLE SERIAL NUMBER LABEL
1. V.I.N. (Vehicle Identification Number)
2. Model number

- Record engine serial number.

TYPICAL — ENGINE SERIAL NUMBER LABEL
1. E.I.N. (Engine Identification Number)

Enter data into ECM as detailed in *ENTERING THE COLLECTED INFORMATION INTO THE ECM* below.

Entering the Collected Information into the ECM

Use B.U.D.S. to enter the recorded data into the new ECM.

In B.U.D.S., click the **Read Data** button to read the new "empty" ECM.

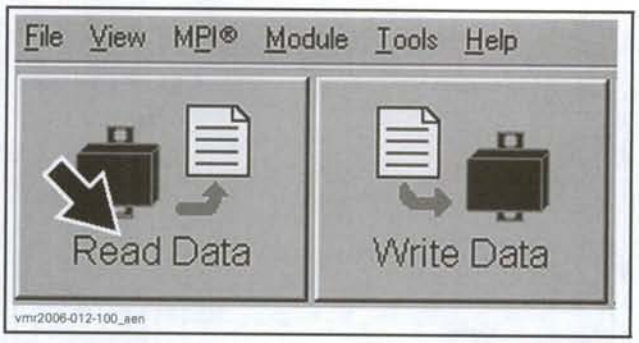

Go to the **Vehicle** tab and enter the information you recorded previously.

- Vehicle (V.I.N.) number
- Engine number

NOTE: Do not enter the leading "M".

- Model number

NOTE: Do not enter leading or trailing 0s (zeros).

- Customer.

Go to the **Setting** tab.

- Reset the **Closed Throttle and Idle Actuator**. Refer to *CLOSED THROTTLE RESET* above.

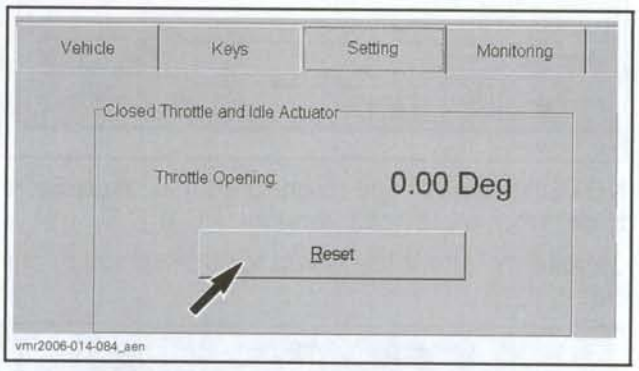

Click on the **Write Data** button.

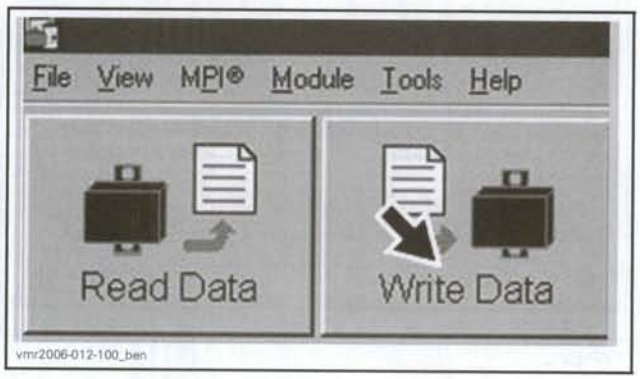

Reinstall remaining removed parts.

Test run engine.

FUEL INJECTOR

Injector Leakage Test

The leakage test is validated when performing the fuel pump pressure test. Refer to *FUEL TANK AND FUEL PUMP* section.

Injector Test with B.U.D.S.

Turn ignition key ON and set engine stop switch to RUN.

Using the B.U.D.S. software, energize the fuel injector from the **Activation** section.

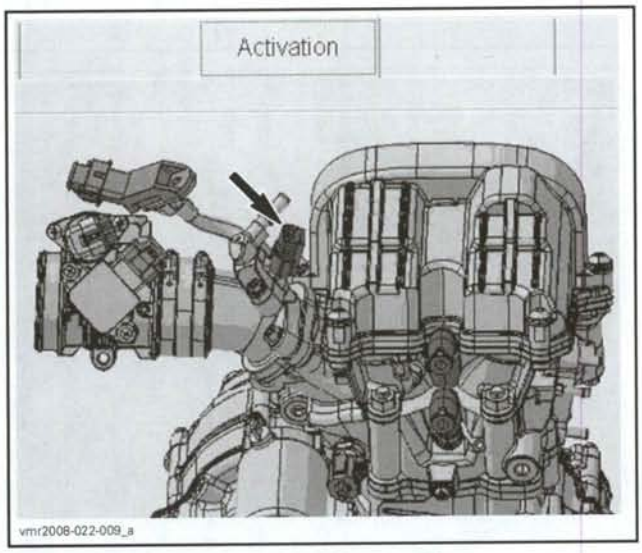

You should hear the injector working.

This validates the injector mechanical and electrical operation.

If the injector does not work, check injector input voltage.

Injector Input Voltage Test

Disconnect the connector from the injector.

NOTE: If connector is hard to unlock, gently use a screwdriver to release connector.

Use the Fluke 115 multimeter (P/N 529 035 868) and select Vdc. Read voltage.

NOTE: It is not necessary to activate the injector since it is continuously powered.

TEST PROBES		MEASUREMENT
VIOLET/BLUE wire (injector connector)	Battery ground	Battery voltage

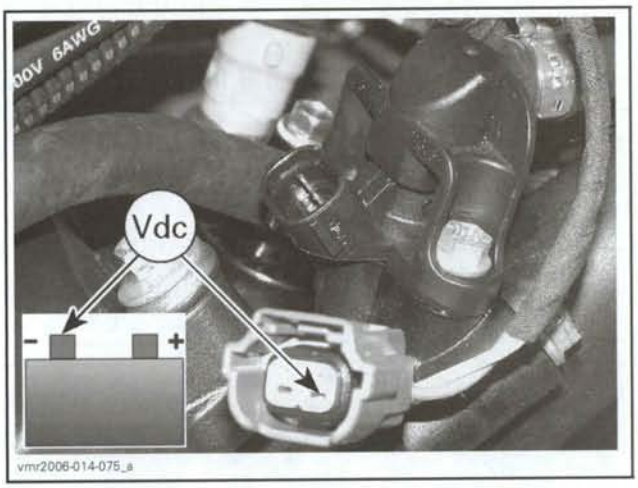

If input voltage is good, carry out the *INJECTOR CONTROL CIRCUIT TEST.*

If input voltage is not good, check continuity between main relay and injector as follows.

Remove main relay from its socket.

Use the Fluke 115 multimeter (P/N 529 035 868) and select Ω.

Read resistance.

TEST PROBES		MEASUREMENT
VIOLET/BLUE wire (injector connector)	Main relay socket pin 5	Close to 0 Ω

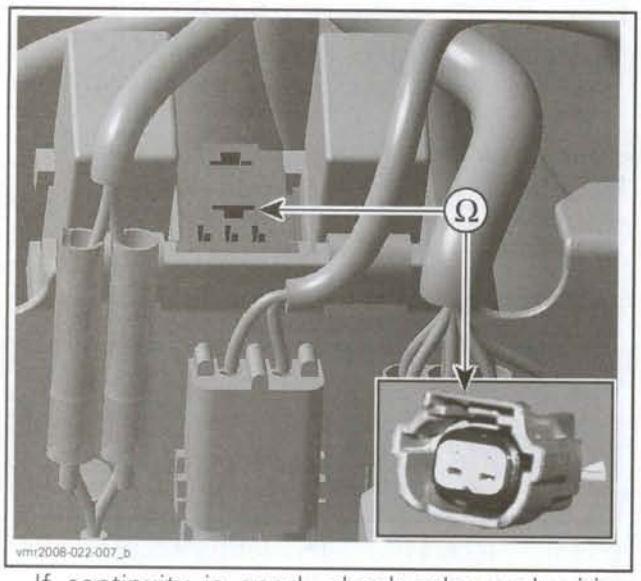

- If continuity is good, check relay and wiring from battery.
- If continuity is faulty, repair or replace wiring from relay socket to injector.

Injector Control Circuit Test

Disconnect ECM connector.

Install ECM adapter (P/N 529 036 085) on ECM connector.

Use the Fluke 115 multimeter (P/N 529 035 868) and select Ω.

Probe terminals as follows.

TEST PROBES		MEASUREMENT
ECM	INJECTOR	
Pin L4	Pin 1	Close to 0 Ω

If control circuit is faulty, repair or replace wiring and connectors.

Injector Resistance Test

Reconnect the injector connector.

Disconnect the ECM connector.

Install ECM adapter (P/N 529 036 085) on ECM connector.

Using the Fluke 115 multimeter (P/N 529 035 868), check resistance value between terminals as follows.

RELAY SOCKET	ECM ADAPTER	RESISTANCE @ 20°C (68°F)
Pin 5	Pin L4	Approximately 12 Ω

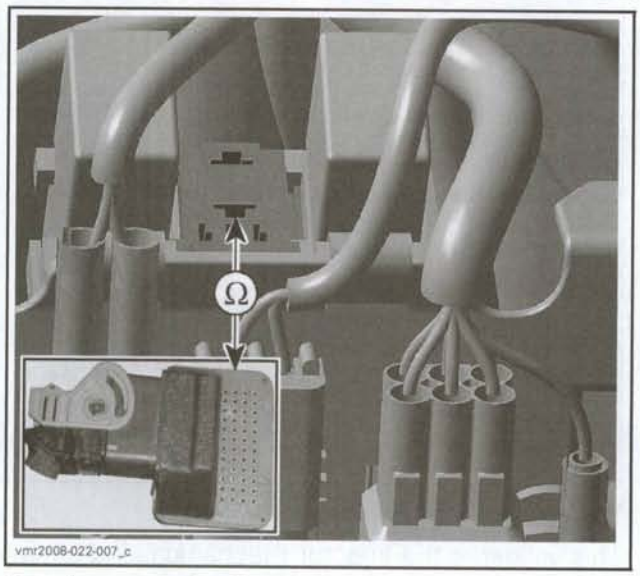

If resistance value is correct, injector coil is in good condition.

If resistance value is incorrect, remove injector connector and check resistance value between injector pins as follows.

INJECTOR		RESISTANCE @ 20°C (68°F)
Pin 1	Pin 2	Approximately 12 Ω

vmr2008-022-035_A

If readings are out of specifications, replace injector.

If readings are good, repair or replace wiring and connectors from ECM to injector.

Injector Removal

Remove the fuel rail from the engine. Refer to *FUEL RAIL* for the procedure.

The fuel injector can be easily pulled out of the fuel rail.

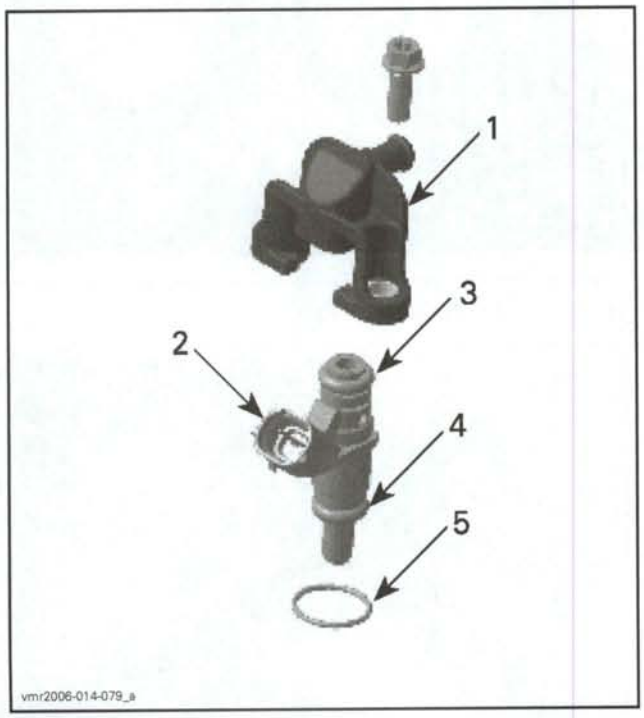

vmr2006-014-079_a

FUEL RAIL ASSEMBLY
1. *Fuel rail*
2. *Fuel injector*
3. *Injector top O-ring*
4. *Injector bottom O-ring*
5. *Manifold O-ring*

Injector Installation

For the installation, reverse the removal procedure. Pay attention to the following details.

Install new O-rings.

Apply a thin film of engine oil to O-rings to ease insertion in rail.

Position the manifold O-ring as shown on injector.


vmr2006-014-071_a

Carefully insert injector in manifold paying attention to the manifold O-ring. Gently push in evenly all around while inserting injector. O-ring must be completely inserted and not visible, before finishing pushing injector.

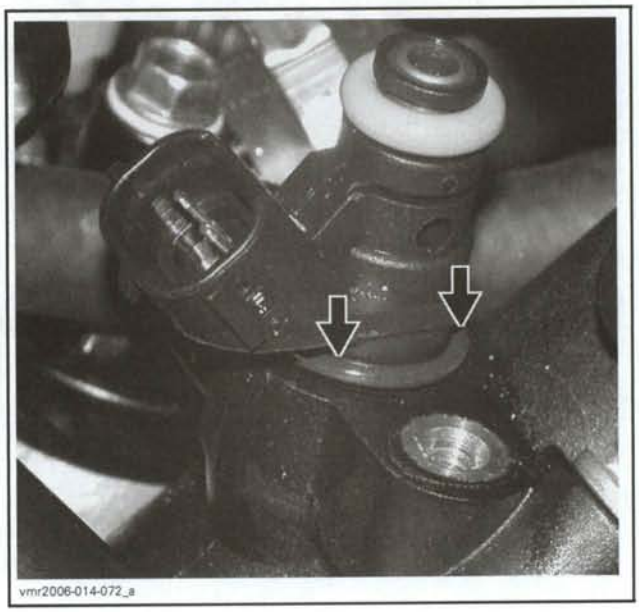
vmr2006-014-072_a

Firmly push injector until it bottoms.

Reinstall fuel rail. See above.

FUEL RAIL

Fuel Rail Removal

Turn ignition key off.

Remove seat. Refer to *BODY.*

Remove front body ass'y. Refer to *BODY.*

Remove retaining screw of coolant tank.


vmr2008-022-036_a

Move tank away to make room to reach the fuel hose connection.


vmr2008-022-037

⚠ WARNING

Prior to disconnecting the quick fitting, ensure engine and exhaust system are not hot.

Wrap a rag around the inlet hose and release the quick fitting.


vmr2008-022-039_A

Unplug injector connector.

NOTE: If connector is hard to unlock, gently use a screwdriver to release connector.


vmr2006-014-001_a

Unscrew rail retaining screws.


vmr2008-022-038_a

NOTE: To reach the RH screw, a 1/4" drive, 8 mm hexagonal socket works well.

Gently pull rail up by hand.


vmr2008-022-040

Fuel Rail Installation

For installation, reverse the removal process but pay attention to the following.

Apply a thin film of injection oil to O-rings of fuel injector to ease installation of fuel rail.

Install new O-rings.

Install fuel rail and evenly tighten screws a little at a time each side.

Tightening torque of the rail retaining screws is 6 N•m (53 lbf•**in**).


vmr2008-022-038_a

Secure inlet hose to injector.

Enable fuel pump using B.U.D.S. Refer to *FUEL TANK/FUEL PUMP.*

⚠ WARNING

Perform a fuel pressure test and ensure that there is no leak. Refer to *FUEL TANK/FUEL PUMP*. Run engine and check for leaks.

THROTTLE BODY

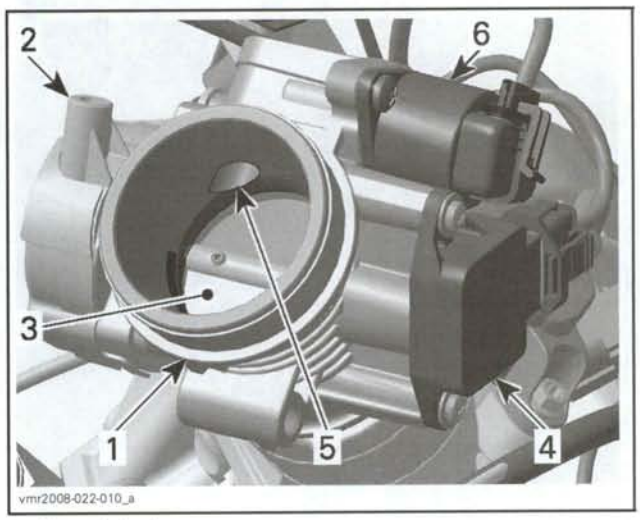

vmr2008-022-010_a

1. *Throttle body*
2. *Throttle cable attachment*
3. *Throttle plate*
4. *TPS*
5. *Idle air bypass channel*
6. *Idle air control valve*

Mechanical Inspection

Check that the throttle plate moves freely and smoothly when depressing throttle lever.

Check if the throttle body idle set screw is loose or worn.

IMPORTANT: Never attempt to adjust the sealed idle stop screw. It is calibrated at the factory. If the screw adjustment is changed, the throttle body must be replaced.

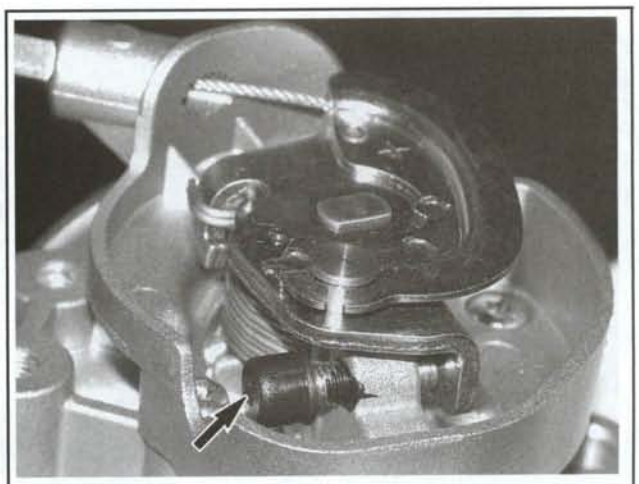
vmr2006-014-064_c

Throttle Body Removal

To remove the throttle body from engine, proceed as follows:

- Remove seat. Refer to *BODY.*
- Remove the 3 rear screws of each side panel.

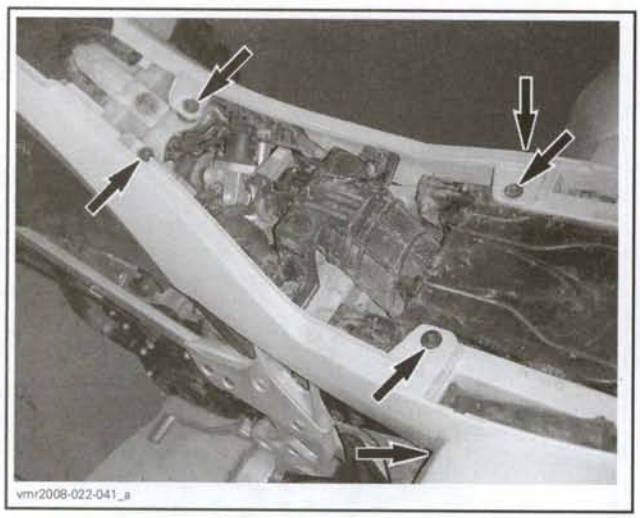
vmr2008-022-041_a

- Pull each panel to make room.
- Remove seat guide.

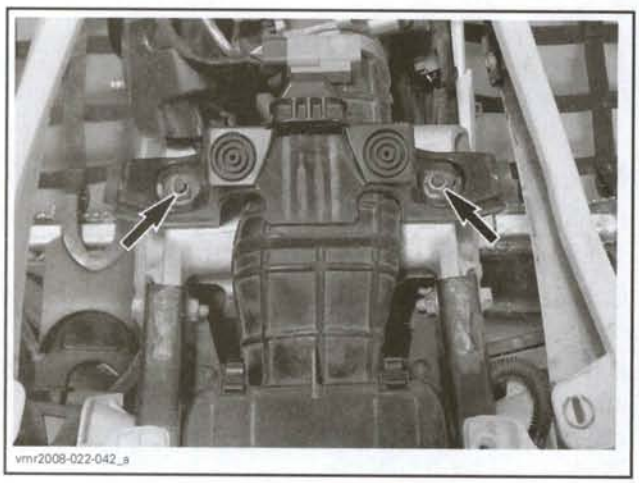
vmr2008-022-042_a

- Remove air deflector.

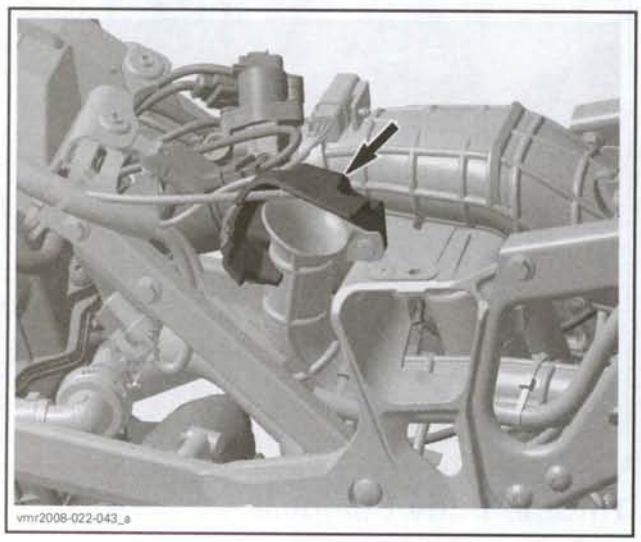
vmr2008-022-043_a

- Unplug TPS, IACV and diagnostic connectors.
- Loosen throttle body clamps.

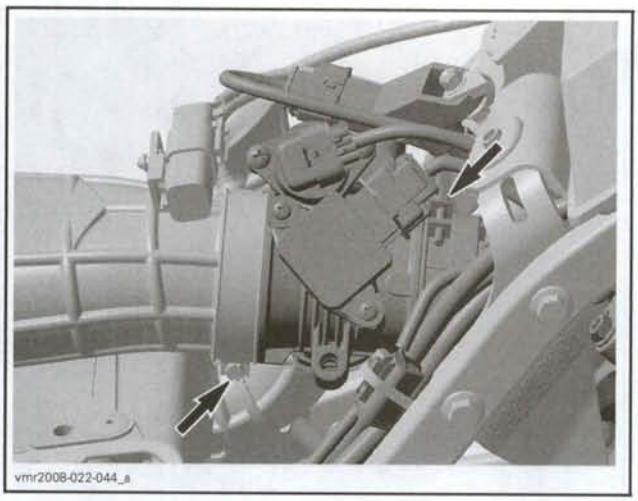
vmr2008-022-044_a

- Pull air intake silencer adaptor from throttle body.


vmr2008-022-045

- Pull out throttle body.


vmr2008-022-046

- Remove throttle body cover.

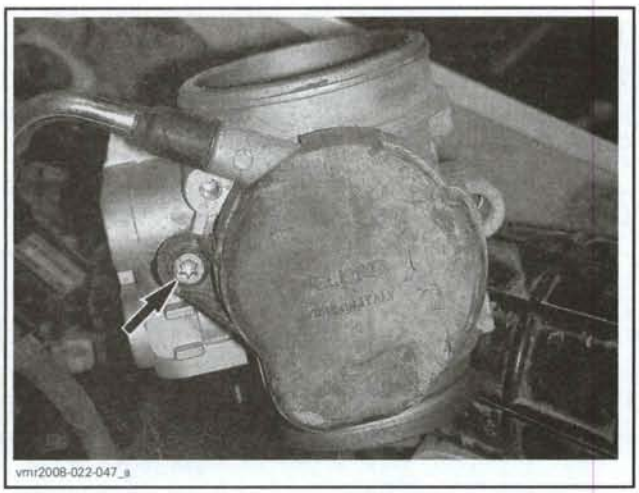
vmr2008-022-047_a

Turn throttle lever and pull out cable barrel.

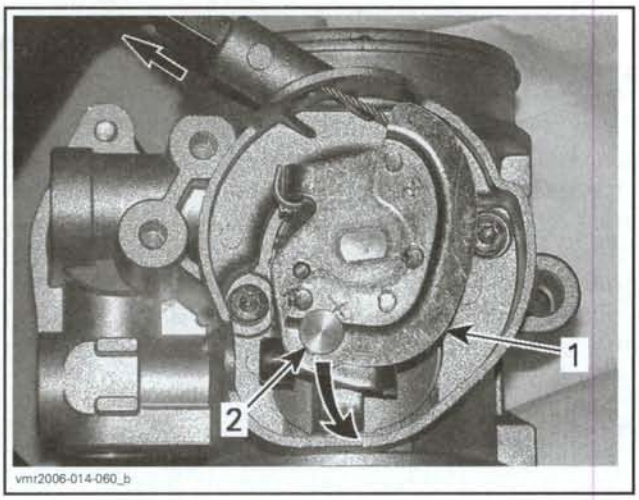

vmr2006-014-060_b

1. *Throttle lever*
2. *Cable barrel*

Remove barrel from cable. Pull out throttle cable.

Throttle Body Installation

Installation of the throttle body is the reverse of the removal procedure. Pay attention for the following details.

Properly install cable barrel to throttle cable end.

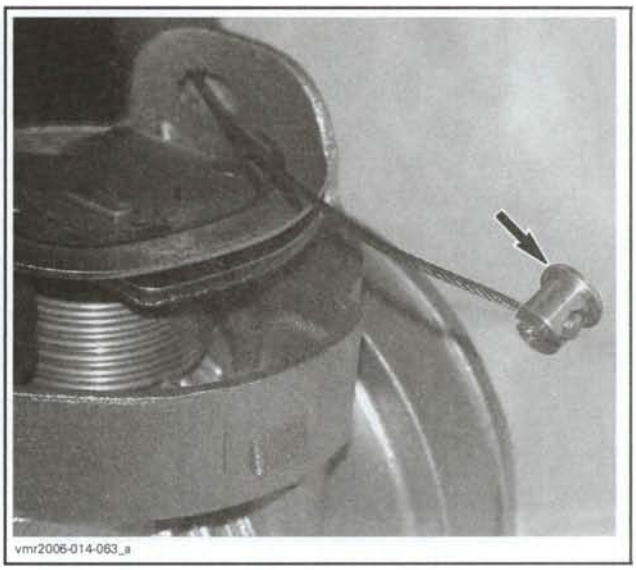
vmr2006-014-063_a

Hook cable to throttle lever.

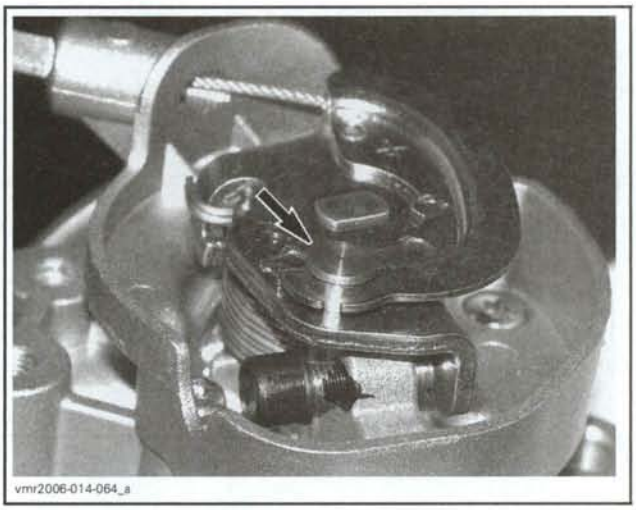
vmr2006-014-064_a

Do not reinstall cover yet.

Install throttle body on intake manifold. Ensure to index throttle body tab with boot notch.

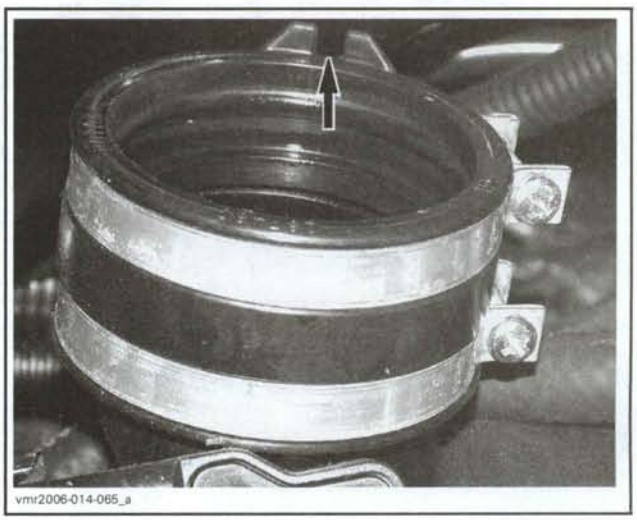
vmr2006-014-065_a

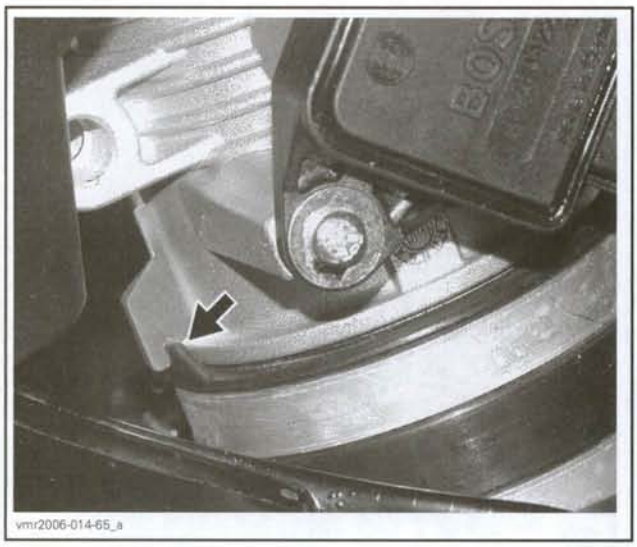
vmr2006-014-65_a

When the throttle body has been replaced, ensure to:

- Check throttle cable adjustment. Refer to *STEERING SYSTEM.*
- Reset the **Closed Throttle and Idle Actuator**. Refer to *BASIC ADJUSTMENTS* in this section.

THROTTLE POSITION SENSOR (TPS)

General

The throttle position sensor (TPS) is a potentiometer that sends a signal to the ECM which is proportional to the throttle shaft angle.

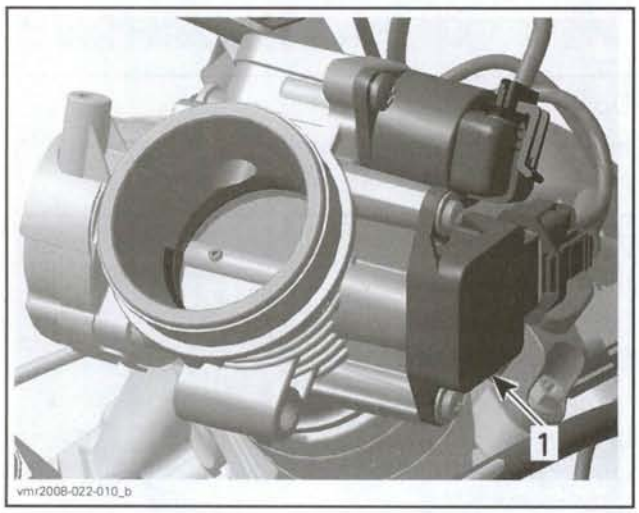

vmr2008-022-010_b

1. Throttle position sensor (TPS)

IMPORTANT: Prior to testing the TPS, ensure that mechanical components or adjustments of throttle body are adequate.

The EMS may generate several fault codes pertaining to the TPS. Refer to *MONITORING SYSTEM/FAULT CODES* section for more information.

TPS Wear Test

While engine is not running, activate throttle and pay attention for smooth operation without physical stops of the cable.

Using the B.U.D.S. software, use the **Throttle Opening** display under **Monitoring**.

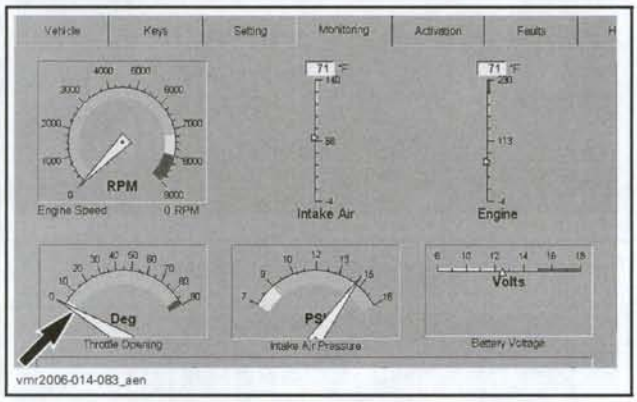

vmr2006-014-083_aen

Slowly and regularly depress the throttle. Observe the needle movement. It must change gradually and regularly as you move the throttle. If the needle "sticks", bounces, suddenly drops or if any discrepancy between the throttle movement and the needle movement is noticed, it indicates that the TPS needs to be replaced or the computer used may be too slow to transfer data fast enough for real time display.

TPS Resistance Test

Ensure TPS is connected to wiring harness.

Disconnect the ECM connector.

Install ECM adapter (P/N 529 036 085) on ECM connector.

Using the Fluke 115 multimeter (P/N 529 035 868), check resistance values on ECM adapter as per the following table.

ECM ADAPTER		THROTTLE IDLE POSITION	WIDE OPEN THROTTLE POSITION
PIN		RESISTANCE Ω @ 20°C (68°F)	
G3	G2	900 - 1100	2300 - 2600
G2	A1	1700 - 1900	1700 - 1900
G3	A1	2400 - 2600	710 - 1300

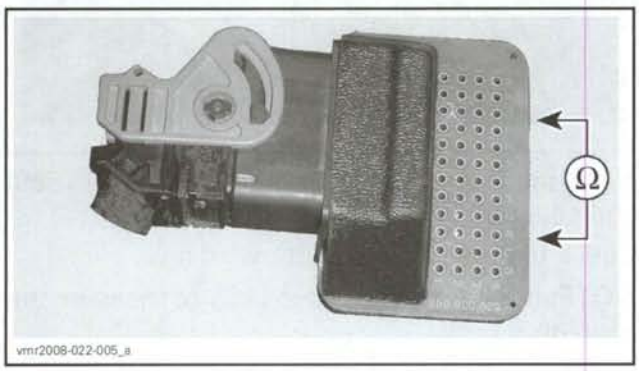

vmr2008-022-005_a

NOTE: The resistance value should change smoothly and proportionally to throttle movement. Otherwise, replace TPS.

If resistance values are correct, perform the *VOLTAGE TEST* below.

If resistance values are incorrect, check wiring harness. If wiring is faulty, repair or replace. If wiring is good, replace TPS.

Reconnect ECM connector.

TPS Voltage Test

Check the ECM voltage output to the TPS as follows.

Disconnect connector from TPS.


vmr2008-022-016_a

Turn ignition key ON and set engine stop switch to RUN.

Use the Fluke 115 multimeter (P/N 529 035 868) and select Vdc.

Check the voltage readings from harness connector as follows.

CONNECTOR PIN		VOLTAGE
1	2	5.0 Vdc
2	3	0 Vdc
1	3	4.75 - 5 Vdc

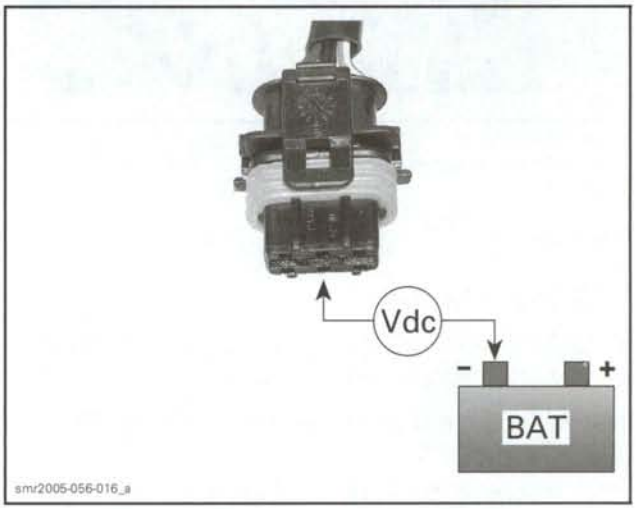

smr2005-056-016_a

If voltage test is not good, check and repair wiring harness.

If voltage test is good, everything is in order (assuming resistance test was performed).

TPS Removal

Remove seat. Refer to *BODY*.

Remove the 3 rear screws of RH side panel.


vmr2008-022-048_a

Pull panel to make room.

Loosen two screws retaining the TPS.

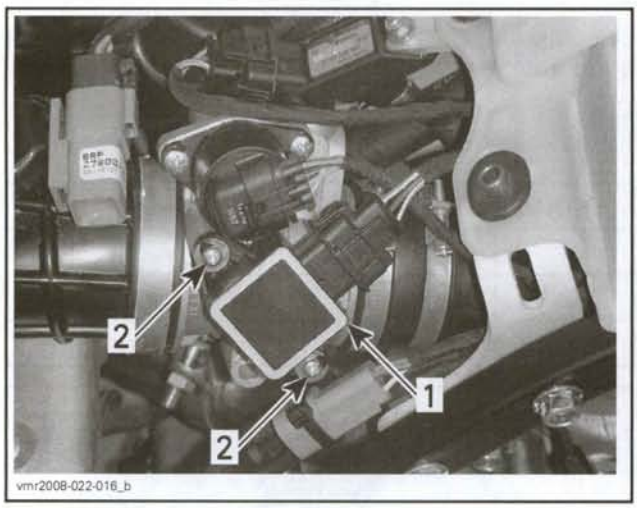

THROTTLE BODY
1. Throttle position sensor (TPS)
2. Screws

Remove TPS.

TPS Installation

Installation is the reverse of the removal. However, pay attention to the following.

Apply Loctite 243 (P/N 293 800 060) on the TPS retaining screws.

Torque screws to 3 N•m (27 lbf•**in**).

Reinstall remaining removed parts.

Proceed with the **Closed Throttle and Idle Actuator Reset**. See *BASIC ADJUSTMENTS* at the beginning of this section.

IDLE AIR CONTROL VALVE

An idle air control valve with good resistance measurement can still be faulty. It is also possible that a mechanical failure occurs which is not detectable without measuring the air flow. Replacing the idle air control valve may be necessary as a test.

If an erratic engine idle is experienced, clean the idle air bypass in throttle body.

IACV Resistance Test

Disconnect idle air control valve connector.

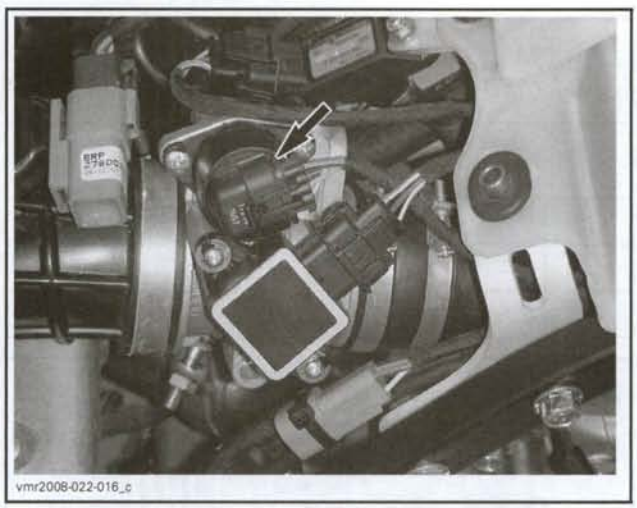

Using the Fluke 115 multimeter (P/N 529 035 868) and select Ω.

Check the resistance in both windings.

NOTE: It is easier to remove IACV to measure the resistance.

Check the resistance between pins as shown.

IDLE AIR CONTROL VALVE		MEASUREMENT
PIN		RESISTANCE Ω @ 20°C (68°F)
A	D	45 - 55
B	C	

If the resistance of any winding is not good, replace the idle air control valve.

If resistance test of valve windings is good, check continuity of IACV wiring between ECM and IACV as follows.

Install ECM adapter (P/N 529 036 085) on ECM connector and verify continuity.

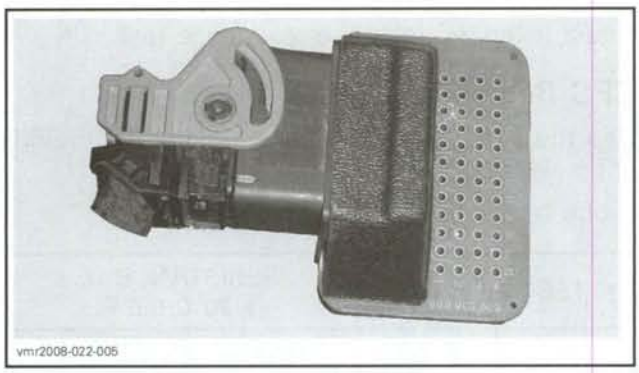
vmr2008-022-005

IDLE AIR CONTROL VALVE CIRCUIT		MEASUREMENT
IACV PIN	ECM PIN	RESISTANCE Ω @ 20°C (68°F)
A	D3	Close to 0 Ω
B	E4	
C	C4	
D	D4	

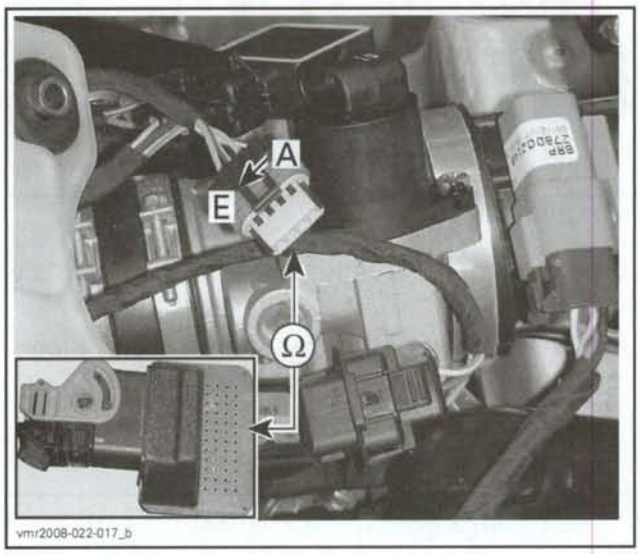

vmr2008-022-017_b

If continuity is not good, check and repair wiring or connectors.

IACV Visual Inspection

CAUTION: Make sure the ignition key is turned off during the following procedure.

Remove idle air control valve from throttle body.

Check the piston and air bypass channel for dirt or deposits which can cause a sticking or leaking piston.

CAUTION: Do not try to operate the piston of the idle air control valve when it is dismounted. Also do not move the piston by hand. The drive screw is very sensitive and may be damaged.

Use a throttle body cleaner such as Gunk Intake Medic or the equivalent.

⚠ WARNING

Only use an appropriate throttle body cleaner that will not damage O-rings, MAPS sensor and idle control valve.

Clean idle air bypass in throttle body from contamination then use an air gun to dry it.

⚠ WARNING

Always wear eye protector. Chemicals can cause a rash break out and injure your eyes.

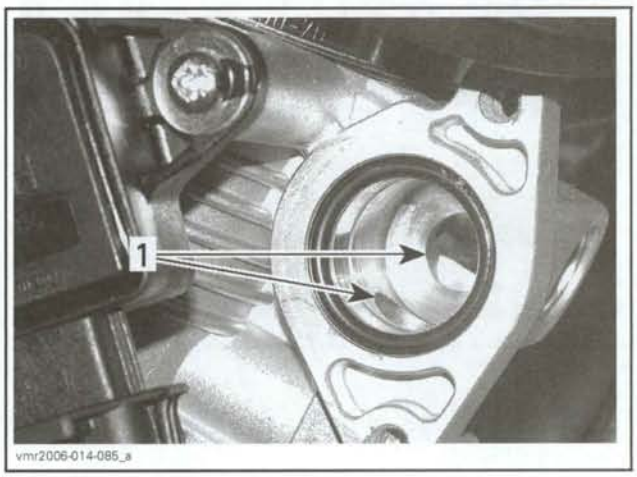

vmr2006-014-085_a

1. Clean bore from contamination

Clean all remaining parts and install the idle air control valve on the throttle body.

Proceed with the **Closed Throttle and Idle Actuator Reset**. See procedure in *BASICS ADJUSTMENTS* at the beginning of this section.

CRANKSHAFT POSITION SENSOR (CPS)

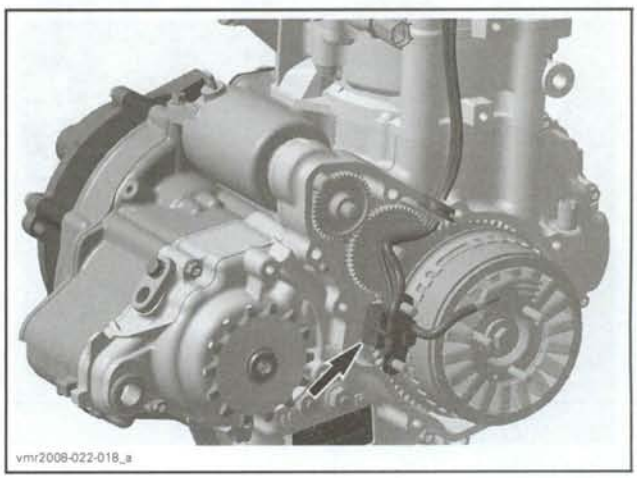
vmr2008-022-018_a

NOTE: Take into account that a CPS fault can be triggered by bent or missing encoder wheel teeth. First check fault codes (refer to *MONITORING SYSTEM/FAULT CODES*) then check the teeth condition if necessary (refer to *MAGNETO/STARTER*).

CPS Voltage Test

Unplug CPS connector.

RH SIDE OF VEHICLE

Use the Fluke 115 multimeter (P/N 529 035 868) and select Vac.

Probe terminals as shown.

Crank engine and read voltage.

TEST PROBES		MEASUREMENT
Pin 1	Pin 2	Approximately 1 Vac

If test succeeded, CPS is good.

If test failed, perform the resistance test.

CPS Resistance Test

Use the Fluke 115 multimeter (P/N 529 035 868) and select Ω.

Probe terminals as shown.

TEST PROBES		RESISTANCE Ω @ 20°C (68°F)
Pin 1	Pin 2	Approximately 260 Ω

RH SIDE OF VEHICLE

If resistance is not within specifications, replace the CPS.

If resistance tests good, **reconnect** the CPS connector and disconnect the ECM connector.

Using the Fluke 115 multimeter (P/N 529 035 868), recheck resistance as per table.

TEST PROBES		RESISTANCE Ω @ 20°C (68°F)
Pin D1	Pin E1	Approximately 260 Ω

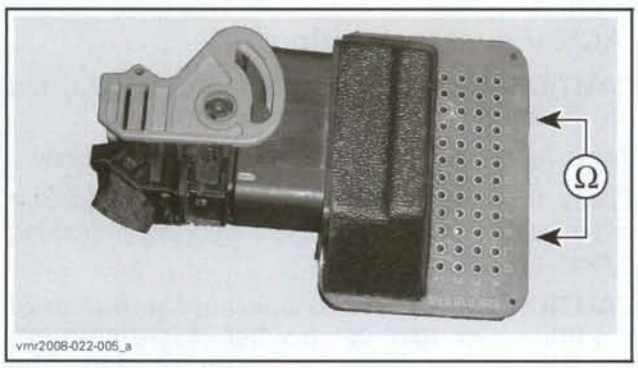

If resistance value is incorrect, repair the connectors or replace the wiring harness between ECM connector and the CPS.

CPS Replacement

Refer to *MAGNETO/STARTER.*

MANIFOLD ABSOLUTE PRESSURE SENSOR (MAPS)

The sensor continuously measures the manifold absolute pressure.

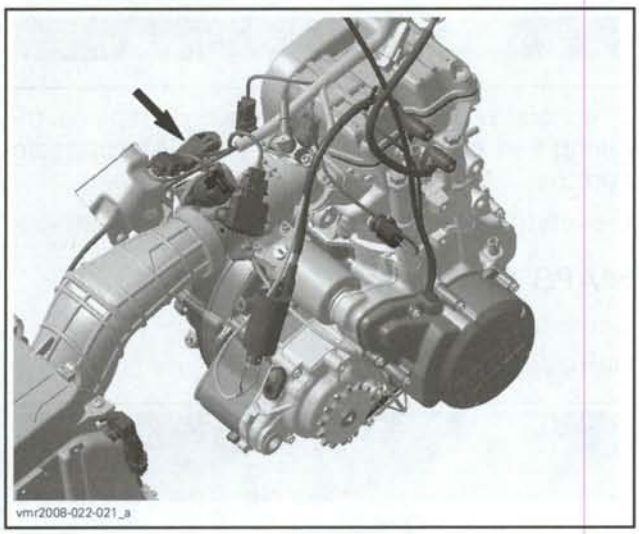
vmr2008-022-021_a

MAPS Inspection

Remove seat. Refer to *BODY.*

Ensure MAPS sensor vacuum tube is properly connected, not leaking, not kinked or damaged.


vmr2008-022-022_a

Tube length is calibrated and should not be tempered with. Otherwise, improper engine calibration could occur.

MAPS Test with B.U.D.S.

Start engine.

Using B.U.D.S. software, read the manifold absolute pressure.

Click on **Monitoring** tab, then on **ECM** tab.

Needle should move as you throttle the engine. Otherwise, perform the voltage and continuity tests.

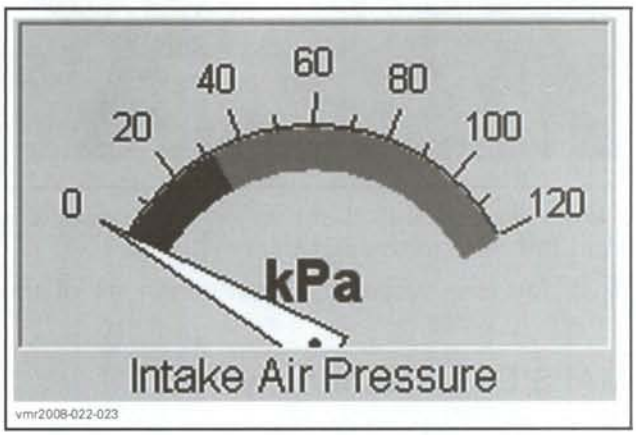

vmr2008-022-023

MAPS Input Voltage Test

Check voltage output from ECM to manifold absolute pressure sensor (MAPS).

Disconnect connector from MAPS.


vmr2008-022-022_b

Turn ignition key ON and set engine stop switch to RUN.

Use the Fluke 115 multimeter (P/N 529 035 868) and select Vdc.

Probe connector terminals as per the following table.

TEST PROBES		MEASUREMENT
Pin 1	Battery ground	5 Vdc

vmr2008-022-024_a

If voltage test failed, check wiring and connectors from this wire to the ECM.

If voltage test succeeded, test continuity of the remaining wires.

MAPS Circuit Continuity Test

Disconnect the ECM connector.

Install ECM adapter (P/N 529 036 085) on ECM connector.

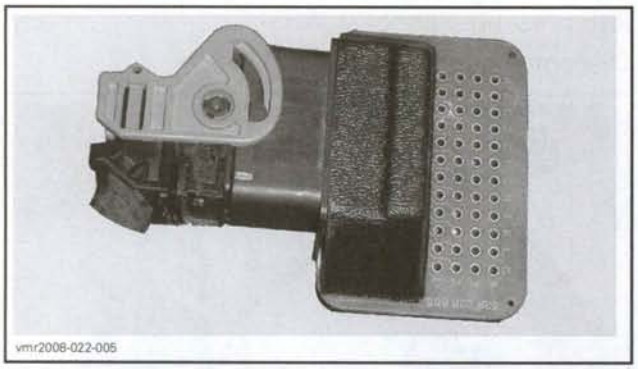
vmr2008-022-005

Use the Fluke 115 multimeter (P/N 529 035 868) and select Ω.

Check the continuity of the MAPS circuits.

MAPS CIRCUIT		MEASUREMENT
MAPS PIN	ECM PIN	RESISTANCE Ω @ 20°C (68°F)
2	G2	Close to 0 Ω
3	F2	

vmr2008-022-024_c

If continuity is not good, repair or replace the wiring and connectors between ECM connector and the MAPS.

If everything tested good replace MAPS sensor.

MAPS Removal

Remove seat. Refer to *BODY.*

Remove the 3 rear screws of LH side panel.

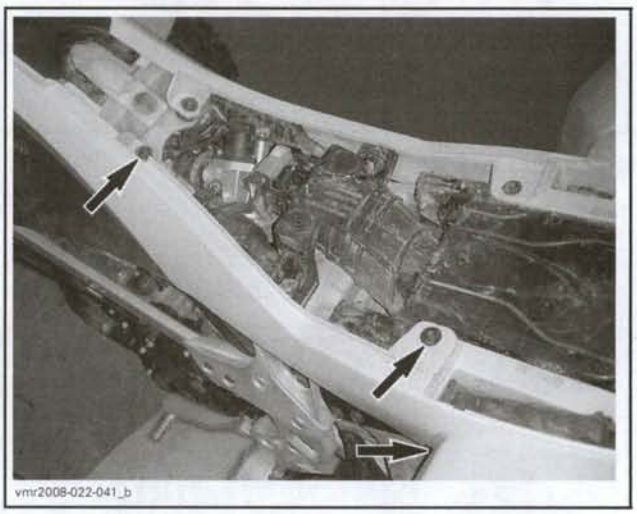
vmr2008-022-041_b

Unplug MAPS connector.

Cut the top Oetiker clamp. Refer to *FUEL TANK/FUEL PUMP* for clamp removal and installation procedures.


vmr2008-022-022_c

Disconnect vacuum tube from MAPS sensor.

Remove MAPS sensor.

MAPS Installation

Install the new MAPS sensor.

Carefully connect vacuum tube. Install a new clamp.

Plug MAPS connector.

Tighten screw.

Reinstall remaining removed parts.

AMBIENT AIR PRESSURE AND TEMPERATURE SENSOR (AAPTS)

The sensor continuously measures the intake air pressure and temperature.

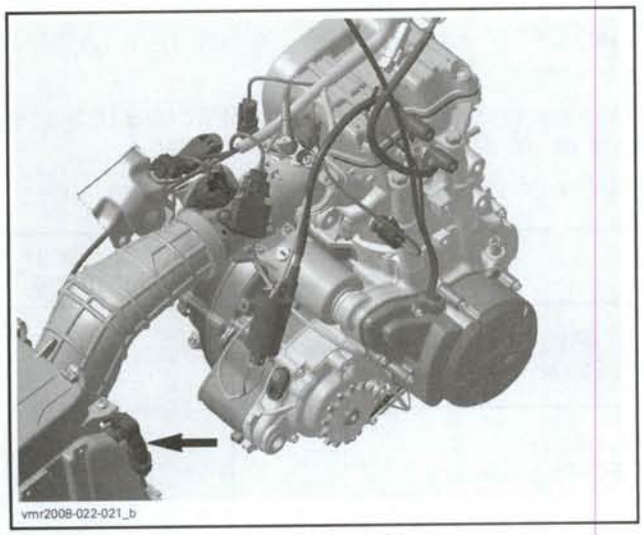
vmr2008-022-021_b

Remove seat. Refer to *BODY*.

AAPTS Resistance Test (Temperature Function)

Detach AAPTS sensor from air filter housing. Refer to *AAPTS REMOVAL*.

Disconnect AAPTS connector.


vmr2008-022-026_b

Use the Fluke 115 multimeter (P/N 529 035 868) and select Ω.

Check the resistance of the sensor itself as shown. Compare result with sensor temperature table according to the ambient temperature.

AAPTS	
Pin 1	Pin 2

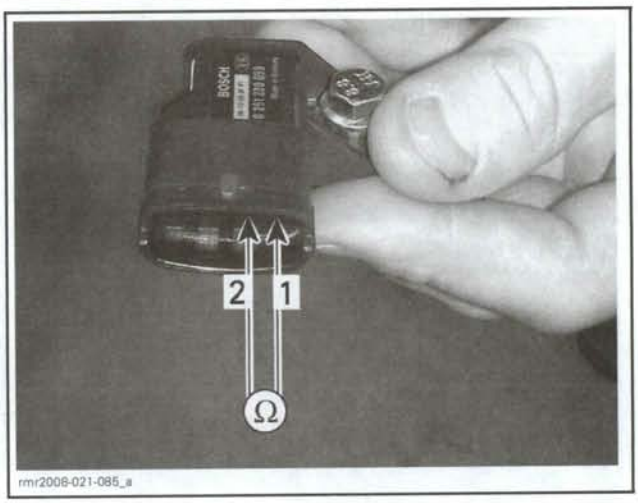

rmr2008-021-085_a

SENSOR TEMPERATURE TABLE		
TEMPERATURE		RESISTANCE (OHMS)
°C	°F	AAPTS
- 30	- 22	26860
- 20	- 4	15614
- 10	14	9425
0	32	5587
20	68	2510
30	86	1715
40	104	1200
50	122	850
60	140	610
70	158	445
80	176	330
90	194	245
100	212	185
110	230	140
120	248	110
130	266	85

If resistance is not within specification, replace the AAPTS.

If resistance test is good, plug AAPTS connector to sensor and check AAPTS circuit continuity.


vmr2008-022-026_b

Remove front body assembly. Refer to *BODY.*

Disconnect the ECM connector.

Install ECM adapter (P/N 529 036 085) on ECM connector.

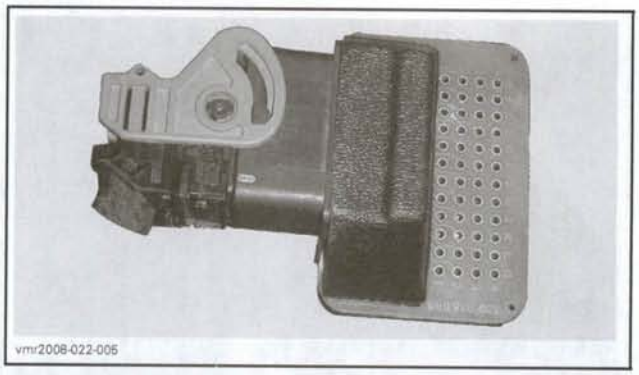
vmr2008-022-005

Measure resistance as follows.

TEST PROBES		RESISTANCE Ω @ 20°C (68°F)
Pin C3	Pin F3	Refer to table above

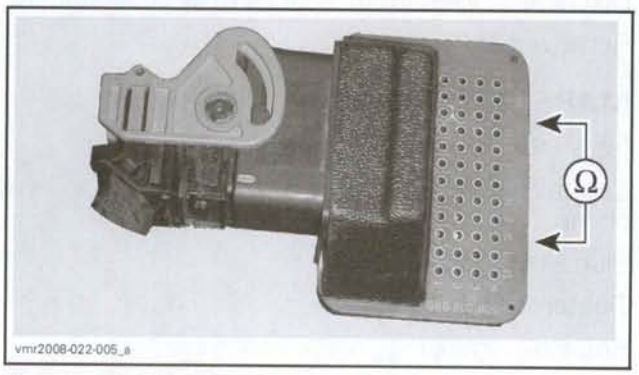

vmr2008-022-005_a

If resistance is not good, check continuity of wiring between ECM and AAPTS.

AAPTS Circuit Continuity Test (Temperature Function)

Disconnect the ECM connector.

Install ECM adapter (P/N 529 036 085) on ECM connector.

Use the Fluke 115 multimeter (P/N 529 035 868) and select Ω.

Check continuity as follows.

TEST PROBES		RESISTANCE Ω @ 20°C (68°F)
Pin C3 (ECM adapter)	Pin 1 (AAPTS connector)	Close to 0 Ω
Pin F3 (ECM adapter)	Pin 2 (AAPTS connector)	

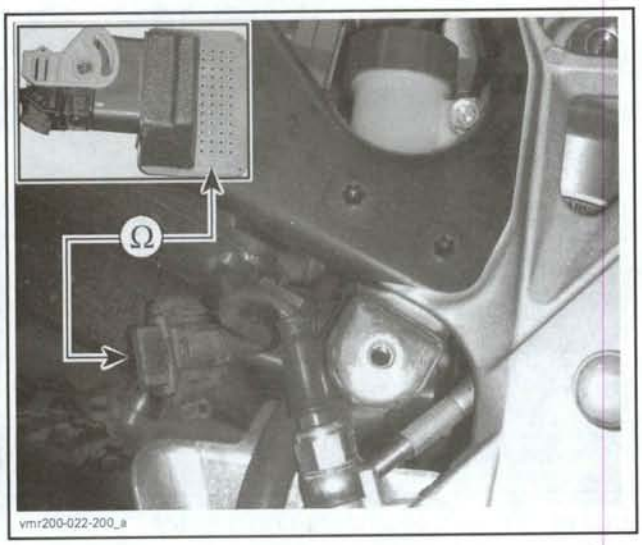

If resistance value is incorrect, repair or replace wiring harness between ECM connector and the AAPTS.

AAPTS Input Voltage Test (Pressure Function)

Check the voltage output from ECM to the pressure sensor.

Ensure ECM harness connector is plugged to ECM.

Turn ignition key ON and set engine stop switch to RUN.

Disconnect AAPTS connector.

Use the Fluke 115 multimeter (P/N 529 035 868) and select Vdc.

Check voltage as follows.

TEST PROBES		MEASUREMENT
Pin 3 (AAPTS connector)	Battery ground	5 Vdc

If voltage test failed, check wiring and connectors from this wire to the ECM.

If voltage test succeeded, test continuity of the remaining wires.

AAPTS Circuit Continuity Test (Pressure Function)

Disconnect ECM connector.

Install ECM adapter (P/N 529 036 085) on ECM connector.

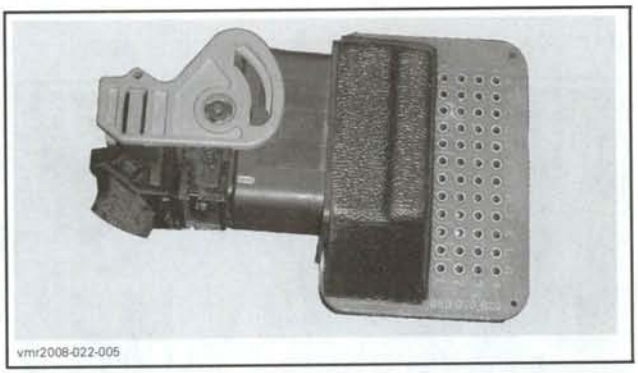

Use the Fluke 115 multimeter (P/N 529 035 868) and select Ω.

Check the continuity of the AAPTS circuits.

TEST PROBES		RESISTANCE Ω @ 20°C (68°F)
Pin C3 (ECM adapter)	Pin 1 (AAPTS)	Close to 0 Ω
Pin D2 (ECM adapter)	Pin 4 (AAPTS)	

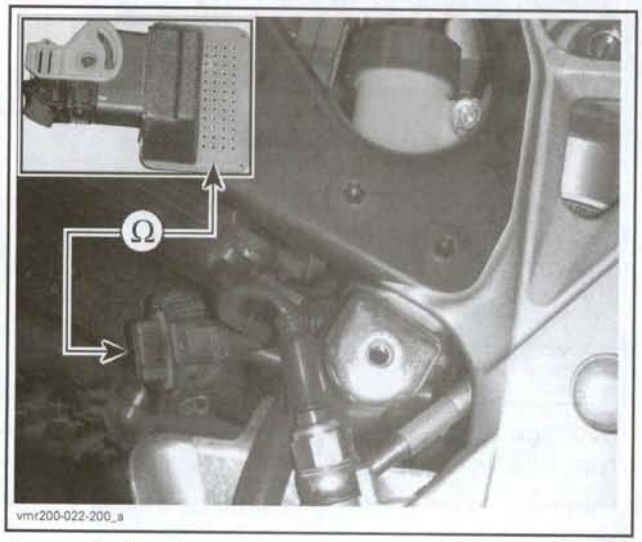

vmr200-022-200_a

If continuity is not good, repair or replace the wiring and connectors between ECM connector and the AAPTS.

If everything tested good replace AAPTS sensor.

AAPTS Removal

Remove seat. Refer to *BODY*.

Remove the 3 rear screws of RH side panel.

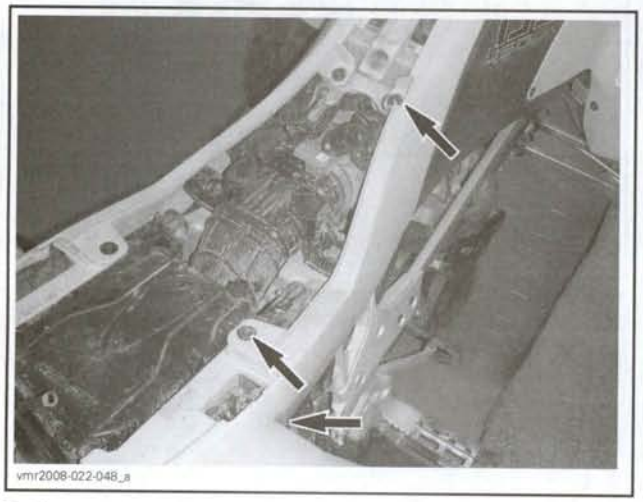
vmr2008-022-048_a

Pull panel to make room.

Remove AAPTS retaining screw.

NOTE: A 1/4 drive Torx driver works well.

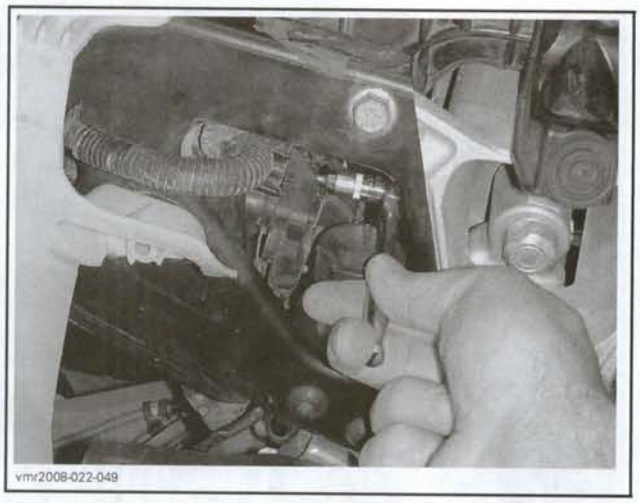
vmr2008-022-049

Pull out sensor and unplug connector.

AAPTS Installation

Reverse operations for the installation.

NOTE: To ease installation of sensor connector, safely lift rear of vehicle and plug connector from the rear.

vmr2008-022-050_a

1. Access to plug the AAPTS connector

COOLANT TEMPERATURE SENSOR (CTS)

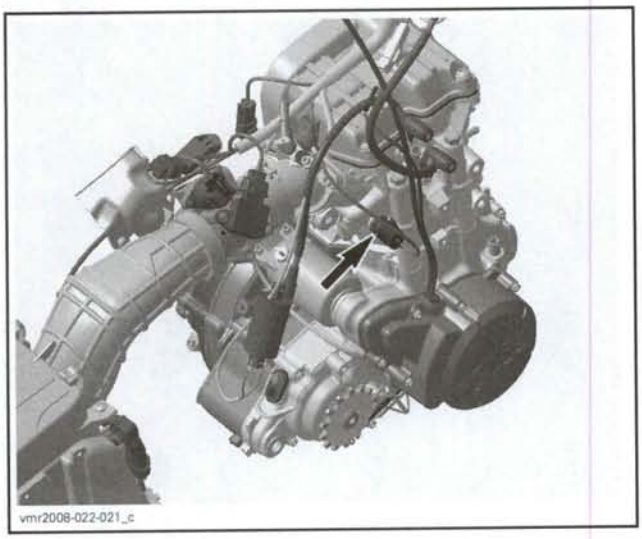
vmr2008-022-021_c

CTS Resistance Test

Disconnect ECM connector.

Install ECM adapter (P/N 529 036 085) on ECM connector.

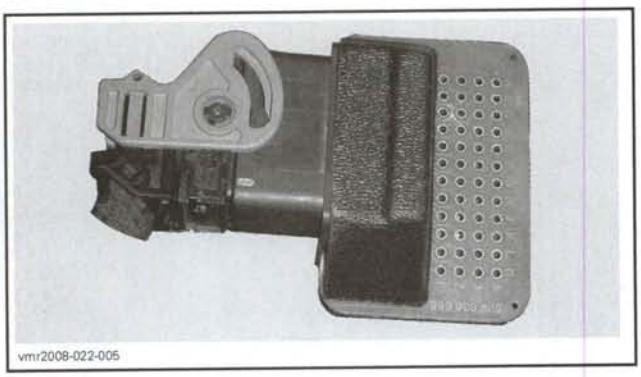
vmr2008-022-005

Ensure CTS connector is plugged.

vmr2008-022-051_a

Use the Fluke 115 multimeter (P/N 529 035 868) and select Ω.

Measure resistance on the ECM adapter. Compare result with sensor temperature table.

ECM ADAPTER	
Pin C3	Pin F4

SENSOR TEMPERATURE TABLE		
TEMPERATURE		RESISTANCE (OHMS)
°C	°F	CTS
- 40	- 40	45000
- 30	- 22	28000
- 20	- 4	15000
0	32	5750
20	68	2600
40	104	1200
60	140	600
80	176	320
100	212	180
130	266	90

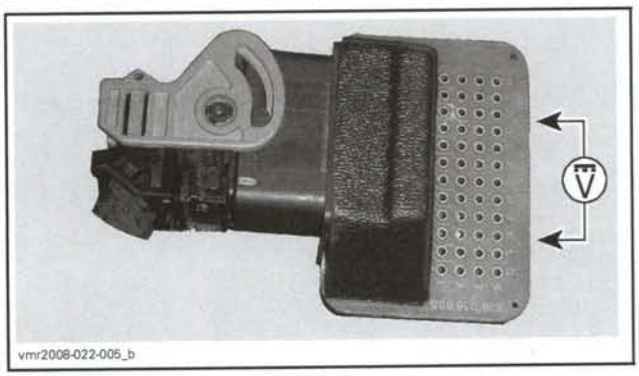
vmr2008-022-005_b

If resistance value is incorrect, check wiring harness and connectors between ECM connector and the CTS. If they are good, replace CTS.

CTS Removal

Place a container under vehicle to recover coolant spillage.

Disconnect CTS connector.

Remove CTS.

vmr2008-022-028_c

CTS Installation

Install the new CTS.

Torque CTS to 17 N•m (150 lbf•**in**).

Reinstall remaining removed parts.

Refill and bleed the cooling system. Refer to *COOLING SYSTEM* subsection.

FUEL TANK/FUEL PUMP

SERVICE TOOLS

Description	Part Number	Page
Oetiker pliers	295 000 070	216
vacuum/pressure pump	529 021 800	213
pressure gauge	529 035 709	215
Fluke 115 multimeter	529 035 868	217, 220
fuel hose adapter	529 036 023	215
ECM adapter	529 036 085	219

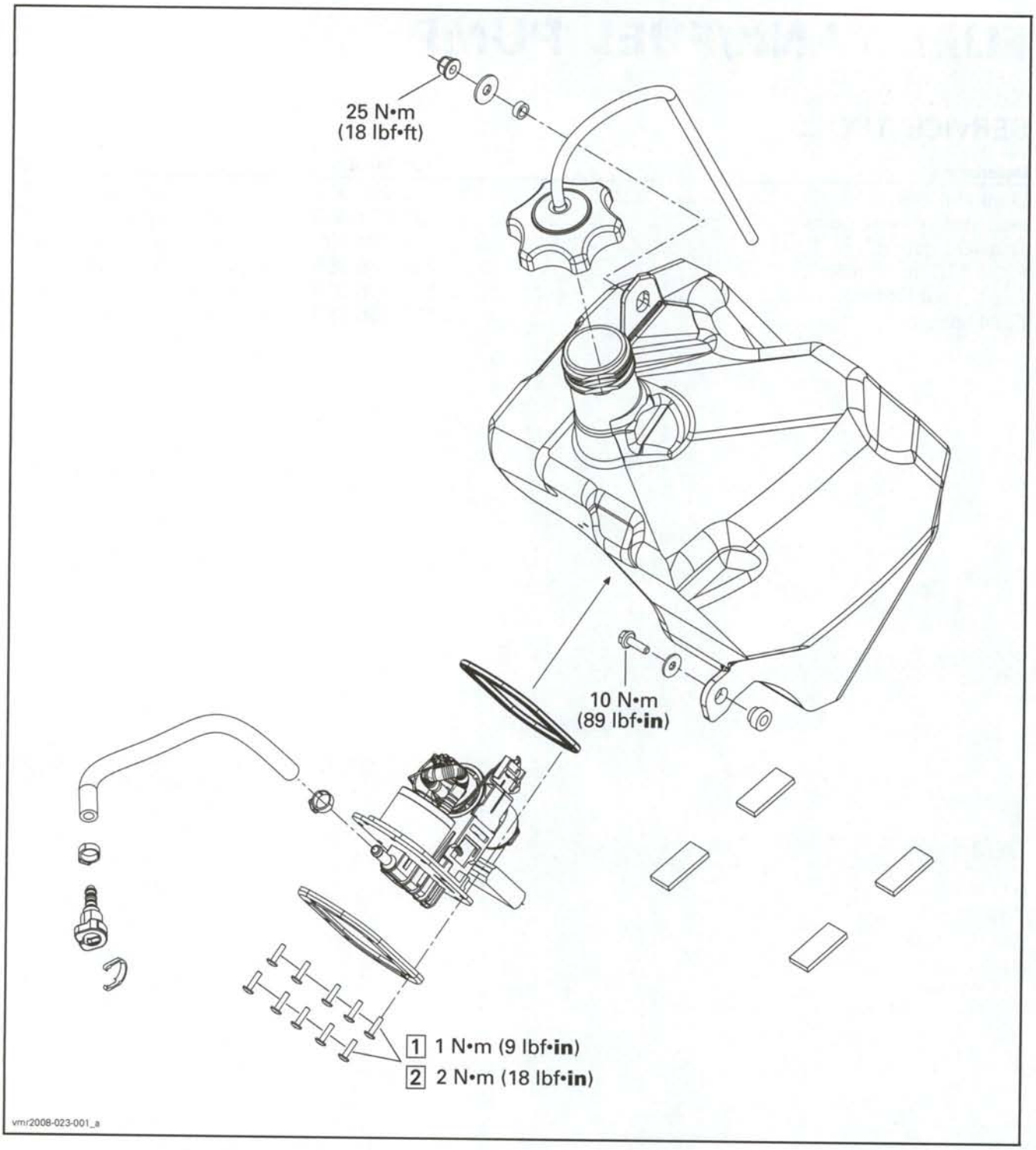
25 N•m
(18 lbf•ft)
10 N•m
(89 lbf•in)
1 1 N•m (9 lbf•in)
2 2 N•m (18 lbf•in)
vmr2008-023-001_a

GENERAL

⚠ WARNING

Fuel is flammable and explosive under certain conditions. Ensure work area is well ventilated. Do not smoke or allow open flames or sparks in the vicinity.

⚠ WARNING

Always disconnect battery prior to working on the fuel system. Always disconnect battery exactly in the specified order, BLACK (-) cable first.

Whenever working on fuel system, always verify for water or dust infiltration in reservoir.

During assembly/installation, use the torque values and service products as in the exploded views.

Clean threads before applying a threadlocker. Refer to *SELF-LOCKING FASTENERS* and *LOCTITE APPLICATION* at the beginning of this manual for complete procedure.

⚠ WARNING

Torque wrench tightening specifications must be strictly adhered to. Locking devices (e.g.: locking tabs, elastic stop nuts, self-locking fasteners, cotter pins, etc.) must be replaced.

⚠ WARNING

Fuel lines remain under pressure at all times. Always proceed with care and use appropriate safety equipment when working on a pressurized fuel system. Always wear safety glasses.

Proceed with care when removing/installing pressure test equipment or disconnecting fuel line connections.

Cover the fuel line connection with an absorbent shop rag.

Slowly disconnect the fuel hose to minimize spilling.

Wipe off any fuel spillage.

⚠ WARNING

Do not allow fuel to spill on hot engine parts or electrical connectors. The evaporating fuel on the hot components or on the electrical connectors produce highly inflammable fuel vapors that can easily be ignited by the heat, a spark, electrostatic discharge or stray current resulting in a fire or an explosion.

Never use a hose pincher on injection system high pressure hoses.

Replace any damaged or deteriorated fuel lines.

When the repair is complete, ensure that all hoses are connected and secured. The fuel pump is activated each time electrical power is turned on.

⚠ WARNING

Always carry out a fuel pump pressure test and/or a fuel tank leak test whenever a related fuel system component has been removed during a maintenance procedure. A missed fuel leak could result in severe injury or death.

INSPECTION

FUEL TANK LEAK TEST

⚠ WARNING

Always carry out a fuel tank leak test whenever fuel tank shows signs of wear or damage which may cause a leak, or when the fuel pump has been removed or replaced. If damage is severe, fuel tank should be replaced even if no leak is present. Do not attempt to repair a plastic fuel tank.

Refill fuel tank.

Using the vacuum/pressure pump (P/N 529 021 800), pressurize fuel tank through vent line on fuel tank cap as per following table.


vmr2008-023-002

PRESSURE	TIME WITHOUT PRESSURE DROP
21 kPa (3 PSI)	3 minutes

If pressure drops, locate fuel leak(s). Repair or replace leaking component(s).

If leak(s) can not be seen, spray soapy water on all hose connections and components; bubbles will indicate leak location(s).

FUEL PUMP PRESSURE TEST

The pressure test will show the available pressure at the fuel pump outlet. It validates the pressure regulator, the fuel pump, and tests for leaks in the system.

NOTE: See also the diagnostic flow chart in the *TROUBLESHOOTING* section to help diagnose a fuel system related problem.

Before proceeding with the pressure test, ensure the battery is fully charged. Battery voltage must be over 12 volts.

⚠ WARNING

If engine has been recently running, always allow engine and exhaust system time to cool before disconnecting any fuel component.

Ensure there is enough gas in fuel tank.

Remove the front body assembly mounting screws as shown in following illustrations.


vmr2008-024-003_a

RH SIDE

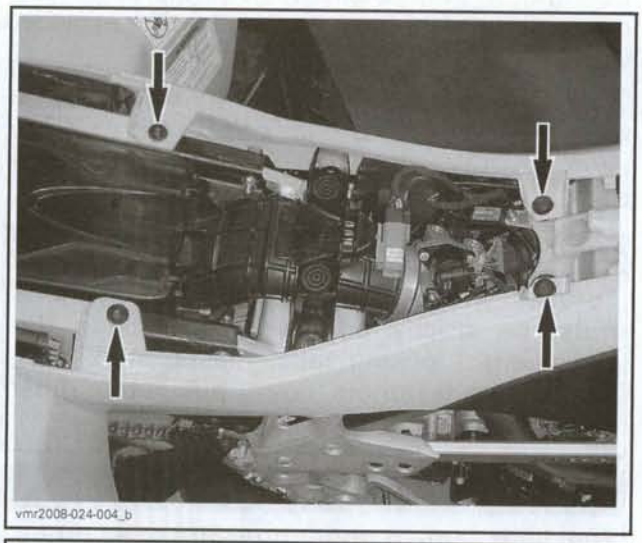
vmr2008-024-004_b


vmr2008-023-003_a

LH SIDE

Remove coolant tank retaining screw.


vmr2008-023-004_a

Carefully pull side panels apart just enough to allow withdrawal of coolant tank.

Move coolant tank aside to make room for access to fuel rail quick disconnect.

Disconnect fuel pump outlet hose at the fuel rail quick disconnect fitting.

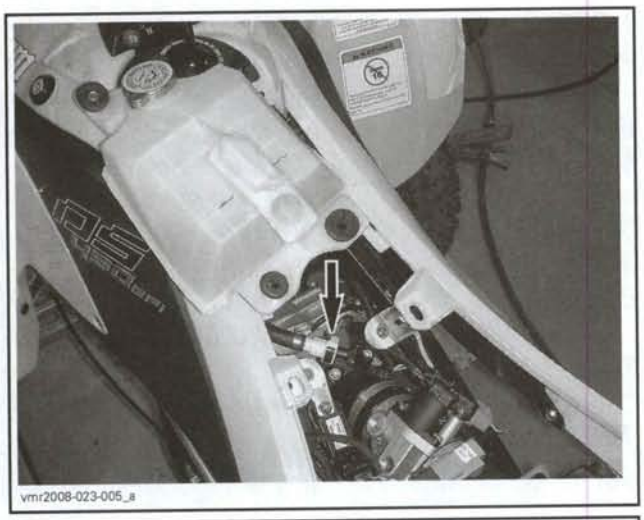
vmr2008-023-005_a

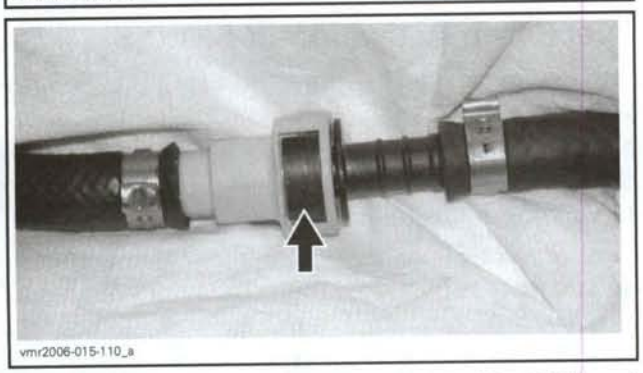
vmr2006-015-110_a

Install fuel pressure gauge (P/N 529 035 709) and fuel hose adapter (P/N 529 036 023) between disconnected hoses (in-line installation).

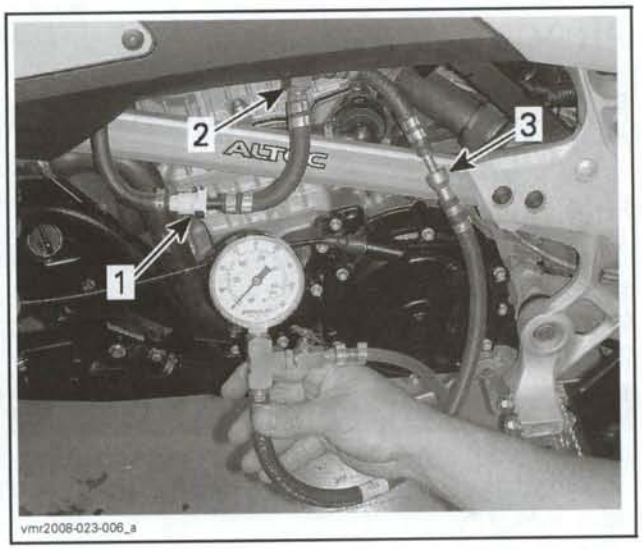

vmr2008-023-006_a

FUEL PRESSURE TEST
1. *Fuel hose quick disconnect*
2. *Fuel hose adapter*
3. *Pressure test gauge fitting*

Turn ignition key ON and set engine run/stop switch to RUN and observe fuel pressure.

Turn ignition key OFF then back ON. Repeat the test.

FUEL PRESSURE	350 kPa (51 PSI)

A rapid pressure drop indicates leakage either from the fuel rail or from the fuel pump check valve.

Check fuel rail for leaks. If it is not leaking, replace fuel pump.

A slow pressure drop indicates leakage either from the fuel injector or from the fuel pressure regulator.

Check fuel injector for leaks, refer to *ELECTRONIC FUEL INJECTION* section. If injectors are not leaking then replace fuel pump.

If there is no leakage, **start engine** and observe fuel pressure. The fuel pressure should be the same as above.

If pressure is within limits, fuel pump and pressure regulator are working adequately.

Remove pressure gauge and fuel hose adapter.

Reconnect fuel pump outlet hose quick disconnect fitting to fuel rail.

Reinstall removed parts.

PROCEDURES

FUEL HOSE AND OETIKER CLAMPS

Fuel Hose Replacement

When replacing fuel hoses, be sure to use hoses and clamps available from the BRP parts department. This will ensure continued proper and safe operation.

⚠ WARNING

Use of fuel lines other than those recommended by BRP may compromise fuel system integrity.

⚠ WARNING

Whenever removing a hose in the fuel system, always use new Oetiker clamps at assembly. Then, validate fuel tightness by performing a fuel pressure test.

Oetiker Clamp Replacement

To secure or cut Oetiker clamps on fuel lines, use Oetiker pliers (P/N 295 000 070).

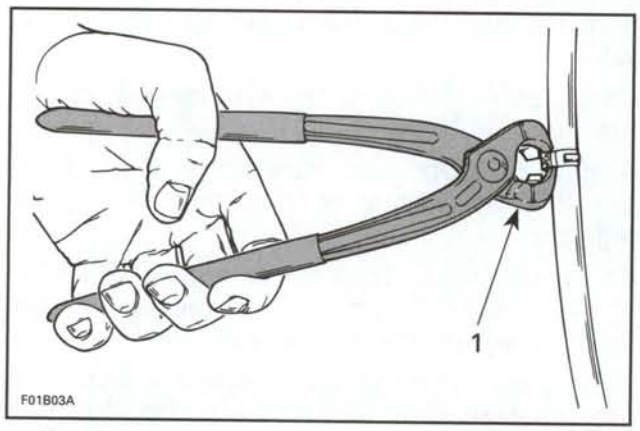

1. Cutting clamp

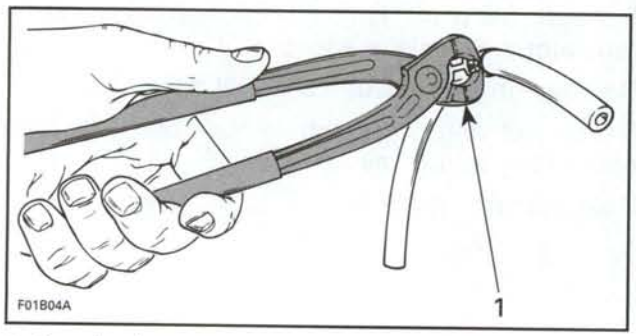

1. Securing clamp

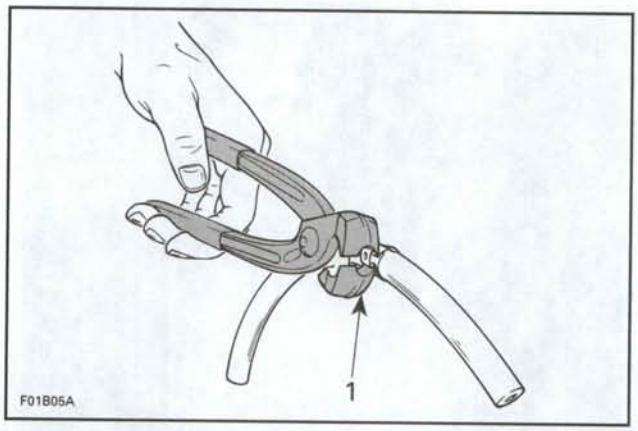

1. Securing clamp in limited access

FUEL PUMP

Fuel Pump Quick Test

Set engine stop switch to RUN.

Turn ignition key to ON and listen for fuel pump operation.

NOTE: Fuel pump will come ON for a few seconds and stop. This is to pressurize the fuel injector system prior to engine start.

If the fuel pump came on for a few seconds and shut off, the fuel pump, ECM, and associated circuits are functioning normally. However, this does not validate fuel pump pressure.

If fuel pump did not come on, first check in B.U.D.S. for applicable fault codes. Refer to *COMMUNICATION TOOLS/B.U.D.S. SOFTWARE* section.

Then carry out a *FUEL PUMP INPUT VOLTAGE TEST.*

Set ignition switch to OFF.

Fuel Pump Activation In B.U.D.S.

The fuel pump can be activated using B.U.D.S. as per following procedure.

NOTE: The fuel pump cannot be disabled using B.U.D.S. It can only be activated for 5 second intervals for pump testing.

Connect vehicle to the latest applicable B.U.D.S. software, refer to the *COMMUNICATION TOOLS/B.U.D.S. SOFTWARE* section.

In B.U.D.S., select **Read Data**.

Select the **Activation** page tab.

On the RH side of the page in the **Activate** field, select **Fuel Pump**. This will turn on the fuel pump for 5 seconds.

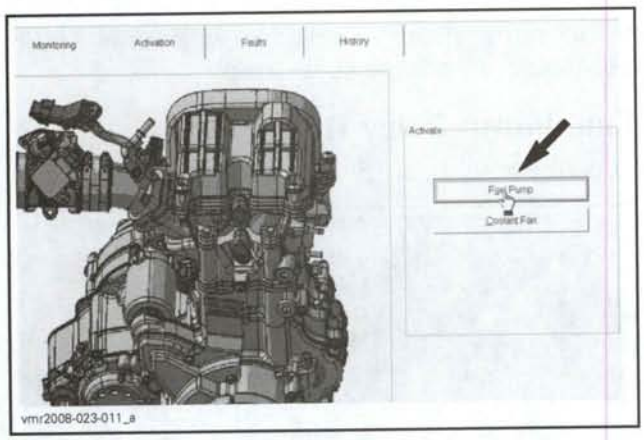

FUEL PUMP ACTIVATION IN B.U.D.S.

Fuel Pump Input Voltage Test

From the LH side of the vehicle, locate the fuel pump connector.

Disconnect the fuel pump connector using a flat screwdriver to lift the connector locking tab as you pull on the connector with the other hand.

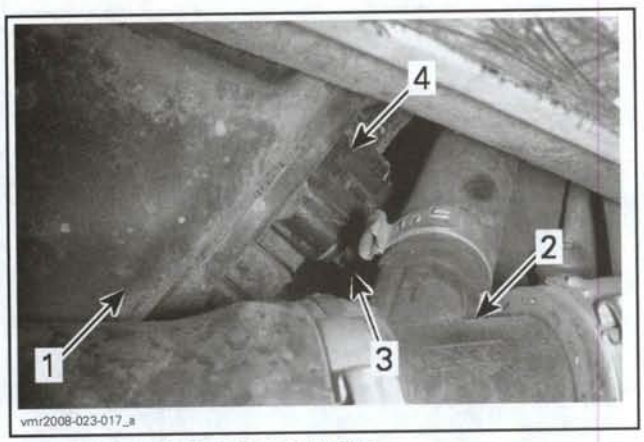

FUEL PUMP CONNECTOR (RH VIEW)
1. *Fuel tank*
2. *Coolant hose T-fitting*
3. *Fuel pump connector*
4. *Locking tab*

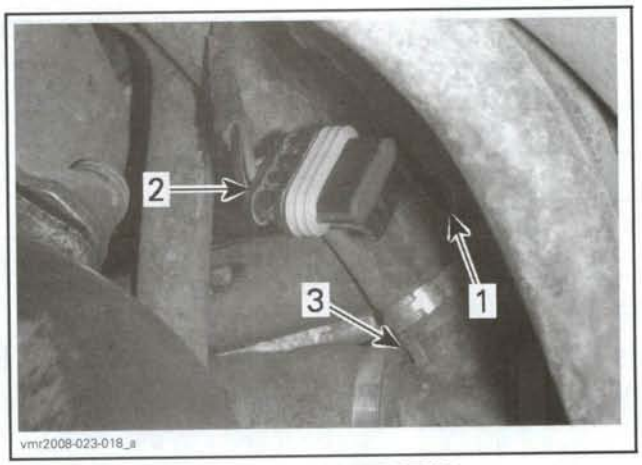

FUEL PUMP CONNECTOR (DISCONNECTED)
1. *Fuel pump*
2. *Fuel pump connector*
3. *Coolant hose T-fitting*

Remove the red plastic pin lock from the connector.

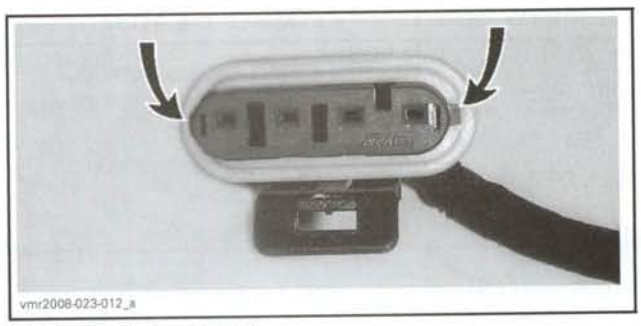

PLASTIC PIN LOCK TABS

Set Fluke 115 multimeter (P/N 529 035 868) to Vdc.

Connect multimeter between pins 3 and 4 of the fuel pump wiring connector.

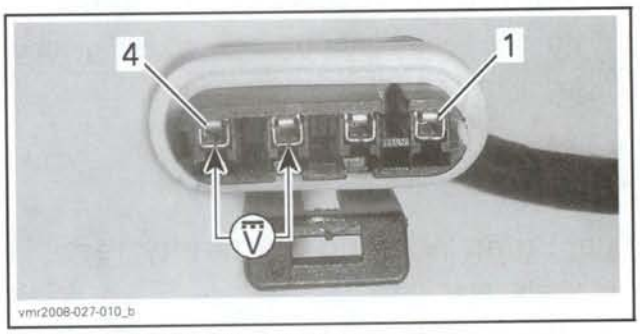

FUEL PUMP INPUT VOLTAGE TEST

Turn ignition key to ON.

Read voltage.

FUEL PUMP INPUT VOLTAGE TEST		
TEST PROBES		VOLTAGE READING
Pin 3	Pin 4	Battery voltage
Pin 3	Chassis ground	

OBSERVATION	SIGNIFICATION
Battery voltage is read for approx 5 seconds, then it will drop to approx. 6 Vdc for 1 second, then to 0 Vdc	– Validates fuel pump relay supplies power to fuel pump. – Validates the fuel pump relay ground circuit through ECM. – Validates fuel pump ground circuit. – When voltage drops to approx 6 Vdc, it validates the ECM functions to switch fuel pump ON and OFF.

OBSERVATION	POSSIBLE CAUSE
Battery voltage is not read	– Fuel pump power supply circuit from fuel pump relay is defective. – Fuel pump ground circuit to ECM is defective. – ECM is faulty.

If battery voltage was read for both fuel pump input voltage tests, carry out a fuel pump winding continuity test.

If battery voltage is not read between pins 3 and 4 of the fuel pump connector but is good to chassis ground, test for continuity of the fuel pump ground circuit wire (fuel pump connector pin 4 to chassis ground). Repair or replace wiring as required.

If battery voltage is not read to chassis ground, carry out the following:
- Fuel pump relay test
- Fuel pump relay input voltage test
- Fuel pump circuit continuity test.

Fuel Pump Winding Continuity Test

Set multimeter to Ω.

Measure the fuel pump motor winding as per following table.

FUEL PUMP WINDING CONTINUITY TEST		
FUEL PUMP CONNECTOR		RESISTANCE Ω @ 20°C (68°F)
Pin 3	Pin 4	Approximately 1 Ω

If fuel pump motor winding resistance is not as per table, replace the fuel pump.

Fuel Pump Relay Quick Test

Locate the fuel pump relay.

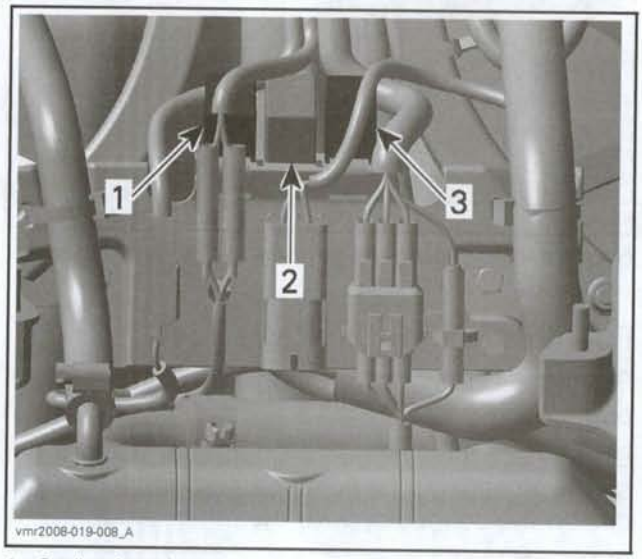

1. Cooling fan relay
2. Main relay
3. Fuel pump relay

Remove the fuel pump relay and set it aside.

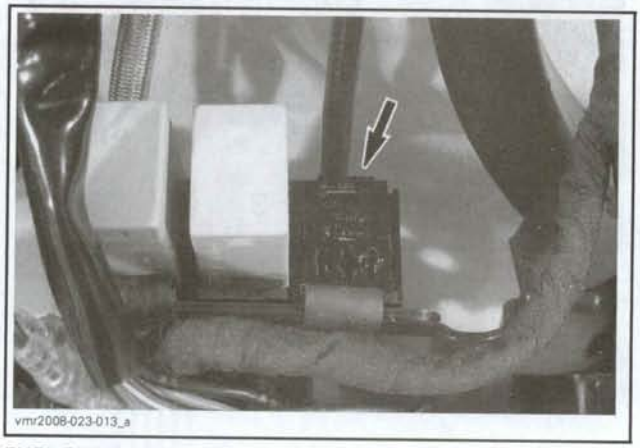

FUEL PUMP RELAY REMOVED

Remove the cooling fan relay of the same type and plug it into the fuel pump relay socket.

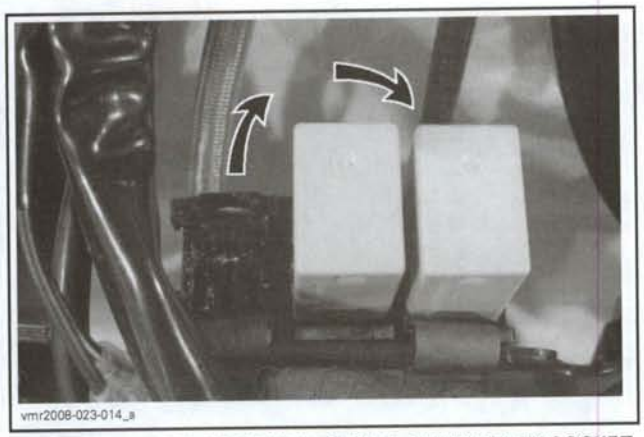

COOLING FAN RELAY MOVED TO FUEL PUMP RELAY SOCKET

Set ignition switch to ON and listen for the fuel pump.

If the fuel pump functions with the replacement (cooling fan) relay, replace the fuel pump relay.

If the fuel pump does not function with the replacement relay, carry out a fuel pump relay input voltage test.

Fuel Pump Relay Input Voltage Test

Remove fuel pump relay.

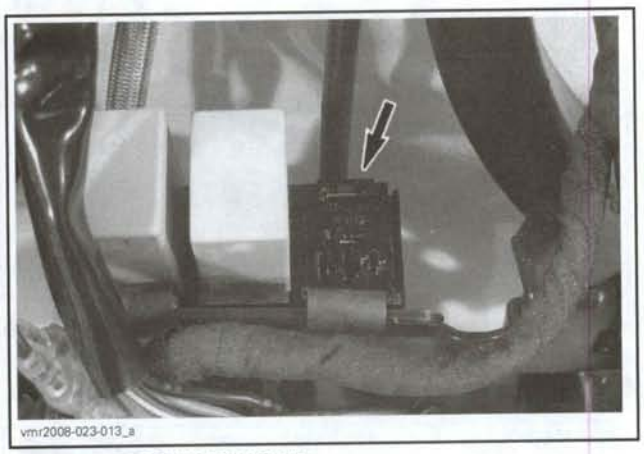

FUEL PUMP RELAY REMOVED

Test for fuel pump relay input voltage as per following table.

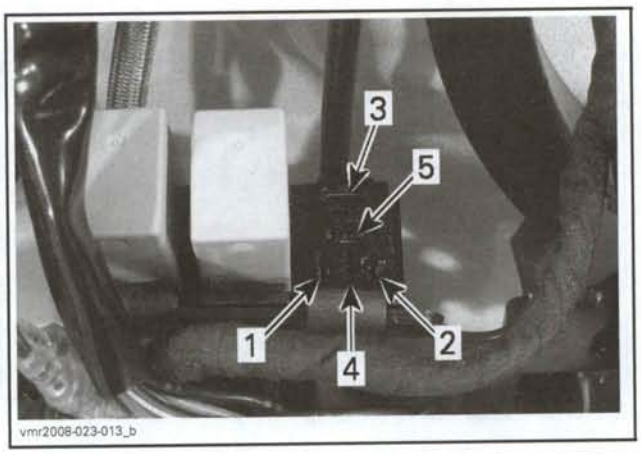

FUEL PUMP RELAY INPUT VOLTAGE		
TEST PROBES		VOLTAGE READING
Relay socket pin 2	Chassis ground	Battery voltage
Relay socket pin 3		

If you do not read any voltage, test the injector and ignition fuse.

If battery voltage is read, carry out a fuel pump circuit continuity test.

Fuel Pump Circuit Continuity Test

Disconnect ECM connector.

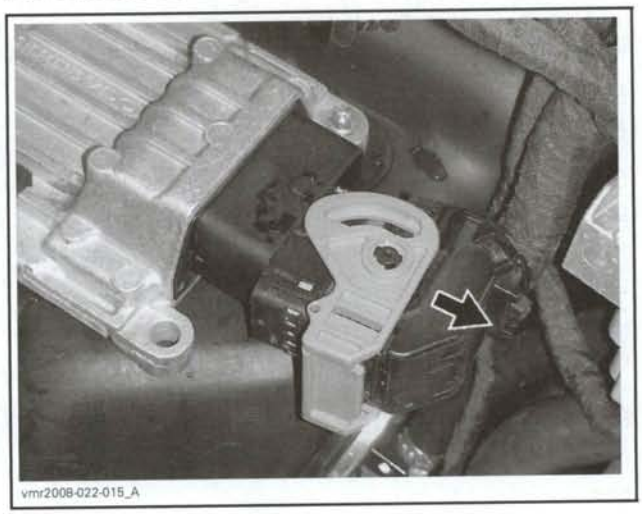

Install the ECM connector onto the ECM adapter (P/N 529 036 085).

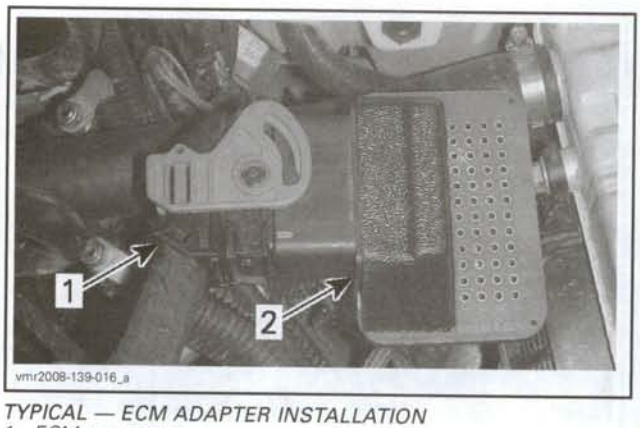

TYPICAL — ECM ADAPTER INSTALLATION
1. *ECM connector*
2. *ECM adapter*

Set the Fluke 115 multimeter (P/N 529 035 868) to Ω.

Measure the fuel pump circuity wiring continuity as per following table.

FUEL PUMP CIRCUIT CONTINUITY TEST		
TEST PROBES		RESISTANCE Ω @ 20°C (68°F)
Pump connector pin 3	Relay socket pin 5	Close to 0 Ω
Pump connector pin 4	Chassis ground	
ECM connector pin J-1	Relay socket pin 1	

Repair wiring/connectors as required.

Remove all tools.

Reinstall the red plastic pin lock on the connector prior to installing it on the fuel pump.

Reinstall all removed components and connectors.

If all tests were carried out good, test ECM. Refer to *ELECTRONIC FUEL INJECTION* section.

Fuel Pump Removal

Remove front body section, refer to the *BODY* section.

Disconnect the electrical connector from the fuel pump.

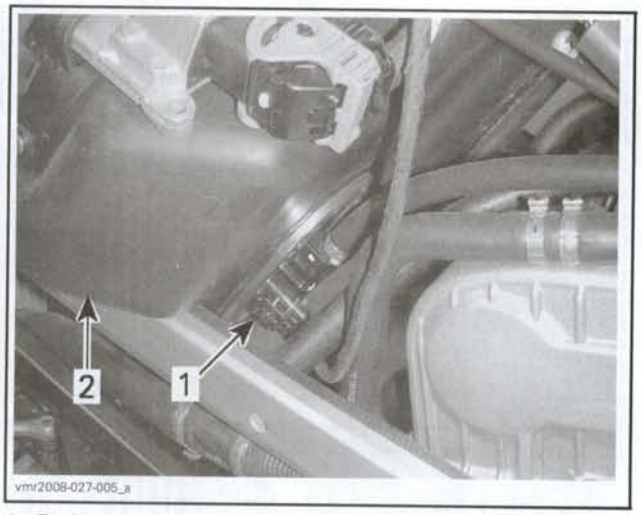

1. *Fuel pump connector*
2. *Fuel tank*

Remove screw securing front of coolant tank.

Without disconnecting hoses, carefully lift the coolant tank and move it aside enough to access the fuel rail quick disconnect fitting at the fuel rail.

FUEL RAIL QUICK DISCONNECT FITTING

Wrap a rag around the fuel hose at the quick disconnect fitting.


vmr2008-022-039_A

Carefully press on the connector lock to release the connector from the fuel line.

⚠ WARNING

Prior to disconnecting the fuel pump at the fuel rail quick disconnect fitting, ensure engine and exhaust system are not hot.

Take note of fuel hose routing for proper installation.

Remove the fuel pump retaining screws.

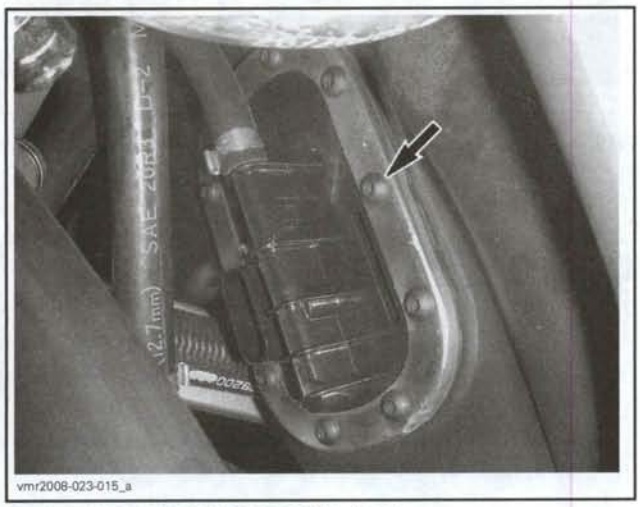
vmr2008-023-015_a

FUEL PUMP RETAINING SCREWS (X10)

Gently pull fuel pump out of fuel tank from top of pump, while rotating it downwards.

CAUTION: While removing fuel pump, pay attention to the fuel level sensor (forward end of pump), and fuel filter (bottom of pump) to avoid deforming them. Any deformation of the fuel level sensor thermistor will require fuel pump replacement.

Fuel Pump Installation

For installation, reverse the removal process but pay attention to the following.

Install a new gasket.

Pay attention to pump orientation.

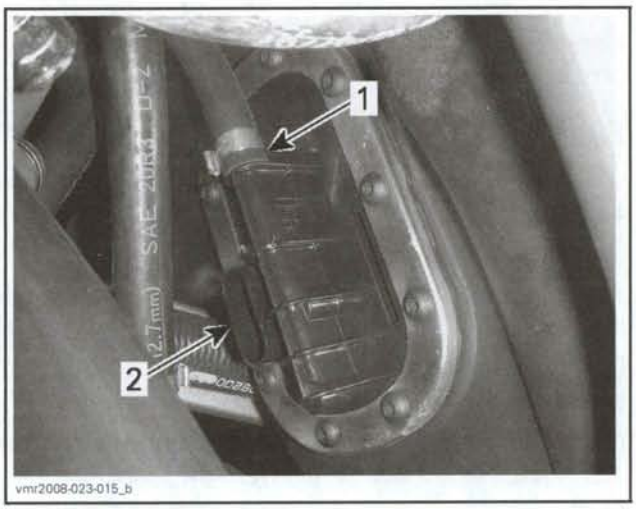

vmr2008-023-015_b

1. *Fuel line at top*
2. *Connector at bottom*

CAUTION: While installing fuel pump, pay attention to the fuel level sensor and fuel filter to avoid deforming them. Any deformation of the fuel level sensor thermistor will require fuel pump replacement.

Tighten retaining screws as per illustrated sequence. For the first sequence from 1 to 10, turn screws only to make a contact between parts 1 N•m (9 lbf•**in**). For sequence 11 to 19, properly torque to 2 N•m (18 lbf•**in**).

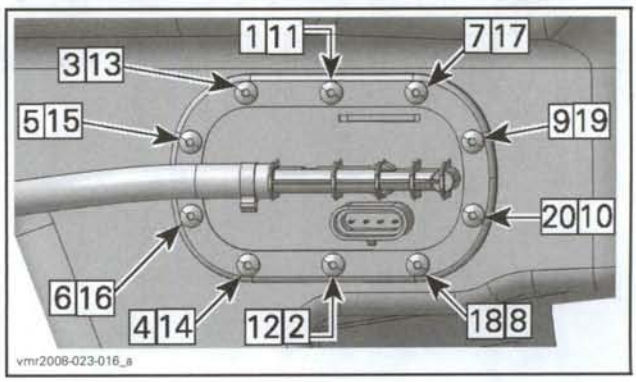

vmr2008-023-016_a

TYPICAL

Route fuel hose as before removal and connect to fuel rail.

FUEL TANK

Fuel Tank Draining

⚠ WARNING

Never perform this operation when the engine and/or the exhaust system is/are hot. Never use a hose pincher on injection system high pressure hoses.

Remove fuel tank cap and siphon gas into an approved fuel container.

Fuel Tank Removal

Disconnect battery, refer to *CHARGING SYSTEM* section.

Remove seat, refer to the *BODY* section.

Remove front body assembly, refer to the *BODY* section.

Drain fuel tank, refer to the *FUEL TANK DRAINING* procedure.

Disconnect and remove the ECM, refer to the *ELECTRONIC FUEL INJECTION* section.

Disconnect the electrical connector from the fuel pump.

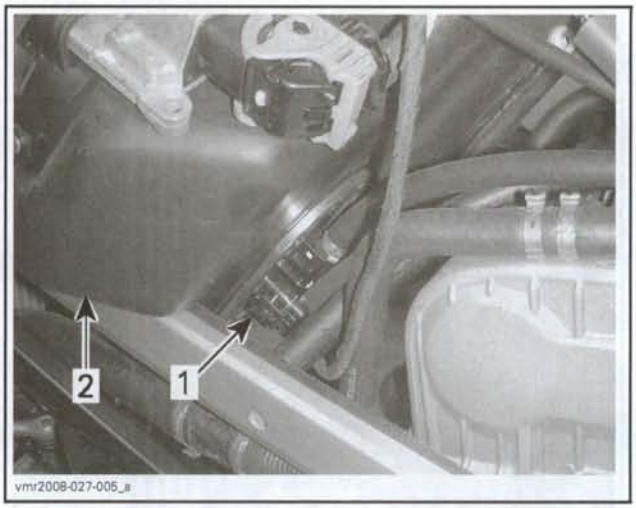

1. *Fuel pump connector*
2. *Fuel tank*

Remove the fuel tank mounting screw.

Without disconnecting hoses, carefully lift the coolant tank and move it aside enough to access the fuel rail quick disconnect fitting.

FUEL RAIL QUICK DISCONNECT FITTING

⚠ WARNING

Prior to disconnecting the fuel rail quick disconnect fitting, ensure engine and exhaust system are not hot.

Wrap a rag around the fuel hose at the quick disconnect fitting.


vmr2008-022-039_A

Disconnect fuel line at quick connect. Refer to *FUEL PUMP* in this section.

Remove the two side frame members, refer to the *FRAME* section.

vmr2008-022-051_b

SIDE FRAME MEMBER (RH SHOWN)

While supporting fuel tank, remove the top LH fuel tank mounting screw.


vmr2008-023-010_a

TOP LH FUEL TANK MOUNTING SCREW

Carefully lower the fuel tank until the filler neck clears the frame top plate, then pull it out the RH side.

Fuel Tank Inspection

Inspect fuel tank for any damages or cracks which may result in fuel leaks.

Inspect tank attachment points for damage.

⚠ WARNING

If cracks and other damages which may result in fuel leaks or tank not being secure are found, replace fuel tank.

Fuel Tank Installation

Reverse removal procedures however, pay attention to the following.

Torque fuel tank mounting screws as specified in exploded view.

Torque side frame member mounting screws as specified in the *FRAME* section.

Refuel tank and ensure there are no leaks by performing the *FUEL TANK LEAK TEST* and the *FUEL PUMP PRESSURE TEST* as described in this section.

IGNITION SYSTEM

SERVICE TOOLS

Description	Part Number	Page
Fluke 115 multimeter	529 035 868	228, 230, 232, 234
ECM adapter tool	529 036 085	231, 233

SERVICE PRODUCTS

Description	Part Number	Page
Super Lube	293 550 030	238
heat-sink paste	420 897 186	237

GENERAL

IGNITION SYSTEM DESCRIPTION

The ignition system of this vehicle has two spark plugs each connected to its own coil. Both plugs will fire to ignite the fuel/air mixture in the combustion chamber at the same time to assure a complete burn of the mixture.

If one coil or spark plug fails, the other will not be affected but the engine will not run smoothly. However, if a short circuit should occur in the primary winding circuit, the ignition system will probably stop functioning completely.

IGNITION SYSTEM OPERATION

The battery supplies 12 Vdc through the main relay and the injector/ignition fuse to the primary side of each ignition coil. The ECM completes the circuit by switching both coils to ground at the right moment.

As the engine rotates, a signal from the CPS (crankshaft position sensor) relative to the position of the piston in the cylinder, is produced and sent to the ECM. The ECM uses this signal as well as engine RPM to establish the exact moment at which the ignition spark is required. It then provides the ground to the primary winding of the ignition coils.

With the ground provided by the ECM, current flows through the primary coil winding which induces a higher current potential in the secondary winding. This high current potential jumps across the spark plug gap and ignites the fuel/air mixture within the cylinder.

Ignition Timing

Ignition timing is not adjustable. Refer to the *ELECTRONIC FUEL INJECTION* section for information.

TROUBLESHOOTING

IGNITION SYSTEM TESTING

NOTE: It is good practice to check for fault codes using B.U.D.S. software as a first troubleshooting step. Refer to *MONITORING SYSTEM/FAULT CODES* sub section.

The ECM controls the ignition system and can detect an open or short circuit in the ignition coil primary windings of both coils. However, it cannot identify the specific coil circuit at fault and does not monitor the secondary windings.

Ignition Testing Sequence

Set engine stop switch to "RUN".

Turn the ignition switch to the "ON" position.

No Headlights and Taillight

If the headlights (if selected) and taillight do not function, the ECM may not be powered. Check the following in the indicated order:

- 20 A main fuse

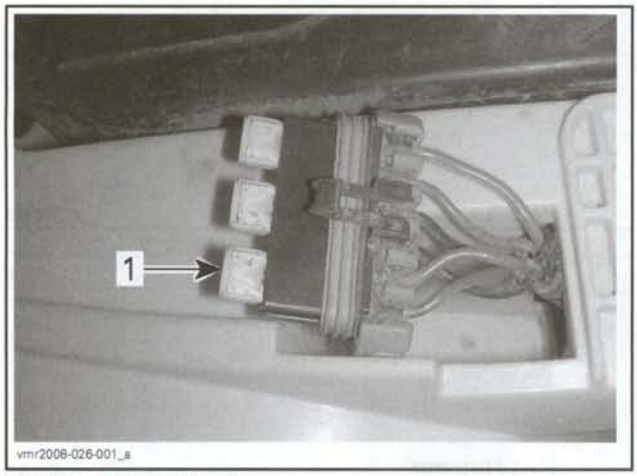

PF2 FUSE HOLDER
1. 20 A main fuse

NOTE: PF2 fuse holder is located under the seat (RH rear corner).

- 5 A ECM fuse

PF1 FUSE HOLDER
1. 5 A ECM fuse

NOTE: PF1 fuse holder is attached to the top LH rear engine mounting bracket.

- Battery (refer to *CHARGING SYSTEM*)

If the items in the previous list tested good, the problem may also be related to one of the following:

- 20 A cooling fan fuse

PF1 FUSE HOLDER
1. 20 A cooling fan fuse

- Ignition switch
- Engine "STOP" switch
- Main relay (refer to *ELECTRONIC FUEL INJECTION (EFI)* section)
- ECM (refer to *ELECTRONIC FUEL INJECTION (EFI)* section).

Headlights and Taillight Turn "ON"

If the headlights (if selected) and taillight turn "ON", the ignition switch, engine shut off switch, and the main relay are functioning normally.

Test the following items in the indicated order:

- 15 A injector/ignition fuse

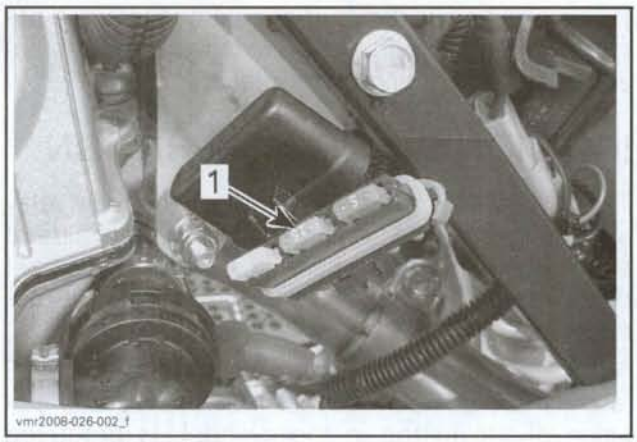

PF1 FUSE HOLDER
1. 15 A injector/ignition fuse

- Spark plugs
- Battery (refer to *CHARGING SYSTEM* section)
- Ignition coils
- CPS (refer to *ELECTRONIC FUEL INJECTION* section)
- ECM (refer to *ELECTRONIC FUEL INJECTION* section).

Intermittent Ignition Problems

In dealing with intermittent problems there is no easy diagnosis. Problems that occur only during normal engine operation may be related to vibrations, or the engine operating temperature, and have to be tested under similar conditions.

Some intermittent problems may be attributable to loose, dirty or corroded connections, or water infiltration, and may be resolved by cleaning the contacts and applying a dielectric grease for protection. Always check for these problems before replacing expensive components and apply the dielectric grease as specified in the procedures.

Multiple Problems

There is always the possibility of more than one component being at fault. If, after a component has been replaced, the problem still persists, carefully repeat the testing procedure to find the other component at fault.

PROCEDURES

Safety Precautions

⚠ WARNING

To prevent powerful electric shock while cranking engine, do not touch any of the ignition components (ignition coil, spark plug wire, etc.) nor tester leads. Also make sure that tester leads do not touch any metallic object.

IGNITION SWITCH

Ignition Switch Operation

The ignition switch is a three position switch, "OFF", "ON" with headlights, "ON" without headlights.

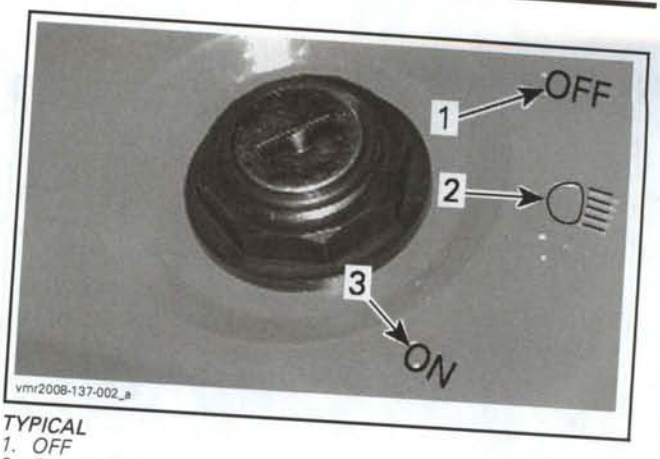

TYPICAL
1. *OFF*
2. *ON with headlights*
3. *ON without headlights*

The primary function of the ignition switch is to provide a signal to the ECM of the intent to start (wake up signal) and run the engine.

The ignition switch receives 12 Vdc directly from the ECM fuse. When the ignition switch is set to "ON" (with or without headlights), it sends a power signal to the ECM through the engine stop switch ("RUN" position). This wakes up the ECM which then waits for the "START" switch signal to engage the starter and control ignition timing for proper engine operation.

For the ECM to initialize and power the ignition circuits, it must receive 12 Vdc to pin A4, and it must not receive a ground at pin K3.

If the engine is running and the ignition switch is turned to the "OFF" position, the ignition circuit is opened (contacts C to D), the headlights circuit is opened (contacts A to F), and a ground is sent to pin K3 of the ECM through contacts F to E. The lights will turn off, ignition will cease immediately and the engine will shut down. However, the ECM will maintain power on the vehicle for 30 seconds.

Ignition Switch Input Voltage Test

Remove front body assembly, refer to the *BODY* section.

Disconnect the ignition switch connector.

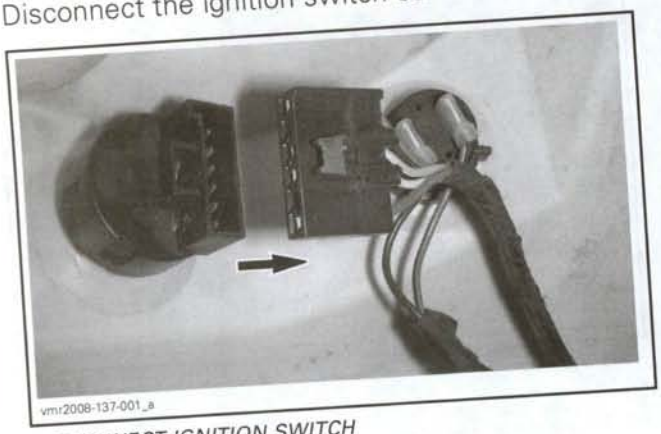

DISCONNECT IGNITION SWITCH

Set the Fluke 115 multimeter (P/N 529 035 868) to Vdc.

Measure the ignition switch input voltage as follows.

IGNITIONS WITCH INPUT VOLTAGE TEST		
TEST PROBES		VOLTAGE
Pin C (BEIGE wire)	Battery ground	Battery voltage

IGNITION SWITCH INPUT VOLTAGE TEST

If you do not obtain battery voltage, test the following:

- 20 A main fuse

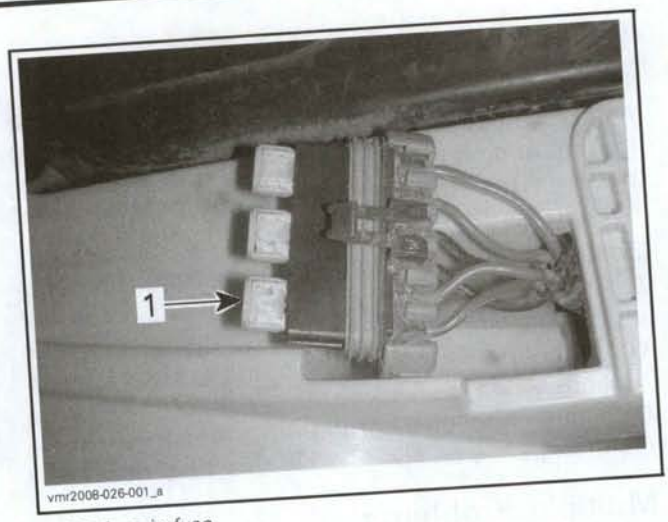

1. 20 A main fuse

- 5 A ECM fuse

1. 5 A ECM fuse

- Wiring harness.

If the ignition switch input voltage is good, carry out an ignition switch continuity test.

Ignition Switch Continuity Test

Set the Fluke 115 multimeter (P/N 529 035 868) to Ω.

Measure the resistance through the ignition switch between the following pins.

NOTE: Connector pin B is not used.

IGNITION SWITCH CONTINUITY TEST		
IGNITION SWITCH POSITION	IGNITION SWITCH PINS	RESISTANCE
OFF	Pins A to F	Infinite (OL)
	Pins C to D	
	Pins E to F	0.2 ± 0.2 Ω max.
ON (w/lights)	Pins A to F	0.2 ± 0.2 Ω max.
	Pins C to D	
	Pins E to F	Infinite (OL)
ON (w/o lights)	Pins A to F	Infinite (OL)
	Pins C to D	0.2 ± 0.2 Ω max.
	Pins E to F	Infinite (OL)

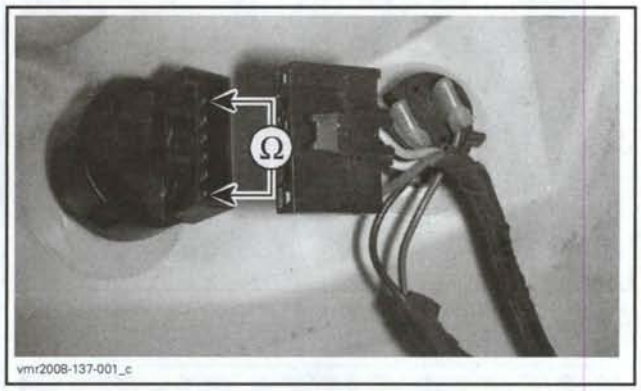

IGNITION SWITCH CONTINUITY TEST

Replace switch if defective.

If the ignition switch tested good, carry out a continuity test of the engine stop switch.

Ignition Switch Removal

Remove the front body assembly, refer to the *BODY* section.

Disconnect the ignition switch connector.

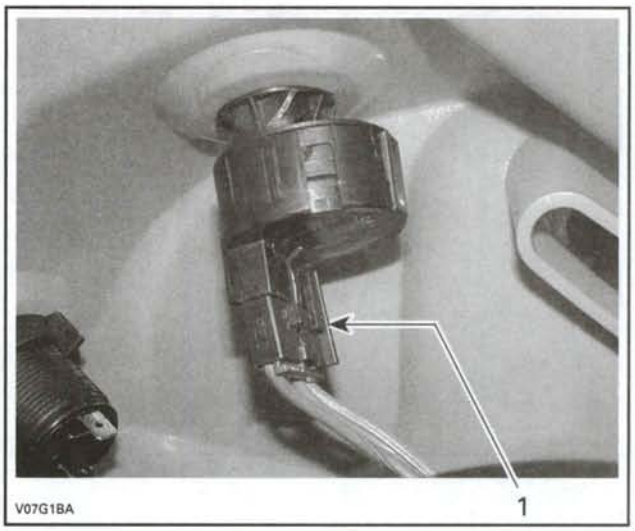

TYPICAL
1. Disconnect ignition switch connector

While holding switch with one hand, unscrew the ignition switch retaining nut with the other.

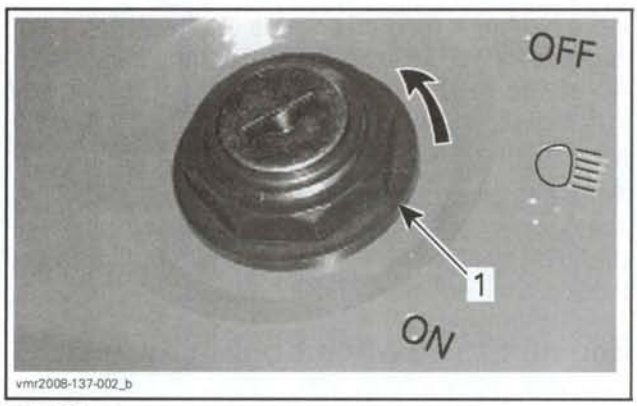

TYPICAL
1. Remove retaining nut

Ignition Switch Installation

For installation of the ignition switch, reverse the removal procedure.

Torque the switch retaining nut to 4 N•m (35 lbf•**in**).

ENGINE STOP SWITCH

Engine Stop Switch Operation

The engine stop switch functions as an engine shutoff switch for a normal shutdown or for an emergency situation. It can be quickly activated without letting go of the handlebars.

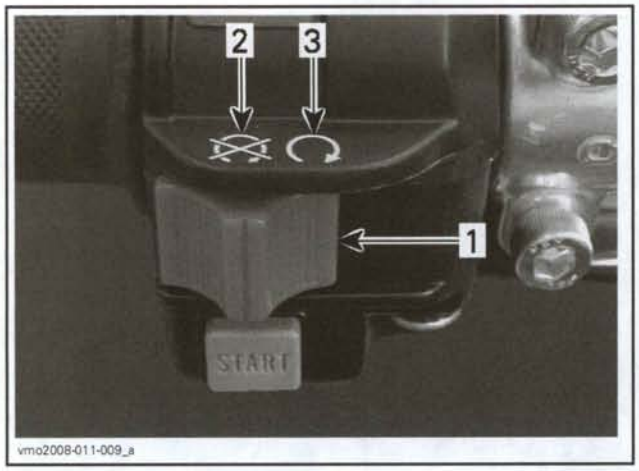

1. Engine stop switch button
2. STOP position
3. RUN position

When the engine stop switch is set to "RUN", it completes a circuit between the ignition switch and the ECM. This circuit provides the 12 Vdc power used to initialize the ECM.

If the engine is running and the engine stop switch is set to "OFF", it opens the 12 Vdc circuit to pin A4 of the ECM. Ignition will cease immediately, the engine will shut down, but the ECM will maintain power on the vehicle for 30 seconds.

If the engine stop switch is left in the "STOP" position when the ignition switch is turned to "ON", the ECM will not be initialized, the headlights and tail light will not turn "ON".

Engine Stop Switch Continuity Test

Remove the front body assembly, refer to the *BODY* section.

Disconnect the multifunction switch connectors, MG1 and MG2.

MULTIFUNCTION SWITCH CONNECTORS
1. Disconnect MG1
2. Disconnect MG2

Set the Fluke 115 multimeter (P/N 529 035 868) to Ω.

Measure the resistance through the stop switch (steering harness side) as per following table.

ENGINE STOP SWITCH CONTINUITY TEST			
POSITION	CONNECTOR		RESISTANCE
Switch to STOP	MG2 (BLACK/WHITE)	MG1 pin 3 (BLACK)	1 Ω max.
Switch to RUN	MG2 (BLACK/WHITE)	MG1 pin 3 (BLACK)	Infinite (OL)

ENGINE STOP SWITCH CONTINUITY TEST

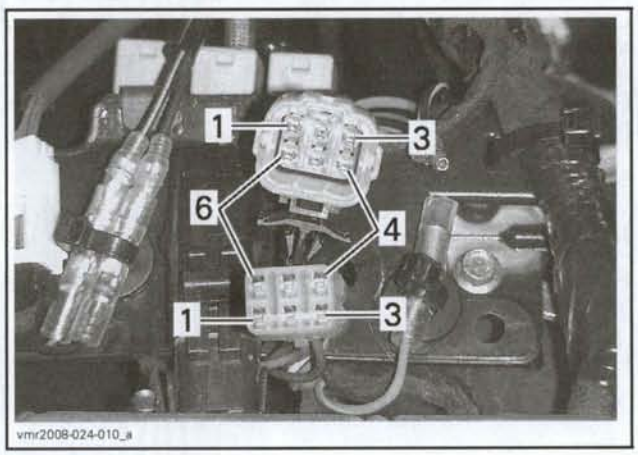

MG1 PIN OUT

Replace multifunction switch assembly if engine stop switch continuity test results are not as per specification.

If the engine stop switch tested good, carry out the *ENGINE STOP SWITCH WIRING TEST*.

Engine Stop Switch Wiring Test

To carry out a continuity test of the engine stop switch wiring, carry out the following.

- Disconnect MG1 connector.

- Disconnect HIC1 connector.

- Disconnect ECM connector.

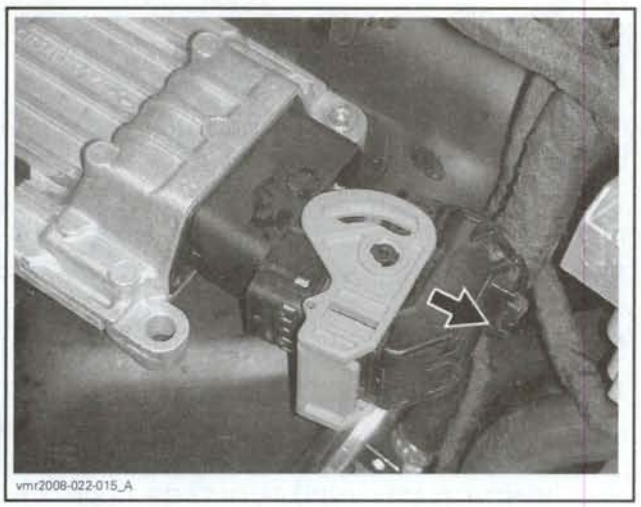

Install the ECM connector onto the ECM adapter tool (P/N 529 036 085).

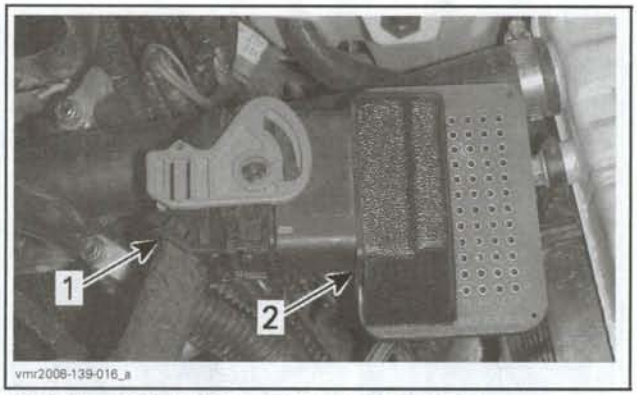

TYPICAL – ECM ADAPTER TOOL INSTALLATION
1. ECM connector
2. Adapter tool

Carry out the following continuity tests.

ENGINE STOP SWITCH WIRING TEST		
TEST PROBES		RESISTANCE
MG1 pin 3 (VIOLET/BEIGE) vehicle harness side	HIC1 pin B (VIOLET/BEIGE) to steering harness side	Close to 0 Ω
HIC1 pin B to ECM	ECM pin A4	

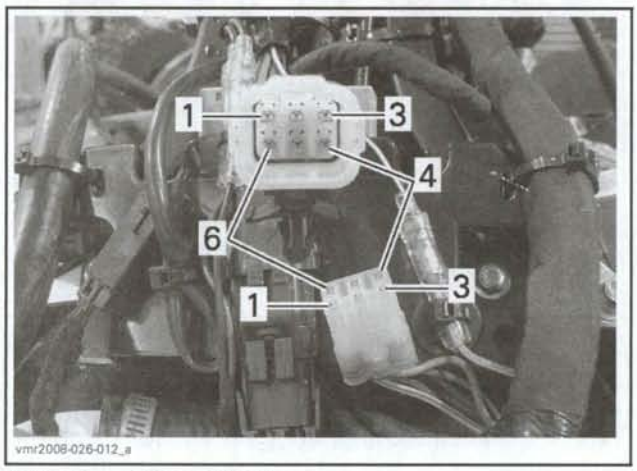

CONNECTOR MG1 PIN-OUT

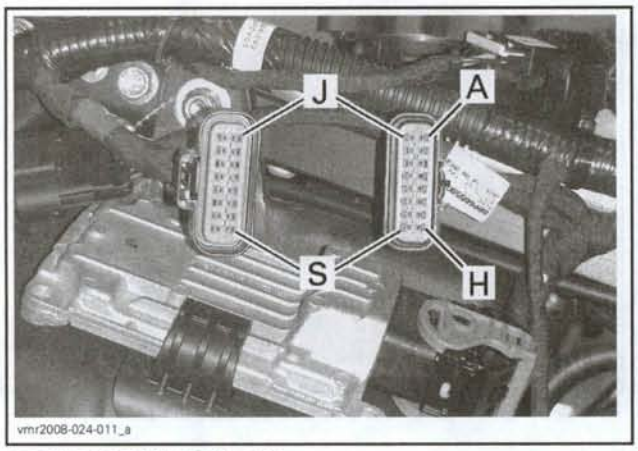

CONNECTOR HIC1 PIN-OUT

Repair or replace wiring/connector as applicable.

IGNITION COIL

The ignition coils are mounted to the top RH side frame member.

To access the ignition coils, remove the front body assembly. Refer to the *BODY* section.

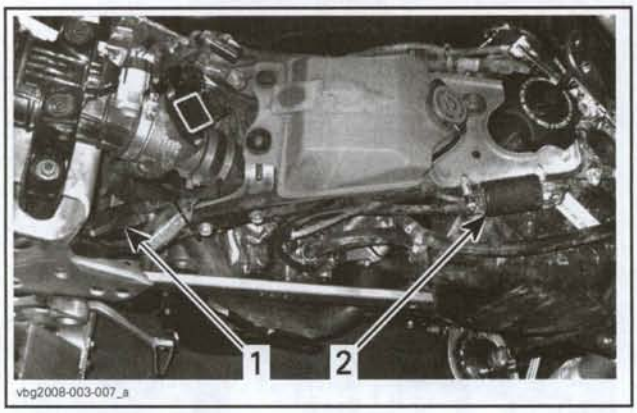

IGNITION COIL LOCATIONS
1. *Rear ignition coil*
2. *Front ignition coil*

When troubleshooting an ignition coil problem, first carry out a spark occurrence test, refer to *SPARK PLUG* in this section.

If there is no spark, carry out the coil input voltage test, then the coil resistance tests.

Ignition Coil Input Voltage Test

Ensure ignition coil is properly powered as follows.

Remove front body assembly. Refer to the *BODY* section.

Locate the two small primary winding connectors on each ignition coil.

Pull back each plastic connector housing enough to access the metal connectors.

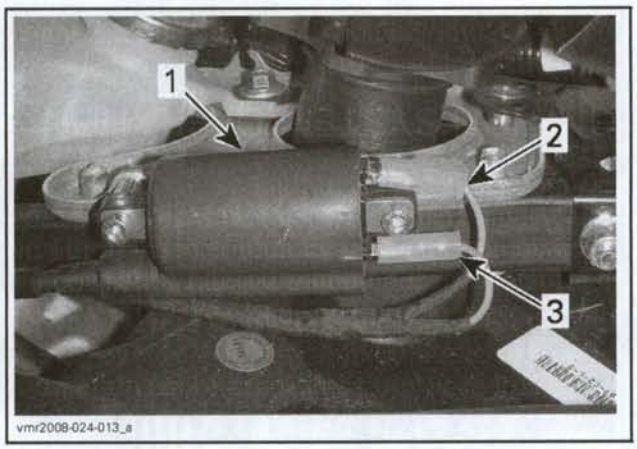

1. *Front ignition coil*
2. *VIOLET/BLUE connector housing*
3. *BROWN/ORANGE connector housing*

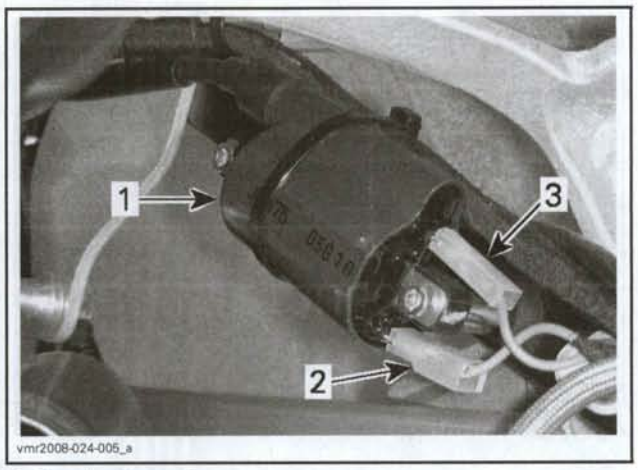

1. *Rear ignition coil*
2. *VIOLET/BLUE connector housing*
3. *BROWN/ORANGE connector housing*

NOTE: The small primary winding connectors to the coils are soldered to the coil terminals.

Set the Fluke 115 multimeter (P/N 529 035 868) to Vdc.

Measure battery voltage between the battery terminals.

Set engine stop switch to "RUN".

Turn ignition switch to "ON".

Measure coil input voltage as follows.

IGNITION COIL INPUT VOLTAGE TEST	
TEST PROBES	VOLTAGE
VIOLET/BLUE wire with chassis ground	Battery voltage
BROWN/ORANGE wire with chassis ground	

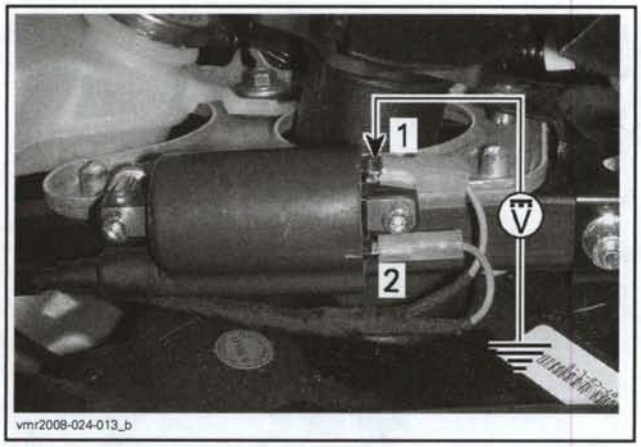

IGNITION COIL INPUT VOLTAGE TEST
1. VIOLET/BLUE wire
2. BROWN/ORANGE wire

If you did not read battery voltage at the VIOLET/BLUE wire terminal, check continuity of the ignition coil input circuit (VIOLET/BLUE wire to injector/ignition fuse).

If you did not read battery voltage at the BROWN/ORANGE wire terminal, carry out a resistance test of the ignition coil.

If battery voltage was read at both terminals, disconnect the ECM connector and test for continuity of the ignition coil ground circuit.

Ignition Coil Ground Circuit Continuity Test

Disconnect ECM connector.

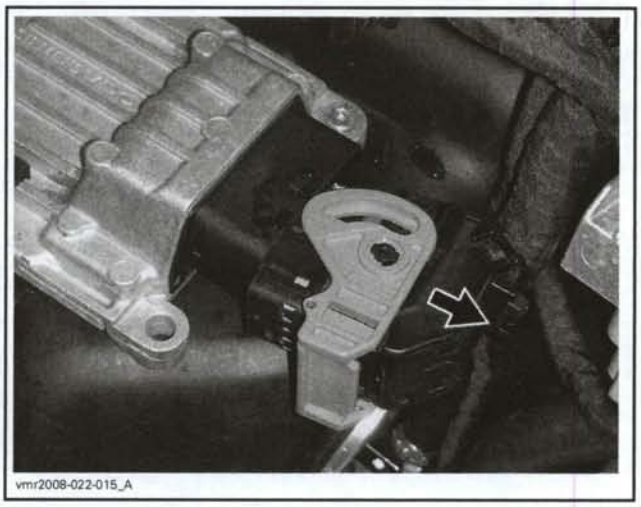

Install the ECM connector onto the ECM adapter tool (P/N 529 036 085).

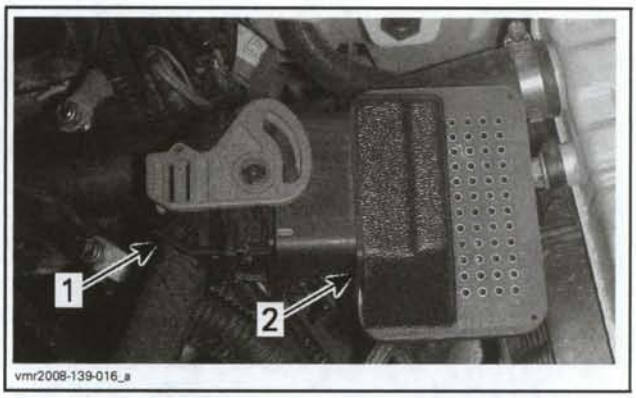

TYPICAL – ECM ADAPTER TOOL INSTALLATION
1. ECM connector
2. Adapter tool

Pull back the plastic connector housing on the BROWN/ORANGE wire of each coil enough to access the metal terminals.

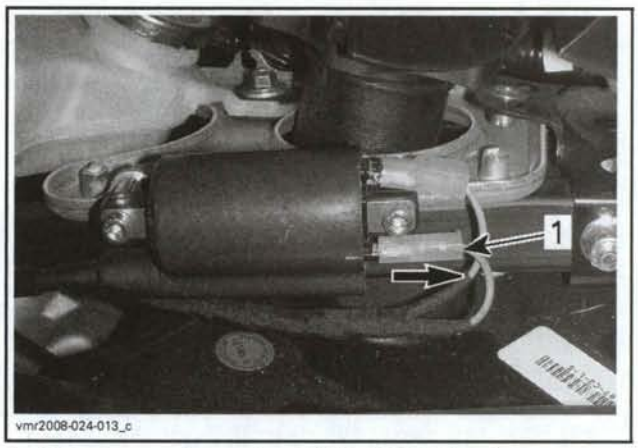

1. Pull out connector housing (BROWN/ORANGE wire)

Measure for continuity through the coil ground wire to the ECM as follows.

IGNITION COIL GROUND CIRCUIT CONTINUITY TEST		
TEST PROBES		RESISTANCE
Coil 1 (BROWN/ORANGE wire)	ECM pin M1	Close to 0 Ω
Coil 2 (BROWN/ORANGE wire)	ECM pin M2	

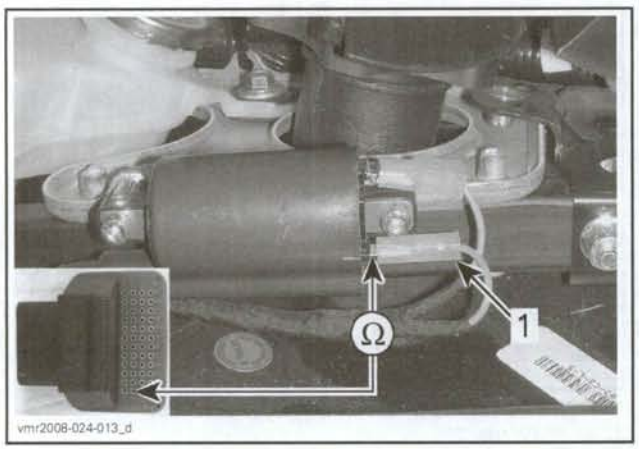

COIL GROUND CIRCUIT CONTINUITY TEST
1. BROWN/ORANGE wire terminal

Ignition Coil Resistance Tests

NOTE: An ignition coil with good resistance measurements can still be faulty. Voltage leak can occur at high voltage levels which is not detectable with an ohmmeter. Replacing the ignition coil may be necessary as a test.

Primary Winding Resistance Test

Pull back each plastic connector housing enough to access the metal connectors.

Set the Fluke 115 multimeter (P/N 529 035 868) to Ω and test the primary winding resistance of both coils as follows.

IGNITION COIL PRIMARY WINDING RESISTANCE TEST		
TEST PROBES		RESISTANCE @ 20°C (68°F)
VIOLET/BLUE wire	BROWN/ORANGE wire	2.2 ± 0.33 Ω

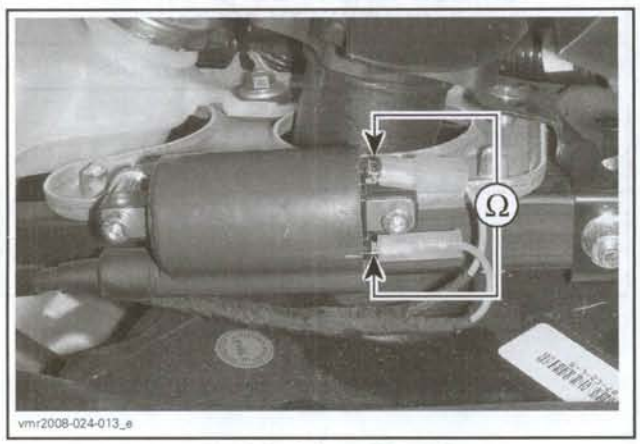

COIL PRIMARY WINDING RESISTANCE TEST

If the primary winding resistance is not within specification, replace the ignition coil.

If the primary winding tests good, test the secondary winding resistance.

Secondary Winding Resistance Test

Disconnect both spark plug cables from its spark plug.

1. Outer spark plug cable to front coil
2. Inner spark plug cable to rear coil

Measure the secondary winding resistance of each coil as follows.

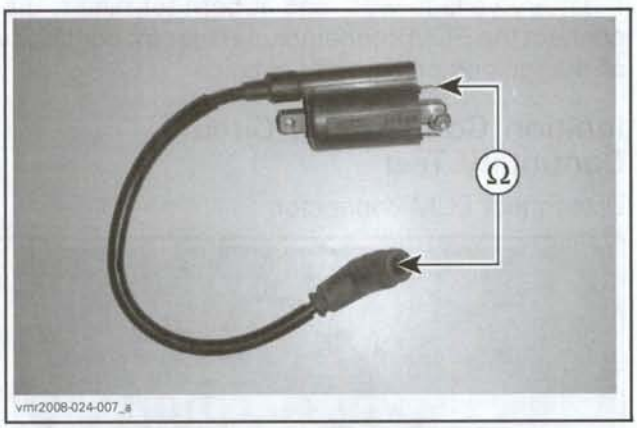

TYPICAL – SECONDARY WINDING RESISTANCE TEST

IGNITION COIL SECONDARY WINDING RESISTANCE TEST		
TEST PROBES		RESISTANCE @ 20°C (68°F)
VIOLET/BLUE wire	Spark plug cap	18 KΩ ± 3.6 KΩ

If the secondary winding resistance is not as specified, remove the spark plug cap and measure its resistance as per following procedure.

Spark Plug Cap Resistance Test

Hold spark plug wire firmly near spark plug cap and unscrew the spark plug cap from the cable and the ignition coil.

Measure resistance through the cap.

SPARK PLUG CAP		RESISTANCE @ 20°C (68°F)
Coil side	Spark plug side	5 KΩ ± 1 KΩ

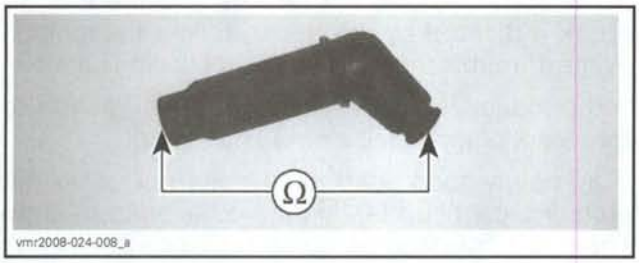

SPARK PLUG CAP RESISTANCE TEST

If resistance value obtained is not close to value specified, or cable shows signs of deterioration, replace spark plug cap, or cable and coil as required.

Ignition Coil Removal (Front Coil)

Disconnect the spark plug cable.

Pull back the plastic connector housings from both coil input connectors.

As you hold the top input connector at the wire crimp with a pair of long nose pliers, quickly heat the contact end to melt the solder and pull the connector off the coil terminal.

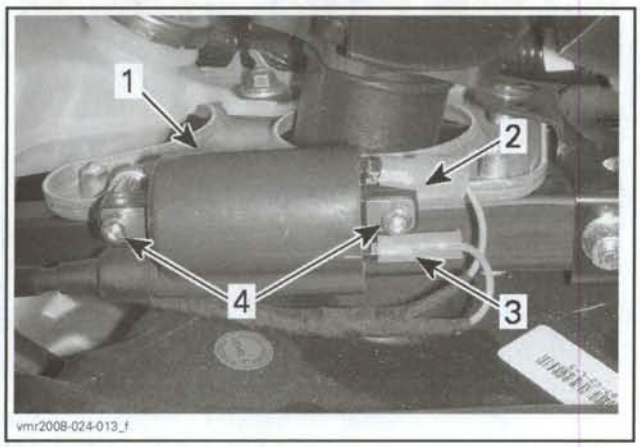

1. *Front ignition coil*
2. *VIOLET/BLUE wire terminal*
3. *BROWN/ORANGE wire terminal*
4. *Mounting screws*

Repeat the previous step for the second contact.

Remove the two ignition coil mounting screws.

Ignition Coil Removal (Rear Coil)

Cut the locking tie retaining the wires to the ignition coil.

Note the routing of the spark plug cable.

Disconnect the spark plug cable and feed it back to the ignition coil.

Remove the two ignition coil mounting screws and relocate the coil outside of the frame to provide access to the two small input connectors.

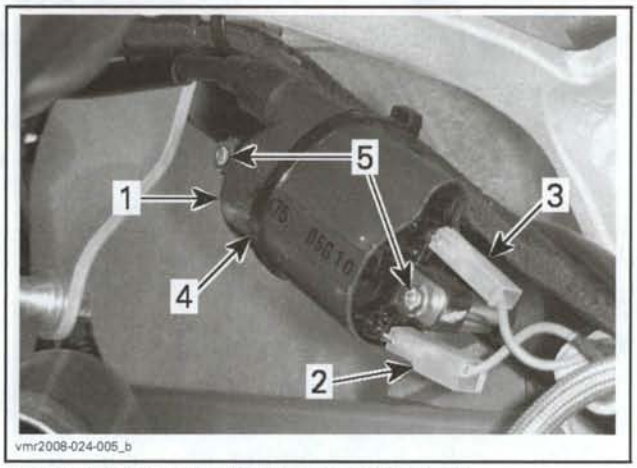

REAR IGNITION COIL (VIEW FROM LEFT SIDE)
1. *Rear ignition coil*
2. *VIOLET/BLUE wire terminal*
3. *BROWN/ORANGE wire terminal*
4. *Locking tie*
5. *Mounting screws*

Pull back the plastic connector housings from both coil input connectors.

As you hold the top input connector at the wire crimp with a pair of long nose pliers, quickly heat the contact end to melt the solder and pull the connector off the coil terminal.

Repeat the previous step for the second contact.

Ignition Coil Installation (Both Coils)

Reverse the removal procedure. However, pay attention to the following.

If the connector housings are too damaged to reinstall, remove them completely and insert heat shrink tubing before installing and soldering the small connectors.

Install the BROWN/ORANGE wire on the small terminal that is on the spark plug cable side of the coil.

On the rear coil, solder the small wire connectors on the coil input terminals before mounting the coil on the frame.

Solder small connectors on coil input terminals using 60 – 40 flux core solder. Use solder sparingly and clean soldered terminals using a common flux cleaner.

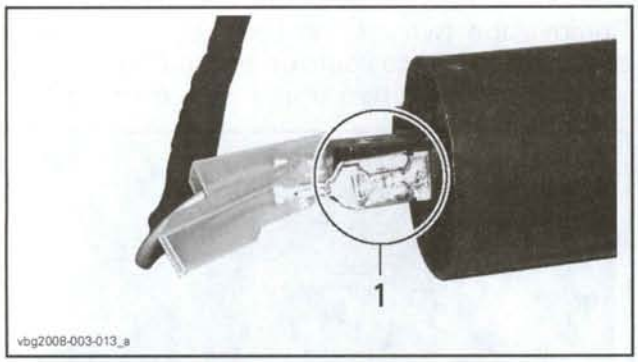

1. Solder small coil connectors

Allow the terminals to cool before covering them with the connector housings.

Torque the coil mounting screws to 5 N•m (44 lbf•**in**).

Install a new locking tie on the rear coil to retain the wires onto the coil.

SPARK PLUG

Testing for Spark Occurrence

This engine is equipped with two spark plugs that each receive power from a separate coil. Test each plug for spark occurrence separately.

⚠ WARNING

Never check for ignition spark from an open coil and/or spark plug as spark may cause potential fuel vapors to ignite.

Use an approved inductive type spark tester to test each plug for ignition. Follow spark tester manufacture procedures.

Locate spark plugs on RH side of engine.

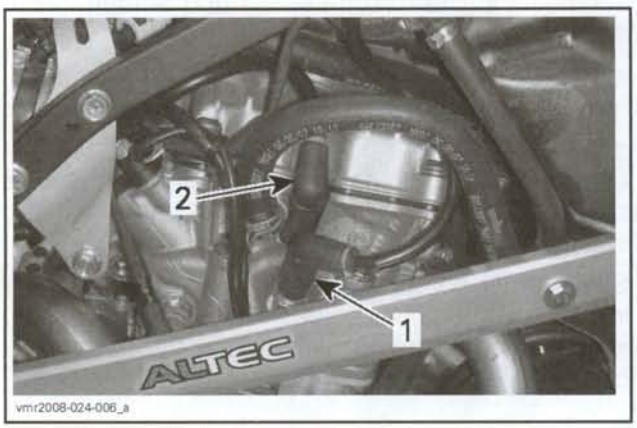

1. Front coil spark plug
2. Rear coil spark plug

Turn ignition switch to "ON".

Set engine stop switch to "RUN".

Press and hold the start button.

If **nothing happens** when the start button is pressed, refer to the *STARTING SYSTEM* section.

If the starter rotates the engine and there is **no spark indicated** by the tester, follow the ignition system troubleshooting sequence as indicated.

If the inductive spark tester indicates ignition to the spark plug, install a new spark plug.

If a known good spark plug does not solve the problem, continue testing the other system components. The ignition spark may not be correct due to other system components being out of tolerance.

NOTE: Keep in mind that even if there is a spark during this static test, the voltage requirement to produce a spark in the combustion chamber is higher when the engine is running. The ignition coil may not be functioning properly. Replacing the applicable ignition coil may be necessary as a test.

Spark Plug Removal

Disconnect each spark plug cable as required.

DISCONNECT SPARK PLUG CABLE
1. Front coil spark plug cable
2. Rear coil spark plug cable

NOTE: To remove the inner spark plug, the front body assembly must be removed. Refer to the *BODY* section.

Clean the area around both spark plugs with pressurized air before removing them.

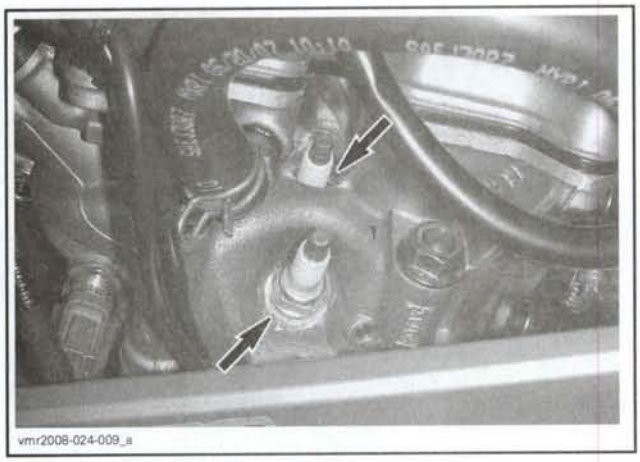

CLEAN AREA AROUND SPARK PLUGS

Using an approved spark plug socket, release the spark plug torque.

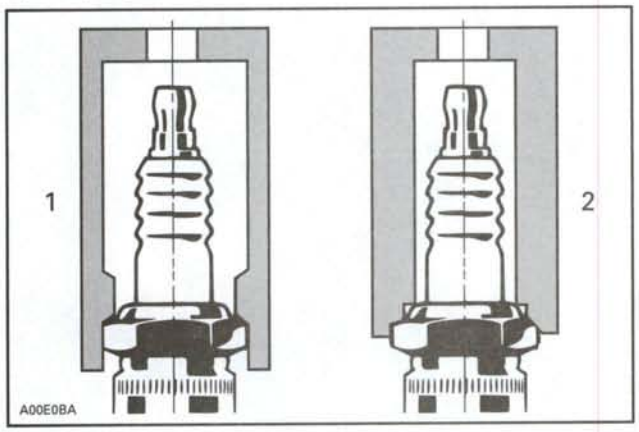

1. *Proper socket*
2. *Improper socket*

Remove wrench from socket and extension and unscrew the spark plug by hand.

Troubleshooting a Fouled Spark Plug

Fouling of the spark plug is indicated by irregular running or misfiring of the engine, decreased engine speed due to misfiring, reduced performance, and increased fuel consumption. This may be due to a loss of compression.

Other possible causes are: a clogged air filter, incorrect or bad fuel, defective ignition system, incorrect spark plug gap, lubricating oil entering the combustion chamber, or use of a spark plug with a temperature rating too cold for the engine requirement.

The plug face of a fouled spark plug has either a wet or dry black carbon deposit. Such coatings form a conductive connection between the center electrode and the ground electrode.

Spark Plug Analysis

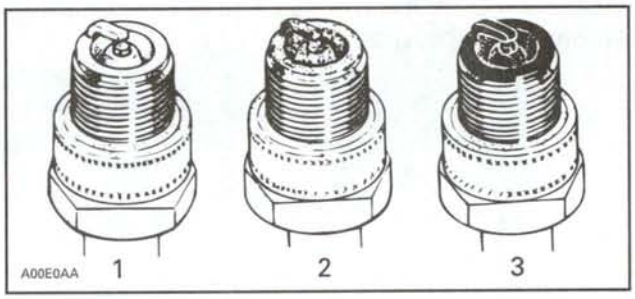

TYPICAL
1. *Overheated (light grey, white)*
2. *Normal (light brown, brown)*
3. *Fouled (black, wet or dry, dark deposits, grey, melted coating)*

The plug face reveals the condition of the engine, operating condition, method of driving and fuel mixture. For this reason it is advisable to inspect the spark plug at prescribed intervals, examining the plug face (i.e. the part of the plug projecting into the combustion chamber).

Spark Plug Installation

Spark plug installation is the reverse of the removal procedure. However, pay attention to the following.

Prior to installation make sure that contact surfaces of the cylinder head and spark plugs are free of grime.

Using a wire type feeler gauge, set the electrode gap as specified in *TECHNICAL SPECIFICATIONS.*

Apply a light coat of heat-sink paste (P/N 420 897 186) over the spark plug threads and gasket to ensure proper cooling of the spark plugs.

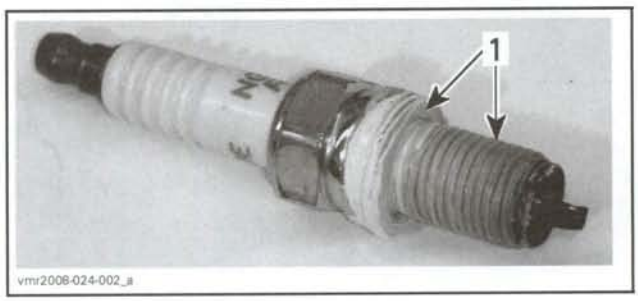

1. *Apply heat-sink paste*

CAUTION: Not applying heat-sink paste to the spark plug threads and gasket as recommended can cause premature spark plug failure due to insufficient heat transfer.

Hand screw spark plug into cylinder head until it bottoms out.

Torque spark plug to 19 N•m (168 lbf•**in**) using an approved spark plug socket and torque wrench.

Apply Super Lube (P/N 293 550 030) to the electrical contact inside the spark plug cap before installing it on the spark plug.

CHARGING SYSTEM

SERVICE TOOLS

Description	Part Number	Page
digital/inductive tachometer	529 014 500	241–242
Fluke 111 multimeter	529 035 868	241

SERVICE TOOLS – OTHER SUPPLIER

Description	Part Number	Page
Extech inductive ammeter	380941	242
Electro Specialties battery load tester model	710	243

SERVICE PRODUCTS

Description	Part Number	Page
dielectric grease	293 550 004	245–246

GENERAL

SYSTEM DESCRIPTION

The purpose of the charging system is to keep the battery at a full state of charge.

NOTE: For an overview of the vehicle electrical system, refer to *ENGINE MANAGEMENT SYSTEM* section.

Magneto

The magneto is the primary source of electrical energy. It transforms a magnetic field into electric current (AC).

The alternating current is regulated and transformed into direct current (DC) by the voltage regulator/rectifier, and normally powers all of the vehicles systems and accessories.

The magneto has a 3 phase delta wound stator.

TYPICAL

Voltage Regulator/Rectifier

The rectifier receives AC current from the magneto and transforms it into direct current (DC).

The voltage regulator/rectifier output passes through the 20 A charging system fuse and is then distributed as follows:

- 20 A main fuse
- Starter solenoid
- Battery.

The voltage regulator/rectifier limits voltage to prevent any damage to electrical components.

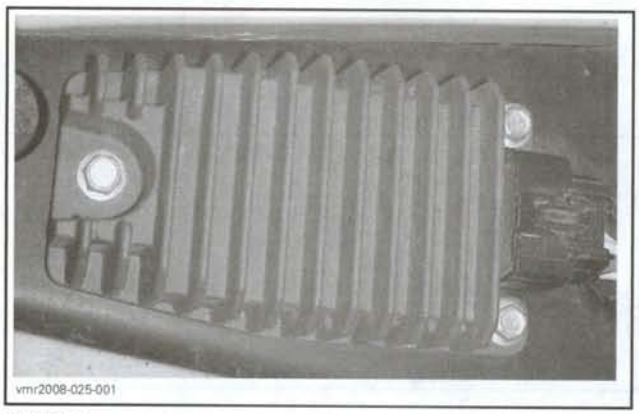

TYPICAL

NOTE: If the battery will not stay charged, the problem can be any of the charging system components. If these all test good, try a new voltage regulator/rectifier.

Battery

The battery supplies DC power to the electric starter for cranking the engine. During engine starting, it also supplies DC power to every electrical and electronic systems in the vehicle as well as all accessories. At low engine RPM operation and high current load conditions, it supplements the magnetos output as required, and helps to maintain a steady system voltage.

PROCEDURES

It is good practice to check for fault codes using the B.U.D.S. software as a first troubleshooting step. Refer to *MONITORING SYSTEM/FAULT CODES* section.

NOTE: First, ensure that battery is in good condition prior to performing the following tests.

VOLTAGE REGULATOR/RECTIFIER

Voltage Regulator/Rectifier General Information

The voltage regulator/rectifier in this vehicle is capable of rectifying and regulating the magneto output voltage to 14.7 ± .5 Vdc, depending on the load requirements of the vehicles systems. It provides its total output voltage to the vehicle through a 20 A charging system fuse.

If the battery is regularly discharged, test the charging system fuse. If the fuse is blown, the vehicle runs on battery power only.

The voltage regulator/rectifier could be the cause of a blown fuse. To test this possibility, simply disconnect the voltage regulator/rectifier from the circuit and replace the fuse.

If the fuse still blows, check for a defective wire between the charging fuse and the voltage regulator/rectifier connector.

If the fuse does not blow, replace the voltage regulator/rectifier and run the engine to make sure the charging system is operating normally.

CAUTION: Do not use a higher rated fuse as this can cause severe damage.

Voltage Regulator/Rectifier Continuity Test

Due to internal circuitry, there is no static test available.

Voltage Test Using B.U.D.S.

Remove the seat, refer to *BODY* section.

Remove the diagnostic connector from its storage cap.

DIAGNOSTIC CONNECTOR

Connect to the latest B.U.D.S. software, refer to *COMMUNICATION TOOLS/B.U.D.S. SOFTWARE* section.

⚠ WARNING

Before starting engine, make sure parking brake is set and transmission is selected to neutral "N". Failure to comply with this procedure may result in severe injury and possible loss of life.

Start engine.

In B.U.D.S., select **Read Data**.

Select the **Monitoring** tab.

On **Monitoring page 1**, read the 12 Vdc system voltage on the **Battery Voltage** meter and the engine RPM on the **Engine Speed** indicator as per following table.

CHARGING SYSTEM VOLTAGE TEST WITH B.U.D.S.	
TEST ENGINE SPEED	VOLTAGE
4000 RPM	14.2 - 15.2 Vdc

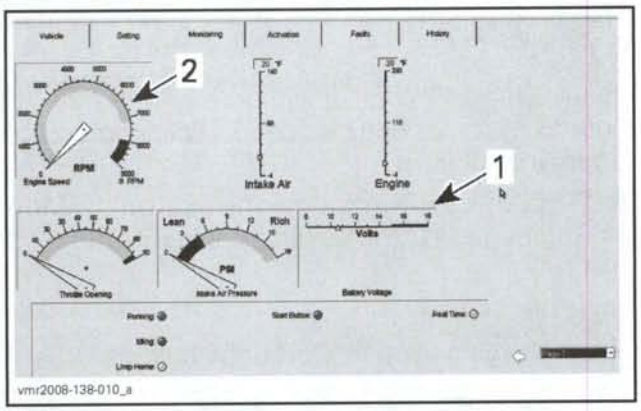

TYPICAL
1. *Voltage indication*
2. *RPM indication*

If voltage is above specification, replace voltage regulator/rectifier.

If voltage is below specification, test the following:

- Battery ground wire continuity
- Voltage regulator/rectifier ground wire continuity
- Battery cable from voltage regulator to battery
- Magneto stator (refer to *MAGNETO/STARTER* section)
- Wiring and connectors from stator to voltage regulator.

Repair or replace as required.

Install all removed parts and connectors.

Voltage Test With a Multimeter

Proceed as follows:

Remove seat.

Measure battery voltage at the battery terminals.

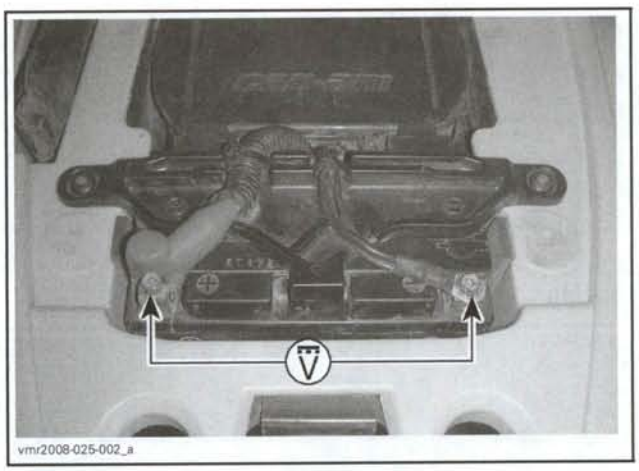

BATTERY VOLTAGE TEST

Start the engine.

Install a digital/inductive tachometer (P/N 529 014 500) or equivalent to measure engine speed. Follow manufacturers instructions.

NOTE: Vehicle RPM may also be read on the **Monitoring page** of the latest applicable B.U.D.S. software.

1. *Battery*
2. *Multimeter*
3. *Digital tachometer*

Measure charging system voltage at the battery terminals using the Fluke 111 multimeter (P/N 529 035 868) as follows.

CHARGING SYSTEM VOLTAGE TEST WITH MULTIMETER	
TEST ENGINE SPEED	VOLTAGE
4000 RPM	14.4 - 15.2 Vdc

If voltage is above specification, replace voltage regulator/rectifier.

If voltage is below specification, refer to *VOLTAGE TEST WITH B.U.D.S.* for sequence of tests to be carried out.

DC Current Test with an Inductive Ammeter

Remove seat.

Pull main fuse holder out of its storage compartment.

Push back the fuse holder harness sheath enough to access its wiring for the inductive ammeter installation.

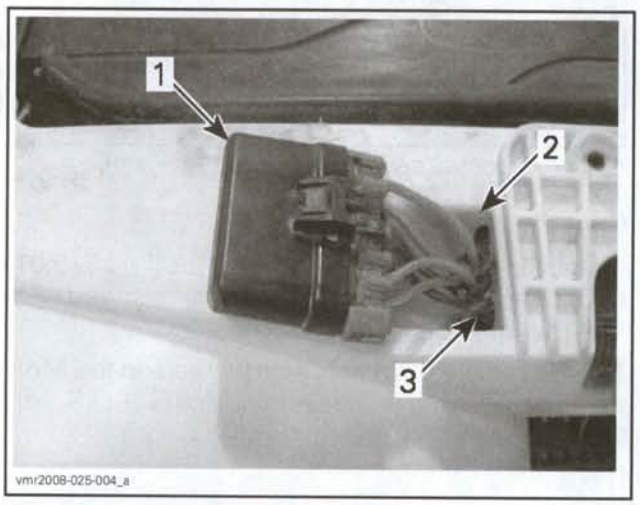

1. *Pull main fuse holder out of compartment*
2. *Fuse holder compartment*
3. *Push back harness sheath*

Use an Extech inductive ammeter (P/N 380941) or equivalent for measuring charging system current.

Turn "ON" the inductive ammeter and select to 40 Adc current.

NOTE: Be sure to zero set the ammeter after selecting it to 40 Adc or current reading will not be accurate.

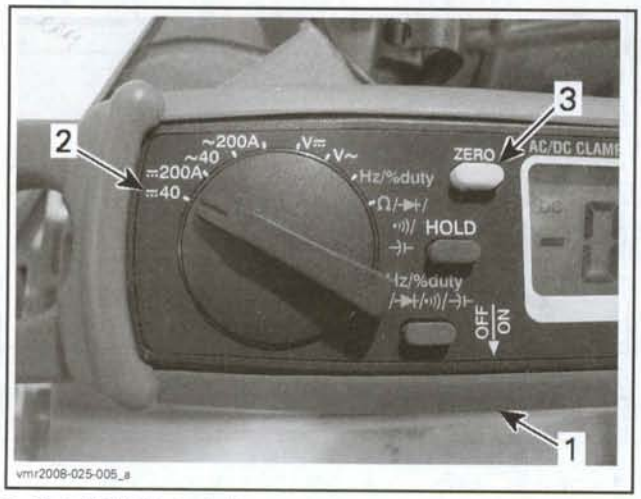

1. *Turn "ON" the inductive ammeter*
2. *Select 40 Adc*
3. *Zero set the ammeter*

Install the inductive ammeter clamp over the RED/YELLOW wire connected to the fuse holder.

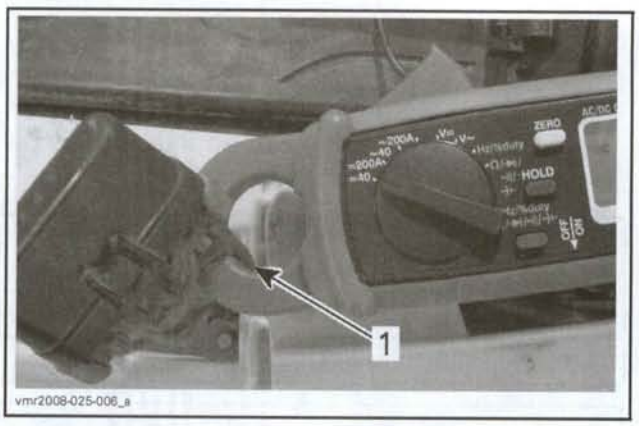

1. *Clamp inductive ammeter over RED/YELLOW wire*

Install a digital/inductive tachometer (P/N 529 014 500) to measure engine speed. Follow manufacturers instructions.

NOTE: Vehicle RPM may also be read on the **Monitoring page** of the latest applicable B.U.D.S. software.

Start the engine.

Read charging system current as follows.

1. *Read RPM on digital tachometer*
2. *Read current on inductive ammeter*

DC CURRENT TEST WITH AN INDUCTIVE AMMETER		
TEST ENGINE SPEED	LOADS	CURRENT
4000 RPM	Headlights "OFF"	Approx. 6 A
	Headlights "ON"	Approx. 10 A
	Radiator cooling fan running	Approx. 14 A

If readings are not close to specification, check for the following:

- Battery condition
- Accessory loads
- Dirty, corroded or loose connections.

If the items in the previous list are in good condition, test the magneto stator before concluding that the voltage regulator/rectifier is faulty.

Remove test equipment.

Pull harness sheath back to its original position and place the main fuse holder in its storage compartment.

Install seat.

CAUTION: It is not recommended to carry out the DC current test with a multimeter connected in series. The charging current will exceed the multimeter operating range possibly causing equipment damage.

BATTERY

Battery Information

These vehicles are equipped with a VRLA battery (Valve Regulated Lead Acid). **It is a maintenance-free type battery.**

Refer to battery manufacturer's instructions for proper filling, activation and routine charging procedures.

Troubleshooting

Weak or Discharged Battery

If you have a frequently weak or discharged battery, check for the following:

- Battery posts and/or cable terminal loose or oxidized
- Faulty battery (does not keep a full charge)
- Loose or bad starter solenoid connections
- Loose or bad engine and chassis ground connections
- Faulty system wiring/connections
- Faulty voltage regulator/rectifier
- Faulty stator.

Rectify any problem identified, recharge battery as per manufacturers instructions and carry out a battery load test to confirm the condition of the battery.

Battery Voltage Test (No Load)

NOTE: A battery voltage test without a load applied is carried out on a battery without discharging current. It is the simplest and most commonly used. However, be aware that the voltage test can indicate that the battery is in good condition even though the battery does not have enough power to crank the engine. A load test gives a more accurate indication of the condition of the battery.

Check the charge condition using a multimeter.

With a multimeter, voltage readings appear instantly to show the state of charge.

If the battery has just received a charge, allow it to rest for 1-2 hours before taking a voltage reading.

Set multimeter to Vdc and connect between the battery terminals. Always respect polarity.

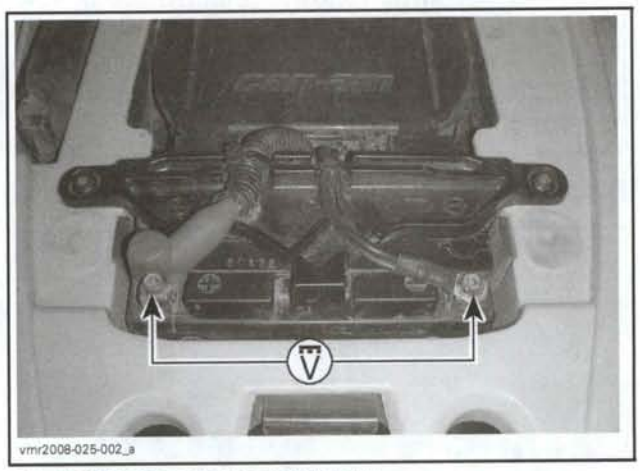

BATTERY VOLTAGE TEST (NO LOAD)

FULLY CHARGED BATTERY VOLTAGE
12.5 Vdc minimum

Battery Voltage Test (Load Applied)

This is the best test used to determine the condition of the battery. Use a load testing device such as the Electro Specialties battery load tester model (P/N 710). It has a 500 Amp carbon pile adjustable load.

Follow battery load tester instructions.

Apply a load of 3 times the ampere-hour rating of the battery. At 14 seconds into the test, check battery voltage.

BATTERY VOLTAGE TEST (load applied)	
TIME TO MEASURE INTO TEST	VOLTAGE
14 seconds	Min. 10.5 Vdc

If battery voltage has dropped below 10.5 Vdc, battery storage capacity has decreased appreciably and battery should be replaced.

Battery Removal

Remove the seat.

⚠ WARNING

Always disconnect BLACK (-) cable first. This will open the battery circuit and remove the possibility of causing a spark, or a short circuit with the vehicle when disconnecting the RED (+) battery cable. Electrolyte or fuel vapors can be present and a spark may ignite them, possibly causing an explosion which could result in equipment damage, severe personal injuries, or death.

Disconnect BLACK (-) battery cable.

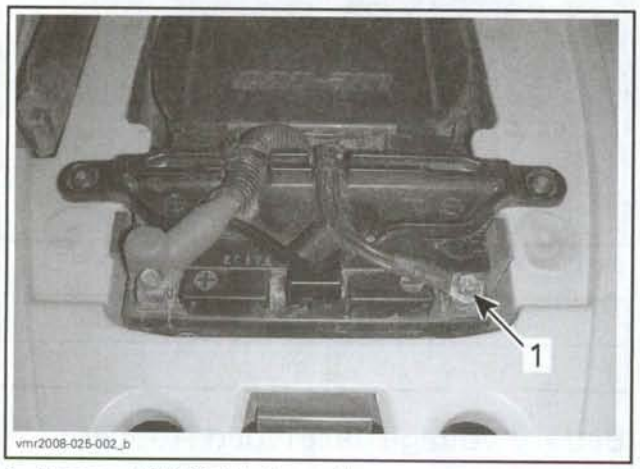

1. Disconnect BLACK (-) battery cable

Pull back the red rubber protector from the positive (+) battery terminal.

Disconnect the RED (+) battery cable.

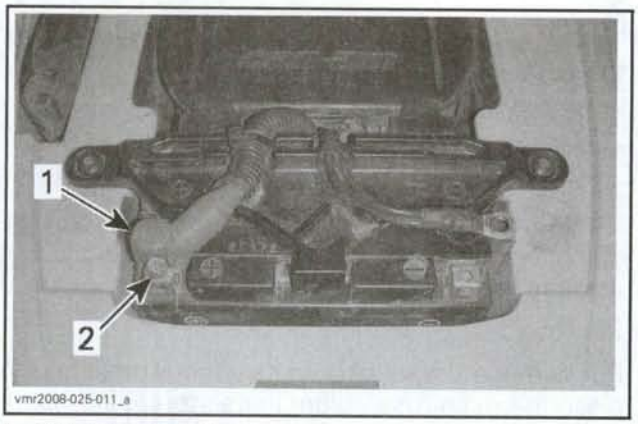

1. Pull out protective boot
2. Disconnect RED (+) battery cable

Remove the two screws securing the battery support.

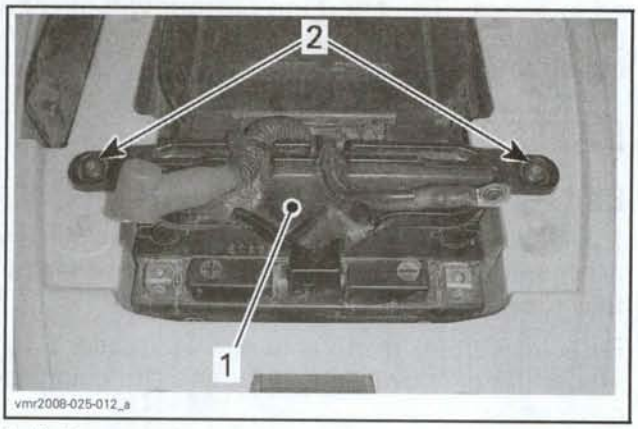

1. Battery support
2. Remove battery support screws

Lift up on the battery support and remove the battery from the battery compartment.

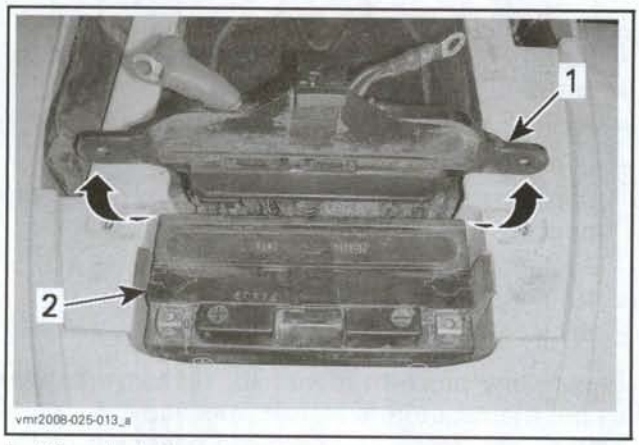

1. Lift up the battery support
2. Remove battery

Battery Cleaning

With the battery removed from vehicle, clean the battery support, battery compartment, cables and battery posts using a solution of baking soda and water.

NOTE: Starter solenoid is located at bottom of battery compartment. Use cleaning solution sparingly when cleaning battery compartment. Do not allow relay to soak in solution to avoid possible infiltration of starter solenoid. Rinse and dry solenoid thoroughly.

Remove corrosion (if present) from battery cable terminals and battery posts using a firm wire brush. Rinse thoroughly with clear water and dry using a clean cloth.

Apply a light coat of dielectric grease (P/N 293 550 004) on terminals.

Battery Inspection

Visually inspect battery casing for cracks or any other damages. If casing is damaged, replace battery and thoroughly clean battery support, battery compartment, and starter solenoid using a water and baking soda solution.

Inspect condition of battery posts, battery support, battery compartment and wire terminal lugs.

Battery Storage

It is not necessary to remove the battery during vehicle storage but it is recommended for long term storage.

If the battery is left in the vehicle during storage or used infrequently, disconnect the BLACK (-) negative battery cable to eliminate battery current drain from the electrical equipment.

Recharge the battery once a month with an approved battery charger as per manufacturer's recommendations.

Clean battery, battery support, compartment and connections as required, refer to *BATTERY CLEANING* in this section.

For other recommendations during storage, refer to battery manufacturers instructions.

⚠ WARNING

Ensure battery is stored in a safe place, out of reach for children.

New Battery Activation

Refer to the instructions provided with the battery.

Battery Charging

⚠ WARNING

Always wear safety glasses and charge in a well ventilated area. Never charge or boost a battery while it is installed on vehicle. Do not open the sealed caps during charging. Do not place battery near open flame.

CAUTION: If battery becomes hot, stop charging and allow it to cool before continuing.

NOTE: Sealed VRLA batteries have an internal safety valve. If battery pressure increases due to overcharging, the valve opens to release excess pressure, preventing battery damage.

Perform a *BATTERY VOLTAGE TEST (no load)*.

An automatic charger is a fast and convenient way for error-proof charging.

Always follow the battery manufacturers charging instructions.

Battery should be charged at a slow charge rate of 1/10 its given 10 hour capacity.

When using a constant current charger, charge battery according to the chart below.

Battery Voltage Below 12.8 V and Above 11.5 V

STANDARD CHARGING (RECOMMENDED)		
BATTERY TYPE	TIME	CHARGE
YT7B-BS	5-10 hours	0.7 A

QUICK CHARGING		
BATTERY TYPE	TIME	CHARGE
YT7B-BS	1 hour	3 A

Battery Installation

⚠ WARNING

Always connect RED (+) cable first then BLACK (-) cable.

Insert the fasteners in the battery posts.

Lift the battery support and insert the battery in the compartment with the battery terminals towards the rear of the vehicle.

Install the two support mounting screws.

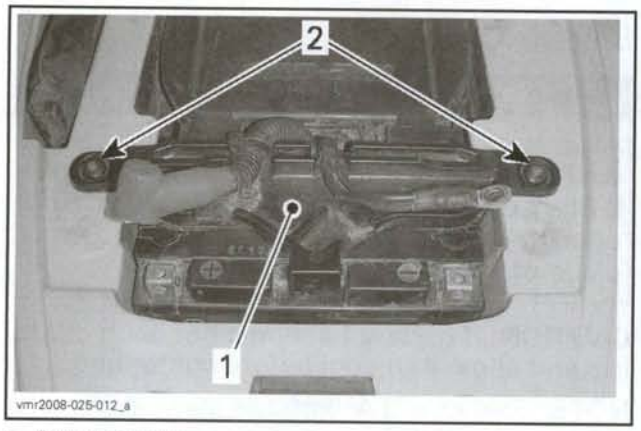

1. Battery support
2. Install battery support screws

Connect the RED (+) battery cable to the positive (+) battery post.

Connect the BLACK battery cable to the negative (-) battery post.

Apply silicone dielectric grease (P/N 293 550 004) on battery posts and connections.

Install the red rubber protector over the positive (+) battery post.

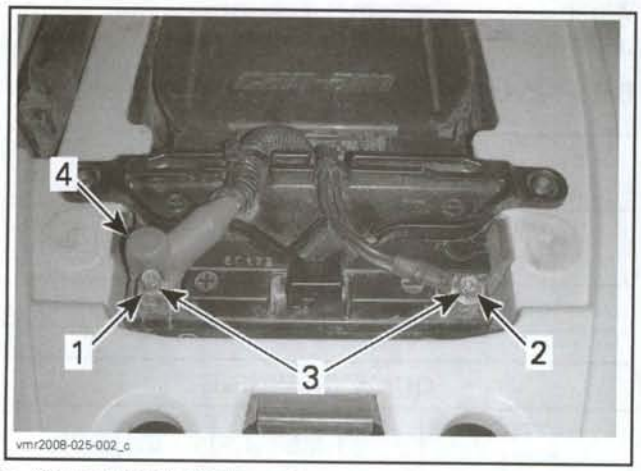

1. Connect RED (+) battery cable
2. Connect BLACK (+) battery cable
3. Apply dielectric grease
4. Install red rubber protector over positive battery post

Install the seat.

ELECTRICAL SYSTEM MAIN GROUNDS

The main electrical system chassis ground is located on the LH side of the vehicle attached to the inside of the oblique frame member.

The engine ground is attached to one of the starter mounting screws. See following illustration for ground locations.

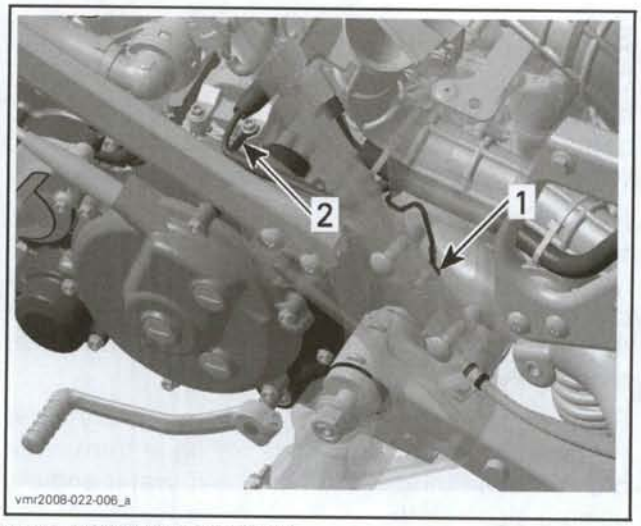

MAIN GROUND LOCATIONS
1. Chassis ground
2. Engine ground

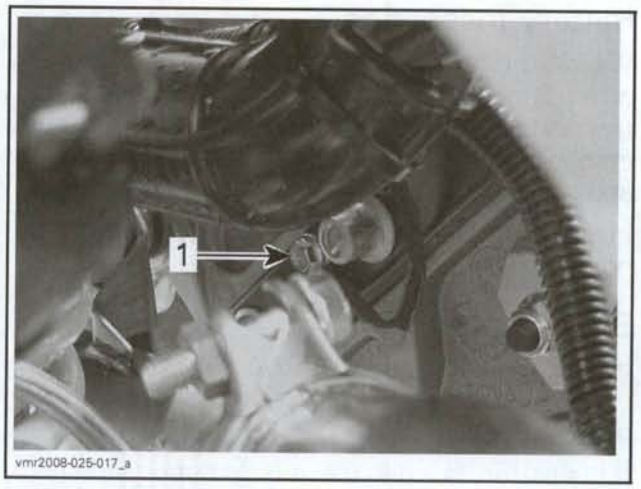

1. Chassis ground (right side view)

Ensure main ground connections are clean and tight.

STARTING SYSTEM

SERVICE TOOLS

Description	Part Number	Page
ECM adapter tool	529 036 085	252

GENERAL

Starting System Operation

When the START button is pressed, 12 Vdc is applied through the start switch to the starter solenoid coil. The ECM completes the starter solenoid control circuit by providing a ground. The starter solenoid then closes its contacts and battery power is applied to the starter for cranking the engine.

Engine Cranking Conditions

The following conditions must be met to allow engine cranking.

- Ignition switch turned ON
- Engine stop switch to RUN
- Transmission in neutral
- Start button is pressed and held.

NOTE: The engine can be started when the transmission is in gear if the clutch lever is held in.

TROUBLESHOOTING

NOTE: It is good practice to check for fault codes using B.U.D.S. software as a first troubleshooting step. Refer to *MONITORING SYSTEM/FAULT CODES*.

Starter Will Not Crank Engine

No Headlights and Taillight

If the "Engine cranking conditions" are met, and the headlights (if selected) and taillight do not function, refer to the *IGNITION SYSTEM* section

Headlights and Taillight Turn "ON"

If the "Engine cranking conditions" are met and the starter will not crank the engine, pull in the clutch lever and press the start button.

If the starter cranks the engine, test the neutral switch.

If the starter will not crank the engine with the clutch pulled in, try manually rotating the engine.

To manually rotate the engine, carry out the following.

- Set the ignition switch to the "OFF" position.
- Select transmission to fifth gear.
- Push the vehicle to rotate the engine.

NOTE: Engine can also be rotated using a hand crank, refer to the *CRANKCASE/CRANKSHAFT* section.

If you **cannot rotate the engine**, verify engine and gearbox.

If the **engine can be rotated manually**, check the following in this order:

- Battery
- Starter voltage test (refer to *MAGNETO/STARTER* section)
- Starter solenoid
- Start button switch
- Wiring and connections.

Starter Will Not Crank Engine in Gear (Clutch Lever Held in)

The engine can be started with the transmission selected to any gear if the clutch lever is held in (clutch disengaged).

If you cannot start the engine in gear with the clutch disengaged, test the following:

- Clutch switch
- Wiring and connectors
- ECM.

Starter Cranks Engine in Gear (Clutch Lever Released)

If the starter cranks the engine in gear and the clutch is not disengaged, test the following:

- Neutral switch (refer to *GEARBOX* section)
- Clutch switch
- Wiring and connectors
- ECM.

PROCEDURES

STARTER SOLENOID

Solenoid Continuity Test

Remove the 20 A main fuse and the 20 A charging system fuse for circuit isolation.

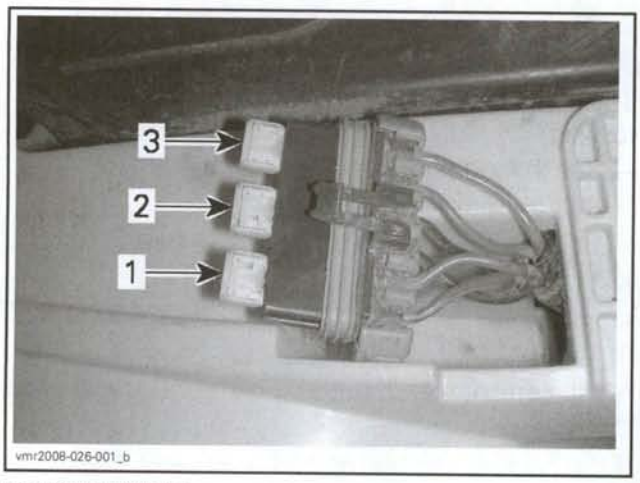

PF2 FUSE HOLDER
1. *Main fuse*
2. *Spare fuse*
3. *Charging system fuse*

Disconnect and remove the battery, refer to the *CHARGING SYSTEM* section.

Remove the solenoid mounting screw.

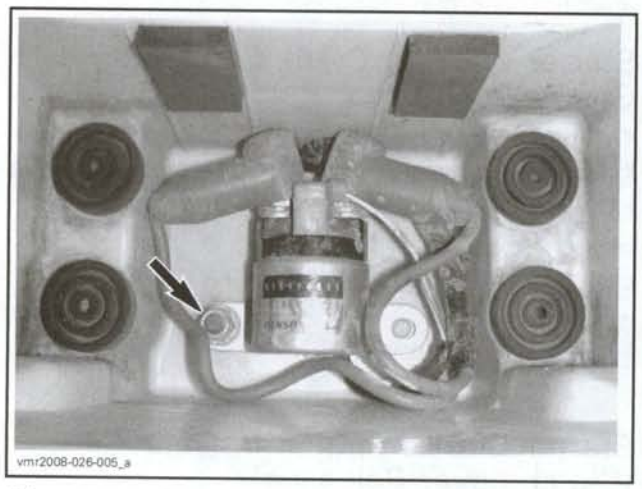

Disconnect the small terminal wires from the solenoid.

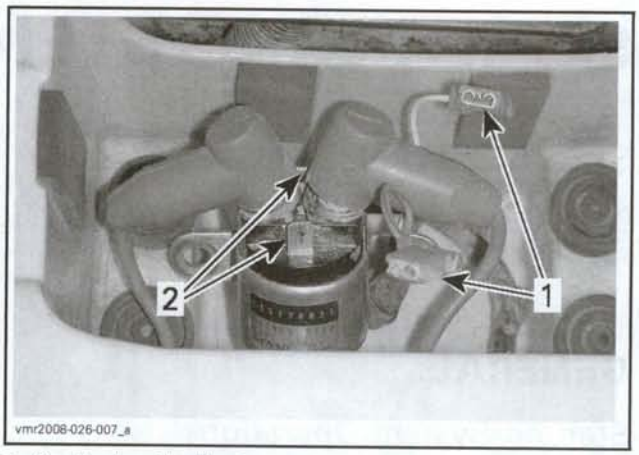

1. *Small solenoid coil wires*
2. *Small solenoid coil terminals*

Set multimeter to Ω.

Measure solenoid coil resistance as follows.

CAUTION: Battery must remain disconnected for the following continuity tests or multimeter damage may occur.

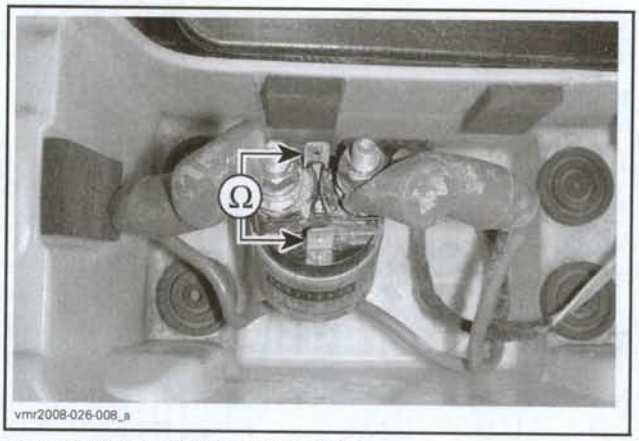

SOLENOID COIL CONTINUITY TEST

SOLENOID POSTS		MEASUREMENT
		RESISTANCE @ 20°C (68°F)
SS1	SS2	Approx. 7 Ω

Test for a stuck solenoid plunger by measuring the resistance across the solenoid contacts as follows.

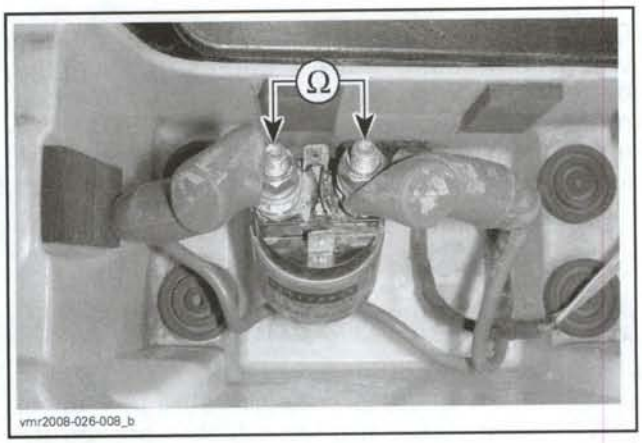

SOLENOID POSTS		MEASUREMENT
		RESISTANCE @ 20°C (68°F)
Battery post (SS3)	Starter post (SS4)	Open circuit

If any measurement is out of specification, replace solenoid.

Install the 20 A main fuse and the 20 A charging system fuse.

Solenoid Battery Cable Continuity Test

Measure the continuity of the solenoid battery cable (battery disconnected) as follows.

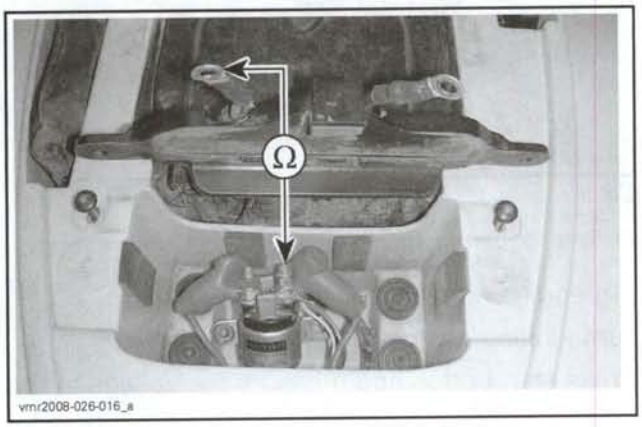

SOLENOID BATTERY CABLE CONTINUITY TEST		
PROBE POSITIONS		MEASUREMENT
Red battery cable terminal	Starter solenoid battery post	Close to 0 Ω

If you do not obtain a resistance reading near 0 Ω and cable connection to solenoid is clean and tight, replace solenoid battery cable.

NOTE: A reading other than almost 0 Ω indicates a bad crimp on a terminal, or corrosion within the crimped terminal leading to a high resistance and a voltage drop at the terminal.

Solenoid Diode Test

Disconnect small terminals from solenoid.

Set multimeter to the diode symbol as shown.

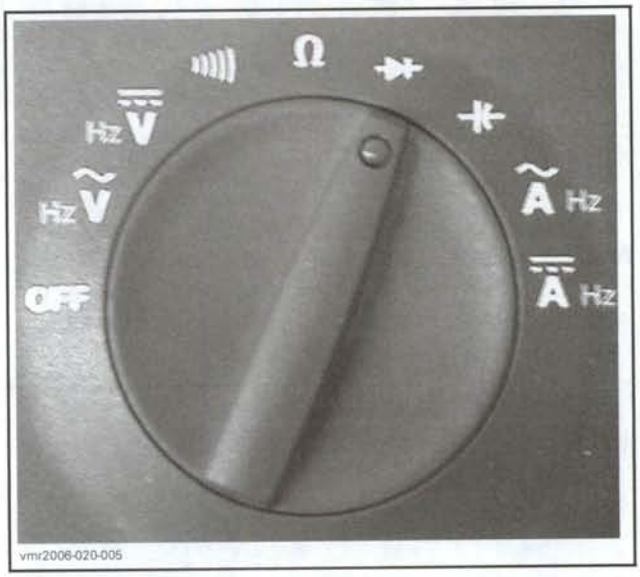

Probe wires while paying attention to the diode polarity.

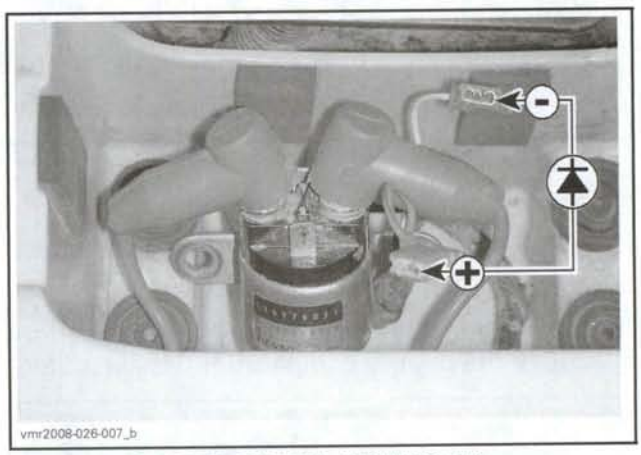

FORWARD POLARITY, MUST BE AROUND 0.5 V

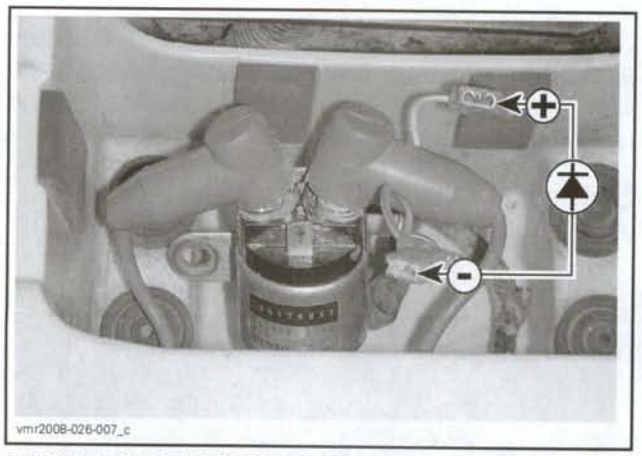

REVERSE POLARITY, MUST BE OPEN CIRCUIT (OL)

If test failed, replace diode.

NOTE: The starter solenoid diode (D1) is located inside the main rear wiring harness protective sheath, forward of the battery compartment, within the LH rear frame extension.

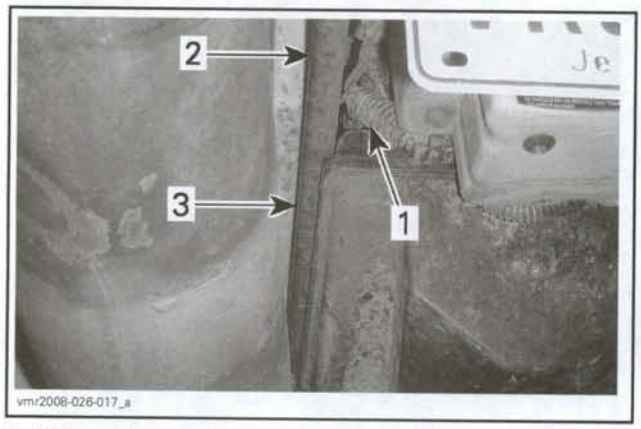

1. *Main rear harness*
2. *Rear frame extension*
3. *D1 diode location*

Power Signal to Solenoid Coil

Temporarily reconnect the battery with the battery outside of the battery compartment as illustrated.

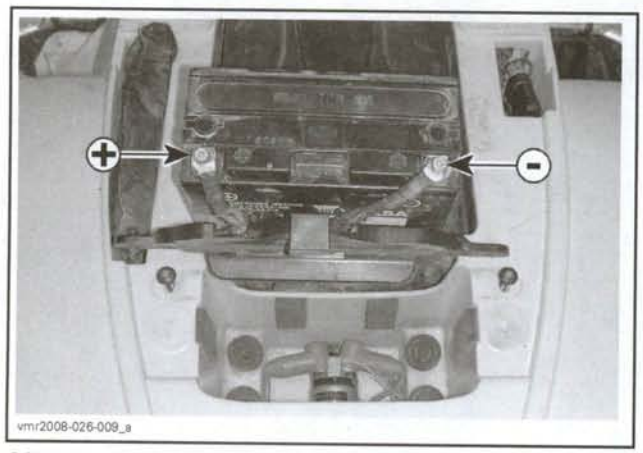

CONNECT BATTERY OUTSIDE COMPARTMENT

CAUTION: Be sure to respect battery polarity when connecting battery cables. Connecting battery in reverse polarity could result in equipment damage. Always connect the RED (+) battery cable first and the BLACK (-) battery cable last.

Set parking brake.

Set transmission to Neutral ("N").

⚠ WARNING

Before starting engine, ensure parking brake is set and transmission is selected to neutral "N". Failure to comply with this procedure may result in severe injury and possible loss of life.

Set multimeter to Vdc.

Measure battery voltage between battery terminals.

Disconnect the small wires from the solenoid.

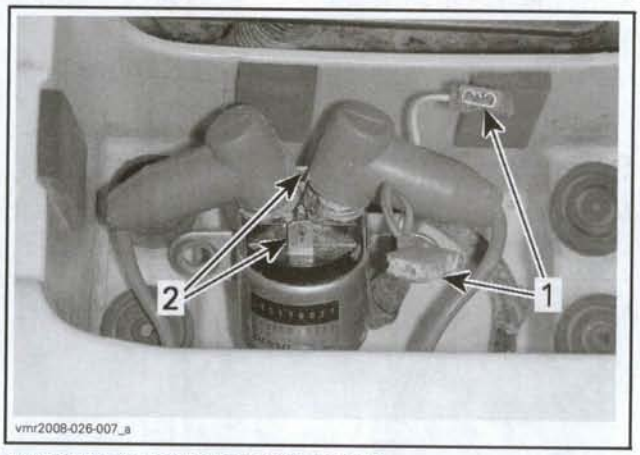

DISCONNECT SOLENOID COIL WIRES
1. *Small solenoid coil wires*
2. *Small solenoid coil terminals*

Set engine stop switch to "RUN".

Turn ignition switch to "ON".

Press start button and measure the voltage at the small solenoid coil wires as follows.

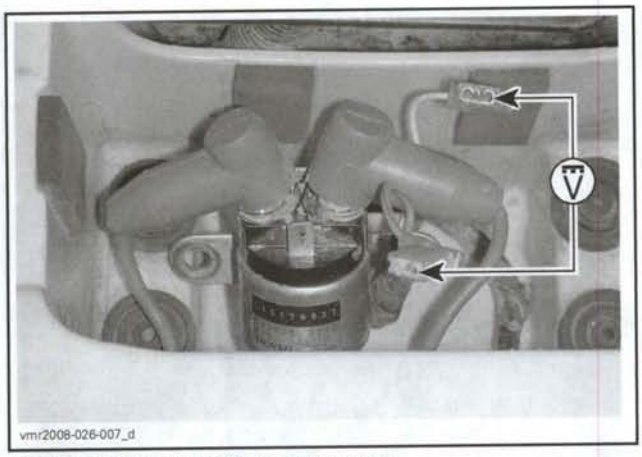

SOLENOID COIL POWER SIGNAL TEST

START BUTTON	WIRES	VOLTAGE
Released	YELLOW/RED and ORANGE/BROWN	Approx. 0 Vdc
Depressed and held		Battery voltage

If voltage is not as specified, carry out the following voltage check.

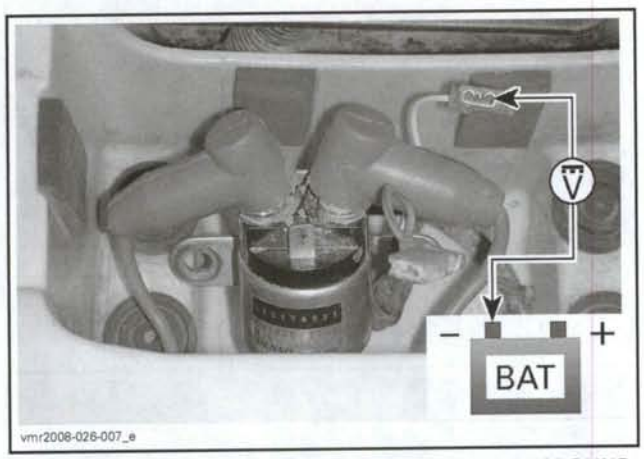

SOLENOID COIL POWER SIGNAL TEST TO BATTERY GROUND

START BUTTON	WIRES	VOLTAGE
Released	YELLOW/RED and battery ground	0 Vdc
Depressed and held		Battery voltage

If voltage is as specified, test continuity of solenoid ground control circuit.

If no voltage is read, carry out a start button input voltage test, refer to *START BUTTON* in this section.

Solenoid Dynamic Test

Remove the injection and ignition fuse to prevent engine from starting.

NOTE: Check engine light will flash, starter will crank engine but with an initial delay of 1 or 2 seconds.

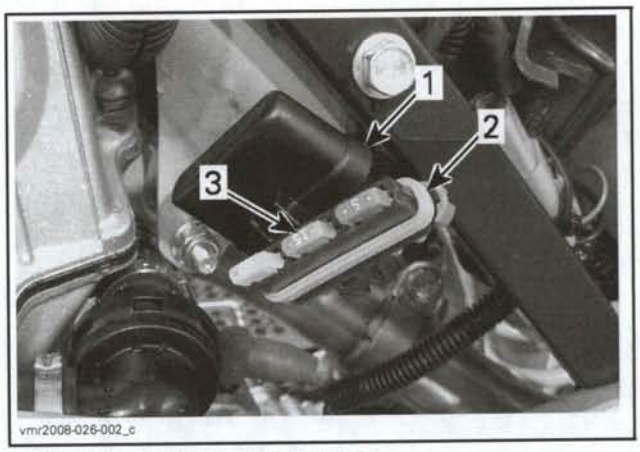

REMOVE INJECTION/IGNITION FUSE
1. *PF1 fuse holder cover*
2. *Fuse holder*
3. *Injection/ignition fuse*

Set parking brake.

Set transmission to Neutral "N".

Turn ignition switch to "ON".

Set engine stop switch to "RUN".

Set multimeter to Vdc.

Depress the start button.

As the engine is cranking, measure the voltage drop across the large solenoid terminals as follows.

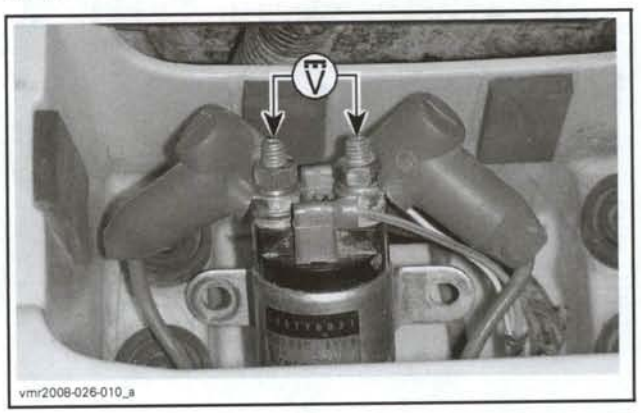

SOLENOID POST		MEASUREMENT
Solenoid battery terminal	Solenoid starter terminal	0.2 Vdc max.

If voltage drop is above specification, replace solenoid.

NOTE: A high voltage drop could indicate a high resistance across the solenoid contacts, or bad connections.

Continuity Test of Solenoid Ground Control Circuit

Remove the front body assembly, refer to *BODY* section.

Locate ECM on LH side of fuel tank.

ECM LOCATION

To remove ECM connector, push and hold the connector locking tab.

Rotate connector lock until it stops.

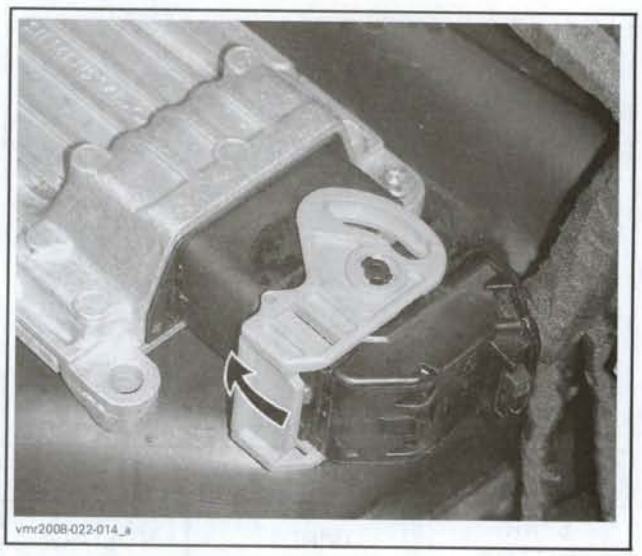

Pull out connector.

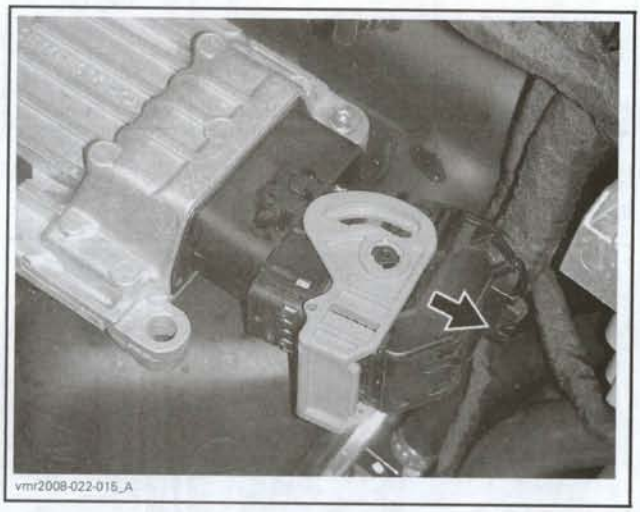

Install the ECM connector onto the ECM adapter tool (P/N 529 036 085).

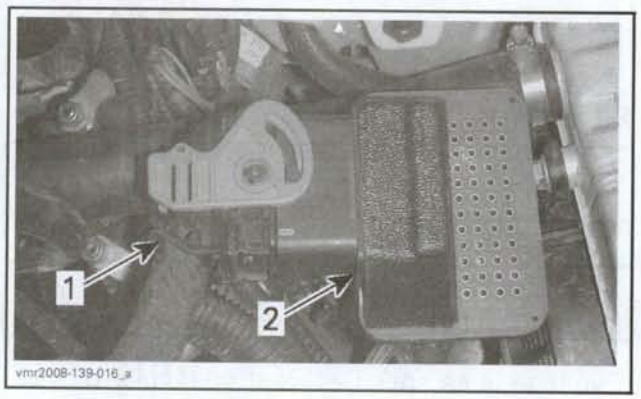

TYPICAL
1. *ECM connector*
2. *ECM adapter tool*

Set multimeter to Ω.

Read resistance as follows.

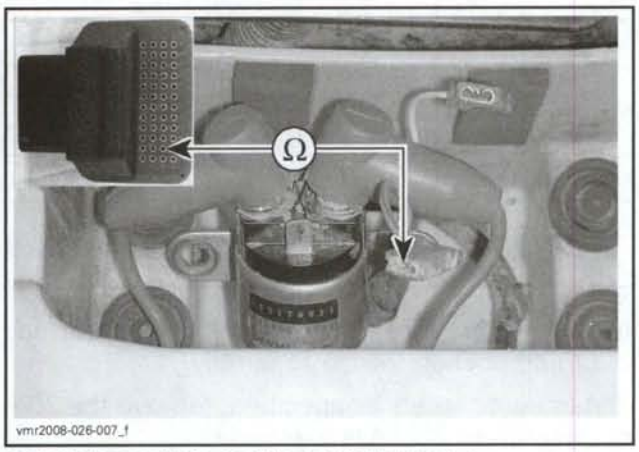

SOLENOID GROUND CONTROL CIRCUIT TEST

CONTINUITY TEST OF SOLENOID GROUND CONTROL CIRCUIT		
TEST PROBES		RESISTANCE
Solenoid ORANGE/BROWN wire	ECM pin L3	Close to 0 Ω

If resistance is not as specified, repair wiring or connections.

If solenoid input circuits and ground control circuit continuity tested good, test ECM ground circuits. Refer to *ELECTRONIC FUEL INJECTION (EFI)* section.

START BUTTON

Start Button Input Voltage Test

Remove the front body assembly, refer to *BODY* section.

Disconnect the LH multifunction switch connector (MG1).

DISCONNECT MG1

Set parking brake.

Set transmission to neutral "N" position.

Set engine stop switch to "RUN".

Turn ignition switch "ON".

Set multimeter to Vdc and measure the start button input voltage as follows:

START BUTTON INPUT VOLTAGE TEST		
MG1 VEHICLE HARNESS CONNECTOR		VOLTAGE
Pin 1	Chassis ground	Battery voltage
Pin 1	Pin 6	

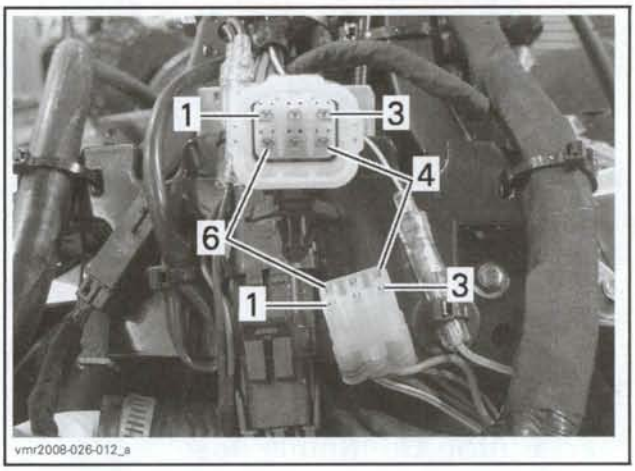

MG1 PIN-OUT

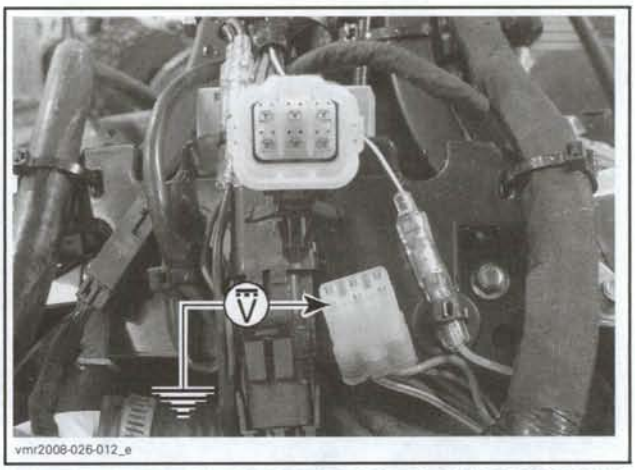

START BUTTON INPUT VOLTAGE TEST TO CHASSIS GROUND

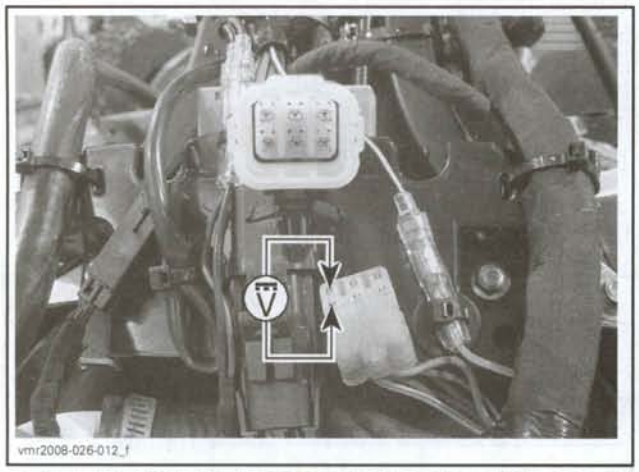

START BUTTON INPUT VOLTAGE TEST AT MG1 (PINS 1 TO 6)

If voltage is as specified, test continuity of start button switch.

If no voltage is read, test continuity of RED/BLACK wire between MG1 connector and **cooling fan and accessories fuse**.

If voltage is good to chassis ground but not to pin 6 of MG1 connector, test continuity of YELLOW/RED wire between MG1 connector and starter solenoid.

Refer to *START BUTTON CONTINUITY TEST* for start button wiring tests.

Start Button Continuity Test

Disconnect the multifunction switch connector (MG1).

Test start button switch continuity as follows.

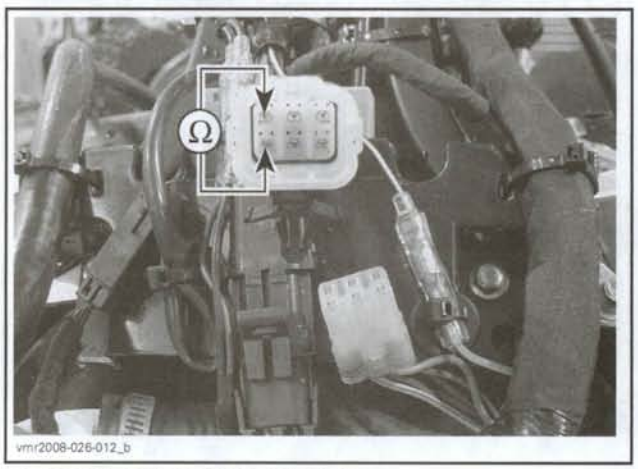

START BUTTON CONTINUITY TEST

START BUTTON	MULTIFUNCTION SWITCH CONNECTOR (MG1)	RESISTANCE
Released	Pin 6 (RED/VIOLET) and pin 1 (YELLOW/BLUE)	Infinite (OL)
Depressed and held		0.6 Ω max.

If start switch does not test as specified, replace the multifunction switch assembly.

If start switch tests as specified, remove the 20 A cooling fan and accessories fuse.

REMOVE 20 A COOLING FAN/ACCESSORIES FUSE

Test continuity of the following main vehicle harness wires:

- **YELLOW/RED wire** from multifunction switch connector (MG1 contact 6) to starter solenoid
- **YELLOW/BLUE wire** from MG1 (contact 1) to cooling fan and accessories fuse (contact "B" fuse removed).

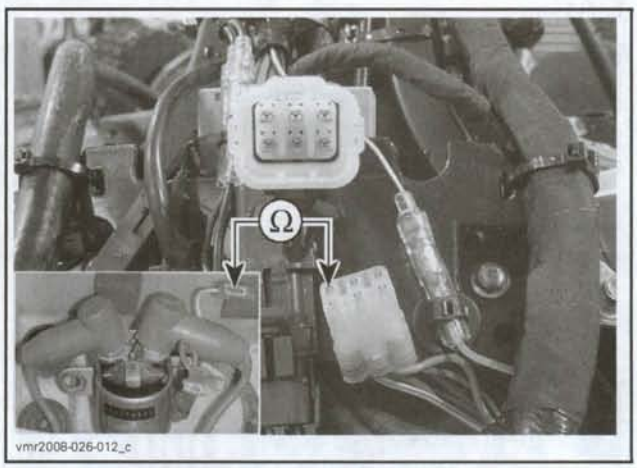

MG1 PIN 6 TO STARTER SOLENOID YELLOW/RED

MG1 (vehicle harness side)	TO	RESISTANCE
Pin 6 (YELLOW/RED)	Starter solenoid YELLOW/RED wire	Close to 0 Ω
Pin 1 (YELLOW/BLUE)	Cooling fan/acc. fuse (contact "B")	Approx. 1.0 Ω

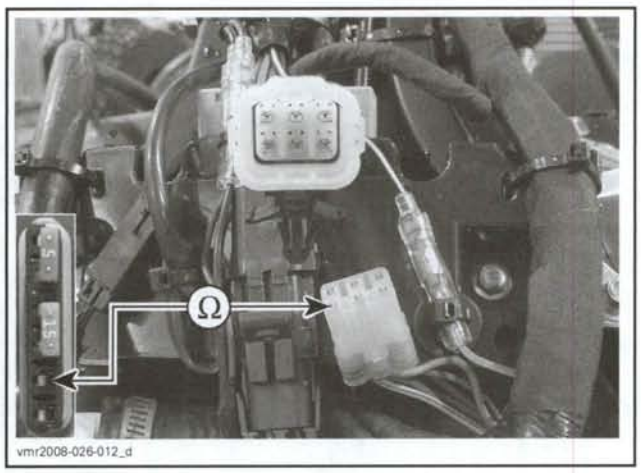

MG1 PIN 1 TO COOLING FAN/ACCESSORIES FUSE PIN "B"

Repair wiring or connections.

Install all removed parts and connectors as required.

CLUTCH SWITCH

Clutch Switch Function

When the clutch lever is released, the clutch switch is held in the open position by the lever. When the lever is pulled in to disengage the clutch, the switch is allowed to close. This signals the ECM that the clutch is disengaged and allows the driver to start the engine when the transmission is in gear.

If the clutch lever free play is not adjusted properly, the clutch switch may be released to the closed position, allowing the engine to be cranked in gear with the clutch engaged. Refer to the *CLUTCH* section for lever free play adjustment.

Clutch Switch Continuity Test

Remove front body assembly, refer to *BODY* section.

Disconnect the two clutch switch connectors.

Set multimeter to Ω selection.

Connect the multimeter between the two clutch switch connectors (steering side) and measure the resistance as follows:

CLUTCH SWITCH CONTINUITY TEST	
Clutch lever released	OL (infinite Ω)
Clutch lever held in	Close to 0 Ω

If you do not measure OL (infinite Ω) with clutch lever released, check the clutch lever free play before assuming switch is at fault.

If you do not measure close to 0 Ω with clutch lever held in, replace clutch switch.

NOTE: If resistance reading is erratic, switch contacts may be oxidized or corroded due to moisture ingress, or burned and pitted. Replace switch.

Clutch Switch Replacement

Pull back switch lever rubber protector to access the switch locking tab.

Using a small screwdriver, compress the switch locking tab as you pull the switch out of the lever housing.

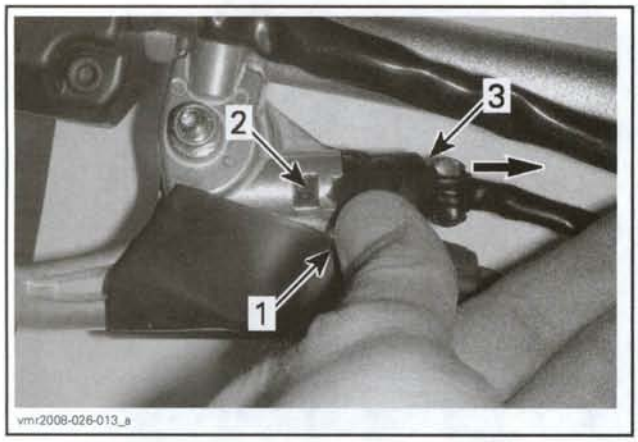

1. Pull back rubber protector
2. Press up on locking tab
3. Pull switch out

Note routing of clutch switch wiring and remove the switch from the handlebars.

Insert new switch in clutch lever housing with alignment keys in a vertical position.

Push switch into housing until the locking tab snaps into position.

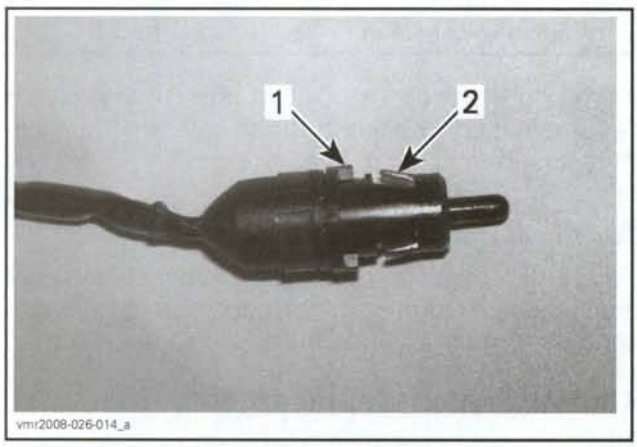

CLUTCH SWITCH
1. Alignment key
2. Locking tab

Gently pull on the switch to ensure that it is secure.

Route the wiring as noted before removal.

Carry out a continuity test to ensure it functions properly with the clutch lever.

Reconnect the two switch connectors to the wiring harness.

Install the front body assembly, refer to *BODY* section.

LIGHTS

SERVICE TOOLS

Description	Part Number	Page
Fluke 115 multimeter	529 035 868	258, 260–261, 264
ECM adapter tool	529 036 085	266

GENERAL

LIGHTS SYSTEM DESCRIPTION

The lights system is composed of the following components:
- Headlight power regulator
- 2 headlights
- A combination taillight/brake light
- "N" neutral indicator light
- Low fuel indicator light
- Check engine indicator light
- Headlight switch.

LIGHTS SYSTEM OPERATION

The lights system receives its power through the cooling fan/accessories fuse. It is not independently fused.

When the engine stop switch is set to "RUN" and the ignition switch is set to "ON" (with headlights), the entire lighting system receives power from the battery, and from the voltage regulator/rectifier output when the engine is running.

If the ignition switch is set to "ON" without the headlights function, only the headlights will not receive power. This function allows the driver to reduce the load on the charging system and battery when the headlights are not required.

When the electrical load is high and the available charging system voltage may not be sufficient to prevent battery power drain, such as when the engine is at idle (or not running), the electrical system voltage will drop. The headlight power regulator detects this voltage drop and cycles its output to the lights to reduce the electrical system load.

The main purpose of the headlight power regulator is to prevent battery power drainage, saving power for the essential engine systems. The "low fuel" and "check engine" indicator lights are not affected as they are not powered through the headlight power regulator.

TROUBLESHOOTING

LIGHTS SYSTEM TESTING

Lights System Testing Sequence

Set engine stop switch to "RUN".

Set ignition switch to **"ON" with headlights** function.

The following lights should come on:
- Headlights
- Taillight
- "N" neutral light (if transmission is in neutral)
- Check engine indicator light momentarily (pre-start test)
- Low fuel level indicator light (only if the fuel is below the sensor activation level).

None of the Lights Function

Refer to the *IGNITION SYSTEM* section.

Only the Check Engine Light Functions

Test the headlight power regulator.

A Specific Light does not Function

Test the following:
- Applicable bulb
- Light input voltage
- Light control circuit (switches)
- Ground circuit wiring.

Refer to the section applicable to the light not functioning.

PROCEDURES

HEADLIGHT POWER REGULATOR

Headlight Power Regulator Test

Disconnect the taillight/brake light connector.

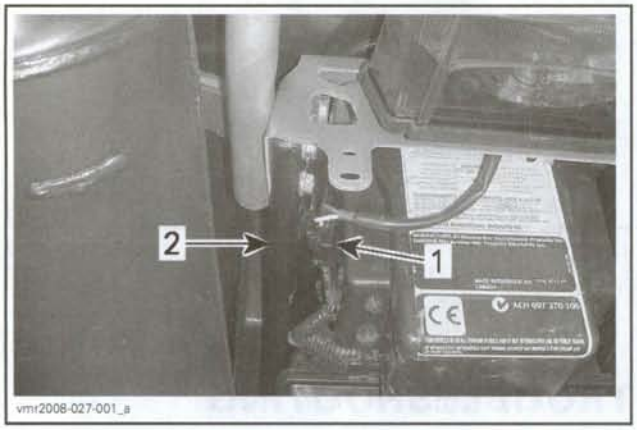

1. *Taillight/brake light connector*
2. *Rear frame extension*

Remove seat, refer to the *BODY* section.

Set the Fluke 115 multimeter (P/N 529 035 868) to Vdc and measure battery voltage.

Set engine stop switch to "RUN".

NOTE: Do not start the engine.

Set ignition switch to "ON".

Measure the taillight/brake light input voltage between the RED/VIOLET wire (pin 2) rear main harness side of connector, and chassis ground.

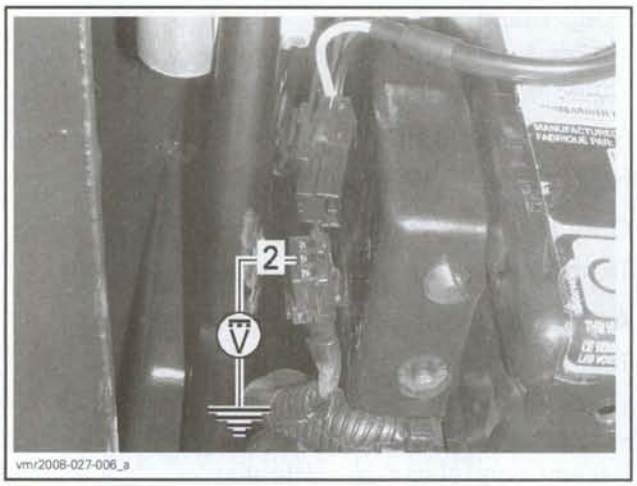

TAILLIGHT INPUT VOLTAGE TEST (PIN 2)

Measured voltage should be significantly below battery voltage (eg. if battery voltage was 12.8 Vdc, measured voltage at light connector will be approximately 7 Vdc). This is normal.

Start engine.

⚠ WARNING

Before starting engine, ensure parking brake is set and transmission is selected to neutral "N". Failure to comply with this procedure may result in severe injury and possible loss of life.

Measure charging system voltage at battery terminals, refer to *CHARGING SYSTEM* section.

Again measure taillight/brake light input voltage.

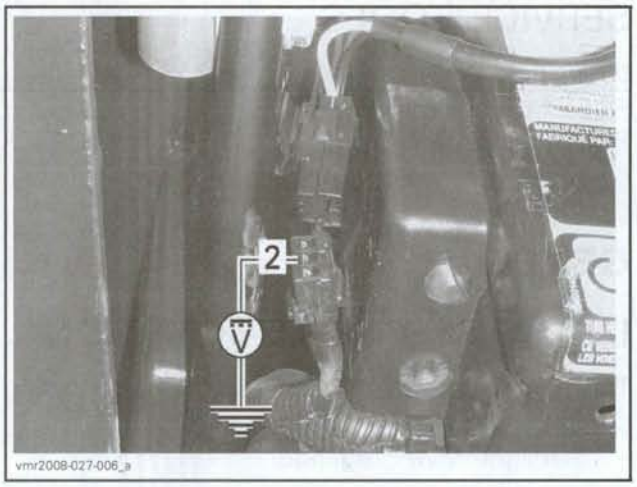

TAILLIGHT INPUT VOLTAGE TEST (PIN 2)

If the taillight/brake light input voltage is close to charging voltage, the headlights power regulator is functioning normally.

If you do not measure any voltage, carry out the following:

- Remove the front body assembly (refer to *BODY* section).
- Locate the headlight power regulator on the LH side of the frame just above the cylinder head.
- Disconnect the headlight power regulator connector.

1. *Headlight power regulator*
2. *Headlight power regulator connector*
3. *ECM*

- Set the multimeter to Vdc.

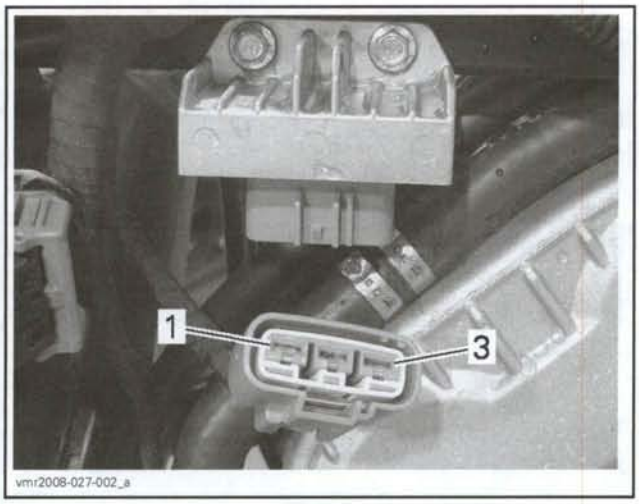

HEADLIGHT POWER REGULATOR CONNECTOR PIN-OUT

- Test for battery voltage at the RED/VIOLET wire (pin 2).

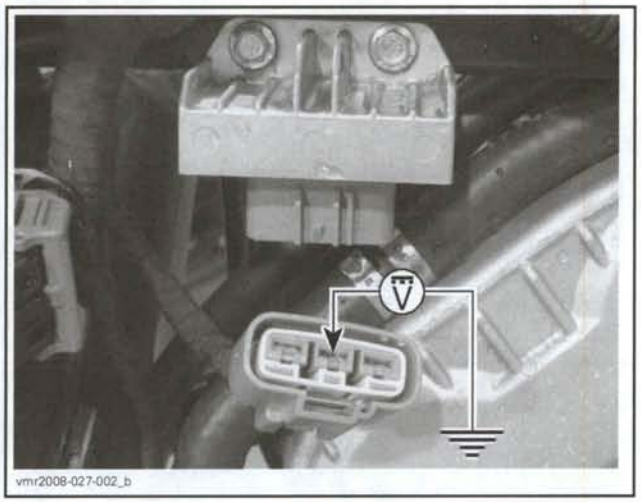

- Set ignition switch to "OFF".
- Set the multimeter to Ω.
- Test for continuity of the BLACK wire (pin 1) to chassis ground.

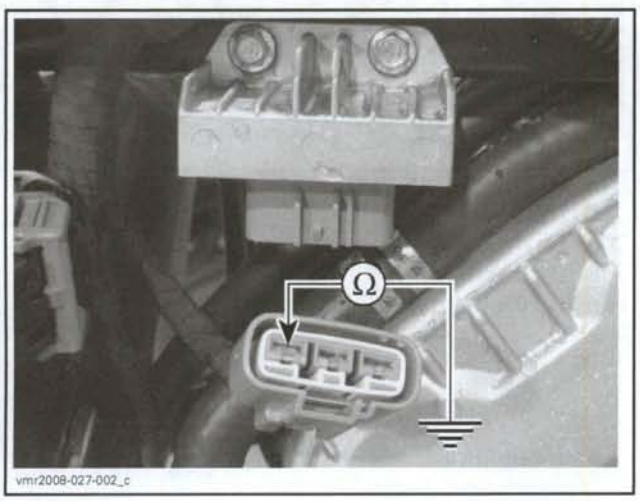

- Test for continuity of the RED/VIOLET wire (pin 3) from the headlight power regulator connector to the taillight/brake light connector (pin 2).

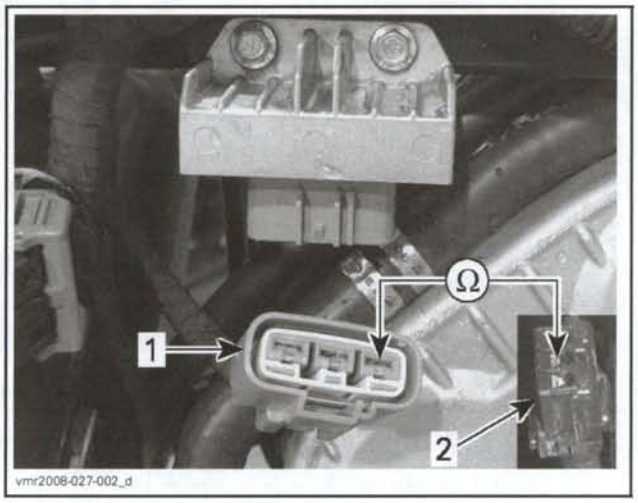

1. *Headlight voltage regulator connector*
2. *Taillight/brake light connector*

If all items tested as specified and lights remain dim or will not come on, replace the headlight power regulator.

HEADLIGHTS

Headlight Input Voltage Test

Pull back the rubber protector from the headlight connector.

Disconnect the headlight connector from the bulb.

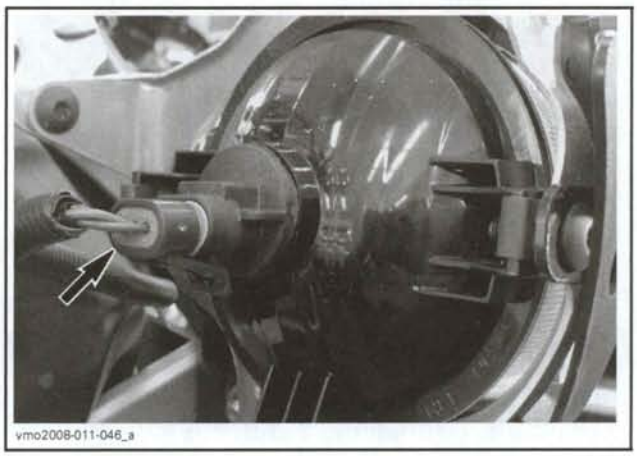

Set engine stop switch to "RUN".

Set ignition switch to **"ON" with headlights** function.

Start engine.

⚠ WARNING

Before starting engine, ensure parking brake is set and transmission is selected to neutral "N". Failure to comply with this procedure may result in equipment damage, severe injury and possible loss of life.

Set the Fluke 115 multimeter (P/N 529 035 868) to Vdc and measure the headlight input voltage as per following table.

HEADLIGHT INPUT VOLTAGE TEST			
HEADLIGHT SWITCH POSITION	PROBES		VOLTAGE
Low beams	GREEN wire	Chassis ground	Over 12 Vdc
	GREEN wire	BLACK/RED wire	
High beams	BLUE wire	Chassis ground	
	BLUE wire	BLACK/RED wire	

If voltage test is good as per table, replace light bulb.

If voltage is good with chassis ground but not with the BLACK/RED wire, test the ground circuit wiring and the ignition switch for continuity. Refer to the *IGNITION SECTION* for ignition switch testing procedures.

If voltage test is good in one headlight switch position but not in the other, refer to the *HEADLIGHT SWITCH CONTINUITY TEST*.

If there is no voltage present at both headlight connectors but the taillight/brake light is functioning, test the headlight switch and wiring.

Headlight Bulb Replacement

⚠ WARNING

Always turn the ignition switch to the OFF position before replacing a defective bulb.

NOTE: Always check light operation after bulb replacement.

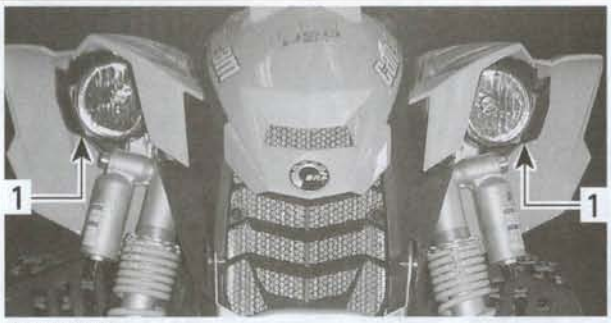

1. Bulb location

Pull back rubber boot and disconnect the bulb connector.

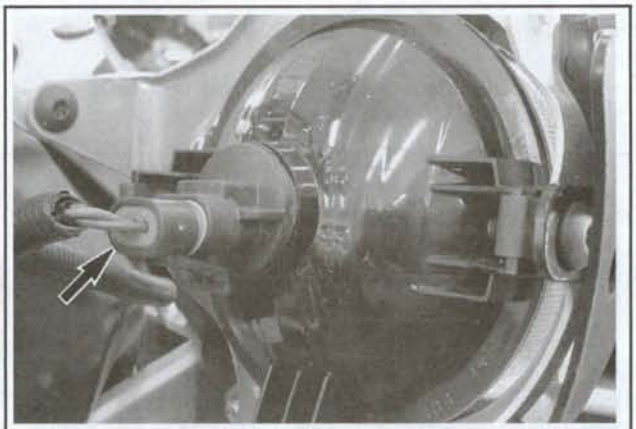

Rotate bulb counterclockwise.

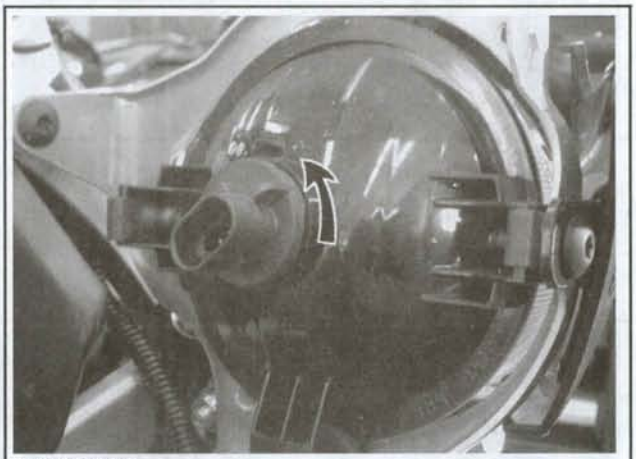

Replace defective bulb.

CAUTION: Never touch glass portion of a halogen bulb with bare fingers, it shortens its operating life. If glass is touched, clean it with isopropyl alcohol. It will not leave a film on the bulb.

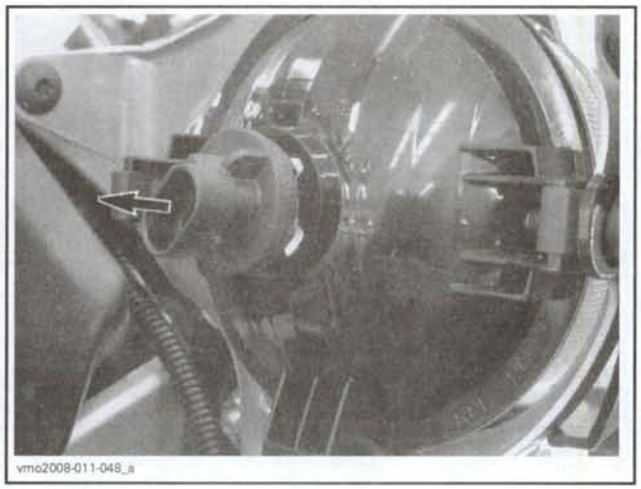
vmo2008-011-048_a

Reinstall removed parts in the reverse order of their removal.

Headlight Beam Aiming Adjustment

Adjust beam aiming as follows:

Using a long screwdriver, turn the adjusting screw to adjust beam height according to owner preference.

Adjust both headlights evenly.

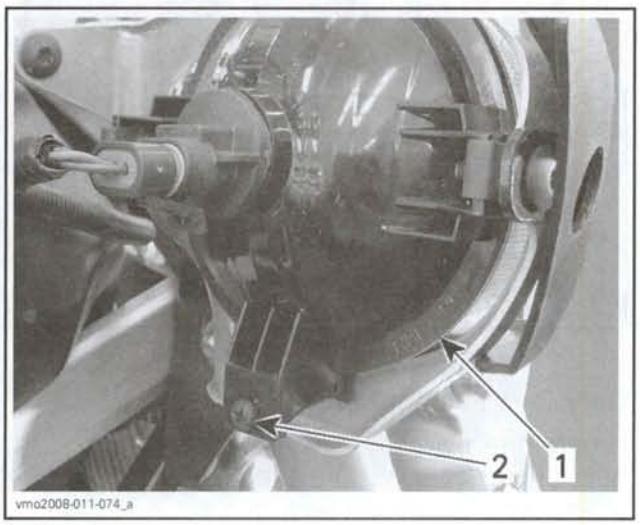

vmo2008-011-074_a

1. *Headlight*
2. *Adjusting screw*

HEADLIGHT SWITCH

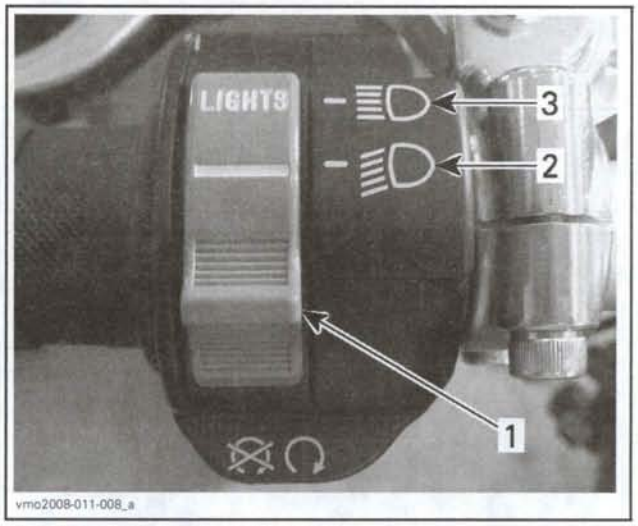

vmo2008-011-008_a

HEADLIGHT SWITCH FUNCTIONS
1. *Headlight switch*
2. *Low beam*
3. *High beam*

Headlight Switch Continuity Test

Remove the front body assembly, refer to the *BODY* section.

Disconnect the multifunction switch connector MG1.


vmr2008-026-003_b

MG1 CONNECTOR

Using the Fluke 115 multimeter (P/N 529 035 868), measure the resistance between wires on the steering side of the harness as per following table.

POSITION	WIRES	RESISTANCE
Switch to LO	Pins 4 (RED/YELLOW) and 2 (GREEN)	0.4 Ω max.
Switch to HI	Pins 4 (RED/YELLOW) and 5 (BLUE)	0.4 Ω max.

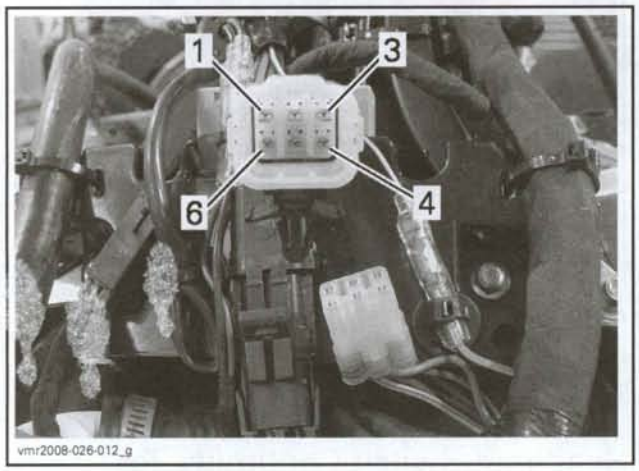

MG1 PIN-OUT

If you do not obtain continuity of headlight switch as specified in table, replace the multifunction switch. Refer to *STEERING SYSTEM*.

TAILLIGHT/BRAKE LIGHT

Taillight/Brake Light Operation

The taillight automatically comes on when the ignition switch is turned "ON" with the engine stop switch set to "RUN".

The brake light comes on when either the brake lever or brake pedal is depressed.

NOTE: When testing the brake light, always test it using both controls to make ensure both switches can turn on the brake light.

Taillight/Brake Light Circuit Test

No Taillight or Brake Light

If neither taillight or brake light come on, disconnect the taillight/brake light connector secured to the inside of the LH rear frame extension next to the battery compartment.

1. Taillight/brake light connector
2. Rear frame extension

Set engine stop switch to "RUN".

Set ignition switch to "ON".

Test for input voltage at the taillight/brake light connector pin 2 (RED/VIOLET wire).

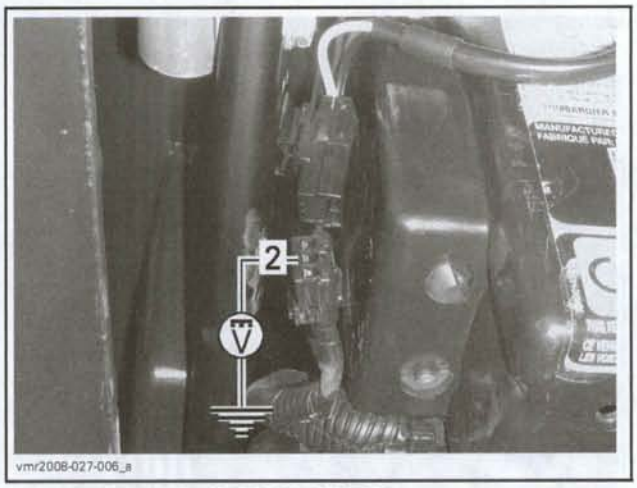

TAILLIGHT/BRAKE LIGHT CONNECTOR

Only One Filament Functions

If only one filament functions and replacing the bulb does not solve the problem, test the light ground circuits as follows.

- Turn ignition switch to the "OFF" position.
- Set multimeter to Ω.
- Measure continuity to ground at brake light connector as per following table.

CONTINUITY TEST TAILLIGHT/BRAKE LIGHT GROUND CIRCUIT		
CONTROL TO ACTUATE	Taillight/brake light connector	Resistance
NONE (TAILLIGHT)	Pin 1 (BLACK wire)	Close to 0 Ω
BRAKE LEVER	Pin 3 (BLACK/GREEN wire)	
BRAKE PEDAL		

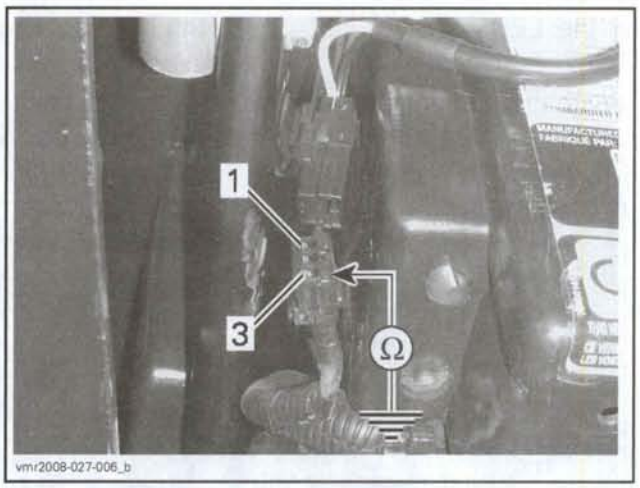

TAILLIGHT/BRAKE LIGHT CONTINUITY TEST

If you do not obtain close to 0 Ω through the taillight circuit, repair or replace wiring.

If you do not obtain close to 0 Ω through one of the brake light circuits, refer to the *BRAKES* section for brake lever and brake pedal switch testing and replacement.

Taillight/Brake Light Bulb Replacement

Unscrew lens screws to expose bulb.

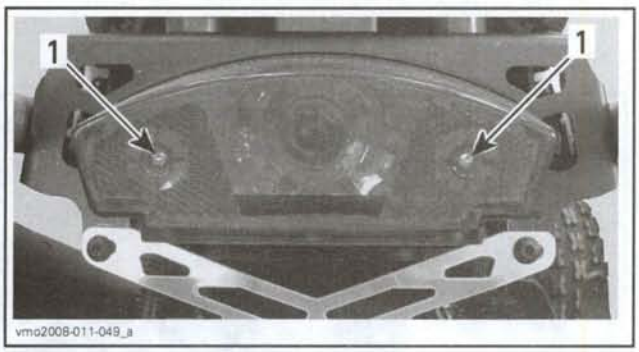

TYPICAL – TAILLIGHT ASSEMBLY
1. Screws

Push bulb in and hold while turning counterclockwise to release it from the socket.

Install the new bulb by first pushing it in, then turning it clockwise.

Set ignition switch to "ON" and test both the taillight and brake light functions.

NEUTRAL INDICATOR LIGHT (GREEN)

Neutral Indicator Light Operation

The neutral "N" indicator light is an LED that comes on only when the vehicle is powered and the transmission is in neutral. It is mounted in a cluster (dashboard) just ahead of the fuel cap and has no light test function.

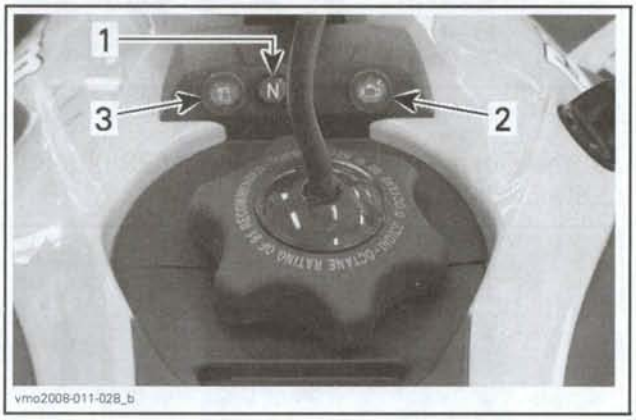

1. Neutral (N) indicator light
2. Check engine indicator light
3. Low fuel level indicator light

The light receives power from the headlight power regulator and is activated by the neutral switch in the transmission which provides a ground to the light when the transmission is in neutral.

If the neutral indicator light does not come on, carry out the following procedures.

Neutral Indicator Light Testing

If the neutral indicator light will not come on with the transmission in neutral, first test the neutral position switch as it is easily accessible. Refer to the *GEARBOX* section.

If the neutral position switch tested good, remove the indicator lights dashboard, refer to the *BODY* section.

Disconnect the neutral indicator light connectors.

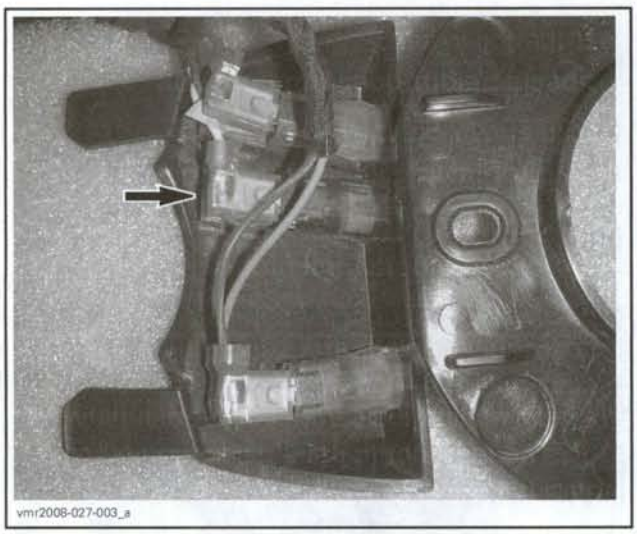

NEUTRAL INDICATOR LIGHT CONNECTORS

Set the Fluke 115 multimeter (P/N 529 035 868) to the diode function.

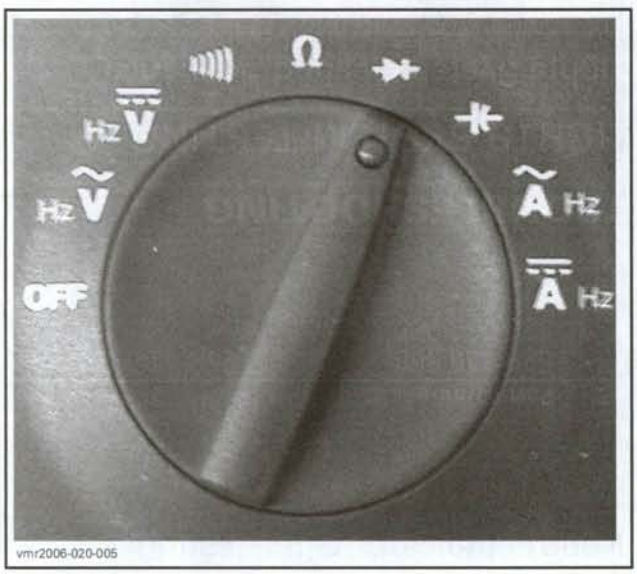

TEST LED WITH DIODE FUNCTION

Test the LED indicator light as per following table.

NOTE: Do not use Ω function to check a LED.

LED TESTING		
PROBES		MULTIMETER READING
Red probe on (+) terminal	Black probe on (–) terminal	1.6 to 2.0 Vdc
Red probe on (–) terminal	Black probe on (+) terminal	OL (open circuit)

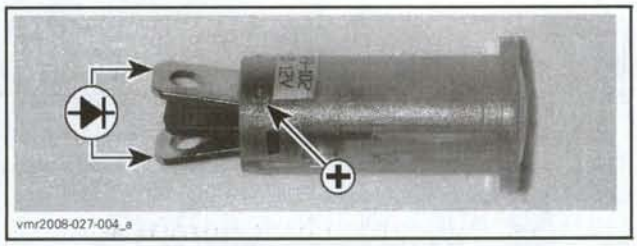

NEUTRAL INDICATOR LIGHT LED TESTING

If you do not obtain readings as per table, replace the LED indicator light.

If the LED tested good, carry out the following tests.

- With the transmission set to neutral, measure the ground circuit continuity from the WHITE/GREEN wire connector to ground.

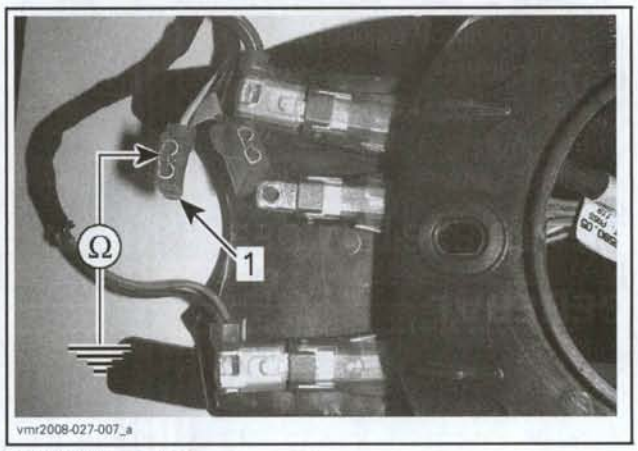

CONTINUITY TEST
1. WHITE/GREEN wire connector to ground

- If the ground circuit was good, set the ignition switch to "ON".
- Start engine.
- Set multimeter to Vdc and measure for the light input voltage at the RED/VIOLET wire connector. You should obtain charging system voltage.

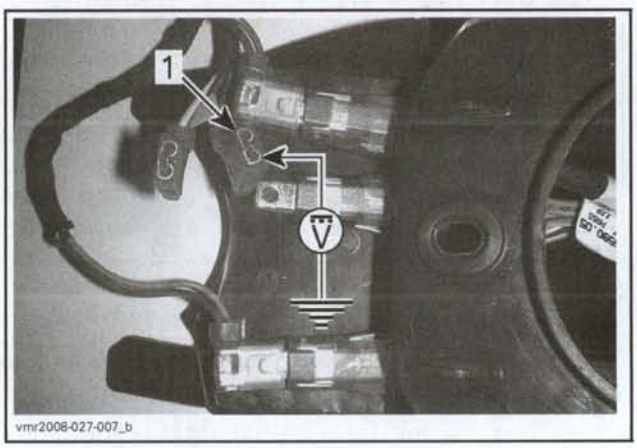

NEUTRAL INDICATOR LIGHT INPUT VOLTAGE TEST
1. RED/VIOLET wire to ground

- Repair or replace wiring as required.

NOTE: When reconnecting the LED connectors, be sure to connect the RED/VIOLET wire to the positive (+) LED terminal or it will not function as it will be in reverse polarity.

Neutral Indicator Light Removal

Remove dashboard, refer to *BODY* section.

Disconnect the wires from the indicator light.

Press both tabs then push indicator light out of the dashboard.

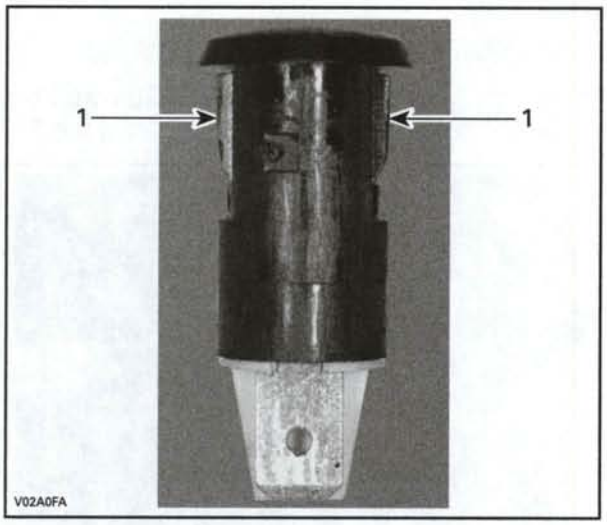

1. Tabs

Neutral Indicator Light Installation

For the installation, reverse the removal procedure.

NOTE: The LED is subject to polarity. Make sure to reconnect the RED/VIOLET wire to the positive (+) terminal.

CHECK ENGINE INDICATOR LIGHT (YELLOW)

Check Engine Indicator Light Operation

The check engine indicator light is an LED that will come on flashing (momentarily) when the power is first applied to the vehicle (light test function). It is mounted in a cluster (dashboard) just ahead of the fuel cap.

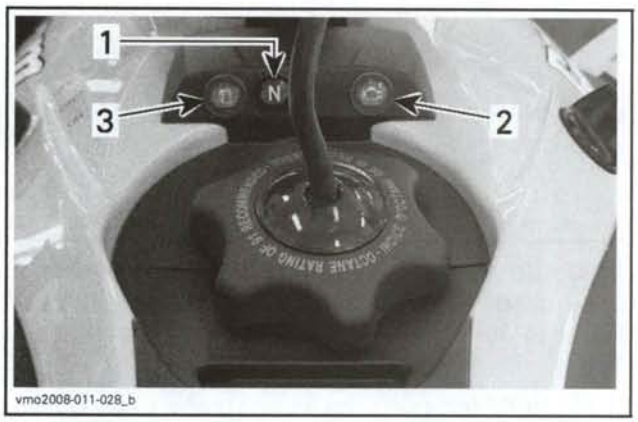

1. Neutral (N) indicator light
2. Check engine indicator light
3. Low fuel level indicator light

The light receives power from the cooling fan and accessories fuse. When power is first turned on, or when the ECM detects an engine related fault, it supplies a ground to the light to advise you of an abnormal engine condition.

Refer to the *MONITORING SYSTEM/FAULT CODES* section for more information on the light function.

Check Engine Indicator Light Testing

If the check engine indicator light does not come on, carry out the following procedures.

Remove the dashboard, refer to the *BODY* section.

Disconnect the check engine indicator light connectors.

Test the LED as per the *NEUTRAL INDICATOR LIGHT* procedure.

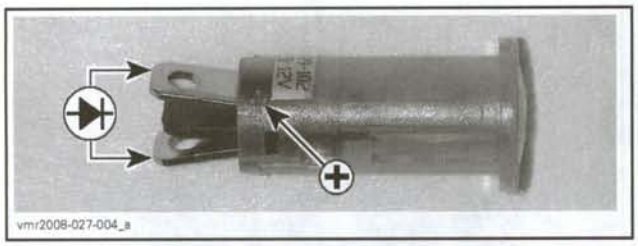

If you do not obtain readings as per previous table, replace the check engine indicator light (LED). Refer to *NEUTRAL INDICATOR LIGHT* in this section.

If you obtained readings as per table, carry out the following procedures.

Set ignition switch to "ON".

Start engine.

Test for light input voltage at the check engine indicator light RED/BLACK wire connector.

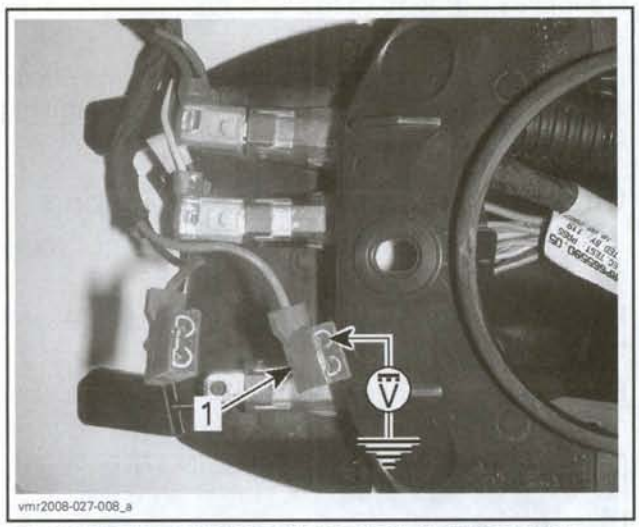

CHECK ENGINE INDICATOR LIGHT INPUT VOLTAGE TEST
1. RED/BLACK wire to ground

If the light input voltage is good, turn ignition switch to "OFF".

Remove the front body assembly, refer to the *BODY* section.

Disconnect the ECM connector.

Install the ECM connector onto the ECM adapter tool (P/N 529 036 085).

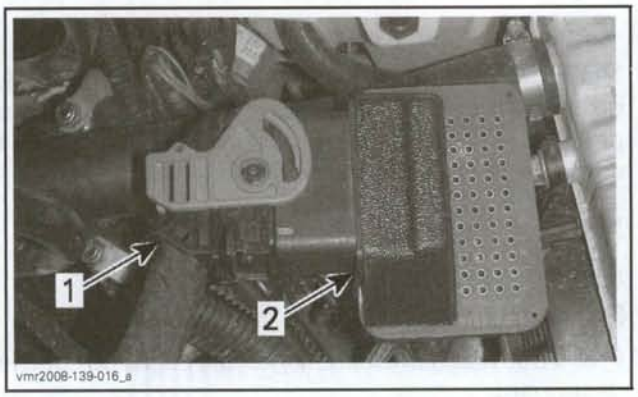

TYPICAL
1. ECM connector
2. ECM adapter tool

Test for continuity of the PINK/ORANGE wire from the LED terminal to the ECM adapter tool pin K4.

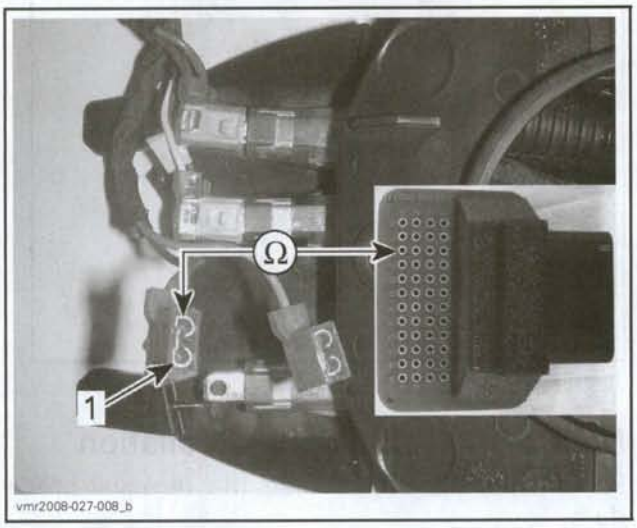

CONTINUITY TEST OF CHECK ENGINE INDICATOR LIGHT
1. PINK/ORANGE wire to K4

If you do not obtain continuity, repair or replace the wiring/connectors.

Install all removed components and connectors.

NOTE: When reconnecting the check engine indicator light connectors, be sure to connect the RED/BLACK wire to the positive (+) terminal of the LED or it will not function as it will be in reverse polarity.

LOW FUEL LEVEL INDICATOR LIGHT (YELLOW)

Low Fuel Level Indicator Light Operation

The low fuel indicator light only comes on to advise you of a low fuel condition. It does not have a light test function and is located in a cluster (dashboard) just ahead of the fuel tank cap.

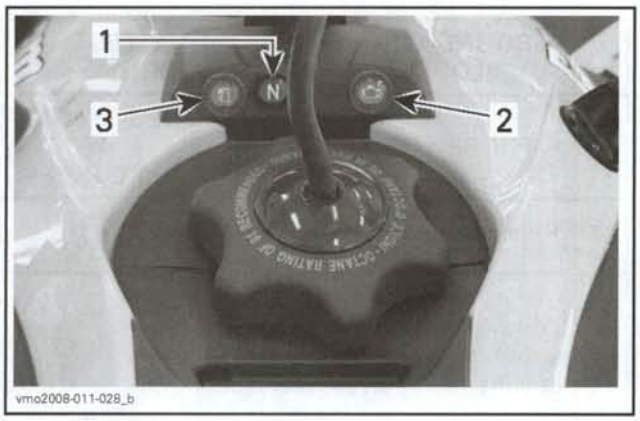

1. Neutral (N) indicator light
2. Check engine indicator light
3. Low fuel level indicator light

The low fuel level indicator light looks like the check engine and neutral indicator lights, but it is different in that it is actually a light bulb and not an LED.

The low fuel level sensor is a thermistor mounted on the fuel pump module inside the fuel tank.

When the electrical system is powered, a current circulates through the negative temperature coefficient sensor (NTC) which produces heat. The fuel in the tank cools the sensor (a thermistor) preventing its resistance value from dropping, therefore limiting current flow due to the high resistance of the thermistor.

When the fuel level has dropped to the point where it cannot sufficiently cool the thermistor, its resistance value drops due to the increase in temperature. This causes an increase in current flow to the point where the low fuel level light will come on, at first dim, then brighter as the current flow increases.

Low Fuel Level Indicator Light Dynamic Test

To test the low fuel level indicator light operation, remove the fuel cap and syphon the fuel out of the tank until it is just below the fuel pump.

Install the fuel cap.

Set the engine stop switch to "RUN".

Set ignition switch to "ON".

As the thermistor heats up with power applied, the low fuel level light should come on.

If the light does not come on, set the ignition switch to "OFF" and carry out the following *LOW FUEL LEVEL INDICATOR LIGHT TESTING* procedures.

Low Fuel Level Indicator Light Testing

To test the low fuel indicator light, carry out the following procedures.

Remove the dashboard, refer to the *BODY* section.

Disconnect the two wires from the indicator light.

Measure for continuity through the light bulb. You should measure approximately 22 ohms.

If the light bulb does not test good, replace the low fuel level indicator light. Refer to *NEUTRAL INDICATOR LIGHT* in this section.

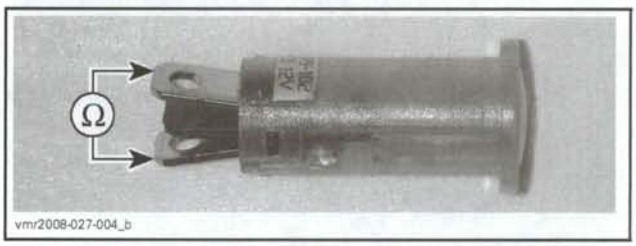

Measure the ground circuit continuity through the sensor to chassis ground as per following table.

LOW FUEL LEVEL SENSOR RESISTANCE TEST		
PROBE POSITIONS		RESISTANCE AT 20°C (68°F)
BROWN/PINK wire terminal at light	Chassis ground	1000 Ω ± 150 Ω

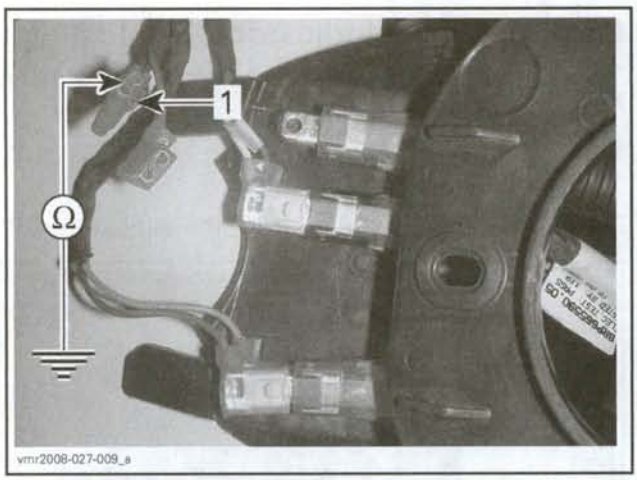

LOW FUEL LEVEL SENSOR RESISTANCE TEST
1. BROWN/PINK wire to ground

NOTE: If the sensor resistance is not measured as specified at the prescribed temperature, the resistance reading may be outside of the acceptable tolerance even though the sensor is in good working condition.

If the resistance is not as per table, or circuit to ground is open, remove the front body assembly. Refer to the *BODY* section.

Disconnect the fuel pump connector.

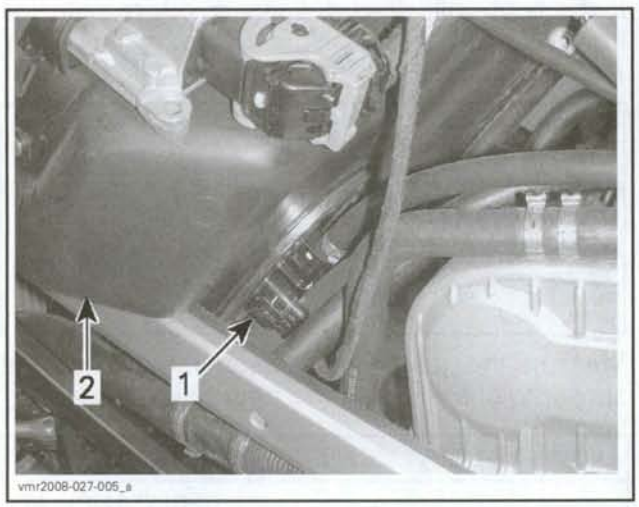

1. Fuel pump connector
2. Fuel tank

Measure for continuity through the low fuel level sensor at the pump and the ground circuit wiring as per following table.

GROUND CIRCUIT CONTINUITY TEST (LOW FUEL LEVEL SENSOR)		
PROBE POSITIONS		RESISTANCE AT 20°C (68°F)
Fuel pump connector pin 1	Fuel pump connector pin 2	1000 Ω ± 150 Ω
BROWN/PINK wire terminal at light	Fuel pump wiring connector pin 1 (BROWN/PINK wire)	Close to 0 Ω
Fuel pump wiring connector pin 2 (BLACK wire)	Chassis ground	

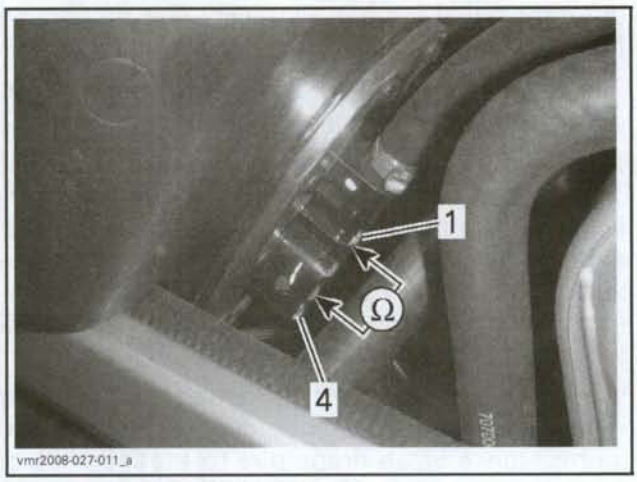

FUEL PUMP CONNECTOR PIN-OUT

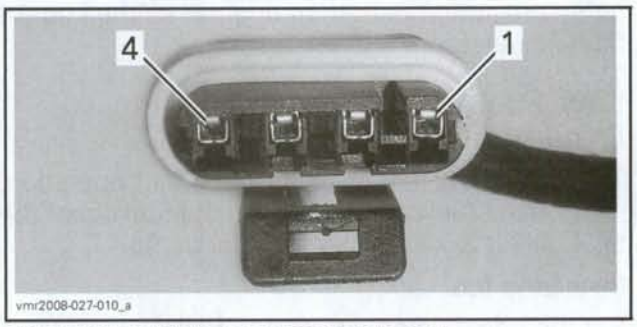

FUEL PUMP WIRING CONNECTOR (PIN-OUT)

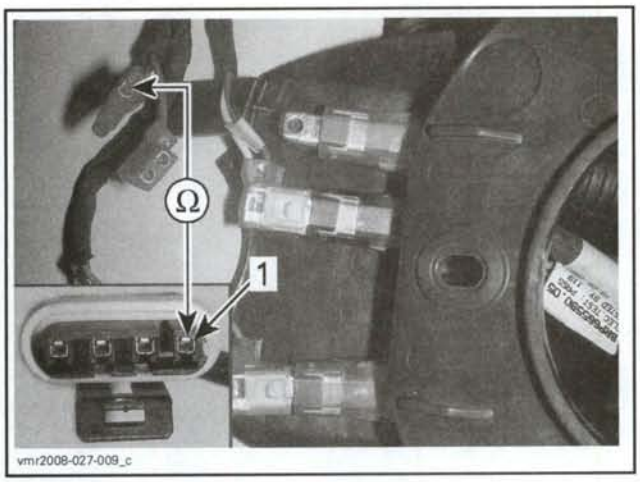

GROUND CIRCUIT CONTINUITY TEST (LOW FUEL LEVEL SENSOR)
1. Pin 1 (BROWN/BLACK wire)

If the low fuel level sensor resistance is not as specified at the indicated temperature, the fuel pump will have to be replaced. Refer to the *FUEL TANK/FUEL PUMP* section for replacement procedures.

If you do not obtain continuity through wiring, repair or replace wiring/connectors.

Reinstall the red pin lock on the connector and reconnect the fuel pump connector as required.

If wiring and sensor tested good, carry out the *LOW FUEL LEVEL LIGHT INPUT VOLTAGE TEST.*

Input Voltage Test (low fuel level indicator light)

Set the engine stop switch to "RUN".

Set ignition switch to "ON".

Measure voltage at the low fuel level light RED/BLACK wire connector. You should obtain battery voltage.

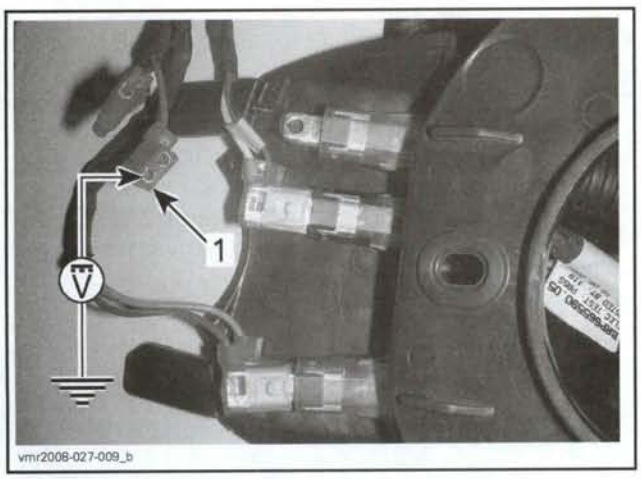

INPUT VOLTAGE TEST (LOW FUEL LEVEL INDICATOR LIGHT)
1. RED/BLACK wire to ground

If you do not obtain battery voltage, repair or replace wiring/connectors as required.

DRIVE CHAIN/REAR AXLE

SERVICE TOOLS

Description	Part Number	Page
bearing remover/installer tool	529 035 918	282
rear axle key	529 036 082	279

SERVICE PRODUCTS

Description	Part Number	Page
CV grease	293 550 019	279, 281
Loctite 767 (antiseize lubricant)	293 800 070	282
Loctite 609	413 703 100	281
pulley flange cleaner	413 711 809	280

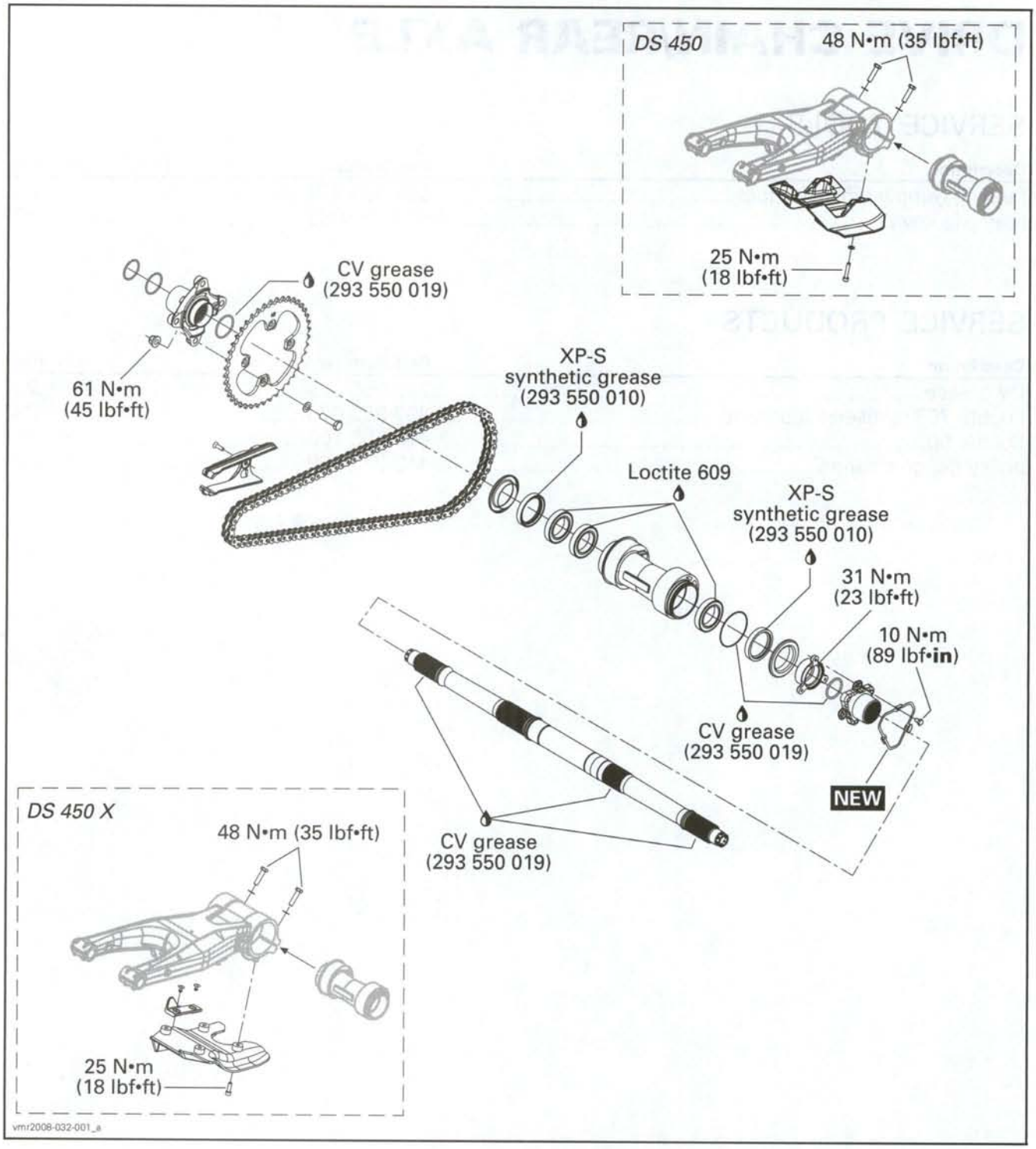
DS 450
48 N•m (35 lbf•ft)
25 N•m
(18 lbf•ft)
CV grease
(293 550 019)
61 N•m
(45 lbf•ft)
XP-S
synthetic grease
(293 550 010)
Loctite 609
XP-S
synthetic grease
(293 550 010)
31 N•m
(23 lbf•ft)
10 N•m
(89 lbf•in)
CV grease
(293 550 019)
NEW
CV grease
(293 550 019)
DS 450 X
48 N•m (35 lbf•ft)
25 N•m
(18 lbf•ft)
vmr2008-032-001_a

GENERAL

During assembly/installation, use the torque values and service products as in the exploded views.

Clean threads before applying a threadlocker. Refer to *SELF-LOCKING FASTENERS* and *LOCTITE APPLICATION* at the beginning of this manual for complete procedure.

⚠ WARNING

Torque wrench tightening specifications must strictly be adhered to.
Locking devices (e.g.: locking tabs, elastic stop nuts, cotter pins, etc.) must be replaced with new ones.

CAUTION: During installation, make sure every part is free from old grease and dirt. This allows for a clean reassembly and will avoid premature wear caused by dirt contamination.

After each repair, ride the vehicle for a few minutes and make sure the job is successful; i.e. axle is not loose, chain is not rubbing on any part or making noise, rear brake operates correctly, etc.

PROCEDURES

DRIVE CHAIN

Drive Chain Adjustment

NOTE: Always adjust drive chain with the driver, or equivalent weight, seated on the vehicle.

Check drive chain free play midway between sprockets, on upper run of drive chain.

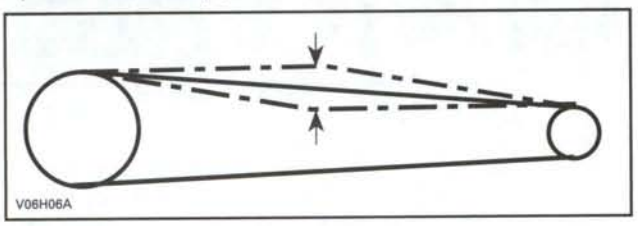

Drive chain free play should allow the following vertical movement by hand.

DRIVE CHAIN FREE PLAY	22 mm (7/8 in)

Check drive chain free play at several points along the chain. The free play should remain constant. Otherwise, inspect drive chain.

NOTE: A drive chain with uneven free play will jump and be noisy.

If drive chain free play is constant but out of specification, adjust as follow:

Loosen rear axle lock bolts.

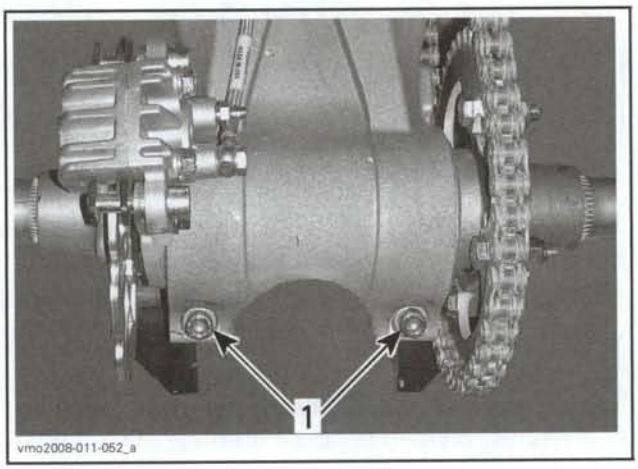

1. Rear axle lock bolts

Insert screwdriver pin (from the vehicle's tool kit) or an equivalent tool through rear sprocket hub and into chain tensioner.

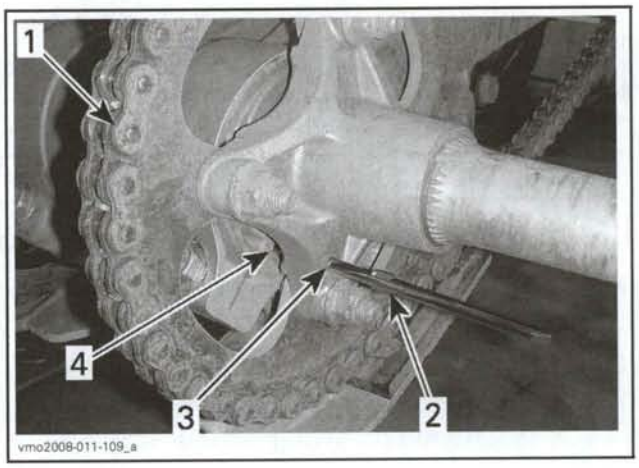

1. Drive chain
2. Screwdriver pin
3. Rear sprocket hub
4. Chain tensioner

With the screwdriver pin properly in place, move the vehicle forward to increase free play or backward to decrease free play. Adjust as per specification.

Tighten the rear axle lock bolts to 48 N•m (35 lbf•ft).

Drive Chain Inspection

Inspect drive chain for:
- Damaged rollers
- Damaged or missing O-rings
- Kinked or binding links (try to lubricate)
- Rotated pins.

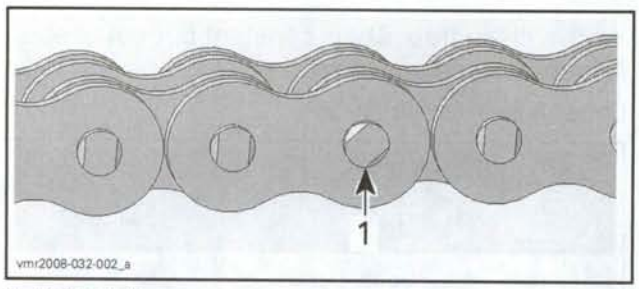

1. Rotated pin

Measure elongation or stretching of drive chain as per following procedures:

If the chain is installed on the vehicle, tension the top of chain by placing transmission on 1st gear and move vehicle backward.

If the chain is on the bench, securing one end and apply a tension load of approximately 20 kg (45 lb).

Measure the distance between a span of 16 pins (center to center), using a caliper or a ruler.

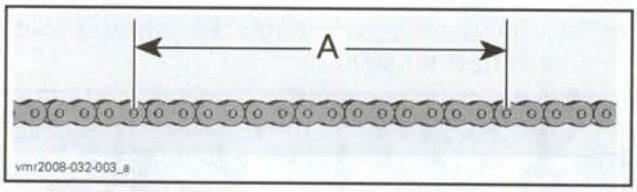

A. Maximum stretching

DRIVE CHAIN MAXIMUM STRETCHING	
SERVICE LIMIT	256.5 mm (10.098 in)

Replace drive chain if out of specification or if any defect were detected.

CAUTION: Replace drive chain and sprockets together to prevent premature wear.

Check slider shoe on swing arm. Replace as required.

Drive Chain Cleaning

CAUTION: Never wash the chain with a high pressure washer or gasoline. Damage to the O-rings will result, causing premature wear and drive chain failure.

Clean the side surfaces of the chain with a dry cloth.

NOTE: Do not brush chain.

Drive Chain Lubrication

Lubricate only with an approved O-ring chain lubricant. Other commercial chain lubricant may contain solvent which could damage the O-rings.

Drive Chain Removal

Select a level surface and set transmission to NEUTRAL.

Loosen rear axle lock bolts.

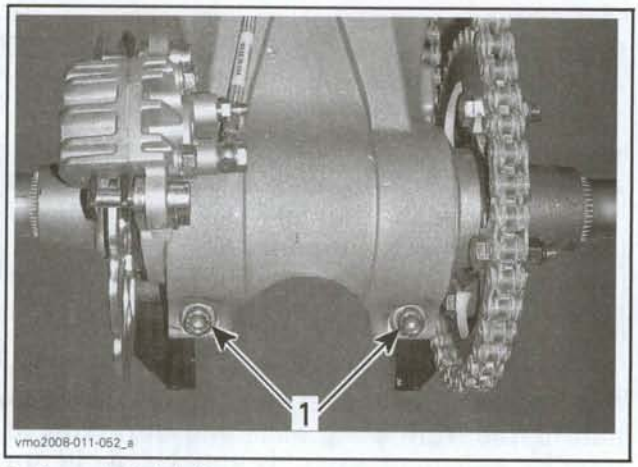

1. Rear axle lock bolts

Insert screwdriver pin (from the vehicle's tool kit) or an equivalent tool through rear sprocket hub and into chain tensioner.

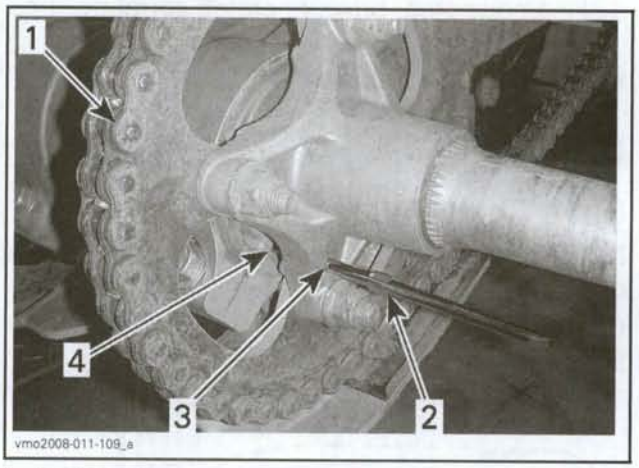

1. Drive chain
2. Screwdriver pin
3. Rear sprocket hub
4. Chain tensioner

Move the vehicle backward to release chain tension.

Lift the rear of vehicle and install jack stands under the frame to support vehicle off the ground.

Remove swing arm protector.

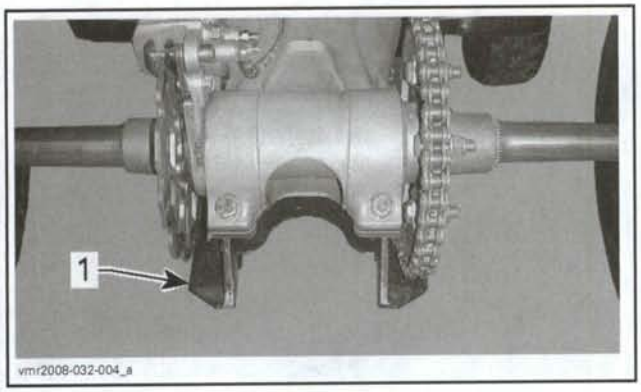

1. Swing arm protector

Remove drive chain from rear sprocket.

Remove bolt securing bell crank lever to swing arm.

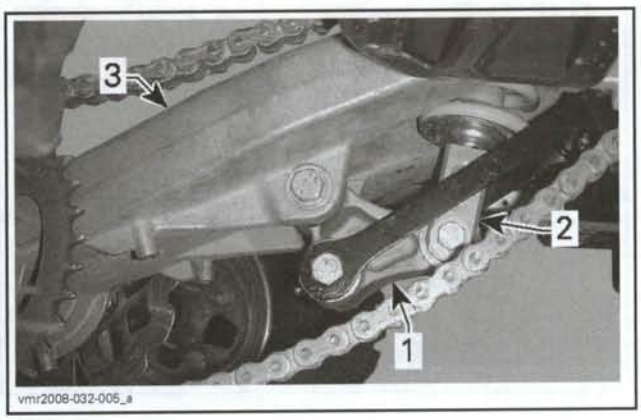

1. Bell crank lever
2. Rear shock absorber
3. Swing arm

Remove front screw holding brake hose to swing arm.

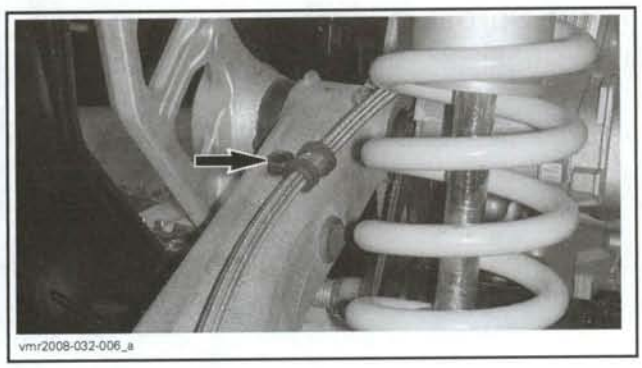

Remove front sprocket protector.

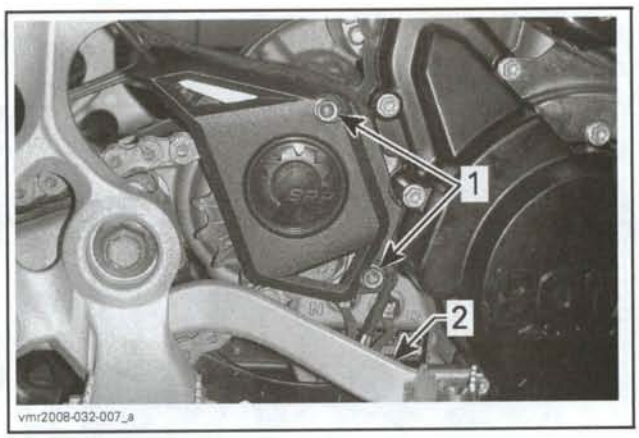

1. Protector screws
2. Brake pedal

Remove chain guard.

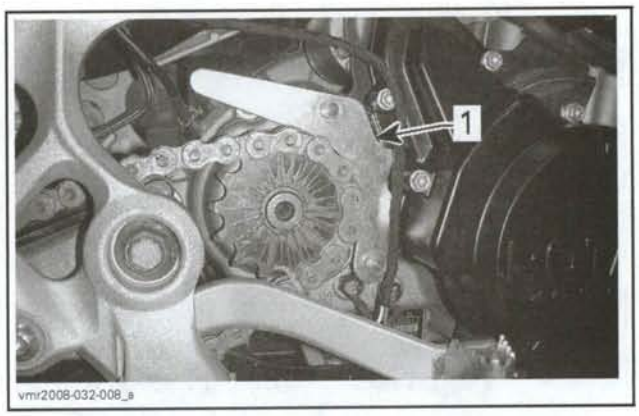

1. Chain guard

Remove drive chain from front sprocket.

Remove swing arm bolt.

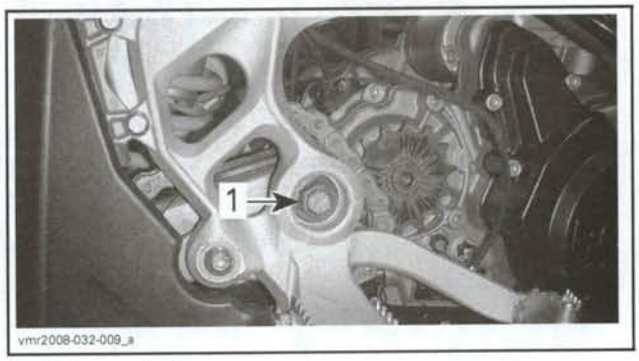

1. Swing arm bolt

Move swing arm backward. Support swing arm to avoid damaging brake hose.

Remove drive chain from vehicle.

Drive Chain Installation

Installation is the reverse of the removal. However pay attention to the following.

Position wires from indicator switches on front sprocket protector before installing it.


vmr2008-032-010

Adjust drive chain. Refer to *DRIVE CHAIN ADJUSTMENT* for the proper procedure.

FRONT SPROCKET

Front Sprocket Removal

Loosen drive chain. Refer to *DRIVE CHAIN REMOVAL* for the procedure.

Remove front sprocket protector.

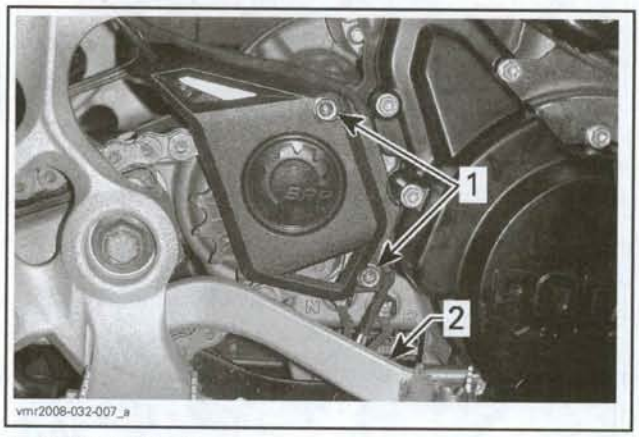

vmr2008-032-007_a

1. Protector screws
2. Brake pedal

Remove chain guard.

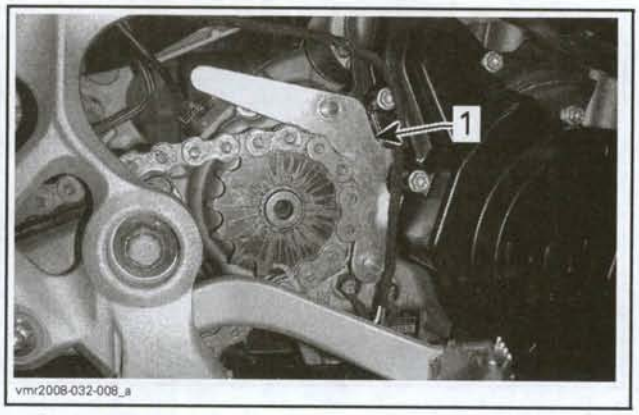

vmr2008-032-008_a

1. Chain guard

Remove and discard circlip at the center of front sprocket.

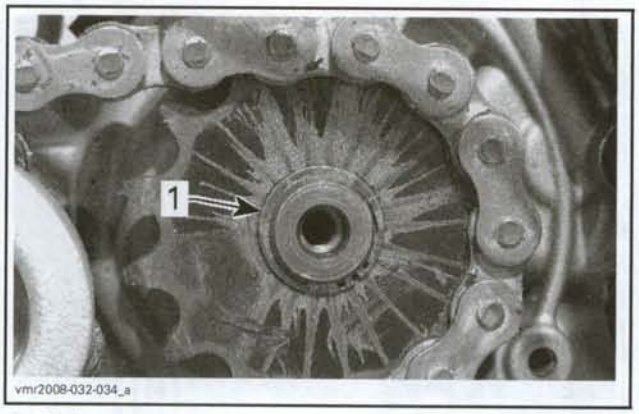

vmr2008-032-034_a

1. Circlip

Remove front sprocket and chain from engine output shaft.

Remove front sprocket from chain.

Front Sprocket Inspection

Check front sprocket for:
- Distortion
- Excessive wear
- Other damages.

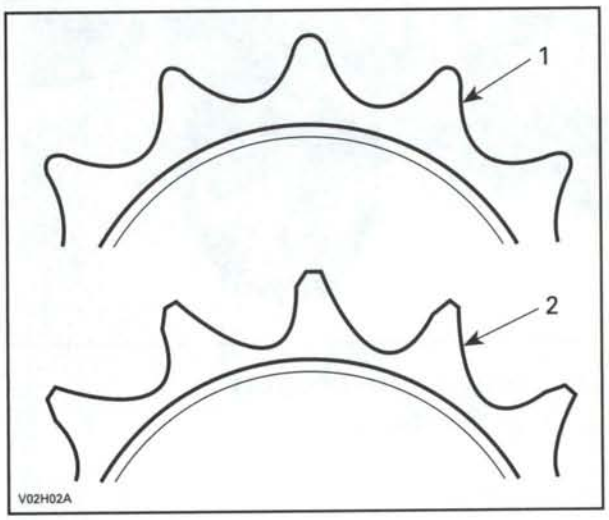

1. Good
2. Worn

CAUTION: Replace drive chain and sprockets together to prevent premature wear.

Check if O-ring on main shaft is:
- Brittle
- Hard
- Damaged.

Replace if necessary.

Inspect main shaft splines for wear or other damages. If necessary replace main shaft, refer to *GEARBOX* section.

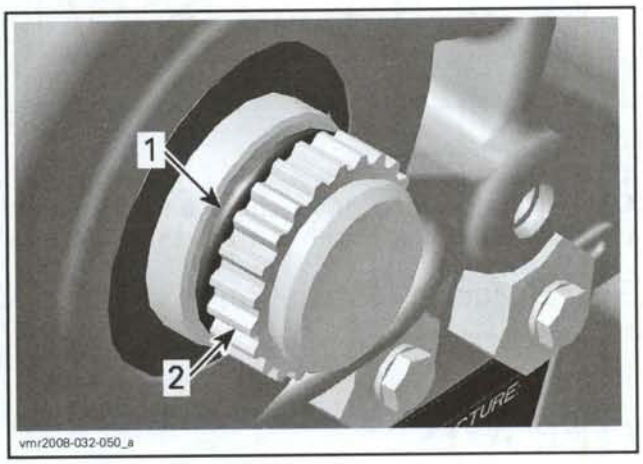

1. O-ring
2. Main shaft splines

Front Sprocket Installation

The installation is the reverse of the removal procedure.

Install a **NEW** circlip.

REAR SPROCKET

Rear Sprocket Removal

Lift the rear of vehicle and install jack stands under the frame to support vehicle off the ground.

Remove the RH rear wheel.

Remove swing arm protector.

Loosen rear sprocket nuts.

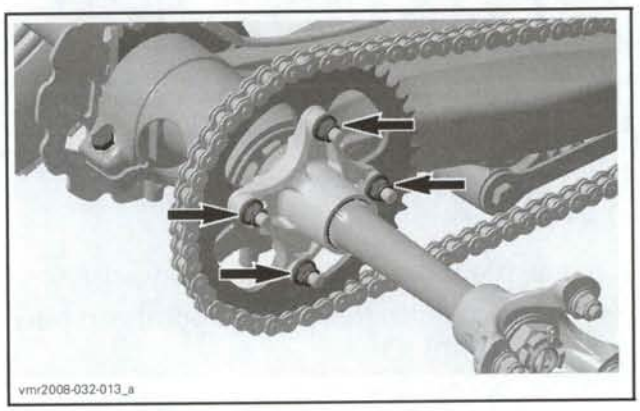

Loosen rear axle lock bolts.

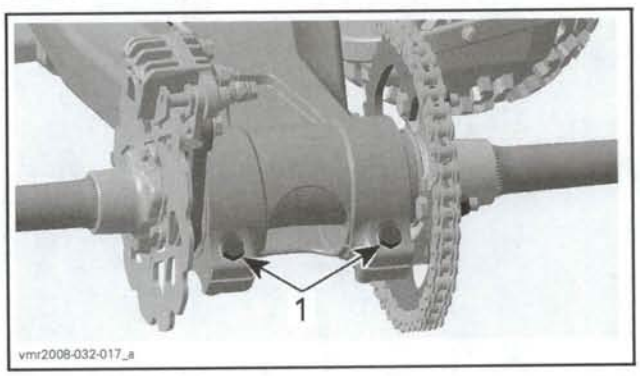

1. Rear axle lock bolts

Insert screwdriver pin (from the vehicle's tool kit) through rear sprocket hub and into chain tensioner.

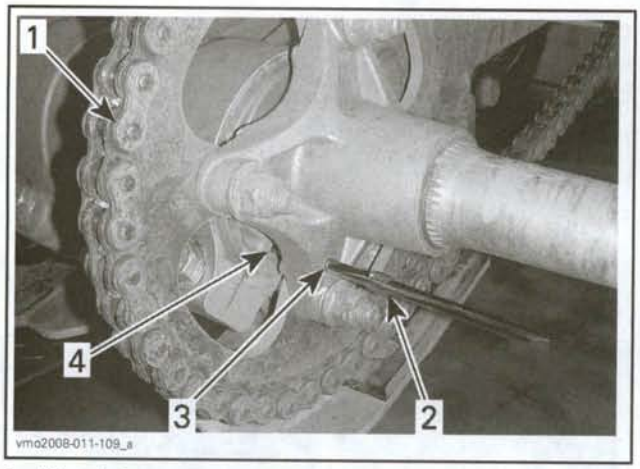

1. *Drive chain*
2. *Screwdriver pin*
3. *Rear sprocket hub*
4. *Chain tensioner*

Turn the axle forward to release chain tension.

Remove drive chain from rear sprocket and place it on swing arm.

Remove rear sprocket bolts.

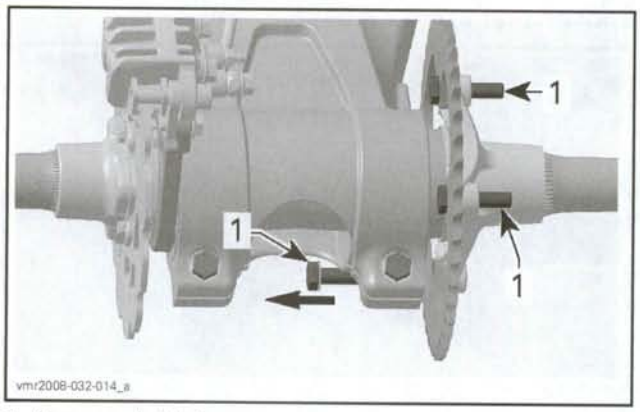

1. *Rear sprocket bolts*

Remove the rear sprocket from its hub.

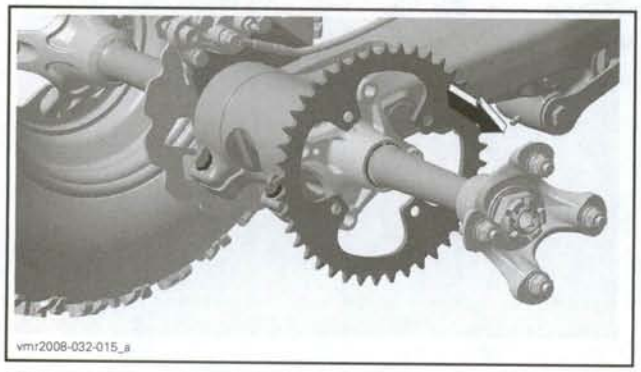

Slide it over wheel hub.

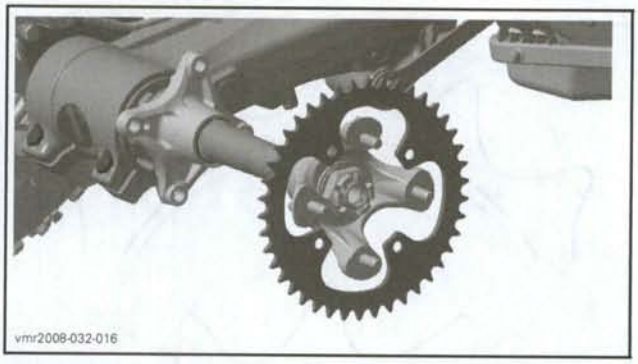

Rear Sprocket Inspection

Check rear sprocket for:

- Distortion
- Excessive wear
- Other damages.

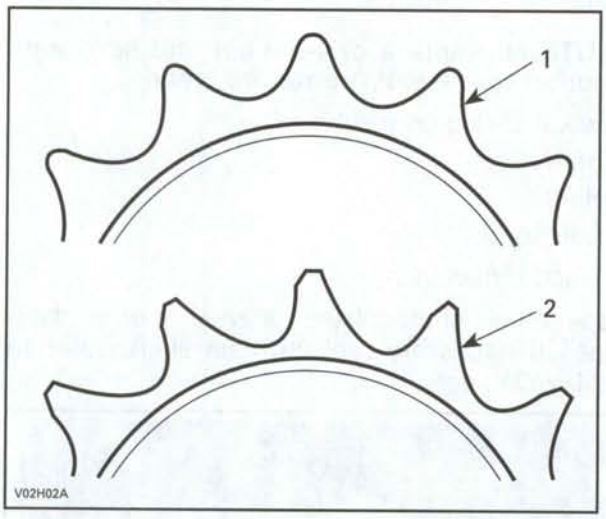

1. *Good*
2. *Worn*

CAUTION: Replace drive chain and sprockets together to prevent premature wear.

Rear Sprocket Installation

The installation is the reverse of the removal procedure.

REAR AXLE

Rear Axle Removal

Select a level surface and set transmission to NEUTRAL.

Loosen wheel nuts.

Lift the rear of vehicle and install jack stands under the frame to support vehicle off the ground.

Remove both wheels and wheel hubs. Refer to *WHEELS AND TIRES* section.

Remove brake disc hub. Refer to *BRAKE SYSTEM* section.

Using the axle key (P/N 529 036 082), unscrew the axle nut.

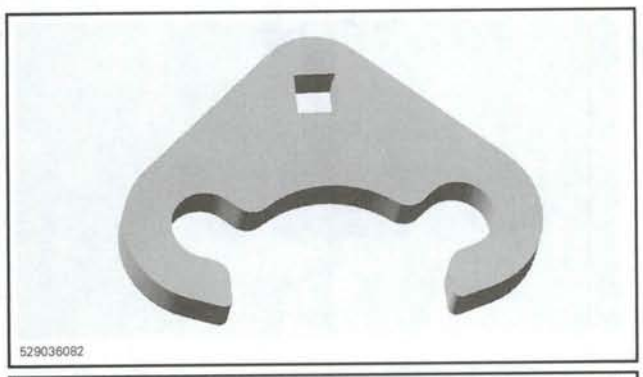

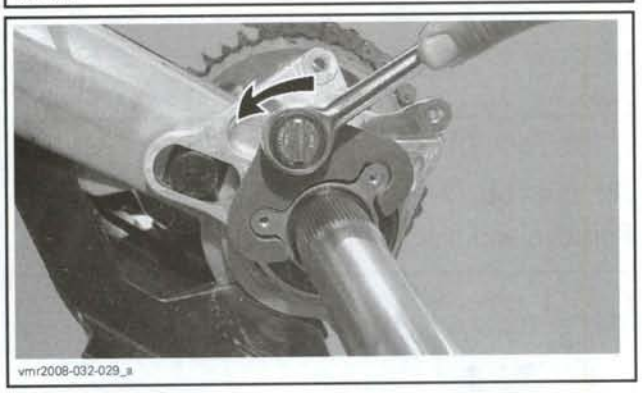

Remove the O-ring behind the axle nut.

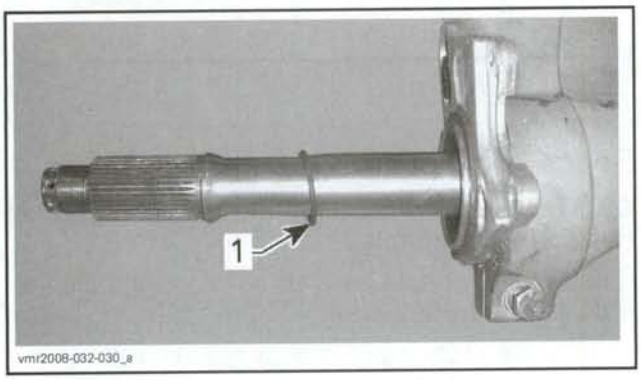

1. Axle nut O-ring

Release drive chain tension.

Remove drive chain from rear sprocket. Lay the drive chain on swing arm.

Remove the rear axle by pulling it on the RH side.

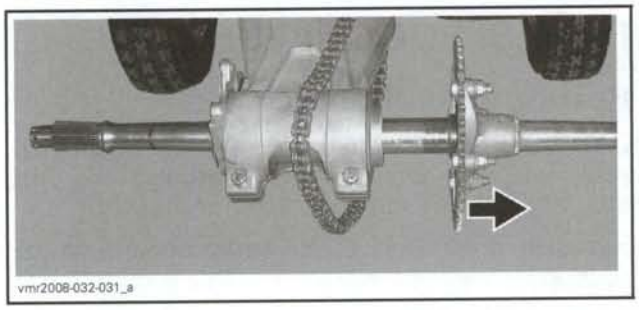

Rear Axle Inspection

Check axle for:

- Bending
- Torsion
- Rust (indicates a possible damage to axle)
- Bearing surfaces condition.

Replace rear axle as required.

Rear Axle Installation

Insert rear axle into chain tensioner.

On LH side, install the O-ring. Push it inside chain tensioner.

Install axle nut.

Using the rear axle key (P/N 529 036 082), tighten axle nut to 31 N•m (23 lbf•ft).

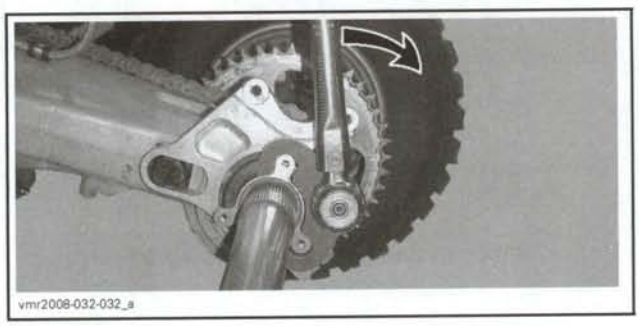

CAUTION: It is very important to place the torque wrench perpendicularly with the special tool.

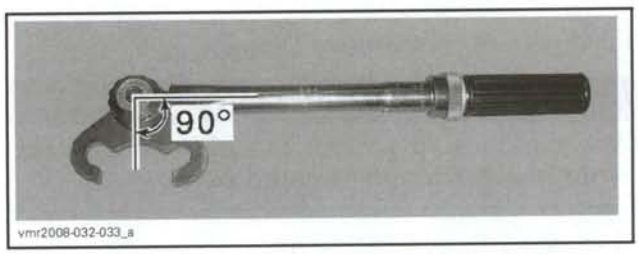

Apply CV grease (P/N 293 550 019) on all rear axle splines.

Install all other removed parts.

REAR SPROCKET HUB

Rear Sprocket Hub Removal

CAUTION: Removing rear sprocket hub from rear axle will permanently damage the hub splines. Do not remove hub needlessly.

Remove *REAR SPROCKET*, see procedure in this section.

Remove *REAR AXLE* from vehicle, see procedure in this section.

Using an appropriate steel tube as a pusher, press the hub down approximately 2 mm (.080 in) to allow C-clip removal.

NOTE: Heat sprocket hub in the center area to allow hub displacement.

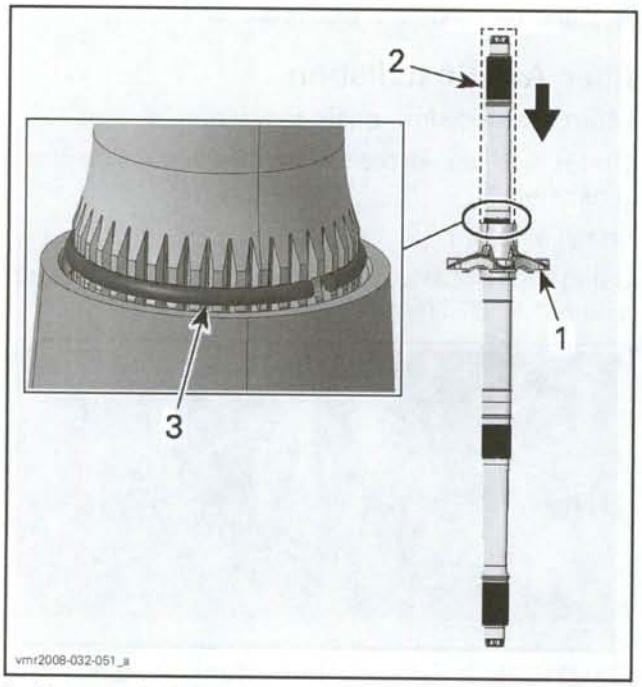

1. *Rear sprocket hub*
2. *Steel tube used as a pusher*
3. *C-clip*

Pull tube out and remove C-clip.

⚠ WARNING

Wear gloves to handle the parts to protect your hands from the heated parts.

Turn rear axle upside down.

Press the hub out of rear axle.

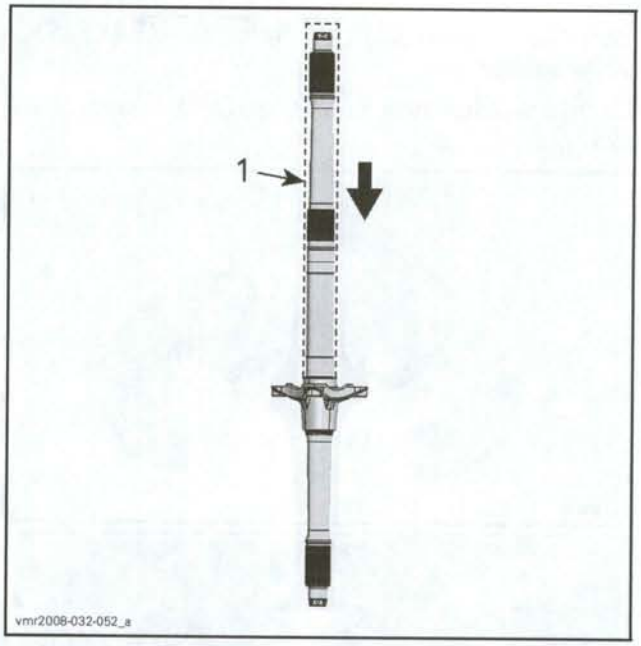

1. *Steel tube used as a pusher*

Discard hub.

Remove and discard the O-ring.

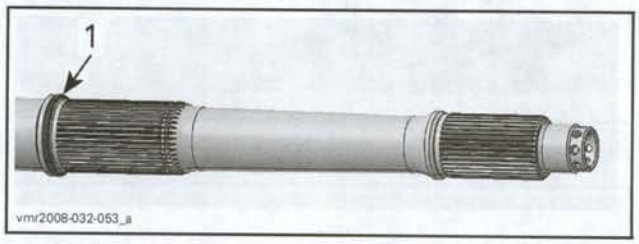

1. *O-ring*

Rear Sprocket Hub Installation

CAUTION: Never reinstall a removed sprocket hub. Always install a new one.

Clean rear axle splines with pulley flange cleaner (P/N 413 711 809).

Install a **NEW** O-ring on rear axle and properly seat against the axle flange.

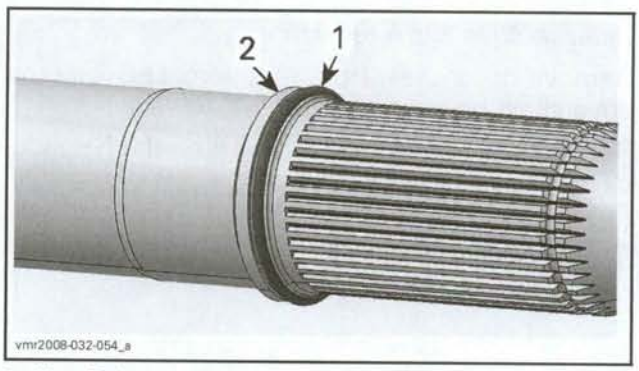

1. *New O-ring*
2. *Axle flange*

Apply CV grease (P/N 293 550 019) on O-ring.

Insert a **NEW** hub on axle and align splines.

Using the same steel tube as for removal, press hub until the C-clip groove allows C-clip insertion.

CAUTION: Be careful not to press more than needed. Otherwise, the O-ring might be damaged.

Install C-clip.

Press hub in the opposite direction until hub bottoms on the C-clip.

CHAIN TENSIONER

Chain Tensioner Inspection

Check seals for damages. Replace if necessary.

Check if the bearings turn smoothly and freely. Replace them if necessary.

NOTE: If bearings were seized on rear axle, carefully inspect it. New bearings must have a slide fit on the axle.

Chain Tensioner Removal

Remove rear axle. Refer to *REAR AXLE* above for complete procedure.

Remove the circlip on the LH side of chain tensioner.

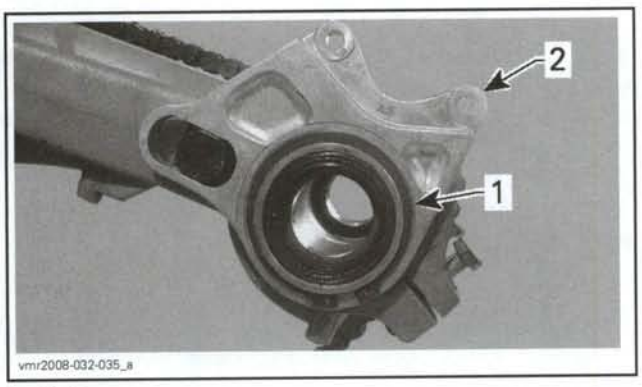

1. Circlip
2. Caliper bracket

Remove caliper bracket.

1. Pull off bracket

Remove chain tensioner from the RH side.

Chain Tensioner Disassembly

Remove and discard both seals.

Using a heat gun, heat chain tensioner lobes.

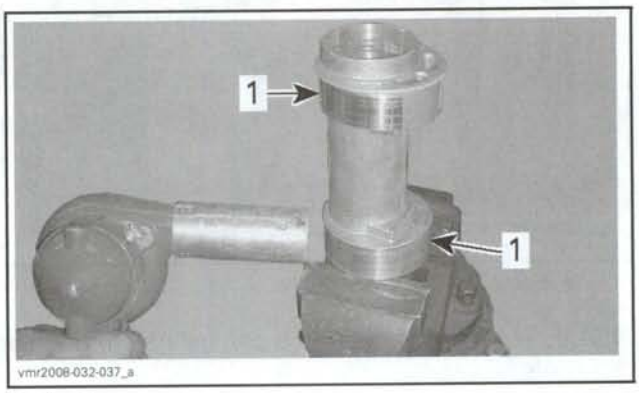

1. Heat here

Drive bearings out by using a punch.

NOTE: Support chain tensioner properly to avoid damaging it.

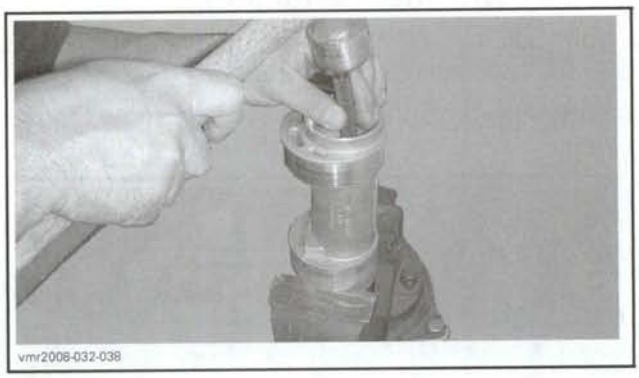

Chain Tensioner Assembly

Clean inside and outside of chain tensioner to remove antiseize and adhesive products.

Apply a thin layer of Loctite 609 (P/N 413 703 100) on outer race of each bearing.

CAUTION: On rear sprocket side, bearings could stick together if a large amount of Loctite 609 is used.

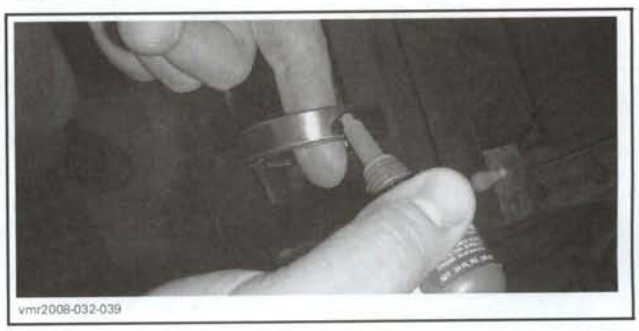

Using a press and the bearing remover/installer tool (P/N 529 035 918), install **NEW** bearings.

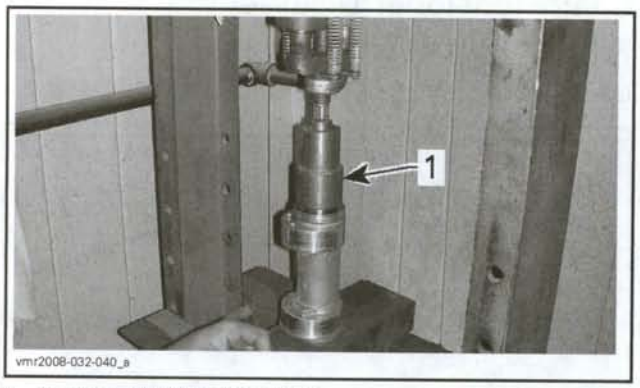

1. Special tool (P/N 529 035 918)

NOTE: Sometimes, bearings can be installed without tools.

Clean Loctite surplus.

Check if bearings turn smoothly and freely.

Install **NEW** seals.

Chain Tensioner Installation

Apply Loctite 767 (antiseize lubricant) (P/N 293 800 070) on chain tensioner lobes.

Insert chain tensioner inside swing arm by the RH side.

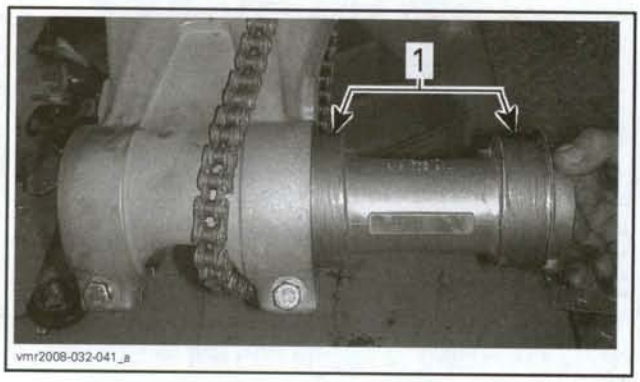

1. Apply antiseize lubricant here

Install caliper bracket.

Install the circlip.

Install all other removed parts.

WHEELS/TIRES

SERVICE PRODUCTS

Description	Part Number	Page
CV grease	293 550 019	287–288

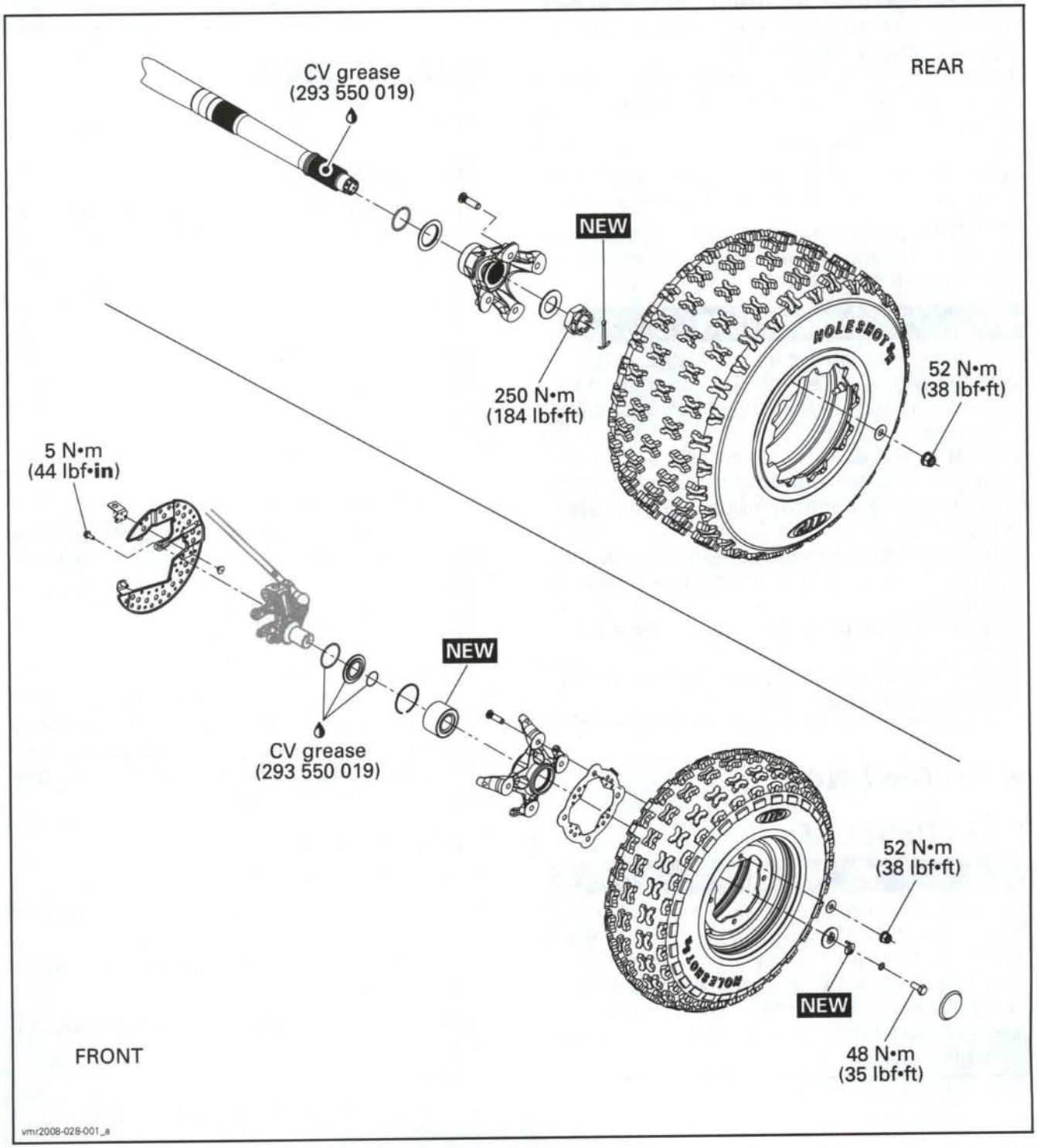

GENERAL

During assembly/installation, use the torque values and service products as in the exploded view.

Clean threads before applying a threadlocker. Refer to *SELF-LOCKING FASTENERS* and *LOCTITE APPLICATION* at the beginning of this manual for complete procedure.

⚠ WARNING

Torque wrench tightening specifications must be strictly adhered to.
Locking devices (ex: locking tabs, elastic stop nuts, cotter pin, etc.) must be replaced with new ones.

Hoses or cables removed or disconnected must be installed and routed at the same place.

CAUTION: Locking ties that had to be removed during a procedure, must be replaced and installed at the same place.

⚠ WARNING

When the tires are replaced, never install a bias tire with a radial tire. This combined application may create handling and/or stability problems.
Do not mix tires of different size and/or design on the same axle. Front tires or rear tires must be of the identical model and manufacturer.
For unidirectional tread pattern, ensure that the tires are installed in the correct direction of rotation.
The radial tires must be installed as a complete set.
Severe injury or death can result if you do not follow these instructions.

MAINTENANCE

TIRE PRESSURE

⚠ WARNING

Tire pressure greatly affects vehicle handling and stability. Underpressure may cause tire to deflate and rotate on wheel. Overpressure may burst the tire. Always follow recommended pressure. Since tires are low-pressure types, a manual pump should be used.

Check pressure when tires are COLD before using the vehicle. Tire pressure changes with temperature and altitude.

Recheck pressure if one of these conditions has changed.

TIRE PRESSURE		FRONT	REAR
Up to 100 kg (220 lb)	MAXIMUM	41.5 kPa (6 PSI)	
	MINIMUM	34.5 kPa (5 PSI)	

PROCEDURES

TIRE

Tire Inspection

Check for air leaks (hissing sound) caused by an ill-fitting rim or a faulty tire valve.

Check tire for:
- Cuts
- Slits
- Cracks.

Check sides of tire for:
- Bumps
- Bulges
- Nails
- Other foreign objects.

Check minimum tread depth by using a tread depth gauge. Check in three locations across the tire's tread:
- Outer edge
- Center
- Inside edge.

It is normal to see uneven wear on tires depending on how the vehicle is driven and road conditions. The front tires external or internal edges tread will wear unevenly depending on if the vehicle is driven smoothly or aggressively.

Tire Replacement

To replace a tire, do the following:

- Remove *WHEEL* from vehicle, see procedure in this section.
- Using an automotive tire changer (rim clamp type), remove the old tire.

NOTE: Refer to manufacturer's instructions for tire changer operation.

- Install the new tire.
- Remove the old balancing masses from rim.

- Clean inner side of wheel with alcohol to remove grease and dust.
- Balance wheel using a wheel balancer.

NOTE: Refer to manufacturer's instructions for wheel balancer operation.

- Install new balancing masses inside wheel. Position them in the center of the flat inner surface of the rim.

CAUTION: Improperly positioned weights can cause interference with the front wheel hub.

- Reinstall wheel.

WHEEL

Wheel Removal

Loosen lug nuts.

Lift the vehicle.

Support vehicle securely using jack stands.

Remove lug nuts and flat washers.

Remove wheel from vehicle.

Wheel Installation

The installation is the reverse of the removal procedure. However, pay attention to the following.

Install wheel on vehicle.

NOTE: Ensure that front brake disc protectors are properly installed.

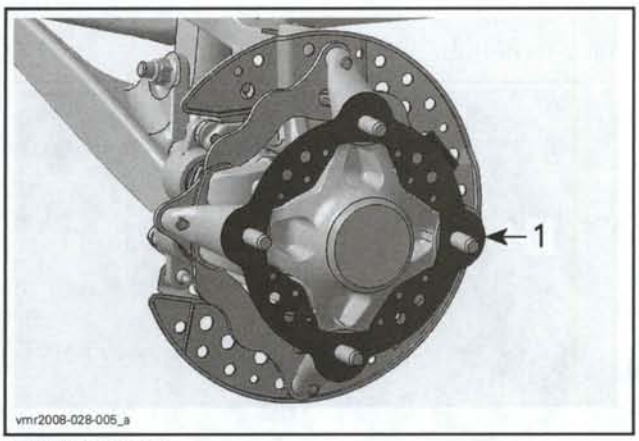

FRONT WHEELS
1. External protector

Install flat washers.

Manually screw all lug nuts.

CAUTION: Always use the recommended lug nuts (P/N 250 100 105) and flat washers (P/N 250 200 080). Using a different lug nut and flat washer could cause damages to the rim.

Using the following sequence, tighten lug nuts to 52 N•m (38 lbf•ft).

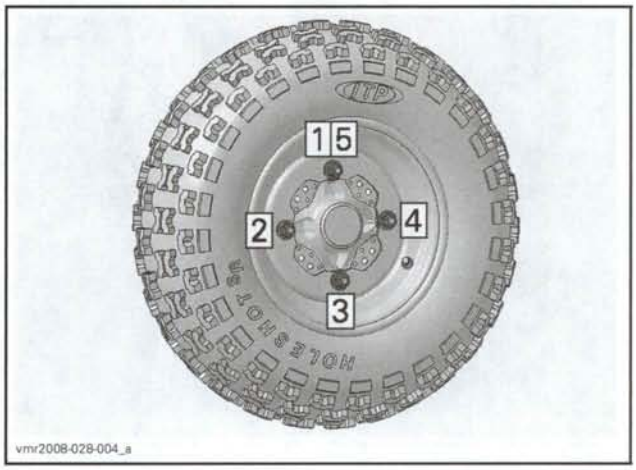

FRONT WHEEL

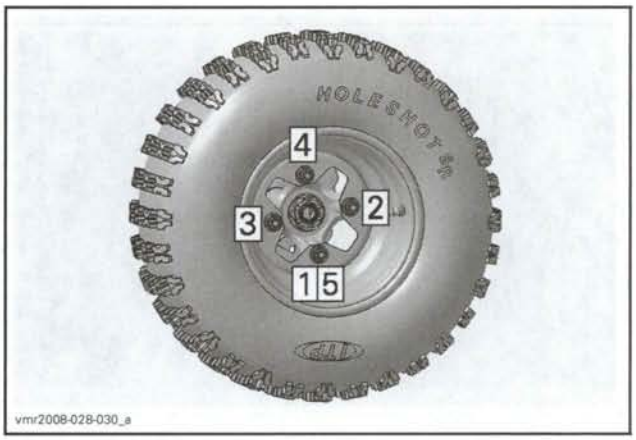

REAR WHEEL

FRONT WHEEL HUB

Front Wheel Hub Removal

Remove appropriate wheel.

Remove the external brake disc protector.

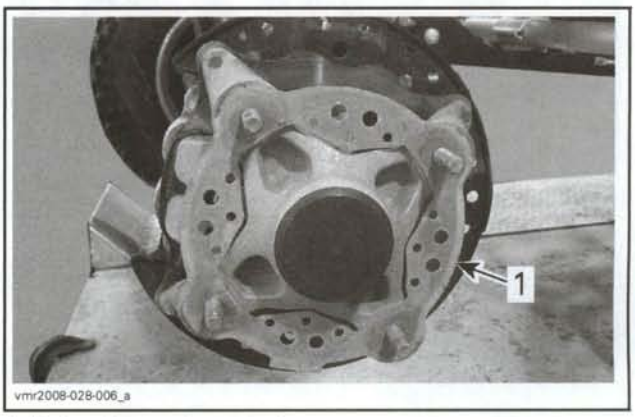

1. External brake disc protector

Remove wheel hub cap.

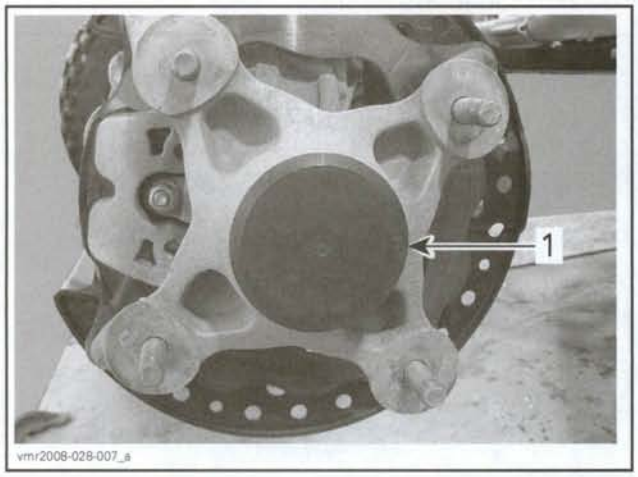

1. Wheel hub cap

Unfold locking washer.

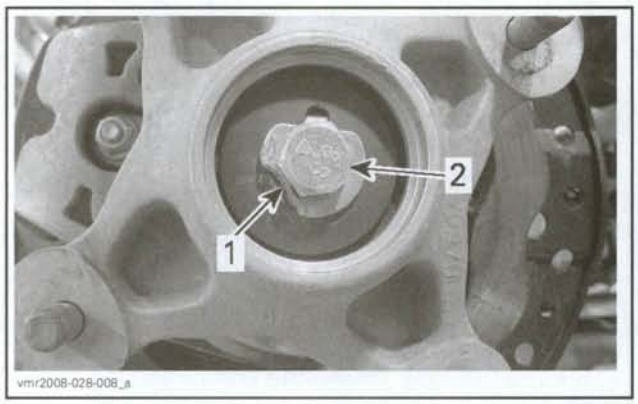

1. Locking washer
2. Wheel hub screw

Unscrew and remove the wheel hub screw.

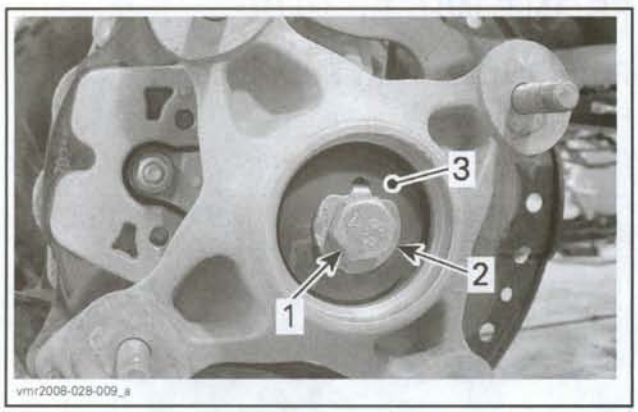

1. Wheel hub screw
2. Locking washer
3. Retaining washer

Remove the caliper. Refer to *BRAKES* section.

1. Wheel hub
2. Caliper

Remove the outer brake pad.

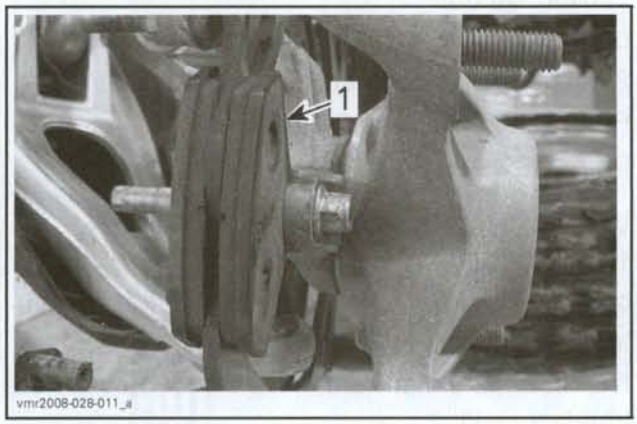

1. Outer brake pad

Pull wheel hub.

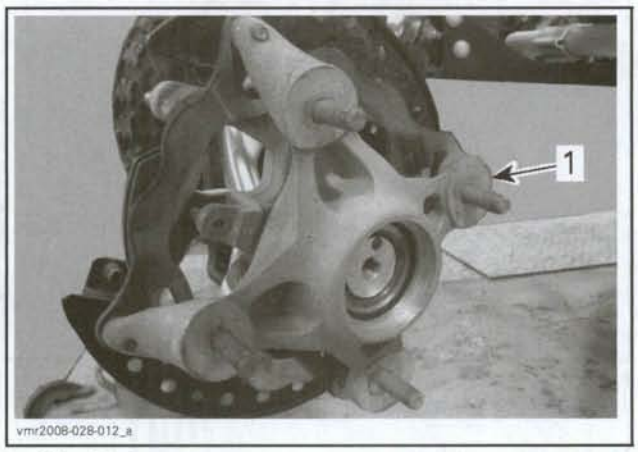

1. Wheel hub

Remove the small O-ring, the support ring and the large O-ring.

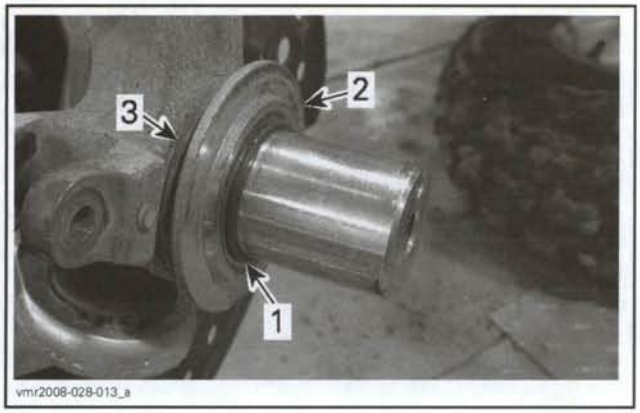

1. *Small O-ring*
2. *Support ring*
3. *Large O-ring*

Front Wheel Hub Installation

Install the large O-ring on support ring.

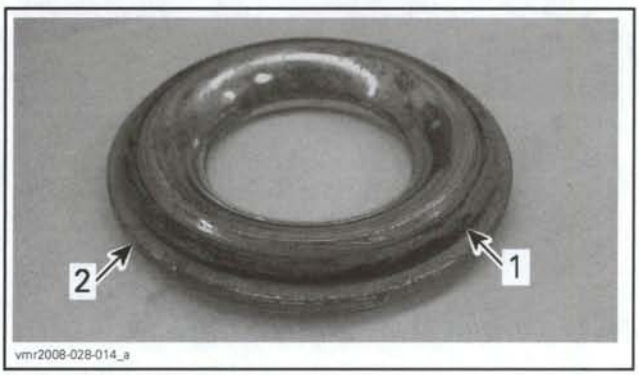

1. *Large O-ring*
2. *Support ring*

Apply CV grease (P/N 293 550 019) on large O-ring and support ring.

Install support ring on knuckle.

Apply CV grease (P/N 293 550 019) on the small O-ring.

Install the small O-ring.

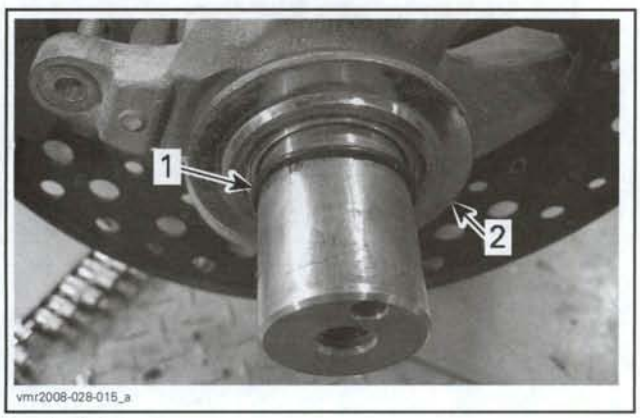

1. *Small O-ring*
2. *Support ring*

Install the wheel hub.

Install brake pad and caliper. Refer to *BRAKES* section.

Install locking washer tab into retaining washer hole.

Install washers by inserting the tab into the knuckle drilled hole.

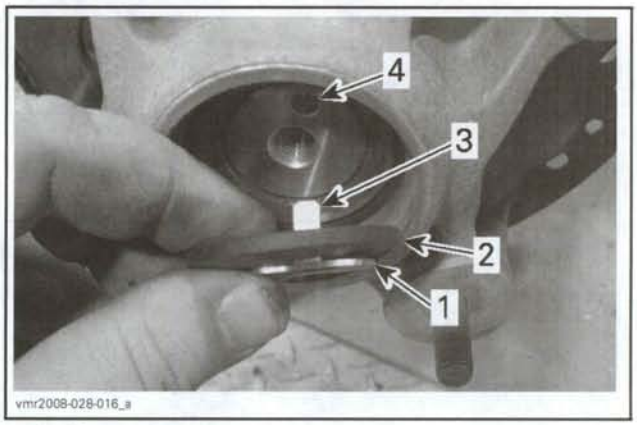

1. *Locking washer*
2. *Retaining washer*
3. *Locking washer tab*
4. *Knuckle drilled hole*

Install and tighten wheel hub screw.

Position the large O-ring on the joint between hub and knuckle.

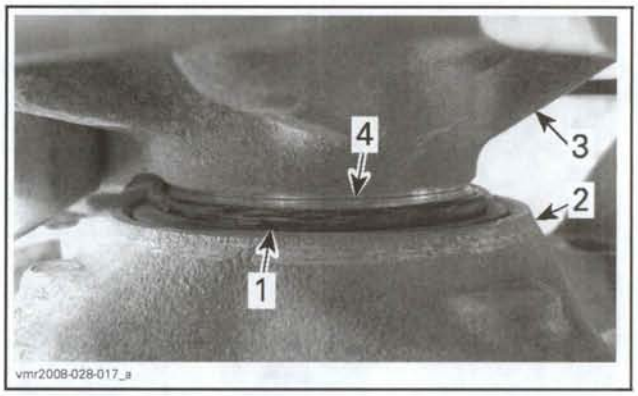

1. *Large O-ring on support ring*
2. *Wheel hub*
3. *Knuckle*
4. *Joint*

Install all other removed parts.

REAR WHEEL HUB

Rear Wheel Hub Removal

Remove *WHEEL*, see procedure in this section.

Remove and discard the cotter pin.

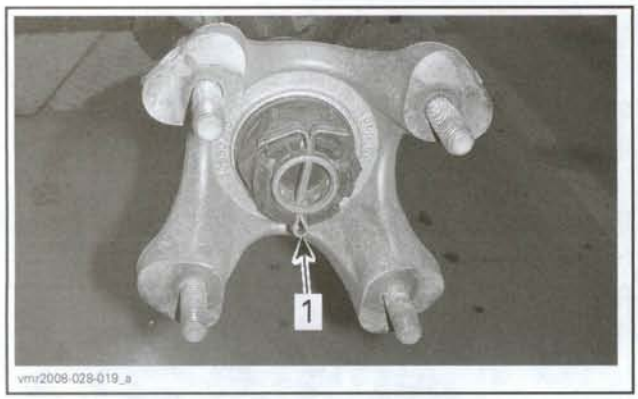

1. Cotter pin

Unscrew the rear wheel hub nut.

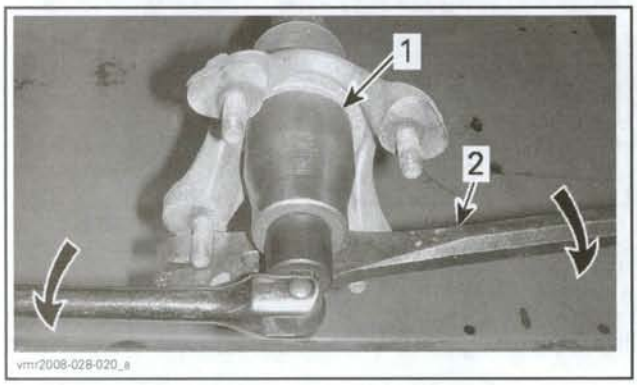

1. 41 mm socket
2. Pry bar

Remove the flat washer.

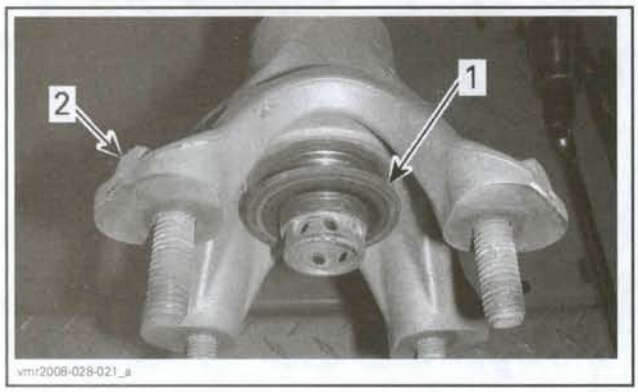

1. Flat washer
2. Wheel hub

Pull rear wheel hub to remove it.

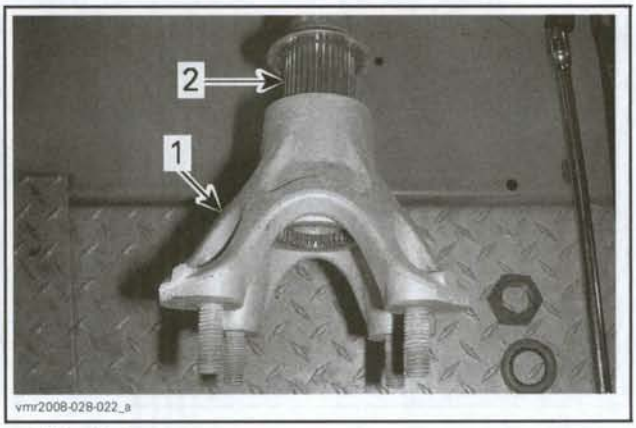

1. Wheel hub
2. Drive axle

Remove the conical washer.

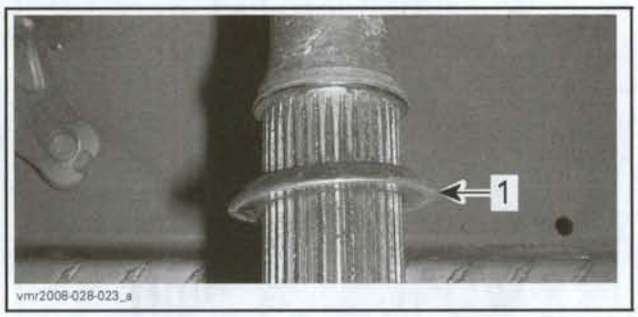

1. Conical washer

Rear Wheel Hub Installation

Install conical washer with its flat side outward.

Apply CV grease (P/N 293 550 019) on drive axle splines.

Install wheel hub. Align a wheel hub opening with a cotter pin hole.

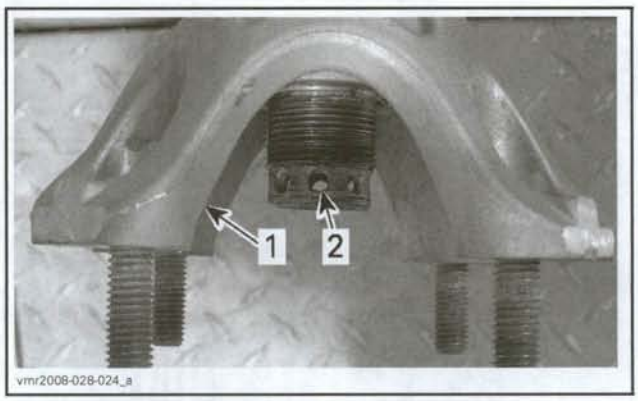

1. Wheel hub opening
2. Cotter pin hole

Install flat washer and nut.

Tighten wheel hub nut to 250 N•m (184 lbf•ft). Further tighten nut until one of its grooves is aligned with the cotter pin hole and hub opening.

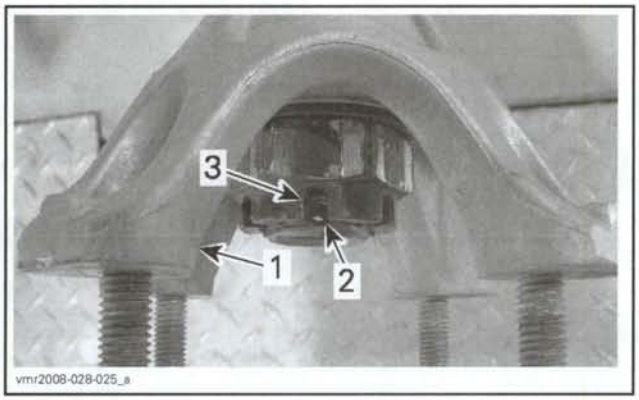

1. *Wheel hub opening*
2. *Cotter pin hole*
3. *Wheel hub nut groove*

CAUTION: Never unscrew wheel hub nut to align one of its grooves with a cotter pin hole.

Install a **NEW** cotter pin. Both ends of cotter pins must be folded.

WHEEL BEARING

Wheel Bearing Inspection

Lift the front of vehicle.

First, check if ball joints are loose. If necessary, repair all defective parts before checking the wheel bearing condition.

NOTE: Be careful not to misjudge play from in the ball joint or from the wheel bearing.

Grab wheel by the top and the bottom.

Push and pull the wheel to feel wheel bearing play.

If there is any play, replace wheel bearing.

Wheel Bearing Removal

Remove *FRONT WHEEL HUB*, see procedure in this section.

Remove circlip retaining wheel bearing into wheel hub.

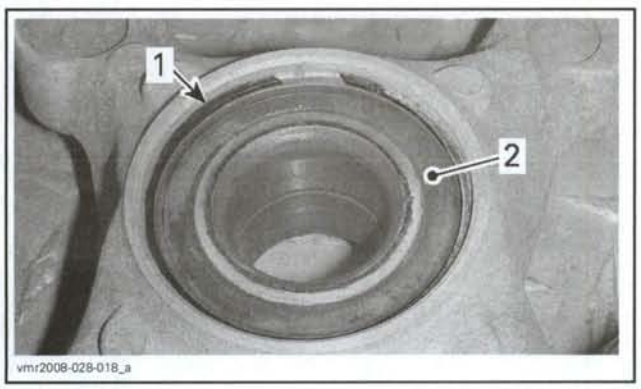

1. *Circlip*
2. *Wheel bearing*

Using a press and a proper extractor, push the wheel bearing out of wheel hub.

Wheel Bearing Installation

Place the **NEW** wheel bearing in a freezer for 30 minutes before installing.

Clean all grease, outside and inside, from wheel hub.

Place wheel hub in an oven to 100°C (212°F) for 30 minutes maximum to ease wheel bearing installation.

Install the wheel bearing into the wheel hub. If necessary, use a press to push on the outer race.

When wheel hub is cold, install the circlip.

Install the wheel hub on vehicle. Refer to *FRONT WHEEL HUB INSTALLATION* in this section.

STEERING

SERVICE TOOLS – OTHER SUPPLIER

Description	Part Number	Page
Smoothflow™ tapered tip	16 ga #511 rtt-b	294

SERVICE PRODUCTS

Description	Part Number	Page
XP-S synthetic grease	293 550 010	301
Loctite 406 (glue)	293 800 100	294
pulley flange cleaner	413 711 809	294

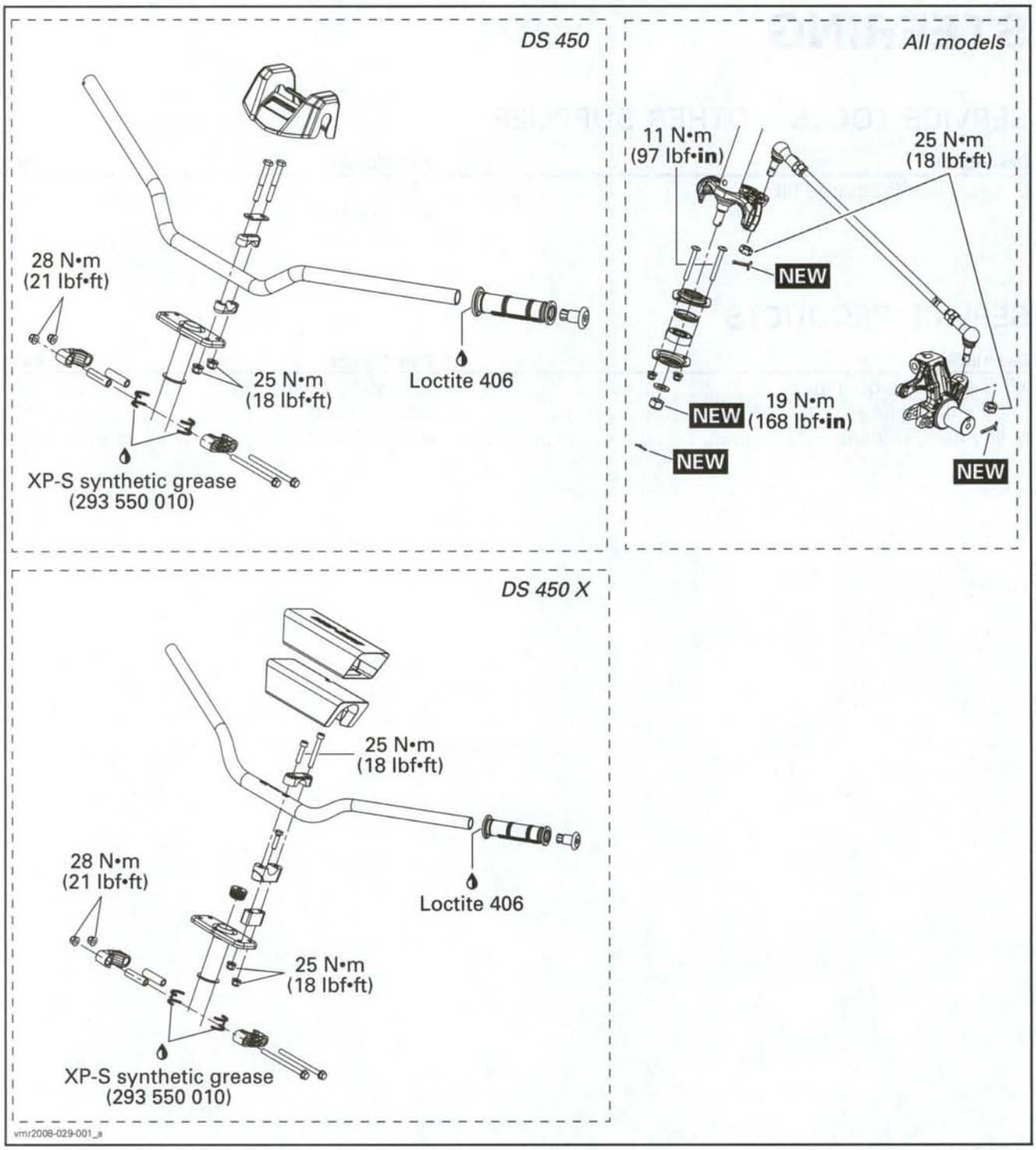
DS 450
28 N•m
(21 lbf•ft)
25 N•m
(18 lbf•ft)
Loctite 406
XP-S synthetic grease
(293 550 010)
All models
11 N•m
(97 lbf•in)
25 N•m
(18 lbf•ft)
NEW
NEW
19 N•m
(168 lbf•in)
NEW
NEW
DS 450 X
25 N•m
(18 lbf•ft)
28 N•m
(21 lbf•ft)
Loctite 406
25 N•m
(18 lbf•ft)
XP-S synthetic grease
(293 550 010)
vmr2008-029-001_a

GENERAL

During assembly/installation, use the torque values and service products as in the exploded view.

Clean threads before applying a threadlocker. Refer to *SELF-LOCKING FASTENERS* and *LOCTITE APPLICATION* at the beginning of this manual for complete procedure.

⚠ WARNING

Torque wrench tightening specifications must be strictly adhered to.
Locking devices (e.g.: locking tabs, elastic stop nuts, cotter pins, etc.) must be replaced with new ones.

Hoses or cables removed or disconnected must be installed and routed at the same place.

CAUTION: Locking ties removed during a procedure, must be replaced and installed at the same location.

ADJUSTMENT

STEERING ALIGNMENT

Place vehicle on level surface.

Position handlebar so that it is in straight ahead position by measuring from the extremities of the handlebar to a rear fixed point.

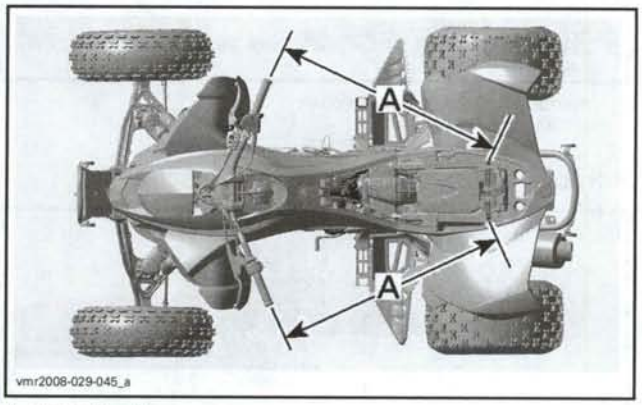

A. Same length

NOTE: The reference point must be the same to each side.

Tie handlebar to prevent movements during alignment.

Measure the distance between front wheels — center to center.

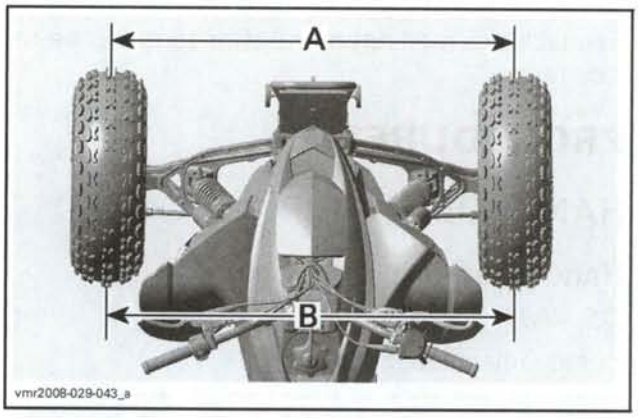

A. Front distance
B. Rear distance

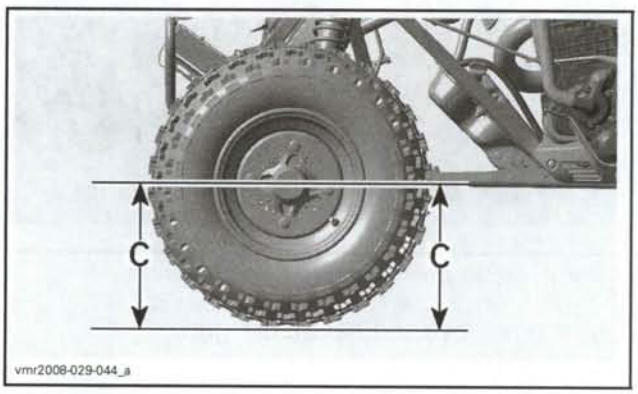

C. Same height

Refer to the following chart for alignment specification.

MODEL	TOTAL TOE-IN	
	MM	IN
ALL	$0^{+0}_{-6.35}$	$0^{+0}_{-1/4}$
Rear distance (B) – front distance (A) = toe-in		

Set alignment of wheel by adjusting tie-rod.

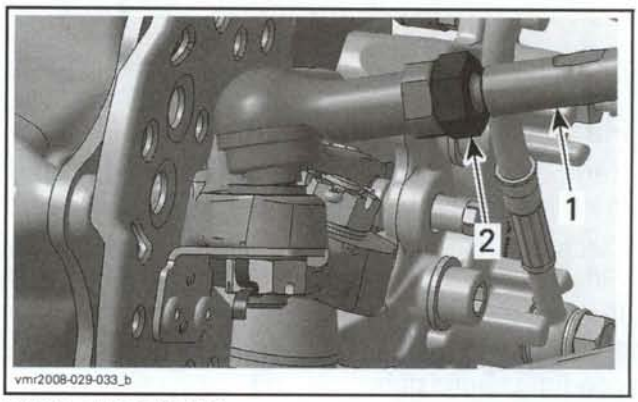

WHEEL SIDE SHOWN
1. Tie-rod
2. Tie-rod lock nut (one per tie-rod end)

Recheck the measurement after torquing tie-rod lock nuts.

PROCEDURES

HANDLEBAR GRIP

Handlebar Grip Removal

DS 450

Remove handlebar cap.

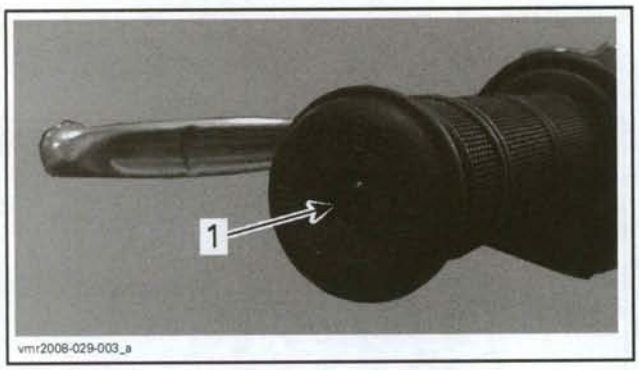

1. Handlebar cap screw

Cut and remove the handlebar grip.

DS 450 X

Remove handlebar wind deflector.

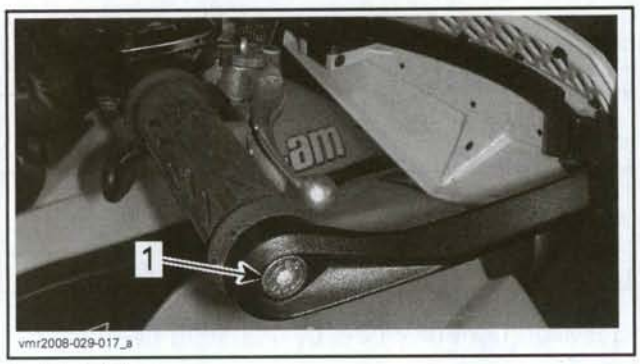

1. Wind deflector screw

Cut and remove the handlebar grip.

Handlebar Grip Installation

Remove all rubber residues of the old grip before installing the new.

Clean the handlebar with pulley flange cleaner (P/N 413 711 809) or alcohol to remove any greasy matter on it.

Sandpaper the inner of handlebar grip to allow a good glue adhesion.

Install handlebar grip by blowing compressed air between handlebar grip and handlebar.

Install a Smoothflow™ tapered tip (P/N 16 ga #511 rtt-b) from EFD Inc on a bottle of Loctite 406 (glue) (P/N 293 800 100).

Lift a part of the grip using a small screwdriver and inject glue (about 4 spots per side).

NOTE: The glue dries quickly. Do not apply it before installing grip.

Apply pressure on the grip for approximately 30 seconds to set the glue.

Install the handlebar grip cap and torque screw 0.4 N•m (3.5 lbf•**in**).

MULTIFUNCTION SWITCH

Multifunction Switch Removal

Remove the front body assembly. Refer to *BODY* section.

Unplug multifunction switch connectors.

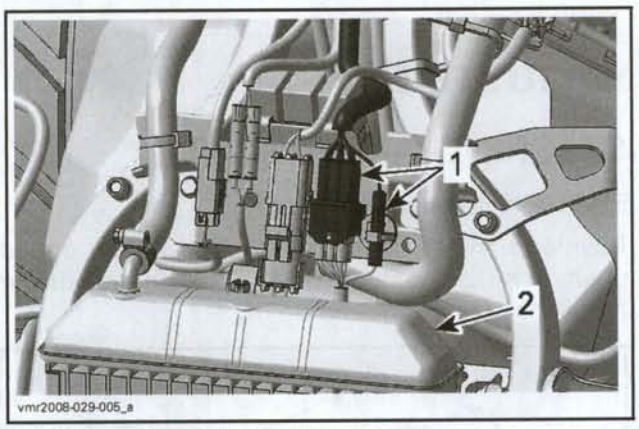

1. Multifunction switch connectors
2. Radiator

Remove the multifunction switch screws.

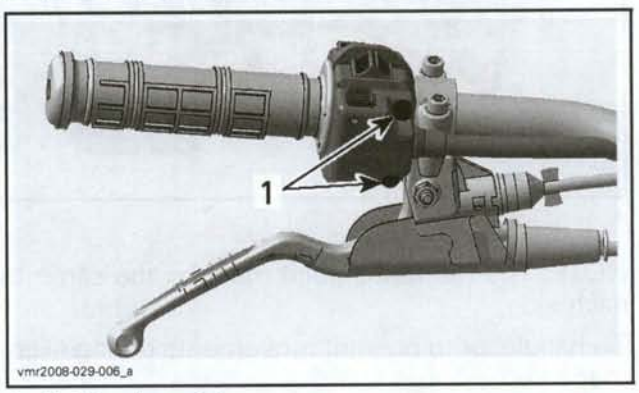

1. Multifunction switch screws

Separate multifunction switch halves.

Multifunction Switch Installation

The installation is the reverse of the removal procedure.

THROTTLE LEVER

Throttle Lever Removal

Remove the throttle lever housing cover.

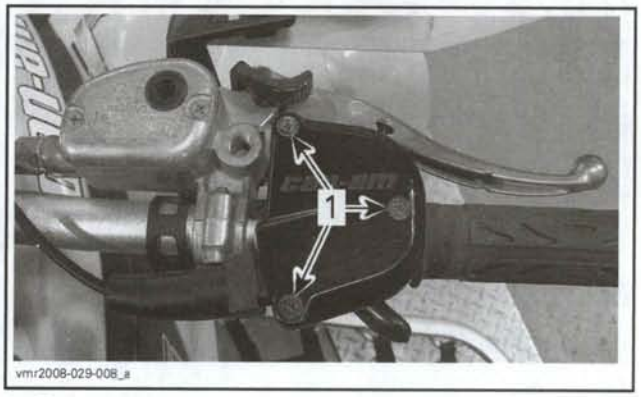

1. Cover screws

Slide rubber protector back to expose the throttle cable adjuster.

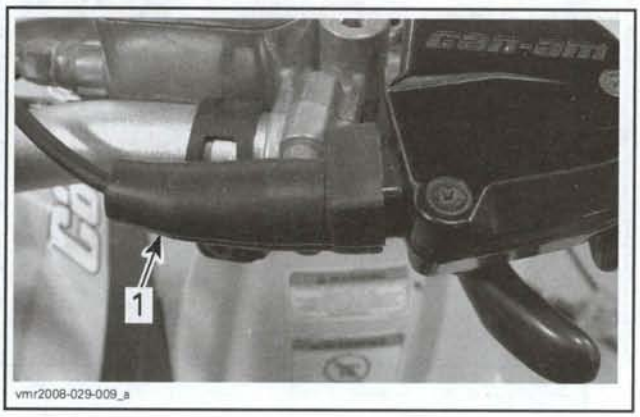

1. Rubber protector

Loosen the lock nut.

Screw the adjuster completely.

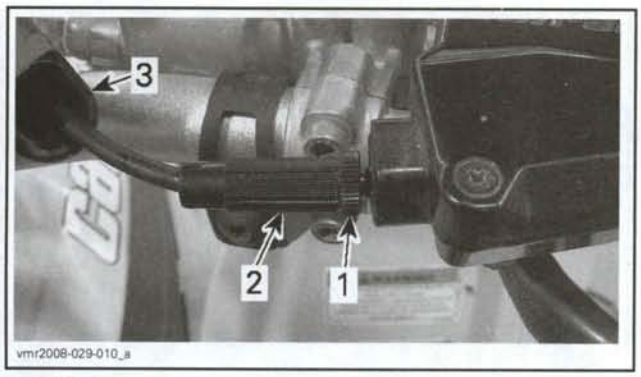

1. Lock nut
2. Throttle cable adjuster
3. Rubber protector

Remove cable from the throttle lever.

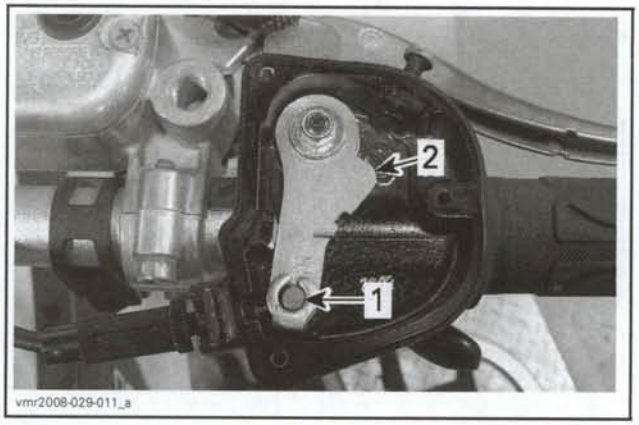

1. Throttle cable end
2. Throttle lever

Underneath throttle lever housing, remove screws securing the housing clamp.

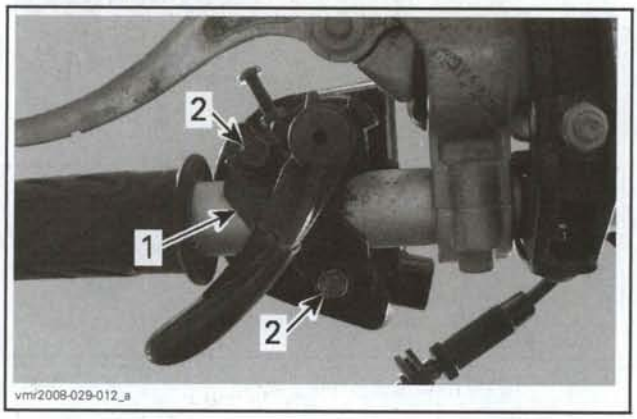

1. Housing clamp
2. Housing clamp screws

Remove throttle lever housing from handlebar.

Throttle Lever Installation

The installation is the reverse of the removal procedure.

Adjust throttle cable. Refer to *THROTTLE CABLE ADJUSTMENT* in this section.

THROTTLE CABLE

Throttle Cable Removal

At Handlebar

Remove the throttle lever housing cover.

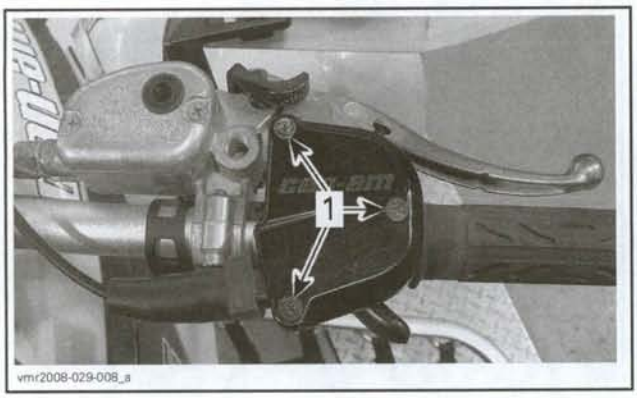

1. Cover screws

Slide rubber protector back to expose the throttle cable adjuster.

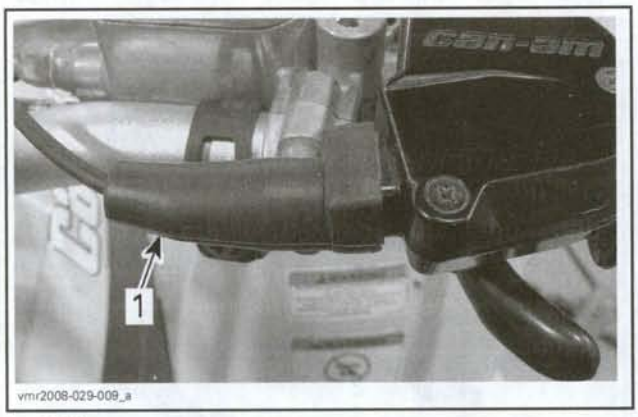

1. Rubber protector

Loosen the lock nut.

Screw the adjuster completely.

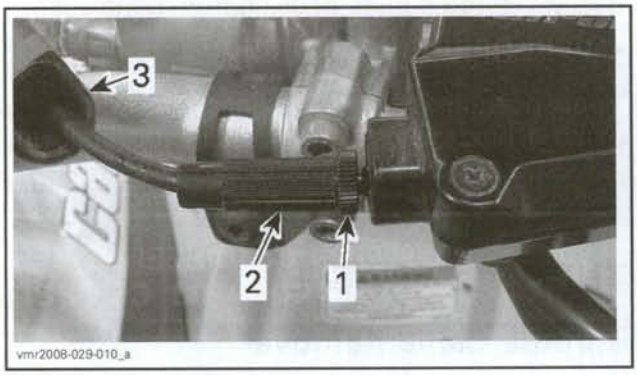

1. Lock nut
2. Throttle cable adjuster
3. Rubber protector

Remove cable from the throttle lever.

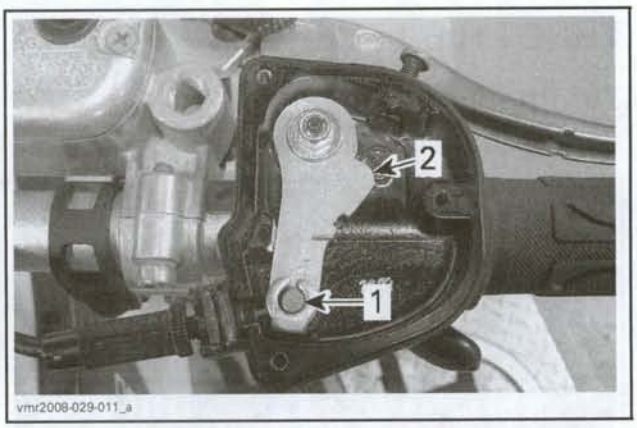

1. Throttle cable end
2. Throttle lever

At Throttle Body

Remove front body assembly. Refer to *BODY* section.

Remove the air intake hose deflector.

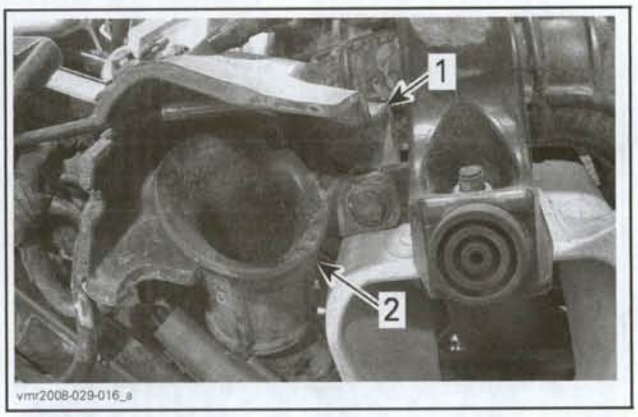

1. Deflector
2. Air intake hose

Loosen throttle body clamps.

Turn the throttle body to reach the throttle body cover screw.

1. Throttle body cover screw
2. Air intake inlet hose

Remove the throttle body cover.

Detach throttle cable from the throttle body cam.

1. Cable barrel

Unscrew the cable from throttle body.

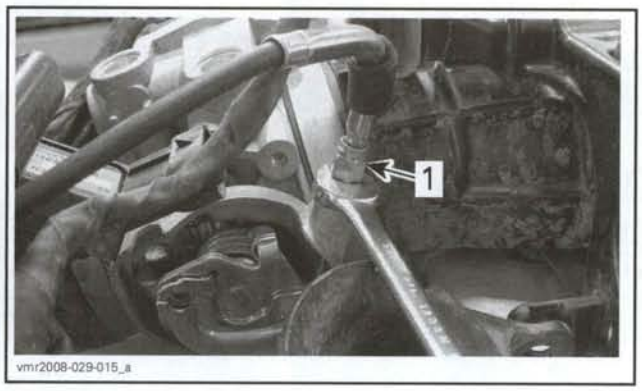

1. Cable screwed connection

Cut all locking ties retaining throttle cable to frame.

Remove the throttle cable from the vehicle noting its correct routing.

Throttle Cable Installation

The installation is the reverse of the removal procedure.

Proceed with throttle cable adjustment.

Throttle Cable Adjustment

Slide rubber protector back to expose throttle cable adjuster.

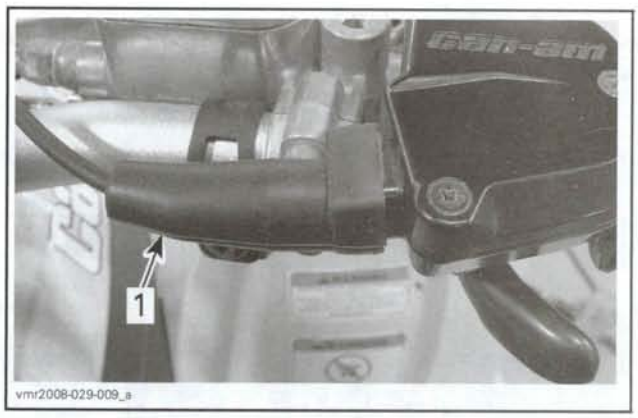

1. Rubber protector

Loosen lock nut then turn the adjuster to obtain correct throttle lever free play.

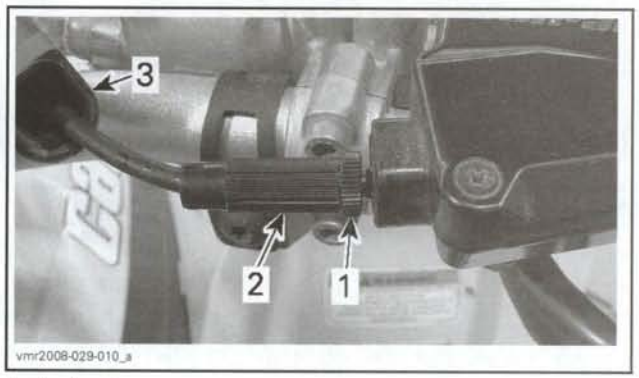

1. Lock nut
2. Throttle cable adjuster
3. Rubber protector

NOTE: Measure throttle free play at the tip of throttle lever.

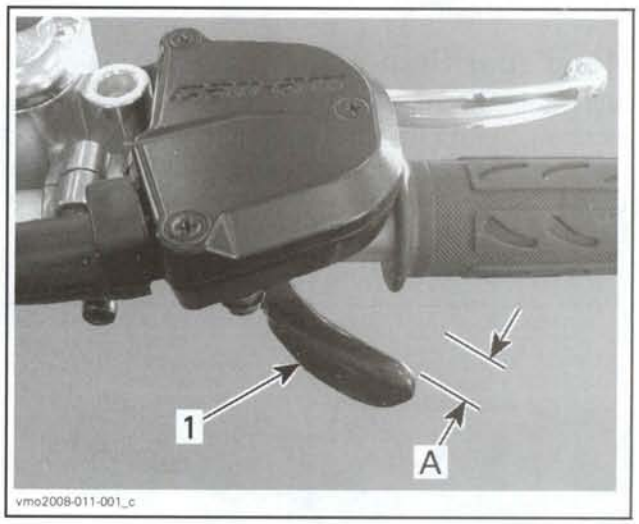

1. Throttle lever
A. 2 to 4 mm (5/64 to 5/32 in)

Tighten lock nut and reinstall the rubber protector.

Turn handlebar side to side and ensure there is still free-play in each position.

To ensure there is no strain in the cable at wide open position:

- Fully depress throttle lever and hold.
- Loosen adjuster lock nut/adjuster until it just releases lever.

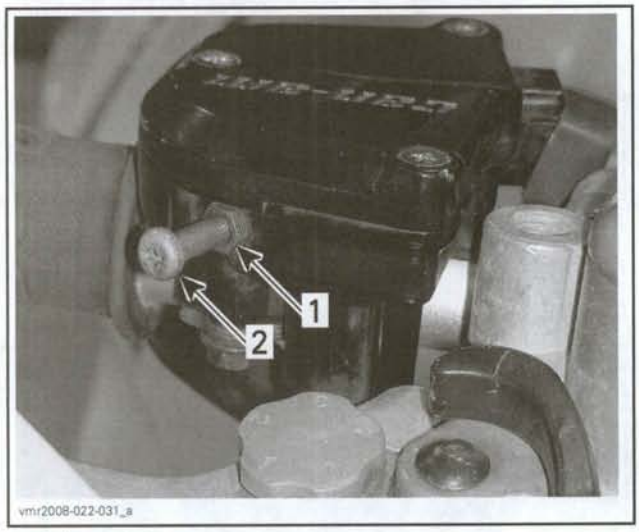

1. Adjuster lock nut
2. Adjuster

- Turn adjuster clockwise until it touches lever again.
- From there, tighten adjuster 1/2 turn (to remove strain in cable).
- Tighten lock nut.
- Release throttle lever.

HANDLEBAR

Handlebar Removal

NOTE: If the handlebar must be changed, remove all components (handlebar wind deflectors, throttle lever, front master cylinder, clutch lever and multifunction switch) before removing it from vehicle.

Remove the handlebar cover.

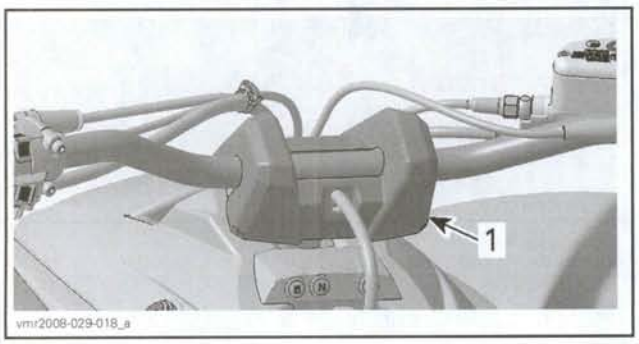

DS 450
1. Rigid cover

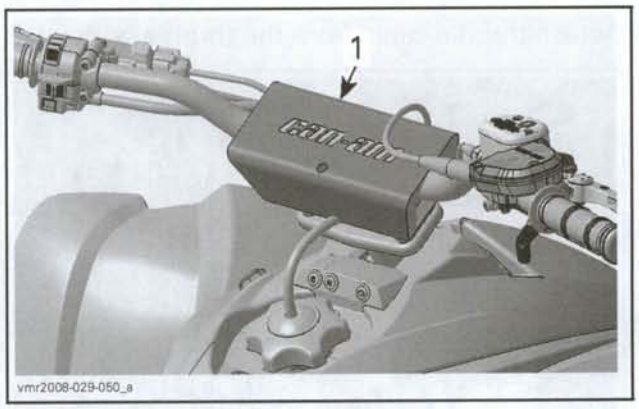

DS 450 X
1. Leatherette cover with foam

Remove the handlebar screws.

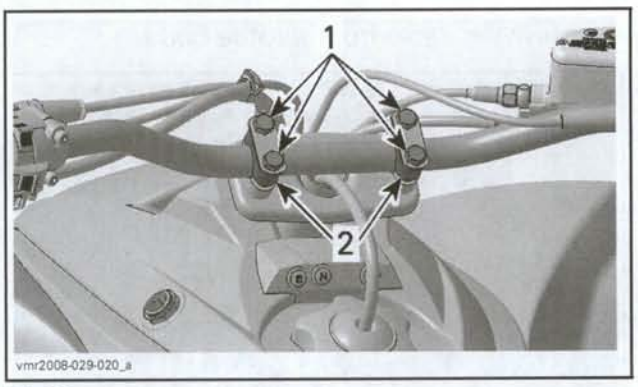

DS 450
1. Handlebar screws
2. Handlebar clamps

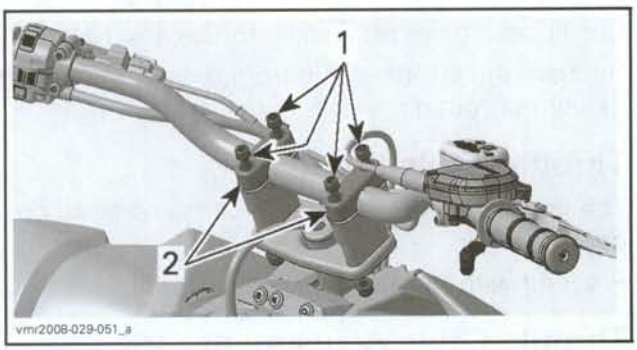

DS 450 X
1. Handlebar screws
2. Handlebar clamps

Remove the handlebar.

Handlebar Installation

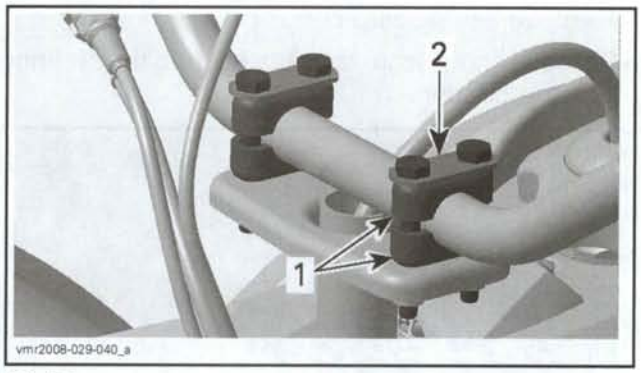

DS 450
1. *Handlebar clamps*
2. *Reinforcement plate*

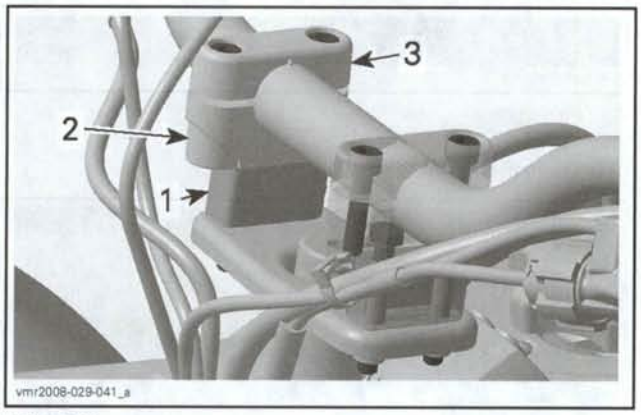

DS 450 X
1. *Handlebar extension*
2. *Handlebar support*
3. *Handlebar clamp*

Finger-tight handlebar screws.

Center handlebar between handlebar clamps.

Hold handlebar in this position and tighten handlebar screws.

Install all other removed parts.

STEERING COLUMN

Steering Column Removal

Remove the front body assembly. Refer to *BODY* section.

Remove front shock absorbers. Refer to *FRONT SUSPENSION* section.

Remove the radiator. Refer to *COOLING SYSTEM* section.

Remove *HANDLEBAR*, see procedure in this section.

Inside shock absorber upper attachments, unscrew bolts securing the front upper brace.

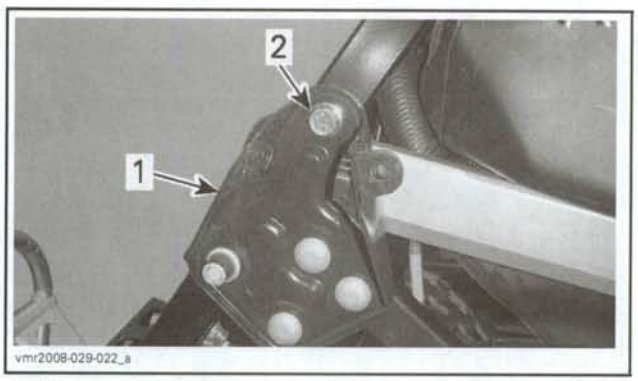

1. *LH upper attachment*
2. *Upper brace bolt (one each side)*

Detach tie-rods from steering column. See *TIE-ROD* in this section.

1. *Tie-rod end nuts*
2. *Steering column*

Remove the radiator lower support.

1. *Radiator support*
2. *Steering column*

Unscrew bearing flanges.

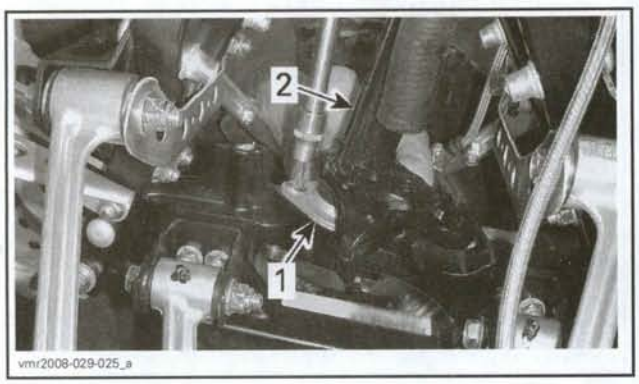

1. Bearing flanges
2. Steering column

Unscrew bolts securing the steering support.

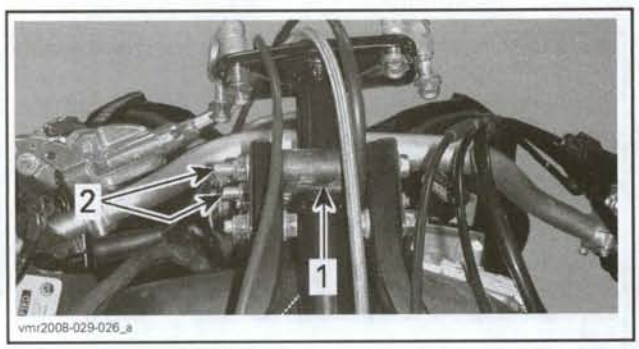

1. Steering support
2. Steering support bolts

Pull steering column out of vehicle noting cables routing.

Remove steering support halves with bushings.

Steering Column Inspection

Check steering column for:
- Wear
- Cracks
- Bending.

Replace if any of these problems is detected.

⚠ WARNING

Never try to weld or modify the steering column. Always replace the column with a new one.

Check if steering column half-seals are:
- Brittle
- Hard
- Otherwise damaged.

Replace them if necessary.

At the same time, check steering column bearing condition. It must turn smoothly and freely. If not, replace bearing.

Steering Column Bearing Replacement

- Remove and discard cotter pin.
- Remove and discard the nut securing the steering column bearing.

1. Steering column bearing nut

- Remove the washer.

1. Washer

- Remove the bearing.

NOTE: A puller may be necessary to remove a seized bearing.

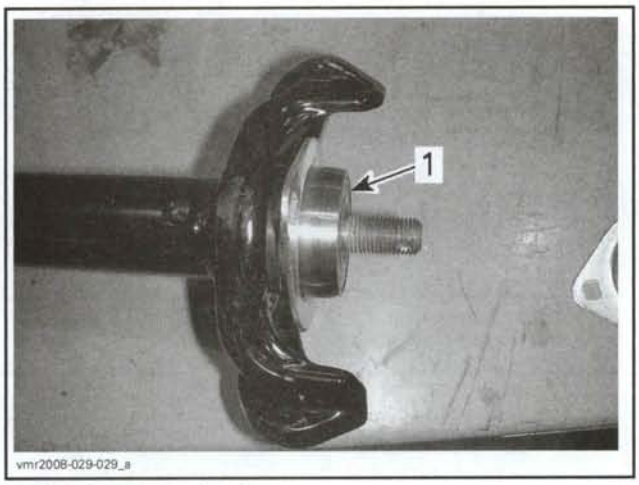

1. Steering column bearing

- Remove the bearing flange.

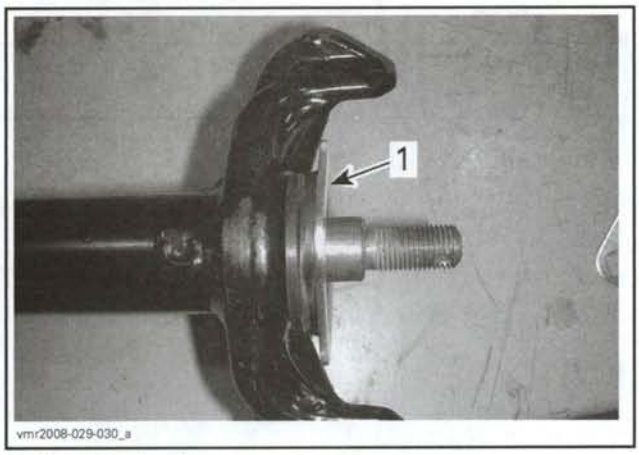

1. Upper bearing flange

- Remove and discard bearing seal.

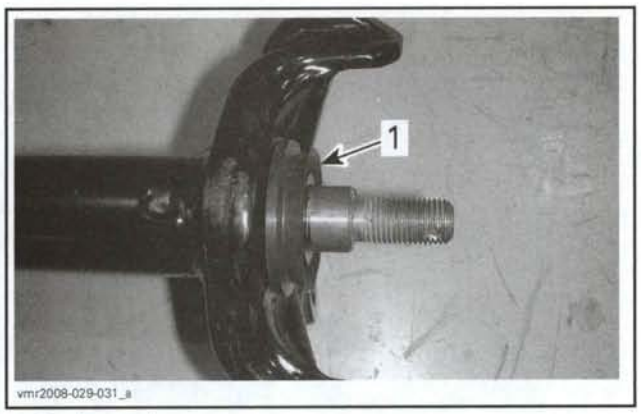

1. Bearing seal

- Install a **NEW** bearing seal. Position V-shaped section outside.

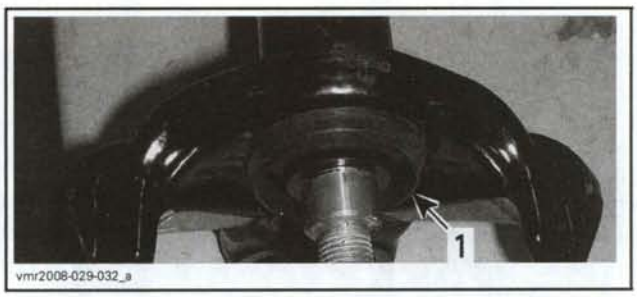

1. V-shaped section

- Install all other parts by reversing the previous procedure. However, pay attention to the following.
- Install a **NEW** bearing nut.
- Install a **NEW** cotter pin. Both ends of cotter pins must be folded.

Steering Column Installation

The installation is the reverse of the removal procedure. However, pay attention to the following.

Apply XP-S synthetic grease (P/N 293 550 010) on half-seals.

Install all other removed parts accordingly with their installation procedures.

TIE-ROD

Tie-Rod Removal

Place vehicle on a level surface.

Apply parking brake.

Loosen wheel lug nuts.

Lift the front of vehicle.

Remove wheel.

From steering column and knuckle, remove:
- Cotter pins (discard)
- Tie-rod end nuts
- Hardened washers.

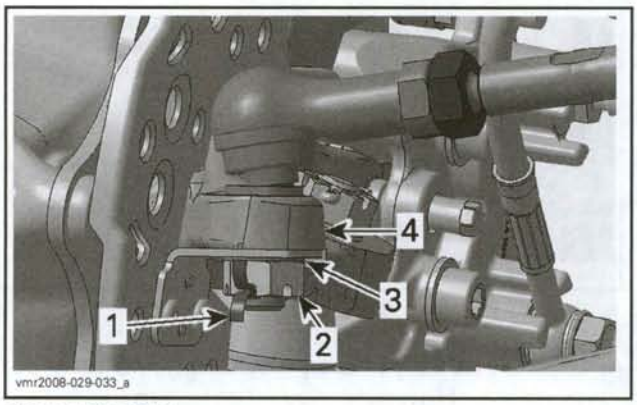

FROM KNUCKLE
1. *Cotter pin*
2. *Tie-rod end nut*
3. *Hardened washer*
4. *Knuckle*

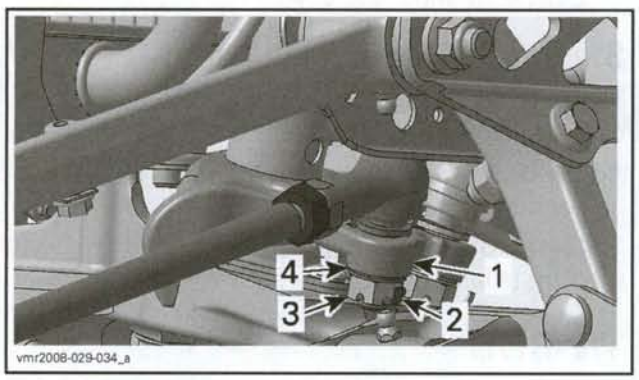

FROM STEERING COLUMN
1. *Steering column lever*
2. *Cotter pin*
3. *Tie-rod nut*
4. *Hardened washers*

Remove tie-rod from vehicle.

Tie-Rod Inspection

Inspect tie-rod ends for wear or looseness, if excessive, replace.

Tie-Rod Installation

For the installation, reverse the removal procedure. However, pay attention to the following.

Adjust the tie-rod length to 439 mm (17-9/32 in).

Check the both unengaged threaded portion of tie-rod.

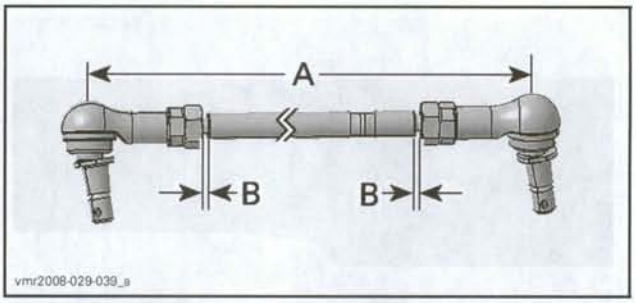

A. Preliminary adjustment: 439 mm (17-9/32 in)
B. Unengaged threads: 20 mm (25/32 in)

TIE-ROD	
Preliminary length adjustment — dimension "A"	439 mm (17-9/32 in)
Maximum unengaged threads — dimension "B" *	20 mm (25/32 in)
* Dimension "B" to be approximately equal upon assembly.	

Tighten tie-rod lock nuts.

Install **NEW** cotter pins. Both ends of cotter pins must be folded.

Perform steering alignment. Refer to *ADJUSTMENT* at the beginning of this section.

KNUCKLE

Knuckle Removal

Place vehicle on a level surface.

Loosen wheel lug nuts.

Lift the front of vehicle.

Remove wheel.

Remove wheel hub. Refer to *WHEELS/TIRES* section.

Remove bolt securing upper ball joint.

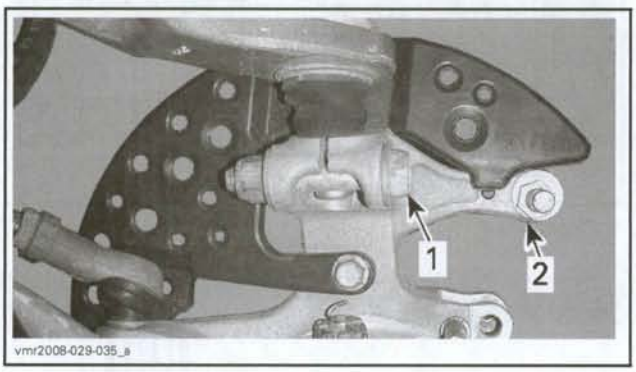

1. *Upper ball joint bolt*
2. *Knuckle*

Detach tie-rod end from knuckle.

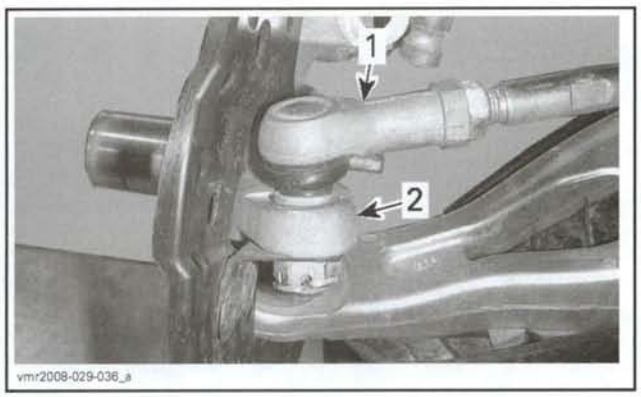

1. *Tie-rod end*
2. *Knuckle*

Remove protective plate by removing the central screw.

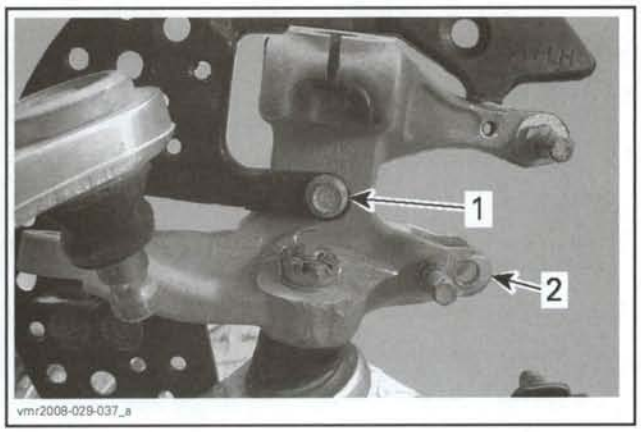

1. *Protective plate screw*
2. *Knuckle*

Separate lower ball joint from knuckle.

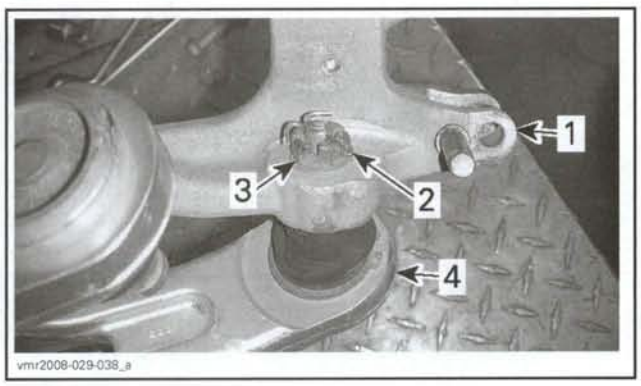

1. *Knuckle*
2. *Cotter pin*
3. *Lower ball joint nut*
4. *Lower suspension arm*

Knuckle Installation

The installation is the reverse of the removal procedure. However, pay attention to the following.

Install **NEW** cotter pins. Both ends of cotter pins must be folded.

Verify steering alignment. Refer to *ADJUSTMENT* at the beginning of this section.

FRONT SUSPENSION

SERVICE TOOLS

Description	Part Number	Page
ball joint remover	529 036 121	312–315

SERVICE PRODUCTS

Description	Part Number	Page
suspension grease	293 550 033	309
Loctite 609	413 703 100	313, 315
Loctite Chisel (gasket remover)	413 708 500	312, 315

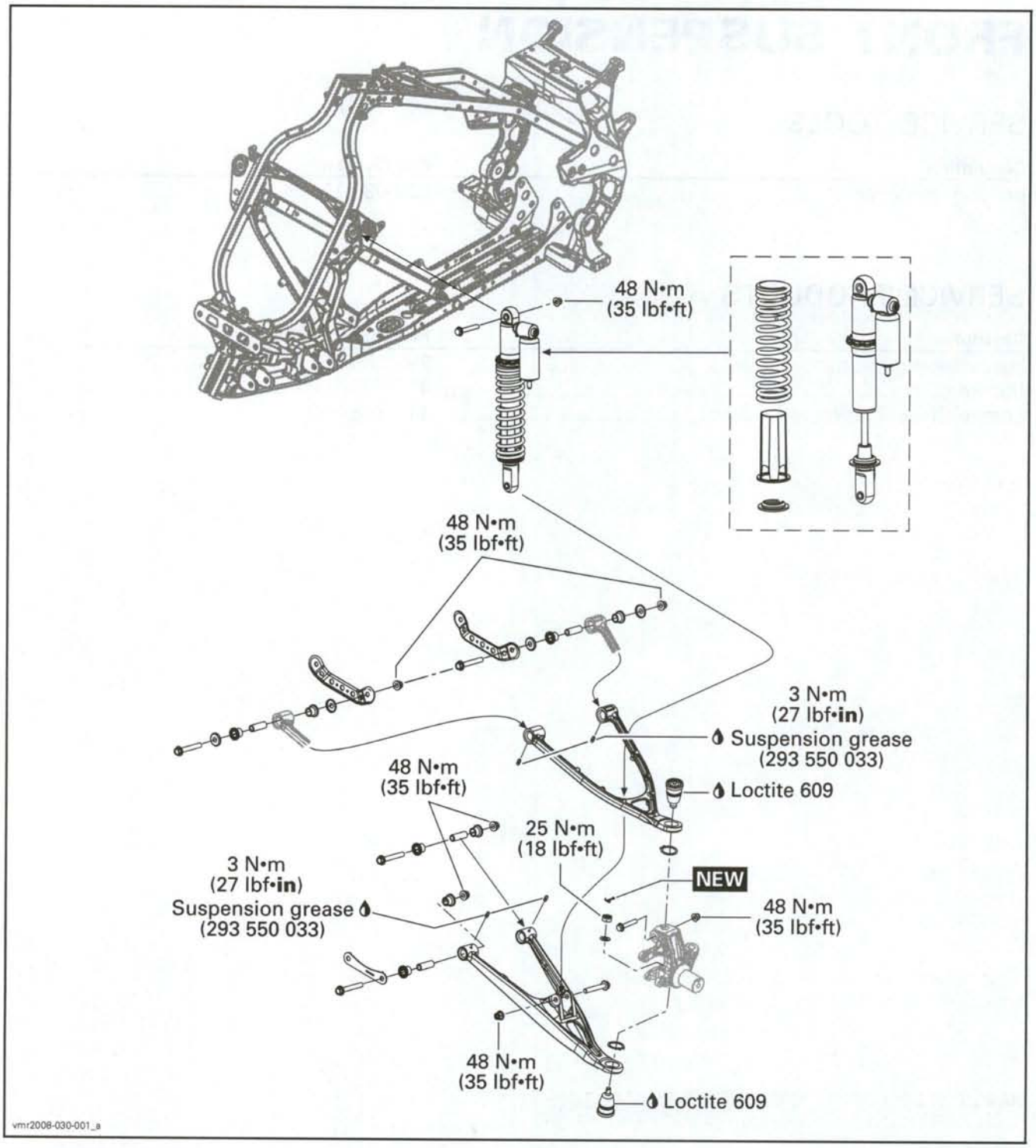
48 N•m
(35 lbf•ft)
48 N•m
(35 lbf•ft)
3 N•m
(27 lbf•in)
Suspension grease
(293 550 033)
48 N•m
(35 lbf•ft)
Loctite 609
25 N•m
(18 lbf•ft)
3 N•m
(27 lbf•in)
Suspension grease
(293 550 033)
NEW
48 N•m
(35 lbf•ft)
48 N•m
(35 lbf•ft)
Loctite 609
vmr2008-030-001_a

GENERAL

During assembly/installation, use the torque values and service products as in the exploded view.

Hoses or cables removed or disconnected must be installed and routed at the same place.

Clean threads before applying a threadlocker. Refer to *SELF-LOCKING FASTENERS* and *LOCTITE APPLICATION* at the beginning of this manual for complete procedure.

⚠ WARNING

Torque wrench tightening specifications must be strictly adhered to.
Locking devices (e.g.: locking tabs, elastic stop nuts, cotter pins, etc.) must be replaced with new ones.

CAUTION: Locking ties removed during a procedure, must be replaced and installed at the same location.

ADJUSTMENTS

Vehicle handling and comfort depend upon suspension adjustments.

Choice of suspension adjustments vary with driver's weight, personal preference, riding speed and field condition.

The best way to set up the suspension, is to start from factory settings (refer to *SUSPENSION FACTORY SETTINGS)*, then customize each adjustment one at a time.

Front and rear adjustments are interrelated. It may be necessary to readjust the rear shock absorber after adjusting front shock absorbers for instance.

Test run the vehicle under the same conditions; trail, speed, driver riding position, etc.

Change one adjustment and retest.

Proceed methodically until you are satisfied.

⚠ WARNING

Always adjust front shock absorbers identically. Uneven adjustment can cause poor handling and loss of stability, and/or control, and increase the risk of an accident.

FACTORY SETTINGS

FACTORY SETTINGS	
Spring length	282 mm (11 in)
Compression (low speed)	DS 450: 9 clicks DS 450 X: 8 clicks
Compression (high speed)	DS 450 X: 3/4 of a turn
Rebound	9 clicks

Spring Preload

Lift the front of the vehicle.

Measure springs length without load on the wheels.

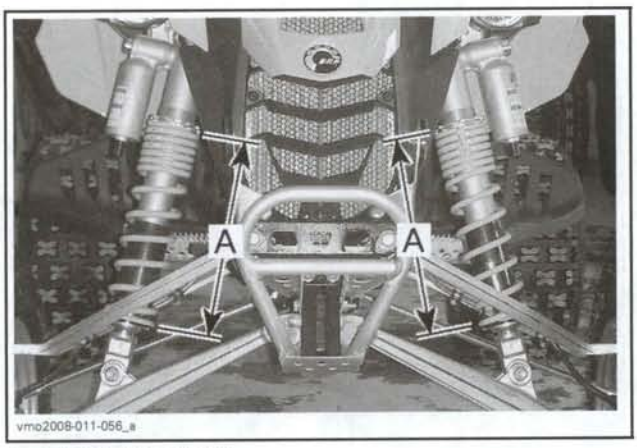

SPRING FREE LENGTH
A. 282 mm (11 in)

Shock Absorber Compression (low speed)

DS 450

9 CLICKS COUNTERCLOCKWISE
1. Compression adjuster

DS 450 X

8 CLICKS COUNTERCLOCKWISE
1. Compression adjuster

Shock Absorber Compression (high speed)

DS 450 X

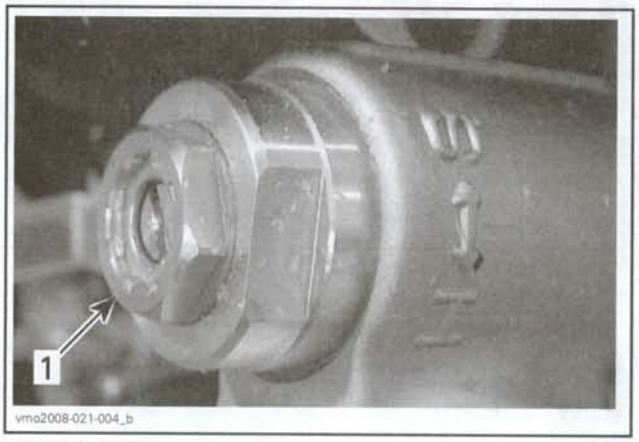

3/4 OF A TURN
1. High speed compression adjuster

Shock Absorber Rebound

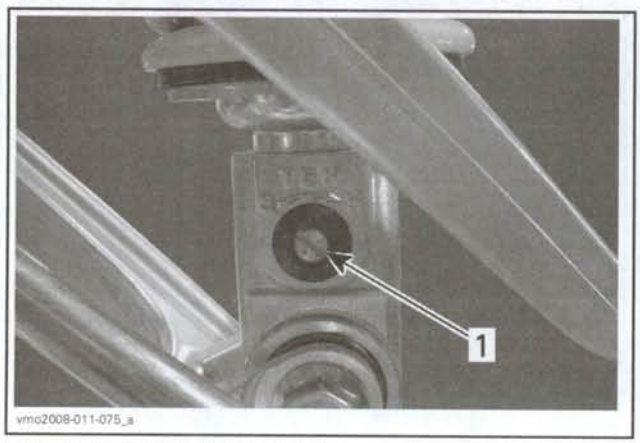

9 CLICKS COUNTERCLOCKWISE
1. Rebound adjuster

ADJUSTING SUSPENSION

Spring Preload Adjustment

Shorten the spring for a firmer ride on rough trail condition.

Lengthen the spring for a softer ride on smooth trail condition.

Lift the front of the vehicle.

Measure springs length.

NOTE: Spring length must be measured without load on the wheels.

Loosen top locking rings.

Turn adjusting rings to position springs to appropriate length.

1. Locking ring
2. Adjusting ring

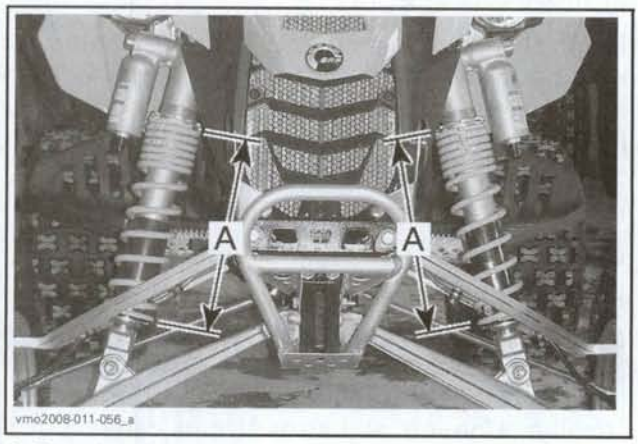

A. Same length

Shock Absorber Compression/Rebound Adjustment

Perform adjustments **one** position (click) at a time.

Test run the vehicle under the same conditions; trail, speed, driver riding position, etc. Proceed methodically until you are satisfied.

Compression (low speed)

Use a flat screwdriver to adjust it.

1. Compression adjuster

Turning it clockwise (H) **increases** shock damping action (stiffer).

Turning it counterclockwise (S) **decreases** shock damping action (softer).

Compression (high speed)

DS 450 X

Use a 17 mm wrench to adjust it.

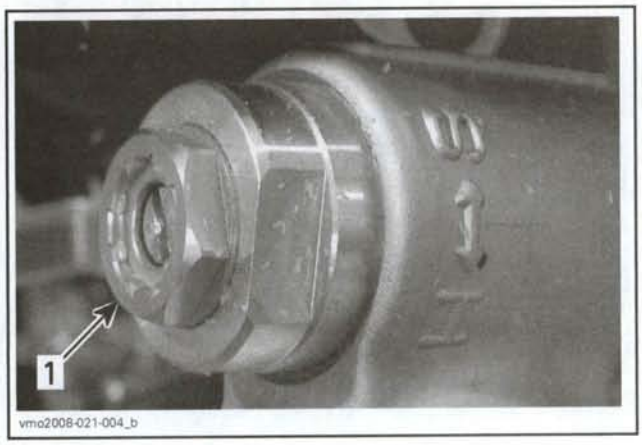

1. High speed compression adjuster

Turning it clockwise (H) **increases** shock damping action (stiffer).

Turning it counterclockwise (S) **decreases** shock damping action (softer).

Rebound

Use a flat screwdriver to adjust it.

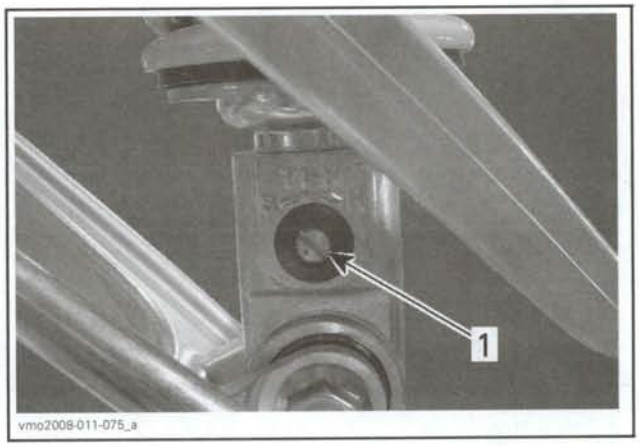

1. Rebound adjuster

Turning it clockwise (H) **increases** shock damping action (stiffer).

Turning it counterclockwise (S) **decreases** shock damping action (softer).

MAINTENANCE

LUBRICATION

Use suspension grease (P/N 293 550 033) to lubricate suspension arms. There are two grease fittings per arm.

UPPER ARM
1. Grease fittings

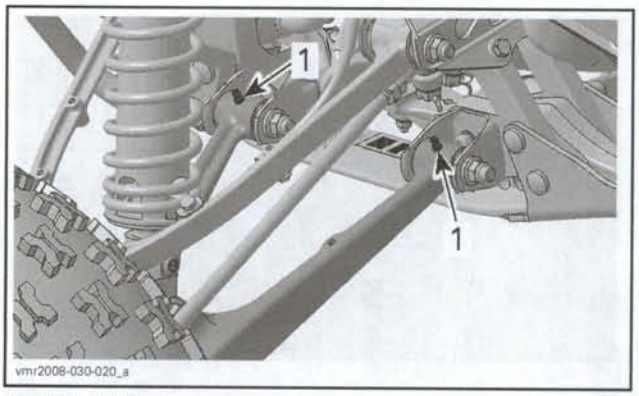

LOWER ARM
1. Grease fittings

PROCEDURES

SHOCK ABSORBER

Shock Absorber Removal

Lift the front of vehicle.

NOTE: Lift up vehicle high enough to have the wheel off the ground.

Unscrew shock absorber bolts.

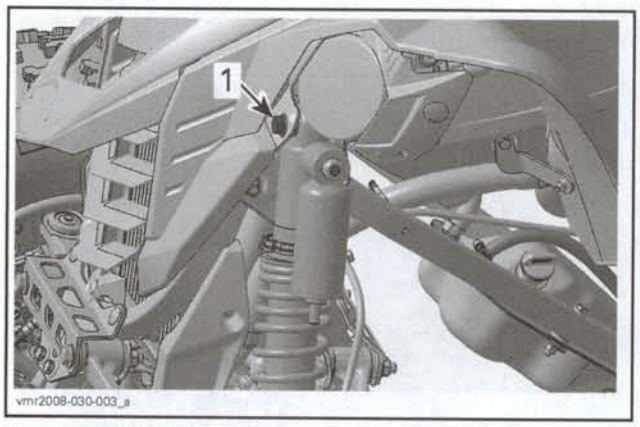

1. Upper shock absorber bolt

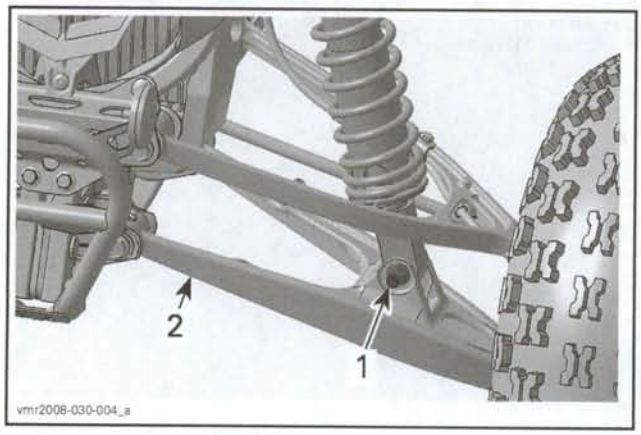

1. Lower shock absorber bolt
2. Lower suspension arm

Remove shock absorber from vehicle.

Shock Absorber Disassembly

Loosen the top locking ring.

Unscrew adjusting ring.

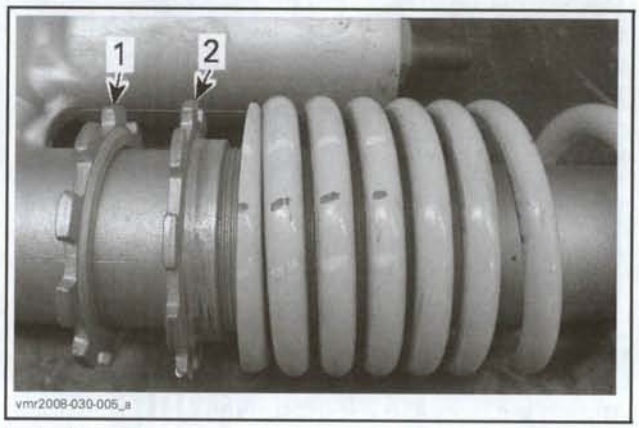

1. Locking ring
2. Adjusting ring

At the bottom of shock absorber, remove spring stopper and rod protector.

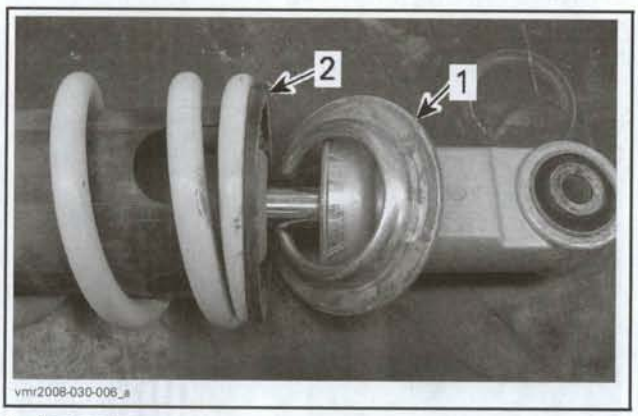

1. Spring stopper
2. Rod protector

Remove spring.

Shock Absorber Inspection

Inspect the spring for damage. Replace if necessary.

Inspect shock for oil leakage. Extend and compress the piston several times over its entire stroke.

Check piston rod for excessive wear or pitting.

To inspect shock operation, or if suspecting an internal leak between oil chamber and gas chamber, check shock as follows:

Install shock in a vise clamping on its bottom eyelet with its rod upward. Verify the compression stroke when the rod is fully extended.

Completely push down the shock rod then release.

NOTE: Because of gas pressure, strong resistance is felt when compressing shock.

The shock should extend unassisted. Check that it moves smoothly and with uniform resistance. Any of the following conditions will denote a defective shock:

- A skip or hang back when reversing stroke at mid travel.
- Seizing or binding condition except at extreme end of either stroke.
- A gurgling noise after completing one full compression and extension stroke.

If suspecting a shock is freezing, place it in a freezer (temperature below 0°C (32°F)) for 4 hours.

Push down on rod and note its resistance. If shock is frozen it will be much more difficult to compress than one in normal condition.

Replace shock if any of these conditions are found.

On both ends, check the bushings for excessive wear or other damages. Replace shock absorber if necessary.

Shock Absorber Assembly

Extend the piston rod.

Install spring with the color code upward.

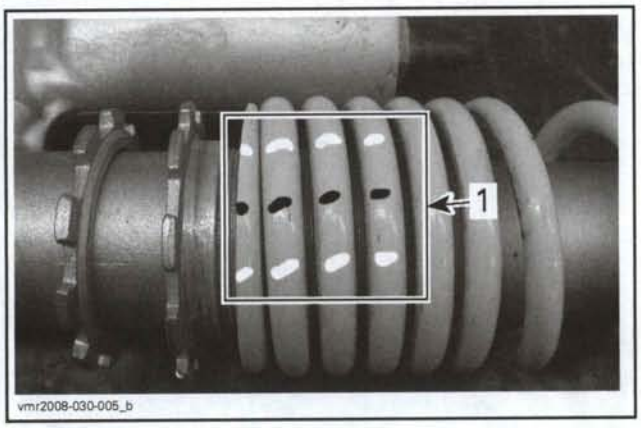

1. Color code area

Install rod protector and spring stopper.

Install the adjusting ring.

Shock Absorber Installation

Install the shock absorber with the rebound adjuster rearward.

Position bolt heads as follow:

SHOCK ABSORBER BOLT HEAD POSITION	
Upper shock absorber bolt	Forward
Lower shock absorber bolt	Rearward

Adjust *SPRING PRELOAD*, see procedure at the beginning of this section.

UPPER SUSPENSION ARM

Upper Suspension Arm Inspection

Check upper suspension arm for:

- Bending
- Cracks
- Pitting
- Other damages.

Replace as required.

Move upper suspension arm from side to side and up and down. There should be no noticeable play in bushings.

If necessary, remove suspension arm and inspect pivot bushings and sleeves for wear or damages. Replace bushings and/or sleeves if necessary.

Upper Suspension Arm Removal

Place vehicle on a level surface.

Apply parking brake.

Loosen wheel lug nuts.

Lift the front of vehicle.

Remove wheel.

Detach brake hose from upper suspension arm.

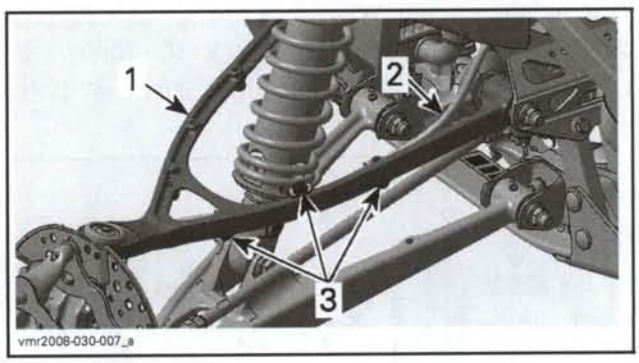

1. Upper suspension arm
2. Brake hose
3. Screws to remove

Remove bolt securing upper ball joint.

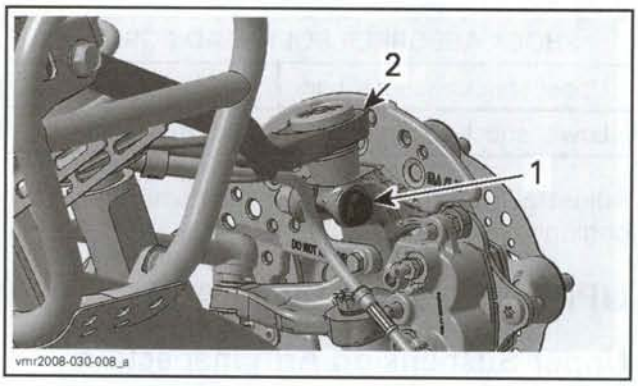

1. *Upper ball joint bolt*
2. *Knuckle*

Remove ball joint from knuckle.

Remove bolts retaining upper suspension arm to frame.

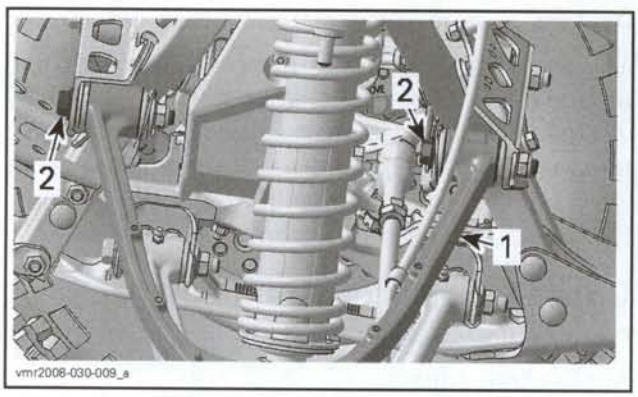

1. *Upper suspension arm*
2. *Upper suspension arm bolts*

Remove upper suspension arm from vehicle.

Upper Suspension Arm Installation

The installation is the reverse of the removal procedure. However, pay attention to the following.

Use the following illustration to position all parts in proper order.

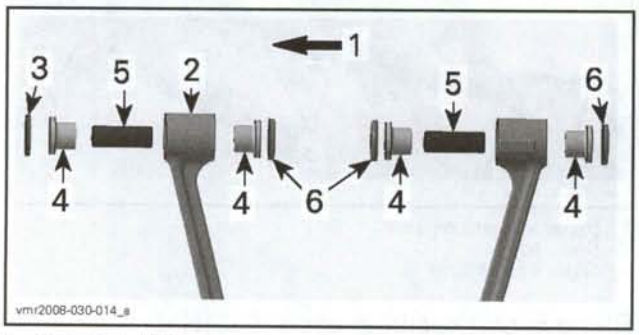

1. *Front of vehicle*
2. *LH upper suspension arm*
3. *Flat washer*
4. *Pivot bushings*
5. *Sleeves*
6. *Wear caps*

Lubricate grease fittings.

UPPER BALL JOINT

Upper Ball Joint Inspection

Inspect ball joint end for damage.

Ensure it's moving freely without play.

Replace ball joint as required.

Upper Ball Joint Removal

Remove *UPPER SUSPENSION ARM*, see procedure above.

Remove circlip securing ball joint to suspension arm.

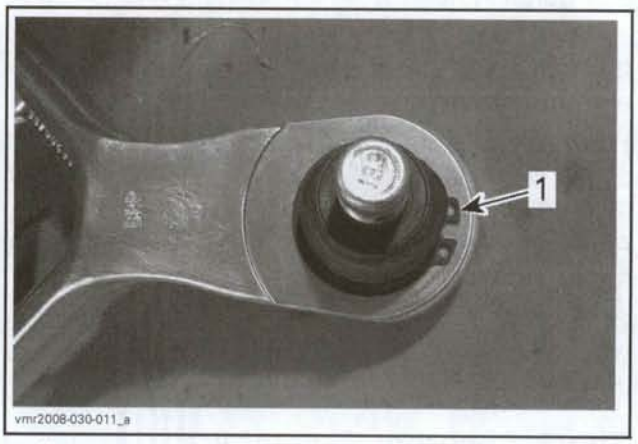

1. *Circlip*

Apply localized heat to break adhesive product.

Using a press and the ball joint remover (P/N 529 036 121) as a support, drive ball joint out of the upper suspension arm while hot.

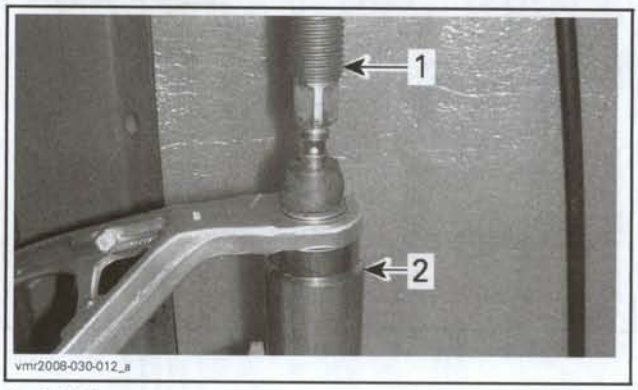

1. *Ball joint remover*
2. *Press*

Upper Ball Joint Installation

Cured product on suspension arm can be removed using a combination of Loctite Chisel (gasket remover) (P/N 413 708 500) and a brass wire brush.

Apply a thin layer of Loctite 609 (P/N 413 703 100) on ball joint head and inside the suspension arm bore.

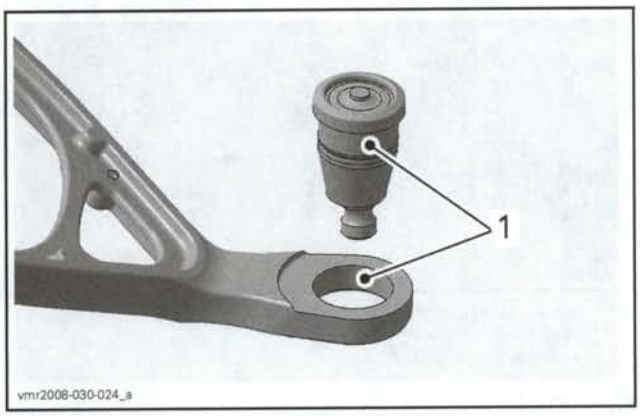

1. Apply adhesive product on these surfaces

Using a press, a steel plate and the ball joint remover (P/N 529 036 121), press ball joint into the suspension arm.

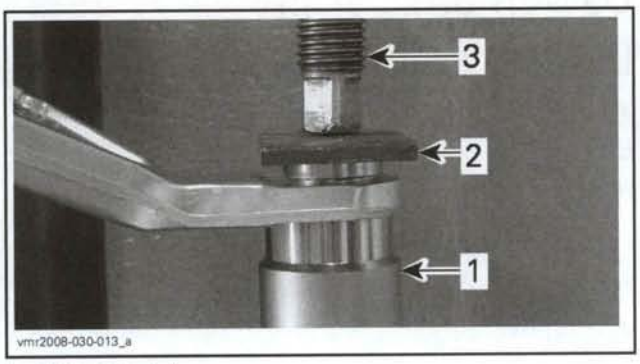

1. Ball joint installer
2. Steel plate
3. Press

Wipe any excess of adhesive product.

Install the circlip.

Install *UPPER SUSPENSION ARM*, see procedure in this section.

LOWER SUSPENSION ARM

Lower Suspension Arm Inspection

Check lower suspension arm for:

- Bending
- Cracks
- Pitting
- Other damages.

Replace as required.

Move lower suspension arm from side to side and up and down. There should be no noticeable play in bushings.

If necessary, remove suspension arm and inspect pivot bushings and sleeves for wear or damages. Replace bushings and/or sleeves if necessary.

Lower Suspension Arm Removal

Place vehicle on a level surface.

Apply parking brake.

Loosen wheel lug nuts.

Lift the front of vehicle.

Remove wheel.

Remove and discard the cotter pin securing lower ball joint nut.

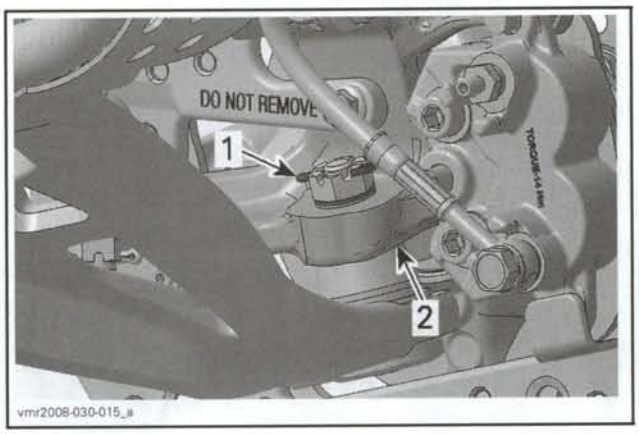

1. Cotter pin
2. LH knuckle

Remove the lower ball joint nut and washers.

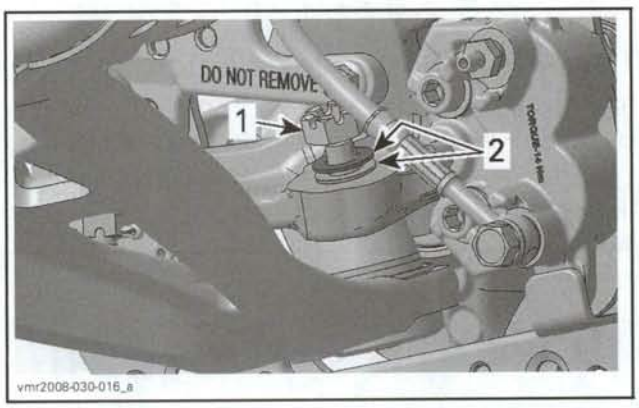

1. Ball joint nut
2. Washers

Remove the shock absorber lower bolt.

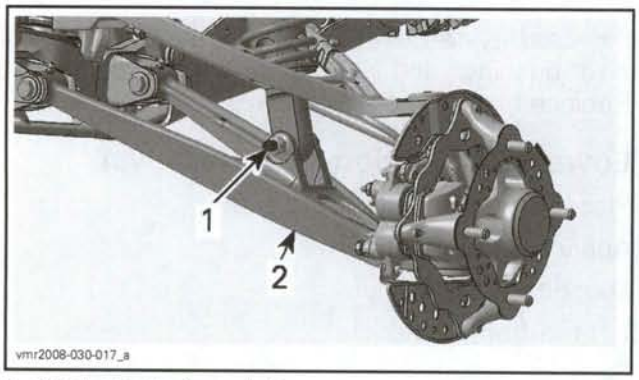

1. Shock absorber lower bolt
2. Lower suspension arm

Separate ball joint from knuckle.

Remove bolts retaining lower suspension arm to frame.

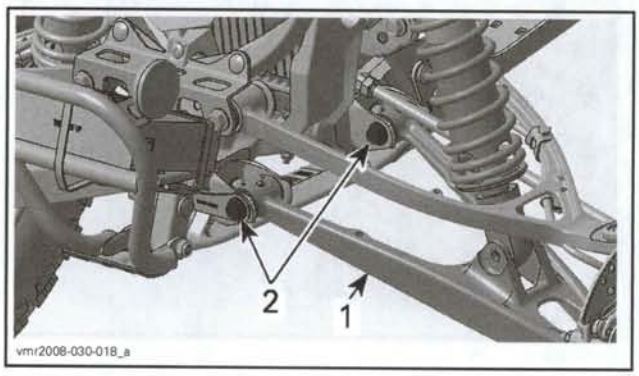

1. Lower suspension arm
2. Lower suspension arm bolts

Remove lower suspension arm from vehicle.

Lower Suspension Installation

The installation is the reverse of the removal procedure. However, pay attention to the following.

Use the following illustration to position all parts in proper order.

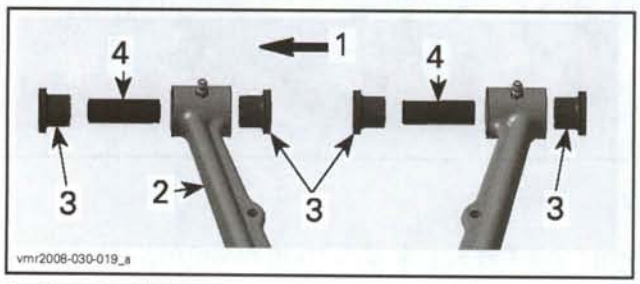

1. Front of vehicle
2. LH lower suspension arm
3. Pivot bushings
4. Sleeves

Install lower suspension arm on vehicle using the front suspension plate.

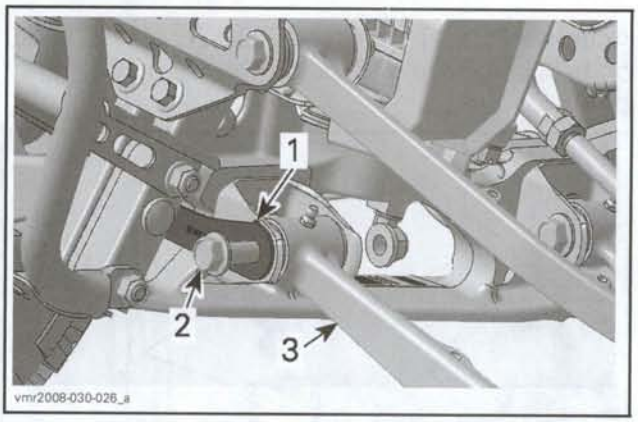

1. Front suspension plate
2. Lower suspension arm front bolt
3. Lower suspension arm

CAUTION: Do not omit this plate. The structural solidity of the frame would be greatly affected.

Lubricate grease fittings.

LOWER BALL JOINT

Lower Ball Joint Inspection

Inspect ball joint end for damage.

Ensure it's moving freely without play.

Replace ball joint as required.

Lower Ball Joint Removal

Remove *LOWER SUSPENSION ARM*, see procedure above.

Remove circlip securing ball joint to suspension arm.

1. Circlip

Apply localized heat to break adhesive product.

Using a press and the ball joint remover (P/N 529 036 121) as a support, drive ball joint out of the lower suspension arm while hot.

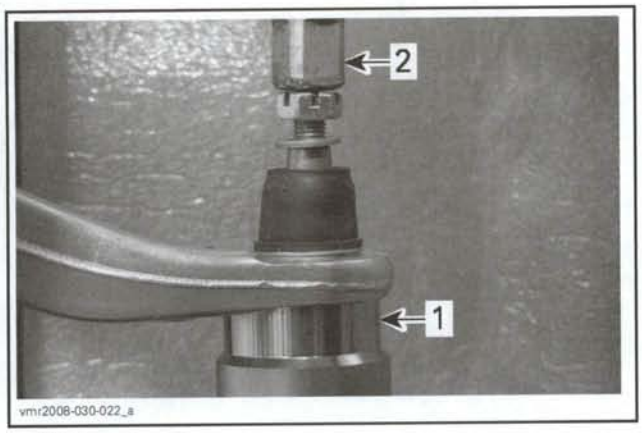

1. Ball joint remover
2. Press

Lower Ball Joint Installation

Cured product on suspension arm can be removed using a combination of Loctite Chisel (gasket remover) (P/N 413 708 500) and a brass wire brush.

Apply a thin layer of Loctite 609 (P/N 413 703 100) on ball joint head and inside the suspension arm bore.

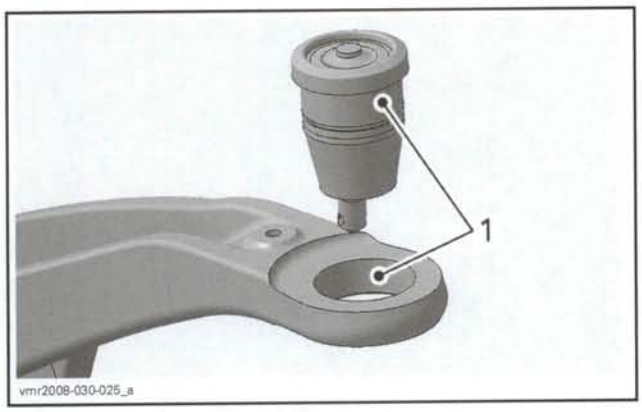

1. Apply adhesive product on these surfaces

Using a press, a steel plate and the ball joint remover (P/N 529 036 121), press ball joint into the lower suspension arm.

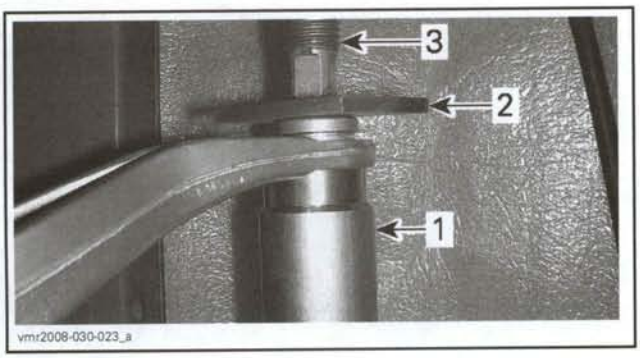

1. Ball joint installer
2. Steel plate
3. Press

Wipe any excess of adhesive product.

Install the circlip.

Install *LOWER SUSPENSION ARM*, see procedure in this section.

REAR SUSPENSION

SERVICE TOOLS

Description	Part Number	Page
needle bearing installer	529 036 109	324

SERVICE PRODUCTS

Description	Part Number	Page
dielectric grease	293 550 004	322
suspension grease	293 550 033	320, 325–326

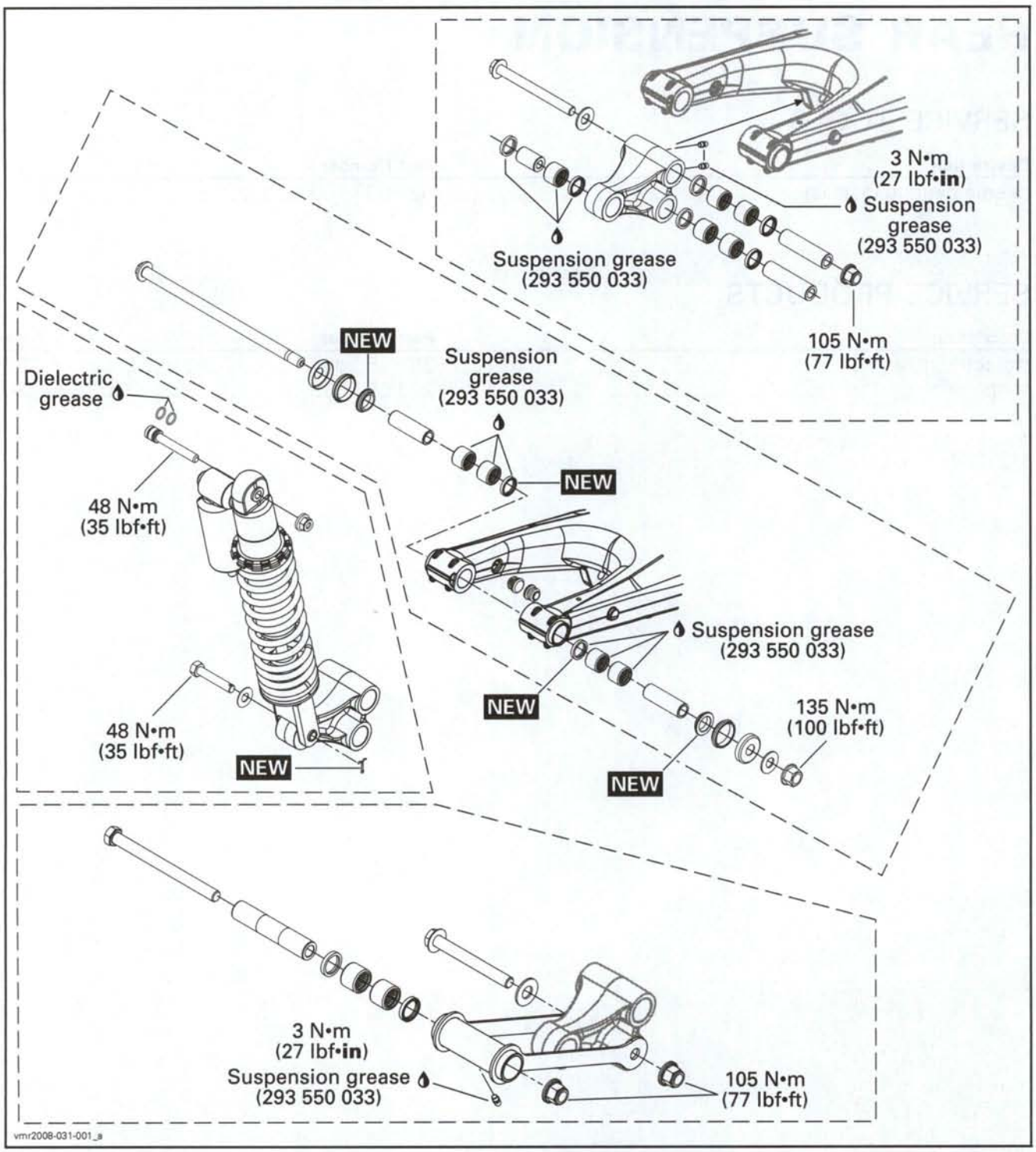
3 N•m
(27 lbf•in)
Suspension grease
(293 550 033)
Suspension grease
(293 550 033)
105 N•m
(77 lbf•ft)
NEW
Suspension grease
(293 550 033)
Dielectric grease
NEW
48 N•m
(35 lbf•ft)
Suspension grease
(293 550 033)
NEW
135 N•m
(100 lbf•ft)
48 N•m
(35 lbf•ft)
NEW
NEW
3 N•m
(27 lbf•in)
Suspension grease
(293 550 033)
105 N•m
(77 lbf•ft)
vmr2008-031-001_a

GENERAL

During assembly/installation, use the torque values and service products as in the exploded views.

Clean threads before applying a threadlocker. Refer to *SELF-LOCKING FASTENERS* and *LOCTITE APPLICATION* at the beginning of this manual for complete procedure.

⚠ WARNING

Torque wrench tightening specifications must be strictly adhered to.
Locking devices (e.g.: locking tabs, elastic stop nuts, cotter pins, etc.) must be replaced with new ones.

⚠ WARNING

- **Rear shock absorber is pressurized.**
- **An explosion may occur if heated or punctured.**
- **Do not disassemble reservoir or shock body.**

ADJUSTMENTS

Before performing any suspension adjustments, it is always good practice to start from factory settings, then customize each adjustment one at a time.

FACTORY SETTINGS

Spring Preload

Lift the rear of the vehicle. Spring length should be measured without load on the wheels.

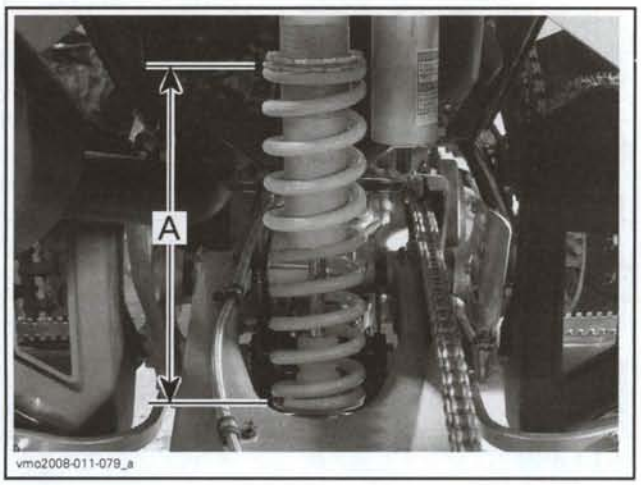

SPRING LENGTH
A. 262 mm (10 in)

Shock Absorber Compression Damping

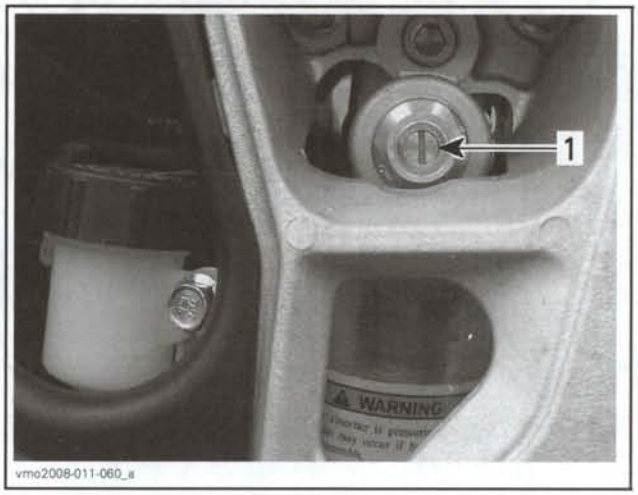

9 CLICKS COUNTERCLOCKWISE
1. Compression damping adjuster

Shock Absorber Rebound Damping

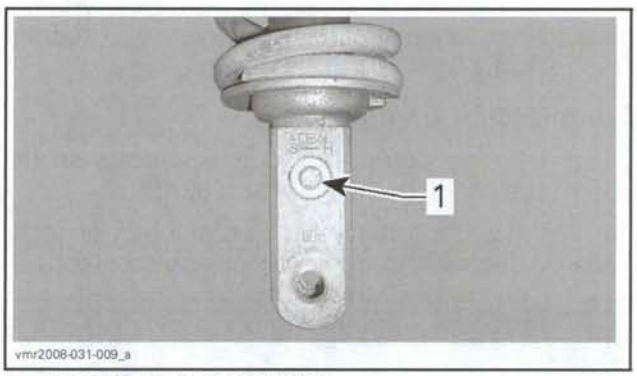

9 CLICKS COUNTERCLOCKWISE
1. Rebound damping adjuster

ADJUSTING SUSPENSION

Spring Preload Adjustment

Shorten the spring for a firmer ride.

Lengthen the spring for a softer ride.

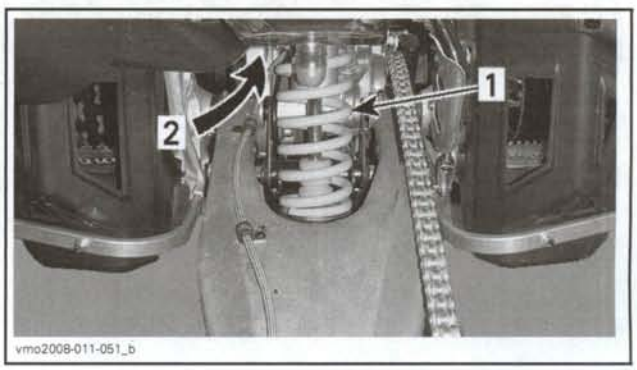

1. Rear shock
2. Adjusting rings location

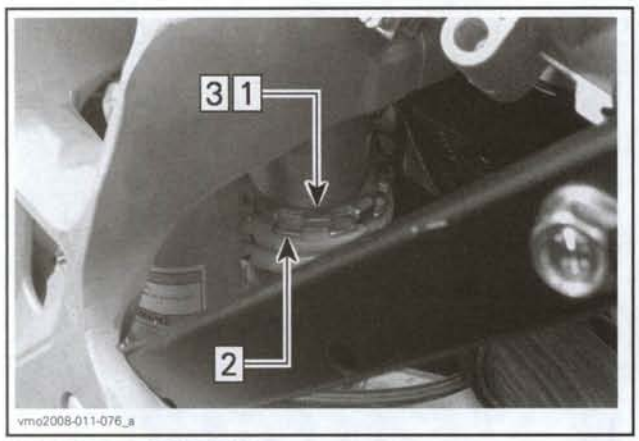

PRELOAD ADJUSTMENT
Step 1: Loosen top locking ring
Step 2: Turn adjusting ring accordingly
Step 3: Tighten top locking ring

Shock compression and Rebound Adjustment

Perform adjustments **one** position (click) at a time. Test run the vehicle under the same conditions; trail, speed, driver riding position, etc. Proceed methodically until you are satisfied.

Compression Damping

Turning the compression adjuster clockwise (H) **increases** shock damping action (stiffer).

Turning the compression adjuster counterclockwise (S) **decreases** shock damping action (softer).

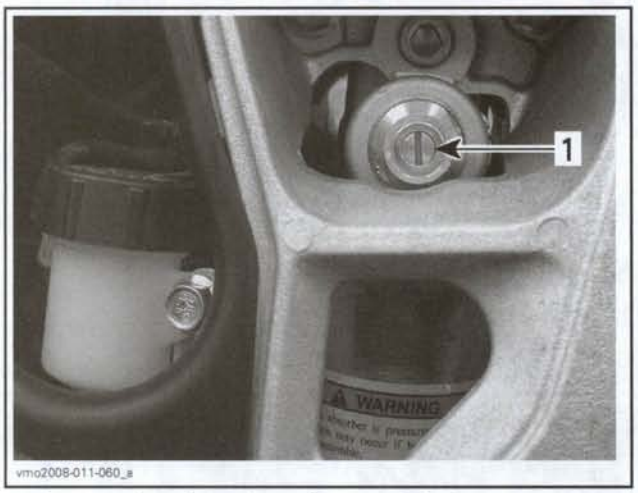

1. Compression adjuster (use a flat screwdriver)

Rebound Damping

Turning the rebound adjuster clockwise (H) **increases** shock damping action (stiffer).

Turning the rebound adjuster counterclockwise (S) **decreases** shock damping action (softer).

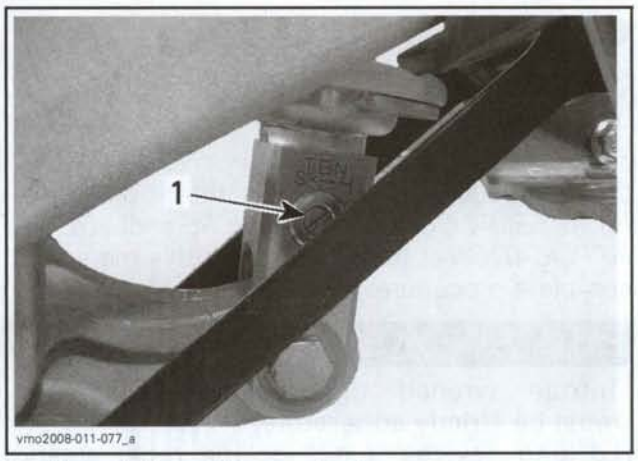

1. Rebound adjuster (flat screwdriver)

MAINTENANCE

LUBRICATION

Lubricate bell crank lever and pivot arm with suspension grease (P/N 293 550 033).

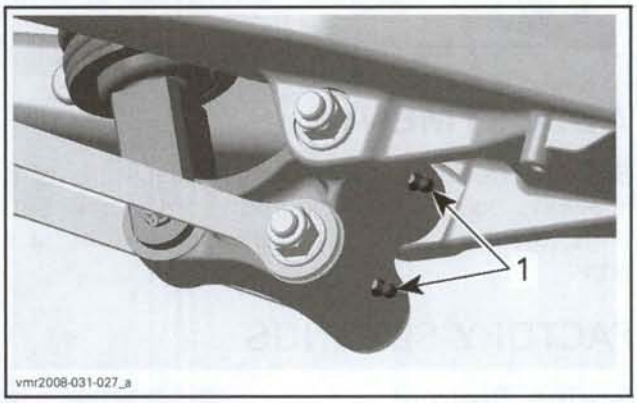

BELL CRANK LEVER
1. Grease fittings

PIVOT ARM
1. Grease fitting

PROCEDURES

SHOCK ABSORBER

Shock Absorber Removal

Remove seat.

Remove screws securing both rear ends of fascia.

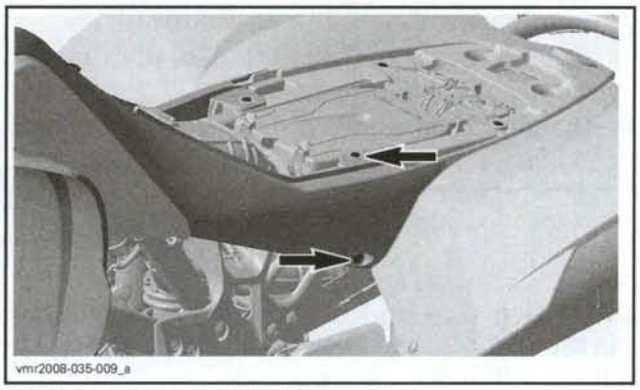

REMOVE THESE SCREWS ON EACH SIDE

Remove screws holding fascia and coolant reservoir.

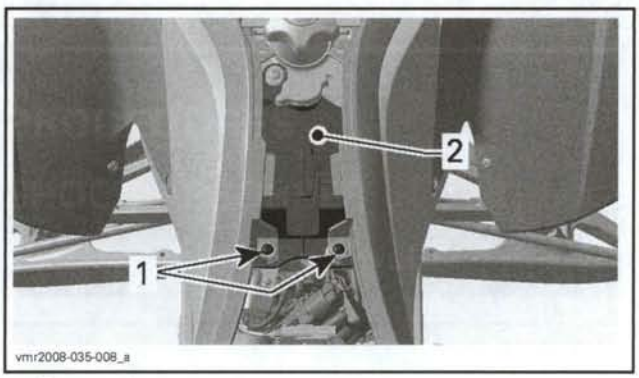

1. *Remove these screws*
2. *Coolant reservoir*

Lift rear of vehicle until rear shock absorber is fully extended.

Install a jack stand under the frame to support the vehicle.

Remove and discard cotter pin securing lower bolt of shock absorber.

Unscrew lower bolt.

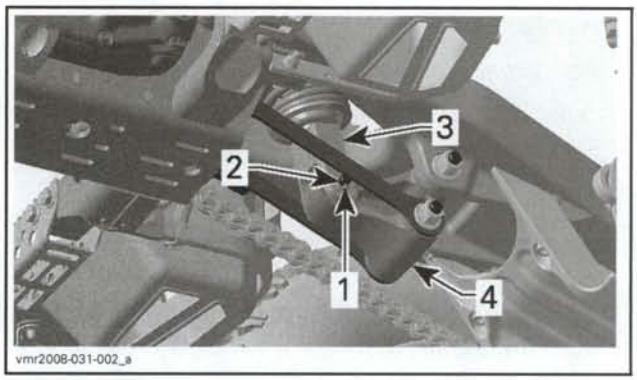

UNDERNEATH SWING ARM
1. *Cotter pin*
2. *Lower bolt*
3. *Shock absorber*
4. *Bell crank lever*

Remove bolt securing bell crank lever to swing arm.

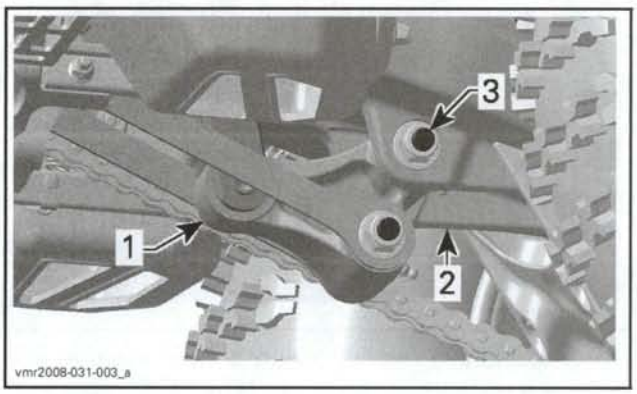

1. *Bell crank lever*
2. *Swing arm*
3. *Bolt to be removed*

Lift both rear ends of fascia to reach the shock absorber upper bolt.

Remove the shock absorber upper bolt.

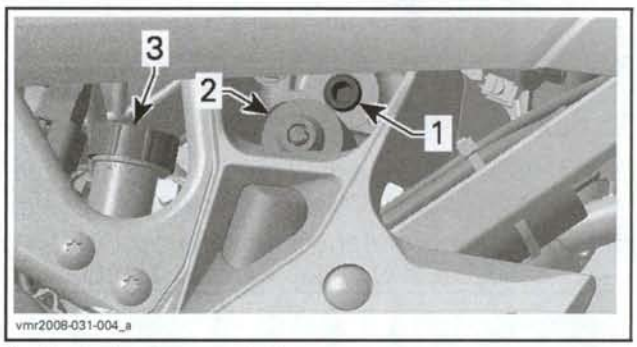

1. *Shock absorber upper bolt*
2. *Shock absorber*
3. *Rear brake fluid reservoir*

Remove the shock absorber.

Shock Absorber Inspection

Check shock absorber body for:

- Leaks

- Dents
- Abnormal wear.

Check piston rod for:
- Straightness
- Wear
- Nicks
- Burrs.

Remove *SPRING*, see procedure in this section.

Secure the shock absorber body end in a vise with its rod upward.

Fully compress piston rod. When released, it should extend smoothly.

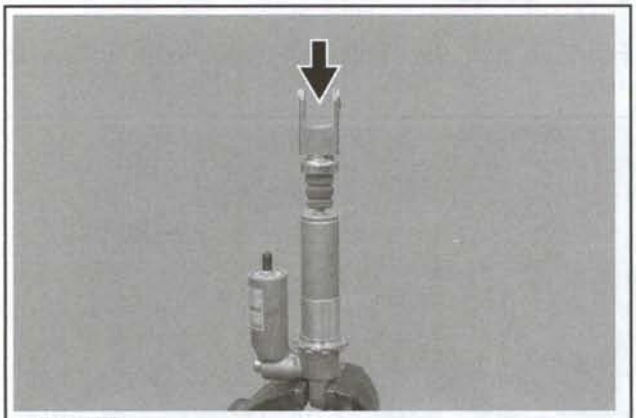
vmr2008-031-007_a

Pay attention to the following conditions that will denote a defective shock absorber:
- A skip or a hang back when reversing stroke at mid travel.
- Seizing or binding condition except at extreme end of either stroke.
- Oil leakage.
- A gurgling noise, after completing one full compression stroke.

Replace shock absorber if any fault is present.

Shock Absorber Installation

For installation, reverse removal procedures. However pay attention to the following.

Before installing the shock absorber upper bolt, check condition of O-rings. Replace as required.

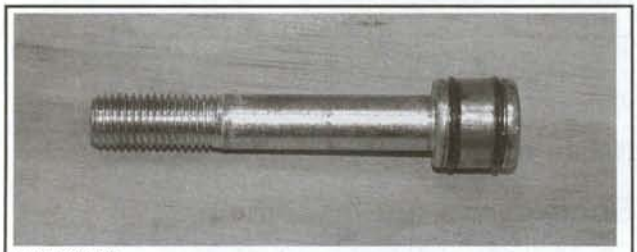
vmr2008-031-022

Apply dielectric grease (P/N 293 550 004) on O-rings.

SPRING

Spring Removal

⚠ WARNING

- **Rear shock absorber is pressurized.**
- **An explosion may occur if heated or punctured.**
- **Do not disassemble reservoir or shock body.**

Remove shock absorber. See procedure above.

Install shock absorber in a vise.

CAUTION: Use a vice with soft jaws (rubber, plastic or brass) to avoid damaging shock absorber surface.

Unscrew both adjusting nuts completely.

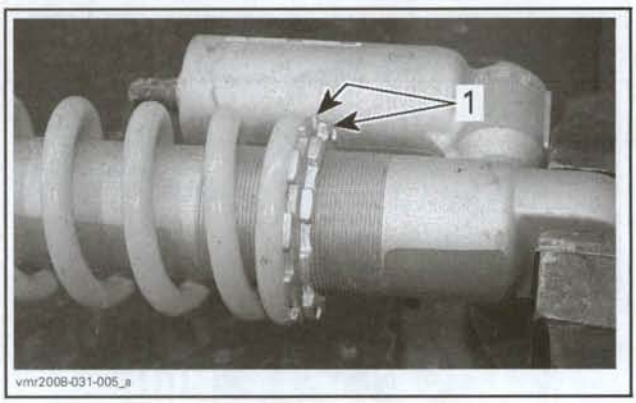

vmr2008-031-005_a

1. Adjusting nuts

Remove spring seat.

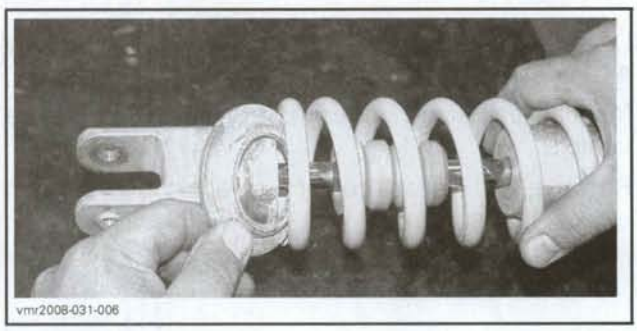
vmr2008-031-006

Remove spring.

Spring Installation

For installation, reverse removal procedures.

SWING ARM

Swing Arm Removal

NOTE: Wheel hubs, brake disc, rear sprocket, rear axle and chain tensioner should be removed only if the replacement of swing arm is necessary. In this case, remove them first. Refer to *DRIVE TRAIN* section for the complete procedure.

Select a level surface and set transmission to NEUTRAL.

Lift the rear of vehicle.

Install jack stands under the frame to support vehicle off the ground.

Loosen drive chain. Refer to *DRIVE CHAIN ADJUSTMENT* in *DRIVE TRAIN* section for the procedure.

Remove screws securing brake hose on swing arm.

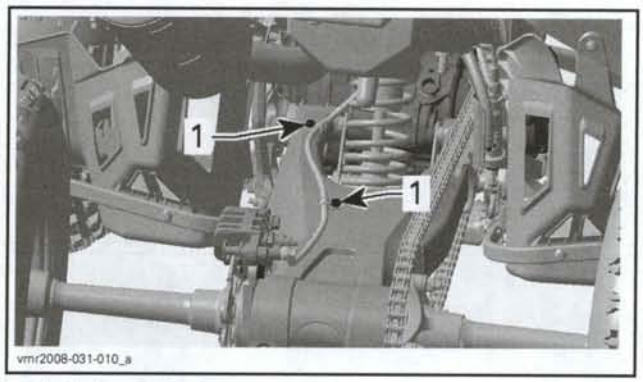

1. Brake hose screws

Remove the caliper screws then the caliper. Hang the caliper with a piece of wire to take the weight off the brake hose.

CAUTION: Do not let caliper hang by the hose and do not stretch or twist the hose.

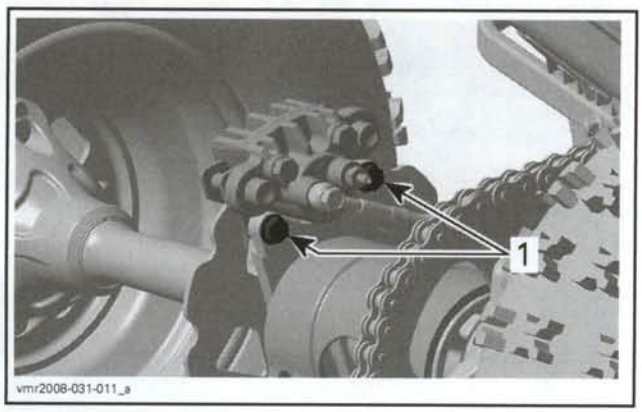

1. Caliper screws

Remove front sprocket. Refer to *FRONT SPROCKET* in *DRIVE TRAIN* section for the procedure.

Remove bolt securing bell crank lever to swing arm.

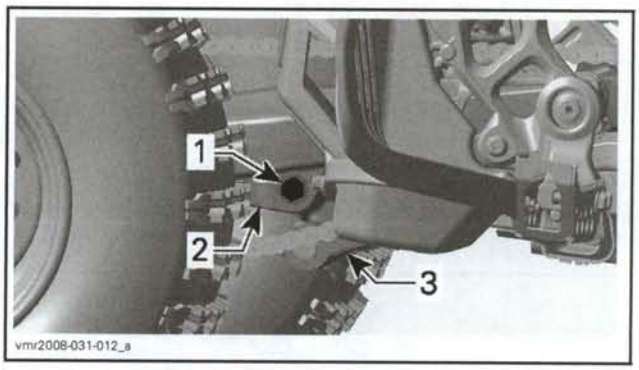

1. Bell crank lever bolt
2. Swing arm
3. Bell crank lever

Remove the swing arm bolt.

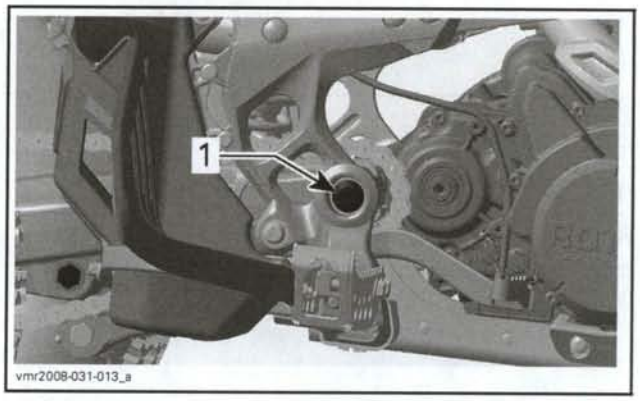

1. Bolt to be removed

Move swing arm rearward to remove it from vehicle.

Slide bushing out of swing arm end.

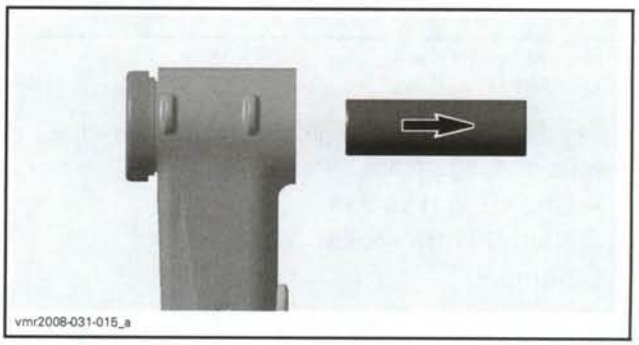

Swing Arm Inspection

Inspect swing arm for:
- Distortion
- Bending
- Pitting

- Cracks
- Other damages.

Replace swing arm with a new one if damaged.

With your finger nail, feel bearing contact surfaces of bushing. If any irregular surface is found, replace bushing and needle bearings.

Check needle bearings. They must turn smoothly and freely. Replace them if necessary.

Swing Arm Disassembly

Remove dust cap and outer seal. Discard if damaged.

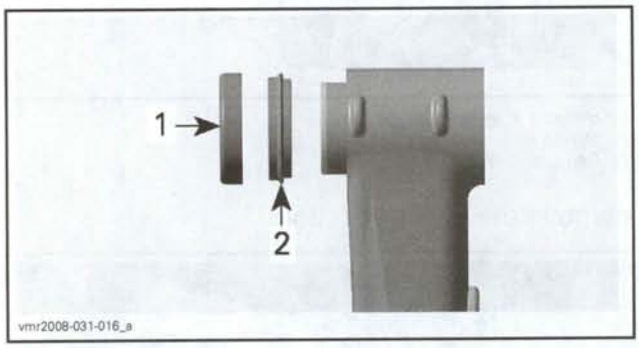

1. Dust cap
2. Outer seal

Remove the flanged bushing.

Remove and discard inner seal.

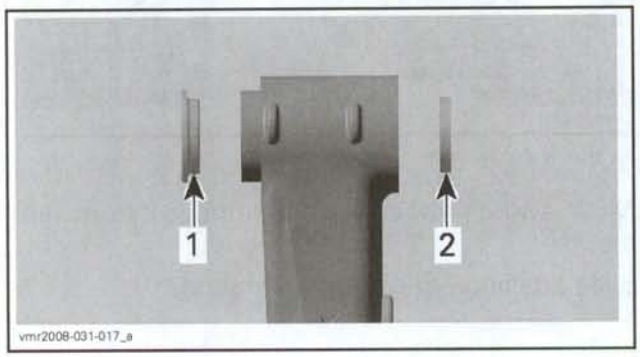

1. Press-fit flanged bushing
2. Inner seal

Using the following tools, remove and discard needle bearings from swing arm:

- A long 19 mm socket
- A short 30 mm socket
- C-clamp.

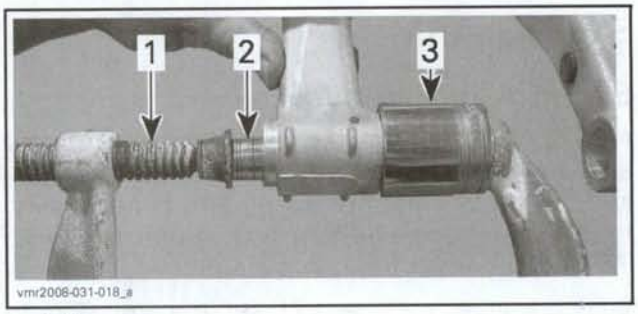

1. C-clamp
2. 19 mm socket
3. 30 mm socket

Swing Arm Assembly

Using the needle bearing installer (P/N 529 036 109), install **NEW** needle bearings into swing arm ends.

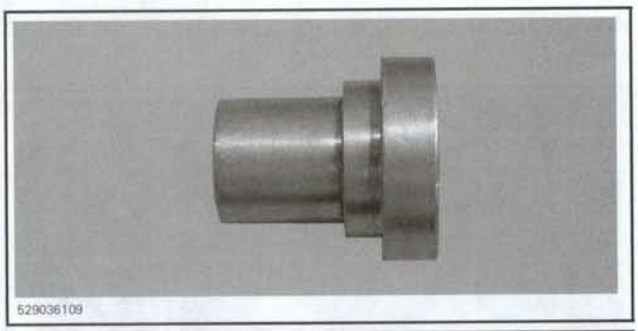

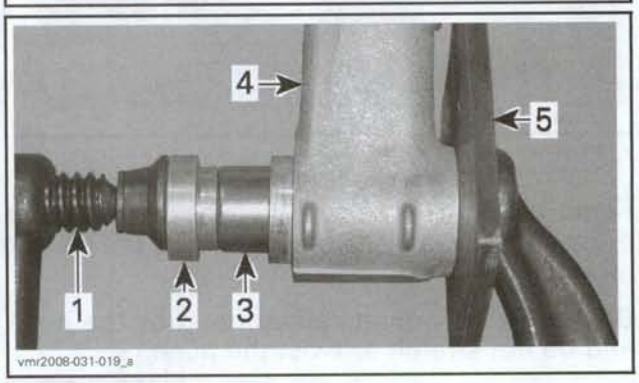

FIRST BEARING
1. C-clamp
2. Needle bearing installer
3. Needle bearing
4. End of swing arm
5. Aluminum or steel plate

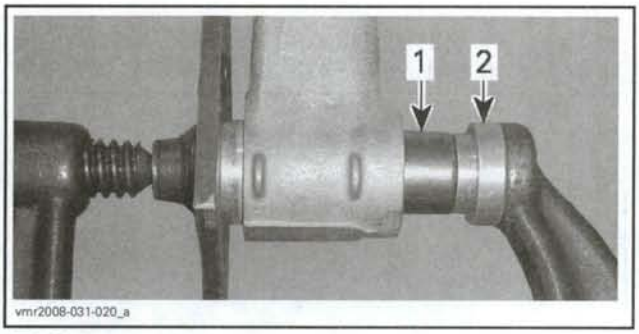

SECOND BEARING
1. *Needle bearing*
2. *Needle bearing installer*

Apply suspension grease (P/N 293 550 033) on the inner face of needle bearings.

Apply suspension grease (P/N 293 550 033) on **NEW** seals.

Install seals with the lips facing inside swing arm ends.

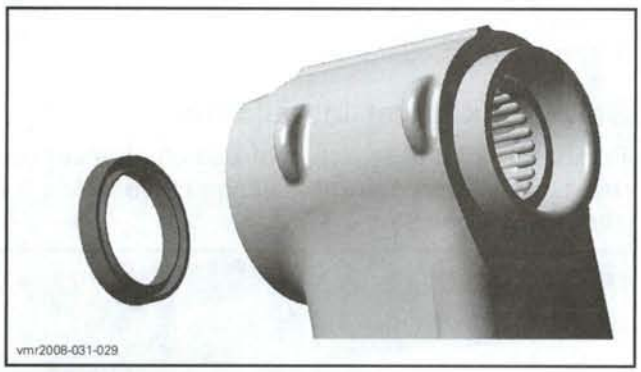

Press in flanged bushing.

Assemble all other disassembled parts.

Swing Arm Installation

Installation is essentially the reverse of removal procedure. However, pay attention to the following details.

Install swing arm bolt and nut.

Torque nut to 135 N•m (100 lbf•ft).

Check if the swing arm moves freely.

Install all other removed parts.

BELL CRANK LEVER

Bell Crank Lever Removal

Lift rear of vehicle until rear shock absorber is fully extended.

Install a jack stand under the frame to support the vehicle.

Remove bolt securing pivot arm to bell crank lever.

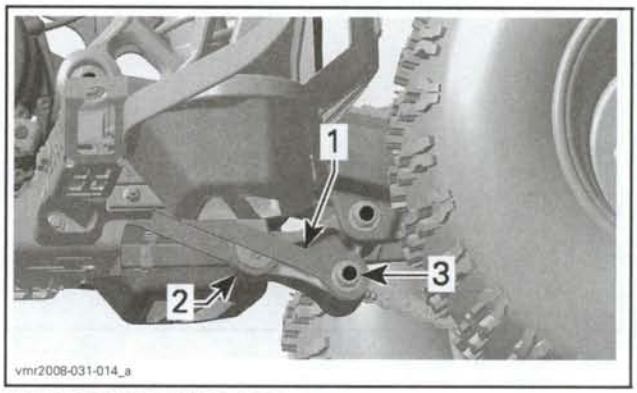

UNDERNEATH SWING ARM
1. *Pivot arm*
2. *Bell crank lever*
3. *Remove bolt and nut*

Remove and discard cotter pin securing lower bolt of shock absorber.

Unscrew lower bolt.

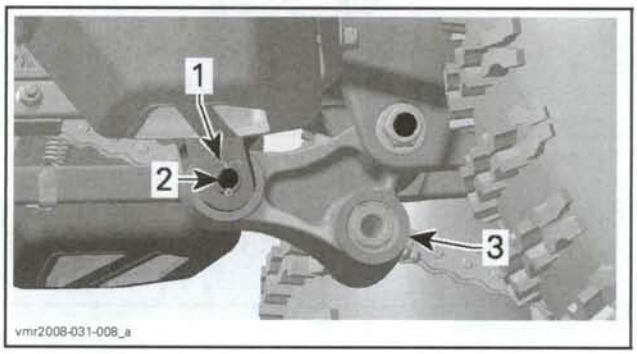

1. *Cotter pin*
2. *Lower bolt*
3. *Bell crank lever*

Remove bolt securing bell crank lever to swing arm.

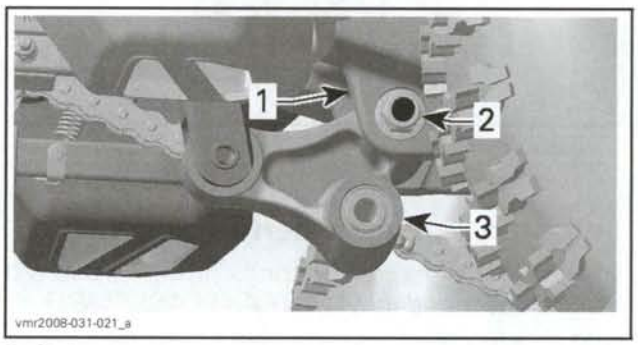

1. *Swing arm*
2. *Bolt and nut to be removed*
3. *Bell crank lever*

Remove bell crank lever.

Bell Crank Lever Disassembly

Remove bushing.

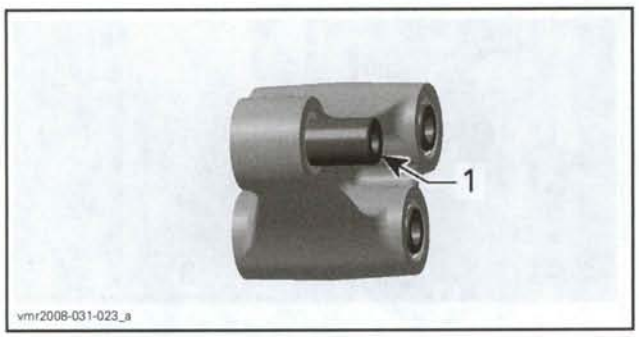

1. Bushing

Remove and discard seals.

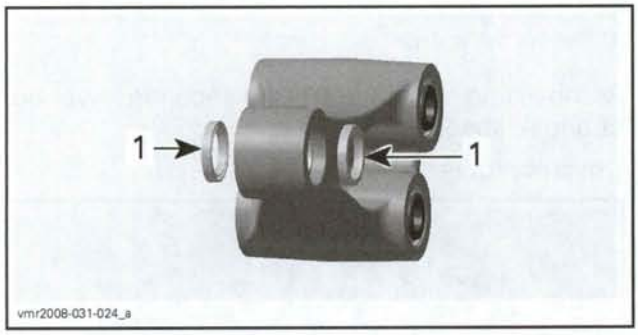

1. Seal

Remove and discard needle bearing(s) by using the procedure described in *SWING ARM DISASSEMBLY.*

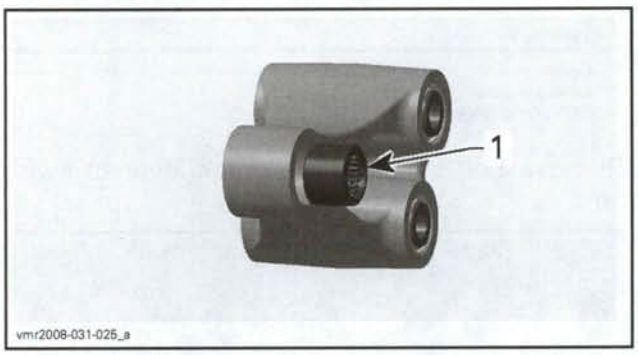

1. Needle bearing

Bell Crank Lever Assembly

To install **NEW** needle bearings properly, use procedure described in *SWING ARM ASSEMBLY.*

NOTE: After installing the single needle bearing, apply suspension grease (P/N 293 550 033) on its inner face.

Install seals.

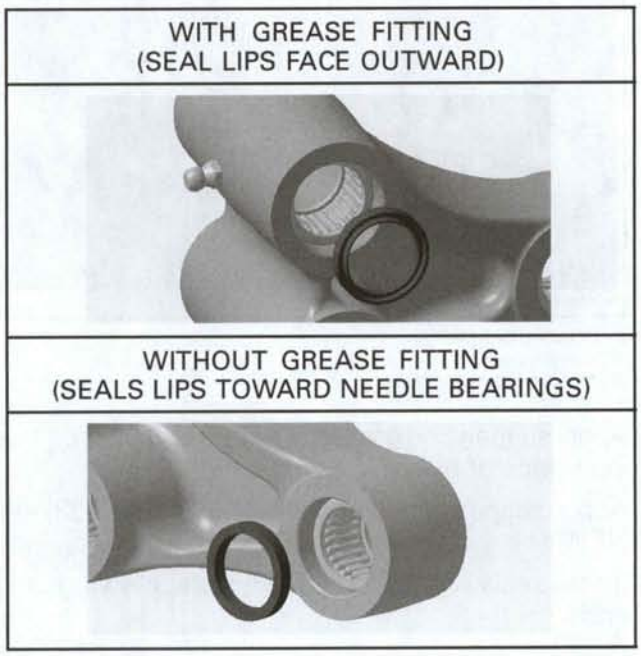

Insert bushing.

Bell Crank Lever Installation

Position the longest radius of bell crank lever upward. This curved portion allows more space for shock absorber travel.

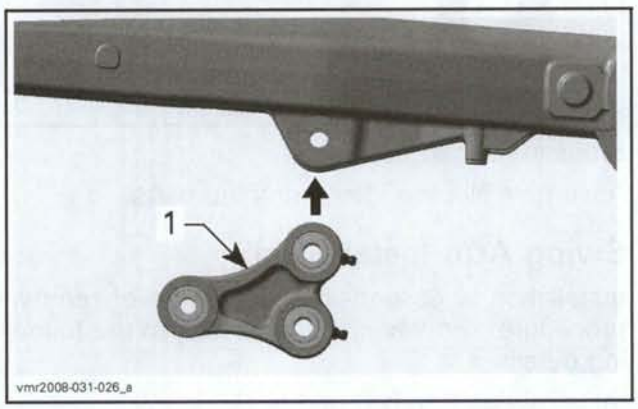

1. Longest radius

Install all other removed parts.

Lubricate bell crank lever using the grease fittings.

PIVOT ARM

Pivot Arm Removal

Remove bolt securing pivot arm to bell crank lever.

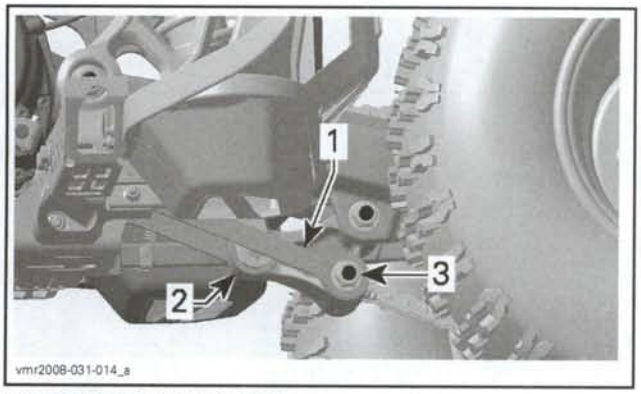

UNDERNEATH SWING ARM
1. *Pivot arm*
2. *Bell crank lever*
3. *Remove bolt and nut*

Remove the RH footrest. Refer to *BODY*.

Remove the brake pedal. Refer to *BRAKES*.

Remove the pivot arm bolt.

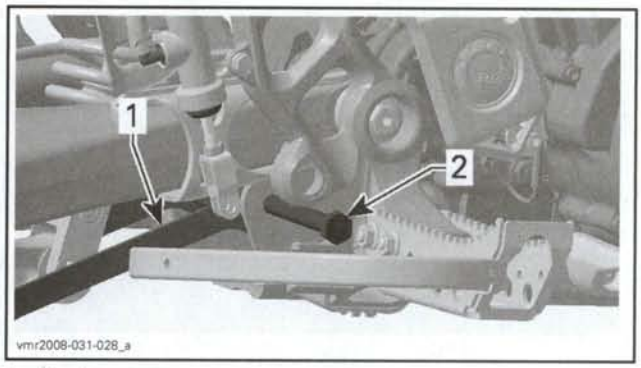

1. *Pivot arm*
2. *Pivot arm bolt*

Remove pivot arm from vehicle.

Pivot Arm Disassembly

Remove bushing.

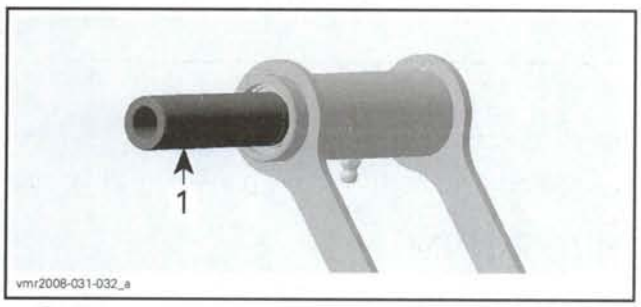

1. *Bushing*

Remove and discard seals.

1. *Seal*

Remove and discard needle bearings by using the procedure described in *SWING ARM DISASSEMBLY*.

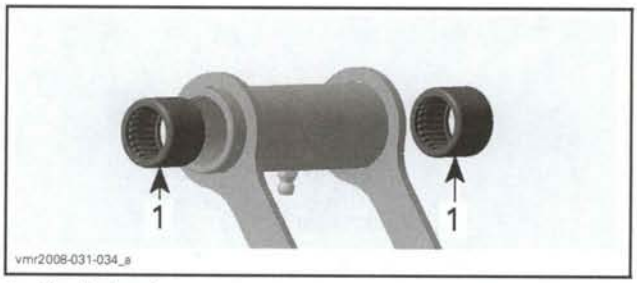

1. *Needle bearings*

Pivot Arm Assembly

To install **NEW** needle bearings properly, use procedure described in *SWING ARM ASSEMBLY*.

Install seals with lips facing outward.

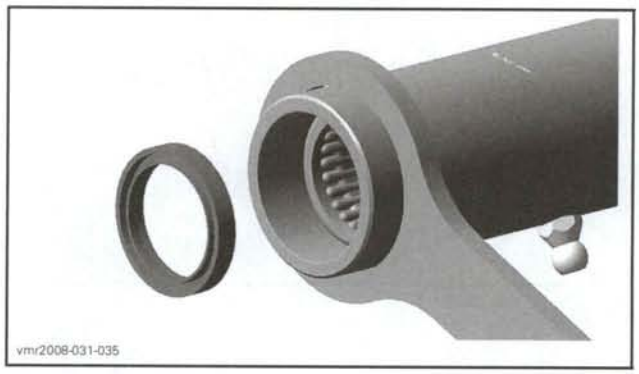

Insert bushing.

Pivot Arm Installation

The installation is the reverse of the removal procedure. However, pay attention to the following.

Always install the pivot arm bolt with bolt head on the RH side of vehicle to avoid damaging drive chain with the nut.

Lubricate pivot arm using the grease fitting.

BRAKES

SERVICE TOOLS

Description	Part Number	Page
vacuum/pressure pump	529 021 800	334
axle key	529 036 082	345
blind hole puller kit	529 036 117	343

SERVICE PRODUCTS

Description	Part Number	Page
CV grease	293 550 019	344
jet pump bearing grease	293 550 032	339, 342
brake fluid GTLMA (DOT 4)	293 600 062	332
Loctite 243 (blue)	293 800 060	338

FRONT BRAKES

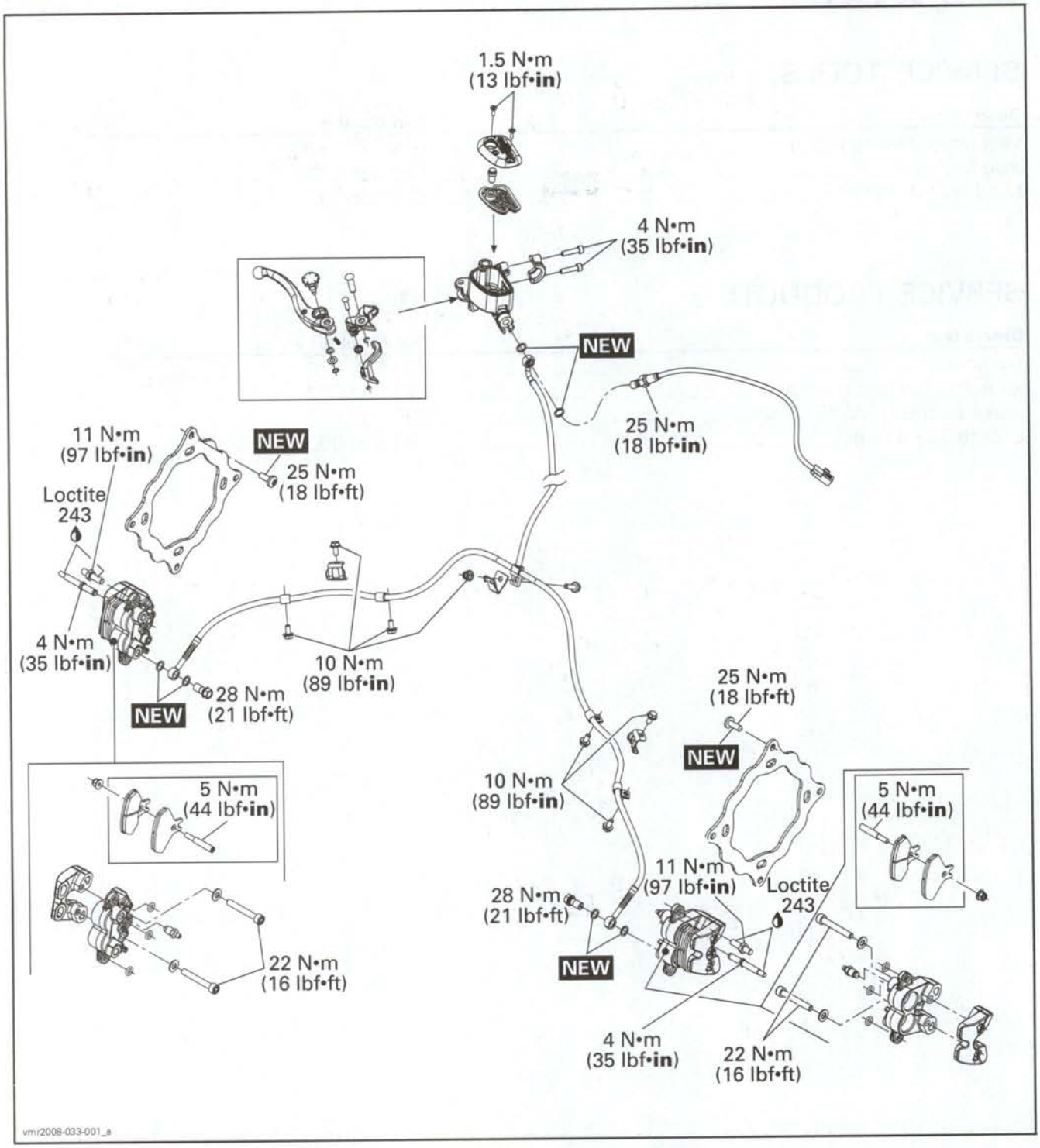

REAR BRAKE

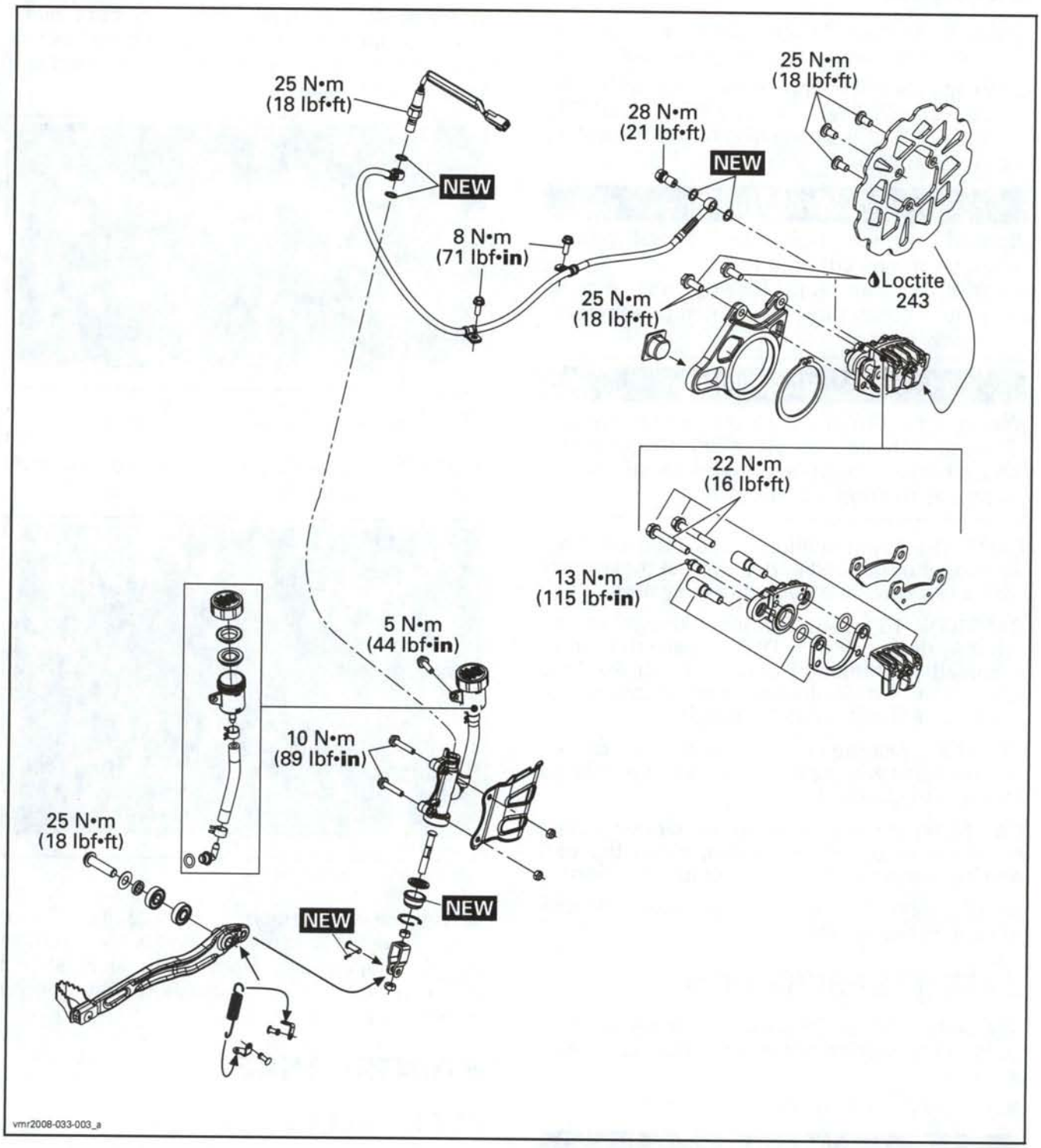
25 N•m
(18 lbf•ft)
NEW
28 N•m
(21 lbf•ft)
NEW
25 N•m
(18 lbf•ft)
8 N•m
(71 lbf•in)
Loctite
243
25 N•m
(18 lbf•ft)
22 N•m
(16 lbf•ft)
13 N•m
(115 lbf•in)
5 N•m
(44 lbf•in)
10 N•m
(89 lbf•in)
25 N•m
(18 lbf•ft)
NEW
NEW
vmr2008-033-003_a

GENERAL

During assembly/installation, use the torque values and service products as in the exploded view.

Clean threads before applying a threadlocker. Refer to *SELF-LOCKING FASTENERS* and *LOCTITE APPLICATION* at the beginning of this manual for complete procedure.

⚠ WARNING

Torque wrench tightening specifications must be strictly adhered to.
Locking devices (e.g.: locking tabs, elastic stop nuts, cotter pins, etc.) must be replaced with new ones.

⚠ WARNING

Never apply anything to the brake fittings. The use of thread sealant or Teflon tape could cause brake system failure and cause severe damages to components.

CAUTION: Avoid spilling brake fluid on plastic, rubber or painted parts. Protect these parts with a rag when servicing brake system.

CAUTION: To avoid serious damage to the brake system, use only DOT 4 brake fluid from a sealed container. Do not use brake fluid taken from old or already opened containers, nor mix different fluids for topping off.

CAUTION: Sealing washers must be discarded and replaced with new ones every time a Banjo fitting is unscrewed.

CAUTION: Before opening or working near bleeders, reservoir or fittings, clean the part and its area to avoid system contamination.

NOTE: Dispose brake fluid as per your local environmental regulations.

SYSTEM DESCRIPTION

The brake system consists of two separate circuits. Each system has its own master cylinder and reservoir.

Both front and rear brakes are disc type.

⚠ WARNING

Periodically check the brake hoses for damages or leaks. Repair any damage before operating the vehicle.

Parking Brake

To engage mechanism: Squeeze front brake lever and maintain while moving lever lock with a finger. Front brake lever is now compressed and applying front brakes.

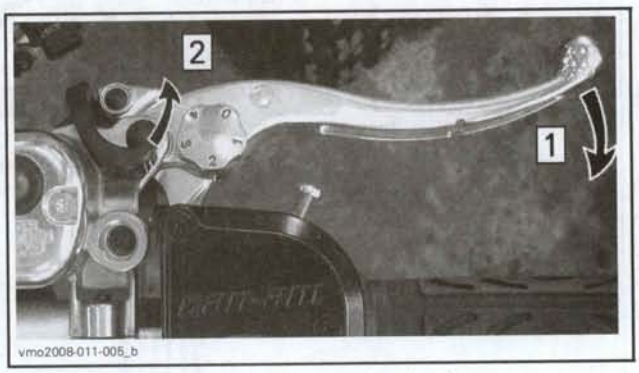

Step 1: Squeeze front brake lever and maintain
Step 2: Move parking brake lever to desired position

NOTE: Parking brake can be adjusted in four (4) different positions.

PARKING BRAKE POSITIONS

To release mechanism: Squeeze front brake lever. Lever lock should automatically return to its original position. Front brake lever should return to rest position. Always release parking brake before riding.

MAINTENANCE

BRAKE FLUID

Recommended Brake Fluid

Always use brake fluid meeting the specification DOT 4 only such as the brake fluid GTLMA (DOT 4) (P/N 293 600 062).

Brake Fluid Level Verification

Park the vehicle on a firm level surface.

Add brake fluid when required. Do not overfill.

Clean reservoir cover before removing.

Immediately wipe out any spills.

Front Brake Fluid Reservoir

Turn handlebar in the straight-ahead position to ensure reservoir is level.

Check brake fluid level thru reservoir cover sight window.

A **DARK** color indicates a proper fluid level.

A **LIGHT** color indicates a low fluid level.

TYPICAL
1. Proper fluid level
2. Low fluid level

Rear Brake Fluid Reservoir

Check brake fluid level into rear reservoir. The fluid must be between the LOWER and UPPER marks. Refill as required.

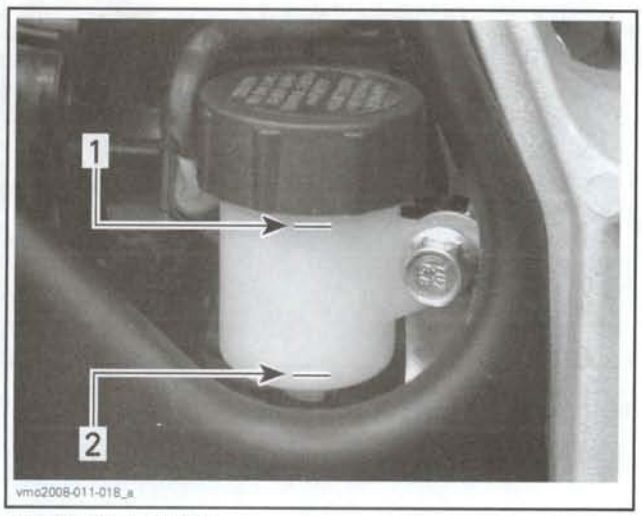

RH SIDE OF VEHICLE
1. Maximum level (MAX)
2. Minimum level (MIN)

Brake Fluid Replacement

To replace brake fluid, drain the brake circuit completely then refill and bleed.

Brake Fluid Draining

Remove reservoir cover with diaphragm.

Connect a clear hose to the bleeder.

Place the other end of hose into a container.

Loosen bleeder and pump brake lever or brake pedal until no more fluid flows out through clear hose.

Brake Fluid Bleeding

Close bleeder.

Fill master cylinder reservoir to the appropriate level, using recommended brake fluid only.

NOTE: Master cylinder reservoir must be kept full to prevent air from being pumped into the system. If a lack of fluid occurs, start the procedure again.

Bleed system as per the following procedure:

Manual Bleeding Procedure:

- Install a clear hose to bleeder.
- Place the other end of the hose in a small container partially filled with clean brake fluid.
- Carefully pump the brake lever or the brake pedal few times and hold it while opening the bleeder.

NOTE: When bleeder is opened, brake fluid flows out of caliper and the brake lever moves toward the handlebar or the brake pedal moves down.

- Retighten the bleeder, then release brake lever or brake pedal gradually.
- Repeat the procedures until no air bubbles appear in hose and lever or pedal is stiff.

NOTE: For the front brake system, switch to LH and RH caliper. Turn handlebar to full RH side when bleeding right caliper and turn to the LH side for the left caliper. This helps the bleeder to reach air into the caliper.

- Top up the master cylinder reservoir to the appropriate level, using recommended brake fluid only.
- Install diaphragm and cover on reservoir.

NOTE: Make sure rear reservoir diaphragm is correctly installed, see the following illustrations to position it.

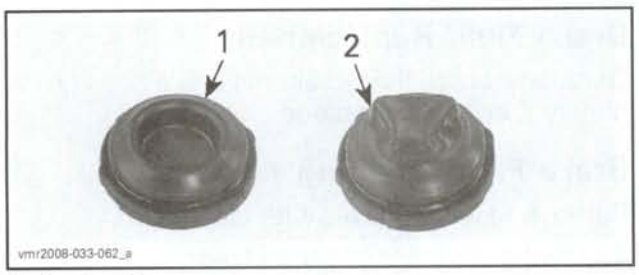

1. Good position
2. To avoid

- Check brakes operation carefully before riding the vehicle.

Bleeding Procedure Using a Vacuum Pump:

- Install the vacuum/pressure pump (P/N 529 021 800) to bleeder. See the manufacturer's operating instructions.

- Pump vacuum pump and loosen bleeder.
- Pump until air bubbles do not appear in clear hose.

NOTE: For the front brake system, switch to LH and RH caliper. Turn handle bar to full RH side when bleeding right caliper and turn to the LH side for the left caliper. This helps the bleeder to reach air into the caliper.

- Close bleeder and operate brake lever or brake pedal. If it still feels spongy, bleed system again.
- Top up the master cylinder reservoir to the appropriate level, using recommended brake fluid only.
- Install diaphragm and cover on reservoir.

NOTE: Make sure rear reservoir diaphragm is correctly installed, see the following illustrations to position it.

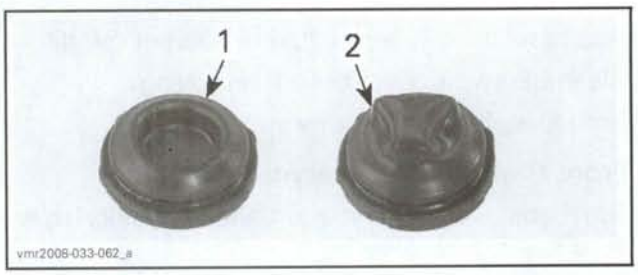

1. Good position
2. To avoid

- Check brakes operation carefully before riding the vehicle.

PROCEDURES

CALIPER

Caliper Removal

Front Caliper

Park the vehicle on a firm level surface.

Loosen wheel nuts.

Raise vehicle and support it securely.

Remove wheels.

NOTE: If the caliper is not replaced, omit the next steps concerning the brake system draining and brake hose removal.

Drain brake fluid from brake system.

Remove the Banjo fitting and discard the sealing washers.

Detach brake hose from caliper and catch spilled fluid with a rag.

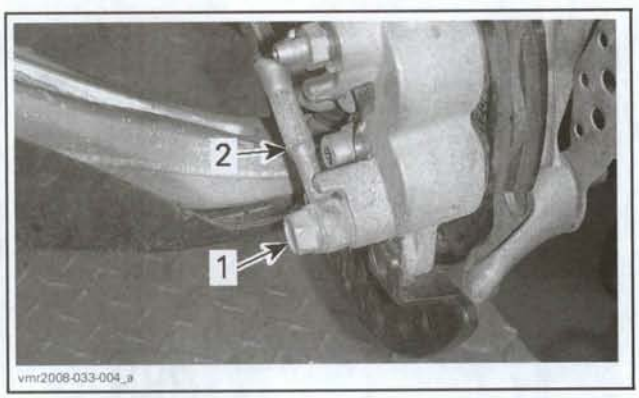

1. Banjo fitting
2. Brake hose

Detach the protector from the bottom of caliper.

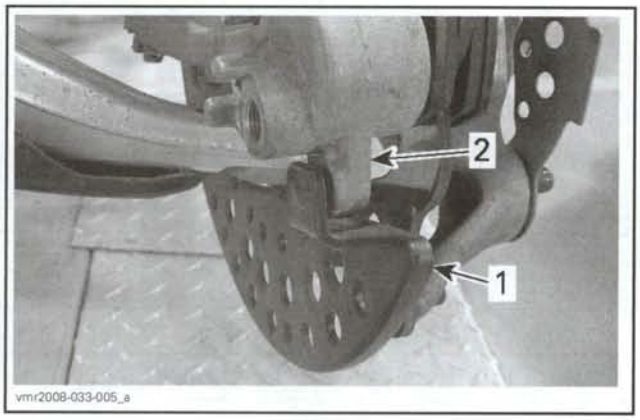

1. Protector
2. Caliper

Unscrew caliper screws.

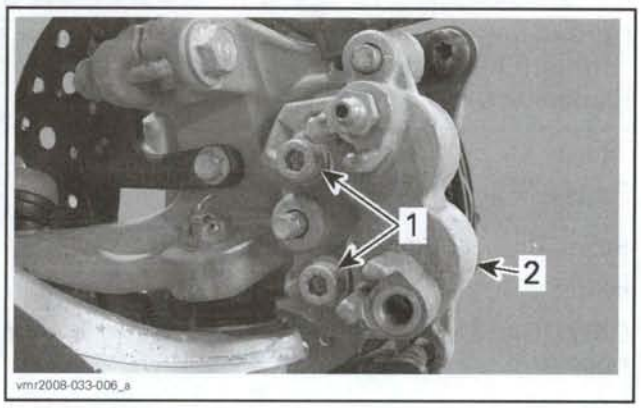

1. Caliper screws
2. Inner caliper body half

Remove the external caliper body half.

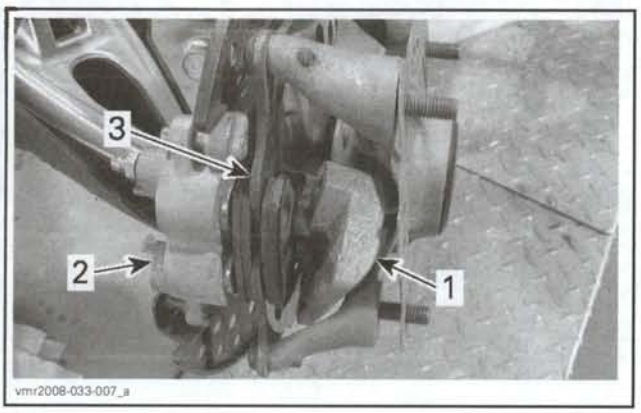

1. External caliper body half
2. Internal caliper body half
3. Brake disc

Pull the internal caliper body half to slide it out of guide pins.

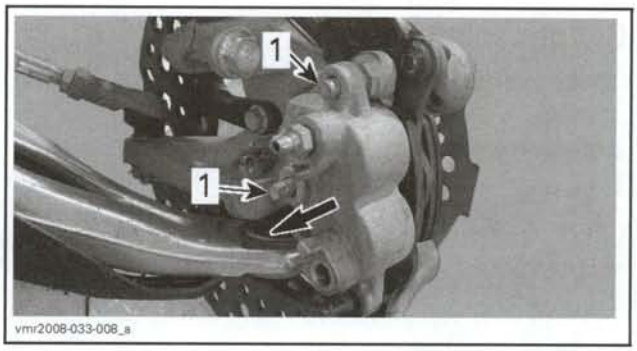

1. Guide pins

Rear Caliper

Park the vehicle on a firm level surface.

NOTE: If the caliper is not replaced, omit the next steps concerning the brake system draining and brake hose removal.

Drain brake fluid from brake system.

Remove the Banjo fitting and discard the sealing washers.

Detach brake hose from caliper and catch spilled fluid with a rag.

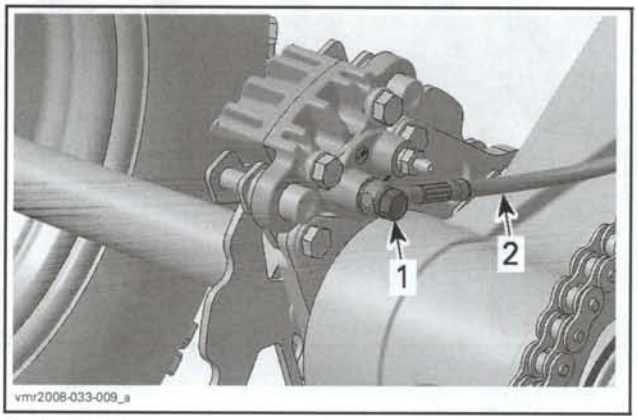

1. Banjo fitting
2. Brake hose

Unscrew caliper screws.

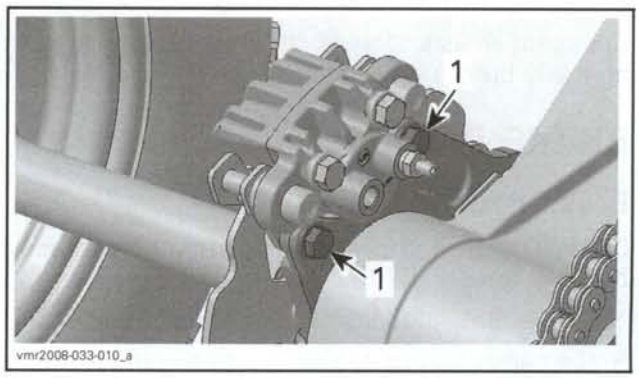

1. Caliper screws

Caliper Inspection

Check pistons for:
- Rust
- Scratches
- Leaks.

Check caliper support for:
- Cracks
- Wear.

Replace caliper support if required.

Caliper Installation

The installation is the reverse of the removal procedure. However, pay attention to the following.

Install Banjo fittings with two **NEW** sealing washers.

CAUTION: Each front caliper has a recess to position brake hose properly. To avoid damaging the brake hose, make sure brake hose is installed inside it.

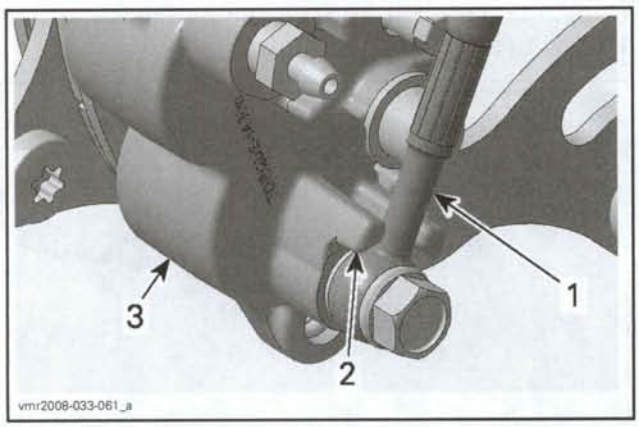

1. Brake hose
2. Caliper recess
3. Front caliper

Torque Banjo fittings to 28 N•m (21 lbf•ft).

Fill and bleed the brake system. Refer to *BRAKE FLUID BLEEDING* in this section.

Check for leaks and make sure the brakes operate normally before driving.

BRAKE PADS

Brake Pads Inspection

CAUTION: Soiled brake pads must be replaced by new ones.

Measure brake pad lining thickness.

Brake pads must be replaced when lining is 1 mm (1/32 in) thick. Verify the groove on the pad lining.

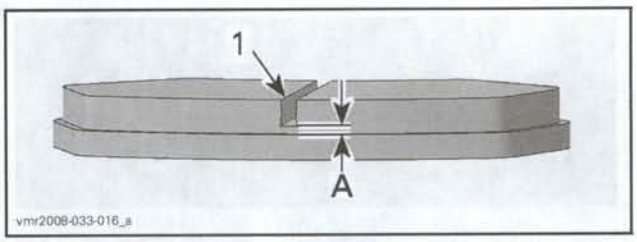

1. Groove on pad lining
A. Brake pad minimum thickness 1 mm (1/32 in)

SERVICE LIMIT	
Brake pad thickness	1 mm (1/32 in)

CAUTION: Brake pads must always be replaced in pairs.

⚠ WARNING

Avoid getting oil or grease on brake pads. Contaminated brake pads can affect stopping capacities. Discard any contaminated pads.

Brake Pads Replacement

Front Brake Pads

Remove *CALIPER*, see procedure in this section.

CAUTION: Do not let the caliper hang by the hose and do not stretch or twist the hose.

Using a TORX socket (T25) and a 10 mm wrench, unscrew brake pad pin.

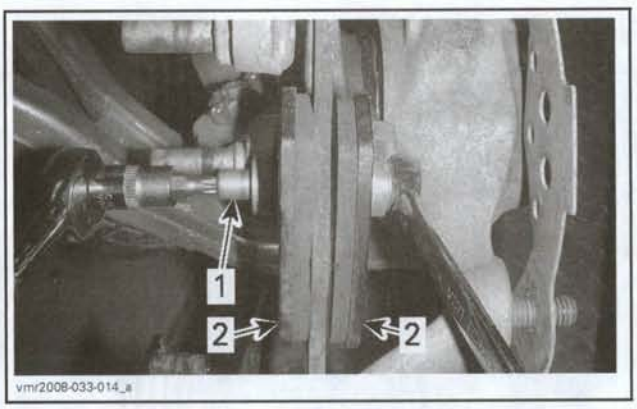

1. Brake pad pin
2. Brake pads

Pull brake pad pin out to release pads.

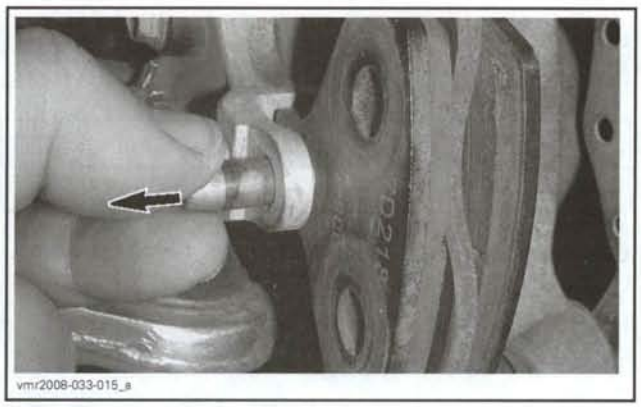

PULL BRAKE PAD PIN

Depress pistons into their bores.

CAUTION: It's very important to clean remaining O.D. of pistons out from caliper with brake fluid before pushing pistons back in. Make sure the pistons are free of any contaminant and are shiny.

Install **NEW** brake pads.

Install brake pad pin.

Tighten pin to 5 N•m (44 lbf•**in**).

Install caliper.

After the job is completed, firmly depress the brake lever a few times to bring the pads in contact with the disc.

Check brake fluid level in the front brake fluid reservoir and top up if necessary.

Check for leaks and make sure the brakes operate normally before driving. The pads must rest flat on the disc.

Rear Brake Pads

Loosen brake pad screws.

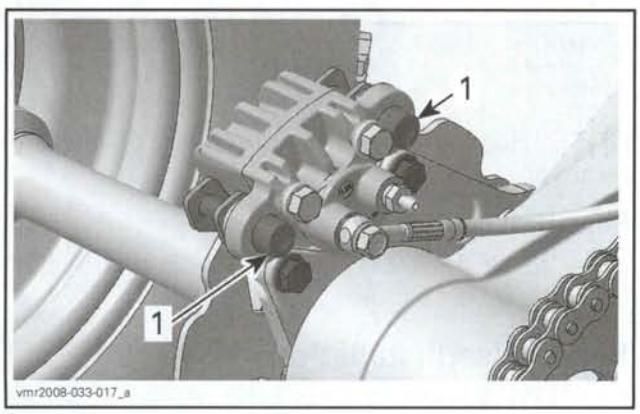

1. Brake pad screws

Remove caliper screws.

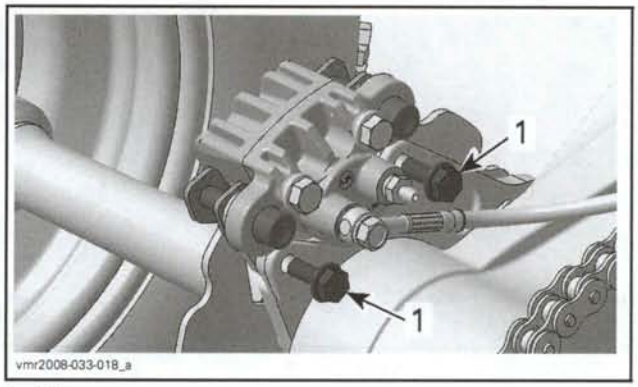

1. Caliper screws

Remove brake pad screws.

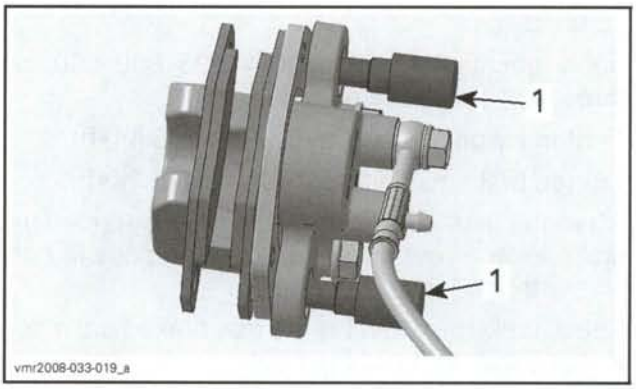

1. Brake pad screws

Remove brake pads.

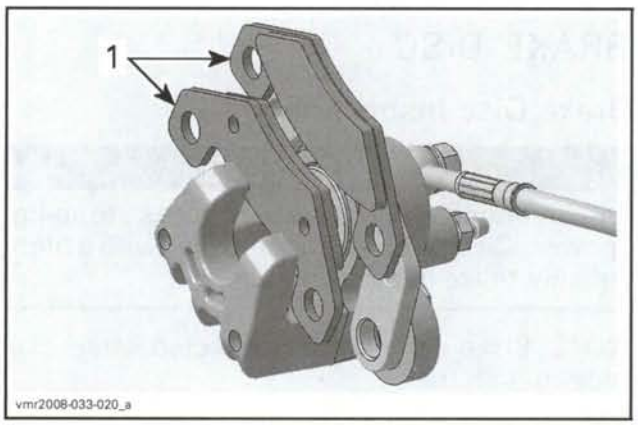

1. Brake pads

Depress piston into its bore.

CAUTION: It's very important to clean remaining O.D. of piston out from caliper with brake fluid before pushing piston back in. Make sure the piston is free of any contaminant and is shiny.

Check O-rings condition inside caliper holes. Replace them if necessary.

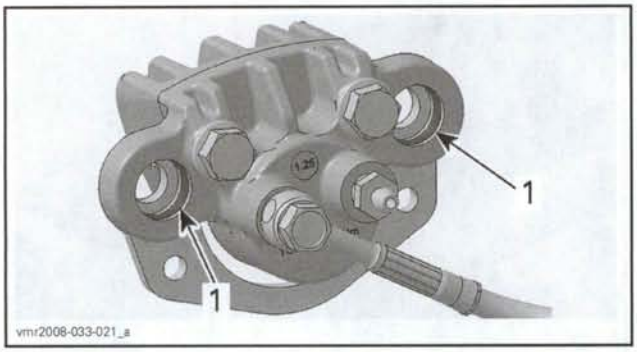

1. O-rings

Install **NEW** brake pads.

Install brake pad screws.

Install caliper.

Apply Loctite 243 (blue) (P/N 293 800 060) on threads of caliper screws.

Tighten caliper screws to 25 N•m (18 lbf•ft).

Tighten brake pad pins to 22 N•m (16 lbf•ft).

After the job is completed, firmly depress the brake lever a few times to bring the pads in contact with the disc.

Check brake fluid level in the rear brake fluid reservoir and top up if necessary.

Check for leaks and make sure the brakes operate normally before driving. The pads must rest flat on the disc.

BRAKE DISC

Brake Disc Inspection

⚠ WARNING

A contaminated brake disc reduces stopping power. Clean a contaminated disc with a high quality brake degreasing agent.

NOTE: Brake discs can be inspected without removing from the vehicle.

Park the vehicle on a firm level surface.

Loosen wheel nuts.

Raise vehicle and support it securely.

Remove wheels.

Raise vehicle and support it securely.

NOTE: For rear brake disc the wheels removal is not necessary.

Visually inspect both brake disc surfaces for:
- Scratches
- Grooves
- Other damages.

Replace brake disc as required.

Measure thickness of the disc.

BRAKE DISC THICKNESS	
Minimum thickness	3.5 mm (.13 in)

CAUTION: Brake discs should never be machined.

Replace disc if not within specifications.

Turn the disc by hand and check run out.

BRAKE DISC RUN OUT	
Maximal disc run out	0.5 mm (.02 in)

Replace disc if not within specifications.

Brake Disc Removal

Front Brake Disc

Remove wheel hub. Refer to *WHEELS/TIRES* section.

Remove screws retaining brake disc to wheel hub. Discard screws.

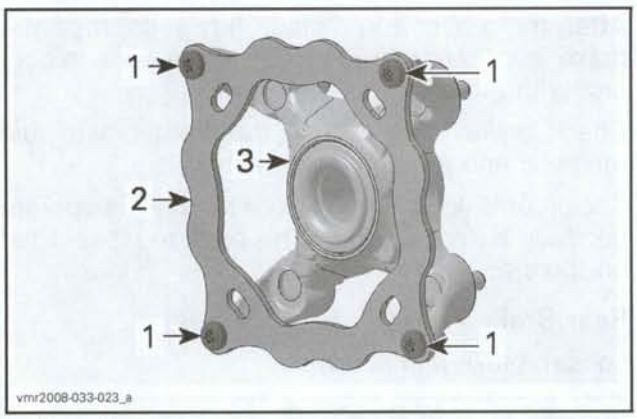

1. Brake disc screws
2. Brake disc
3. Wheel hub

NOTE: Heat up disc around screws to facilitate removal.

Rear Brake Disc

Refer to *REAR BRAKE DISC HUB* in this section for removal procedure.

Brake Disc Installation

Use **NEW** screws to secure the brake disc.

Tighten brake disc screws to 25 N•m (18 lbf•ft).

BRAKE LEVER

Brake Lever Replacement

NOTE: The removal of master cylinder is not necessary to disassemble it.

Remove brake lever pivot by removing the circlip underneath lever.

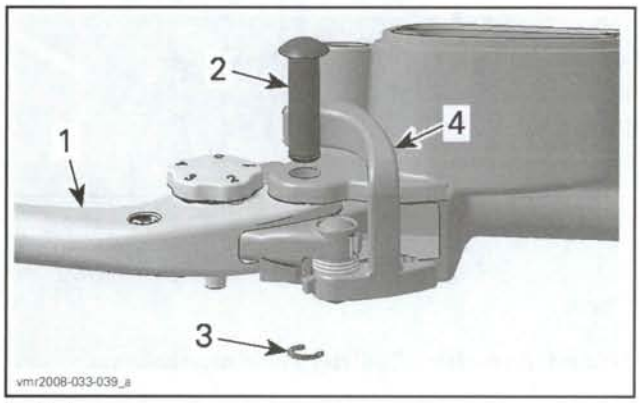

1. *Brake lever*
2. *Brake lever pivot*
3. *Circlip*
4. *Parking brake lever*

Remove brake lever from master cylinder.

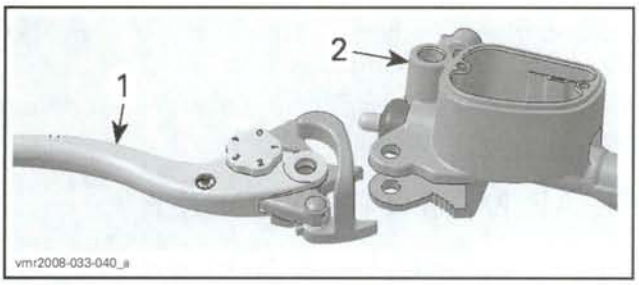

1. *Brake lever*
2. *Master cylinder*

Separate inner lever and brake lever.

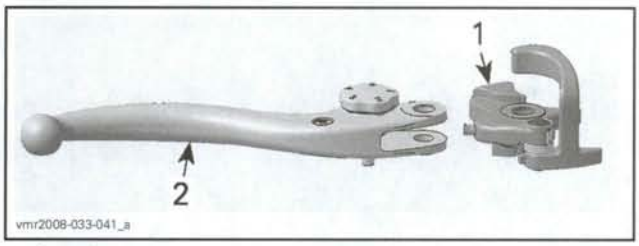

1. *Inner lever*
2. *Brake lever*

Remove circlip securing parking brake lever to inner lever.

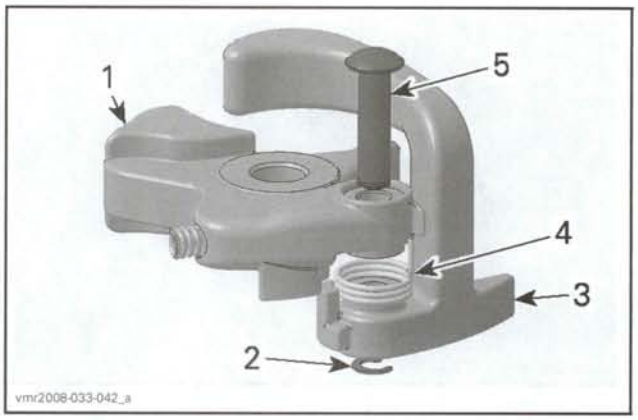

1. *Inner lever*
2. *Circlip*
3. *Parking brake lever*
4. *Parking brake lever spring*
5. *Parking brake lever pivot*

Remove the adjustment cam from brake lever.

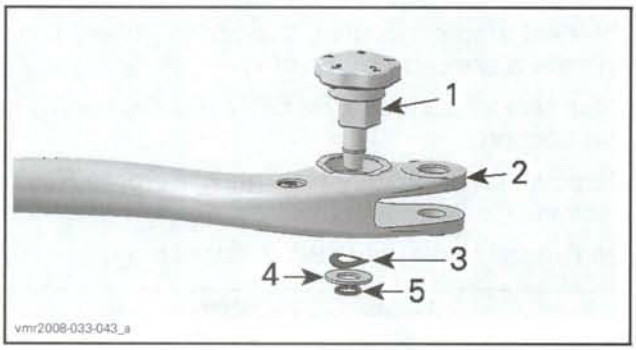

1. *Adjustment cam*
2. *Brake lever*
3. *Spring washer*
4. *Shim*
5. *Snap ring*

Reverse the previous steps to reinstall all removed parts. However, pay attention to the following.

Apply lithium grease such as the jet pump bearing grease (P/N 293 550 032) between adjustment cam head and brake lever.

1. *Apply grease in this section*

Apply lithium grease such as the jet pump bearing grease (P/N 293 550 032) inside inner lever cup.

1. Apply grease here

FRONT MASTER CYLINDER

Front Master Cylinder Removal

NOTE: If the master cylinder is not replaced, omit the next step concerning the parking brake lever and the brake system draining.

Drain brake fluid, see *BRAKE FLUID DRAINING* in this section.

Remove the front body assembly. Refer to *BODY* section.

Unplug the brake light switch connector.

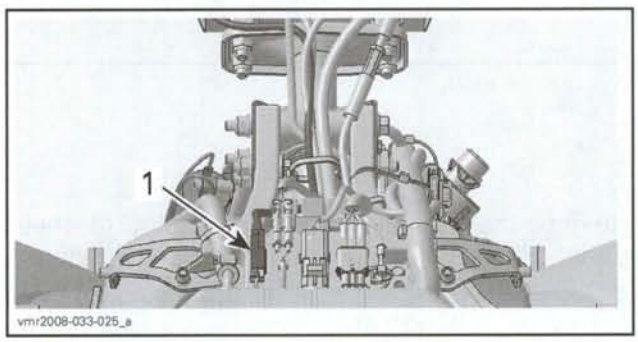

1. Brake light switch connector

Unscrew brake light switch and discard the sealing washers.

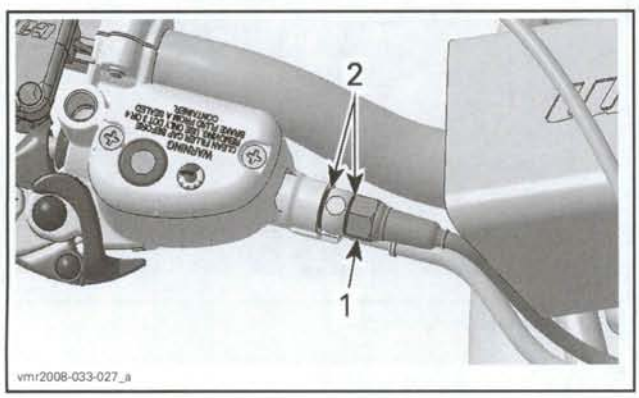

1. Brake light switch
2. Sealing washers

Unscrew master cylinder screws.

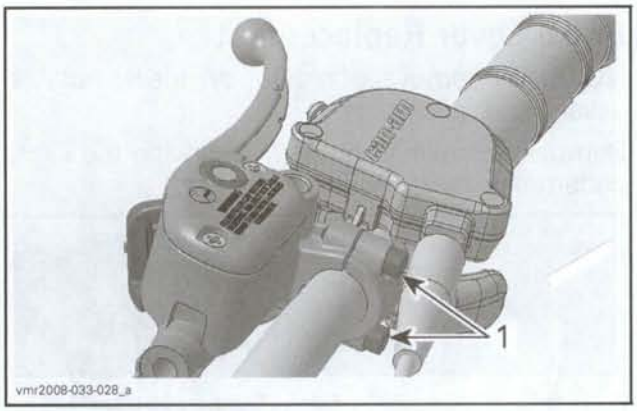

1. Master cylinder screws

Remove *BRAKE LEVER*, see procedure in this section.

Front Master Cylinder Installation

For the installation, reverse the removal procedure. However, pay attention to the following.

Install brake light switch with two **NEW** sealing washers.

Torque brake light switch to 25 N•m (18 lbf•ft).

Fill and bleed the brake system. Refer to *BRAKE FLUID BLEEDING* in this section.

Check for leaks and make sure the brakes operate normally before driving.

REAR MASTER CYLINDER

Rear Master Cylinder Removal

Remove RH foot protector. Refer to *BODY* section.

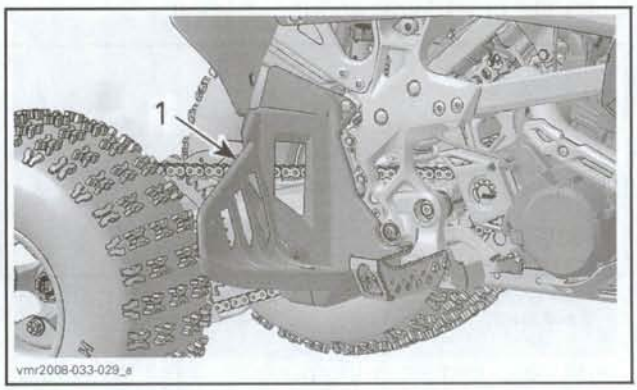

1. Foot protector

Unplug brake switch connector. The connector is located against the front portion of air filter housing.

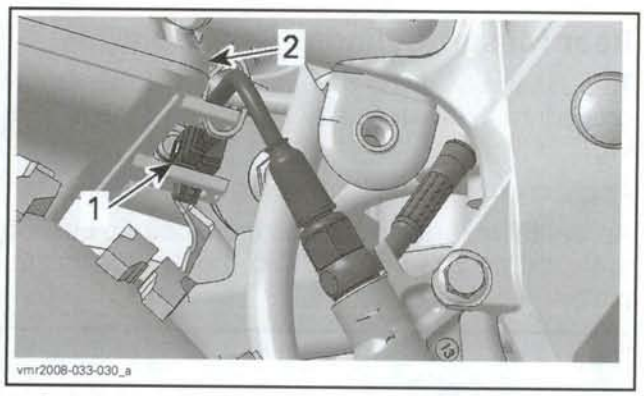

1. *Brake light switch connector*
2. *Air filter housing*

Drain brake fluid from rear brake circuit. See *BRAKE FLUID DRAINING* at the beginning of this section.

Unscrew brake light switch and discard the sealing washers.

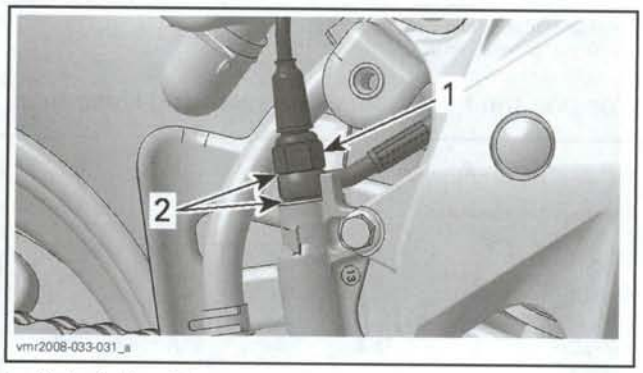

1. *Brake light switch*
2. *Sealing washers*

NOTE: At this time, check hoses and fittings for damages or leaks.

Remove the brake pedal spring.

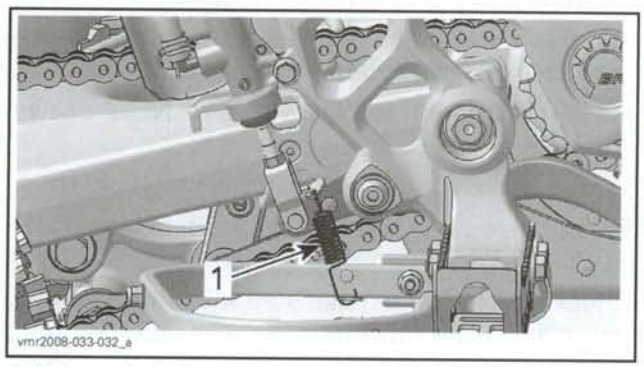

1. *Brake pedal spring*

Remove pin securing brake pedal to master cylinder rod hook. Discard the cotter pin.

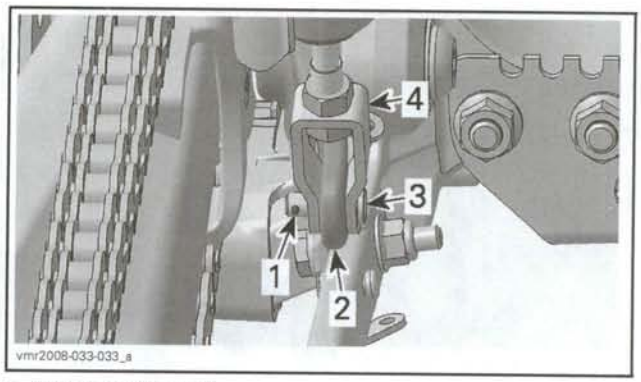

1. *Cotter pin (discard)*
2. *Brake pedal*
3. *Retaining pin*
4. *Hook*

Disconnect reservoir hose from master cylinder.

Remove bolts retaining master cylinder to frame.

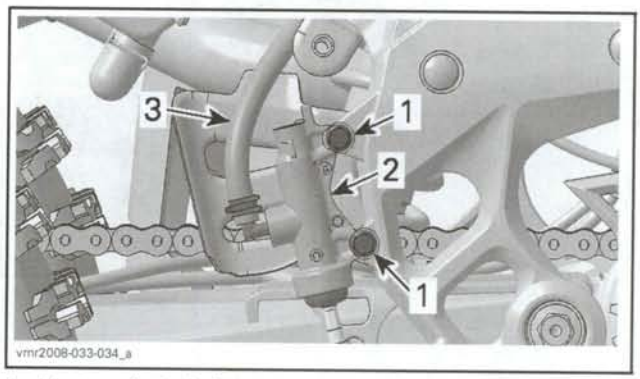

1. *Master cylinder bolts*
2. *Master cylinder*
3. *Reservoir hose*

Rear Master Cylinder Disassembly

Remove hook from master cylinder rod.

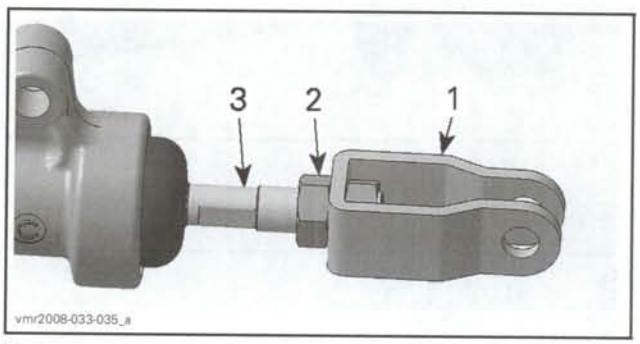

1. *Hook*
2. *Locking nut*
3. *Master cylinder rod*

Remove and discard boot.

NOTE: The base of boot is deformed during removal. For optimal sealing, the replacement of the boot is necessary.

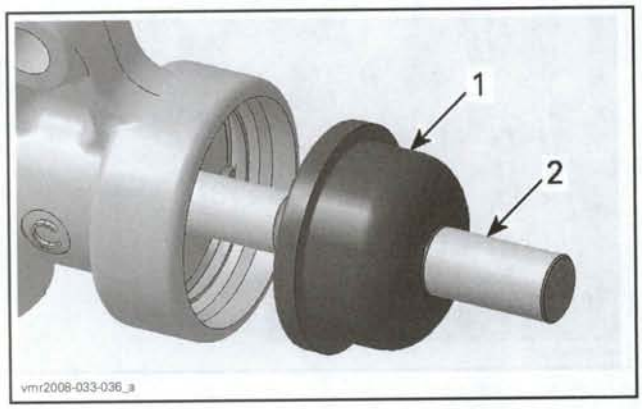

1. Boot
2. Master cylinder rod

Remove the circlip retaining master cylinder rod.

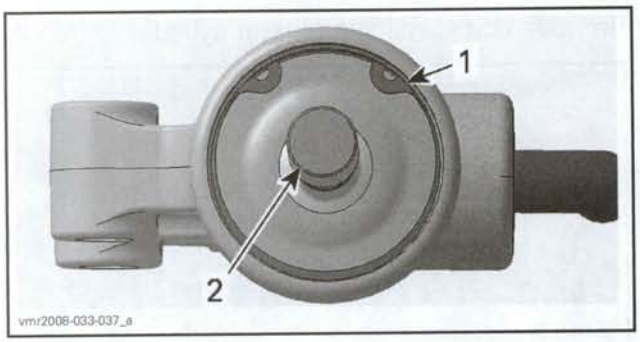

1. Circlip
2. Master cylinder rod

Remove the master cylinder rod.

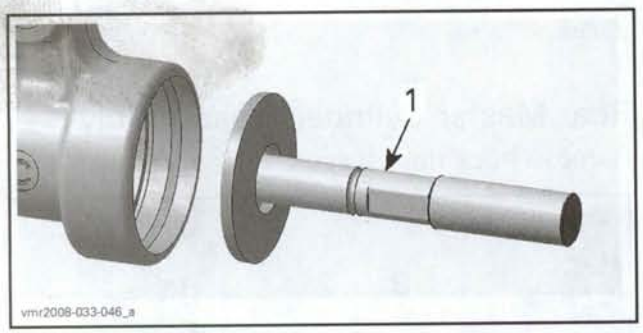

1. Master cylinder rod

Remove master piston and spring.

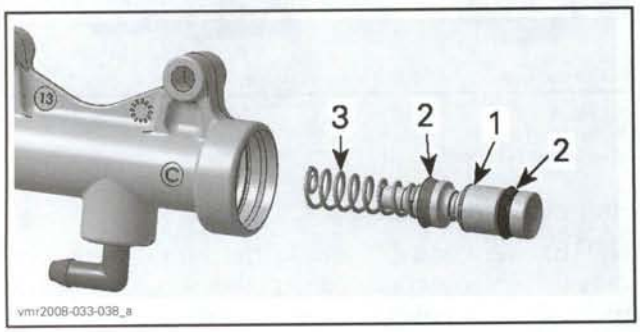

1. Master piston
2. Seals
3. Spring

Rear Master Cylinder Assembly

The assembly is the reverse of the disassembly procedure. However, pay attention to the following.

Apply brake fluid on both seals.

Apply lithium grease such as the jet pump bearing grease (P/N 293 550 032) on the end of master piston.

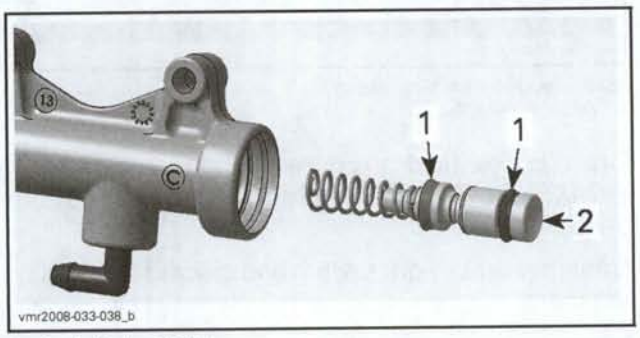

1. Apply brake fluid here
2. Apply grease here

Position the hook as per the following illustration.

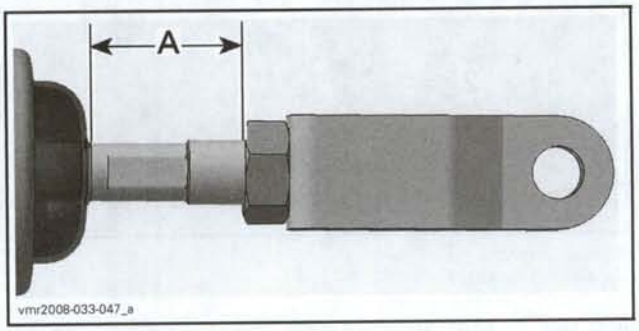

A. 92.6 mm (3.65 in)

Rear Master Cylinder Installation

For the installation, reverse the removal procedure. However, pay attention to the following.

Install brake light switch with two **NEW** sealing washers.

Torque brake light switch to 25 N•m (18 lbf•ft).

Fill and bleed the brake system. Refer to *BRAKE FLUID BLEEDING* in this section.

Check for leaks and make sure the brakes operate normally before driving.

BRAKE PEDAL

Brake Pedal Removal

Remove RH foot protector. Refer to *BODY* section.

Remove the brake pedal spring.

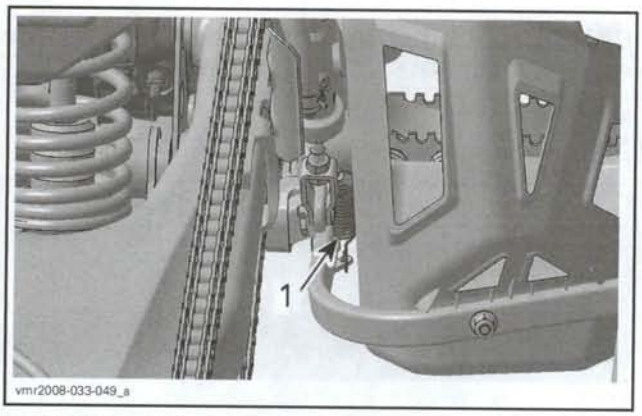

1. Brake pedal spring

Remove pin securing brake pedal to master cylinder rod hook. Discard the cotter pin.

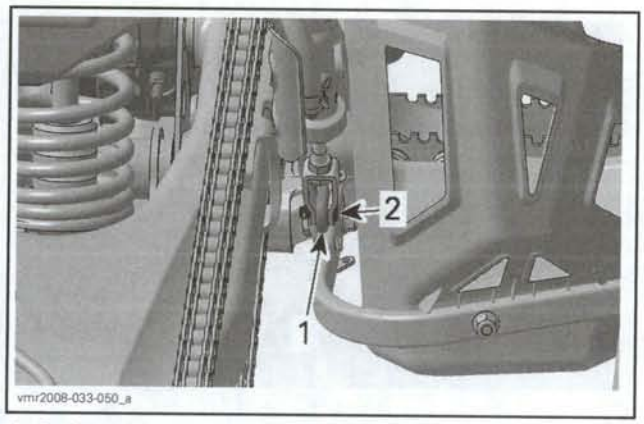

1. Brake pedal
2. Retaining pin

Remove brake pedal screw.

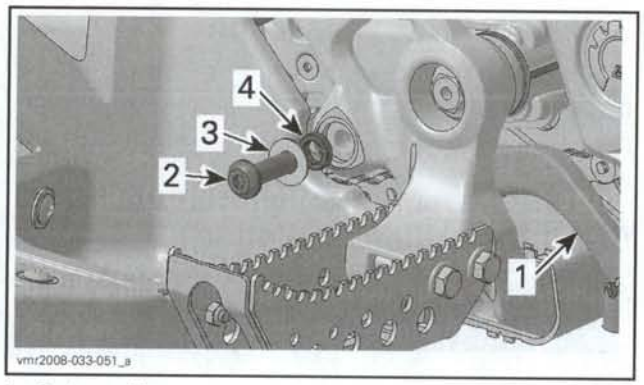

1. Brake pedal
2. Brake pedal screw
3. Washer
4. Shim

Remove brake pedal.

Brake Pedal Bearing Replacement

Using a punch, drive bearings out of frame.

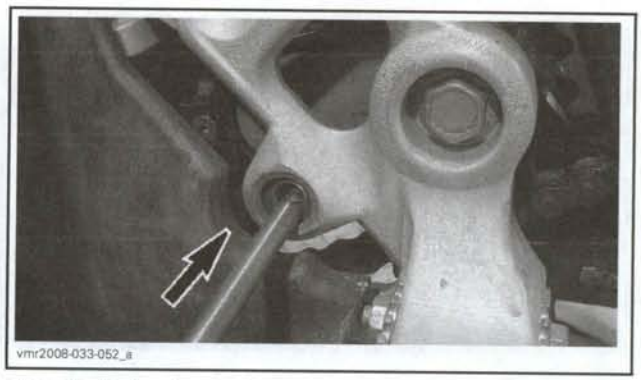

NOTE: If the inner bearing outer race stays inside the frame, the swing arm removal is necessary. Use a blind hole puller from the blind hole puller kit (P/N 529 036 117) to extract the outer race.

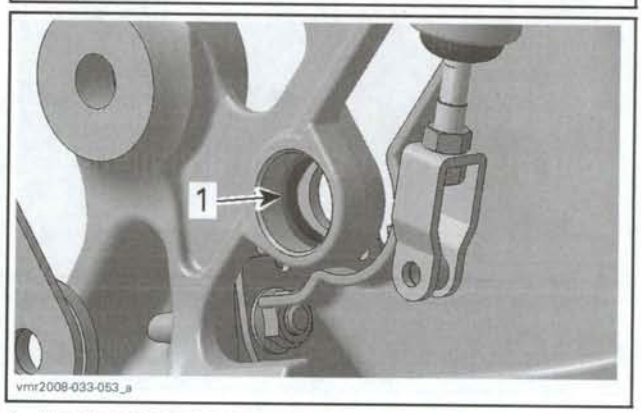

1. Inner bearing outer race

Use the following setup to install bearings.

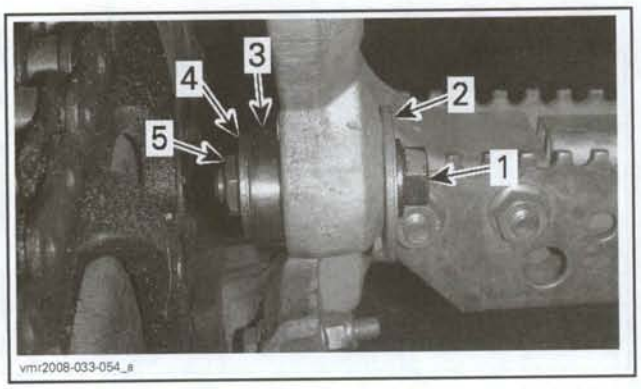

1. *Bolt*
2. *Large washer*
3. *Bearing*
4. *Washer (bearing diameter)*
5. *Nut*

Install all other removed parts.

Brake Pedal Installation

For installation, reverse the removal procedure.

BRAKE DISC HUB

Brake Disc Hub Removal

Remove the LH wheel hub and the conical support ring. See procedure in *WHEEL HUB* above.

Remove the snap ring.

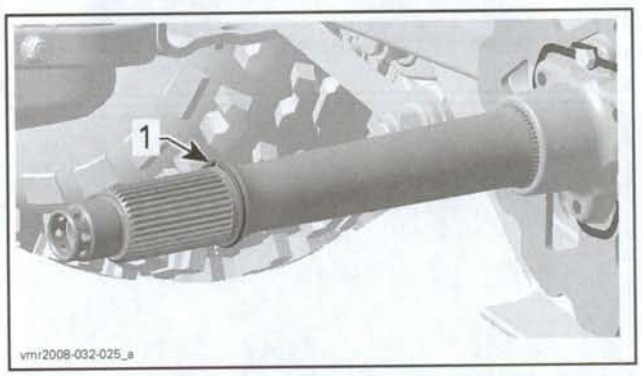

1. *Snap ring*

Remove screws securing caliper.

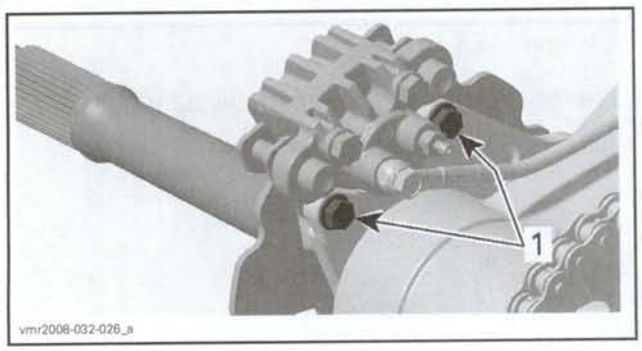

1. *Caliper screws*

Hang the caliper with a piece of wire.

CAUTION: Do not let the caliper hang by the hose and do not stretch or twist the hose.

Unfold locking washer.

Remove brake hub screws.

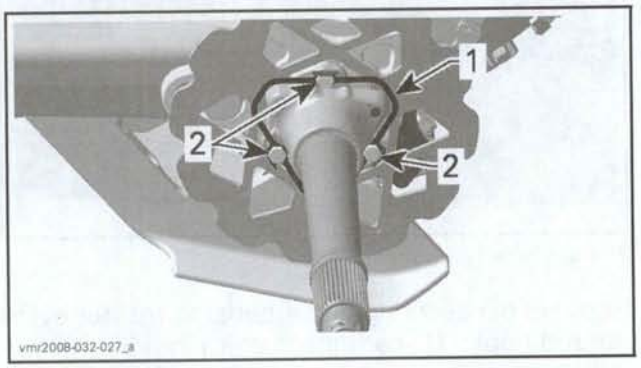

1. *Locking washer*
2. *Brake hub screws*

Remove and discard the locking washer.

Remove brake hub with the disc brake.

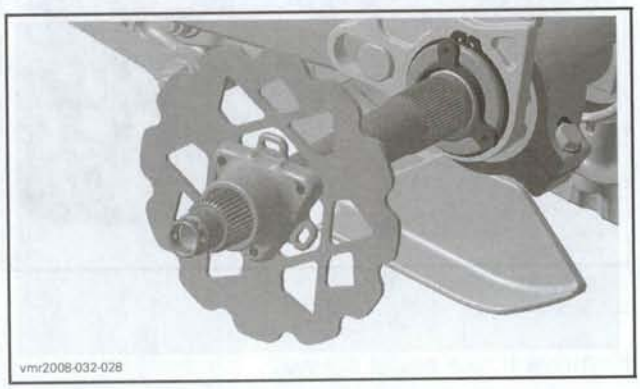

Brake Disc Hub Inspection

Check brake hub for cracks or other damages. Replace if necessary.

Check brake hub splines for wear or damages. Replace brake hub and/or rear axle.

Brake Disc Hub Installation

The installation is the reverse of the removal procedure. However, pay attention to the following.

Apply CV grease (P/N 293 550 019) on rear axle splines.

Fold tabs of locking washer on each hub screw heads.

REAR CALIPER BRACKET

Rear Caliper Bracket Removal

Remove *BRAKE DISC HUB*, see procedure in this section.

Using the axle key (P/N 529 036 082), unscrew the axle nut.

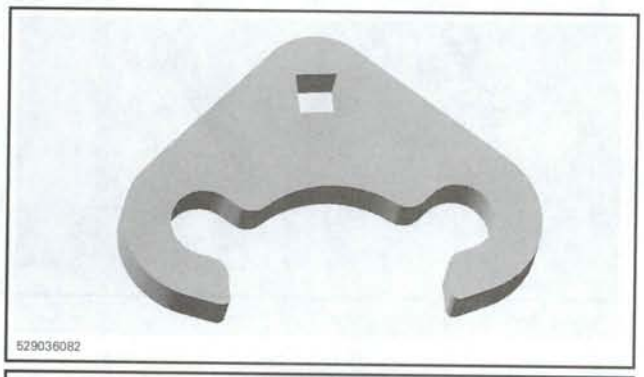

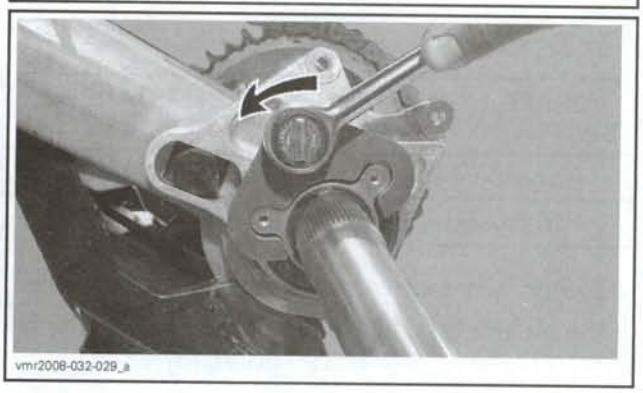

Remove the wear ring.

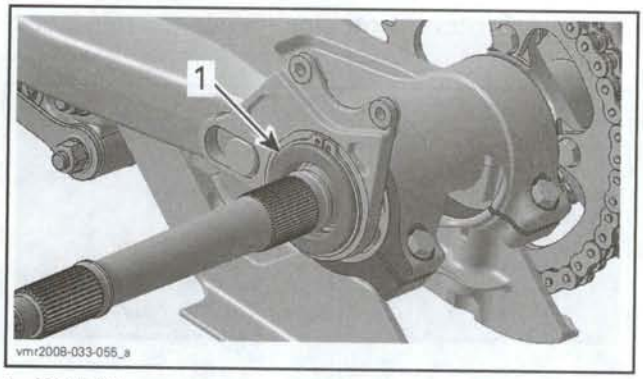

1. *Wear ring*

Remove the large circlip.

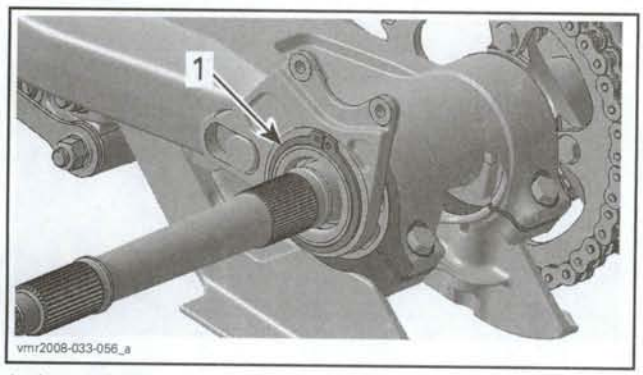

1. *Large circlip*

Pull the rear caliper bracket.

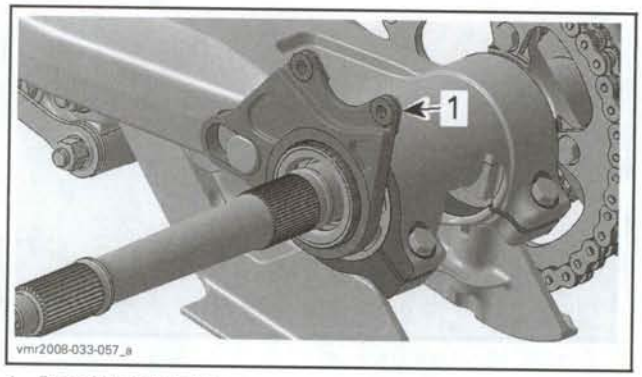

1. *Rear caliper bracket*

Rear Caliper Bracket Installation

For installation, reverse the removal procedure.

FRONT BRAKE LIGHT SWITCH

Front Brake Light Switch Test

Refer to *BODY* section to remove the front body assembly.

Unplug the brake light switch connector.

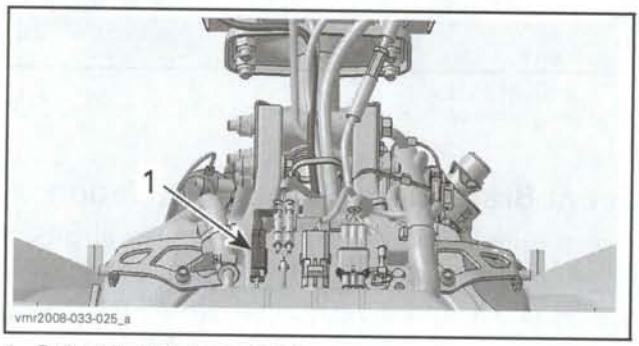

1. *Brake light switch connector*

Check switch operation as follows.

BRAKE LIGHT SWITCH POSITION	PIN		RESISTANCE @ 20°C (68°F)
Firmly pushed	1	2	0.2 Ω max.
Released			Infinite (OL)

If switch is defective, replace it with a new one.

If the switch tests good, verify wire continuity between harness connector and VCM.

Front Brake Light Switch Removal

Drain brake fluid, see *BRAKE FLUID DRAINING* in this section.

Remove the front body assembly. Refer to *BODY* section.

Unplug the brake light switch connector.

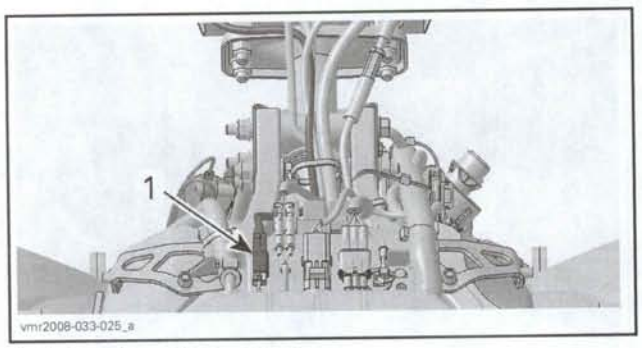

1. Brake light switch connector

Unscrew brake light switch and discard the sealing washers.

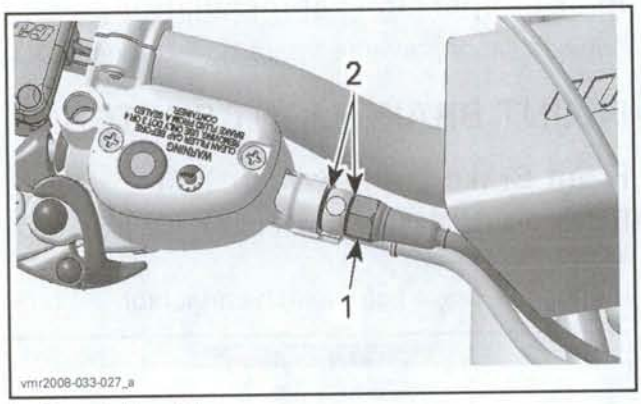

1. Brake light switch
2. Sealing washers

Front Brake Light Switch Installation

For the installation, reverse the removal procedure. However, pay attention to the following.

Install brake light switch with two **NEW** sealing washers.

Torque brake light switch to 25 N•m (18 lbf•ft).

Fill and bleed the brake system. Refer to *BRAKE FLUID BLEEDING* in this section.

Check for leaks and make sure the brakes operate normally before driving.

REAR BRAKE LIGHT SWITCH

Rear Brake Light Switch Test

Refer to *BODY* section to remove the RH foot protector.

Unplug the brake light switch connector.

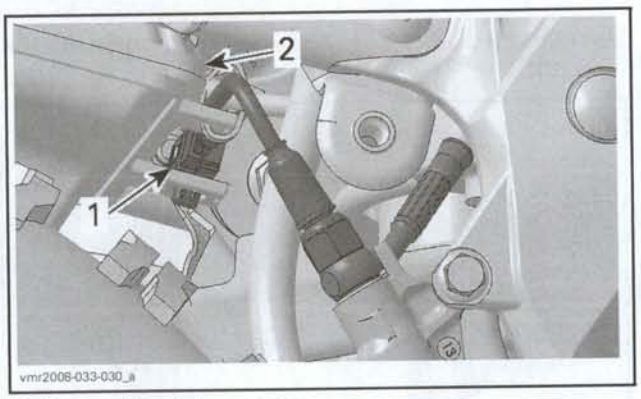

1. Brake light switch connector
2. Air filter housing

Check switch operation as follows.

BRAKE LIGHT SWITCH POSITION	PIN		RESISTANCE @ 20°C (68°F)
Firmly pushed	1	2	0.2 Ω max.
Released			Infinite (OL)

If switch is defective, replace it with a new one.

If the switch tests good, verify wire continuity between harness connector and VCM.

Rear Brake Light Switch Removal

Remove RH foot protector. Refer to *BODY* section.

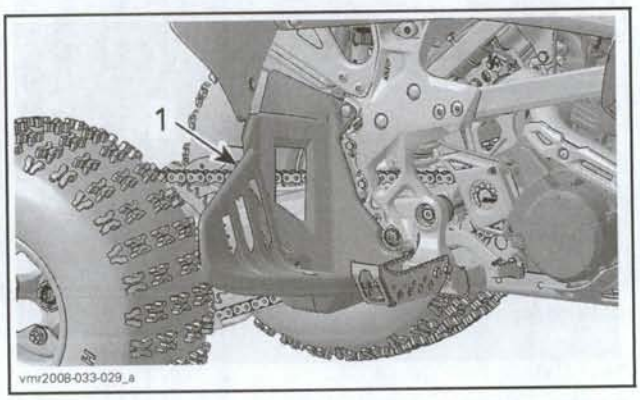

1. Foot protector

Unplug brake switch connector. The connector is located against the front portion of air filter housing.

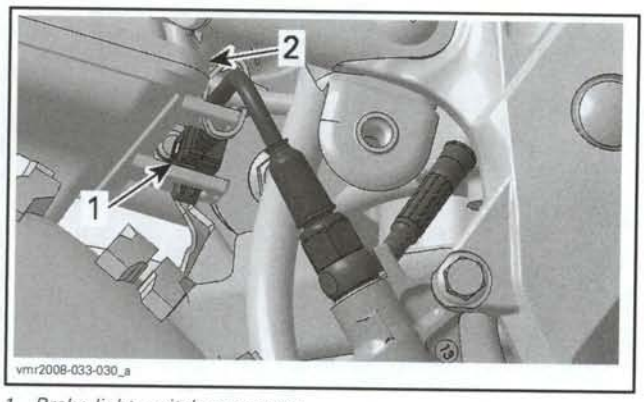

1. *Brake light switch connector*
2. *Air filter housing*

Drain brake fluid from rear brake circuit. See *BRAKE FLUID DRAINING* at the beginning of this section.

Unscrew brake light switch and discard the sealing washers.

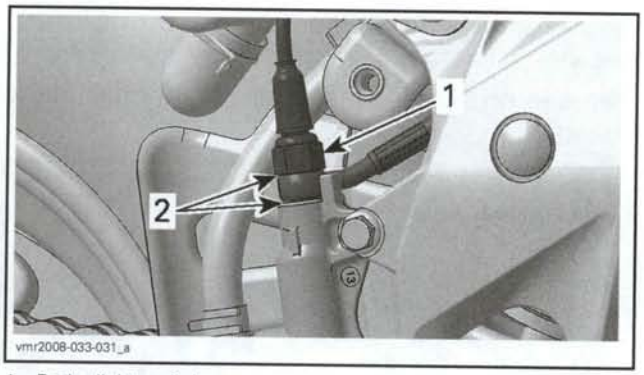

1. *Brake light switch*
2. *Sealing washers*

Rear Brake Light Switch Installation

For the installation, reverse the removal procedure. However, pay attention to the following.

Install brake light switch with two **NEW** sealing washers.

Torque brake light switch to 25 N•m (18 lbf•ft).

Fill and bleed the brake system. Refer to *BRAKE FLUID BLEEDING* in this section.

Check for leaks and make sure the brakes operate normally before driving.

FLEXIBLE BRAKE HOSE

Flexible Brake Hose Removal

Front Flexible Brake Hoses

Place vehicle on a level surface.

Loosen wheel lug nuts.

Lift the front of vehicle.

Support vehicle securely on jack stands.

Remove front wheels.

Drain brake fluid, see *BRAKE FLUID DRAINING* in this section.

Remove the front body assembly. Refer to *BODY* section.

Unplug the brake light switch connector.

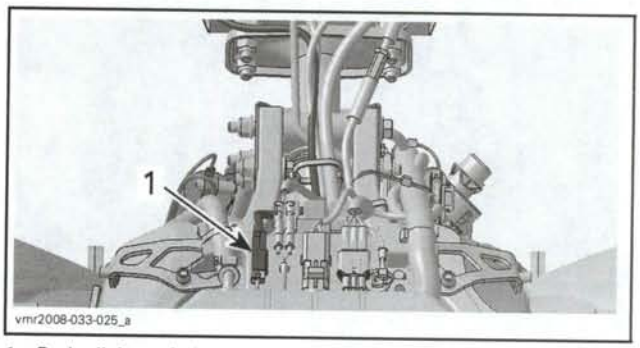

1. *Brake light switch connector*

Unscrew brake light switch and discard the sealing washers.

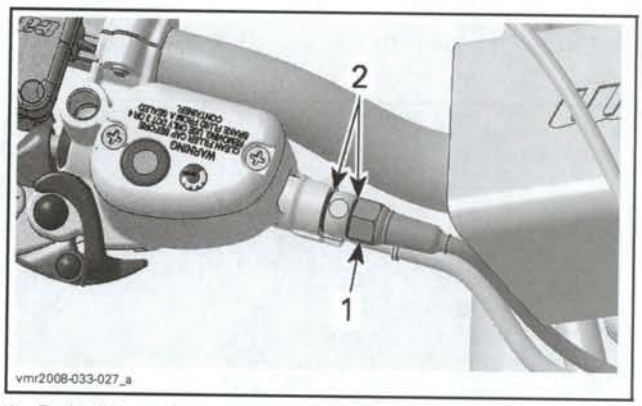

1. *Brake light switch*
2. *Sealing washers*

Detach brake hoses from upper suspension arms.

Disconnect brake hoses from calipers.

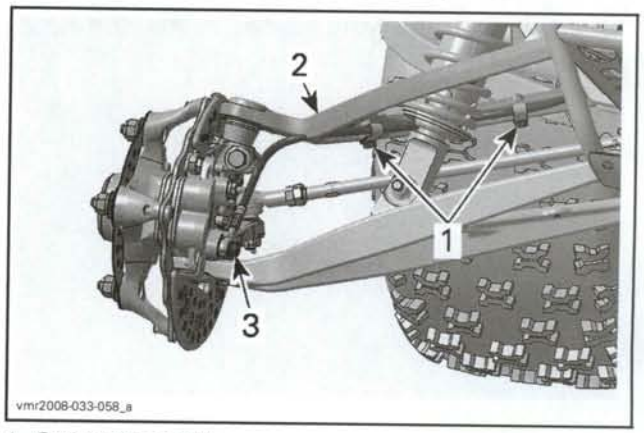

1. *Brake hose screws*
2. *RH upper suspension arm*
3. *Banjo fitting*

Wipe brake fluid spillage.

Discard sealing washers.

Empty hose into a drain pan.

Unscrew bolt securing the T-union to frame.

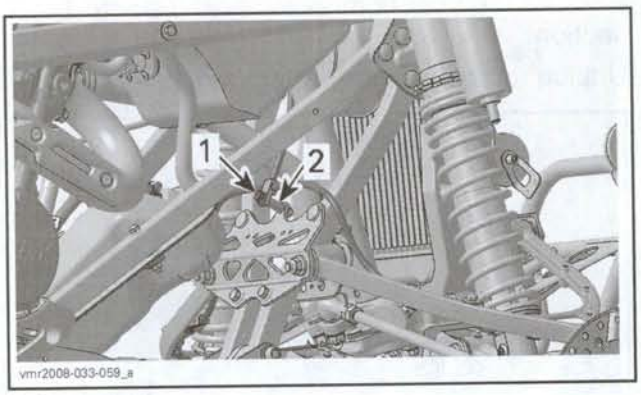

1. T-union bolt
2. Spacer

Remove brake hoses from vehicle and note the routing.

Rear Flexible Brake Hose

Remove RH foot protector. Refer to *BODY* section.

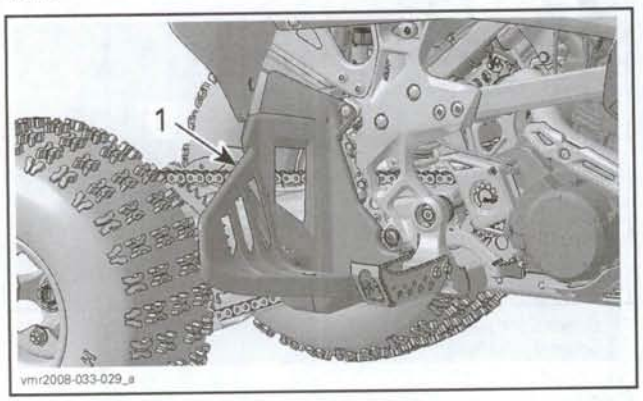

1. Foot protector

Unplug brake switch connector. The connector is located against the front portion of air filter housing.

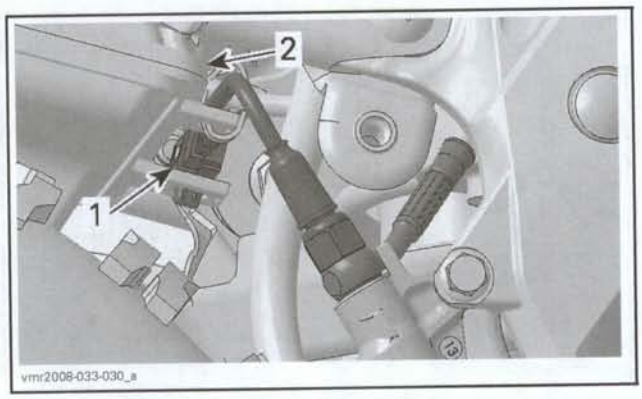

1. Brake light switch connector
2. Air filter housing

Drain brake fluid from rear brake circuit. See *BRAKE FLUID DRAINING* at the beginning of this section.

Unscrew brake light switch and discard the sealing washers.

Unscrew Banjo fitting on caliper and discard the sealing washers.

Remove screws securing brake hose retainers to swing arm.

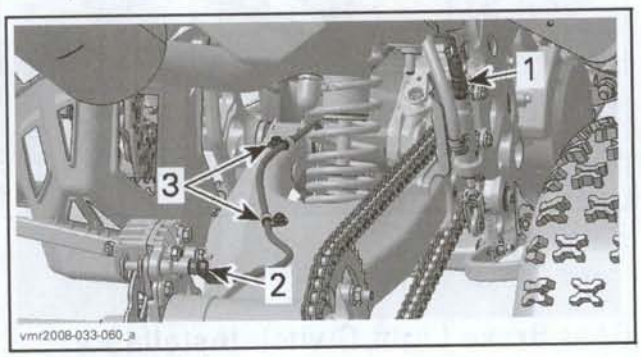

1. Brake light switch
2. Banjo fitting
3. Brake cable retainers

Remove brake hose from vehicle and note the routing.

Flexible Brake Hose Installation

For the installation, reverse the removal procedure. However, pay attention to the following.

Install brake light switch or Banjo fitting with **NEW** sealing washers.

CAUTION: Each front caliper has a recess to position brake hose properly. To avoid damaging the brake hose, make sure brake hose is installed inside it.

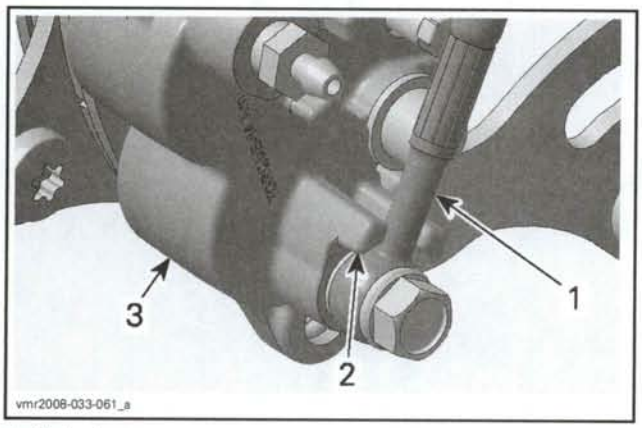

1. Brake hose
2. Caliper recess
3. Front caliper

After front brake hoses installation, turn handlebar fully right and fully left to be sure that the brake hose does not rub against wheel hub or suspension arm. Also remove the shock absorbers and move the suspension up and down. If brake hose rubs on any parts, reroute brake hose correctly.

Fill and bleed the brake system. Refer to *BRAKE FLUID BLEEDING* in this section.

Install all other removed parts.

Check for leaks and make sure the brakes operate normally before driving.

BODY

BODY PARTS

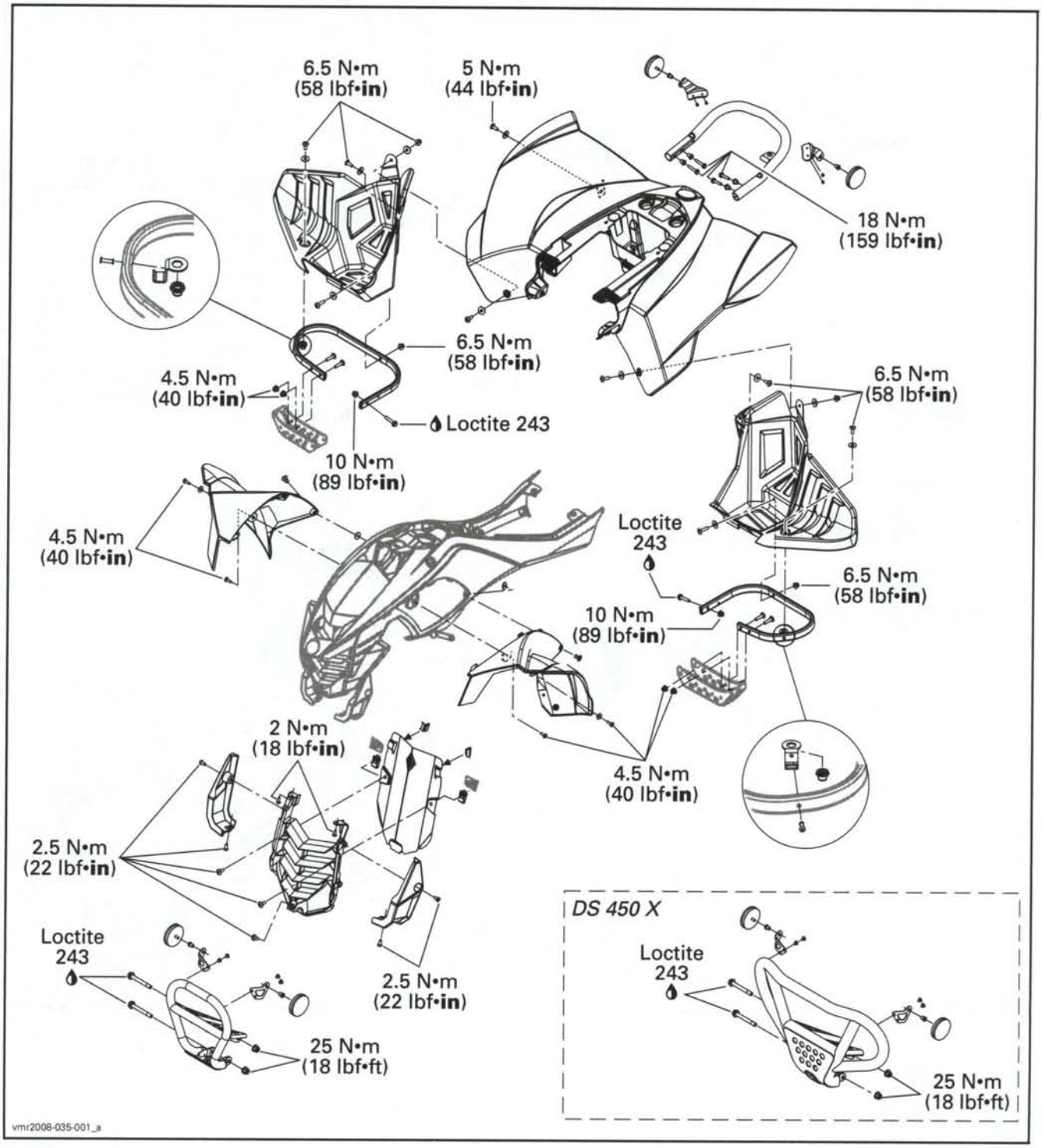

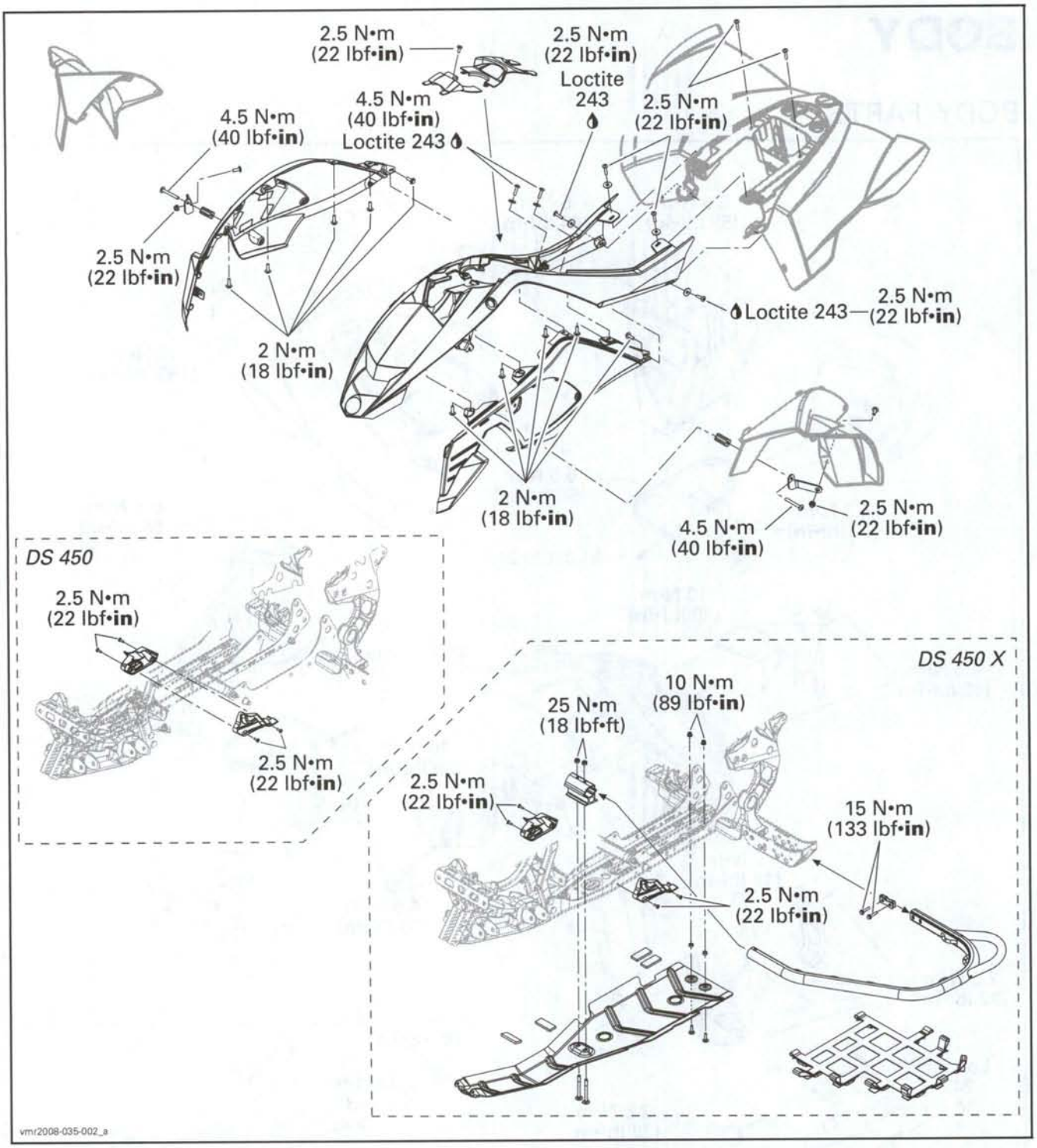
2.5 N•m
(22 lbf•in)
2.5 N•m
(22 lbf•in)
Loctite
243
4.5 N•m
(40 lbf•in)
Loctite 243
2.5 N•m
(22 lbf•in)
4.5 N•m
(40 lbf•in)
2.5 N•m
(22 lbf•in)
Loctite 243
2.5 N•m
(22 lbf•in)
2 N•m
(18 lbf•in)
2 N•m
(18 lbf•in)
4.5 N•m
(40 lbf•in)
2.5 N•m
(22 lbf•in)
DS 450
2.5 N•m
(22 lbf•in)
2.5 N•m
(22 lbf•in)
DS 450 X
10 N•m
(89 lbf•in)
25 N•m
(18 lbf•ft)
2.5 N•m
(22 lbf•in)
15 N•m
(133 lbf•in)
2.5 N•m
(22 lbf•in)
vmr2008-035-002_a

SEAT

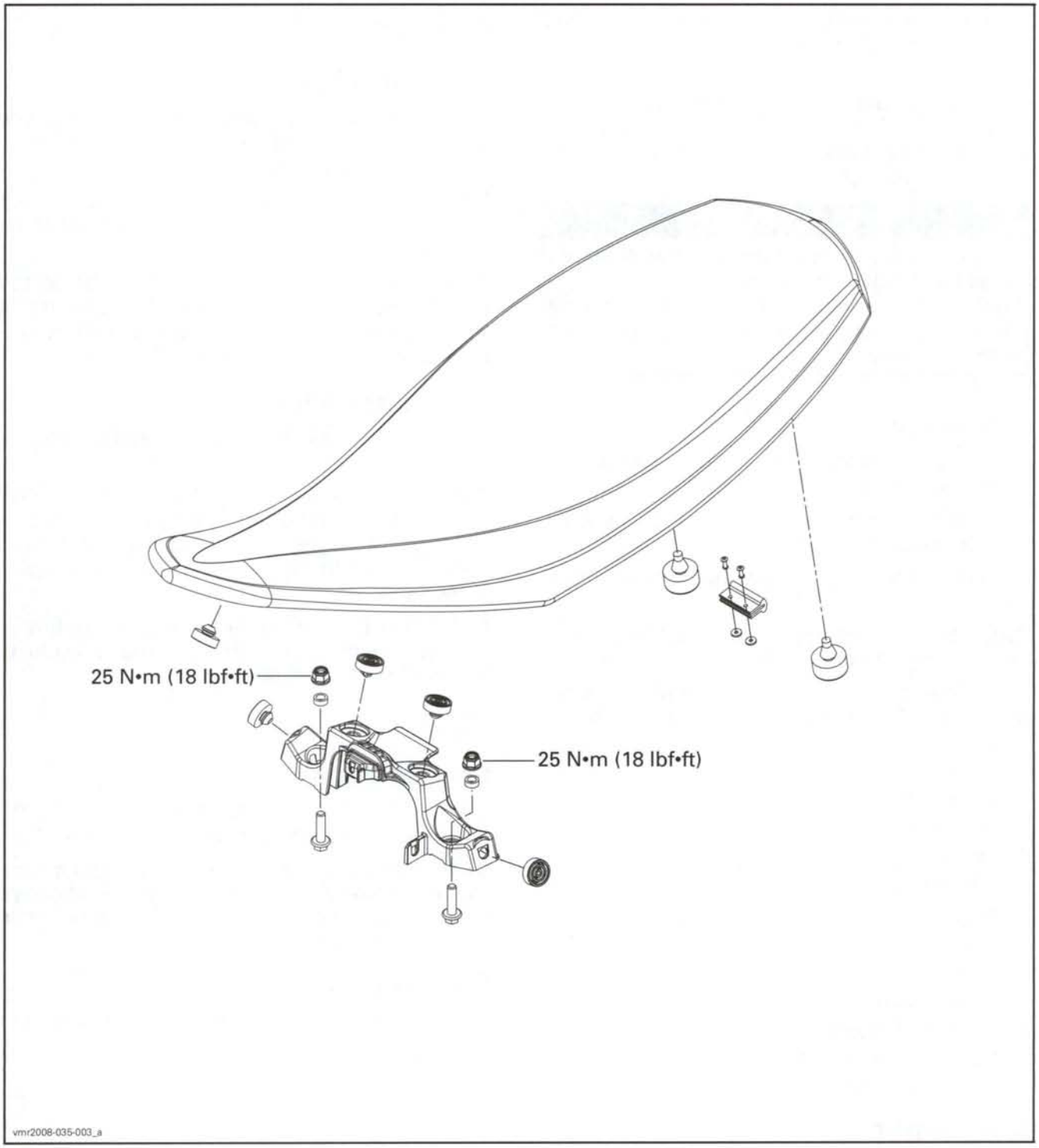

GENERAL

During assembly/installation, use the torque values and service products as in the exploded views.

Clean threads before applying a threadlocker. Refer to *SELF-LOCKING FASTENERS* and *LOCTITE APPLICATION* at the beginning of this manual for complete procedure.

⚠ WARNING

Torque wrench tightening specifications must be strictly adhered to.
Locking devices (e.g.: locking tabs, elastic stop nuts, cotter pins, etc.) must be replaced with new ones.

Vehicle Care

Clean the vehicle thoroughly, removing all dirt and grease accumulation.

To clean use a soft clean cloth and either soapy water or isopropyl alcohol.

To remove grease, oil or glue use isopropyl alcohol.

CAUTION: Do not apply isopropyl alcohol or acetone directly on decals.

The following products must not be used to clean or wax any of the plastic components used on the vehicles:

- Gasoline
- Brake fluid
- Kerosene
- Diesel fuel
- Lighter fluid
- Varsol
- Naphtha
- Acetone
- Strong detergents
- Abrasive cleaners
- Waxes containing an abrasive or a cleaning agent in their formula.

Body Repair

No plastic part on this vehicle is repairable. Change all defective parts.

PROCEDURES

DECALS

Decal Removal

Using a heat gun (low heat setting) warm up one end of decal for a few seconds until decal can roll off when rubbing with your finger.

Pull decal slowly and when necessary apply more heat to ease removal on the area that has to be peeled off.

If decal tears while pulling off, it has to be heated for a few seconds longer. If decal tends to stretch while pulling off, stop heating and wait a few seconds to let it cool, then peel it off.

Decal Installation

Using isopropyl alcohol, clean the surface and dry thoroughly.

Apply a soapy water solution to new decal and carefully position it. Using a sponge or a squeegee, remove the air bubbles and surplus water working from the center toward the edges. Allow to air dry.

CAUTION: Do not apply isopropyl alcohol or solvent directly on decals. Use these products in a well ventilated area.

SEAT

Seat Cleaning

It is recommended to clean the seat with a solution of warm soapy water, using a soft clean cloth.

CAUTION: Avoid use of harsh detergents such as strong soaps, degreasing solvents, abrasive cleaners, paint thinners, etc. that may cause damage to the seat cover.

Seat Removal

The seat latch is located underneath rear end of seat.

1. Seat latch

Pull latch rearward while gently lifting rear of seat. Continue lifting movement until you can release seat retaining devices, then completely remove seat.

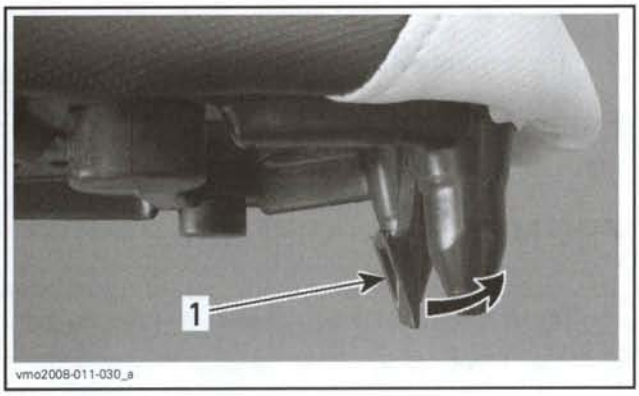

1. Seat latch

Seat Installation

Insert seat front upper slot into coolant tank hook, then make sure seat middle tab is well engaged. When seat rests in its position, firmly push seat down to latch.

NOTE: A distinctive snap will be felt. Double check that the seat is secure by giving it a tug to confirm proper latching.

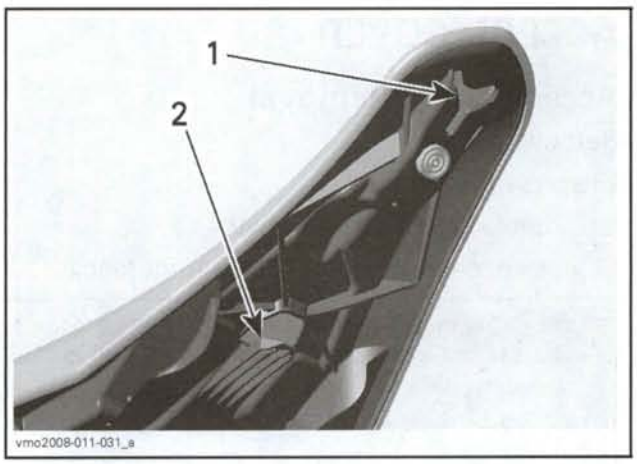

1. Upper slot
2. Middle tab

⚠ WARNING

Make sure seat is securely latched before riding.

Seat Cover Replacement

Remove the old seat cover. Check the foam and replace if necessary.

Install staples with an electric tacker such as Arrow tacker no. ETN-50 or with a manual tacker such as Arrow tacker no. T-50.

NOTE: For an easier installation, it's highly recommended to use an electric tacker.

Ensure that the seat rest firmly against a hard surface such as a piece of wood. This is done to get the staples completely pushed in place.

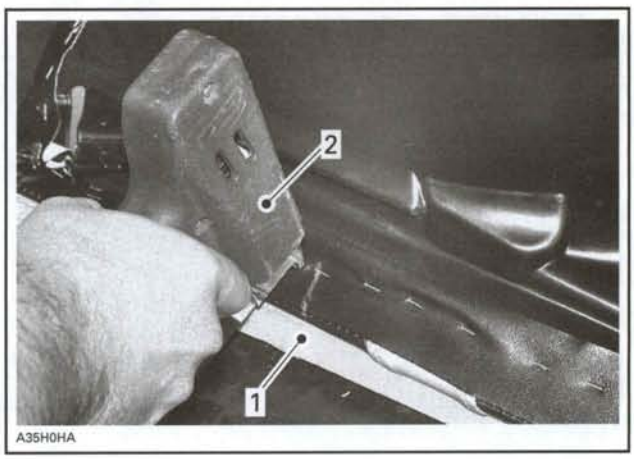

TYPICAL
1. Piece of wood
2. ETN-50 (electric)

After cover installation cut all around the excess of material.

ACCESS COVER

Access Cover Removal

Remove seat.

Unscrew fuel tank cap.

Lift front edge of access cover.

Release access cover tabs from front fascia.

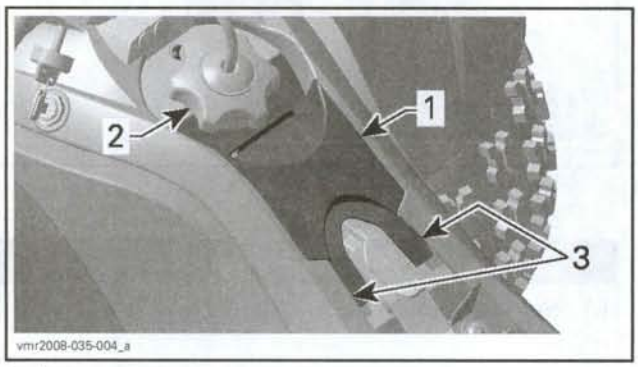

1. Access cover
2. Fuel tank cap
3. Access cover tabs

Access Cover Installation

The installation is the reverse of the removal procedure.

CONSOLE

Console Removal

Remove seat.

Remove access cover. Refer to *ACCESS COVER.*

Remove screw securing console.

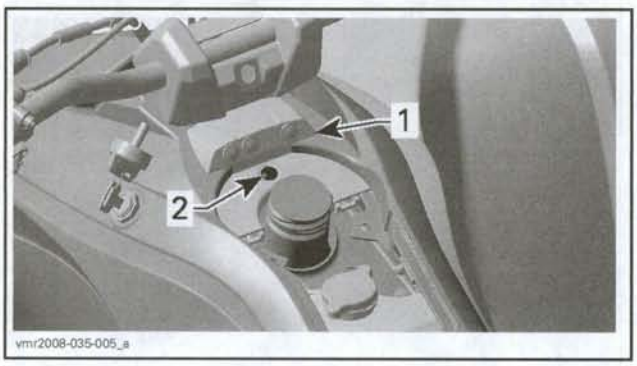

1. Console
2. Console screw

Lift the console.

Disconnect indicator lamps.

Remove console completely.

Console Installation

Installation is the reverse order of removal.

FRONT BUMPER

Front Bumper Removal

Remove bolts securing front bumper to frame.

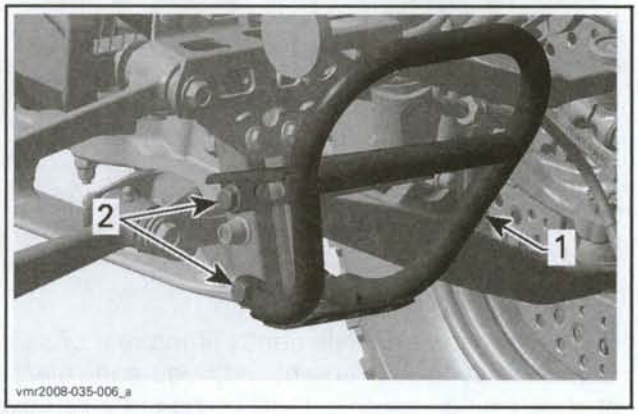

TYPICAL
1. Front bumper
2. Front bumper bolts

Pull front bumper to remove it.

Front Bumper Installation

Installation is the reverse order of removal.

FRONT BODY ASSEMBLY

To work on frame, fuel tank or steering column, the removal of front body assembly is necessary.

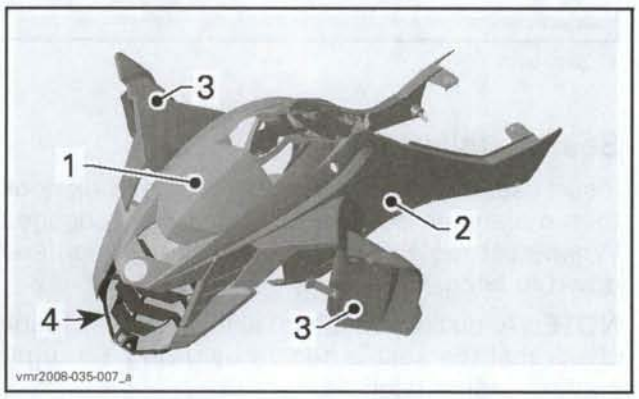

THE FRONT BODY ASSEMBLY INCLUDES:
1. Front fascia
2. Side panels
3. Front fenders
4. Front grille

Front Body Removal

Remove seat.

Remove access cover.

Remove console screw.

Remove screws holding fascia and coolant reservoir.

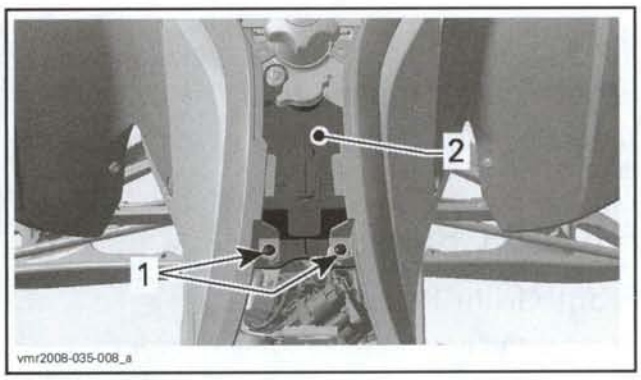

1. Remove these screws
2. Coolant reservoir

Remove screws at the rear end of front fascia (two on each sides).

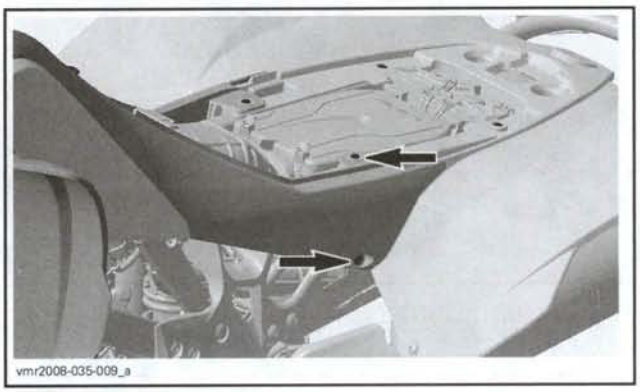

Remove screw retaining front fender bracket and side panel (same on both sides).

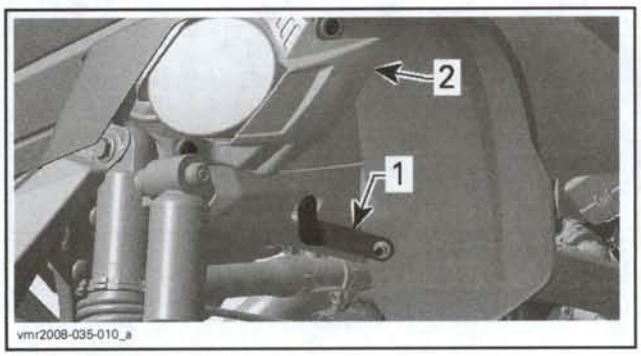

1. Front fender bracket
2. Headlamp

Unplug headlamp connector.

Remove screw retaining headlamp to front fender and side panel (same on both sides).

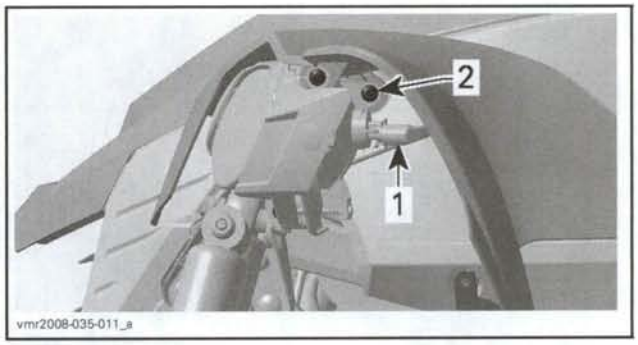

1. Headlamp connector
2. Screw to remove

Remove headlamp support screw.

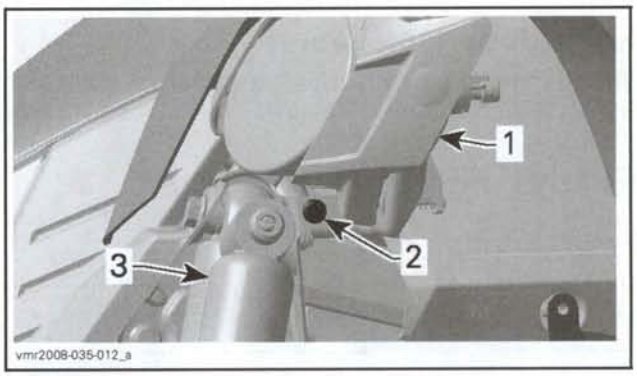

1. Headlamp
2. Headlamp support screw
3. Shock absorber

Remove screw at the bottom of front grille.

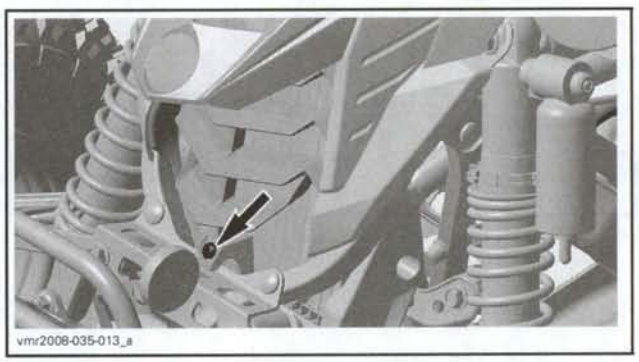

Lift front body assembly to remove the ignition switch.

Remove front body assembly.

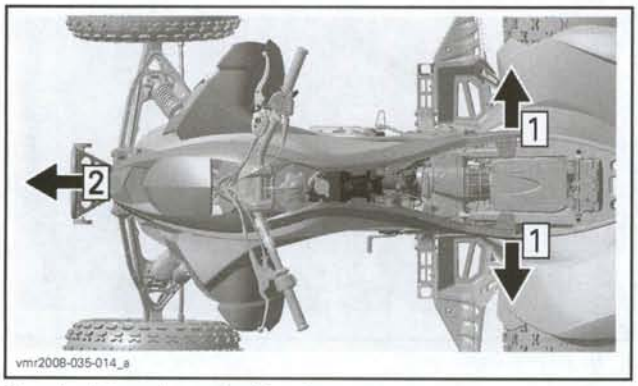

Step 1: Move the ends of fascia away
Step 2: Pull the body assembly forward

Front Body Installation

The installation is the reverse of removal procedure.

FRONT FENDER

Front Fender Removal

Remove both screws retaining headlamp to front fender.

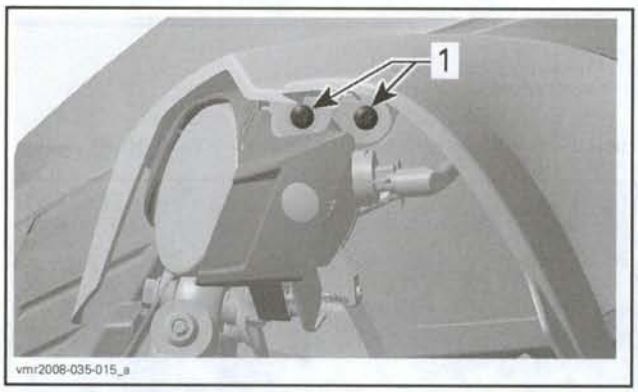

UNDERNEATH LH FRONT FENDER
1. Headlamp screws

Remove screw at the bottom of fender.

Remove plastic rivet retaining front fender to side panel.

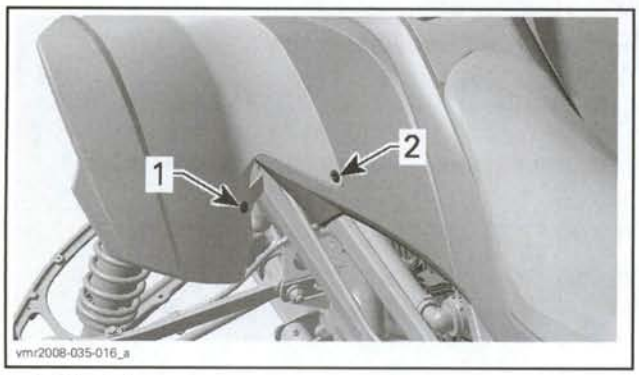

1. Fender's lower screw
2. Plastic rivet

Remove front fender.

Front Fender Installation

The installation is the reverse of removal procedure.

FRONT GRILLE

Front Grille Removal

Remove the bottom screw of front grille.

Remove both screws holding front grille to side panels.

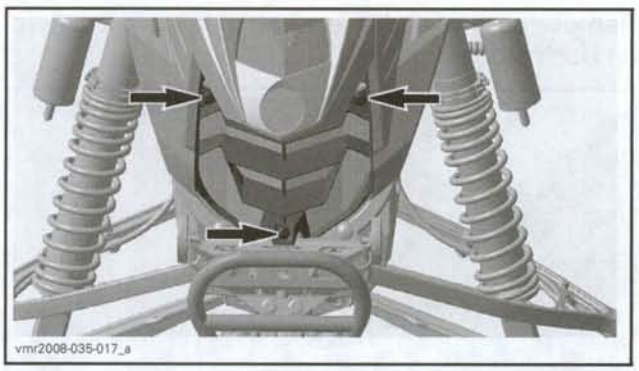

Remove both top screws securing front grille to fascia.

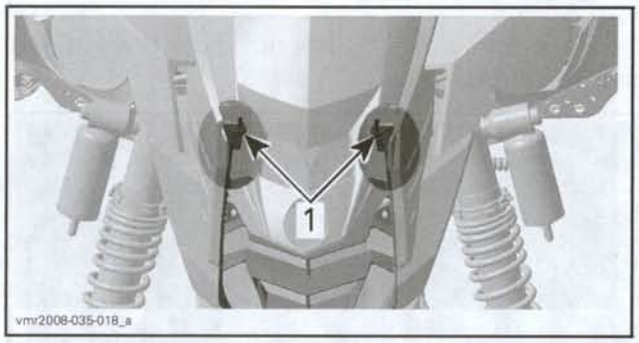

1. Top screws underneath front fascia

Remove front grille.

Front Grille Installation

For the installation, reverse the removal procedure.

SIDE PANELS

Side Panel Removal

Remove front body assembly.

Remove both front fenders.

Turn the assembly up side down.

Remove front grille.

Remove all screws securing side panels to fascia.

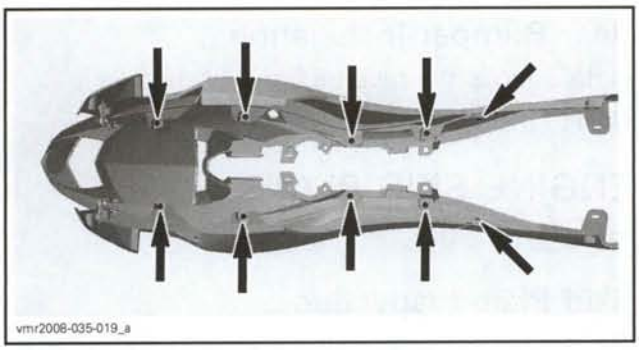

Side Panel Installation

Installation is the reverse order of removal.

FRONT FASCIA

Front Fascia Removal

Remove the following components as detailed elsewhere in this section:

- Front body assembly
- Front grille
- Side panels.

Front Fascia Installation

Installation is the reverse order of removal.

FOOTREST

Footrest Removal

Remove screws retaining footrest to rear fender and frame.

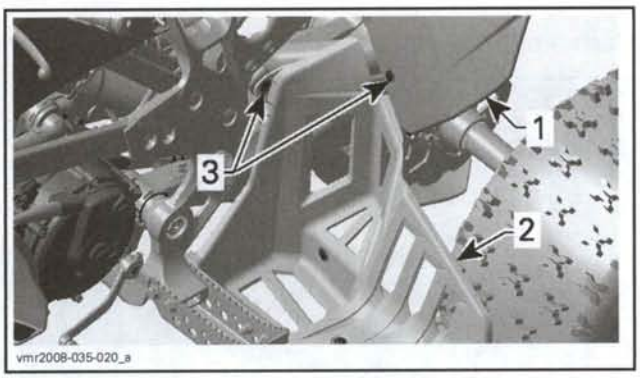

1. Rear fender
2. Footrest
3. Screws to be removed

Remove both screws securing footrest to footrest support.

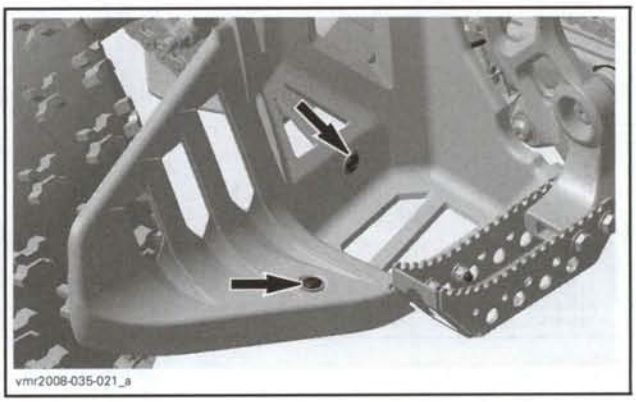

Remove footrest.

Footrest Installation

Installation is the reverse order of removal.

NOTE: Install all bolts before torquing.

FOOTREST SUPPORT

Footrest Support Removal

Remove footrest.

Unscrew bolts retaining footrest support to the frame and footpeg.

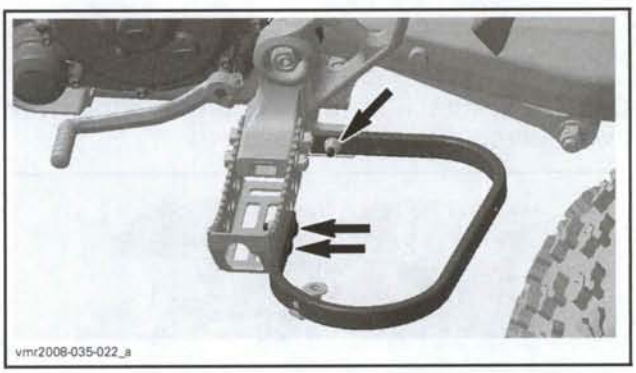

Footrest Support Installation

Installation is the reverse order of removal.

NOTE: Install all bolts before torquing.

REAR FENDER

Rear Fender Removal

Remove seat.

Remove battery. Refer to *CHARGING SYSTEM*.

Remove the fuse holder cover and slide the holder through the fender opening.

Remove both fascia screws.

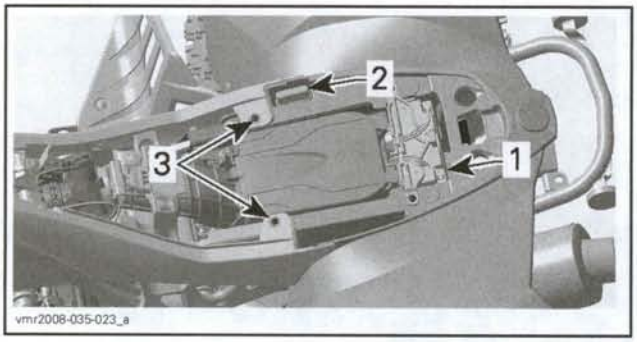

1. *Battery*
2. *Fuse holder*
3. *Fascia screws*

Remove screws retaining rear fender to footrest and fascia to frame.

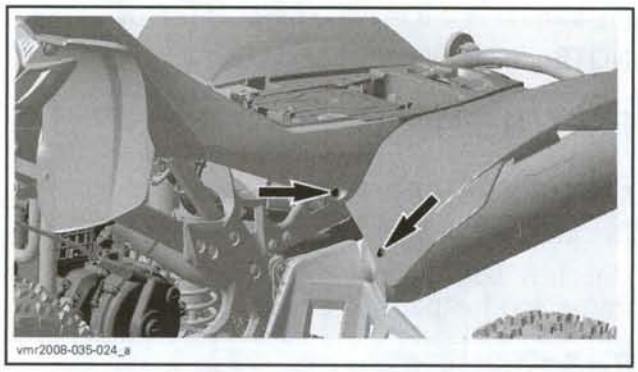

Remove bolts securing rear fender to its support.

CAUTION: Attach muffler to fender support to avoid damaging exhaust system.

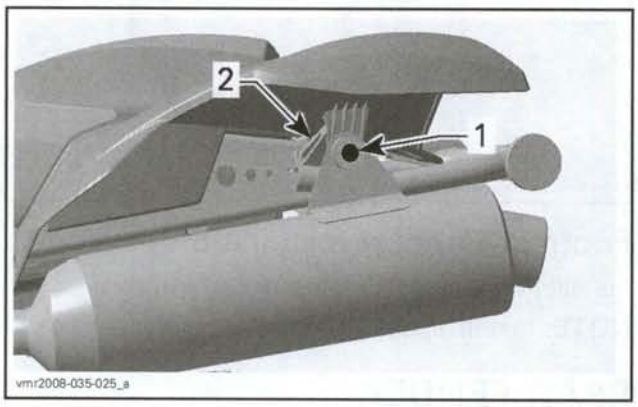

1. *Muffler bolt*
2. *Rear fender support*

Rear Fender Installation

Installation is the reverse order of removal.

REAR BUMPER

Rear Bumper Removal

From underneath of rear fender, remove screws retaining rear bumper.

Rear Bumper Installation

Installation is the reverse order of removal.

NOTE: Install all bolts before torquing.

ENGINE SKID PLATE

DS 450 X

Skid Plate Inspection

The skid plate protects the engine and the frame. Check for damage, cracks or looseness.

Change if skid plate is damaged or cracked.

Skid Plate Removal

Underneath vehicle, remove screws retaining skid plate to frame.

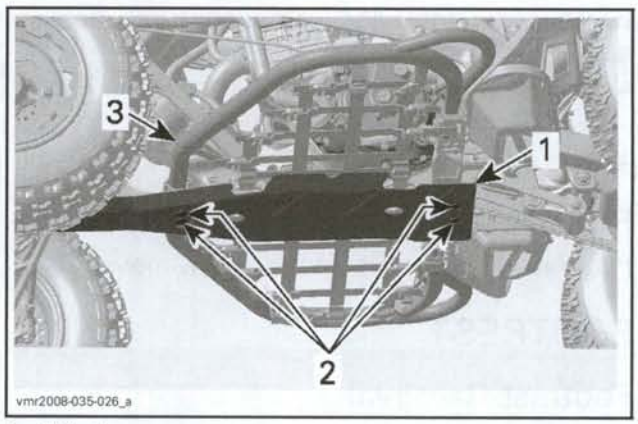

1. *Skid plate*
2. *Bolts to be removed*
3. *Nerf bar*

Remove the lower bolt securing the front bumper.

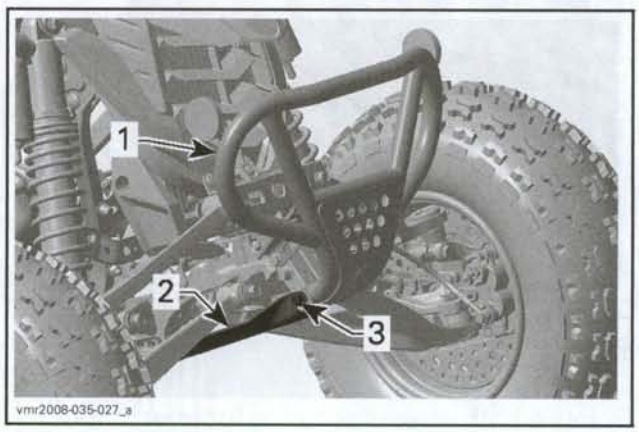

1. *Front bumper*
2. *Skid plate*
3. *Lower bolt of bumper*

Skid Plate Installation

Installation is the reverse of the removal.

NOTE: Install all bolts before torquing.

NERF BAR

DS 450 X

Nerf Bar Removal

NOTE: The procedure for LH and RH side nerf bar is the same.

⚠ WARNING

Engine and muffler must be cold before removing the nerf bar. Otherwise, serious injuries may occur.

Unfasten the net straps and slide them out from the frame.

Remove bolt retaining nerf bar and skid plate to frame.

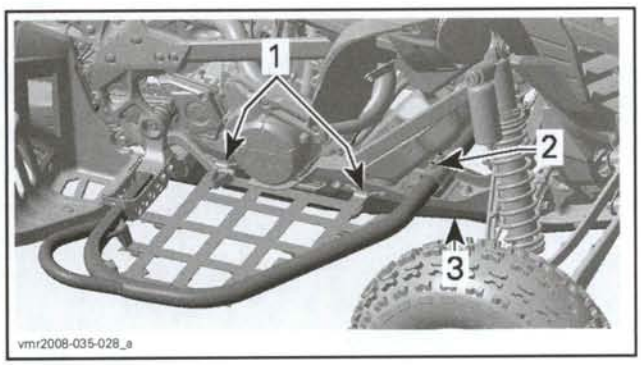

1. *Net straps to be removed*
2. *Nerf bar bolt*
3. *Skid plate*

Remove bolts securing nerf bar to footpeg.

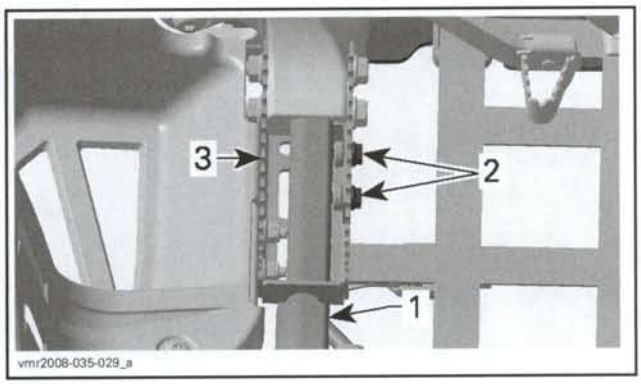

1. *Nerf bar*
2. *Nerf bar's bolts*
3. *Footpeg*

Nerf Bar Inspection

Check nerf bar for cracks or bents. Replace nerf bar as required.

Check net strap for wear. Change or repair as required.

Nerf Bar Installation

Installation is essentially the reverse of removal procedure but pay attention to the following:

After installing the net strap on the frame, make sure to tight it properly.

⚠ WARNING

Make sure the net is not too tight on nerf bar tube. Check for clearance by standing up on footpegs and moving feet in all directions. Feet must not interfere with nerf bar net. Otherwise, serious injuries may occur.

FRAME

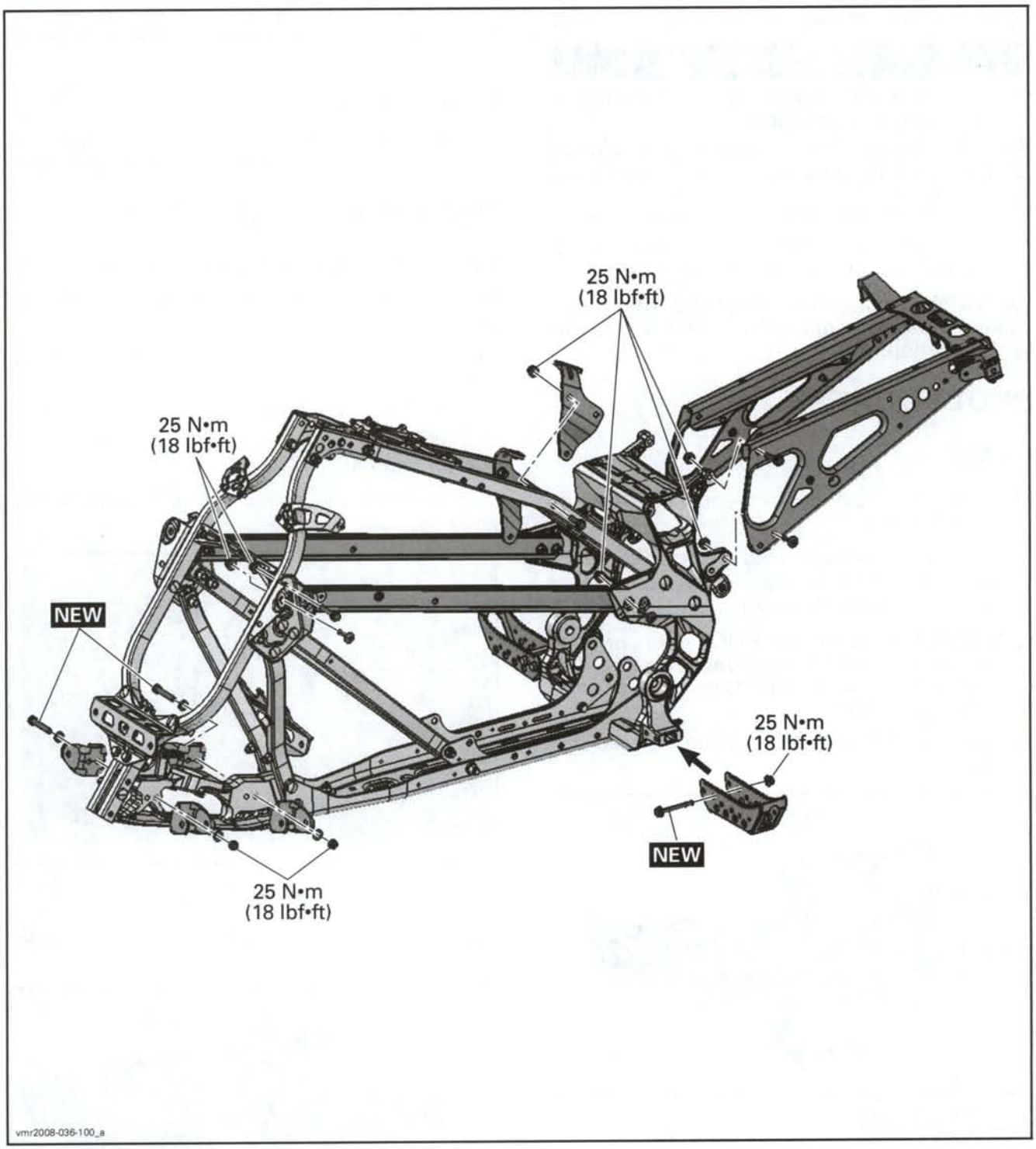
25 N•m
(18 lbf•ft)
25 N•m
(18 lbf•ft)
NEW
25 N•m
(18 lbf•ft)
NEW
25 N•m
(18 lbf•ft)
vmr2008-036-100_a

GENERAL

During assembly/installation, use the torque values and service products as in the exploded view.

⚠ WARNING

Torque wrench tightening specifications must be strictly adhered to.
Locking devices (e.g.: locking tabs, elastic stop nuts, cotter pins, etc.) must be replaced with new ones.

Hoses or cables removed or disconnected must be installed and routed at the same place.

CAUTION: Locking ties removed during a procedure must be replaced and installed at the same location.

PROCEDURES

FRAME

Many components of this frame are firmly secured with HUCK rivets.

This fastening process allows an incredible structural integrity. For this reason, structural parts of frame are not available individually.

CAUTION: Do not remove HUCK rivets or bolts securing parts of the pyramidal structure. The removal of these components can cause frame distortion or cracks.

However, the following parts can be replaced separately.

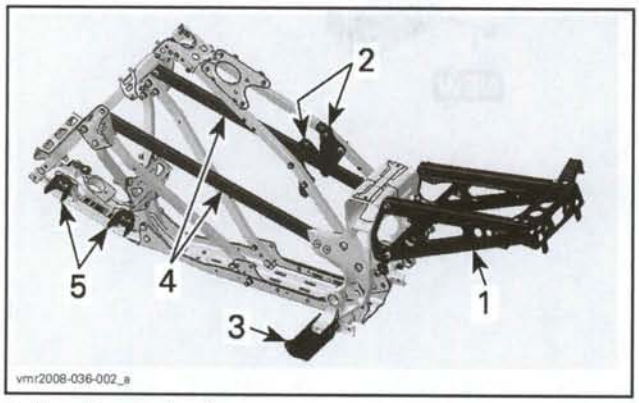

1. *Rear frame extension*
2. *Rear engine supports*
3. *Footpegs*
4. *Both side members*
5. *Lower suspension arm attachments*

Frame Cleaning

Using a high pressure washer, clean the frame thoroughly.

CAUTION: Never direct high-pressure water jet towards decals. They will peel off.

Clean frame with a special cleaner specially formulated for anodized aluminum (follow manufacturer's instructions).

Frame Welding

No welds should be done on aluminum frame except if mentioned or required on a BRP Bulletin.

REAR FRAME EXTENSION

Rear Frame Extension Removal

Remove muffler. Refer to *EXHAUST SYSTEM* section.

Refer to *BODY* section and remove the following parts:

- Front body assembly
- Rear fender
- Rear bumper.

Loosen clamp securing air intake hose to throttle body.

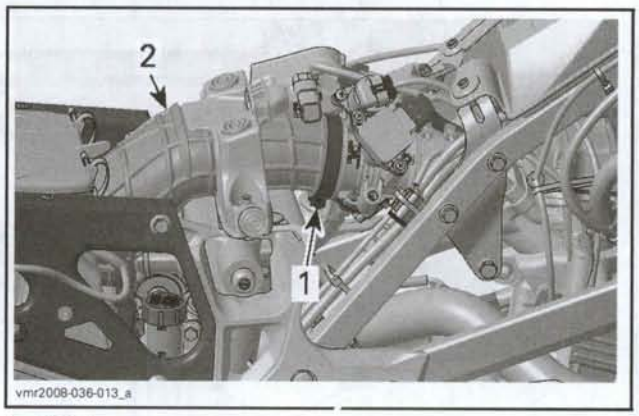

1. *Clamp*
2. *Air intake hose*

Unplug brake light and voltage regulator connectors.

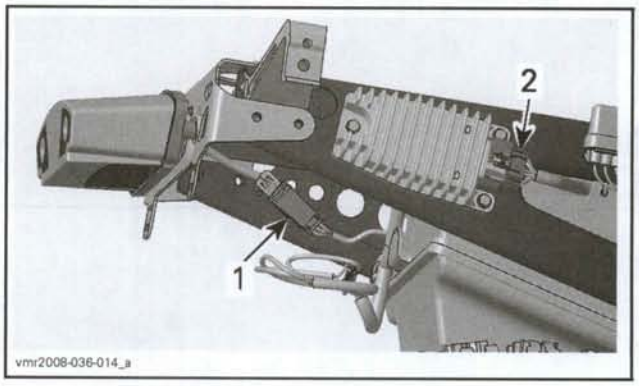

1. *Brake light connector*
2. *Voltage regulator connector*

On both sides, remove bolts securing the rear frame extension to frame.

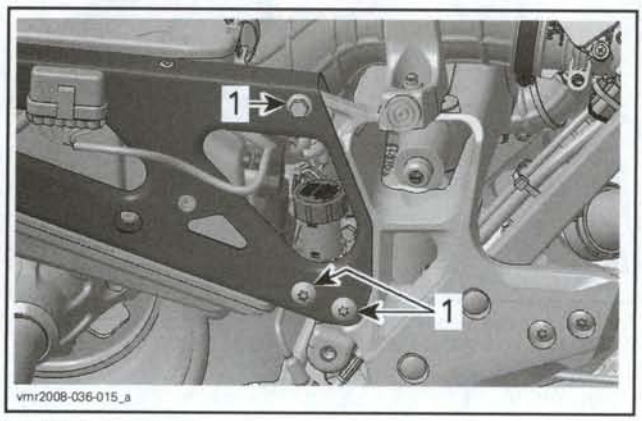

1. RH retaining bolts

Remove the rear frame extension from vehicle.

Unscrew air filter housing bolts.

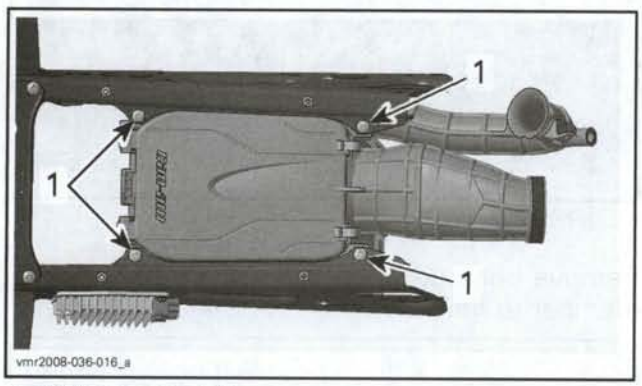

1. Air filter housing bolts

Remove brake light and voltage regulator from the rear frame extension.

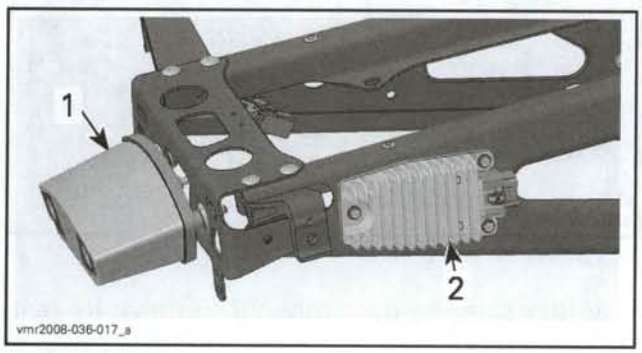

1. Brake light
2. Voltage regulator

Rear Frame Extension Installation

The installation is the reverse of the removal procedure.

CAUTION: Make sure do not use elastic stop nuts to secure rear frame extension bolts. The plastic inside elastic stop nuts could melt due to the exhaust system heat and their efficiency could be reduced.

REAR ENGINE SUPPORTS

Rear Engine Support Removal

Remove the front body assembly. Refer to *BODY* section.

Unscrew rear engine mounting bolt.

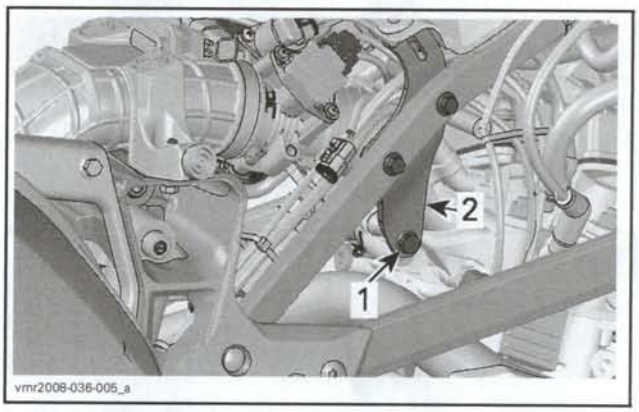

1. Engine mounting bolt
2. RH rear engine support

Remove bolts securing rear engine support to frame.

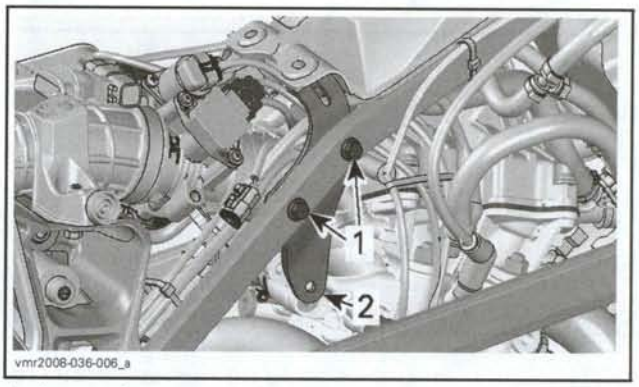

1. Rear engine support bolts
2. RH rear engine support

Rear Engine Support Installation

The installation is the reverse of the removal procedure.

FOOTPEG

Footpeg Removal

Remove footrest. Refer to *BODY* section.

Unscrew and discard bolts securing footrest support to footpeg.

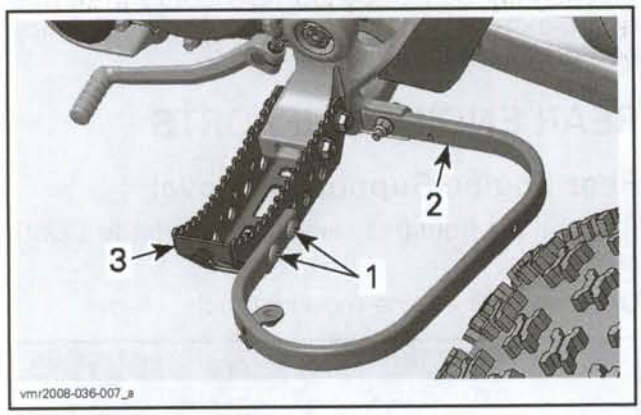

1. *Footrest support bolts*
2. *Footrest support*
3. *LH footpeg*

Unscrew footpeg bolts.

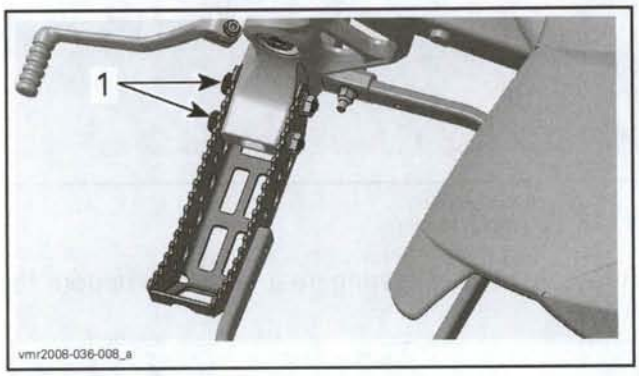

1. *Footpeg bolts*

Remove footpeg from vehicle.

Footpeg Installation

For installation, reverse the removal procedure.

Use **NEW** bolts when installing footpeg.

SIDE MEMBER

NOTE: Side members should be removed only to perform the following, do not remove them unnecessarily:

- Engine removal
- Valves adjustment
- Fuel tank removal.

Side Member Removal

Remove the front shock absorber. Refer to *FRONT SUSPENSION* section.

Remove the side member front bolt locates inside shock absorber upper bracket.

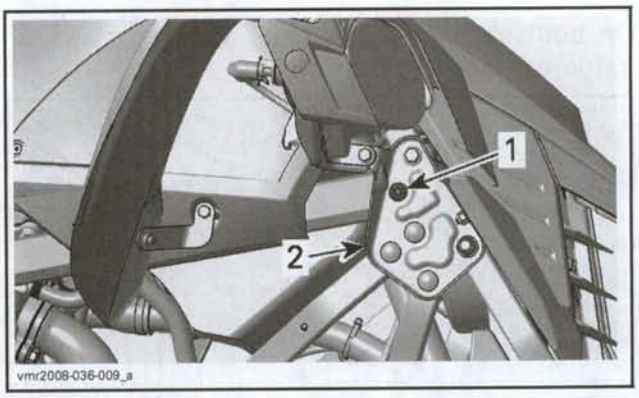

1. *Side member front bolt*
2. *Shock absorber upper bracket*

Remove front fender support screw.

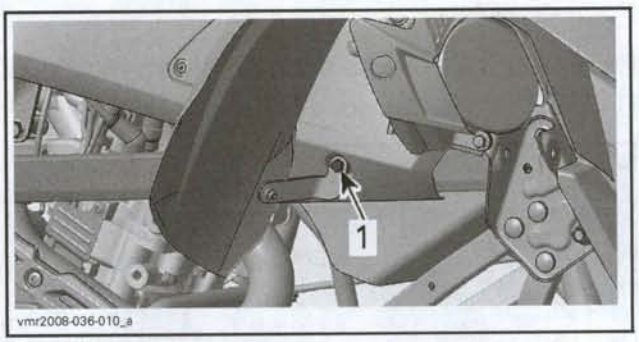

1. *RH fender support screw*

Remove bolts securing the rear section of side member to frame.

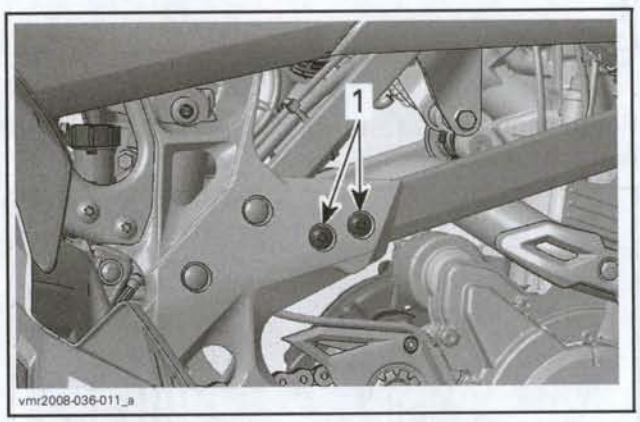

1. *Side member rear bolts*

Slide the side member forward to move its rear section out of frame.

Move side member rearward to remove it from vehicle.

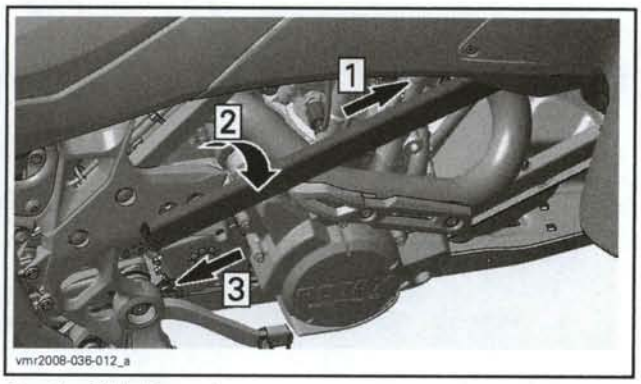

Step 1: Slide forward
Step 2: Move the end outside
Step 3: Move rearward to remove

Side Member Installation

Reverse the removal procedure to install side members.

LOWER SUSPENSION ARM ATTACHMENTS

Lower Suspension Arm Attachment Removal

Remove both lower suspension arm. Refer to *FRONT SUSPENSION* section.

Unscrew attachment bolts. Discard bolts and nuts.

Remove suspension arm attachments.

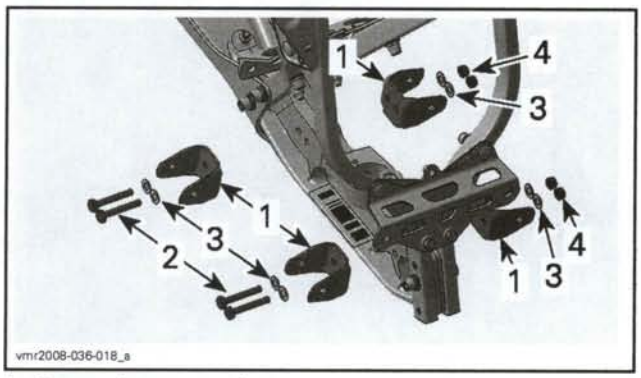

1. Suspension arm attachments
2. Discard these bolts
3. Washers
4. Discard these nuts

Lower Suspension Arm Attachment Installation

The installation is the reverse of the removal procedure. However, pay attention to the following.

Use **NEW** bolts when installing lower suspension arm attachment.

CAUTION: A special fastener grade is used for this assembly. Make sure to use the proper bolts when installing suspension arm attachments.

DS 450/DS 450 X

MODEL				DS 450	DS 450 X
ENGINE					
Engine type				ROTAX® 449	
				4-stroke, Double Over Head Camshaft (DOHC), liquid cooled	
Number of cylinders				1	
Number of valves				4 valves (mechanical adjustment)	
Bore			mm (in)	97 (3.82)	
Stroke			mm (in)	60.8 (2.39)	
Displacement			cm³ (in³)	449.3 (27.42)	
Compression ratio				11.7 : 1	
Decompressor type				Automatic	
Maximum HP RPM			RPM	8000	
Lubrication	Type			Dry sump with 2 pumps (lubrication of engine and transmission simultaneously)	
	Oil filter			Replaceable synthetic multi-layer oil filter (cartridge)	
	Engine oil pressure	Minimum		200 kPa (29 PSI) @ 5000 RPM @ 80°C (176°F) minimum oil temperature	
	Engine oil	Capacity (oil change with filter)		1.8 L (1.9 quarts)	
		Recommended		XP-S 5W40 synthetic oil. **Do not use other synthetic oil, synthetic blend oil or additive in Can-Am ATV wet clutch equipped vehicles**	
Intake valve opening				12° BTDC	
Intake valve closing				48° ABDC	
Exhaust valve opening				64° BBDC	
Exhaust valve closing				15° ATDC	
Valve clearance	Intake		mm (in)	0.11 to 0.18 (.0043 to .0071)	
	Exhaust		mm (in)	0.22 to 0.29 (.0087 to .0114)	
Valve stem diameter	Intake	New	mm (in)	5.961 to 5.975 (.2347 to .2352)	
		Service limit	mm (in)	5.950 (.2343)	
	Exhaust	New	mm (in)	5.946 to 5.960 (.2341 to .2346)	
		Service limit	mm (in)	5.935 (.2337)	
Valve out of round	Intake and exhaust	New	mm (in)	0.005 (.0002)	
		Service limit	mm (in)	0.06 (.0024)	
Valve guide diameter		New	mm (in)	6.006 to 6.018 (.2364 to .2369)	
		Service limit	mm (in)	6.050 (.2382)	
Valve spring free length	Inner spring	New	mm (in)	39.24 (1.5449)	
		Service limit	mm (in)	38.00 (1.4961)	
	Outer spring	New	mm (in)	41.97 (1.6524)	
		Service limit	mm (in)	40.50 (1.5945)	
Valve seat contact width	Intake	New	mm (in)	1.00 to 1.40 (.0394 to .0551)	
		Service limit	mm (in)	1.60 (.0630)	
	Exhaust	New	mm (in)	1.25 to 1.55 (.0492 to .0610)	
		Service limit	mm (in)	1.80 (.0709)	

MODEL				DS 450	DS 450 X
ENGINE (cont'd)					
Valve lifter bucket diameter		New	mm (in)	33.459 to 33.475 (1.3173 to 1.3179)	
		Service limit	mm (in)	33.440 (1.3165)	
Valve lifter bucket radial clearance		Service limit	mm (in)	0.08 (.0032)	
Piston measurement	Size "1"/"A"	New	mm (in)	96.930 to 96.960 (3.8161 to 3.8173)	
		Service limit	mm (in)	96.910 (3.8153)	
	Size "2"/"B"	New	mm (in)	96.940 to 96.970 (3.8165 to 3.8177)	
		Service limit	mm (in)	96.920 (3.8157)	
Two piston sizes are available to matched with cylinders . When replacing piston, always check the letter stamps at the bottom of cylinder to match them (piston "1" with cylinder "A" and piston "2" with cylinder "B"). Do not mismatch them. Serious engine damages can occur.					
Piston/cylinder clearance		New	mm (in)	0.040 to 0.085 (.0016 to .0033)	
		Service limit	mm (in)	0.090 (.0035)	
Piston ring type		1st		Upper compression ring, rectangular	
		2nd		Lower compression ring, rectangular	
		3rd		Oil scraper ring	
Ring end gap	Upper compression ring	New	mm (in)	0.15 to 0.40 (.006 to .016)	
	Lower compression ring			0.15 to 0.40 (.006 to .016)	
	Oil scraper ring			0.15 to 0.35 (.006 to .014)	
	All	Service limit	mm (in)	1.00 (.0394)	
Ring/piston groove clearance	Upper compression ring	New	mm (in)	0.025 to 0.070 (.0010 to .0028)	
	Lower compression ring			0.025 to 0.070 (.0010 to .0028)	
	Oil scraper ring			0.015 to 0.060 (.0006 to .0024)	
	Upper compression ring	Service limit	mm (in)	0.120 (.0047)	
	Lower compression ring			0.120 (.0047)	
	Oil scraper ring			0.100 (.0039)	
Cylinder diameter	Size "1"/"A"	New	mm (in)	97.000 to 97.012 (3.8189 to 3.8194)	
	Size "2"/"B"			97.012 to 97.025 (3.8194 to 3.8199)	
Cylinders are available in two diameters. Always check the letter at the bottom of cylinder to select the proper piston (piston "1" with cylinder "A" and piston "2" with cylinder "B"). Do not mismatch them. Serious engine damages can occur.					
Cylinder taper		Maximum New	mm (in)	0.024 (.0009)	
		Service limit	mm (in)	0.090 (.0035)	
Cylinder out of round		Maximum New	mm (in)	0.015 (.0006)	
		Service limit	mm (in)	0.020 (.0008)	

MODEL				DS 450	DS 450 X
ENGINE (cont'd)					
Camshaft bearing journal		New	mm (in)	23.967 to 23.980 (.9436 to .9441)	
		Service limit	mm (in)	23.950 (.9429)	
Camshaft bearing journal bore		New	mm (in)	24.007 to 24.020 (.9452 to .9457)	
		Service limit	mm (in)	24.040 (.9461)	
Camshaft lobe	Intake valve	New	mm (in)	40.200 to 40.400 (1.5827 to 1.5905)	
		Service limit	mm (in)	40.150 (1.5807)	
	Exhaust valve	New	mm (in)	40.499 to 40.699 (1.5944 to 1.6023)	
		Service limit	mm (in)	40.450 (1.5925)	
Camshaft radial clearance		Service limit	mm (in)	0.060 (.0024)	
Decompressor — valve lift		Nominal	mm (in)	0.65 to 0.90 (.0256 to .03534)	
Crankshaft axial play			mm (in)	0.100 to 0.700 (.0039 to .0276)	
Balancer shaft bearing journal		New	mm (in)	16.985 to 16.994 (.6687 to .6691)	
		Service limit	mm (in)	16.950 (.6673)	
Connecting rod big end radial play		New	mm (in)	0.010 to 0.022 (.0004 to .0009)	
		Service limit	mm (in)	0.050 (.0020)	
Connecting rod big end axial play		New	mm (in)	0.317 to 0.643 (.0125 to .0253)	
		Service limit	mm (in)	0.700 (.0276)	
Connecting rod small end diameter		New	mm (in)	20.015 to 20.025 (.7880 to .7884)	
		Service limit	mm (in)	20.040 (.7890)	
Piston pin diameter		New	mm (in)	19.996 to 20.000 (.7872 to .7874)	
		Service limit	mm (in)	19.990 (.7870)	
Connecting rod/piston pin clearance (radial play)		Service limit	mm (in)	0.050 (.0020)	
CLUTCH					
Type				Wet clutch, multi-plate	
Clutch spring free length		New	mm (in)	33.70 to 34.50 (1.327 to 1.358)	
		Service limit	mm (in)	31.60 (1.244)	
Clutch plate assembly thickness (friction and clutch plates)		New	mm (in)	30.28 to 32.52 (1.192 to 1.280)	
		Service limit	mm (in)	30.20 (1.189)	
Friction plate thickness		New	mm (in)	2.52 to 2.68 (.100 to .106)	
		Service limit	mm (in)	2.45 (.096)	
Maximum warpage for steel driven plate package		Service limit	mm (in)	1.20 (.047)	
GEARBOX					
Type				Integrated 5 speed, constant mesh	
Primary reduction gear ratio				75/27	
Gear ratio		1st		30/13	
		2nd		28/15	
		3rd		26/18	
		4th		23/20	
		5th		21/22	
Pinion groove width		New	mm (in)	3.70 to 3.80 (.146 to .150)	
		Service limit	mm (in)	4.00 (.157)	

MODEL				DS 450	DS 450 X
ENGINE (cont'd)					
GEARBOX (cont'd)					
Shift fork claw thickness		New	mm (in)	3.54 to 3.60 (.139 to .142)	
		Service limit	mm (in)	3.40 (.134)	
Diameter of free pinion on clutch shaft (4th and 5th speed)		New	mm (in)	24.007 to 24.020 (.9452 to .9457)	
		Service limit	mm (in)	24.025 (.9458)	
Diameter of free pinion on main shaft (1st, 2nd and 3rd speed)		New	mm (in)	25.007 to 25.020 (.9845 to .9850)	
		Service limit	mm (in)	25.025 (.9852)	
Main shaft journal diameter	MAG side	New	mm (in)	24.991 to 25.000 (.9839 to .9842)	
		Service limit	mm (in)	24.980 (.9835)	
	Free pinion bearing	New	mm (in)	20.935 to 21.065 (.8242 to .8293)	
		Service limit	mm (in)	20.920 (.8236)	
	Clutch side	New	mm (in)	16.985 to 16.994 (.6687 to .6691)	
		Service limit	mm (in)	16.960 (.6677)	
Clutch shaft journal diameter	MAG side	New	mm (in)	14.989 to 15.000 (.5901 to .5906)	
		Service limit	mm (in)	14.970 (.5894)	
	Free pinion bearing	New	mm (in)	19.935 to 20.065 (.7848 to .7900)	
		Service limit	mm (in)	19.920 (.7843)	
	Clutch side	New	mm (in)	24.980 to 24.993 (.9835 to .9840)	
		Service limit	mm (in)	24.960 (.9827)	
	Clutch drum	New	mm (in)	20.935 to 21.065 (.8242 to .8293)	
		Service limit	mm (in)	20.920 (.8236)	
COOLING SYSTEM					
Type				Liquid cooled, single radiator with cooling fan	
Coolant		Type		Ethyl glycol/water mix (50% coolant, 50% water). Use premixed coolant sold by BRP (P/N 219 700 362) or coolant specifically designed for aluminum engines	
		Capacity	L (quarts)	1.8 (1.9)	
Thermostat		Opening temperature	°C (°F)	75 (149)	
Radiator cap opening pressure			kPa (PSI)	110 (16)	
ELECTRICAL SYSTEM					
Magneto generator output				250 W @ 6000 RPM	
Ignition system type				DI (Digital Ignition)	
Ignition timing				Not adjustable	
Spark plug		Quantity		2	
		Make and type		NGK DCPR9E (apply heat-sink paste P12 (P/N 420 897 186) on threads)	
		Gap	mm (in)	0.7 to 0.8 (.027 to .031)	
Engine RPM limiter setting			RPM	10250	
Battery		Type		Maintenance free battery type	
		Voltage		12 volts	
		Nominal rating		7 A•h	
		Power starter output		0.6 KW	
Headlamp			W	2 x 35	

MODEL				DS 450	DS 450 X
ELECTRICAL SYSTEM (cont'd)					
Taillight			W	5/21	
Indicator lights				LEDS, 0.7 V approximately (each)	
Fuses	Charging system		A	20	
	Main		A	20	
	Cooling fan and accessories		A	20	
	Injector and ignition		A	15	
	Engine control module (ECM)		A	5	
FUEL SYSTEM					
Fuel delivery				Electronic Fuel Injection (EFI), Dell'Orto 46 mm single throttle body	
Fuel pump	Type			In-tank electrical fuel pump (Bosch)	
	Operating pressure		kPa (PSI)	350 (51)	
Idle speed			RPM ± 50	1850 (not adjustable)	
Fuel	Type			Super unleaded gasoline	
	Octane rating	Inside North America	(R+M)/2	91 or higher	
		Outside North America	RON	95 or higher	
Fuel tank capacity				11.5 L (3.0 U.S. gal)	
Remaining fuel in fuel tank when display light turns ON				± 3 L (.79 U.S. gal)	
DRIVE SYSTEM					
Rear axle				Chain driven/solid axle	
Rear drive ratio				14/42	
Drive chain				Regina 135 ORC6	
STEERING					
Turning radius	Standard		m (ft)	6.12 (20.1)	
Total toe-in (vehicle on ground without loads)			mm (in)	0 to 6.35 (0 to 1/4)	
Camber angle				0.8°	
Tie-rod maximum unengaged threads			mm (in)	20 (.787)	
Tie-rod maximum length			mm (in)	392 (15.43)	
SUSPENSION					
FRONT					
Suspension type				Double suspension arm	
Suspension travel			mm (in)	241 (9.5)	
Shock absorber	Qty			2	
	Type			HPG	HPG (fully adjustable)
Spring free length			mm (in)	279.4 (11)	
Spring color code				White/Red/White	
Front preload adjustment				Seat of spring threaded	

MODEL			DS 450	DS 450 X
SUSPENSION (cont'd)				
REAR				
Suspension type			Rigid swing arm	
Suspension travel		mm (in)	267 (10.5)	
Shock absorber	Qty		1	
	Type		HPG	
Spring free length		mm (in)	274.3 (10.8)	
Spring color code			White/Black/White	
Rear preload adjustment			Seat of spring threaded	
BRAKES				
Front brake	Qty		2	
	Type		Hydraulic, discs	
Rear brake	Qty		1	
	Type		Hydraulic, disc	
Brake fluid	Capacity	ml (U.S. oz)	125 (4.23)	
	Type		DOT 4	
Parking brake			Hydraulic type, RH brake lever includes a parking brake on front wheels	
Caliper	Front		Floating — piston inverted	
	Rear		Floating	
Brake pad material	Front		Semi-metallic	
	Rear		Semi-metallic	
Minimum brake pad thickness		mm (in)	1 (.04)	
Minimum brake disc thickness	Front	mm (in)	3.5 (.138)	
	Rear	mm (in)	3.5 (.138)	
Maximum brake disc warpage		mm (in)	0.2 (.01)	
TIRES AND WHEELS				
TIRES				
Pressure	Front		Maximum: 41.5 kPa (6 PSI) Minimum: 34.5 kPa (5 PSI)	
	Rear		Maximum: 41.5 kPa (6 PSI) Minimum: 34.5 kPa (5 PSI)	
Minimum tire thread depth		mm (in)	7 (.275)	
Size	Front		21 x 10 x 7	
	Rear		20 x 9 x 9	
WHEELS				
Size	Front		11 x 5.5	
	Rear		10 x 8.5	

MODEL			DS 450	DS 450 X
DIMENSION				
Overall length		m (in)	1.83 (72)	
Overall width		m (in)	1.17 (46)	
Overall height		m (in)	1.06 (42)	
Wheel base		m (in)	1.27 (50)	
Wheel track	Front	mm (in)	1000 (39.5)	
	Rear	mm (in)	909 (36)	
Ground clearance	Under frame	mm (in)	229 (9)	
	Rear axle	mm (in)	132 (5)	
WEIGHT AND LOADING CAPACITY				
Dry weight		kg (lb)	156 (345)	
Total vehicle load allowed (including driver, all other loads and added accessories)		kg (lb)	100 (220)	
Gross vehicle weight rating		kg (lb)	274 (603)	
MATERIAL				
Frame	Material		Aluminum	
	Color		Gray and Black	
Wheel	Material		Aluminum	
	Color		Anodized aluminum	
Front bumper	Material		Aluminum	
	Color		Anodized aluminum	
Front/rear fender	Material		High density polyethylene	
	Color		Yellow	
Fuel tank	Material		High density polyethylene	
	Color		Black	
Steering cover	Material		High density polyethylene	Leatherette/foam
	Color		Black	
Front grid	Material		High density polyethylene	
	Color		Black	
Side panel	Material		High density polyethylene	
	Color		Black and Yellow	
Air filter housing cover	Material		Polypropylene (glass fiber-reinforced)	
	Color		Black	
Air filter housing	Material		Polypropylene (glass fiber-reinforced)	
	Color		Black	
Seat base	Material		Polypropylene	
	Color		Black	
Seat cover	Material		Leatherette	
	Color		Black and Yellow	

DS 450/DS 450 X

WIRING DIAGRAM

NOTE: The wiring diagram is on the last page of the manual.

Wire Colors

It identifies the color of a wire. When a 2-color scheme is used, the first color is the main color while the second color is the tracer color.

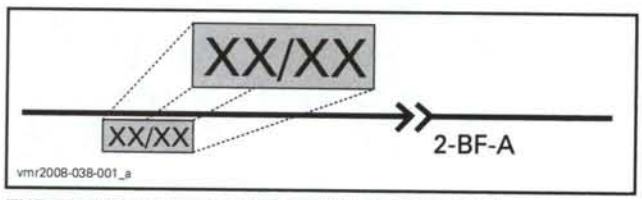

THE SHADED PART INDICATES THE WIRE COLOR

Example: YELLOW/BLACK is a YELLOW wire with a BLACK stripe.

Connector Location Area

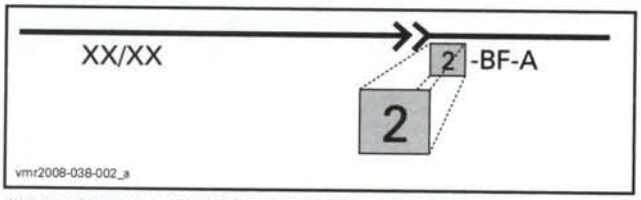

THE SHADED PART INDICATES THE CONNECTOR LOCATION AREA

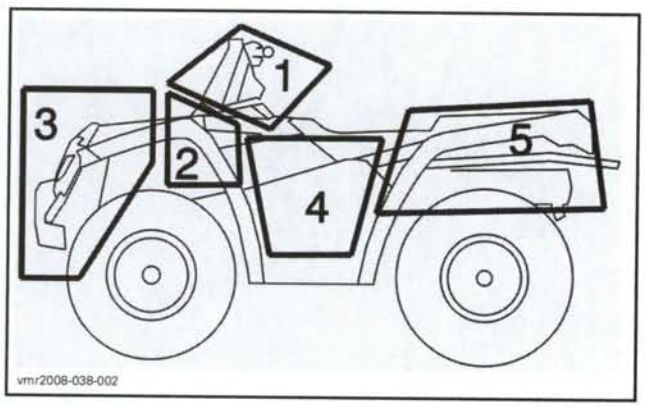

AREA	LOCATION
1	Steering area
2	ECM area
3	Front of vehicle
4	Engine area
5	Rear of vehicle

Connector Identification

Indicates the connector individually. If there are many connectors in the same area this helps to identify which wire is in which connector.

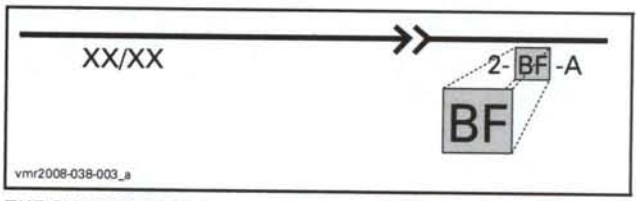

THE SHADED PART INDICATES A CONNECTOR IDENTIFICATION

Terminal Location in Connector

This is the terminal position in the connector. The number or letter given refers to the physical identification stamped on the connector.

NOTE: If no letter or number is indicated on the connector, they are indicated where there is a specific test using this connector.

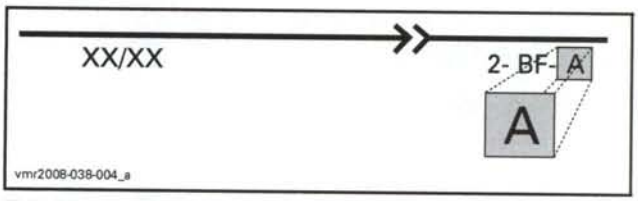

THE SHADED PART INDICATES THE TERMINAL LOCATION IN CONNECTOR HOUSING