ENGINE LUBRICATION & COOLING SYSTEMS

SECTION LC

CONTENTS

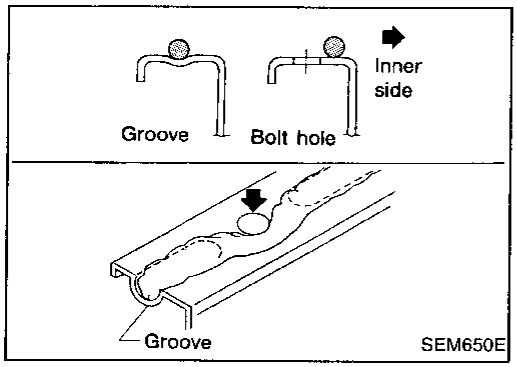

Liquid Gasket Application Procedure

a. Use a scraper to remove all traces of old liquid gasket from mating surfaces and grooves. Also, completely clean any oil from these areas.
b. Apply a continuous bead of liquid gasket to mating surfaces. (Use Genuine Liquid Gasket or equivalent.)
   - Be sure liquid gasket is 3.5 to 4.5 mm (0.138 to 0.177 in) wide (for oil pan).
   - Be sure liquid gasket is 2.0 to 3.0 mm (0.079 to 0.118 in) wide (in areas except oil pan).
c. Apply liquid gasket to inner surface around hole perimeter area.
d. Assembly should be done within 5 minutes after coating.
e. Wait at least 30 minutes before refilling engine oil and engine coolant.

Special Service Tools

The actual shapes of Kent-Moore tools may differ from those of special service tools illustrated here.

Tool number (Kent-Moore No.) Tool name	Description	
ST25051001 (J25695-1) Oil pressure gauge	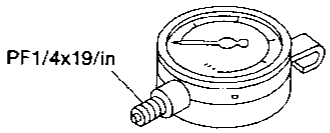 NT558	Measuring oil pressure **Maximum measuring range: 2,452 kPa (25 kg/cm^2, 356 psi)**
ST25052000 (J25695-2) Hose	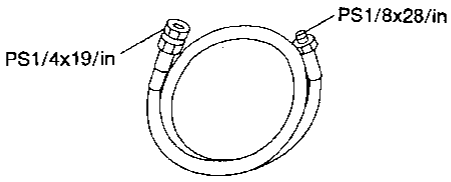 NT559	Adapting oil pressure gauge to cylinder block
WS39930000 (—) Tube presser	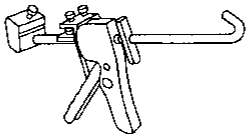 NT052	Pressing the tube of liquid gasket
EG17650301 (J33984-A) Radiator cap tester adapter	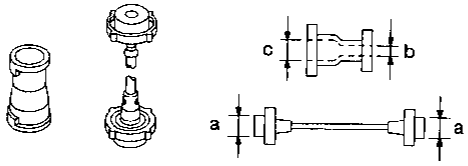 NT564	Adapting radiator cap tester to radiator filler neck **a: 28 mm (1.10 in) dia.** **b: 31.4 mm (1.236 in) dia.** **c: 41.3 mm (1.626 in) dia.**
KV99103510 (—) Radiator plate pliers A	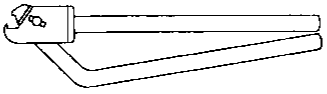 NT224	Installing radiator upper and lower tanks

Special Service Tools (Cont'd)

Tool number (Kent-Moore No.) Tool name	Description
KV99103520 (—) Radiator plate pliers B	Removing radiator upper and lower tanks 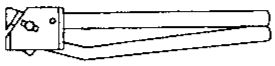 NT225

Lubrication Circuit

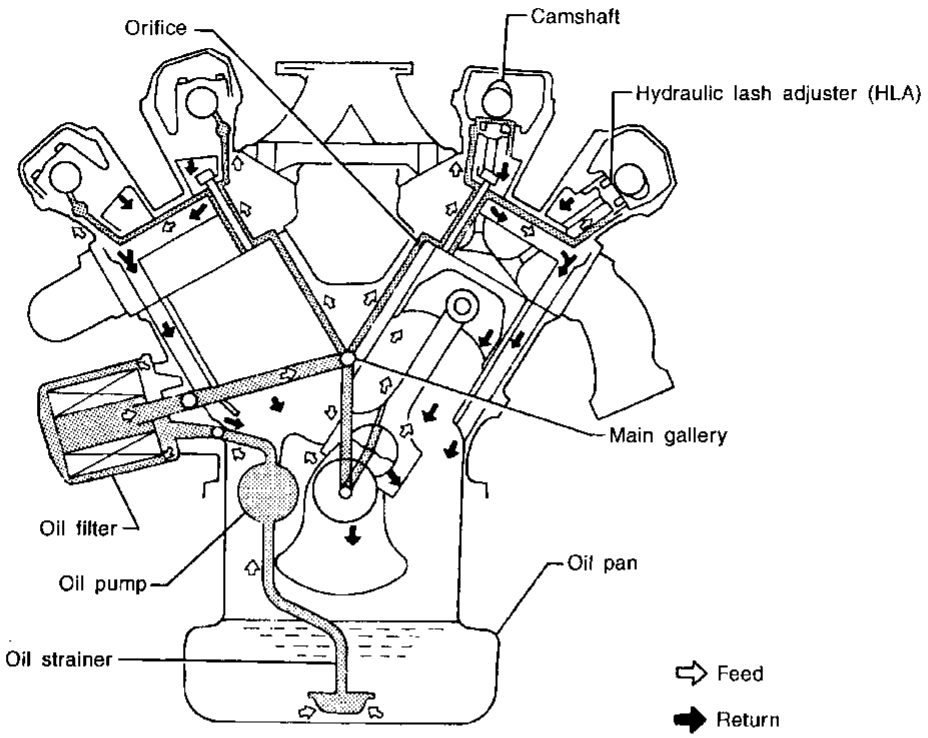

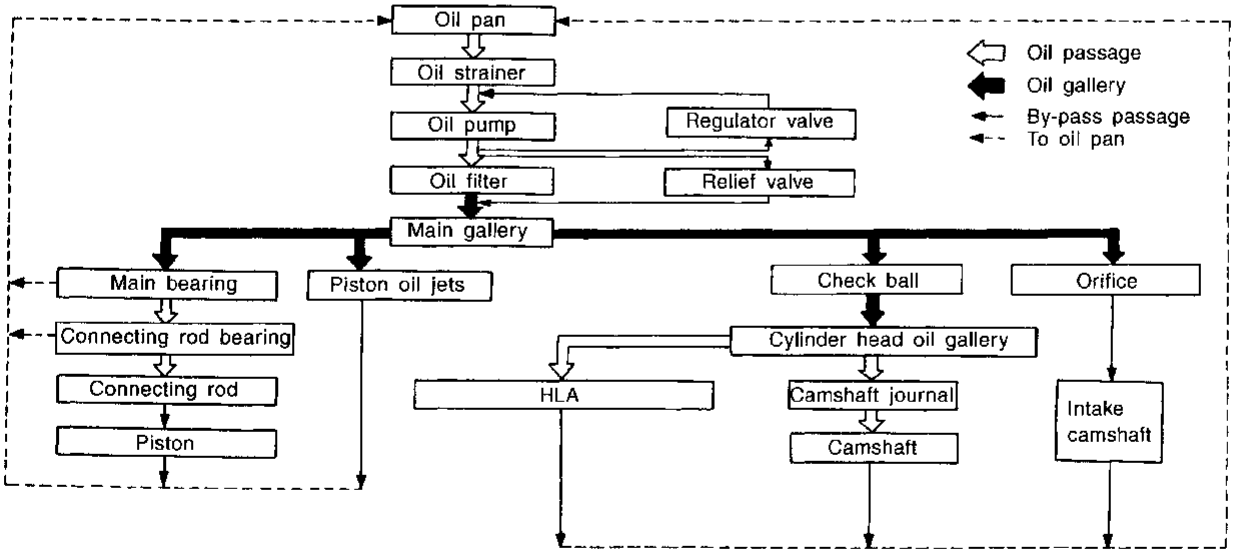

MLC077A

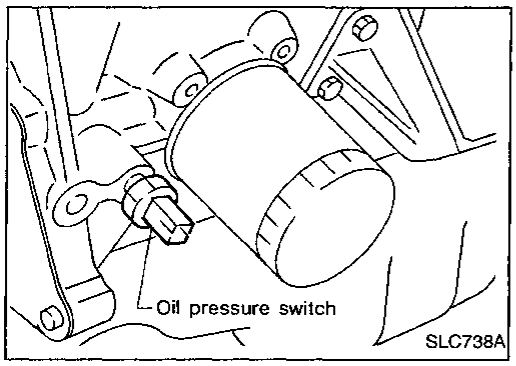

Oil Pressure Check

WARNING:

- **Be careful not to burn yourself, as the engine and oil may be hot.**
- **Oil pressure check should be done in "Neutral" gear position.**

1. Check oil level.
2. Remove oil pressure switch.

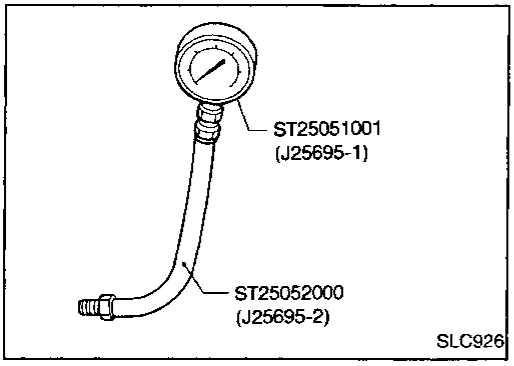

3. Install pressure gauge.
4. Start engine and warm it up to normal operating temperature.
5. Check oil pressure with engine running under no-load.

Engine speed rpm	Approximate discharge pressure kPa (kg/cm^2, psi)
Idle speed	More than 78 (0.8, 11)
3,000	353 - 451 (3.6 - 4.6, 51 - 65)

If difference is extreme, check oil passage and oil pump for oil leaks.

6. Install oil pressure switch with sealant.

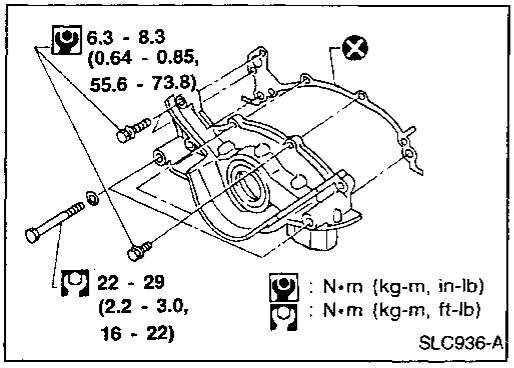

Oil Pump

REMOVAL

1. Drain oil.
2. Remove oil pan. (Refer to "Removal" of "OIL PAN" in EM section.)
3. Remove oil pump assembly.

Oil Pump (Cont'd)

DISASSEMBLY AND ASSEMBLY

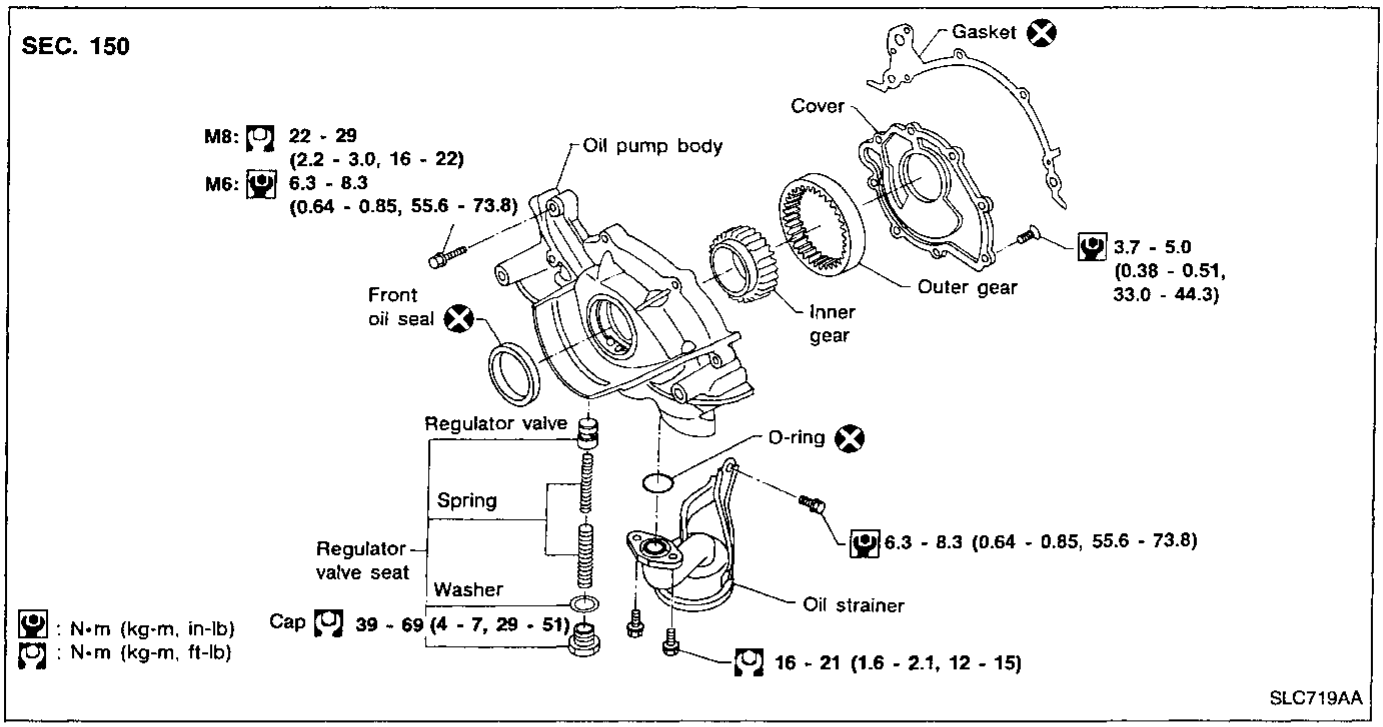

- **Always replace with new oil seal and gasket.**
- **When installing oil pump, apply engine oil to inner and outer gears.**
- **Be sure that O-ring is properly installed.**

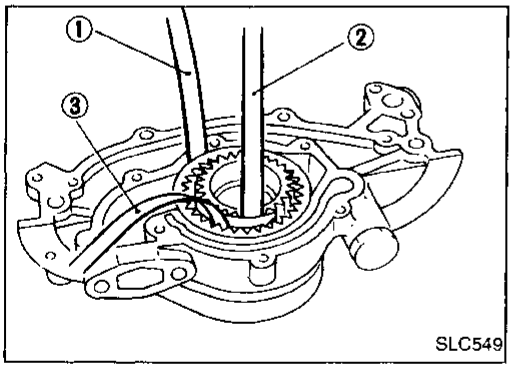

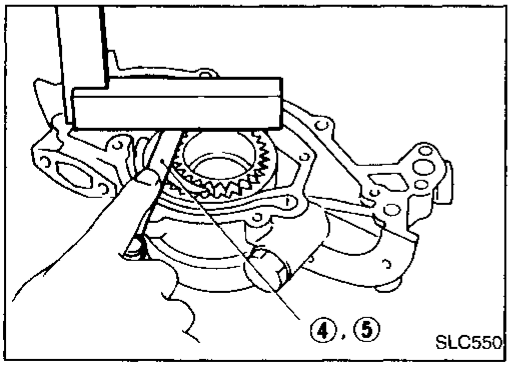

OIL PUMP INSPECTION

Using a feeler gauge, check the following clearances:

Standard clearance:

Unit: mm (in)

Body to outer gear clearance ①	0.114 - 0.200 (0.0045 - 0.0079)
Inner gear to crescent clearance ②	0.223 - 0.333 (0.0088 - 0.0131)
Outer gear to crescent clearance ③	0.210 - 0.320 (0.0083 - 0.0126)
Housing to inner gear clearance ④	0.050 - 0.090 (0.0020 - 0.0035)
Housing to outer gear clearance ⑤	0.050 - 0.110 (0.0020 - 0.0043)

If any clearance exceeds the limit, replace gear set or entire oil pump assembly.

Oil Pump (Cont'd)

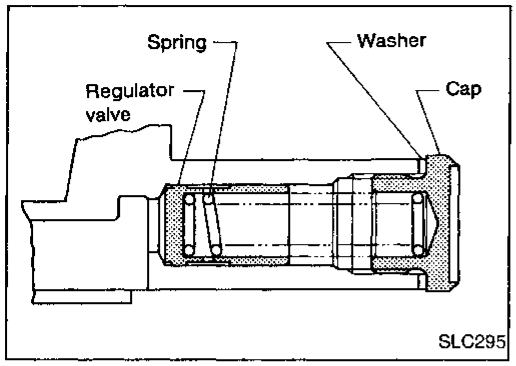

REGULATOR VALVE INSPECTION

1. Visually inspect components for wear and damage.
2. Check oil pressure regulator valve sliding surface and valve spring.
3. Coat regulator valve with engine oil. Check that it falls freely into the valve hole by its own weight.

If damaged, replace regulator valve set or oil pump assembly.

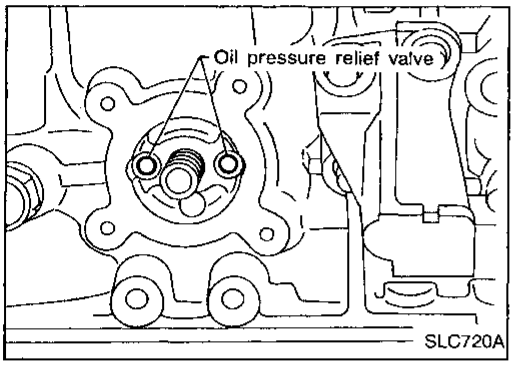

OIL PRESSURE RELIEF VALVE INSPECTION

Inspect oil pressure relief valve for movement, cracks and breaks by pushing the ball. If replacement is necessary, remove valve by prying it out with a suitable tool.
Install a new valve by tapping it in place.

Cooling Circuit

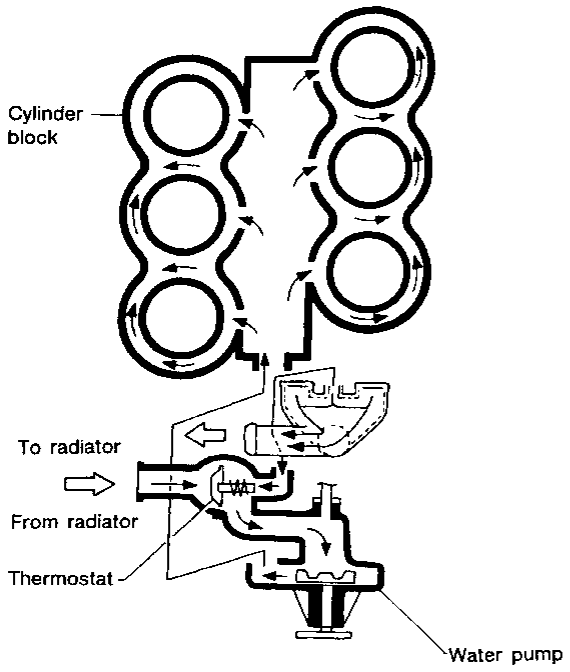

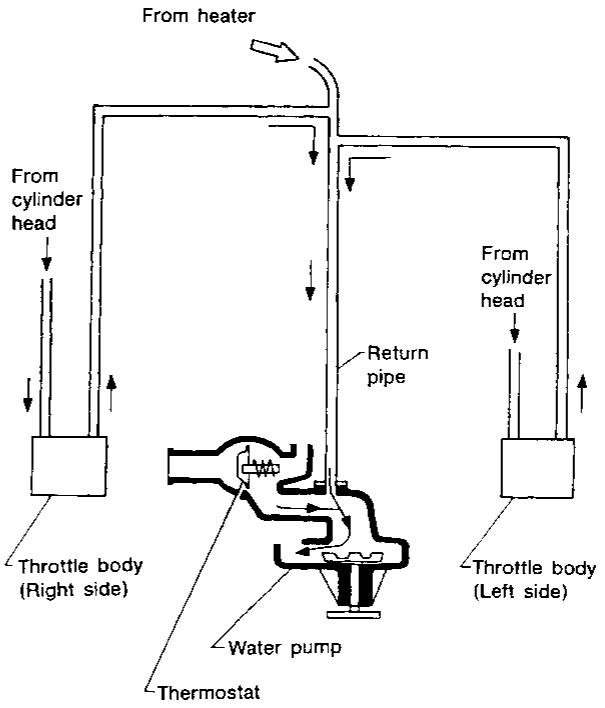

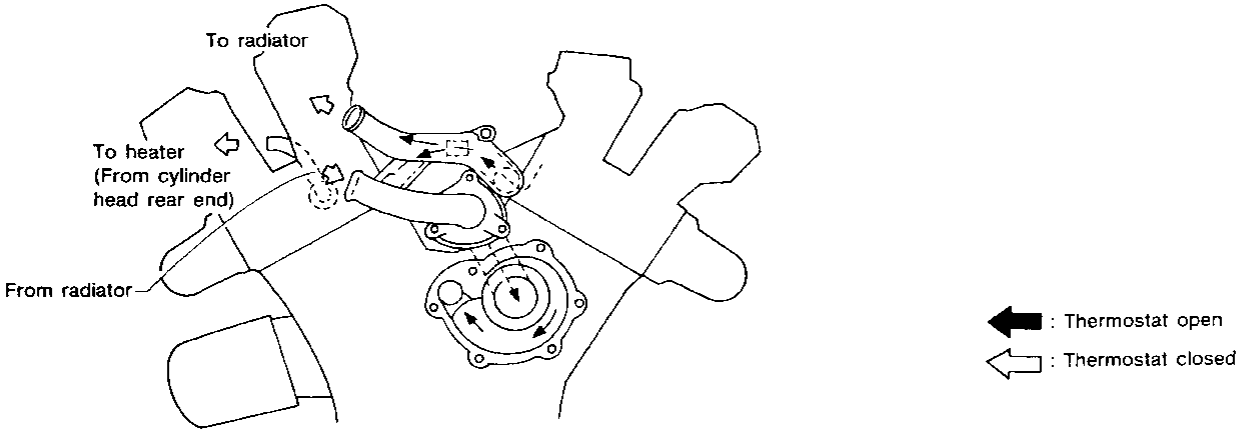

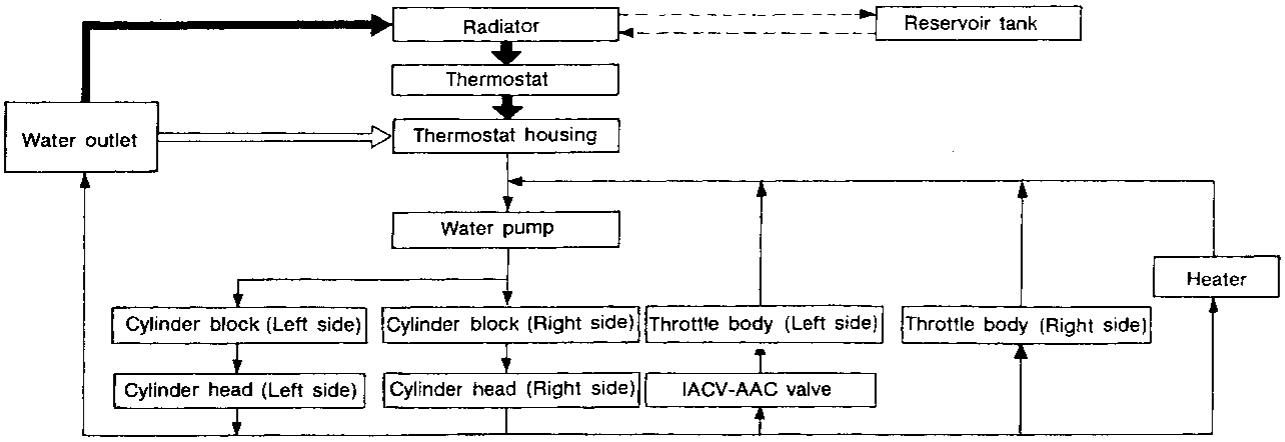

SLC723AA

System Check

WARNING:
Never remove the radiator cap when the engine is hot; serious burns could be caused by high pressure fluid escaping from the radiator.
Wrap a thick cloth around the cap and carefully remove it by turning it a quarter turn to allow built-up pressure to escape. Then turn the cap all the way off.

CHECKING COOLING SYSTEM HOSES

Check hoses for improper attachment, leaks, cracks, damage, loose connections, chafing and deterioration.

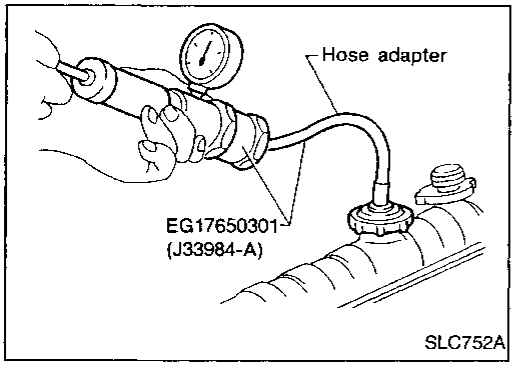

CHECKING COOLING SYSTEM FOR LEAKS

To check for leakage, apply pressure to the cooling system with a tester.

Testing pressure:
157 kPa (1.6 kg/cm^2, 23 psi)

CAUTION:
Higher than the specified pressure may cause radiator damage.

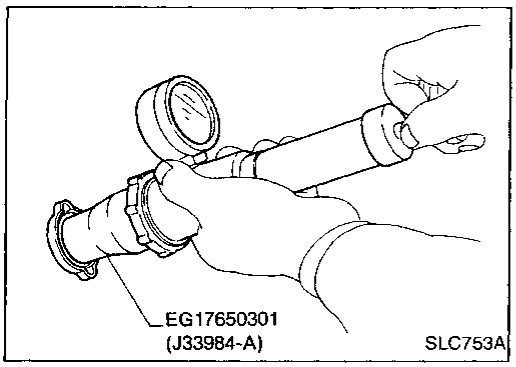

CHECKING RADIATOR CAP

To check radiator cap, apply pressure to cap with a tester.

Radiator cap relief pressure:
Standard
78 - 98 kPa (0.8 - 1.0 kg/cm^2, 11 - 14 psi)
Limit
59 - 98 kPa (0.6 - 1.0 kg/cm^2, 9 - 14 psi)

Water Pump

REMOVAL AND INSTALLATION

CAUTION:
- **When removing water pump assembly, be careful not to get coolant on timing belt.**
- **Water pump cannot be disassembled and should be replaced as a unit.**
- **After installing water pump, connect hose and clamp securely, then check for leaks using radiator cap tester.**

Water Pump (Cont'd)

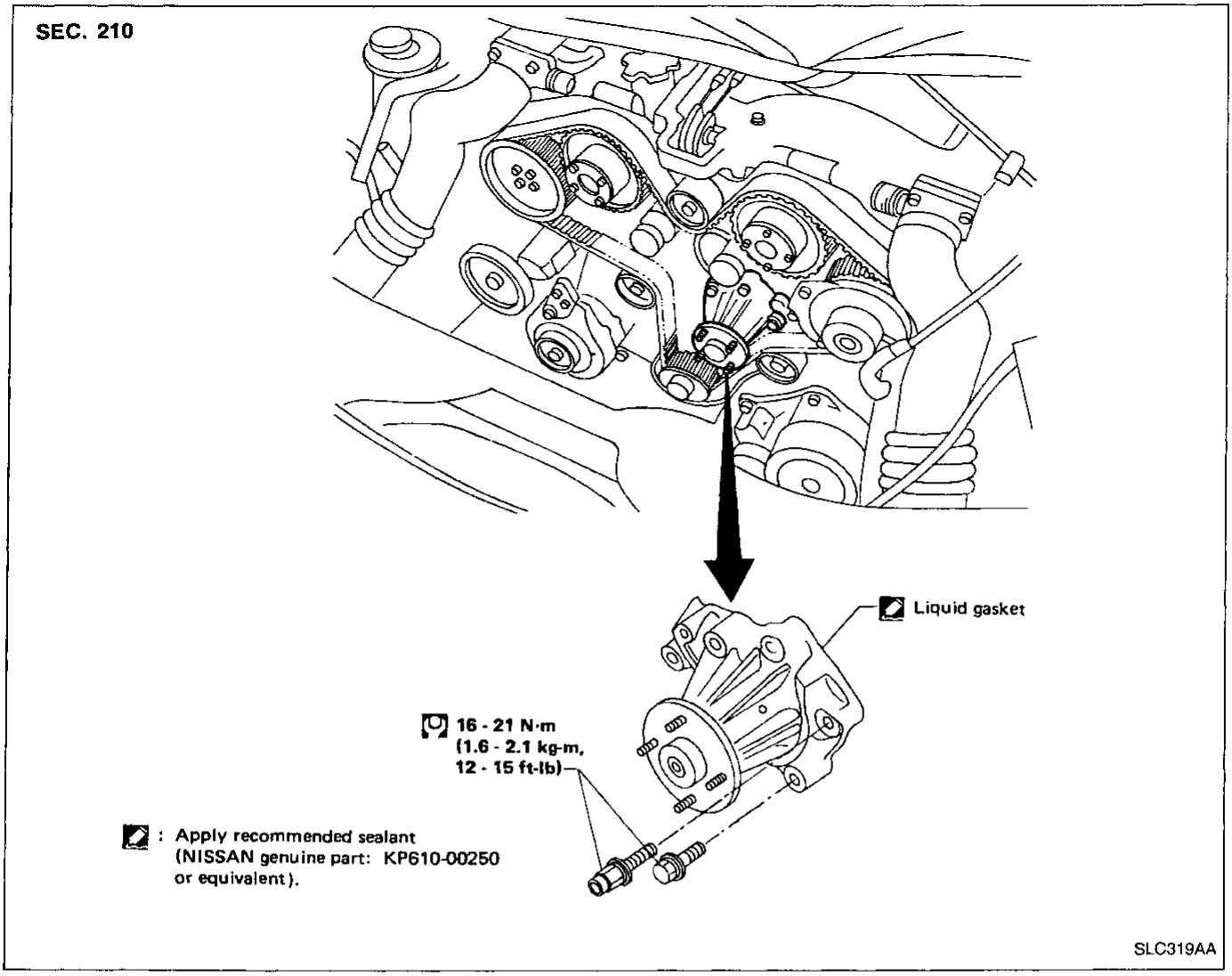

1. Drain coolant from drain cocks on both sides of cylinder block and radiator.
2. Remove the following parts:
   - Under cover
   - Radiator
   - Drive belts
   - Cooling fan and coupling
   - Water inlet and outlet
   - Crank shift pulley
   - Timing belt cover
3. Remove water pump.
4. After repairing or replacing water pump, install any parts removed in reverse order of removal.

Water Pump (Cont'd)

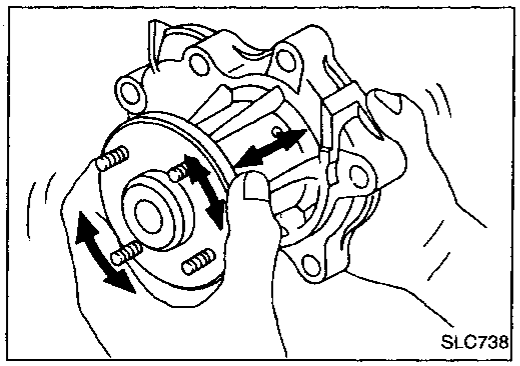

INSPECTION

1. Check for badly rusted or corroded vanes and body assembly.
2. Check for rough operation due to excessive end play.

Thermostat

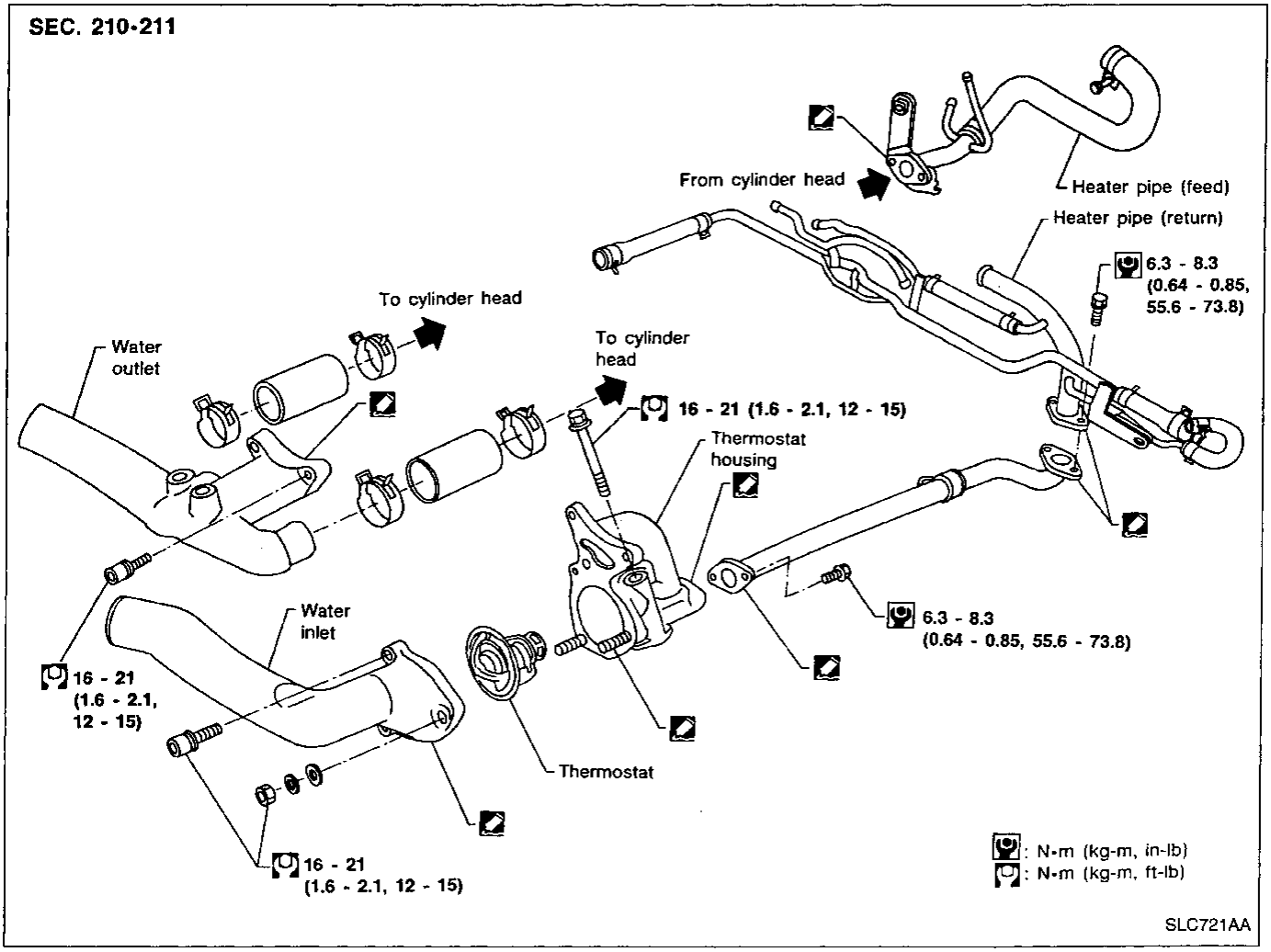

REMOVAL AND INSTALLATION

1. Drain coolant from drain cocks on both sides of cylinder block and radiator.
2. Remove the following parts:
- Under cover
- Radiator upper hose
- Radiator shroud
- Fan belt
- Cooling fan and coupling
- Water inlet
3. Remove thermostat.

Thermostat (Cont'd)

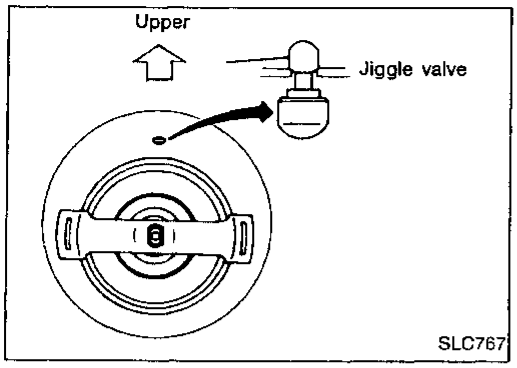

4. After repairing or replacing thermostat, install thermostat with jiggle valve facing upward.

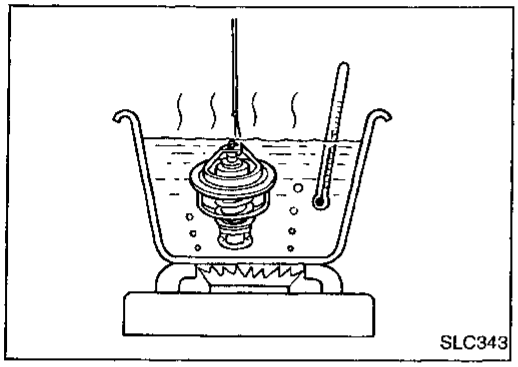

INSPECTION

1. Check valve seating condition at ordinary room temperatures. It should seat tightly.
2. Check valve opening temperature and valve lift.

		Standard
Valve opening temperature	°C (°F)	76.5 (170)
Valve lift	mm/°C (in/°F)	More than 10/90 (0.39/194)

3. Then check if valve is 5°C (9°F) below valve opening temperature.

- **After installation, run engine for a few minutes, and check for leaks.**
- **Be careful not to spill coolant over engine compartment. Use a rag to absorb coolant.**

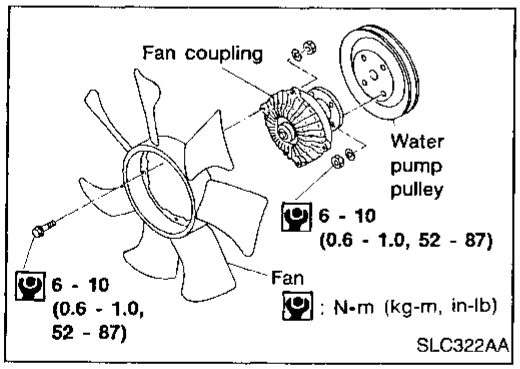

Cooling Fan (Crankshaft driven)

DISASSEMBLY AND ASSEMBLY

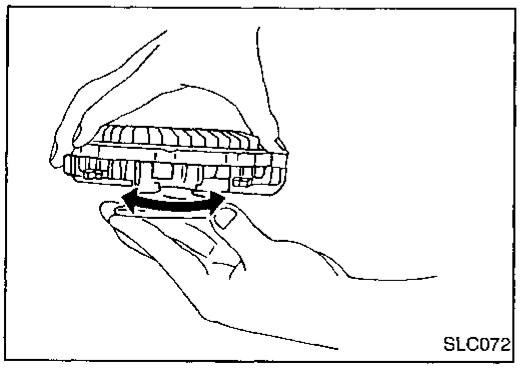

INSPECTION

Check fan coupling for rough operation, oil leakage or bent bimetal.

Cooling Fan (Motor driven)

This cooling fan is controlled by ECM (ECCS control module). For details, refer to "Cooling Fan", "TROUBLE DIAGNOSIS FOR DTC P1900" in EC section.

Radiator

REMOVAL AND INSTALLATION

1. Drain coolant from radiator drain cock.
2. Remove under cover.
3. Disconnect radiator upper and lower hoses.
4. Remove A/T oil cooler hoses.
5. Remove radiator lower shroud.
6. Remove radiator.
7. After repairing or replacing radiator, install any part removed in reverse order of removal.

When filling radiator with coolant, refer to "Changing Engine Coolant" in MA section.

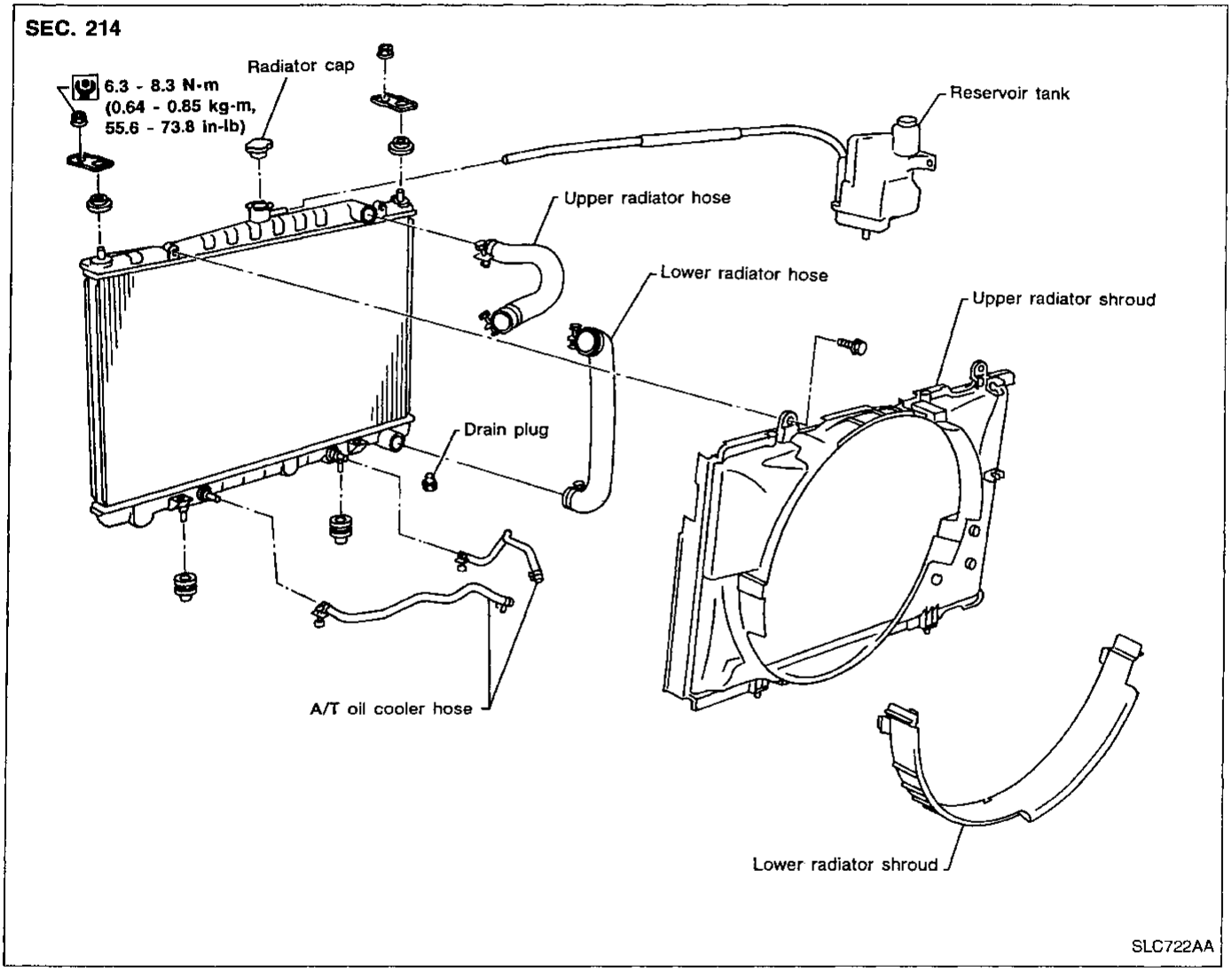

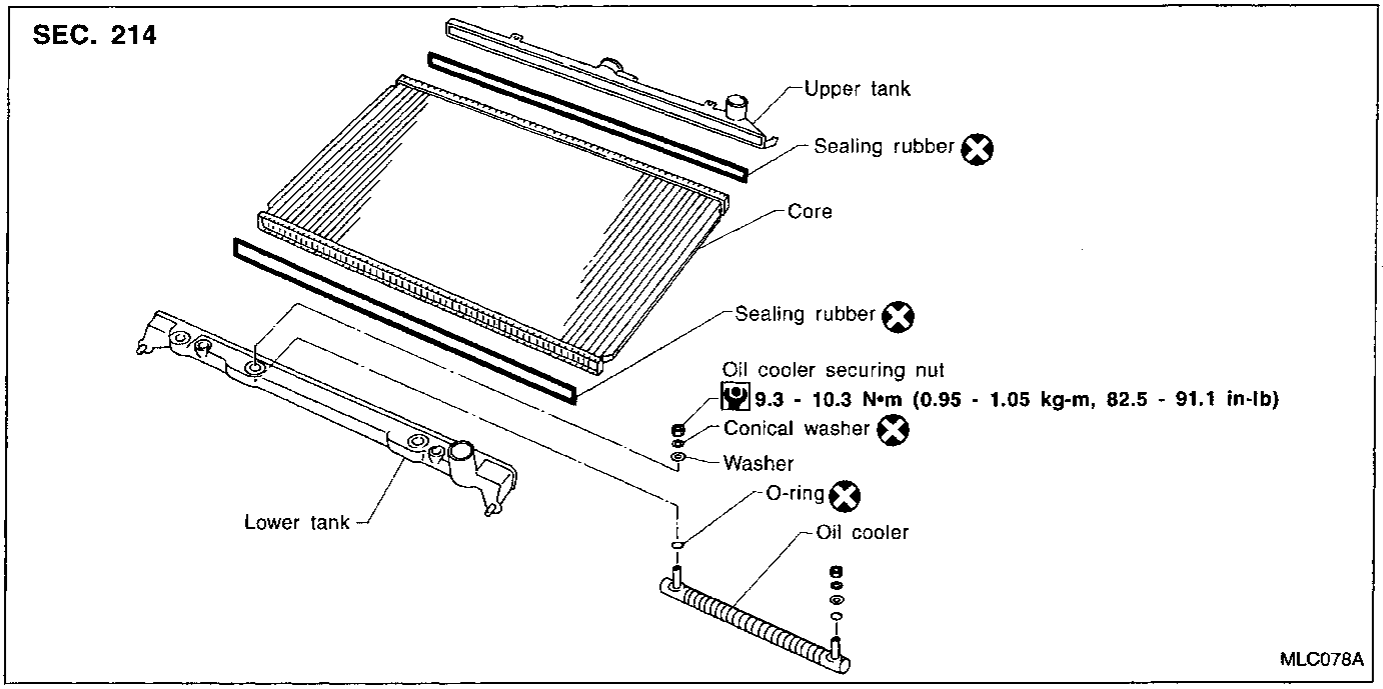

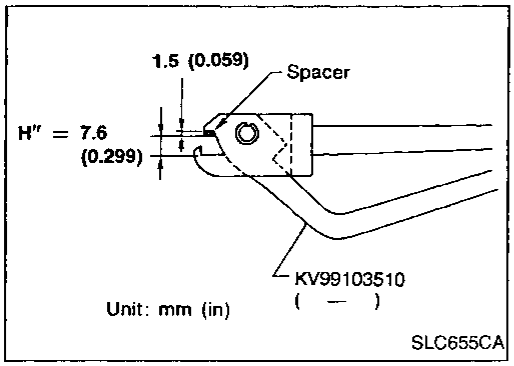

PREPARATION

1. Attach a spacer to the tip of the radiator plate pliers A. Spacer specification: 1.5 mm (0.059 in) thick x 18 mm (0.71 in) wide x 8.5 mm (0.335 in) long.
2. Make sure that when radiator plate pliers A are closed dimension H" is approx. 7.6 mm (0.299 in).
3. Adjust dimension H" with the spacer, if necessary.

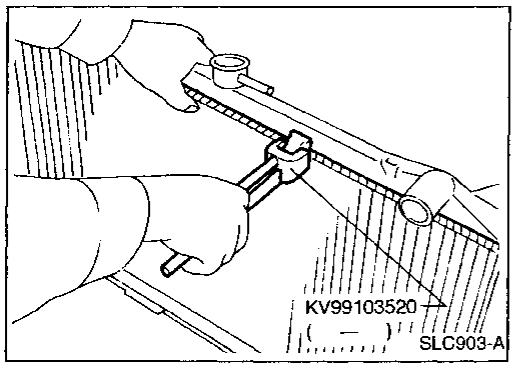

DISASSEMBLY

1. Remove tank with Tool.

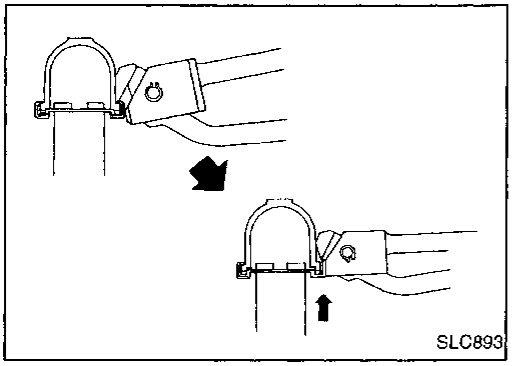

- Grip the crimped edge and bend it upwards so that Tool slips off.

Do not bend excessively.

Radiator (Cont'd)

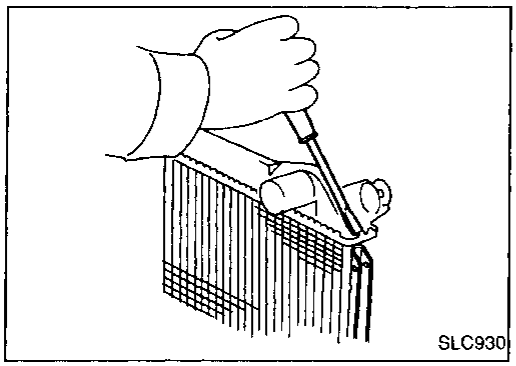

- In areas where Tool cannot be used, use a screwdriver to bend the edge up.

Be careful not to damage tank.

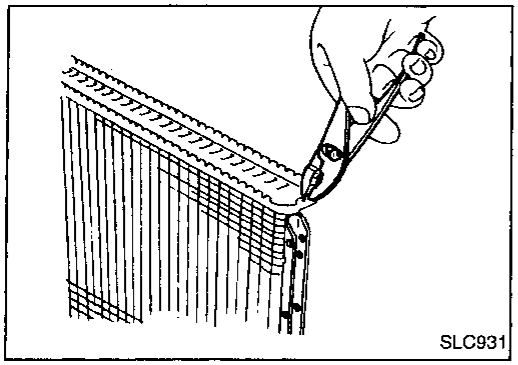

2. Make sure the edge stands straight up.
3. Remove oil cooler from tank.

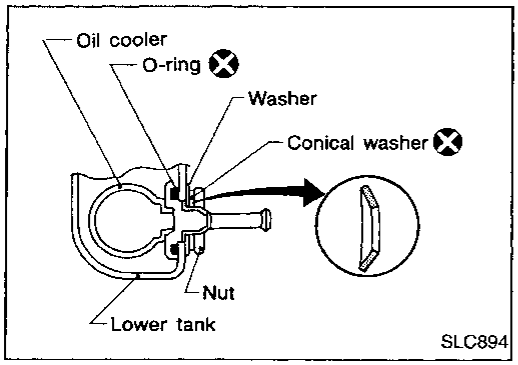

ASSEMBLY

1. Install oil cooler.

Pay attention to direction of conical washer.

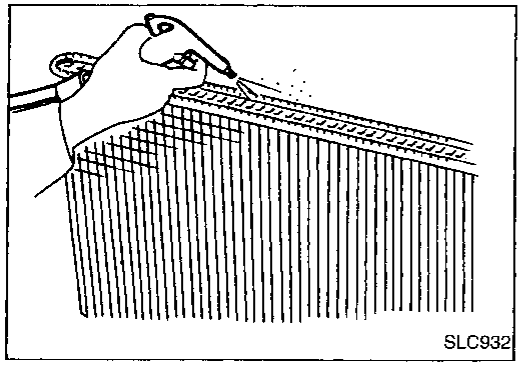

2. Clean contact portion of tank.

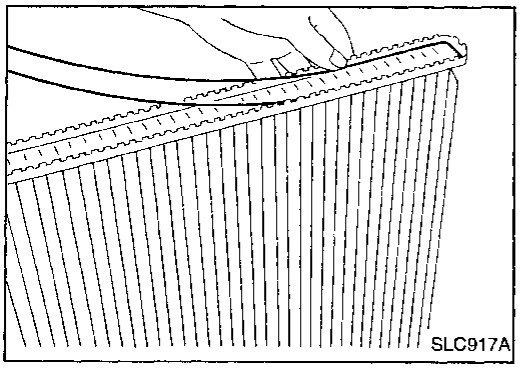

3. Install sealing rubber.

Push it in with fingers.
Be careful not to twist sealing rubber.

Radiator (Cont'd)

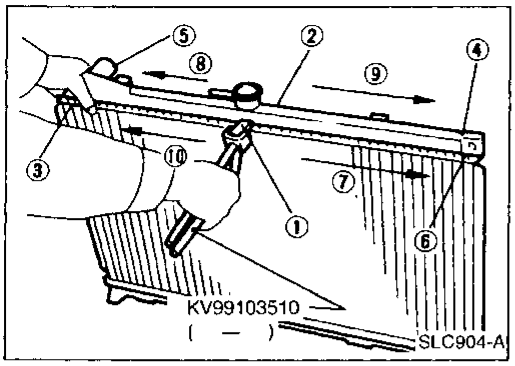

4. Caulk tank in specified sequence with Tool.

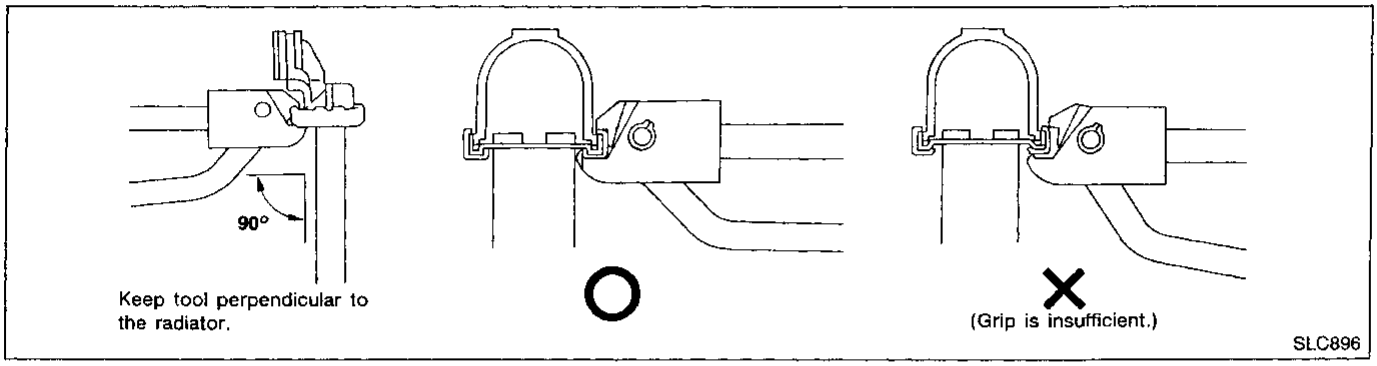

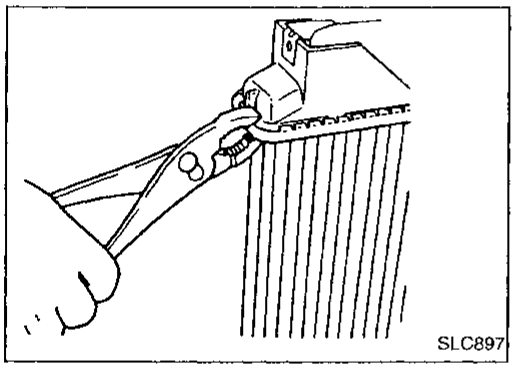

- Use pliers in the locations where Tool cannot be used.

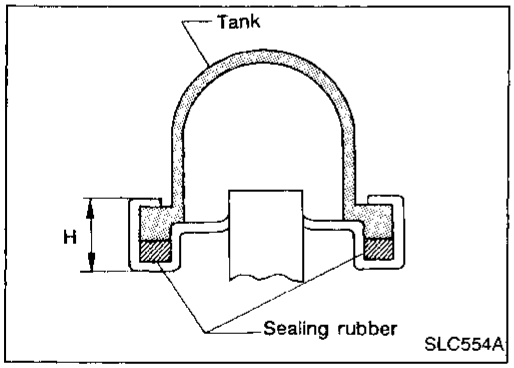

5. Make sure that the rim is completely crimped down.
   Standard height "H":
   8.0 - 8.4 mm (0.315 - 0.331 in)
6. Confirm that there is no leakage.

Refer to Inspection.

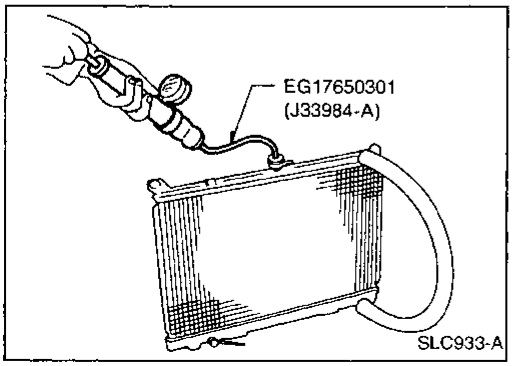

INSPECTION

Apply pressure with Tool.

Specified pressure value:
157 kPa (1.6 kg/cm^2, 23 psi)

WARNING:

To prevent the risk of the hose coming undone while under pressure, securely fasten it down with a hose clamp. Attach a hose to the oil cooler as well.

Overheating Cause Analysis

	Symptom		Check items	
Cooling system parts malfunction	Poor heat transfer	Water pump malfunction	Worn or loose drive belt	—
		Thermostat stuck closed	—	
		Damaged fins	Dust contamination or paper clogging	
			Mechanical damage	
		Clogged radiator cooling tube	Excess foreign material (rust, dirt, sand, etc.)	
	Reduced air flow	Fan coupling does not operate.	—	—
		Cooling fan does not operate.		
		High resistance to fan rotation		
		Damaged fan blades		
	Damaged radiator shroud	—	—	
	Improper coolant mixture ratio	—	—	—
	Poor coolant quality	—	—	—
	Insufficient coolant	Coolant leaks	Cooling hose	Loose clamp
				Cracked hose
			Water pump	Poor sealing
			Radiator cap	Loose
				Poor sealing
			Radiator	O-ring for damage, deterioration or improper fitting
				Cracked radiator tank
				Cracked radiator core
			Reservoir tank	Cracked reservoir tank
		Overflowing reservoir tank	Exhaust gas leaks into cooling system	Cylinder head deterioration
				Cylinder head gasket deterioration
Except cooling system parts malfunction	—	Overload on engine	Abusive driving	High engine rpm under no load
				Driving in low gear for extended time
				Driving at extremely high speed
			Powertrain system malfunction	—
			Installed improper size wheels and tires	
			Dragging brakes	
			Improper ignition timing.	
	Blocked or restricted air flow	Blocked bumper	—	—
		Blocked radiator grille	Installed car brassiere	
			Mud contamination or paper clogging	
		Blocked radiator	—	
		Blocked condenser	—	
		Installed large fog lamp		

Engine Lubrication System

Oil pressure check

Engine speed rpm	Approximate discharge pressure kPa (kg/cm², psi)
Idle speed	More than 78 (0.8, 11)
3,000	353 - 451 (3.6 - 4.6, 51 - 65)

Oil pump

Unit: mm (in)

Body to outer gear clearance ①	0.114 - 0.200 (0.0045 - 0.0079)
Inner gear to crescent clearance ②	0.223 - 0.333 (0.0088 - 0.0131)
Outer gear to crescent clearance ③	0.210 - 0.320 (0.0083 - 0.0126)
Housing to inner gear clearance ④	0.050 - 0.090 (0.0020 - 0.0035)
Housing to outer gear clearance ⑤	0.050 - 0.110 (0.0020 - 0.0043)

Engine Cooling System

Thermostat

	Standard
Valve opening temperature °C (°F)	76.5 (170)
Valve lift mm/°C (in/°F)	More than 10/90 (0.39/194)

Radiator

Unit: kPa (kg/cm², psi)

Cap relief pressure	
Standard	78 - 98 (0.8 - 1.0, 11 - 14)
Limit	59 - 98 (0.6 - 1.0, 9 - 14)
Leakage test pressure	157 (1.6, 23)