RUSSCO

FIDELITY-PRO

FIDELITY-MASTER

MONO & STEREO PHONO PREAMPLIFIERS

RUSSCO

FIDELITY-PRO

FIDELITY-MASTER

MONO & STEREO PHONO PREAMPLIFIERS

WARRANTY

All Russco products are warranted against defects in workmanship and materials for a period of one year from the date of delivery. We will repair or replace products which prove to be defective during the warranty period provided they are returned to Russco. Warranty subject to cancellation if in the opinion of Russco the product has been either unduly tampered with or modified so as to cause failure beyond our control. No other warranty is expressed or implied. We are not liable for consequential damages.

RUSSCO ELECTRONICS MFG., INC.

5690 E. Shields

Fresno, Calif. 93727

RUSSCO FIDELITY-MASTER AND FIDELITY-PRO PHONO PREAMPLIFIERS

DESCRIPTION:

The Russco Fidelity-Pro and Fidelity-Master phono preamplifiers are professional quality, RIAA equalized phono playback preamplifiers designed specifically for use in broadcast and recording studios. All models feature a self-contained power supply, integrated circuits and a single piece extruded aluminum case designed for easy serviceability. The Fidelity-Pro model offers low and high frequency filters not available on the Fidelity-Master. All models are available in either stereo or mono versions with unbalanced or balanced (transformer) output. A special feature of all models is the use of two integrated circuits for each channel: a low noise preamp unit coupled to a high slew-rate output unit. This allows output levels to +18dBm into a 600 ohm line over the full audio spectrum.

The following table is provided as a quick reference to illustrate the features of the different models:

	FIDELITY-MASTER MODELS				FIDELITY-PRO MODELS			
MODEL	FMMU	FMMB	FMSU	FMSB	FPMU	FPMB	FPSU	FPSB
MONO	X	X			X	X		
STEREO			X	X			X	X
FIXED EQUALIZATION	X	X	X	X				
RUMBLE FILTER SWITCH					X	X	X	X
H.F. BOOST & CUT SWITCH					X	X	X	X
UNBALANCED OUTPUT	X		X		X		X	
BALANCED OUTPUT		X		X		X		X
PART NUMBER	900-018	900-019	900-016	900-017	900-014	900-015	900-012	900-013

RUSSCO FIDELITY-MASTER AND FIDELITY-PRO PHONO PREAMPLIFIERS

SPECIFICATIONS: (All Models Except as Noted)

Frequency Response: 20 to 15,000 Hz, ±1 dB of RIAA Curve. (Transformer models down approximately 3 dB at 15 KHz with 600 ohms load, flat with no load.)

Noise: Equivalent to -108 dBm input at I KHz. (70 dB below NAB standard reference level using Shure M44-7 cartridge.)

Distortion: Less than 0.1% THD at +18 dBm out into 600 ohms, 20 to 15,000 Hz. (Transformer models less than 0.1% at +17.5 dBm out into 600 ohms, 30 to 15,000 Hz, 20 Hz less than 0.1% THD at +10 dBm out, less than 1% at +17.5 dBm out.)

Maximum Output Level: +18 dBm into 600 ohms, +22 dBm no load.

Maximum Input Level: 100 millivolts RMS at 1KHz.

Input Sensitivity: 1 millivolt RMS at 1KHz for 0 dBm output.

Crosstalk (Stereo Models Only): Greater than 55 dB down at 15KHz; greater than 65 dB down at 1KHz.

Input Impedance: 47,000 ohms.

Output Impedance: 600 ohms for transformer models, less than 10 ohms for unbalanced models.

Filters (Fidelity-Pro models):

Low Frequency: Flat
Cut: -3 dB at 70 Hz, -8 dB at 30 Hz.

High Frequency: Boost: +3 dB at 5KHz, +5 dB at 10 KHz, level from 10KHz up.
Flat
Cut: -3 dB at 4.5KHz, -6 dB at 7KHz, rolls off at 6 dB per octave above 7KHz.

Power: 117 Volts AC, 60 Hz, 40 milliwatts.

Size: 11" long x 4-3/4" wide x 1-3/4" high (including hardware).

Shipping weight: 4 pounds maximum, depending on model.

Operating weight: 2 to 3 pounds, depending on model.

NOTE: All specifications based on tests made with tone-arm and Shure M44-7 cartridge hooked up to the preamp. Signal driven through cartridge across a 100 ohm resistor on the ground side of the cartridge.

UNPACKING AND INSTALLATION

UNPACKING:

Remove the styrofoam packers from both sides of the preamp case. No other packing material need be removed.

INSTALLATION:

The preamp may be set free standing on a shelf or may be mounted to any flat surface. Holes for number six screws are provided in the base flange. It can be mounted to wood or metal, but care should be taken regarding grounding if mounted to metal. (The case is at ground potential.)

When locating the preamp, avoid areas near electric motors or transformers where strong fields may be present.

Ventilation is not a critical factor due to the low power dissipation of the unit, but areas of high ambient temperature (over 120 degrees fahrenheit) should be avoided to assure long component life.

CONNECTIONS:

INPUT: Plug leads from tone-arm into input jack(s) on front panel. Use standard RCA phono type plugs. Connect tone-arm ground lead under the ground post screw.

OUTPUT: Connect output leads to the terminal strip on the rear panel.

For unbalanced models use single or two conductor shielded line, connecting grounds at the terminals marked "-" or "GND". Connect center or hot lead to the terminals marked "+". These models need not be terminated in any particular load, but if terminated, the load should be no less than 600 ohms. If two conductor shielded line is used, the shield should be grounded at one end only.

Balanced models may be connected with two conductor twisted line, shielded or unshielded. Connect wires to terminals marked "+" and "-". The shield can be connected to the terminal marked "GND", but should be connected at one end only. Balanced models may be terminated with a 600 ohm resistor or transformer. An increase in high frequency response will result if the output is terminated in a high impedance. For long line applications and installations in an environment of noisy fields, it is recommended that the output transformer center-taps be grounded. See special instructions on page six for this modification.

POWER: Insert power cord into any standard 117 VAC, 60 Hz outlet. There is no power switch on the preamp and it may be left connected to the power indefinitely as it draws so little power.

If it is desired to disconnect the AC power during non-operative periods, the preamp may be connected to a switched AC outlet.

CHECK OUT AND CALIBRATION:

Playing any reference signal recording (such as the NAB Test Record Level Check Signal) adjust level controls for the desired output level. The level controls are accessible through holes in the front panel. Use a small slot type screwdriver.

> **NOTE:** When using an AC powered meter to measure the output level of balanced output models, take care that both sides of the measured line are kept above ground. Grounding one side of the line may cause false readings. Frequency response tests made using a disc recording as the signal source will display the frequency response characteristics of the cartridge as well as those of the preamp. Response may be modified on Fidelity-Pro models by changing the high and low frequency switch positions. Balanced output models can have the high frequency response raised by increasing the output load impedance to some value above 600 ohms.

IN CASE OF DIFFICULTY:

The following preliminary steps are recommended as a prelude to actually trouble shooting the preamp itself. If these steps prove insufficient in solving the problem, the preamp should be returned to the factory for repair or serviced by a qualified technical person. See "Servicing the Preamp" on pages five and six for technical guidelines.

A. Preamp does not appear to operate.

1. Check all external connections for shorts, broken wires or loose connections.
2. Check tone-arm and cartridge connections.
3. Check power cord connection. Is the AC to the outlet turned on?
4. Check fuse and replace if blown.

B. High Noise or Hum.

1. Check all ground connections to be sure that they are tight.
2. Move the preamp away from any field producing objects, such as motors, AC lines or transformers.
3. Turn the AC plug over.
4. Try various combinations of grounding to the turntable, tone-arm, preamp chassis and preamp ground terminals.
5. Some tone-arms that have a common ground shielded lead cable can cause ground-loop problems. It may help to disconnect one of the grounds at either the cartridge or preamp end of the cable. (This generally applies to stereo installations only.)

C. Distortion.

1. Make sure that there are no partial shorts on the output lines.
2. Make sure that the load on the output lines is no less than 600 ohms. If the load is less than 600 ohms, a series resistor should be put in the line to bring the preamp output load up to 600 ohms. The preamp level is then turned up to overcome the loss due to the series resistor.

SERVICING THE PREAMP

DISASSEMBLY:

See figure one, page nine. Remove the two phillips head screws on the front panel. Grasp the panel on both sides with fingers resting in the finger reliefs and pull the panel straight forward, removing the circuit board from the box. Slide the top panel out of the box. The P.C. board can now be replaced in the box for operational testing.

If desired, the rear panel can be removed from the box in a similar manner. The P.C. board can then be plugged back into the socket and the entire unit can be operated outside of the box.

TESTING:

The use of only high impedance AC and DC meters is recommended for testing the circuitry of the preamp.

The first test performed on a non-operational unit should be for proper DC voltages. NOTE THAT THE CIRCUIT USES BOTH POSITIVE AND NEGATIVE DC VOLTAGES. METER POLARITY WILL HAVE TO BE CHANGED WHEN MOVING THE TEST PROBE FROM POSITIVE DC TO NEGATIVE DC. All measurements are made with reference to ground.

After it has been confirmed that the DC voltages are correct, signal tracing may be used to determine the point of signal loss. The test setup illustrated in figure two on page ten provides a simple method of injecting the proper level signal at the input.

IF A DEFECTIVE INTEGRATED CIRCUIT IS SUSPECTED, remember that these are highly reliable devices with a failure rate equal to or lower than those of other components....DO NOT BLAME THE TROUBLE ON AN I.C. UNTIL THE POSSIBILITY OF AN EXTERNAL COMPONENT FAILURE HAS BEEN THOROUGHLY INVESTIGATED. If the I.C. proves to be the cause of the trouble, it should be replaced as follows:

1. Remove the solder from around all the pins of the I.C. (The use of a solder removal tool such as the Edsyn "Soldavac" is recommended...Irons that heat all the I.C. pins at once are not recommended.) Make sure that each pin is free from the P.C. board.
2. Lift the I.C. from the board, being careful not to bend any of the leads or damage the body. (It may still be good.)
3. Insert new I.C. and solder leads to P.C. board. Make sure that each pin is soldered well and that there are no solder bridges between P.C. board pads. Do not overheat the I.C. during soldering.

PARTS:

The parts list on page seven lists all of the commonly needed replacement parts that are available from Russco Electronics. Many of these parts may be found at local electronics parts houses. When buying locally, be sure that the correct part or an exact equivalent is supplied. Do not attempt to use "general purpose" devices or "experimenters specials ". The factory can supply most of the parts on the list in a few days.

RETURNING FOR SERVICE:

Items returned for service should be packed well (preferably in the original carton) and shipped prepaid to the factory. PLEASE DO NOT FAIL TO INCLUDE OR MAIL UNDER SEPARATE COVER A DESCRIPTION OF THE DEFECT. Return charges will be prepaid if the item is in warranty. Out of warranty items will be shipped freight collect or billed.

SPECIAL NOTE ON GROUNDING OUTPUT TRANSFORMER CENTER-TAPS:

In order to reduce noise on a balanced line, it may be necessary to ground the center-taps of the output transformers. Remove the circuit board as described under DISASSEMBLY. The transformer secondary center-tap lead will be found bundled next to the transformer winding. An unoccupied P.C. pad will be found on the P.C. board between the points where the other two transformer secondary leads are soldered to the board. Insert the center-tap lead in this pad and solder it to the underside of the board. Cut off any excess lead.

WARRANTY AND SERIAL NUMBER

When ordering parts or sub-assemblies under warranty, be sure to supply the serial number of your unit. The serial number will be found on a label on the bottom of the preamp box.

PARTS LIST --- RUSSCO FIDELITY-MASTER AND FIDELITY-PRO PREAMPS

SCHEMATIC REFERENCE	PARTS DESCRIPTION	RUSSCO PART NO.	PRICE*
T1	Power Transformer, Wood 7424	108-005	10.35
T2	Output Transformer, Wood 7425	108-006	14.35
D1,2,3,4,	Rectifier Diode, 1 Amp, 100vPIV, Semtech SII	130-007	.60
D5,6	Zener Diode, 13v, IW, 5%, 1N4743A	130-010	.65
D7,8	Zener Diode, 10v, 1W, 5%, 1N4740A	130-009	.65
IC1	Integrated Circuit Stereo Preamp, National LM1303N, Motorola MC1303 or Fairchild MuA739	140-002	6.00
IC2	Integrated Circuit Operational Amplifier, National LM301AN or Analog Devices AD301AN	140-001	3.30
F1	Fuse, 3/10 Amp Slow Blow, Littlefuse 3AG 1/10	101-003	.50
C1,2	Capacitor, Electrolytic, Axial, 500mF/50V	110-016	1.15
C3,4	" " " 1mF/70V	110-002	.45
C5	" Tantalum, Dipped, 1mF/35V	110-019	.85
C6, 11, I6, 20, 21	" Ceramic, Disc, 0.01mF/100V	110-026	.25
C7, 12, 15, 17	" Tantalum, Dipped, 10mF/35V	110-017	.85
C8	" Ceramic, Disc, 0.005mF/100V	110-025	.25
C9	" Mylar, Axial, 0.001mF/200V/10%	110-020	.45
C10	" " " 0.0047mF/200V/10%	110-021	.45
C13	" Tantalum, Dipped, 0.15mF/35V	110-018	.85
C14	" Mylar, Axial, 0.01mF/200V/10%	110-022	.45
C18	" Ceramic, Disc, 5pF/1KV	110-023	.25
C19	" Ceramic, Disc, 10pF/1KV	110-024	.25
C22	" Electrolytic, Axial, 100mF/35V	110-009	.85
R1,2	Resistor, Deposited Carbon, 220 ohm, ½W, 5%	150-006	.15
R3	" " " 47Kohm, ¼W, 5%	150-032	.20
R4	" " " 820K ohm, ¼W, 5%	150-035	.20
R5	" " " 2.2K ohm, ¼W, 5%	150-040	.20
R6	" " " 56K ohm, ¼W, 5%	150-042	.20
R7	" " " 750K ohm, ¼W, 5%	150-034	.20
R8,9	" " " 100 ohm, ½W, 5%	150-003	.15
R10	" " " 6.8K ohm, ¼W, 5%	150-041	.20
R11	Trimpot, 10K ohm, Linear Taper, Cermet Element, Bourns 3389S-1-103	150-043	2.00
R12,14	Resistor, Deposited Carbon, 100K ohm, ¼W, 5%	150-033	.20
R13	" " " 10K ohm, ¼W, 5%	150-031	.20
R15	" " " 22 ohm, ½W, 5%	150-002	.15

REPLACEMENT ASSEMBLIES	RUSSCO PART NO.	PRICE*
Rear Panel and transformer assembly, complete, ready to plug in:		
For Mono Preamps, all models	400-118	26.75
For Stereo Preamps, all models	400-117	36.00
Front Panel and Printed Circuit Board Assembly, complete, ready to plug in:		
Fidelity-Master, Mono, Unbalanced (FMMU)	400-119	45.00
" " " Balanced (FMMB)	400-120	64.00
" " Stereo, Unbalanced (FMSU)	400-121	76.50
" " " Balanced (FMSB)	400-122	114.50
Fidelity-Pro, Mono, Unbalanced (FPMU)	400-123	60.75
" " " Balanced (FPMB)	400-124	79.75
" " Stereo, Unbalanced (FPSU)	400-125	98.50
" " " Balanced (FPSB)	400-126	136.50

* Prices subject to change without notice.

NOTE on OUTPUT IMPEDANCE of BALANCED MODELS:

Because of the low reflected impedance of the integrated circuit driving the output transformer, the true output impedance at the secondary of the transformer is less than the rated 600 ohms. This is of no consequence unless the transformer secondary is driving a precision attenuator or filter which requires a 600 ohm source for proper operation.

In such applications, place a 270 ohm resistor in series with each side of the output line. This will give the proper source match for filter or attenuator inputs.

FIG. 1 ~ DISASSEMBLY

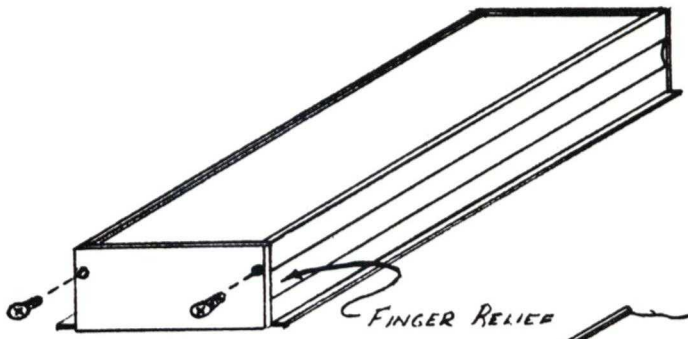

(1) REMOVE 2 PHILLIPS-HEAD SCREWS FROM FRONT PANEL.

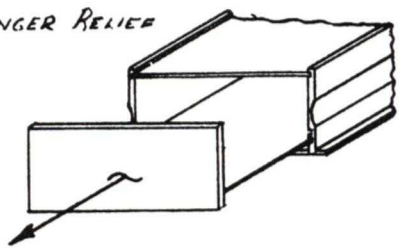

(2) PULL PANEL STRAIGHT AWAY FROM BOX, REMOVING P.C. BOARD.

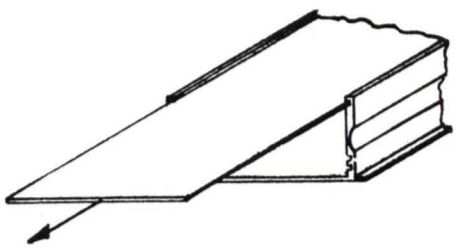

(3) REMOVE LID BY SLIDING OUT OF BOX.

(4) REINSERT P.C. BOARD IN BOX, (LOWER GROOVE) LEAVING LID OUT. PERFORM SERVICE TESTING WITH ACCESS TO TOP SIDE OF BOARD.

~ OR ~

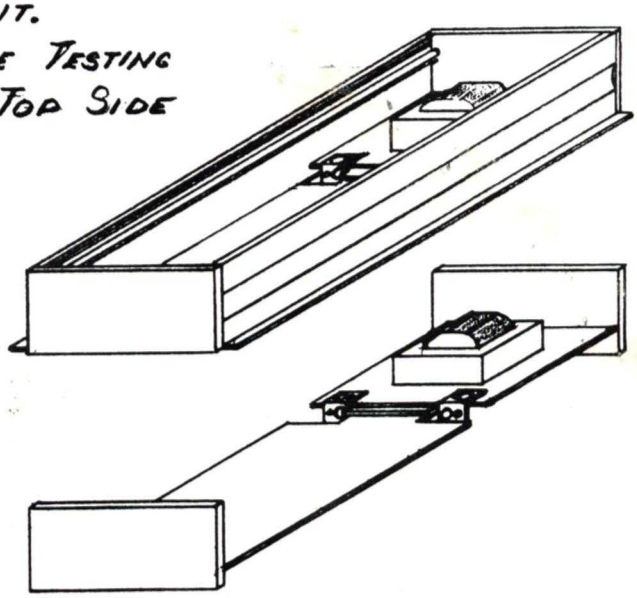

Fig. 2 ~ Signal Tracing Test Setup

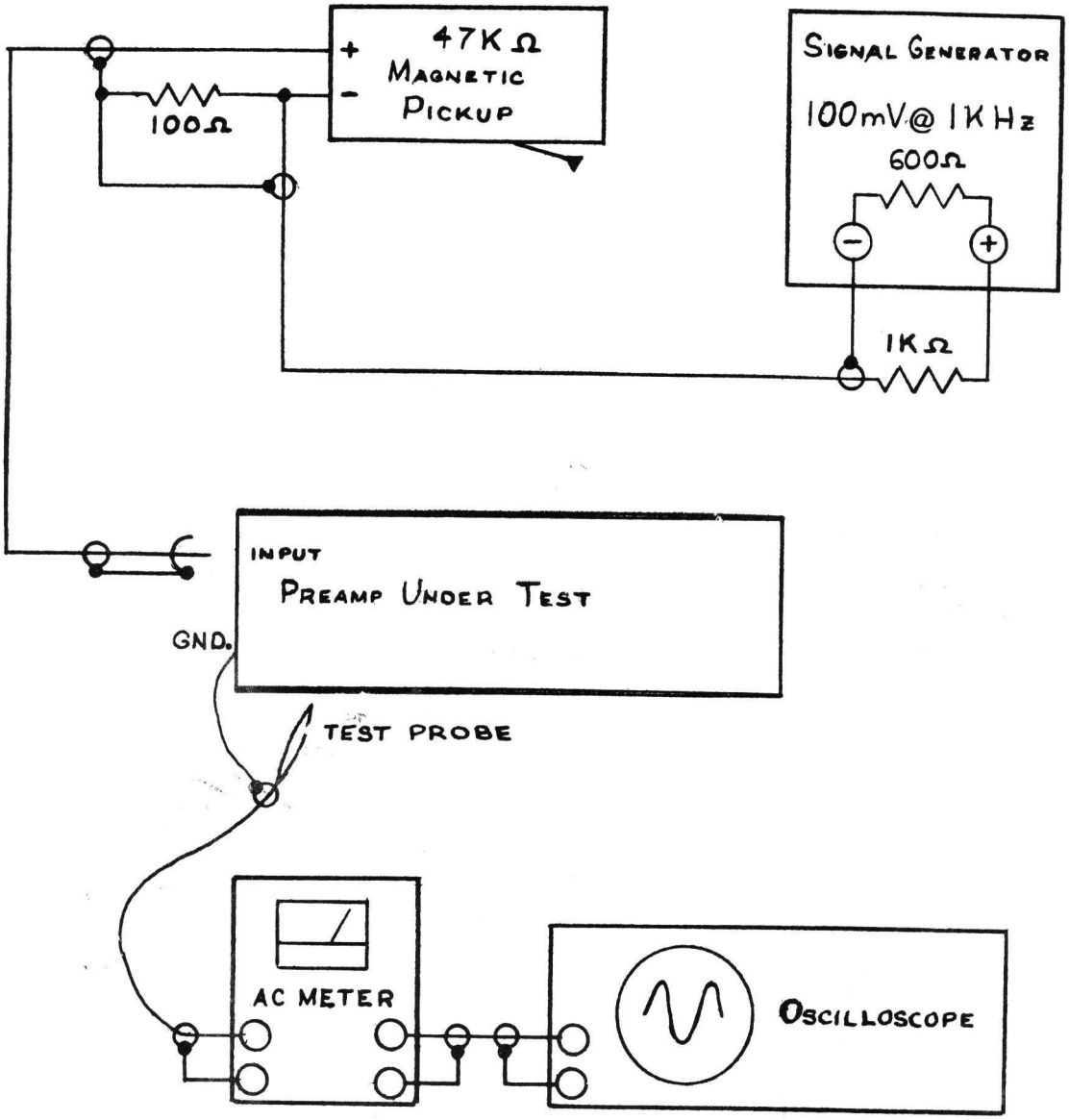

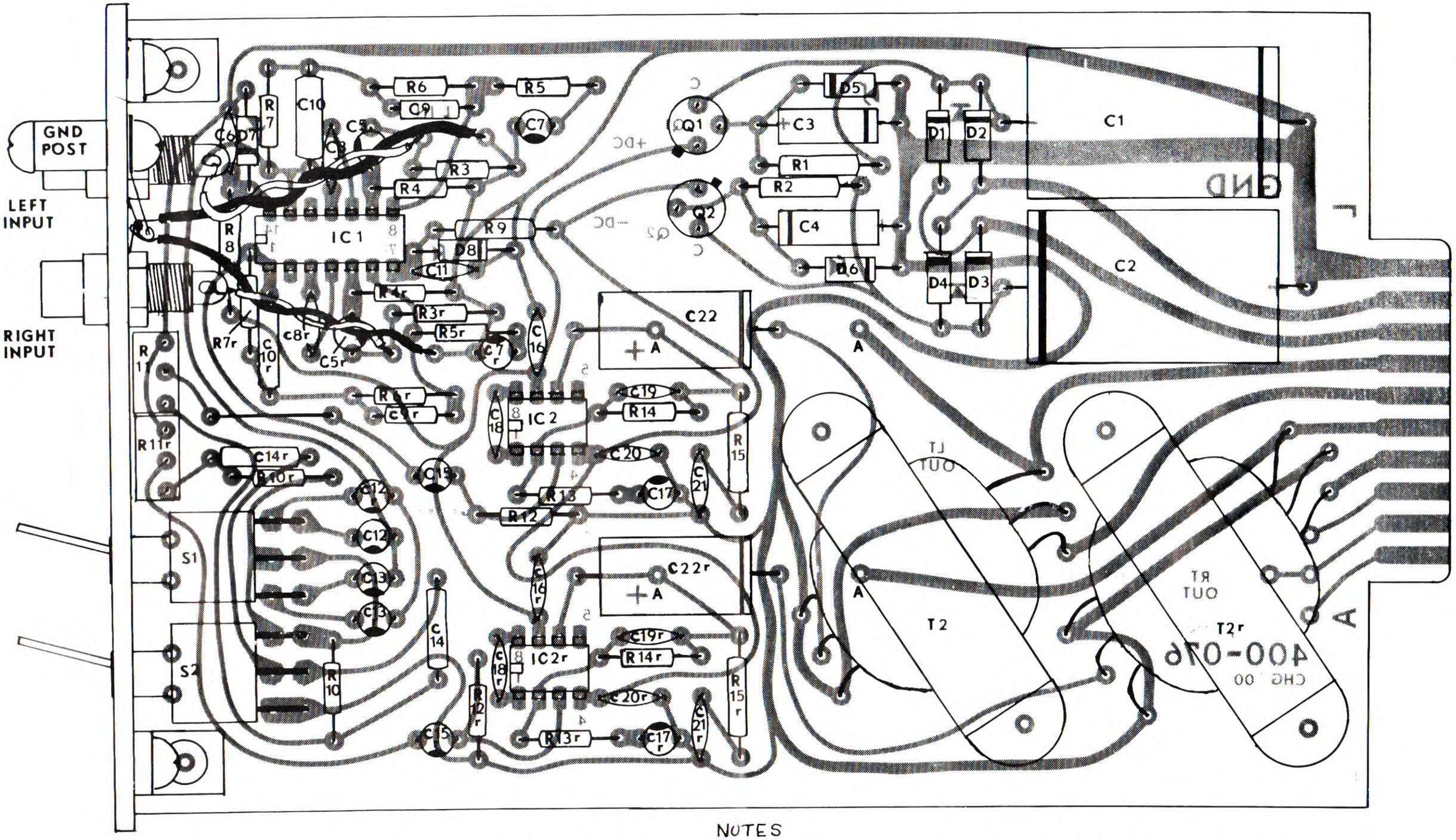

NOTES

1. P.C. Board viewed from component side, underside traces shown shaded.
2. Part number references keyed to schematic. Right channel parts designated by "r."
3. I.C. pin numbers are etched on underside of P.C. Board.
4. Electrolytic capacitor polarities are etched on underside of P.C. Board.
5. FPSB version shown. Others have some components omitted and jumpers added. Unbalanced models have output capacitors (C22) in holes marked "A."

Fig. 3 ~ P.C. Board Component Layout

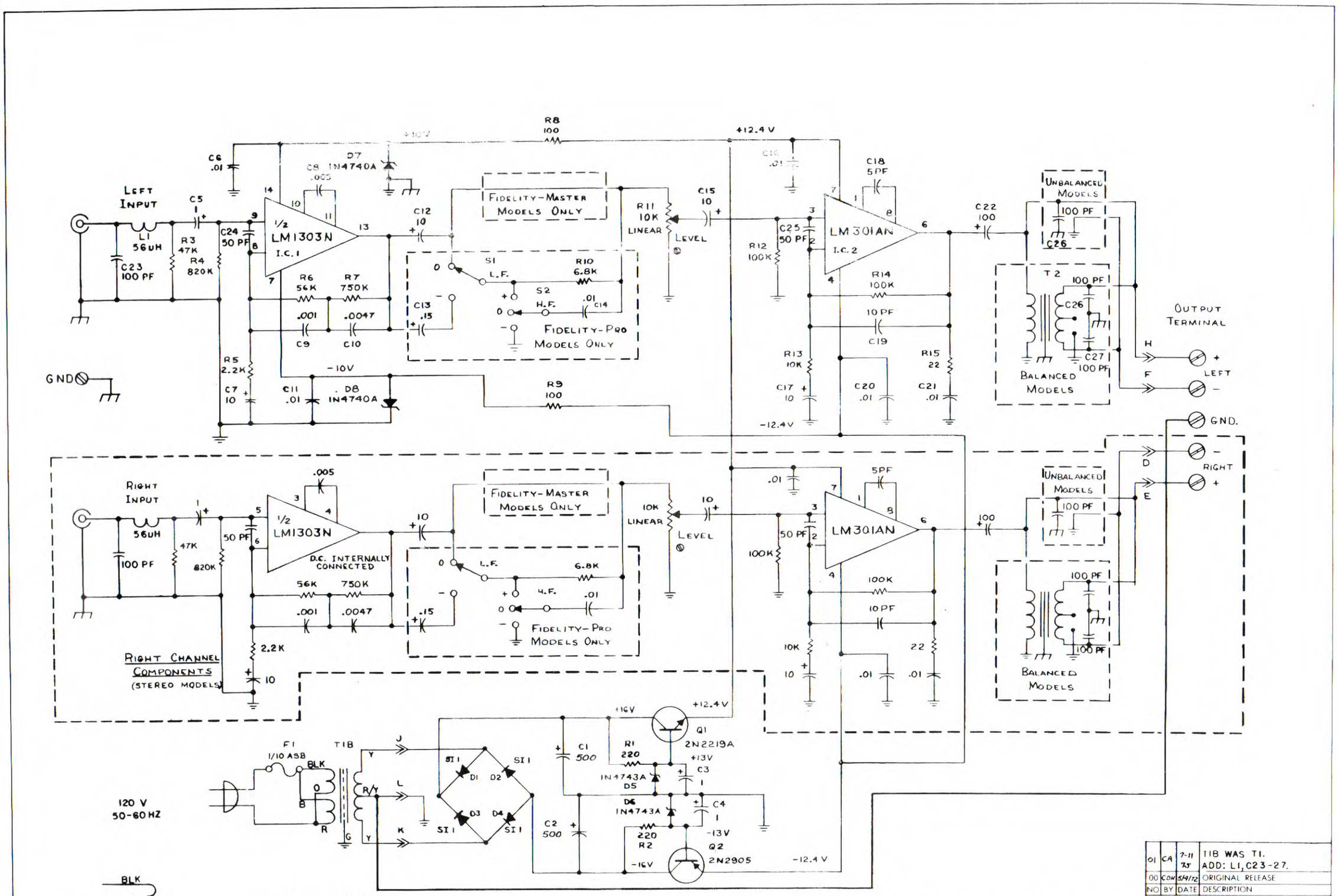

NOTES

6. I.C. 1 MAY BE RC4739.
5. PART REFERENCE NUMBERS FOR RIGHT CHANNEL COMPONENTS SAME AS LEFT.
4. SEE PARTS LIST FOR FURTHER COMPONENT DESCRIPTIONS.
3. RESISTOR VALUES IN OHMS.
2. CAPACITOR VALUES IN MICROFARADS, UNLESS SPECIFIED.
1. P.C. BOARD CONTACTS: —>> H

CHASSIS

CIRCUIT

NO	BY	DATE	DESCRIPTION
01	CA	7-11 73	TIB WAS T1. ADD: L1, C23-27.
00	CDH	5/4/72	ORIGINAL RELEASE

REVISION

SCALE ~ DO NOT SCALE DWG.

TOLERANCES ~

MATERIAL ~

FINISH ~

RUSSCO Electronics Mfg., Inc.
5690 E. Shields
Fresno, Calif. 93727

DRWN: CDH | APP: C. Harmon | DATE 5-4-72

TITLE: SCHEMATIC, PHONO PREAMPS, FIDELITY-PRO & FIDELITY-MASTER, MONO & STEREO

PART NO. 900-012 THRU 900-019 | SHEET 2 OF 2