FILE NO.

SANYO

SERVICE MANUAL

Digital Movie Camera

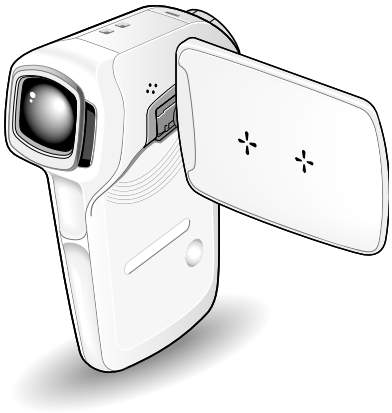

Contents

1. OUTLINE OF CIRCUIT DESCRIPTION 3
2. DISASSEMBLY 12
3. ELECTRICAL ADJUSTMENT 17
4. USB STORAGE INFORMATION REGISTRATION 22
5. TROUBLESHOOTING GUIDE 23
6. PARTS LIST 24
CIRCUIT DIAGRAMS & PRINTED WIRING BOARDS C1

❗RoHS

- This product does not contain any hazardous substances prohibited by the RoHS Directive.

⚠WARNING

- You are requested to use RoHS compliant parts for maintenance or repair.
- You are requested to use lead-free solder.

(This product has been manufactured using lead-free solder. Be sure to follow the warning given on page 2 when carrying out repair work.)

CAUTION : Danger of explosion if battery is incorrectly replaced.

Replace only with the same or equivalent type recommended by the manufacturer.
Discard used batteries according to the manufacturer's instructions.

NOTE : 1. Parts order must contain model number, part number, and description.
2. Substitute parts may be supplied as the service parts.
3. N. S. P. : Not available as service parts.

Design and specification are subject to change without notice.

VPC-CG9BK

(Product Code : 168 137 02)
(U.S.A.) (Canada)

VPC-CG9EXBK

(Product Code : 168 137 03)
(Europe) (U.K.) (South America)
(China) (Australia) (Hong Kong)
(Russia) (Middle East) (Africa)
(General) (Korea) (Taiwan)

VPC-CG9GXBK

(Product Code : 168 137 04)
(South America) (China)
(Australia) (Hong Kong)
(General) (Korea) (Taiwan)

VPC-CG9EXW

(Product Code : 168 137 07)
(Europe) (U.K.) (South America)
(China) (Australia) (Hong Kong)
(Russia) (Middle East) (Africa)
(General) (Korea) (Taiwan)

VPC-CG9GXW

(Product Code : 168 137 09)
(South America) (China)
(Australia) (Hong Kong)
(General) (Korea) (Taiwan)

VPC-CG9EX

(Product Code : 168 137 11)
(Europe) (U.K.) (South America)
(China) (Australia) (Hong Kong)
(Russia) (Middle East) (Africa)
(General) (Korea) (Taiwan)

VPC-CG9GXP

(Product Code : 168 137 12)
(South America) (China)
(Australia) (Hong Kong)
(General) (Korea) (Taiwan)

VPC-CG9

(Product Code : 168 137 18)
(U.S.A.) (Canada)

VPC-CG9EXP

(Product Code : 168 137 19)
(Europe) (U.K.) (South America)
(China) (Australia) (Hong Kong)
(Russia) (Middle East) (Africa)
(General) (Korea) (Taiwan)

REFERENCE No. SM5310742

PRODUCT SAFETY NOTICE

The components designated by a symbol (⚠) in this schematic diagram designates components whose value are of special significance to product safety. Should any component designated by a symbol need to be replaced, use only the part designated in the Parts List. Do not deviate from the resistance, wattage, and voltage ratings shown.

WARNING

Do not use solder containing lead.

This product has been manufactured using lead-free solder in order to help preserve the environment.
Because of this, be sure to use lead-free solder when carrying out repair work, and never use solder containing lead.

Lead-free solder has a melting point that is 30 - 40°C (86 - 104°F) higher than solder containing lead, and moreover it does not contain lead which attaches easily to other metals. As a result, it does not melt as easily as solder containing lead, and soldering will be more difficult even if the temperature of the soldering iron is increased.
The extra difficulty in soldering means that soldering time will increase and damage to the components or the circuit board may easily occur.
Because of this, you should use a soldering iron and solder that satisfy the following conditions when carrying out repair work.

Soldering iron

Use a soldering iron which is 70 W or equivalent, and which lets you adjust the tip temperature up to 450°C (842°F). It should also have as good temperature recovery characteristics as possible.
Set the temperature to 350°C (662°F) or less for chip components, to 380°C (716°F) for lead wires and similar, and to 420°C (788°F) when installing and removing shield plates.
The tip of the soldering iron should have a C-cut shape or a driver shape so that it can contact the circuit board as flat or in a line as much as possible.

Solder

Use solder with the metal content and composition ratio by weight given in the table below. Do not use solders which do not meet these conditions.

Metal content	Tin (Sn)	Silver (Ag)	Copper (Cu)
Composition ratio by weight	96.5 %	3.0 %	0.5 %

Lead-free solder is available for purchase as a service tool.
Use the following part number when ordering:
Part name: Lead-free solder with resin (0.5 mm dia., 500 g)
Part number: VJ8-0270

Note:
If replacing existing solder containing lead with lead-free solder in the soldered parts of products that have been manufactured up until now, remove all of the existing solder at those parts before applying the lead-free solder.

1. OUTLINE OF CIRCUIT DESCRIPTION

1-1. CMOS CIRCUIT DESCRIPTION

1. IC Configuration

The CMOS peripheral circuit block basically consists of the following ICs.

IC911 (MT9N001I125TC)

CMOS imager
CDS, AGC, ADC built-in
H driver, V driver, serial communication circuit built-in

2. IC911 (CMOS)

[Structure]

The electric charges which are generated when each pixel is optically converted are in turn converted into signal voltages by the FD amplifier, and they are then transmitted by the built-in H driver and V driver. The signals are sampled and amplified by the CDS and PGA circuits at the point they are output, and then they are AD converted and output. The output uses the 12 bit parallel interface.

1/2.3-inch positive pixel array CMOS-type fixed imaging element

Effective pixels	3488 (H) X 2616 (V)

1-2. CP1 and VF1 CIRCUIT DESCRIPTION

1. Circuit Description

1-1. Digital clamp

The optical black section of the extracts averaged values from the subsequent data to make the black level of the output data uniform for each line. The optical black section averaged value for each line is taken as the sum of the value for the previous line multiplied by the coefficient k and the value for the current line multiplied by the coefficient 1-k.

1-2. Signal processor

1. γ correction circuit

This circuit performs (gamma) correction in order to maintain a linear relationship between the light input to the camera and the light output from the picture screen.

2. Color generation circuit

This circuit converts the image sensor into RGB signals.

3. Matrix circuit

This circuit generates the Y signals, R-Y signals and B-Y signals from the RGB signals.

4. Horizontal and vertical aperture circuit

This circuit is used gemerate the aperture signal.

1-3. AE/AWB and AF computing circuit

The AE/AWB carries out computation based on a 64-segment screen, and the AF carries out computations based on a 6-segment screen.

1-4. SDRAM controller

This circuit outputs address, RAS, CAS and CS data for controlling the SDRAM. It also refreshes the SDRAM.

1-5. Communication control

1. SIO

This is the interface for the 8-bit microprocessor.

2. PIO/PWM/SIO for LCD

8-bit parallel input and output makes it possible to switch between individual input/output and PWM input/output.

1-6. Digital encorder

It generates chroma signal from color difference signal.

2. Outline of Operation

When the shutter opens, the reset signals (ASIC and CPU) and the serial signals (“take a picture” commands) from the 8-bit microprocessor are input and operation starts.

The picture data from CMOS passes through the A/D and CDS, and is then input to the ASIC as digital data. The AF, AE, AWB, shutter, and AGC value are computed from this data, and three exposures are made to obtain the optimum picture. The data which has already been stored in the SDRAM is read by the CPU and color generation is carried out. Each pixel is interpolated from the surrounding data as being either R, G, and B primary color data to produce R, G and B data. At this time, correction of the lens distortion which is a characteristic of wide-angle lenses is carried out. After AWB and γ processing are carried out, a matrix is generated and aperture correction is carried out for the Y signal, and the data is then compressed by JPEG and is then written to card memory (SD card).

When the data is to be output to an external device, it is taken data from the memory and output via the USB I/F. When played back on the LCD and monitor, data is transferred from memery to the SDRAM, and the image is then elongated so that it is displayed over the SDRAM display area.

3. LCD Block

The LCD display circuit is located on the CP1 board and VF1 board, and consists of components such as a power circuit and VCOM control circuit.

The signals from the ASIC are 8-bit digital signals, that is input to the LCD directly. The 8-bit digital signals are converted to RGB signals inside the LCD driver circuit. The LCD is input signals from ASIC directly to the LCD, and function such as image quality are controlled.

In addition, the timing pulses for signals other than the video signals are also input from the ASIC directory to the LCD.

4. Lens drive block

4-1. Focus drive

The 16-bit serial data signals (LENS_SD) and (LENS_SCLK and LENS_EN) which are output from the ASIC (IC101) are used to drive (FOCUS A +, FOCUS A -, FOCUS B + and FOCUS B -) by the motor driver IC (IC951), and are then used to microstep-drive the stepping motor for focusing operation. Detection of the standard focusing positions is carried out by the ASIC detecting the signal (F_SENSE) from the photointerruptor inside the lens block.

4-2. Zoom drive

The 16-bit serial data signals (LENS_SD) and (LENS_SCLK and LENS_EN) which are output from the ASIC (IC101) are used to drive (ZOOM A +, ZOOM A -, ZOOM B + and ZOOM B -) by the motor driver IC (IC951), and are then used to microstep-drive the stepping motor for zooming operation. Detection of the standard zooming positions is carried out by the ASIC detecting the signal (Z_SENSE) from the photointerruptor inside the lens block.

4-3. ND filter

The ND filter drive signals (NDON and NDOFF) which are output from the ASIC (IC101) are used to drive (ND + and ND -) by the motor driver (IC951), and then the ND filter is inserted into and removed from the beam path.

4-4. Iris drive

The drive method is a galvanometer type without braking coil. The output from the Hall sensor inside the lens is amplified by the Hall amplifier circuit inside the IC971 lens drive IC, and the difference between the current and target aperture determined by the resulting output and the exposure amout output from the ASIC (IC101) is input to the servo amplifier circuit (IC971) to keep the aperture automatically controlled to the target aperture. The lens aperture control signal is output from IC971 and is input to lens drive IN6B of IC951. IC951 functions as the driver for driving the lens.

4-5. Shutter drive

Reverse voltage is applied to the above aperture drive coil to operate the shutter. When the shutter operates, the OC_EN and OC_CONT signals are maintained at a high level, it is input to IN6B of IC951 with low level.

At the same time the SHUTTER + signal that is output from the ASIC (IC101) becomes high (input to IN6A of IC951) and the shutter operates. IC951 functions as the driver for driving the lens.

5. Video Clip Recording and Playback

5-1. Recording

The signal from the camera block is input to IC101 (ASIC). The data that is input to the ASIC is input to SDRAM, and converts this data to encoded MPEG4 data, after which it is written in sequence onto the SD card as streaming data. At this time, the audio signals that are input to the built-in microphone are converted into digital data by the audio CODEC IC of IC183, and they are then input to ASIC. The audio data is then encoded (AAC), and then it is written in sequence onto the SD card together as streaming data with the image signals described above.

5-2. Playback

The data is read from the SD card, and the encoded data is decoded into image data where it is displayed by the LCD or on a TV monitor. At the same time, the audio data is also decoded, and is input to IC183 as digital data. D/A conversion is carried out at IC183, and the sound is then output to the speaker or to the LINE OUT terminal or the headphone.

6. Audio CODEC Circuit (IC183)

The audio signals from the microphone are converted into 16-bit digital data. AD conversion is carried out at a maximum sampling frequency of 48 kHz.

During audio playback, the 16-bit digital data is converted into analog signals and these drive headphone through the speaker or line out system and headphone amplifier. DA conversion is carried out at a maximum sampling frequency of 48 kHz.

1-3. PWA POWER CIRCUIT DESCRIPTION

1. Outline

This is the main power circuit, and is comprised of the following blocks.
Switching controller (IC501)
Motor system power output (L5301)
Digital 3.25 V power output (L5002)
Digital and CMOS 1.8 V power output (L5003)
Backlight power output (Q5007, L5007)
Digital 1 V power output (IC502, L5004)
CMOS analog 2.8 V power output (IC503, L5005)

2. Switching Controller (IC501)

This is the basic circuit which is necessary for controlling the power supply for a PWM-type switching regulator, and is provided with seven built-in channels, only CH1 (motor system), CH2 (digital 3.25 V), CH3 (digital 1.8 V) and CH7 (backlight) are used.
Each power supply output is received, and the PWM duty is varied so that each one is maintained at the correct voltage setting level.
Feedback for the backlight power (CH7) is provided to the both ends voltage of registance so that regular current can be controlled to be current that was setting.

2-1. Short-circuit protection circuit

If output is short-circuited for the length of time determined by the condenser which is connected to Pin (A6) of IC501, all output is turned off. To reset, momentarily set the control signal (P ON) to repeat control, or temporarily disconnect the input power supply.

3. Motor System Power Output

BOOST 5 V is output. Feedback for the 5.0 V output is provided to the switching controller (Pin (B7) of IC501) so that PWM control can be carried out.

4. Digital 3.25 V Power Output

VDD3 is output. Feedback for the VDD3 is provided to the swiching controller (Pin (F3) of IC501) so that PWM control can be carried out.

5. Digital 1.8 V and CMOS 1.8 V Power Output

VDD 1.8 and CMOS 1.8 V are output. Feedback for the 1.8 V is provided to the switching controller (Pin (C3) of IC501) so that PWM control to be carried out.

6. Backlight Power Supply output

Regular current is being transmitted to LED for LCD backlight. Feedback for the both ends voltage of registance that is being positioned to in series LED are provided to the switching controller (Pin (C4) of IC501) so that PWM control to be carried out.

7. Digital 1 V Power Output

VDD 1.0 is output. Feedback for the VDD 1.0 is provided to the switching controller (Pin (11) of IC502) so that PWM control to be carried out.

8. CMOS Analog 2.8 V Power Output

VAA 2.8 is output. Feedback for the VAA 2.8 is provided to the switching controller (Pin (3) of IC503) so that PWM control to be carried out.

1-4. ST1 STROBE CIRCUIT DESCRIPTION

1. Charging Circuit

When UNREG power is supplied to the charge circuit and the CHG signal from microprocessor becomes High (3.3 V), the charging circuit starts operating and the main electorolytic capacitor is charged with high-voltage direct current.
However, when the CHG signal is Low (0 V), the charging circuit does not operate.

1-1. Charge switch

When the CHG signal switches to Hi, IC541 starts charging operation.

1-2. Power supply filter

C5401 constitutes the power supply filter. They smooth out ripples in the current which accompany the switching of the oscillation transformer.

1-3. Oscillation circuit

This circuit generates an AC voltage (pulse) in order to increase the UNREG power supply voltage when drops in current occur. This circuit generates a drive pulse with a frequency of approximately 200-300 kHz, and drive the oscillation transformer.

1-4. Oscillation transformer

The low-voltage alternating current which is generated by the oscillation control circuit is converted to a high-voltage alternating current by the oscillation transformer.

1-5. Rectifier circuit

The high-voltage alternating current which is generated at the secondary side of T5401 is rectified to produce a high-voltage direct current and is accumulated at electrolytic capacitor C5412.

1-6. Charge monitoring circuit

The functions programmed in the IC541 monitor oscillations and estimate the charging voltage. If the voltage exceeds the rated value, charging automatically stops. Then, the ZCHG_DONE signal is changed to Lo output and a "charging stopped" signal is sent to the microcomputer.

2. Light Emission Circuit

When FLCLT signal is input from the ASIC, the stroboscope emits light.

2-1. Emission control circuit

When the FLCLT signal is input to the emission control circuit, Q5402 switches on and preparation is made to the light emitting. Moreover, when a FLCLT signal becomes Lo, the stroboscope stops emitting light.

2-2. Trigger circuit

The Q5402 is turned ON by the FLCLT signal and light emission preparation is preformed. Simultaneously, high voltage pulses of several kV are emitted from the trigger coil and applied to the light emitter.

2-3. Light emitting element

When the high-voltage pulse form the trigger circuit is applied to the light emitting part, currnet flows to the light emitting element and light is emitted.

Beware of electric shocks.

1-5. SYA CIRCUIT DESCRIPTION

1. Configuration and Functions

For the overall configuration of the SYA block, refer to the block diagram. The SYA block centers around a 8-bit microprocessor (IC301), and controls camera system condition (mode).
The 8-bit microprocessor handles the following functions.
1. Operation key input, 2. Clock control and backup, 3. Power ON/OFF, 4. Storobe charge control

Pin	Signal	I/O	Outline
1	SCK	O	Serial data clock output
2	CARD	I	SD card detection (L= SD card)
3	BACKUP_CTL	O	Backup battery charge control (L= charge)
4	CHG_DONE	I	Strobo condensor charge done detection (H → L= charge done)
5	HOT LINE	I	Hot line request from ASIC
6	TEST_MODE	I	Test mode terminal (L= starting up test mode)
7	NOT USED	O	-
8	NOT USED	O	-
9	VDD2	-	VDD
10	VSS2	-	GND
11	RED_LED	O	Red LED (H= lighting)
12	GREEN_LED (G)	O	Green LED (H= lighting)
13	NAND RESET	O	OneNAND flash reset (L= reset)
14	KEY_POWER	I	Key input POWER (L=input)
15	BL ON	O	LCD backlight ON/OFF single (H= backlight ON)
16	NOT USED	O	-
17	MAIN RESET	O	System reset (MRST)
18	PLLEN	O	ASIC PLL ON/OFF control
19	UTX	I	Debugger terminal
20	MR_PANEL_OPEN	I	LCD panel open/close detection (H= panel open)
21	USB_DET	I	USB connection detection (L= connection)
22	COMREQ	I	Command request input
23	KEY_WIDE	I	Key input WIDE (L= input)
24	KEY_1st	I	Key input 1st SHUTTER (L= input)
25	KEY_PLAY	I	Key input PLAY (L= input)
26	BOOT	O	BOOT output
27	ST_CHG	O	Strobo charge control (H= charge)
28	SW3.2 ON	O	SW 3.2 power ON/OFF signal (L= ON)
29	KEY_DOWN	I	Key input DOWN (L= input)
30	KEY_MENU	I	Key input MENU (L= input)
31	KEY_UP	I	Key input UP (L= input)
32	KEY_RIGHT	I	Key input RIGHT (L= input)
33	KEY_SET	I	Key input SET (L= input)
34	KEY_VREC	I	Keyscan VREC (L= input)
35	VSS3	-	GND
36	VDD3	-	VDD
37	RDSEL	I/O	Debugger terminal
38	CLK (SFW)	I/O	Debugger terminal
39	DATA0 (SFW)	I/O	Debugger terminal
40	P ON	O	D/D converter 1.8 V/3.3 V ON/OFF signal (H= ON)
41	P ON2	O	D/D converter 1.0 V ON/OFF signal (H= ON)
42	KEY_TELE	I	Key input TELE (L= input)

See next page →

43	KEY_LEFT	I	Key input LEFT (L= input)
44	HINJI	I	LCD panel rotation detection (L= panel inversion)
45	NOT USED	O	-
46	NOT USED	O	-
47	NOT USED	O	-
48	NOT USED	O	-
49	BAT_OFF	I	Battery OFF detection (L= battery OFF)
50	SREQ	I/O	Serial communication request signal
51	FRAME_VALID	I	CMOS_V signal
52	KEY_2ND	I	Key input 2nd SHUTTER (L= input)
53	RESET	I	Microprocessor reset input (L= reset)
54	XCIN	I	Sub clock oscillation terminal (32.768 kHz)
55	XCOUT	O	Sub clock oscillation terminal (32.768 kHz)
56	VSS1	-	GND
57	XIN	I	Main clock oscillation terminal (4 MHz)
58	XOUT	O	Main clock oscillation terminal (4 MHz)
59	VDD1	-	VDD
60	UNREG SY	I	Camera power voltage input
61	AV_JACK	I	AV JACK connection detection (L= connection)
62	TH_TEMP	I	Camera temperature detection
63	SO	O	Serial data output
64	SI	I	Serial data input

Table 5-1. 8-bit Microprocessor Port Specification

2. Internal Communication Bus

The SYA block carries out overall control of camera operation by detecting the input from the keyboard and the condition of the camera circuits. The 8-bit microprocessor reads the signals from each sensor element as input data and outputs this data to the camera circuits (ASIC) or to the LCD display device as operation mode setting data. Fig. 5-1 shows the internal communication between the 8-bit microprocessor, ASIC and SPARC lite circuits.

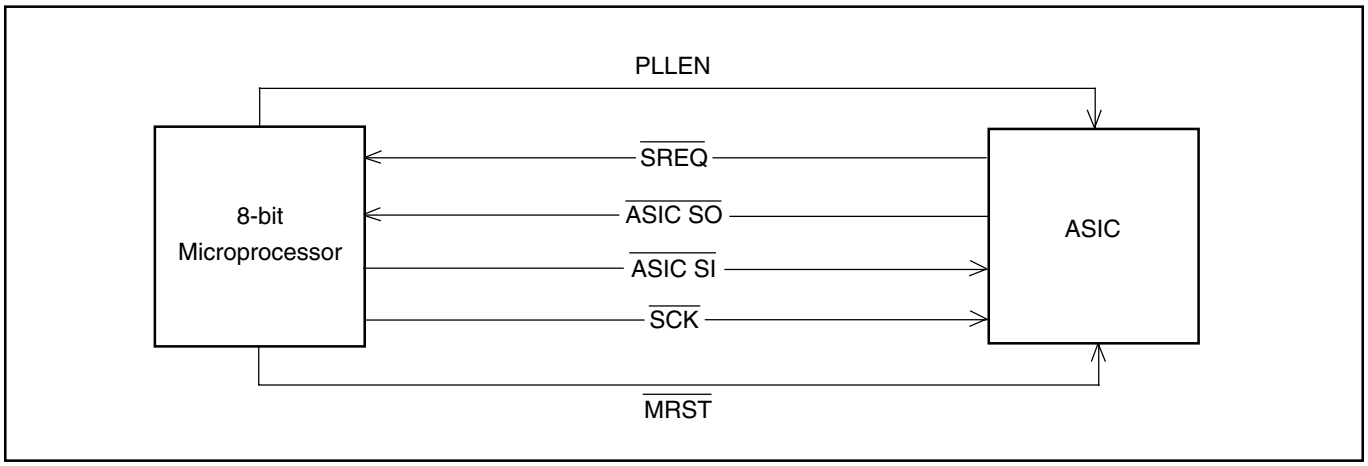

Fig. 5-1 Internal Bus Communication System

3. Power Supply Control

The 8-bit microprocessor controls the power supply for the overall system.

The following is a description of how the power supply is turned on and off. When the battery is attached, a regulated 3.2 V (power off: 2.4 V) voltage is normally input to the 8-bit microprocessor (IC301) by IC302, so that clock counting and key scanning is carried out even when the power switch is turned off, so that the camera can start up again. When the battery is removed, the 8-bit microprocessor operates in sleep mode using the backup battery. At this time, the 8-bit microprocessor only carries out clock counting, and waits in standby for the battery to be attached again. When a switch is operated, the 8-bit microprocessor supplies power to the system as required.

The 8-bit microprocessor first set the P ON signal at pin (40) and the P ON2 signal at pin (41) to high, and then turns on the DC/DC converter. After this, low signal is output from pin (17) so that the ASIC is set to the reset condition. After this these pins set to high, and set to active condition. Once it is completed, the ASIC returns to the reset condition, all DC/DC converters are turned off and the power supply to the whole system is halted.

		ASIC, memory	CMOS	8 bit CPU
Power voltage		3.3 V 1.0 V 1.8 V	2.8 V (A) 2.8 V (D), 1.8 V (D)	3.2 V
Power OFF		OFF	OFF	32KHz
CAMERA	Power switch ON - Auto power OFF	OFF	OFF	32KHz
	LCD finder	ON	ON	4 MHz
Play back		ON	OFF	4 MHz

Table 5-2. Camera Mode

Note) 4 MHz = Main clock operation, 32 kHz = Sub clock operation

MEMO

2. DISASSEMBLY

2-1. REMOVAL OF ST1 BOARD, LENS AND CP1 BOARD

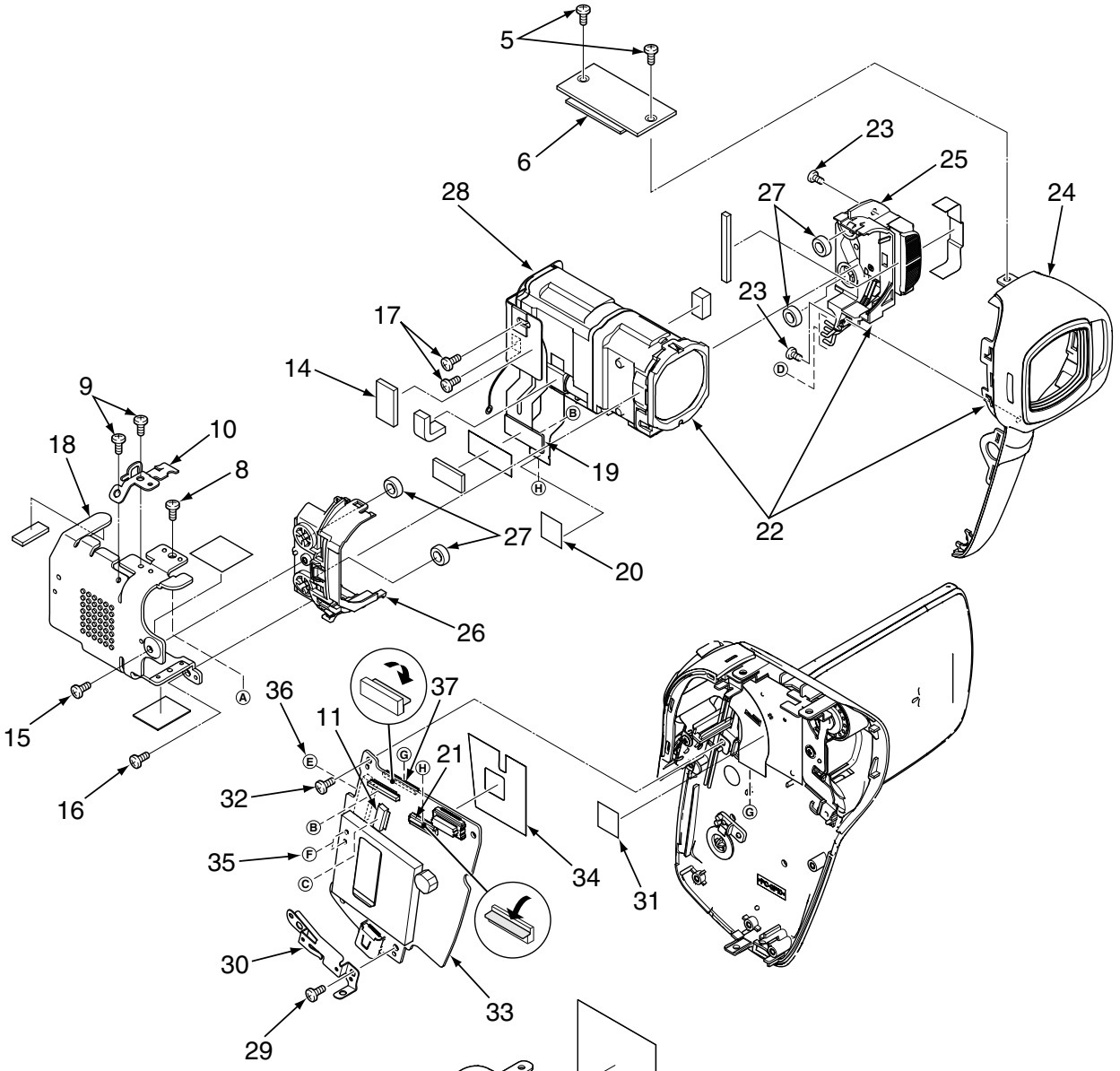

When assembling,
tighten the screws order.
A → B → C → D

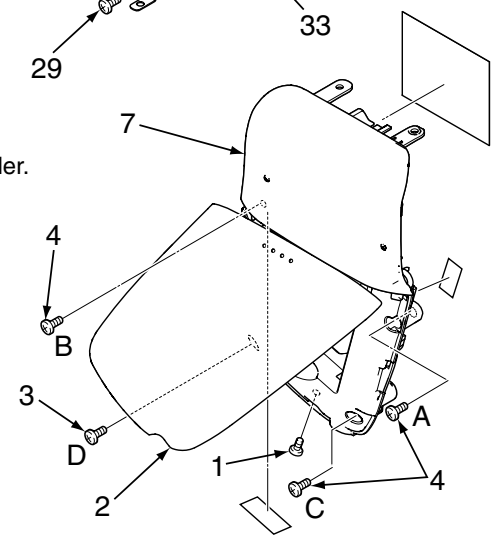

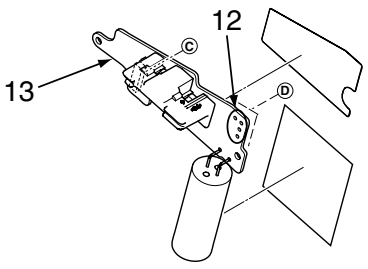

NOTE: Discharge a strobe capacitor with the discharge jig (VJ8-0188) for electric shock prevention.

1. Screw 1.7 x 6
2. Open the cover battery.
3. Screw 1.7 x 4.5
4. Three screws 1.7 x 6
5. Two screws 1.7 x 4.5
6. Cabinet top
7. Compl, cabi mid
8. Screw 1.7 x 3
9. Two screws 1.7 x 2
10. Holder top
11. Connector (C)
12. Remove the solder. (D)
13. ST1 board
14. Heat sink rubber left
15. Screw 1.7 x 2.5
16. Screw 1.7 x 4
17. Two screws 1.7 x 2
18. Heat sink left
19. Connector (B)
20. Spacer cp1 lens
21. FPC (H)
22. Cabinet front + assy lamp + lens
23. Two screws 1.7 x 3
24. Cabinet front
25. Assy, lamp
26. Holder lens left
27. Holder lens
28. Assy, FPC CA1 SV-SG214
29. Screw 1.7 x 3.5
30. Earth USB
31. Spacer cp1 lens
32. Screw 1.7 x 3
33. CP1 board
34. Spacer CP1
35. Remove the solder. (F)
36. Connector (E)
37. FPC (G)

7. Compl, cabi mid

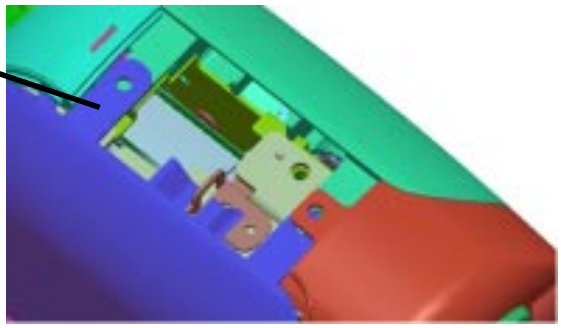

10. Holder top

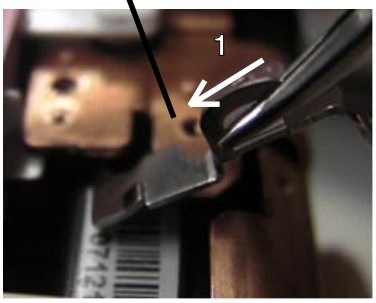

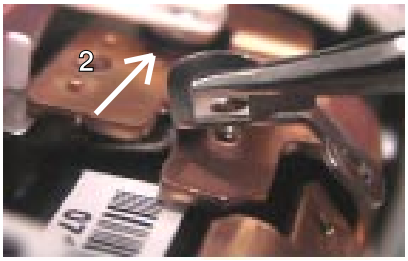

13. ST1 board

22. Cabinet front + assy lamp + lens

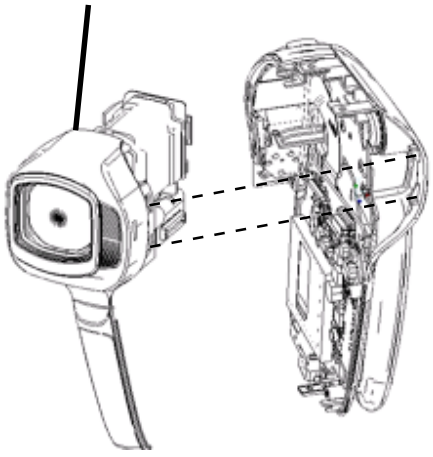

2-2. REMOVAL OF UNIT CONTROL

1. Heat sink tape joint
2. Screw 1.7 x 3.5
3. Unit, control
4. Spacer unit
5. Heat sink right
6. Screw 1.7 x 2
7. Two screws 1.7 x 2.5
8. Holder joint
9. Earth spring right
10. Spacer wire
11. Speaker, 8
12. Spacer speaker
13. Cover joint inner

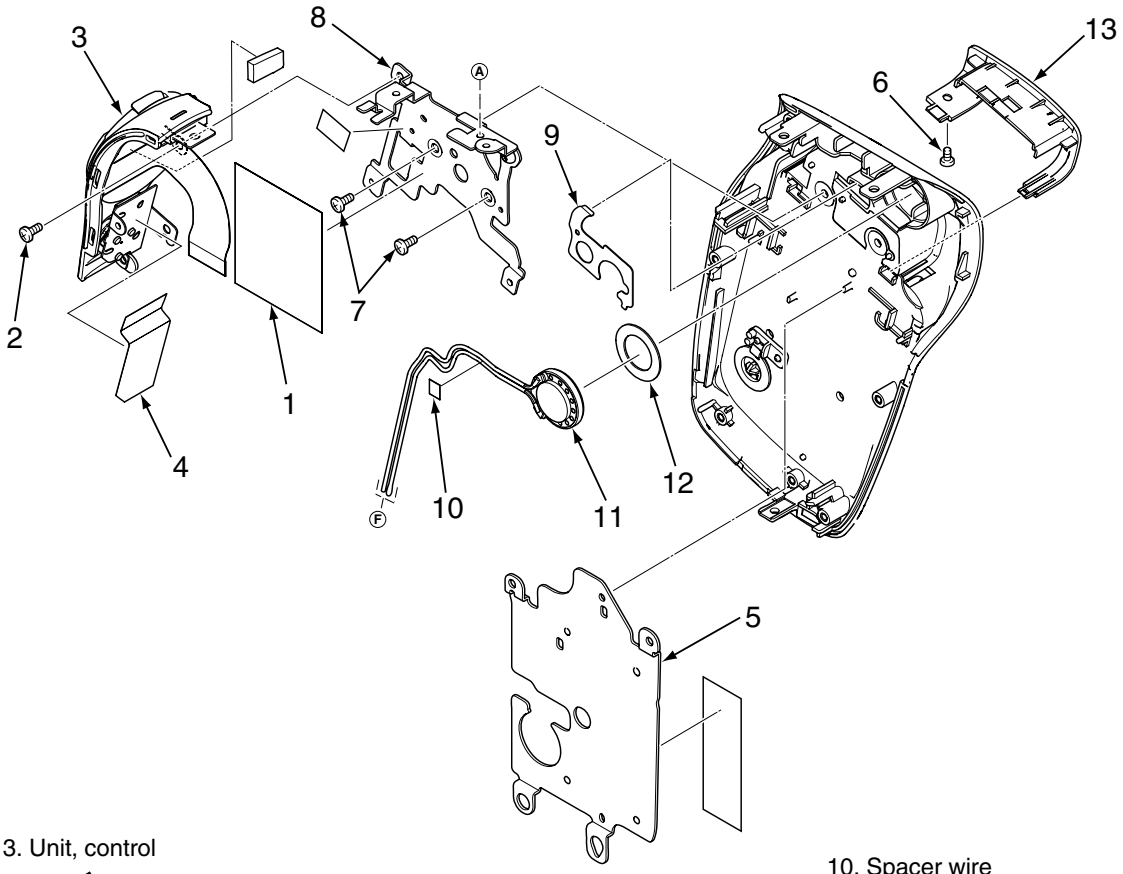

3. Unit, control

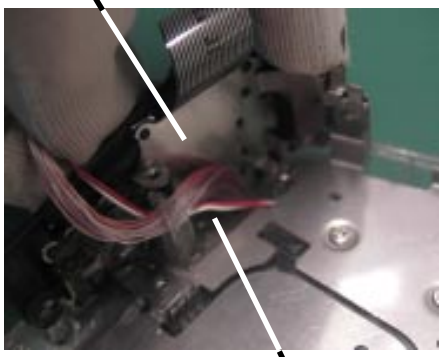

Pass in the hole.

10. Spacer wire

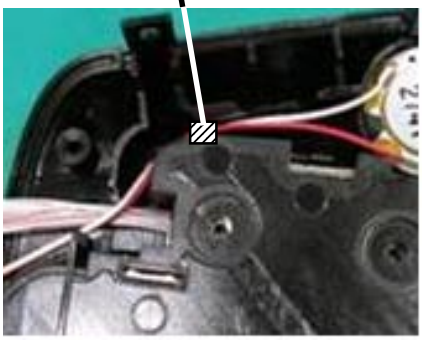

2-3. REMOVAL OF TB1 BOARD AND VF1 BOARD

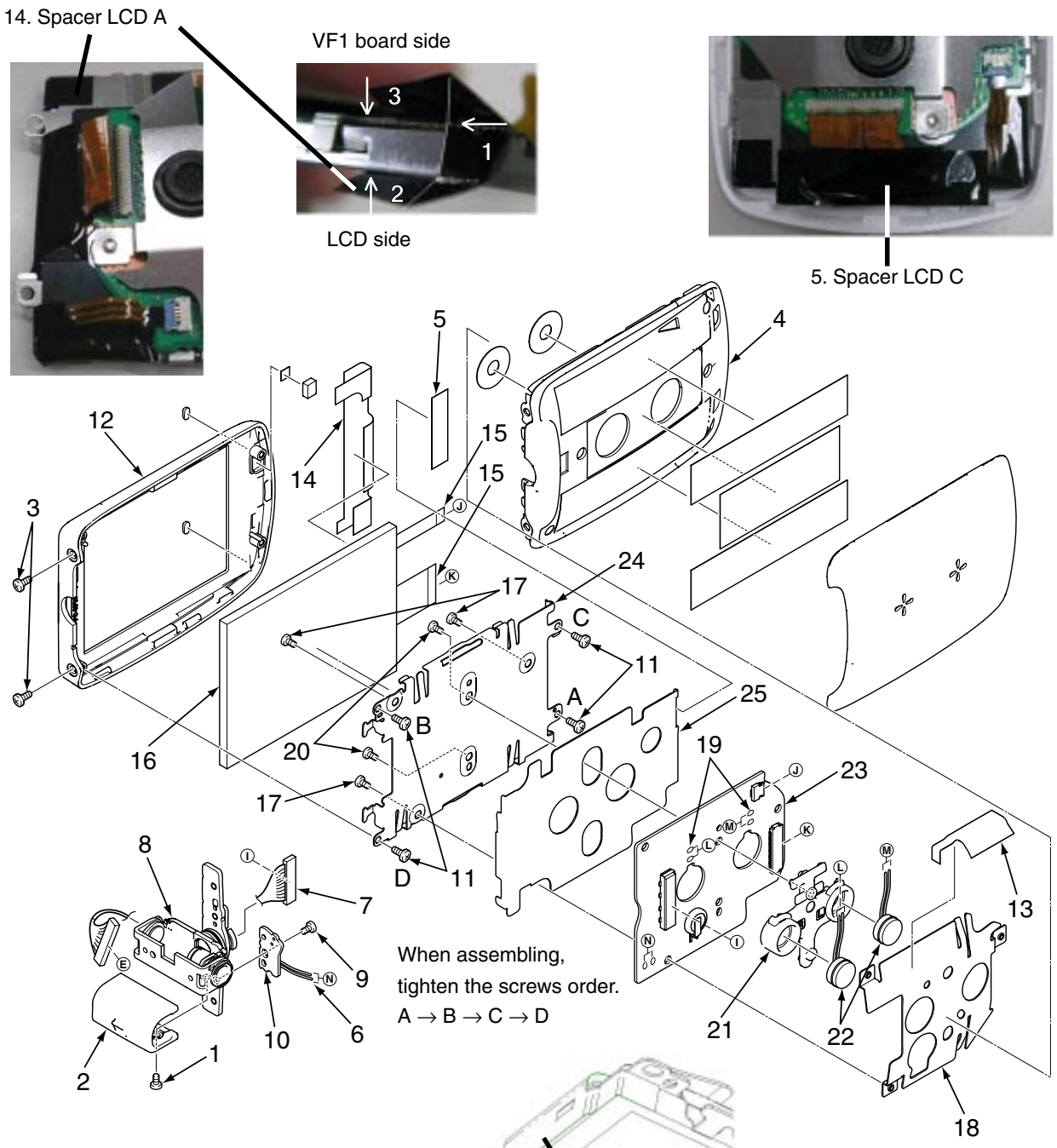

1. Screw 1.7 x 2
2. Cover joint
3. Two screws 1.7 x 3
4. Cover LCD back
5. Spacer LCD C
6. Remove the solder.
7. Connector
8. Assy, joint
9. Screw 1.7 x 2
10. TB1 board
11. Four screws 1.7 x 2.5
12. Cover LCD front
13. Spacer LCD B
14. Spacer LCD A
15. Two FPCs
16. LCD
17. Three screws 1.7 x 2
18. Shield VF1
19. Remove the solder.
20. Two screws 1.7 x 3
21. Holder VF
22. Microphone
23. VF1 board
24. Holder monitor
25. Spacer VF

Microphone dressing method

2-4. BOARD LOCATION

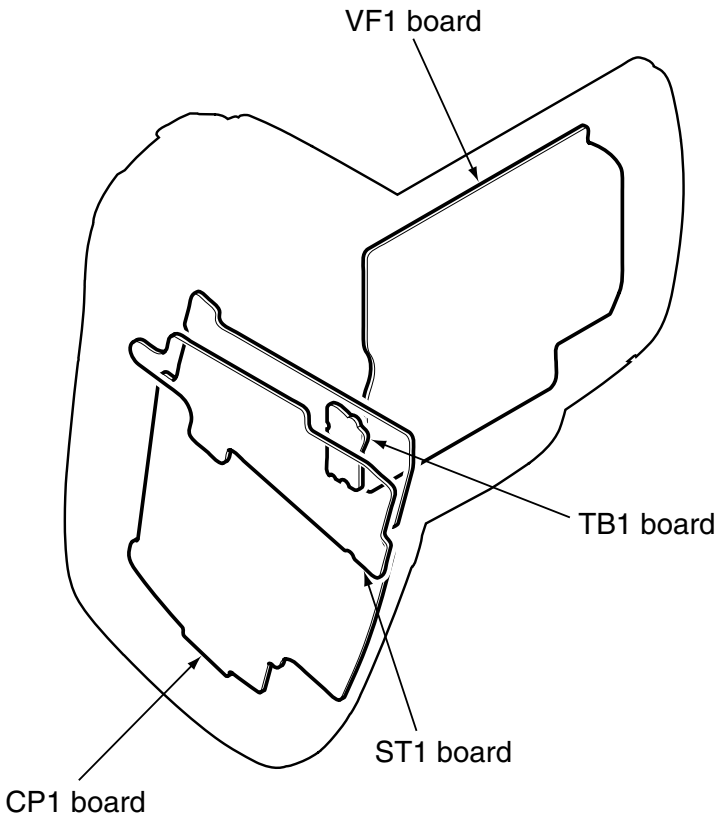

3. ELECTRICAL ADJUSTMENT

3-1. Table for Servicing Tools

Ref. No.	Name	Number	Part code
J-1	Pattern box	1	VJ8-0190
J-2	Calibration software	1	
J-3	Chroma meter	1	VJ8-0192
J-4	Spare lump (pattern box)	1	VJ8-0191
J-5	Discharge jig	1	VJ8-0188
J-6	Collimator	1	VJ8-0260
J-7	Spare lump (collimator)	1	VJ8-0282
J-8	Siemens star chart	1	

Download the calibration software and the firmware from the following URL.
http://www.digital-sanyo.com/overseas/service/
Place the DscCalDi.exe file, camapi32.dll file and QrCodeInfo.dll file together into a folder of your choice.

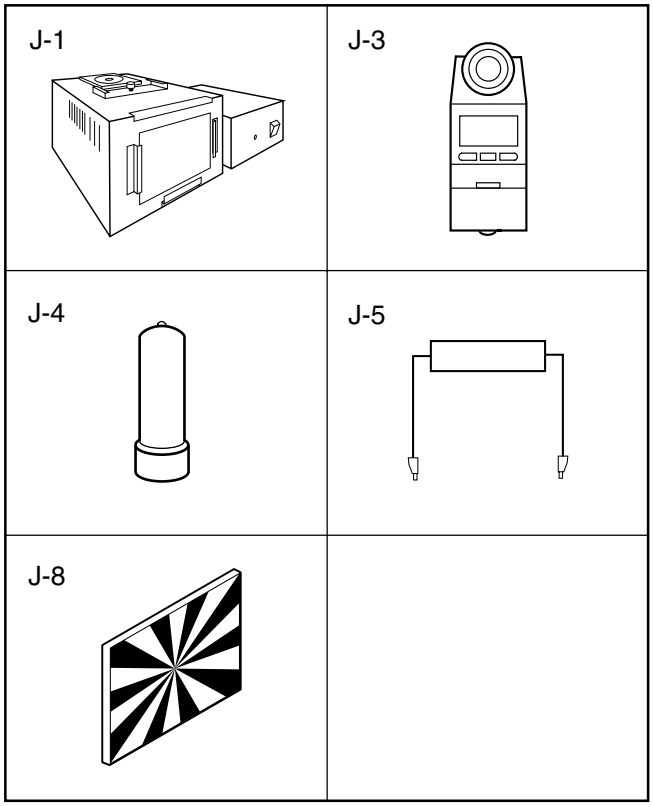

3-2. Equipment

1. PC (IBMⓇ-compatible PC, Windows 2000 or XP or Vista)

3-3. Adjustment Items and Order

1. Lens Adjustment (Infinity)
2. Lens Adjustment (1m)
3. AWB Adjustment
4. CCD White Point Defect Detect Adjustment
5. CCD Black Point And White Point Defect Detect Adjustment In Lighted

Note: If the lens, CCD and board and changing the part, it is necessary to adjust again. Item 1-5 adjustments should be carried out in sequence.

3-4. Setup

1. System requirements

Windows 2000 or XP or Vista
IBMⓇ-compatible PC with pentium processor
USB port
40 MB RAM
Hard disk drive with at least 15 MB available
VGA or SVGA monitor with at least 256-color display

2. Installing USB driver

Install the USB driver with camera or connection kit for PC.

3. Pattern box

Turn on the switch and wait for 30 minutes for aging to take place before using Color Pure. It is used after adjusting the chroma meter (VJ8-0192) adjust color temperature to 3100 ± 20 K and luminosity to 900 ± 20 cd/m^2. Be careful of handling the lump and its circumference are high temperature during use and after power off for a while.

4. Computer screen during adjustment

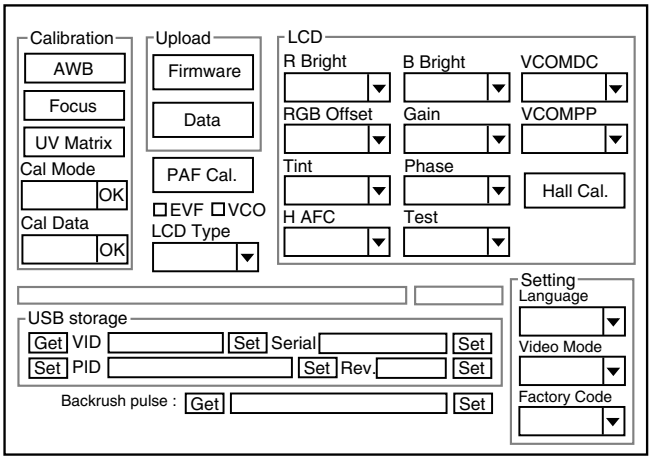

3-5. Connecting the camera to the computer

This camera requires a DC adaptor (sold separately) in order to use an AC adaptor.

1. Insert the DC adaptor to the camera.
2. Insert the AC adaptor's cable to DC terminal of the DC adaptor.
3. Line up the arrow on the cable connector with the notch on the camera's USB port. Insert the connector.
4. Locate a USB port on your computer.
5. If "USB CONNECTION" is displayed, choose the "COM PUTER", and press the SET button.
   Next, choose the "CARD READER", and press the SET button.

3-6. The adjustment item which in necessary in part exchange

	Lens Adjust-ment (Infinity)	Lens Adjust-ment (1 m)	AWB Adjust-ment	CCD White Point Defect Detect Adjustment	CCD Black Point And White Point Defect Detect Adjustment In Lighted	Factory Cord Setting	Language Setting	USB storage information registration	Reset Setting
COMPL PWB CP-1	○	○	○	○	○	○	△	○	○
COMPL PWB VF-1									
COMPL PWB ST-1									
COMPL PWB TB-1									
ASSY, FLEXIBLE PWB COMP3	○	○	○	○	○				
LENS	○	○	○						

○ : Be sure to carry out the necessary adjustments after replacing the unit.
△ : Adjustment is possible from the menu setting screen of the camera and by using the calibration software.

3-7. Updating the firmware

Check the firmware version immediately after the CP1 board has been replaced. If an old version is being used, interference and errors in operation may also occur. If an old version is being used, update it with a newer version.
Refer to 3-13. Firmware uploading procedure. (Page 21)

3-8. Adjust Specifications

1. Lens Adjustment (Infinity)

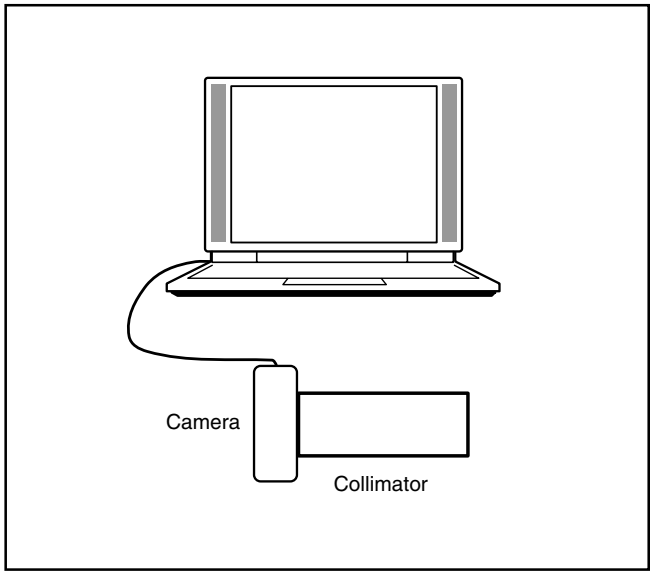

Preparation:
POWER switch: ON
If using a ready-made collimator, set to infinity.
Note:
Do not vibrate during the adjustment.
The temperature of the camera should be allowed to reach room temperature before adjusting the focus. If any slight increases or decreases in room temperature occur, wait until the temperature of the camera reaches room temperature before carrying out adjustment.

Adjustment method:
1. Set the camera so that it becomes center of the siemens star chart in the collimator (zoom wide and tele).
   (Set a distance of 0.5-1.0 cm between camera lens and collimator lens when zoom tele edge. Do not touch the each lens.)
2. Double-click on the DscCalDi.exe.
3. Select “Infinity Cal.” on the LCD “Test”, and click the “Yes”.
4. Lens infinity adjustment value will appear on the screen.
5. Click the OK.

2. Lens Adjustment (1m) is carried out after this adjustment.

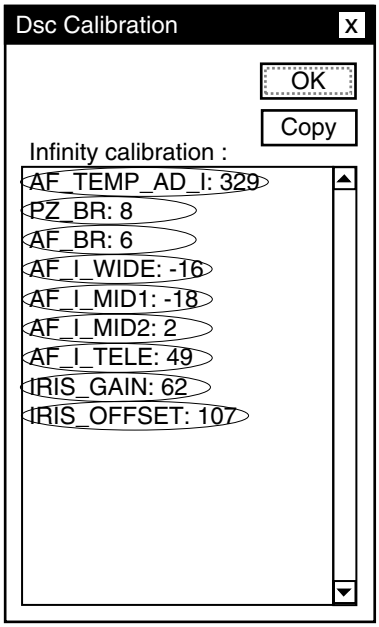

Adjustment value determination is effectuated using below values.
The adjustment values fulfill the conditions below, they are determined as within specifications.

Adjustment value determination

AF_TEMP_AD_I: ATADI
ATADI: adjustment value of focus temperature A/D (0<ATADI<1023)
PZ_BR: PBR
PBR: adjustment value of zoom backrush pulse (0<=PBR<=10)
AF_BR: ABR
ABR: adjustment value of focus backrush pulse (0<=ABR<=10)
AF_I_WIDE: ZIW
ZIW: infinity adjustment value of focus at zoom position wide (-40<=ZIW<=40)
AF_I_MID1: ZIM1
ZIM1: infinity adjustment value of focus at zoom position middle1 (-70<=ZIM1<=70)
AF_I_MID2: ZIM2
ZIM2: infinity adjustment value of focus at zoom position middle2 (-58<=ZIM2<=82)
AF_I_TELE: ZIT
ZIT: infinity adjustment value of focus at zoom position tele (-41<=ZIT<=99)
IRIS_GAIN: g
g: adjustment value of gain (0<=g<=255)
IRIS_OFFSET: o
o: adjustment value of offset (0<=o<=255)

2. Lens Adjustment (1m)

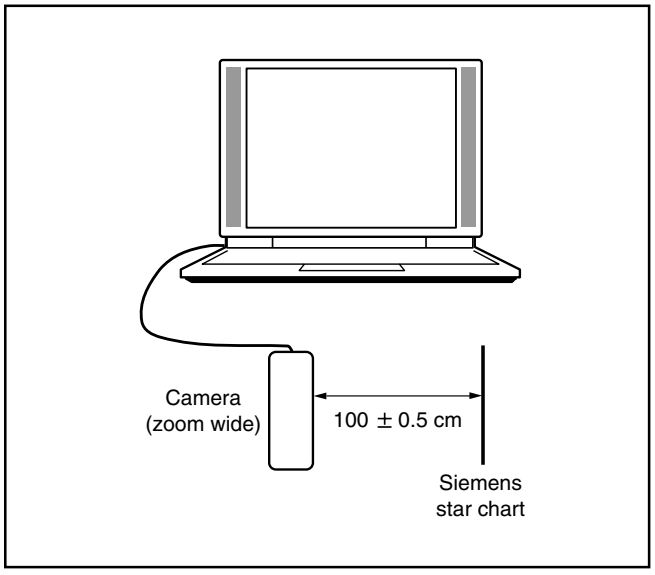

Preparation:

POWER switch: ON

Adjustment condition:

Siemens star chart (A3)
Fluorescent light illumination with no flicker (incandescent light cannot be used.)
Illumination above the subject should be 700 lux ± 10%.

Note:

Do not vibrate during the adjustment.
The temperature of the camera should be allowed to reach room temperature before adjusting the focus. If any slight increases or decreases in room temperature occur, wait until the temperature of the camera reaches room temperature before carrying out adjustment.

Adjustment method:

1. Set the siemens star chart 100 ± 0.5 cm from lens surface (zoom wide position) so that it becomes center of the screen (zoom wide and tele). Set the camera and the chart in a straight, and do not put optical systems (mirror and conversion lens etc.)
2. Double-click on the DscCalDi.exe.
3. Click the “Focus”, and Click the “Yes”.
4. Lens adjustment value will appear on the screen.
5. Click the OK.

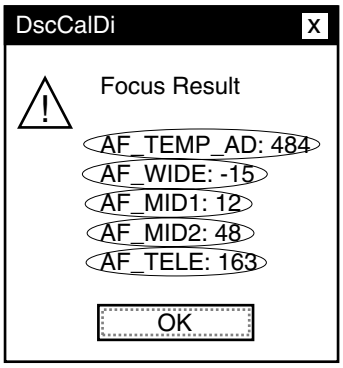

Adjustment value determination is effectuated using below values.
The adjustment values fulfill the conditions below, they are determined as within specifications.

Adjustment value determination

AF_TEMP_AD: ATAD
ATAD: adjustment value of focus temperature A/D (0<ATAD<1023)
AF_WIDE: ZW
ZW: adjustment value of focus at zoom position wide (–50<=ZW<=50)
AF_MID1: ZM1
ZM1: adjustment value of focus at zoom position middle1 (–80<=ZM1<=80)
AF_MID2: ZM2
ZM2: adjustment value of focus at zoom position middle2 (–68<=ZM2<=92)
AF_TELE: ZT
ZT: adjustment value of focus at zoom position tele (–51<=ZT<=109)

3. AWB Adjustment

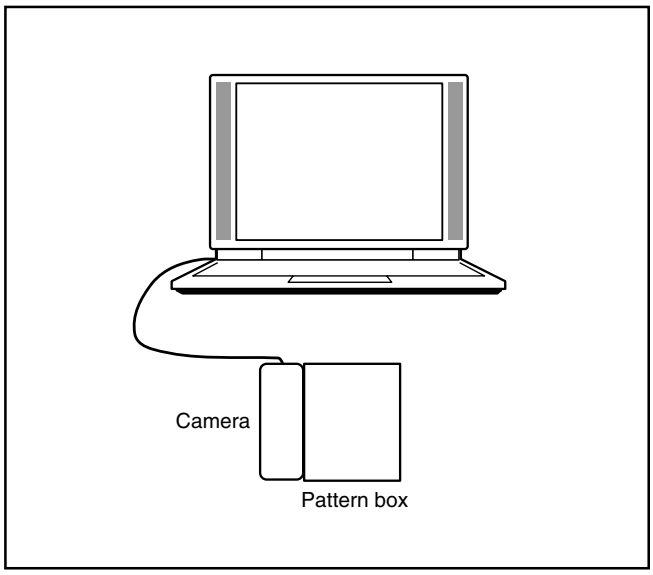

Preparation:

POWER switch: ON

Setting of pattern box:

Color temperature: 3100 ± 20 (K)

Luminance: 900 ± 20 (cd/m^2)

Adjusting method:

1. When setting the camera in place, set it to an angle so that nothing appears in any part of the color viewer except the white section. (Do not enter any light.)
2. Double-click on the DscCalDi.exe.
3. Click the AWB, and click the Yes.
4. AWB adjustment value will appear on the screen.
5. Click the OK.

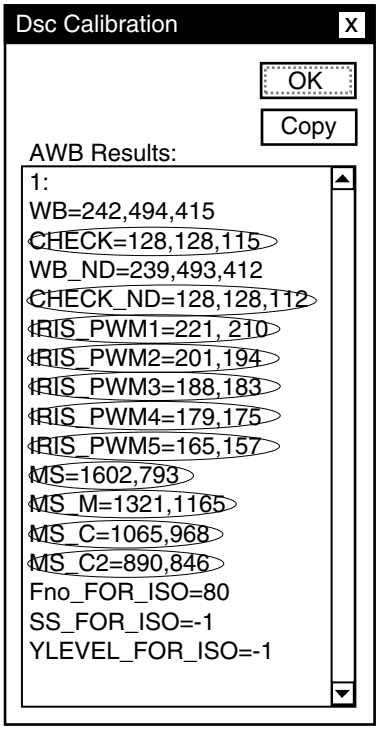

Adjustment value determination is effectuated using the "CHECK", "CHECK_ND", "MS", "MS_M", "MS_C", "MS_C2", "IRIS_PWM1", "IRIS_PWM2", "IRIS_PWM3", "IRIS_PWM4" and "IRIS_PWM5" values. If

CHECK= wc0, wc1, wc2

CHECK_ND= wnc0, wnc1, wnc2

MS= ms1, ms2,

MS_M= ms3, ms4,

MS_C= ms5, ms6,

MS_C2= ms7, ms8,

IRIS_PWM1= s1, s2

IRIS_PWM2= s3, s4

IRIS_PWM3= s5, s6

IRIS_PWM4= s7, s8

IRIS_PWM5= s9, s10

the adjustment values fulfill the conditions below, they are determined as within specifications.

Adjustment value determination

wc0=128 ± 2, wc1=128 ± 2, wc2=130 ± 40

wnc0=128 ± 2, wnc1=128 ± 2, wnc2=130 ± 40

1200<=ms1<=4450, 240<=ms2<=2240, 980<=ms3<=2980, 820<=ms4<=2820, 700<=ms5<=2700, 570<=ms6<=2570, 470<=ms7<=2470, 360<=ms8<=2360

0<=s1<=255, 0<=s2<=255, 0<=s3<=255, 0<=s4<=255, 0<=s5<=255, 0<=s6<=255, 0<=s7<=255, 0<=s8<=255, 0<=s9<=255, 0<=s10<=255

ms2<ms8<ms7<ms6<ms5<ms4<ms3<ms1

s1>s2>s3>s4>s5>s6>s7>s8>s9>s10

Adjustment values other than the above are irrelevant.

4. CCD White Point Defect Detect Adjustment

Preparation:

POWER switch: ON

Adjustment method:

1. Double-click on the DscCalDi.exe.
2. Select "CCD Defect" on the LCD "Test", and click the "Yes".
3. After the adjustment is completed, OK will display.
4. Click the OK.

5. CCD Black Point And White Point Defect Detect Adjustment In Lighted

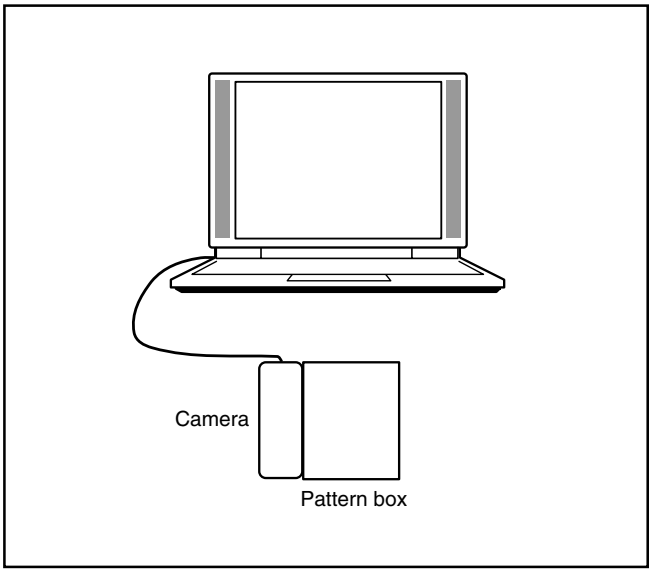

Preparation:
POWER switch: ON
Setting of pattern box:
Color temperature: 3100 ± 20 (K)
Luminance: 900 ± 20 (cd/m^2)
Adjusting method:
1. Set the camera 0 cm from the pattern box. (Do not enter any light.)
2. Double-click on the DscCalDi.exe.
3. Select “CCD Black” on the LCD “Test”, and click the “Yes”.
4. After the adjustment is completed, the number of defect will appear.
5. Click the OK.

3-9. Factory Code Setting
1. Check the "Factory Code" display within the Setting group.
2. **For U.S.A., Canada and NTSC general area**
   If "FC_SANYO_U" does not appear, click on the " ▼" mark located on the right of the "Factory Code" display BOX and select "FC_SANYO_U".
3. **For Europe and PAL general area**
   If "FC_SANYO_EX" does not appear, click on the " ▼" mark located on the right of the "Factory Code" display BOX and select "FC_SANYO_EX".

3-10. Language Setting
1. Click on the " ▼" mark located on the right of the "Language" display BOX.
2. Select language. (Default is English.)
3. End "DscCal" and remove the camera before turning the camera power OFF.

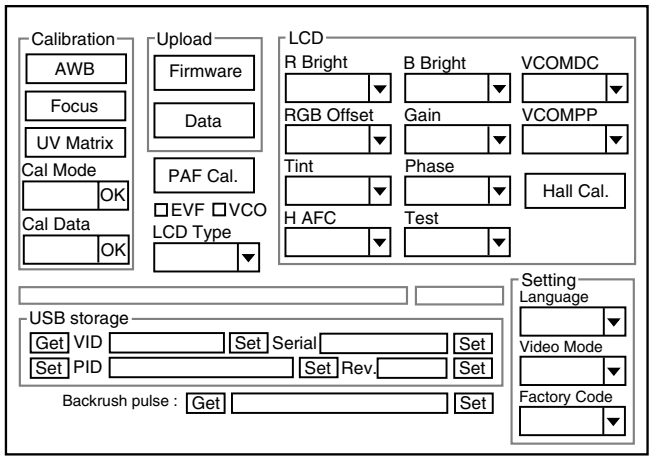

3-11. Reset Setting
Carry out reset settings after replacing CP1 board.
1. Turn on the camera.
2. Press the MENU button.
3. Choose the Option menu.
4. Choose the RESET SETTINGS, and press the SET button.
5. Select RESET, and press the SET button.

3-12. The Compulsive boot starting method
1. Keep MENU button, SET button, and SHUTTER button depressed while switching on the power.
2. Connect the camera and the computer with USB cable.

3-13. Firmware uploading procedure
1. Uploading the firmware should be carried out if the version number (COMPL PWB XX-X) on the replacement circuit board is lower than the version of the distributed firmware. For XX-X, enter the name of the circuit board containing the firmware.
2. The firmware is distributed by e-mail in self-extracting archive format. Change the extension of the distributed file to .EXE and save it in your preferred folder.
3. When you double-click the saved file, the firmware (binary file) will be saved in the same folder.
4. The firmware must not be distributed without permission.

1. Overwriting firmware from the SD card
Preparation:
SD card: SD card with firmware rewritten into the root directory
Data: S214Nxxx.BIN (xxx: version)
Overwriting method:
1. Insert the above SD card.
2. Turn on the camera.
3. Set the REC/PLAY switch to the PLAY.
4. Press the MENU button.
5. Choose the Option menu.
6. Choose the FORMAT.
7. Toggle the SET button to the left for 2 seconds. FIRMWARE UPDATE will display.
8. Choose YES.
9. Press the SET button. Update is starting.

Note:
Do not turn off the camera’s power or remove the SD card while the firmware is being updated.
The power will turn on automatically after the update is complete.

2. Overwriting firmware from the calibration software
Preparation:
PC with overwriting firmware copied to the preferred folder in the HD.
Data: S214Nxxx.BIN (xxx: version)
Overwriting method:
1. Connect the camera’s USB/AV terminal to the computer’ USB connector.
2. The USB Connection screen appears on the camera’s LCD monitor. Choose the “COMPUTER”, and press the SET button. Next, choose the “CARD READER”, and press the SET button.
3. Double-click on the DscCalDi.exe.
4. Click the Firmware.
5. Choose the fimware file to use for overwriting, and click the Yes.
6. Update is starting. The message will appear, and choose OK.
7. After the update is complete, disconnect the USB cable and turn the camera’s power off.

Note:
Do not turn off the camera’s power while the firmware is being updated.

4. USB STORAGE INFORMATION REGISTRATION

USB storage data is important for when the camera is connected to a computer via a USB connection.
If there are any errors in the USB storage data, or if it has not been saved, the USB specification conditions will not be satisfied, so always check and save the USB storage data.

Preparation:

POWER switch: ON

Adjustment method:

1. Connect the camera to a computer. (Refer to 3-5. Connecting the camera to the computer on the page 17.)
2. Double-click on the DscCalDi.exe.
3. Click on the Get button in the USB storage window and check the USB storage data.
   VID: SANYO
   PID: CG9
   Serial:
   Rev. : 1.00
4. Check the “Serial” in the above USB storage data. If the displayed value is different from the serial number printed on the base of the camera, enter the number on the base of the camera. Then click the Set button.
5. Next, check VID, PID and Rev. entries in the USB storage data. If any of them are different from the values in 3. above, make the changes and then click the corresponding Set button.

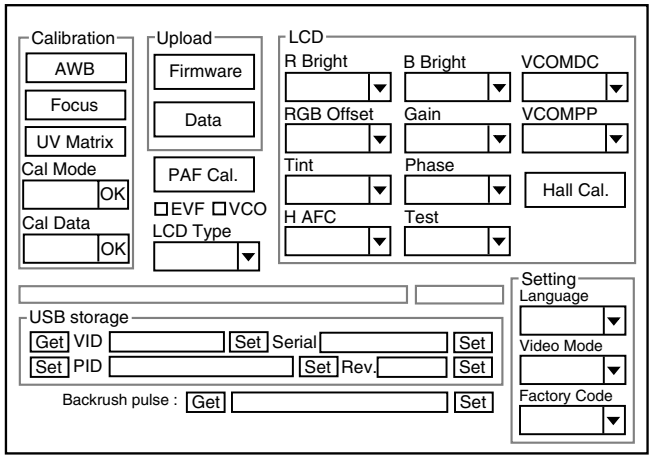

5. TROUBLESHOOTING GUIDE

POWER LOSS INOPERTIVE

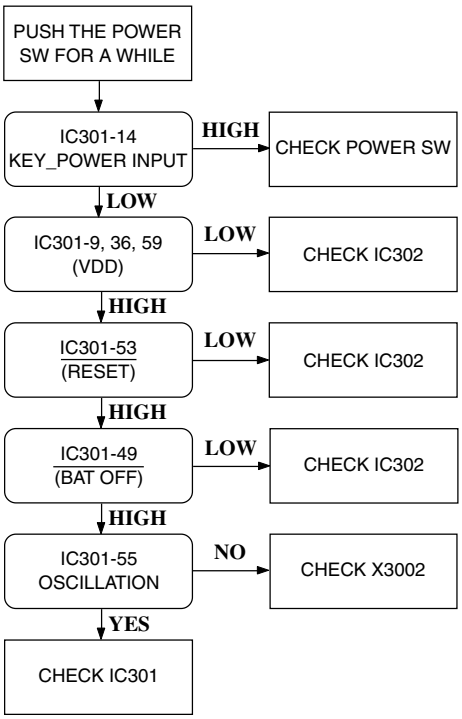

TAKING INOPERATIVE

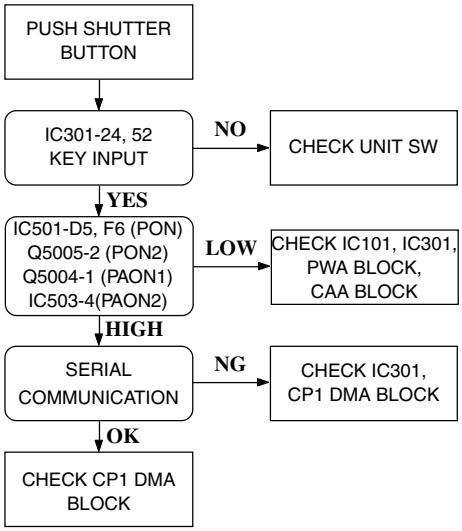

NO PICTURE

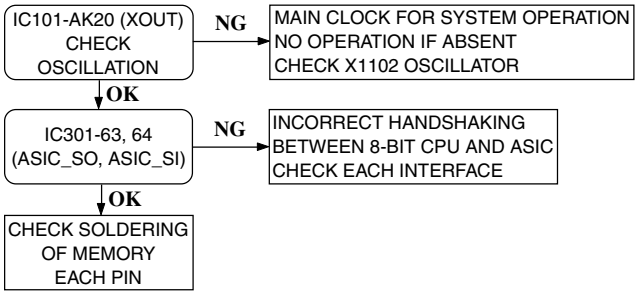

6. PARTS LIST

PACKING MATERIALS

LOCATION	PARTS NO.	DESCRIPTION
7001	636 115 5564	CARTON INNER-SG214/U,VPC-CG9BK,VPC-CG9
7001	636 115 5571	CARTON INNER-SG214/EX,VPC-CG9EXBK, VPC-CG9GXBK,VPC-CG9EXW,VPC-CG9GXW, VPC-CG9EX,VPC-CG9GXP,VPC-CG9EXP
7002	636 078 4659	CUSHION SHEET-SX792/KRNK
7003	636 099 3020	LABEL CARTON SILVER-817U2 VPC-CG9EX,VPC-CG9
7003	636 086 5068	LABEL CARTON WHITE-719EX3 VPC-CG9EXW,VPC-CG9GXW
7003	636 074 6589	LABEL CARTON PINK 712EX3 VPC-CG9GXP,VPC-CG9EXP
7004	636 114 4926	LABEL SILVER MODEL-214/EX4 VPC-CG9EX,VPC-CG9
7004	636 114 0980	LABEL WHITE MODEL-214/EX2 VPC-CG9EXW,VPC-CG9GXW
7004	636 114 4872	LABEL PINK MODEL-214/GX5 VPC-CG9GXP,VPC-CG9EXP
7005	636 115 5618	REINFORCE PAD,A-SG214/J (INNER BOTTOM)

ACCESSORIES

LOCATION		PARTS NO.	DESCRIPTION
Note: Please refer to the table of next page for the accessories.			
1		636 103 1783	STRAP CAP LENS-SG112/J
2		636 113 1100	CAP LENS-SG214/J VPC-CG9BK,VPC-CG9EXBK,VPC-CG9GXBK, VPC-CG9EX,VPC-CG9
2		636 114 1420	CAP LENS-SG214/J2 VPC-CG9EXW,VPC-CG9GXW,VPC-CG9GXP, VPC-CG9EXP
3		645 087 1818	CABLE,DSC USB (Dedicated USB interface cable)
4		645 087 1825	CABLE,DSC A/V (Dedicated AV interface cable)
5	⚠	645 083 6794	CORD,POWER-1.9MK,VPC-CG9BK,VPC-CG9
5	⚠	645 083 6787	CORD,POWER-1.2MK, EXCEPTVPC-CG9BK,VPC-CG9
6	⚠	645 089 5081	BATTERY CHARGER
OR	⚠	645 093 9617	BATTERY CHARGER
7	⚠	645 089 8990	BATTERY,RECHARGE,LI-ION
8		636 113 9069	DISC,CD-ROM INST G214 VPC-CG9GXBK,VPC-CG9GXW,VPC-CG9GXP PDF of instruction manual: English, German, French, Spanish, Italian, Dutch, Russian, Portuguese, Simplefied Chinese, Traditional Chinese, Korean
9053		636 114 1710	INSTRUCTION MANUAL CAMERA/SOFTWEAR

Table of accessories

1 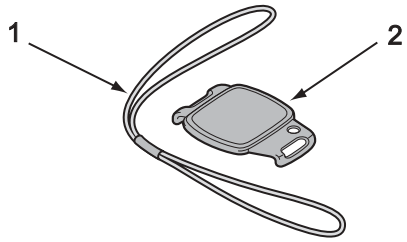 2	3 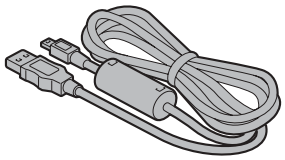
4 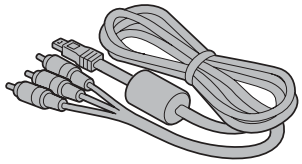	5 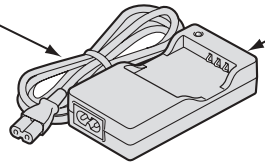 6
7 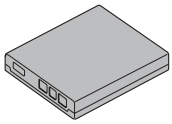	8 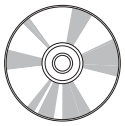

CABINET AND CHASSIS PARTS 1

LOCATION	PARTS NO.	DESCRIPTION
1	636 114 1574	COMPL,COVER BATT-SG214 VPC-CG9BK,VPC-CG9EXBK,VPC-CG9GXBK
1	636 114 1598	COMPL,COVER BATT-SG214 VPC-CG9EXW,VPC-CG9GXW
1	636 114 4902	COMPL,COVER BATT-SG214 VPC-CG9EX,VPC-CG9
1	636 114 4919	COMPL,COVER BATT-SG214 VPC-CG9GXP,VPC-CG9EXP
2	636 113 7034	SPACER CABI MID B-SG214/J
3	636 114 4803	CABINET LEFT-SG214/EX4,VPC-CG9EX,VPC-CG9
3	636 114 4810	CABINET LEFT-SG214/GX5 VPC-CG9GXP,VPC-CG9EXP
3	636 113 0448	CABINET LEFT-SG214/J VPC-CG9BK,VPC-CG9EXBK,VPC-CG9GXBK
3	636 114 1277	CABINET LEFT-SG214/J2 VPC-CG9EXW,VPC-CG9GXW
4	636 115 9623	HEAT SINK TAPE JOINT-214
5	636 113 0592	COVER CARD-SG214/J VPC-CG9BK,VPC-CG9EXBK,VPC-CG9GXBK, VPC-CG9EX,VPC-CG9
5	636 114 1260	COVER CARD-SG214/J3 VPC-CG9EXW,VPC-CG9GXW,VPC-CG9GXP, VPC-CG9EXP
6	636 113 0639	STAND-SG214/J VPC-CG9BK,VPC-CG9EXBK,VPC-CG9GXBK, VPC-CG9EX,VPC-CG9
6	636 114 1291	STAND-SG214/J2 VPC-CG9EXW,VPC-CG9GXW,VPC-CG9GXP, VPC-CG9EXP
7	636 116 0704	SPACER CABI MID-SG214/J
8	636 113 0455	CABINET MIDDLE-SG214/J VPC-CG9BK,VPC-CG9EXBK,VPC-CG9GXBK, VPC-CG9EX,VPC-CG9
8	636 114 1215	CABINET MIDDLE-SG214/J3 VPC-CG9EXW,VPC-CG9GXW,VPC-CG9GXP, VPC-CG9EXP
9	636 112 4768	COMPL PWB,ST-1
10	636 109 2951	SPACER MAIN CON-SG212/J
11	636 113 0981	SPACER CP1 ST-SG214/J
12	636 113 0837	EARTH USB-SG214/J
13	636 114 1451	COMPL PWB,CP-1 F/W
14	636 114 7064	SPACER CP1-SG214/J
15	636 116 0278	SPACER HEAT SINK B-SG214
16	636 113 0905	HEAT SINK LEFT-SG214/J
17	636 114 0508	SPACER LENS TOP-SG214
18	636 113 0813	HOLDER TOP-SG214/J
19	636 113 0998	SPACER HEAT SINK-SG214/J
20	636 113 0721	HOLDER LENS LEFT-SG214/J
21	636 113 0752	HOLDER LENS-SG214/J
22	636 114 0911	ASSY,FPC CA1 SV-SG214
23	636 114 0492	SPACER LENS LEFT-SG214
24	636 114 8580	SPACER CA1-SG214/J
25	636 114 1109	SPACER CA1 CN-SG214/J
26	636 115 9661	HEAT SINK RUBBER LEFT-214
27	636 114 0461	SPACER LENS RIGHT-SG214
28	636 113 0462	CABINET TOP-SG214/J VPC-CG9BK,VPC-CG9EXBK,VPC-CG9GXBK, VPC-CG9EX,VPC-CG9
28	636 114 1314	CABINET TOP-SG214/J3 VPC-CG9EXW,VPC-CG9GXW,VPC-CG9GXP, VPC-CG9EXP
29	636 115 5472	SPACER LENS-SG214/J
30	645 096 4305	ASSY,LAMP-SG214 VPC-CG9BK,VPC-CG9EXBK,VPC-CG9GXBK, VPC-CG9EX,VPC-CG9
30	645 096 8846	ASSY,LAMP-SG214/J2 VPC-CG9EXW,VPC-CG9GXW,VPC-CG9GXP, VPC-CG9EXP
31	636 114 1673	SPACER FLASH-SG214/J
32	636 114 1499	COMPL,CABI FRONT-SG214/J VPC-CG9BK,VPC-CG9EXBK,VPC-CG9GXBK, VPC-CG9EX,VPC-CG9
32	636 114 6586	COMPL,CABI FRONT-SG214/J VPC-CG9EXP,VPC-CG9GXP
32	636 114 6579	COMPL,CABI FRONT-SG214/J VPC-CG9EXW,VPC-CG9GXW
33	636 116 9943	SPACER CP1 LENS-SG214/J
101	411 192 4408	SCR S-TPG PAN PCS 1.7X6.0 VPC-CG9BK,VPC-CG9EXBK,VPC-CG9GXBK, VPC-CG9EX,VPC-CG9
101	411 180 1808	SCR S-TPG PAN PCS 1.7X6.0 VPC-CG9EXW,VPC-CG9GXW,VPC-CG9GXP, VPC-CG9EXP
102	411 192 4408	SCR S-TPG PAN PCS 1.7X6.0 VPC-CG9BK,VPC-CG9EXBK,VPC-CG9GXBK, VPC-CG9EX,VPC-CG9
102	411 180 1808	SCR S-TPG PAN PCS 1.7X6.0 VPC-CG9EXW,VPC-CG9GXW,VPC-CG9GXP, VPC-CG9EXP
103	411 177 0906	SCR S-TPG PAN PCS 1.7X3.5
104	411 178 9403	SCR S-TPG PAN PCS 1.7X4.0
105	411 175 5705	SCR PAN PCS 1.7X3
106	411 178 6204	SCR PAN PCS 1.7X4
107	312 060 9504	SPECIAL SCREW-1.7X2.5
108	411 199 0700	SCR TIN 1.7X2
109	411 184 0005	SCR PAN PCS 1.7X2.0
110	411 177 9503	SCR S-TPG PAN PCS 1.7X3
111	411 192 4309	SCR S-TPG PAN PCS 1.7X4.5 VPC-CG9BK,VPC-CG9EXBK,VPC-CG9GXBK, VPC-CG9EX,VPC-CG9
111	411 207 7806	SCR S-TPG PAN PCS 1.7X4.5 VPC-CG9EXW,VPC-CG9GXW,VPC-CG9GXP, VPC-CG9EXP
112	411 194 8305	SCR PAN PCS 1.7X4.5 VPC-CG9BK,VPC-CG9EXBK,VPC-CG9GXBK, VPC-CG9EX,VPC-CG9
112	411 182 4609	SCR PAN PCS 1.7X4.5 VPC-CG9EXW,VPC-CG9GXW,VPC-CG9GXP, VPC-CG9EXP

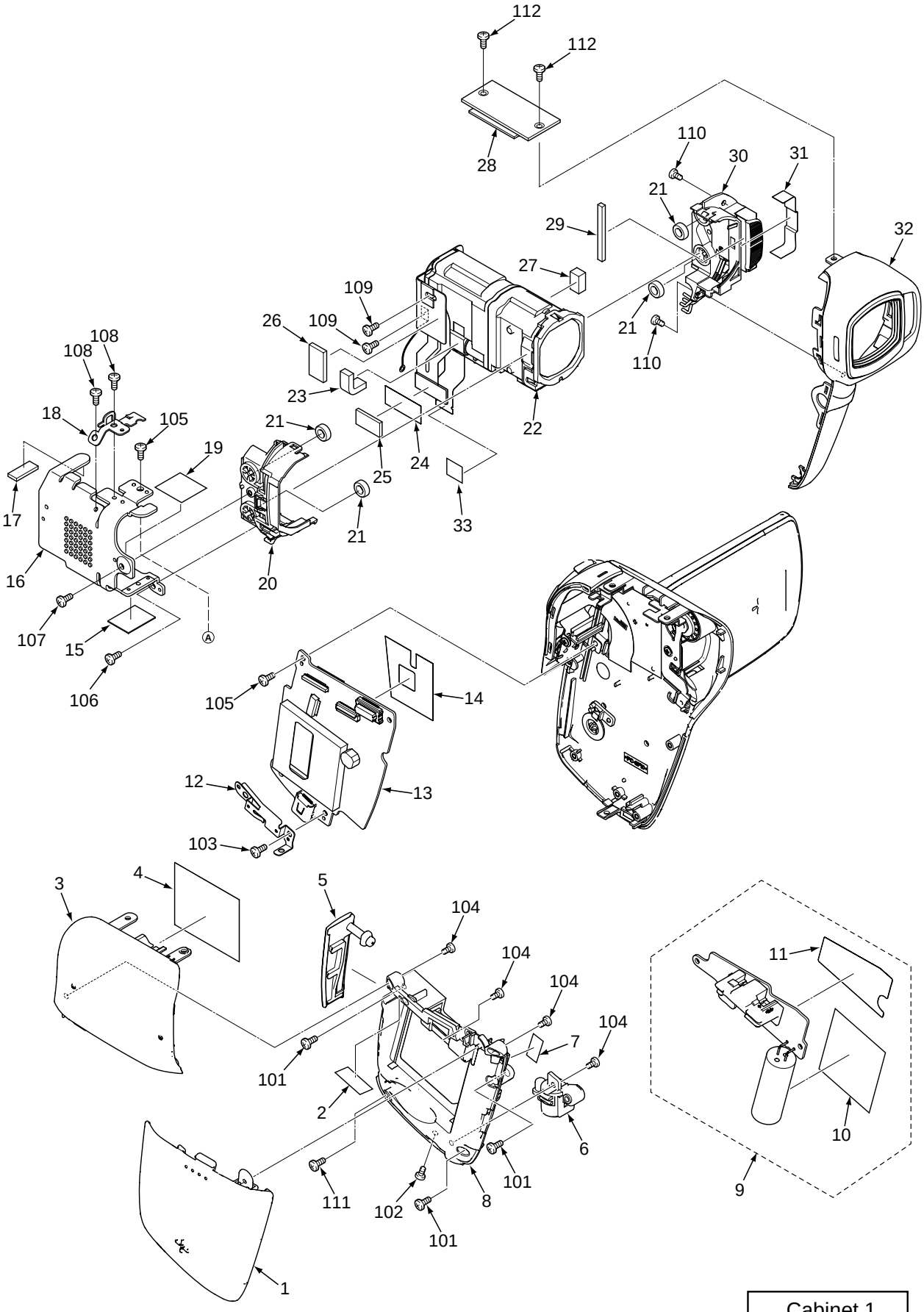

Cabinet 1

SG214/J PARTS LIST 1

CABINET AND CHASSIS PARTS 2

LOCATION	PARTS NO.	DESCRIPTION
1	636 113 0851	HEAT SINK RIGHT-SG214/J
2	636 115 9630	HEAT SINK TAPE RIGHT-214
3	636 116 7574	ASSY,CABI RIGHT SV-214/J VPC-CG9BK,VPC-CG9EXBK,VPC-CG9GXBK
3	636 116 7581	ASSY,CABI RIGHT SV-214/J2 VPC-CG9EXW,VPC-CG9GXW
3	636 116 7604	ASSY,CABI RIGHT SV-214/EX4 VPC-CG9,VPC-CG9EX
3	636 116 7611	ASSY,CABI RIGHT SV-214/GX5 VPC-CG9EXP,VPC-CG9GXP
4	636 113 0424	BUTTON POWER-SG214/J VPC-CG9BK,VPC-CG9EXBK,VPC-CG9EX, VPC-CG9
4	636 114 1178	BUTTON POWER-SG214/J2 VPC-CG9EXW,VPC-CG9GXW,VPC-CG9GXP, VPC-CG9EXP
5	636 114 1116	SPACER SPEAKER-SG214/J
6	645 093 3424	SPEAKER,8
7	636 114 1536	SPACER WIRE-SG214/J
8	636 113 7331	EARTH SPRING RIGHT-SG214
9	636 113 0783	HOLDER JOINT-SG214/J
10	636 113 9656	SPACER JOINT BASE-SG214/J
11	636 115 9623	HEAT SINK TAPE JOINT-214
12	636 114 1093	SPACER UNIT-SG214/J
13	645 096 2851	UNIT,CONTROL-SG214/J VPC-CG9BK,VPC-CG9EXBK,VPC-CG9GXBK, VPC-CG9EX,VPC-CG9
13	645 096 8150	UNIT,CONTROL-SG214/J3 VPC-CG9EXW,VPC-CG9GXW,VPC-CG9GXP, VPC-CG9EXP
14	636 113 0530	COVER JOINT -SG214/J
15	636 105 1545	ASSY,JOINT-SG211/J
16	636 106 6310	ASSY,SHIELD WIRE CP1-VF1
17	636 112 7592	COMPL PWB,TB-1
18	636 113 0509	COVER JOINT INNER-SG214/J
19	636 113 0943	SHIELD VF1-SG214/J
20	636 114 7521	SPACER LCD B-SG214/J
21	645 095 9943	MICROPHONE
22	636 113 0622	HOLDER VF-SG214/J
23	636 112 4775	COMPL PWB,VF-1
24	636 116 5976	SPACER VF-SG214/J
25	636 113 0806	HOLDER MONITOR-SG214/J
26	645 095 7642	LCD(TX06D107TM0AAA)
27	636 114 4629	COVER LCD FRONT-SG214/EX4 VPC-CG9EX,VPC-CG9
27	636 114 4636	COVER LCD FRONT-SG214/GX5 VPC-CG9GXP,VPC-CG9EXP
27	636 113 0646	COVER LCD FRONT-SG214/J VPC-CG9BK,VPC-CG9EXBK,VPC-CG9GXBK
27	636 114 1369	COVER LCD FRONT-SG214/J2 VPC-CG9EXW,VPC-CG9GXW
28	636 099 6991	COVER STAND-SG111/J VPC-CG9BK,VPC-CG9EXBK,VPC-CG9GXBK, VPC-CG9EX,VPC-CG9
28	636 114 1413	COVER STAND-SG214/J2 VPC-CG9EXW,VPC-CG9GXW,VPC-CG9GXP, VPC-CG9EXP
29	636 115 4772	ADHESIVE MAGNET-SG214/J
30	645 096 8129	MAGNET-SG214/J
31	636 115 4789	SPACER LCD A-SG214/J
32	636 114 6715	SPACER LCD C-SG214/J
33	636 113 0653	COVER LCD BACK-SG214/J VPC-CG9BK,VPC-CG9EXBK,VPC-CG9GXBK, VPC-CG9EX,VPC-CG9
33	636 114 1383	COVER LCD BACK-SG214/J2 VPC-CG9EXW,VPC-CG9GXW,VPC-CG9GXP, VPC-CG9EXP
34	636 114 1079	ADHESIVE LCD BACK-SG214/J
35	636 109 3071	SPACER MIC FILTER-SG212/J VPC-CG9BK,VPC-CG9EXBK,VPC-CG9GXBK, VPC-CG9EX,VPC-CG9
35	636 115 5311	SPACER MIC FILTR-SG214/J2 VPC-CG9EXW,VPC-CG9GXW,VPC-CG9GXP, VPC-CG9EXP
36	636 113 0974	SPACER MIC-SG214/J
37	636 114 4643	DEC LCD BACK-SG214/EX4 VPC-CG9EX,VPC-CG9
37	636 114 4650	DEC LCD BACK-SG214/GX5 VPC-CG9GXP,VPC-CG9EXP
37	636 113 0691	DEC LCD BACK-SG214/J VPC-CG9BK,VPC-CG9EXBK,VPC-CG9GXBK
37	636 114 1390	DEC LCD BACK-SG214/J2 VPC-CG9EXW,VPC-CG9GXW
38	636 116 9943	SPACER CP1 LENS-SG214/J
39	636 114 0492	SPACER LENS LEFT-SG214
103	411 177 0906	SCR S-TPG PAN PCS 1.7X3.5
108	411 199 0700	SCR TIN 1.7X2
109	411 184 0005	SCR PAN PCS 1.7X2.0
113	411 177 8100	SCR S-TPG PAN PCS 1.7X2.5
114	312 060 7906	SPECIAL SCREW-1.7X3.0
115	411 199 0809	SCR TIN 1.7X3 VPC-CG9BK,VPC-CG9EXBK,VPC-CG9GXBK, VPC-CG9EX,VPC-CG9
115	411 199 0908	SCR TIN 1.7X3 VPC-CG9EXW,VPC-CG9GXW,VPC-CG9GXP, VPC-CG9EXP
116	411 176 1003	SCR PAN PCS 1.7X2.5

CABINET AND CHASSIS PARTS 2

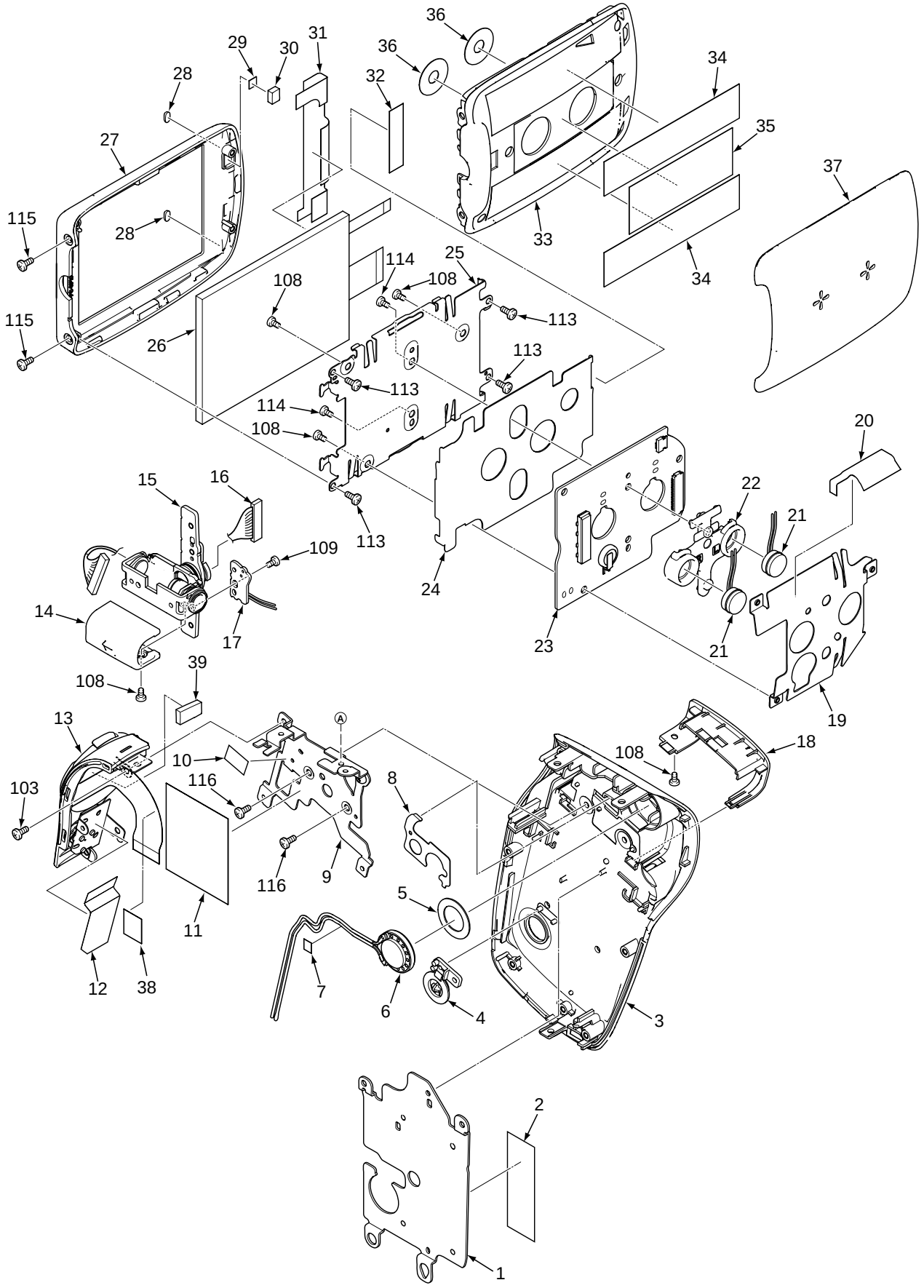

Cabinet 2

SG214/J PARTS LIST 2

ELECTRICAL PARTS

Note:

1. Materials of Capacitors and Resistors are abbreviated as follows ;

Resistors		Capacitors	
MT-FILM	Metallized Film Resistor	MT-POLYEST	Metallized Polyester Capacitor
MT-GLAZE	Metallized Glaze Resistor	MT-COMPO	Metallized Composite Capacitor
OXIDE-MT	Oxide Metallized Film Resistor	TA-SOLID	Tantalum Solid Capacitor
		AL-SOLID	Aluminum Solid Capacitor
		NP-ELECT	Non-Polarized Electrolytic Capacitor
		OS-SOLID	Aluminum Solid Capacitors with Organic Semiconductive Electrolytic Capacitor
		DL-ELECT	Double Layered Electrolytic Capacitor
		POS-SOLID	Polymerized Organic Semiconductor Capacitor

2. Tolerance of Capacitor (10pF over) and Resistor are noted with follow symboles.

F .....1% G .....2% J .....5% K 10%
M .....20% N .....30% Z .....+80% ~ -20%

3. Capacitors

U : µF P : pF

4. Inductors

UH : µH MH : mH

5. N.S.P. : Not available as service parts.

COMPL PWB,CP-1 F/W

636 114 1451

LOCATION	PARTS NO.	DESCRIPTION
	(SEMICONDUCTORS)	
Q1301	305 168 3703	TR DTC144EM
OR	305 216 1200	TR RN1104MFV
OR	305 172 4703	TR UNR32A3
Q1302	405 218 3902	TR UP0431300
OR	305 167 0406	TR EMD12
Q1403	405 218 3902	TR UP0431300
OR	305 167 0406	TR EMD12
Q3001	305 173 4405	TR DTC114TM
OR	305 173 7406	TR UNR32A5
Q3002	305 210 5709	TR UP0KG8D
OR	305 217 3906	TR HN2E07JE
OR	305 200 9007	TR EML17
Q3003	305 183 7700	TR EMH10
Q3004	305 168 4007	TR DTA114EM
OR	305 216 1408	TR RN2102MFV
OR	305 172 4802	TR UNR31A1
Q5003	405 218 4701	TR SSM3J120TU
Q5004	305 181 4909	TR 2SK3541
Q5005	305 184 6009	TR UP03396
Q5007	405 219 2706	TR MCH5835-E
Q5008	305 200 6006	TR UP03397
Q9001	405 220 5604	TR RUM003N02
Q9002	405 220 5604	TR RUM003N02
Q9003	305 168 3703	TR DTC144EM
OR	305 216 1200	TR RN1104MFV
OR	305 172 4703	TR UNR32A3
Q9701	305 184 6009	TR UP03396
	(INTEGRATED CIRCUITS)	
IC101	409 686 1903	IC EV2MA B.G.A. (N.S.P.)
OR	409 692 9702	IC EV2MB B.G.A. (N.S.P.)
IC121	410 641 7601	IC K5W1213LCM-AK75 B.G.A. (N.S.P.)
IC181	309 650 3509	IC TK70630HC-G
IC182	409 689 9609	IC BU7635GUW B.G.A. (N.S.P.)
IC301	410 655 7604	IC LC87F2924BUFL64TBM-E B.G.A. (N.S.P.)
IC302	309 582 6203	IC BD4289FVM
IC303	409 690 2309	IC MRX1518HTA
IC501	410 644 3303	IC UPD168803FC-AN2-A B.G.A. (N.S.P.)
IC502	409 686 6205	IC SC4624MLT
IC503	409 691 1400	IC XC9235A28CE
IC902	409 690 7403	IC TC7SG126FE
IC911	409 690 0909	IC TK70628HC-G
IC913	409 690 0909	IC TK70628HC-G
IC914	409 690 7502	IC TC7SP3125TU
IC951	409 680 0506	IC BU2233GU B.G.A. (N.S.P.)
IC971	309 646 8709	IC AK7331
	(DIODES)	
D5001	307 223 5509	DIODE MA2Z720
D5002	407 259 8106	DIODE RB496KA
D5003	307 248 0701	DIODE MA21D3800
D5301	307 248 0701	DIODE MA21D3800
	(CRYSTAL DEVICES)	
X1102	645 094 0170	OSC,CRYSTAL 48.00000MHZ
X3002	645 080 8708	OSC,CRYSTAL 32.768KHZ
	(INDUCTORS)	
L1001	645 094 0521	IMPEDANCE,33 OHM P
L1002	645 094 0521	IMPEDANCE,33 OHM P
L1003	645 094 0521	IMPEDANCE,33 OHM P
L1301	645 059 7596	IMPEDANCE,90 OHM P
L1302	945 020 1869	INDUCTOR,750 OHM
L1303	945 053 5414	IMPEDANCE,1000 OHM P
L1304	945 053 5414	IMPEDANCE,1000 OHM P
L1801	645 094 0521	IMPEDANCE,33 OHM P
L5002	645 068 7136	INDUCTOR,4.7U N
L5003	645 068 7136	INDUCTOR,4.7U N
L5004	645 086 2007	INDUCTOR,2.0U M
L5005	645 084 1231	INDUCTOR,4.7U N
L5007	645 076 0150	INDUCTOR,6.8U N
L5301	645 091 0043	INDUCTOR,4.7U M
L9001	645 094 0521	IMPEDANCE,33 OHM P
	(VARISTOR)	
VA134	308 050 1207	VARISTOR AVR-M1608C120MT
	(CAPACITORS)	
CB181	403 461 2000	CERAMIC 1U K 16V
CB971	303 392 5500	CERAMIC 1U K 6.3V
C1001	303 276 1307	CERAMIC 1000P K 50V
C1005	303 384 6409	CERAMIC 4.7U K 6.3V
C1006	303 338 0309	CERAMIC 0.1U K 10V
C1007	303 384 6409	CERAMIC 4.7U K 6.3V
C1009	303 381 8109	CERAMIC 1U K 6.3V
C1010	303 338 0309	CERAMIC 0.1U K 10V
C1011	303 384 6409	CERAMIC 4.7U K 6.3V
C1012	303 384 6409	CERAMIC 4.7U K 6.3V
C1013	303 338 0309	CERAMIC 0.1U K 10V
C1014	303 338 0309	CERAMIC 0.1U K 10V
C1015	303 338 0309	CERAMIC 0.1U K 10V
C1047	303 384 6409	CERAMIC 4.7U K 6.3V
C1048	303 384 6409	CERAMIC 4.7U K 6.3V
C1051	303 338 0309	CERAMIC 0.1U K 10V
C1052	303 338 0309	CERAMIC 0.1U K 10V
C1053	303 338 0309	CERAMIC 0.1U K 10V
C1054	303 338 0309	CERAMIC 0.1U K 10V
C1055	303 338 0309	CERAMIC 0.1U K 10V
C1056	303 338 0309	CERAMIC 0.1U K 10V
C1057	303 338 0309	CERAMIC 0.1U K 10V
C1058	303 338 0309	CERAMIC 0.1U K 10V
C1063	303 338 0309	CERAMIC 0.1U K 10V
C1064	303 338 0309	CERAMIC 0.1U K 10V
C1065	303 338 0309	CERAMIC 0.1U K 10V

LOCATION	PARTS NO.	DESCRIPTION
C1066	303 338 0309	CERAMIC 0.1U K 10V
C1067	303 338 0309	CERAMIC 0.1U K 10V
C1068	303 338 0309	CERAMIC 0.1U K 10V
C1121	303 314 6400	CERAMIC 7P D 50V
C1122	303 314 6400	CERAMIC 7P D 50V
C1203	303 338 0309	CERAMIC 0.1U K 10V
C1205	303 338 0309	CERAMIC 0.1U K 10V
C1206	303 338 0309	CERAMIC 0.1U K 10V
C1207	303 384 6409	CERAMIC 4.7U K 6.3V
C1209	303 338 0309	CERAMIC 0.1U K 10V
C1304	303 433 1102	CERAMIC 1U K 10V
C1801	303 381 8109	CERAMIC 1U K 6.3V
C1802	303 320 0607	CERAMIC 220P J 25V
C1803	303 381 8109	CERAMIC 1U K 6.3V
C1804	303 381 8109	CERAMIC 1U K 6.3V
C1805	303 381 8109	CERAMIC 1U K 6.3V
C1806	303 381 8109	CERAMIC 1U K 6.3V
C1807	303 381 8109	CERAMIC 1U K 6.3V
C1810	303 384 6409	CERAMIC 4.7U K 6.3V
C1811	303 384 6409	CERAMIC 4.7U K 6.3V
C1812	303 381 8109	CERAMIC 1U K 6.3V
C1813	303 338 0309	CERAMIC 0.1U K 10V
C1814	303 381 8109	CERAMIC 1U K 6.3V
C1815	303 320 0607	CERAMIC 220P J 25V
C1816	303 381 8109	CERAMIC 1U K 6.3V
C1818	303 338 0309	CERAMIC 0.1U K 10V
C3001	303 391 0506	CERAMIC 10U K 6.3V
C3003	303 338 0309	CERAMIC 0.1U K 10V
C3004	303 338 0309	CERAMIC 0.1U K 10V
C3005	303 338 0309	CERAMIC 0.1U K 10V
C3006	303 381 8109	CERAMIC 1U K 6.3V
C3007	303 381 8109	CERAMIC 1U K 6.3V
C3008	303 276 1901	CERAMIC 22P J 50V
C3009	303 381 8109	CERAMIC 1U K 6.3V
C3011	303 338 0309	CERAMIC 0.1U K 10V
C3012	303 433 1102	CERAMIC 1U K 10V
C3013	303 381 8109	CERAMIC 1U K 6.3V
C3014	303 317 2300	CERAMIC 20P J 50V
C5001	303 338 0309	CERAMIC 0.1U K 10V
C5003	303 384 6409	CERAMIC 4.7U K 6.3V
C5004	303 320 0607	CERAMIC 220P J 25V
C5005	303 433 1102	CERAMIC 1U K 10V
C5006	303 338 0309	CERAMIC 0.1U K 10V
C5007	303 383 5007	CERAMIC 1U K 16V
C5009	303 381 8109	CERAMIC 1U K 6.3V
C5021	303 393 2607	CERAMIC 22U M 6.3V
C5024	303 276 1901	CERAMIC 22P J 50V
C5031	303 393 2607	CERAMIC 22U M 6.3V
C5032	303 279 5104	CERAMIC 3300P K 50V
C5033	303 381 8109	CERAMIC 1U K 6.3V
C5036	303 376 9401	CERAMIC 1U K 6.3V
C5037	303 381 8109	CERAMIC 1U K 6.3V
C5064	303 376 9401	CERAMIC 1U K 6.3V
C5071	303 408 5500	CERAMIC 2.2U K 16V
C5072	303 383 5007	CERAMIC 1U K 16V
C5073	303 276 1000	CERAMIC 0.01U K 16V
C5074	303 376 9401	CERAMIC 1U K 6.3V
C5101	303 393 2607	CERAMIC 22U M 6.3V
C5102	303 393 2607	CERAMIC 22U M 6.3V
C5105	303 338 0309	CERAMIC 0.1U K 10V
C5106	303 344 0409	CERAMIC 0.033U K 10V
C5107	303 338 0309	CERAMIC 0.1U K 10V
C5108	303 320 0706	CERAMIC 270P J 25V
C5109	303 308 3408	CERAMIC 390P K 50V
C5110	303 276 2106	CERAMIC 3P C 50V
C5111	303 384 6409	CERAMIC 4.7U K 6.3V
C5112	303 384 6508	CERAMIC 10U K 6.3V
C5301	303 384 6508	CERAMIC 10U K 6.3V
C5302	303 381 6204	POS-SOLID 33U M 8V
C5303	303 294 6100	CERAMIC 100P J 50V
C9004	303 338 0309	CERAMIC 0.1U K 10V
C9005	303 433 1102	CERAMIC 1U K 10V
C9006	303 376 9401	CERAMIC 1U K 6.3V
C9007	303 380 6601	CERAMIC 0.22U K 6.3V
C9008	303 433 1102	CERAMIC 1U K 10V
C9009	303 419 8903	CERAMIC 10U M 6.3V
C9010	303 294 6100	CERAMIC 100P J 50V

LOCATION	PARTS NO.	DESCRIPTION
C9011	303 294 6100	CERAMIC 100P J 50V
C9012	303 338 0309	CERAMIC 0.1U K 10V
C9013	303 338 0309	CERAMIC 0.1U K 10V
C9014	303 338 0309	CERAMIC 0.1U K 10V
C9015	303 338 0309	CERAMIC 0.1U K 10V
C9016	303 338 0309	CERAMIC 0.1U K 10V
C9017	303 338 0309	CERAMIC 0.1U K 10V
C9019	303 338 0309	CERAMIC 0.1U K 10V
C9501	303 338 0309	CERAMIC 0.1U K 10V
C9506	303 381 6907	CERAMIC 0.22U K 25V
C9507	303 338 0309	CERAMIC 0.1U K 10V
C9509	303 338 0309	CERAMIC 0.1U K 10V
C9510	303 338 0309	CERAMIC 0.1U K 10V
C9701	303 433 1102	CERAMIC 1U K 10V
C9702	303 338 0309	CERAMIC 0.1U K 10V
C9703	303 338 0309	CERAMIC 0.1U K 10V
C9704	303 279 5005	CERAMIC 4700P K 25V
C9705	303 282 5108	CERAMIC 470P K 50V
C9706	303 276 1307	CERAMIC 1000P K 50V
C9707	303 338 0309	CERAMIC 0.1U K 10V
C9708	303 338 0309	CERAMIC 0.1U K 10V
C9710	303 381 8109	CERAMIC 1U K 6.3V
C9712	303 294 6100	CERAMIC 100P J 50V
	(RESISTOR PACKS)	
RB101	945 028 0710	R-NETWORK 10KX4 1/16W
RB103	945 037 0831	R-NETWORK 47X4 1/16W
RB104	945 037 0831	R-NETWORK 47X4 1/16W
RB116	945 037 4372	R-NETWORK 220X4 1/16W
RB141	945 028 0697	R-NETWORK 100X4 1/16W
RB142	945 028 0710	R-NETWORK 10KX4 1/16W
RB143	945 028 0710	R-NETWORK 10KX4 1/16W
RB180	645 078 4224	R-NETWORK 0X2 0.063W
RB302	945 042 8204	R-NETWORK 33KX4 1/32W
RB303	945 028 0703	R-NETWORK 1KX4 1/16W
RB304	945 028 0703	R-NETWORK 1KX4 1/16W
RB305	945 028 0703	R-NETWORK 1KX4 1/16W
RB306	945 028 0727	R-NETWORK 100KX4 1/16W
RB311	645 068 6405	R-NETWORK 150KX2 1/16W
RB312	645 078 4620	R-NETWORK 22KX2 0.063W
RB313	945 028 0703	R-NETWORK 1KX4 1/16W
RB901	945 037 0817	R-NETWORK 0X4 1/16W
RB902	945 037 0817	R-NETWORK 0X4 1/16W
RB903	945 037 0817	R-NETWORK 0X4 1/16W
RB951	645 078 4606	R-NETWORK 220X2 0.063W
RB952	645 078 4903	R-NETWORK 39KX2 0.063W
RB972	945 042 8204	R-NETWORK 33KX4 1/32W
	(RESISTORS)	
R1001	301 299 1205	MT-GLAZE 82 DD 1/16W
R1002	301 237 2905	MT-GLAZE 51 JA 1/16W
R1003	301 105 7902	MT-GLAZE 0.000 ZA 1/16W
R1004	301 224 9009	MT-GLAZE 10K JA 1/16W
R1005	301 225 1200	MT-GLAZE 4.7K JA 1/16W
R1008	301 224 9009	MT-GLAZE 10K JA 1/16W
R1009	301 226 1506	MT-GLAZE 0.000 ZA 1/16W
R1010	301 105 7902	MT-GLAZE 0.000 ZA 1/16W
R1011	301 105 7902	MT-GLAZE 0.000 ZA 1/16W
R1012	301 225 1200	MT-GLAZE 4.7K JA 1/16W
R1013	301 226 1506	MT-GLAZE 0.000 ZA 1/16W
R1014	301 226 1506	MT-GLAZE 0.000 ZA 1/16W
R1015	301 226 1506	MT-GLAZE 0.000 ZA 1/16W
R1018	301 224 9009	MT-GLAZE 10K JA 1/16W
R1019	301 224 9009	MT-GLAZE 10K JA 1/16W
R1020	301 224 9009	MT-GLAZE 10K JA 1/16W
R1022	301 224 8804	MT-GLAZE 100 JA 1/16W
R1027	301 224 8804	MT-GLAZE 100 JA 1/16W
R1028	301 224 9306	MT-GLAZE 1K JA 1/16W
R1032	301 224 9009	MT-GLAZE 10K JA 1/16W
R1033	301 224 9306	MT-GLAZE 1K JA 1/16W
R1039	301 224 9009	MT-GLAZE 10K JA 1/16W
R1041	301 275 1908	MT-GLAZE 2K DC 1/16W
R1051	301 224 8804	MT-GLAZE 100 JA 1/16W
R1052	301 224 8804	MT-GLAZE 100 JA 1/16W
R1053	301 262 2505	MT-GLAZE 68 DD 1/16W
R1056	301 225 7905	MT-GLAZE 220 JA 1/16W
R1090	401 343 5903	MT-GLAZE 3.4K DC 1/16W
R1104	301 226 1506	MT-GLAZE 0.000 ZA 1/16W
R1121	301 262 2307	MT-GLAZE 1.0K DC 1/16W

LOCATION	PARTS NO.	DESCRIPTION
R1122	301 224 9405	MT-GLAZE 1.0M JA 1/16W
R1256	301 224 8804	MT-GLAZE 100 JA 1/16W
R1301	301 261 1707	MT-GLAZE 510 JA 1/16W
R1352	301 224 9009	MT-GLAZE 10K JA 1/16W
R1401	301 224 8804	MT-GLAZE 100 JA 1/16W
R1801	301 226 1506	MT-GLAZE 0.000 ZA 1/16W
R1802	301 226 1506	MT-GLAZE 0.000 ZA 1/16W
R1803	301 224 8804	MT-GLAZE 100 JA 1/16W
R1804	301 226 1506	MT-GLAZE 0.000 ZA 1/16W
R1807	301 226 1506	MT-GLAZE 0.000 ZA 1/16W
R1808	301 226 1506	MT-GLAZE 0.000 ZA 1/16W
R1809	301 226 1506	MT-GLAZE 0.000 ZA 1/16W
R1810	301 226 1506	MT-GLAZE 0.000 ZA 1/16W
R1811	301 226 1506	MT-GLAZE 0.000 ZA 1/16W
R1812	301 277 5409	MT-GLAZE 75 DD 1/16W
R1813	301 224 8903	MT-GLAZE 100K JA 1/16W
R1814	301 225 8100	MT-GLAZE 10 JA 1/16W
R1815	301 224 8903	MT-GLAZE 100K JA 1/16W
R1816	301 226 2404	MT-GLAZE 560 JA 1/16W
R1817	301 226 2404	MT-GLAZE 560 JA 1/16W
R3001	301 263 2306	MT-GLAZE 750 JA 1/16W
R3002	301 225 8001	MT-GLAZE 330 JA 1/16W
R3003	301 224 9306	MT-GLAZE 1K JA 1/16W
R3005	301 225 7905	MT-GLAZE 220 JA 1/16W
R3006	301 224 9009	MT-GLAZE 10K JA 1/16W
R3007	301 225 0401	MT-GLAZE 330K JA 1/16W
R3010	301 224 9306	MT-GLAZE 1K JA 1/16W
R3011	301 262 0600	MT-GLAZE 22K DC 1/16W
R3012	301 225 1408	MT-GLAZE 47K JA 1/16W
R3013	301 225 1408	MT-GLAZE 47K JA 1/16W
R5001	301 262 8705	MT-GLAZE 910 DC 1/16W
R5002	301 226 1506	MT-GLAZE 0.000 ZA 1/16W
R5008	301 226 1506	MT-GLAZE 0.000 ZA 1/16W
R5013	301 226 1506	MT-GLAZE 0.000 ZA 1/16W
R5021	301 258 7101	MT-GLAZE 180K DC 1/16W
R5022	301 257 4002	MT-GLAZE 68K DC 1/16W
R5023	301 258 6708	MT-GLAZE 12K DC 1/16W
R5024	301 226 1506	MT-GLAZE 0.000 ZA 1/16W
R5031	301 262 0907	MT-GLAZE 27K DC 1/16W
R5032	301 258 6906	MT-GLAZE 20K DC 1/16W
R5033	301 262 5209	MT-GLAZE 1.5K DC 1/16W
R5034	301 226 1506	MT-GLAZE 0.000 ZA 1/16W
R5042	301 224 8903	MT-GLAZE 100K JA 1/16W
R5043	301 224 8804	MT-GLAZE 100 JA 1/16W
R5044	301 224 9009	MT-GLAZE 10K JA 1/16W
R5045	301 225 0104	MT-GLAZE 27K JA 1/16W
R5046	301 224 8903	MT-GLAZE 100K JA 1/16W
R5049	301 225 3808	MT-GLAZE 1.5K JA 1/16W
R5070	301 225 0203	MT-GLAZE 3.3K JA 1/16W
R5071	301 240 9601	MT-GLAZE 680K JA 1/16W
R5072	301 225 1408	MT-GLAZE 47K JA 1/16W
R5074	301 224 8903	MT-GLAZE 100K JA 1/16W
R5075	301 258 6807	MT-GLAZE 15K DC 1/16W
R5076	301 275 6101	MT-GLAZE 18 DD 1/16W
R5101	301 275 2004	MT-GLAZE 30K DC 1/16W
R5102	301 274 9707	MT-GLAZE 24K DC 1/16W
R5103	301 263 1903	MT-GLAZE 3.3K DC 1/16W
R5104	301 262 1300	MT-GLAZE 2.4K DC 1/16W
R5105	301 225 1408	MT-GLAZE 47K JA 1/16W
R5106	301 262 8804	MT-GLAZE 51K DC 1/16W
R5107	301 274 9707	MT-GLAZE 24K DC 1/16W
R5108	301 225 8100	MT-GLAZE 10 JA 1/16W
R5109	301 258 6906	MT-GLAZE 20K DC 1/16W
R5111	301 224 8903	MT-GLAZE 100K JA 1/16W
R5113	301 224 9306	MT-GLAZE 1K JA 1/16W
R5301	301 258 7101	MT-GLAZE 180K DC 1/16W
R5302	301 290 2409	MT-GLAZE 43K DC 1/16W
R5303	301 275 1908	MT-GLAZE 2K DC 1/16W
R5304	301 262 0600	MT-GLAZE 22K DC 1/16W
R5305	301 226 1506	MT-GLAZE 0.000 ZA 1/16W
R9001	301 226 1506	MT-GLAZE 0.000 ZA 1/16W
R9002	301 224 9009	MT-GLAZE 10K JA 1/16W
R9004	301 226 1506	MT-GLAZE 0.000 ZA 1/16W
R9005	301 226 1506	MT-GLAZE 0.000 ZA 1/16W
R9006	301 226 1506	MT-GLAZE 0.000 ZA 1/16W
R9007	301 224 8804	MT-GLAZE 100 JA 1/16W
R9010	301 226 1506	MT-GLAZE 0.000 ZA 1/16W
R9012	301 226 1506	MT-GLAZE 0.000 ZA 1/16W
R9014	301 226 1506	MT-GLAZE 0.000 ZA 1/16W
R9015	301 224 9702	MT-GLAZE 22 JA 1/16W
R9016	301 225 3808	MT-GLAZE 1.5K JA 1/16W
R9017	301 224 9702	MT-GLAZE 22 JA 1/16W
R9018	301 225 3808	MT-GLAZE 1.5K JA 1/16W
R9026	301 226 1506	MT-GLAZE 0.000 ZA 1/16W
R9027	301 226 1506	MT-GLAZE 0.000 ZA 1/16W
R9029	301 246 2101	MT-GLAZE 51K JA 1/16W
R9030	301 225 1200	MT-GLAZE 4.7K JA 1/16W
R9501	301 340 6708	MT-GLAZE 0.68 FE 1/10W
R9506	301 341 9005	MT-GLAZE 5.1 FE 1/10W
R9507	301 341 9005	MT-GLAZE 5.1 FE 1/10W
R9509	301 257 4101	MT-GLAZE 100K DC 1/16W
R9702	301 262 2307	MT-GLAZE 1.0K DC 1/16W
R9703	301 262 1607	MT-GLAZE 2.2K DC 1/16W
R9704	301 262 1904	MT-GLAZE 6.8K DC 1/16W
R9705	301 257 4101	MT-GLAZE 100K DC 1/16W
R9706	301 257 4101	MT-GLAZE 100K DC 1/16W
R9707	301 257 4101	MT-GLAZE 100K DC 1/16W
R9708	301 224 9504	MT-GLAZE 2.2K JA 1/16W
R9709	301 225 0500	MT-GLAZE 33K JA 1/16W
	(THERMISTOR)	
TH301	308 054 7700	TH NCP15WF104F03-RC
	(SWITCH)	
S3001	645 045 2857	SWITCH,PUSH
	(FUSES)	
F5001 ⚠	323 031 5609	FUSE 32V 2A
F5002 ⚠	323 031 5609	FUSE 32V 2A
F5003 ⚠	423 033 6205	FUSE 32V 1.6A
	(CONNECTORS)	
CN105	645 093 7026	SOCKET,PWB-WIRE 3 (N.S.P)
CN106	645 092 8284	PLUG,PWB-PWB 34P (N.S.P)
CN110	645 086 0638	SOCKET,10P (N.S.P)
CN141	645 092 8185	SOCKET,CARD(SD)12 (N.S.P)
CN301	645 069 5193	SOCKET,FPC 20P (N.S.P)
CN901	645 092 7836	PLUG,PWB-PWB 44P (N.S.P)
CN951	645 095 5433	SOCKET,FPC 27P (N.S.P)

COMPL PWB,TB-1

636 112 7592

	(SWITCH)	
S6501	645 092 3166	SWITCH,PUSH 1P-1TX1

COMPL PWB,VF-1

636 112 4775

	(RECHARGEABLE BATTERY)	
Z6301 ⚠	945 051 6000	BATTERY,RECHARGE
	(DIODES)	
D1701	307 244 0606	DIODE HSC226-E
D1702	307 244 0606	DIODE HSC226-E
D1703	307 244 0606	DIODE HSC226-E
	(CAPACITORS)	
CB171	403 467 3704	CERAMIC 1U K 6.3V
CB172	403 467 3704	CERAMIC 1U K 6.3V
CB173	403 467 3704	CERAMIC 1U K 6.3V
CB174	403 467 3803	CERAMIC 1U K 10V
CB175	403 467 3803	CERAMIC 1U K 10V
C1701	303 397 7608	CERAMIC 1U K 25V
C1702	303 397 7608	CERAMIC 1U K 25V
C1705	303 397 7608	CERAMIC 1U K 25V
C1706	303 433 1102	CERAMIC 1U K 10V
C1709	303 384 6409	CERAMIC 4.7U K 6.3V
C1717	303 433 1102	CERAMIC 1U K 10V
C1718	303 384 6409	CERAMIC 4.7U K 6.3V
C1866	303 384 6409	CERAMIC 4.7U K 6.3V
C1867	303 384 6409	CERAMIC 4.7U K 6.3V
C1868	303 384 6409	CERAMIC 4.7U K 6.3V
C1871	303 381 8109	CERAMIC 1U K 6.3V
C1872	303 381 8109	CERAMIC 1U K 6.3V
	(RESISTOR PACKS)	
RB171	945 037 0817	R-NETWORK 0X4 1/16W

LOCATION	PARTS NO.	DESCRIPTION
	(RESISTORS)	
R1701	301 226 1506	MT-GLAZE 0.000 ZA 1/16W
R1867	301 301 3500	MT-GLAZE 200 JA 1/16W
R1868	301 263 6908	MT-GLAZE 2K JA 1/16W
R1869	301 263 6908	MT-GLAZE 2K JA 1/16W
R1870	301 301 3500	MT-GLAZE 200 JA 1/16W
R1871	301 226 1506	MT-GLAZE 0.000 ZA 1/16W
R1872	301 226 1506	MT-GLAZE 0.000 ZA 1/16W
R1873	301 226 1506	MT-GLAZE 0.000 ZA 1/16W
	(CONNECTORS)	
CN171	645 095 4108	SOCKET,FPC 41P (N.S.P)
CN172	645 084 3099	SOCKET,FPC 4P (N.S.P)
CN173	645 093 7033	SOCKET,PWB-WIRE 3(N.S.P)

COMPL PWB,ST-1

636 112 4768

	(SEMICONDUCTOR)	
Q5402	406 021 5107	TR TIG032TS-S-TL-E
	(INTEGRATED CIRCUIT)	
IC541	409 684 3800	IC BD4218NUV
	(DIODES)	
D5401	307 247 4007	DIODE RR255M-400
D5402	407 255 9305	DIODE FV02R80
D5404	407 261 2802	DIODE RB521S-30FJ
OR	307 205 5206	DIODE RB521S-30
OR	307 221 4108	DIODE MA2SD19
	(TRANSFORMER)	
T5401	645 094 8725	TRANS,STEP UP
	(CAPACITORS)	
C5401	303 393 2607	CERAMIC 22U M 6.3V
C5410	303 428 3401	CERAMIC 0.018U K 350V
C5411	303 428 3609	CERAMIC 0.01U K 350V
C5412	404 117 5703	ELECT 60U A 300V
C5431	303 381 8109	CERAMIC 1U K 6.3V
C5432	303 381 8109	CERAMIC 1U K 6.3V
C5433	303 276 1307	CERAMIC 1000P K 50V
C5434	303 276 1307	CERAMIC 1000P K 50V
C5435	303 276 3103	CERAMIC 33P J 50V
	(RESISTORS)	
R5402	302 106 1609	MT-GLAZE 100K JD 1/8W
R5422	302 106 1708	MT-GLAZE 220K JD 1/8W
R5424	301 224 9009	MT-GLAZE 10K JA 1/16W
R5425	301 225 1804	MT-GLAZE 47 JA 1/16W
R5431	301 224 8804	MT-GLAZE 100 JA 1/16W
R5432	301 224 9009	MT-GLAZE 10K JA 1/16W
R5433	301 260 5300	MT-GLAZE 6.2K JA 1/16W
R5434	301 259 7902	MT-GLAZE 5.1K JA 1/16W
R5435	301 224 8804	MT-GLAZE 100 JA 1/16W
R5436	301 224 9306	MT-GLAZE 1K JA 1/16W
R5437	301 224 9306	MT-GLAZE 1K JA 1/16W
R5438	301 224 9306	MT-GLAZE 1K JA 1/16W
	(FUSE)	
F5004 ⚠	323 031 5609	FUSE 32V 2A
	(CONNECTOR)	
CN541	645 095 9622	SOCKET,PWB-PWB 34(N.S.P)
	(MISCELLANEOUS)	
	636 109 2951	SPACER MAIN CON-SG212/J
	636 113 0981	SPACER CP1 ST-SG214/J
	636 113 0738	HOLDER TERMINAL-SG214/J
	636 113 0950	TERMINAL BATT-SG214/J
	411 174 1708	SCR S-TPG PAN PCS 1.7X3.5
	636 112 9879	ASSY,WIRE VF1&TB1-SG214 (N.S.P.)
	636 113 1810	ASSY,WIRE VF1&TB1-SG214 (N.S.P.)

SANYO Electric Co., Ltd.
Osaka, Japan

Mar./'08 Printed in Japan