# Bristol ControlWave Express (Remote Terminal Unit)

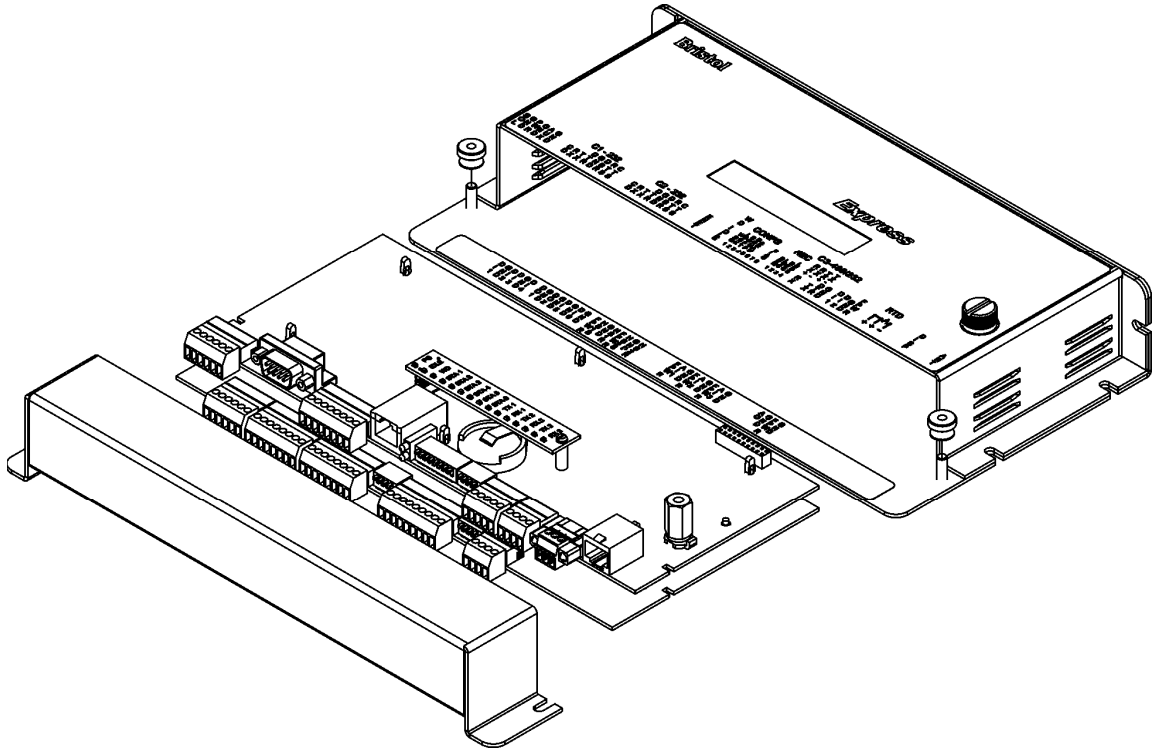


ControlWave

## IMPORTANT! READ INSTRUCTIONS BEFORE STARTING!

Be sure that these instructions are carefully read and understood before any operation is attempted. Improper use of this device in some applications may result in damage or injury. The user is urged to keep this book filed in a convenient location for future reference.

These instructions may not cover all details or variations in equipment or cover every possible situation to be met in connection with installation, operation or maintenance. Should problems arise that are not covered sufficiently in the text, the purchaser is advised to contact Emerson Process Management, Remote Automation Solutions division (RAS) for further information.

## EQUIPMENT APPLICATION WARNING

The customer should note that a failure of this instrument or system, for whatever reason, may leave an operating process without protection. Depending upon the application, this could result in possible damage to property or injury to persons. It is suggested that the purchaser review the need for additional backup equipment or provide alternate means of protection such as alarm devices, output limiting, fail-safe valves, relief valves, emergency shutoffs, emergency switches, etc. If additional information is required, the purchaser is advised to contact RAS.

## RETURNED EQUIPMENT WARNING

When returning any equipment to RAS for repairs or evaluation, please note the following: The party sending such materials is responsible to ensure that the materials returned to RAS are clean to safe levels, as such levels are defined and/or determined by applicable federal, state and/or local law regulations or codes. Such party agrees to indemnify RAS and save RAS harmless from any liability or damage which RAS may incur or suffer due to such party's failure to so act.

## ELECTRICAL GROUNDING

Metal enclosures and exposed metal parts of electrical instruments must be grounded in accordance with OSHA rules and regulations pertaining to "Design Safety Standards for Electrical Systems," 29 CFR, Part 1910, Subpart S, dated: April 16, 1981 (OSHA rulings are in agreement with the National Electrical Code).

The grounding requirement is also applicable to mechanical or pneumatic instruments that include electrically operated devices such as lights, switches, relays, alarms, or chart drives.

## EQUIPMENT DAMAGE FROM ELECTROSTATIC DISCHARGE VOLTAGE

This product contains sensitive electronic components that can be damaged by exposure to an electrostatic discharge (ESD) voltage. Depending on the magnitude and duration of the ESD, this can result in erratic operation or complete failure of the equipment. Read supplemental document S14006 at the back of this manual for proper care and handling of ESD-sensitive components.

**Remote Automation Solutions**
A Division of Emerson Process Management
1100 Buckingham Street, Watertown, CT 06795
Telephone (860) 945-2200

**Click here to return to Table of Contents**

## WARRANTY

A. Remote Automation Solutions (RAS) warrants that goods described herein and manufactured by RAS are free from defects in material and workmanship for one year from the date of shipment unless otherwise agreed to by RAS in writing.

B. RAS warrants that goods repaired by it pursuant to the warranty are free from defects in material and workmanship for a period to the end of the original warranty or ninety (90) days from the date of delivery of repaired goods, whichever is longer.

C. Warranties on goods sold by, but not manufactured by RAS are expressly limited to the terms of the warranties given by the manufacturer of such goods.

D. All warranties are terminated in the event that the goods or systems or any part thereof are (i) misused, abused or otherwise damaged, (ii) repaired, altered or modified without RAS consent, (iii) not installed, maintained and operated in strict compliance with instructions furnished by RAS or (iv) worn, injured or damaged from abnormal or abusive use in service time.

E. These warranties are expressly in lieu of all other warranties express or implied (including without limitation warranties as to merchantability and fitness for a particular purpose), and no warranties, express or implied, nor any representations, promises, or statements have been made by RAS unless endorsed herein in writing. Further, there are no warranties which extend beyond the description of the face hereof.

F. No agent of RAS is authorized to assume any liability for it or to make any written or oral warranties beyond those set forth herein.

## REMEDIES

A. Buyer's sole remedy for breach of any warranty is limited exclusively to repair or replacement without cost to Buyer of any goods or parts found by Seller to be defective if Buyer notifies RAS in writing of the alleged defect within ten (10) days of discovery of the alleged defect and within the warranty period stated above, and if the Buyer returns such goods to the RAS Watertown office, unless the RAS Watertown office designates a different location, transportation prepaid, within thirty (30) days of the sending of such notification and which upon examination by RAS proves to be defective in material and workmanship. RAS is not responsible for any costs of removal, dismantling or reinstallation of allegedly defective or defective goods. If a Buyer does not wish to ship the product back to RAS, the Buyer can arrange to have a RAS service person come to the site. The Service person's transportation time and expenses will be for the account of the Buyer. However, labor for warranty work during normal working hours is not chargeable.

B. Under no circumstances will RAS be liable for incidental or consequential damages resulting from breach of any agreement relating to items included in this quotation from use of the information herein or from the purchase or use by Buyer, its employees or other parties of goods sold under said agreement.

**Click here to return to Table of Contents**

**How to return material for Repair or Exchange**

Before a product can be returned to Remote Automation Solutions (RAS) for repair, upgrade, exchange, or to verify proper operation, Form (GBU 13.01) must be completed in order to obtain a RA (Return Authorization) number and thus ensure an optimal lead time. Completing the form is very important since the information permits the RAS Watertown Repair Dept. to effectively and efficiently process the repair order.

You can easily obtain a RA number by:

**A. FAX**
Completing the form (GBU 13.01) and faxing it to (860) 945-2220. A RAS Repair Dept. representative will return the call (or other requested method) with a RA number.

**B. E-MAIL**
Accessing the form (GBU 13.01) via the RAS Web site (www.emersonprocess.com/Bristol) and sending it via E-Mail to Custserve.bristol@emersonprocess.com . A RAS Repair Dept. representative will return E-Mail (or other requested method) with a RA number.

**C. Mail**
Mail the form (GBU 13.01) to

**Remote Automation Solutions**
**A Division of Emerson Process Management**
Repair Dept.
1100 Buckingham Street
Watertown, CT 06795

A RAS Repair Dept. representative will return call (or other requested method) with a RA number.

**D. Phone**
Calling the RAS Repair Department at (860) 945-2442. A RAS Repair Department representative will record a RA number on the form and complete Part I, send the form to the Customer via fax (or other requested method) for Customer completion of Parts II & III.

A copy of the completed Repair Authorization Form with issued RA number should be included with the product being returned. This will allow us to quickly track, repair, and return your product to you.

**Click here to return to Table of Contents**

EMERSON
Process Management

# Remote Automation Solutions (RAS)

## Repair Authorization Form (on-line completion)

(Providing this information will permit Bristol, also doing business as Remote Automation Solutions (RAS) to effectively and efficiently process your return. Completion is required to receive optimal lead time. Lack of information may result in increased lead times.)

**Date** **RA #** **SH** **Line No.**

**Standard Repair Practice is as follows:** Variations to this is practice may be requested in the "Special Requests" section.

- Evaluate / Test / Verify Discrepancy
- Repair / Replace / etc. in accordance with this form
- Return to Customer

**Please be aware of the Non warranty standard charge:**

- There is a $100 minimum evaluation charge, which is applied to the repair if applicable (√ in "returned" B,C, or D of part III below)

**Part I** **Please complete the following information for single unit or multiple unit returns**

**Address No. _____** **(office use only)**

**Bill to :** **Ship to:**

**Purchase Order:** **Contact Name:**

**Phone:** **Fax:** **E-Mail:**

**Part II** **Please complete Parts II & III for each unit returned**

**Model No./Part No.** **Description:**

**Range/Calibration:** **S/N:**

**Reason for return** : ☐ Failure ☐ Upgrade ☐ Verify Operation ☐ Other

1. Describe the conditions of the failure (Frequency/Intermittent, Physical Damage, Environmental Conditions, Communication, CPU watchdog, etc.) (Attach a separate sheet if necessary)
2. Comm. interface used: ☐ Standalone ☐ RS-485 ☐ Ethernet ☐ Modem (PLM (2W or 4W) or SNW) ☐Other:
3. What is the **Firmware** revision? What is the **Software** & version?

**Part III** **If checking "replaced" for any question below, check an alternate option if replacement is not available**

A. If product is within the warranty time period but is excluded due to the terms of warranty,, would you like the product: ☐ repaired ☐ returned ☐ replaced ☐ scrapped?

B. If product were found to exceed the warranty period, would you like the product: ☐repaired ☐ returned ☐ replaced ☐ scrapped?

C. If product is deemed not repairable would you like your product: ☐ returned ☐ replaced ☐ scrapped?

D. If RAS is unable to verify the discrepancy, would you like the product: ☐ returned ☐ replaced ☐ *see below?

* Continue investigating by contacting the customer to learn more about the problem experienced? The person to contact that has the most knowledge of the problem is: phone

If we are unable to contact this person the backup person is: phone

Special Requests:
Ship prepaid to: Remote Automation Solutions, Repair Dept., 1100 Buckingham Street, Watertown, CT 06795
Phone: 860-945-2442 Fax: 860-945-2220



Click here to return to Table of Contents

# Emerson Process Management
# *Training*

## GET THE MOST FROM YOUR EMERSON INSTRUMENT OR SYSTEM

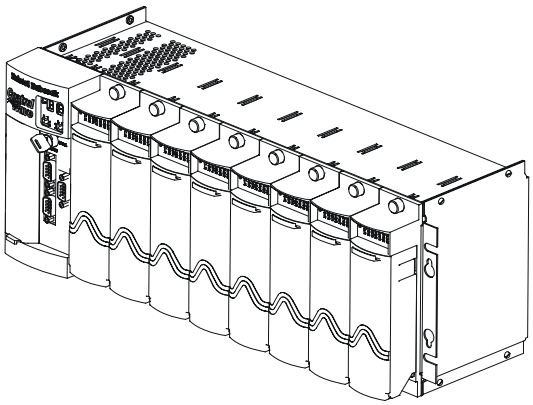

- Avoid Delays and problems in getting your system on-line
- Minimize installation, start-up and maintenance costs.
- Make the most effective use of our hardware and software.
- Know your system.

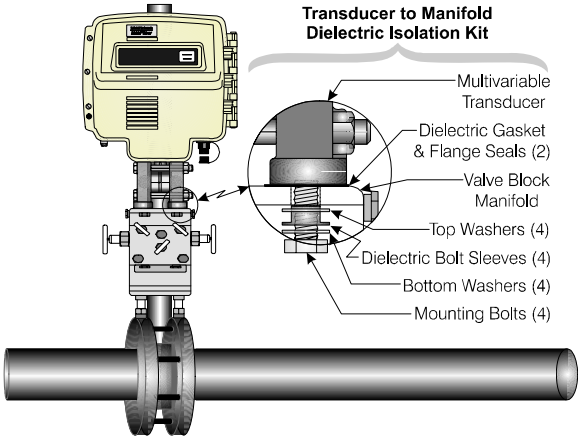


As you know, a well-trained staff is essential to your operation. Emerson offers a full schedule of classes conducted by full-time, professional instructors. Classes are offered throughout the year at various locations. By participating in our training, your personnel can learn how to install, calibrate, configure, program and maintain your Emerson products and realize the full potential of your system.

For information or to enroll in any class, go to http://www.EmersonProcess.com/Remote and click on "Training" or contact our training department in Watertown at (860) 945-2343.

Click here to return to Table of Contents

# CI-ControlWave Express

# **Control**Wave **Express**

## Remote Terminal Unit

## INSTALLATION FORWARD

**NOTE for all Control**Wave **Express Installers:**

**READ THIS SECTION FIRST!**

This manual has been designed for the following audience:

- Customer Site Engineers, who must plan for the installation and implementation of the C**ontrol**Wave **Express**.
- Instructors who must become familiar with and teach Field Engineers/Technicians on the installation, operation and repair of **Control**Wave **Express**.
- Field Engineers/Technicians who must install and service the **Control**Wave **Express**.

Installation of the C**ontrol**Wave **Express** is provided in two formats as follows:

**Section 2 - <u>Installation & Operation</u>** provides a detailed overview of the installation and operation of the C**ontrol**Wave **Express**. Section 2 provides all the information required for instructors who are training individuals unfamiliar with the **Control**Wave **Express**. It is also intended to support anyone who needs to learn how to install and operate the **Control**-Wave **Express** for the first time.

**Appendix C - <u>Hardware Installation Guide</u>** is intended for individuals who are already familiar with the **Control**Wave **Express** but need the configuration information in a concise format. Field Engineers/Technicians who have previously installed one or more **Control**Wave **Express** will find the necessary installation information logically sequenced for their convenience.

**NOTE:**

**A Windows driven diagnostic tool referred to as WINDIAG is provided on the OpenBSI Software CDROM. WINDIAG is documented in instruction manual D4041A – <u>Window Diagnostics for Bristol Controllers</u>. Bristol's WINDIAG program provides menu driven diagnostics that have been designed to assist a technician or Process Engineer in troubleshooting the various ControlWave Express circuits. A brief overview is provided in Section 3.5 of this manual. For more detailed descriptions of Control**Wave **Express Windows Diagnostics than those provided herein, see Document D4041A – Chapters 1 and 7C.**



Click here to return to Table of Contents

Click here to return to Table of Contents

# CI-ControlWave Express

# ControlWave Express

## Remote Terminal Unit

## TABLE OF CONTENTS

*SECTION* *TITLE* *PAGE #*

### Section 1 - ControlWave Express INTRODUCTION



### Section 2 - ControlWave Express INSTALLATION & OPERATION






Click here to return to Table of Contents

# CI-ControlWave Express

# ControlWave Express

## Remote Terminal Unit

## TABLE OF CONTENTS

*SECTION* *TITLE* *PAGE #*

### Section 2 - ControlWave Express INSTALLATION & OPERATION (Continued)






Click here to return to Table of Contents

# CI-ControlWave Express

# ControlWave Express

## Remote Terminal Unit

### TABLE OF CONTENTS

*SECTION* *TITLE* *PAGE #*

**Section 3 - ControlWave Express SERVICE**



**Section 4 - ControlWave Express SPECIFICATIONS**



**APPENDICES/SUPPLEMENTAL INSTRUCTION**






Click here to return to Table of Contents

# CI-ControlWave Express

# ControlWave Express

## Remote Terminal Unit

## TABLE OF CONTENTS

*SECTION* *TITLE* *PAGE #*

### APPENDICES/SUPPLEMENTAL INSTRUCTION (Continued)



### REFERENCED Bristol CUSTOMER INSTRUCTION MANUALS






Click here to return to Table of Contents

# *Section 1*
# *ControlWave Express INTRODUCTION*

## 1.1 GENERAL DESCRIPTION

ControlWave Express remote terminal units (RTU) have been designed to perform as the ideal platform for remote site automation, measurement and data management in process control and manufacturing. ControlWave Express RTUs measure temperature and monitor a variety of analog and digital inputs. In addition to operation in a protected outdoor environment (once mounted in a suitable enclosure), ControlWave Express RTUs provides the following key features.

**Hardware/Packaging Features:**

- 32-bit ARM9 processor (LH7A400) provides exceptional performance and low power consumption
- Wide operating temperature range: (-40 to +70°C) (-40 to 158°F)
- Two Board Platform: (CPU/System Controller Bd. And optional Process I/O Bd.)

  Three CPU/System Controller Board Configurations: Standard I/O included on CPU/System Controller Bd.: 2 Pulse Counter/Digital Inputs
  - Ultra Low Power 14MHz CPU: Supports a nominal +6Vdc or a nominal +12Vdc input power, Solar Regulator and an Auxiliary Power Output
  - Low Power 33MHz CPU: Supports a nominal +12Vdc or a nominal +24Vdc input power, Solar Regulator and an Auxiliary Power Output
  - 33MHz CPU (with 10/100Base-T Ethernet Port): Supports a nominal +12Vdc or a nominal +24Vdc input power, without Solar Reg. and without Aux. Power Output

  Three Optional Process I/O Board Configurations:
  - 2 DI/DO, 4 DI, 2 DO & 2 HSC
  - 2 DI/DO, 4 DI, 2 DO & 2 HSC, 3 AI
  - 2 DI/DO, 4 DI, 2 DO & 2 HSC, 3 AI, 1 AO
- Battery backup for the real-time clock and the system's SRAM is provided by a 3.0V, 300mA-hr lithium coin cell battery located on the CPU Module
- Very low power consumption - minimizes costs of solar panel/battery power systems
- Three serial communications ports (Two RS-232 and One RS-232/485)
- RTD Input (on 14MHz Ultra Low Power CPUs) (connection to a 100-ohm platinum bulb) (using the DIN 43760 curve)
- Nonincendive Class I, Div. 2, Groups C & D Hazardous Locations (see Appendix A)
- Cost effective for small RTU/Process Controller applications

**Firmware/Software Features**

- Functions as a Process Controller or Remote Terminal Unit (RTU)
- Standard application programs will be introduced on a continual basis with WebBSI Web pages that are preconfigured for all user operations.
- Using our ControlWave Designer IEC 61131-3 Programming Environment, any user or third party can modify a standard application or create a completely customized program.
- ControlWave Express RTUs are compatible with Bristol RTUs in software and networking solutions for SCADA data editing/management, and are similar in all operations.

ControlWave Express RTUs are comprised of a CPU/System Controller Board, an optional Process I/O Board and a two piece enclosure (consisting of a card-edge cover and a mounting chassis). Sharp's LH7A400 System-on-Chip Advanced RISC Machine (ARM)



Click here to return to Table of Contents

microprocessor with 32-bit ARM9TDMI Reduced Instruction Set Computer (RISC) is the core of the CPU/System Controller Board. In addition to the microprocessor and control logic, the CPU/System Controller Board includes two fixed RS-232 Communication Ports (COM1 & COM2), 1 configurable (RS-232/RS-485) Communication Port (COM3), 2MB of battery backed Static RAM (SRAM), 512kB Boot/Downloader FLASH, 8MB simultaneous read/write FLASH, SPI I/O Bus Connector, Serial Real Time Clock, Power Supply Sequencer, and Display/Keypad Interface. A piggy-back mounted LED Board provides Power Good, Watchdog, Idle, Transmit and Receive (for each of the three communication ports), and six Status LEDs. Additionally, when interfaced to an optional LCD Display, the unit displays run time status information.

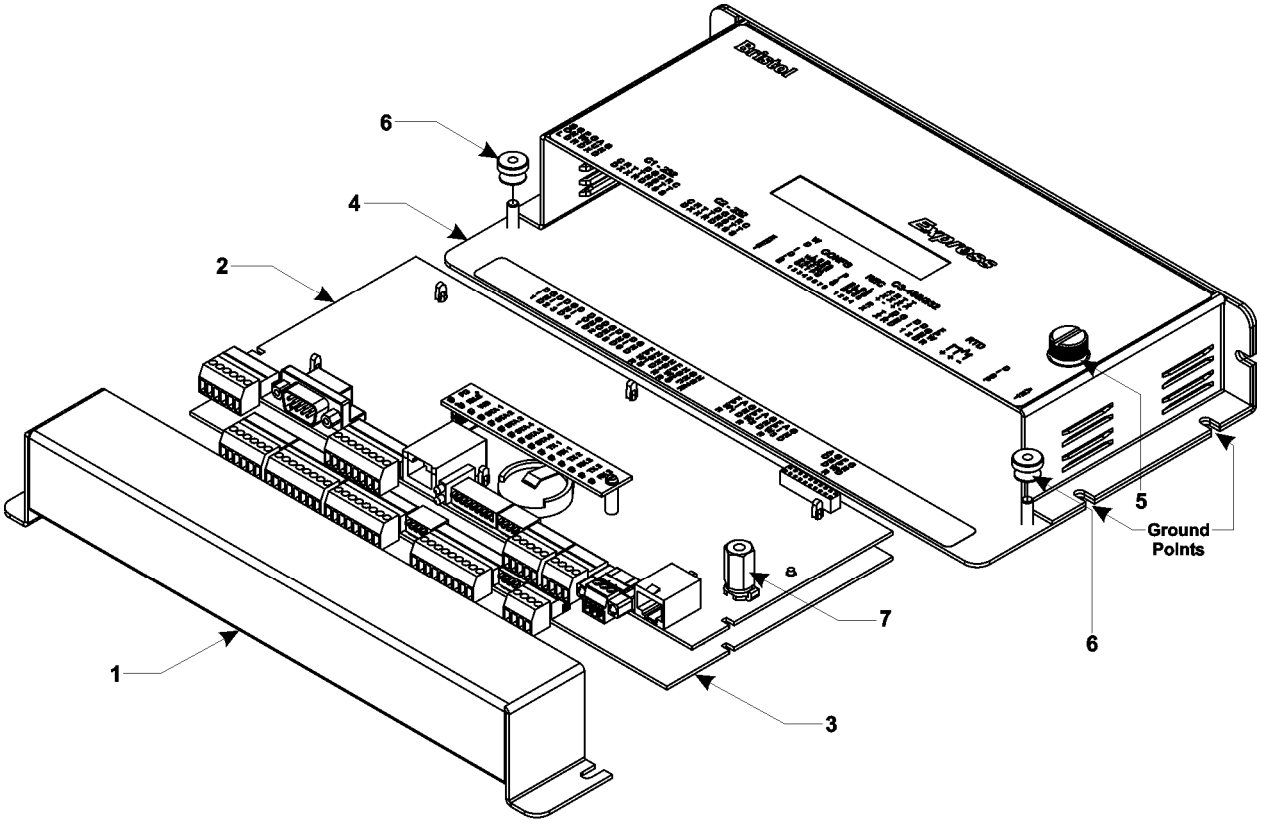


1. Removable Card Edge Cover
2. CPU/System Controller Board
3. Optional Process I/O Board
4. Enclosure/Mounting Chassis
5. Captive Fastener
6. Thumb Screws (2)
7. CPU/Chassis Mounting/Ground Standoff

**Figure 1-1 - ControlWave Express Component Identification**

An optional Process I/O Board provides the circuitry and field interface hardware necessary to interconnect all assigned field I/O circuits except the pulse counter circuits and the RTD input that are located on the CPU/System Controller Board. Non-isolated power is generated and regulated by the CPU/System Controller Board that provides +3.3Vdc for all logic and bulk power for I/O field circuits from a nominal bulk +6Vdc, +12Vdc or +24Vdc power source (depending on the type of CPU). +1.8Vdc, used by the ARM microprocessor, is derived from the regulated 3.3Vdc logic power.



Click here to return to Table of Contents

## 1.2 ControlWave PROGRAMMING ENVIRONMENT

The ControlWave programming environment uses industry-standard tools and protocols to provide a flexible, adaptable approach for various process control applications in the water treatment, wastewater treatment, and industrial automation business.

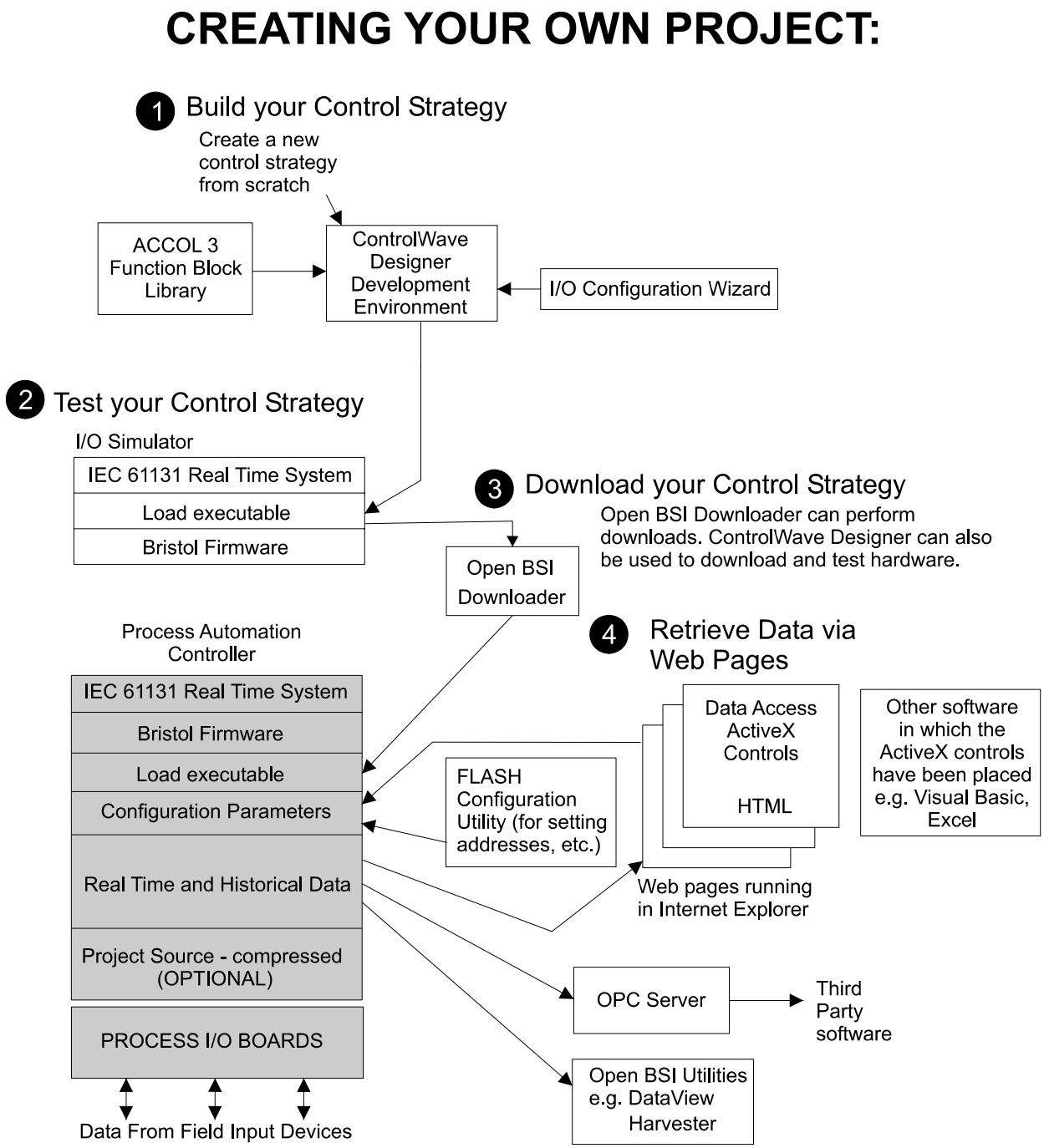


**Figure 1-2 - Control**Wave **- Control Strategy Software Diagram**

ControlWave Express RTUs provide an ideal platform for remote site automation, measurement, and data management in the oil and gas industry.

The control strategy file created and downloaded into the controller is referred to as a **ControlWave project**. The tools that make up the programming environment are:



Click here to return to Table of Contents

- **ControlWave Designer** programming package offers several different methods for generating and debugging control strategy programs including function blocks, ladder logic, structured languages, etc. The resulting programs are fully compatible with **IEC 61131-3** standards. Various communication methods as offered, including TCP/IP, serial links, as well as communication to Bristol **Open BSI** software and networks.

- The **I/O Configuration Wizard**, accessible via a menu item in ControlWave Designer, allows you to define **process I/O modules** in the ControlWave and configure the individual mapping of I/O points for digital and analog inputs and outputs.

- The **ACCOL3 Firmware Library** which is imported into ControlWave Designer, includes a series of Bristol-specific function blocks. These pre-programmed function blocks accomplish various tasks common to most user applications including alarming, historical data storage, as well as process control algorithms such as PID control.

- The **OPC Server** (**O**bject Linking and Embedding (OLE) for **P**rocess **C**ontrol) allows real-time data access to any OPC [Object Linking and Embedding (OLE) for Process Control] compliant third-party software packages.

- **Flash Configuration Utility** – Parameters such as the BSAP local address, IP address, etc. are set using the Flash Configuration Utility, accessible via Open BSI LocalView, NetView, or TechView. The ControlWave Express ships with a standard Flash Configuration Profile (FCP) file, with default configuration parameters already set.

## 1.3 PHYSICAL DESCRIPTION

ControlWave Express RTUs are comprised of the following major components:

- Enclosure/Chassis (Section 1.3.1)
- RTD Probe (Section 1.3.2.1)
- CPU/System Controller Board (Section 1.3.2)

ControlWave Express RTUs can be factory configured with one or more of the following options:

- Process I/O Board (Section 1.3.3)
- Keypad/LCD Display (1.5.2 & 2.4.5)

### 1.3.1 Enclosure/Chassis

ControlWave Express RTUs are housed in an enclosure that accommodates mounting to a Panel or a DIN-Rail. External dimensions are approximately 10.75” long, by 5.56” wide, by 2.06” deep (without mounting brackets). The enclosure consists of two pieces, the removable Card Edge Cover and the Main Mounting Chassis. Two Thumb Screws can be loosened to facilitate removal of the Card Edge Cover, and thus accommodating all instrument field wiring.

RJ-45 connector J2 on the CPU/System Controller Board accommodates either an optional standalone dual line LCD display or optional 4 x 20 LCD display supported with either a 2-button or a 25-button keypad. In normal operation, the LCD associated with a keypad will turn off after the unit has been configured and placed into service while standalone LCDs



Click here to return to Table of Contents

will remain on. When interfaced to a keypad, the operator may activate the display at any time by pressing the appropriate front panel button.

### 1.3.2 CPU/System Controller Board

The multilayer CPU/System Controller Board provides ControlWave Express CPU, I/O monitor/control, memory and communication functions. ControlWave Express CPU/System Controller Boards operate over an extended temperature range with long-term product reliability.

ControlWave Express CPU/System Controller Boards are based on a 32-bit ARM9TDMI RISC Core Processor. The CPU/System Controller Board is specified to operate with an input voltage range from a nominal +6Vdc, +12Vdc or +24Vdc power supply with a system clock speed of either 14 MHz or 33 MHz. In addition to the microprocessor and control logic, the CPU Board includes two fixed RS-232 communication Ports (COM1 & COM2), and one configurable RS-232/RS-485 communication port (COM3). CPU Memory consists of 2MB of battery backed Static RAM (SRAM), 512kB Boot/Downloader FLASH and 8MB simultaneous read/write FLASH. Three unique CPU/System Controller Boards are offered as follows:

- 14 MHz Ultra Low Power CPU: operates from a nominal +6Vdc or +12Vdc bulk input power and is equipped with a Solar Regulator circuit and an Auxiliary Power Output circuit.
- 33 MHz Low Power CPU: operates from a nominal +12Vdc or +24Vdc bulk input power, is equipped with a Solar Regulator circuit and an Auxiliary Power Output circuit).
- 33 MHz Low Power CPU: operates from a nominal +12Vdc or +24Vdc bulk input power and is equipped with a 10/100Base-T Ethernet Port. ***Note: Not equipped with a Solar Regulator circuit or an Auxiliary Power Output circuit.***

CPU/System Controller Boards are provided backup power via a coin cell socket that accepts a 3.0V, 300mA-hr lithium battery. This 3.0V battery provides backup power for the real-time clock and the system's Static RAM (SRAM). Backup power is enabled when Configuration Jumper W3 (adjacent to the battery) is installed in position 1 to 2.

If the 3.3Vdc that powers the unit goes out of specification, a supervisory circuit on the CPU/System Controller Board switches the battery voltage to the VBAT3.3 hardware signal (used by the CPU's SRAM and RTC). This supervisory circuit also generates a BATTERYGOOD signal when the battery voltage is above 2.35V.

The system SRAM is specified to have a standby current of 20µA maximum for each part (plus 2uA for the RTC). For a system containing 2MB of system SRAM, a worst-case current draw of 42µA allows a battery life of approximately 9000 hours.

The power supply operates from a nominal +6Vdc, +12Vdc or +24Vdc (depending on the CPU type) with the nominal input supply configuration being user configured via on-board jumpers. A supervisory circuit monitors the incoming power and the supply voltages. The isolated supplies are shut down when the incoming voltage drops below +5.4V for a +6.0V system, +11.4V for a +12V system or +21.8V for a +24V system.



Click here to return to Table of Contents

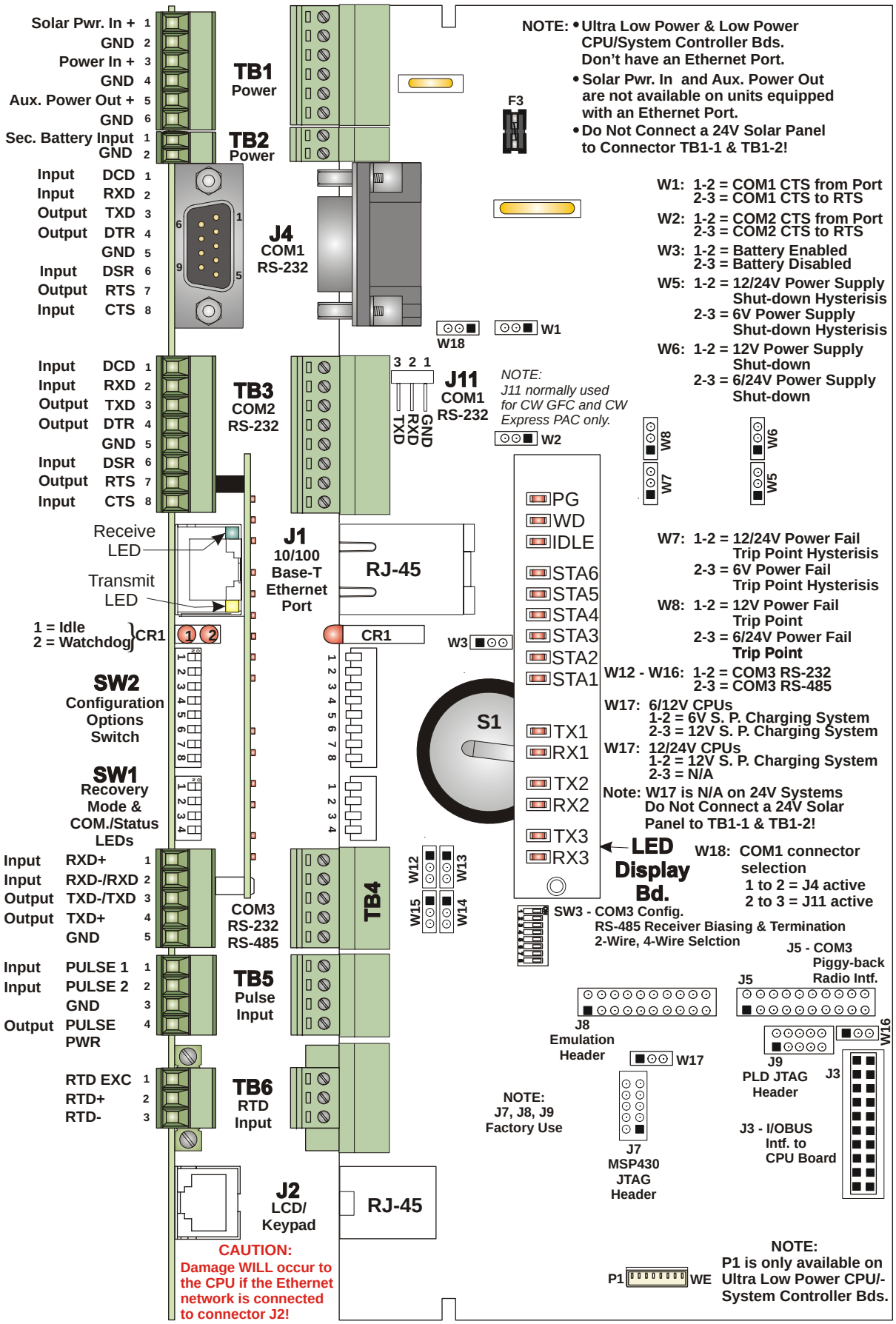


**Figure 1-3 - ControlWave Express CPU/System Controller Board**



Click here to return to Table of Contents

A supervisory circuit is used to switch to battery power when VCC falls out of specification. For maximum shelf life, the battery may be isolated from the circuit by removing the Backup Battery Jumper W3 from position 1 to 2 and then storing it in position 2 to 3. If the real-time clock looses its battery backup a ControlWave Designer system variable bit (_QUEST_DATE) is set. This bit can be used to post a message or alarm to the PC (see the 'Systems Variables' section of the *ControlWave Designer Programmer's Handbook* D5125).

On 14MHz Ultra Low Power CPUs and 33 MHz Low Power CPUs, an on-board solar shunt regulator is capable of charging a 7AH battery (6V or 12V) with the charging cycle controlled by the MSP430 Microcontroller. Firmware turns on the shunt regulator when the battery voltage exceeds the charge regulation threshold. When this happens, the shunt regulator shorts the terminals of the solar panel connector thus eliminating further battery charging. **Note: Damage may result to the power supply components if the battery charger is used without a battery present, i.e., do not connect a solar panel unless a battery has first been connected.**

An alternate battery connection is available through connector TB2 that provides power if there is no power available from TB1.

Circuitry supports two Pulse Counter Inputs via connector TB5, and on 14 MHz Ultra Low Power CPUs interface to a RTD via connector TB6.

Basic CPU components and features are summarized as follows:

- LH7A400 System-on-Chip 32-bit ARM9TDMI RISC Core microprocessor
- 512KB FLASH Boot/Downloader, 29LV040B, 90 nS, 8-bit access
- 2MB SRAM, 3.3V, 1M x 16, with Battery Backup
- 8MB simultaneous read/write FLASH, TSOP site
- 3 Serial Comm. ports
- Spread Spectrum clock for lower EMI
- Serial Real Time Clock with battery backup
- 8-Position configuration options switch bank (SW2), a 4-Position recovery switch bank (SW1) and an 8-Position COM3 (RS-485) support switch bank (SW3)
- Coin cell socket accepts a 3.0V, 300mA-hr lithium battery
- LED Board (piggy-back)
- Nominal +6/12V or +12/24V) Power Input (both with Fail Safe Sequencer)
- Display/Keypad Interface
- 2 Pulse Counter Inputs with 1 second scan rate (Digital Input operation selectable)
- 10/100base-T Ethernet Port (Not on Low Power and Ultra Low Power CPUs)

#### 1.3.2.1 CPU/System Controller Board Connectors

The CPU/System Controller Boards are equipped with up to ten (10) connectors that function as stated in Table 1-1 below. **Note: Additional connectors, not listed herein, are for factory use only.**

**Table 1-1 - CPU/System Controller Board Connector Summary**

| Ref. | # Pins | Function | Notes |
|---|---|---|---|
| J1 | 8-pin | 10/100Base-T Ethernet Port | RJ-45 |
| J2 | 8-pin | LCD Display/Keypad Intf. | RJ-45 |
| J3 | 20-pin | IOBUS | Intf. to Process I/O Board |
| J4 | 9-pin | 9-pin Male D-type (COM1 - RS-232) | Activated by W18 |
| J10 | 20-pin | LED Daughter Board Interface | |
| J11 | 3-pin | Alternate (COM1- RS-232) | See Table 2-3B; Activated by W18 |



Click here to return to Table of Contents

**Table 1-1 - CPU/System Controller Board Connector Summary (Continued)**

| Ref. | # Pins | Function | Notes |
|---|---|---|---|
| TB1 | 6-pin | Solar Panel, Battery/Power Supply & Aux Out, | Main Power Connector<br>See Section 2.3.9 |
| TB2 | 2-pin | Secondary battery input | |
| TB3 | 8-pin | Term. Block (COM2 - RS-232) | See Table 2-3A or 4-2 |
| TB4 | 5-pin | Term. Block (COM3 – RS-232/RS-485) | See Table 2-3C or 4-3 |
| TB5 | 4-pin | Pulse Input Connector | |
| TB6 | 3-pin | RTD Input | See Section 2.3.5 |

**CPU/System Controller Board Optional Ethernet Port Connector J1**

An optional Ethernet port is supported via 8-pin RJ-45 connector J1. The 10/100Base-T Ethernet interface is implemented using an SMSC LAN91C111 controller. This device provides for full or half-duplex implementation. It should be noted that units equipped with an Ethernet Port do not support a Solar Panel or provide an Auxiliary Power Output.

**CPU/System Controller Board Serial Comm. Port Connectors** (see Section 1.5.5)

The CPU Module supports up to three serial communication ports (COM1, COM2 & COM3). COM1 utilizes either a male 9-pin D-Type connector, or a male 3-pin connector – choice of the active connector is determined by jumper W18. COM2 utilizes an 8-pin Terminal Block and COM3 utilizes a 5-pin Terminal Block. COM1 and COM 2 support RS-232 communications, COM3 can be configured to support RS-232 or RS-485 communications.

**CPU/System Controller Board RTD Input Connector** (also see Section 2.3.5)

Edge Connector TB6 (on 14MHz Ultra Low Power CPU/System Controller Boards) provides connection to a 100-ohm platinum bulb (using the DIN 43760 curve). The common three-wire configuration is accommodated. In this configuration, the return lead connects to the RTD- terminal while the two junction leads (Sense and Excitation) connect to the RTD+ terminals.

**CPU/System Controller Board Pulse Counter Input Connector** (also see Section 2.3.4.9)

Edge Connector TB5 supports connection to two internally sourced Pulse Counter Inputs. These inputs are sourced for 3.3V with a source current of 200µA and a maximum input frequency of 10kHz. Pulse Counter inputs are not supported with debounce circuitry and therefore should not be used with relays. **Note: Pulse Counter Inputs can also be configured for DI operation via ControlWave Designer.**

**CPU/System Controller Board Power Connections**

A 6-position Terminal Block is provided for input power wiring as follows:

- TB1-1 - Solar Power In+: Power from a 1W - 6V, 5W - 6V or 5W - 12V Solar Panel (Internally wired to recharge a user supplied battery) *****
- TB1-2 - Ground (GND)
- TB1-3 - Primary Power: Power from a user supplied nominal +6Vdc, +12Vdc or +24Vdc power supply (depending on the type of CPU)



Click here to return to Table of Contents

- TB1-4 - Ground (GND)
- TB1-5 - Auxiliary Power Out+: for an external radio/modem *****
- TB1-6 - Ground (GND)
- TB2-1 - Secondary battery input
- TB2-2 - Ground (GND)

**Note: * = Not available on units equipped with an Ethernet Port.**

Power may be provided by a user supplied rechargeable 6/12V Lead Acid Battery (used in conjunction with a Solar Panel), or a range of other user-supplied battery systems or bulk (nominal +6Vdc, +12Vdc or +24Vdc) power supply.

Solar panels can be interfaced to rechargeable battery systems used to power a ControlWave Express. Internally the solar panel wires connect to the rechargeable battery via CPU/System Controller Board connector TB1-3 and TB1-4. A secondary power input connection (TB2) is supported if no power is available through TB1.

Connector J2 (RJ-45) accommodates connection to one of three LCD Display configurations, i.e., LCD Display only, LCD Display (with Dual-Button Keypad) or LCD Display (with 25-Button Keypad). The LCD Display or LCD Display/Keypad is mounted on the Instrument Front Cover.

#### 1.3.2.2 CPU Memory

**Boot/downloader FLASH**
Boot/download code is contained in a single 512Kbytes uniform sector FLASH IC. This device resides on the local bus, operates at 3.3V and is configured for 8-bit access. 4-Position DIP-Switch SW1's position 3 allows start-up menu options to be displayed or boot-up from system FLASH. If SW1-3 is closed when a reset occurs, the boot-up code will cause a recovery menu to be sent out the COM1 serial port to a terminal program running on an external host computer. *Note: Recovery Mode will also be initiated if CPU/System Controller Board Switch SW1 positions 1 and 2 are both set **ON** or **OFF** when a reset occurs.*

**FLASH Memory**
The base version of the CPU Module has 8Mbytes of 3.3V, simultaneous read/write (DL) FLASH memory. FLASH memory is 16-bits wide. System Firmware and the Boot Project are stored here. No hardware write protection is provided for the FLASH array.

**System Memory (SRAM)**
The base version of the CPU Module has 2Mbytes of soldered-down static RAM, implemented with two 512K x 16 asynchronous SRAMs that are configured as a 1M x 16-bit array. All random access memory retained data is stored in SRAM. During power loss periods, SRAM is placed into data retention mode (powered by a backup 3.0V lithium battery). SRAMs operate at 3.3V. Critical system information that must be retained during power outages or when the system has been disabled for maintenance is stored here. Data includes: Last states of all I/O, historical data, retain variables and pending alarm messages not yet reported. The SRAM supports 16-bit accesses.



Click here to return to Table of Contents

#### 1.3.2.3 CPU/System Controller Board Configuration Jumpers

ControlWave Express CPU/System Controller Board are provided with 12 User Configuration Jumpers that function as follows:

- W1 - COM1 CTS Use Selection
  1 to 2 = COM1 CTS Source is from Device
  2 to 3 = COM1 RTS to CTS Loopback

- W2 - COM2 CTS Use Selection
  1 to 2 = COM2 CTS Source is from Device
  2 to 3 = COM2 RTS to CTS Loopback

- W3 - Enable/Disable Battery Backup Selection
  1 to 2 = Enable Battery Backup
  2 to 3 = Disable Battery Backup

- W5 - Power Supply Shut-down Selection
  1 to 2 = 12/24V Power Supply Shut-down Hysterisis
  2 to 3 = 6V Power Supply Shut-down Hysterisis

- W6 - Power Supply Shut-down Selection
  1 to 2 = 12V Power Supply Shut-down
  2 to 3 = 6/24V Power Supply Shut-down

- W7 - Power Fail Trip Point Hysterisis Selection
  1 to 2 = 12/24V Power Fail Trip Point Hysterisis
  2 to 3 = 6V Power Fail Trip Point Hysterisis

- W8 - Power Fail Trip Point Selection
  1 to 2 = 12V Power Fail Trip Point
  2 to 3 = 6/24V Power Fail Trip Point

- W12 - COM3 Configuration Selection
  1 to 2 = COM3 is RS-232
  2 to 3 = COM3 is RS-485

- W13 - COM3 Configuration Selection
  1 to 2 = COM3 is RS-232
  2 to 3 = COM3 is RS-485

- W14 - COM3 Configuration Selection
  1 to 2 = COM3 is RS-232
  2 to 3 = COM3 is RS-485

- W15 - COM3 Configuration Selection
  1 to 2 = COM3 is RS-232
  2 to 3 = COM3 is RS-485

- W16 - COM3 Configuration Selection
  1 to 2 = COM3 is RS-232
  2 to 3 = COM3 is RS-485



Click here to return to Table of Contents

- W17 - Input Power Selection (Controls Solar Power Shunt Reg.) N/A for +24Vdc CPUs
  1 to 2 = 6V Power
  2 to 3 = 12V Power

- W18 - COM1 Connector Selection
  1 to 2 = Connector J4 (D connector) is active
  2 to 3 = Alternate connector J11 is active

#### 1.3.2.4 CPU/System Controller Board Configuration Switches

Three user-configurable DIP-Switches are provided on the CPU/System Controller Board. These switches provide the following functionality:

- Four-bit DIP-Switch SW1 provides forced recovery functions. Recovery Mode as supported by SW1-1 and SW1-2 or SW1-3 (forced by CW Console) accommodates FLASH firmware upgrades to the CPU or allows the user to perform a Core Updump, i.e., upload the contents of SRAM to a PC for evaluation (see Table 1-2).
- Eight-bit DIP-Switch SW2 is provided for user configuration settings (see Table 1-3).
- Eight-bit DIP-Switch SW3 provides loopback, termination control, and receiver bias settings for the RS-485 port (COM3) (see Table 1-4).

**Table 1-2 - CPU/System Controller Bd. SW1 Assignments**
**Recovery Mode/Local Mode Control**

| Switch | Function | Setting |
|---|---|---|
| SW1-1/2 | Recovery/Local Mode | Both ON or OFF = Recovery Mode<br>SW1 OFF & SW2 ON = Local Mode |
| SW1-3 | Force Recovery Mode | ON = Force Recovery Mode (via CW Console)<br>OFF = Recovery Mode disabled |
| SW1-4 | LED Status | ON = Enable All LEDs<br>OFF = Disable All LED except Watchdog (WD) |

*** = Note: Only the Switch SW1 settings listed in this table, have been tested.**

**Table 1-3 - CPU/System Controller Bd. Configuration Switch SW2 Assignments**
**Note: Except for SW2-4, ON = Factory Default**

| Switch | Function | Setting - (ON = Factory Default) |
|---|---|---|
| SW2-1 | Watchdog Enable | ON = Watchdog circuit is enabled<br>OFF = Watchdog circuit is disabled |
| SW2-2 | Lock/Unlock Soft Switches | ON = Write to Soft Switches and FLASH files<br>OFF = Soft Switches, configurations and FLASH files are locked |
| SW2-3 | Use/Ignore Soft Switches | ON = Use Soft Switches (configured in FLASH)<br>OFF = Ignore Soft Switch Configuration and use factory defaults |
| SW2-4 | Core Updump See Section 3.6 | ON = Core Updump Disabled<br>OFF = Core Updump Enabled via Mode Switch (SW1) |
| SW2-5 | SRAM Control | ON = Retain values in SRAM during restarts<br>OFF = Force system to reinitialize SRAM |
| SW2-6 | System Firmware Load Control * | ON = Enable remote download of System Firmware<br>OFF = Disable remote download of System Firmware |
| SW2-7 | N/A | |
| SW2-8 | Enable WINDIAG | ON = Normal Operation (don't allow WINDIAG to run test)<br>OFF = Disable boot project (allow WINDIAG to run test) |

*** = Boot PROM version 4.7 or higher and System PROM version 4.7 or higher**



Click here to return to Table of Contents

**Table 1-4 - CPU/System Controller Bd. Switch SW3 Assignments**
**RS-485 Loopback & Termination Control (COM3)**

| Switch | RS-485 Function Switch ON | Setting |
|---|---|---|
| SW3-1 | TX+ to RX+ Loopback/2-Wire | ON – 2-Wire Operation or Loopback Enabled<br>OFF – 4-Wire Operation & Loopback Disabled |
| SW3-2 | TX– to RX– Loopback/2-Wire | ON – 2-Wire Operation or Loopback Enabled<br>OFF – 4-Wire Operation & Loopback Disabled |
| SW3-3 | 100 Ohm RX+ Termination | ON – End Nodes Only |
| SW3-4 | 100 Ohm RX– Termination | ON – End Nodes Only |
| SW3-7 | RX+ Bias (End Nodes/Node) | ON – 4-Wire = Both End Nodes<br>2-Wire = One End Node Only<br>OFF – No Bias |
| SW3-8 | RX– Bias (End Nodes/Node) | ON – 4-Wire = Both End Nodes<br>2-Wire = One End Node Only<br>OFF – No Bias |

#### 1.3.2.5 CPU/System Controller Board LEDs – LED Board

CPU/System Controller Boards are equipped with a piggyback mounted LED Board. These LEDs provide the following status conditions when lit:

PG (Red) - Power Good
WD (Red) - a Watchdog condition has been detected
IDLE (Red) - the CPU has free time at the end of its execution cycle
TX1, TX2, TX3 (Red) - transmit activity on COM1, COM2 & COM3 (respectively)
RX1, RX2, RX3 (Red) - receive activity on COM1, COM2 & COM3 (respectively)
Six Status LEDs (Red) - provide run time status codes.

Normally, the Idle LED should be ON most of the time (unless disabled). When the Idle LED is OFF, it indicates that the CPU has no free time, and may be overloaded.

#### 1.3.2.6 CPU/System Controller Board LEDs

CPU/System Controller Boards are equipped with two red LEDs that provide the following status conditions when lit: WD (CR1 - Right) – Indicates Watchdog condition has been detected & IDLE (CR1 - Left) - Indicates the CPU has free time at the end of its execution cycle. Normally, the Idle LED should be ON most of the time (unless disabled). When the Idle LED is OFF, it indicates that the CPU has no free time, and may be overloaded.

### 1.3.3 Process I/O Board

The Process I/O Board is mounted to the CPU/System Controller Board via six nylon mounting posts.

Interface to the CPU/System Controller Board is provided via a 20-pin connector (P1). Process I/O Boards contain I/O circuitry that supports the following I/O:

- Four Dedicated Non-Isolated Internally Sourced Digital Inputs
- Two Dedicated Non-Isolated Digital Outputs
- Two Selectable Non-Isolated Digital I/Os which can be individually wired for Internally-Sourced DI operation or DO operation



Click here to return to Table of Contents

- Two Non-Isolated Internally-Sourced High Speed Counter Inputs (or DI operation supported)
- Three Non-Isolated Single-Ended 1-5V or 4 to 20mA Analog Inputs (Optional)
- One Non-Isolated Externally-Powered 1-5V or 4 to 20mA Analog Output (Optional)

#### 1.3.3.1 Process I/O Board Configuration Jumpers and Switch SW1

ControlWave Express I/O Boards are provided with 6 User Configuration Jumpers and one 4-position DIP-Switch (SW1) that function as follows:

- JP1 - AO Output Source (1-5V or 4-20mA)
  1 to 2 = 4-20mA Analog Output
  2 to 3 = 1-5V Analog Output

- JP3 - AO Power Source
  1 to 2 = System Power
  2 to 3 = External Power (+11 to +30 Vdc)

- JP4 - AI Field Power Configuration
  1 to 2 = External Power
  2 to 3 = System Power

- JP5 - AI1 Input Type (1-5V or 4-20mA)
  1 to 2 = 4-20mA Analog Input
  2 to 3 = 1-5V Analog Input

- JP6 - AI2 Input Type (1-5V or 4-20mA)
  1 to 2 = 4-20mA Analog Input
  2 to 3 = 1-5V Analog Input

- JP7 - AI3 Input Type (1-5V or 4-20mA)
  1 to 2 = 4-20mA Analog Input
  2 to 3 = 1-5V Analog Input

- SW1 - HSC high/low frequency select, DI/HSC Source Current & AO Configuration
  SW1-1: HSC1 – OFF= 10 kHz (high speed), ON = 300 Hz (low speed)
  SW1-2: HSC2 – OFF= 10 kHz (high speed), ON = 300 Hz (low speed)
  SW1-3: DI/HSC 2mA Source Current – OFF = Disabled, ON = Enabled
  SW1-4: AO Configuration – OFF = Current, ON = Voltage



Click here to return to Table of Contents

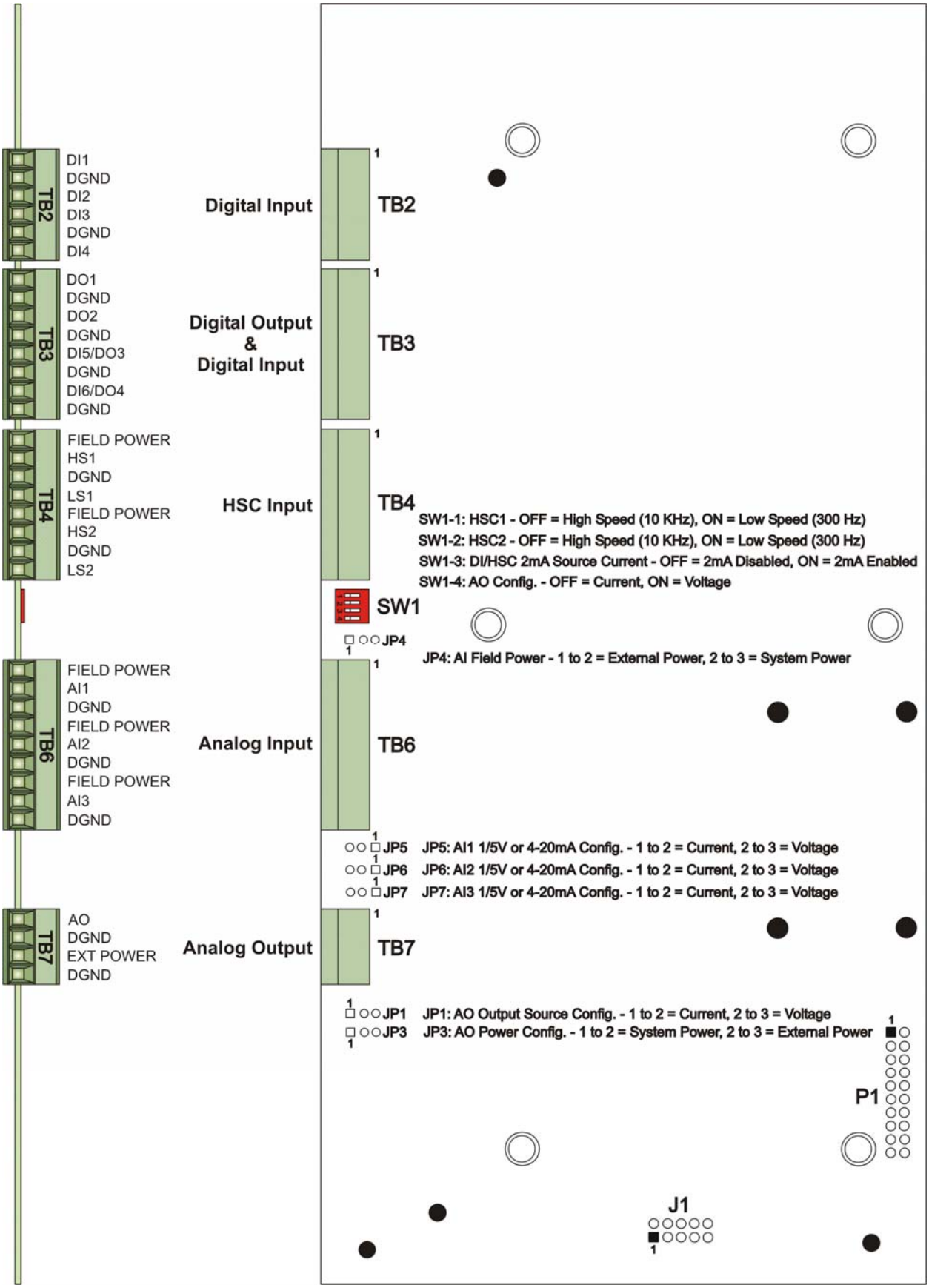


**Figure 1-4 - ControlWave Express Process I/O Board**



Click here to return to Table of Contents

#### 1.3.3.2 Process I/O Board Connectors

Process I/O Boards are equipped with up to six (6) I/O interface connectors that function as follows (see Table 1-5):

**Table 1-5 - Process I/O Board Connector Summary**

| Ref. | # Pins | Function | Notes |
|---|---|---|---|
| P1 | 20-Pin | Bd. Power and I/O Bus | Intf. to CPU/System Controller Bd. |
| TB2 | 6-Pin | Digital Input (DI1 – DI4) Interface | see Section1.3.3.3.1 |
| TB3 | 8-pin | Digital Output (DO1 & DO2) & DI/O (DI5/DO3 & DI6/DO4) Interface | see Section 1.3.3.3.2 for DO<br>see Section 1.3.3.3.3 for DI/O |
| TB4 | 8-pin | High Speed Counter Input Interface | see Section 1.3.3.3.6 |
| TB6 | 9-pin | Analog Input Interface | see Section 1.3.3.3.4 |
| TB7 | 4-pin | Analog Output Interface | see Section 1.3.3.3.5 |

#### 1.3.3.3 Process I/O Board Field I/Os

Field I/O Wiring is supported by card edge Terminal Block Connectors as follows:

Non-isolated Digital Input (DI) Connector (Section 1.3.3.3.1)
Non-isolated Digital Output (DO) & Digital I/O Connector (Sections 1.3.3.3.2 & 1.3.3.3.3)
Non-isolated Analog Input Connector (Section 1.3.3.3.4)
Non-isolated Analog Output Connector (Section 1.3.3.3.5)
Non-isolated High Speed Counter Input Connector (Section 1.3.3.3.6)

##### 1.3.3.3.1 Dedicated Non-isolated Digital Inputs (also see Section 2.3.4.3)

Terminal Block TB2 provides interface to 4 dedicated non isolated Digital Inputs DIs). All Digital Inputs support dry contact inputs that are pulled internally to 3.3 Vdc when the field input is open. Source current for DI#1 through DI#4 is switch selectable for 60uA or 2mA from the 3.3V supply (SW1-3 ON = 2mA, OFF = 60uA). *Note: SW1-3 also sets DI5 & DI6 and both HSCs (for 200uA or 2.2mA operation).* 15 millisecond input filtering protects against contact bounce.

##### 1.3.3.3.2 Dedicated Non-isolated Digital Outputs (also see Section 2.3.4.4)

Terminal Block TB3 provides interface to 2 dedicated non isolated Digital Outputs (DOs) and two selectable DI/Os. Digital Outputs have a 30V operating range and are driven by Open Drain FETs that sink 400 mA (Max.) at 30Vdc. The maximum output frequency is 20 Hz. Transorbs (30Vdc) provide surge suppression between each signal and ground. Selectable DI/Os are discussed in section 1.3.3.3.3.

##### 1.3.3.3.3 Selectable Non-isolated Digital Inputs/Outputs (also see Section 2.3.4.5)

Terminal Block TB3 also supports 2 user selectable Digital Inputs/Outputs. These DI/Os may be unused or individually user wired as desired, i.e., both DI, both DO, one DI and/or one DO. Their operation depends on how they are wired, i.e., DI or DO. These DI/Os are rated identically to the DIs and DOs discussed in Sections 1.3.3.3.1 and 1.3.3.3.2.

##### 1.3.3.3.4 Non-isolated Analog Inputs (also see Section 2.3.4.6)

Terminal Block TB6 provides interface to three single-ended Analog Inputs. Three field terminals are assigned for each Analog Input, i.e., Field Power, AI# and DGND. AI field



Click here to return to Table of Contents

power is applied to the field device (controlled via jumper JP4) and can be supplied by the system battery or an external power source. Each AI channel can be individually configured for 4 to 20mA or 1-5V operation (via JP5 for AI1, JP6 for AI2 and JP7 for AI3).

AIs are supplied with a two hertz low pass filter and surge suppression (via 30Vdc Transorbs).

**1.3.3.3.5 Non-isolated Analog Output** (also see Section 2.3.4.7)

Terminal Block TB7 provides interface to 1 Analog Output. The AO channel can be configured for an internal or external power source via jumper JP3. External power can range from +11 to + 30 Vdc.

Analog Output circuitry consists of a 12-bit resolution Digital to Analog Converter, a V to I circuit and a V to V circuit. 4 to 20mA or 1-5V operation is jumper configured via JP1. An ultra low power 16-bit RISC Microcontroller (MSP) reads the state of SW1-4 and selects the appropriate calibration data for the AO channel.

**1.3.3.3.6 Non-isolated High Speed Counter Inputs** (also see Sections 2.3.4.8)

Terminal Block TB4 provides the interface to two internally-sourced single-ended High Speed Counter or Digital Inputs (HSCI) with selectable high (10 kHz)/ or low (300 Hz) frequencies (SW1-1 for HSC1 & SW1-2 for HSC2). All Input circuits have surge suppression and signal conditioning. HSCs can be interfaced via Dry Contacts or Open Collector field circuits. **Note: High Speed Counter Inputs can also be configured for DI operation via ControlWave Designer.**

High Speed Counter/Digital inputs are sourced from 3.3Vdc and are switch selectable for a source current of 200uA or 2.2mA (SW1-3 ON = 2.2mA, OFF = 200uA). *Note: SW1-3 sets all DIs and all HSCs.* Each HSC circuit has a maximum input frequency of 10 kHz.

## 1.4 FIELD WIRING

ControlWave Express remote terminal units support connection to external field devices through field wiring terminals on the CPU/System Controller Board and the Process I/O Board. Connections to the following types of external devices may be made:

- RTD (CPU Bd.)
- Analog Inputs (AIs) (I/O Bd.)
- Digital Inputs (DIs) (I/O Bd.)
- Digital Outputs (DOs) (I/O Bd.)
- Relays (HSCs*) (I/O Bd.)
- Pulse Inputs* (CPU Bd.)
- Analog Outputs (AOs) (I/O Bd.)
- Battery/Power Supply/Solar Panel (CPU Bd.)
- Communications (RS-232 and RS-485) (CPU Bd.)

*** Pulse Inputs and HSC Inputs can also be configured for use as Digital Inputs.**

## 1.5 FUNCTIONS

ControlWave Express RTUs are shipped without a base application program. Using ControlWave Designer, the user can readily modify this application and then add or subtract functions, etc. An overview of a typical application is provided below.



Click here to return to Table of Contents

- Uses pre-configured web pages for user readings, configuration and maintenance. Web pages can be modified and new pages configured to work with a modified application load
- Resides on a BSAP SCADA network
- Provides audit trail and archives
- Allows the user to select engineering units, including English and metric

The primary function of the ControlWave Express is to provide data acquisition, a local display, communications, output control, input status and self test and diagnostics. Items below implement and supplement the primary function:

- Data acquisition (see Section 1.5.1)
- Local display (see Section 1.5.2)
- Communications (see Section 1.5.3)
- Control outputs (see Section 1.5.4)
- Status inputs (see Section 1.5.4)
- Self test and diagnostics (see Section 1.5.5)

### 1.5.1 Data Acquisition

Typical process inputs used by the ControlWave Express are pressure, flow, level, temperature and frequency input [typically used for positive displacement (PD)], turbine, or ultrasonic meters. In some cases, inputs may also be derived from external Multivariable Transmitters using either the BSAP or MODBUS protocols. Alternatively, the inputs may be obtained via the local I/O Modules using analog transmitters. The ControlWave Express application program will typically allow any combination of inputs to be selected.

### 1.5.2 Optional LCD Display

In normal operation, the Display only LCD Display remains ON while the Dual-Button or 25-Button Keypad/Displays turn OFF after the unit has been configured and placed in service. The operator may activate the Keypad/Display at any time by pressing the appropriate front panel button (depending on the keyboard type). When activated, the display scrolls through a list of current values. The list defaults to an appropriate set of values.

### 1.5.3 Communications

A ControlWave Express can be configured as a Master or Slave node on either a MODBUS network or a BSAP network. Up to three serial communication ports are contained on the ControlWave Express CPU/System Controller Board. Communication ports situated on the CPU/System Controller Board are designated as follows:

**CPU/System Controller Board:**

| | | |
|---|---|---|
| COM1 - Port 1: | J4 - | 9-Pin Male D-Type Connector - RS-232 (Activated by jumper W18) |
| | J11- | 3-Pin Connector – RS-232 (Activated by jumper W18) |
| COM2 - Port 2: | TB3 - | 8-Pin Term Block - RS-232 (COM2 supports an External Modem or Radio option) |
| COM3 - Port 3: | TB4 - | 5-Pin Term Block - RS-232/RS-485 (Configuration: RS232/485 via jumpers W12 through W16 and RS-485 via switch SW3) |

Communication Ports COM1, COM2 & COM3 support serial asynchronous operation. Communication Ports COM1 and COM2 support RS-232 operation while COM3 supports



Click here to return to Table of Contents

RS-232 or RS-485 operation. Any serial communication port can be configured for local communications, i.e., connected to a PC loaded with ControlWave Designer and OpenBSI software.

**RS-232 Ports**

An RS-232 interface supports Point-to-Point, half-duplex and full-duplex communications (20 feet maximum, using data quality cable). Half-duplex communications supported by the ControlWave Express utilize MODBUS or BSAP protocol, while full-duplex is supported by the Point-to-Point (PPP) protocol. ControlWave Express RS-232 ports utilize the "null modem" cable (Figure 2-11A) to interconnect with other devices such as a PC, printer, another ControlWave series unit (except CW_10/30/35) when the ControlWave Express is communicating using the full-duplex PPP protocol.

**RS-485 Ports**

ControlWave Express RTUs can use an RS-485 communication port for network communications to multiple nodes up to 4000 feet away. Essentially, the master and the first slave transmit and receive data on opposite lines; all slaves (from the first to the "nth") are paralleled (daisy-chained) across the same lines. The master node should be wired to one end of the RS-485 cable run. A 24-gauge paired conductor cable, such as Belden 9843 should be used. *Note: Only half-duplex RS-485 networks are supported.*

**Comm. Port Defaults**

From the factory COM1 defaults to 115.2 kilo-baud using the BSAP protocol. The remaining serial communication ports, i.e., COM2 and COM3 default as follows:

COM2 – BSAP Slave @ 9600 Baud
COM3 – BSAP Master @ 9600 Baud (for use with Bristol 3808 MVT Transmitters)



Click here to return to Table of Contents

# *Section 2*
# *ControlWave Express INSTALLATION & OPERATION*

## 2.1 INSTALLATION IN HAZARDOUS AREAS

Each ControlWave Express RTU is furnished in an enclosure/chassis that accommodates mounting to a Panel or a DIN-Rail and have been designed to operate in a protected Class I, Division 2, Groups C & D environment with a nonincendive rating (see Appendix A).

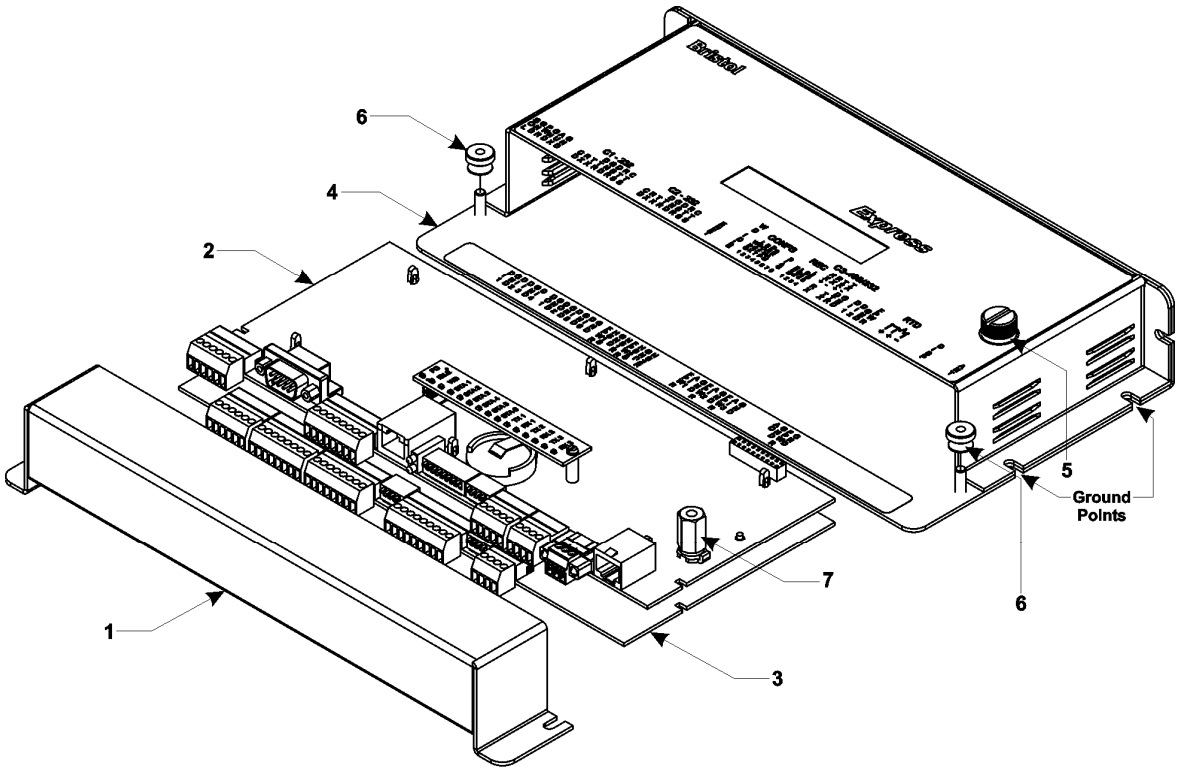


1. Removable Card Edge Cover
2. CPU/System Controller Board
3. Optional Process I/O Board
4. Enclosure/Mounting Chassis
5. Captive Fastener
6. Thumb Screws (2)
7. CPU/Chassis Mounting/Ground Standoff

**Figure 2-1 - ControlWave Express Component Identification**

A Dimensional drawing of the NEMA Enclosure is provided in Figure 2-2.

## 2.2 SITE LOCATION CONSIDERATIONS

Check all clearances when choosing an installation site. Make sure that the ControlWave Express is accessable for wiring and service. If present, make sure that the optional LCD/Keypad is visible and accessible to the on-site operator. External dimensions are approximately 10.75” long, by 5.56” wide, by 2.06” deep (without mounting brackets). The enclosure consists of two pieces, the removable Card Edge Cover and the Main Mounting



Click here to return to Table of Contents

Chassis. Two Thumb Screws can be loosened to facilitate removal of the Card Edge Cover, and thus accommodating all instrument field wiring. Information on mounting the ControlWave Express assembly is provided in Section 2.3.1 *Mounting the ControlWave Express.*

### 2.2.1 Temperature & Humidity Limits

ControlWave Express RTUs have been designed to operate over a -40°F to +158°F (-40°C to +70°C) temperature range (with storage at up to +185°F (+85°C)) and a 0% to 95% relative humidity range. Make sure that the ambient temperature and humidity at the measuring site remains within these limits. Operation beyond these ranges could cause output errors and erratic performance. Prolonged operation under extreme conditions could also result in failure of the unit.

### 2.2.2 Vibration Limits

Check the mounted enclosure, panel or equipment rack for mechanical vibrations. Make sure that the ControlWave Express is not exposed to a level of vibration that exceeds those given in the specifications. ControlWave Express vibration limits are 1g for 10 - 150 Hz & .5g for 150 - 2000 Hz.

## 2.3 ControlWave Express INSTALLATION/CONIGURATION

### Overview of Configuration

An overview of the main configuration steps are provided herein.

#### Step 1. Hardware Configuration

This involves unpacking the ControlWave Express hardware, mounting the enclosure/chassis, wiring I/O terminations, connecting any permanent communication cables, making proper ground connections, connecting a communication cable to a PC workstation, setting switches and setting jumpers. To install and configure the ControlWave Express, follow the steps below:

1. Remove the unit from its carton and install it onto a panel or DIN-rail in an appropriate enclosure and then ultimately at the assigned work site (see Section 2.3.1). Dimensions are provided in Section 4.6 of this manual.
2. Remove the Process I/O Board and the CPU/System Controller Board (as one assembly).
3. Make sure that the Lithium Backup Battery has been enabled, i.e., Backup Battery Jumper W3 on the CPU/System Controller Assembly should be installed on jumper posts 1-2). Configure the CPU/System Controller Board DIP-Switches and Jumpers (see Sections 2.3.3 & 2.3.3.1). Configure the Process I/O Board's DIP-Switches and Jumpers (see Section 2.3.2). After configuring the Jumpers and DIP-Switches, install the Process I/O Board and the CPU/System Controller Board (as one assembly) into the enclosure.
4. Configure/Connect appropriate communication port(s) (see Section 2.3.3.2). Connect COMM. Port 1 or 2 of the ControlWave Express (depending on CPU/System Controller Board Switch SW2 settings - see Section 2.3.3.1) to a Communication Port of a PC (typically PC COMM. Port 1). *Note: Also see Section 2.4.4.*



Click here to return to Table of Contents

5. Install I/O wiring to the Process I/O Board and to the CPU/System Controller Board if Pulse Inputs are present (see Section 2.3.4). Install a communications cable to a Model 3808 Transmitter if required (see Section 2.3.6).
6. Install a ground wire between the Enclosure and a known good Earth Ground (see Section 2.3.7.3).
7. If required, install the RTD Probe (see Section 2.3.5)
8. Connect DC Power wiring to the ControlWave Express CPU/System Controller Board (see Sections 2.3.7.1 & 2.3.7.2).
9. Apply power to the ControlWave Express. Now continue with Steps 2 through 7 below (and Section 2.4.1) and the ControlWave Express will be ready for on-line operation.

**Step 2. Software Installation on the PC Workstation**

**ControlWave Designer** software must be installed on the PC. The completed project is downloaded into the unit from Open BSI Downloader or from ControlWave Designer. This will require the installation of the **ControlWave Designer Package** from the Open BSI CD-ROM onto the PC.

You must install the **Open BSI Network Edition**. For information on minimum system requirements and more details on the installation, see the installation procedure in Chapter 2 of the *Open BSI Utilities Manual* (document # D5081).

**<u>If you have an older version of ControlWave Designer already installed:</u>**

Beginning with ControlWave Designer Version 3.3, the copy protection key (dongle) is NOT required. Prior to installing ControlWave Designer 3.3 or newer, you MUST remove the hardware dongle from the parallel port of your PC workstation. Otherwise, when you subsequently start ControlWave Designer, it will operate only in 'DEMO' mode, and will limit the available system resources.

**IMPORTANT:**
**When you start ControlWave Designer, you will be reminded to register the software. Unregistered software can only be used for a maximum of 30 days. For more information on the registration process, see Chapter 2 of the Open BSI Utilities Manual (document# D5081).**

**Step 3. Establish Communications using either LocalView, NetView, or TechView and Run the Flash Configuration Utility**

Communications must be established with the ControlWave Express using LocalView, NetView, or TechView.

ControlWave Express RTUs ship from the factory with a default Flash configuration. Most users will need to edit this configuration to set the IP address (if using PPP), BSAP local address, user accounts, and port parameters. This can be done in one of two ways:

- Either open the supplied Flash Configuration Profile (FCP) file and modify it, directly in the Flash Configuration Utility, or in a text editor,
- Or retrieve existing Flash Parameters directly from the unit, and edit them in the Flash Configuration Utility.



Click here to return to Table of Contents

Detailed information on the Flash Configuration Utility, and LocalView is included in Chapter 5 of the *Open BSI Utilities Manual* (document # D5081). NetView is described in Chapter 6 of that same manual. TechView is described in the *TechView User's Guide* (document# D5131).

**Step 4. Create an Application-Specific Control Strategy in ControlWave Designer**

At this point, you can create your application-specific control strategy using ControlWave Designer. This involves opening a new project using the 'CWMicro' template, defining I/O boards using the I/O Configurator, and creating a program using one or more of the five supported IEC 61131 languages (FBD, ST, SFC, LD, or IL). Some of these languages are text-based, others use graphical diagrams. The choice is up to you, depending upon your particular application.

The *ControlWave MICRO Quick Setup Guide* (document # D5124) includes a simple LD example. Additional examples are included in the manual, *Getting Started with ControlWave Designer* (document # D5085). More detailed information about ControlWave Designer and IEC 61131 is included in the *ControlWave Designer Reference Manual* (document # D5088).

The ACCOL3 Firmware Library, which is automatically accessible through the template referenced above, includes a series of function blocks which perform a variety of process control and communication functions. These can be included within your program to perform various duties including PID control, alarming, calculations, etc. Detailed information about each function block is included in the ControlWave Designer on-line help files.

On the variables declaration page(s) in ControlWave Designer, you will need to mark any variable you want to make accessible to external programs, such as Open BSI's DataView utility, as **"PDD"**. Similarly, any variables which should be collected into a database, or exported using the **O**LE for **P**rocess **C**ontrol (OPC) Server must be marked as **"OPC".** Variables marked as OPC can be built into a text file by the **OpenBSI Signal Extractor.** The text file can then be used in the creation of a database for human machine interface (HMI) software such as OpenEnterprise or Iconics' Genesis. These HMI software packages require that the **"Datatype conversion enable"** option be selected when generating the file using Signal Extractor. Information about the OpenBSI Signal Extractor is included in Chapter 12 of the *Open BSI Utilities Manual* (document # D5081).

Once the program has been created, it is assigned to an executable task. The entire project is then saved and compiled.

**NOTE: From this point on, the order of steps may be varied, somewhat, depending upon the requirements of the user's application.**

**Step 5. Create Application-Specific Web Pages (OPTIONAL)**

ControlWave Express RTUs support a set of standard web pages for data collection purposes and for access to communication statistics maintained in the controller. Optionally, additional user-created web pages may be created to allow a customized human-machine interface. A series of ActiveX controls for data collection and configuration are provided on the OpenBSI CD which can be included as part of these user-created web pages. For information on the ActiveX controls, see the *Web_BSI Manual* (document # D5087).



Click here to return to Table of Contents

You can use whichever HTML creation package you want to create the pages, however, all ControlWave Express related web pages (whether standard or user-created) must be viewed within Microsoft® Internet Explorer. The web pages may reside either on a PC workstation, or they can be downloaded into FLASH memory at the ControlWave Express. If stored at the ControlWave Express, you must use the ControlView utility to retrieve the pages (using FTP) for viewing in Internet Explorer.

**Step 6. Create an Open BSI Network Containing the ControlWave Express, or ADD the ControlWave Express to an Existing Open BSI Network**

In order for the ControlWave Express unit to function as part of a Bristol network, it is necessary to include it in the Bristol network.

**If no Bristol network exists:**

You need to run Open BSI's NetView software on the PC workstation in order to define a Bristol network. A series of software wizards are used to define a Network Host PC, a network, and the RTUs (controllers) assigned to the network. Finally, communication lines must be specified which handle the address assigned to the ControlWave Express. Chapters 3 and 4 of the *Open BSI Utilities Manual* (document # D5081) include 'quick start' examples for performing these steps. More detailed information is included in the NetView chapter (Chapter 6) of D5081.

**If a Bristol network already exists:**

You will need to add the ControlWave Express to the existing network using NetView's RTU Wizard. Chapter 6 of the *Open BSI Utilities Manual* (document # D5081) includes different sub-sections depending upon whether you are adding the unit to a BSAP network, or an IP network.

**Step 7. If applicable, download new or modified control strategy (OPTIONAL)**

If you modify a ControlWave Express program, or create your own program, compile and download the new or modified program into the unit, using either ControlWave Designer, or the Open BSI 1131 Downloader. In this case, you download the control strategy into the BOOT project area of FLASH memory; this ensures that if the ControlWave Express is reset, or if there has been a failure of the backup battery, the control strategy can be restarted from the beginning, i.e. from the BOOT project in FLASH memory. To download the project, see Section 2.4.1.

### 2.3.1 Mounting the ControlWave Express Enclosure/Chassis

When mounting one of these units, it is to be installed in accordance with the following restrictions:

- The unit may be positioned vertically or horizontally. Units can be mounted to a panel directly or via a DIN-Rail Mounting Bracket (utilizing a 35mm DIN-Rail). The basic unit measures 10.75" long, by 5.56" wide, by 2.06" deep (without mounting brackets).

- The unit must be positioned such that the front of the assembly is visible and the unit is accessible for service, i.e., replacement of the Lithium Battery, or installation and removal of any ControlWave Express option.



Click here to return to Table of Contents

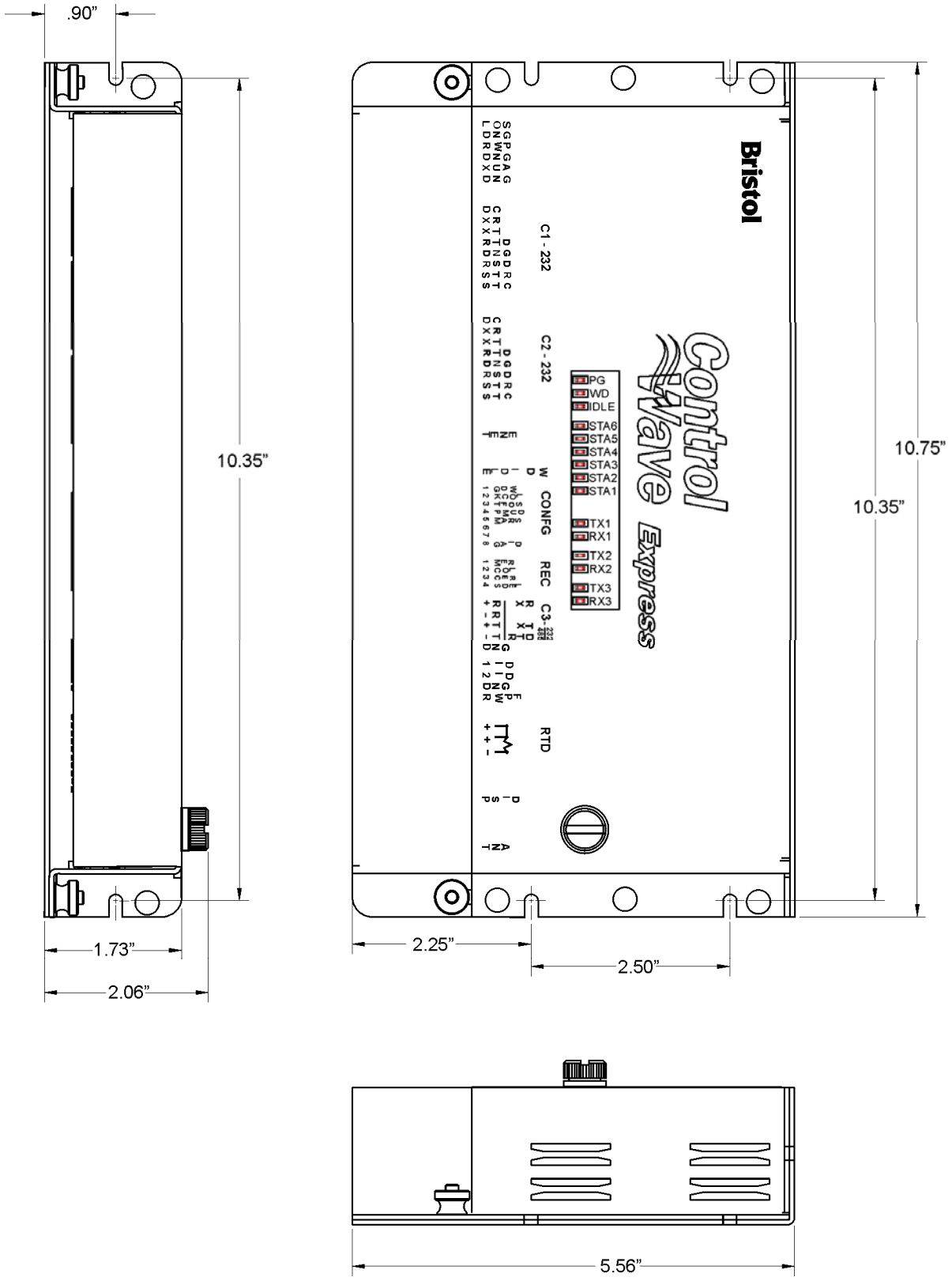


**Figure 2-2 - ControlWave Express Dimensions**

- Power wiring should not be installed until the unit has been mounted and grounded at a designated work site.
- I/O wiring, external power wiring, local comm. port, and network (RS-232 and RS-485) comm. port cabling enter the unit though a slot on the left side of the Removable Card Edge Cover.



Click here to return to Table of Contents

### 2.3.2 Process I/O Board Configuration

I/O Board jumpers and Switch SW1 must be set to configure field I/O (see Figure 2-3).

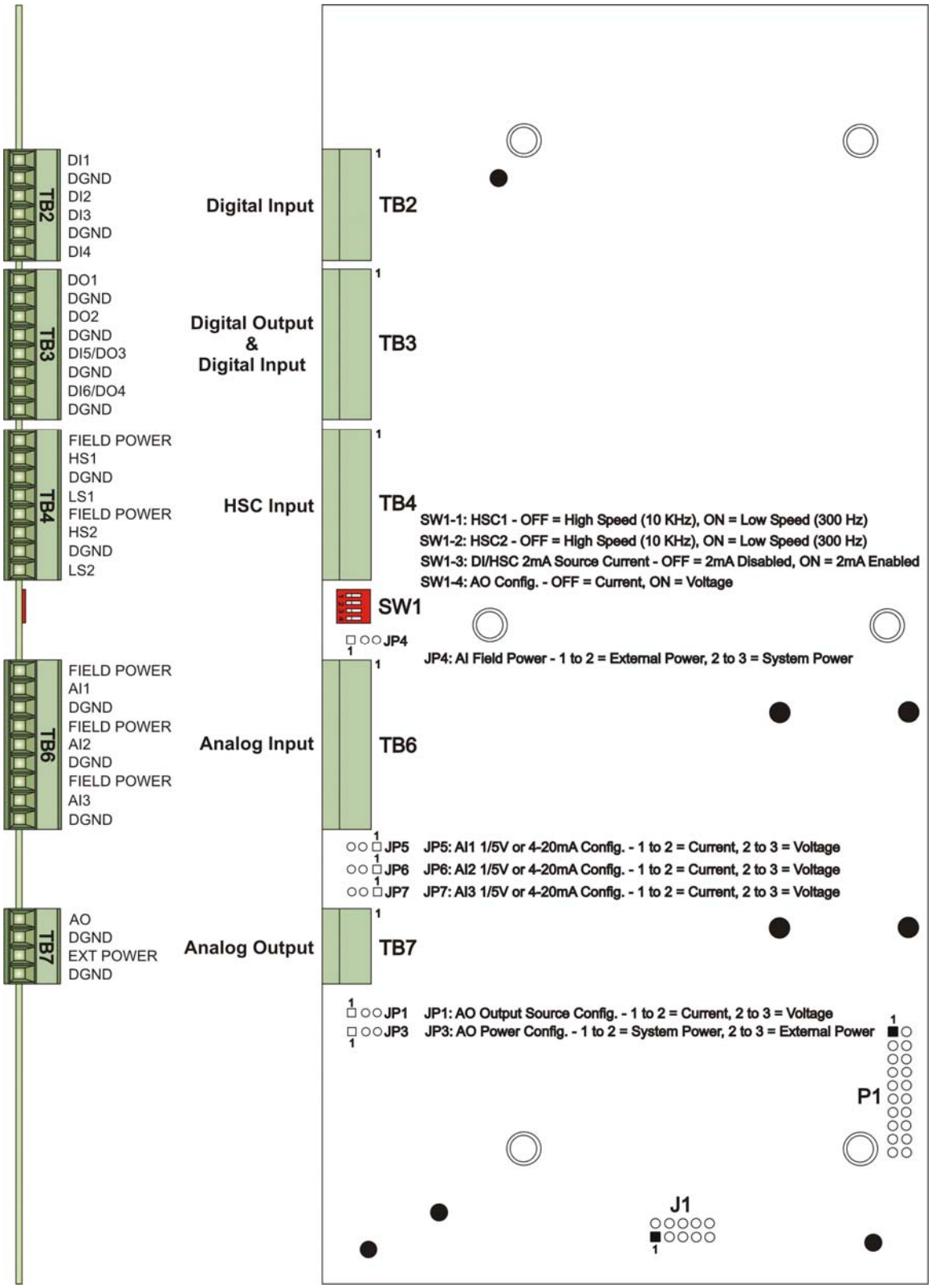


**Figure 2-3 - Process I/O Board Component Identification Diagram**



Click here to return to Table of Contents

### 2.3.3 CPU/System Controller Board Configuration

To configure the CPU/System Controller Board, Jumpers must be set (see Figure 2-4), DIP-Switches must be set (see Section 2.3.3.1) and Communication Ports must be wired (see Sections 2.3.3.2 through 2.3.3.3).

For safety reasons and to prevent accidental damage to a user-supplied external bulk DC Power Supply, it is recommended that the pluggable Power Terminal Blocks TB1 and TB2 on the CPU/System Controller Board be disconnected until the entire unit has been wired, and hardware configured. Sections 2.3.7.1 & 2.3.7.2 provide details on DC Power Connector wiring.

#### 2.3.3.1 CPU/System Controller Board Switch Configuration

ControlWave Express CPU/System Controller Board Switches must be set for the desired performance options. Tables 2-1, 2-2 and 2-5 provide an overview of switch settings.

SW2-1 set OFF will disable the system from entering a watchdog state when a crash or system hang up occurs. Setting SW2-1 OFF prevents the system from automatically restarting.

SW2-2 set OFF prevents changing the Soft Switches, other configurations and FLASH files, i.e., these items are locked. To change Soft Switch, configuration and FLASH files SW2-2 must be set to the ON position (see Section 2.4.4).

**Table 2-1 - CPU/System Controller Bd. Configuration Switch SW2 - Assignments**
**Note: Except for SW2-4, ON = Factory Default**

| SW# | Function | Setting - (ON = Factory Default) |
|---|---|---|
| SW2-1 | Watchdog Enable | ON = Watchdog circuit is Enabled<br>OFF = Watchdog circuit is Disabled |
| SW2-2 | Lock/Unlock Soft Switches | ON = Write to Soft Switches and FLASH files<br>OFF = Soft Switches, configurations and FLASH files are locked |
| SW2-3 | Use/Ignore Soft Switches | ON = Use Soft Switches (configured in FLASH)<br>OFF = Ignore Soft Switch Configuration and use factory defaults |
| SW2-4 | Core Updump See Section 3.6 | ON = Core Updump Disabled<br>OFF = Core Updump Enabled via Mode Switch (SW1) |
| SW2-5 | SRAM Control | ON = Retain values in SRAM during restarts<br>OFF = Force system to reinitialize SRAM |
| SW2-6 | System Firmware Load Control * | ON = Enable remote download of System Firmware<br>OFF = Disable remote download of System Firmware |
| SW2-7 | N/A | |
| SW2-8 | Enable WINDIAG | ON = Normal Operation (don't allow WINDIAG to run test)<br>OFF = Disable boot project (allow WINDIAG to run test) |

*** = Boot PROM version 4.7 or higher and System PROM version 4.7 or higher**

SW2-3 set OFF forces the use of Soft Switches as set per factory default (see Section 2.4.4). For use of user defined Soft Switches, SW2-3 must be set to the ON position. *Note: If both SW2-3 and SW2-8 are set OFF (closed), all communication ports will be set to 9600 bps operation.*

SW2-4 set OFF and used in conjunction with Mode Switch (SW1) will cause the ControlWave Express to perform a Core Updump (see Section 3.6).



Click here to return to Table of Contents

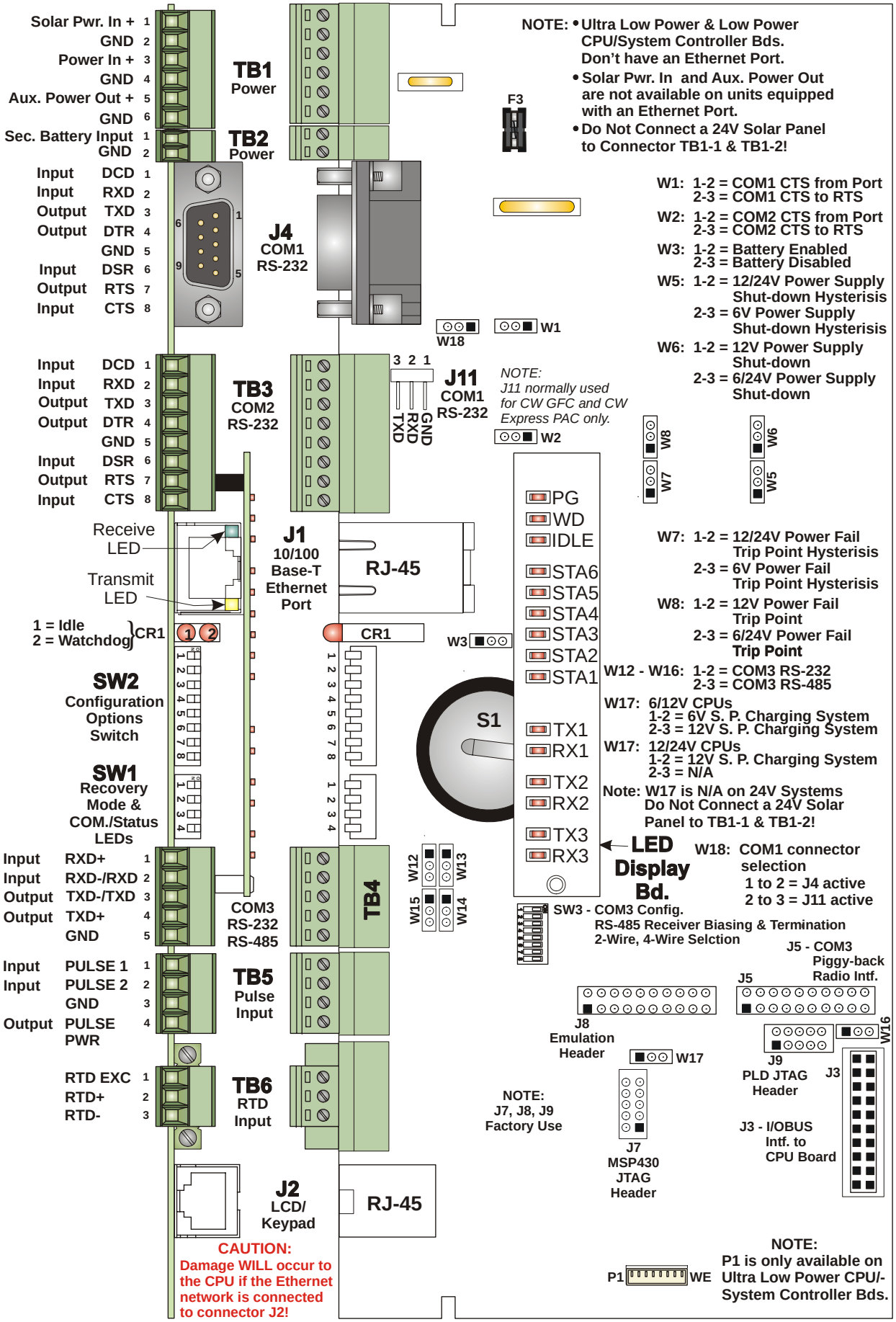


**Figure 2-4 - CPU/System Controller Bd. Component I.D. Diagram**



Click here to return to Table of Contents

SW2-5 set OFF forces the ControlWave Express to reinitialize SRAM when the unit recovers from a low power or power outage condition. When set ON, the contents of SRAM will be retained and utilized when the system restarts. **Note: If the Battery is removed from the CPU Module (CPU removed), the CPU should not be installed (and power applied) before one minute has passed unless SW2-5 on the CPU has been set OFF.**

SW2-6 set ON will enable the user to perform a remote download of System Firmware on units equipped with Boot PROM version 4.7 or higher and System PROM version 4.7 or higher (see Section 2.4.2.3).

SW2-8 set OFF prevents the 'Boot Project' from running and places the unit into diagnostic mode. SW2-8 must be set OFF to run the WINDIAG program resident on the local PC (**see Section 3.5**). When SW2-8 has been set ON, diagnostics is disabled. SW2-8 must be set to the ON position for normal system operation, i.e. for the Boot project to run. *Note: If both SW2-3 and SW2-8 are set OFF (closed), all communication ports will be set to 9600 bps operation.*

Table 2-5 in Section 2.3.3.3 provides CPU/System Controller Board Switch SW3 (COM3) RS-485 communication port settings.

**Table 2-2 - CPU/System Controller Bd. Switch SW1**
**Recovery Mode/Local Mode Control**

| SWITCH | Function | Setting |
|---|---|---|
| SW1-1/2 | Recovery/Local Mode | Both ON or OFF = Recovery Mode<br>SW1 OFF & SW2 ON = Local Mode |
| SW1-3 | Force Recovery Mode | ON = Force Recovery Mode (via CW Console)<br>OFF = Recovery Mode disabled |
| SW1-4 | LED Status | ON = Enable All LEDs<br>OFF = Disable All LED except Watchdog (WD) |

*** = Note: Only the Switch SW1 settings listed in this table, have been tested.**

Recovery Mode as supported by SW1-1 and SW1-2 or SW1-3 (forced by CW Console) accommodates FLASH firmware upgrades to the CPU or allows the user to perform a Core Updump, i.e., upload the contents of SRAM to a PC for evaluation.

### 2.3.3.2 Communication Ports

A ControlWave Express can be configured as a Master or Slave node on either a MODBUS network or a BSAP network. A variety of communication schemes are available. Three serial communication ports are contained on the standard CPU/System Controller Board. These communication ports are designated as follows:

**<u>CPU/System Controller Board:</u>**

COM1 - Port 1: J4 (9-Pin Male D-Type Connector) RS-232 or J11 (3-Pin Male Connector) Choice of active connector configured by jumper W18.
COM2 - Port 2: TB3 (8-Pin Term. Block) RS-232
COM3 - Port 3: TB4 (5-Pin Term. Block) RS232/RS-485 - RS-485 Configured by SW3

Communication Ports COM1, COM2 and COM3 support serial asynchronous operation as listed above. Any communication port (COM1, COM2 or COM3) can be configured for local communications, i.e., connected to a PC loaded with ControlWave Designer and OpenBSI software.



Click here to return to Table of Contents

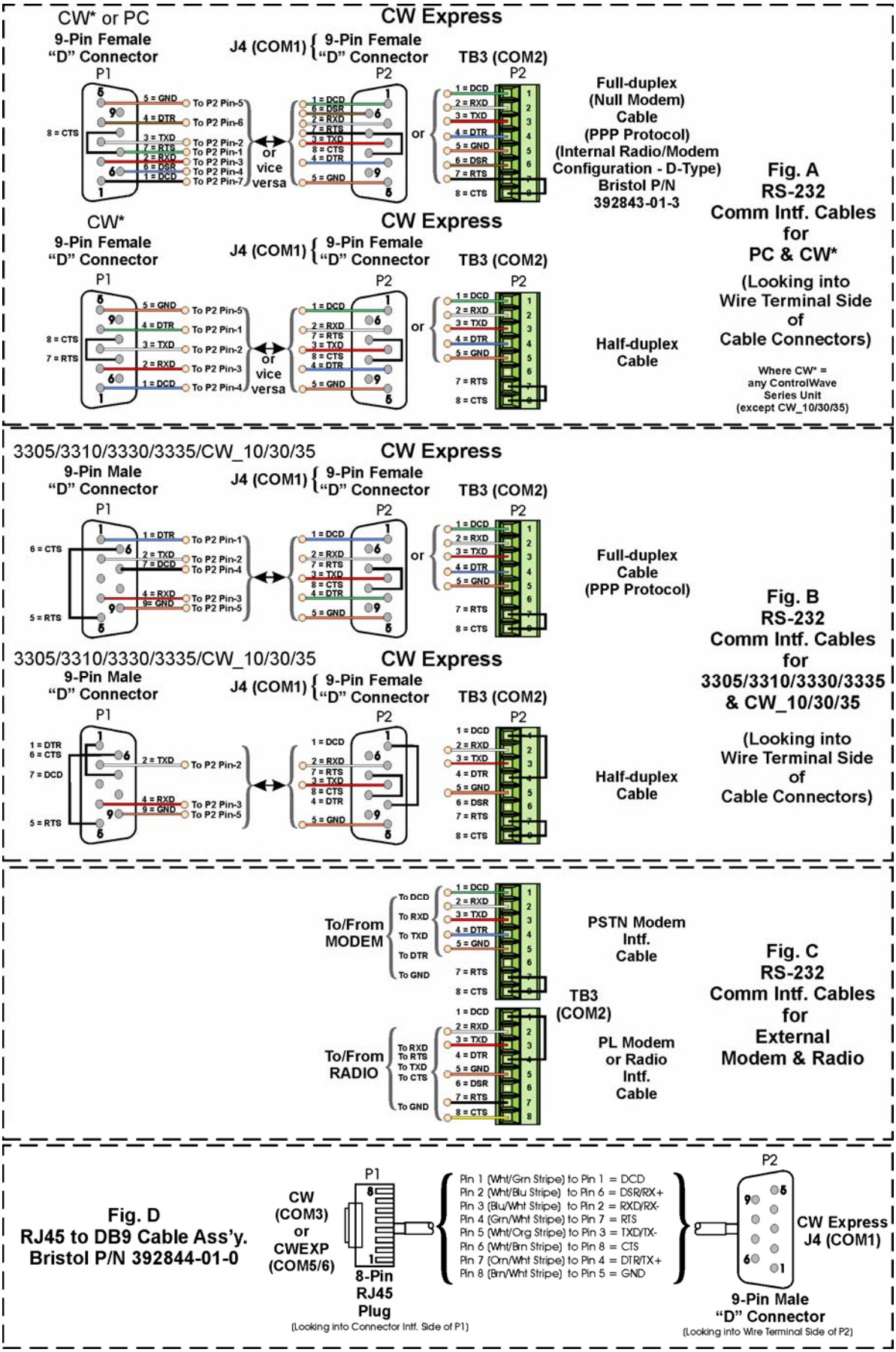


**Figure 2-5 - Communication Ports – CPU Board RS-232 Cable Wiring Diagram**



Click here to return to Table of Contents

Diagrams of RS-232/485 interfaces and connectors are shown in Figures 2-4 and 2-5 Hardware connector pin wiring assignments are provided in Tables 2-3A through 2-3C.

#### 2.3.3.3 RS-232 & RS-485 Interfaces

ControlWave Express RS-232 & RS-485 communication schemes are discussed herein.

##### 2.2.3.3.1 RS-232 Ports

An RS-232 interface supports Point-to-Point, half-duplex and full-duplex communications (20 feet maximum, using data quality cable). Half-duplex communications supported by the ControlWave Express utilize MODBUS or BSAP protocol, while full-duplex is supported by the Point-to-Point (PPP) protocol. ControlWave Express RS-232 ports utilize a "null modem" cable (Figure 2-5A - Top) to interconnect with other devices such as a PC, printer, a ControlWave series unit (except CW_10/30/35) when the ControlWave Express is communicating using the full-duplex PPP protocol. A half-duplex cable (Figures 2-5A - Bottom) may be utilized when the ControlWave Express is connected to a ControlWave series unit (except CW_10/30/35). If communicating with a Bristol series 3305, 3310, 3330, 3335, or CW_10/30/35 RTU/DPC, one of the cables shown in Figure 2-5B must be used. Refer to Figure 2-5C to connect ControlWave Express serial RS-232 port COM2 to either an external modem or external radio. When interfacing to Port COM3 of a ControlWave unit, or to COM5 or COM6 of a ControlWaveEXP, the cable of Figure 2-5D must be used along with the one of Figure 2-5A or 2-5B. Tables 2-3A through 2-3C provide the connector pin assignments for ports COM1 and COM2.

**Note:** The following facts regarding ControlWave Express RTU's RS-232 serial communication ports should be observed when constructing communications cables:

- DCD must be high to transmit (except when dialing a modem)
- Each RS-232 transceiver has one active receiver while in power down mode (disabled); the DCD signal is connected to the active receiver.
- CTS must be high to transmit.
- When port is set for full-duplex operation - RTS is always ON.
- DTR is always high (when port is active); DTR enables RS-232 Transceivers.
- When port is set for half-duplex operation - CTS must go low after RTS goes low.
- All RS-232 Comm. ports support RTS, DTR, CTS, DCD and DSR control signals.
- All RS-232 Comm. port I/O signals are protected by LCDA12C surge protectors to ±4KV ESD.

**Table 2-3A - RS-232 Ports (COM1 & 2) Connector Pin Assignments (D – Connector: COM1 Connector J4, COM2 Connector TB3**

| Pin # | Signal RS-232 | Description: RS-232 Signals |
|---|---|---|
| 1 | DCD | Data Carrier Detect Input |
| 2 | RXD | Receive Data Input |
| 3 | TXD | Transmit Data Output |
| 4 | DTR | Data Terminal Ready Output |
| 5 | GND | Power Ground |
| 6 | DSR | Data Set Ready Input |
| 7 | RTS | Request To Send Output |
| 8 | CTS | Clear To Send Input |
| 9 | - | - |



Click here to return to Table of Contents

**Table 2-3B - RS-232 Port (COM1) Alternate Connector (COM1 Connector J11)**

| Pin # | Signal RS-232 | Description: RS-232 Signals |
|---|---|---|
| 1 | GND | Power Ground |
| 2 | RXD | Receive Data Input |
| 3 | TXD | Transmit Data Output |

NOTE: Choice of COM1 connectors (J4 or J11) determined by jumper W18.

#### 2.2.3.3.2 RS-485 Ports

ControlWave Express RTUs can use an RS-485 communication port for network communications to multiple nodes up to 4000 feet away. Since this interface is intended for network communications, Table 2-4 provides the appropriate connections for wiring the master, 1st slave, and nth slave. Essentially, the master and the first slave transmit and receive data on opposite lines; all slaves (from the first to the "nth") are paralleled (daisy-chained) across the same lines. The master node should be wired to one end of the RS-485 cable run. A 24-gauge paired conductor cable, such as Belden 9843 should be used. *Note: Only half-duplex RS-485 networks are supported.*

Table 2-3C provides connector pin assignments for CPU/System Controller Board port COM3. Table 2-5 provides the RS-485 termination and loopback control Switch Settings for the RS-485 Ports.

**Table 2-3C - RS-232/485 Port (COM3) Connector Pin Assignments (TB4)**

| Pin # | Signal RS-485 | Description: RS-485 Signals | Description: RS-232 Signals |
|---|---|---|---|
| 1 | RXD+ | Receive Data + Input | |
| 2 | RXD–/RXD | Receive Date – Input | Receive Date Input |
| 3 | TXD–/TXD | Transmit Data – Output | Transmit Data Output |
| 4 | TXD+ | Transmit Data + Output | |
| 5 | Power Ground | Ground | Ground |

Receiver biasing and termination as well as 2-wire or 4-wire selection are enabled by eight-position DIP-Switch (SW3) situated on the CPU/System Controller Board as stated in Table 2-5.

To ensure that the “Receive Data” lines are in a proper state during inactive transmission periods, certain bias voltage levels must be maintained at the master and most distant slave units (end nodes). These end nodes also require the insertion of 100-Ohm terminating resistors to properly balance the network. Secondary Communication Board switches must be configured at each node to establish proper network performance. This is accomplished by configuring CPU/System Controller Bd. Switch SW3 (COM3) so that the 100-Ohm termination resistors and biasing networks are installed at the end nodes and are removed at all other nodes on the network (see Table 2-5).



Click here to return to Table of Contents

**Table 2-4 - RS-485 Network Connections**
(see Table 2-3C ControlWave Express RS-485 Port Pin # Assignments)

| From Master | To 1st Slave | To nth Slave |
|---|---|---|
| TXD+ | RXD+ | RXD+ |
| TXD– | RXD– | RXD– |
| RXD+ | TXD+ | TXD+ |
| RXD– | TXD– | TXD– |
| GND/ISOGND* | GND/ISOGND* | GND/ISOGND* |

* ISOGND with Isolated RS-485 Ports Only!

**Note: Pins 1, 2, 3, 4 & 9 of BBI Series 3305, 3310, 3330, 3335 & 3340 RTU/DPC RS-485 Comm. Ports are assigned as follows: 1 = TXD+, 2 = TXD-, 3 = RXD+, 4 = RXD- & 9 = ISOGND.**

**Table 2-5 - CPU/System Controller Bd. Switch SW3 Assignments**
**RS-485 Loopback & Termination Control for COM3**

| SWITCH # | RS-485 Function Switch ON | Setting |
|---|---|---|
| SW3-1 | TX+ to RX+ Loopback/2-Wire | ON – 2-Wire Operation or Loopback Enabled<br>OFF – 4-Wire Operation & Loopback Disabled |
| SW3-2 | TX– to RX– Loopback/2-Wire | ON – 2-Wire Operation or Loopback Enabled<br>OFF – 4-Wire Operation & Loopback Disabled |
| SW3-3 | 100 Ohm RX+ Termination | ON – End Nodes Only |
| SW3-4 | 100 Ohm RX– Termination | ON – End Nodes Only |
| SW3-7 | RX+ Bias (End Nodes/Node) | ON – 4-Wire = Both End Nodes<br>2-Wire = One End Node Only<br>OFF – No Bias |
| SW3-8 | RX– Bias (End Nodes/Node) | ON – 4-Wire = Both End Nodes<br>2-Wire = One End Node Only<br>OFF – No Bias |

**SW3-5 & SW3-6 Not Used**

### 2.3.3.4 Ethernet Port

ControlWave Express CPU/System Controller Boards can contain one Ethernet Port that utilizes a 10/100Base-T RJ-45 modular connector (J1) and typically provides a shielded twisted pair interface to an Ethernet Hub.

A typical Ethernet Hub provides eight (8) 10/100Base-T RJ-45 Ports (with Port 8 having the capability to link to another Hub or to an Ethernet communications port). Both ends of the twisted pair Ethernet cable are equipped with modular RJ-45 connectors. These cables have a one-to-one wiring configuration as shown in Figure 2-8. Table 2-6 provides the assignments and definitions of the 8-pin 10/100Base-T connector.

It is possible to connect two nodes in a point-to-point configuration without the use of a Hub. However, the cable used must be configured such that the TX+/- Data pins are connected to the RX+/- Data pins (swapped) at the opposite ends of the cable (see Figure 2-7).

The maximum length of one segment (CPU to Hub) is 100 meters (328 feet). The use of Category 5 shielded cable is recommended.



Click here to return to Table of Contents

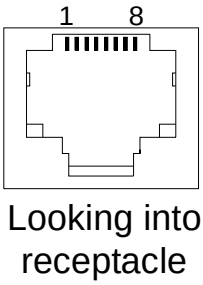


**Figure 2-6 - RJ-45 Connector (Ethernet Port) J1 on CPU/System Controller Board**

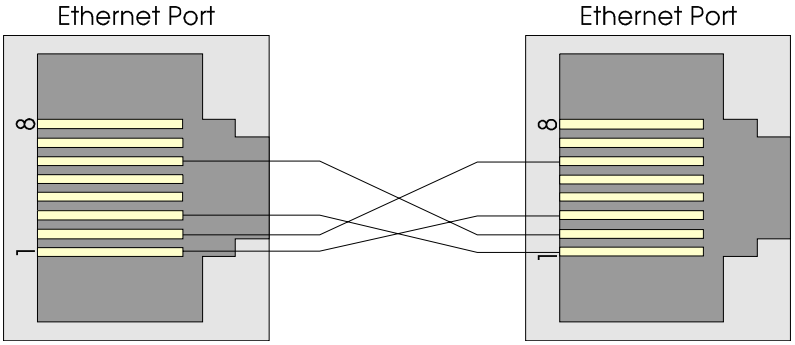


**Figure 2-7 - Point-to-Point 10/100Base-T Ethernet Cable**

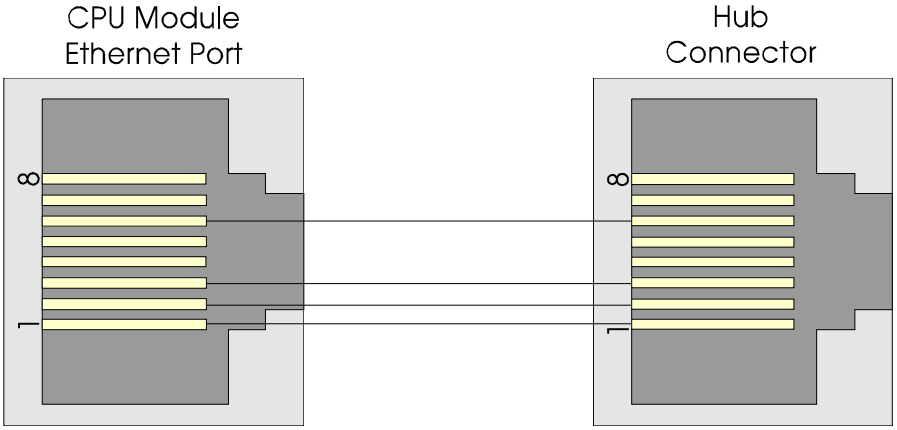


**Figure 2-8 - Standard 10/100Base-T Ethernet Cable (CPU/System Controller Board to Hub)**

**Table 2-6 - Ethernet 10/100Base-T Pin Assignments**

| Pin # | Description | Pin # | Description |
|---|---|---|---|
| 1 | Transmit Data+ (Output) | 5 | Not Connected |
| 2 | Transmit Data- (Output) | 6 | Receive Data- (Input) |
| 3 | Receive Data+ (Input) | 7 | Not Connected |
| 4 | Not Connected | 8 | Not Connected |

***Note: TX & RX are swapped at Hub's.***



Click here to return to Table of Contents

### 2.3.4 I/O Wiring

ControlWave Express RTUs are provided with card edge terminal blocks that accommodate field wiring. Wiring is routed into the enclosure/chassis through a slot in the removable card edge cover.

#### 2.3.4.1 I/O Wire Connections

ControlWave Express RTUs utilize terminal blocks equipped with compression-type terminals that accommodate up to #16 AWG wire. A connection is made by inserting the wire's bared end (1/4" max) into the clamp beneath the screw and securing the screw. The wire should be inserted fully so that no bare wires are exposed to cause shorts. If using standard wire, tin the bare end with solder to prevent flattening and improve conductivity.

Allow some slack in the wires when making terminal connections. The slack makes the connections more manageable and minimizes mechanical strain on the terminal blocks.

Field I/O Wiring is supported by card edge Terminal Block Connectors as follows:

#### 2.3.4.2 Shielding and Grounding

The use of twisted-pair, shielded and insulated cable for I/O signal wiring will minimize signal errors caused by electromagnetic interference (EMI), radio frequency interference (RFI) and transients. When using shielded cable, all shields should only be grounded at one point in the appropriate system. This is necessary to prevent circulating ground current loops that can cause signal errors.

**Process I/O Board I/O Connections**
Non-isolated Analog Input Connection (Section 2.3.4.6)
Non-isolated Analog Output Connection (Section 2.3.4.7)
Dedicated Non-isolated Digital Input Connection (Section 2.3.4.3)
Dedicated Non-isolated Digital Output Connection (Section 2.3.4.4)
Selectable Non-isolated Digital Input/Output Connection (Section 2.3.4.5)
Non-isolated High Speed Counter Input Connector (Section 2.3.4.8)

**CPU/System Controller Board I/O Connections**
Non-isolated Pulse Input Connection (Section 2.3.4.9)

#### 2.3.4.3 Dedicated Non-isolated Digital Inputs

Process I/O Board Terminal Block connector TB2 provides interface to 4 dedicated non-isolated Digital Inputs DIs). All Digital Inputs support dry contact inputs that are pulled internally to 3.3 Vdc when the field input is open. Source current for DI#1 through DI#4 is switch selectable for 60uA or 2mA from the 3.3V supply (SW1-3 ON = 2mA, OFF = 60uA). *Note: SW1-3 sets all DIs and all HSCs (for DI5, DI6, HSC1 & HSC2 SW1-3 ON = 2.2mA and SW1-3 OFF = 200uA).* 15 millisecond input filtering protects against contact bounce.

##### 2.3.4.3.1 Dedicated Digital Input Configurations

Terminal Block TB2 supports four non-configurable DIs. Each DI provides a 60uA or 2mA source current from 3.3Vdc. Switch SW1-3 must be set to establish the DI source current for DI#1 through DI4 (SW1-3 ON = 2mA, OFF = 60uA) as well as DI5 & DI6 (SW1-3 ON = 2.2mA, OFF = 200uA). Field wiring assignments are provided in Figure 2-9.



Click here to return to Table of Contents

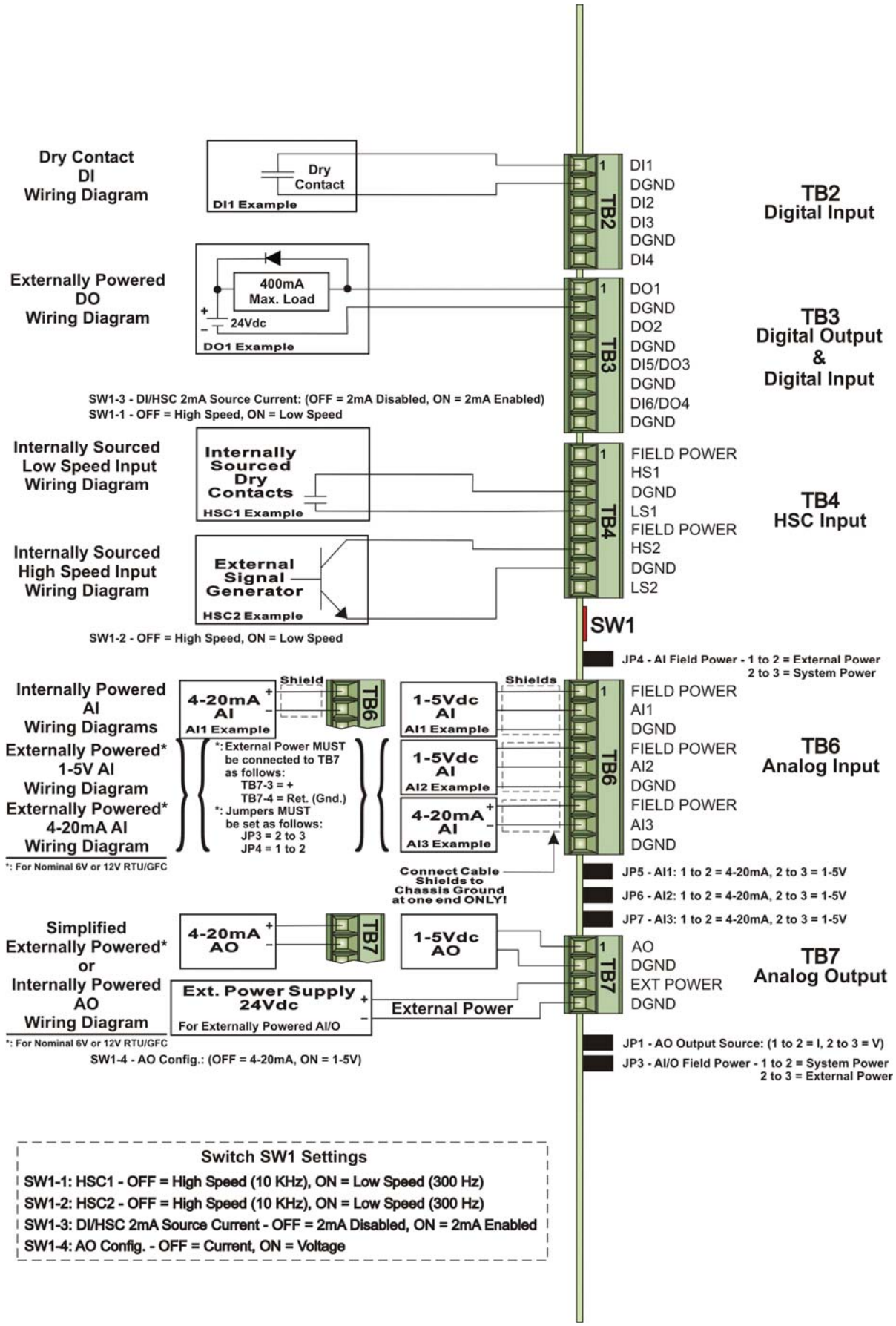


**Figure 2-9 – Process I/O Board Field I/O Wiring Diagrams**



Click here to return to Table of Contents

#### 2.3.4.4 Dedicated Non-isolated Digital Outputs

Process I/O Board Terminal Block connector TB3 provides interface to 2 dedicated non-isolated Digital Outputs (DOs) and two selectable DI/Os. Digital Outputs have a 30V operating range and are driven by Open Drain MOSFETs that provide 400 mA (Max.) at 30Vdc. The maximum output frequency is 20 Hz. Transorbs (30Vdc) provide surge suppression between each signal and ground.

##### 2.3.4.4.1 Dedicated Digital Output Configurations

Process I/O Board Terminal Block connector TB3 supports two non-configurable externally powered DOs. Open drain MOSFETs associated with each DO can sink 400mA. Field wiring assignments are provided in Figure 2-9.

#### 2.3.4.5 Selectable Non-isolated Digital Inputs/Outputs

TB3 supports 2 user-selectable Digital Inputs/Outputs. These DI/Os may be unused or individually user wired as desired, i.e., both DI, both DO, one DI and/or one DO. Their operation depends on how they are wired, i.e., DI or DO. DI/Os are rated identically to the DIs and DOs.

##### 2.3.4.5.1 Selectable Digital Input/Output Configurations

Process I/O Board Terminal Block connector TB3 supports two user selectable DI/DOs. When wired for DI operation, each DI provides a 200uA or 2.2mA source current from 3.3Vdc. Switch SW1-3 must be set to establish the DI source current for DI 5 & 6 (SW1-3 ON = 2.2mA, OFF = 200uA). When wired for DO operation, the Open Drain MOSFET associated with each DO can sink 400mA @ 30Vdc. Field wiring assignments are provided in Figure 2-9.

#### 2.3.4.6 Non-isolated Analog Inputs

Process I/O Board Terminal Block connector TB6 provides interface to three single-ended Analog Inputs. Three field terminals are assigned for each Analog Input, i.e., Field Power, AI# and DGND). AI field power applied to each Analog Input (controlled via Jumper JP4) can be supplied by the system power (bulk input supply) or an external 24V power source. Each AI can be individually configured for 4-20mA or 1-5 operation (via Jumpers JP5 for AI1, JP6 for AI2 and JP7 for AI3). **Note: When AI Field Power Jumper JP4 is set in position 1 to 2, an external 24Vdc power source such as the ControlWave Loop Power Supply (see PIP-ControlWaveLS) will be required to power the Analog Inputs. When JP4 is set in position 2 to 3, the three Analog Inputs are powered by the system, i.e., the bulk input power applied to across TB1-3 (Power In+) and TB1-4 (GND) on the CPU/System Controller Board.**

AIs are supplied with a two hertz low pass filter and surge suppression (via 30Vdc Transorbs). The Analog Inputs are self-calibrating.

##### 2.3.4.6.1 Analog Input Configurations

AI circuits are supported by Configuration Jumpers that accommodate configuration of each of the three Analog Inputs (see Table 2-7). Analog Input can be individually configured for 1-5V or 4-20mA operation. Field wiring assignments are provided in Figure 2-9.



Click here to return to Table of Contents

**Note:**

**Cable shields associated with AI wiring should be connected to the ControlWave Express Chassis Ground. Multiple shield terminations will require a user supplied copper ground bus. This ground bus must be connected to the ControlWave Express Chassis Ground (using up to a #4 AWG wire size) and must accommodate a connection to a known good Earth Ground (in lieu of a direct connection from the ControlWave Express Chassis Ground) and to all AI cable shields. Shield wires should use an appropriate Terminal Lug and should be secured to the copper bus via industry rugged hardware (screw/bolt, lock washer and nuts).**

**Table 2-7 - Analog Input Circuitry Jumper Assignments**

| Jumper | Purpose | Notes |
|---|---|---|
| JP4 | AI Field Power | Pins 1-2 installed = External Power<br>Pins 2-3 installed = System Power |
| JP5 – JP7 | Configures AI1 through AI3 (respectively) | Pins 1-2 installed = 4-20mA AI<br>Pins 2-3 installed = 1-5V AI |

### 2.3.4.7 Non-isolated Analog Output

Process I/O Board Terminal Block connector TB7 provides interface to 1 Analog Output. The AO channel can be configured for an internal or external power source via jumper JP3. External power can range from +11 to + 30 Vdc. **It should be noted that Analog Output circuitry associated with 6V units MUST be configured for external power operation.**

Analog Output circuitry consists of a 12-bit resolution Digital to Analog Converter, a V to I circuit and a V to V circuit. 4 to 20mA or 1-5V operation is configured via SW1-4. The AO channel is self-calibrating.

#### 2.3.4.7.1 Analog Output Configurations

The Analog Output circuit utilizes two Configuration Jumpers that accommodate 1-5V or 4-20mA AO operation (JP1) and AO Power selection (JP3), i.e., system power (nominally 12 or 24 Vdc) or external power (11 - 30Vdc). Switch SW1-4 is also used to select calibration data for the AO's current/voltage operation. The maximum external load that can be connected to the 4-20mA output is 250 ohms (with an external 11V power source) or 650 ohms (with an external 24V power Source). The maximum external load current for the 1-5V output is 5mA (with an external 11 to 30 V power source). AO operation requires either an 11 to 30Vdc power source (connected to TB7-3 and TB7-4) or the unit's power supply (nominally 12 or 24 Vdc). **Note: External power can be supplied by Bristol ControlWave Loop Power Supply which supplies a regulated and isolated +24Vdc (see PIP-ControlWaveLS).**

**Table 2-8 - Analog Output Circuitry Jumper/Switch Assignments**

| Jumper/ Switch | Purpose | Notes |
|---|---|---|
| JP1 | AO1 Field Output Source Config. | Pins 1-2 installed = 4-20 mA AO<br>Pins 2-3 installed = 1-5V AO |
| JP3 | A/IO Power | Pins 1-2 installed = System Power<br>Pins 2-3 installed = External Power |
| SW1-4 | AO Field Output Source Config. | SW1-4 ON = Voltage<br>SW1-4 OFF = Current |



Click here to return to Table of Contents

### 2.3.4.8 Non-isolated High Speed Counter/Digital Inputs

Process I/O Board Terminal Block connector TB4 provides the interface to two internally-sourced single-ended High Speed Counter/Digital Inputs (HSC/DIs). All Input circuits have surge suppression and signal conditioning. HSC inputs are switch-selectable (SW1-1 for HSC1 & SW1-2 for HSC2) for high frequency (10 kHz) or low frequency (300 Hz).

High Speed Counter/Digital inputs are sourced from 3.3Vdc and are switch selectable for a source current of 200uA or 2.2mA (SW1-3 ON = 2.2mA, OFF = 200uA). *Note: SW1-3 sets all DIs and all HSCs.*

#### 2.3.4.8.1 High Speed Counter Configurations

A total of 2 HSC inputs with surge protection are provided. HSC Configuration Switches must be set per Table 2-9.

**Table 2-9 - Non Isolated HSC/DI Switch Assignments**

| Switches | Purpose | Notes |
|---|---|---|
| SW1-1<br>SW1-2 | Configures HSC1<br>Configures HSC2 | OFF = High Frequency (10 kHz)<br>ON = Low Frequency (300 Hz) |
| SW1-3 | HSC Source Current | OFF = 200uA Source Current<br>ON = 2.2mA Source Current |

### 2.3.4.9 Non-isolated Pulse Counter/Digital Inputs

CPU/System Controller Edge connector TB5 provides the interface to two non-configurable Open Collector Pulse Counter/Digital Inputs (Pulse 1 and Pulse 2). Pulse Counters act like high speed counters but cannot be used with contact relays because they lack contact debounce circuitry. Signal conditioning circuitry provides 20 microsecond filtering. Each Pulse Counter/Digital input circuit has surge suppression which consists of a 16V transorb between signal and ground. Pulse Counter/Digital Inputs are field driven by open collector circuits and are sourced for 3.3V (internally) with a 200uA source current. Maximum input frequency for each Pulse Counter/Digital Input circuit is 10 kHz. Figure 2-10 shows the Open Collector Wiring arrangement.

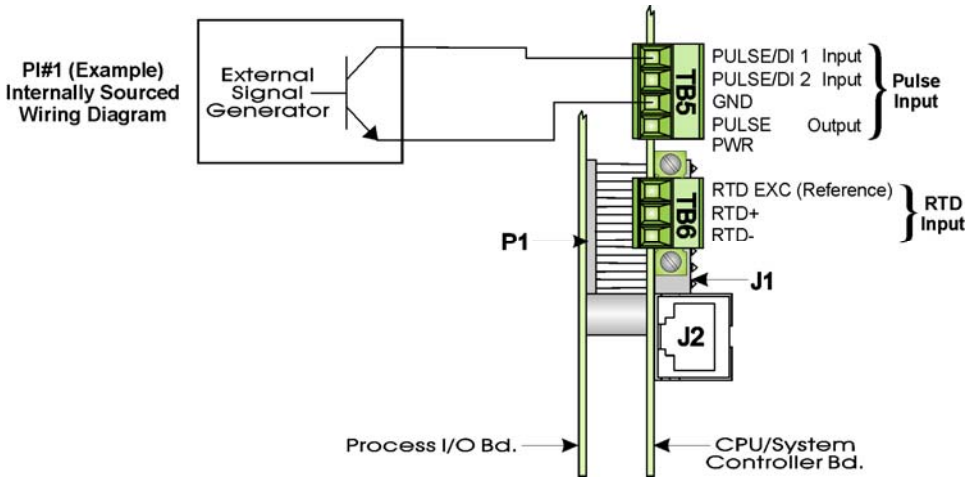


**Figure 2-10 - Pulse Input Wiring Diagram**



Click here to return to Table of Contents

### 2.3.5 RTD Wiring

A 3-wire RTD may be provided with the ControlWave Express (equipped with a 14MHz CPU/System Controller Board). Connector TB6 on the CPU/System Controller Board accommodates a removable three-wire Terminal Block (TB6). This connector accommodates a 100-ohm platinum bulb using the DIN 43760 curve. ControlWave Express RTUs use the common three-wire configuration. In this configuration, the Return lead connects to RTD- and the two junction leads (Sense and Excitation), connect to RTD+ and RTD EXC. Connection between the RTD and CPU/System Controller Board is wired per Table 2-10 and Figure 2-11.

**Table 2-10 - RTD Connections to CPU/System Controller Board Connector TB6**

| TB6 Pin | Signal | Function |
|---|---|---|
| 1 | RTD EXC | Reference |
| 2 | RTD+ | Sense |
| 3 | RTD- | Return |

Never ground the RTD Cable Shield at both ends or allow it to come in contact with metallic/conductive conduit as multiple ground paths could cause RTD input errors.

To install the RTD Probe, screw the Fitting Body into the thermowell with a 7/8"open-end wrench. While applying pressure against the sheath to force the Tip of the RTD Probe into the bottom of the thermowell (so that the Probe Tip is in contact with the thermowell), tighten the Nut (9/16" open-end wrench) against the 7/8" Fitting Body (see Figure 2-12).

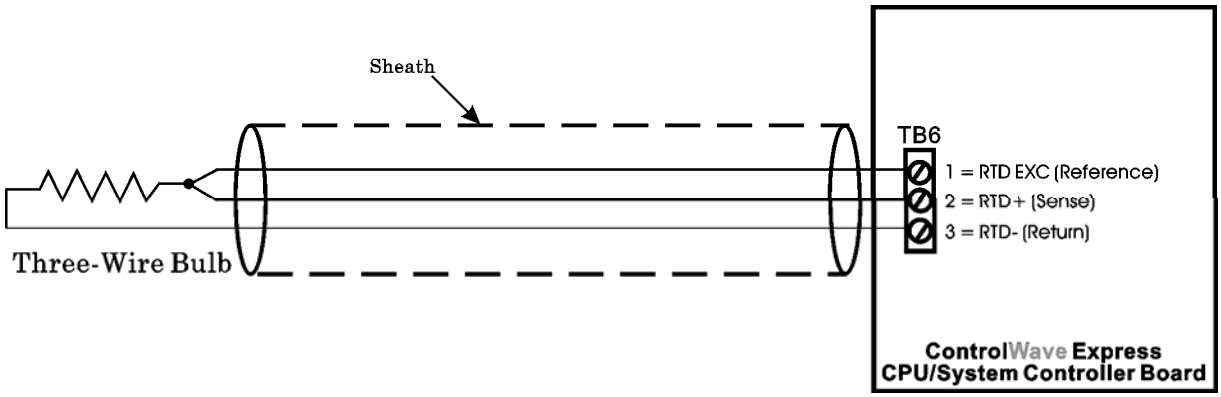


**Figure 2-11 - 3-Wire RTD Temperature Input Wiring**

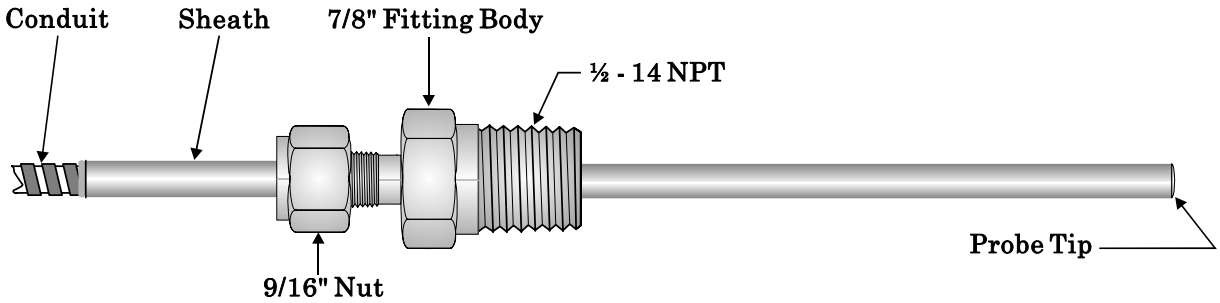


**Figure 2-12 - RTD Probe Installation/Removal Diagram**



Click here to return to Table of Contents

### 2.3.6 Connection to a Model 3808 Transmitter

A Model 3808 Transmitter (Digital) can be interfaced to a ControlWave Express via an RS-232 or an RS-485 communication scheme. Communication schemes and cable lengths determine the type of communication port utilized. In general RS-232 communications are utilized when the Model 3808 Transmitter is situated within 25 feet of the ControlWave Express, i.e., for local communications. Communications can be achieved with transmitters up to 4000 feet away (remote communications) via the RS-485 scheme.

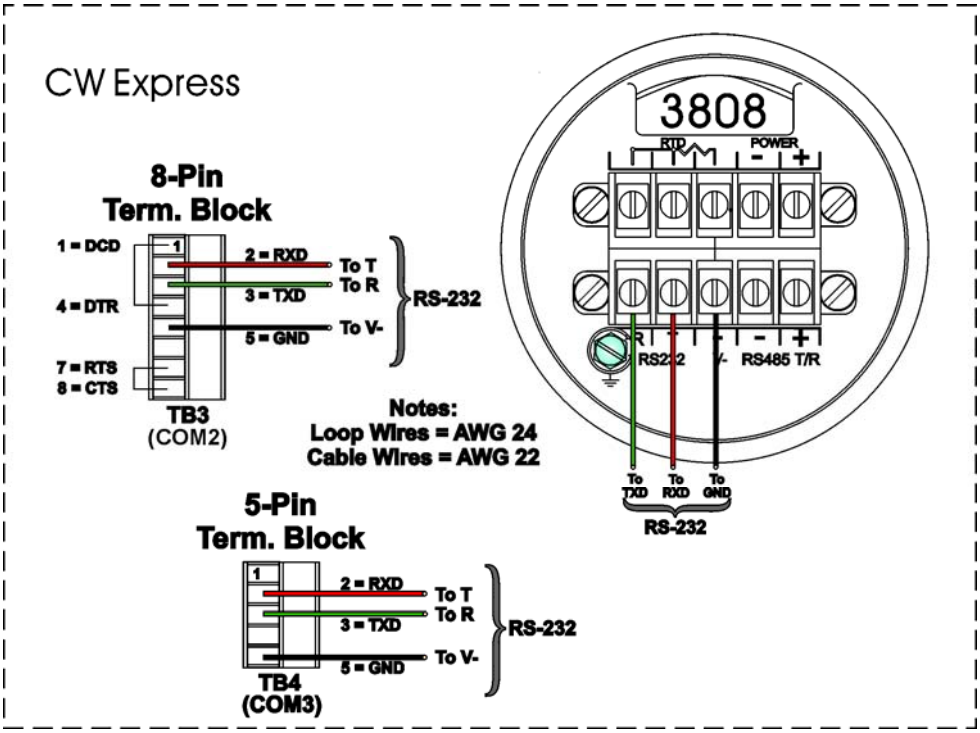


**Figure 2-13 - 3808 Transmitter to ControlWave Express RS-232 Comm. Cable Diagram**

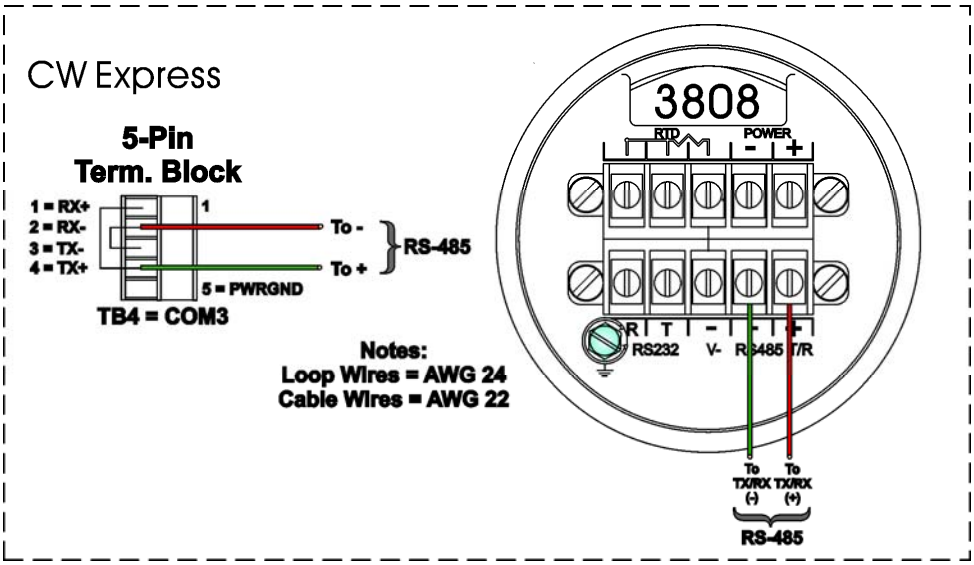


**Note: For Loopback & Termination Control:**
**Use SW3 on CPU/System Controller Board to configure COM3.**

**Figure 2-14 - 3808 Transmitter to ControlWave Express RS-485 Comm. Cable**



Click here to return to Table of Contents

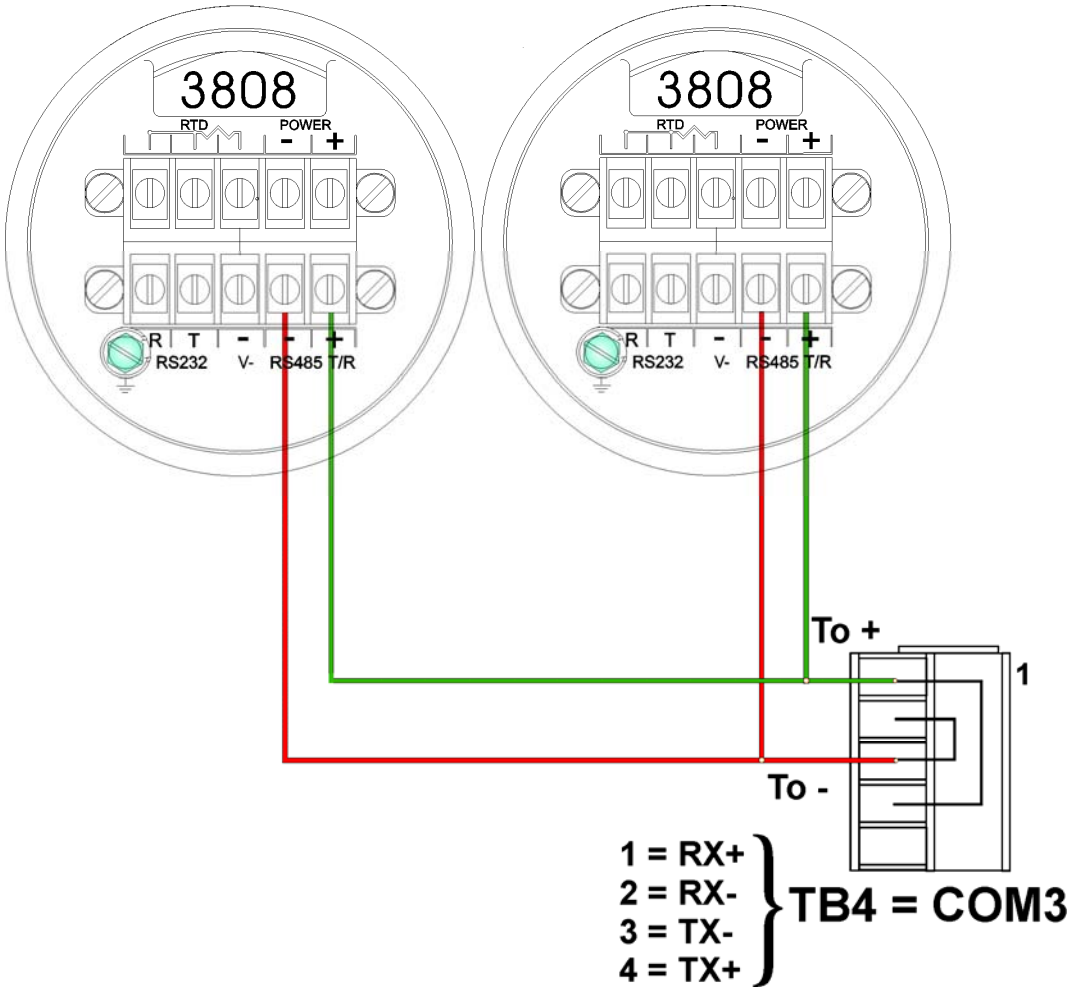


**Figure 2-15 - ControlWave Express to 3808s - RS-485 Network Diagram**

Figures 2-13 and 2-14 detail the RS-232 and RS-485 wiring connections required between the ControlWave Express and the Model 3808 Transmitter.

Up to two Model 3808 Transmitters can be connected to a ControlWave Express via a half-duplex RS-485 Network. An illustration of this network is provided in Figure 2-15.

### 2.3.7 Power Wiring & Distribution

Primary Power is user supplied applied to Connector TB1 of the CPU/System Controller Board (TB1-3 = Power In + & TB1-4 = GND) and is based upon the type of CPU/System Controller Board as follows:

- 14MHz Ultra Low Power CPU: Nominal +6Vdc (+5.4V to +16.0V) or Nominal +12Vdc (+11.4V to +16V) bulk input supply.
- 33MHz Low Power CPU: Nominal +12Vdc (+11.4V to +16.0V) or Nominal +24Vdc (+21.8V to +28V) bulk input supply.
- 33MHz with Ethernet CPU: Nominal +12Vdc (+11.4V to +16.0V) or Nominal +24Vdc (+21.8V to +28.0V) bulk input supply.

Two other power interface connections are provided on 14 MHz Ultra Low Power and 33 MHz Low Power CPU/System Controller Boards and function as follows:



Click here to return to Table of Contents

- TB1-1 - Solar Power In + (TB1-2 = GND ) (GND = –)
- TB1-5 - Auxiliary Power Out + - for External Radio/Modem (TB1-6 = GND) (GND = –)

A secondary power input is available at connector TB2:

- TB2-1 – Input
- TB2-2 – Ground

ControlWave Express Terminal Blocks utilize compression-type terminals that accommodate up to #16 AWG wire. A connection is made by inserting the wire's bared end (1/4" max) into the clamp adjacent to the screw and then securing the screw. The wire should be inserted fully so that no bare wires are exposed to cause shorts. If using standard wire, tin the bare end with solder to prevent flattening and improve conductivity. Allow some slack in the wires when making connections. The slack makes the connections more manageable and helps to minimize mechanical strain on the terminal blocks.

#### 2.3.7.1 Bulk Power Supply Current Requirements

ControlWave Express RTUs are equipped with a CPU/System Controller Board that accepts either 6/12Vdc or 12/24Vdc Bulk Power input. The maximum current required for a particular ControlWave Express can be estimated as follows:

**Bulk +6/12/24Vdc Supply Current = CPU/System Controller Board (with options) + Process I/O Board + LCD Display Keypad + Optional External Modem/Radio**

**Table 2-11A - ControlWave Express Base Assembly Power Requirements (for 14MHz Ultra Low Power CPU)**

| COMPONENTS | Bulk 12Vdc Supply | Bulk 6Vdc Supply |
|---|---|---|
| CPU + Process I/O + LCD | W/O Field Supply & with AO Output under range: 5mA | 7.0mA |

**Table 2-11B - ControlWave Express Base Assembly Power Requirements (for 33MHz CPU - With/Without Ethernet)**

| COMPONENTS | Bulk 12Vdc Supply | Bulk 24Vdc Supply |
|---|---|---|
| CPU + Process I/O + LCD (without Ethernet) | W/O Process I/O Bd.: 10mA | W/O Process I/O Bd.: 10mA |
| CPU + Process I/O + LCD (with Ethernet) | W/O Process I/O Bd.: 80mA | W/O Process I/O Bd.: 47mA |

**Note: Current consumptions provided in Tables 2-11A/B are based on typical application loads. For 3808 power consumption refer to CI-3808.**

This summation will accommodate steady state current draw. Table 2-11A and 2-11B provide detailed steady state power current requirements for each ControlWave Express configuration. Note: In the case of an external modem/radio, the unit's manufacturer provides power consumption specifications.



Click here to return to Table of Contents

### 2.3.7.2 Power Wiring

One Bulk DC supply can be connected to the ControlWave Express CPU/System Controller Board. The Bulk DC supply (nominally +6Vdc, +12Vdc or +24Vdc) connected to TB1-3 (Power In +) and TB1-4 (GND -) is converted, regulated and filtered by the CPU/System Controller Board to produce +3.3Vdc. This CPU/System Controller Bd. circuit is fused at 3.5A (F3). Depending on the version of the CPU/System Controller Board, the unit's input power operating range will vary as follows:

- Nominal +6Vdc input source operating range: (+5.4Vdc to +16.0Vdc)
- Nominal +12Vdc input source operating range: (+11.4Vdc to +16.0Vdc)
- Nominal +24Vdc input source operating range: (+21.8Vdc to +28.0Vdc)

An alternate power connection is available at connector TB2, intended for use if power is not available through TB1. Bulk DC power would be connected to TB2-1 (Power Input) and TB2-2 (GND).

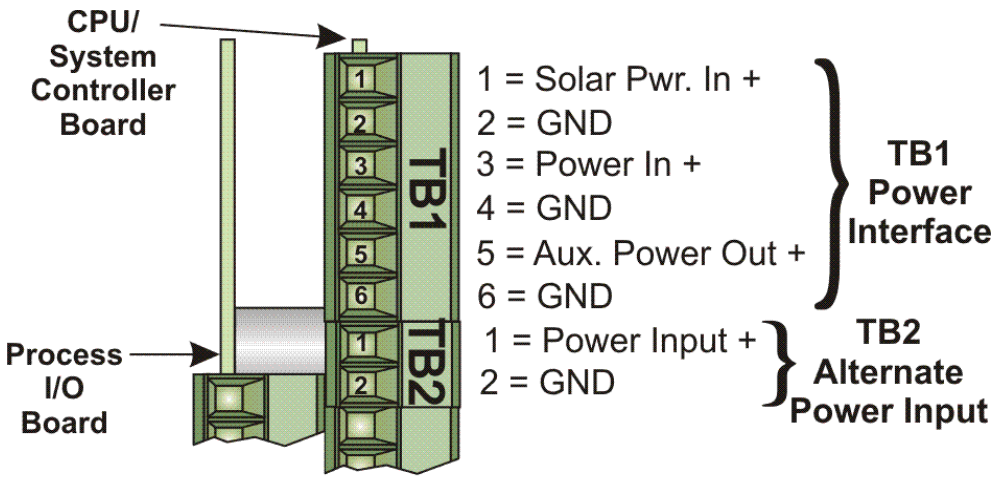


**Figure 2-16 - CPU/System Controller Board (TB1 & TB2) Power Wiring**

**Note: Solar Power In+ and Aux. Power Out+ not available on CPUs with Ethernet**

### 2.3.7.3 ControlWave Express System Grounding

ControlWave Express Enclosures are not provided with a Ground Lug. Instead, the user utilizes one or more mounting screws to secure a ground cable to the unit. A ground wire (#4 AWG Max. wire size) must be run between the enclosure via one or more mounting screws (see Figure 2-1) and a known good Earth Ground. The following considerations are provided for the installation of ControlWave Express system grounds (see S1400CW):

- Earth Ground wire size should be #4 AWG. It is recommended that stranded copper wire is used and that the length should be as short as possible.
- This ground wire should be clamped or brazed to the Ground Bed Conductor (that is typically a stranded copper AWG 0000 cable installed vertically or horizontally).
- The wire end that is to be fastened to the ControlWave Express should be crimped to a Terminal Ring/Lug and soldered. *Note: Use a high wattage Soldering Iron.*
- The ground wire should be run such that any routing bend in the cable has a minimum radius of 12-inches below ground and 8-inches above ground.



Click here to return to Table of Contents

### 2.3.8 Operation of the Lithium Backup Coin-cell Battery

CPU/System Controller Boards are equipped with a Coin-cell Socket (S1) that accommodates a 3.0V, 300 mA-hr lithium coin cell. A supervisory circuit on the CPU/System Controller Board is used to switch to battery power when the regulated 3.3Vdc VCC falls out of specification. The CPU/System Controller Board switches the battery voltage to the VBAT3.3 hardware signal, which provides backup power for the real-time clock (RTC) and the system SRAM on the CPU Module.

The system SRAM has a standby current draw of 20uA maximum for each part. For a unit containing 2MB of SRAM, a worst-case current draw of 42uA allows a battery life of approximately 9000 hours.

Jumper W3 on the CPU/System Controller Board must be installed on terminals 1 and 2 to enable the battery. For maximum shelf life, the battery may be isolated from the circuit by install Jumper W3 on terminals 2 and 3.

CPU/System Controller Boards are shipped with the Lithium backup battery installed. To remove the backup battery, pry up the Battery Securing Tab on the Coin-cell Battery Socket and then remove the battery using a pair of tweezers or needle-nose pliers. Install the replacement battery. Note: This step will not be required until units have been in operation for an extended period of time (normally many years) as the battery life is approximately 9000 hours of backup service. (Power is drawn from the battery when the unit looses power).

**NOTE:**
**If the Lithium backup battery is disconnected or removed when power is off the contents of SRAM (on the CPU/System Controller Board) will not be retained. Once a Lithium backup battery has been removed, do not install a replacement battery for at least one minute unless SW2-5 on the CPU/System Controller Board has been set OFF.**

## 2.4 OPERATIONAL DETAILS

ControlWave Express RTUs are shipped from the factory with firmware that allows the unit to be configured in conjunction with an IEC 61131, application program. This section provides information as follows:

- Steps required to download the application and place the unit into 'Run' mode.
- Steps required to download system firmware.
- Operation of the CPU/System Controller Board's Mode Switch (SW1)
- Soft Switch Configurations and Communication Ports

Operational details on ControlWave Express LEDs (and optional LCD Displays) and use of the Bristol WINDIAG program for fault isolation are provided in Chapter 3.

### 2.4.1 Downloading the Application

Any ControlWave Express must have a configured ControlWave project (application) before it can be placed into operation. For units not shipped with a standard application, this will require connection of the ControlWave Express to a PC running ControlWave Designer and OpenBSI software. Configuration of the application must be performed by an individual



Click here to return to Table of Contents

familiar with the various programming tools. The following software user documentation is referenced:

*Getting Started with ControlWave Designer Manual* - D5085
*ControlWave Designer Reference Manual* - D5088
*Open BSI Utilities Manual* - D5081
*Web_BSI Manual* - D5087
*ControlWave Designer Programmer's Handbook* – D5125

An application download can be initiated from ControlWave Designer, or from the OpenBSI 1131 Downloader.

1. Make sure that the CPU/System Controller Board's Mode Switch (SW1) is set in 'Local Mode,' i.e., SW1-1 set to the **OFF** position and SW1-2 set to the **ON** position.

   **NOTE:**
   **From the factory, COM1 defaults to 115.2 kbd (RS-232) using the BSAP Protocol. Do not connect COM1 to a PC unless the PC's RS-232 port in question has been configured for BSAP operation.**

2. Once the ControlWave Express project has been defined, communications and configuration parameters have been set, perform the download from ControlWave Designer (see D5088 - chapter 11) or from the Open BSI 1131 Downloader (see D5081 - Chapter 7).

3. After the download has been completed leave the CPU/System Controller Board's Mode Switch (SW1) in the 'Local Mode' position.

### 2.4.2 Upgrading ControlWave Express Firmware

ControlWave Express CPUs ship from the factory with system firmware already installed. If an upgrade of the system firmware is required, use one of the procedures below to download the new or replacement firmware from the PC.

Upgrade of system firmware via LocalView FLASH Mode requires OpenBSI 5.1 (or newer). If you have an older version of OpenBSI, FLASH upgrades are performed via HyperTerminal. You will need a binary (*.BIN) system firmware file that is read as follows: e1s*xxxx*.bin (for 14MHz CPUs) e3s*xxxx*.bin (for 33MHz CPUs) (where e1s or e3s is the product code and *xxxx* is the release #). Upgrade of an unattended ControlWave Express can be accomplished from a remote PC. This capability is introduced in Section 2.4.2.3.

#### 2.4.2.1 Using LocalView to Upgrade ControlWave Express Firmware

**NOTE:**
**Your ControlWave Express must be set to Recovery Mode ENABLE (ON) prior to performing the FLASH upgrade, then set to Recovery Mode DISABLE (OFF) after the upgrade. On ControlWave Express RTUs this is accomplished via the CPU/System Controller Board's Mode Switch SW1. Set SW1-3 to the ON position for Recovery Mode. After setting SW1-3 to the ON position, turn power OFF and then ON again.**

A null modem cable (see Figure 2-5) must be connected to COM1 of the ControlWave Express and to any RS-232 port on the associated PC. The PC's RS-232 port used for this



Click here to return to Table of Contents

purpose must be set to run at 115.2 Kbaud. ControlWave Express CPU Switch SW1, position, 3 must be set ON.

**Start LocalView, Choose FLASH, Enter A Name, Click on [Create]**

Start LocalView by clicking on: **Start → Programs → OpenBSI Tools → LocalView**. The New View Mode dialog box will appear (see Figure 2-17).

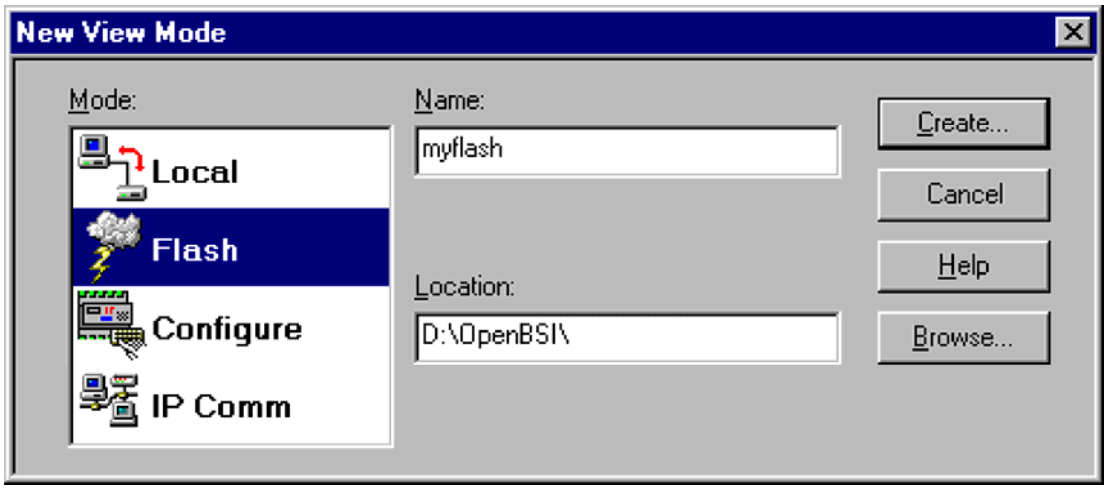


**Figure 2-17 - Local View - New View Mode Menu**

**"Mode"**
Choose 'Flash' for the mode.

**"Name"**
Enter a name for the View Mode File in the **"Name"** field.

**"Location"**
If you want to store the View Mode File in a directory other than that shown in the **"Location"** field, enter the new location there, or use the **[Browse]** push button to find the directory.

When the **"Mode"**, **"Name"**, and **"Location"** have been specified, click on the **[Create]** push button to activate the Communication Setup Wizard.

**Step 1 - Communication Setup**

Choose the communication port you want in the **What port would you like to use:** field. Click on the **[Next]** pushbutton to activate the next wizard.

**Step 2 - Flash RTU Setup**

In the Flash RTU Setup Wizard, you need not set the RTU type or local address, since these are unused in this mode. Click on the **[Next]** push button to activate the Flash Data Setup Wizard.



Click here to return to Table of Contents

**Step 3 - Flash Data Setup**

Complete the following fields in the Flash Data Setup Wizard:

**"Please enter the name of the binary file to Flash"**
To upgrade system firmware, you must specify the path and name of a binary (*.BIN) file on your hard disk containing the firmware.

Click on **[Finish]** to install the specified BIN file in FLASH memory at the RTU.

Once the Flash download has begun, you will NOT be allowed to shut down LocalView, unless you cancel the download, or it has been completed.

The progress of the Flash download will be displayed in the window. Any mismatch in file versions, or if the type of .BIN file does not match the type of RTU, the download will be aborted.


**Figure 2-18 - Communication Setup: Step 1 Menu**

Once the download has completed, set SW1-3 to the OFF position and then turn power OFF and then ON again.



Click here to return to Table of Contents

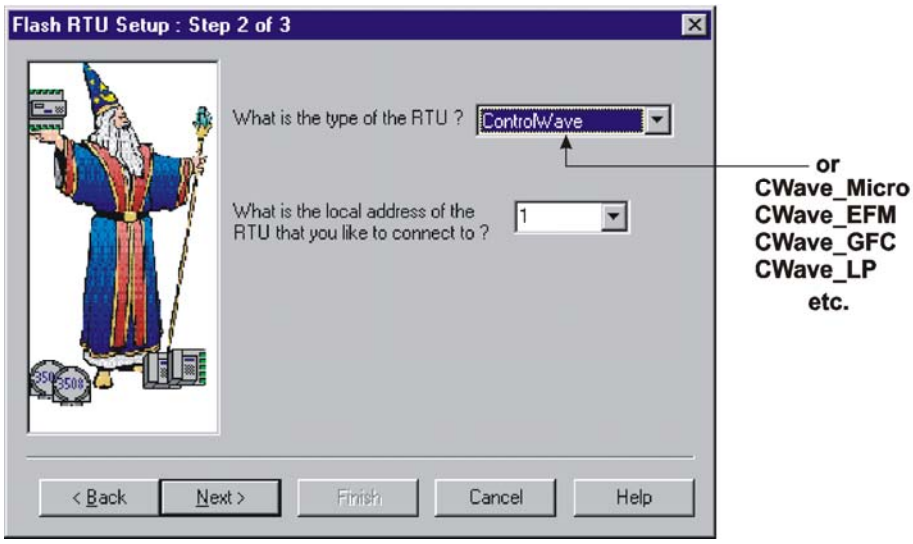


**Figure 2-19 - Flash RTU Setup Menu**



Click here to return to Table of Contents


**Figure 2-20 - Flash Data Setup Menu**
**(Note: Substitute \e1s*xxxx*bin or \e3s*xxxx* for cwe04...)**

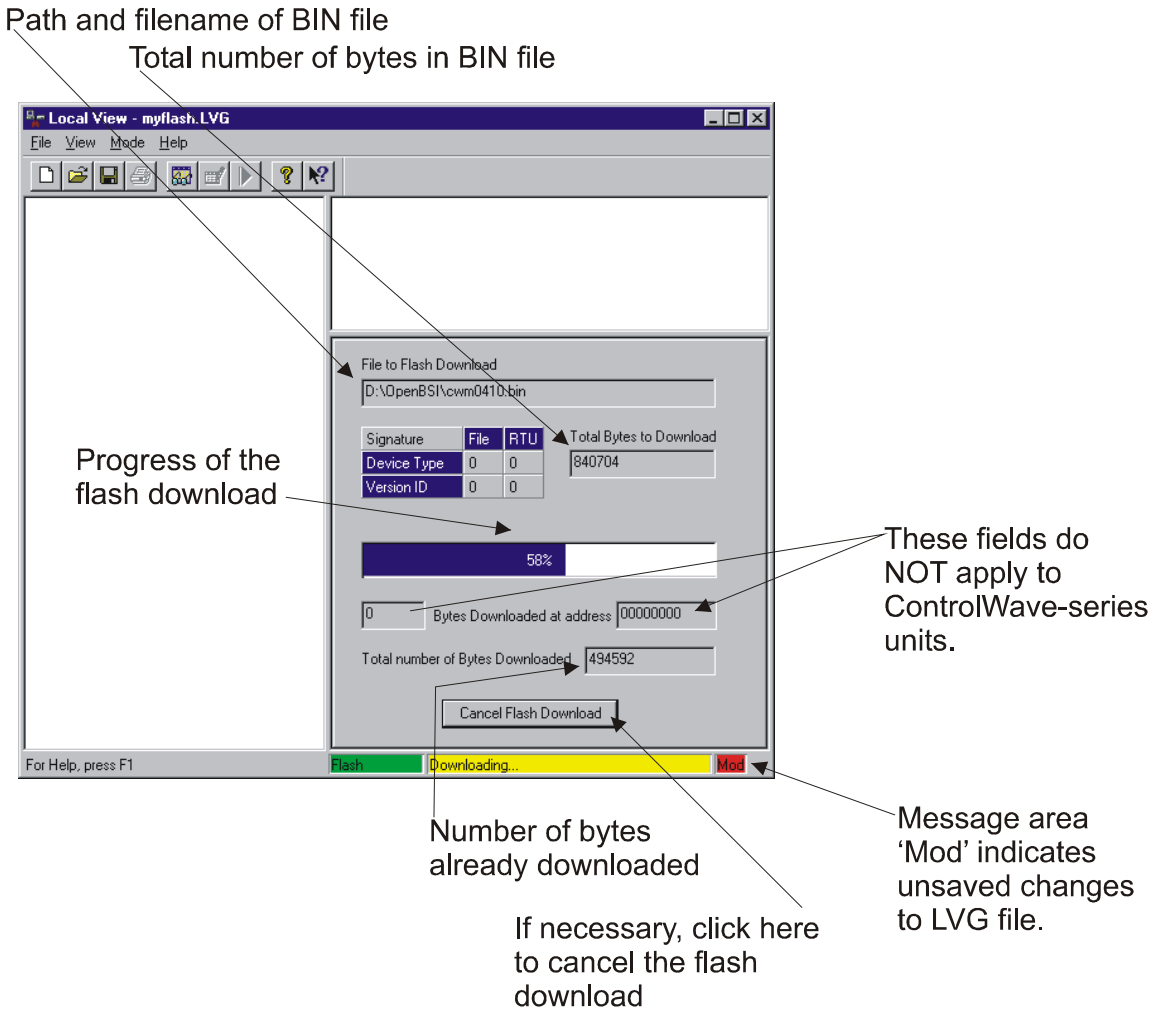


**Figure 2-21 - Local View Downloading System Firmware Menu**



Click here to return to Table of Contents

#### 2.4.2.2 Using HyperTerminal to Upgrade ControlWave Express Firmware

A half-duplex null modem cable (see Figure 2-5) must be connected to COM1 of the ControlWave Express and to any RS-232 port on the associated PC. The PC's RS-232 port used for this purpose must be set to run at 115.2 Kbaud. ControlWave Express CPU/System Controller Board Switch SW1, position, 3 must be set to the **ON** position.

1. If not already running, apply power to the associated PC.

2. Start the HyperTerminal program on the PC. Note: HyperTerminal is a Windows utility program. In Windows XP, you can start HyperTerminal by clicking on **Start → Programs → Accessories → Communications →** HyperTerminal. If using HyperTerminal for the first time, set the communications properties (for the PC Port being utilized) via the Properties Menu as follows: Bits per second: = 115200, Data bits: = 8, Parity: = None, Stop bits: = 1, and Flow control: = None and then click OK.

3. Set the CPU/System Controller Board's Mode Switch (SW1) for 'Recovery Mode,' i.e., set CPU/System Controller Board Switch SW1-3 to the ON position.

4. Apply power to the ControlWave Express. The resident BIOS will initialize and test the hardware, this process is referred to as POST (Power On Self Test).

   Unless there is a problem System Status Code **RECOV** (Waiting in Recovery Mode) will be posted to the Status LEDs on the CPU's LED Board and to the optional LCD Display (if present). Detection of a fault during POST will be posted on the LCD Display (if present) and the Status LEDs on the CPU's LED Board (see Table 2-12 and Figures 2-26 and 2-27).

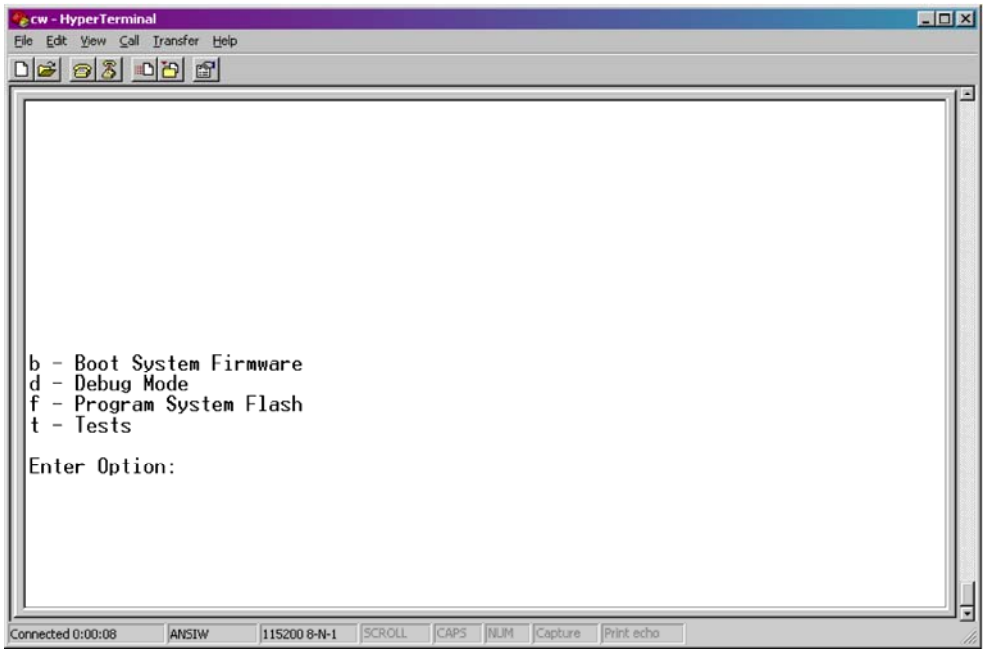


**Figure 2-22 - HyperTerminal Recovery Mode Menu**

From the HyperTerminal Recovery Mode menu (Figure 2-22), press the 'F' key to enter FLASH download. A message will be displayed warning that the FLASH is about to be erased; press the 'Y' key at the prompt. The screen will display dots as the flash devices are being erased; this could take a few minutes.



Click here to return to Table of Contents

5. When the FLASH is ready for download the letter C will be displayed on the screen. In the HyperTerminal command bar click on Transfer and then Send File (see Figure 2-23). In the Send File Dialog Box (see Figure 2-24), select “1KXmodem” for the protocol, enter the filename of the appropriate .bin file in the format “e1s*xxxxx*.bin” or “e3s*xxxxx*.bin” (where *xxxxx* varies from release to release). Click on the Send button to start the download (see Figure 2-24). When the HyperTerminal Recovery Mode Menu of Figure 2-22 appears, the download has completed.

6. Close the HyperTerminal program. The null modem cable connected between the ControlWave Express and the PC can be removed if desired.

7. Set the CPU/System Controller Board’s Mode Switch (SW1) for ‘Local Mode,’ i.e., set SW1-3 OFF. Then switch power OFF/ON.

Once the ControlWave Express is running its application load, status codes are posted to the LCD Display (if present) and the Status LEDs on the CPU’s LED Board. These Status LED Codes are listed in Table 2-12.

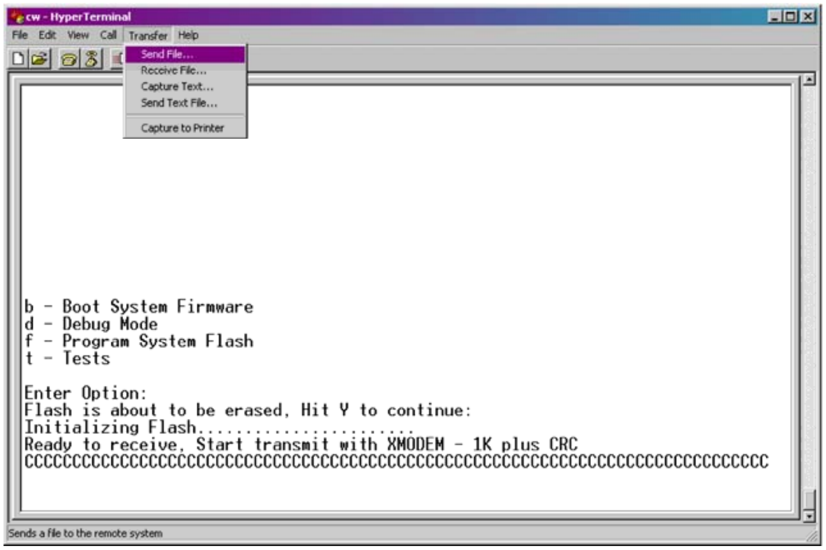

```
b - Boot System Firmware
d - Debug Mode
f - Program System Flash
t - Tests

Enter Option:
Flash is about to be erased, Hit Y to continue:
Initializing Flash......................
Ready to receive, Start transmit with XMODEM - 1K plus CRC
CCCCCCCCCCCCCCCCCCCCCCCCCCCCCCCCCCCCCCCCCCCCCCCCCCCCCCCCCCCCCCCCCCCCCCCCCCCCCC
```

**Figure 2-23 - HyperTerminal FLASH Download Menu (Ready to Download) - (Transfer/Send File Selected)**

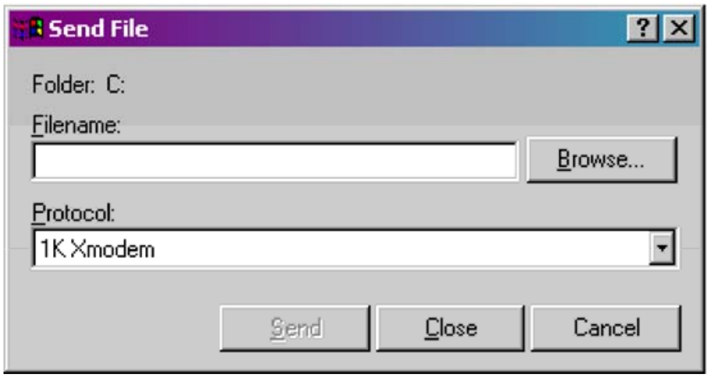

Folder: C:

Filename:

Protocol: 1K Xmodem

**Figure 2-24 - HyperTerminal Flash Download (Send File Dialog Box)**

Click here to return to Table of Contents

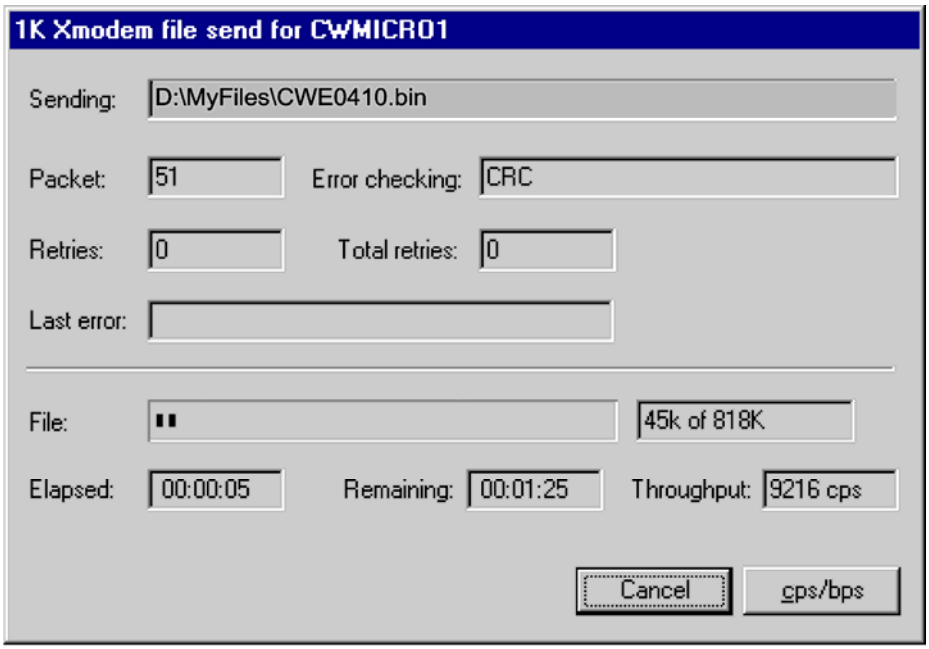


**Figure 2-25 - HyperTerminal FLASH Download (Download in Process)**
**(Note: Substitute \e1s*xxxx*bin or \e3s*xxxx*.bin for cwe04...)**

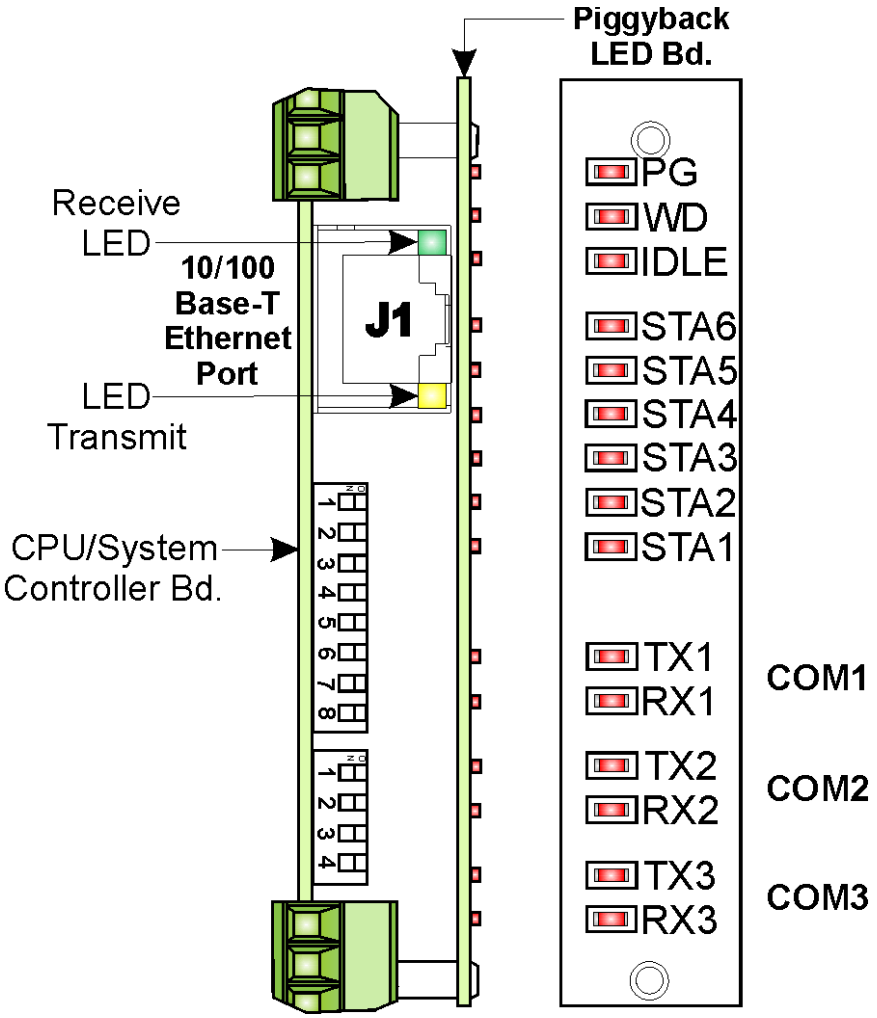


**Figure 2-26 - CPU/System Controller LEDs**
**(See Figure 2-27 and Table 2-12 for Status LED Definitions)**



Click here to return to Table of Contents

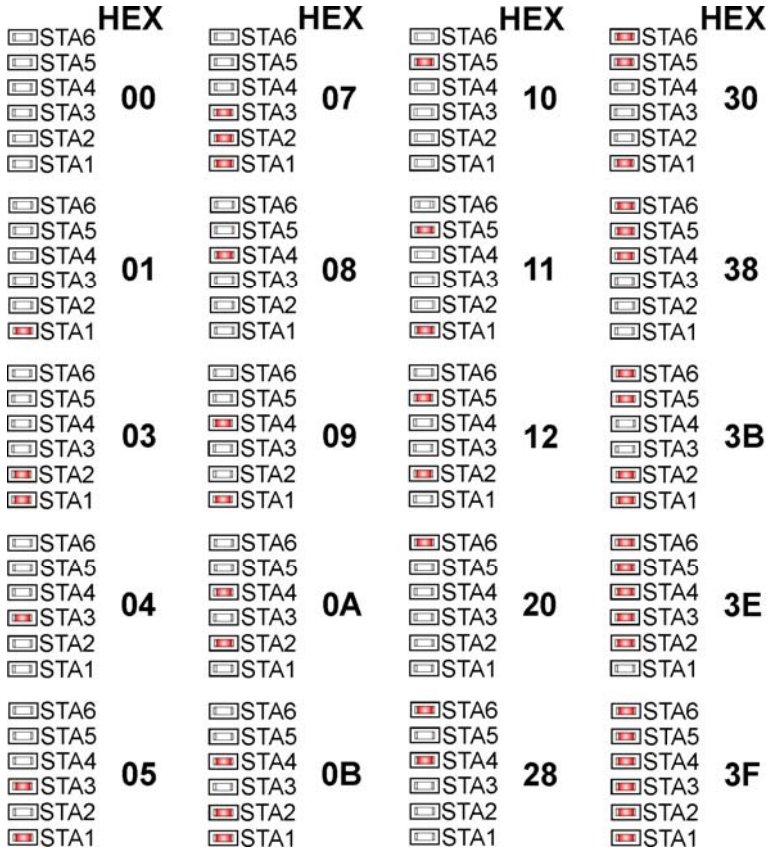


**Figure 2-27 - CPU/System Controller LED Board - LED Hexadecimal Codes (See Table 2-12 for Definitions)**

**Table 2-12 - System Status Codes on LCD Display & LEDs on CPU/System Controller Board's LED Display Board.**

| LED 6 STA6 | LED 5 STA5 | LED 4 STA4 | LED 3 STA3 | LED 2 STA2 | LED 1 STA1 | Status In Hex | LCD Disp. | Indication Definition |
|---|---|---|---|---|---|---|---|---|
| 0 | 0 | 0 | 0 | 0 | 0 | 00 | Blank | Application Running |
| 0 | 0 | 0 | 0 | 0 | 1 | 01 | DIAG | Unit in Diagnostic Mode |
| 0 | 0 | 0 | 0 | 1 | 1 | 03 | R DIAG | Unit Running Diagnostics |
| 0 | 0 | 0 | 1 | 0 | 0 | 04 | FWXSUM | Flash XSUM Error |
| 0 | 0 | 0 | 1 | 0 | 1 | 05 | DEVERR | Error Initializing Application Device |
| 0 | 0 | 0 | 1 | 1 | 1 | 07 | FLASH | Flash Programming Error |
| 0 | 0 | 1 | 0 | 0 | 0 | 08 | FACT | Using Factory Defaults * |
| 0 | 0 | 1 | 0 | 0 | 1 | 09 | BATT | Battery Failure Detected * |
| 0 | 0 | 1 | 0 | 1 | 0 | 0A | STRTUP | Currently Loading the Boot Project |
| 0 | 0 | 1 | 0 | 1 | 1 | 0B | INIT | System Initialization in Progress |
| 0 | 1 | 0 | 0 | 0 | 0 | 10 | RECOV | Waiting in Recovery Mode |
| 0 | 1 | 0 | 0 | 1 | 0 | 12 | RAMERR | Error Testing SRAM |
| 1 | 0 | 0 | 0 | 0 | 0 | 20 | STOP | Application Loaded |
| 1 | 0 | 1 | 0 | 0 | 0 | 28 | HALT | Stopped at a Break Point |
| 1 | 1 | 0 | 0 | 0 | 0 | 30 | NO APP | No Application Loaded |
| 1 | 1 | 1 | 0 | 0 | 0 | 38 | BREAKP | Running with Break Points |
| 1 | 1 | 1 | 0 | 1 | 1 | 3B | POWERD | Waiting for Power-down (after NMI) |
| 1 | 1 | 1 | 1 | 1 | 0 | 3E | UPDUMP | Waiting for Updump to be Performed |
| 1 | 1 | 1 | 1 | 1 | 1 | 3F | NOTRUN | Unit Crashed (Watchdog Disabled) |

*** = Flashed at startup**



Click here to return to Table of Contents

#### 2.4.2.3 Remote Upgrade of ControlWave Express Firmware

It is possible to download system firmware into an unattended remote ControlWave Express. This function can only be accomplished if CPU Board Switch SW2-6 (associated with the unit in question) is set in the ON position (factory default). The procedure for performing a remote download of system firmware is discussed in *Appendix J* of the *Open BSI Utilities Manual* (document D5081). **Note: Remote upgrade of ControlWave Express Firmware requires Boot PROM version 4.7 or higher and System PROM version 4.7 or higher.**

### 2.4.3 Operation of the Mode Switch

The CPU/System Controller Board's Mode Switch (SW1) is a four position DIP-Switch; functions are listed in Table 2-12.

**Table 2-12 - CPU/System Controller Bd. Mode Switch SW1 Assignments Recovery Mode/Local Mode Control**

| SWITCH | Function | Setting |
|---|---|---|
| SW1-1/2 | Recovery/Local Mode | Both ON or OFF = Recovery Mode<br>SW1 OFF & SW2 ON = Local Mode |
| SW1-3 | Force Recovery Mode | ON = Force Recovery Mode (via CW Console)<br>OFF = Recovery Mode disabled |
| SW1-4 | LED Status | ON = Enable All LEDs<br>OFF = Disable All LED except Watchdog (WD) |

*** = Note: Only the Switch SW1 settings listed in this table, have been tested.**

Recovery Mode: Recovery Mode is used for either a firmware upgrade (see Section 2.4.2) or a core updump (see Section 3.6).

Local Mode: Local Mode should be selected for normal running operations.

### 2.4.4 Soft Switch Configuration and Communication Ports

Firmware-defined soft switches that control many default settings for various system operating parameters such as BSAP Local Address, EBSAP Group Number, three (3) communication port parameters, etc., can be viewed and, if desired, changed via the Flash Configuration Utility, which is accessible from LocalView, NetView, or TechView. When connecting the ControlWave Express to the PC (local or network) for the first time you should be aware of the communication port default parameter settings provided below (see Figures 2-5 and 2-6). *Note: Communication port factory defaults can be enabled anytime by setting CPU Board Switch SW2-3 to the OFF position. CPU Switch SW2-8 must be set OFF to run the WINDIAG program.*

COM1: From the factory, RS-232 Communications Port COM1 defaults to 115.2 kbd (RS-232) using the BSAP Protocol. *Note: By setting CPU/System Controller Board Switch SW2-8 OFF, the boot project will be prevented from running and the unit will be placed into diagnostic mode.* To test COM1 using the WINDIAG program, it must not otherwise be in use. Connection to a PC requires the use of an RS-232 "Null Modem" cable (see Figure 2-5A/B).

COM2: From the factory, RS-232 Communications Port COM2 on the CPU/System Controller Board defaults to 9600 baud, 8-bits, no parity, 1 stop bit, BSAP/ControlWave Designer protocol operation. To test COM2 using the



Click here to return to Table of Contents

WINDIAG program, it must not otherwise be in use. *Note: CPU Switch SW2-8 must be set OFF to run the WINDIAG program.*

COM3: RS-232/RS-485 Communications Port COM3 on the CPU/System Controller Board defaults to 9600 baud, 8-bits, no parity, 1 stop bit, BSAP/ControlWave Designer protocol operation. CPU/System Controller Board Jumpers W12 through W16 are used to configure COM3 for RS-232 or RS-485 operation (1-2 = RS-232, 2-3 = RS-485) and Switch SW3 is used to configure COM3 when it has been set for RS-485 operation (see Table 2-5). To test COM3 using the WINDIAG program, it must not otherwise be in use *Note: CPU/System Controller Board Switch SW2-8 must be set OFF to run the WINDIAG program.* In lieu of the use of an RS-232 Port, an RS-485 cable (see Tables 2-3B & 2-4) can be connected between COM3 and the PC's RS-485 Port.

### 2.4.5 Optional Display/Keypad Assemblies

Three Display/Keypad assemblies are offered; one with a dual-button Keypad (see Figure 2-29 one with a 25-button Keypad (see Figure 2-30 and one without a Keypad (see Figure 2-28). Both Display/Keypad assemblies utilize identical 4 x 20 LCD Displays. The Display ONLY assembly contains an upper row consisting of a ± LCD character along with nine 7-Segment LCD characters, and a bottom row consisting of six 14-Segment LCD characters. LCDs Each Display/Keypad or Display only assembly employs a unique microcontroller based Display/Keypad Interface Circuitry (situated on the remote Display or Display/Keypad assembly that drive the LCD Display and interfaces the Keypad (when present). Interface to the ControlWave Express is made via a cable equipped with two plugs. This cable connects to the RJ-45 Display Jack (J2) on the CPU/System Controller Board and RJ-45 Jack (J1) on the remote Display or Display/Keypad assembly. A potentiometer is provided on the Display or Display/Keypad to set the contrast of the LCD Display.

Figure 2-29 provides mounting hardware information for the Dual-button Display/Keypad Assembly. Operation of the Display Only Assembly is briefly discussed in section 2.4.5.1. Operation of the Dual-button Display/Keypad Assembly is discussed in section 2.4.5.2.

Figure 2-30 provides mounting hardware information for the 25-button Display/Keypad Assembly. Information on configuring the 'Display Function Block' (required to configure the Display associated with the 25-button Display/Keypad Assembly) is provided in ControlWave Designer's On-Line Help.

**Note: Operation of the 25-button Display/Keypad Assembly is discussed in Appendix E.**

#### 2.4.5.1 Operation of the Display Only Assembly

In normal operation, the display stays on after the unit has been configured and placed into service. ControlWave Express Display ONLY assemblies contain an upper row consisting of a ± LCD character along with nine 7-Segment LCD characters, and a bottom row consisting of six 14-Segment LCD characters. Signal values controlled by the application are posted to the upper characters and signal names are posted to the lower characters.



Click here to return to Table of Contents

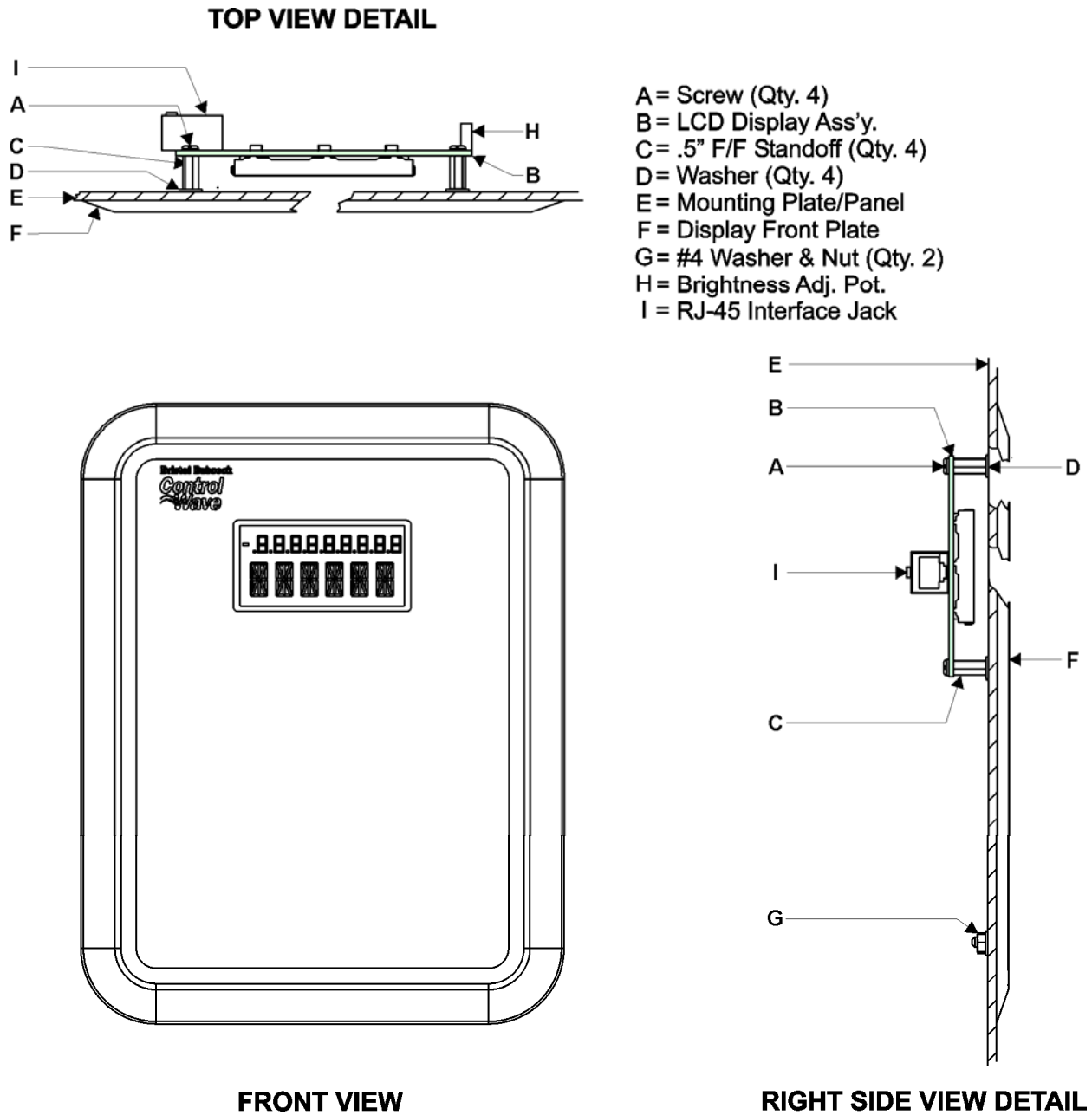


**Figure 2-28 - LCD Display (Only) Assembly Installation Drawing**

### 2.4.5.2 Operation of the Dual-button Display/Keypad Assembly

The Display will have a timeout of 20 minutes. If there has been no keypad activity for this time the display will "logout," i.e., the display will be turned off and scrolling stopped until a key press occurs. When a key press occurs after a timeout the display will return to the opening screen.

If a shorter timeout of the display is needed for power savings, another timeout may be implemented. The processor connected to the display will control the timeout. When the timeout occurs the display will be blanked, but communications between the ControlWave Express CPU and display processor will still occur. The display processor will ignore posting the messages to the screen when in the low power mode. When a key is pressed the display processor will return to displaying information to the display.



Click here to return to Table of Contents

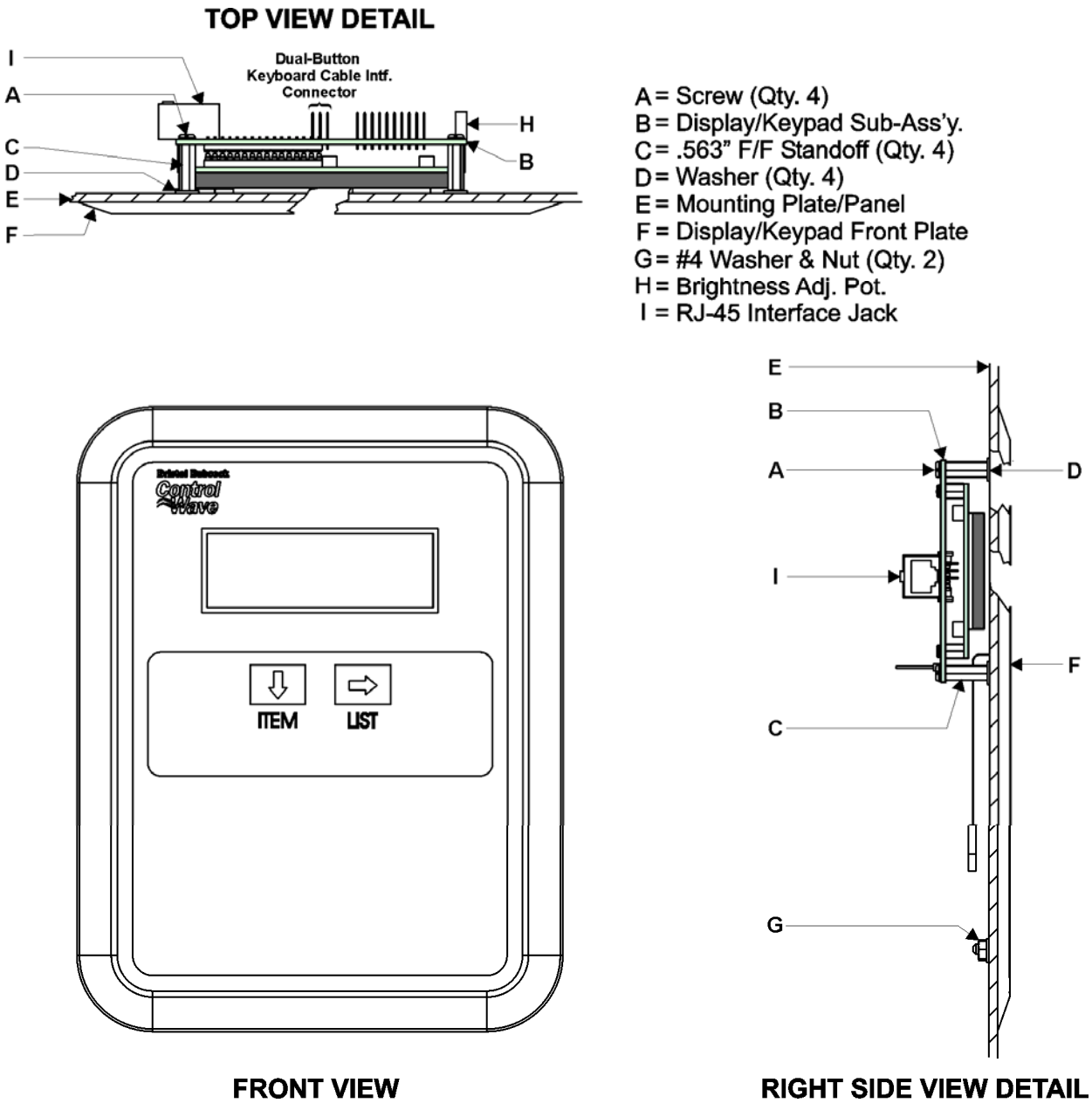


**Figure 2-29 - Dual-button Display/Keypad Assembly Installation Drawing**

Displays are organized into screens as follows:

**Opening Screen:** User defined strings

**List Selection Screen:** List Name
List Number
<Blank Line>
<Blank Line>

The List Selection screen is entered from the main opening screen by pressing the right arrow. Once here the operator can select which list is to be viewed. The operator can traverse though different list numbers by pressing the down arrow key. When the list to be scrolled is shown on the display, pressing the right arrow key will bring the operator to the Display Element screen.



Click here to return to Table of Contents

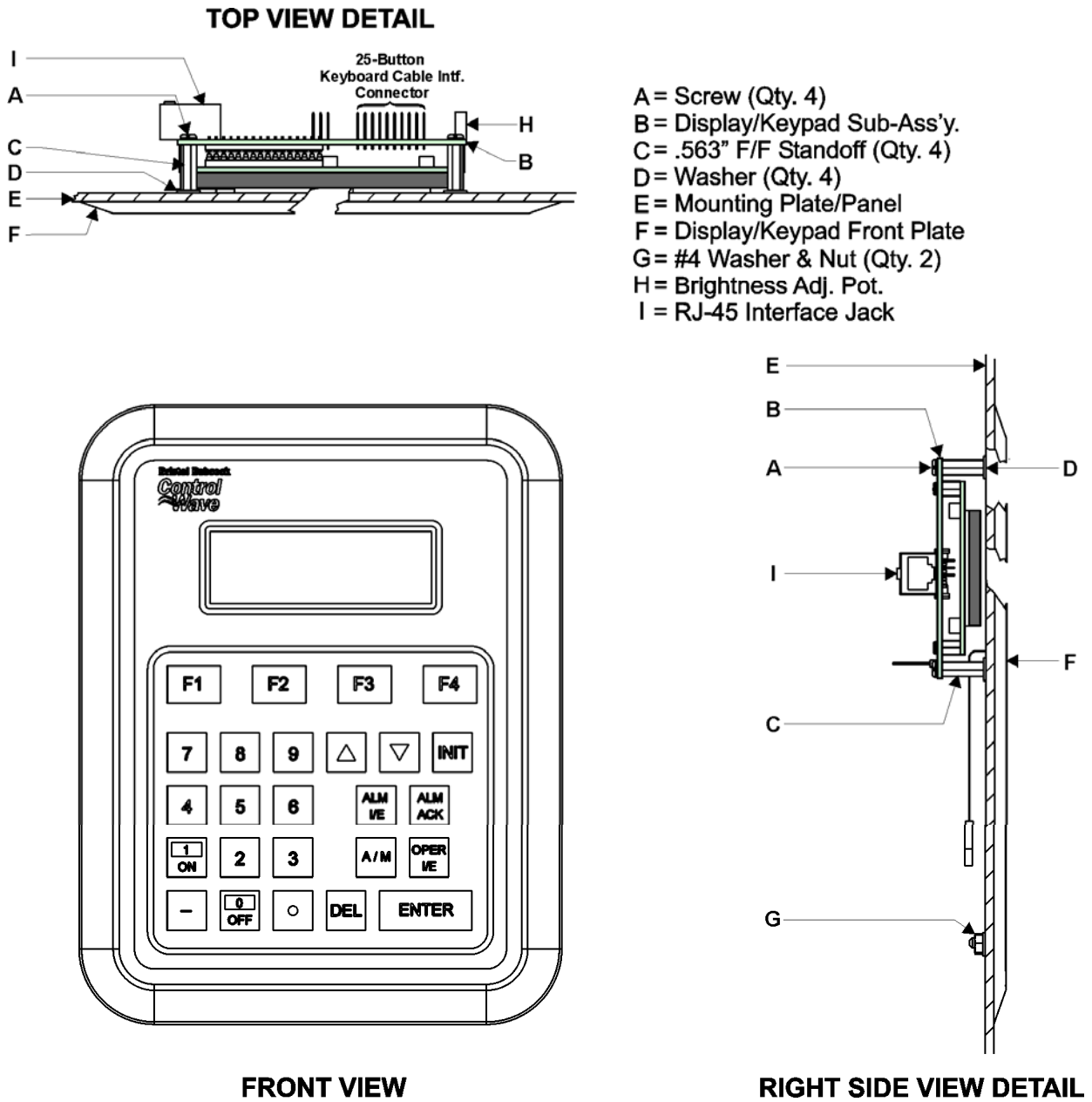


**Figure 2-30 - 25-Button Display/Keypad Assembly Installation Drawing**

**Display Element Screen:** <Blank Line>
<Blank Line>
Variable Name
Variable Name

The Display Element screen is entered from the list selection screen by pressing the right arrow. Once here the operator can view the variables in the list. Once entered the first element of the list is displayed and then next element will be displayed after the scroll timeout occurs. The scrolling will continue displaying the next element in the list and then wrapping around to the beginning of the list. The down arrow key will toggle the display through hold and scroll mode. Pressing the right arrow key will bring the operator to the list selection screen.

Display/Keypad Assemblies are supported by **Automatic Mode** and **Manual Mode**.



Click here to return to Table of Contents

**Automatic Mode**

In Automatic mode a set of screens (based on the application) are displayed. The application programmer provides strings for the opening screen. From there the firmware is responsible for displaying the screens and responding to key presses. Screens are fixed and start off with an opening screen, which displays user information passed into the function block. Users can view a list to select which list is to be scrolled. Once the list to be scrolled has been selected, the user can scroll through the list by pressing the down arrow key. List elements will be displayed automatically, scrolling at a predetermined rate (determined by iiScrollTime). The user may pause on a variable by pressing the right arrow key. Pressing the right arrow key again will cause the list to start scrolling again.

The essence of Automatic mode is that the user can supply inputs into the function that will determine which list can be displayed, but cannot change the menu or display. The user is allowed to select a list and to start/stop scrolling.

**Manual Mode**

In Manual Mode the programmer is responsible for creating each screen and displaying the next desired screen, based on key inputs. The programmer has access to all lines of the display and can provide any string that he/she desires to display. Special formats that must be adhered to that allow the programmer to display what they want on the screen are provided in the description of iaScrnSruct in the Display function block within ControlWave Designer's On-Line Help. It should be noted that currently, Manual Mode does not support reading Keypad keypresses. **Note: Manual Mode operation requires ControlWave Firmware 4.50 or newer.**



Click here to return to Table of Contents

Click here to return to Table of Contents

# *Section 3*
# *ControlWave Express SERVICE*

## 3.1 SERVICE INTRODUCTION

This section provides general, diagnostic and test information for the ControlWave Express.

The service procedures described herein will require the following equipment:

1. PC with null modem interface cable & Bristol WINDIAG Software
2. Loop-back plugs/wires (for RS-232 and RS-485) (see Figures 3-9 & 3-10)

The following test equipment can be used to test the Power Supply/Sequencer Module:

1. DMM (Digital Multimeter): 5-1/2 digit resolution
2. Variable DC Supply: Variable to 30Vdc @ 2.5A (with vernier adjustment)

When ControlWave Express RTUs are serviced on site, it is recommended that any associated processes be closed down or placed under manual control. This precaution will prevent any processes from accidentally running out of control when tests are conducted.

***Warning***

*Harmful electrical potentials may still be present at the field wiring terminals even though the ControlWave Express power source may be turned off or disconnected. Do not attempt to unplug termination connectors or perform any wiring operations until all the associated supply sources are turned off and/or disconnected.*

***Warning***

*Always turn off the any external supply sources used for externally powered I/O circuits, before changing any printed circuit boards.*

## 3.2 COMPONENT REMOVAL/REPLACEMENT PROCEDURES

This section provides information on accessing ControlWave Express components for testing, as well as removal/replacement procedures.

### 3.2.1 Accessing Components For Testing

Testing and replacement of ControlWave Express components should only be performed by technically qualified persons. Familiarity with the disassembly and test procedures described in this manual are required before starting. Any damage to the ControlWave Express resulting from improper handling or incorrect service procedures will not be covered under the product warranty agreement. If these procedures cannot be performed properly, the unit should be returned to the factory (with prior authorization) for evaluation and repairs.



Click here to return to Table of Contents

### 3.2.2 Removal/Replacement of the CPU/System Controller Board & the Process I/O Board

1. Loosen the two Thumb Screws and remove the Removable Card Edge Cover.
2. If the ControlWave Express is running, place any critical control processes under manual control and shut down the unit by disconnecting power to the CPU/System Controller Board Assembly at TB1 and, if applicable, TB2.
3. Disconnect all removable card edge connectors from the CPU/System Controller Board and the Process I/O Board making sure they are identified so they can be returned to their assigned connectors.
4. If present, disconnect the Keypad or Keypad/Display cable from connector J2 on the CPU/System Controller Board.
5. Carefully slide the boards out of the Enclosure/Mounting Chassis.
6. If either the CPU/System Controller Board or Process I/O Board is to be replaced, the two units must be separated from each. Use a pair of needle nose pliers to squeeze the pair of tabs (associated with each of the six nylon mounting posts) while gently pulling the CPU/System Controller Board away from the Process I/O Board. Carefully unplug the boards from their interface connectors. The replacement boards must be aligned with each other and pressed together such that the interface connectors and mounting posts properly mate and then must be squeezed together such that the mounting post tabs capture the CPU/System Controller Board.
7. To install these boards, power must be off. Align the boards (assembly) with the Enclosure/Mounting Chassis guides (such that the Process I/O Board is adjacent to the bottom of the unit and then slide the boards (assembly) into the unit.
8. Replace all cables removed in steps 2 through 4.
9. Replace the Removable Card Edge Cover and tighten the two Thumb Screws. Apply power and test the unit.

## 3.3 TROUBLESHOOTING TIPS

### 3.3.1 CPU/System Controller Board Voltage Checks

One bulk power source or an internal battery (Primary Power System) can be connected to the CPU/System Controller Board Assembly. Connector TB1 provides 2 input terminal connections for bulk power (see Figure 3-3):

TB1-3 = (+VIN) (+5.4V to +16V for 6Vdc supply) (+11.4V to +16V for 12Vdc supply) (+21.8V to +28V for 24Vdc supply)
TB1-4 = Chassis Ground - CHASSIS



Click here to return to Table of Contents

Bulk supply voltages can be checked at TB1 using a voltmeter or multimeter. CPU/System Controller Board Assemblies are factory configured for use with a nominal 6Vdc or 12Vdc bulk power supply. The maximum and minimum input power switch-points can be tested with the use of a Variable dc Power Supply connected between TB1-3 (+) and TB1-4 (-). By increasing the input voltage (starting at less than +4.3Vdc, 9.5Vdc or 19.2Vdc) for +6V, +12V or +24V units respectively, you can determine the point at which the unit will turn on, i.e., the point at which the LCD Display comes ON (Vt+). By decreasing the input voltage (starting at +8Vdc, +16Vdc or +28Vdc), you can determine the point at which the unit turns off, i.e., the point at which the LCD Display goes OFF (Vt-). If the value of the Primary Power System (battery) or bulk power supply's +6Vdc, +12Vdc or +24Vdc output approaches the value of Vt+ or Vt- it should be replaced by a battery/power supply with the correct +6Vdc, +12Vdc or +24Vdc output.

### 3.3.2 LED and LCD Checks

CPU/System Controller Boards for the ControlWave GFC, GFC Plus, Express, Express Plus, and Corrector are equipped with two red LEDs that provide the following status conditions when lit: WD (CR1 - Right) – Indicates Watchdog condition has been detected & IDLE (CR1 - Left) - Indicates the CPU has free time at the end of its execution cycle. Normally, the Idle LED should be ON most of the time (unless disabled). When the Idle LED is OFF, it indicates that the CPU has no free time, and may be overloaded.

CPU/System Controller Boards for the ControlWave Express ONLY are also equipped with a piggyback mounted LED Board. These LEDs provide the following status conditions when lit:

PG (Red) - ON = Power Good
WD (Red) - ON = Watchdog Condition - OFF = Normal Operation
IDLE (Red) - ON = CPU has free time at the end of its execution cycle
TX1, TX2, TX3 (Red) - ON = transmit activity on COM1, COM2 & COM3 (respectively)
RX1, RX2, RX3 (Red) - ON = receive activity on COM1, COM2 & COM3 (respectively)
Six Status LEDs (Red) - provide run time status codes (see Table 3-1 and Figure 3-1)

Normally, the Idle LED should be ON most of the time (unless disabled). When the Idle LED is OFF, it indicates that the CPU has no free time, and may be overloaded.

Ethernet Port Connector J1 on the CPU/System Controller Board contains two LEDs that indicate transmit (yellow) and receive (green) activity when lit.

An optional LCD Display provides system status codes that are useful in troubleshooting the unit (see Table 3-1).



Click here to return to Table of Contents

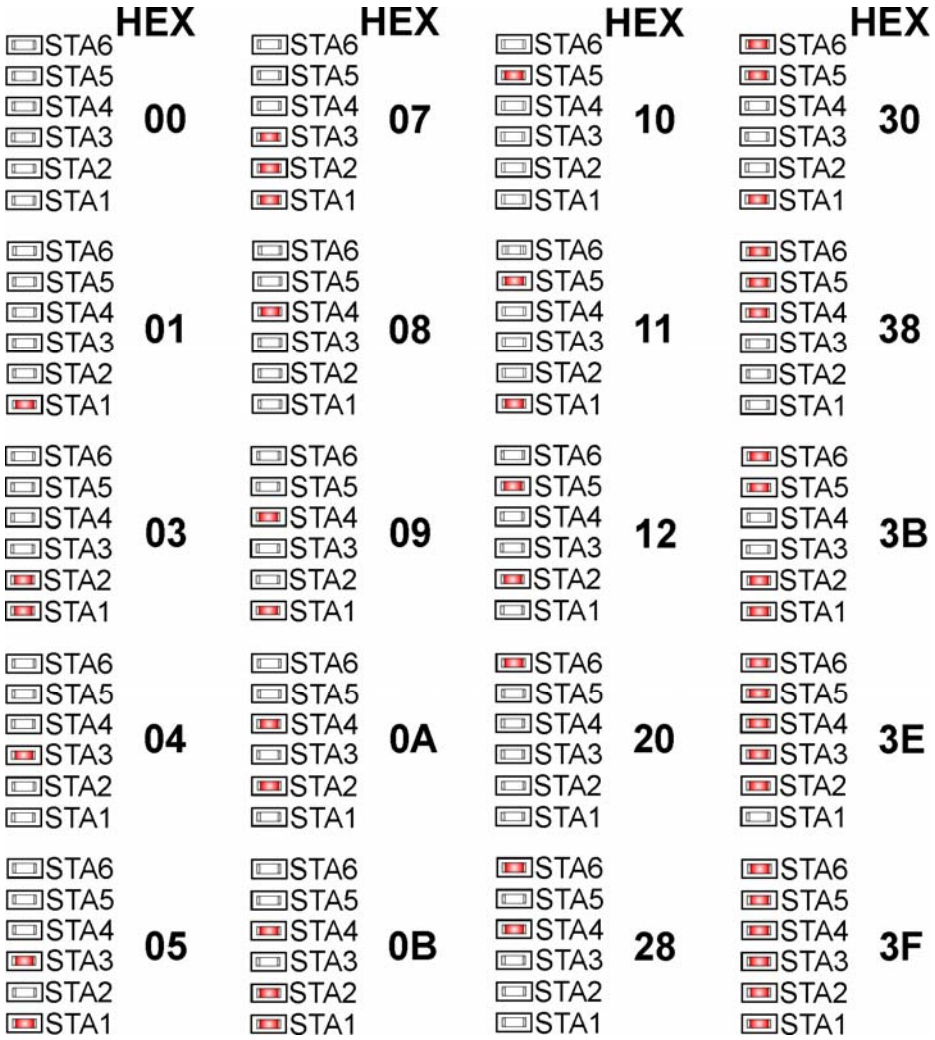


**Figure 3-1 - CPU/System Controller LED Board – Status LED Hexadecimal Codes (See Table 3-1 for Definitions)**

**Table 3-1 - System Status Codes on LCD Display & LEDs on CPU/System Controller Board's LED Display Board.**

| LED 6 STA6 | LED 5 STA5 | LED 4 STA4 | LED 3 STA3 | LED 2 STA2 | LED 1 STA1 | Status In Hex | LCD Disp. | Indication Definition |
|---|---|---|---|---|---|---|---|---|
| 0 | 0 | 0 | 0 | 0 | 0 | 00 | Blank | Application Running |
| 0 | 0 | 0 | 0 | 0 | 1 | 01 | DIAG | Unit in Diagnostic Mode |
| 0 | 0 | 0 | 0 | 1 | 1 | 03 | R DIAG | Unit Running Diagnostics |
| 0 | 0 | 0 | 1 | 0 | 0 | 04 | FWXSUM | Flash XSUM Error |
| 0 | 0 | 0 | 1 | 0 | 1 | 05 | DEVERR | Error Initializing Application Device |
| 0 | 0 | 0 | 1 | 1 | 1 | 07 | FLASH | Flash Programming Error |
| 0 | 0 | 1 | 0 | 0 | 0 | 08 | FACT | Using Factory Defaults * |
| 0 | 0 | 1 | 0 | 0 | 1 | 09 | BATT | Battery Failure Detected * |
| 0 | 0 | 1 | 0 | 1 | 0 | 0A | STRTUP | Currently Loading the Boot Project |
| 0 | 0 | 1 | 0 | 1 | 1 | 0B | INIT | System Initialization in Progress |
| 0 | 1 | 0 | 0 | 0 | 0 | 10 | RECOV | Waiting in Recovery Mode |
| 0 | 1 | 0 | 0 | 1 | 0 | 12 | RAMERR | Error Testing SRAM |
| 1 | 0 | 0 | 0 | 0 | 0 | 20 | STOP | Application Loaded |
| 1 | 0 | 1 | 0 | 0 | 0 | 28 | HALT | Stopped at a Break Point |



Click here to return to Table of Contents

| | | | | | | | | |
|---|---|---|---|---|---|---|---|---|
| 1 | 1 | 0 | 0 | 0 | 0 | 30 | NO APP | No Application Loaded |
| 1 | 1 | 1 | 0 | 0 | 0 | 38 | BREAKP | Running with Break Points |
| 1 | 1 | 1 | 0 | 1 | 1 | 3B | POWERD | Waiting for Power-down (after NMI) |
| 1 | 1 | 1 | 1 | 1 | 0 | 3E | UPDUMP | Waiting for Updump to be Performed |
| 1 | 1 | 1 | 1 | 1 | 1 | 3F | NOTRUN | Unit Crashed (Watchdog Disabled) |

*** = Flashed at startup**

### 3.3.3 Wiring/Signal Checks

Check I/O Field Wires at the Card Edge Terminal Blocks and at the field device. Check wiring for continuity, shorts & opens. Check I/O signals at their respective Terminal Blocks (see Figures 3-1 through 3-4).

## 3.4 GENERAL SERVICE NOTES

Certain questions or situations frequently arise when servicing the ControlWave ExpressPAC. Some items of interest are provided in Sections 3.4.1 through 3.4.4.

### 3.4.1 Extent of Field Repairs

Field repairs to a ControlWave Express are strictly limited to the replacement of complete modules. Component replacement on a ControlWave Express Module constitutes tampering and will violate the warranty. Defective ControlWave Express components (printed circuit boards, LCD Displays, etc.) must be returned to the factory for authorized service.



Click here to return to Table of Contents

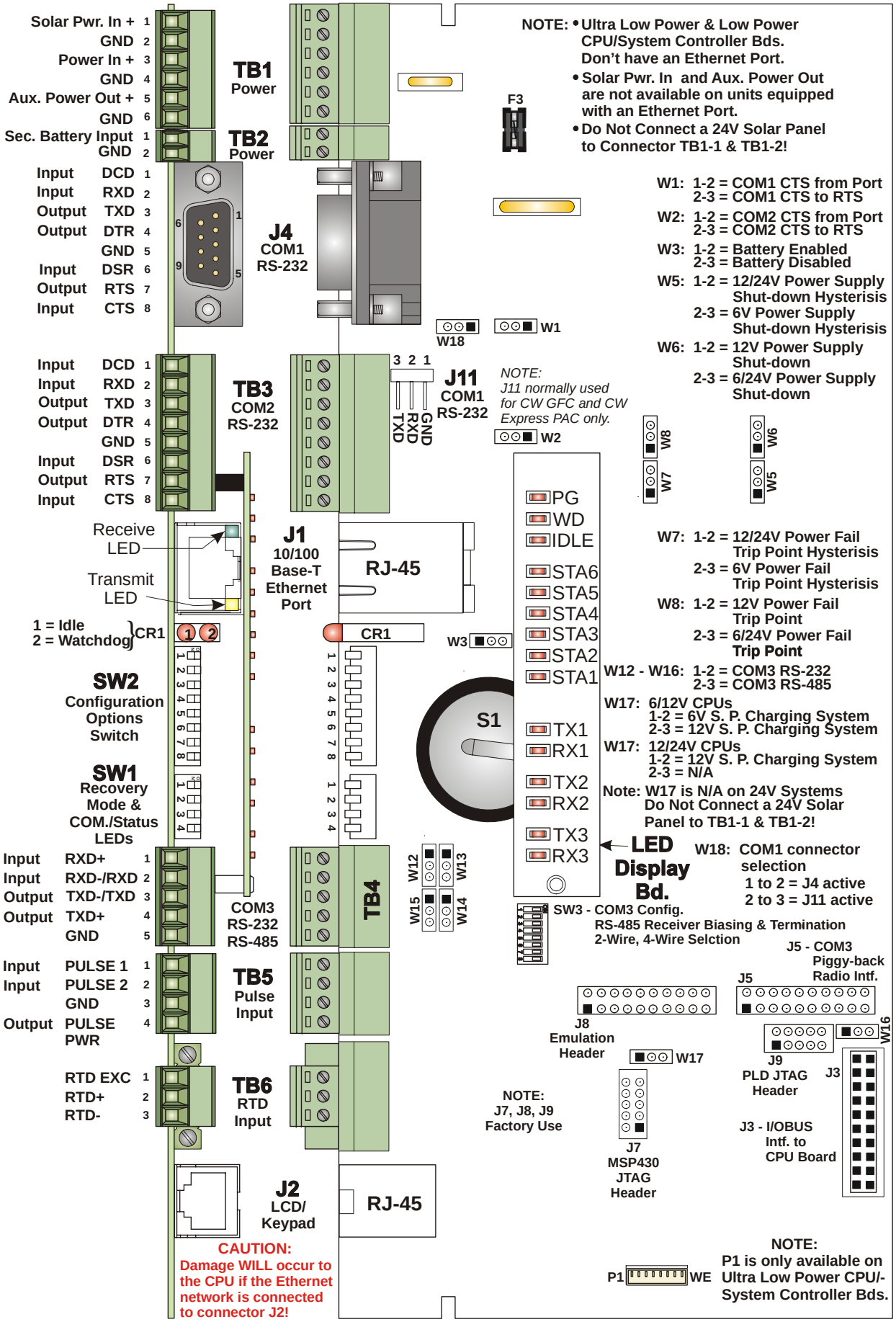


**Figure 3-2 - CPU/System Controller Bd. Component Identification**



Click here to return to Table of Contents

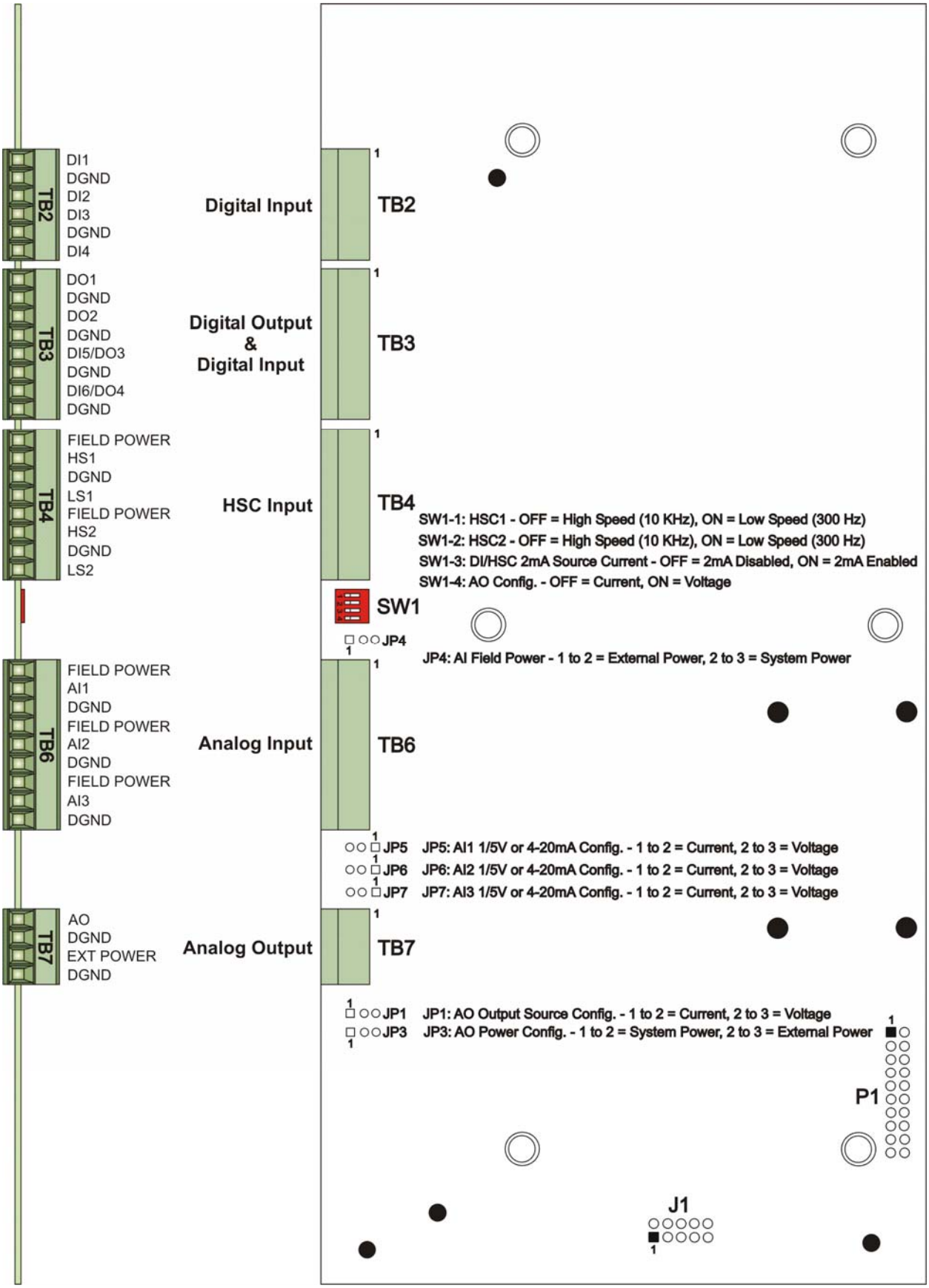


**Figure 3-3 - Process I/O Board Component Identification Diagram**



Click here to return to Table of Contents

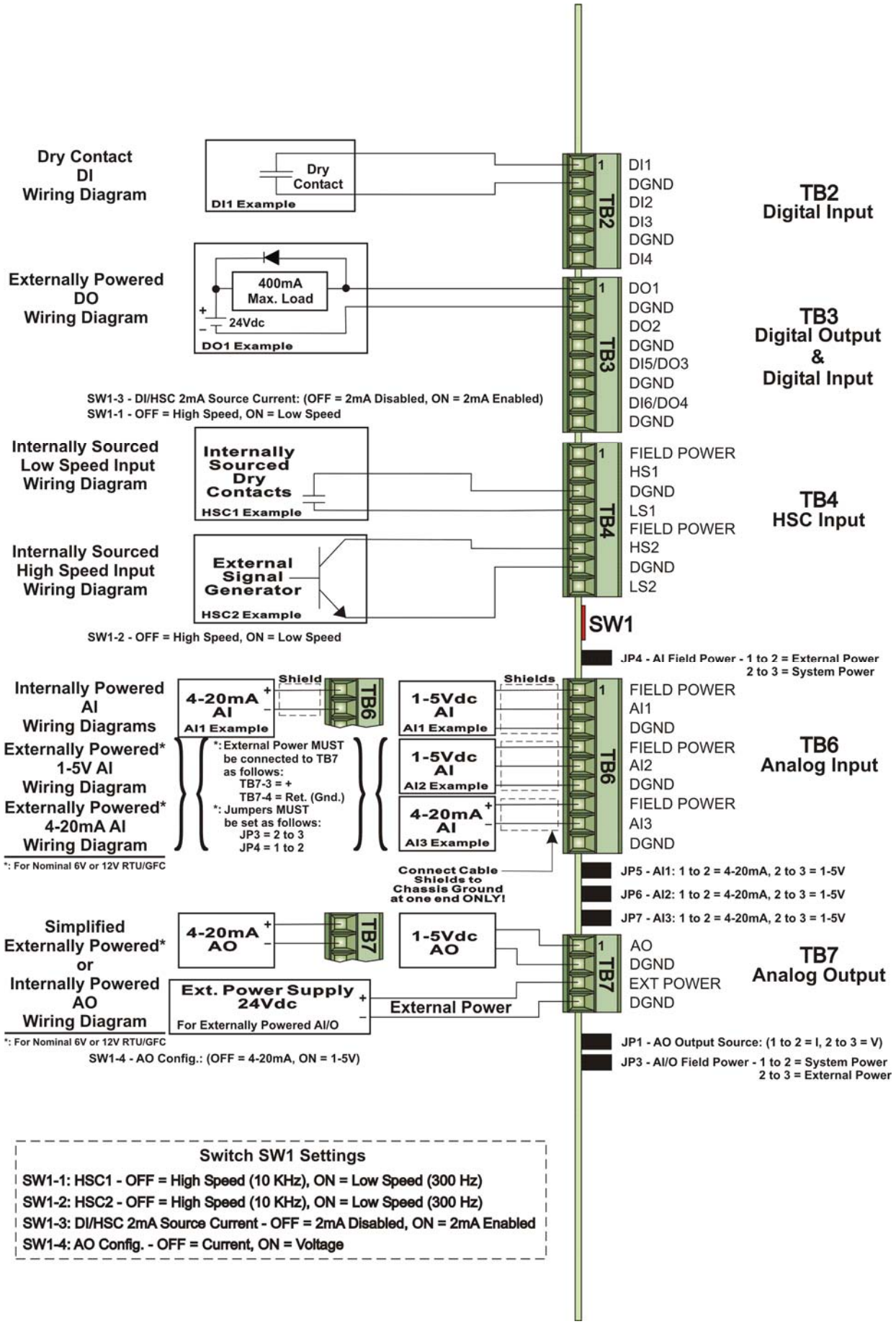


**Figure 3-4 - Process I/O Board Field I/O Wiring Diagram**



Click here to return to Table of Contents

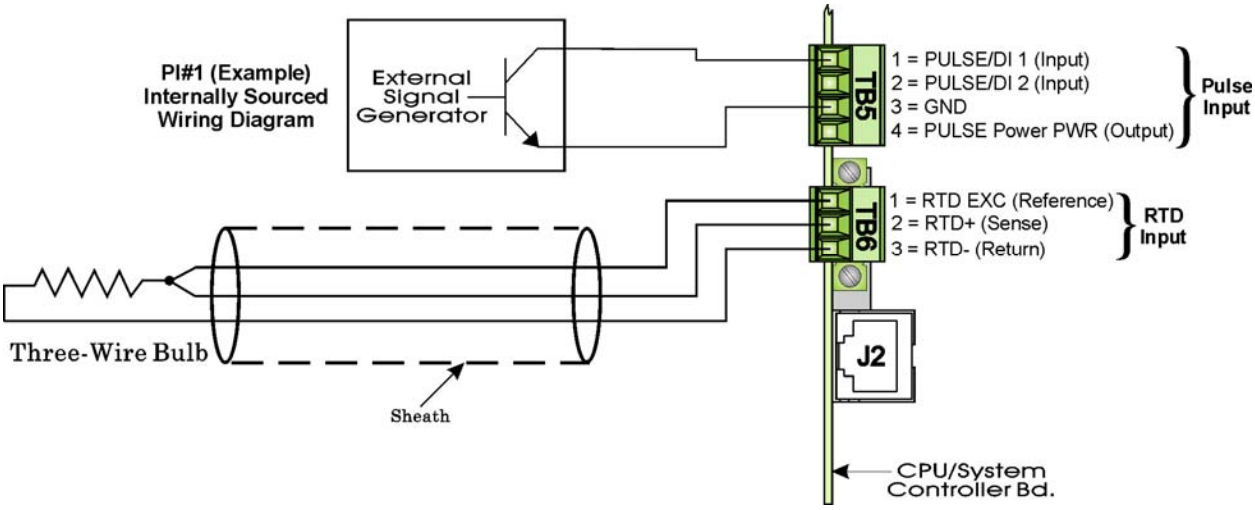


**Figure 3-5 - CPU/System Controller Board Field I/O Wiring Diagram**

### 3.4.2 Disconnecting RAM Battery

The ControlWave Express RTU Lithium RAM battery cannot be replaced while power is on. Once the RAM battery has been replaced, the unit will still execute its FLASH-based application (Boot Project) upon power-up, but all of the current process data will have been lost. Upon power-up, the unit will act as though it had just been booted and it will revert back to the initial values specified in its application. The battery may be disabled by placing the CPU/System Controller Board's Battery Backup Jumper (W3) onto Jumper Posts 2 and 3.

### 3.4.3 Maintaining Backup Files

It is essential to maintain a backup disk of each ControlWave project to guard against an accidental loss of configuration data. Without a backup record, it will be necessary to reconfigure the entire application; that can be a very time consuming procedure. Always play it safe and keep backup copies of your applications. A copy of the application can be loaded into ControlWave ExpressPAC FLASH memory and/or saved to a PC's hard disk as a compressed ZWT file.

## 3.5 WINDIAG DIAGNOSTICS

**Bristol WINDIAG program provides menu-driven diagnostics that have been designed to assist a technician or Process Engineer in troubleshooting the various ControlWave Express circuits. For more detailed descriptions of ControlWave Express Windows Diagnostics than those provided herein see Document D4041A - Chapters 1 & 7C.**

Bristol WINDIAG Software is a diagnostic tool used for testing ControlWave Express electronics including, I/O circuitry, CPU memory, communications ports, etc., for proper performance. The ControlWave Express must be communicating with a PC equipped with the WINDIAG program. CPU/System Controller Board configuration switch SW2-8 must be set to the OFF (Closed) position to enable diagnostics. Communication between the ControlWave Express (with/without application loaded) and the PC can be made via a Local or Network Port with the following restrictions:



Click here to return to Table of Contents

- CPU/System Controller Board Switch SW2-8 must be OFF to run the WINDIAG program. Setting SW2-8 OFF will prevent the 'Boot Project' from running and will place the unit into diagnostic mode.

- Any ControlWave Express communication port can be connected to the PC provided their port speeds and configuration match, e.g., baud rate, parity, stop bits, protocol, etc. This can be accomplished via user-defined Soft Switches.

- Setting CPU/System Controller Board Switch SW2-3 OFF will force ports COM2 and COM3 to 9600 baud, 8-bits, no parity, 1 stop bit, BSAP/ControlWave Designer protocol operation.

- Communication port COM1 is only forced to 9600 bps operation when CPU/System Controller Board Switches SW2-3 and SW2-8 have both been set OFF. COM1 can also be set to 9600 bps operation via user defined Soft Switches.

- Setting CPU/System Controller Board Switches SW2-3 and SW2-8 OFF prevents the 'Boot Project' from running, places the unit into diagnostic mode and forces communication ports COM1, COM2 and COM3 to operate at 9600 baud.

COM1: From the factory, RS-232 Communications Port COM1 (9-pin male D-type connector J4, or 3-pin male connector J11) on the CPU/System Controller Board defaults to 115.2 kbd (RS-232) using the BSAP Protocol. *Note: Port COM1 will be configured for RS-232 operation (at 9600 baud) by setting CPU/System Controller Board Switches SW2-3 and SW2-8 OFF. This will prevent the boot project from running and places the unit into diagnostic mode. CPU/System Controller Board Switch SW2-8 must be set OFF to run the WINDIAG program.* Connection to a PC requires the use of an RS-232 "Null Modem" cable (see Figure 2-5A).

COM2: From the factory, RS-2325 Communications Port COM2 (8-position Terminal Block TB3) on the CPU/System Controller Board defaults to 9600 baud, 8-bits, no parity, 1 stop bit, BSAP/ControlWave Designer protocol operation (RS-232).

COM3: RS-232/RS-485 Communications Port COM3 (5-position Terminal Block TB4) on the CPU/System Controller Board defaults to 9600 baud, 8-bits, no parity, 1 stop bit, BSAP/ControlWave Designer protocol operation. In lieu of the use of an RS-232 Port, an RS-485 cable (see Tables 2-3B & 2-4) can be connected between COM3 and a PC's RS-485 Port.

To use the WINDIAG program place any critical processes under manual control. WINDIAG cannot be run while the ControlWave Express application is running. Set the CPU/System Controller Board Switch SW2-8 to the OFF position. Perform steps 1 through 6 below.

1. Start the OpenBSI NetView Program. A screen similar to Figure 3-6 will appear.

2. To start WINDIAG program, click on **Start → Programs → OpenBSI Tools → Common Tools → Diagnostics.**

3. Once WINDIAG has started, the Main Diagnostics screen of Figure 3-7 will appear.



Click here to return to Table of Contents

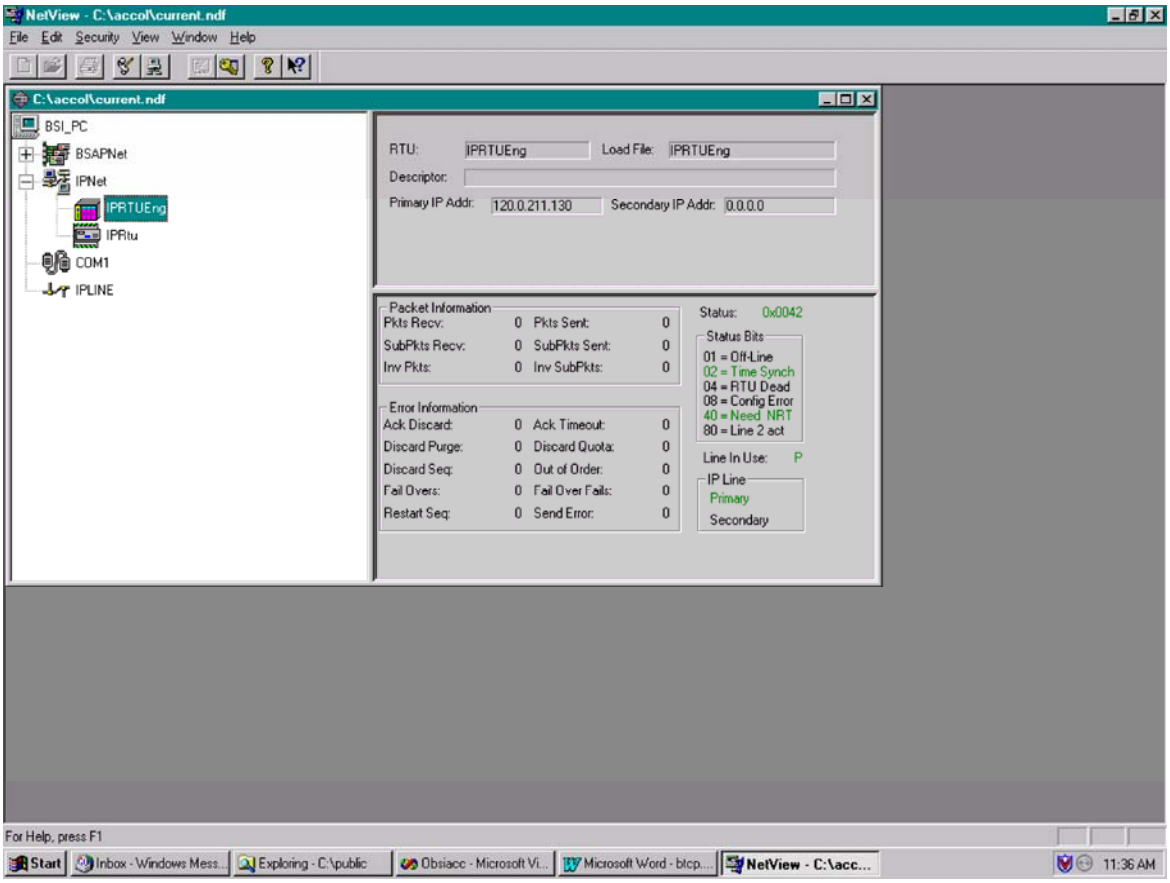


**Figure 3-6 – NetView - Example with Multiple Networks**

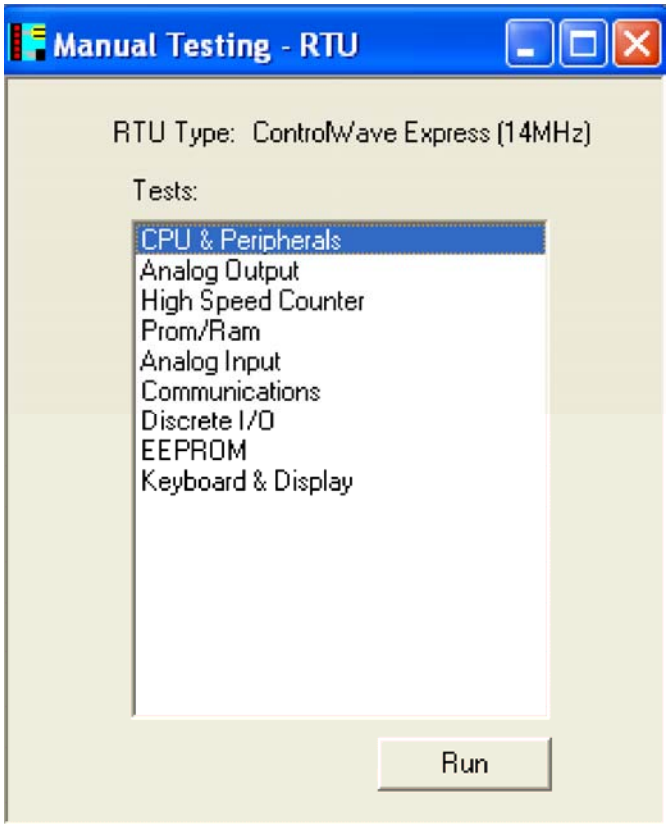


**Figure 3-7 - WINDIAG Main Diagnostics Screen**



Click here to return to Table of Contents

4. Select the module to be tested. Enter any prompted parameters (slot #, etc.). WINDIAG will perform the diagnostics and display pass/fail results.

5. After all diagnostic testing has been performed, exit WINDIAG program and then exit the NetView.

   When you close Netview, you will be prompted as to whether or not you want to close OpenBSI; select Yes.

6. Set ControlWave Express CPU/System Controller Board Switch SW2-8 to the ON (Open) position. The ControlWave Express should resume normal operation.

### 3.5.1 Diagnostics Using WINDIAG

ControlWave Express electronics can be tested using the WINDIAG program. From WINDIAG's Main Diagnostics Menu (see Figure 3-8) the following diagnostic tests can be performed:

| | |
|---|---|
| CPU & Peripherals Diagnostic: | Checks the CPU/System Controller Board [except for RAM & PROM (FLASH)]. |
| PROM/RAM Diagnostic: | Checks the CPU/System Controller Board's RAM and PROM (FLASH) hardware. |
| Communications Diagnostic: | Checks Comm. Ports 1, 2 and 3 - The External loop-back tests require the use of a loop-back plug. |
| Analog Output Diagnostic: | Checks AOs on the Process I/O Board. |
| Analog Input Diagnostic: | Checks AIs on the Process I/O Board. |
| Discrete I/O Diagnostic: | Checks DIs or DOs on the Process I/O Board. |
| High Speed Counter Diagnostic: | Checks HSCs on the Process I/O Board & Pulse Counter Inputs on the CPU/System Controller Board. |
| Keyboard & Display Diagnostics | Checks Keyboard/Keypad & Display hardware |

#### 3.5.1.1 Communications Diagnostic Port Loop-back Test

WINDIAG's Communications Diagnostic Menu (see Figure 3-10) provides for selection of the communication port to be tested. Depending on the type of network (RS-232 or RS-485) and the port in question, a special loop-back plug is required as follows:

Port 1 - RS-232 use a 9-pin female D-type loop-back plug (see Fig. 3-8).
Port 2 - RS-232 use loop-back wires (see Figure 3-8).
Port 3 - RS-232 use loop-back wires (see Figure 3-9)
Port 3 - RS-485 use loop-back wires or CPU Switch SW3 (see Figure 3-9).

This group of tests verifies the correct operation of the Communication Interface. COM1, COM2 and COM3 can be tested with this diagnostic. The ControlWave Express communication port that is connected to the PC (local or network and used for running these tests) cannot be tested until diagnostics has been established via one of the other ports, i.e., to test all ControlWave Express communication ports (via WINDIAG), communications with the PC will have to be established twice (each time via a different port). It should be noted that the ControlWave Express communication port that is connected to the PC (RS-232, RS-485 or Ethernet) must be good for WINDIAG to run the Communications Diagnostics



Click here to return to Table of Contents

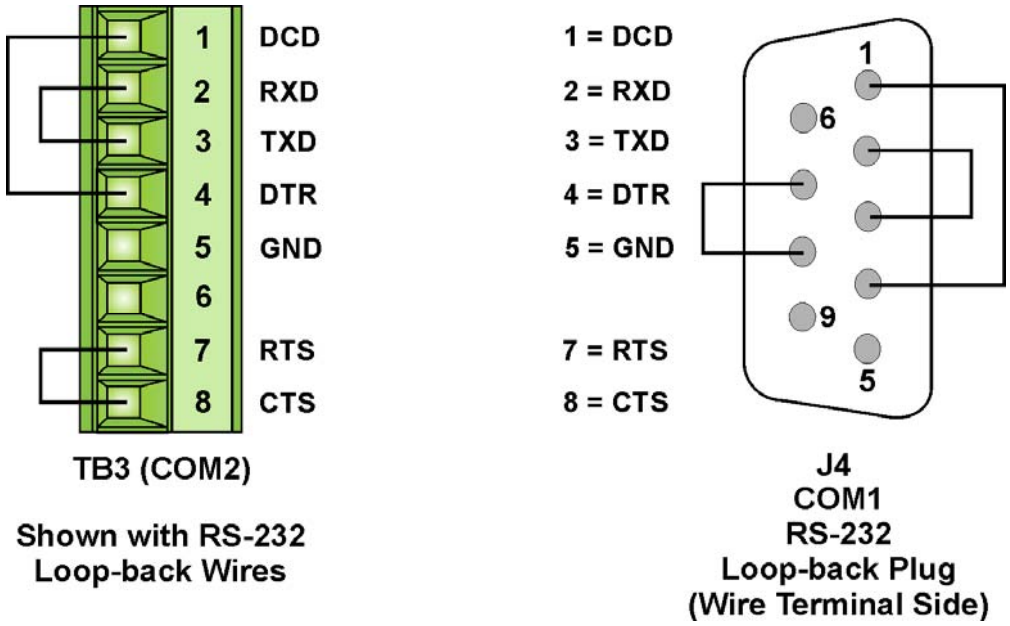


**Figure 3-8 - COM1 & COM2 RS-232 Loop-back Plug/Wires**

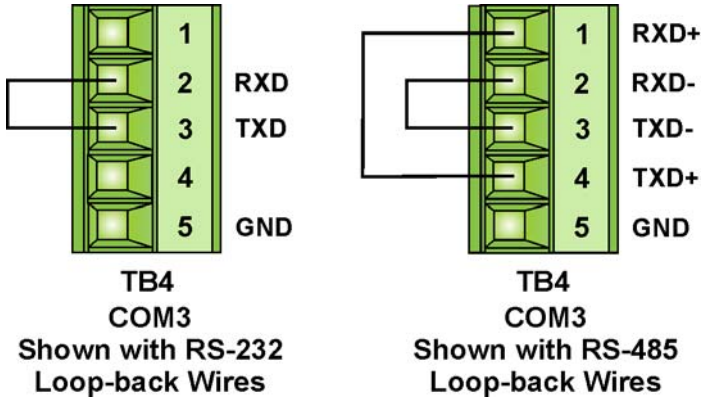


**Figure 3-9 - COM3 RS-232 & RS-485 Loop-back Wires**
**Note: RS-485 Loopback can be achieved via CPU Switches SW3-1 & SW3-2 set ON**

### 3.5.1.2 Serial Comm. Port External Loop-back Test Procedure

Connect an external loop-back plug or loop-back wires to the Communication Port to be tested (see Figures 3-8 and 3-9).

1. Type "1," "2," "3," or "4" for the port to test.

2. Set baud rate to test to 115200 baud or ALL ASYNC and the number of passes to 5.

3. Click on RUN button next to External loop-back.

   ` Test responses:
   a) Success - All sections of test passed
   b) Failure - TXD RXD Failure
   - CTS RTS Failure
   ` Execution time < 5 sec.



Click here to return to Table of Contents

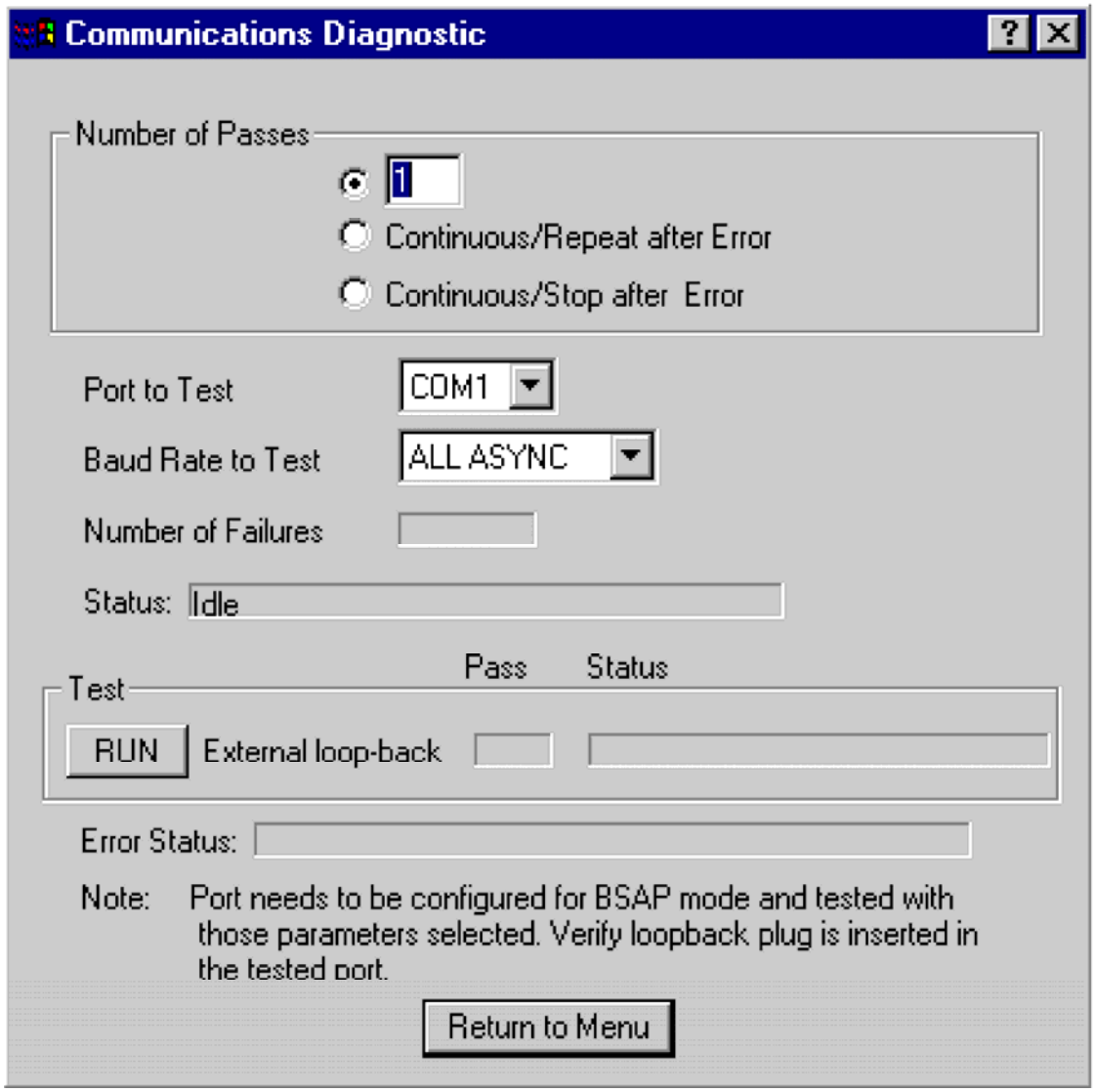


**Figure 3-10 - WINDIAG's Communications Diagnostic Menu**

## 3.6 CORE UPDUMP

In some cases a copy of the contents of SRAM and SDRAM can be uploaded to a PC for evaluation by Emerson Remote Automation Solutions division engineers. This upload is referred to as a 'Core Updump.' A Core Updump may be required if the ControlWave Express repeatedly enters a 'Watchdog State' thus ill-effecting system operation. A Watchdog State is entered when the system crashes, i.e., a CPU timeout occurs due to improper software operation, a firmware glitch, etc. In some cases the Watchdog State may reoccur but may not be logically reproduced.

'Crash Blocks' (a function of firmware provided for watchdog troubleshooting) are stored in CPU RAM. The user can view and save the 'Crash Blocks' by viewing the Crash Block Statistic Web Page (see the *Web_BSI Manual* - D5087). Crash Block files should be forwarded to Emerson support personnel for evaluation.

Follow the five steps below to perform a Core Updump.



Click here to return to Table of Contents

1. Set CPU/System Controller Board Switch SW2-1 OFF (Disable Watchdog Timer). If Switch SW2-4 is ON, set it to OFF (Enable Core Updump). **Note: The factory default setting for SW2-4 is OFF.**

2. Wait for the error condition (typically 3F on CPU/System Controller Board Status LEDs or NOTRUN on optional LCD Display).

3. Connect ControlWave Express Comm. Port 1 to a PC using a half-duplex Null Modem Cable (see Figures 2-5A).

4. Set CPU/System Controller Board Switch (SW1- Recovery) so that SW1-1 and SW1-2 are both in either the **ON** position or the **OFF** position.

5. Start the PC's HyperTerminal Program (at 115.2kbaud) and generate a file using the 1KX-Modem protocol. Save the resulting Core Updump in a file to be forwarded for evaluation.

When the Core Updump has been completed, set the CPU/System Controller Board's Recovery Switch as follows: SW1-1 is in the **OFF** position & SW1-2 is in the **ON** position.

## 3.7 CALIBRATION CHECKS

Calibration of the RTD is performed using OpenBSI's TechView program (see document # D5131 - *TechView User's Guide*).



Click here to return to Table of Contents

Click here to return to Table of Contents

# Section 4
# ControlWave Express SPECIFICATIONS

## 4.1 CPU, MEMORY & PROGRAM INTERFACE

| | |
|---|---|
| Processor: | Sharp's LH7A400 32-bit System-on-Chip with 32-bit ARM9TDMI RISC Core |
| Memory: | 8 Mbytes of simultaneous read/write FLASH<br>2 Mbyte of on-board SRAM<br>512 Kbytes FLASH Boot/Downloader |
| Real Time Clock: | A Semtech SH3000 support IC provides a full BCD clock calendar with programmable periodic/wakeup interrupt and a programmable clock generator with adjustable spectrum spreading. |
| Connectors: | (see Table 4-1 and referenced Tables) |

## 4.2 CPU/SYSTEM CONTROLLER BOARD

### 4.2.1 Input Power Specs.

*Note: Voltages are dc unless otherwise specified.*

| | |
|---|---|
| Operating Range: | +5.4V to +16.0V (+6V nominal Input Supply)<br>+11.4V to +16.0V (+12V nominal Input Supply)<br>+21.8V to +28.0V (+24V nominal Input Supply) |
| Output Voltages: | +3.3Vdc ±1% |
| Output Current: | 1A Max. @ 3.3Vdc |
| Output Ripple P/P: | +3.3V Output: 10mV |
| Fusing: | 3.5A Slow Blow 5x20mm Fuse |
| Electrical Isolation: | None |
| Surge Suppression: | 16V Transorb to DGND and Chassis<br>Meets ANSI/IEEE C37.90-1978 |
| Terminations: | Pluggable, maximum wire size is 16 gauge |
| Shutdown: | <u>+6V System</u><br>Below +4.3Vdc<br><br><u>+12V System</u><br>Below +9.5Vdc<br><br><u>+24V System</u><br>Below +19.2Vdc |



Click here to return to Table of Contents

### 4.2.2 Power Supply Sequencer Specs.

Signals Monitored: Input Power

Sequencer Switchpoints: +3.3V Max. ON Switchpoint = +3.15V
+3.3V Min. OFF Switchpoint = +3.00V
+1.8V Max. ON Switchpoint = +1.72V
+1.8V Min. OFF Switchpoint = +1.64V

Sequencer Output Signals: PFDLYCLK Timing on power down 2msec after POWER-FAIL
VIN100M timing on power up 1.8 second delay for Good Power
POWERGOOD incoming power, 3.3V & 1.8V in Spec.

### 4.2.3 CPU/System Controller Board Connectors

**Table 4-1 - CPU/System Controller Board Connector Summary**

| Ref. | # Pins | Function | Notes |
|---|---|---|---|
| J1 | 8-Pin | 10/100Base-T Ethernet Port (RJ-45) | see Table 2-6 |
| J2 | 10-Pin | 25-Button Display/Keypad Intf. | RJ-45 Jack (or Display Only) |
| J3 | 20-Pin | I/O Bus Interface Header | Intf. to CPU/System Controller Bd. |
| J4 | 9-Pin | D-Type - Male (COM1 - RS-232) | see Figure 4-1 & Table 4-2A |
| J5 | 20-Pin | Radio Daughter Board | |
| J7 | 10-Pin | MSP430 JTAG Header | Factory Use Only |
| J8 | 20-Pin | Emulation Header | Factory Use Only |
| J9 | 10-Pin | PLD JTAG Header | Factory Use Only |
| J11 | 3-Pin | Alternate COM1 (RS-232) | For GFC models |
| P1 | 8-Pin | MVT Interface Connector | Near Bottom of Board |
| TB1 | 6-Pin | Term. Block - Power | see Figure 4-4 |
| TB2 | 2-Pin | Term Block – Alternate Power | see Figure 4-4 |
| TB3 | 8-pin | Term. Block (COM2 - RS-232) | see Table 4-2 & Fig. 4-2 |
| TB4 | 5-pin | Term. Block (COM3 - RS-232/RS-485) | see Table 4-3 & Fig. 4-3 |
| TB5 | 4-Pin | Term. Block - Pulser 1 & 2 Interface | see Figure 4-5 |
| TB6 | 3-Pin | Term. Block - RTD Interface | see Figure 4-6 |

#### 4.2.3.1 Communication Ports

Connector/Port: <u>CPU/System Controller Board</u>
J1 - 8-Pin RJ-45 Jack (10/100Base-T Ethernet Port)
J4 - 9-Pin D-Type - COM1 (RS-232)
TB3 - 8-Pos. Term. Block - COM2 (RS-232)
TB4 - 5-Pos. Term. Block - COM3 (RS-485/485)

Baud Rate: 300 to 115Kbps for RS-232 or RS-485
Up to 56Kbps for Modem
10/100 Mbps for Ethernet Port



Click here to return to Table of Contents

**Table 4-2 - RS-232 Ports (COM1 & 2)**
**Connector Pin Assignments (J4 - COM1 & TB3 COM2)**
**Located on CPU/System Controller Bd.**

| Pin # | Signal RS-232 | Description: RS-232 Signals |
|---|---|---|
| 1 | DCD | Data Carrier Detect Input |
| 2 | RXD | Receive Data Input |
| 3 | TXD | Transmit Data Output |
| 4 | DTR | Data Terminal Ready Output |
| 5 | GND | Signal/Power Ground |
| 6 | DSR | Data Set Ready Input |
| 7 | RTS | Request To Send Output |
| 8 | CTS | Clear To Send Input |
| 9 | | N/A |

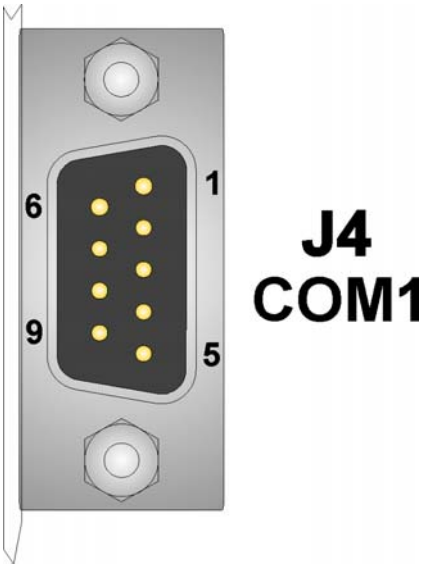


**Figure 4-1 - DB9 9-Pin Connectors J4 (COM1) on CPU/System Controller Bd.**

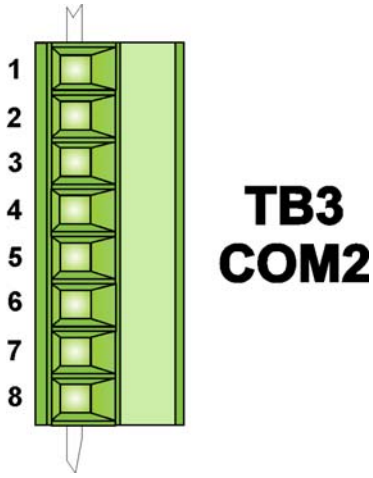


**Figure 4-2 - 8-Position Term. Block TB3 (COM2) on CPU/System Controller Board**



Click here to return to Table of Contents

**Table 4-3 - RS-232/485 Port (COM3) Connector TB4 Pin Assignments**

| Pin # | Signal RS-232 | Description: RS-232 Signals | Signal RS-485 | Description: RS-485 Signals |
|---|---|---|---|---|
| 1 | - | - | RXD+ | Receive Data + Input |
| 2 | RXD | Receive Data Input- | RXD– | Receive Data – Input |
| 3 | TXD | Transmit Data Output | TXD– | Transmit Data – Output |
| 4 | - | - | TXD+ | Transmit Data + Output |
| 5 | GND | Signal/Power Ground | GND | Ground |

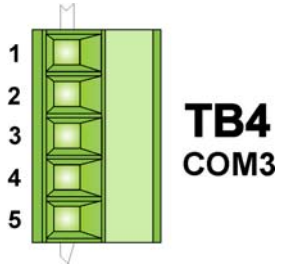


**Figure 4-3 - 5-Position Term. Block (COM3) TB4 on CPU/System Controller Board**

### 4.2.3.2 Power Interface & Field Input Connections

Power Interface: see Figure 4-4 (see Sections 4.2.1 & 4.2.2)

Pulse Input Interface: see Figure 4-5

RTD Input Interface: see Figure 4-6

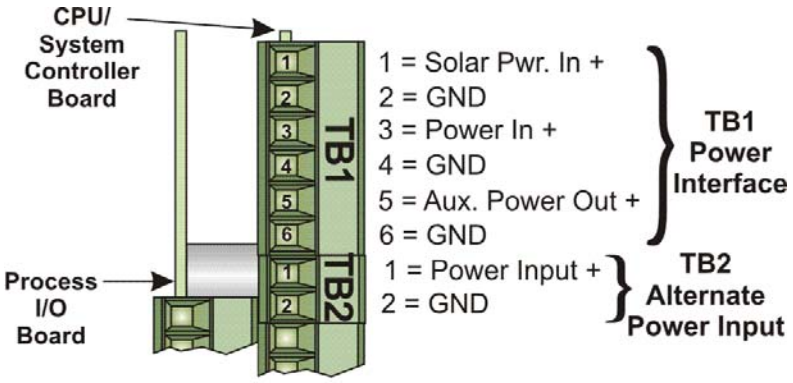


**Figure 4-4 - Terminal Blocks TB1 and TB2**

**Pulse/Digital Inputs**

No of Inputs: 2

Input Configuration: 3.3V Input Source Voltage
200uA Input Source Current
Driven Open Collector

ON State: below 1.46V

OFF State: above 1.90V



Click here to return to Table of Contents

Max. Input Frequency: 10 kHz

Signal conditioning: 20 microsecond Filtering.

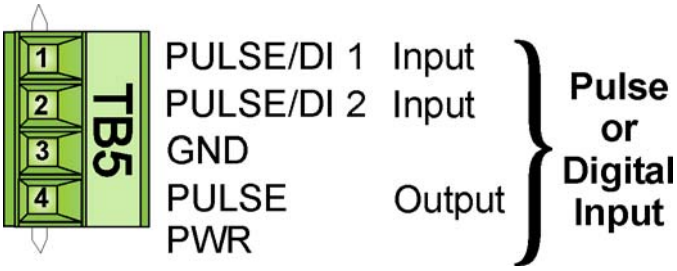


**Figure 4-5 - 4-Position Pulse Input Interface Terminal Block TB5**

**RTD Input** **Note: Only Available on 14MHz CPUs**

RTD Type: 100-ohm platinum bulb (using the DIN 43760 curve).

Configuration: The common three-wire configuration is accommodated. In this configuration, the return lead connects to the RTD- terminal while the two junction leads (Sense and Excitation) connect to the RTD+ terminals.

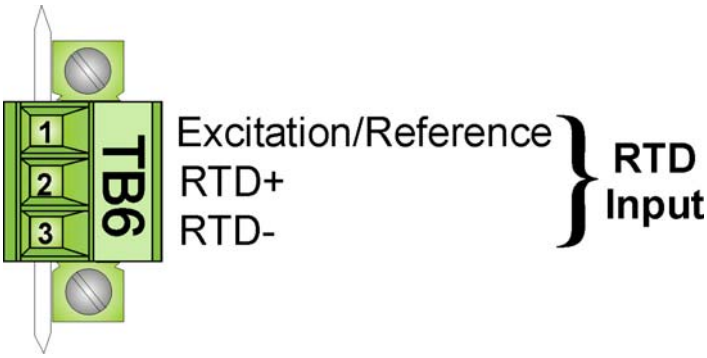


**Figure 4-6 - 3-Position RTD Input Interface Terminal Block TB6**

## 4.3 PROCESS I/O BOARD SPECIFICATIONS

### 4.3.1 Process I/O Board Connectors (see Figure 4-7 & Table 4-4)

**Table 4-4 - Process & I/O Board User Connector Summary**

| Ref. | # Pins | Function |
|---|---|---|
| P1 | 20-pin | CPU/System Controller Intf. Connector |
| TB2 | 6-pin | Term. Block - DI Interface |
| TB3 | 8-pin | Term. Block - DO & DI/O Interface |
| TB4 | 8-pin | Term. Block - HSC Interface |
| TB6 | 9-pin | Term. Block - AI Interface |
| TB7 | 4-pin | Term. Block - AO Interface |



Click here to return to Table of Contents

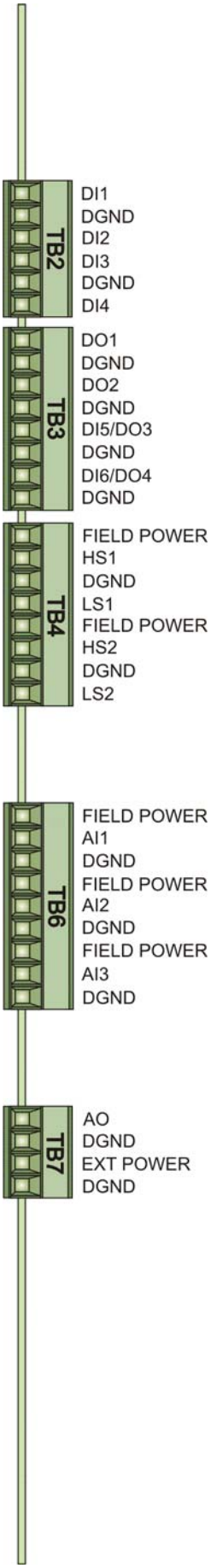


**Figure 4-7 - Process I/O Board Edge View (Connector Identification)**



Click here to return to Table of Contents

### 4.3.2 Non-isolated Digital Input/Output Circuitry Specs.

**Non-isolated Digital Inputs**

| | |
|---|---|
| Number of Inputs: | 4 Fixed, 2 Selectable DI - Internally Sourced (Dry Contact) operation |
| Input Filtering: | 15 milliseconds |
| Input Current: | Switch Selectable (SW1-3)<br>DI1 through DI4 (SW1-3: ON = 2mA, OFF = 60uA)<br>DI5 & DI6 (SW1-3: ON = 2.2mA, OFF = 200uA) |
| Bus Access: | SPI |
| ON State Voltage: | below 1.3V |
| OFF State Voltage: | above 1.6V |
| Electrical Isolation: | None |
| Surge Suppression: | 30V Transorb between signal and ground<br>Meets ANSI/IEEE C37.90-1978 |
| Status Indication: | None |

**Non-isolated Digital Outputs**

| | |
|---|---|
| Number of Outputs: | 2 Fixed, 2 Selectable DO |
| Output Configuration: | Open Drain (Externally Powered) |
| Maximum Load Current: | 400mA each 30Vdc |
| Electrical Isolation: | None |
| Surge Suppression: | 30V Transorb between signal and ground<br>Meets ANSI/IEEE C37.90-1978 |

**General DI/DO Circuitry Specs.**

| | |
|---|---|
| Terminations: | Pluggable, max wire size is 16 AWG |

### 4.3.3 Non-isolated Analog Input/Output Circuitry Specs.

**Non-isolated Analog Inputs**

| | |
|---|---|
| Number of Inputs: | 3 Single Ended Inputs (1-5V or 4-20mA) individually jumper configurable |
| Input Type: | (Externally Powered) Voltage Input: 1-5 Vdc<br>(Externally Powered) Current Loop: 4-20mA |



Click here to return to Table of Contents

| | |
|---|---|
| Input Impedance: | 1 Meg ohm for 1-5V inputs<br>250 ohm for 4-20mA inputs |
| Settling Time: | 600 msec to within 0.1% of input signal |
| Conversion Time: | 20 usec |

**Non-isolated Analog Outputs**

| | |
|---|---|
| Number of Outputs: | 1 AO (1-5V or 4-20mA) individually jumper configurable |
| 4-20mA Output Compliance: | 250 ohm load with 11V External Power Source<br>650 ohm load with 24V External Power Source |
| 1-5V Output: | 5mA maximum output current into external load with external voltage range of 11 to 30 Vdc |

**General AI/AO Circuitry Specs.**

Accuracy:

Analog Input
0.1% of Span @ +25°C (+77°F)
0.2% of Span @ -40°C to +70°C (-40°F to 158°F)

Analog Output
Current Output:
0.1% of Span @ +25°C (+77°F)
0.2% of Span @ -20°C to +70°C (-4°F to 158°F)
0.3% of Span @ -40°C to +70°C (-40°F to 158°F)

Voltage Output ($I_{load}$max = 5mA):
**(see Note[1] & Note[2])**
0.1% of Span + (2.5 ohms x $I_{load}$)/4.4V x 100@ +25°C (+77°F)
0.2% of Span + (2.5 ohms x $I_{load}$)/4.4V x 100 @ -20°C to +70°C (-4°F to +158°F)
0.3% of Span + (2.5 ohms x $I_{load}$)/4.4V x 100 @ -40°C to +70°C (-40°F to 158°F)
where X = [(2.5 ohms x $I_{load}$)/4.4V x 100]
**Note[1]: Does not include error due to inductors**
**Note[2]: 2.5 ohm uncompensated series resistance with Inductors**

| | |
|---|---|
| Terminations: | Pluggable - Max. wire size is 16 AWG |
| Data Transfer: | SPI |

### 4.3.4 Non-isolated High Speed Counter Input Circuitry Specs.

| | |
|---|---|
| Number of Inputs: | 2 HSC Inputs |
| Input Configuration: | Internally Sourced Dry Contact |



Click here to return to Table of Contents

| | |
|---|---|
| Input Frequency: | Individually switch-selectable high (10kHz Max), or low (300 Hz). SW1-1 (HSC1), SW1-2 (HSC2). |
| Input filtering: | 20 microseconds on high speed (HS) and 1 millisecond on low speed (LS). |
| Signal Conditioning: | Bandwidth limiting |
| ON State Voltage: | below 1.46V |
| OFF State Voltage: | above 1.90V |
| Bus Access: | SPI |
| Electrical isolation: | None |
| Surge Suppression: | 30V Transorb between signal and ground<br>Meets ANSI/IEEE C37.90-1978 |
| Terminations: | Pluggable, max wire size is 16 AWG |
| Status Indication: | None |
| Power Consumption: | Additional Current per Input<br>200uA per HS or LS Input (ON State) |

## 4.4 ENVIRONMENTAL SPECIFICATIONS

| | | |
|---|---|---|
| Temperature: | Operating: | -40 to +158 °F (-40 to +70 °C) |
| | Storage: | -40 to +158 °F (-40 to +70 °C) |
| Relative Humidity: | 0-95% Non-condensing | |
| Vibration: | 1g for 10 - 150 Hz<br>.5g for 150 - 2000 Hz | |
| RFI Susceptibility: | In conformity with the following standards:<br>IEC 1000-4-3 (Level 2): 3V/meter - 80MHz to 1000MHz | |

## 4.5 DIMENSIONS

NEMA 3R Enclosure RTU (see Figure 4-8)



Click here to return to Table of Contents

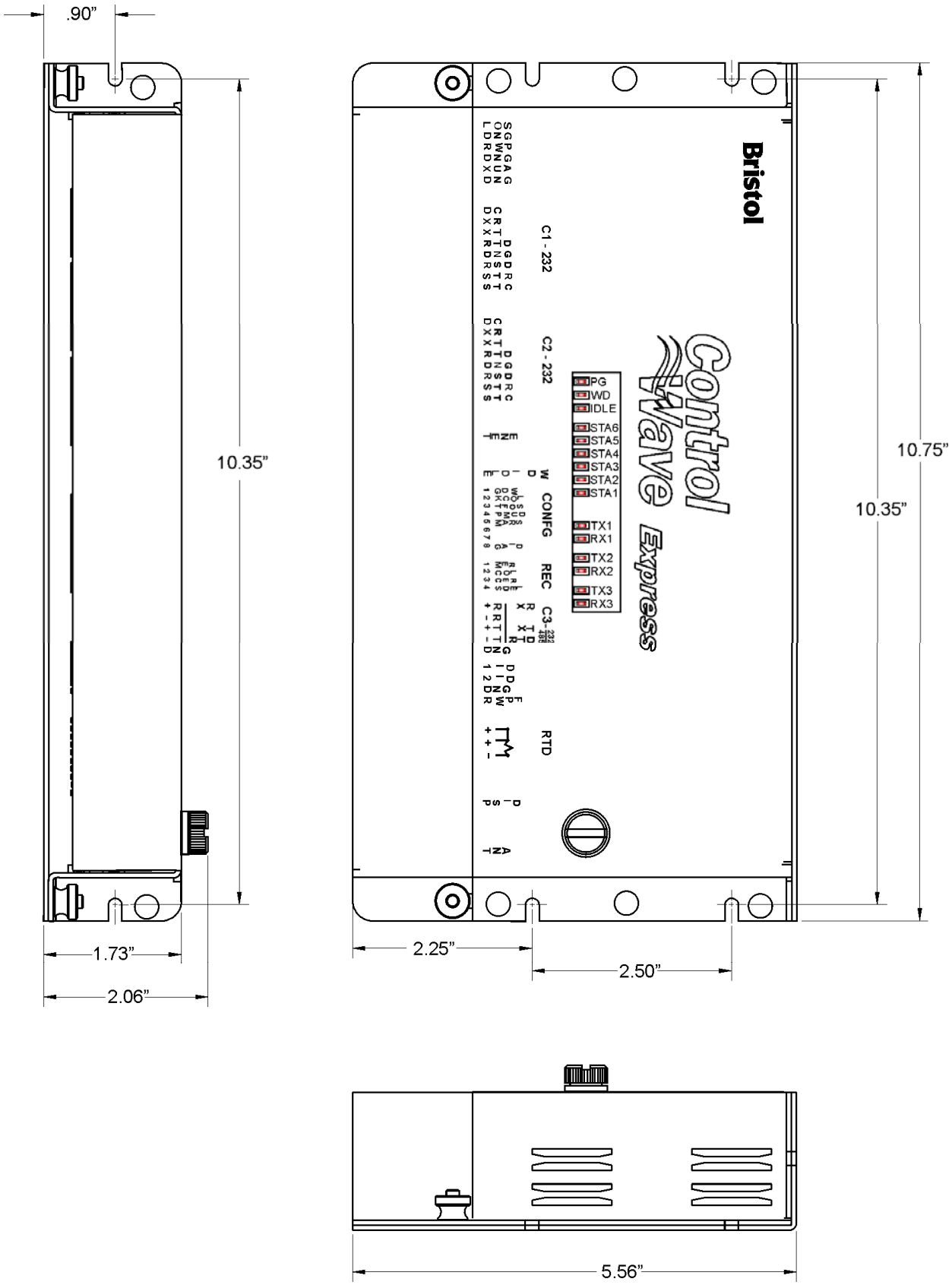


**Figure 4-8 - Control**Wave **Express Dimensions**



Click here to return to Table of Contents

## **Control**Wave **Express**
## Special Instructions for Class I, Division 2 Hazardous Locations

1. Bristol's **Control**Wave **Express** RTU is listed by Underwriters Laboratories (UL) as nonincendive and (when installed in a NEMA 1 or better enclosure) is suitable for use in Class I, Division 2, Group C and D hazardous locations or nonhazardous locations only. Read this document carefully before installing a nonincendive **Control**Wave **Express** RTU. Refer to the **Control**Wave **Express** RTU User's Manual for general information. In the event of a conflict between the **Control**Wave **Express** RTU User's Manual and this document, always follow the instructions in this document.
2. The **Control**Wave **Express** RTU includes both nonincendive and unrated field circuits. Unless a circuit is specifically identified in this document as nonincendive, the circuit is unrated. Unrated circuits must be wired using Div. 2 wiring methods as specified in article 501-4(b) of the National Electrical Code (NEC), NFPA 70 for installations in the United States, or as specified in Section 18-152 of the Canadian Electrical Code for installation in Canada.
3. The power system (solar panel and battery) are not supplied by Bristol Inc. and are therefore unrated (see paragraph 2). Connection to the solar panel is approved as a nonincendive circuit so that Division 2 wiring methods are not required. The nominal panel voltage must match the nominal battery voltage (6V or 12V).
4. **WARNING: EXPLOSION HAZARD - Do Not disconnect Solar Power from the Battery or any other power connections within the Control**Wave **Express Enclosure or any power connections to optional items such as radio/modem, or cabling to the Display/Keypad unless the area is known to be nonhazardous.**
5. **WARNING: EXPLOSION HAZARD - Substitution of major components may impair suitability for use in Class I, Division 2 environments.**
6. **WARNING: EXPLOSION HAZARD - The area must be known to be nonhazardous before servicing/replacing the unit and before installing or removing I/O wiring.**
7. **WARNING: EXPLOSION HAZARD - Do Not disconnect equipment unless power has been disconnected and the area is known to be nonhazardous.**
8. An optional RTD may be supplied with the **Control**Wave **Express**. Connection to the RTD is approved as a nonincendive circuit, so that Division 2 wiring methods are not required.
9. Signal connectors available for customer wiring are listed in Table A1. Network Communication Port and I/O wiring connections are unrated and must be wired using Div. 2 wiring methods. No temporary connections may be made to the Local Port (COM1 -J4 on CPU/System Controller Board) unless the user ensures that the area is known to be nonhazardous. Field Service connections to this port are typically temporary, and must be short in duration to ensure that flammable concentrations do not accumulate while it is in use.

### Table A1 -Module/Board Connector Customer Wiring Connectors

| Module/Item | Connector | Wiring Notes |
|---|---|---|
| CPU/System Controller Board | TB1: 6-pin Term. Block | Solar Power: User Wired - *<br>Primary Power: User Wired - *<br>Auxiliary Output: User Wired - * |
| CPU/System Controller Board | TB3: COM2, 8-pin Term Block RS-232 | Remote Comm. Port: For Radio or external Network Comm. Refer to Model Spec. and ¶ 9 of this document. When used for Network Comm., use Div. 2 wiring methods. |
| CPU/System Controller Board | TB4: COM3, 5-pin Term Block RS-232/RS-485 | RS-232/485 Comm. Port: For external Network Comm. Refer to Model Spec. and ¶ 9 of this document. |
| CPU/System Cntrl. Bd. | TB5: 4-pin Term. Block Pulse Input Interface | Pulse Input Field Wiring: Field I/O wiring connector is unrated, use Div. 2 wiring methods. * |
| CPU/System Cntrl. Bd. | TB6: 3-pin Term. Block RTD Interface | Field Wired: Refer to ¶ 8 of this document. * |
| CPU/System Controller Board | J1: 8-pin RJ-45 Jack 10/100Base-T Ethernet Port | 10/100Base-T Ethernet Port Jack<br>For external connection to an Ethernet Hub. Refer to Model Spec. and ¶ 9 of this document. |
| CPU/System Controller Board | J2: 8-pin RJ-45 Female Connector – Display or Display/Keypad Intf. | User Connected using Factory Wired Cable - * |
| CPU/System Controller Board | J4: COM1, 9-pin Male D-sub RS-232 | RS-232 Comm. Port Connectors: For external Network Comm. Refer to Model Spec. and ¶ 9 of this document. |



**Click here to return to Table of Contents**

## Table A1 -Module/Board Connector Customer Wiring Connectors (Continued)

| Module/Item | Connector | Wiring Notes |
|---|---|---|
| Process I/O Board | TB2: 6-pin Term. Block<br>DI Interface | Discrete Input Field Wiring: Field I/O wiring connector is unrated, use Div. 2 wiring methods. * |
| Process I/O Board | TB3: 8-pin Term. Block<br>DO/DI Interface | Discrete Output/Input Field Wiring: Field I/O wiring connector is unrated, use Div. 2 wiring methods. * |
| Process I/O Board | TB4: 8-pin Term. Block<br>HSC Interface | High Speed Counter Field Wiring: Field Input wiring connector is unrated, use Div. 2 wiring methods. * |
| Process I/O Board | TB6: 9-pin Term. Block<br>AI Interface | Analog Input Field Wiring: Field Input wiring connector is unrated, use Div. 2 wiring methods. * |
| Process I/O Board | TB7: 4-pin Term. Block<br>AO Interface | Analog Output Field Wiring: Field Output wiring connector is unrated, use Div. 2 wiring methods. * |

*Note: * = These wires should only be installed/removed when the item (PCB) in question is installed/removed or when checking wiring continuity. The area must be known to be nonhazardous before servicing/replacing the unit and before installing or removing PCBs, Connectors or individual I/O or Power wires. Refer to ¶ 5, 6 & 7 of this document. All input power and I/O wiring must be performed in accordance with Class I, Division 2 wiring methods as defined in Article 501-4 (b) of the National Electrical Code, NFPA 70, for installations within the United States, or as specified in Section 18-152 of the Canadian Electrical Code for installation in Canada.*



**Click here to return to Table of Contents**

# Appendix C
# HARDWARE INSTALLATION GUIDE

## Hardware Configuration

There are seven (7) main steps required to configure a ControlWave Express. This appendix provides an overview of these steps with an emphasis on the installation and configuration of the hardware. This appendix is intended for users who have already installed at least one ControlWave Express.

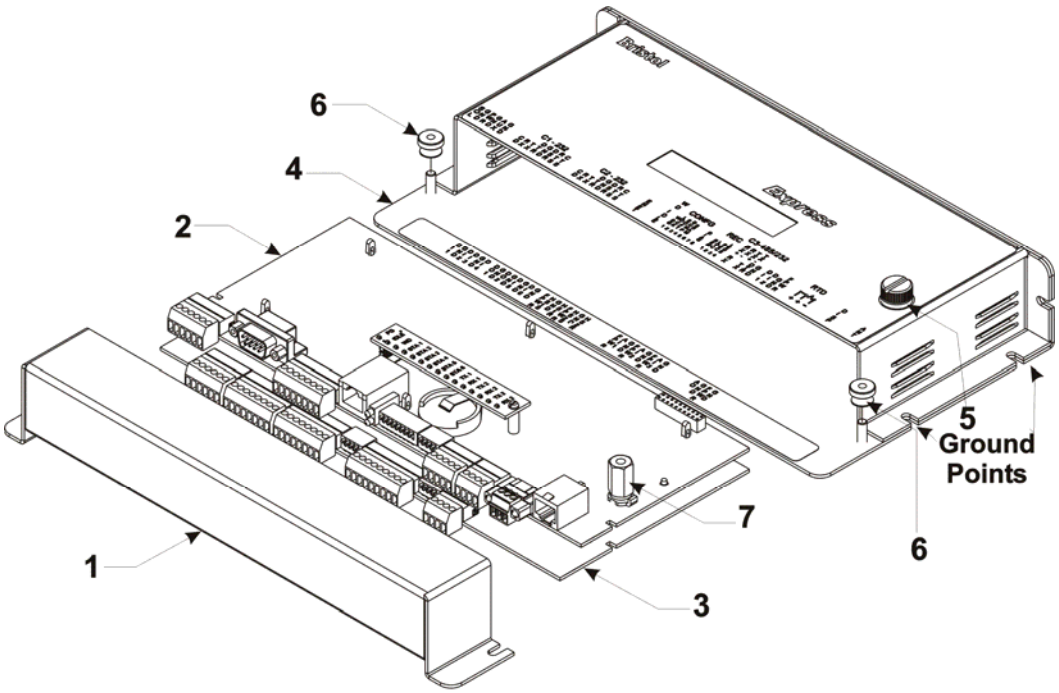


1. Removable Card Edge Cover
2. CPU/System Controller Board
3. Optional Process I/O Board
4. Enclosure/Mounting Chassis
5. Captive Fastener
6. Thumb Screws (2)
7. CPU/Chassis Mounting/Ground Standoff

**Figure C-1 - ControlWave Express - Component Identification Diagram**

## Step 1. Hardware Configuration

This involves unpacking the ControlWave Express hardware, mounting the enclosure, wiring I/O terminations, connecting any permanent communication cables, making proper ground connections, connecting a communications cable to a PC workstation, setting switches and setting jumpers. To install and configure the ControlWave Express, follow the steps below:

1. Remove the unit from its carton and install it onto a panel or DIN-Rail in an appropriate enclosure and then ultimately at the assigned work site (see Section 2.3.1). Dimensions are provided in Section 4.6 of this manual.



Click here to return to Table of Contents

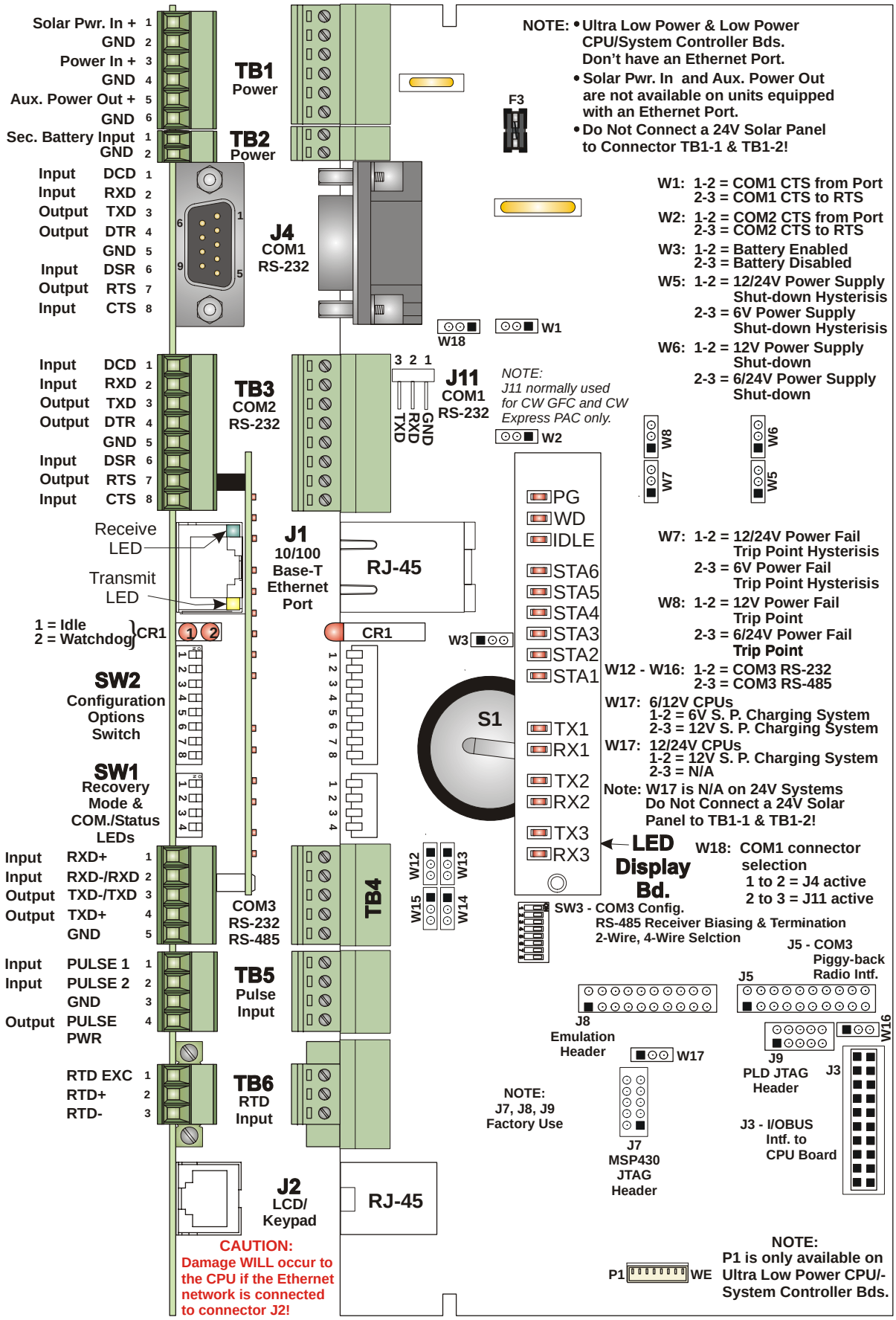


**Figure C-2 - CPU/System Controller Bd. Component I.D.**



Click here to return to Table of Contents

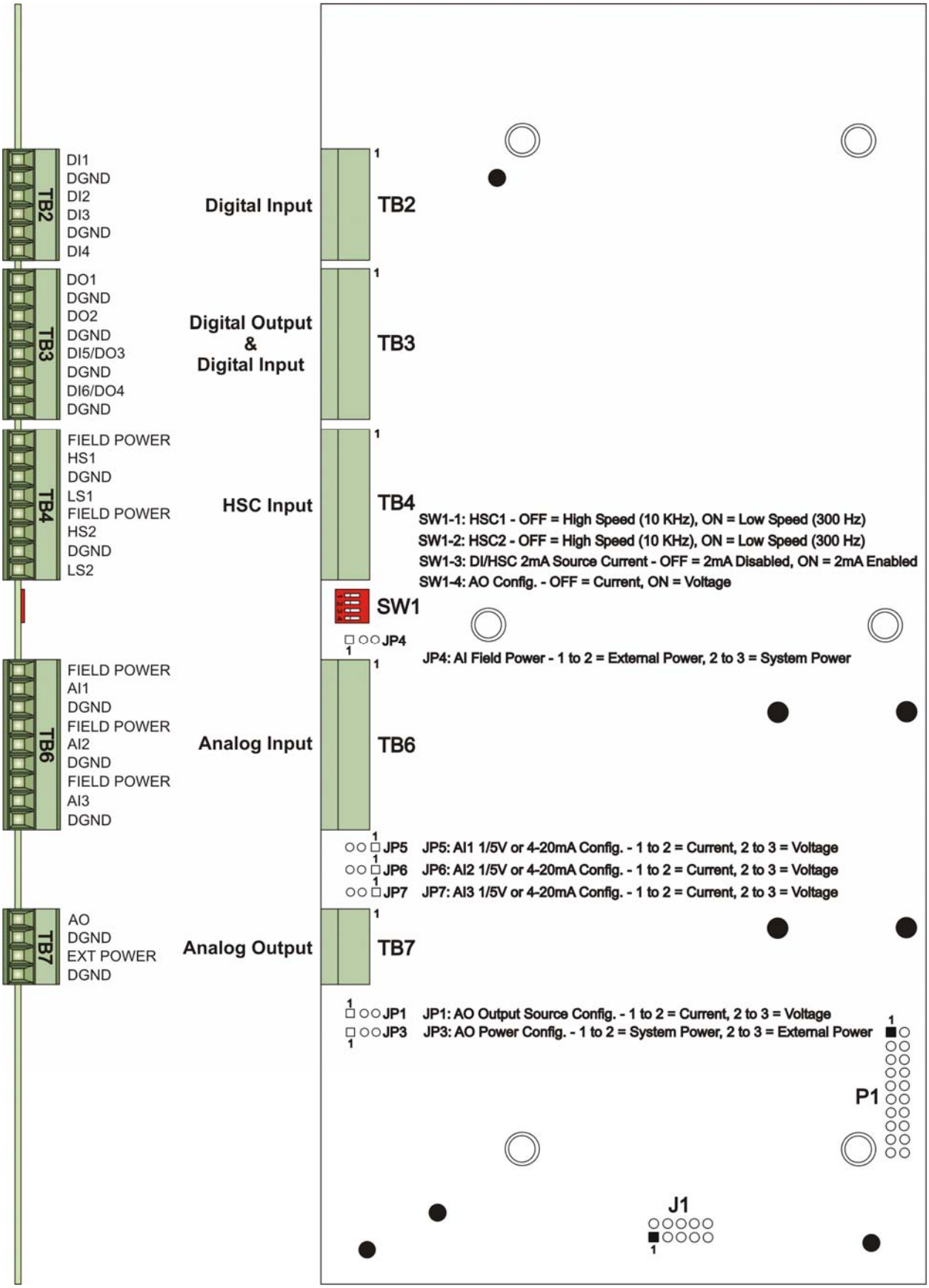


**Figure C-3 – Process I/O Board Component Identification Diagram**



Click here to return to Table of Contents

**Step 1. Hardware Configuration (Continued)**

2. Remove the Process I/O Board and the CPU/System Controller Board (as one assembly).

**Table C-1 - CPU/System Controller Bd. Switch SW1**
**Recovery Mode/Local Mode Control**

| SWITCH | Function | Setting |
|---|---|---|
| SW1-1/2 | Recovery/Local Mode * | Both ON or OFF = Recovery Mode<br>SW1 OFF & SW2 ON = Local Mode |
| SW1-3 | Force Recovery Mode | ON = Force Recovery Mode (via CW Console)<br>OFF = Recovery Mode disabled |
| SW1-4 | LED Status | ON = Enable Idle LED Status Indication<br>OFF = Disable Idle LED Status Indication |

*** = Note: Only the Switch SW1 settings listed in this table, have been tested.**

**Table C-2 - CPU/System Controller Bd. Configuration Switch SW2 - Assignments**
**Note: Except for SW2-4, ON = Factory Default**

| SW# | Function | Setting - (ON = Factory Default) |
|---|---|---|
| SW2-1 | Watchdog Enable | ON = Watchdog circuit is Enabled<br>OFF = Watchdog circuit is Disabled |
| SW2-2 | Lock/Unlock<br>Soft Switches | ON = Write to Soft Switches and FLASH files<br>OFF = Soft Switches, configurations and FLASH files are locked |
| SW2-3 | Use/Ignore<br>Soft Switches | ON = Use Soft Switches (configured in FLASH)<br>OFF = Ignore Soft Switch Configuration and use factory defaults |
| SW2-4 | Core Updump<br>See Section 3.6 | ON = Core Updump Disabled<br>OFF = Core Updump Enabled via Mode Switch (SW1) |
| SW2-5 | SRAM Control | ON = Retain values in SRAM during restarts<br>OFF = Force system to reinitialize SRAM |
| SW2-6 | System Firmware<br>Load Control * | ON = Enable remote download of System Firmware<br>OFF = Disable remote download of System Firmware |
| SW2-8 | Enable WINDIAG | ON = Normal Operation (don't allow WINDIAG to run test)<br>OFF = Disable boot project (allow WINDIAG to run test) |

*** = Boot PROM version 4.7 or higher and System PROM version 4.7 or higher**

**Table C-3 - CPU/System Controller Bd. Switch SW3 Assignments**
**RS-485 Loopback & Termination Control for COM3**

| SWITCH # | RS-485 Function Switch ON | Setting |
|---|---|---|
| SW3-1 | TX+ to RX+ Loopback/2-Wire | ON – 2-Wire Operation or Loopback Enabled<br>OFF – 4-Wire Operation & Loopback Disabled |
| SW3-2 | TX– to RX– Loopback/2-Wire | ON – 2-Wire Operation or Loopback Enabled<br>OFF – 4-Wire Operation & Loopback Disabled |
| SW3-3 | 100 Ohm RX+ Termination | ON – End Nodes Only |
| SW3-4 | 100 Ohm RX– Termination | ON – End Nodes Only |
| SW3-7 | RX+ Bias (End Nodes/Node) | ON – 4-Wire = Both End Nodes<br>2-Wire = One End Node Only<br>OFF – No Bias |
| SW3-8 | RX– Bias (End Nodes/Node) | ON – 4-Wire = Both End Nodes<br>2-Wire = One End Node Only<br>OFF – No Bias |

**SW3-5 & SW3-6 Not Used**



Click here to return to Table of Contents

**Step 1. Hardware Configuration (Continued)**

3. Make sure that the Lithium Backup Battery has been enabled, i.e., Backup Battery Jumper W3 on the CPU/System Controller Assembly should be installed on jumper posts 1-2). Configure the CPU/System Controller Board DIP-Switches and Jumpers. Tables C-1 through C-3 provides overviews of the switch settings (see Figure C-2). Configure the Process I/O Board's DIP-Switches and Jumpers (see Figure C-3). After configuring the Jumpers and DIP-Switches, install the Process I/O Board and the CPU/System Controller Board (as one assembly) into the enclosure.

4. Configure/Connect appropriate communication port(s) (see Section 2.3.3.2). Connect COMM. Port 1 (Local Port) or 2 of the ControlWave Express (depending on CPU/System Controller Board Switch SW2 settings - see Section 2.3.3.1) to a Communication Port of a PC (typically PC COMM. Port 1). *Note: Also see Section 2.4.4.*

   A ControlWave Express can be configured as a Master or Slave node on either a MODBUS network or a BSAP network. A variety of communication schemes are available. Three communication ports are contained on the standard CPU/System Controller Board. These communication ports are designated as follows:

   **<u>CPU/System Controller Board:</u>**

   COM1 - Port 1: J4 (9-Pin Male D-Sub) or J11 (3-Pin Male connector) - RS-232 (choice of connector determined by setting of jumper W18.)
   COM2 - Port 2: TB3 (8-Pin Term. Block) RS-232
   COM3 - Port 3: TB3 (5-Pin Term. Block) RS-232/RS-485 - Configured by Jumpers W12 through W16 (When set for RS-485 operation, COM3 is used to configure Receiver Biasing and Termination.)

   Communication Ports COM1, COM2 and COM3 support serial asynchronous operation as listed above. Any communication port (COM1, COM2 or COM3) can be configured for local communications, i.e., connected to a PC loaded with ControlWave Designer and OpenBSI software. The pin labels for the various RS-232/485 interface connectors are provided in Tables C-4A and C-4B.

   **RS-232 & RS-485 Interfaces**

   ControlWave Express RS-232 & RS-485 communication schemes are discussed herein.

   **RS-232 Ports**
   An RS-232 interface supports Point-to-Point, half-duplex and full-duplex communications (20 feet maximum, using data quality cable). Half-duplex communications supported by the ControlWave Express utilize MODBUS or BSAP protocol, while full-duplex is supported by the Point-to-Point (PPP) protocol. ControlWave Express RS-232 ports utilize a "null modem" cable (Figure C-4 - Top) to interconnect with other devices such as a PC, printer, a ControlWave-series unit (except CW_10/30/35) when the ControlWave Express is communicating using the full-duplex PPP protocol. A half-duplex cable (Figures C-4A - Bottom) may be utilized when the ControlWave Express is connected to a ControlWave series unit (except CW_10/30/35). If communicating with a Bristol series 3305, 3310, 3330, 3335 or CW_10/30/35 RTU/DPC, one of the cables shown in Figure C-4B must be used. Refer to Figure C-4C to connect ControlWave serial RS-232 port COM2 to either an external modem or external radio. When interfacing to Port COM3 of a ControlWave unit, or to COM5 or



Click here to return to Table of Contents

COM6 of a ControlWaveEXP, the cable of Figure C-4D must be used along with the one of Figure C-4A or C-4B.

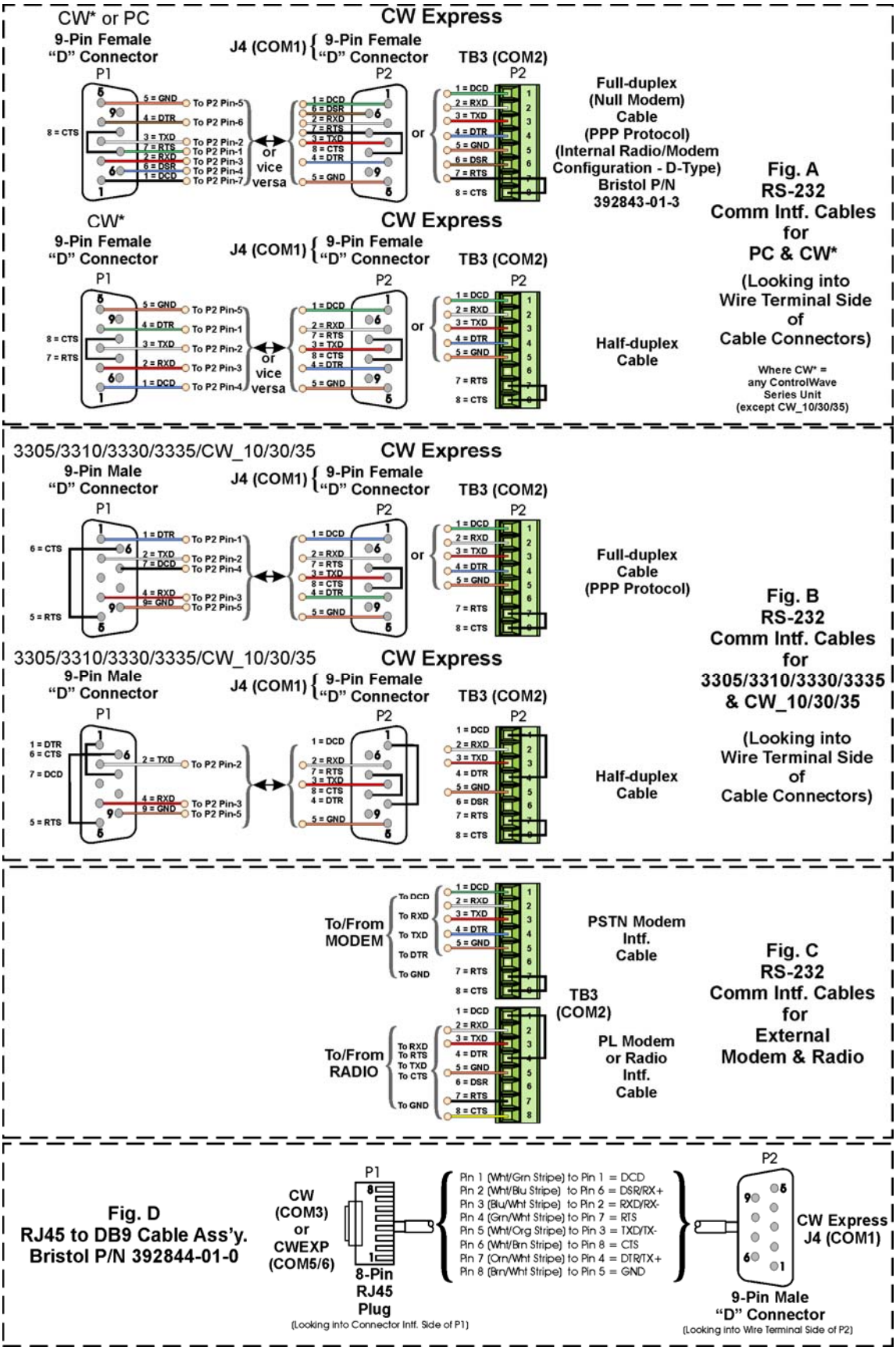


**Figure C-4 - Communication Port RS-232 Cable Wiring Diagram**



Click here to return to Table of Contents

**Step 1. Hardware Configuration (Continued)**

Tables C-4A through C-4C provide the connector pin assignments for the Comm. Ports.

**Note:** The following facts regarding ControlWave Express RS-232 serial communication ports should be observed when constructing communications cables:

- DCD must be high to transmit (except when dialing a modem)
- Each RS-232 transceiver has one active receiver while in powerdown mode (disabled); the DCD signal is connected to the active receiver.
- CTS must be high to transmit.
- When port is set for full-duplex operation - RTS is always ON.
- DTR is always high (when port is active); DTR enables RS-232 Transceivers.
- When port is set for half-duplex operation - CTS must go low after RTS goes low.
- All RS-232 Comm. ports support RTS, DTR, CTS, DCD and DSR control signals.
- All RS-232 Comm. port I/O signals are protected by LCDA12C surge protectors to ±4KV ESD.

**Table C-4A - RS-232 Ports (COM1 & 2) Connector Pin Assignments (COM1 Connector J4 & COM2 Connector TB3)**

| Pin # | Signal RS-232 | Description: RS-232 Signals |
|---|---|---|
| 1 | DCD | Data Carrier Detect Input |
| 2 | RXD | Receive Data Input |
| 3 | TXD | Transmit Data Output |
| 4 | DTR | Data Terminal Ready Output |
| 5 | GND | Power Ground |
| 6 | DSR | Data Set Ready Input |
| 7 | RTS | Request To Send Output |
| 8 | CTS | Clear To Send Input |
| 9 | - | - |

**Table C-4B - RS-232 Port (COM1) Alternate Connector (COM1 Connector J11)**

| Pin # | Signal RS-232 | Description: RS-232 Signals |
|---|---|---|
| 1 | GND | Power Ground |
| 2 | RXD | Receive Data Input |
| 3 | TXD | Transmit Data Output |

NOTE: Choice of COM1 connectors (J4 or J11) determined by jumper W18.

**Table C-4C - RS-2 32/RS-485 Port (COM3) Connector Pin Assignments (COM3 Connector TB4)**

| Pin # | Signal RS-232 | Description: RS-232 Signals | Signal RS-485 | Description RS-485 Signal |
|---|---|---|---|---|
| 1 | - | - | RXD+ | Receiver Data + Input |
| 2 | RXD | Receive Data Input | RXD– | Receiver Data – Input |
| 3 | TXD | Transmit Data Output | TXD– | Transmit Data – Output |
| 4 | - | - | TXD+ | Transmit Data + Output |
| 5 | GND | Power Ground | GND | Ground |



Click here to return to Table of Contents

**Step 1. Hardware Configuration (Continued)**

**RS-485 Ports**

ControlWave Express RTUs can use an RS-485 communication port for local network communications to multiple nodes up to 4000 feet away. Since this interface is intended for network communications, Table C-5 provides the appropriate connections for wiring the master, 1st slave, and nth slave. Essentially, the master and the first slave transmit and receive data on opposite lines; all slaves (from the first to the "nth") are paralleled (daisy chained) across the same lines. The master node should be wired to one end of the RS-485 cable run. A 24-gauge paired conductor cable, such as Belden 9843 should be used. *Note: Only half-duplex RS-485 networks are supported*

Receiver biasing and termination as well as 2-wire or 4-wire selection are enabled by an eight-position DIP-Switch (SW3) situated on the CPU/System Controller Board.

Table C-4C provides connector pin assignments for CPU/System Controller Board port COM3. Table C-3 provides the RS-485 termination and loopback control Switch Settings for COM3 when it has been configured for RS-485 communications.

To ensure that the "Receive Data" lines are in a proper state during inactive transmission periods, certain bias voltage levels must be maintained at the master and most distant slave units (end nodes). These end nodes also require the insertion of 100-Ohm terminating resistors to properly balance the network. Secondary Communication Board switches must be configured at each node to establish proper network performance. This is accomplished by configuring CPU/System Controller Bd. Switch SW3 (COM3) so that the 100-Ohm termination resistors and biasing networks are installed at the end nodes and are removed at all other nodes on the network (see Table C-5).

**Table C-5 - RS-485 Network Connections**

(see Table C-4C ControlWave Express RS-485 Port Pin # Assignments)

| From Master | To 1st Slave | To nth Slave |
|---|---|---|
| TXD+ | RXD+ | RXD+ |
| TXD– | RXD– | RXD– |
| RXD+ | TXD+ | TXD+ |
| RXD– | TXD– | TXD– |
| GND/ISOGND* | GND/ISOGND* | GND/ISOGND* |

* ISOGND with Isolated RS-485 Ports Only!

**Note: Pins 1, 2, 3, 4 & 9 of BBI Series 3305, 3310, 3330, 3335 & 3340 RTU/DPC RS-485 Comm. Ports are assigned as follows: 1 = TXD+, 2 = TXD-, 3 = RXD+, 4 = RXD- & 9 = ISOGND.**
**Note: For Loopback & Termination Control: Use SW3 on CPU/System Controller Board to configure COM3.**

**Ethernet Port**

ControlWave Express CPU/System Controller Boards can contain one Ethernet Port that utilizes a 10/100Base-T RJ-45 modular connector (J1) and typically provides a shielded twisted pair interface to an Ethernet Hub.

A typical Ethernet Hub provides eight (8) 10/100Base-T RJ-45 Ports (with Port 8 having the capability to link to another Hub or to an Ethernet communications port). Both ends of the twisted pair Ethernet cable are equipped with modular RJ-45 connectors. These cables have



Click here to return to Table of Contents

a one-to-one wiring configuration as shown in Figure C-7. Table C-6 provides the assignments and definitions of the 8-pin 10/100Base-T connector.

It is possible to connect two nodes in a point-to-point configuration without the use of a Hub. However, the cable used must be configured such that the TX+/- Data pins are connected to the RX+/- Data pins (swapped) at the opposite ends of the cable (see Figure C-7).

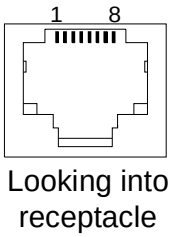


**Figure C-5 - RJ-45 Connector (Ethernet Port) J1 on CPU/System Controller Board**

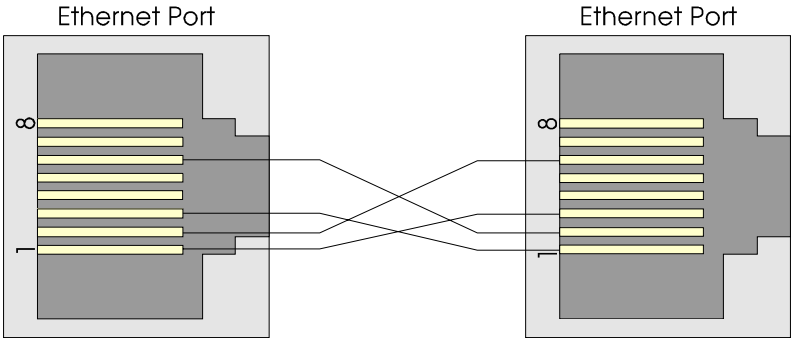


**Figure C-6 - Point-to-Point 10/100Base-T Ethernet Cable**

The maximum length of one segment (CPU to Hub) is 100 meters (328 feet). The use of Category 5 shielded cable is recommended.

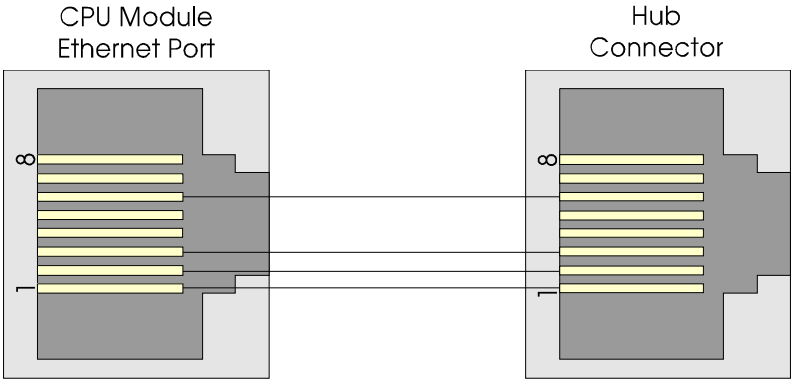


**Figure C-7 - Standard 10/100Base-T Ethernet Cable (CPU/System Controller Board to Hub)**

**Table C-6 - Ethernet 10/100Base-T Pin Assignments**

| Pin # | Description | Pin # | Description |
|---|---|---|---|
| 1 | Transmit Data+ (Output) | 5 | Not Connected |
| 2 | Transmit Data- (Output) | 6 | Receive Data- (Input) |
| 3 | Receive Data+ (Input) | 7 | Not Connected |
| 4 | Not Connected | 8 | Not Connected |

***Note: TX & RX are swapped at Hub's.***



Click here to return to Table of Contents

**Step 1. Hardware Configuration (Continued)**

5. Install I/O wiring to the Process I/O Board and CPU/System Controller Board (see Figures C-11 and C-12 and Section 2.3.4 if required). Install a communications cable between the ControlWave Express and a Model 3808 Transmitter (Network of Transmitters) if required (see Figures C-8 through C-10). Figures C-8 and C-9 detail the RS-232 and RS-485 wiring connections required between the ControlWave Express and the Model 3808 Transmitter.

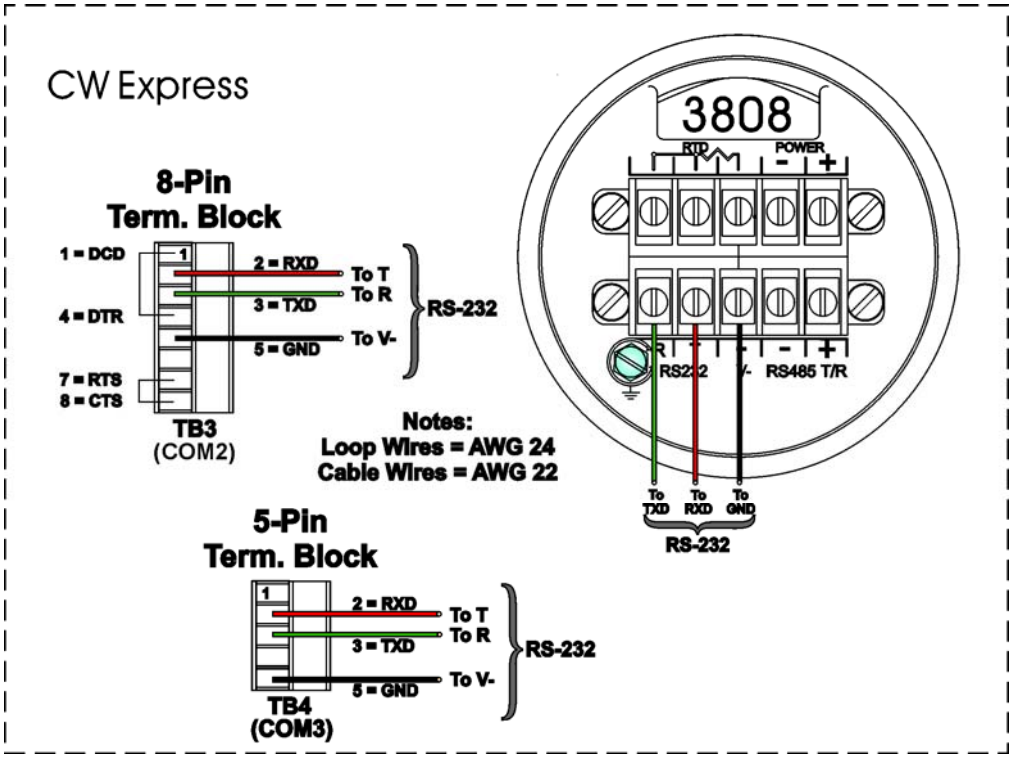


**Figure C-8 - Model 3808 Transmitter to Control**Wave **Express RS-232 Comm. Cable Diagram**

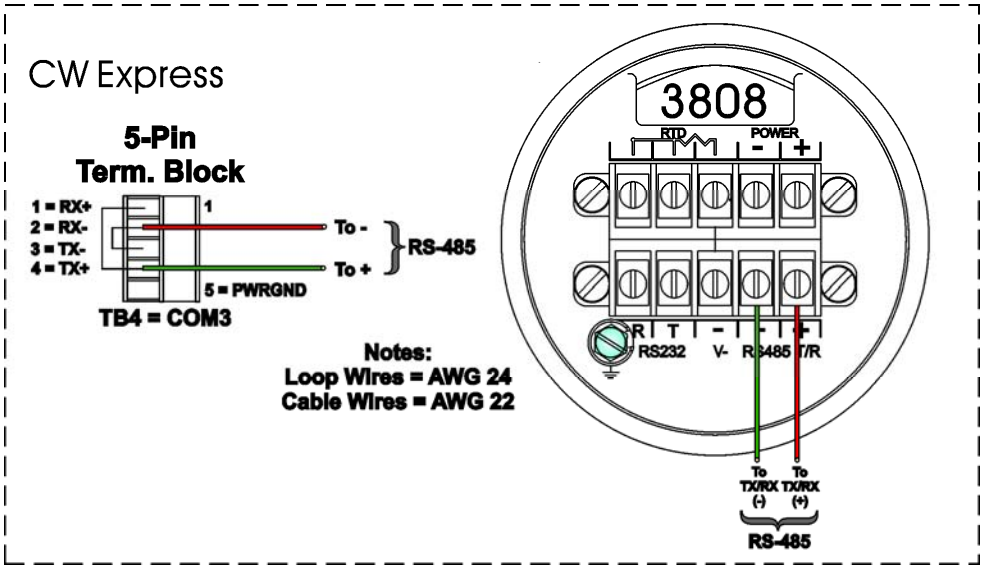


**Figure C-9 - Model 3808 Transmitter to ControlWave Express RS-485 Comm. Cable Diagram**



Click here to return to Table of Contents

**Step 1. Hardware Configuration (Continued)**

Up to two (2) Model 3808 Transmitters can be connected to a ControlWave Express via a half duplex RS-485 Network. An illustration of this network is provided in Figure C-10.

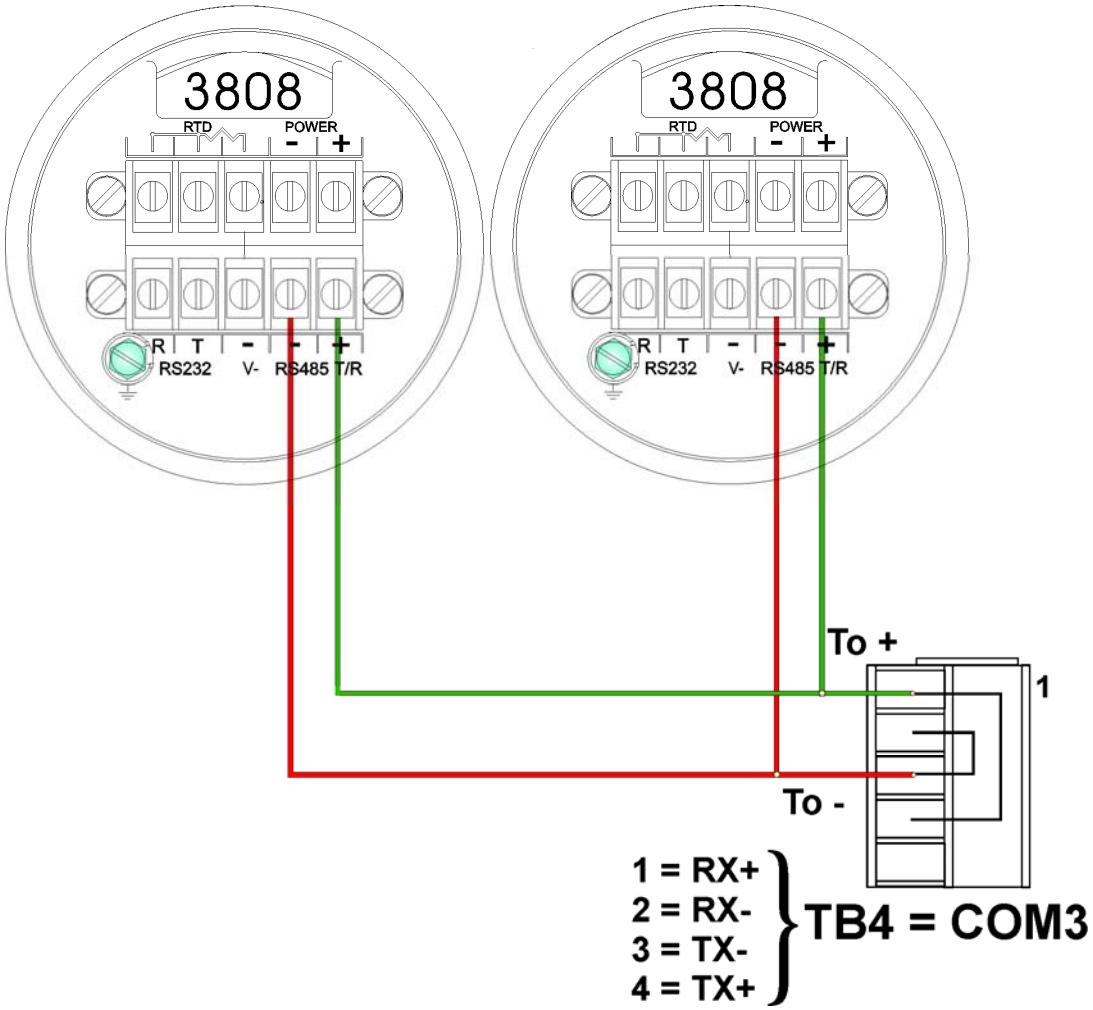


**Figure C-10 - ControlWave Express to 3808s - RS-485 Network Diagram**

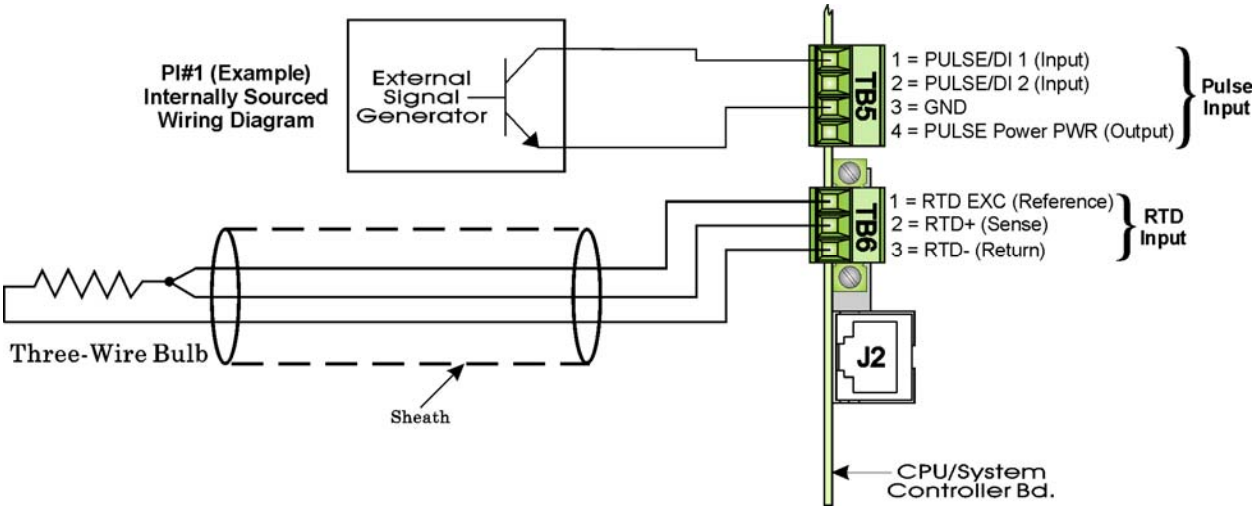


**Figure C-11 - CPU/System Controller Board Field I/O Wiring Diagrams**



Click here to return to Table of Contents

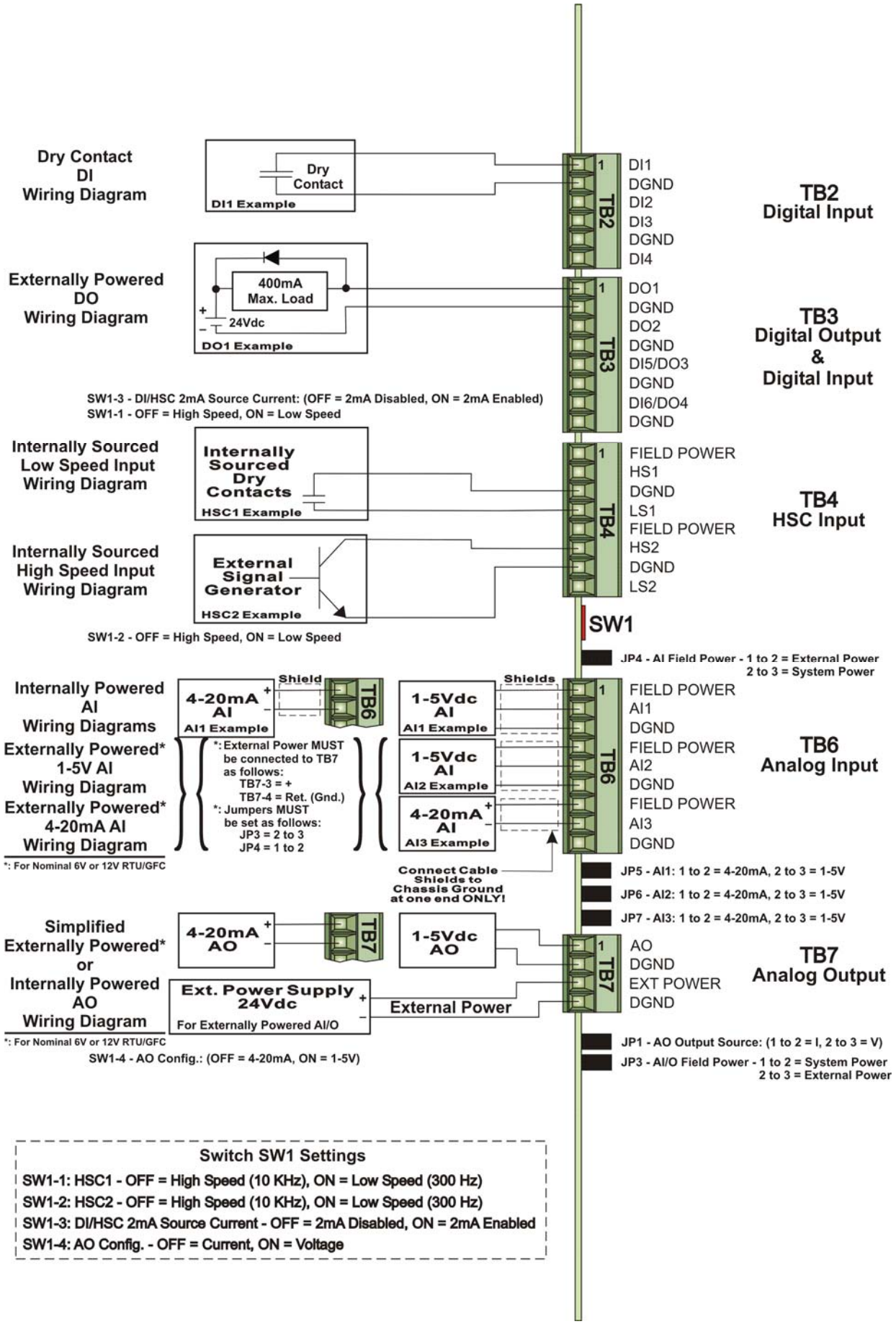


**Figure C-12 – Process I/O Board Field I/O Wiring Diagrams**



Click here to return to Table of Contents

**Step 1. Hardware Configuration (Continued)**

6. Install a ground wire between the Enclosure/Chassis and a known good Earth Ground.

   ControlWave Express Enclosures are not provided with a Ground Lug. A ground wire (#4 AWG Max. wire size) must be run between the Enclosure/Chassis via one or more mounting screws (see Figure C-1) and a known good Earth Ground. The following considerations are provided for the installation of ControlWave Express system grounds (see S1400CW):

   - Earth Ground wire size should be #4 AWG. It is recommended that stranded copper wire is used and that the length should be as short as possible.
   - This ground wire should be clamped or brazed to the Ground Bed Conductor (that is typically a stranded copper AWG 0000 cable installed vertically or horizontally).
   - The wire end that is to be fastened to the ControlWave Express should be crimped to a Terminal Ring/Lug and soldered. *Note: Use a high wattage Soldering Iron.*
   - The ground wire should be run such that any routing bend in the cable has a minimum radius of 12-inches below ground and 8-inches above ground.

7. If required, install the RTD Probe (see Section 2.3.5).

8. Connect DC Power wiring to the ControlWave Express CPU/System Controller Board (see Sections 2.3.7.1 & 2.3.7.2).

   CPU/System Controller Board Connector TB1 power wiring assignments are provided as follows:

   TB1-1 = Solar Power In+
   TB1-2 = GND Chassis Ground – CHASSIS - (Solar Power – Return)
   TB1-3 = (+VIN) (+5.4Vdc to +16V dc for 6V bulk) (+11.4Vdc to +16.0Vdc for 12V bulk) (+21.8Vdc to +28.0Vdc for 24V bulk)
   TB1-4 = GND Chassis Ground – CHASSIS
   TB1-5 = Aux. Power Out + (for external radio/modem)
   TB1-6 = GND Chassis Ground – CHASSIS - (for radio/modem)

9. Apply power to the ControlWave Express. Continue with Steps 2 through 7 below (and Section 2.4.1) and the ControlWave Express will be ready for on line operation.

**Step 2. Software Installation on the PC Workstation**

ControlWave Designer software must be installed on the PC if the ControlWave Express is being utilized for an application, other than the standard one. This is accomplished by installing the ControlWave Designer Package from the Open BSI CD ROM.

You must install the **Open BSI Network Edition**. For information on minimum system requirements and more details on the installation, see the installation procedure in Chapter 2 of the *Open BSI Utilities Manual* (document # D5081).

**<u>If you have an older version of ControlWave Designer already installed:</u>**

Beginning with ControlWave Designer Version 3.3, the copy protection key (dongle) is NOT required. Prior to installing ControlWave Designer 3.3 or newer, you MUST remove the hardware dongle from the parallel port of your PC workstation. Otherwise, when you



Click here to return to Table of Contents

subsequently start ControlWave Designer, it will operate only in 'DEMO' mode, and will limit the available system resources.

**IMPORTANT:**

**When you start ControlWave Designer, you will be reminded to register the software. Unregistered software can only be used for a maximum of 30 days. For more information on the registration process, see Chapter 2 of the Open BSI Utilities Manual (document# D5081).**

### Step 3. Establish Communications using either LocalView, NetView, or TechView and Run the Flash Configuration Utility

Communications must be established with the ControlWave Express using either LocalView, NetView, or TechView.

The ControlWave Express ships from the factory with a default Flash configuration. Most users will need to edit this configuration to set the IP address (if using PPP), BSAP local address, user accounts, and port parameters. This can be done in one of two ways:

- Either open the supplied Flash Configuration Profile (FCP) file and modify it, directly in the Flash Configuration Utility, or in a text editor,

- Or retrieve existing Flash Parameters directly from the unit, and edit them in the Flash Configuration Utility.

Detailed information on the Flash Configuration Utility and LocalView is included in Chapter 5 of the *Open BSI Utilities Manual* (document # D5081). NetView is described in Chapter 6 of that same manual. TechView is described in the *TechView User's Guide* (document# D5131).

### Step 4. Creation of the Application-Specific Control Strategy

You can create your own application-specific control strategy using ControlWave Designer. This involves opening a new project using the 'CWMicro' template, defining I/O points using the I/O Configurator, and creating a program using one or more of the five supported IEC 61131 languages (FBD, ST, SFC, LD, or IL). Some of these languages are text-based, others use graphical diagrams. The choice is up to you, depending upon your particular application.

The *ControlWave MICRO Quick Setup Guide* (document # D5124) includes a simple LD example. Additional examples are included in the manual, *Getting Started with ControlWave Designer* (document # D5085). More detailed information about ControlWave Designer and IEC 61131 is included in the *ControlWave Designer Reference Manual* (document # D5088).

The ACCOL3 Firmware Library, which is automatically accessible through the template referenced above, includes a series of function blocks which perform a variety of process control and communication functions. These can be included within your program to perform various duties including PID control, alarming, calculations, etc. Detailed information about each function block is included in the ControlWave Designer on-line help files.



Click here to return to Table of Contents

On the variables declaration page(s) in ControlWave Designer, you will need to mark any variable you want to make accessible to external programs, such as Open BSI's DataView utility, as **"PDD"**. Similarly, any variables which should be collected into a database, or exported using the OLE for Process Control (OPC) Server must be marked as **"OPC."** Variables marked as OPC can be built into a text file by the **OpenBSI Signal Extractor.** The text file can then be used in the creation of a database for human machine interface (HMI) software such as OpenEnterprise or Iconics' Genesis. These HMI software packages require that the **"Datatype conversion enable"** option be selected when generating the file using Signal Extractor. Information about the OpenBSI Signal Extractor is included in Chapter 12 of the *Open BSI Utilities Manual* (document # D5081).

Once the program has been created, it is assigned to an executable task. The entire project is then saved and compiled.

**NOTE: From this point on, the order of steps may be varied, somewhat, depending upon the requirements of the user's application.**

**Step 5. Create Your Own Application-Specific Web Pages (Optonal)**

The ControlWave Express RTU supports a standard set of web pages for configuration purposes. If you create your own application program, you may create your own web pages using Bristol ActiveX controls discussed in the *Web_BSI Manual* (document # D5087).

You can use whichever HTML creation package you want to create the pages, however, all ControlWave Express related web pages (whether standard or user-created) must be viewed within Microsoft® Internet Explorer. Web pages are stored on a PC workstation.

**Step 6. Create an Open BSI Network Containing the ControlWave Express, or ADD the ControlWave Express to an Existing Open BSI Network**

In order for the ControlWave Express unit to function as part of a Bristol network, it is necessary to include it in the Bristol network.

**If no Bristol network exists:**

You need to run Open BSI's NetView software on the PC workstation in order to define a Bristol network. A series of software wizards are used to define a Network Host PC, a network, and the RTUs (controllers) assigned to the network. Finally, communication lines must be specified which handle the address assigned to the ControlWave Express. Chapters 3 and 4 of the *Open BSI Utilities Manual* (document # D5081) include 'quick start' examples for performing these steps. More detailed information is included in the NetView chapter (Chapter 6) of D5081.

**If a Bristol network already exists:**

You will need to add the ControlWave Express RTU to the existing network using NetView's RTU Wizard. Chapter 6 of the *Open BSI Utilities Manual* (document # D5081) includes different sub-sections depending upon whether you are adding the unit to a BSAP network, or an IP network.

**Step 7. If applicable, download new or modified control strategy (OPTIONAL)**

If you modify a standard ControlWave Express program, or create your own program, compile and download the new or modified program into the unit, using either ControlWave Designer, or the Open BSI 1131 Downloader. In this case, you download the control strategy into the BOOT project area of FLASH memory; this ensures that if



Click here to return to Table of Contents

the ControlWave Express is reset, or if there has been a failure of the backup battery, the control strategy can be restarted from the beginning, i.e. from the BOOT project in FLASH memory.

## Downloading the Application

Any ControlWave Express must have a configured ControlWave project (application) before it can be placed into operation. This will require connection of the ControlWave Express to a PC running ControlWave Designer and OpenBSI software. Configuration of the application must be performed by an individual familiar with the various programming tools. The following software user documentation is referenced:

*Getting Started with ControlWave Designer Manual* - D5085
*ControlWave Designer Reference Manual* - D5088
*Open BSI Utilities Manual* - D5081
*Web_BSI Manual* - D5087
*ControlWave Designer Programmer's Handbook* – D5125

An application download can be initiated from ControlWave Designer, or from the OpenBSI 1131 Downloader.

1. Make sure that the CPU/System Controller Board's Mode Switch (SW2) is set in 'Local Mode,' i.e., SW1-1 in the **OFF** position and SW1-2 in the **ON** position.

   **Note: From the factory, COM1 defaults to 115.2 kbd (RS-232) using the BSAP Protocol. Do not connect COM1 to a PC unless the PC's RS-232 port in question has been configured for BSAP operation.**

2. Once the ControlWave Express project has been defined and the communications and configuration parameters have been set, perform the download from either ControlWave Designer (see D5088 - Chapter 11) or the Open BSI 1131 Downloader (see D5081 - Chapter 7).

3. After the download has been completed leave the CPU/System Controller Board's Mode Switch (SW1) set in 'Local Mode,' i.e., SW1-1 in the **OFF** position and SW1-2 in the **ON** position.

## LED & LCD Display Checks

CPU/System Controller Boards for the ControlWave Express, ControlWave ExpressPAC, ControlWave GFC, ControlWave GFC Plus, and ControlWave Corrector are equipped with two red LEDs that provide the following status conditions when lit: WD (CR1 - Right) – Indicates Watchdog condition has been detected & IDLE (CR1 - Left) - Indicates the CPU has free time at the end of its execution cycle. Normally, the Idle LED should be ON most of the time (unless disabled). When the Idle LED is OFF, it indicates that the CPU has no free time, and may be overloaded.

ControlWave Express CPU/System Controller Boards ONLY are also equipped with a piggyback mounted LED Board. These LEDs provide the following status conditions when lit:

PG (Red) – ON = Power Good
WD (Red) - ON = Watchdog Condition - OFF = Normal Operation



Click here to return to Table of Contents

IDLE (Red) - the CPU has free time at the end of its execution cycle and may be overloaded
TX1, TX2, TX3 (Red) - transmit activity on COM1, COM2 & COM3 (respectively)
RX1, RX2, RX3 (Red) - receive activity on COM1, COM2 & COM3 (respectively)
Six Status LEDs (Red) - provide run time status codes (see Table C-7 and Figure C-13)

Normally, the Idle LED should be ON most of the time (unless disabled). When the Idle LED is OFF, it indicates that the CPU has no free time, and may be overloaded.

Ethernet Port Connector J1 on the CPU/System Controller Board contains two LEDs that indicate transmit (yellow) and receive (green) activity when lit.

Operation and diagnostic messages are posted to the six Status LEDs (see Figure C-13 and Table C-7) and, if present, to the optional LCD Display (see Table C-7).

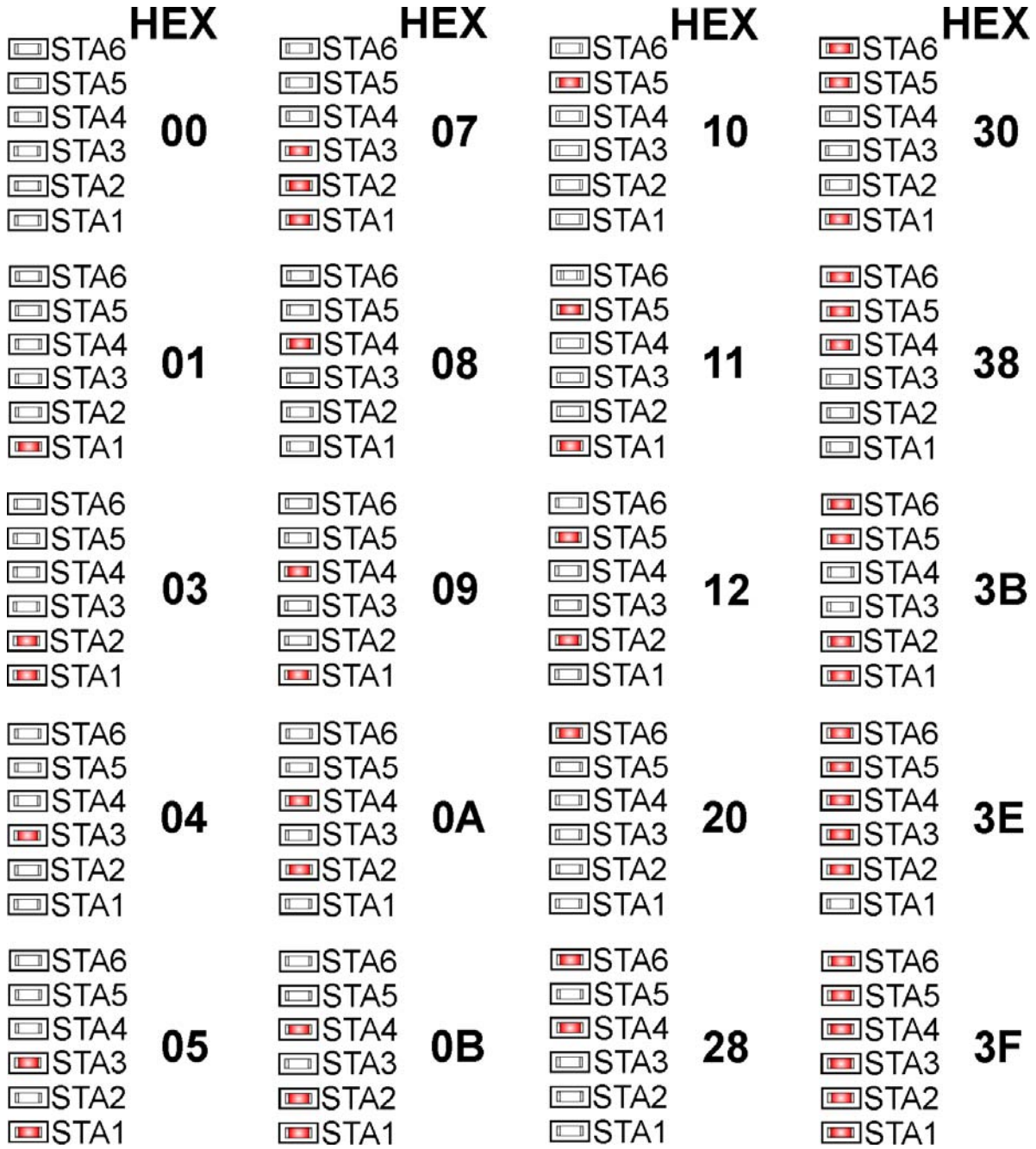


**Figure C-13 - CPU/System Controller LED Board - LED Hexadecimal Codes**



Click here to return to Table of Contents

**(See Table C-7 for Definitions)**
**Table C-7 - System Status Codes on LCD Display**
**& LEDs on CPU/System Controller Board's LED Board.**

| LED 6 STA6 | LED 5 STA5 | LED 4 STA4 | LED 3 STA3 | LED 2 STA2 | LED 1 STA1 | Status In Hex | LCD Disp. | Indication Definition |
|---|---|---|---|---|---|---|---|---|
| 0 | 0 | 0 | 0 | 0 | 0 | 00 | Blank | Application Running |
| 0 | 0 | 0 | 0 | 0 | 1 | 01 | DIAG | Unit in Diagnostic Mode |
| 0 | 0 | 0 | 0 | 1 | 1 | 03 | R DIAG | Unit Running Diagnostics |
| 0 | 0 | 0 | 1 | 0 | 0 | 04 | FWXSUM | Flash XSUM Error |
| 0 | 0 | 0 | 1 | 0 | 1 | 05 | DEVERR | Error Initializing Application Device |
| 0 | 0 | 0 | 1 | 1 | 1 | 07 | FLASH | Flash Programming Error |
| 0 | 0 | 1 | 0 | 0 | 0 | 08 | FACT | Using Factory Defaults * |
| 0 | 0 | 1 | 0 | 0 | 1 | 09 | BATT | Battery Failure Detected * |
| 0 | 0 | 1 | 0 | 1 | 0 | 0A | STRTUP | Currently Loading the Boot Project |
| 0 | 0 | 1 | 0 | 1 | 1 | 0B | INIT | System Initialization in Progress |
| 0 | 1 | 0 | 0 | 0 | 0 | 10 | RECOV | Waiting in Recovery Mode |
| 0 | 1 | 0 | 0 | 1 | 0 | 12 | RAMERR | Error Testing SRAM |
| 1 | 0 | 0 | 0 | 0 | 0 | 20 | STOP | Application Loaded |
| 1 | 0 | 1 | 0 | 0 | 0 | 28 | HALT | Stopped at a Break Point |
| 1 | 1 | 0 | 0 | 0 | 0 | 30 | NO APP | No Application Loaded |
| 1 | 1 | 1 | 0 | 0 | 0 | 38 | BREAKP | Running with Break Points |
| 1 | 1 | 1 | 0 | 1 | 1 | 3B | POWERD | Waiting for Power-down (after NMI) |
| 1 | 1 | 1 | 1 | 1 | 0 | 3E | UPDUMP | Waiting for Updump to be Performed |
| 1 | 1 | 1 | 1 | 1 | 1 | 3F | NOTRUN | Unit Crashed (Watchdog Disabled) |

*** = Flashed at startup**



Click here to return to Table of Contents

# ControlWave Express DISPLAY/KEYPAD ASSEMBLY - GUIDE

## Appendix E

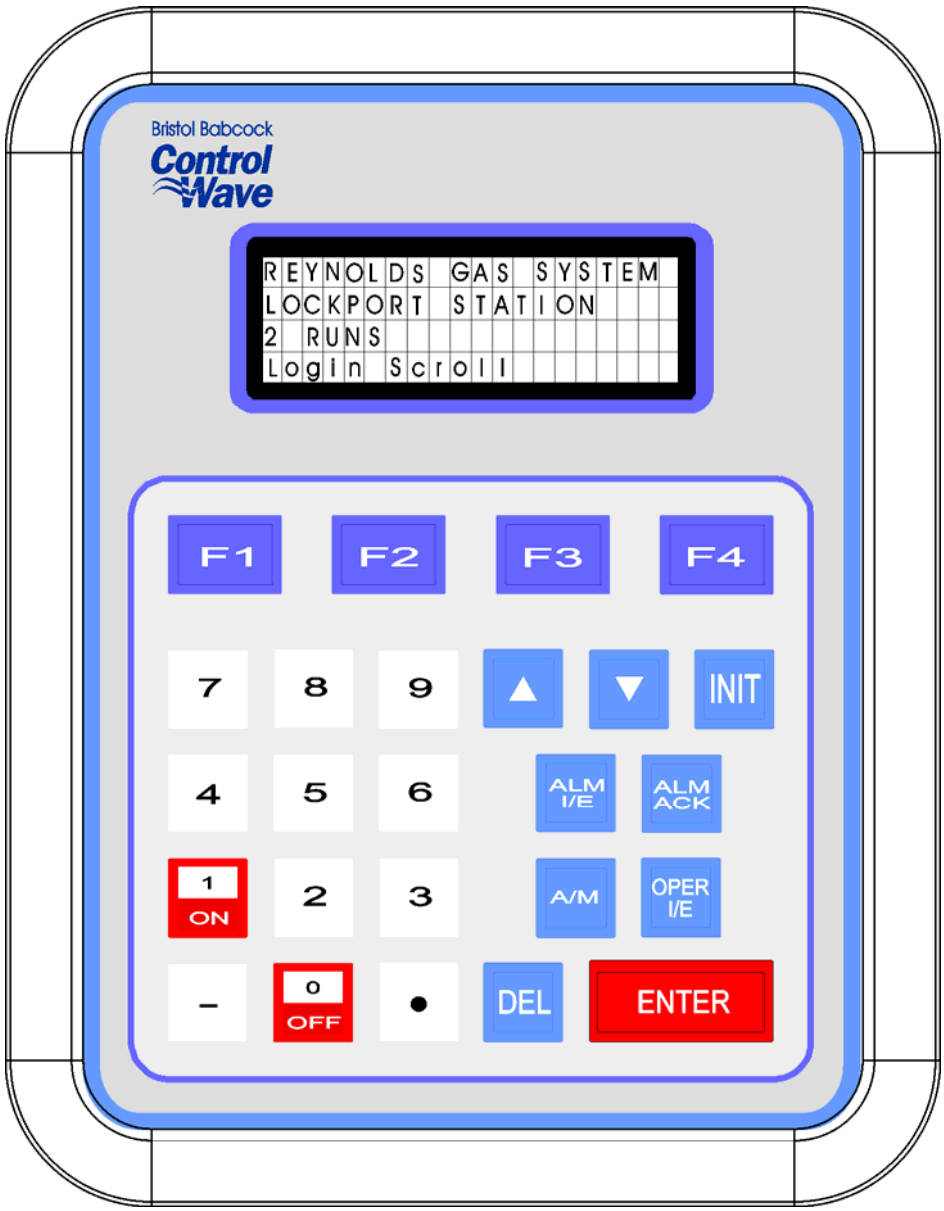

# APPENDIX E

# ControlWave Express Display/Keypad Assembly Guide

## TABLE OF CONTENTS



**NOTE:**

**The Dual-button Display/Keypad Assembly is discussed at the end of Chapter 2 (see Section 2.4.5.2).**




Click here to return to Table of Contents

# Appendix E
# DISPLAY/KEYPAD ASSEMBLY GUIDE

## E1.1 OVERVIEW

Bristol Display/Keypad assemblies provide a built-in, local, user interface for the **Control**Wave **Express** These assemblies allow an operator or engineer to view and modify variable values and associated status information, via an ACCOL3 Function Block. Variables can include inputs, process variables, calculated variables, constants, setpoints, tuning parameters and outputs used in a measurement or control application. Status bits include alarm state, alarm acknowledge, control, manual, and questionable data.

Setting up the Display/Keypad is a simple matter of configuring a Display Function Block in the ControlWave Designer project.

The Display/Keypad is comprised of a four line by twenty character liquid crystal display, with adjustable LCD Contrast, and a 25 button membrane key matrix. Each key has a microswitch for positive tactile feedback. This means that as you firmly depress the keys, you will feel it click as it engages. In the case of the **Control**Wave **Express**, the Display/Keypad is located externally to the unit.

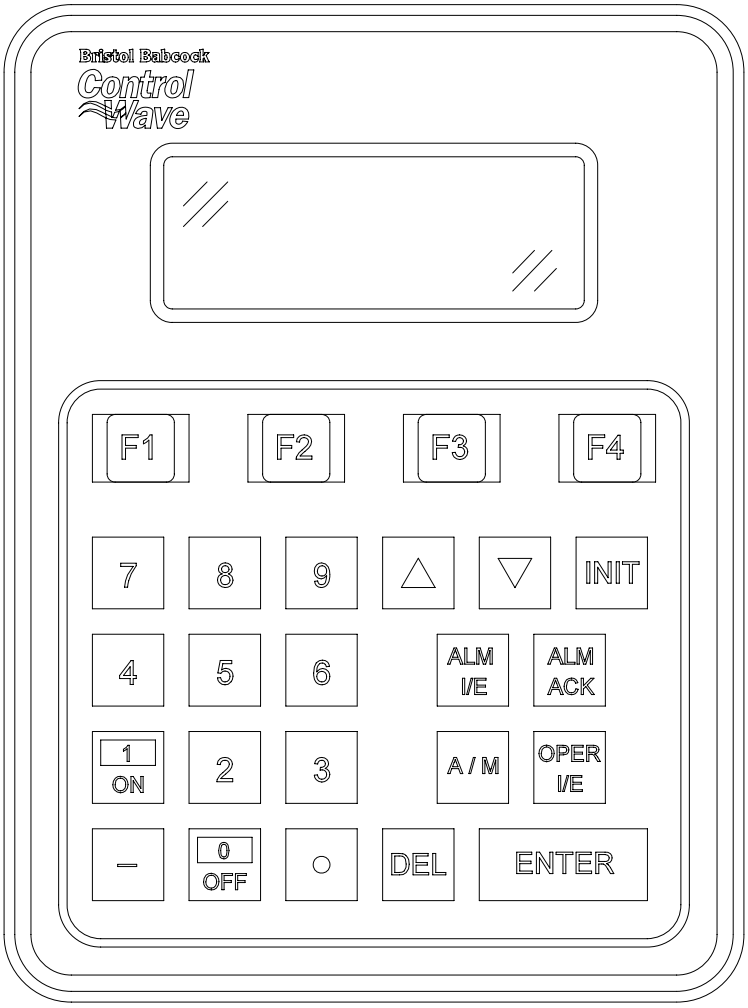


**Figure 1 - Display/Keypad Assembly – 25 Button Keypad & 4 X 20 Display**



Click here to return to Table of Contents

Display/Keypad Assemblies are supported by **Automatic Mode and Manual Mode**.

**Automatic Mode**
In Automatic Mode a set of screens (based on the application load) are displayed. The application programmer provides strings for the opening screen. From there the firmware is responsible for displaying the screens and responding to key presses. Screens are fixed and start off with an opening screen, which displays user information passed into the function block. Users can view a list to select which list is to be scrolled. Once the list to be scrolled has been selected, the user can scroll through the list by pressing the down arrow key. List elements will be displayed automatically, scrolling at a predetermined rate (determined by iiScrollTime). The user may pause on a variable by pressing the right arrow key. Pressing the right arrow key again will cause the list to start scrolling again.

The essence of Automatic Mode is that the user can supply inputs into the function that will determine which list can be displayed, but cannot change the menu or display. The user is allowed to select a list and to start/stop scrolling.

**Manual Mode**
In Manual Mode the programmer is responsible for creating each screen and displaying the next desired screen, based on key inputs. The programmer has access to all lines of the display and can provide any string that he/she desires to display. Special formats that must be adhered to that allow the programmer to display what they want on the screen are provided in the description of iaScrnSruct in the ACCOL 3 Display function block within ControlWave Designer's On-Line Help. It should be noted that currently, Manual Mode does not support reading Keypad keypresses. **Note: Manual Mode operation requires ControlWave Firmware 4.50 or newer.**

If you're setting up the keypad, follow the configuration instructions provided in Section E3 of this appendix.

If your keypad has already been set up, Section E4 will tell you how to use the keypad and interpret the display.

## E2.1 DISPLAY FUNCTION BLOCK DESCRIPTION

Keypad and display control/configuration are handled by the DISPLAY Function Block. This function block allows an operator to view/change variable data or to be allowed to scroll through lists of variable data based upon their login privileges.

In order for the keypad and display to operate, the ControlWave Designer project must include a properly configured DISPLAY Function Block. Use ControlWave Designer to configure this function block and assign the parameters according to the four steps covered in Section 3.

### E2.1.1 DISPLAY Function Block Parameters

Referring to Figure 2, various DISPLAY Function Block Parameters are available. For information on configuring the Display Function Block, please reference on-line help in ControlWave Designer.



Click here to return to Table of Contents

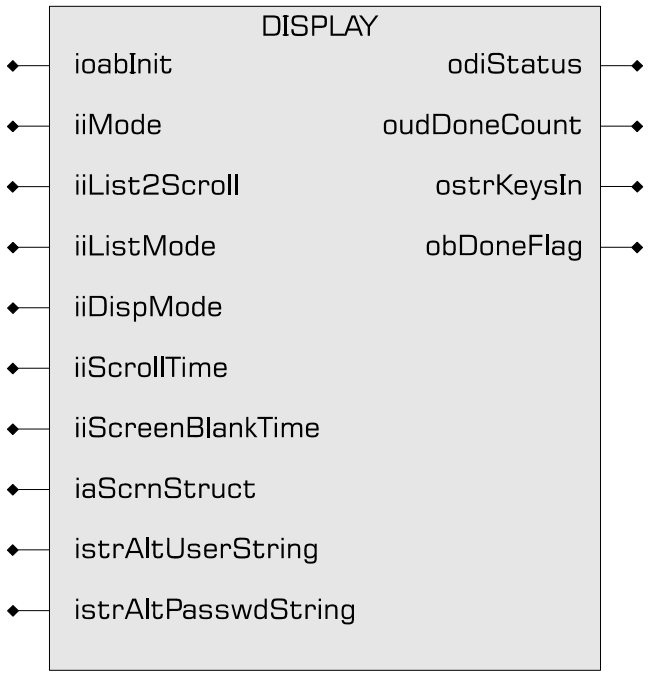


**Figure 2 - ACCOL3 DISPLAY Function Block Parameters**

## E3.1 PREPARING THE ControlWave PROJECT

In order for the keypad and display to operate, the ControlWave Designer project must include a properly configured Display Function Block. Once the Keypad is operating, a user who has signed on with a password can scroll through the names of variable lists and choose a list to read or change. Use Up Arrow and Down Arrow keys to select the Username and use the numeric keys to enter your password. The steps that follow describe how to configure this function block.

### Step 1: Creating the Identifier Display

The Identifier Display is the first display to appear when the Display Function Block is initialized and begins to execute. This display will look similar to Figure 3. Each of the first three lines of the display contains the text value of a string variable. These string variables are created utilizing iaScrnStruct parameters of the Display Function Block (See Figure 2) and your computer keyboard. Since this is the first display that the user will see, you may want the display to contain general information such as the node name of the controller or the process that the controller is monitoring.

The bottom line on the display is called the legend line. It shows which function keys are currently active and their purpose. Function keys are those keys on the Keypad that are marked ([F1] through [F4]). Function key assignments are preconfigured and cannot be changed. Using function keys is described in Section 4, Using the Keypad.

The legend line in Figure 3 shows that the user has two choices: to Log-in (using [F1]) or scroll (using [F2]).



Click here to return to Table of Contents

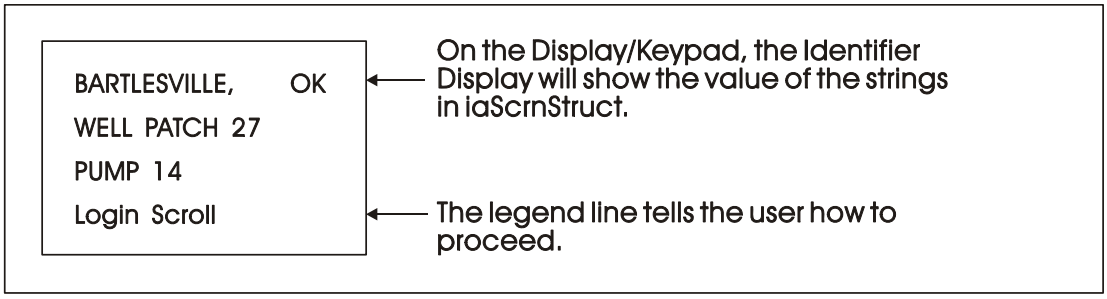


**Figure 3 - Creating the Identifier Message**

### Step 2: Defining a Scroll List

Once the Keypad is operating properly, you can automatically scroll through a list of variables created via DISPLAY Function Block Parameters iiList2Scroll and iiListMode. Scrolling can be done without entering a password. The variables in the list are displayed one at a time and in the same order in which they were entered in the variable list.

Later, we'll discuss other variable lists that can be accessed with the keypad. To distinguish this list from others, let's call this variable list the Scroll List.

Enter the number of a variable list to be scrolled. This variable list becomes the Scroll List. The Scroll List can contain different types of variables (that is, logical, analog and string). You can create a specific scroll variable list or use any list in the ControlWave Project.

Each variable in the Scroll List will be displayed for the number of seconds defined by the iiScrollTime parameter. If you don't specify a time for this parameter, the hold time will be two seconds. If you signed-on and then started scrolling you will be signed-off in 20 minutes if no keys are pressed. If you don't want to automatically stop scrolling after 20 minutes, sign-off (INIT key) before starting scrolling.

### Step 3: Assigning Passwords

A valid RTU username/password combination must be entered to go beyond the initial displays. Passwords can be any combination of numbers up to 16 digits in length, from 0000000000000000 to 9999999999999999. If none are specified, the default values are system for User-name and 666666 for Password (read/write access).

### Step 4: Status Information

Enter a variable name on the odiStatus terminal.

See On Line Help in ControlWave Designer for Status Values.

The next section describes how to use the Keypad to access variable information.

## E4.1 USING THE KEYPAD

The Identifier Display is the starting point from which you can go to other displays. It shows an identification message and the words Login and Scroll at the bottom of the screen (see Note 1). The identification message may contain the name of the controller, the plant equipment it is monitoring, or the variables you can expect to see when you use this display.



Click here to return to Table of Contents

*Note 1 : If your display shows something else, press the [F4] key until you see the words Login and Scroll on the bottom line.*

*If your screen is blank, turn the brightness screw clockwise. This screw is located to the left of the Keypad (looking at the rear of the 25-Button Display/Keypad Assembly (see Figure 17). If no letters appear, the controller has not been programmed properly to operate the keypad.*

The words Login and Scroll at the bottom of the screen are on the legend line. It tells you which function keys (that is, key [F1] through [F4]) are active and their purpose at that time.

Up to four legends can appear on the legend line. The legend on the far left corresponds to the function of the [F1] key. The assignment for the [F4] key is on the far right. Keys [F2] and [F3] are described to the left and right of center. When no legend appears, that function key is not active at that time. For example, in Figure 4 only [F1] and [F2] are active.

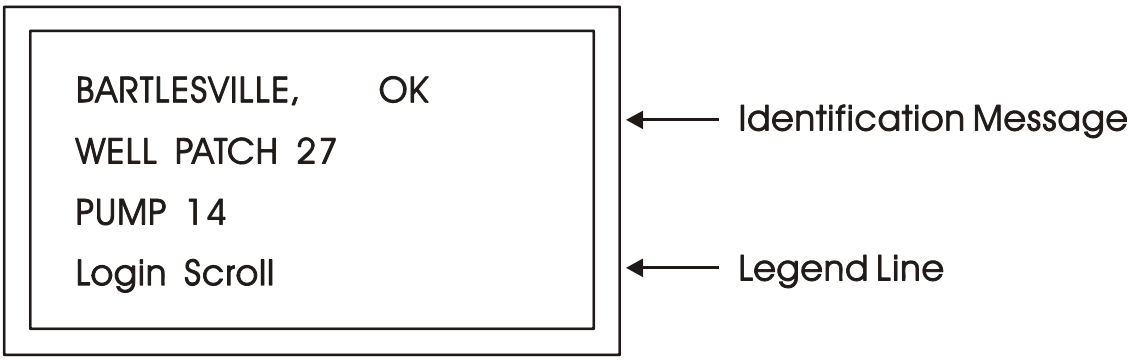


**Figure 4 - The Identifier Display**

From the Identifier Display, you have two choices. Pressing [F1] will allow you to sign-on if you have a password. By pressing [F2] you can activate automatic scrolling through a list of variables.

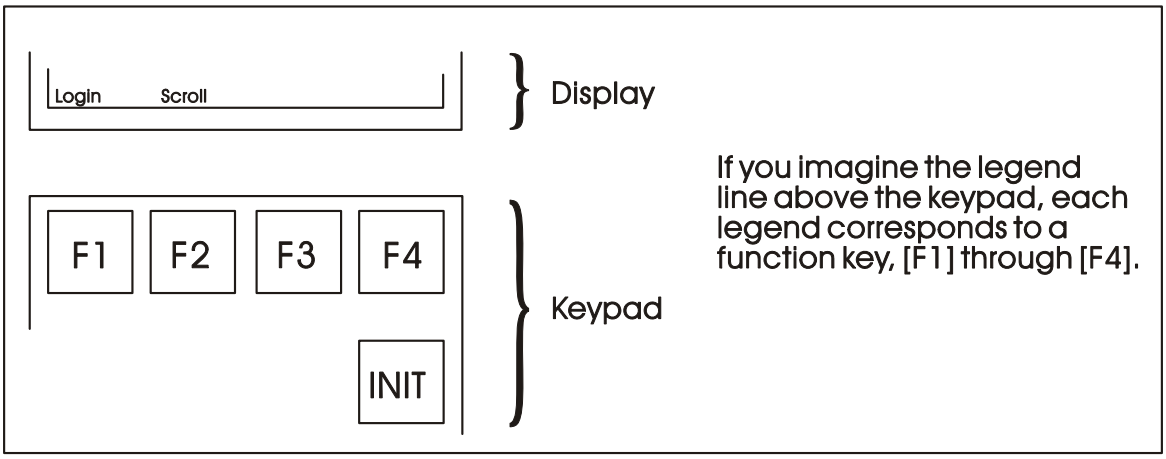


**Figure 5 - Identifier Display Legends and Corresponding Keypad Alignment for 25 Button Membrane Key Matrix Keypad System**

### E4.1.1 Scrolling

To begin automatic scrolling, press [F2] from the Identifier Display (Figure 4). Variable in-



Click here to return to Table of Contents

formation will appear on the screen and remain there for 1 to 30 seconds (default = 2). The variable name appears on the first line. The variable value appears on the second line and status information appears on the third line. An example is shown in Figure 6.

When all variables in the list have been displayed, they will be shown again in the same order. This is called Single Variable Mode.

Pressing Mlti [F2] activates Multiple Variable Mode. Multiple Variable Mode displays up to three (3) variables and their values on the screen simultaneously. Pressing Sngl [F2] terminates Multiple Variable Mode and returns you to Single Variable Mode.

```
TOTAL_MCF
 437052.3
        CE  ME  AE  NA
Hold  Mlti            Exit
```

Single Variable Mode

```
TOTAL_MCF    437052.3
VAR2                 VAL
VAR 3                VAL
Go  Sngl             Exit
```

Multiple Variable Mode

**Figure 6 - Scrolling**

Press HOLD [F1] to halt scrolling. Changing variable values will continue to be displayed.

Press GO [F1] to resume scrolling.

Press EXIT [F4] to return to the Identifier Display (Figure 4).

### E4.1.2 Signing-On

To access the List Menu, you must first sign-on with a proper password. From the Identifier Display (Figure 4), press [F1]. The screen will look like Figure 7A or 7C. If the display looks like Figure 7C:

> Someone else has already signed on. Go to the paragraph below that starts "Once you have successfully signed on,…".

If the display looks like Figure 7A:

> Select the Username (default = system) by using the Up and Down Arrow Keys. If the Username system is displayed and no other Username is available (i.e., no others have been assigned), press [ENTER].
>
> Enter a password using the 0 to 9 keys. For security, asterisks will appear as you enter the digits. If you make a mistake, press [F1] and try again or use the delete key to delete the previously pressed key action. The default password is 666666 (used when a password is not known or no password has been assigned). After typing the password, press [ENTER].



Click here to return to Table of Contents

If your password is not recognized, the asterisks will be erased after you press [ENTER]. Check your password and try again.

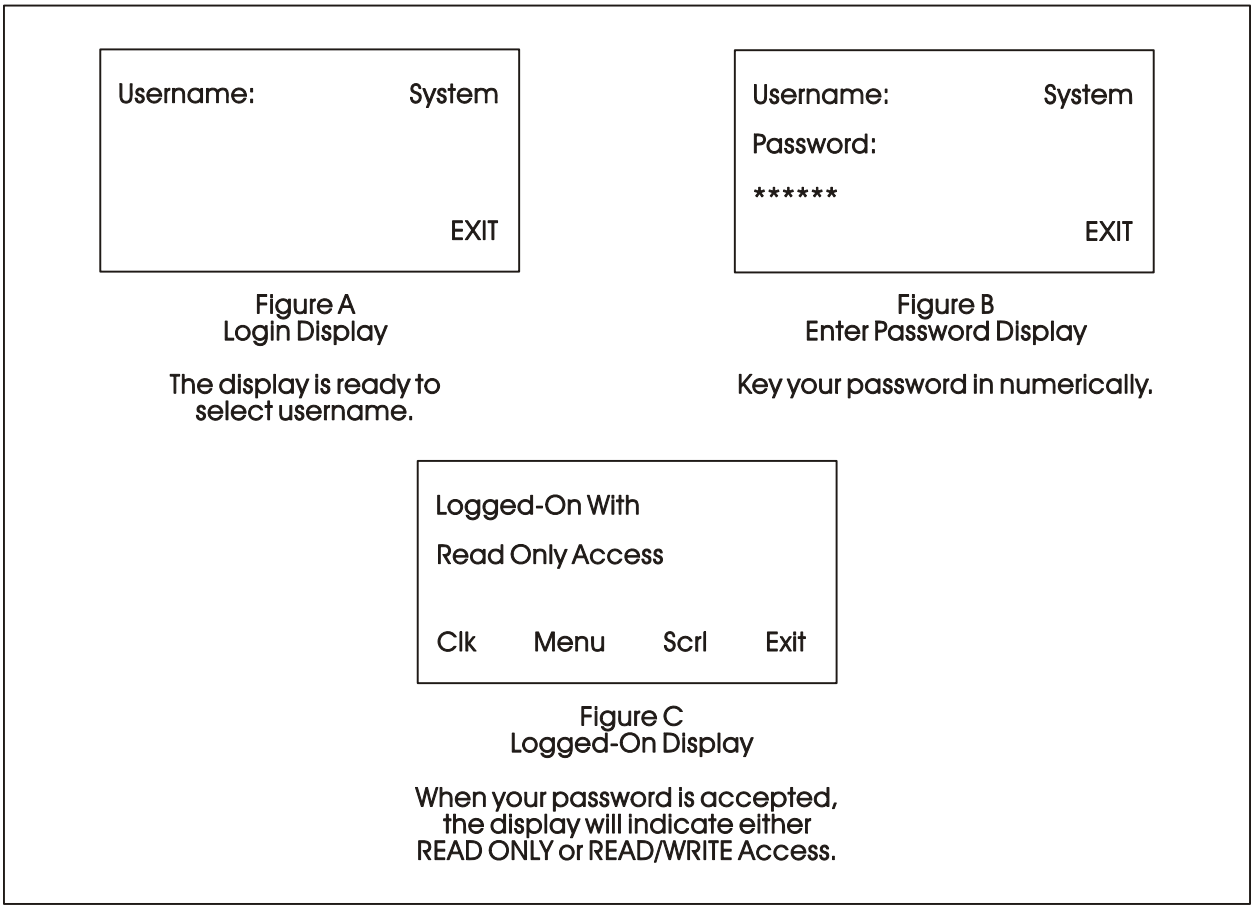


**Figure 7 - Logging On**

Once the correct password has been entered, the display will look like Figure 7C.

When the second line shows READ/WRITE, you can read and write variable parameters. When it shows READ ONLY you cannot change variable parameters. You are only permitted to read variable information. If your display shows READ ONLY and you want to change variable values, sign-off (press the [INIT] key) and log on with a username and password that provides Read/Write privileges.

Once you have successfully signed on, the legend line will show that you have four options. You can view and change the time and date of the local clock, access more variable lists, Scroll, or return to the Identifier Display. Use function keys F1 through F4 to select the next menu (F1 = Clock, F2 = Menu, F3 = Scroll list & F4 = Exit). Let's start by setting the local clock.

### E4.1.3 Using the Clock Functions

From the Logged-On Display (Figure 7C), press [F1]. The screen will show the present date and time and will look like Figure 8. Follow the instructions below to change the time or date. When you're finished, press [F4] to exit.

Today's date is shown in the first line in the format month/day/year.



Click here to return to Table of Contents

The current time is shown in the form of hours:minutes:seconds.

```
09/30/2004
11:47:42

Date  Time          Exit
```

**Figure 8 - Clock Display**

#### E4.1.3.1 Changing the Time

From the display shown in Figure 8, press Time [F2]. Colons (:) will appear on the third line. Enter the new time there and press [ENTER]. Valid times range from 00:00:00 to 23:59:59. Invalid entries will be ignored. The display will be updated to show the new time.

```
09/30/2004
11:47:42
   :   :
Date  Time          Exit
```

**Figure 9 - Time Set Display**

If you make a mistake while entering the new time, use [DEL] to backspace and delete one character at a time.

#### E4.1.3.2 Changing the Date

From the clock display (Figure 8, press [F1]. Slash marks (/) will appear on the third line. Enter the new date there and press [ENTER].

```
09/30/2004
11:47:42
   /   /
Date  Time          Exit
```

**Figure 10 - Date Set Display**

If you make a mistake while entering the new date, use [DEL] to back space and delete one character at a time. Press [F4] to return to the Logged-On Display (Figure 7C).



Click here to return to Table of Contents

### E4.1.4 Choosing a Variable List from the List Menu

The List Menu is another area where variable information can be seen. As explained earlier in this section, your first opportunity to read variable information is by choosing the SCROLL function from the Initial Display. The variable name and value are presented from the Scroll List. This function is available to all users even without signing-on.

The List Menu will show other groups of variable which you can choose to read. This information will be more detailed than the Scroll List.

To get to the List Menu, choose MENU (press [F2]) from the Logged-On Display (Figure 7C).

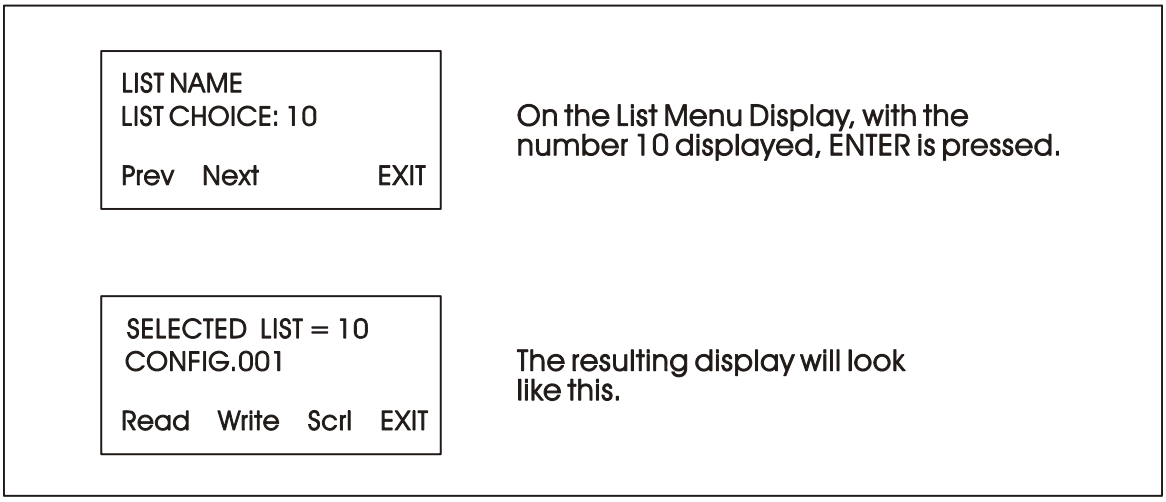


**Figure 11 - Using the List Menu Display**

The first variable list number in the menu will appear on the second line.

Press PREV (F1) and NEXT (F2) to see the other variable lists that are available in the List Menu. You can also use the Up and Down Arrow Keys to scroll through the various lists. To move directly to a list, enter the list number, then press [ENTER].

### E4.1.5 Moving Through a Variable List

After READ (F1) or WRITE (F2) has been pressed, the display will show the first variable in the list. An example is shown in Figure 12. Each time NEXT (F2) is pressed; the display will show the next variable in the list. PREV (F1) will show the previous variable. You can also use the Up and Down Arrow Keys to move through a list.

Automatic wraparound occurs in either direction. When you reach the end of the list, [F1] will display the first variable again. At the top of the list, [F2] will display the last variable.

### E4.1.6 Changing Variable Parameters

From Figure 11, you can change variable parameters by pressing F2 [Write]. Then follow the directions summarized below (see Note 2).

*Note 2: If your display does not contain the legend Write in the legend line, your password will only allow you to read variables. If you want to change variable values at this*



Click here to return to Table of Contents

*time, you must first log-off and then log-on using the correct password. See your Systems Engineer for the correct password.*

Before making any changes, first check the signal inhibit status field (See Figure 12). When the display shows ME (manual enable) you can change variable parameters. When it shows MI (manual inhibit), you cannot alter the parameters of this variable. If the field indicates MI, press the OPER I/E key to change it to ME.

To change an analog value:

Press CHNG (F3) to clear the third line. Use the number keys 0 through 9 to enter the new value. The minus sign and period are also permitted. Press [ENTER].

If you make a mistake, press CHNG (F3) and enter the number again or use the [DEL] key to erase a character.

Another way to enter new values is by using the arrow up and arrow down keys (located below the [F3] key and left of the [INIT] key). These keys will raise and lower the value by 1% of the displayed amount.

To change the status of a logical variable:

Press CHNG (F3), then use either the down and up arrow keys or the [0/OFF] and [1/ON] keys to change the state of a logical variable. If the [0/OFF] and [1/ON] keys are used, you must also press [ENTER].

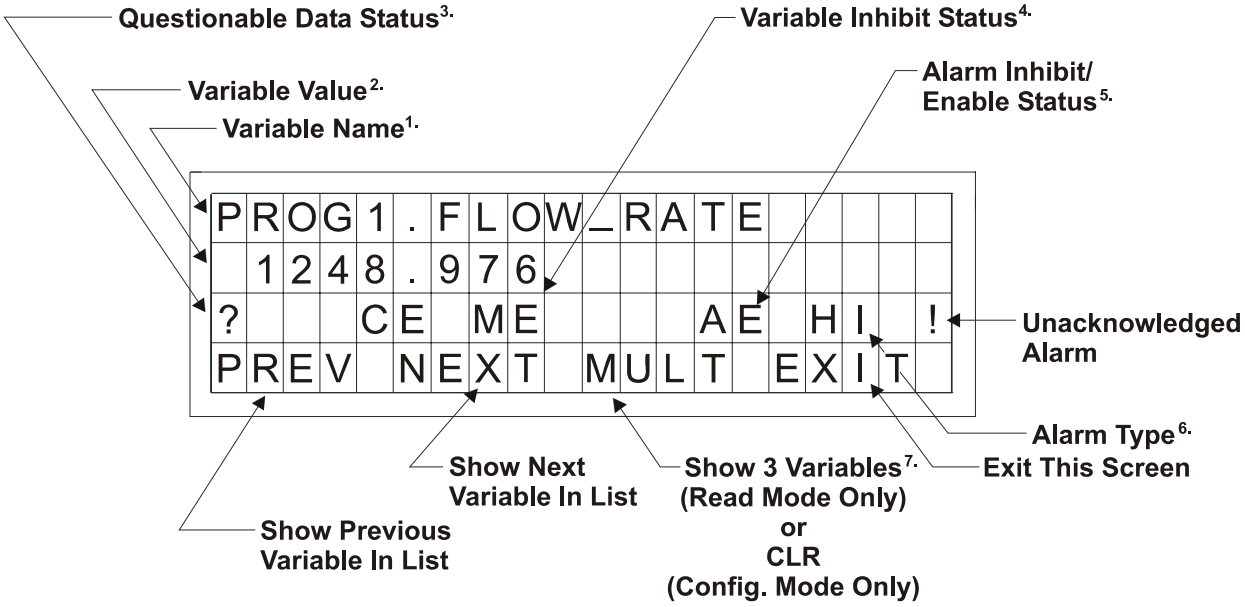


**Figure 12 - Interpreting Variable Information**

To acknowledge an alarm:

Press [ALM ACK].

To change the alarm enable/inhibit status for alarm variables:

Press [ALM I/E] key. (Note: This will only inhibit alarm reporting, and not alarm level detection.)



Click here to return to Table of Contents

## Notes for Figure 12

1. Variable Name (Example 1: @GV.FLOW_RATE) (Example 2: @GV.TOTAL_FLOW_RATE)

2. Value - analog value, string value, or logical value. Values which cannot fit in this field will be shown as asterisks.

   Analog values are displayed in floating point format, for example, 0.0125, 99.627, and 1287.66. When the value cannot be shown in floating point format, scientific format is used (1.287668E+10 or 1.25E-02 for example).

3. Questionable Data Status - for analog variables, column 1 will be clear if the status is valid. It will display a question mark if the status is questionable.

4. Variable Inhibit Status

   CE (Control Enable) means this variable can be updated by the ControlWave project.
   CI (Control Inhibit) means the variable cannot be updated by the ControlWave project.
   ME (Manual Enable) means the variable can be changed manually.
   MI (Manual Inhibit) means the variable cannot be changed manually.

5. Alarm Enable (for alarm variables only)

   AE - variable is alarm enabled (changes will be reported).
   AI - variable is alarm inhibited (changes will not be reported).

6. Alarm State

| For Analog Variables: | | For Logical Variables: | |
|---|---|---|---|
| HH | - high-high alarm | TA | - true alarm |
| HI | - high alarm | FA | - false alarm |
| LO | - low alarm | CA | - change-of-state alarm |
| LL | - low-low alarm | | |

   ! - alarm is unacknowledged

## Notes for Figure 12 (Continued)

7 Multiple Signal Display

   In Read Mode, pressing MULT (F3) will display the variable name extension, value, and units for three variables at one time. These variables include the variable displayed when NEXT (F2) was pressed and the next two variables in the list. Press SNGL [F3] to return to viewing one variable at a time (see Figure 12A).

```
NAME   WEST  SUNBURY  P
FLOW   1260.58GALS.
ALARM  OFF
PREV  NEXT  SNGL  EXIT
```

**Figure 12A - Example of MULT Display in READ Mode**

Variables are shown below as they would appear in SNGL mode.



Click here to return to Table of Contents

```
1)  String
        SITE_NAME
        WEST SUNBURY PUMP STATION
                CE ME

2)  Analog
        TOTAL_FLOW_RATE
          1260.578
                CE MI

3)  Logical
        FLOW_ALARM
        OFF
                CE MI AE NA
```

### E4.1.7 Signing-Off

Once you have logged-on, use the [INIT] key at any time to log-off. When this key has been pressed, the screen will look like Figure 13. Press Yes (F1) to sign-off. You are signed-off when the Identifier Display (Figure 3C) appears.

If you do not want to log-off, press Exit (F4) to leave the Log-Off Display.

Once you are signed-on an automatic sign-off will occur if 20 minutes has elapsed since the last key was pressed.

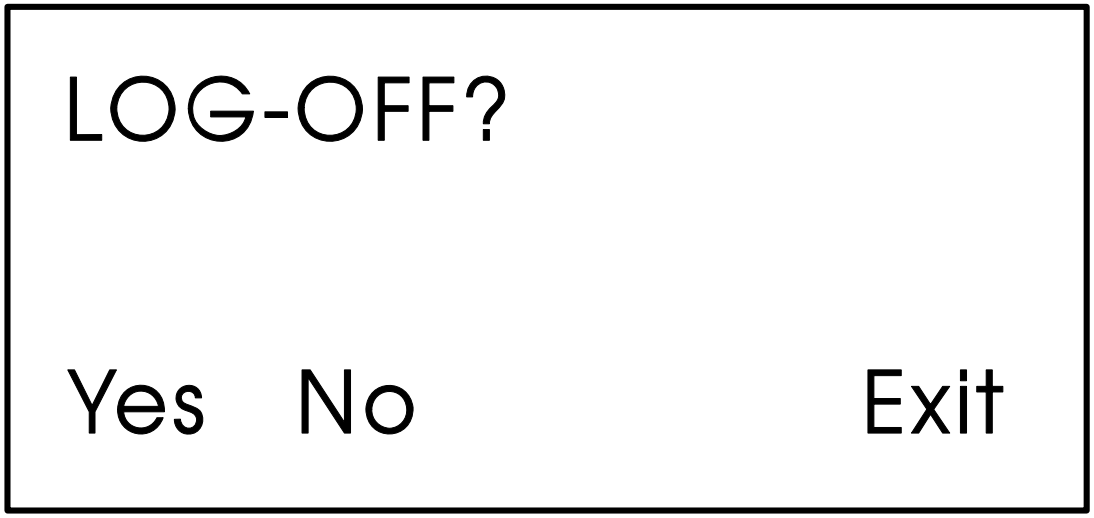


**Figure 13 - Log-Off Display**



Click here to return to Table of Contents

## E5.1 KEYPAD IDENTIFICATION & INSTALLATION INFO.

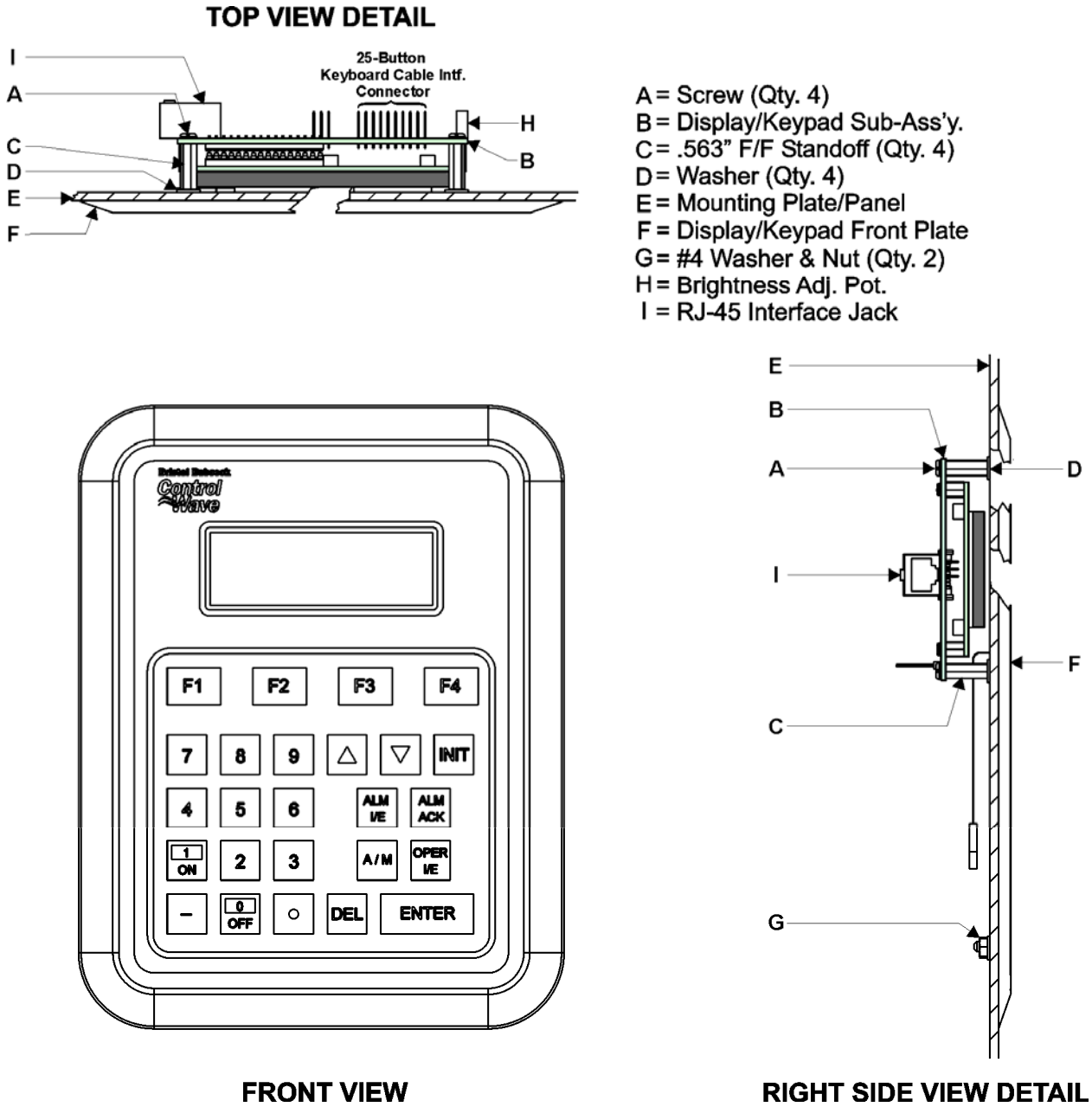


**Figure 14 - 25-Button Display/Keypad Assembly Installation Drawing**



Click here to return to Table of Contents

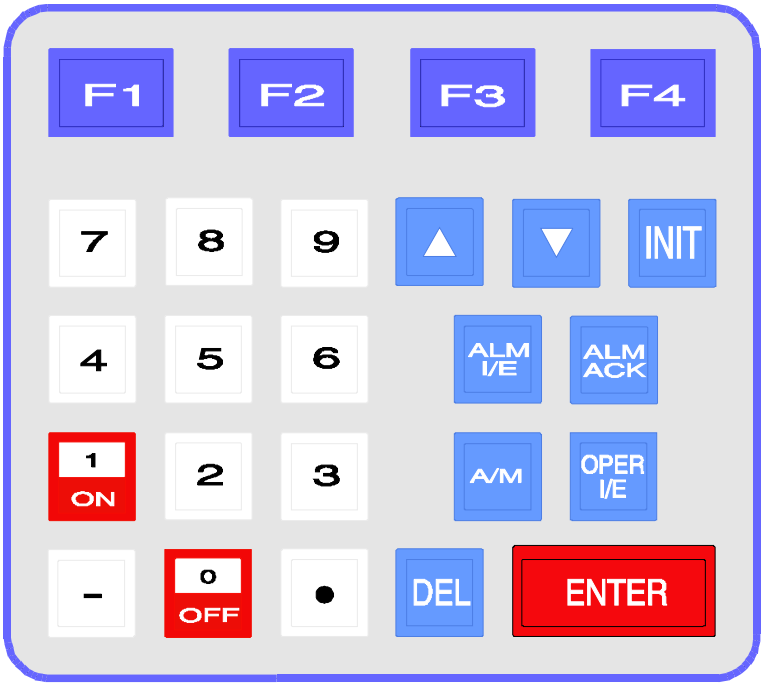


**Figure 15 - 25 Button Keypad**

**Table 1 - 25 Button Keypad Keys**

| KEY | FUNCTION |
|---|---|
| F1, F2, F3, F4 | Function keys will take on a variety of different functions depending on the situation. The function of these keys is listed on the legend line (bottom line) of the display. |
| INIT | The INIT key is used to terminate the keyboard session and sign-off. |
| 0 to 9, -, . | These keys are used to change the value of analog variables in the CONFIGURATION mode. The 0/OFF and 1/ON keys are used to change the state of logical variables. |
| Δ | Each press of this key will raise an analog variable value by 1% of the displayed value or turn a logical variable ON. |
| ∇ | Each press of this key will lower an analog variable value by 1% of the displayed value or turn a logical variable OFF. |
| ALM I/E | Use this key to enable or inhibit alarm variables. |
| ALM ACK | Use this key to acknowledge alarms. |
| A/M | Toggle between AUTO (CE) and MANUAL (CI) with this key. |
| OPER I/E | Toggle between manual inhibit (MI) and enable (ME) with this key. |
| DEL | Use this backspace key to erase digits that have been entered on the keypad. |
| ENTER | This key is used to enter new data from the display into the controller, e.g., password or variable values. |



Click here to return to Table of Contents

## Sources for Obtaining
## Material Safety Data Sheets

This device includes certain components or materials which may be hazardous if misused. For details on these hazards, please contact the manufacturer for the *most recent* material safety data sheet.

| Manufacturer | General Description | Part Number |
|---|---|---|
| DURACELL<br><br>http://www.duracell.com | 3V Lithium Manganese Dioxide Battery | DL 2450 |

Bristol Battery Part Number = 395620-01-5



Click here to return to Table of Contents

Click here to return to Table of Contents

# Supplement Guide - S1400CW

*Issue: 04/05*

ControlWave™

## SITE CONSIDERATIONS For EQUIPMENT INSTALLATION, GROUNDING & WIRING

A Guide for the Protection of
Site Equipment & Personnel
In the Installation of
ControlWave
Process Automation Controllers

**Bristol Babcock**

Click here to return to Table of Contents

# NOTICE

*Copyright Notice*

The information in this document is subject to change without notice. Every effort has been made to supply complete and accurate information. However, Bristol Babcock assumes no responsibility for any errors that may appear in this document.

## Request for Additional Instructions

Additional copies of instruction manuals may be ordered from the address below per attention of the Sales Order Processing Department. List the instruction book numbers or give complete model number, serial or software version number. Furnish a return address that includes the name of the person who will receive the material. Billing for extra copies will be according to current pricing schedules.



Click here to return to Table of Contents

# Supplement Guide S1400CW
# SITE CONSIDERATIONS FOR EQUIPMENT INSTALLATION, GROUNDING & WIRING

## TABLE OF CONTENTS

*SECTION* *TITLE* *PAGE #*






**Click here to return to Table of Contents**

# Supplement Guide S1400CW
# SITE CONSIDERATIONS FOR EQUIPMENT INSTALLATION, GROUNDING & WIRING

## TABLE OF CONTENTS

*SECTION* *TITLE* *PAGE #*

### Section 5 - WIRING TECHNIQUES (Continued)



### REFERENCE DOCUMENTS


1. IEEE Recommended Practice for Grounding of Industrial and Commercial Power Systems - ANSI/IEEE Std 142-1982
2. IEEE Guide for the Installation of Electrical Equipment to Minimize Electrical Noise inputs to Controllers from External Sources - IEE Std 518-1982
3. Lightning Strike Protect; Roy B. Carpenter, Jr. & Mark N. Drabkin, Ph.D.; Lightning Eliminators & Consultant, Inc., 6687 Arapahoe Road, Boulder Colorado
4. Lightning Protection Manual for Rural Electric Systems, NRECA Research Project 82-5, Washington DC, 1983
5. Grounding for the Control of EMI; Hugh W. Denny; Don White Consultants, Inc., 1983, 1st Edition
6. Fundamentals of EGM - Electrical Installations; Michael D. Price; NorAm Gas Transmission, 525 Milam Street, Shreveport, Louisiana 71151
7. TeleFlow Modem Grounding Kit 621495-01-8 Installation Instructions - PIP-3530MGKI; Bristol Babcock, Watertown, CT 06795





**Click here to return to Table of Contents**

# *Section 1 - Overview*

## 1.1 INTRODUCTION

This document provides information pertaining to the installation of **Control**Wave systems; more specifically, information covering reasons, theory and techniques for protecting your personnel and equipment from electrical damage. Your instrument system affects the quality of service provided by your company and many aspects of its operational safety. Loss of instruments means lost production and profits as well as increased expenses.

*Information contained in this document is for educational purposes. Bristol Babcock makes no warranties or guarantees on the effectiveness or the safety of techniques described herein. Where the safety of installations and personnel is concerned, refer to the National Electrical Code Rules and rules of local regulatory agencies.*

## 1.2 MAJOR TOPICS

Topics are covered in seven sections designed to pinpoint major areas of concern for the protection of site equipment and personnel. The following overview is provided for each of the major sections.

- **Section 2 - Protection**
  This section provides the reasons for protecting instrument systems. An overview of the definition of quality and what we are trying to accomplish in the protection of site installations and how to satisfy the defined requirements is presented. Additionally, this section provides considerations for the protection of personnel and equipment.

- **Section 3 - Grounding & Isolation**
  Information pertaining to what constitutes a good earth ground, how to test and establish such grounds, as well as when and how to connect equipment to earth grounds is provided

- **Section 4 - Lightning Arresters & Surge Protectors**
  Some interesting information dealing with Lightning strikes and strokes is presented in technical and statistical form along with a discussion of how to determine the likelihood of a lightning strike. Protecting equipment and personnel during the installation of radios and antenna is discussed in a review of the dangers to equipment and personnel when working with antennas. Reasons for the use of lightning arresters and surge protectors are presented along with overviews of how each device protects site equipment.

- **Section 5 - Wiring Techniques**
  Installation of Power and "Measurement & Control" wiring is discussed. Information on obscure problems, circulating ground and power loops, bad relays, etc. is presented. Good wire preparation and connection techniques along with problems to avoid are discussed. This sections list the ten rules of instrument wiring.



**Click here to return to Table of Contents**

# *Section 2 - Protection*

## 2.1 PROTECTING INSTRUMENT SYSTEMS

Electrical instrumentation is susceptible to damage from a variety of natural and man made phenomena. In addition to wind, rain and fire, the most common types of system and equipment damaging phenomena are lightning, power faults, communication surges & noise and other electrical interference's caused by devices such as radios, welders, switching gear, automobiles, etc. Additionally there are problems induced by geophysical electrical potential & noise plus things that are often beyond our wildest imagination.

### 2.1.1 Quality Is Conformance To Requirements

A quality instrumentation system is one that works reliably, safely and as purported by the equipment manufacturer (and in some cases by the system integrator) as a result of good equipment design and well defined and followed installation practices. If we except the general definition of quality to be, "quality is conformance to requirements," we must also except the premise that a condition of "quality" can't exist where requirements for such an end have not been evolved. In other words, you can't have quality unless you have requirements that have been followed. By understanding the requirements for a safe, sound and reliable instrumentation system, and by following good installation practices (as associated with the personnel and equipment in question), the operational integrity of the equipment and system will be enhanced.

Understanding what is required to properly install BBI equipment in various environments, safely, and in accordance with good grounding, isolating and equipment protection practices goes a long way toward maintaining a system which is healthy to the owner and customer alike. Properly installed equipment is easier to maintain and operate, and is more efficient and as such more profitable to our customers. Following good installation practices will minimize injury, equipment failure and the customer frustrations that accompany failing and poorly operating equipment (of even the finest design). Additionally, personnel involved in the installation of a piece of equipment add to or subtract from the reliability of a system by a degree which is commensurate with their technical prowess, i.e., their understanding of the equipment, site conditions and the requirements for a quality installation.

## 2.2 PROTECTING EQUIPMENT & PERSONNEL

**Control**Wave installations must be performed in accordance with National Electrical Code Rules, electrical rules set by local regulatory agencies, and depending on the customer environment (gas, water, etc), other national, state and local agencies such as the American Water Works Association (AWWA). Additionally, installation at various customer sites may be performed in conjunction with a "safety manager" or utility personnel with HAZMAT (hazardous material) training on materials present (or potentially present) as required by OSHA, the customer, etc.



**Click here to return to Table of Contents**

### 2.2.1 Considerations For The Protection of Personnel

Always evaluate the site environment as if your life depended on it. Make sure that you understand the physical nature of the location where you will be working. Table 2-1 provides a general guideline for evaluating an installation site.

**Table 2-1 - Installation Site Safety Evaluation Guide**

| # | Guide |
|---|---|
| 1 | Indoor or outdoor – Dress Appropriately |
| 2 | If outdoor, what kind of environment, terrain, etc. Watch out for local varmint (bees, spiders, snakes, etc.) |
| 3 | If indoor or outdoor – determine if there are any pieces of dangerous equipment or any processes which might be a risk to your safety |
| 4 | If in a tunnel, bunker, etc. watch out for a build up of toxic or flammable gases. Make sure the air is good. Watch out for local varmint (bees, spiders, snakes, etc.) |
| 5 | Hazardous or Non-Hazardous Environment – Wear appropriate safety equipment and perform all necessary safety measures. |
| 6 | Before installing any equipment or power or ground wiring, make sure that there are no lethal (life threatening) voltages between the site where the instrument will be installed and other equipment, pipes, cabinets, etc. or to earth itself. |
| 7 | Never assume that adjacent or peripheral equipment has been properly installed and grounded. Determine if this equipment and the **Control**Wave unit in question can be touched simultaneously without hazard to personnel and/or equipment? |
| 8 | Before embarking to remote locations where there are few or no human inhabitants ask a few simple questions like, should I bring water, food, hygienic materials, first aid kit, etc? Be Prepared! |
| 9 | Observe the work habits of those around you – for your own safety! |

Some of the items that a service person should consider before ever going on site can be ascertained by simply asking questions of the appropriate individual. Obviously other safety considerations can only be established at the installation site.

### 2.2.2 Considerations For The Protection of Equipment

Always evaluate the site installation/service environment and equipment. Understand the various physical interfaces you will be dealing with such as equipment mounting and supporting, **Control**Wave analog and digital circuits, power circuits, communication circuits and various electrical grounds. Table 2-2 provides a general guideline for evaluating the equipment protection requirements of an installation site.

**Table 2-2 - Equipment Protection Site Safety Evaluation Guide**

| # | Guide | Reference Section |
|---|---|---|
| 1 | Environment - Class I, Division 2 - Nonincendive<br>Environment - Class I, Division 1 - Intrinsically Safe<br>Other - Safe or unrated area | See Appendix A of CI Manual<br>See Appendix B of CI Manual |
| 2 | Earth Ground - Established by mechanical/electrical or (both) or not at all. | See Section 3 |
| 3 | Is the area prone to lightning strikes? | See Section 4 |
| 4 | Are there surge suppressors installed or to be installed? | See Section 4 |
| 5 | Are there overhead or underground power or communication cables in the immediate area? | See Section 2.3 |



**Click here to return to Table of Contents**

**Table 2-2 - Equipment Protection Site Safety Evaluation Guide (Continued)**

| # | Guide | Reference Section |
|---|---|---|
| 6 | Is there an antenna in the immediate area? | See Section 4.1.2 |
| 7 | How close is other equipment? Can someone safely touch this equipment and a **Control**Wave simultaneously? | See Section 2.3 |
| 8 | Determine equipment ground requirements. How will the **Control**Wave and its related wiring be grounded? Consider Earth Ground, Circuit Ground, Conduit Ground, Site Grounds! | See Section 3 |
| 9 | Are there any obviously faulty or questionable power or ground circuits? | See Section 2.3 |

## 2.3 OTHER SITE SAFETY CONSIDERATIONS

Overhead or underground power or communication cables must be identified prior to installing a new unit. Accidentally cutting, shorting or simply just contacting power, ground, communication or process control I/O wiring can have potentially devastating effects on site equipment, the process system and or personnel.

Don't assume that it is safe to touch adjacent equipment, machinery, pipes, cabinets or even the earth itself. Adjacent equipment may not have been properly wired or grounded, may be defective or may have one or more loose system grounds. Measure between the case of a questionable piece of equipment and its earth ground for voltage. If a voltage is present, something is wrong.

AC powered equipment with a conductive case should have the case grounded. If you don't see a chassis ground wire, don't assume that it is safe to touch this equipment. If you notice that equipment has been grounded to pipes, conduit, structural steel, etc., you should be leery. ***Note: AWWA's policy on grounding of electric circuits on water pipes states, "The American Water Works Association (AWWA) opposes the grounding of electrical systems to pipe systems conveying water to the customer's premises…."***

Be sure that the voltage between any two points in the instrument system is less than the stand-off voltage. Exceeding the stand-off voltage will cause damage to the instrument and will cause the instrument to fail.



**Click here to return to Table of Contents**

# *Section 3 - Grounding & Isolation*

## 3.1 POWER & GROUND SYSTEMS

**Control**Waves utilize DC power systems. AC power supplies are not provided with **Control**Wave units. **Control**Wave, **Control**Wave **MICRO**, **Control**Wave **EFM/GFC/EFC**, **Control**Wave**RED**, **Control**Wave**REDIO** and **Control**Wave I/O Expansion Racks are provided with a Ground Lug that accommodates up to a #4 AWG size wire for establishing a connection to Earth Ground. In the case of the **Control**Wave**LP**, a Chassis Ground termination terminal (TB2, Pin-3), that accepts up to a #14 AWG size wire, is provided on the unit's Power Supply/Sequencer Board.

## 3.2 IMPORTANCE OF GOOD GROUNDS

**Control**Wave units (see above) are utilized in instrument and control systems that must operate continually and within their stated accuracy over long periods of time with minimum attention. Failures resulting from an improperly grounded system can become costly in terms of lost time and disrupted processes. A properly grounded system will help prevent electrical shock hazards resulting from contact with live metal surfaces, provide additional protection of equipment from lightning strikes and power surges, minimize the effects of electrical noise and power transients, and reduce signal errors caused by ground wiring loops. Conversely, an improperly grounded system may exhibit a host of problems that appear to have no relation-ship to grounding. It is essential that the reader (service technician) have a good under-standing of this subject to prevent needless troubleshooting procedures.

**WARNING**

*This device must be installed in accordance with the National Electrical Code (NEC) ANSI/NEPA-70. Installation in hazardous locations must also comply with Article 500 of the code. For information on the usage of **Control**Wave units in Class I, Division 2, Groups C & D Hazardous and Nonhazardous locations, see appendix A of the applicable Customer Instruction (CI) manual. For information on the usage of **Control**Wave units in Class I, Division 1, Groups C & D Hazardous locations, see appendix B of the applicable Customer Instruction (CI) manual.*

## 3.3 EARTH GROUND CONNECTIONS

To properly ground a **Control**Wave unit, the units Chassis Ground (post or terminal) must ultimately be connected to a known good Earth Ground. Observe recommendations provided in topics Establishing a Good Earth Ground and Ground Wire Considerations.

### 3.3.1 Establishing a Good Earth Ground

A common misconception of a ground is that it consists of nothing more than a metal pipe driven into the soil. While such a ground may function for some applications, it will often



Click here to return to Table of Contents

not be suitable for a complex system of sophisticated electronic equipment. Conditions such as soil type, composition and moisture will all have a bearing on ground reliability.

A basic ground consists of a 3/4-inch diameter rod with a minimum 8-foot length driven into conductive earth to a depth of about 7-feet as shown in Figure 3-1. Number 3 or 4 AWG solid copper wire should be used for the ground wire. The end of the wire should be clean, free of any coating and fastened to the rod with a clamp. This ground connection should be covered or coated to protect it from the weather and the environment.

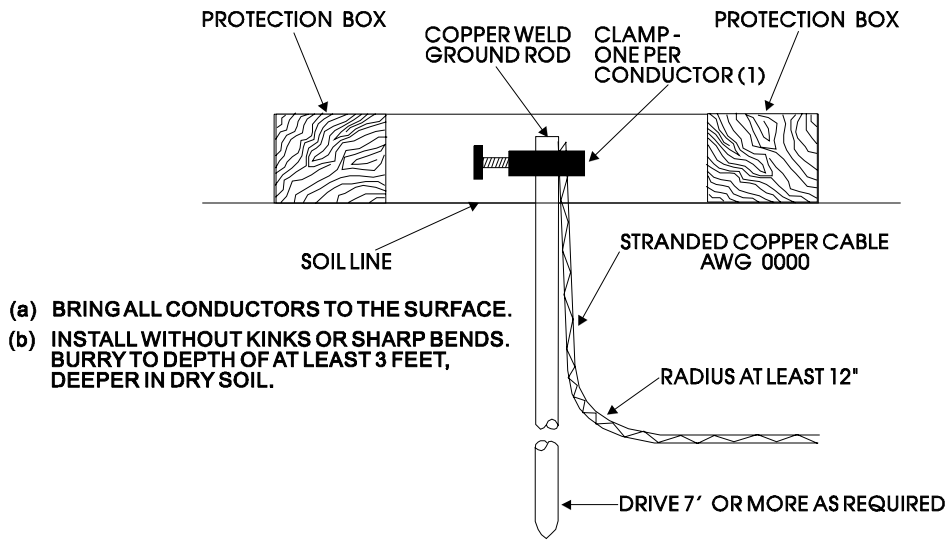


**Figure 3-1 - Basic Ground Rod Installation**

### 3.3.1.1 Soil Conditions

Before installing a ground rod, the soil type and moisture content should be analyzed. Ideally, the soil should be moist and moderately packed throughout to the depth of the ground rod. However, some soils will exhibit less than ideal conditions and will require extra attention.

Soil types can be placed into two general categories with respect to establishing and maintaining a good earth ground, i.e., 'Good Soil' and 'Poor Soil.'

To be a good conductor, soil must contain some moisture and free ions (from salts in the soil). In very rainy areas, the salts may be washed out of the soil. In very sandy or arid area the soil may be to dry and/or salt free to a good conductor. If salt is lacking add rock salt (NaCl); if the soil is dry add calcium chloride ($CaCl_2$).

### 3.3.1.2 Soil Types:

| Good | Poor |
|---|---|
| Damp Loam | Back Fill |
| Salty Soil or Sand | Dry Soil |
| Farm Land | Sand Washed by a Lot of Rain |
| | Dry Sand (Desert) |
| | Rocky Soil |

Ground Beds must always be tested for conductivity prior to being placed into service. A brief description of ground bed testing in 'Good Soil' and 'Poor Soil' is provided herein. Details on this test are described in the National Electrical Code Handbook. Once a reliable



Click here to return to Table of Contents

ground has been established, it should be tested on a regular basis to preserve system integrity.

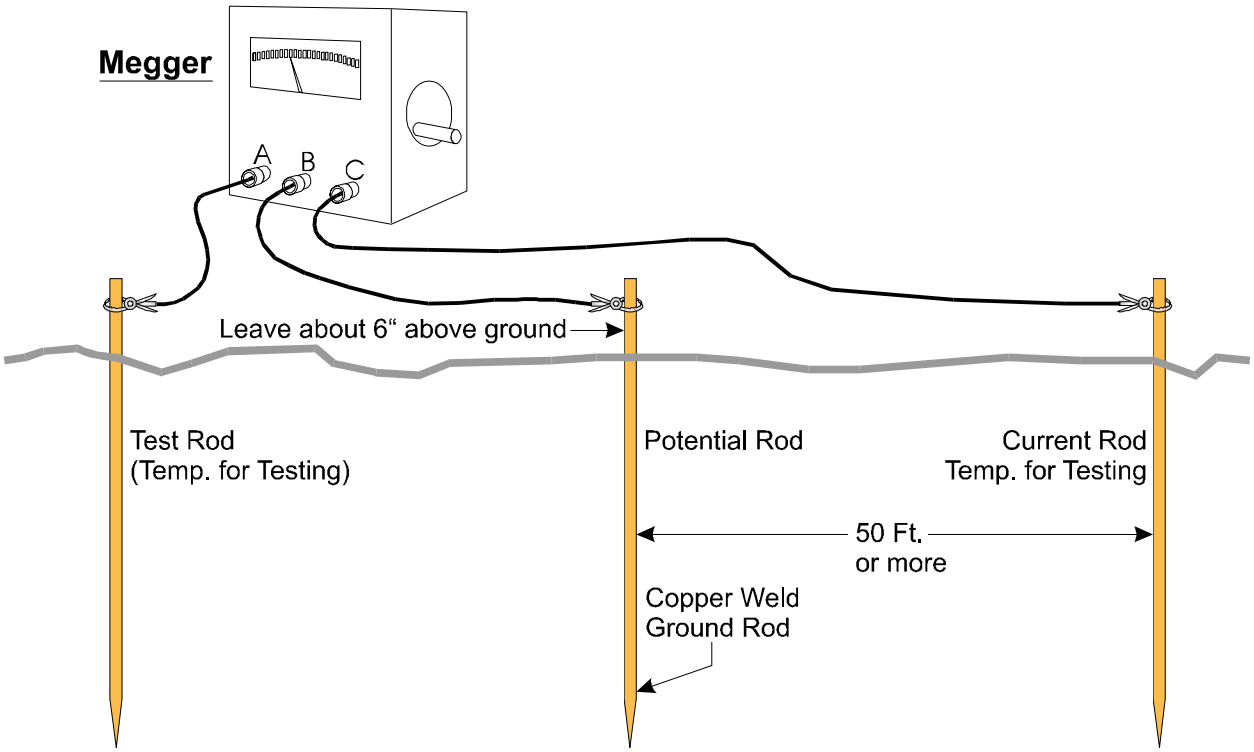


**Figure 3-2 - Basic Ground Bed Soil Test Setup**

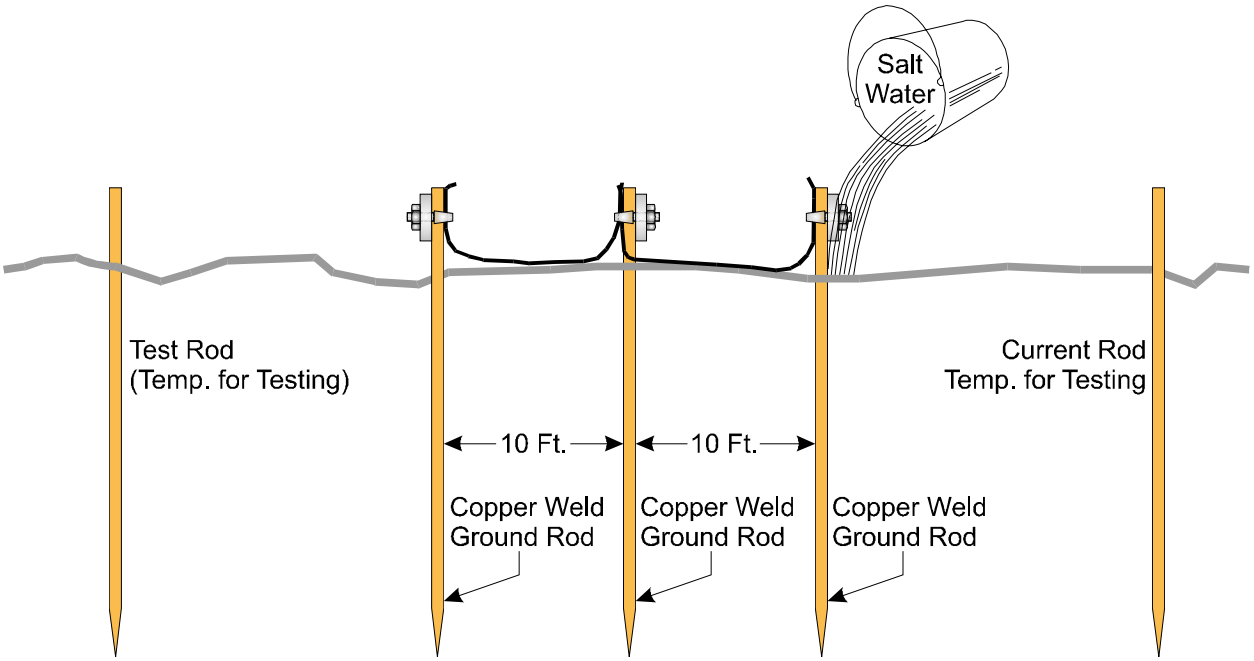


**Figure 3-3 - Basic Ground Bed Soil Test Setup with Additional Ground Rods**

Figure 3-2 shows the test setup for ‘Good Soil’ conditions. If the Megger* reads less than 5 ohms, the ground is good. The lower the resistance, the better the earth ground. If the



**Click here to return to Table of Contents**

Megger reads more than 10 ohms, the ground is considered 'poor.' If a poor ground is indicated, one or more additional ground rods connected 10 feet from the main ground rod should be driven into the soil and interconnected via bare AWG 0000 copper wire and 1" x ¼-20 cable clamps as illustrated in Figure 3-3). *** Note: Megger is a Trademark of the Biddle Instrument Co. (now owned by AVO International). Other devices that may be used to test ground resistance are "Viboground"; Associated Research, Inc., "Groundmeter"; Industrial Instruments, Inc., and "Ground-ohmer"; Herman H. Sticht Co., Inc.**

If the Megger still reads more than 10 ohms, mix a generous amount of cooking salt, ice cream salt or rock salt with water and then pour about 2.5 to 5 gallons of this solution around each rod (including the test rods). Wait 15 minutes and re-test the soil. If the test fails, the soil is poor and a 'Poor Soil Ground Bed' will have to be constructed.

Figure 3-4 shows a typical Poor Soil Ground Bed Electrode. A Poor Soil Ground Bed will typically consists of four or more 10-foot long electrodes stacked vertically and separated by earth. Figure 3-5 shows the construction of a Poor Soil Ground Bed. For some poor soil sites, the ground bed will be constructed of many layers of 'Capacitive Couplings' as illustrated. In extremely poor soil sites one or more 3' by 3' copper plates (12 gauge or 1/16" thick) will have to be buried in place of the electrodes.

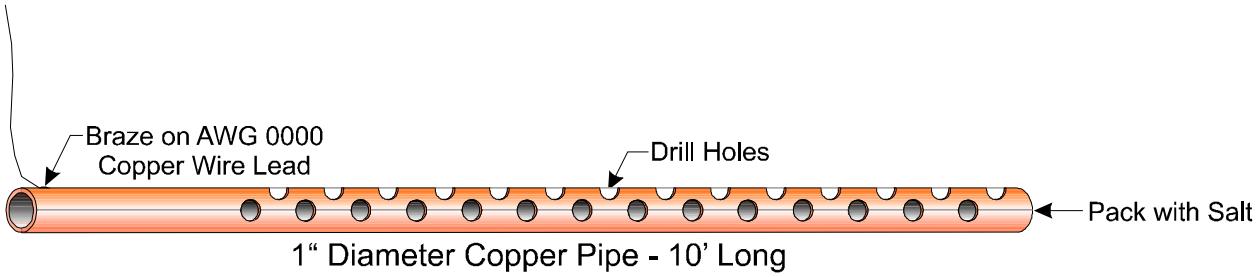


**Figure 3-4 - Ground Electrode Construction for Poor Soil Conditions**

### 3.3.1.3 Dry, Sandy or Rocky Soil

Very dry soil will not provide enough free ions for good conductance and a single ground rod will not be effective. A buried counterpoise or copper screen is recommended for these situations. It will be necessary to keep the soil moist through regular applications of water.

Sandy soil, either wet or dry, may have had its soluble salts leached out by rain water, thereby reducing conductivity of the ground. High currents from lightning strikes could also melt sand and cause glass to form around the ground rod, rendering it ineffective. A buried counterpoise or copper screen is preferred for these installations along with regular applications of salt water.

Rocky soil can pose many grounding problems. A counterpoise or copper plate will probably be required. Constructing a trench at the grounding site and mixing the fill with a hygroscopic salt such as calcium chloride may help for a time. Soaking the trench with water on a regular basis will maintain conductivity.

Units with phone modems require the use of a lightning arrester. The lightning arrester must be situated at the point where the communication line enters the building.



**Click here to return to Table of Contents**

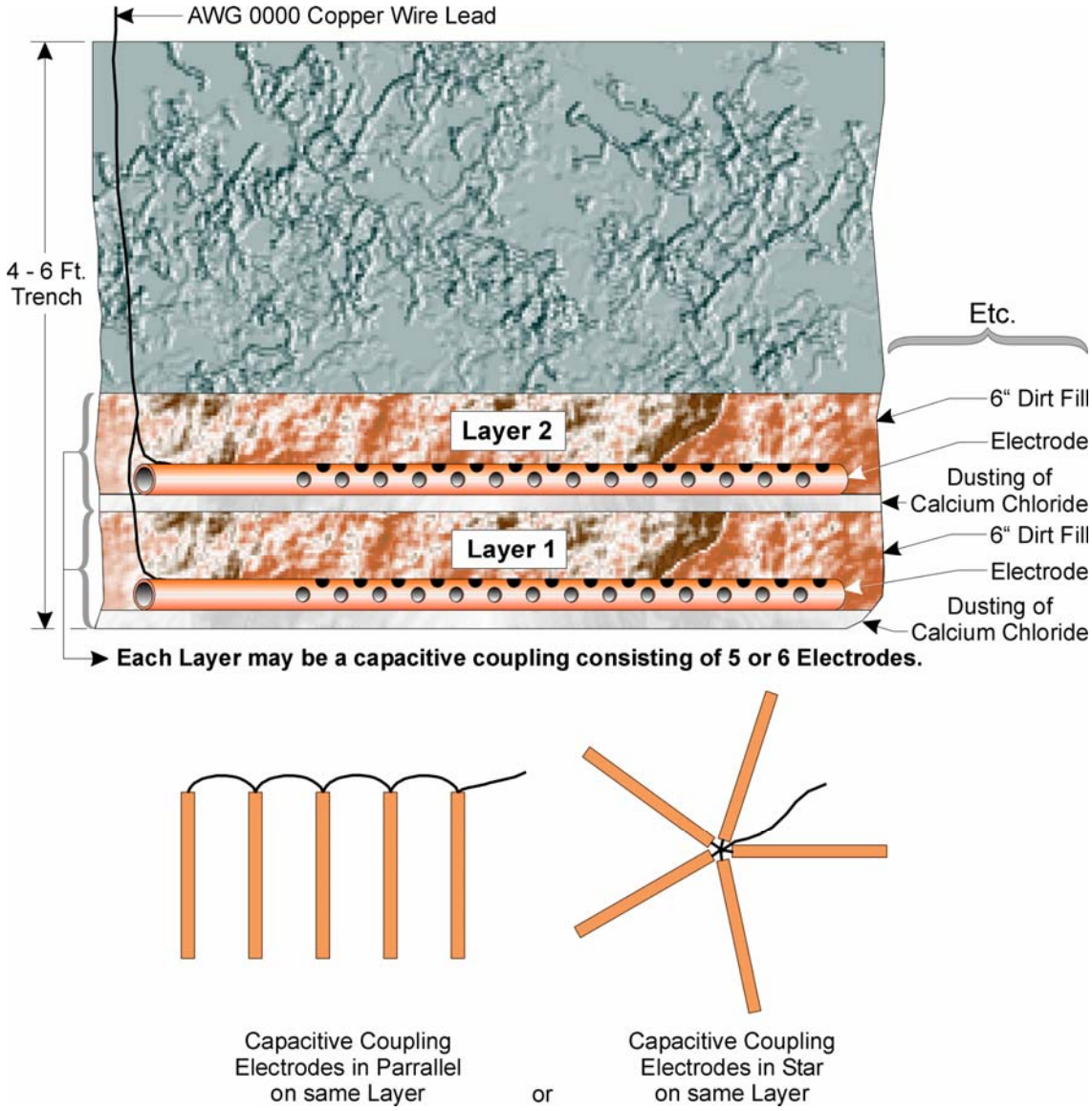


**Figure 3-5 - Poor Soil Ground Bed Construction Diagram**

### 3.3.2 Ground Wire Considerations

<u>**Control**Wave, **Control**Wave **MICRO**, **Control**Wave **EFM/GFC/XFC**, **Control**-Wave**RED**, **Control**Wave **REDIO** & **Control**Wave I/O Expansion Rack</u>

**Control**Wave Chassis are provided with a Ground Lug that accommodates up to a #4 AWG wire size. A ground wire must be run between the Chassis Ground Lug and a known good Earth Ground. The cases of the various **Control**Wave Modules are connected to Chassis Ground when they have been installed and secured via their two Captured Panel Fasteners. As an extra added precaution, it is recommended that a #14 AWG wire be run from PSSM Power Connector TB2-5 (Chassis Ground) (PSSM Connector TB1-3 for **Control**Wave **MICRO** unit) (SCM Connector TB1-3 for **Control**Wave **EFM**) to the same known good Earth Ground.

<u>**Control**Wave**LP** Process Automation Controller</u>

A #14 AWG ground wire must be run from the **Control**Wave**LP**'s PSSB Terminal TB2-3 (Chassis Ground) to a known good Earth Ground. In lieu of a direct connection to Earth



**Click here to return to Table of Contents**

Ground, it is recommended that the unit's Chassis Ground Terminal be connected to a conductive mounting panel or plate, a user supplied Ground Lug or a user supplied Ground Bus. The panel, lug or bus in turn must be connected to a known good Earth Ground via a #4 AWG wire.

General Considerations

The following considerations are provided for the installation of **Control**Wave system grounds:

- Size of ground wire (running to Earth Ground should be #4 AWG. It is recommended that stranded copper wire is used for this application and that the length should be as short as possible.
- This ground wire should be clamped or brazed to the Ground Bed Conductor (that is typically a stranded copper AWG 0000 cable installed vertically or horizontally).
- The wire ends should be tinned with solder prior to installation.
- The ground wire should be run such that any routing bend in the cable has a minimum radius of 12-inches below ground and 8-inches above ground.

The units Earth Ground Cable should be clamped to an exposed Ground Rod or to an AWG 0000 stranded copper Ground Cable that in turn should be connected to either an Earth Ground Rod or Earth Ground Bed. Both ends of the units Earth Ground Cable must be free of any coating such as paint or insulated covering as well as any oxidation. The connecting point of the Ground Rod or AWG 0000 Ground Cable must also be free of any coating and free of oxidation. Once the ground connection has been established (at either the Ground Rod or Ground Cable) it should be covered or coated to protect it from the environment.

### 3.3.3 Other Grounding Considerations

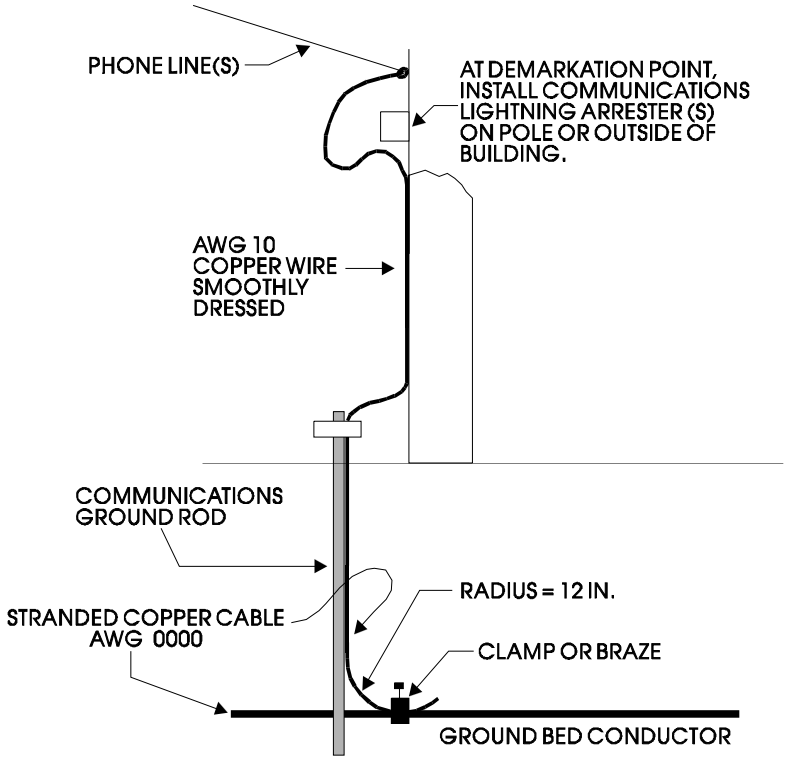


**Figure 3-6 - Grounding of Phone Line**



**Click here to return to Table of Contents**

For applications employing equipment that communicates over telephone lines, a lightning arrester **Must Be** provided. For indoor equipment the lightning arrester must be installed at the point where the communication line enters the building as shown in Figure 3-6. The ground terminal of this arrester must connect to a ground rod and/or a buried ground bed.

Gas lines also require special grounding considerations. If a gas meter run includes a thermocouple or RTD sensor installed in a thermowell, the well (not the sensor) must be connected to a gas discharge-type lightning arrester as shown in Figure 3-7. A copper braid, brazed to the thermal well, is dressed into a smooth curve and connected to the arrester as shown. The curve is necessary to minimize arcing caused by lightning strikes or high static surges. The path from the lightning arrester to the ground bed should also be smooth and free from sharp bends for the same reason.

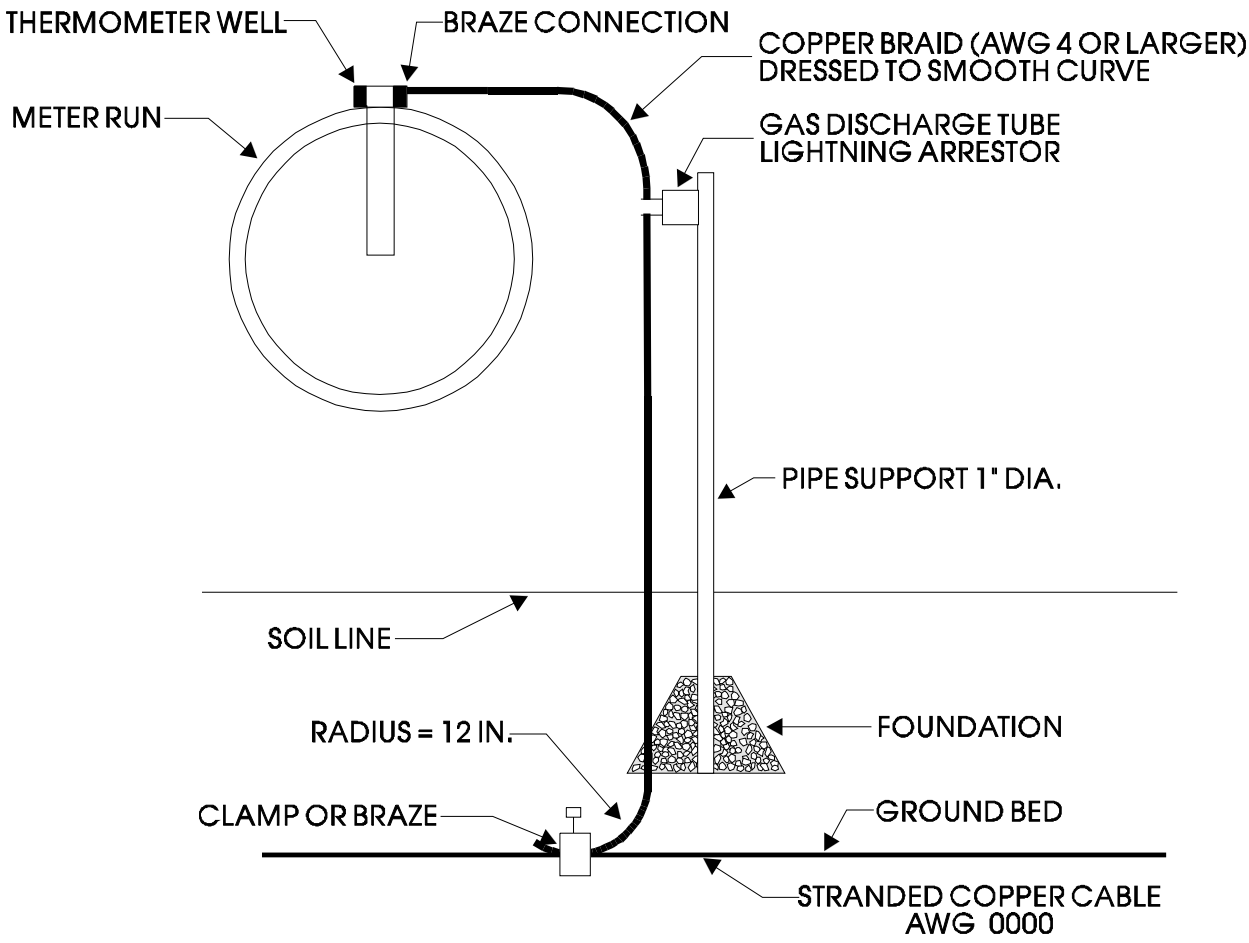


**Figure 3-7 - Grounding of Thermometer Well in Gas Line**

## 3.4 ISOLATING EQUIPMENT FROM THE PIPELINE

### 3.4.1 Meter Runs Without Cathodic Protection

**Control**Wave **EFM/GFC/XFC**'s may be mounted directly on the pipeline or remotely on a vertical stand-alone two-inch pipe (see Figure 3-8). The Earth Ground Cable is to run between the **Control**Wave **EFM/GFC/XFC**'s Ground Lug and Earth Ground (Rod or Bed) even though the **Control**Wave **EFM/GFC/XFC**'s Multivariable Transducer may be



**Click here to return to Table of Contents**

grounded to the pipeline. If any pressure transmitters or pulse transducers are remotely mounted, connect their chassis grounds to the pipeline or earth ground.

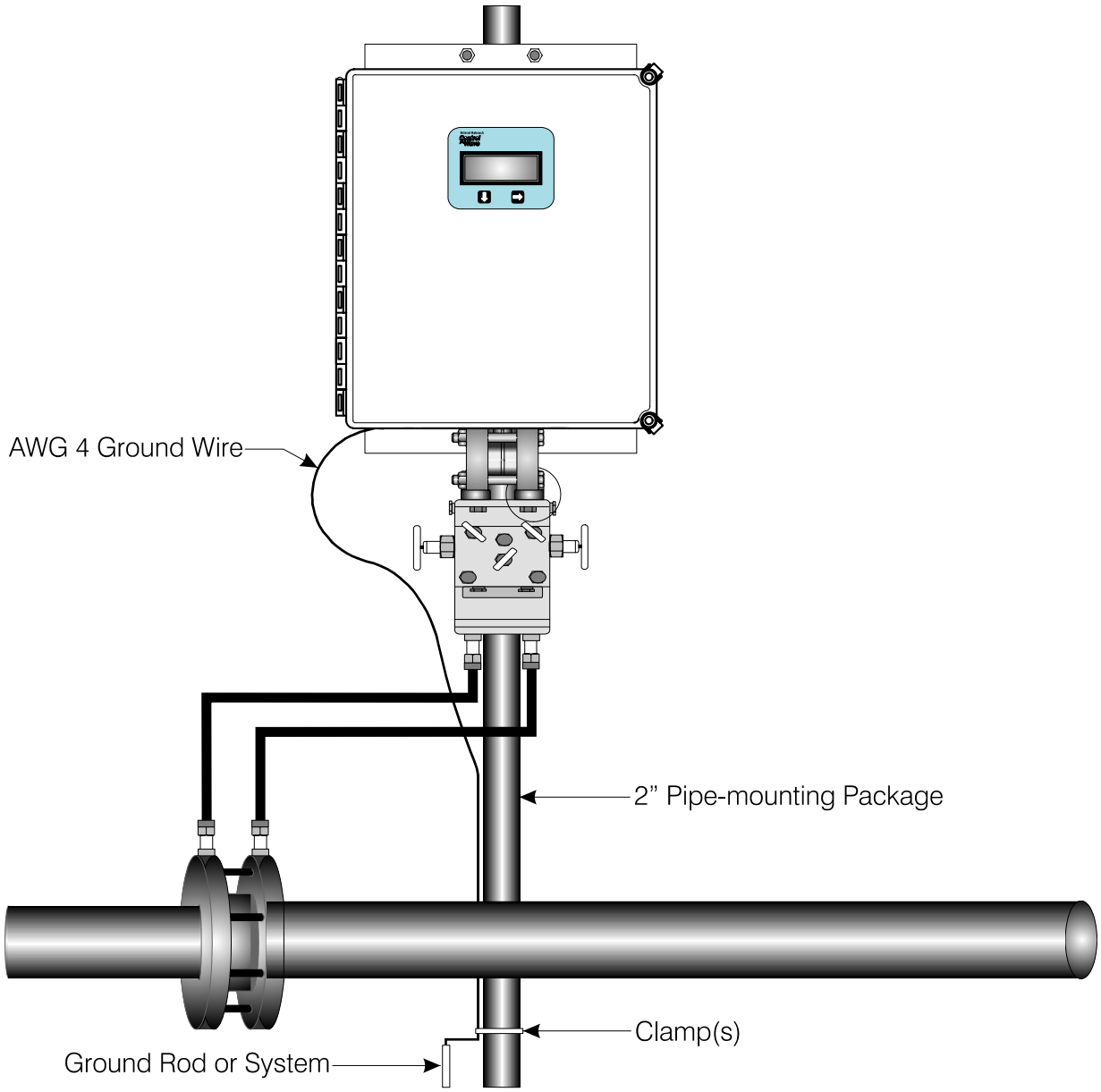


**Figure 3-8 - Control**Wave **EFM (Installation is similar to GFC/XFC)**
**Remote Installation without Cathodic Protection**

### 3.4.2 Meter Runs With Cathodic Protection

Dielectric isolators are available from Bristol Babcock and are always recommended as an *added measure* in isolating the **Control**Wave **EFM/GFC/XFC** from the pipeline even though the **Control**Wave **EFM/GFC/XFC** does provide 500V galvanic isolation from the pipeline and should not be affected by cathodic protection or other EMF on the pipeline. **Control**Wave **EFM/GFC/XFC** may be mounted directly on the pipeline (see Figure 3-9) or remotely on a vertical stand-alone two-inch stand-pipe (see Figure 3-10). It is recommended that isolation fitting always be used in remotely mounted meter systems. An isolation fittings or gasket should be installed between the following connections:



**Click here to return to Table of Contents**

- all conductive tubing that runs between the pipeline and mounting valve manifold and/or the units multivariable pressure transducer
- all conductive connections or tubing runs between the **Control**Wave **EFM/GFC** and turbine meter, pulse transducer, or any input other device that is mounted on the pipeline
- any Temperature Transducer, Pressure Transmitter, etc. and their mount/interface to the pipeline

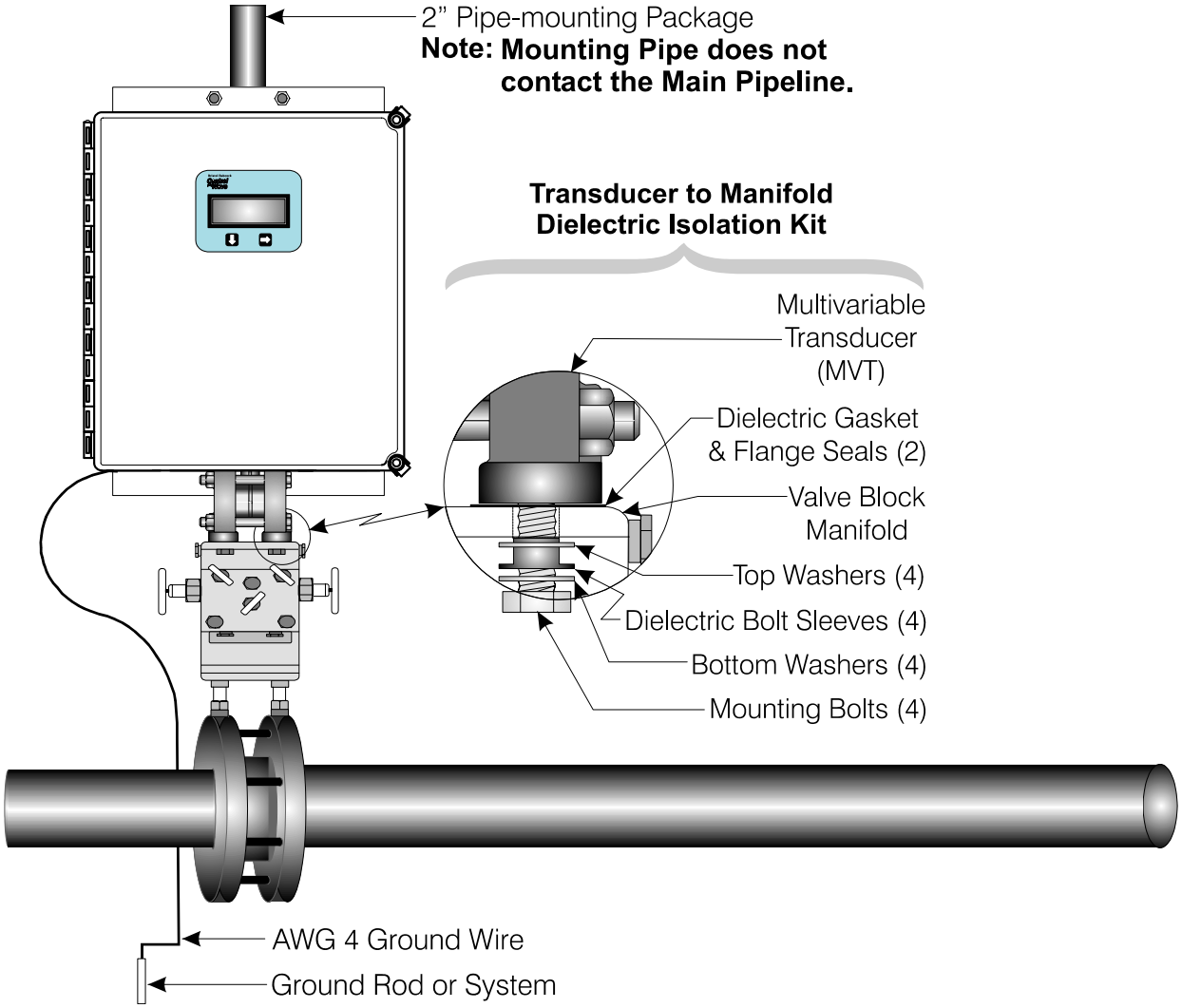


**Figure 3-9 - Control**Wave **EFM (Installation is similar to EFM/GFC/XFC) Direct Mount Installation (with Cathodic Protection)**

The ground conductor connects between the **Control**Wave **EFM/GFC/XFC**'s Ground Lug and a known good earth ground. Connect the cases of Temperature Transducers, Pressure Transmitters, etc., to the known good earth ground. If the mounting 2-inch pipe is in continuity with the pipeline it will have to be electrically isolated from the **Control**Wave **EFM/GFC/XFC**. Use a strong heat-shrink material such as RAYCHEM WCSM 68/22 EU 3140. This black tubing will easily slip over the 2-inch pipe and then after uniform heating (e.g., with a rose-bud torch) it electrically insulates and increases the strength of the pipe stand.



**Click here to return to Table of Contents**

See BBI Specification Summary F1670SS-0a for information on PGI Direct Mount Systems and Manifolds.

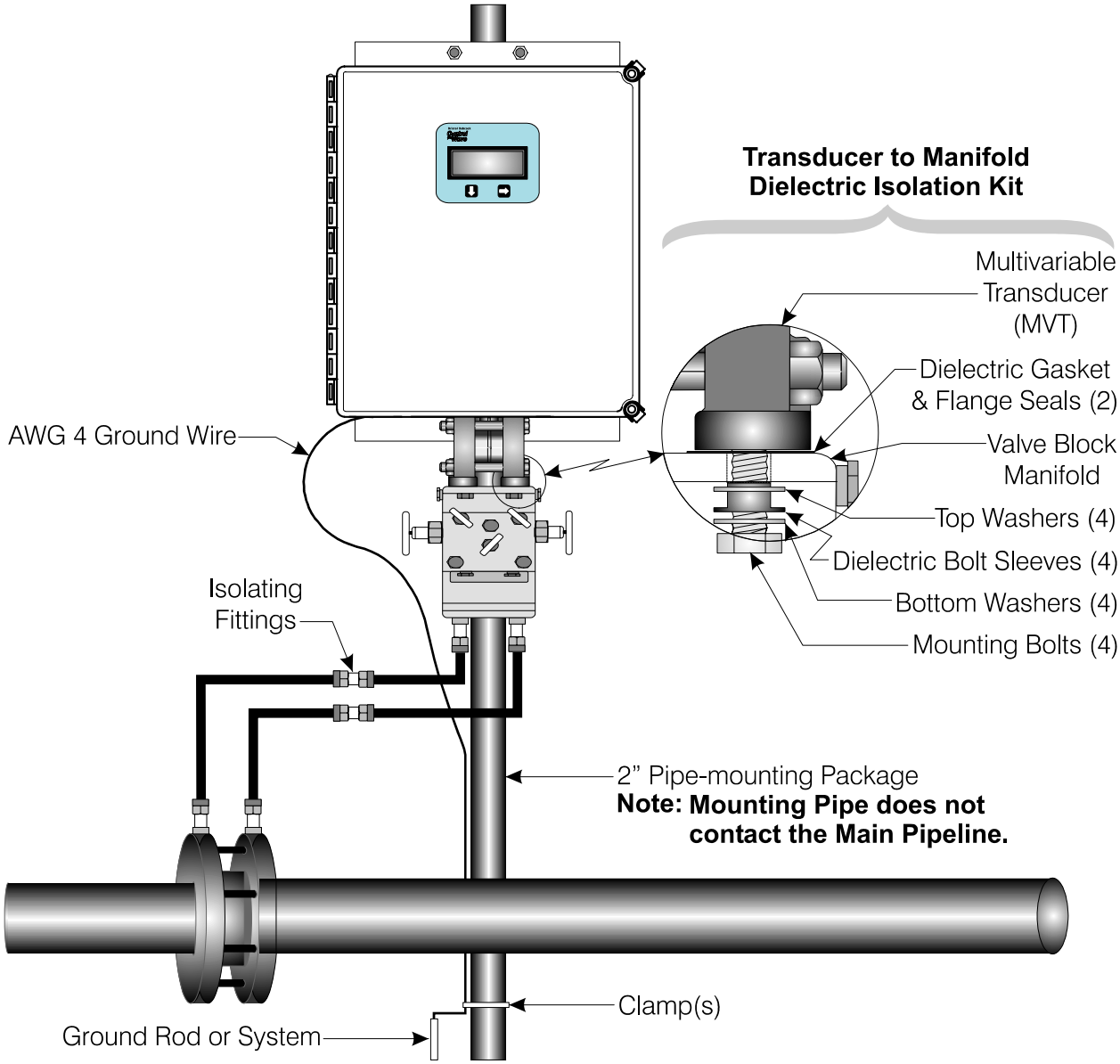


**Figure 3-10 – ControlWave EFM (Installation is similar to GFC/XFC)**
**Remote Installation (with Cathodic Protection)**



**Click here to return to Table of Contents**

# *Section 4 - Lightning Arresters & Surge Protectors*

## 4.1 STROKES & STRIKES

Lightning takes the form of a pulse that typically has a 2 µS rise and a 10 µS to 40 µS decay to a 50% level. The IEEE standard is an 8 µS by 20 µS waveform. The peak current will average 18 KA for the first impulse and about half of that for the second and third impulses. Three strokes (impulses) is the average per lightning strike. The number of visible flashes that may be seen is not necessarily the number of electrical strokes.

A lightning strike acts like a constant current source. Once ionization occurs, the air becomes a luminous conductive plasma reaching up to 60,000° F. The resistance of a struck object is of little consequence except for the power dissipation on the object ($I^2$ x R). Fifty percent of all lightning strikes will have a first impulse of at least 18 KA, ten percent will exceed the 60 KA level, and only about one percent will exceed 120 KA.

### 4.1.1 Chance of Being Struck by Lightning

The map of Figure 4-1 shows the average annual number of thunderstorm days (Isokeraunic level) for the various regions within the continental U.S.A. This map is not representative of the severity of the storm or the number of lightning strikes since it does not take into account more than one lightning strike in a thunderstorm day. The Isokeraunic or Isoceraunic number provides a meteorological indication of the frequency of thunderstorm activity; the higher the Isokeraunic number the greater the lightning strike activity for a given area. These levels vary across the world from a low of 1 to a high of 300. Within the United States the Isokeraunic level varies from a low of 1 to a high of 100.

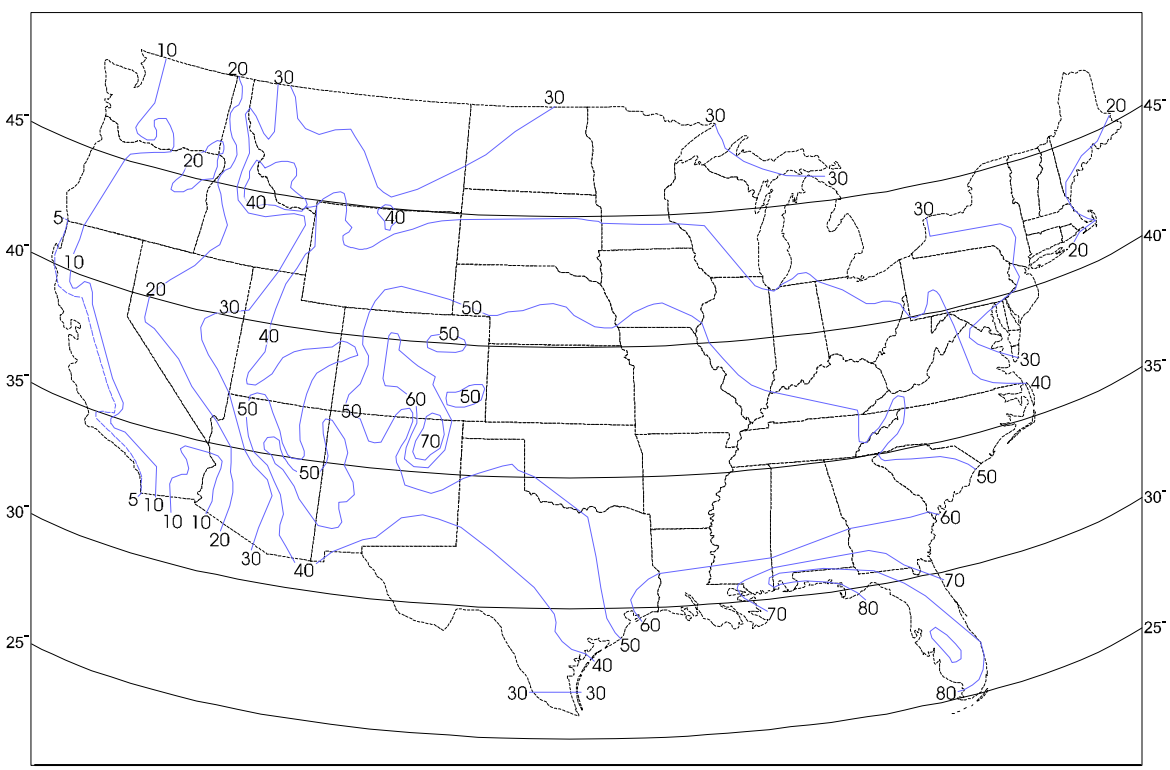


**Figure 4-1 - Average Thunderstorm Days of the Year (for Continental USA)**



**Click here to return to Table of Contents**

Thunderstorms are cloud formations that produce lightning strikes (or strokes). Across the United States there is an average of 30 thunderstorm days per year. Any given storm may produce from one to several strokes. Data on the subject indicates that for an average area within the United States there can be eight to eleven strokes to each square mile per year. The risk of stroke activity is increased for various areas such central Florida where up to 38 strokes to each square mile per year are likely to occur.

To determine the probability of a given structure (tower, building, etc.) (within your location) being struck, perform the following computation:

1. Using the map of Figure 4-1 (or a comparable meteorological map for your local), find the Isokeraunic level (I) for your area. Then using Chart 1, find "A" for your area.
2. Refer to Figure 4-1 to find the latitude. Then using Chart 2, find "B" for your latitude (Lat.°).
3. Multiply "A" x "B" to get "C".
4. To calculate the number of lightning strikes per year that are likely to strike a given object (tower, mast, etc.), use the equation that follows (where "C" was calculated in step 3 and "H" is equal to the height of the object.

   Strikes Per Year = ("C" x $H^2$) ÷ (.57 x $10^6$ )

Chart 1

| I | "A" |
|---|---|
| 5 | 8 |
| 10 | 26 |
| 20 | 85 |
| 30 | 169 |
| 40 | 275 |
| 50 | 402 |
| 60 | 548 |
| 70 | 712 |
| 80 | 893 |
| 90 | 1069 |
| 100 | 1306 |

Chart 2

| LAT.° | "B" |
|---|---|
| 25 | .170 |
| 30 | .200 |
| 35 | .236 |
| 40 | .280 |
| 45 | .325 |

**Note for these charts:**

I = Thunderstorm Days Per Year (Isokeraunic Number)
A= Stroke activity for associated Isokeraunic Area
B= Height/Stroke coefficient for associated latitude

**For Example:** On Long Island, New York (Isokeraunic number 20), Chart 1 gives "A" to equal 85. The latitude is approximately 40°. Referring to Chart 2, "B" is found to be equal to .28. "C" for this example is equal to 23.80. Using the equation for strikes per year, it is determined that a 100-foot tower has .4 chances per year of being struck by lightning. Assuming that no other structures are nearby, the tower will more than likely be struck by lightning at least once in three years.

Note: The Isokeraunic activity numbers connoted as I, "A" and "B" in Charts 1 and 2 above are provided for the continental United States. Isokeraunic data for various countries is available from various federal or state Civil Engineering or Meterorelogical organizations. This information is typically available from manufacturers of lightning strike protection equipment (such as Lightning Arresters).

Since **Control**Wave, **Control**Wave **MICRO**, **Control**Wave **EFM/GFC/XFC**, **Control-**Wave**LP** and **Control**Wave**EXP** units are dc operated systems that are isolated from AC grids, they are typically immune to lightning strikes to power lines or power equipment (except for inductive flashover due to close installation proximity). However, once a radio or



**Click here to return to Table of Contents**

modem has been interfaced to a **Control**Wave, **Control**Wave **MICRO**, **Control**Wave **EFM/GFC/XFC**, **Control**Wave**LP**, or **Control**Wave**EXP** the possibility of damage due to a lightning strike on power or telephone lines or to a radio antenna or the antenna's tower must be considered. It is recommended that the additional lightning protection considerations listed below be followed for units installed in areas with a high possibility or history of stroke activity.

**Units interfaced to a modem**: In series with the phone line (as far away as possible from the equipment) - for indoor installations the lightning arrester should typically be located at the point where the line enters the structure.

**Units interfaced to a radio**: Mount antenna discharge unit (lightning arrester) as close as possible to where the lead in wire enters the structure. See Antenna Caution below.

### 4.1.2 Antenna Caution

Each year hundreds of people are killed, mutilated, or receive severe permanent injuries when attempting to install or remove an antenna or antenna lead. In many cases, the victim was aware of the danger of electrocution but failed to take adequate steps to avoid the hazard. For your safety, and for proper installation maintenance, please **read** and **follow** the safety precautions that follow - **they may save your life**.

- When installing or servicing an antenna:
  DO NOT use a metal ladder. DO NOT step onto or touch an antenna mast while power is applied to an associated radio unless the radio is a low power (low current) type.
  DO NOT work on a wet or windy day, especially during a thunderstorm or when there is lightning or thunder in your area. Dress properly; shoes with rubber soles and heels, rubber gloves, long sleeve shirt or jacket.
- The safe distance from power lines should be at least twice the height of the antenna and mast combination.
- Antenna Grounding per National Electrical Code Instructions:
  A. Use AWG 10 or 8 aluminum or AWG 1 copper-clad steel or bronze wire, or larger as ground wires for both the mast and lead-in. Securely clamp the wire to the bottom of the mast.
  B. Secure lead-in wire from antenna to antenna discharge (lightning arrester) unit and the mast ground wire to the structure (building, shed, etc.) with stand-off insulators spaced from 4 feet (1.22 meters) to 6 feet (1.83 meters) apart.
  C. Mount antenna discharge unit as close as possible to where the lead-in wire enters the structure.
  D. The hole drilled through the wall for the lead-in wire should be just large enough to accommodate the cable. Before drilling this hole, make sure there are no wires or pipes, etc. in the wall.
  E. Push the cable through the hole and form a rain drip loop close to where the wire enters the exterior of the structure.
  F. Caulk around the lead-in wire (where it enters the structure) to keep out drafts.
  G. Install lightning arresters (antenna discharge units). The grounding conductor should be run in as straight a line as practicable from the antenna mast and/or the antenna discharge units to grounding electrode(s).
  H. Only connect the antenna cable to the radio after the mast has been properly grounded and the lead-in cable has been properly connected to lightning arresters which in turn have each been properly connected to a known good earth ground.



**Click here to return to Table of Contents**

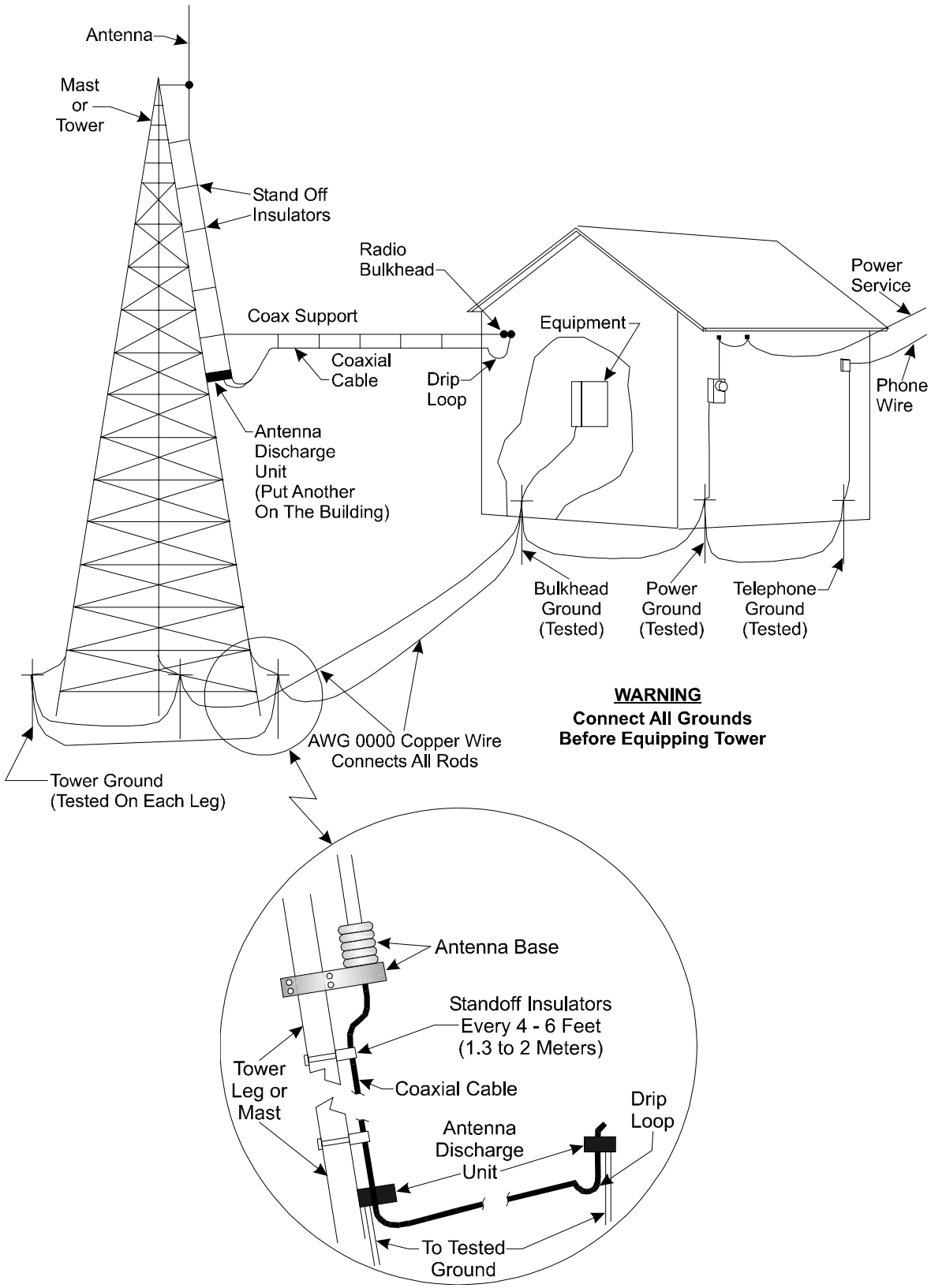


**Figure 4-2 - Radio Antenna Field Installation Site Grounding Diagram**

For all systems it is best to have all communication equipment input/output grounds tied together. In the case of **Control**Wave units, this is accomplished via the unit's Chassis Ground (Typically at a ground lug, ground bus or ground plate). However additional



**Click here to return to Table of Contents**

communication equipment lightning arresters and surge suppressors should be tied to the same system ground. System ground consists of the tower leg grounds utility ground and bulkhead-equipment ground-stakes that are tied together via bare copper wire.

### 4.1.3 Ground Propagation

As in any medium, a dynamic pulse, like R.F., will take time to propagate. This propagation time will cause a differential step voltage to exist in time between any two ground rods that are of different radial distances from the strike. With a ground rod tied to a struck tower, the impulse will propagate its step voltage outwardly from this rod in ever-expanding circles, like a pebble thrown into a pond. If the equipment house has a separate ground rod and the power company and/or telephone company grounds are also separate, the dynamic step voltage will cause currents to flow to equalize these separate ground voltages. Then if the coax cable (associated with a radio) is the only path linking the equipment chassis with the tower ground, the surge can destroy circuitry.

### 4.1.4 Tying it all Together

To prevent this disaster from occurring, a grounding system must be formed which interconnects all grounds together. This will equalize and distribute the surge charge to all grounds, and at the same time, it will make for a lower surge impedance ground system. This interconnection can be done as a grid, where each ground has a separate line to each other ground, or by using a "rat Race" ring which forms a closed loop (not necessarily a perfect circle) which surrounds the equipment house completely.

By making this interconnection, it will be necessary to use proper I/O protectors for the equipment. Of course, these should be a requirement regardless of whether this grounding technique is used. I/O protectors are used for power lines (even those these don't feed into a **Control**Wave unit), telephone lines, and also to minimize EMI pick-up from a strike. Ideally it is best to place all I/O protectors on a common panel that has a low inductance path to the ground system. The **Control**Wave units would then have a single ground point from its Chassis Ground Terminal/Ground Lug to this panel. In lieu of this, the **Control**Wave unit in question should be tied to a ground rod that in turn is connected to the Earth/System Ground created for the site.

Your protected equipment connected to a common single ground system, will now be just like a bird sitting on a high tension wire. When lightning strikes, even with a 50 ohm surge impedance ground system, the entire system consisting of equipment, ground system, building, etc., will all rise together to the one million volt peak level (for example) and will all decay back down together. So long as there is no voltage differential (taken care of by protectors and ground interconnections, there will be no current flow through the equipment and therefore no resulting equipment damage.

### 4.1.5 Impulse Protection Summary

- Use more than one ground rod.
- Place multi-ground stakes more than their length apart.
- Tie Power, Telco, Tower, Bulkhead and equipment ground together.
- Make all ground interconnect runs that are above ground with minimum radius bends of eight inches and run them away from other conductors and use large solid wire or a solid strap.



**Click here to return to Table of Contents**

- Watch out for dissimilar metals connections and coat accordingly.
- Use bare wire radials together where possible with ground stakes to reduce ground system impedance.
- Use I/O protectors (Phone line, Radio) with a low inductance path to the ground system.
- Ground the Coaxial Cable Shield (or use an impulse suppressor) at the bottom of the tower just above the tower leg ground connection.

## 4.2 USE OF LIGHTNING ARRESTERS & SURGE PROTECTORS

Units equipped with radios or modems use lightning arresters and surge protectors to protect equipment from lightning strikes, power surges and from damaging currents that have been induced onto communication lines.

The first line of defense is the Lightning Arrester. These devices typically use gas discharge bulbs that can shunt high currents and voltages to earth ground when they fire. The high current, high voltage gas discharge bulb has a relatively slow response time and only fire when their gas has been ionized by high voltage.

The second line of defense is the Surge Protector, which is made of solid state devices, fires very quickly and conducts low voltages and currents to ground. Surge protectors are built into BBI 9600 bps modems.

Lightning Arresters are applied to circuits as follows:

- Equipment or circuits that can be exposed to lightning strikes, falling power lines, high ground currents caused by power system faults, by operational problems on electric railways, etc.

- Equipment installed in dry, windy areas, such as the Great Plains and the Southwest Desert in the United States. Wind and wind blown dust can cause high voltages (static) to appear on overhead wires, fences, and metal buildings.

***Note: Lightning Arresters may explode if lightning strike is very close. Mount lightning arresters where flying parts won't cause injury to equipment or personnel.***



**Click here to return to Table of Contents**

# *Section 5 - Wiring Techniques*

## 5.1 OVERVIEW

This section provides information pertaining to good wiring practices. Installation of Power and "Measurement & Control" wiring is discussed. Information on obscure problems, circulating ground and power loops, bad relays, etc. is presented. Good wire preparation and connection techniques along with problems to avoid are discussed.

## 5.2 INSTRUMENT WIRING

Each of the rules listed below is briefly discussed; the emphasis herein is placed on the avoidance of problems as well as equipment safety.

Rule 1 - Never utilize common returns.

Rule 2 - Use twisted shielded pairs (with overall insulation) on all Signal/Control circuits.

Rule 3 - Ground cable shields at one end only.

Rule 4 - Use known good earth grounds (Rod, Bed, System) and test them periodically,

Rule 5 - Earth connections must utilize smoothly dressed large wire.

Rule 6 - Perform all work neatly and professionally.

Rule 7 - Route high power conductors away from signal wiring according to NEC Rules.

Rule 8 - Use appropriately sized wires as required by the load.

Rule 9 - Use lightning arresters and surge protectors.

Rule 10 - Make sure all wiring connections are secure.

### 5.2.1 Common Returns

Use of common returns on I/O wiring is one of the most common causes of obscure and difficult to troubleshoot control signal problems. Since all wires and connections have distributed resistance, inductance and capacitance, the chances of a achieving a balanced system when common returns are present is very remote. Balanced systems (or circuits) are only achieved when all currents and voltages developed in association with each of the common returns are equal. In a balanced system (or circuit) there are no noise or measurment errors introduced due to by "sneak circuits."

The illustration of Figure 5-1 shows the difference between testing an I/O circuit that is discrete and has no sneak circuits and one that utilizes common returns. Common sense tells us that it is tough to mix up connections to a twisted shielded pair (with overall vinyl covering) to every end device. Do yourself a favor; to make start up easier, DON'T USE COMMON RETURNS!



**Click here to return to Table of Contents**

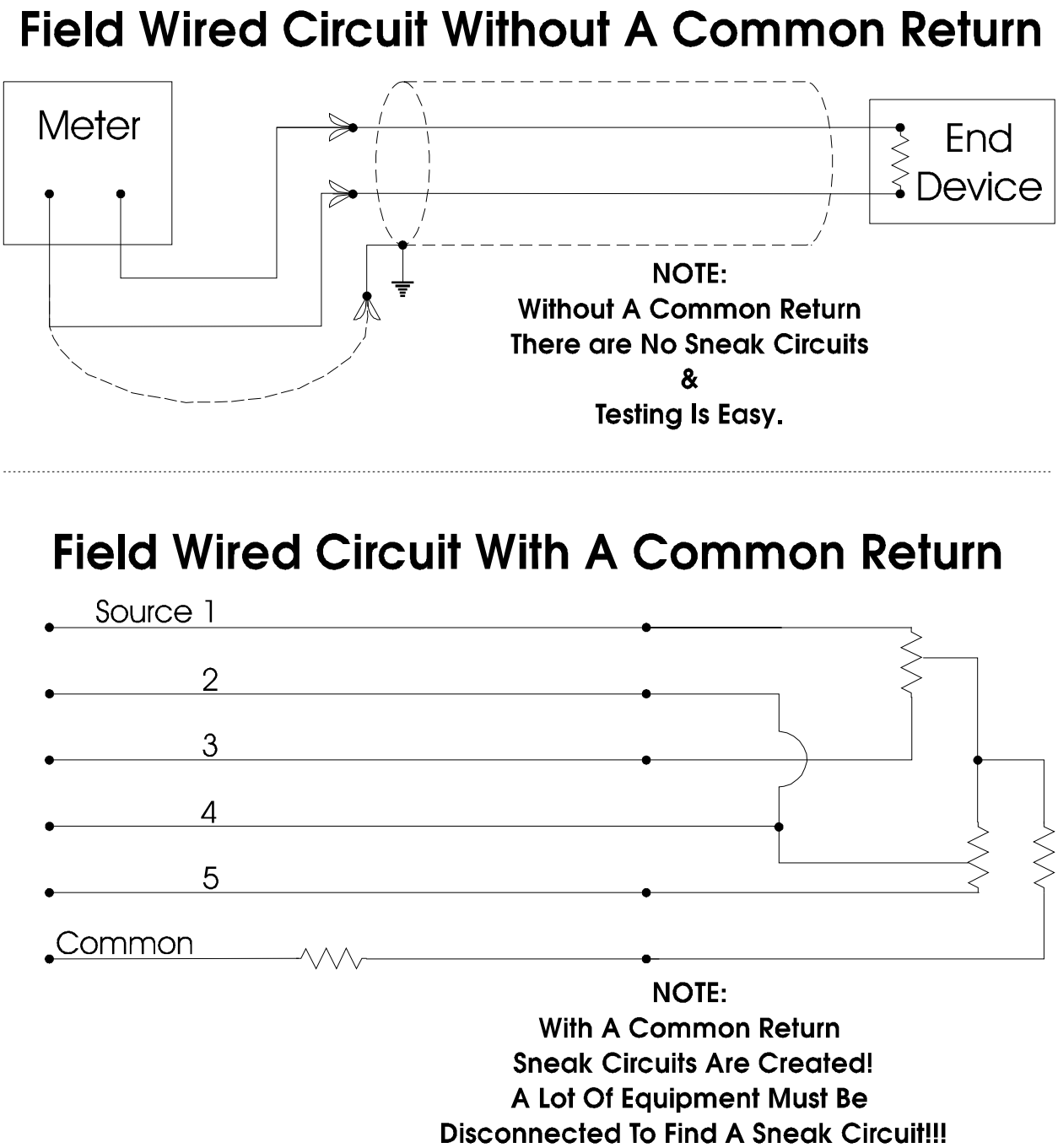


**Figure 5-1 - Field Wired Circuits With & Without A Common Return**

### 5.2.2 Use of Twisted Shielded Pair Wiring (with Overall Insulation)

For all field I/O wiring the use of twisted shielded pairs with overall insulation is highly recommended. This type of cable provides discrete insulation for each of the wires and an additional overall insulated covering that provides greater E.M.I. immunity and protection to the shield as well.



Click here to return to Table of Contents

### 5.2.3 Grounding of Cable Shields

DO NOT connect the cable shield to more than one ground point; it should only be grounded at one end. Cable shields that are grounded at more than one point or at both ends may have a tendency to induce circulating currents or sneak circuits that raise havoc with I/O signals. This will occur when the ground systems associated with multipoint connections to a cable shield have a high resistance or impedance between them and a ground induced voltage is developed (for what ever reason, i.e., man made error or nature produced phenomena).

### 5.2.4 Use of Known Good Earth Grounds

**Control**Wave units should only have one connection to earth ground. For **Control**Wave and **Control**Wave **MICRO** Process Automation Controllers, **Control**Wave **MICRO**, **Control**Wave **EFM** Electronic Flow Meters, **Control**Wave **GFC/XFC** Gas Flow Computers and **Control**Wave I/O Expansion Racks, this connection is provided via the Ground Lug that is situated on the bottom of the unit. **Control**Wave**LP**s require the installation of a ground lug, ground bus or ground plate/panel. Since **Control**Wave units are DC-based systems, grounding does not take into account AC power grounding considerations. Earth grounding the unit is absolutely necessary when the unit is equipped with a radio or modem. Additionally these units should be connected to earth ground when they are installed in areas that have frequent lightning strikes or are located near or used in conjunction with equipment that is likely to be struck by lightning or if struck by lightning may cause equipment or associated system failure. Earth Grounds must be tested and must be known to be good before connecting the **Control**Wave. Earth grounds must be periodically tested and maintained (see Section 4).

### 5.2.5 Earth Ground Wires

Earth connections must utilize smoothly dressed large wire. Use AWG 3 or 4 stranded copper wire with as short a length as possible. Exercise care when trimming the insulation from the wire ends. Twists the strands tightly, trim off any frizzes and tin the ends with solder. The earth ground wire should be clamped or brazed to the Ground Bed Conductor (that is typically a standard AWG 0000 copper cable. The earth ground wire should be run such that any routing bend in the cable is a minimum 8-inch radius above ground or a minimum 12-inch radius below ground.

### 5.2.6 Working Neatly & Professionally

Take pride in your work and observe all site and maintenance safety precautions. After properly trimming the stranded pair wire ends, twist them in the same direction as their manufacturer did and then tin them with solder. Install the tinned wire end into it's connector and then secure the associated connector's clamping screw. Remember to check these connections for tightness from time to time. If solid copper wire is used (in conjunction with the DC Power System or for Earth Ground) make sure that the conductor is not nicked when trimming off the insulation. Nicked conductors are potential disasters waiting to happen. Neatly trim shields and whenever possible, coat them to protect them and prevent shorts and water entry.



**Click here to return to Table of Contents**

Remember loose connections, bad connections, intermittent connections, corroded connections, etc., are hard to find, waste time, create system problems and confusion in addition to being costly.

### 5.2.7 High Power Conductors and Signal Wiring

When routing wires, keep high power conductors away from signal conductors. Space wires appropriately to vent high voltage inductance. Refer to the National Electrical Code Handbook for regulatory and technical requirements.

### 5.2.8 Use of Proper Wire Size

**Control**Waves utilize compression-type terminals that accommodate up to #14 AWG gauge wire. A connection is made by inserting the bared end (1/4 inch max.) into the clamp beneath the screw and securing the screw.

Allow some slack in the wires when making terminal connections. Slack makes the connections more manageable and minimizes mechanical strain on the PCB connectors. Provide external strain relief (utilizing Tie Wrap, etc.) to prevent the loose of slack at the **Control**Wave.

Be careful to use wire that is appropriately sized for the load. Refer to equipment manufacturer's Specs. and the National Electrical Code Handbook for information on wire size and wire resistance. After installing the field wiring, test each load to determine if the correct voltage or current is present at the load. If you know the resistance of the field wires (Circular Mills x Length) you should be able to calculate the load voltage. Conversely, if you know the minimum load voltage and current, you should be able to derive the maximum voltage loss that is allowable due to line resistance and then the correct wire size.

Referring to Figure 5-2, a relay that is picked by 100 mA, with a loop supply voltage of 24V and a total line resistance of 20 ohms, the load voltage (voltage across the relay) should be:

$V_L = V_S - (V_C + V_C)$ where $V_C + V_C = (R_C + R_C)\ I$

$22 = 24 - 2$ where $2V = (20\ \Omega) \times 0.1\ A$

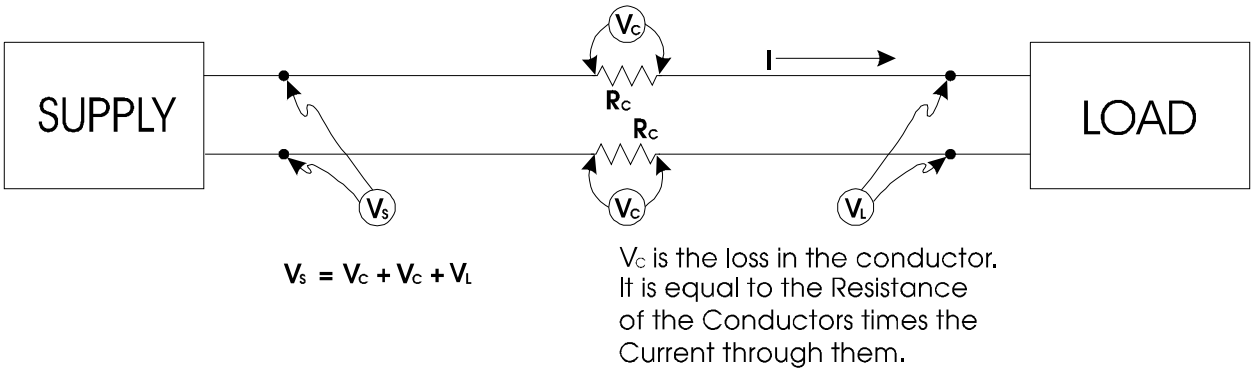


**Figure 5-2 - Calculating Load Voltage due to Line Resistance**

### 5.2.9 Lightning Arresters & Surge Protectors

Use lightning arresters in association with any radio or modem equipped unit. BBI 9600 bps modems are equipped with surge protection circuitry. Lightning arresters or Antenna



Click here to return to Table of Contents

Discharge Units should be placed on the base of the antenna and at the point where the antenna lead (typically coax) enters the site equipment building. When a modem is used, a lightning arrester should be placed at the point where the phone line enters the site equipment building. If you use a modem (manufactured by other than BBI) it is recommended that you also install a surge suppressors or lightning arrester on the phone line as close to the modem as possible. *Any unit interfaced to a radio or modem must be connected to a known good earth ground.*

### 5.2.10 Secure Wiring Connections

Make sure that all wiring connections are secure. In time wires that were once round will become flattened due to the pressure applied by screw compression type terminals and site vibrations. After a while these compression screws have a tendency to become loose. Part of a good maintenance routine should be to check and tighten all screws associated with wiring terminal connections. Avoid nicking the wire(s) when stripping insulation. Remember, nicked conductors will lead to future problems. Also remember to provide some cabling slack and strain relief.

If installing stranded or braided wiring that has not been tinned, be sure to tightly twist the end (in the same direction as manufactured) and then trim off any frizzed wires.



**Click here to return to Table of Contents**

Click here to return to Table of Contents

# READER RESPONSE FORM

Please help us make our documentation more useful to you! If you have a complaint, a suggestion, or a correction regarding this manual, please tell us by mailing this page with your comments. It's the only way we know we're doing our job by giving you correct, complete, and useful documentation.

DOCUMENT NUMBER: S1400CW
TITLE: *ControlWave™ SITE CONSIDERATIONS For EQUIPMENT INSTALLATION, GROUNDING & WIRING*
ISSUE DATE: APR., 2005
COMMENT/COMPLAINT:

_____

_____

_____

_____

_____

_____

_____

_____

_____

_____

_____

_____

_____

Mail this page to:
Bristol Babcock Inc.
1100 Buckingham Street
Watertown, CT 06795
Attn: Technical Publications Group, Dept. 315

Click here to return to Table of Contents

# Bristol Babcock

PART OF THE FKI GROUP OF COMPANIES

1100 Buckingham Street
Watertown, CT 06795
Phone: +1 (860) 945-2200
Fax: +1 (860) 945-2213
Website: www.bristolbabcock.com

## U.S.A. Locations:

**Northern Region**
Bristol Babcock Inc.
1100 Buckingham Street
Watertown, CT 06795
Phone: +1 (860) 945-2381
Fax: +1 (860) 945-2525
NorthernUS@bristolbabcock.com

**Gulf Coast Region**
Bristol Babcock Inc.
2000 Governor's Circle
Suite F
Houston, TX 77092-8731
Phone: +1 (713) 685-6200
Fax: +1 (713) 681-7331
SouthwestUS@bristolbabcock.com

**Western Region**
Bristol Babcock Inc.
1609 South Grove Avenue
Suites 106 & 107
Ontario, CA 91761
Phone: +1 (909) 923-8488
Fax: +1 (909) 923-8988
WesternUS@bristolbabcock.com

**Southeast Region**
Bristol Babcock Inc.
317 S. North Lake Blvd.
Suite 1016
Altamonte Springs, FL 32701
Phone: +1 (407) 740-7084
Fax: +1 (407) 629-2106
SoutheastUS@bristolbabcock.com

**Helicoid Instruments**
1100 Buckingham Street
Watertown, CT 06795
Phone: +1 (860) 945-2218
Fax: +1 (860) 945-2213
jmcgrail@bristolbabcock.com

**Central Region**
Bristol Babcock Inc.
300 North Coit Road
Suite 1300
Richardson, TX 75080
Phone: +1 (972) 238-8935
Fax: +1 (972) 238-8198
dallas@bristolbabcock.com

**Rocky Mountain Region**
Bristol Babcock Inc.
906 San Juan Blvd., Suite A
Farmington, NM 87401
Phone: +1 (505) 320-5046
Fax: +1 (505) 327-3273
NewMexUS@bristolbabcock.com

**Communications Technology Group**
Bristol Babcock Inc.
317 S. North Lake Blvd.
Suite 1016
Altamonte Springs, FL 32701
Phone: +1 (407) 629-9464
Fax: +1 (407) 629-2106
orlandoRFgroup@bristolbabcock.com

## International Affiliates:

**Canada**
Bristol Babcock, Canada
234 Attwell Drive
Toronto, Ont. M9W 5B3
Canada
PH: 416-675-3820
FAX: 416-674-5129
info@bristolbabcock.ca

**Mexico**
BBI, S.A. de C.V.
Homero No. 1343, 3er Piso
Col. Morales Polanco
11540 Mexico, D.F.
Mexico
PH: (52-55)-52-81-81-12
FAX: (52-55)-52-81-81-09
Mexico@bristolbabcock.com

**United Kingdom**
Bristol Babcock Ltd.
Blackpole Road
Worcester, WR3 8YB
United Kingdom
PH: +44 (0) 1905 856950
FAX: +44 (0) 1905 856969
enquiries@bristol-babcock.com

**Asia Pacific**
Bristol Babcock, Inc.
PO Box 1987
Bunbury, Western Australia
6231
PH: +61 (0) 8 9791 3654
FAX: +61 (0) 8 9791 3173
dtrench@bdsa.com.au

Victoria, Australia
PH: +61 (0) 3 9384 2171
FAX: +61 (0) 3 8660 2501

**Calgary Office**
Bristol Babcock, Canada
3812 Edmonton Trail N.E.
Calgary, Alberta T2E 5T6
Canada
PH: 403-265-4808
FAX: 403-233-2914
janetl@bristolbabcock.ca

**Villahermosa Office**
BBI, S.A. de C.V.
Av. Plomo No.2
Bodega No. 1 - Ciudad Industrial
Villahermosa, Tabasco 86010
Mexico
PH: 52-993-353-3142
FAX: 52-993-353-3145
bbivsa@prodigy.net.mx

**Middle East**
Bristol Babcock Ltd.
Blackpole Road
Worcester, WR3 8YB
United Kingdom
PH: +44 (0) 1905 856950
FAX: +44 (0) 1905 856969
enquiries@bristol-babcock.com

RC Rev: 05-Feb-04

**Click here to return to Table of Contents**

ESDS Manual
S14006
4/15/92

# CARE AND HANDLING OF PC BOARDS AND ESD-SENSITIVE COMPONENTS

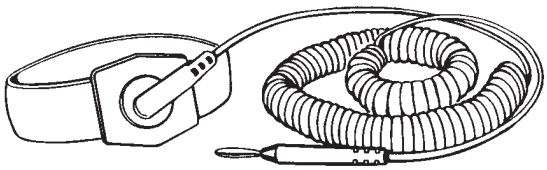

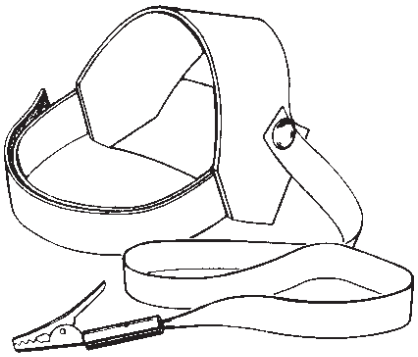

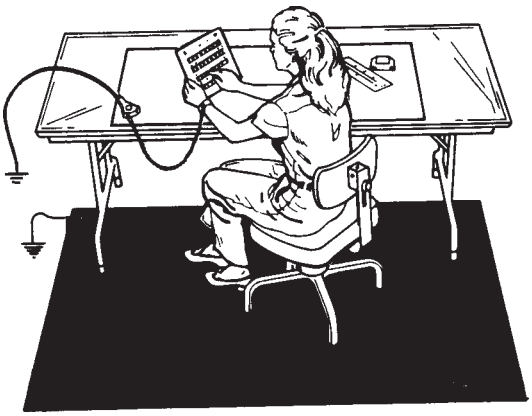

**BRISTOL BABCOCK**

**Click here to return to Table of Contents**

Click here to return to Table of Contents

# TABLE OF CONTENTS



# TOOLS AND MATERIALS REQUIRED

## 1. Tools

Anti-Static Field kit. It is recommended that an anti-static field kit be kept on any site where solid-state printed circuit boards and other ESD-sensitive components are handled. These kits are designed to remove any existing static charge and to prevent the build-up of a static charge that could damage a PC board or ESD-sensitive components. The typical anti-static field kit consists of the following components:

1. A work surface (10mm conductive plastic sheet with a female snap fastener in one corner for ground cord attachment).

2. A 15-foot long ground cord for grounding the work surface.

3. Wrist strap (available in two sizes, large and small, for proper fit and comfort) with a female snap fastener for ground cord attachment.

4. A coiled ground cord with a practical extension length of 10 feet for attachment to the wrist strap.

Toothbrush (any standard one will do)



Click here to return to Table of Contents

## 2. Materials

- Inhibitor (Texwipe Gold Mist ; Chemtronics Gold Guard, or equivalent)
- Cleaner (Chemtronics Electro-Wash; Freon TF, or equivalent)
- Wiping cloth (Kimberly-Clark Kim Wipes, or equivalent)

# ESD-SENSITIVE COMPONENT HANDLING PROCEDURE

## 1. Introduction

Microelectronic devices such as PC boards, chips and other components are electro-static-sensitive. Electrostatic discharge (ESD) of as few as 110 volts can damage or disrupt the functioning of such devices. Imagine the damage possible from the 35,000 volts (or more) that you can generate on a dry winter day by simply walking across a carpet. In fact, you can generate as much as 6,000 volts just working at a bench.

There are two kinds of damage that can be caused by the static charge. The more severe kind results in complete failure of the PC board or component. This kind of damage is relatively simple, although often expensive, to remedy by replacing the affected item(s). The second kind of damage results in a degradation or weakening which does not result in an outright failure of the component. This kind of damage is difficult to detect and often results in faulty performance, intermittent failures, and service calls.

Minimize the risk of ESD-sensitive component damage by preventing static build-up and by promptly removing any existing charge. Grounding is effective, if the carrier of the static charge is **conductive** such as a human body. To protect components from **nonconductive** carriers of static charges such as plastic boxes, place the component in static-shielding bags.

This manual contains general rules to be followed while handling ESD-sensitive components. Use of the anti-static field kit to properly ground the human body as well as the work surface is also discussed.



Click here to return to Table of Contents

| Table 1 | | |
|---|---|---|
| **Typical Electrostatic Voltages** | | |
| | **Electrostatic Voltages** | |
| **Means of Static Generation** | 10-20 Percent Relative Humidity | 65-90 Percent Relative Humidity |
| Walking across carpet | 35,000 | 1,500 |
| Walking over vinyl floor | 12,000 | 250 |
| Worker at bench | 6,000 | 100 |
| Vinyl envelopes for work instructions | 7,000 | 600 |
| Poly bag picked up from bench | 20,000 | 1,200 |
| Work chair padded with poly foam | 18,000 | 1,500 |

## 2. General Rules

(1) ESD-sensitive components shall **only** be removed from their static-shielding bags by a person who is properly grounded.

(2) When taken out of their static-shielding bags, ESD-sensitive components shall **never** be placed over, or on, a surface which has not been properly grounded.

(3) ESD-sensitive components shall be handled in such a way that the body does not come in contact with the conductor paths and board components. Handle ESD-sensitive components in such a way that they will not suffer damage from physical abuse or from electric shock.

(4) EPROMS/PROMS shall be kept in anti-static tubes until they are ready to use and shall be removed **only** by a person who is properly grounded.

(5) When inserting and removing EPROMS/PROMS from PC boards, use a chip removal tool similar to the one shown in the figure following. Remember, all work should be performed on a properly grounded surface by a properly-grounded person.



**Click here to return to Table of Contents**

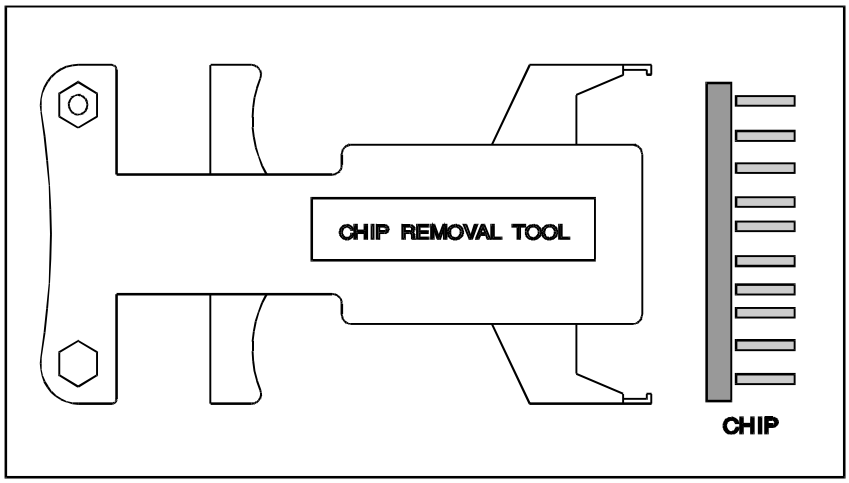


Typical Chip Removal Tool

(6) It is important to note when inserting EPROMS/PROMS, that the index notch on the PROM must be matched with the index notch on the socket. Before pushing the chip into the socket, make sure all the pins are aligned with the respective socket-holes. Take special care not to crush any of the pins as this could destroy the chip.

(7) Power the system down before removing or inserting comb connectors/plugs or removing and reinstalling PC boards or ESD-sensitive components from card files or mounting hardware. Follow the power-down procedure applicable to the system being serviced.

(8) Handle all defective boards or components with the same care as new components. This helps eliminate damage caused by mishandling. Do not strip used PC boards for parts. Ship defective boards promptly to Bristol Babcock in a static-shielding bag placed *inside* static-shielding foam and a box to avoid damage during shipment.



**Click here to return to Table of Contents**

## *CAUTION*

***Don't place ESD-sensitive components and paperwork in the same bag.***

***The static caused by sliding the paper into the bag could develop a charge and damage the component(s).***

(9) Include a note, which describes the malfunction, in a *separate* bag along with each component being shipped. The repair facility will service the component and promptly return it to the field.

## 3. Protecting ESD-Sensitive Components

(1) As stated previously, it is recommended that an electrically-conductive anti-static field kit be kept on any site where ESD-sensitive components are handled. A recommended ESD-protective workplace arrangement is shown on page 7. The anti-static safety kit serves to protect the equipment as well as the worker. As a safety feature, a resistor (usually of the one-megohm, 1/2-watt, current-limiting type) has been installed in the molded caps of the wrist strap cord and the ground cord. This resistor limits current should a worker accidently come in contact with a power source. Do not remove the molded caps from grounded cords. If a cord is damaged, replace it immediately.

(2) Be sure to position the work surface so that it does **not** touch grounded conductive objects. The protective resistor is there to limit the current which can flow through the strap. When the work surface touches a grounded conductive object, a short is created which draws the current flow and defeats the purpose of the current-limiting resistor.

(3) Check resistivity of wrist strap periodically using a commercially-available system tester similar to the one shown in the figure below:

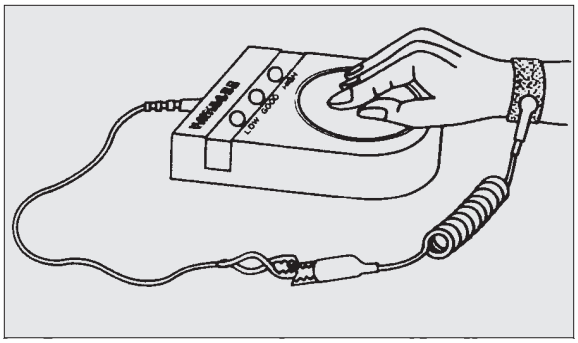




**Click here to return to Table of Contents**

**Note**: If a system checker is not available, use an ohmmeter connected to the cable ends to measure its resistance. The ohmmeter reading should be **1 megohm +/- 15%**. Be sure that the calibration date of the ohmmeter has not expired. If the ohmmeter reading exceeds **1 megohm by +/- 15%**, replace the ground cord with a new one.

## 4. Static-safe Field Procedure

(1) On reaching the work location, unfold and lay out the work surface on a convenient surface (table or floor). Omit this step if the table or floor has a built-in ESD-safe work surface.

(2) Attach the ground cord to the work surface via the snap fasteners and attach the other end of the ground cord to a reliable ground using an alligator clip.

(3) Note which boards or components are to be inserted or replaced.

(4) Power-down the system following the recommended power-down procedure.

(5) Slip on a known-good wristband, which should fit snugly; an extremely loose fit is not desirable.

(6) Snap the ground cord to the wristband. Attach the other end of the ground cord to a reliable ground using the alligator clip.



**Click here to return to Table of Contents**

(7) The components can now be handled following the general rules as described in the instruction manual for the component.

(8) Place the component in a static-shielding bag before the ground cord is disconnected. This assures protection from electrostatic charge in case the work surface is located beyond the reach of the extended ground cord.

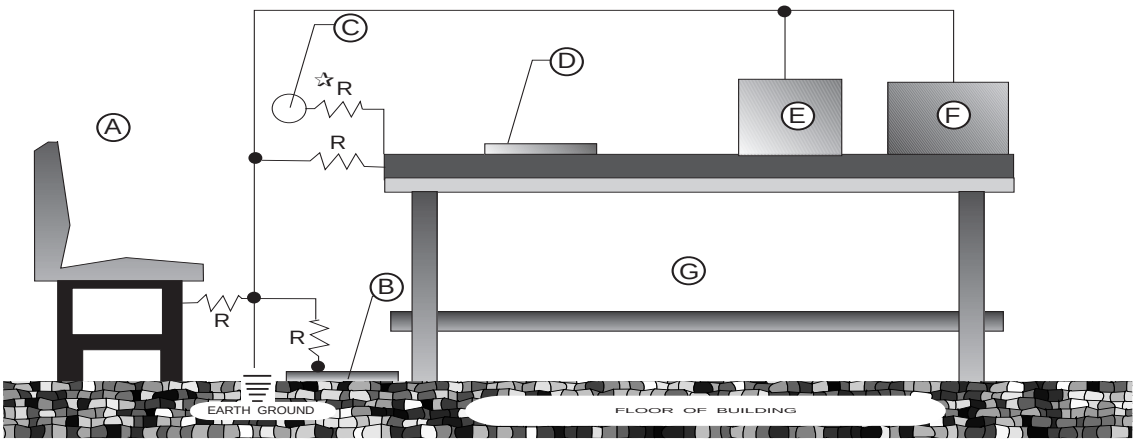


**LEGEND**

A - Chair with ground (optional)

B - ESD protective floor mat (optional)

C - Wrist strap

D - ESD protective trays, etc.

E - Ionizer

F - Other electrical equipment

G - Workbench with ESD protective table top

☆NOTE: ALL RESISTORS 1M Ω +/-10% 1/2W



Click here to return to Table of Contents

(9) If a component is to undergo on-site testing, it may be safely placed on the grounded work surface for that purpose.

(10) After all component work is accomplished, remove the wrist straps and ground wire and place in the pouch of the work surface for future use.

## 5. Cleaning And Lubricating

The following procedure should be performed periodically for all PC boards and when a PC board is being replaced.

### *CAUTION*

***Many PC board connectors are covered with a very fine gold-plate.***

***Do not use any abrasive cleaning substance or object such as a pencil eraser to clean connectors.***

***Use only the approved cleaner/lubricants specified in the procedure following.***

### WARNING

**Aerosol cans and products are extremely combustible.**

**Contact with a live circuit, or extreme heat can cause an explosion.**

**Turn OFF all power and find an isolated, and ventilated area to use any aerosol products specified in this procedure.**

(1) Turn the main line power **OFF**. Blow or vacuum out the component. This should remove potential sources of dust or dirt contamination during the remainder of this procedure.



**Click here to return to Table of Contents**

(2) Clean PC board connectors as follows:

a. Review the static-safe field procedure detailed earlier.

b. Following the ESD-sensitive component handling procedures, remove the connectors from the boards and remove the PC boards from their holders.

c. Use cleaner to remove excessive dust build-up from comb connectors and other connectors. This cleaner is especially useful for removing dust.

d. Liberally spray all PC board contacts with Inhibitor. The inhibitor:

- Provides a long lasting lubricant and leaves a protective film to guard against corrosion
- Improves performance and reliability
- Extends the life of the contacts
- Is nonconductive, and is safe for use on most plastics

e. Clean the comb contacts using a **lint-free** wiping cloth.

f. Lightly mist all comb contacts again with Inhibitor.

**NOTE: Do not use so much Inhibitor that it drips.**

g. Repeat the above procedure for the other PC boards from the device.

(3) Cleaning PC edge connectors

a. Use cleaner to remove excessive dust build-up from connectors. This cleaner is especially useful for removing dust.

b. Liberally spray the outboard connector with Inhibitor.

c. Lightly brush the outboard connector with a soft, non-metallic, bristle brush such as a toothbrush.



**Click here to return to Table of Contents**

d. Spray the connector liberally to flush out any contaminants.

e. Remove any excess spray by shaking the connector or wiping with either a toothbrush, or a **lint-free** wiping cloth.

## 6. Completion

(1) Replace any parts that were removed.

(2) Make sure that the component cover is secure.

(3) Return the system to **normal** operation.

(4) Check that the component operates normally.



**Click here to return to Table of Contents**

Click here to return to Table of Contents

# Bristol ControlWave Express (Remote Terminal Unit)

**Emerson Process Management**
**Remote Automation Solutions**
1100 Buckingham Street
Watertown, CT 06795
Phone: +1 (860) 945-2262
Fax: +1 (860) 945-2525
www.EmersonProcess.com/Remote

**Emerson Process Management**
**Remote Automation Solutions**
6338 Viscount Rd.
Mississauga, Ont. L4V 1H3
Canada
Phone: 905-362-0880
Fax: 905-362-0882
www.EmersonProcess.com/Remote

**Emerson Process Management Mexico**
Viveros de la Colina No 238
Col. Viveros de la Loma
Tlalnepantla, Mexico 54080
T +52 (55) 57.28.08.00
F +52 (55) 53.66.26.18
www.EmersonProcess.com/Remote

**Emerson Process Management, Ltd.**
**Remote Automation Solutions**
Blackpole Road
Worcester, WR3 8YB
United Kingdom
Phone: +44 1905 856950
Fax: +44 1905 856969
www.EmersonProcess.com/Remote

**Emerson Process Management AP Pte Ltd.**
**Remote Automation Solutions Division**
1 Pandan Crescent
Singapore 128461
Phone: +65-6770-8584
Fax: +65-6891-7841
www.EmersonProcess.com/Remote

## NOTICE



EMERSON
Process Management

**Click here to return to Table of Contents**