PG00-00031-2E

3 5

Product Guide

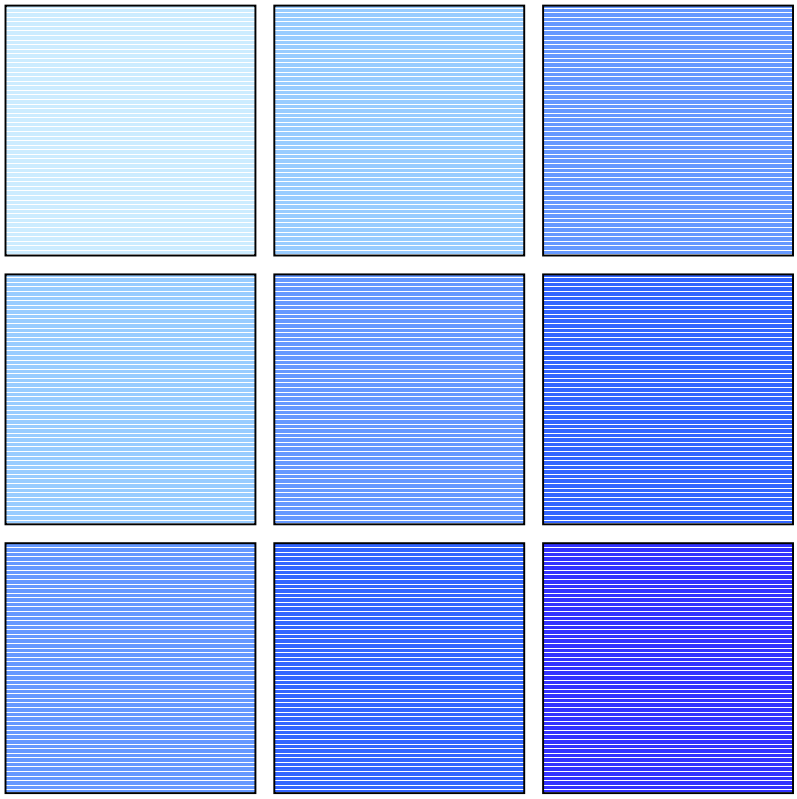

FUJITSU

Product Line-up

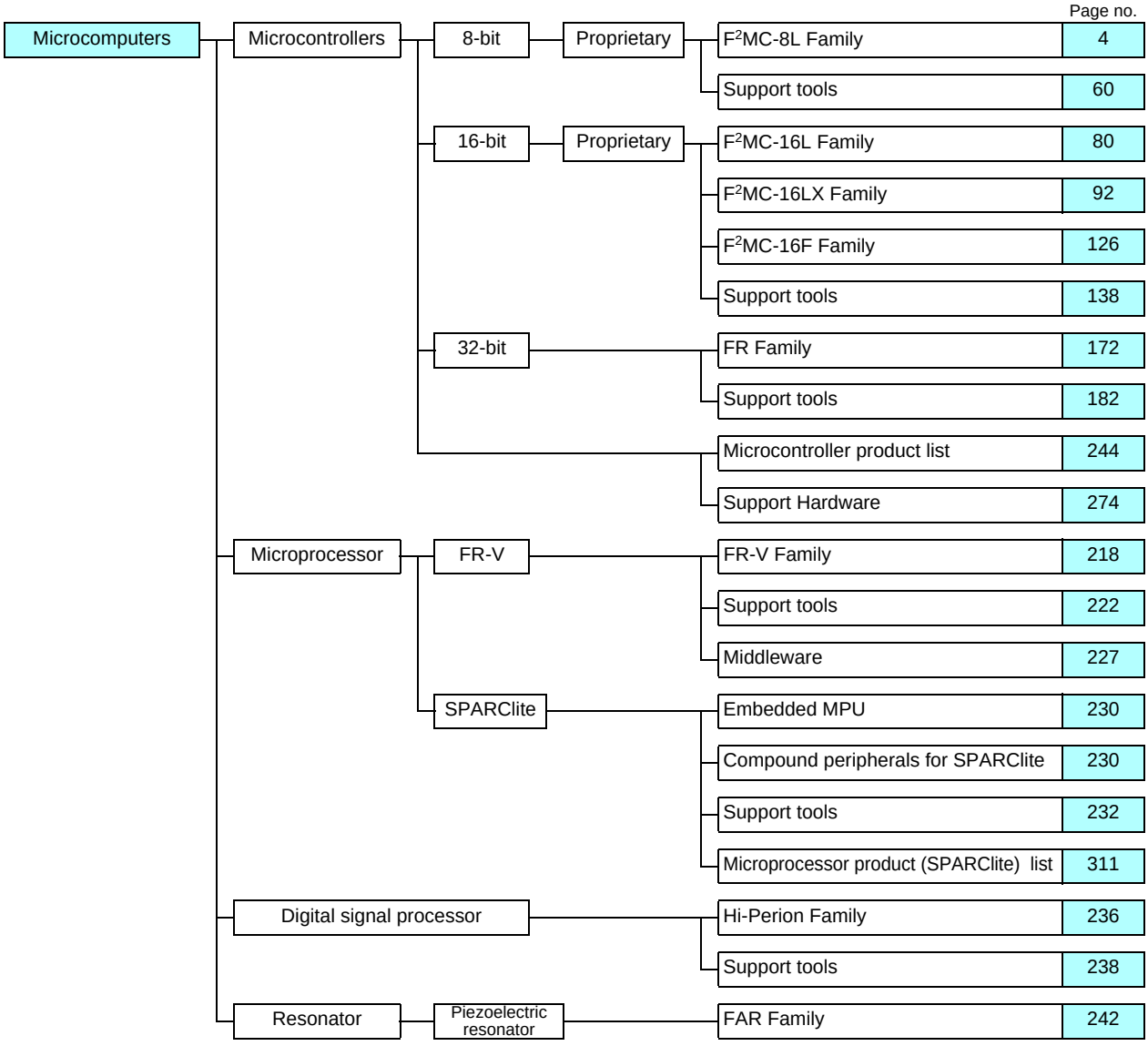

Microcomputer Migration Path

TRADEMARKS:

- SPARC is a registered trademark of SPARC International, Inc. in the United States.
  SPARC is based on technology developed by Sun Microsystems, Inc.
  SPARClite is a trademark of SPARC International, Inc. in the United States.
  Fujitsu Microelectronics, Inc. has been granted permission to use the trademark.
- MS-DOS and MS-Windows are trademarks of Microsoft Corporation of the USA.
- PC/AT and PC-DOS are trademarks of International Business Machines Corporation of USA.
- Sun OS/Solaris and Sun 4 are trademarks of Sun Microsystems Corporation of USA.
- HP-UX is a trademark of Hewlett-Packard.
- IE Bus is trademark of NEC Corporation.

THE I²C LICENSE:

Purchase of FUJITU Ltd. I²C components conveys a license under the Philips I²C Patent Right to use these components in an I²C system, provided that the system conforms to the I²C Standard Specification as defined by Philips.

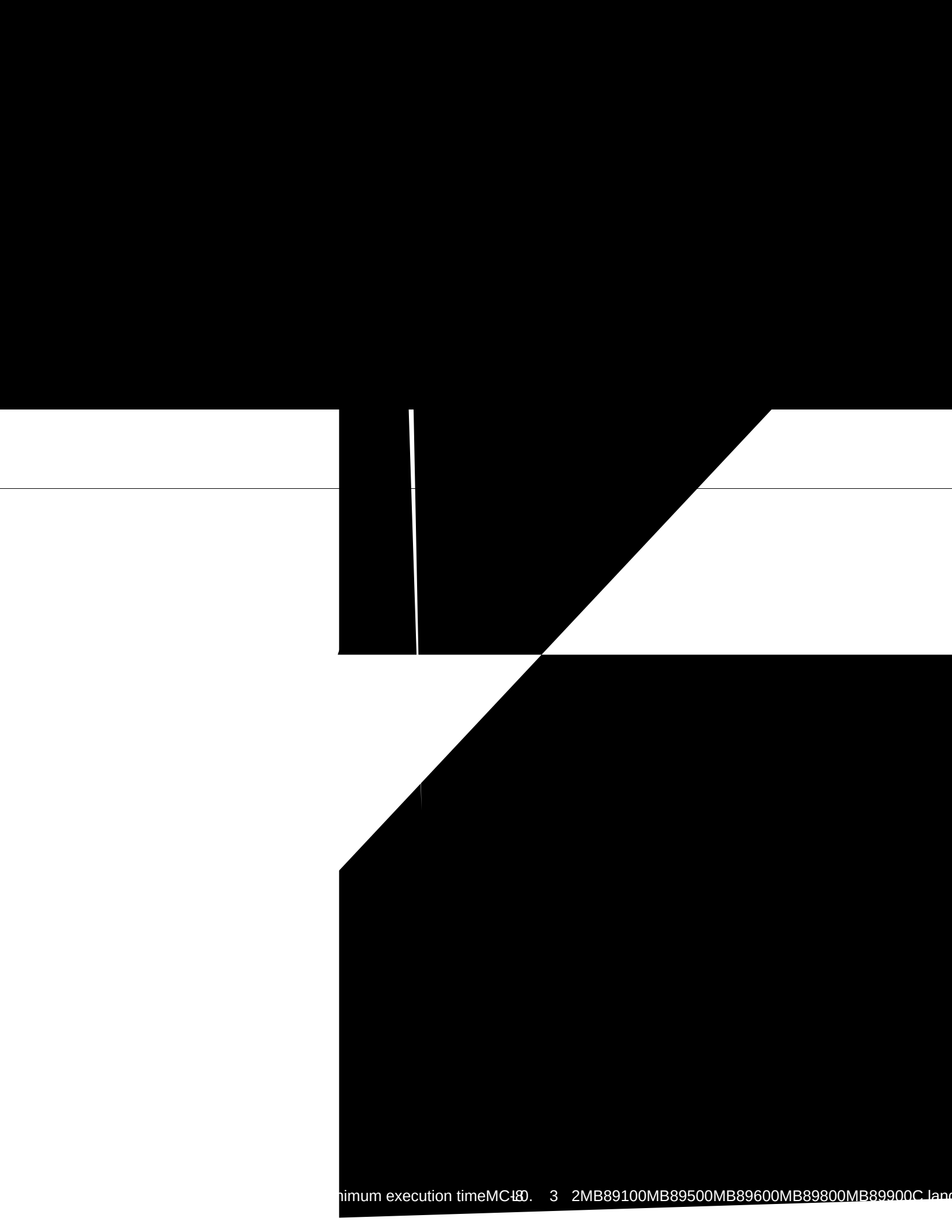

32-bit Microprocessor

- FR-V Family

  Fujitsu's original processor whose media processing performance is enhanced by adding VLIW architecture and media instruction, etc.
- SPARClite

  A 32-bit RISC microprocessor aimed at embedded applications and based on the SPARC architecture

32-bit Microcontrollers

- FR (FR30 Series, FR50 Series, FR60 Series)

  A proprietary Fujitsu product developed for embedded applications

  A microcontroller with a 32-bit RISC architecture

16-bit Microcontrollers

- F²MC-16L (MB90600 series)

  Features: Low voltage (+2.7V to +5.5V), low price

  Applications: For applications including information consumer products, communications, and OA
- F²MC-16LX (MB90500 series)

  Features: Supports high-performance, low-power consumption, large memory space

  Applications: For applications including consumer information products and telecommunications instruments
- F²MC-16F (MB90200 series)

  Features: Provides high-speed signed instructions and C language real time operating system instructions

  Applications: For high-speed real time control

8-bit Microcontrollers

- F²MC-8L (MB89100 series, MB89500 series, MB89600 series, MB89800 series, and MB89900 series)

  Features: Low voltage (+2.2V to +6.0V), low-power consumption

  Applications: 8-bit microcontrollers for consumer markets

8-bit Proprietary F²MC-8L Family Features

F²MC-8L Family Features

- Minimum execution time: 0.32µs/12.5MHz, 0.4 µs/10MHz, 0.95 µs/4.2 MHz
- Operating voltage: +2.2 V to +6.0 V, operating frequency: 1 MHz to 10 MHz
- Software-switchable instruction cycle (4 speeds) provides low voltage, low-power comsumption operation (clock gear function)
- Backup voltage in stop mode (voltage required to maintain RAM data): Min. +1.5 V
- Bitwise selectable pull-up resistors for each I/O port
- One-time PROM products support (by programming data) the same option settings as mask ROM products (the option settings are mask options for some products).
- Memory space: Max. 64 Kbytes

Memory space

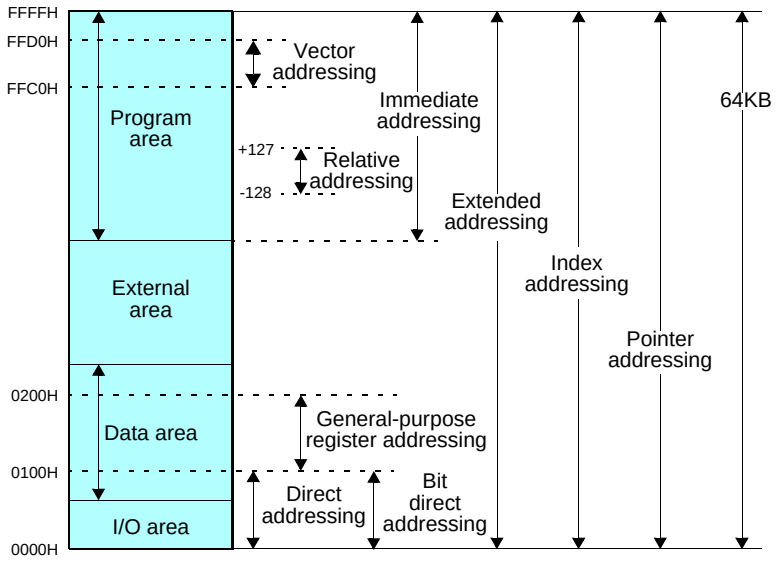

- Memory mapped I/O
- Registers
  Dedicated registers
  General-purpose registers: 8 × 8-bit per bank, Max. 32 banks

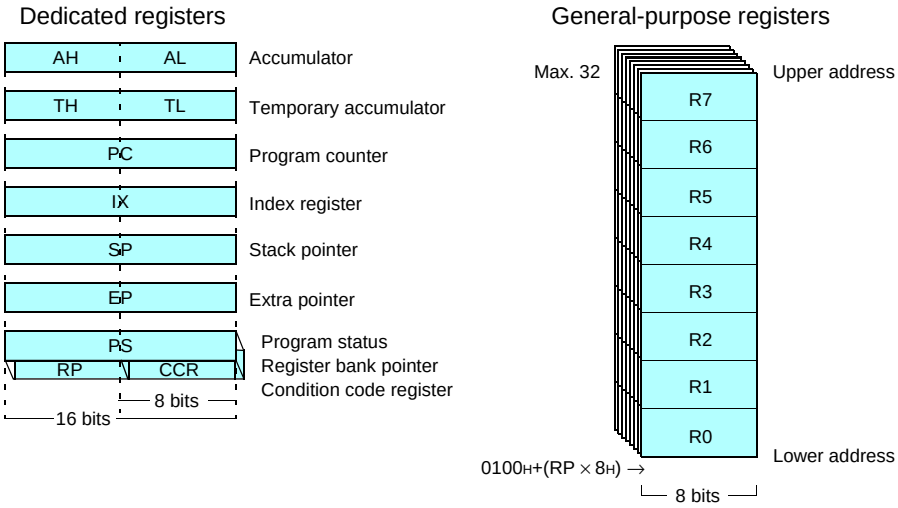

- Enhanced interrupt function (prioritized multiple interrupts)
- Powerful operation and transfer functions
  Multiplication and division instructions: 8-bit × 8-bit = 16-bit (7.6µs/10MHz), 16-bit ÷ 8-bit = 8-bit (8.4µs/10MHz)
  Data transfer: Max. 16-bit
- Number of instructions: 136

^{2}M C

M B 8 9 0 5 1
Page
ROM 32 KB 58

M B 8 9 5 8

M B 8 9 4 8
M P M B a B 8 g 8 9 e 9 8 5 2
A O M 1 K B 38
124-elements

8-bit Proprietary F²MC-8L Family Standard Products

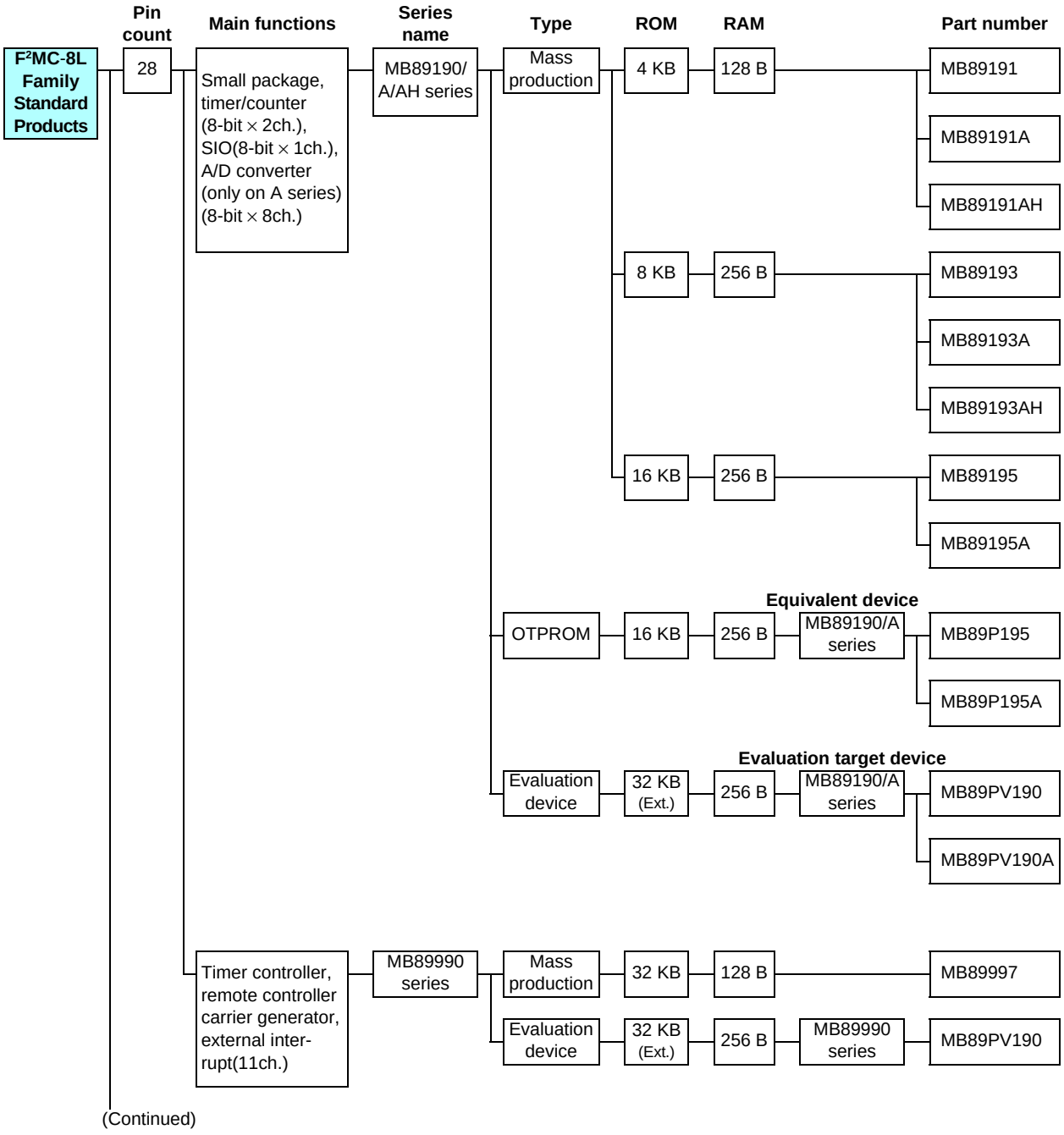

F²MC-8L Family Standard Products

MB89190/190A/190AH Series

Standard products (small package)

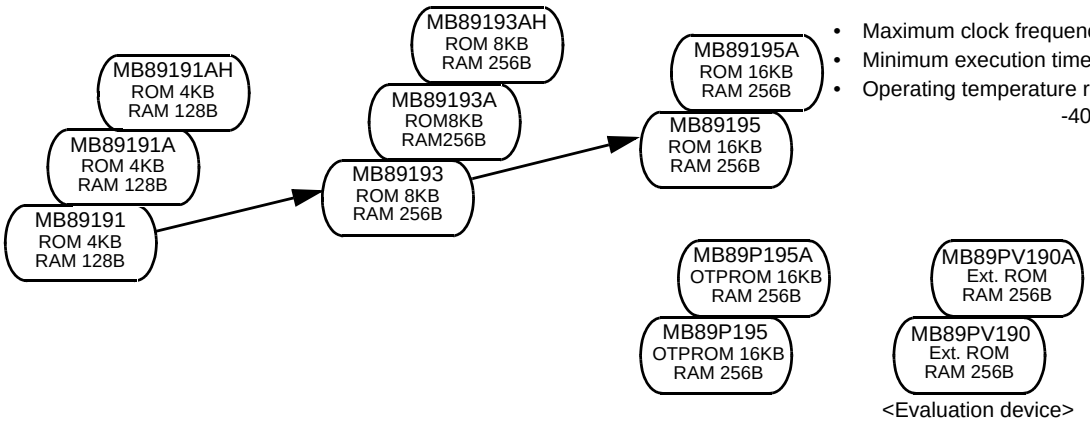

- Maximum clock frequency:4.2 MHz
- Minimum execution time:0.95 µs
- Operating temperature range: -40°C to +85°C

Part number	Operating power supply voltage* (V)	Package				Functions
		SH-DIP	DIP	SOP	MQFP	
MB89191	+2.2 to +6.0	28P	28P	28P	–	I/O ports: 22 (20 on MB89190A series) Timebase timer (WDT): 20-bit × 1ch. Timer/counter: 8-bit × 2ch. (can operate as 16-bit × 1ch.) A/D converter: 8-bit × 8ch. (MB89190A series only) Remote controller carrier generator SIO : 8-bit × 1ch. Buzzer output Interrupts: 5 internal, 11 external Low-power consumption (standby functions)modes: Sleep, stop
MB89191A		28P	28P	28P	–	
MB89191AH		28P	28P	28P	–	
MB89193		28P	28P	28P	–	
MB89193A		28P	28P	28P	–	
MB89193AH		28P	28P	28P	–	
MB89195		28P	28P	28P	–	
MB89195A		28P	28P	28P	–	
MB89P195	+2.7 to +6.0	–	28P	28P	–	
MB89P195A		–	28P	28P	–	
MB89PV190		–	–	–	48C	
MB89PV190A		–	–	–	48C	

*: A/D = 3.5V to 6.0V
Packages: P - plastic, C - ceramic

MB89990 Series

Standard products (remote controller, etc.)

- Maximum clock frequency:4.2 MHz
- Minimum execution time:0.95 µs
- Operating temperature range:-40°C to +85°C

Part number	Operating power supply voltage(V)	Package			Functions
		SH-DIP	SOP	MQFP	
MB89997	+2.2 to +6.0	28P	28P	–	I/O ports: 22 Timebase timer (WDT): 21-bit × 1ch. Timer/counter: 1ch. Remote controller carrier generator Interrupts: 3 internal,11 external Low-power consumption (standby functions)modes: Sleep, stop
MB89PV190	+2.7 to +6.0	–	–	48C	

Packages: P - plastic, C - ceramic

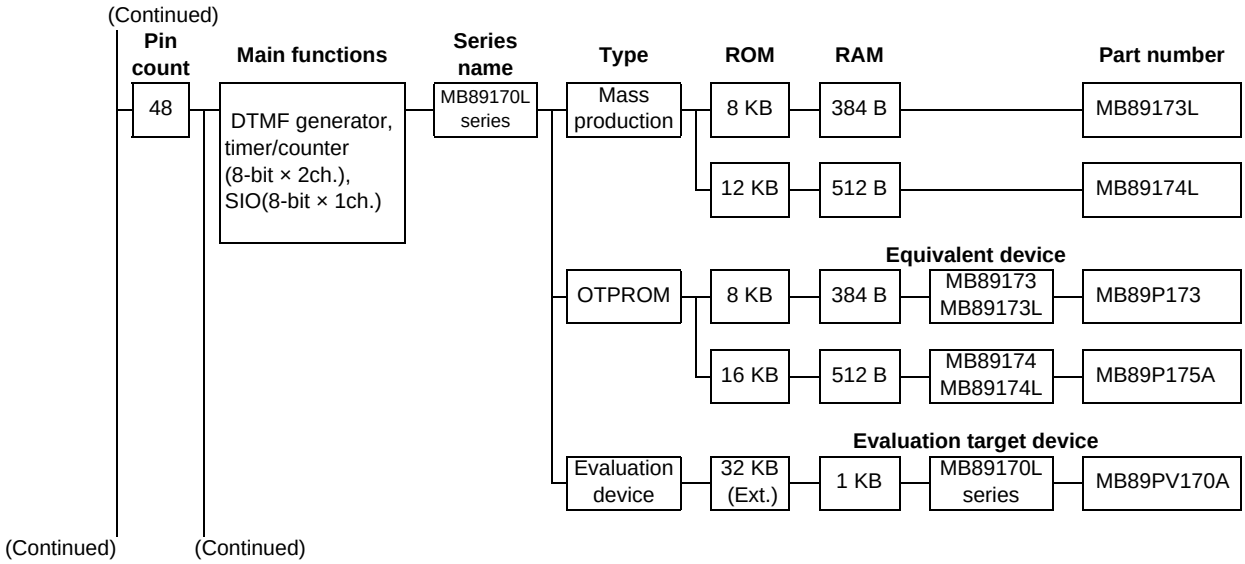
(Continued)
Pin count
Main functions
Series name
Type
ROM
RAM
Part number
48
DTMF generator, timer/counter (8-bit × 2ch.), SIO(8-bit × 1ch.)
MB89170L series
Mass production
8 KB
384 B
MB89173L
12 KB
512 B
MB89174L
Equivalent device
OTPROM
8 KB
384 B
MB89173
MB89173L
MB89P173
16 KB
512 B
MB89174
MB89174L
MB89P175A
Evaluation target device
Evaluation device
32 KB (Ext.)
1 KB
MB89170L series
MB89PV170A
(Continued)
(Continued)

MB89170L Series

Standard products (low cost)

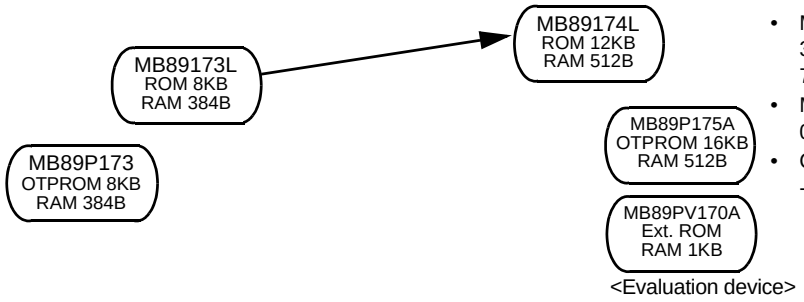

- Maximum clock frequency:
  3.58 MHz: MB89P173
  7.16 MHz: MB89173L/174L/P175A/PV170A
- Minimum execution time:
  0.6 µs to 17.6 µs
- Operating temperature range:
  -40°C to +85°C

Part number	Operating power supply voltage (V)	Package		Functions
		QFP	MQFP	
MB89173L	+2.2 to +6.0	48P	–	I/O ports: 37 Timebase timer (WDT): 21-bit × 1ch. Timer/counter: 8-bit × 2ch. (can also operate as 16-bit × 1ch.) SIO : 8-bit × 1ch. Clock prescaler: 15-bit Interrupts: 4 internal,11 external Low-power consumption (standby functions) modes:Sleep,stop
MB89174L		48P	–	
MB89P173	+2.7 to +6.0	48P	–	
MB89P175A		48P	–	
MB89PV170A		–	48C	

Packages: P - plastic, C - ceramic

(Continued)

(Continued)

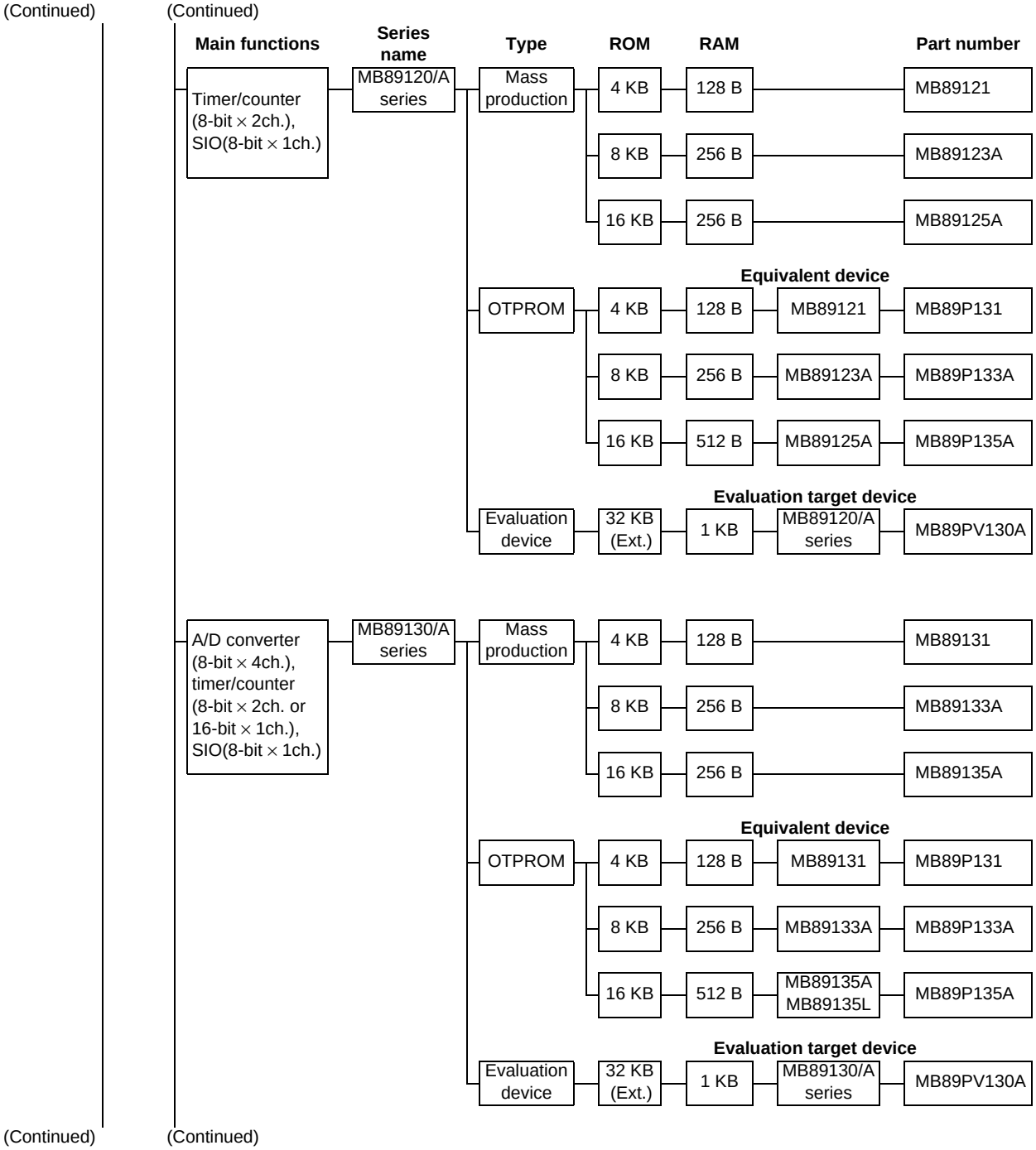

(Continued)

(Continued)

MB89120/120A Series

Standard products (low cost)

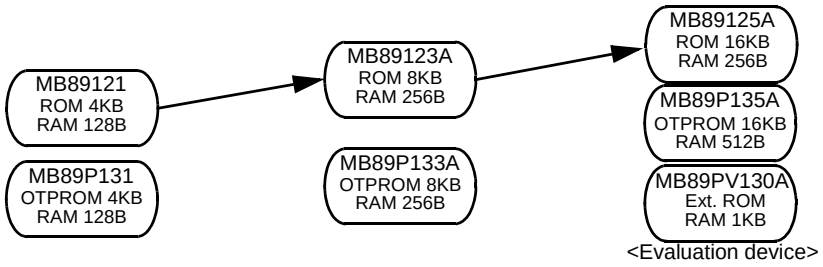

- Maximum clock frequency: 4.2 MHz (32.768 kHz)
- Minimum execution time: 0.95 µs to 1.53 µs (61 µs)
- Operating temperature range: -40°C to +85°C

Part number	Operating power supply voltage (V)	Package		Functions
		QFP	MQFP	
MB89121	+2.2 to +6.0	48P	–	I/O ports: 36 Timebase timer (WDT): 21-bit × 1ch. Timer/counter: 8-bit × 2ch. (can operate as 16-bit × 1ch.) Remote control carrier generator (on MB89123A/125A/P133A, not included on MB89121/P131) SIO : 8-bit × 1ch. Clock prescaler: 15-bit Buzzer output Interrupts: 4 internal, 3 external (MB89121/P131) 4 internal, 11 external (MB89123A/125A/ P133A) Low-power consumption (standby functions)modes:Sleep, watch, stop, sub
MB89123A		48P	–	
MB89125A		48P	–	
MB89P131	+2.7 to +6.0	48P	–	
MB89P133A		48P	–	
MB89P135A		48P	–	
MB89PV130A		–	48C	

Packages: P - plastic, C - ceramic

MB89130/130A Series

Standard products (built-in A/D converter, low cost)

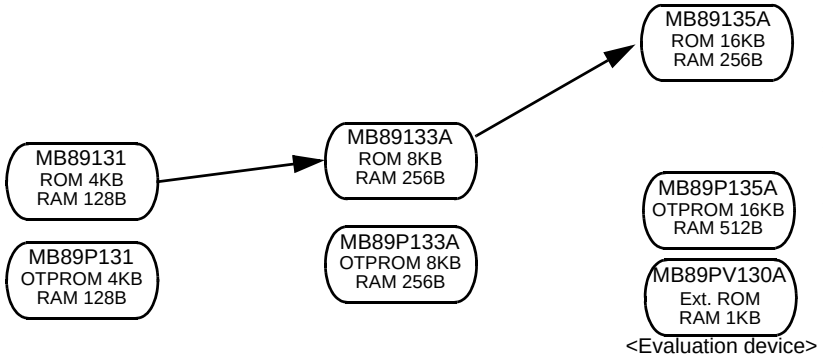

- Maximum clock frequency: 4.2 MHz (32.768 kHz)
- Minimum execution time: 0.95 µs to 1.53 µs(61 µs)
- Operating temperature range: -40°C to +85°C

Part number	Operating power supply voltage* (V)	Package			Functions
		SH-DIP	QFP	MQFP	
MB89131	+2.2 to +6.0	–	48P	–	I/O ports: 36 Timebase timer (WDT): 21-bit × 1ch. Timer/counter: 8-bit × 2ch. (can operate as 16-bit × 1ch.) A/D converter: 8-bit × 4ch. Remote control carrier generator (on MB89133A/135A/P133A, not included on MB89131/P131) SIO : 8-bit × 1ch. Clock prescaler: 15-bit Buzzer output Interrupts: 5 internal, 3 external (MB89131/P131) 5 internal, 11 external (MB89133A/135A/P133A) Low-power consumption (standby functions)modes:Sleep, watch, stop, sub
MB89133A		48P	48P	–	
MB89135A		–	48P	–	
MB89P131	+2.7 to +6.0	–	48P	–	
MB89P133A		48P	48P	–	
MB89P135A		–	48P	–	
MB89PV130A		–	–	48C	

*: A/D = 3.5V to 6.0V
Packages: P - plastic, C - ceramic

(Continued)

(Continued)

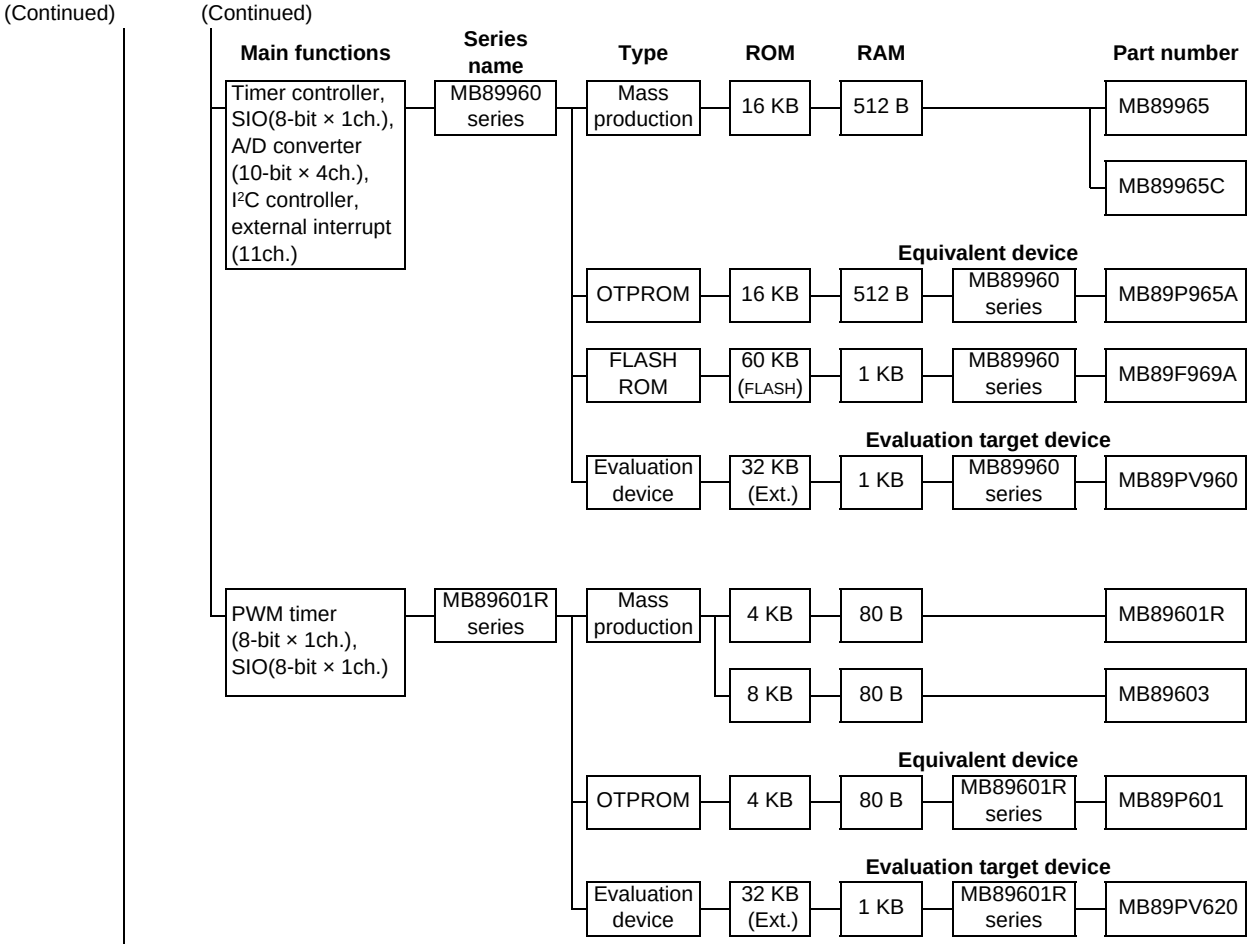

(Continued)

MB89960 Series

Standard products (built-in A/D converter, low cost)

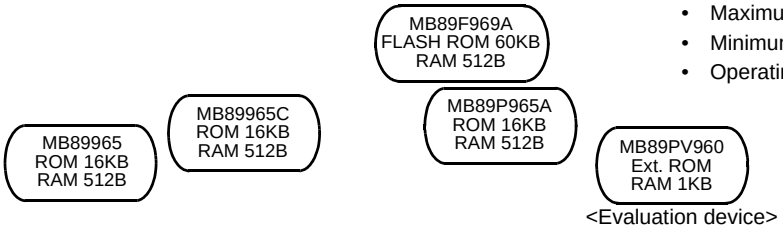

<Evaluation device>

- Maximum clock frequency: 10 MHz (32.768kHz)
- Minimum execution time: 0.4 µs (61µs)
- Operating temperature range:-40°C to +85°C

Part number	Operating power supply voltage (V)	Package			Functions
		LQFP	QFP	MQFP	
MB89965	+3.5 to +5.5	48P (□ 7 × 7mm)	48P (□ 10 × 10mm, □ 12 × 12mm)	–	I/O ports: 35 Timebase timer (WDT): 21-bit × 1ch. Timer/counter: 8-bit × 2ch. SIO : 8-bit × 1ch. A/D converter: 10-bit × 4ch. I²C bus interface: (built into MB89965C/P965A/ F969A /PV960, equivalent to SMBus Rev 1.0) Interrupts: 7 internal, 11 external Low-power consumption (standby functions) modes : Sleep,watch,stop,sub
MB89965C		48P (□ 7 × 7mm)	48P (□ 10 × 10mm, □ 12 × 12mm)	–	
MB89P965A	+3.5 to +5.5	48P (□ 7 × 7mm)	48P (□ 10 × 10mm, □ 12 × 12mm)	–	
MB89F969A		64P (□ 12 × 12mm)	–	–	
MB89PV960		–	–	48C	

Packages: P - plastic, C - ceramic

MB89601R Series

Standard products (small package)

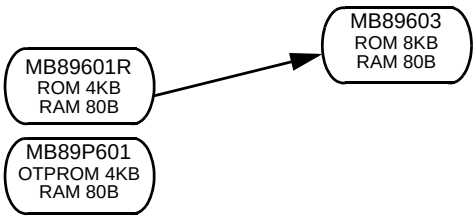

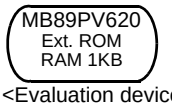

<Evaluation device>

- Maximum clock frequency: 10 MHz
- Minimum execution time: 0.4 µs
- Operating temperature range: -40°C to +85°C

Part number	Operating power supply voltage (V)	Package			Functions
		LQFP	MDIP	MQFP	
MB89601R	+2.2 to +6.0	48P	–	–	I/O ports: 33 Timebase timer (WDT): 20-bit × 1ch. PWM timer: 8-bit × 1ch. SIO : 8-bit × 1ch. Interrupts: 3 internal, 1 external Low-power consumption (standby functions)modes: Sleep,stop
MB89603		48P	–	–	
MB89P601	+2.7 to +6.0	48P	–	–	
MB89PV620		–	64C	64C	

Packages: P - plastic, C - ceramic

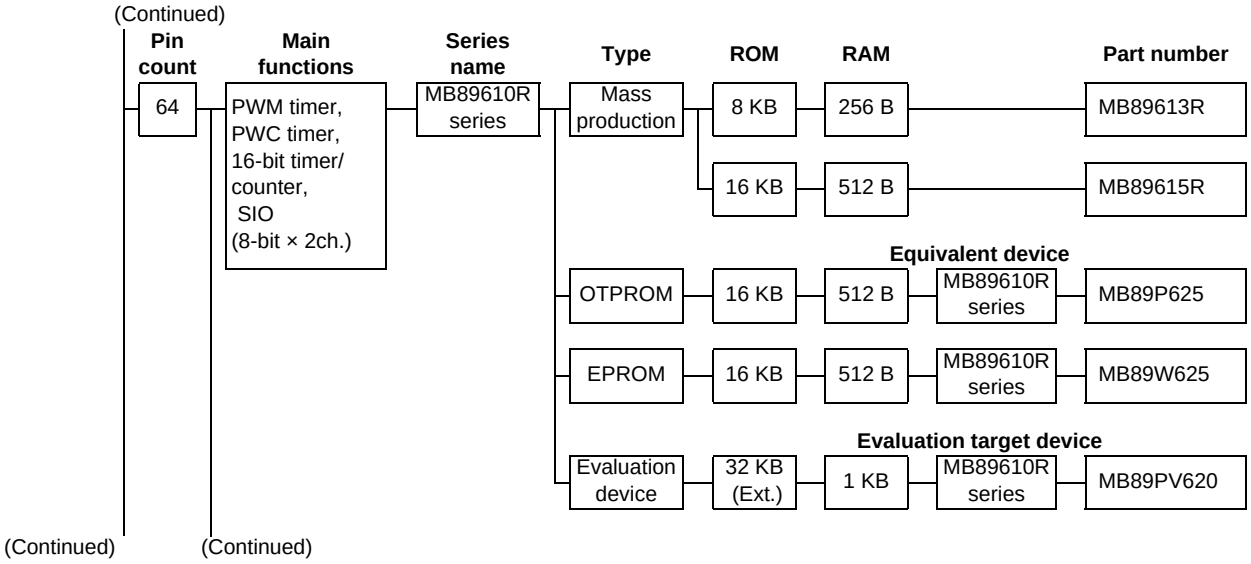
(Continued)
Pin count
Main functions
Series name
Type
ROM
RAM
Part number
64
PWM timer, PWC timer, 16-bit timer/ counter, SIO (8-bit × 2ch.)
MB89610R series
Mass production
8 KB
256 B
MB89613R
16 KB
512 B
MB89615R
Equivalent device
OTPROM
16 KB
512 B
MB89610R series
MB89P625
EPROM
16 KB
512 B
MB89610R series
MB89W625
Evaluation target device
Evaluation device
32 KB (Ext.)
1 KB
MB89610R series
MB89PV620
(Continued)
(Continued)

MB89610R Series

Standard products (general-purpose type)

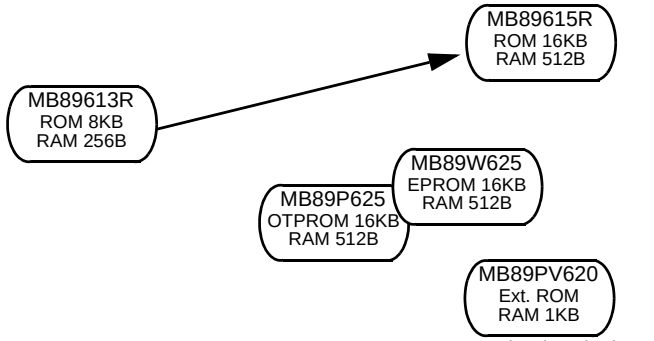

<Evaluation device>

- Maximum clock frequency: 10 MHz
- Minimum execution time: 0.4 µs
- Operating temperature range: -40°C to +85°C

Part number	Operating power supply voltage (V)	Package					Functions
		DIP	QFP	LQFP	MDIP	MQFP	
MB89613R	+2.2 to +6.0	64P	64P	64P (0.5 mm pitch, 0.65mm pitch)	–	–	I/O ports: 53 Timebase timer (WDT): 20-bit × 1ch. Timer/counter: 16-bit × 1ch. PWM timer: 8-bit × 1ch. PWC timer: 8-bit × 1ch. SIO : 8-bit × 2ch. Buzzer output Interrupts: 6 internal, 4 external Low-power consumption (standby functions) modes: Sleep, stop
MB89615R		64P	64P		–	–	
MB89P625	+2.7 to +6.0	64P	64P	64P (0.65 mm pitch)	–	–	
MB89W625		64C	–	–	–	–	
MB89PV620		–	–	–	64C	64C	

Packages: P - plastic, C - ceramic

(Continued)

(Continued)

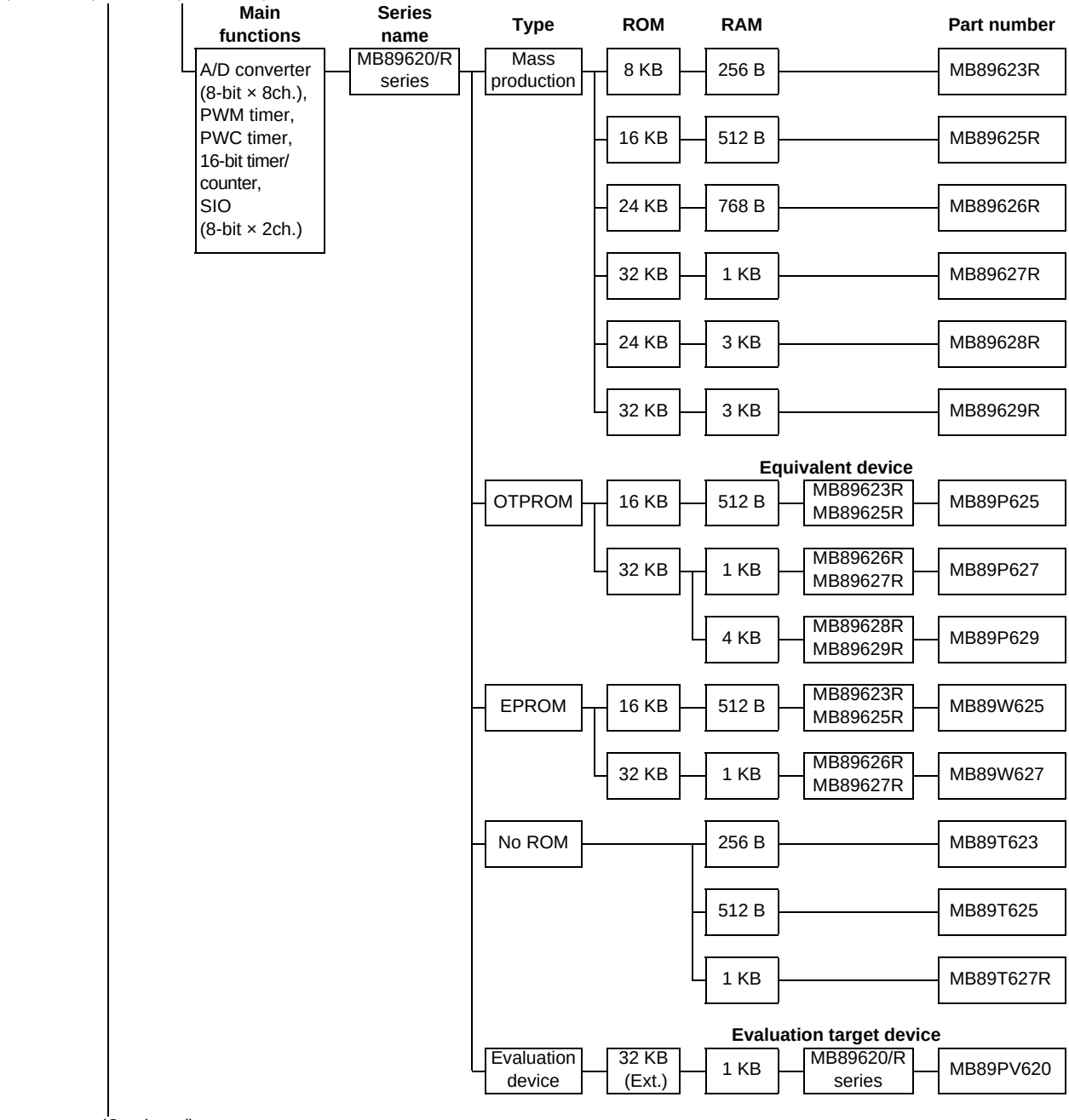

(Continued)

M

S

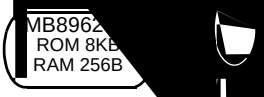

Part numbe	
MB89623R	
MB89625R	
MB89626R	
MB89627R	
MB89628R	
MB89629R	
MB89T623	
MB89T62	
MB89T62	
MB89P6	
MB89P6	+2.
MB89P	
MB89V	
MB89	
MB89	

*: 0V
P stic

(Continued)

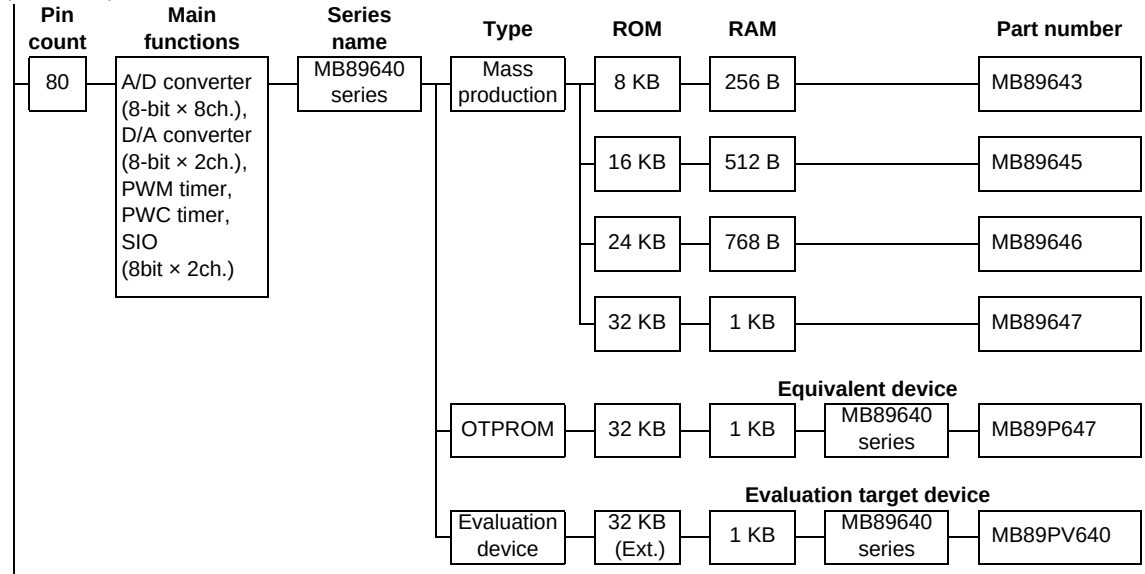

(Continued)

MB89640 Series

Standard products (built-in A/D, D/A converter)

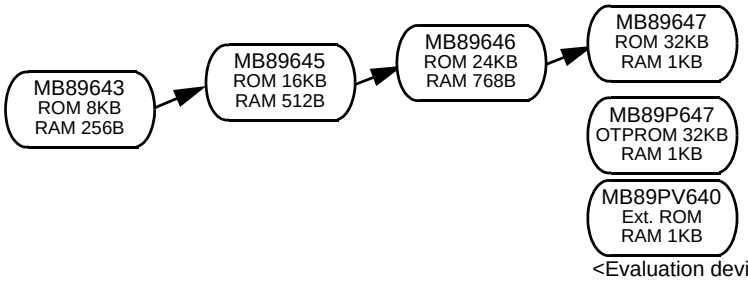

- Maximum clock frequency: 10 MHz (32.768 kHz)
- Minimum execution time: 0.4 µs to 6.4 µs (61 µs)
- Operating temperature range: -40°C to +85°C

Part number	Operating power supply voltage* (V)	Package			Functions
		QFP	LQFP	MQFP	
MB89643	+2.2 to +6.0	80P	80P	–	I/O ports: 65 Timebase timer (WDT): 21-bit × 1ch. Timer/counter: 16-bit × 1ch. PWM timer: 8-bit × 2ch. PWC timer: 8-bit × 1ch. A/D converter: 8-bit × 8ch. D/A converter: 8-bit × 2ch. SIO : 8-bit × 2ch. Clock prescaler: 15-bit Buzzer output function Interrupts: 9 internal, 9 external Low-power consumption (standby functions) modes: Sleep, watch,stop,sub
MB89645		80P	80P	–	
MB89646		80P	80P	–	
MB89647		80P	80P	–	
MB89P647	+2.7 to +6.0	80P	80P	–	
MB89PV640		–	–	80C	

*: A/D = D/A = 3.5V to 6.0V
Packages: P - plastic, C - ceramic

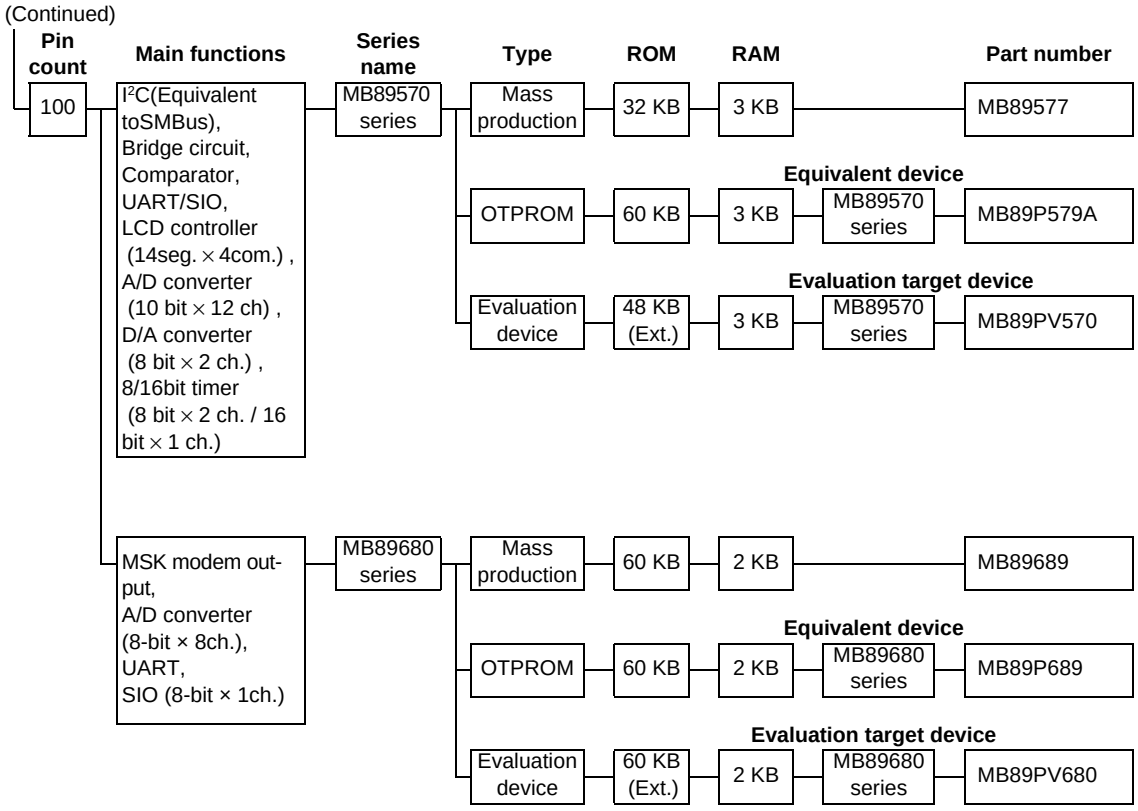
(Continued)
Pin count
Main functions
Series name
Type
ROM
RAM
Part number
100
I²C(Equivalent toSMBus), Bridge circuit, Comparator, UART/SIO, LCD controller (14seg. × 4com.) , A/D converter (10 bit × 12 ch) , D/A converter (8 bit × 2 ch.) , 8/16bit timer (8 bit × 2 ch. / 16 bit × 1 ch.)
MB89570 series
Mass production
32 KB
3 KB
MB89577
Equivalent device
OTPROM
60 KB
3 KB
MB89570 series
MB89P579A
Evaluation target device
Evaluation device
48 KB (Ext.)
3 KB
MB89570 series
MB89PV570
MSK modem out-put, A/D converter (8-bit × 8ch.), UART, SIO (8-bit × 1ch.)
MB89680 series
Mass production
60 KB
2 KB
MB89689
Equivalent device
OTPROM
60 KB
2 KB
MB89680 series
MB89P689
Evaluation target device
Evaluation device
60 KB (Ext.)
2 KB
MB89680 series
MB89PV680

MB89570 Series

Standard products

<Evaluation device>

- Maximum clock frequency:10 MHz (32.768 kHz)
- Minimum execution time:0.40 µs
- Operating temperature range:-40°C to +85°C

Part number	Operating power supply voltage(V)	Package			Functions
		QFP	LQFP	MQFP	
MB89577	+2.7 to +3.7	100P	100P	–	I/O ports: 82 Timebase timer (WDT): 21-bit × 1ch. Timer/counter: 8-bit × 2ch. (can operate as 16-bit × 1ch.) 16 bit Timer/counter × 1ch. I²C(Equivalent toSMBus): 1ch. SIO/UART: 1ch. A/D converter: 10-bit × 12ch. D/A converter: 8-bit × 2ch. LCD controller: 56 elements, 10 to 14 segments, 2 to 4 common 7 × 8-bit LCD display RAM Comparator Interrupts: 4 external Low-power consumption (standby functions) modes: Sleep, watch,stop,sub
MB89P579A		100P	100P	–	
MB89PV570		–	–	100C	

Packages: P - plastic, C - ceramic

MB89680 Series

Standard products (100-pin, MSK modem output)

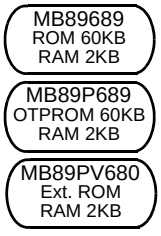

<Evaluation device>

- Maximum clock frequency:
  8 MHz (32.768 kHz)
- Minimum execution time:
  0.5 µs to 8.0 µs (61 µs)
- Operating temperature range:
  -40°C to +85°C

Part number	Operating power supply voltage* (V)	Package		Functions
		QFP	MQFP	
MB89689	+2.2 to +6.0	100P	–	I/O ports: 85 Timebase timer (WDT): 21-bit × 1ch. Timer/counter: 8-bit × 2ch. (can operate as 16-bit × 1ch.) PWM timer: 8-bit × 1ch. A/D converter: 8-bit × 8ch. SIO : 8-bit × 1ch. UART: 6-bit to 9-bit × 1ch. MSK software modem output: 1200 bps, 2400 bps MSK software modem timer: 1ch. (built-in noise reduction circuit) Clock prescaler: 15-bit Interrupts: 10 internal, 16 external Low-power consumption (standby functions) modes:Sleep, watch, stop, sub
MB89P689	+2.7 to +6.0	100P	–	
MB89PV680		–	100C	

*: A/D = 3.5V to 6.0V

Packages: P - plastic, C - ceramic

8-bit Proprietary F²MC-8L Family Internal UART Products

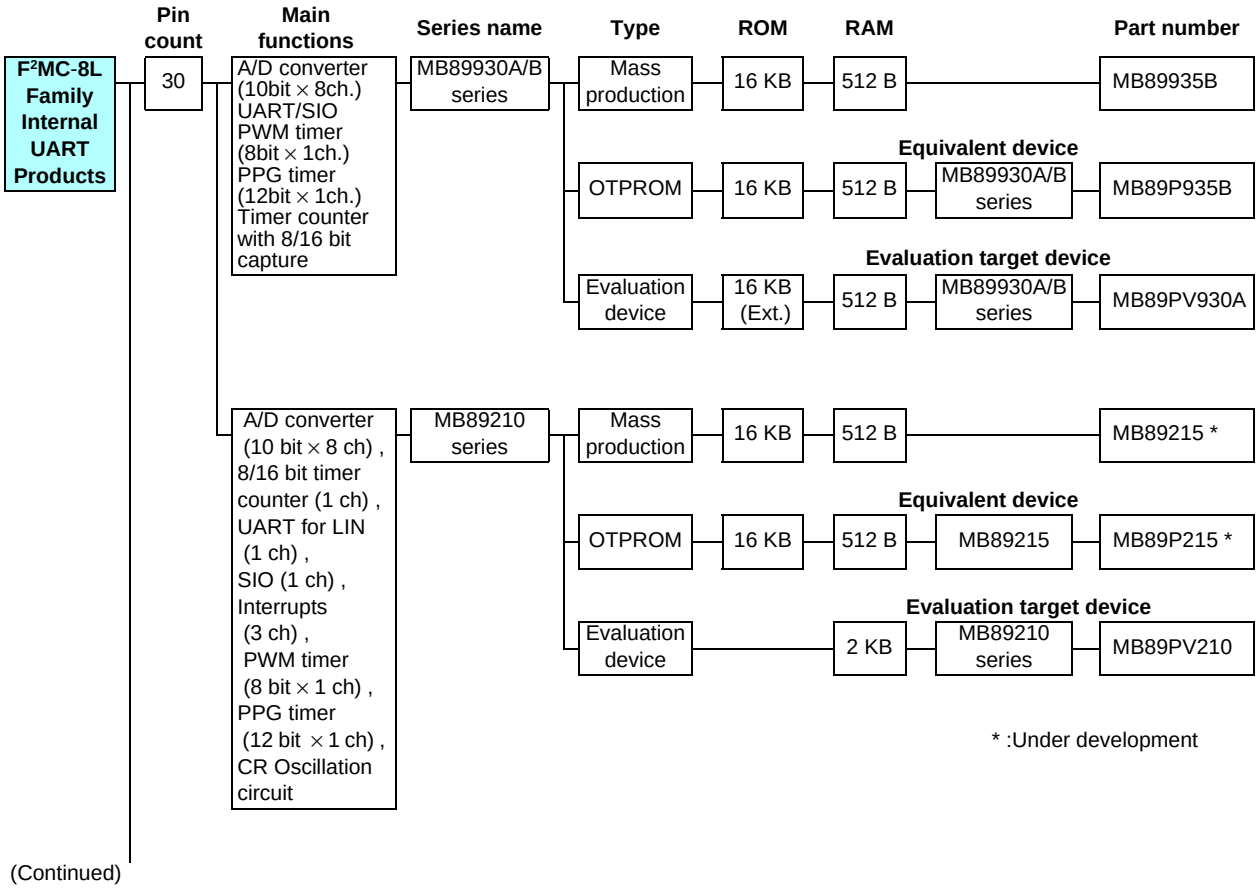

F²MC-8L Family UART Products

MB89930A/B Series

Standard products (built-in UART, compact type)

MB89935B
ROM 16KB
RAM 512B

MB89P935B
OTPROM 16KB
RAM 512B

MB89PV930A
Ext. ROM
RAM 512B
<Evaluation device>

- Maximum clock frequency: 10 MHz
- Minimum execution time: 0.4 µs
- Operating temperature range: –40°C to +85°C

Part number	Operating power supply voltage (V)	Package		Functions
		SSOP	MQFP	
MB89935B	+2.2 to +5.5	30P	-	I/O ports: 21 A/D converter: 10-bit × 8 ch. UART/SIO: 1 ch. PWM timer: 8-bit × 1 ch. PPG timer: 12-bit × 1ch. Timer counter with 8/16-bit capture Timebase timer: 21-bit × 1ch. Interrupts: 11 external Low-power consumption (standby functions) modes: Sleep, stop
MB89P935B	+3.0 to +5.5	30P	-	
MB89PV930A	+2.7 to +5.5	-	48C	

Packages: P - plastic, C - ceramic

MB89210 Series

UART for LIN, Compact type, CR Oscillation circuit

MB89215
ROM 16KB
RAM 512B
Under development

MB89P215
OTPROM 16KB
RAM 512B
Under development

MB89PV210
Ext. ROM
RAM 2KB
<Evaluation device>

- Maximum clock frequency: 12.5 MHz
- Minimum execution time: 0.32 µs
- Operating temperature range: –40°C to +85°C

Part number	Operating power supply voltage (V)	Package		Functions
		SSOP	MQFP	
◎MB89215	+3.5 to +5.5	30P	—	I/O ports: 21 A/D converter: 10-bit ×8 ch. Timer counter with 8/16-bit capture : 1 ch. Timebase timer: 21-bit × 1 ch. PWM timer: 8-bit × 1 ch. PPG timer: 12-bit × 1 ch. UART for LIN : 1 ch. SIO : 1 ch. Interrupts: 3 external CR Oscillation circuit (MB89215, MB89P215) Low-power consumption (standby functions) modes: Sleep, stop
◎MB89P215	+3.5 to +5.5	30P	—	
MB89PV210	+3.5 to +5.5	—	48C	

Packages: P - plastic, C - ceramic

◎ : Under development

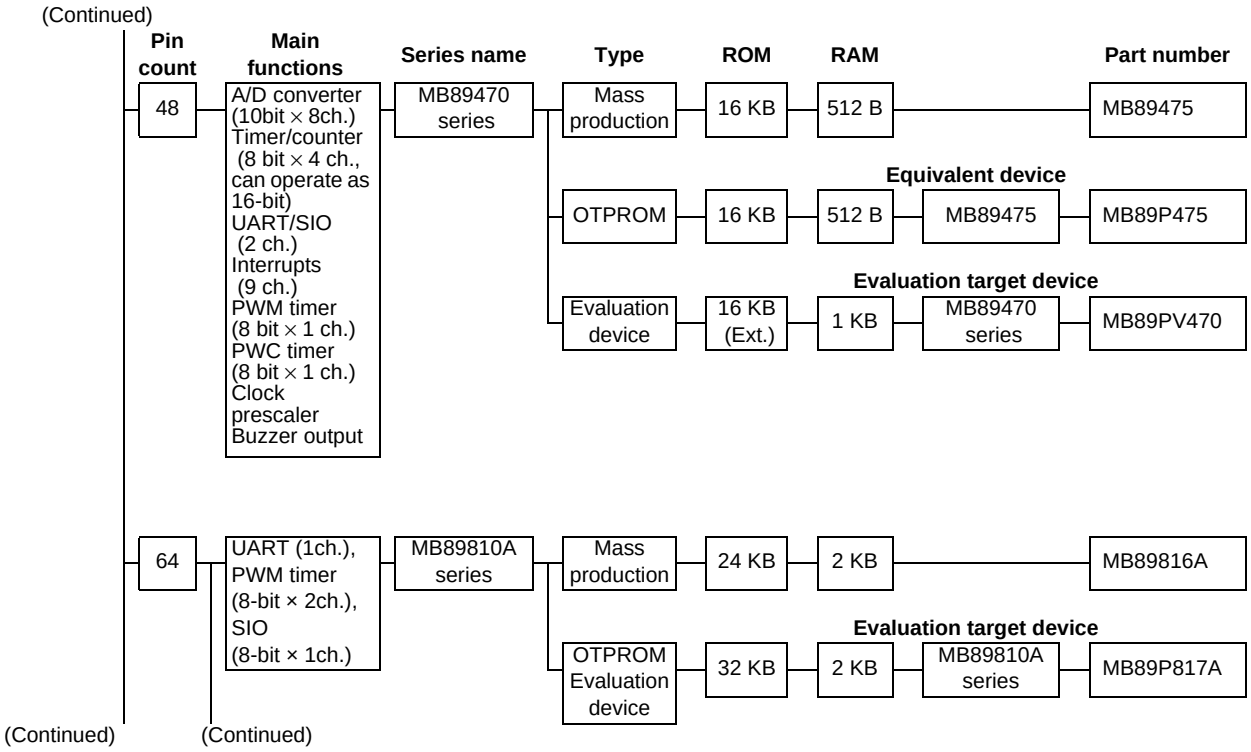
(Continued)
Pin count
Main functions
Series name
Type
ROM
RAM
Part number
48
A/D converter (10bit × 8ch.)
Timer/counter (8 bit × 4 ch., can operate as 16-bit)
UART/SIO (2 ch.)
Interrupts (9 ch.)
PWM timer (8 bit × 1 ch.)
PWC timer (8 bit × 1 ch.)
Clock prescaler
Buzzer output
MB89470 series
Mass production
16 KB
512 B
MB89475
Equivalent device
OTPROM
16 KB
512 B
MB89475
MB89P475
Evaluation target device
Evaluation device
16 KB (Ext.)
1 KB
MB89470 series
MB89PV470
64
UART (1ch.), PWM timer (8-bit × 2ch.), SIO (8-bit × 1ch.)
MB89810A series
Mass production
24 KB
2 KB
MB89816A
Evaluation target device
OTPROM Evaluation device
32 KB
2 KB
MB89810A series
MB89P817A
(Continued)
(Continued)

MB89470 Series

Standard products (built-in UART, compact type)

MB89475
ROM 16 KB
RAM 512 B

MB89P475
OTPROM 16 KB
RAM 512 B

MB89PV470
Ext. ROM
RAM 1 KB
<Evaluation device>

- Maximum clock frequency: 12.5 MHz (32.768 kHz)
- Minimum execution time: 0.32 µs (61 µs)
- Operating temperature range: -40°C to +85°C

Part number	Operating power supply voltage (V)	Package		Functions
		LQFP	MQFP	
MB89475	+2.2 to +5.5	48P	–	I/O ports: 39 A/D converter: 10-bit × 8 ch. Timer/counter: 8-bit × 4 ch. (16-bit × 2ch.) Timebase timer (WDT): 21-bit × 1 ch. PWM timer: 8-bit × 1 ch. PWC timer: 8-bit × 1 ch. UART/SIO: 2ch. Interrupts: 5 ch. (Level) + 4 ch. (edges) Clock prescaler Buzzer output Low-power consumption (standby functions) modes: Sleep, stop, sub, clock
MB89P475	+3.5 to +5.5	48P	–	
MB89PV470	+2.7 to +5.5	–	48C	

Packages: P - plastic, C - ceramic

MB89810A Series

Standard products (built-in UART, large memory 8-bit microcontroller)

MB89816A
ROM 24KB
RAM 2KB

MB89P817A
OTPROM 32KB
RAM 2KB

- Maximum clock frequency: 5 MHz (32.768 kHz)
- Minimum execution time: 0.8 µs (61 µs)
- Operating temperature range: -40°C to +85°C

Part number	Operating power supply voltage (V)	Package	Functions
		QFP	
MB89816A	+2.2 to +6.0	64P	I/O ports: 53 Timebase timer (WDT): 20-bit × 1 ch. Timer/counter: 16-bit × 1ch. PWM timer: 8-bit × 2ch. SIO: 8-bit × 1ch. UART: 5-, 7- or 8-bit × 1 ch. Clock prescaler: 12-bit Interrupts: 7 internal, 8 external Low-power consumption (standby functions) modes: Sleep, watch, stop, sub
MB89P817A	+2.7 to +6.0	64P	

Packages: P - plastic

(Continued)

(Continued)

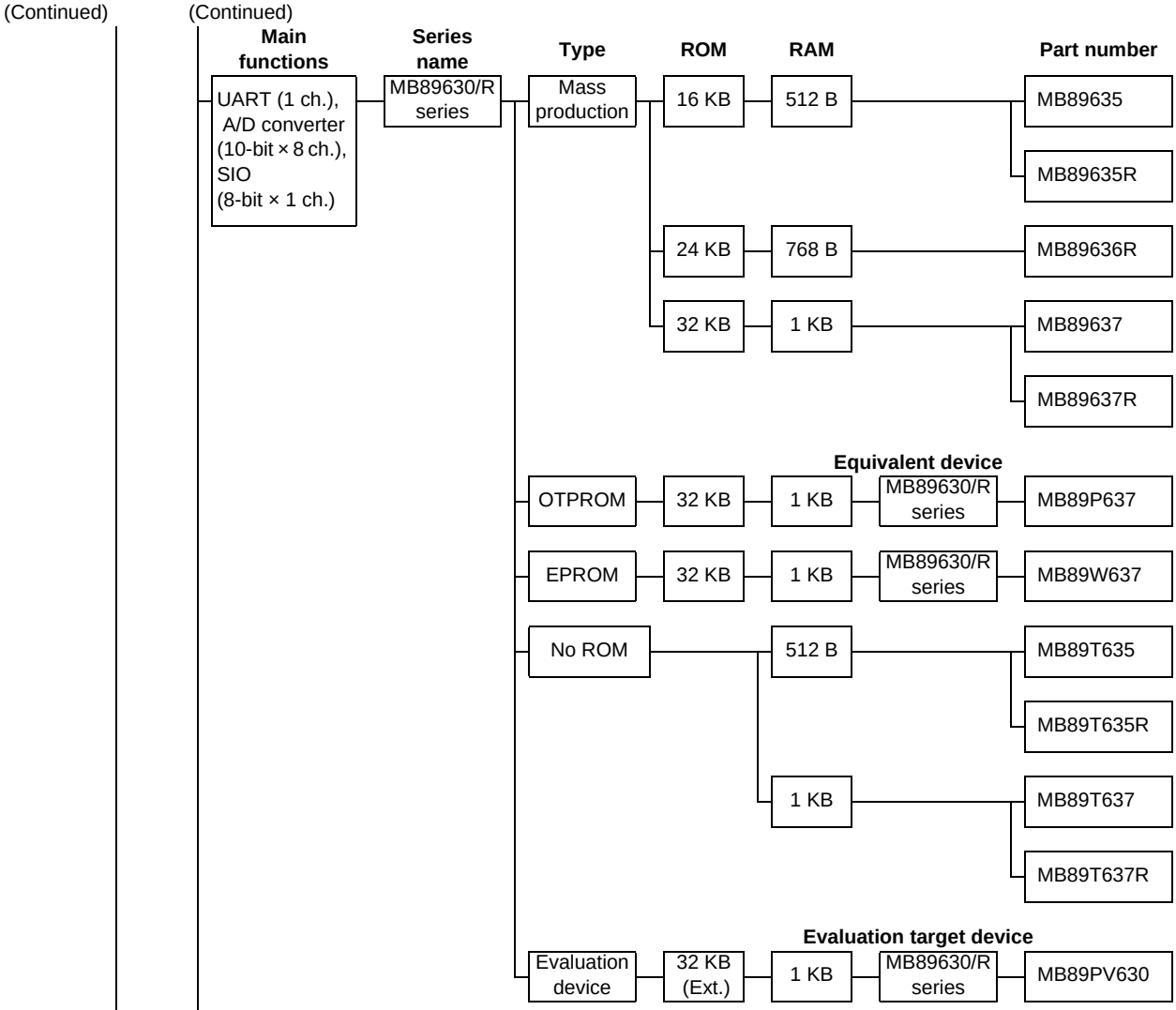

(Continued)

(Continued)

MB89630/630R Series

Standard products (A/D converter, built-in UART)

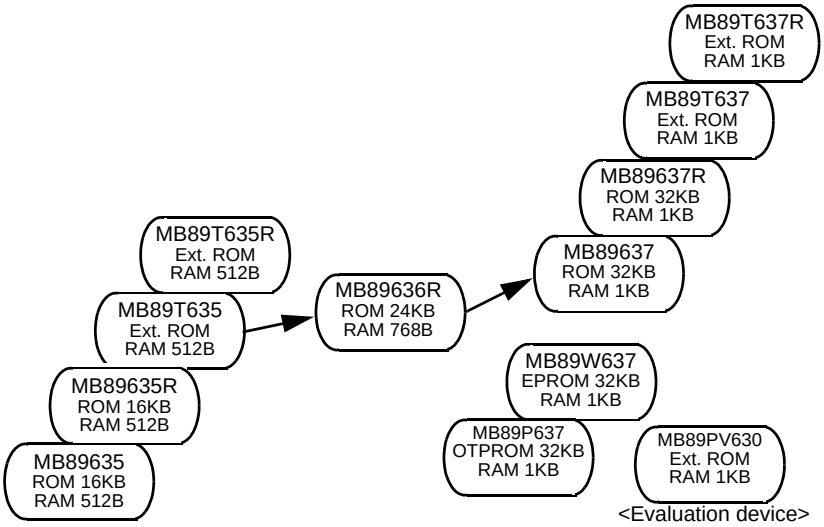

- Maximum clock frequency: 10 MHz (32.768 kHz)
- Minimum execution time: 0.4 µs to 6.4 µs (61 µs)
- Operating temperature range: -40°C to +85°C

Part number	Operating power supply voltage* (V)	Package					Functions
		SH-DIP	QFP	LQFP	MDIP	MQFP	
MB89635	+2.2 to +6.0	64P	64P	64P	–	–	I/O ports: 53 Timebase timer (WDT): 21-bit × 1ch. Timer/counter: 16-bit × 1ch. PWM timer: 8-bit × 2ch. PWC timer: 8-bit × 1ch. A/D converter: 10-bit × 8ch. SIO: 8-bit × 1ch. UART: 8-bit × 1ch. (switchable between two I/O ports) Clock prescaler: 15-bit Buzzer output Interrupts: 10 internal, 4 external Low-power consumption (standby functions) modes: Sleep, watch, stop, sub
MB89635R		64P	64P	64P	–	–	
MB89636R		64P	64P	64P	–	–	
MB89637		64P	64P	64P	–	–	
MB89637R		64P	64P	64P	–	–	
MB89P637	+2.7 to +6.0	64P	64P	–	–	–	
MB89W637		64C	–	–	–	–	
MB89T635		64P	64P	64P	–	–	
MB89T635R		64P	64P	64P	–	–	
MB89T637		64P	64P	64P	–	–	
MB89T637R		64P	64P	64P	–	–	
MB89PV630		–	–	–	64C	64C	

*: A/D = 3.5V to 6.0V
Packages: P - plastic, C - ceramic

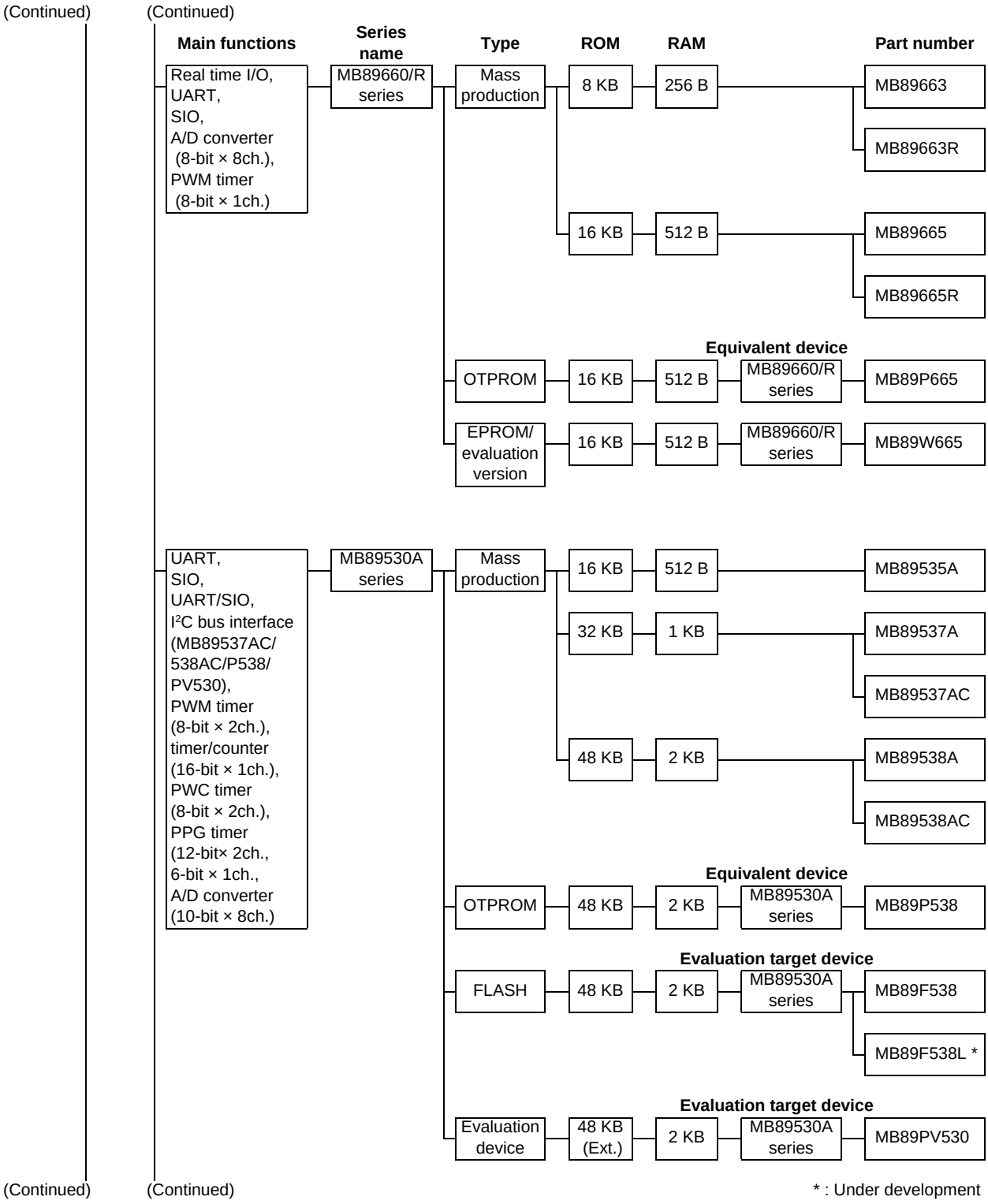
(Continued)
(Continued)
Main functions
Series name
Type
ROM
RAM
Part number
Real time I/O, UART, SIO, A/D converter (8-bit × 8ch.), PWM timer (8-bit × 1ch.)
MB89660/R series
Mass production
8 KB
256 B
MB89663
MB89663R
16 KB
512 B
MB89665
MB89665R
Equivalent device
OTPROM
16 KB
512 B
MB89660/R series
MB89P665
EPROM/ evaluation version
16 KB
512 B
MB89660/R series
MB89W665
UART, SIO, UART/SIO, I²C bus interface (MB89537AC/ 538AC/P538/ PV530), PWM timer (8-bit × 2ch.), timer/counter (16-bit × 1ch.), PWC timer (8-bit × 2ch.), PPG timer (12-bit× 2ch., 6-bit × 1ch., A/D converter (10-bit × 8ch.)
MB89530A series
Mass production
16 KB
512 B
MB89535A
32 KB
1 KB
MB89537A
MB89537AC
48 KB
2 KB
MB89538A
MB89538AC
Equivalent device
OTPROM
48 KB
2 KB
MB89530A series
MB89P538
Evaluation target device
FLASH
48 KB
2 KB
MB89530A series
MB89F538
MB89F538L *
Evaluation target device
Evaluation device
48 KB (Ext.)
2 KB
MB89530A series
MB89PV530
(Continued)
(Continued)
* : Under development

MB89660/660R Series

Standard products (for real-time pulse I/O control)

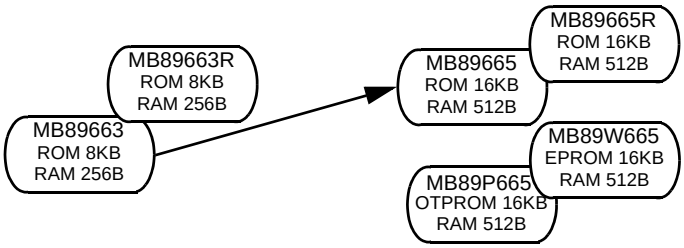

<Evaluation device>

- Maximum clock frequency: 10 MHz
- Minimum execution time: 0.4 µs
- Operating temperature range: -40°C to +85°C

Part number	Operating power supply voltage* (V)	Package		Functions
		SH-DIP	QFP	
MB89663	+2.2 to +6.0	64P	64P	I/O ports: 52 Timebase timer (WDT): 20-bit × 1ch. Timer/counter: 8-bit × 2ch. (can operate as 16-bit × 1ch.) PWM timer: 8-bit × 1ch. A/D converter: 8-bit × 8ch. SIO: 8-bit × 1ch. Real time I/O 16-bit timer: Operating clock frequency (0.4, 0.8, 1.6, or 3.2 µs), Overflow interrupt Input capture: 16-bit × 2ch. (external trigger edge selection) Output compare: 16-bit × 2ch. UART: 7-bit to 9-bit × 1ch. Interrupts: 11 internal, 4 external Low-power consumption (standby functions) modes: Sleep, stop, hardware standby
MB89663R		64P	64P	
MB89665		64P	64P	
MB89665R		64P	64P	
MB89P665	+2.7 to +6.0	64P	64P	
MB89W665		64C	–	

*: A/D = 3.5V to 6.0V
Packages: P - plastic, C - ceramic

MB89530A Series

Standard products (telephones, mobileproducts, etc.)

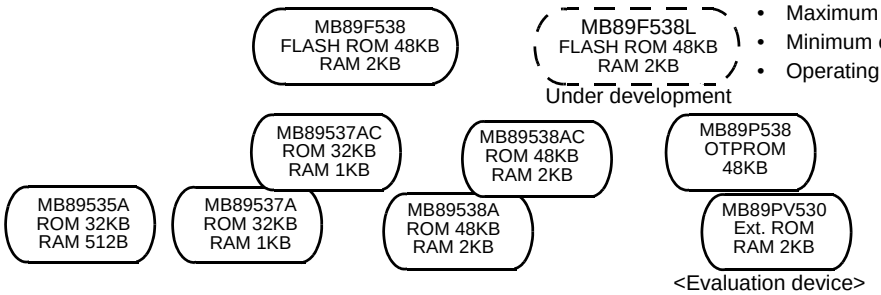

<Evaluation device>

- Maximum clock frequency : 12.5 MHz (32.768 kHz)
- Minimum execution time : 0.32 µs (61µs)
- Operating temperature range : -40°C to +85°C

Part number	Operating power supply voltage (V)	Package					Functions
		SDIP	QFP	LQFP	BCC	MQFP	
MB89535A	+2.2 to +5.5	64P	64P	64P (0.5 mm pitch, 0.65 mm pitch)	64P	–	I/O ports: 53 (MB89F538/F538L: 52) Timebase timer (WDT): 21-bit × 1ch. Timer/counter: 16bit × 1ch. PWM timer: 8-bit × 2ch. PWC timer: 8-bit × 1ch. PPG timer: 12-bit × 2ch. , 6-bit × 1ch. A/D converter: 10-bit × 8ch. I²C bus interface (built into MB89537AC/538AC/P538/PV530) SIO/UART × 1ch., SIO × 1ch., UART × 1ch UART/Serial interface Interrupts: 12 external Low-power consumption (standby functions) modes: Sleep, stop, watch, sub
MB89537A		64P	64P		–	–	
MB89537AC		64P	64P		–	–	
MB89538A		64P	64P		–	–	
MB89538AC		64P	64P		–	–	
◎MB89F538L	+2.4 to +3.6	64P	64P	64P (0.65 mm pitch)	64P	–	
MB89F538	+3.5 to +5.5	64P	64P		–	–	
MB89P538	+2.7 to +5.5	64P	64P		–	–	
MB89PV530		64C	–	–	–	64C	

Packages:P - plastic, C - ceramic
◎ : Under development

(Continued)

(Continued)

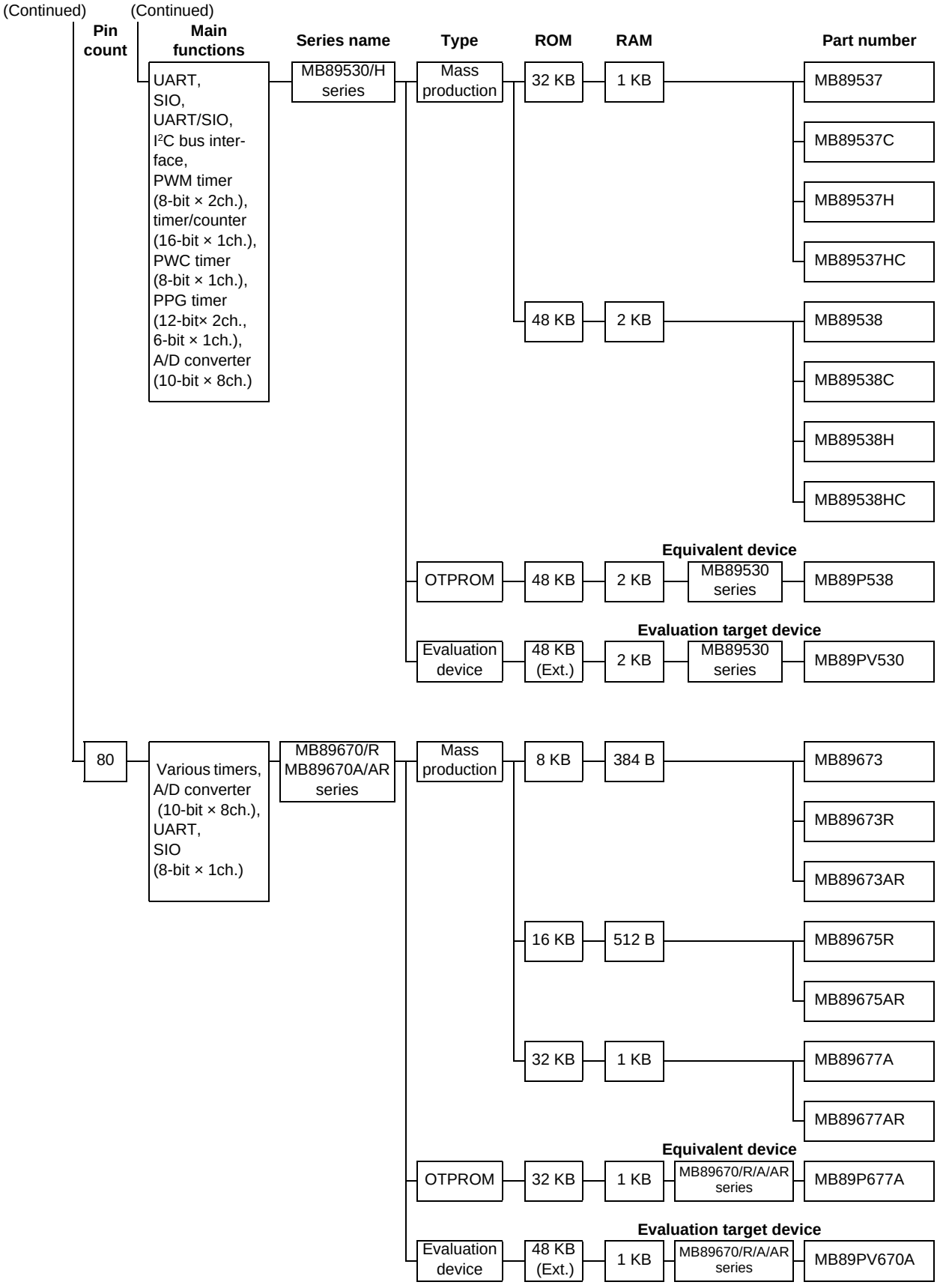

MB89530/530H Series

Standard products (telephones, mobileproducts, etc.)

- Maximum clock frequency: 12.5 MHz (32.768 kHz)
- Minimum execution time: 0.32 µs (61µs)
- Operating temperature range: -40°C to +85°C

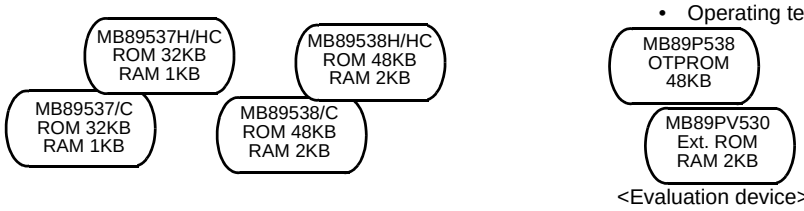

<Evaluation device>

Part number	Operating power supply voltage (V)	Package				Functions
		SDIP	QFP	LQFP	MQFP	
MB89537	+2.2 to +3.6	64P	64P	64P (0.5 mm pitch, 0.65 mm pitch)	–	I/O ports: 53 Timebase timer (WDT): 21-bit × 1 ch. Timer/counter: 16bit × 1ch. PWM timer: 8-bit × 2 ch. PWC timer: 8-bit × 1 ch. PPG timer: 12-bit × 2ch. , 6-bit × 1 ch. A/D converter: 10-bit × 8 ch. I²C bus interface (built into MB89537C/537HC/538C/538HC/P538/PV530) UART: 1 ch. SIO: 1 ch. UART/SIO: 1 ch. Interrupts: 10 internal, 12 external Low-power consumption (standby functions) modes : Sleep, stop, watch, sub
MB89537C		64P	64P		–	
MB89537H	+3.5 to +5.5	64P	64P		–	
MB89537HC		64P	64P		–	
MB89538	+2.2 to +3.6	64P	64P		–	
MB89538C		64P	64P		–	
MB89538H	+3.5 to +5.5	64P	64P		–	
MB89538HC		64P	64P		–	
MB89P538	+2.7 to +5.5	64P	64P	64P (0.65 mm pitch)	–	
MB89PV530		64C	–	–	64C	

Packages:P - plastic, C - ceramic

MB89670/670R/670A/670AR Series

Standard products (multi function timer)

- Maximum clock frequency: 10 MHz
- Minimum execution time: 0.4 µs to 6.4 µs
- Operating temperature range: -40°C to +85°C

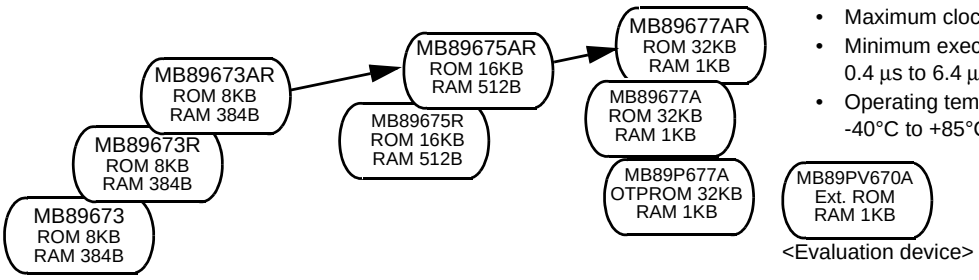

<Evaluation device>

Part number	Operating power supply voltage* (V)	Package			Functions
		QFP	LQFP	MQFP	
MB89673	+2.2 to +6.0	80P	80P	–	I/O ports: 69 Timebase timer (WDT): 21-bit × 1ch. Timer/counter:16-bit × 2ch. (16-bit × 1ch. + 8-bit × 2ch.) Buzzer output PWM timer: 8-bit × 3ch. (MB89673/673R/675R) 8-bit × 6ch. (MB89677A/PV670A/673AR/675AR/P677A) Up/down counter: 8-bit × 2ch. (16-bit × 1ch.) A/D converter: 10-bit × 8ch. SIO: 8-bit × 1ch. UART: 8-bit × 1ch. (switchable between two I/O ports) Interrupts: 10 internal, 8 external Low-power consumption (standby functions) modes: Sleep, stop
MB89673R		80P	80P	–	
MB89673AR		80P	80P	–	
MB89675R		80P	80P	–	
MB89675AR		80P	80P	–	
MB89677A		80P	80P	–	
MB89677AR		80P	80P	–	
MB89P677A	+2.7 to +6.0	80P	80P	–	
MB89PV670A		–	–	80C	

*: A/D = 3.5V to 6.0V
Packages: P - plastic, C - ceramic

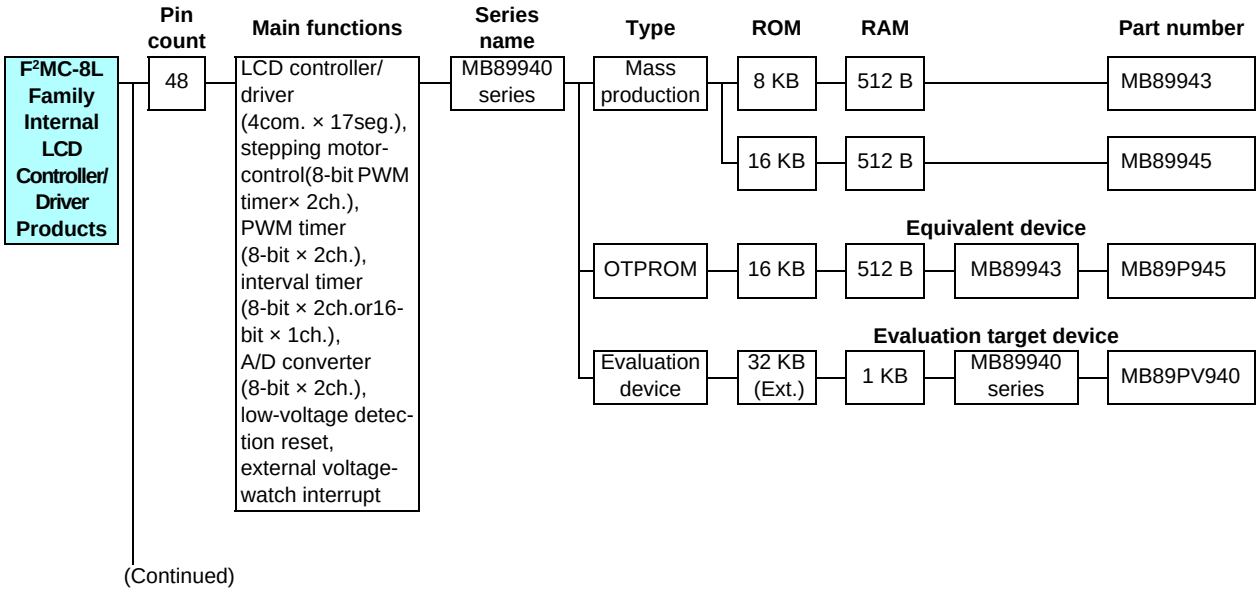
F²MC-8L Family Internal LCD Controller/ Driver Products
Pin count
Main functions
Series name
Type
ROM
RAM
Part number
48
LCD controller/ driver (4com. × 17seg.), stepping motor-control(8-bit PWM timer× 2ch.), PWM timer (8-bit × 2ch.), interval timer (8-bit × 2ch.or16-bit × 1ch.), A/D converter (8-bit × 2ch.), low-voltage detec-tion reset, external voltage-watch interrupt
MB89940 series
Mass production
8 KB
512 B
MB89943
16 KB
512 B
MB89945
Equivalent device
OTPROM
16 KB
512 B
MB89943
MB89P945
Evaluation target device
Evaluation device
32 KB (Ext.)
1 KB
MB89940 series
MB89PV940
(Continued)

F²MC-8L Family Internal LCD Controller/Driver Products

MB89940 Series

Standard products (LCD controller/driver, built-in stepping motor controller)

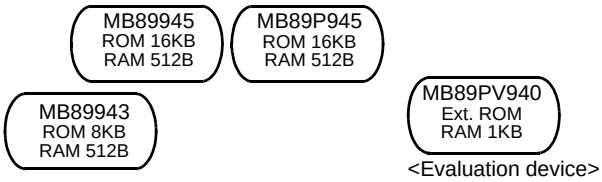

<Evaluation device>

- Maximum clock frequency: 8 MHz
- Minimum execution time: 0.5 µs
- Operating temperature range:-40°C to +85°C

Part number	Operating power supply voltage (V)	Package		Functions
		QFP	MQFP	
MB89943	+3.5 to +5.5	48P	–	I/O ports: 37 Timebase timer (WDT): 21-bit × 1ch. Interval timer: 8-bit × 2ch. (can operate as 16-bit × 1ch.) PWM timer: 8-bit × 2ch. Stepping motor control: 8-bit PWM timer × 2ch. A/D converter: 8-bit × 2ch. LCD controller/driver: 68 elements, 2 to 4 common, 10 to 17 segments 17 × 4-bit LCD display RAM Low-voltage detection reset External voltage watch interrupt Interrupts: 5 internal, 3 external Low-power consumption (standby functions) modes: Sleep, stop
MB89945		48P	–	
MB89P945		48P	–	
MB89PV940		–	48C	

Packages: P - plastic, C - ceramic

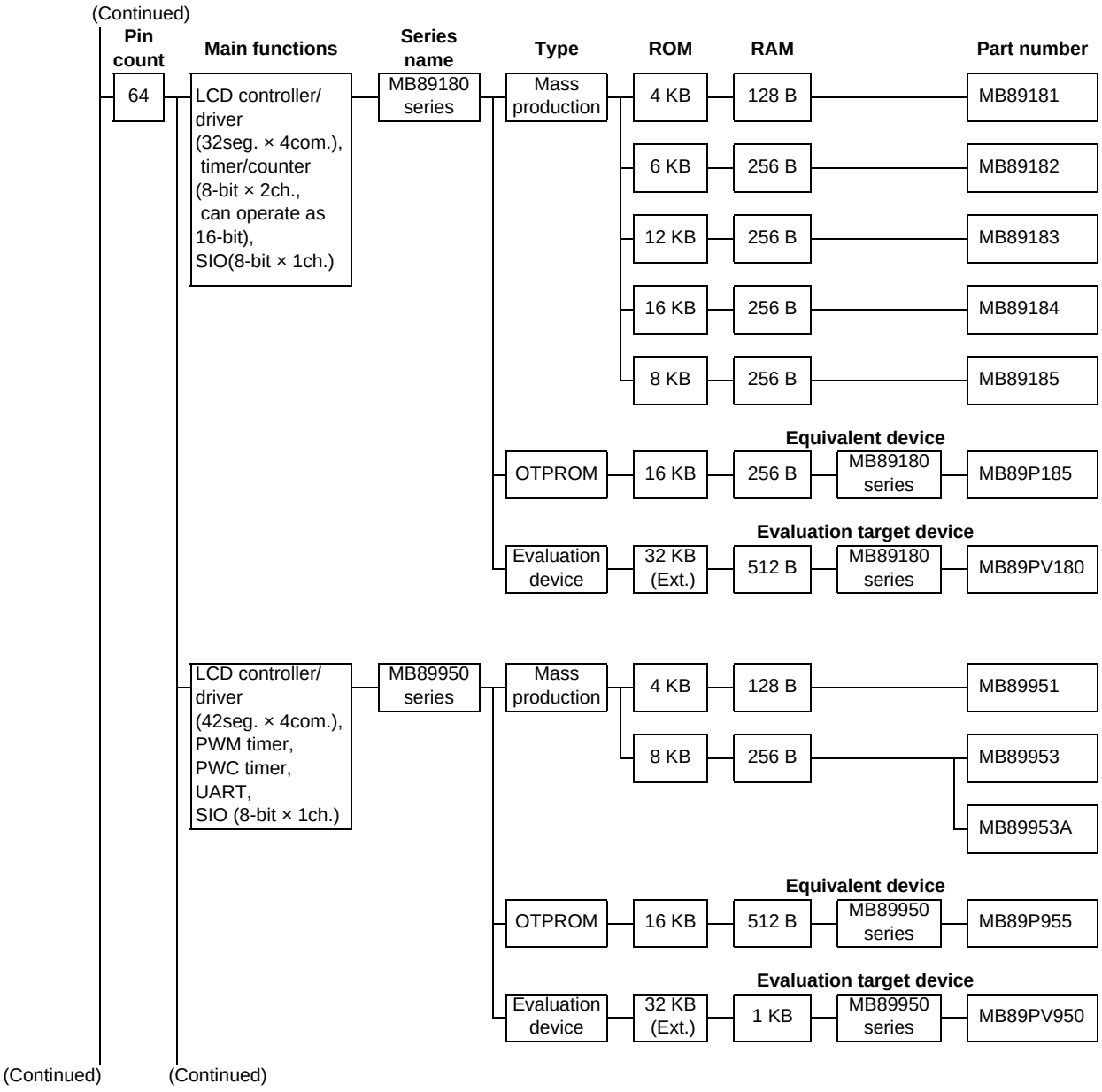
(Continued)
Pin count
Main functions
Series name
Type
ROM
RAM
Part number
64
LCD controller/ driver (32seg. × 4com.), timer/counter (8-bit × 2ch., can operate as 16-bit), SIO(8-bit × 1ch.)
MB89180 series
Mass production
4 KB
128 B
MB89181
6 KB
256 B
MB89182
12 KB
256 B
MB89183
16 KB
256 B
MB89184
8 KB
256 B
MB89185
Equivalent device
OTPROM
16 KB
256 B
MB89180 series
MB89P185
Evaluation target device
Evaluation device
32 KB (Ext.)
512 B
MB89180 series
MB89PV180
LCD controller/ driver (42seg. × 4com.), PWM timer, PWC timer, UART, SIO (8-bit × 1ch.)
MB89950 series
Mass production
4 KB
128 B
MB89951
8 KB
256 B
MB89953
MB89953A
Equivalent device
OTPROM
16 KB
512 B
MB89950 series
MB89P955
Evaluation target device
Evaluation device
32 KB (Ext.)
1 KB
MB89950 series
MB89PV950
(Continued)
(Continued)

MB89180 Series

Standard products (built-in LCD controller/driver)

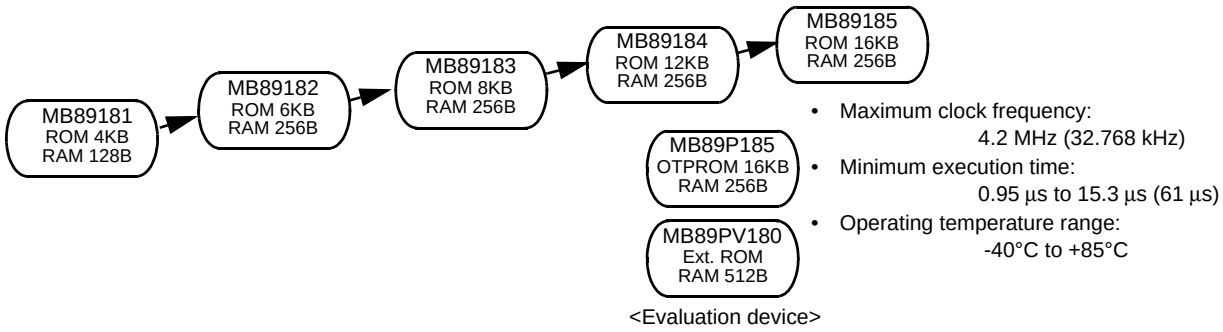

Part number	Operating power supply voltage (V)	Package			Functions
		LQFP	QFP	MQFP	
MB89181	+2.2 to +6.0	64P	64P	–	I/O ports: 43 Timebase timer (WDT): 21-bit × 1ch. Timer/counter:8-bit×2ch (can operate as 16-bit×1ch.) LCD controller/driver: 128 elements, 2 to 4 common, 8 to 32 segments, 3 bias power terminal, 16 × 8-bit LCD display RAM SIO: 8-bit × 1ch. Clock prescaler: 15-bit Remote control carrier generator Buzzer output Interrupts: 4 internal, 12 external Low-power consumption (standby functions) modes: Sleep, watch, stop, sub
MB89182		64P	64P	–	
MB89183		64P	64P	–	
MB89184		64P	64P	–	
MB89185		64P	64P	–	
MB89P185	+2.7 to +6.0	64P	64P	–	
MB89PV180		–	–	64C	

Packages: P - plastic, C - ceramic

MB89950 Series

Standard products (built-in LCD controller/driver)

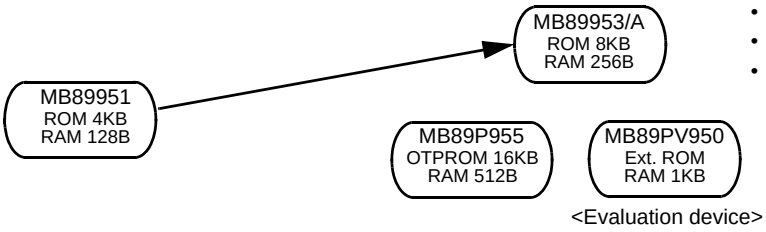

- Maximum clock frequency: 5 MHz
- Minimum execution time: 0.8 µs to 4.0 µs
- Operating temperature range:-40°C to +85°C

Part number	Operating power supply voltage (V)	Package		Functions
		LQFP	MQFP	
MB89951	+2.2 to +6.0	64P	–	I/O ports: 33 Timebase timer (WDT): 21-bit × 1ch. PWM timer: 8-bit × 1ch. PWC timer: 8-bit × 1ch. LCD controller/driver: 168 elements, 2 to 4 common, 20 to 42 segments, 4 bias power terminal, 21 × 8-bit LCD display RAM SIO: 8-bit × 1ch. UART: 8-bit × 1ch. Interrupts: 4 internal, 2 external Low-power consumption (standby functions) modes:Sleep, stop
MB89953		64P	–	
MB89953A		64P	–	
MB89P955	+2.7 to +6.0	64P	–	
MB89PV950		–	64C	

Packages: P - plastic, C - ceramic

(Continued)

(Continued)

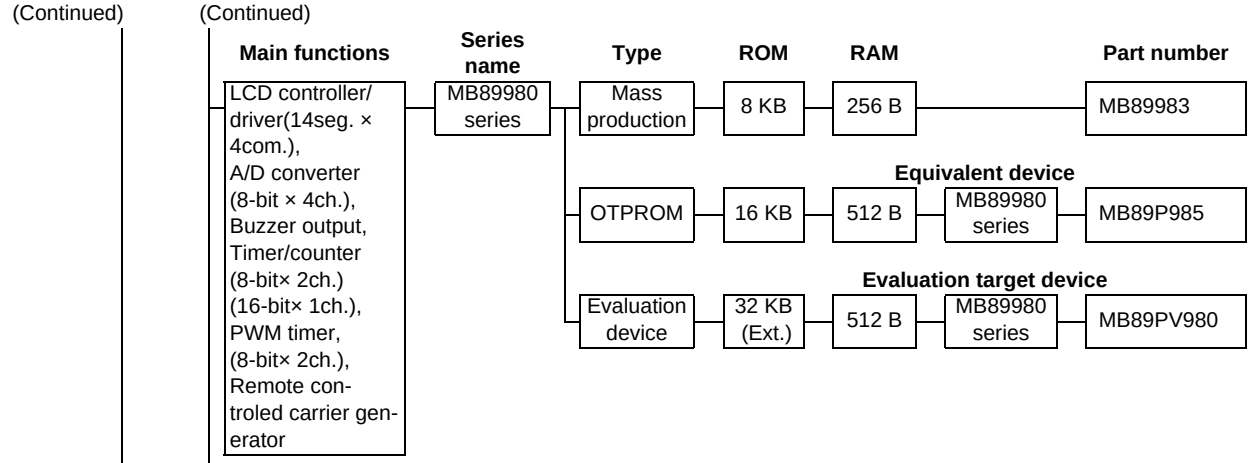

(Continued)

(Continued)

MB89980 Series

Standard products (built-in LCD controller/driver)

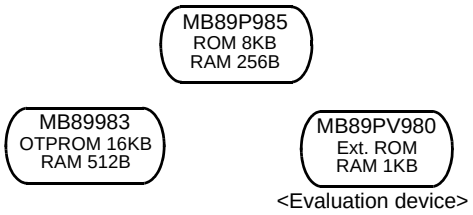

<Evaluation device>

- Maximum clock frequency: 4.2 MHz (32.768 kHz)
- Minimum execution time: 0.95 µs
- Operating temperature range: – 40°C to +85 °C

Part number	Operating power supply voltage * (V)	Package		Functions
		LQFP	MQFP	
MB89983	+2.2 to +6.0	64P	–	I/O ports: 47 Timebase timer (WDT): 21-bit × 1ch. Timer/counter: 8-bit × 2ch.(can operate as 16-bit × 1ch.) PWM timer: 8-bit × 2ch. Buzzer output Remote controled carrier generator LCD controller/driver:56 elements, 2 to 4 common, 4 to 14segments 7 × 8-bit LCD display RAM Interrupts: 12 external Low-power consumption (standby functions) modes:Sleep, watch, stop, sub
MB89P985	+2.7 to +6.0	64P	–	
MB89PV980		–	64C	

*: A/D = 3.5V to 6.0V
Packages: P - plastic, C - ceramic

(Continued)

(Continued)

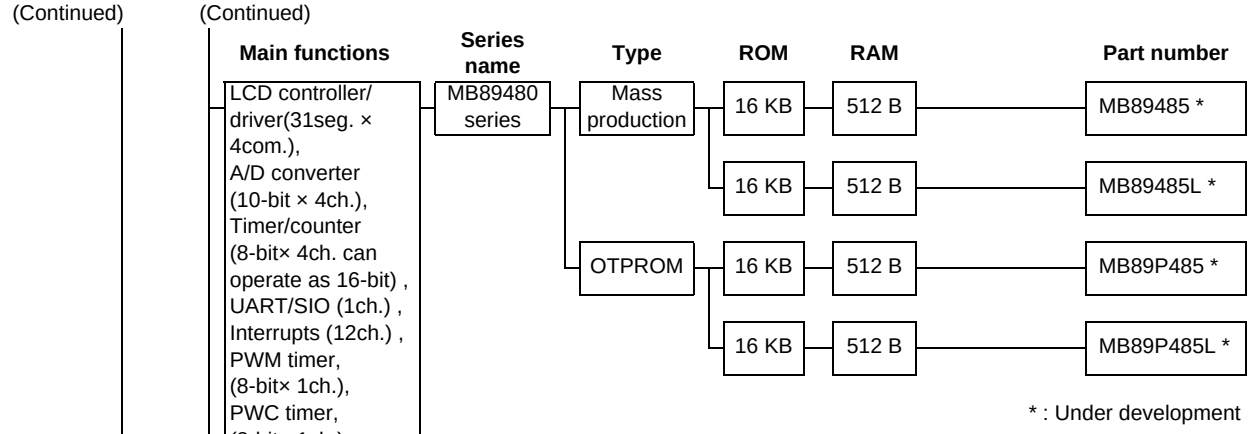

* : Under development

(Continued)

(Continued)

MB89480 Series

Standard products (built-in LCD controller/driver)

MB89485
ROM 16 KB
RAM 512 B

MB89P485
OTPROM 16 KB
RAM 512 B

MB89485L
ROM 16 KB
RAM 512 B

MB89P485L
OTPROM 16 KB
RAM 512 B

MB89PV480
Ext. ROM
RAM 1KB

- Maximum clock frequency: 12.5 MHz (32.768 kHz)
- Minimum execution time: 0.32 µs (61 µs)
- Operating temperature range: – 40°C to +85 °C

Part number	Operating power supply voltage (V)	Package			Functions
		LQFP	SH-DIP	MQFP	
◎MB89485L	+2.2 to +3.6	64P (0.65 mm pitch)	64P	–	I/O ports: 42 LCD controller/driver: 124 elements, 2 to 4 common, 8 to 31 segments,4 bias power supplies, 31 × 4-bit LCD display RAM Selectable as a mask option A/D converter: 10-bit × 4ch. Timer/counter: 8-bit × 4ch.(16-bit × 2ch.) Timebase timer (WDT): 21-bit × 1ch. PWM timer: 8-bit × 1ch. PWC timer: 8-bit × 1ch. PPG timer: 6-bit × 1ch. UART/SIO: 1ch. Interrupts: 8ch. (Level) +4ch. (edges) Clock prescaler Buzzer output Low-power consumption (standby functions) modes:Sleep, stop, sub, watch
◎MB89485	+2.2 to +5.5		64P	–	
◎MB89P485L	+2.7 to +3.6		64P	–	
◎MB89P485	+3.5 to +5.5		64P	–	
MB89PV480	+2.7 to +5.5	–	64C	64C	

Packages: P - plastic, C - ceramic

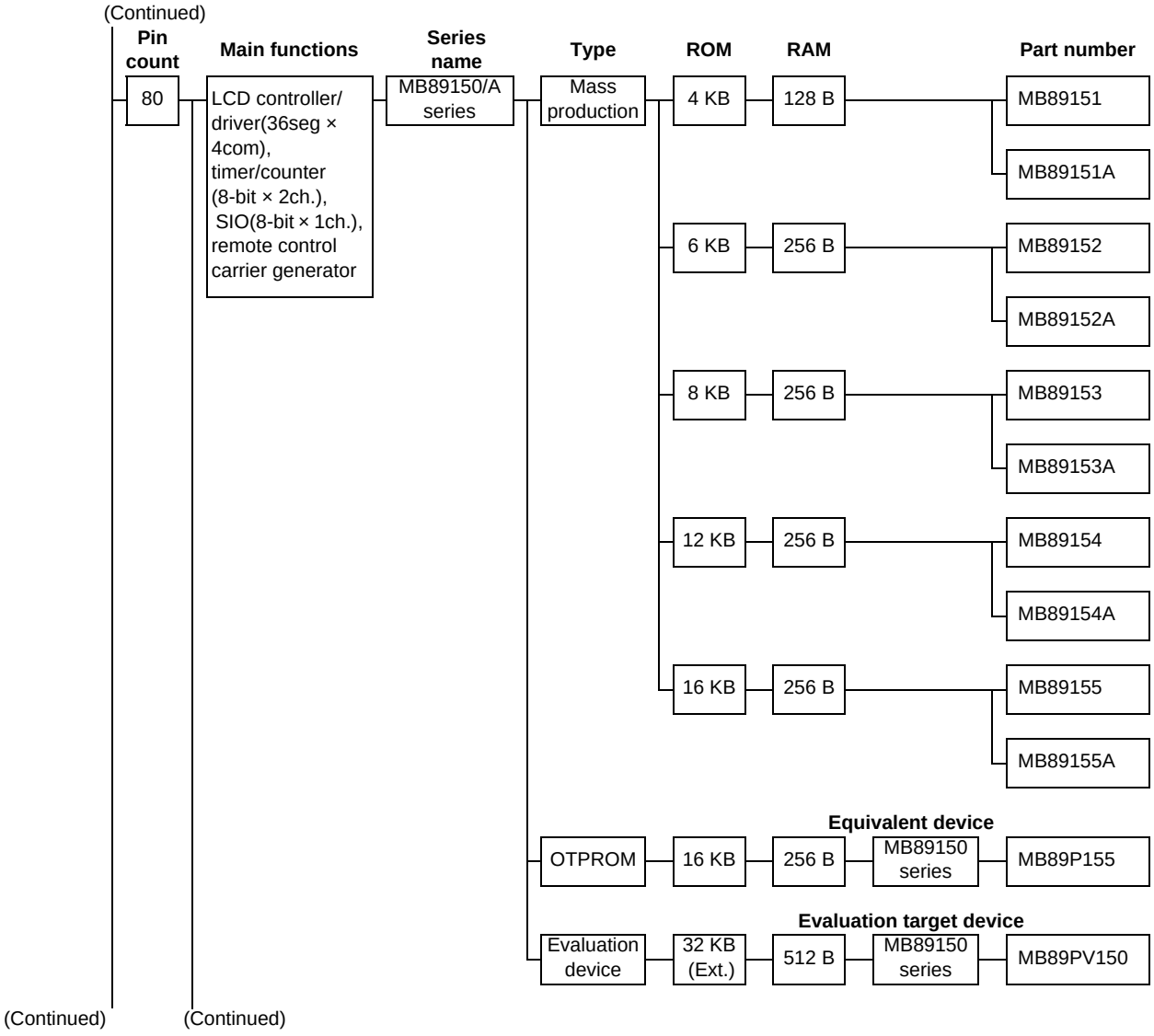
(Continued)
Pin count
Main functions
Series name
Type
ROM
RAM
Part number
80
LCD controller/ driver(36seg × 4com), timer/counter (8-bit × 2ch.), SIO(8-bit × 1ch.), remote control carrier generator
MB89150/A series
Mass production
4 KB
128 B
MB89151
MB89151A
6 KB
256 B
MB89152
MB89152A
8 KB
256 B
MB89153
MB89153A
12 KB
256 B
MB89154
MB89154A
16 KB
256 B
MB89155
MB89155A
Equivalent device
OTPROM
16 KB
256 B
MB89150 series
MB89P155
Evaluation target device
Evaluation device
32 KB (Ext.)
512 B
MB89150 series
MB89PV150
(Continued)
(Continued)

MB89150/150A Series

Standard products (built-in LCD controller/driver)

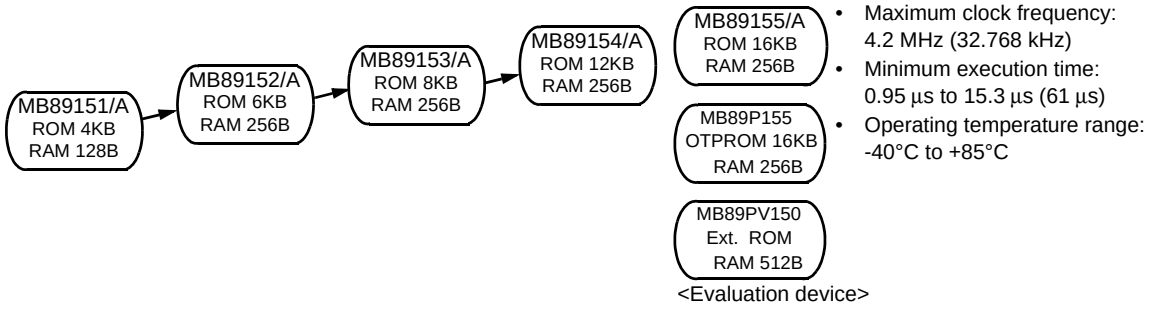

Part number	Operating power supply voltage (V)	Package			Functions
		LQFP	QFP	MQFP	
MB89151	+2.2 to +6.0	80P	80P	–	I/O ports: 43 Timebase timer (WDT): 21-bit × 1ch. Timer/counter: 8-bit × 2ch.(can operate as 16-bit × 1ch.) Buzzer output LCD controller/driver: 144 elements, 2 to 4 common, 20 to 36 segments, 4 bias power supplies, 18 × 8-bit LCD display RAM Booster circuit (MB89151A/152A/153A/154A/155A) No booster circuit (MB89151/152/153/154/PV150, Selectable as a mask option on the MB89P155) SIO: 8 bit × 1ch. Remote control carrier generator Clock prescaler: 15-bit Interrupts: 4 internal, 12 external Low-power consumption (standby functions) modes: Sleep, watch, stop, sub
MB89151A		80P	80P	–	
MB89152		80P	80P	–	
MB89152A		80P	80P	–	
MB89153		80P	80P	–	
MB89153A		80P	80P	–	
MB89154		80P	80P	–	
MB89154A		80P	80P	–	
MB89155		80P	80P	–	
MB89155A		80P	80P	–	
MB89P155	+2.7 to +6.0	80P	80P	–	
MB89PV150		–	–	80C	

Packages: P - plastic, C - ceramic

(Continued) (Continued)

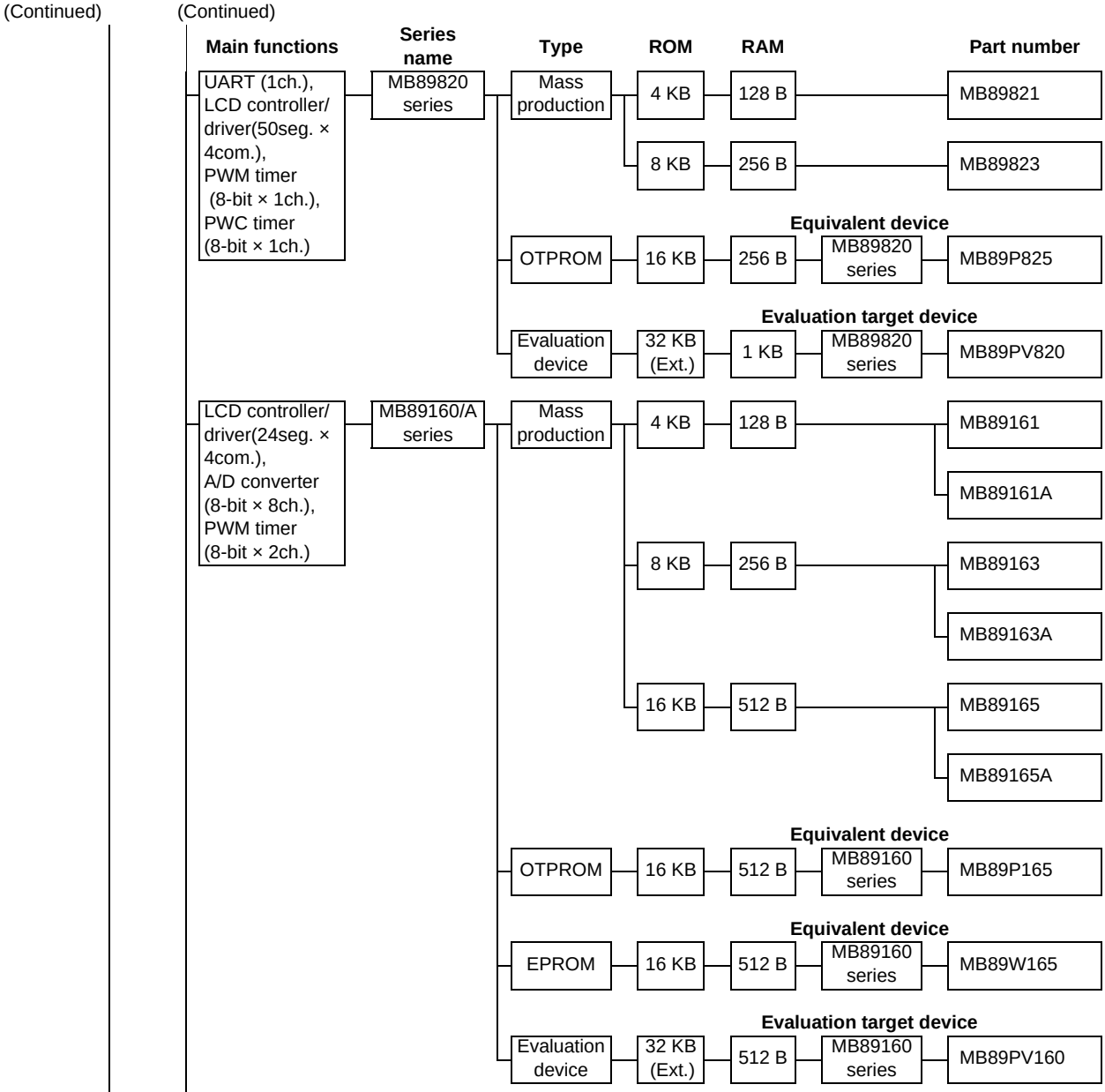

(Continued) (Continued)

MB89820 Series

Standard products (LCD controller/driver, built-in UART)

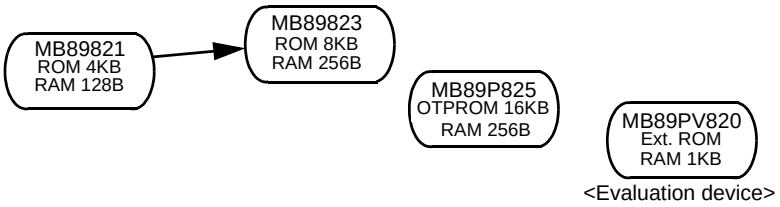

- Maximum clock frequency: 5 MHz
- Minimum execution time: 0.8 µs
- Operating temperature range: -40°C to +85°C

Part number	Operating power supply voltage (V)	Package		Functions
		LQFP	MQFP	
MB89821	+2.2 to +6.0	80P	–	I/O ports: 32 Timebase timer (WDT): 20-bit × 1ch. PWM timer: 8-bit × 1ch. PWC timer: 8-bit × 1ch. LCD controller/driver: 200 elements, 2 to 4 common, 34 to 50 segments, 3 bias power supplies, 8-bit×25 LCD display RAM SIO: 8-bit × 1ch. UART: 5-, 7-, 9-bit × 1ch. Interrupts: 5 internal, 2 external Low-power consumption (standby functions) modes: Sleep, stop
MB89823		80P	–	
MB89P825	+2.7 to +6.0	80P	–	
MB89PV820		–	80C	

Packages: P - plastic, C - ceramic

MB89160/160A Series

Standard products (LCD controller/driver, built-in A/D converter)

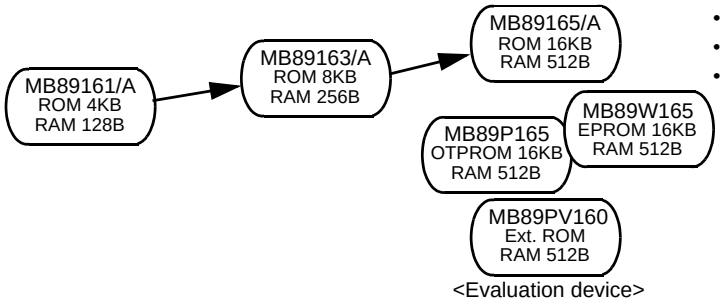

- Maximum clock frequency:4.2 MHz (32.768 kHz)
- Minimum execution time:0.95 µs to 15.3 µs (61 µs)
- Operating temperature range:-40°C to +85°C

Part number	Operating power supply voltage* (V)	Package			Functions
		QFP	LQFP	MQFP	
MB89161	+2.2 to +6.0	80P	80P	–	I/O ports: Max. 54(depends on the number of segments option) Timebase timer (WDT): 21-bit × 1ch. Timer/counter: 8-bit × 2ch.(can operate as 16-bit × 1ch. event) PWM timer: 8-bit × 2ch. A/D converter: 8-bit × 8ch. LCD controller/driver: 96 elements, 2 to 4 common, 8 to 24 segments, 4 bias power supplies, 8-bit × 12 LCD display RAM, Booster circuit (MB89161A/163A/165A) No booster circuit (MB89161/163/165/PV160) (Selectable as a mask option on the MB89P165 and MB89W165) SIO: 8-bit × 1ch. Clock prescaler: 15-bit Remote control carrier generator Buzzer output (7 sources) Interrupts: 7 internal, 12 external Low-power consumption (standby functions) modes: Sleep, watch, stop, sub
MB89161A		80P	80P	–	
MB89163		80P	80P	–	
MB89163A		80P	80P	–	
MB89165		80P	80P	–	
MB89165A		80P	80P	–	
MB89P165	+2.7 to +6.0	80P	80P	–	
MB89W165		80C	–	–	
MB89PV160		–	–	80C	

*: A/D = 3.5V to 6.0V
Packages: P - plastic, C - ceramic

(Continued) (Continued)

Main functions	Series name	Type	ROM	RAM	Equivalent device	Part number
A/D converter (10-bit × 8ch.) UART, UART/SIO, I²C bus interface, PWM timer (8-bit × 2ch.), timer/counter (8-bit × 2ch.), PWC timer (8-bit × 1ch.), PPG timer (6-bit ×1ch., 12-bit × 1ch.), LCD controller/ driver (24seg. ×4 com.)	MB89560/A/H series	Mass production	32 KB	1 KB		MB89567
						MB89567A
						MB89567AC
						MB89567C
						MB89567H
						MB89567HC
		OTPROM	48 KB	1 KB	MB89567	MB89P568
		Evaluation device	56 KB (Ext.)	1 KB	MB89560 series	MB89PV560

(Continued) (Continued)

MB89560/560A/560H Series

Standard products (personal computer, microwave ovens, etc.)

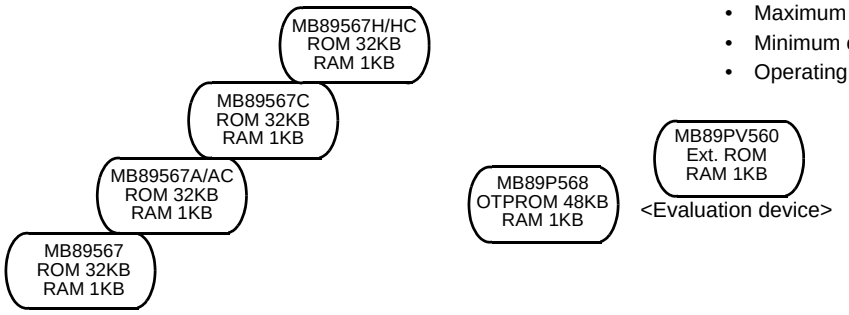

- Maximum clock frequency: 12.5 MHz (32.768kHz)
- Minimum execution time: 0.32 µs (61µs)
- Operating temperature range: -40°C to +85°C

Part number	Operating power supply voltage (V)	Package				Functions
		QFP	LQFP (0.5 mm, □12 × 12 mm)	LQFP (0.65 mm, □14 × 14 mm)	MQFP	
MB89567	+2.2 to +3.6	80P	80P	80P	–	I/O ports: 50 Timebase timer (WDT): 21-bit × 1ch. Timer/counter: 8-bit × 2ch. (can operate as 16-bit) PWM timer: 8-bit × 2ch. PWC timer: 8-bit × 1ch. PPG timer: 6-bit × 1ch. ,12-bit × 1ch. A/D converter: 10-bit × 8ch. I²C bus interface (built into MB89567C/567HC/P568/PV560) UART: 6, 7, 8-bit × 1ch. SIO: 8-bit × 1 ch. UART/SIO: 1 ch. LCD controller/driver: 96 elements, 2 to 4 common, 8 to 24 segments, 12 × 8-bit LCD display RAM, static, duty Booster circuit (Selected as an option) (MB89560/560A) No booster circuit (MB89560H) Interrupts: 10 internal, 12 external Low-power consumption (standby functions) modes: Sleep, watch, stop, sub
MB89567A	+2.2 to +5.5	80P	80P	80P	–	
MB89567AC		80P	80P	80P	–	
MB89567C	+2.2 to +3.6	80P	80P	80P	–	
MB89567H	+3.5 to +5.5	80P	80P	80P	–	
MB89567HC		80P	80P	80P	–	
MB89P568	+2.7 to +5.5	80P	80P	80P	–	
MB89V560		–	–	–	80C	

Packages:P - plastic, C - ceramic

(Continued)

(Continued)

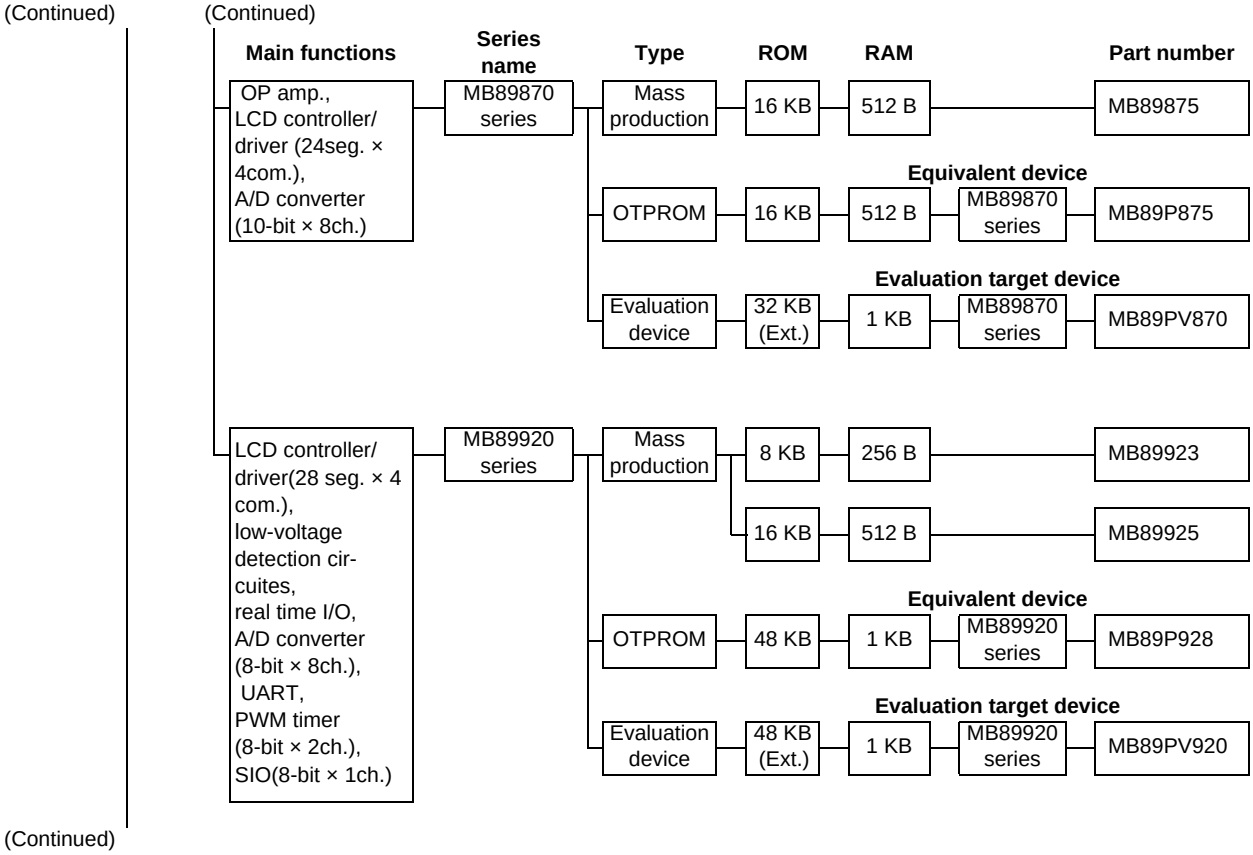

(Continued)

MB89870 Series

Standard products (LCD controller/driver, OP-AMP, built-in A/D converter)

- Maximum clock frequency:10 MHz (32.768 kHz)
- Minimum execution time: 0.4 µs to 6.4 µs (61 µs)
- Operating temperature range:-40°C to +85°C

Part number	Operating power supply voltage* (V)	Package			Functions
		LQFP	QFP	MQFP	
MB89875	+2.2 to +6.0	80P	80P	–	I/O ports: 45 Timebase timer (WDT): 21-bit × 1ch. Timer/counter: 8-bit × 2ch. (16-bit × 1ch.) PWM timer: 8-bit × 1ch. A/D converter: 10-bit × 8ch. LCD controller/driver:96 elements, 2 to 4 common, 16 to 24 segments, 4 bias power supplies, 8-bit × 12 LCD display RAM OP-AMP.: 4 SIO: 8-bit × 1ch. Clock prescaler: 15-bit Buzzer output Interrupts: 6 internal, 8 external Low-power consumption (standby functions) modes: Sleep, watch, stop, sub
MB89P875	+2.7 to +6.0	80P	80P	–	
MB89PV870		–	–	80C	

*: A/D = 3.5V to 6.0V
Packages: P - plastic C - ceramic

MB89920 Series

Standard products (LCD controller/driver, built-in A/D converter)

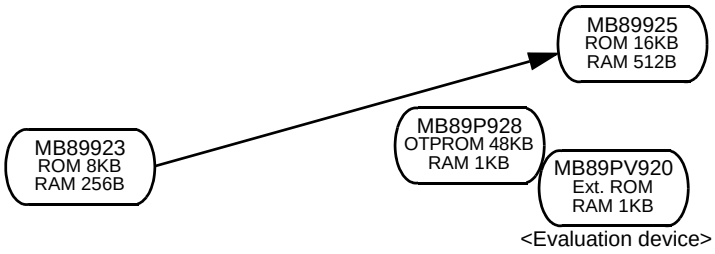

- Maximum clock frequency: 8 MHz
- Minimum execution time: 0.5 µs
- Operating temperature range: -40°C to +85°C

Part number	Operating power supply voltage* (V)	Package		Functions
		QFP	MQFP	
MB89923	+2.2 to +6.0	80P	–	I/O ports: 69 Timebase timer (WDT): 20-bit × 1ch. PWM timer: 8-bit × 2ch. A/D converter: 10-bit × 8ch. LCD controller/driver: 112 elements, 2 to 4 common, 16 to 28 segments, 3 bias power supplies, 8-bit × 14 LCD display RAM UART: 7 to 8-bit × 1ch. Low-voltage detection reset SIO: 8-bit × 1ch. Buzzer output Interrupts: 10 internal, 4 external Low-power consumption (standby functions) modes: Sleep, stop
MB89925		80P	–	
MB89P928	+2.7 to +6.0	80P	–	
MB89PV920		–	80C	

*: A/D = 3.5V to 6.0V
Packages: P - plastic C - ceramic

(Continued)

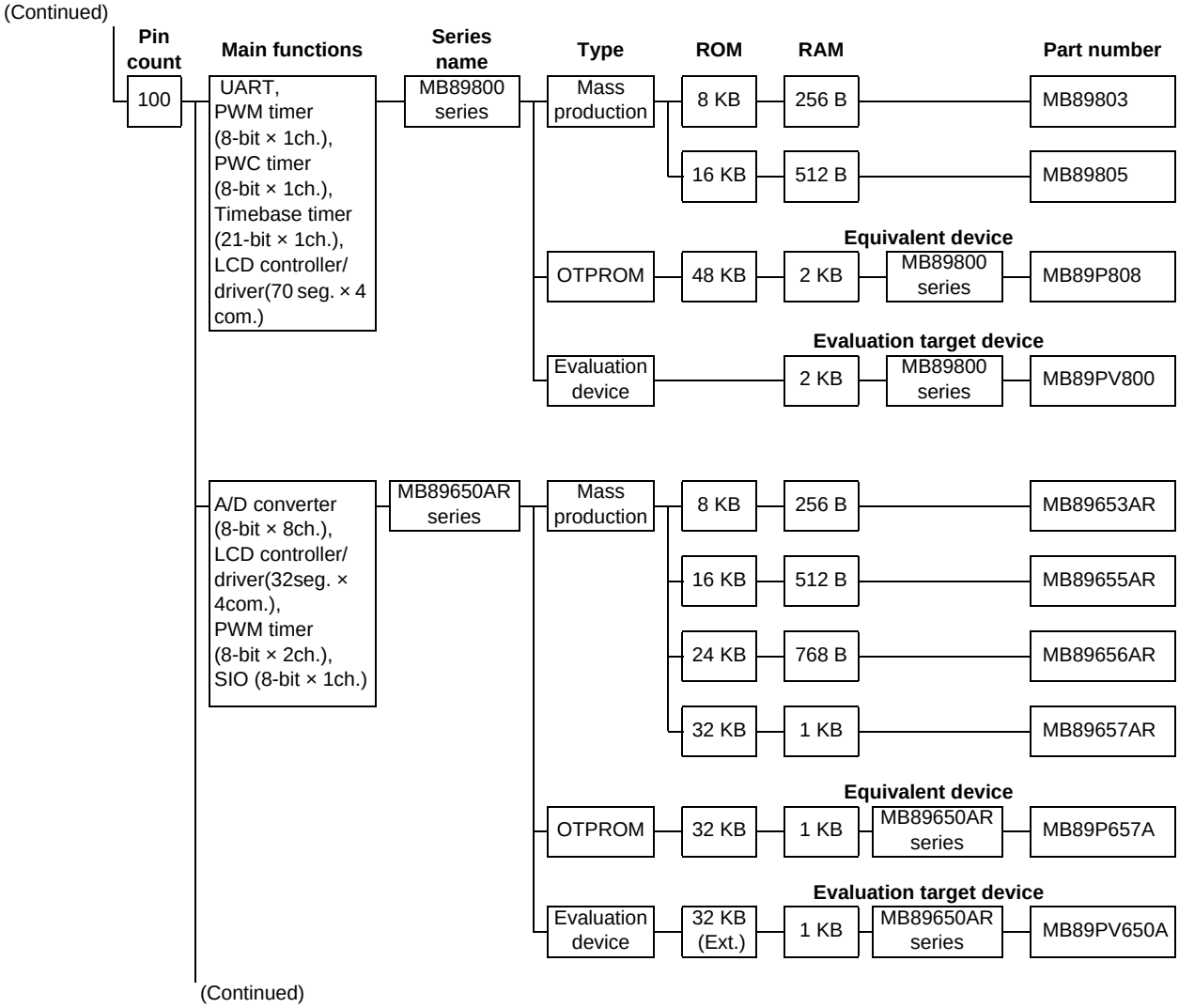

(Continued)

MB89800 Series

Standard products (LCD controller/driver)

- Maximum clock frequency: 10 MHz
- Minimum execution time: 0.4 µs/5V
- Operating temperature range: -40°C to +85°C

Part number	Operating power supply voltage (V)	Package			Functions
		LQFP	QFP	MQFP	
MB89803	+2.2 to +6.0	100P	100P	–	I/O ports: 32 Timebase timer (WDT): 21-bit × 1ch. PWM timer: 8-bit × 1ch. PWC timer: 8-bit × 1ch. UART: 1ch. LCD controller/driver: 280 elements, 4 common, 70 segments, 4-bit × 70 LCD display RAM Interrupts: 5 external Low-power consumption (standby functions) modes: Sleep, stop
MB89805		100P	100P	–	
MB89P808	+2.7 to +6.0	100P	100P	–	
MB89PV800		–	–	100C	

Packages: P - plastic C - ceramic

MB89650AR Series

Standard products (LCD controller/driver, built-in A/D converter)

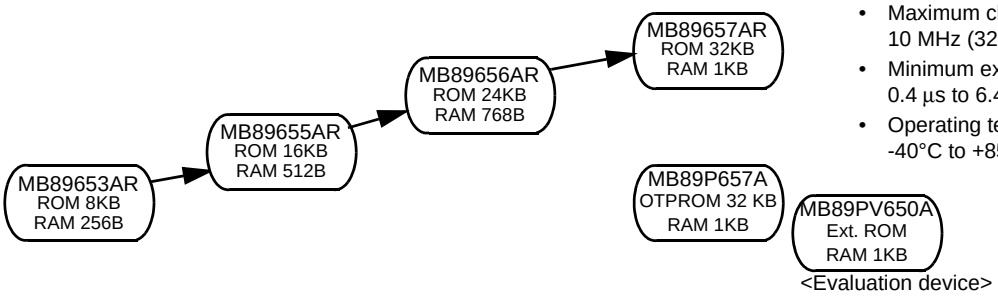

- Maximum clock frequency: 10 MHz (32.768 kHz)
- Minimum execution time: 0.4 µs to 6.4 µs (61 µs)
- Operating temperature range: -40°C to +85°C

Part number	Operating power supply voltage* (V)	Package		Functions
		QFP	MQFP	
MB89653AR	+2.2 to +6.0	100P	–	I/O ports: 64 Timebase timer (WDT): 21-bit × 1ch. Timer/counter: 8-bit × 4ch. (16-bit × 2ch.) PWM timer : 8-bit × 2ch. (4 outputs) A/D converter: 8-bit × 8ch. LCD controller/driver: 128 elements, 2 to 4 common,16 to 32 segments, 4 bias power supplies, 16 × 8-bit LCD display RAM Booster circuit (selected as an option) (MB89653AR/655AR/656AR/657AR) No booster circuit (MB89P657A/PV650A) SIO: 8-bit × 1ch. Clock prescaler: 15-bit Buzzer output Interrupts: 8 internal, 16 external Low-power consumption (standby functions) modes:Sleep, watch, stop
MB89655AR		100P	–	
MB89656AR		100P	–	
MB89657AR		100P	–	
MB89P657A	+2.7 to +6.0	100P	–	
MB89PV650A		–	100C	

*: A/D = 3.5V to 6.0V
Packages: P - plastic, C - ceramic

(Continued)

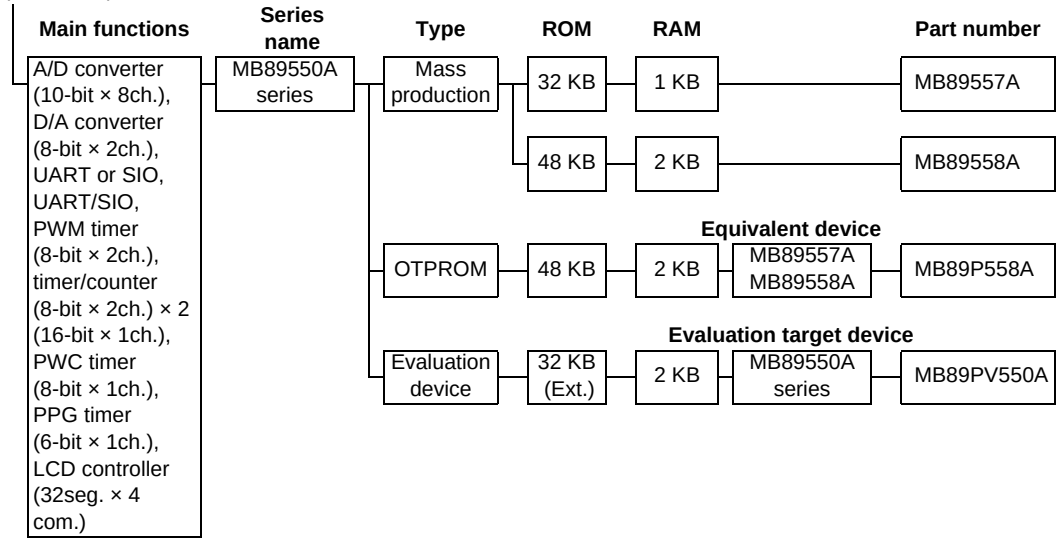
Main functions
Series name
Type
ROM
RAM
Part number
A/D converter (10-bit × 8ch.), D/A converter (8-bit × 2ch.), UART or SIO, UART/SIO, PWM timer (8-bit × 2ch.), timer/counter (8-bit × 2ch.) × 2 (16-bit × 1ch.), PWC timer (8-bit × 1ch.), PPG timer (6-bit × 1ch.), LCD controller (32seg. × 4 com.)
MB89550A series
Mass production
32 KB
1 KB
MB89557A
48 KB
2 KB
MB89558A
Equivalent device
OTPROM
48 KB
2 KB
MB89557A MB89558A
MB89P558A
Evaluation target device
Evaluation device
32 KB (Ext.)
2 KB
MB89550A series
MB89PV550A

MB89550A Series

Standard products (compact camera, etc.)

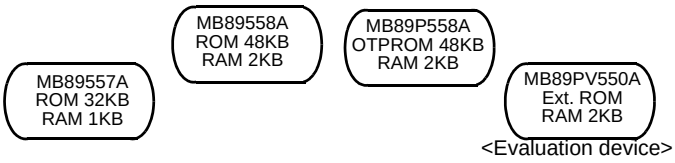

- Maximum clock frequency: 12.5 MHz (32.768kHz)
- Minimum execution time: 0.32 µs (61µs)
- Operating temperature range: -40°C to +85°C

Part number	Operating power supply voltage (V)	Package			Functions
		LQFP	TQFP	MQFP	
MB89557A	+2.2 to +3.6*1 +2.2 to +5.5*2	100P	100P	–	I/O ports: 66 Timebase timer (WDT): 21-bit × 1ch. Timer/counter:8-bit×4ch.(16-bit × 2ch.),16-bit×1ch. PWM timer: 8-bit × 2ch. PWC timer: 8-bit × 1ch. PPG timer: 6-bit × 1ch. A/D converter: 10-bit × 8ch. D/A converter: 8-bit × 2ch. LCD controller/driver: 128 elements, 2 to 4 common, 8 to 32 segments, 1/2, 1/3 bias power supplies, 32 × 4-bit LCD display RAM, booster circuit (selected as an option), static, duty UART/SIO: 8-bit × 2ch. Interrupts: 10 internal, 5 external Low-power consumption (standby functions) modes: Sleep, watch, sub
MB89558A		100P	100P	–	
MB89P558A	+2.7 to +5.5	100P	100P	–	
MB89PV550A		–	–	100C	

*1: Power supply for logic at Vcc1
*2: Power supply for I/O at Vcc2
Packages: P - plastic, C - ceramic

8-bit Proprietary F²MC-8L Family VFD Driver Products

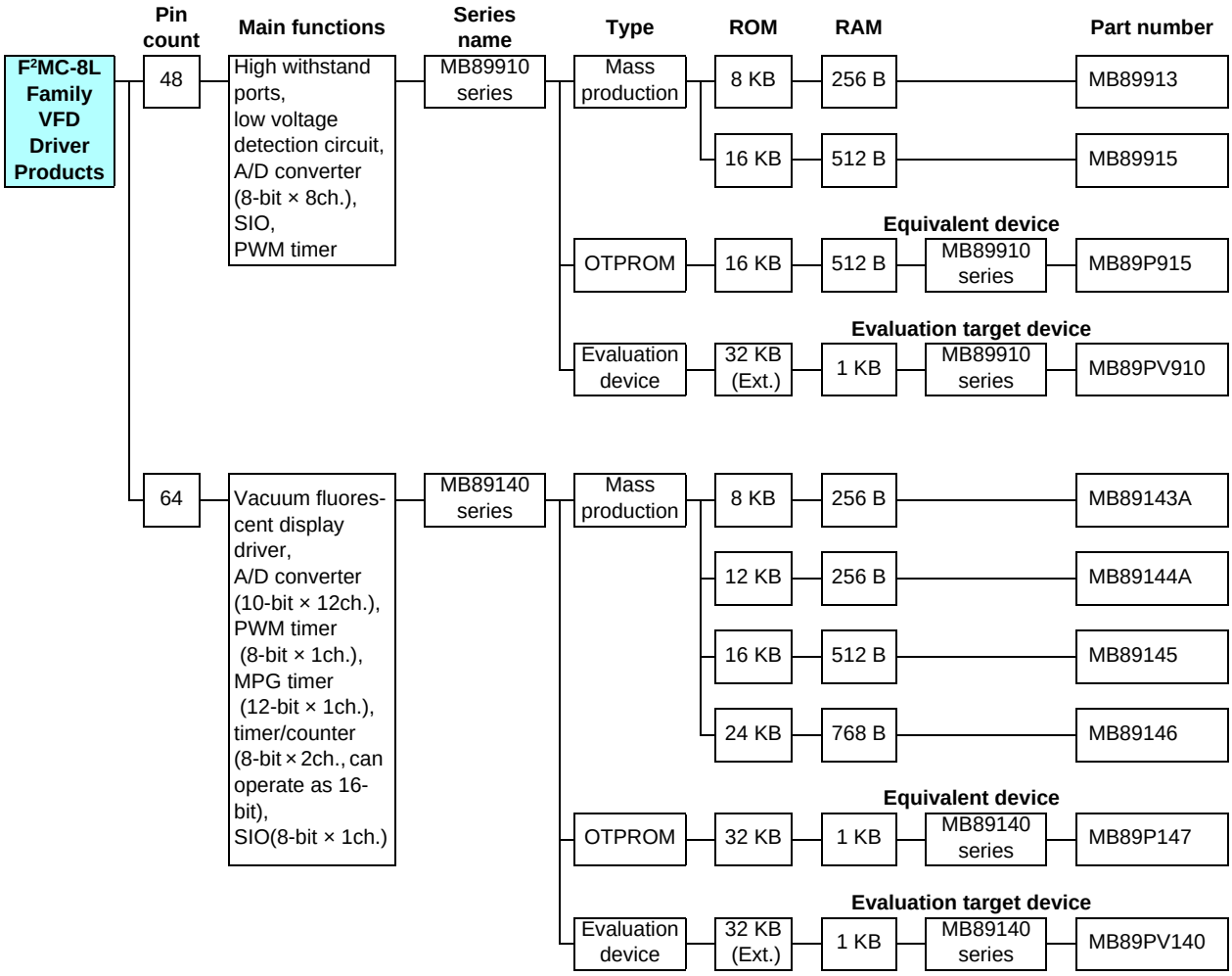

F²MC-8L Family VFD Driver Products

MB89910 Series

Standard products (vacuum fluorescent display driver, compact 8-bit microcontroller)

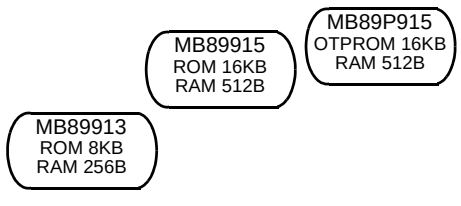

- Maximum clock frequency: 8 MHz (32.768 kHz)
- Minimum execution time: 0.5 µs to 8.0 µs (61 µs)
- Operating temperature range: -40°C to +85°C

Part number	Operating power supply voltage (V)	Package			Functions
		SDIP	QFP	MDIP	
MB89913	+3.8 to +5.5	48P	48P	–	I/O ports: 39 High withstand voltage ports: 8 Timebase timer (WDT): 21-bit × 1ch. Timer/counter: 16-bit × 1ch. PWM timer: 8-bit × 1ch. A/D converter: 8-bit × 8ch. SIO: 8-bit × 1ch. Clock prescaler: 15-bit Low-voltage detection reset (selectable from 4.3V to 3.7V, 3.9V to 3.3V, or 3.6V to 3.0V) Interrupts: 6 internal, 2 external Low-power consumption (standby functions) modes: Sleep, watch, stop, sub
MB89915		48P	48P	–	
MB89P915		48P	48P	–	
MB89PV910	+4.5 to +5.5	–	–	64C	

Packages: P - plastic, C - ceramic

MB89140 Series

Standard products (vacuum fluorescent display driver, 10-bit A/D converter, built-in inverter macro)

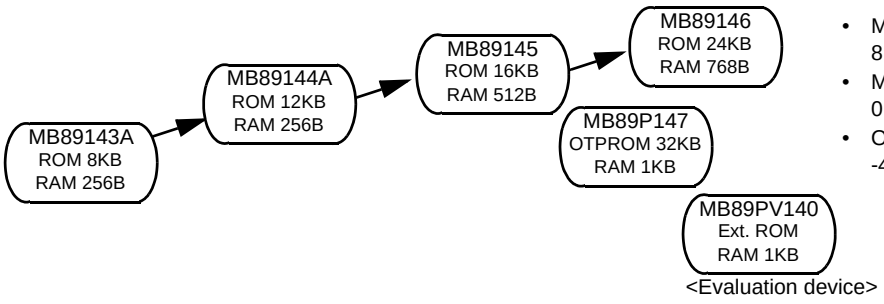

- Maximum clock frequency: 8 MHz (32.768 kHz)
- Minimum execution time: 0.5 µs to 8.0 µs (61 µs)
- Operating temperature range: -40°C to +85°C

Part number	Operating power supply voltage(V)	Package				Functions
		SDIP	QFP	MDIP	MQFP	
MB89143A	+4.0 to +6.0	64P	–	–	–	I/O ports: 55 High withstand voltage ports: 25 Timebase timer (WDT): 21-bit × 1ch. Timer/counter: 8-bit × 2ch. (16-bit × 1ch.) PWM timer: 8-bit × 1ch.(MB89143 except) MPG timer: 12-bit × 1ch.(MB89143 except) A/D converter: 10-bit × 12ch.(MB89143: 8-bit × 8ch.) SIO: 8-bit × 1ch. Clock prescaler: 15-bit Buzzer output Interrupts: 10 internal, 2 external Low-power consumption (standby functions) modes: Sleep, watch, stop, sub
MB89144A		64P	–	–	–	
MB89145	+2.7 to +6.0 *	64P	64P	–	–	
MB89146		64P	64P	–	–	
MB89P147		64P	64P	–	–	
MB89PV140		–	–	64C	64C	

*: A/D = 3.5V to 6.0V
Packages: P - plastic, C - ceramic

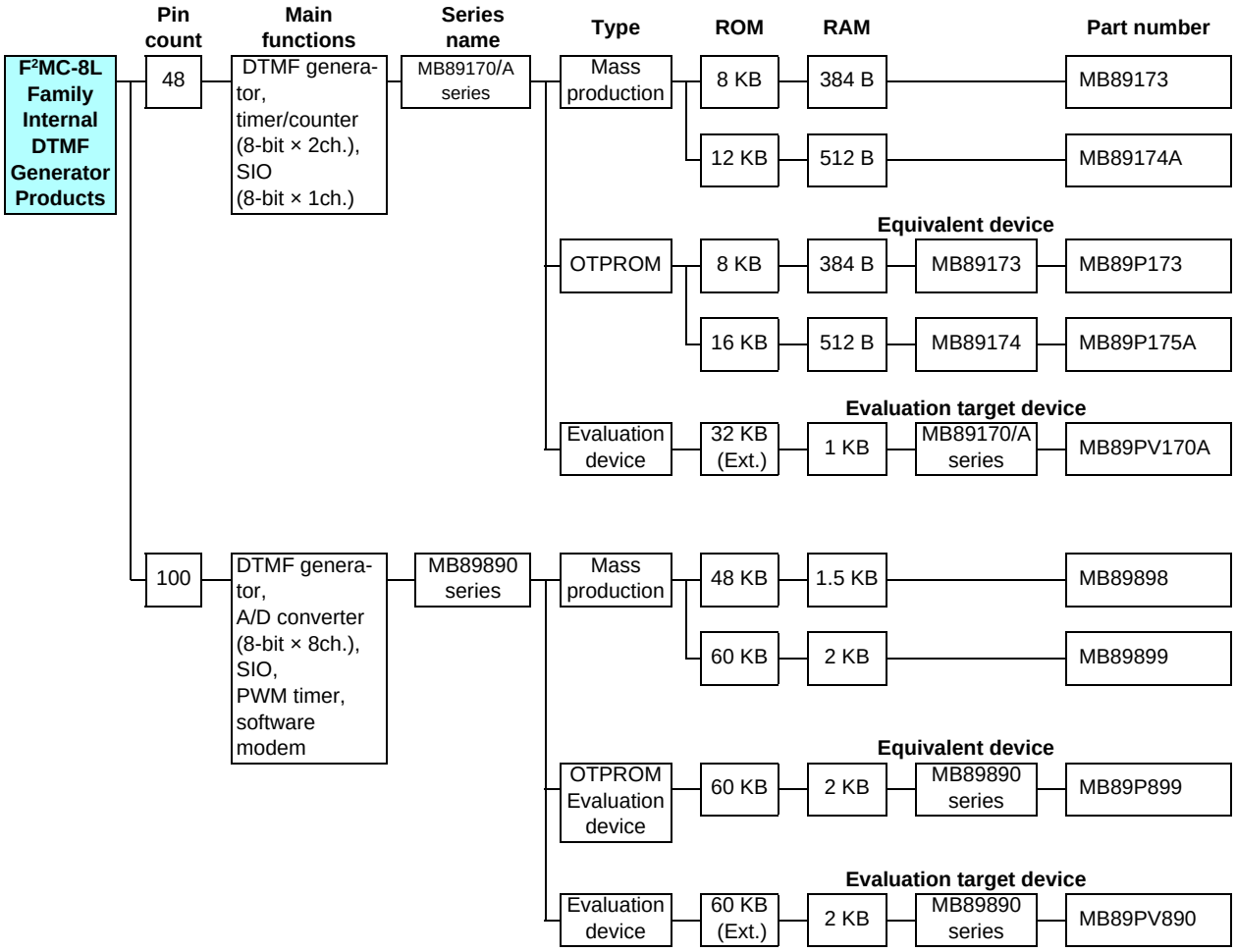
F²MC-8L Family Internal DTMF Generator Products
Pin count
Main functions
Series name
Type
ROM
RAM
Part number
48
DTMF generator, timer/counter (8-bit × 2ch.), SIO (8-bit × 1ch.)
MB89170/A series
Mass production
8 KB
384 B
MB89173
12 KB
512 B
MB89174A
Equivalent device
OTPROM
8 KB
384 B
MB89173
MB89P173
16 KB
512 B
MB89174
MB89P175A
Evaluation target device
Evaluation device
32 KB (Ext.)
1 KB
MB89170/A series
MB89PV170A
100
DTMF generator, A/D converter (8-bit × 8ch.), SIO, PWM timer, software modem
MB89890 series
Mass production
48 KB
1.5 KB
MB89898
60 KB
2 KB
MB89899
Equivalent device
OTPROM Evaluation device
60 KB
2 KB
MB89890 series
MB89P899
Evaluation target device
Evaluation device
60 KB (Ext.)
2 KB
MB89890 series
MB89PV890

F²MC-8L Family DTMF Generator Products

MB89170/170A Series

Standard products (built-in DTMF generator, low cost)

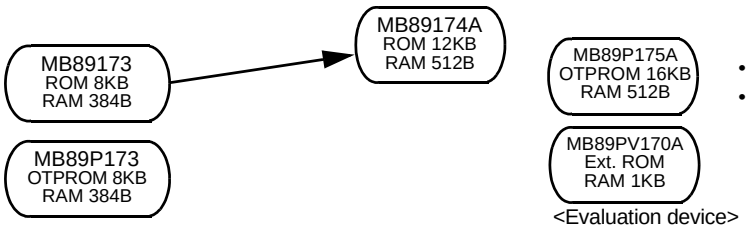

- Maximum clock frequency:
  3.58 MHz (32.768 kHz):MB89170 series
  7.16 MHz (32.768 kHz):MB89170A series
- Minimum execution time: 0.6 µs to 17.6 µs (61 µs)
- Operating temperature range:-40°C to +85°C

Part number	Operating power supply voltage (V)	Package		Functions
		QFP	MQFP	
MB89173	+2.2 to +6.0	48P	–	I/O ports: 37 Timebase timer (WDT): 21-bit × 1ch. Timer/counter: 8-bit × 2ch. (can also operate as 16-bit × 1ch.) DTMF generator: All tone output for CCITT SIO: 8-bit × 1ch. Clock prescaler: 15-bit Interrupts: 4 internal,11 external Low-power consumption (standby functions) modes:Sleep,watch,stop,sub
MB89174A		48P	–	
MB89P173	+2.7 to +6.0	48P	–	
MB89P175A		48P	–	
MB89PV170A		–	48C	

Packages: P - plastic, C - ceramic

MB89890 Series

Standard products (DTMF generator, built-in MSK modem 100-pin)

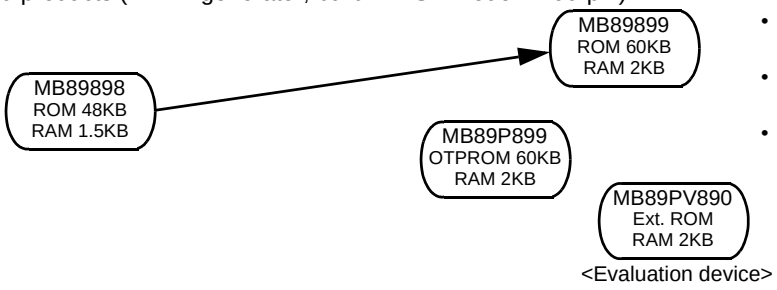

- Maximum clock frequency:
  8 MHz (32.768 kHz)
- Minimum execution time:
  0.5 µs to 8.0 µs (61 µs)
- Operating temperature range:
  -20°C to +85°C

Part number	Operating power supply voltage *(V)	Package		Functions
		QFP	MQFP	
MB89898	+2.2 to +6.0	100P	–	I/O ports: 85 Timebase timer (WDT): 21-bit × 1ch. Timer/counter: 8-bit × 2ch. (can also operate as 16-bit × 1ch.) PWM timer: 8-bit × 1ch. A/D converter: 8-bit × 8ch. DTMF generator: All tone output for CCITT SIO: 8-bit × 1ch + serial with 1-byte buffer × 1ch. MSK software modem output: 1200, 2400bps MSK software modem timer: 1ch. (built-in noise reduction circuit) Clock prescaler: 15-bit Buzzer output (7 tones) Interrupts: 9 internal, 16 external (4 × edge interrupts, 12 × level interrupts) Low-power consumption (standby functions) modes:Sleep,watch,stop
MB89899		100P	–	
MB89P899	+2.7 to +6.0	100P	–	
MB89PV890		–	100C	

*: A/D = 3.5V to 6.0V
Packages: P - plastic, C - ceramic

8-bit Proprietary F²MC-8L Family Inverter Motor Control Products

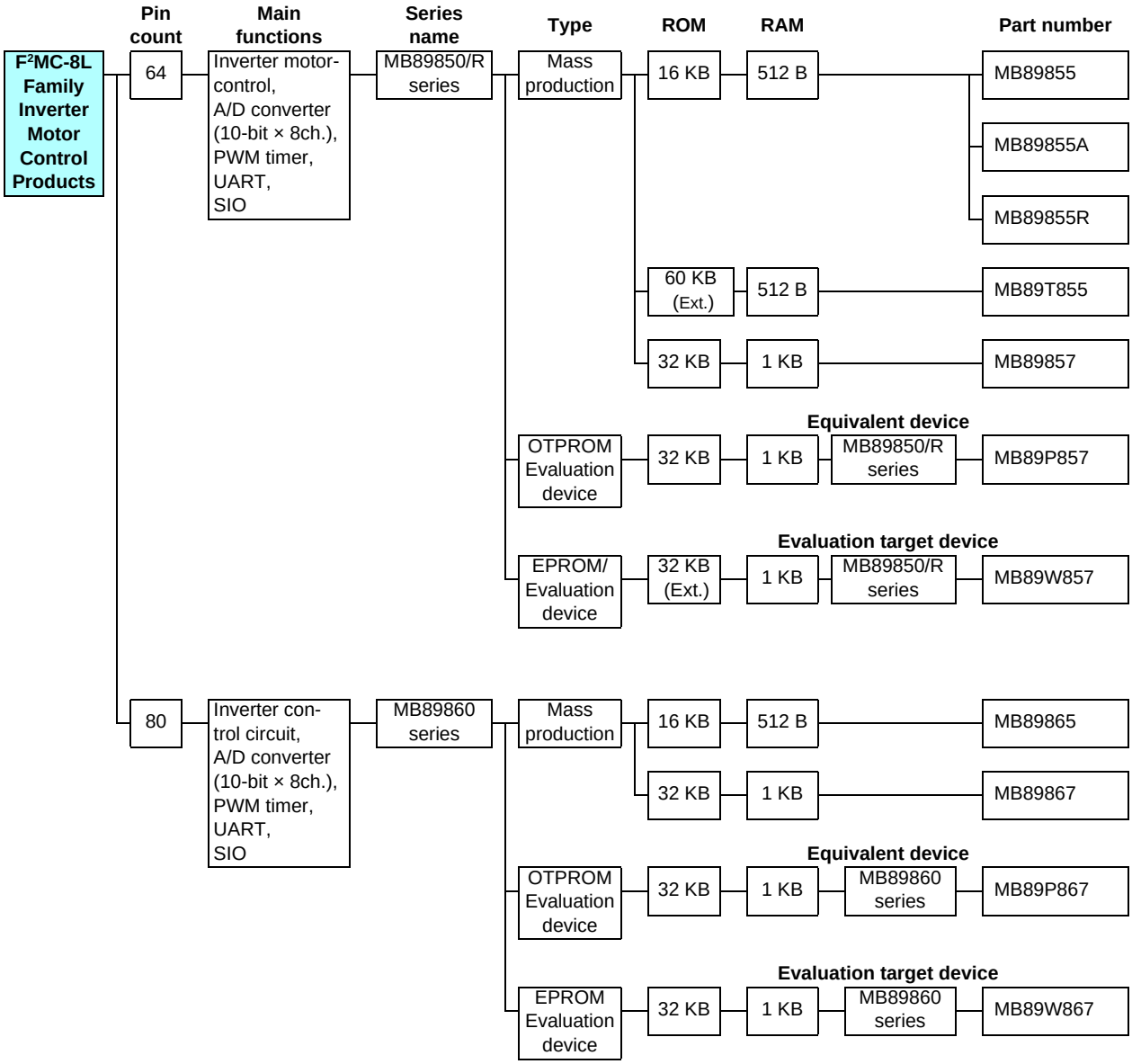

F²MC-8L Family Inverter Motor Control Products

MB89850/850R Series

ASMC (1) (inverter motor control, built-in high-speed pulse output)

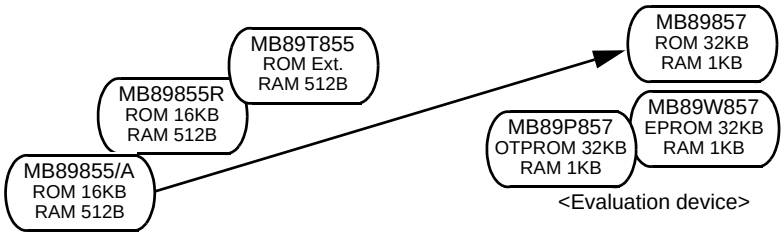

- Maximum clock frequency: 10 MHz
- Minimum execution time: 0.4 µs
- Operating temperature range: -40°C to +85°C

Part number	Operating power supply voltage (V)	Package		Functions
		SH-DIP	QFP	
MB89855	+2.7 to +6.0 *1	64P	–	I/O ports: 53 Timebase timer (WDT): 20-bit × 1 ch. PWM timer:8-bit × 2 ch. (with reload timer function) Timer unit: 10-bit up/down count timer × 1 ch. , output compare register × 4 ch.(with buffer) (0.4µs min resolution), real time waveform output pins × 7 ch. Deadtime timer: 4-bit load timers × 3ch. (non-overlap 3-phase waveform output for timer unit output), includes a function to disable output on detection of over-current (edge or level input) A/D converter: 10-bit × 8 ch. SIO: 8-bit × 1ch. UART: 8-bit × 1 ch. Interrupts: 9 internal, 4 external Low-power consumption (standby functions) modes: Sleep, stop
MB89855A		64P	64P	
MB89855R		64P	64P	
MB89T855	+2.7 to +5.5 *2	64P	–	
MB89857	+2.7 to +6.0 *1	64P	–	
MB89P857	+2.7 to +5.5 *2	64P	64P	
MB89W857		64C	64C	

*1 : A/D = 3.5 V to 6.0 V
*2 : A/D = 3.5 V to 5.5 V
Package: P - plastic, C - ceramic

MB89860 Series

ASMC (1) (inverter motor control, built-in high-speed pulse output)

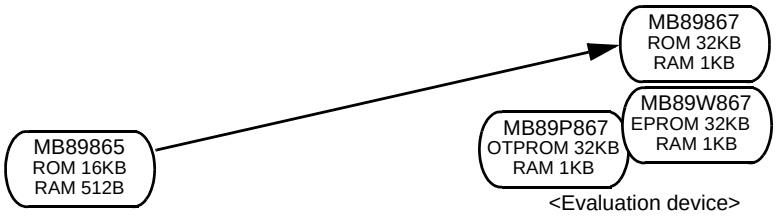

- Maximum clock frequency: 10 MHz
- Minimum execution time: 0.4 µs
- Operating temperature range: -40°C to +85°C

Part number	Operating power supply voltage (V)	Package	Functions
		QFP	
MB89865	+2.7 to +6.0 *1	80P	I/O ports:68 Timebase timer (WDT): 20-bit × 1ch. PWM timer: 8-bit × 2ch. (with reload timer function) Timer unit:10-bit up/down count timer × 1ch., output compare registers × 4 (with buffer), (0.4µs min. resolution), real time waveform output pins × 7ch. Deadtime timer:4-bit load timers × 3ch. (non-overlap 3-phase waveform output for AC inverter motor control.), includes a function to disable output on detection of over-current (edge or level input) A/D converter: 10-bit × 8ch. SIO: 8-bit × 1ch. UART: 8-bit × 1ch. Interrupts: 9 internal, 4 external Low-power consumption (standby functions) modes:Sleep, stop
MB89867		80P	
MB89P867	+2.7 to +5.5 *2	80P	
MB89W867		80C	

*1 : A/D = 3.5 V to 6.0 V
*2 : A/D = 3.5 V to 5.5 V
Package: P - plastic, C - ceramic

8-bit Proprietary F²MC-8L Family Internal USB Products

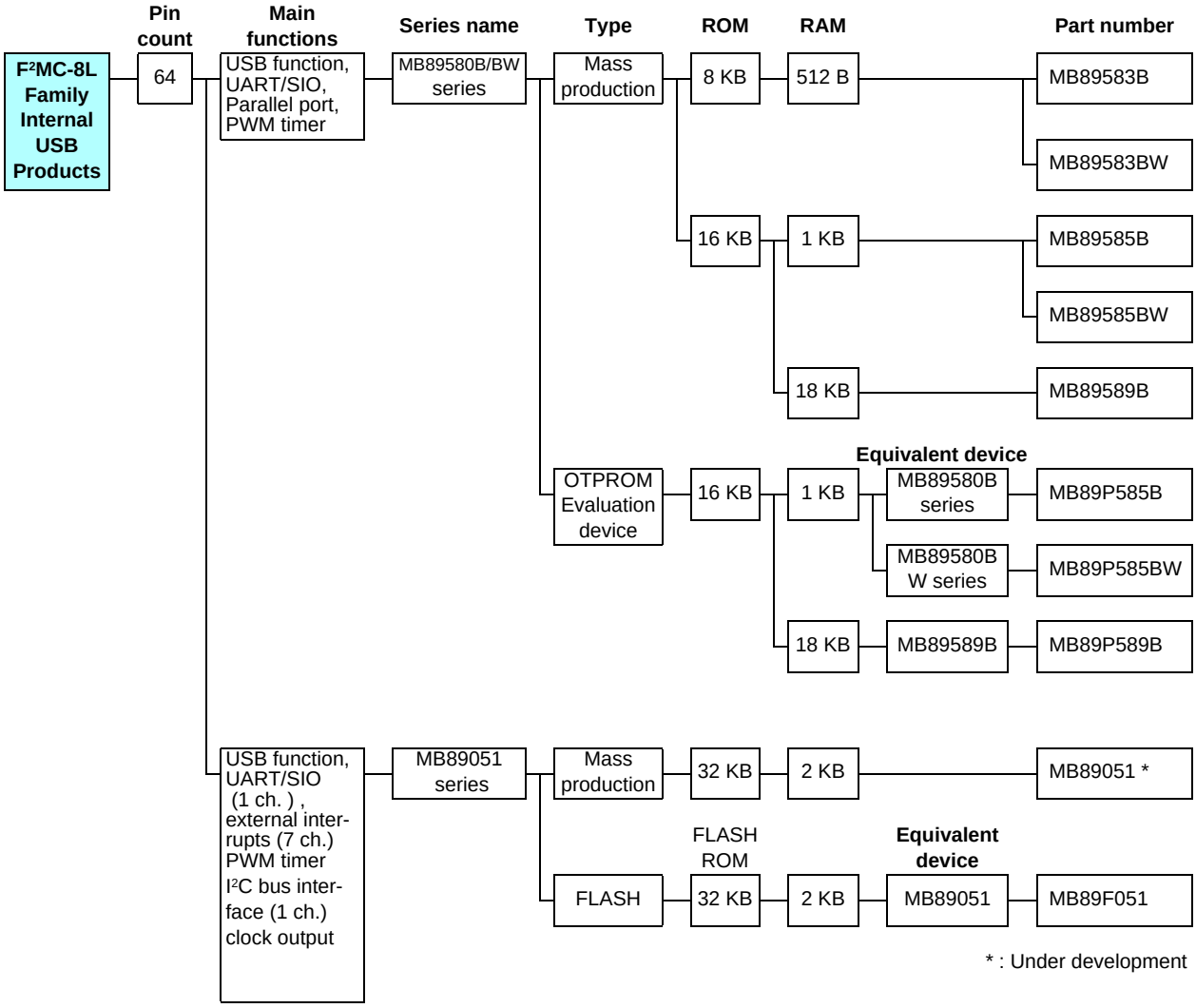

F²MC-8L Family Internal USB Products

MB89580B/580BW Series

Standard products (Internal USB function)

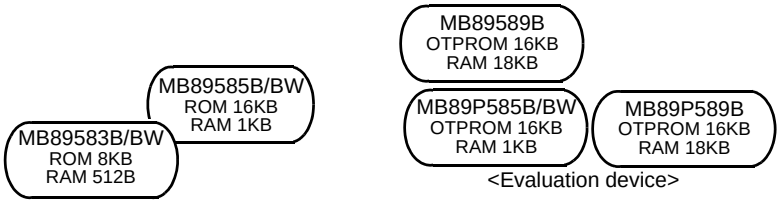

- Maximum clock frequency: 12 MHz
- Minimum execution time: 0.33 µs
- Operating temperature range:-40°C to +85°C

Part number	Operating power supply voltage (V)	Package		Functions
		LQFP (0.5 mm pitch)	LQFP (0.65 mm pitch)	
MB89583B	+3.0 to +5.5	64P	–	I/O ports : 53 Timebase timer : 21-bit × 1ch. PWM timer : 8-bit × 2ch. (also used as PPG timer × 1ch.) USB function UART/SIO : 1ch. Parallel port State of terminal RPVP(D+) and RPVM(D–) until starting USB connection : High-Z : MB89593B/595B/P595B Low-level output : : MB89593BW/595BW/P595BW Interrupts : 8 external Low-power consumption (standby functions) modes : Sleep, stop
MB89583BW		64P	–	
MB89585B		64P	–	
MB89585BW		64P	–	
MB89589B		–	64P	
MB89P585B		64P	–	
MB89P585BW		64P	–	
MB89P589B		–	64P	

Package : P - plastic

MB89051 Series

Standard products (Internal USB function)

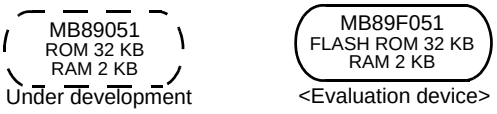

- Maximum clock frequency: 12 MHz
- Minimum execution time: 0.33 µs
- Operating temperature range:-40°C to +85°C (USB operation : 0°C to +70°C)

Part number	Operating power supply voltage (V)	Package	Functions
		LQFP	
◎MB89051	+3.0 to +5.5	64P	I/O ports: 41 USB function (endpoint : 4) Timebase timer : 21-bit × 1 ch. PWM timer : 8-bit × 2 ch. UART/SIO : 1 ch. Interrupts: 7 external I²C bus interface (1 ch.) Clock output : 6 MHz, 12 MHz Low-power consumption (standby functions) modes: Sleep, stop
◎MB89F051		64P	

Package : P - plastic

◎ : Under development

Environment Development Features

(1) Development efficiency enhancement

- Provides integrated total environment
  SOFTUNE V3 Workbench (Manager + Debugger)
  SOFTUNE V3 Workbench (Manager + Debugger) integrates language tools and debugger tools, further facilitating the repeated process of coding, compiling and debugging.
- High programming efficiency
  C compiler support
  Structured assembly language support
- High programming development efficiency
  Provides C library
  Supports C language and assembly source debugging function
- Easy operation by multi windows
  SOFTUNE V3 Workbench (manager + debugger)
  SOFTUNE V3 C checker
  SOFTUNE V3 C analyzer

(2) Efficient system development tools

- Provides realtime debugging using real target board
  Evaluation tool + SOFTUNE V3 Workbench emulator debugger
- Provides software debugging without target board

(3) Total development environment

- Personal computer (IBM-PC)
- ICE tool (MB2140A series, personal emulator)

(4) Conformity with standards

Improves versatility and portability of software resources

- C language: Conforms to ANSI standard
- C library: Conforms to ANSI standard

SOFTUNE V3

1. The SOFTUNE Integrated Development Environment

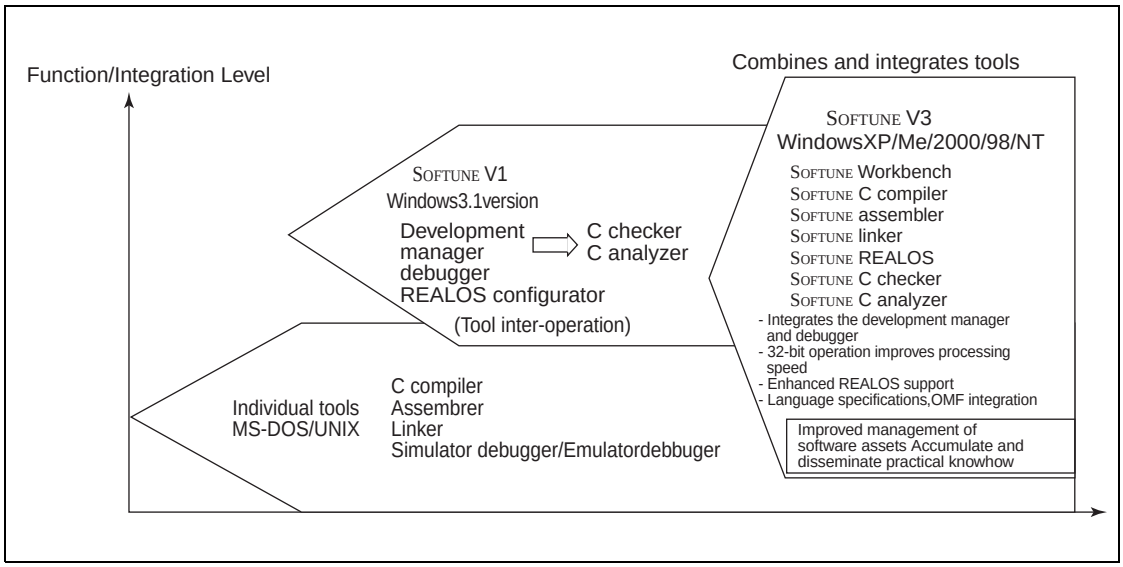

2. SOFTUNE V3 Features and Structure

Workbench integrated project manager and two debugger modules

Errors can be corrected on the "fly", as they are discovered, and the resulting code can be debugged on the spot.

A variety of tools to support C-language coding are available

"C Checker" confirms code operation and "C Analyzer" analyzes the code's structure.

(1) Removing the Annoying Settings which are Part of Program Development

Developing programs for different systems requires the programmer to edit source code, perform actual builds and confirm program operations (debug). Finally, the programmer returns to the editing process to incorporate necessary changes, as indicated by debugging results.

SOFTUNE V3 is an integrated developing environment which is designed to perform such repetitive processes smoothly and efficiently. It is the third generation of SOFTUNE, which has evolved to meet various needs of our customers.

(2) Program Flow

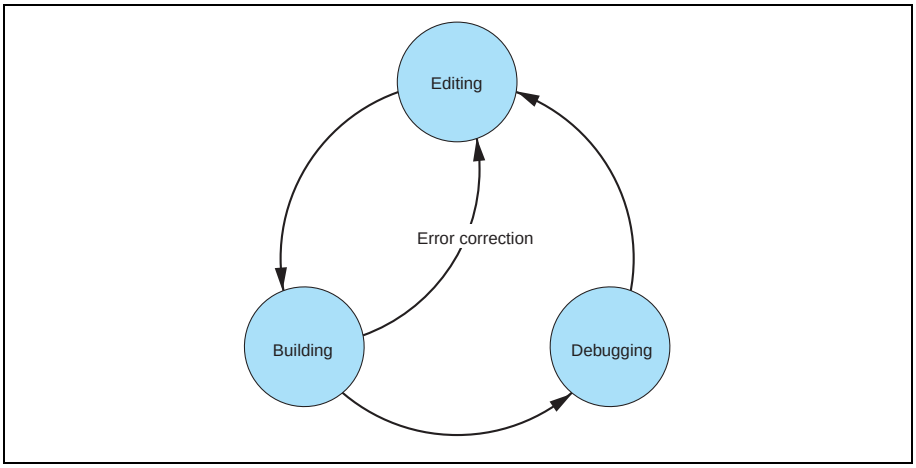

(3) Structure of SOFTUNE V3

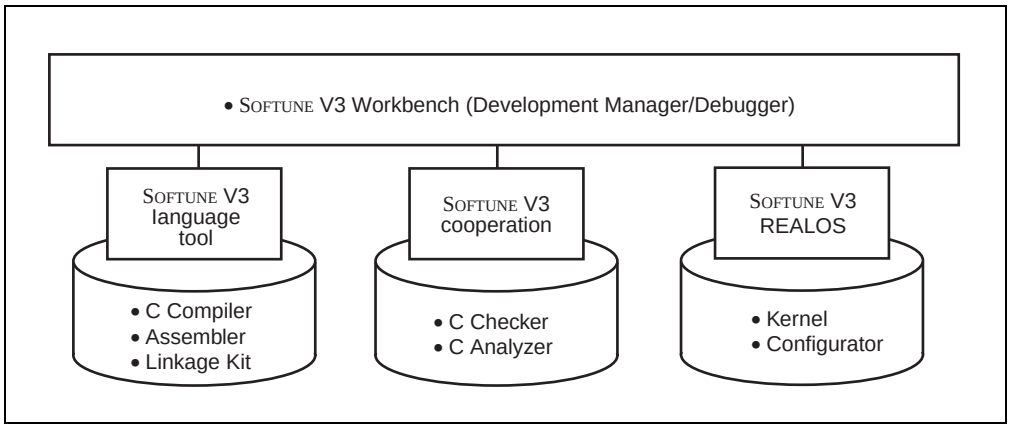

(4) Environment with SOFTUNE V3

The Efficient and Easy-to-Use Integrated Developing Environment.

Program development requires repeated editing, make/build, and debugging operations. Performing these functions smoothly and effectively contributes to improved efficiency.

The SOFTUNE V3 integrated developing system is designed to meet program developers' numerous demands, while ensuring ease of use.

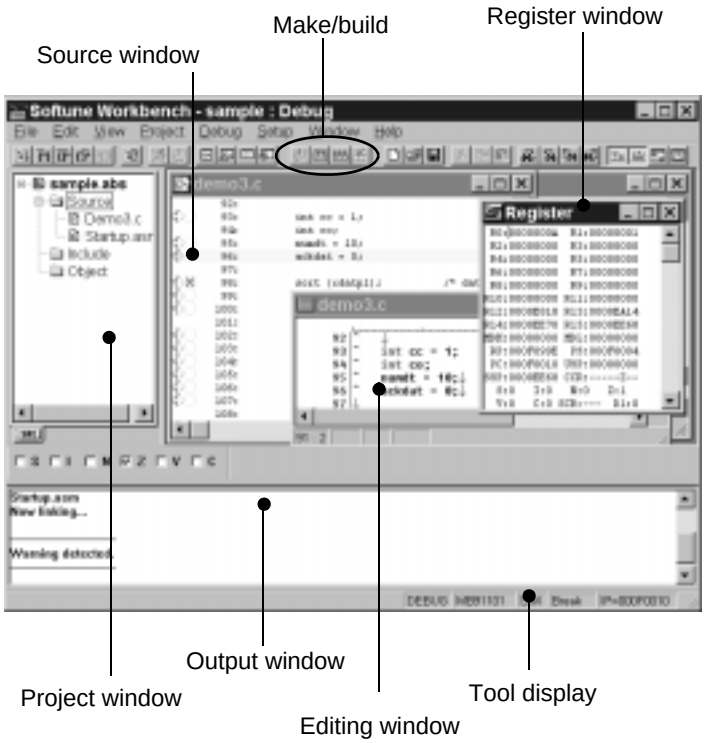

3. Manager Functions

Software programming proceeds according to the "project file", which contains all the information needed for program development.

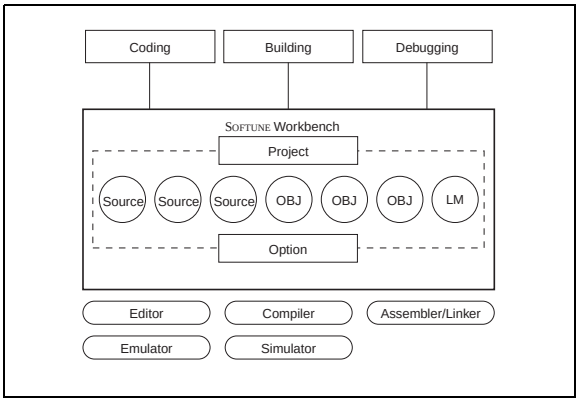

(1) Effective Project Usage

Whether working alone on several projects simultaneously or developing a project as a group, project files can be used to create a simple developing environment.

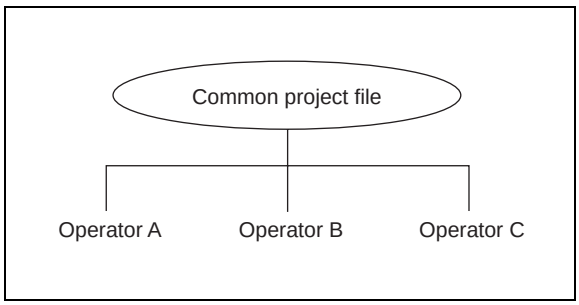

(2) Extremely Easy to Use

- Built-in Editor
  The built-in editor comes complete with many useful functions, such as visual keyword emphasis and auto-indent.
- Error Jump and On-line Help
  Errors that occur during builds are displayed in the output window at the bottom of the screen.
  To make a "Tag-jump" Double-click Mouse.Once on the error press "F1 key" for a more detailed error display.
- Cooperation with Commercially Available Editors
  To meet developers' requests to use editors to which they are accustomed, SOFTUNE can be configured to use the following commercially available editors:(Codewright32, TextPAD32 and others)

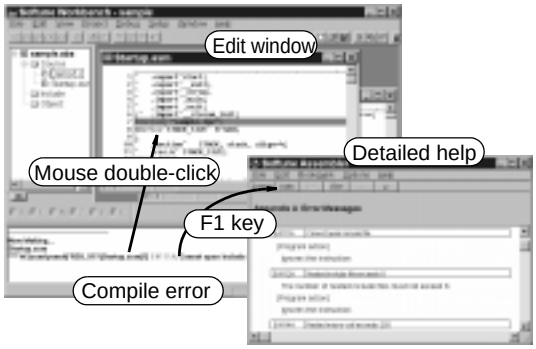

(3) Customizable Environment

When sharing files, cooperation with source generation management tools is assured, and file type conversion tools are called up, so that each person can operate in his or her own customized developing environment.

4. Debugger Function

SOFTUNE Workbench supports two debuggers that are needed at various stages of development. The appropriate debugger environment can be selected to match the situation.

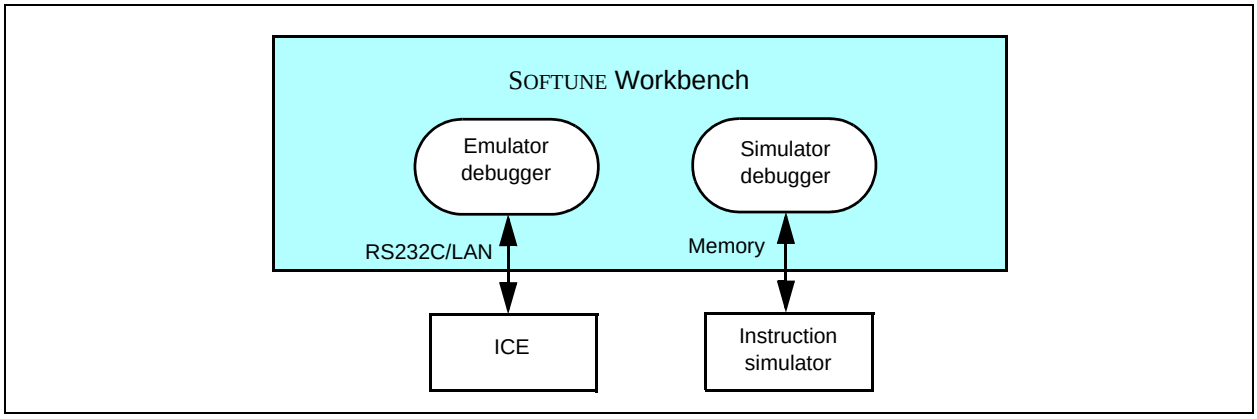

(1) Easy-to see Screen Information

The user can freely change the screen layout by selecting the necessary windows. In addition, the displayed information can be selected to provide only the infomation that is necessary.

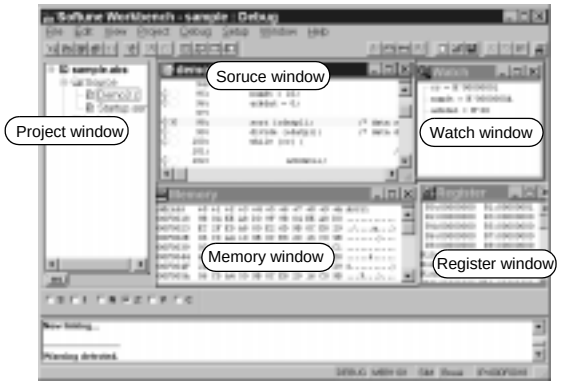

(2) Simple Environment Setting

- Debugging Environment: Setup "Wizard"

  The setup "wizard" supports the selection of communication lines with emulation pods and boards, as well as window settings.
- MCU Operating Environment

  The so-called “CPU information file,” which contains the information required to support all MCUs, is provided as standard. Necessary information such as I/O port locations, ROM/RAM capacity and initial addresses can be set automatically.
- Saving and Restoring the Debugging Environment

  Previous debugging environment specification, such as window locations, breakpoint settings, and memory mapping information, are saved, so that these settings are restored the next time the program is initiated.

5. Cooperation

In cooperation with SOFTUNE Workbench, the following SOFTUNE components help improve the quality of C-language programming, which greatly increases reviewing and documentation efficiency.

1)SOFTUNE V3 C Checker

Designed to meet the following requests from beginners through to advanced users:

- Eliminate all coding mistakes.
- Review programs quickly and efficiently.
- Enable even C-language beginners to create quality code.
- Maximize coding skills.
- Use software assets on Fujitsu CPUs.

The SOFTUNE C Checker checks code for maintainability, methods of expanding specifications and transportability; indicates areas where quality and performance could be improved, and reports these results to the user. The user can then review the C-language code.

(1) Outline

Recently software for embedded microcontrollers has been developed in the C language. However, it is difficult to understand the message output from a compiler unless the language specifications are well known.
This development support tool checks C-source programs to display and print advice for better quality and performance. It also has a facility for selecting necessary advice carefully.

(2) Features

- Outputs advised to be suitable for these objectives: Portability, coding errorperformance, porting to Fujitsu CPU's.
- Allows customization according to the programmers level.
- Works with C compilers (fcc911/fcc911s, cc907/fcc907s, fcc896s) for Fujitsu microcontrollers (FR family, F²MC-16 family, and F²MC-8L family).
- Provides easy operation and simple display over a GUI.

(3) Advising Function

The following pieces of advice are given. "Reason of check", "Example of program", "Suggestion of correction", and "One-point advice" are displayed and explained for each check item.

- Portability

  This tool makes a close check on the items "processing-definded operation" and "undefined operation" which can be problems in portability within the ANSI standard.
  It also gives an explanation of the operation of C compilers (Fcc911, Fcc907 and Fcc896) for Fujitsu microcontrollers.

  For example, the tool gives the user proper advice on many problems (such as a data type acceptable to a structure, code, and its arrangement) at the time of porting.

- Coding error

  This tool indicates the items which are not wrong in the language specifications but may cause an error and the items which are logically inconsistent.

  For example, the equivalent expression "**`if (a==0)`**" in the if statement is likely to be typed as the assignment expression "**`if (a=0)`**" by mistake. Most compilers cannot detect such an error.

- Performance

  This tool indicates the items generally providing better performance and the items essential and effective for the FR family, F²MC-16 family and F²MC-8L family.
  Stress is especially, put on the detection of object size reduction which can be a problem in software for embedded microcontrollers.

  For example, if a function return value is structure of the double type, an area is reserved for the return value and an object which is to be transferred to the area is output.

  This tool advises the user to transfer the function return value by a pointer and largely reduce the object size.

- Porting to Fujitsu CPU

  This tool advises the user what to consider in porting exsting software from other makers' CPU to Fujitsu CPU in the FR family, F²MC-16 family and F²MC-8L family.

  For example, in porting software resources created for the F²MC-16 family to the FR family, this tool advises the user to delete the expansion specifications (**`__far, __near, and __direct etc.`**) inherent to the F²MC-16 family.

8-bit Proprietary F²MC-8L Family Support Tools

•Indicated messages output

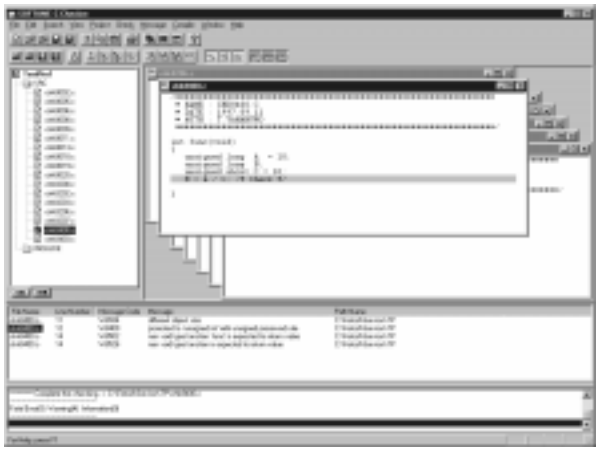

• Coding error indicated and advice displayed

• Advice of porting to Fujitsu C compilers displayed

• Quality-related massages listed

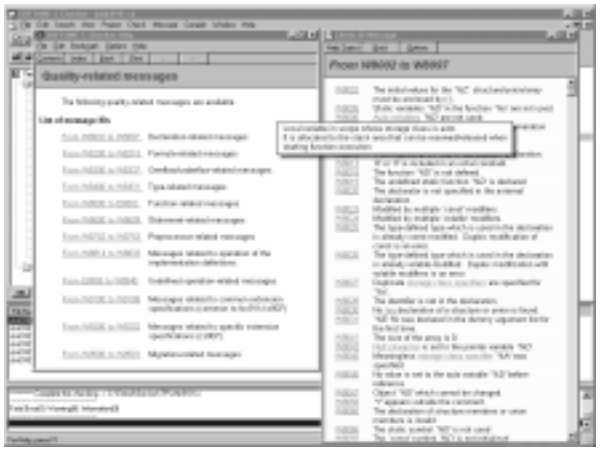

2) SOFTUNE V3 C Analyzer

Designed to meet the following user situations:

- One wishes to examine a program's structure or processing, but the programmer is absent or documentation is unavailable.
- During program development, one wishes to create a structural program while taking into account structure and processing.
- One wishes to examine the range of effects caused by program modification.
- One wishes to create a program's internal documentation.
- One wishes to explore the possibilities of a more efficient program.

The structure and usage of data in a C-language source program are displayed visually, and the internal data structure, functional tree, stack usage and other infomation can be acquired and stored in a file.

(1) Outline

Recent software (ROM) for embedded microcontrollers is increasingly extending its development scale. This situation is created from development by many programmers, diversion of exsting resources, and use of package programs. This development support tool statically analyzes the C-source program to visually display and print the function-to-function structure, reference data, and statistical data. In addition to generating the information required for design and maintenance, the development support tool also provides functions for development aimed at embedded applications. These functions (maximum stack size calculation) are specific to the C compilers (fcc911s, fcc907s, fcc896s) used for Fujitsu microcontrollers (FR family, F²MC-16 family, and F²MC-8L family).

(2) Features

- Displays and prints the function-to-function structure, reference data, and statistical data.
- Supports the embedded capability of C compilers (fcc911/fcc911s, cc907/fcc907s, and fcc 896s)for Fujitsu microcontrollers (FR family, F²MC-16 family and F²MC-8L family).
- Provides easy operation and simple display over a GUI.

(3) Explanation of Features

The following data is enabled for development, maintenance, and higher porting efficiency.

- Graphic flow

  This feature displays the "call" function in the block structure way. It also allows the display of the entire function and calls from any function and the retrieval of functions.
- Logic flow

  This feature visually displays the internal structure of the C-source program.
  For example, it shapes the control structure of **`for`** and **`switch`** statements and structure declarations. A jump feature for retrieval by functions, variable, tag, and macro names is also provided.
- Displaying statistical data

  This feature displays the complexity and line count of a programs every function, the source of destination function name, and the count of appearances of **`if`**, **`for`** and **`asm`** statements, etc.
- Displaying argument data

  This feature displays data about the function-called file name and line number, the return value of the declared function, and the type of argument. It also checks the adjustability of dummy arguments with actual arguments.
- Displaying cross-reference data

  This feature displays functions, variables, tag and macro declarations in its function and its line number.
- Displaying global data

  This feature displays the functions using global variables. It also detects unused global variables.
- Program checking

  This feature checks and displays the adjustabiltiy of dummy arguments with actual arguments.
- Calculating the maximum amount of stacks used

  This feature calculates and displays the amount of stacks used in the entire function, as well as in any other functions. This calculation is made on the basis of the output of C compilers (fcc911/fcc911s, fcc907/fcc907s, and fcc896s) for Fujitsu microcontrollers (FR family, F²MC-16 family and F²MC-8L family).

8-bit Proprietary F²MC-8L Family Support Tools

•Displaying graphic flow

• Displaying logic flow, statistical and cross-reference data

• Displaying logic flow (focus), argument and global data

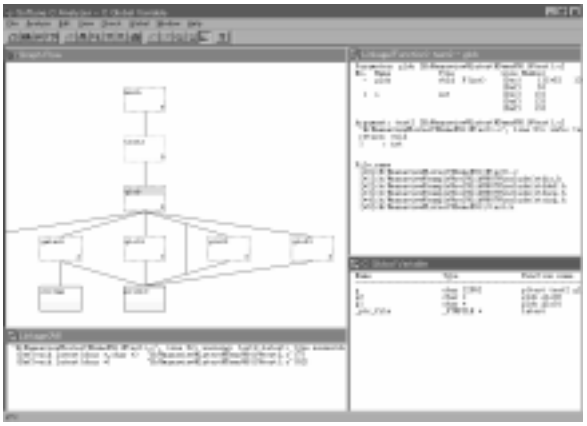

• Displays stack use volume (green numbers) and largest stack configuration (orange numbers)

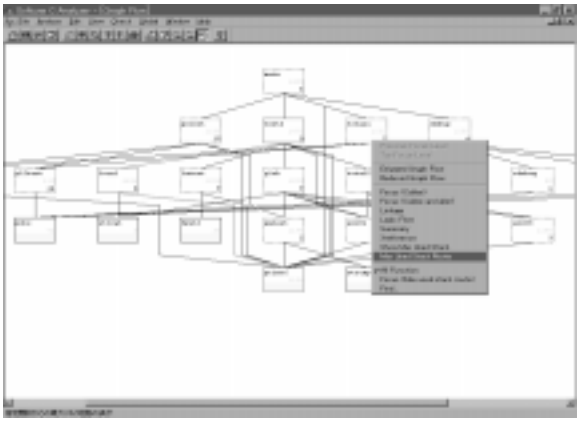

SOFTUNE V3 Support Software Product List (F²MC-8L Family)

Software		Part number *1	Remarks
PackProducts	SOFTUNE V3 Professional Pack	SP3603Z008-P01	SOFTUNE V3 workbench SOFTUNE V3 C compiler SOFTUNE V3 assembler pack SOFTUNE V3 analyser SOFTUNE V3 checker
Individual Products	SOFTUNE V3 workbench	SP3603W008-P01	Integrated Manager,Simulator debugger and Emulator debugger functions
	SOFTUNE V3 C compiler	SP3603C008-P01	ANSI standard conforming
	SOFTUNE V3 assembler pack	SP3603K008-P01	Assembler, linker, librarian,Object format converter
	SOFTUNE V3 analyzer	SP3691X008-P01	For the FR, F²MC-16, and F²MC-8L
	SOFTUNE V3 C checker	SP3691Y008-P01	For the FR, F²MC-16, and F²MC-8L
Compatible emulator hardware (ICE)		MB2140 series - MB2141A/B - MB2144-505/508	–
Personal computers *2	Operating machine	FMV and similar IBM compatibles	–
	Operating OS	WindowsXP WindowsMe Windows2000 Windows98 WindowsNT4.0	–
	Media	CD-ROM *3	–

*1: The product code suffix (Pxx) indicates the number of licenses.
*2: Pentium or higher CPU recommended. 64MB or more memory recommended. 180MB of a disk capacity is required.
The part number is an ordered number of the newest version.
*3: An electronic manual (PDF format) is provided with each product (Japanese and English).
Printed manuals are sold separately. Licensing of each product is available in a number of forms (3, 5 or 10 copies).

Support Hardware and F²MC-8L Family Evaluation Tools

MB2140 Series

- Microcontroller operating voltage : +2.7V to +5.5V
  The range (Max. and Min.) of Microcontroller operating voltage and operating freqency depend on each Microcontroller.
  See the document including Data Sheet and check the range of Microcontroller operating voltage and operating freqency.
- Supports debugging of source level (in assembly, C languages, a mixed indicaton)
- Simplified GUI operation using pull-down menu and buttons
- On-The-FLY function (commands can be run during microcontroller execution and reference memory)
- Powerful real time trace function
- Displays source codes, variables, register, memory and trace on multi windows
- Event trigger allows a wide range of conditions to be specified (× 8)
- Sequential control in 8 conditions and 8 levels
- Performance measurement function (measurement of execution speed between two points, iteration count measurement)
- C0 coverage measurement function (program execution coverage rate measurement)
- Host I/F (standard accessories) : RS-232C (max 115 Kbps) , LAN (10BASE-T)

System Overview

System configuration

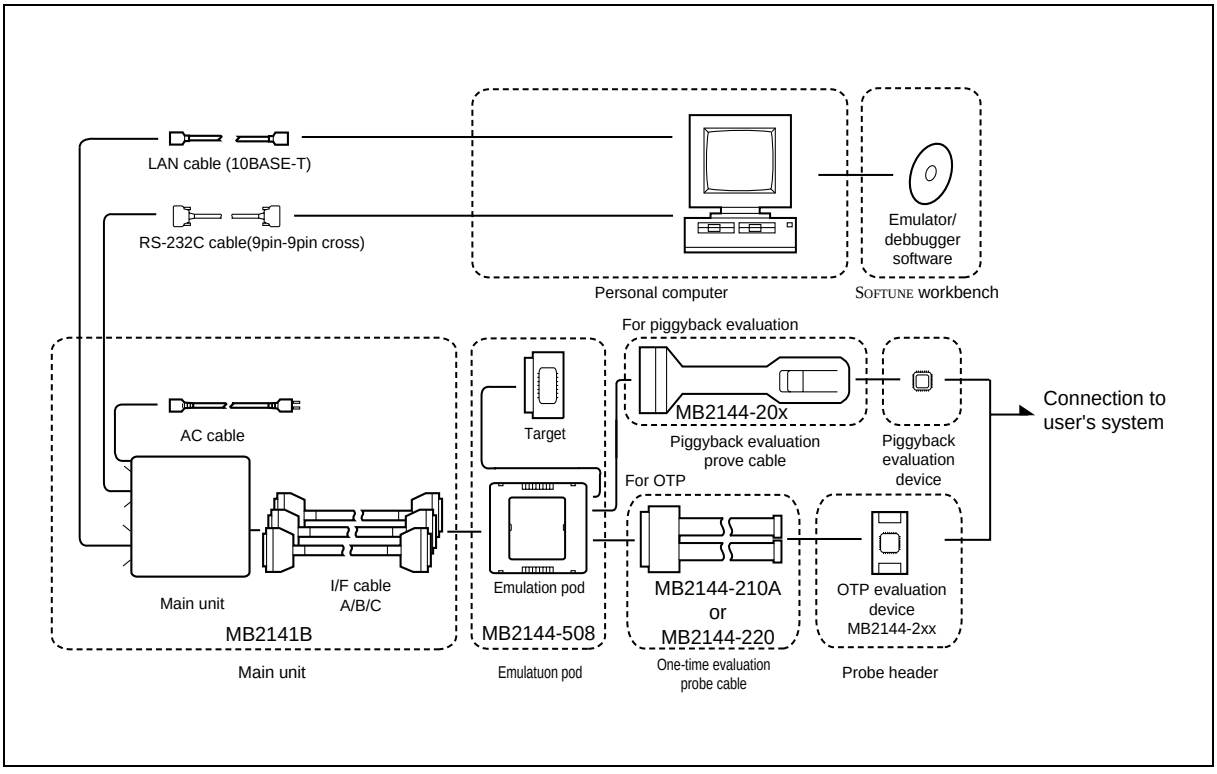

8-bit Proprietary F²MC-8L Family Support Tools

Name	Part number	Remarks
Main unit	MB2141B	For the F²MC-8L family Power supply voltage : 100 V or 200 V. Host I/F : RS-232C(115 Kbps)) , LAN (10BASE-T) Dimensions : W210 × D297 × H77 mm Weight : 2.9 kg Includes : manual
Emulation pod *6	MB2144-508	For the F²MC-8L family Dimensions :158mm(with) × 126mm(depth) × 38mm(height), Weight : 0.5kg Includes : simple target (MB89T625) , manual
Piggyback/evaluation (PV) probe cable	MB2144-201	For DIP-28, piggyback/evaluation package: MDIP-64C-P02
	MB2144-202	For LCC-32 rectangular, piggyback/evaluation package: MQP-64C-P01, MQP-80C-P01, MQP-100C-P02
	MB2144-203	For LCC-32 square, piggyback/evaluation package: MQP-48C-P01, MQP-100C-P02
One-time evaluation probe cable	MB2144-210A or MB2144-220	Use in conjunction with the probe header for each product type.
One-time evaluation probe header	MB2144-211-01A *1	For the MB89860 series (QFP-80), standard options are mounted on MB89P867
	MB2144-212-01A *3	For the MB89850 series (SH-DIP-64), standard options are mounted on MB89P857
	MB2144-214-01A *2	For the MB89810A series (QFP-64), default options are mounted on MB89P817A
	MB2144-215-01 *2	For the MB89660 series (QFP-64), default options are mounted on MB89P665
	MB2144-216-01 *3	For the MB89660 series (SH-DIP-64), default options are mounted on MB89P665
	MB2144-217-01 *4	For the MB89P585B (LQFP-64), default options are mounted on MB89P585B
	MB2144-218-01 *5	For the MB89R905 (QFP-48) ,FPT-48P-M16 (0.8 mm pitch, □ 12 × 12 mm)
	MB2144-224-01 *7	For the MB89P589B (LQFP-64), default options are mounted on MB89P589B
	MB2144-225-01 *4	For the MB89P585BW (LQFP-64) , default options are mounted on MB89P585BW
	MB2144-226-01 *8	For the MB89R907A (QFP-48), FPT-48P-M13 (0.8 mm pitch, □ 10 × 10 mm)

*1 : Includes one Q-pack for QFP-80 (model : TQPACK080RA: made by Tokyo Eletech Ltd.)
Note : Care is required in printed circuit board pattern design because the position of the board connector part (the flat section at the pin tips) of the Q-pack differs from the mass production product package (the Q-pack pins are shifted a few millimeters inwards).
Includes one Q-socket for QFP-80 (model : TQSOCKET080RAG: made by Tokyo Eletech Ltd.)

*2 : Includes one Q-pack for QFP-64 (model : TQPACK064RZ: made by Tokyo Eletech Ltd.)
Note : Care is required in printed circuit board pattern design because the position of the board connector part (the flat section at the pin tips) of the Q-pack differs from the mass production product package (the Q-pack pins are shifted a few millimeters inwards).
Includes one Q-socket for QFP-64 (model : TQSOCKET064RZG: made by Tokyo Eletech Ltd.)

*3 : Includes one IC socket for SH-DIP-64 (model : IC83-64075-GS4: made by Yamaichi Electronics Inc.)

*4 : Includes one Q-pack for LQFP-64 (model : TQPACK064SD : made by Tokyo Eletech Ltd.)
Note : Care is required in printed circuit board pattern design because the size of the foot pattern of the Q-pack differs from the mass production product package (the Q-pack pins are shifted a few millimeters inwards).
Includes one Q-socket for LQFP-64 (model : TQSOCKET064SDW : made by Tokyo Eletech Ltd.)

*5 : Includes one Q-pack for QFP-64 (model : TQPACK064SA : made by Tokyo Eletech Ltd.)
Includes one Q-socket for QFP-64 (model : TQSOCKET064SAW : made by Tokyo Eletech Ltd.)
Note : Care is required in printed circuit board pattern design because the size of the foot pattern of the Q-pack differs from the mass production product package (the Q-pack pins are shifted a few millimeters inwards).

*6 : Interchangeability to MB2114-505.

*7 : Includes one NQ-pack for LQFP-64 (model : NQPACK064SB : made by Tokyo Eletech Ltd.)
Includes one HQ-pack for LQFP-64 (model : HQPACK064SB140 : made by Tokyo Eletech Ltd.)
Note : Care is required in printed circuit board pattern design because the size of the foot pattern of the Q-pack differs from the mass production product package (the Q-pack pins are shifted a few millimeters inwards).

*8 : Includes a pair of Q-pack and Q-socket for QFP-48 (model: TQPACK048SA, TQSOCKET048SAW: by Tokyo Eletech Ltd.)
Note: The dimension of foot patterns is somewhat different between Q-pack and mass production IC packages. Be careful in designing patterns of print-circuit boad.

Contact for details:

*1, *2, *4, *5, *7,*8

- USA: Daimaru New York Co. TEL(212)575-0820/0821
  OESS Co. Head Office TEL(201)288-4422
  OESS Co. Los Angeles Office TEL(714)220-1878
  OESS Co. San Jose Office TEL(408)441-1855
- Europe Germany: OESS GmbH TEL(06106)75013
- Asia Hong Kong: Daimaru Kogyo, Ltd. Hong Kong Office TEL(852)8939457/8939108
  Singapore: Daimaru Kogyo, Ltd. Singapore Office TEL(65)2251636

*3

- USA: Yamaichi Electronics Inc. TEL(408)4520797
- Europe Denmark : Elmatok A.S. TEL(65)351446
  England : Radiatron Components Ltd. TEL(01)8911221
  AB Connector Ltd. TEL(0604)712000
  Finland : Dualtek Oy TEL(80)8019911
  France : Manudax-France TEL(1)4342-2050
  Germany: Macrotron AG TEL(089)4208148
  Glyn GmbH TEL(49)61278077
  Connector Service GmbH TEL(089)429277
  Italy : Eurosab International s.r.l TEL(02)93169781
  Spain : S.A Generalde Imporciones Electronicas TEL(1)416-92-61
  Sweden : Bexab Electronics TEL(08)7680560
  Switzerland : Slcovend AG TEL(01)8303161
- Asia Singapore : Yamco Electronics Pte Ltd. TEL(336)6522
  Korea : Asia Yamaichi Electronics, Inc. TEL(02)482-7263
  Taiwan : Sing Way Co. TEL(02)718-5971
  Joung Lai Trading Co. Ltd. TEL(02)754-1022

- Select the probe cable to match the microcontroller being evaluated.
- Use this evaluation tool by connecting to the user system or to the evaluation device on the user system.
- When using a piggyback/evaluation (PV) device, obtain the piggyback/evaluation (PV) device separately.
- A one-time evaluation or EPROM evaluation type evaluation device is mounted in the one-time evaluation or EPROM evaluation probe cable.

Emulator specification for F²MC-8L

Emulator series		MB2140 series emulator	
Main unit		Main unit : MB2141B	
Pod		MB2144-508	MB2144-505
Target microcontroller		F²MC-8L	F²MC-8L
Evaluation device	Old	Yes	Yes
	New	Yes	No
Operating power supply voltage of micro-controller *		2.7 to 5.5 V	2.7 to 5.5 V
Operating frequency of microcontroller *		Internal : 32 kHz to 20 MHz External : 8 kHz to 5 MHz	Internal : 32 kHz to 16 MHz External : 8 kHz to 4 MHz
Debugger / OS		SOFTUNE V3 Workbench WindowsXP/Me/2000/98/NT4.0	SOFTUNE V3 Workbench WindowsXP/Me/2000/98/NT4.0
Simple target		Attachment (MB89T625)	No
Memory area		- User's memory area - Emulation memory area - Undefined area	
User's memory area		- Max 20 area - Unrestricted of area size - READ, WRITE : an access attribute setup is possible.	
Emulation area	Size	64 Kbyte	
	Mapping unit	1 byte unit, 20area	
	Access attribute	READ, WRITE, GUARD, NOGUARD	
Mirror area : It is used at on-the-fly.		It is 5 area in all about copy area of user's memory area and emulation memory area.	
Execution control		- Continuous execution- The automatic change by sauce display - Step execution- 1 step execution of a sub routine and a function - Machine language command unit- Permission/prohibition of interrupt - C language sauce line unit- Permission/prohibition of a watch dog reset function	
Break		- Instruction execution break : 64 K point - Data access break : 64 K point - Sequential end break - Garded access break - Trace buffer full break - Performance buffer full break - Forced break	
Trace capacity		- Single trace : 32 K cycles (ON/OFF of trace by the event trigger and the sequencer is possible.) - Multi trace : 2 K blocks (1 block is 8 cycles before and after an event trigger.)	
Trace data		- Address - Data - Status Access status : READ, WRITE, CODE Inside status of a device : reset, a hold, and data are effective/invalid. - External probe data - The execution level of a sequencer	
Display form oftrace data		- Machine cycle - Instruction mnemonic - Sauce line	
Event trigger con-dition setup	The number of points	8	
	Trigger conditions	- The AND conditions of address, data, external probe and status. - All conditions can be specified of don't care per 1 bit.	
	Sequential level	8	
	Trigger path	Max 16M time	

(Continued)

(Continued)

Emulator series		MB2140 series emulator	
Main unit		**Main unit : MB2141B**	
Pod		**MB2144-508**	**MB2144-505**
Target microcontroller		**F²MC-8L**	**F²MC-8L**
On-the-fly function (Command execution at the MCU operation)		Yes	
Execution time measurement		- Performance measurement function : 4 domains - Measurement domain : event trigger condition setting domain - Measurement of the minimum, the maximum, and average time is possible. - It is 1µs unit (initial value) is a maximum of 70 minutes. - It is 100 ns unit and is a maximum of 7 minutes.	
Co coverage (Rate measurement of program execution complete coverage)		The range of a debugging domain setup : A maximum of 32 domain An access attribute (R/W) setup is possible.	
Host computer		Personal computer	
Host interface		- RS-232C (115 Kbps) - LAN (10BASE-T)	
Dimensions, weight (A projection part and a cable part remove.)	Main unit	W210 × D297 × H78 mm, 2.9 kg	
	Pod	W160 × D128 × H40 mm, 0.5 kg	
Power supply for emulator : MB2141B		AC 100-120 V and AC 200-220 V are switched automatically.	

* : The range (Max. and Min.) of Microcontroller operating voltage and operating freqency depend on each Microcontroller. See the document including Data Sheet and check the range of Microcontroller operating voltage and operating freqency.

[redacted]

ued)

(Continued)

OTPROM microcontrollers	Package (lead pitch, body size)		Package code	Adaptor socket
MB89P625P-SH	SH-DIP-64	(1.778 mm, 58×17 mm)	DIP-64P-M01	ROM-64SD-28DP-8L *1
MB89P625PF	QFP-64	(1.00 mm, 14×20 mm)	FPT-64P-M06	ROM-64QF-28DP-8L *1
MB89P625PFM	LQFP-64	(0.65 mm, 12×12 mm)	FPT-64P-M09	ROM-64QF2-28DP-8L *1
MB89P627P-SH MB89P629P-SH	SH-DIP-64	(1.778 mm, 58×17 mm)	DIP-64P-M01	ROM-64SD-28DP-8L *1
MB89P627PF MB89P629PF	QFP-64	(1.00 mm, 14×20 mm)	FPT-64P-M06	ROM-64QF-28DP-8L *1
MB89W625C-ES-SH MB89W627C-ES-SH	SH-DIP-64	(1.778 mm, 56.9×18.75 mm)	DIP-64C-A06	ROM-64SD-28DP-8L* 1
MB89P637-xxxP-SH	SH-DIP-64	(1.778 mm, 58×17 mm)	DIP-64P-M01	ROM-64SD-28DP-8L *1
MB89P637-xxxPF	QFP-64	(1.00 mm, 14× 20 mm)	FPT-64P-M06	ROM-64QF-28DP-8L *1
MB89W637C-ES-SH	SH-DIP-64	(1.778 mm, 57×18 mm)	DIP-64C-A06	ROM-64SD-28DP-8L *1
MB89P647PF	QFP-80	(0.80 mm, 14×20 mm)	FPT-80P-M06	ROM-80QF-28DP-8L2 *1
MB89P647PFM	LQFP-80	(0.65 mm, 14×14 mm)	FPT-80P-M11	ROM-80QF2-28DP-8L *1
MB89P657APF	QFP-100	(0.65 mm, 14×20 mm)	FPT-100P-M06	ROM-100QF-28DP-8L2 *1
MB89P657APFV	LQFP-100	(0.50 mm, 14×14 mm)	FPT-100P-M05	ROM-100SQF-28DP-8L
MB89P665P-SH	SH-DIP-64	(1.778 mm, 58×17 mm)	DIP-64P-M01	ROM-64SD-28DP-8L *1
MB89P665PF	QFP-64	(1.00 mm, 14×20 mm)	FPT-64P-M06	ROM-64QF-28DP-8L *1
MB89W665C-ES-SH	SH-DIP-64	(1.778 mm, 56.9×18.75 mm)	DIP-64C-A06	ROM-64SD-28DP-8L *1
MB89P677APF	QFP-80	(0.80 mm, 14×20 mm)	FPT-80P-M06	ROM-80QF-28DP-8L2 *1
MB89P677APFM	LQFP-80	(0.65 mm, 14×14 mm)	FPT-80P-M11	ROM-80QF2-28DP-8L *1
MB89P689PF	QFP-100	(0.65 mm, 14×20 mm)	FPT-100P-M06	ROM-100QF-32DP-8LA *2
MB89P689PFV	LQFP-100	(0.50 mm, 14×14 mm)	FPT-100P-M05	ROM-100SQF-32DP-8LA *2
MB89P808PF	QFP-100	(0.65 mm, 14×20 mm)	FPT-100P-M06	ROM-100QF-32DP-8LA2 *2
MB89P808PFV	LQFP-100	(0.50 mm, 14×14 mm)	FPT-100P-M05	ROM-100SQF-32DP-8LA2 *2
MB89P817APF	QFP-64	(1.00 mm, 14×20 mm)	FPT-64P-M06	ROM-64QF-28DP-8L*1
MB89P825PFM	LQFP-80	(0.65 mm, 14×14 mm)	FPT-80P-M11	ROM-80QF2-28DP-8L3*1
MB89P857P-G	SH-DIP-64	(1.778 mm, 58×17 mm)	DIP-64P-M01	ROM-64SD-28DP-8L*1
MB89P857PF	QFP-64	(1.00 mm, 14×20 mm)	FPT-64P-M06	ROM-64QF-28DP-8L*1
MB89W857	QFP-64	(1.00 mm, 14×20 mm)	FPT-64C-A02	ROM-64QF-28DP-8L5
MB89W857C-ES-SH	SH-DIP-64	(1.778 mm, 56.9×18.75 mm)	DIP-64C-A06	ROM-64SD-28DP-8L*

(r8825)8.5(PFM)-633[(L*)]TJ´4.2 0 0 4.2 499.74 29

Contact for details:Tokyo Japan : Sun Hayato Co. Ltd. FAX (81) 3-5396-9106
Advanced Interconnectics : http://advintcorp.com

Notes:Use a general-purpose EPROM programmer that is able to program a MBM27C256A or MBM27C1000.
A gang EPROM programmer is not recommended. Also, contact Fujitsu for programming mounted devices.
The recommended screening practice before mounting is high-temperature aging (+150°C, 48H).
*1:MBM27C256A equivalent.
Recommended EPROM programmer : UNISITE, 3900, 2900 (Data I/O FAX (81) 3-3779-2203)
1890A, 1891 (Minato Electronics FAX (81) 45-591-6451)
R4945, R4949A (Advantest FAX (81) 44-888-1387)
*2:MBM27C1000 equivalent.
Recommended EPROM programmer : same as *1
*3:MODEL 1890A (Ver. 2.1) + MOS unit OU-910 (Ver. 4.07) : Minato Electronics FAX (81) 45-591-6451
AF9708 (Ver. 1.40 or higher) , AF9709 (Ver. 1.40 or higher) , AF9723 (Ver 1.50 or higher) : Ando Electric Co., Ltd.
*4:MODEL 1890A + MOS unit (Ver. 4.32r) + 3V board (ML01-781) : Minato Electronics FAX (81) 45-591-6451
AF9708, AF9709/B, AF9723 : Ando Electric Co., Ltd. http://www.j-fsg.co.jp/
*5:Serial programming mode only : Yokogawa Digital Computer Co.
Interface (not supported MB89P215)
*6:MODEL 1890A + OU910 (Ver 4.32t1 or higher) , Conversion board : H910-1148 : Minato Electronics
AF9708, AF9709/B : Ando Electric Co., Ltd. http://www.j-fsg.co.jp/

(2)IC Package Conversion Adaptors for the F²MC-8L Family

Target microcontroller	Package conversion (up → down)	IC package conversion adaptor model
MB89610 series MB89620 series MB89630 series MB89530 series	SH-DIP-64 → QFP-64 (1.00 mm pitch)	64SD-64QF-8L
	SH-DIP-64 → QFP-64 (0.65 mm pitch)	64SD-64QF2-8L
	SH-DIP-64 → SQFP-64 (0.5 mm pitch)	64SD-64SQF-8L
MB89120/A series MB89130/A series MB89960/A series	QFP-48 (0.80 mm pitch) → SQFP-48 (0.50 mm pitch)	48QF-48SQF-8L-UP 48QF-48SQF-8L-DWN
MB89190/A series	QFP-48 (0.80 mm pitch)→ SOP-28	48QF-28SOP-8L
	QFP-48 (0.80 mm pitch)→ DIP-28 (2.54 mm pitch)	48QF-28DP-8L
	QFP-48 (0.80 mm pitch)→ SHDIP-28 (1.778 mm pitch)	48QF-28SD-8L
MB89150/A series MB89160/A series MB89560A series MB89640 series MB89670/A series	QFP-80 (0.80 mm pitch) → QFP-80 (0.65 mm pitch)	80QF-80QF2-8L-UP 80QF-80QF2-8L-DWN
MB89150/A series MB89160/A series MB89560/A series	QFP-80 (0.80 mm pitch) → LQFP-80 (0.5 mm pitch)	80QF-80QF2-8L-UP 80QF-80SQF-8L-DWN
MB89550A series MB89570 series	LQFP-100 (0.50 mm pitch) → TQFP-100 (0.4 mm pitch)	100SQF-100TQF-8L
MB89650A series	LQFP-100 (0.50 mm pitch) → QFP-100 (0.65 mm pitch)	100SQF-100QF-8L
MB89863	SH-DIP-64 → QFP-48(0.80 mm pitch)	64SD-48QF-8L
MB89910 series	SH-DIP-64 → SH-DIP-48	64SD-48SD-8L2
MB89930 series	QFP-48 (0.8 mm pitch) → SSOP-30 (0.65 mm pitch)	48QF-30SOP-8L

Contact for details: Tokyo Japan: Sun Hayato Co. Ltd. FAX (81) 3-5396-9106
Advanced Interconnections Corp.: http://www.advintcorp.com/

Evaluation Board for USB

It is an evaluation board corresponding to microcontroller for USB.It contributes to the rise of that the simple evaluation of operation before including in a visitor's system is possible, and development efficiency.
It is constituted by evaluation board for USB, and a main board and a daughter board. A main board is common to each microcontroller products. By changing a daughter board, debugging by ICE combined with the emulator debugger for microcontroller can be performed.

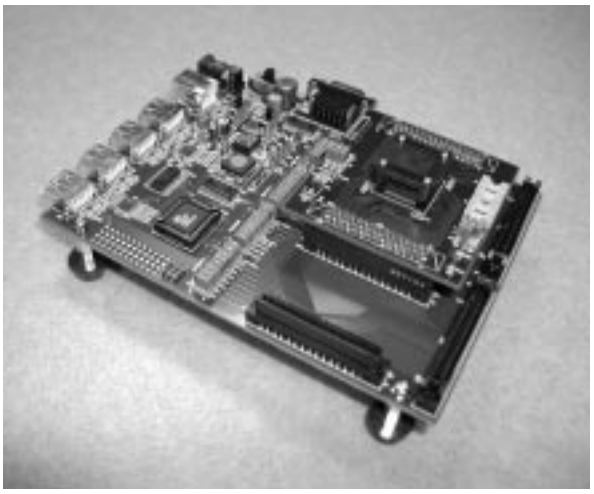

System configuration

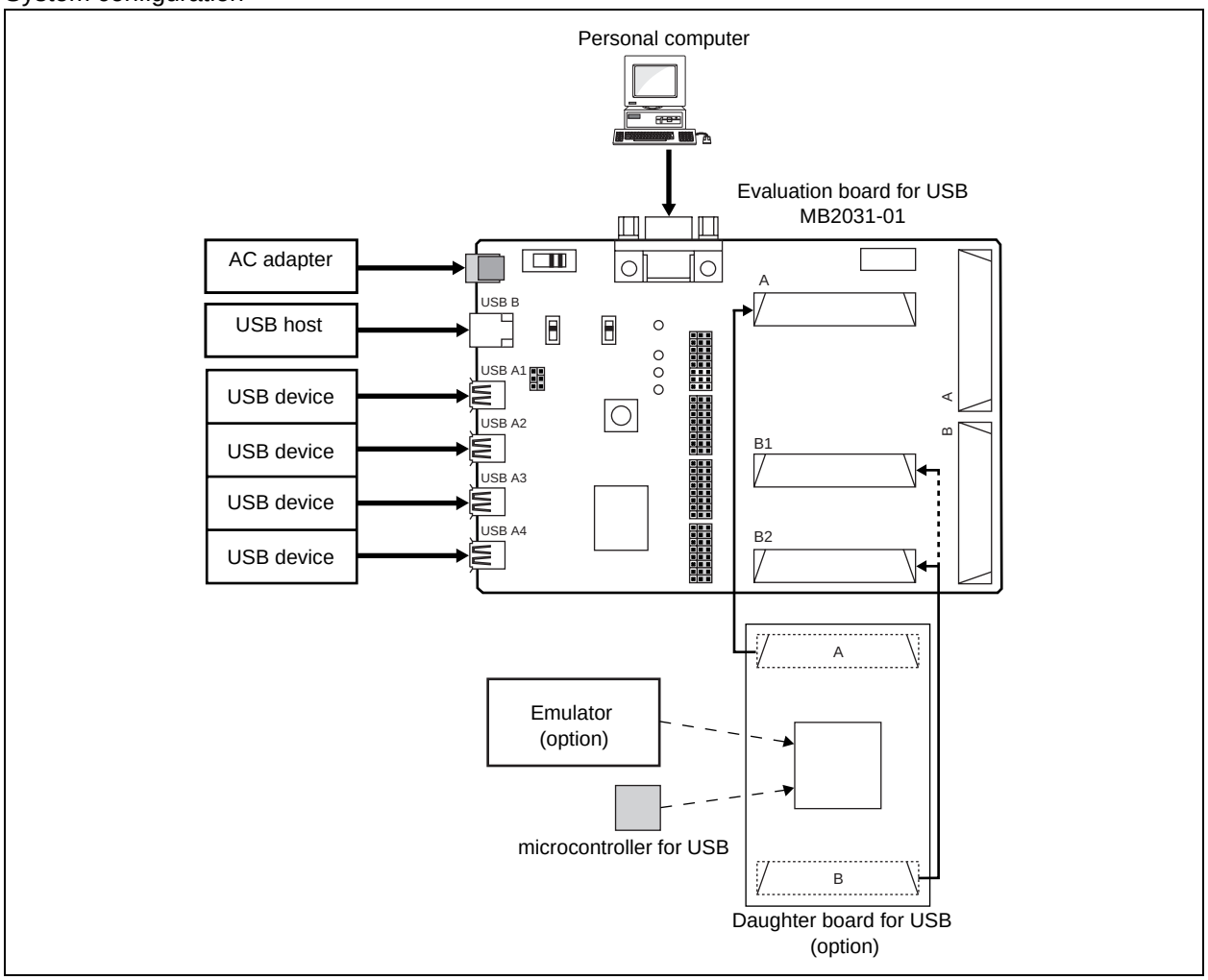

Evaluation board configuration

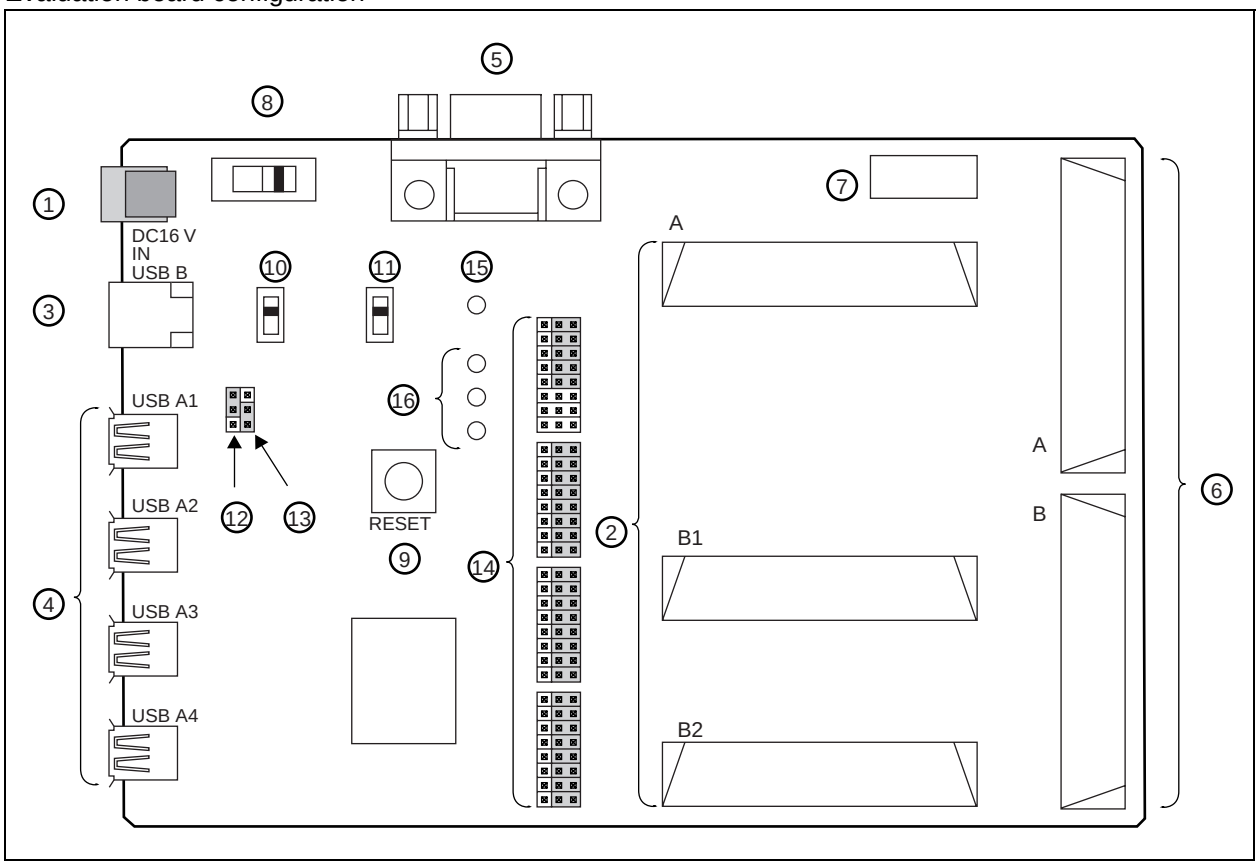

① Power connector
② Daughter I/F connector

Part number	Target microcontroller	Package
MB2031-10	MB89P585B/BW	LQFP-64 (0.5 mm, □10 mm × 10 mm)
MB2031-11	MB89P589B	LQFP-64 (0.65 mm, □12 mm × 12 mm)
MB2031-20	MB89F334	LQFP-120 (0.4 mm, □14 mm × 14 mm)

③ USB-B connector
④ USB-A connector
⑤ RS-232C connector
⑥ General I/F connector
⑦ IC socket for clock mounting
⑧ Power switch
⑨ Reset switch
⑩ USB transmission speed setting switch
⑪ USB transmission speed control switch
⑫ Short plug for a Power Mode setup (selection of a self-power supply or bus power supply)
⑬ Short plug for a MCU Power setup (selection of 3.3 V or 5 V)
⑭ Short plug for a functional setup
⑮ MCU power LED
⑯ USB-LED

F²MC-8L Family Evaluation board (BBF2003) : Sun Hayato

It is an evaluation board corresponding to microcontroller for USB.It contributes to the rise of that the simple evaluation of operation before including in a visitor's system is possible, and development efficiency.
It is constituted by evaluation board for USB, and a main board and a daughter board. A main board is common to each microcontroller products. By changing a daughter board, debugging by ICE combined with the emulator debugger for microcontroller can be performed.

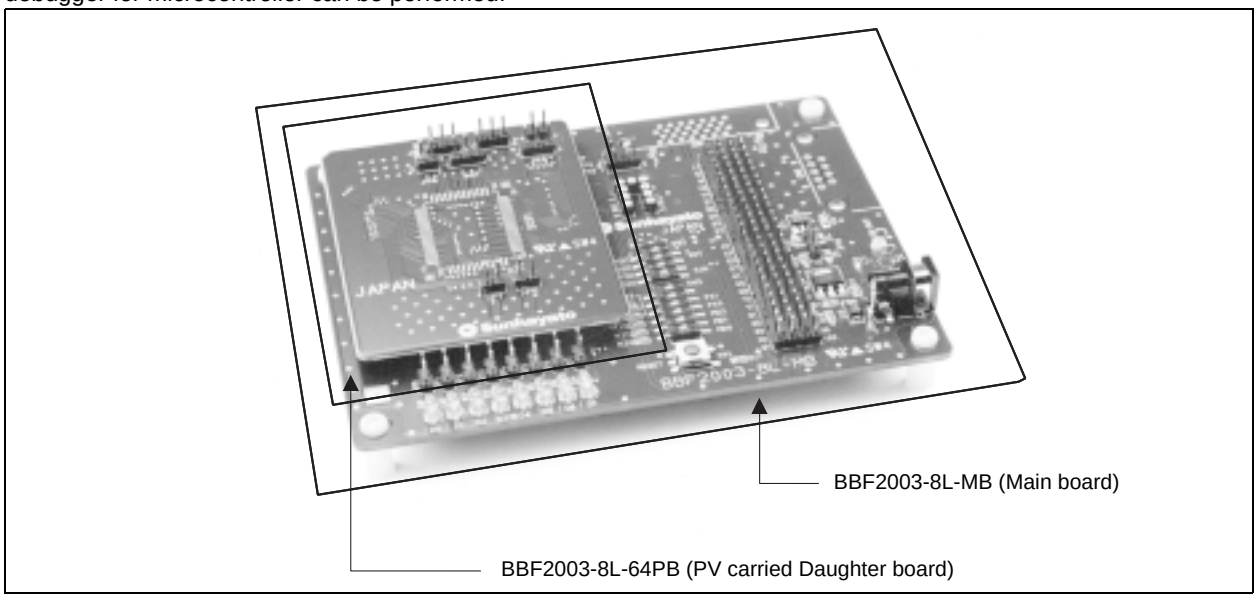

Evaluation oard configuration

- Main board (BBF2003-8L-MB)

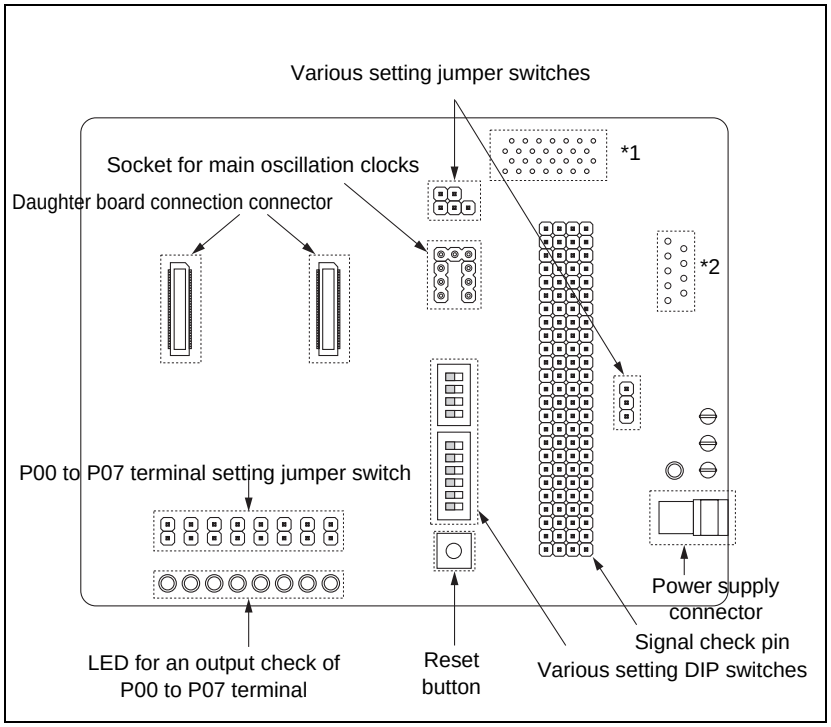

- PV carried Daughter board
  MQFP-64 (BBF2003-8L-64PB)

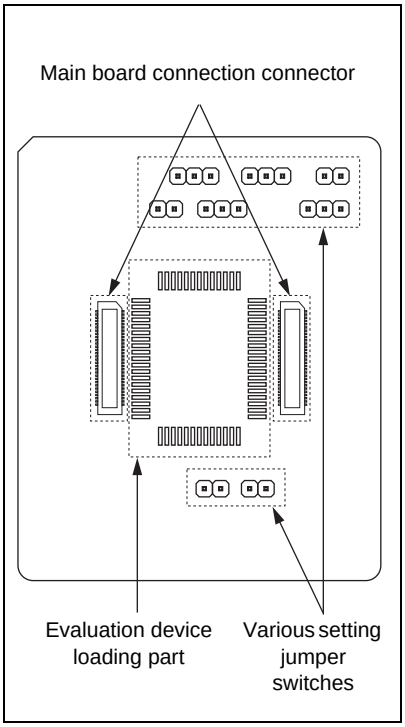

*1:Loading of the connector for serial writing (MB89F538/L) .
Contact for detailes : Yokogawa Digital Computer Corporation
*2: Loading of the RS232C(DSUB 9pin) connector (RS232C driver loading).

Product configuration

• Main board

Part number	Description
BBF2003-8L-MB	• Locating signal check pin to all terminals • Function of LED lightning for output port (P00 to P07) • Evaluate the capability of communication between PC and microcomputer with UART (mounted DSUB 9pin) • LIN transceiver (MB89210series)

• Daughter board

Part number	Description	Target microcontroller	Usage
BBF2003-8L-48PB	0.80 mm pitch	MB89210series	MB89PV210CF mounted possible
		MB89470series	MB89PV470CF mounted possible
BBF2003-8L-64PB	1.00 mm pitch	MB89530/A/Hseries	MB89PV530CF mounted possible

• Main board ＋ daughter board

Part number	Description	Target microcontroller	Usage
BBF2003-8L-48PS	0.80 mm pitch	MB89210series	MB89PV210CF mounted possible
		MB89470series	MB89PV470CF mounted possible
BBF2003-8L-64PS	1.00 mm pitch	MB89530/A/Hseries	MB89PV530CF mounted possible

• Production configuration

Product name	Package
MB89210series	MQFP-48(MQP-48C-P01)
MB89470series	MQFP-48(MQP-48C-P01)
MB89530/A/Hseries	MQFP-64(MQP-64C-P01)

* : The evaluation using the LIN transceiver is possible (MB89210series) .

Contact for detailes : Sun Hayato Co,. td.

Serial on board programmer

The serial on board programming (Fujitsu standard) in FLASH memory of the F²MC-16LX family or OTPROM of the F²MC-8L family is supported as the following programmer.

1. AF220/AF210/AF120/AF110 (FLASH microcontroller programmer) : Yokogawa Digital Computer

(1)System configuration

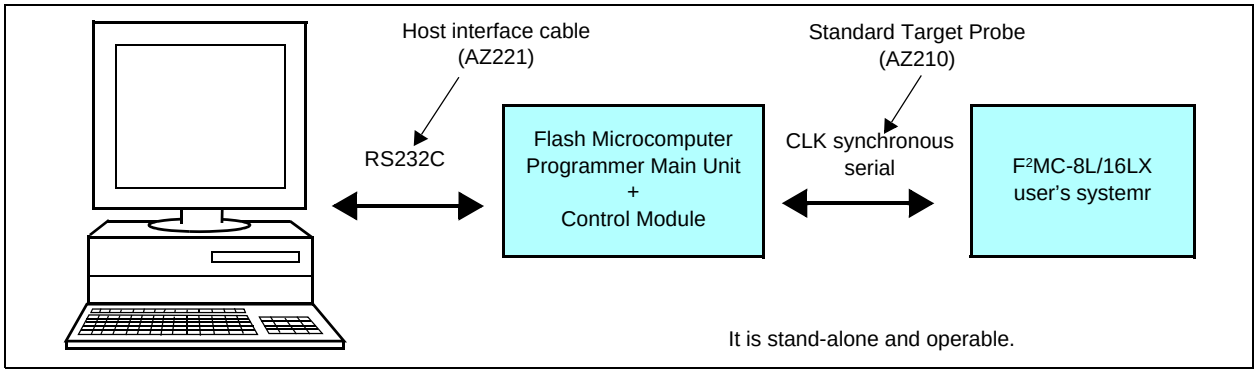

(2) Product configuration

Product name	Part number	Description
Flash Microcontroller Programmer Main Unit	AF220/AC4P	with Ethernet(10Base-T) Interface /100V to 220V Power supply adaptor
	AF210/AC4P	Basic Model /100V to 220V Power supply adaptor
	AF120/AC4P	Single Operation Model with Ethernet Interface /100V to 220V Power supply adaptor
	AF110/AC4P	Single Operation Model /100V to 220V Power supply adaptor
Host Interface Cable	AZ221	Writer exclusive use. RS232C cable for PC/AT
Standard Target Probe	AZ210	Standard Target Probe (a) : 1 m
Control Modules	FF002 or FF004A	Controll modules for F²MC-8L OTP microcontroller made by Fujitsu.
Remote Controller	AZ290	Remote Controller
Memory card	/P2	2 MB PC Card
	/P4	4 MB PC Card

Contact for detailes : Yokogawa Digital Computer Corporation
Although AF200 (Yokogawa Digital Computer) has ceased, the conventional system configuration is also possible for serial onboard writing (a standard for FUJITSU) .

(3) OTPROM microcontroller for programming

OTPROM microcontroller (OTPROM size)		Control Module	Status
MB89P215	(16 KB)	FF004A	Supported *1
MB89F538/L	(48 KB)	FF201	Supported *2
MB89P558A	(48 KB)	FF002	Supported
MB89P585B/BW	(16 KB)	FF004A	Supported *1
MB89P935B	(16 KB)	FF004A	Supported *1

*1 : In control module FF004A, AF200 (cereal programmer of an old version) is available.
*2 : Needs optional adapter AZ264 (3V conversion adaptet).

2. ITF2000 (Serial Gang programmer) : Interface

(1)System configuration

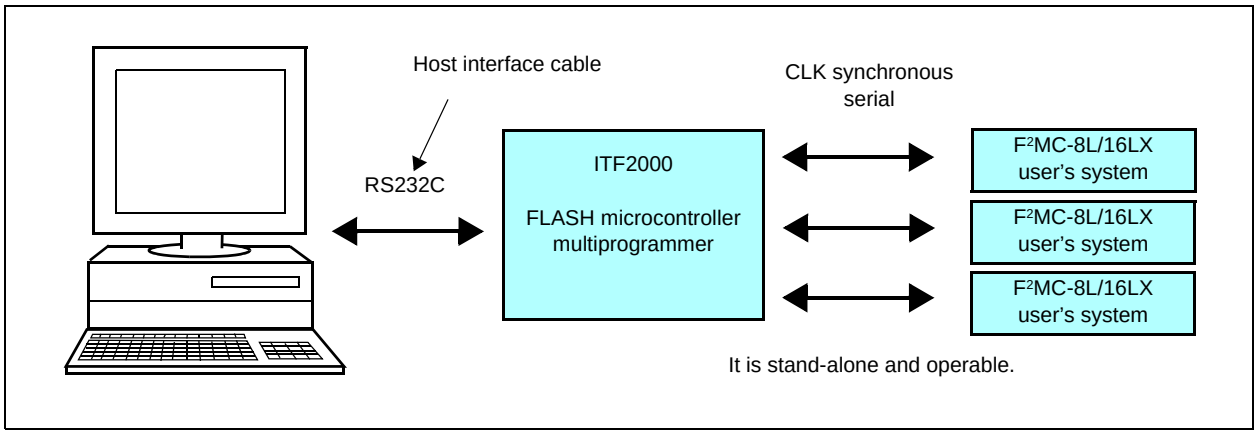

(2) Product configuration

Product	Function
ITF2000	Main unit of FLASH microcontroller multiprogrammer (with remote software)
ISP2000	Adaptor for on board programming (with main cable)
CF002(for F²MC-8L family)	Control software
WF001/F001(for MB89P935B)	Microcontroller module

(3)Programming adaptor

Part number	Package	Programming adaptor
MB89P935B	SSOP-30	TOP2000/SSOP30TP1/P1 (single) TOP2000/SSOP30TP1/P10 (10 sets)

F²MC-16L Family Features

- Faster version of the F²MC-16 (MB90700 series) with object code compatibility and also allows low voltage operation.
- Easy programming with plenty of data types, including bit (1-bit), nibble (4-bit), byte (8-bit), word (16-bit), and long word (32-bit), and 23 types of addressing.
- Bank and linear support of 16Mbytes memory space makes easy migration from external memory sizes to singlechip systems.

Memory space

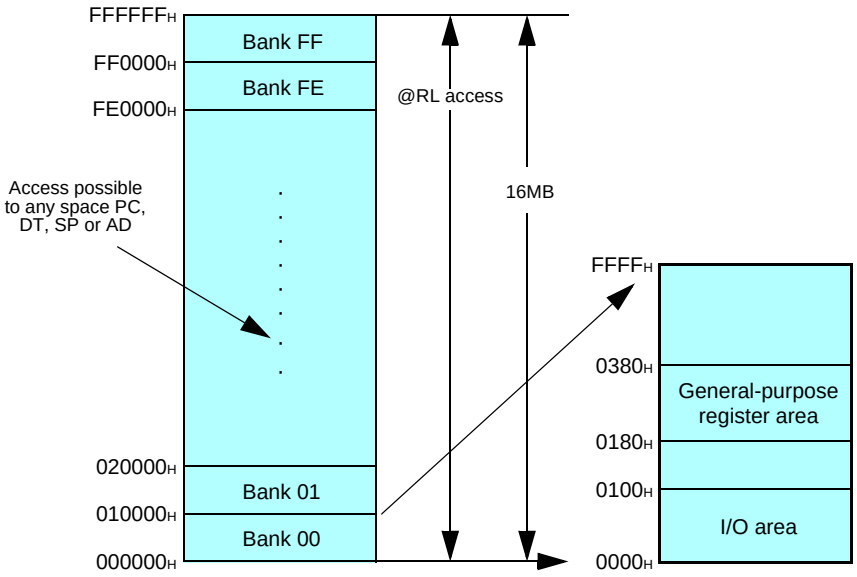

- Registers
  Dedicated registers
  General-purpose registers: 10 × 16-bit per bank, 32 banks Max.

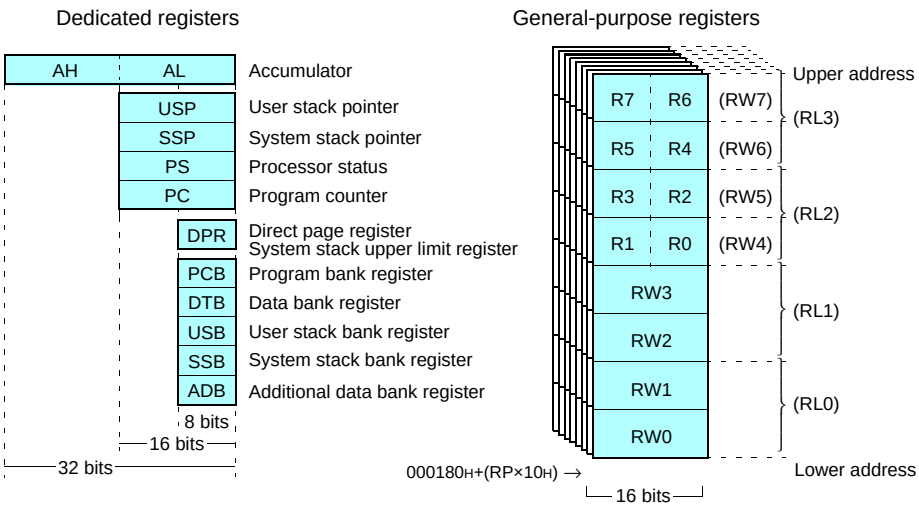

- Pipeline processing using 4 bytes cue (minimum instruction execution time: 62.5 ns/16 MHz)
- Powerful real time processing using 8-level hardware support priority interrupts and extended intelligent I/O service functions.
- Extended C language and real time operating system instructions (SP indirect addressing, etc.)
- Can utilize external 4 MHz oscillator to run at 16 MHz internally by using a built-in clock multiplier circuitry.
- Number of basic instructions: 340 (fully compatible with the F²MC-16/16H)

Main Addressing Modes (can be used by transfer and arithmetic instructions)

- Bit addressing
  Direct bit: I/O area (2 Kbits) + area inside DPR page (2 Kbits)
  Any bit within 64 Kbytes may be specified.
- Indirect addressing
  @RWi, @RWi+, @RWi+disp16, @RLi+disp8, @RWj+disp8 (i = 0 to 3), (j = 0 to 7)
  @RW0+RW7
  @RW1+RW7
  @PC+disp16
  @A
- Direct addressing
  R0 to R7, RW0 to RW7, RL0 to RL3
  dir, addr16, io, addr24

Super Accumulator

- 32-bit accumulator using AH:AL (16 bits:16 bits) as a pair.
- Data precision verification function

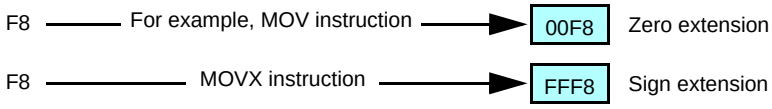

- Data keep function (available for data types of 16-bit word length and less)

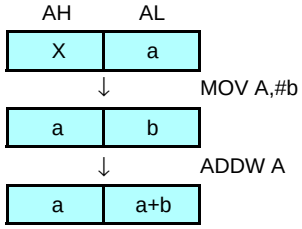

Extended Intelligent I/O Service (EI²OS)

- In addition to programing being made easier because htere is no need to execute unnecessary program transfers, higher speeds for transfer, service response and overall system controls are realized.
- Since CPU micro-instructions executs transfer functions, multi-channel systems can be realized at no extra cost.
- Since I/O transfers can be stopped when a condition is generated such as when invalid data is received, performance loss due to transferring unnecessary data can be avoided because there is no programming load.
- It is possible to specify incrementing or decrementing of buffer address and I/O register address.
- It is possible to specify the entire 00 banks I/O register addresses, the data counter can be set up to 64000.

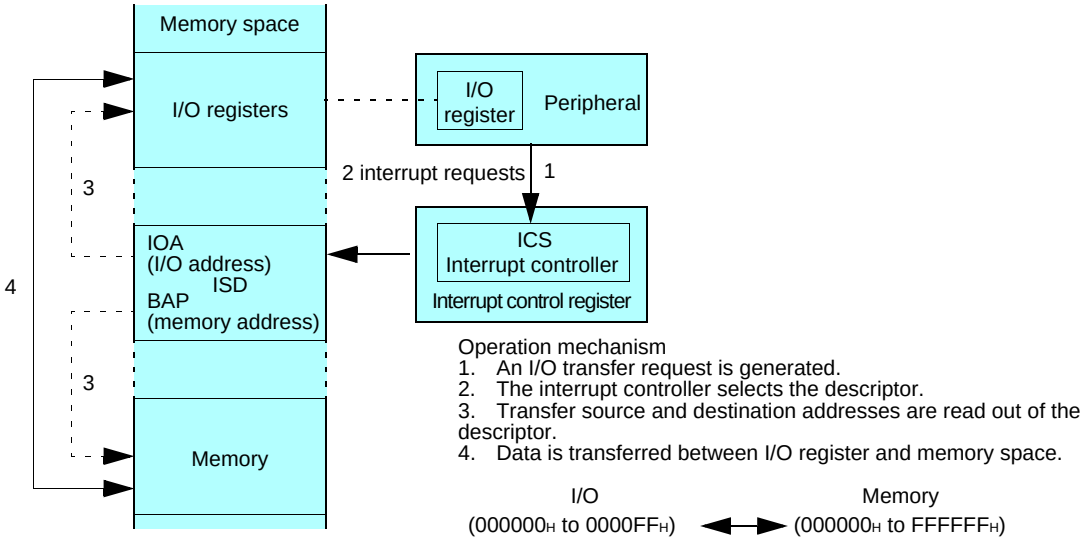

- Execution speed

  From request, to completion of transfer: 32 cycles = 2.00 µs (@16 MHz)

F²MC-16L Family Product Range

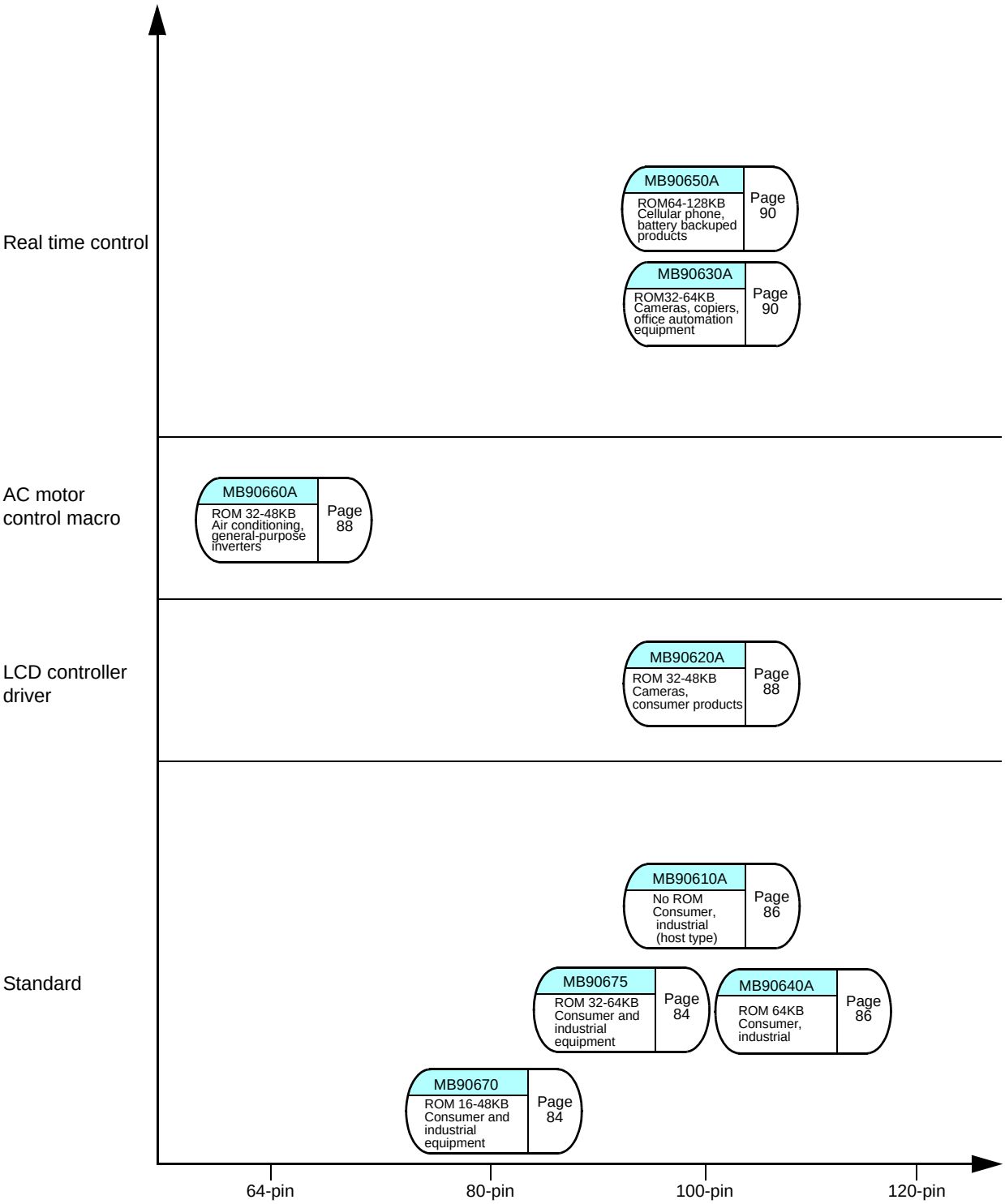

16-bit Proprietary F²MC-16L Family Standard Products

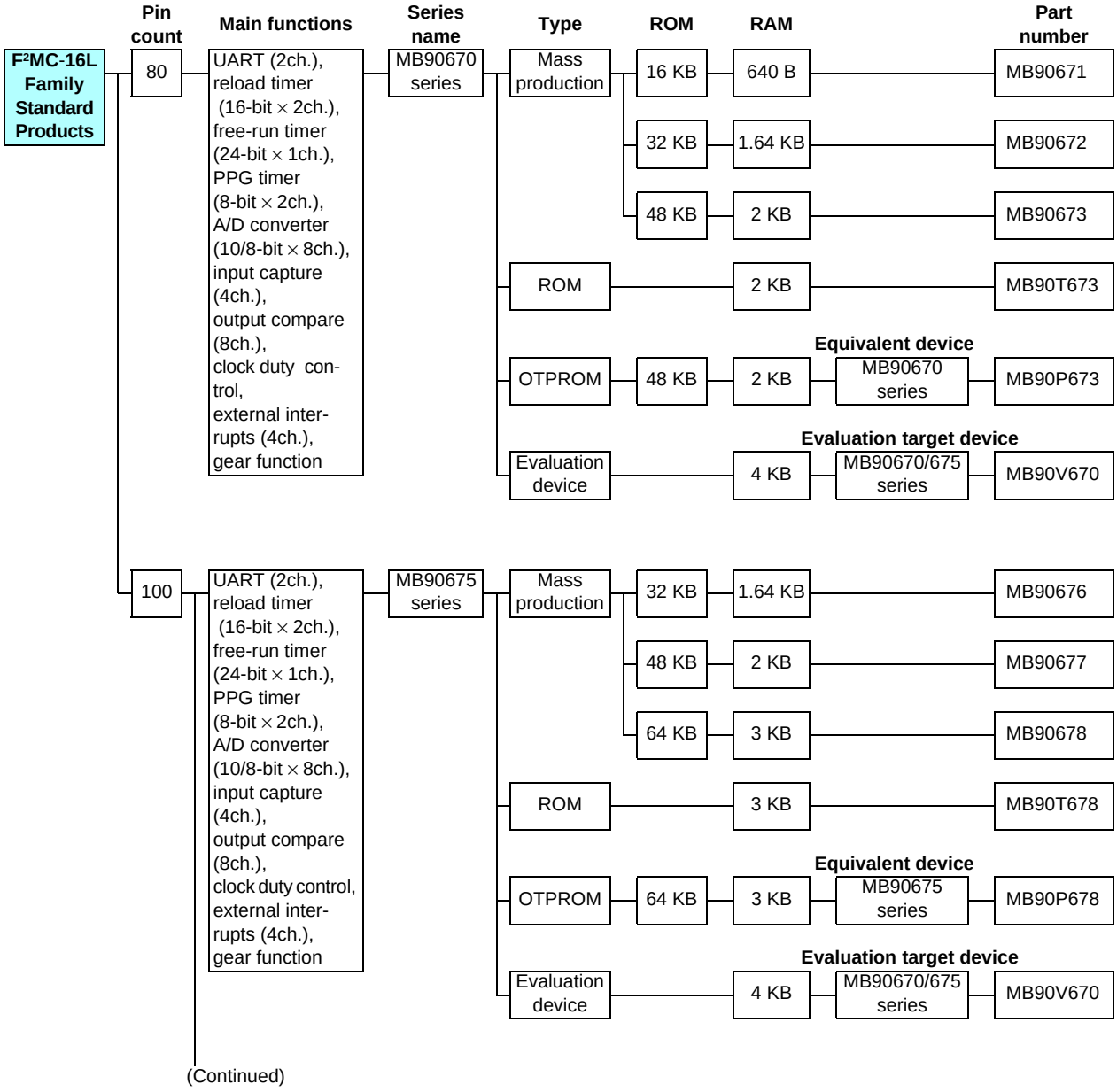

(Continued)

F²MC-16L Family Standard Products

MB90670 Series

For mechanical electronics control, automobile ABS control, AV equipment, high level home appliances etc.

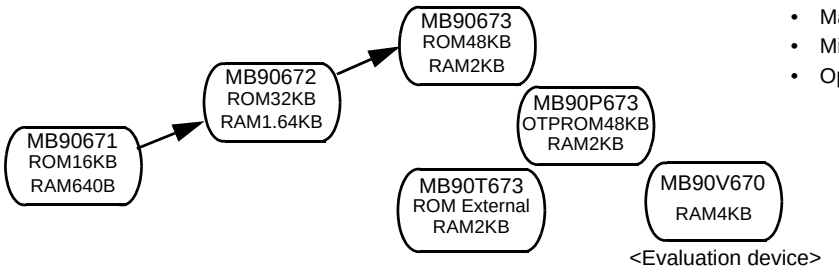

<Evaluation device>

- Maximum internal clock frequency:16 MHz
- Minimum execution time:62.5 ns
- Operating temperature range:-40°C to +85°C

Part number	Operating power supply voltage (V)	Package			Functions
		QFP	LQFP	PGA	
MB90671	+2.7 to +5.5	80P	80P	–	I/O ports: 65 Max. Timer/counter: 16-bit × 2ch. Timebase timer (WDT): 18-bit × 1ch. PPG timer: 8-bit × 2ch. (16-bit × 1ch.) UART: 2ch. Real time I/O: 24-bit input capture unit (ICU) × 4ch. 24-bit output compare unit (OCU) × 8ch. Analog section:10/8-bit A/D converter × 8ch. External interrupts: 4 Low-power consumption modes:Sleep, stop, time base timer, CPU intermittent operation mode
MB90672		80P	80P	–	
MB90673		80P	80P	–	
MB90T673		80P	80P	–	
MB90P673		80P	80P	–	
MB90V670		–	–	256C	

Packages: P - plastic, C - ceramic

MB90675 Series

For mechanical electronics control, automobile ABS control, AV equipment, high level home appliances etc.

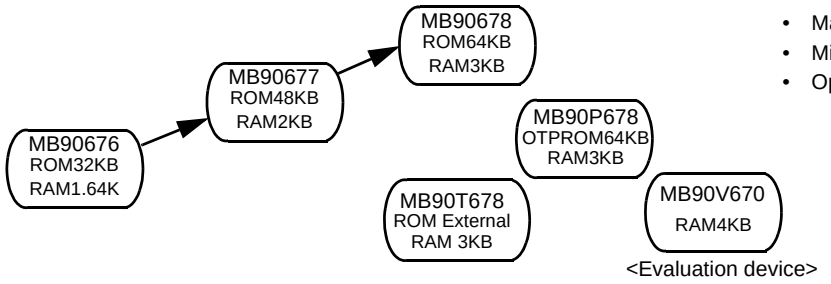

<Evaluation device>

- Maximum internal clock frequency:16 MHz
- Minimum execution time:62.5 ns
- Operating temperature range:-40°C to +85°C

Part number	Operating power supply voltage (V)	Package			Functions
		QFP	LQFP	PGA	
MB90676	+2.7 to +5.5	100P	100P	–	I/O ports: 84 Max. Timer/counter: 16-bit × 2ch. Timebase timer (WDT):18-bit × 1ch. PPG timer: 8-bit × 2ch. (16-bit × 1ch.) UART: 2ch. I²C bus interface: 1ch. Real time I/O: 24-bit input capture unit (ICU) × 4ch. 24-bit output compare unit (OCU) × 8ch. Analog section: 10/8-bit A/D converter × 8ch. External interrupts: 4 Low-power consumption modes:Sleep, stop,time base timer, CPU intermittent operation mode
MB90677		100P	100P	–	
MB90678		100P	100P	–	
MB90T678		100P	100P	–	
MB90P678		100P	100P	–	
MB90V670		–	–	256C	

Packages: P - plastic, C - ceramic

(Continued)

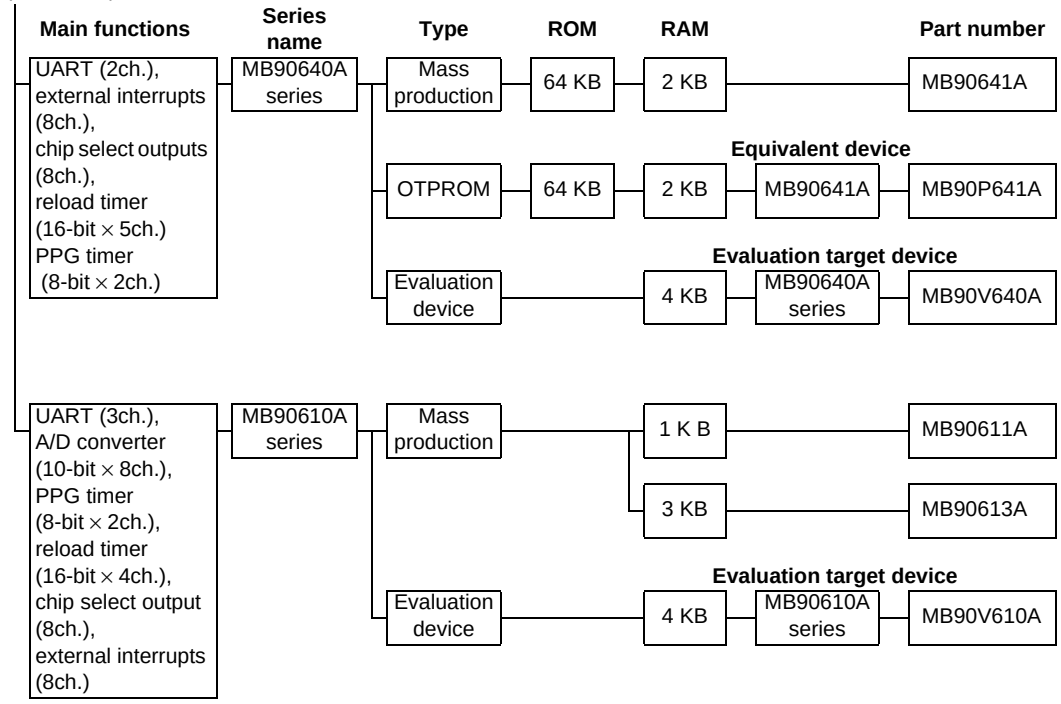
Main functions
Series name
Type
ROM
RAM
Part number
UART (2ch.), external interrupts (8ch.), chip select outputs (8ch.), reload timer (16-bit × 5ch.) PPG timer (8-bit × 2ch.)
MB90640A series
Mass production
64 KB
2 KB
MB90641A
Equivalent device
OTPROM
64 KB
2 KB
MB90641A
MB90P641A
Evaluation target device
Evaluation device
4 KB
MB90640A series
MB90V640A
UART (3ch.), A/D converter (10-bit × 8ch.), PPG timer (8-bit × 2ch.), reload timer (16-bit × 4ch.), chip select output (8ch.), external interrupts (8ch.)
MB90610A series
Mass production
1 K B
MB90611A
3 KB
MB90613A
Evaluation target device
Evaluation device
4 KB
MB90610A series
MB90V610A

MB90640A Series

For industrial applications, OA equipment etc.

- Maximum internal clock frequency: 16 MHz
- Minimum execution time: 62.5 ns
- Operating temperature range: -40°C to +85°C

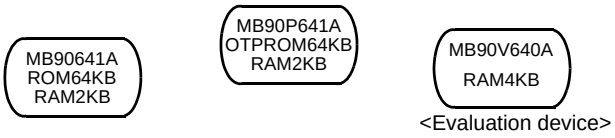

Part number	Operating power supply voltage (V)	Package			Functions
		QFP	LQFP	PGA	
MB90641A	+4.5 to +5.5	100P	100P	–	I/O ports: 83 Max. Timebase timer (WDT): 18bit × 1ch. PPG timer: 8-bit × 2ch. (16-bit × 1ch.) UART: 2ch. Reload timer: 16-bit × 5ch. External interrupts: 8ch. Chip select output pin: 8 External bus interface: selective between non-multiplex and multiplex Low-power consumption modes: Sleep, stop, time base timer, CPU intermittent operation mode
MB90P641A		100P	100P	–	
MB90V640A		–	–	256C	

Packages: P - plastic, C - ceramic

MB90610A Series

For industrial applications, OA equipment control, process control, etc.

- Maximum internal clock frequency: 16 MHz
- Minimum execution time: 62.5 ns
- Operating temperature range: -40°C to +85°C

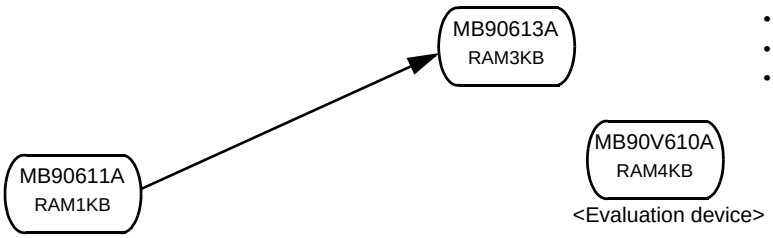

Part number	Operating power supply voltage (V)	Package			Functions
		QFP	LQFP	PGA	
MB90611A	+2.7 to +5.5	100P	100P	–	I/O ports: 57 max. (8, 16-bit multiplexed mode) 41 max. (16-bit non-multiplexed mode) 49 max. (8-bit non-multiplexed mode) Timer/counter: 16-bit × 2ch. Timebase timer (WDT): 18-bit × 1ch. PPG timer: 8-bit × 2ch. (16-bit × 1ch.) UART: 3ch. Analog section: 10-bit A/D converter × 8ch. External interrupts: 8ch. Chip select output pin: 8 External bus interface: selective between non-multiplex and multiplex Low-power consumption modes: Sleep, stop, time base timer, CPU intermittent operation mode
MB90613A		100P	100P	–	
MB90V610A		–	–	256C	

Packages: P - plastic, C - ceramic

16-bit Proprietary F²MC-16L Family

Internal LCD Controller/Driver Products
Internal AC Motor Control Macro Products

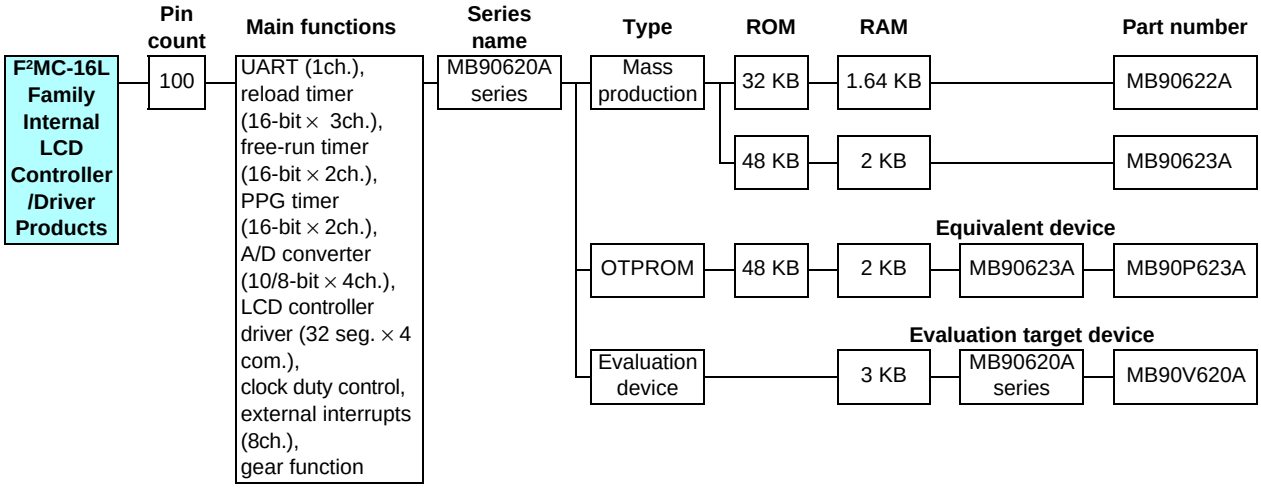

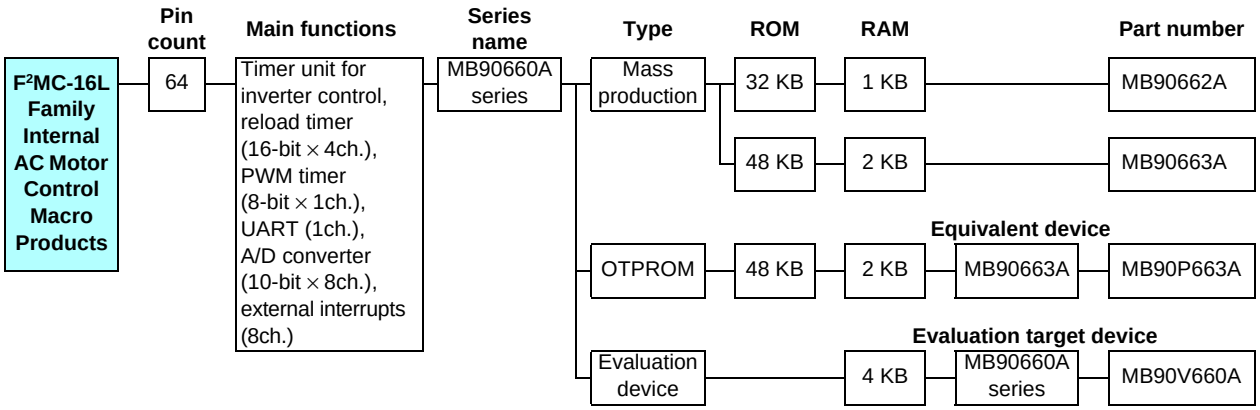

F²MC-16L Family Internal LCD Controller/Driver Products

MB90620A Series

Internal LCD controller/driver, for AV equipment, high level home appliances, etc.

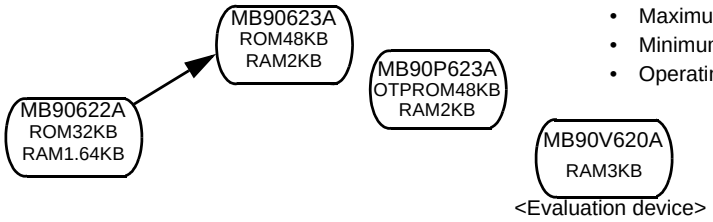

- Maximum internal clock frequency: 12 MHz (32.768 kHz)
- Minimum execution time: 83.3 ns (122.1 µs)
- Operating temperature range: -40°C to +85°C

Part number	Operating power supply voltage (V)	Package		Functions
		LQFP	PGA	
MB90622A	+4.0 to +5.5	100P	–	I/O ports: 59 Max. Timer/counter: 16-bit × 3ch. (reload), 16-bit × 2ch. (free-run) Timebase timer (WDT): 18-bit × 1ch. PPG timer: 16-bit × 2ch. UART: 1ch. SIO: 1ch. Analog section: 8/10-bit A/D converter × 4ch. LCD controller/driver: 128 elements, 2 to 4common, 16 to 32 segments, 16 × 8-bit LCD display RAM External interrupts: 8 Low-power consumption modes:Sleep, stop, CPU intermittent operation, watch, time base timer mode
MB90623A		100P	–	
MB90P623A		100P	–	
MB90V620A		–	256C	

Packages: P - plastic, C - ceramic

F²MC-16L Family Internal AC Motor Control Macro Products

MB90660A Series

For industrial applications, OA equipment control, process control, etc.

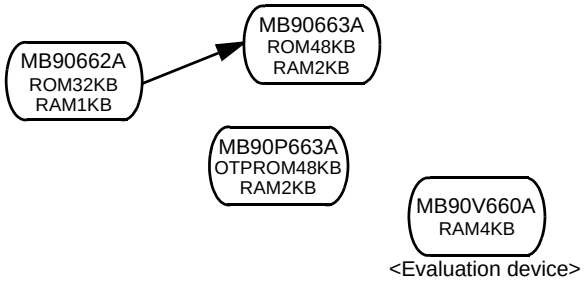

- Maximum internal clock frequency: 16 MHz
- Minimum execution time: 62.5 ns
- Operating temperature range: -40°C to +85°C

Part number	Operating power supply voltage (V)	Package			Functions
		QFP	SDIP	PGA	
MB90662A	+2.7 to +5.5	64P	64P	–	I/O ports: 51 Max. Timer/counter: 16-bit × 4ch. Timebase timer (WDT):18-bit × 8ch. PWM timer: 8-bit × 1ch. UART: 1ch. Analog section: 8/10-bit A/D converter × 8ch. External interrupts: 8 Low-power consumption modes:Sleep, stop, CPU intermittent operation, time base timer mode
MB90663A		64P	64P	–	
MB90P663A		64P	64P	–	
MB90V660A		–	–	256C	

Packages: P - plastic, C - ceramic

16-bit Proprietary F²MC-16L Family Real Time Control Products

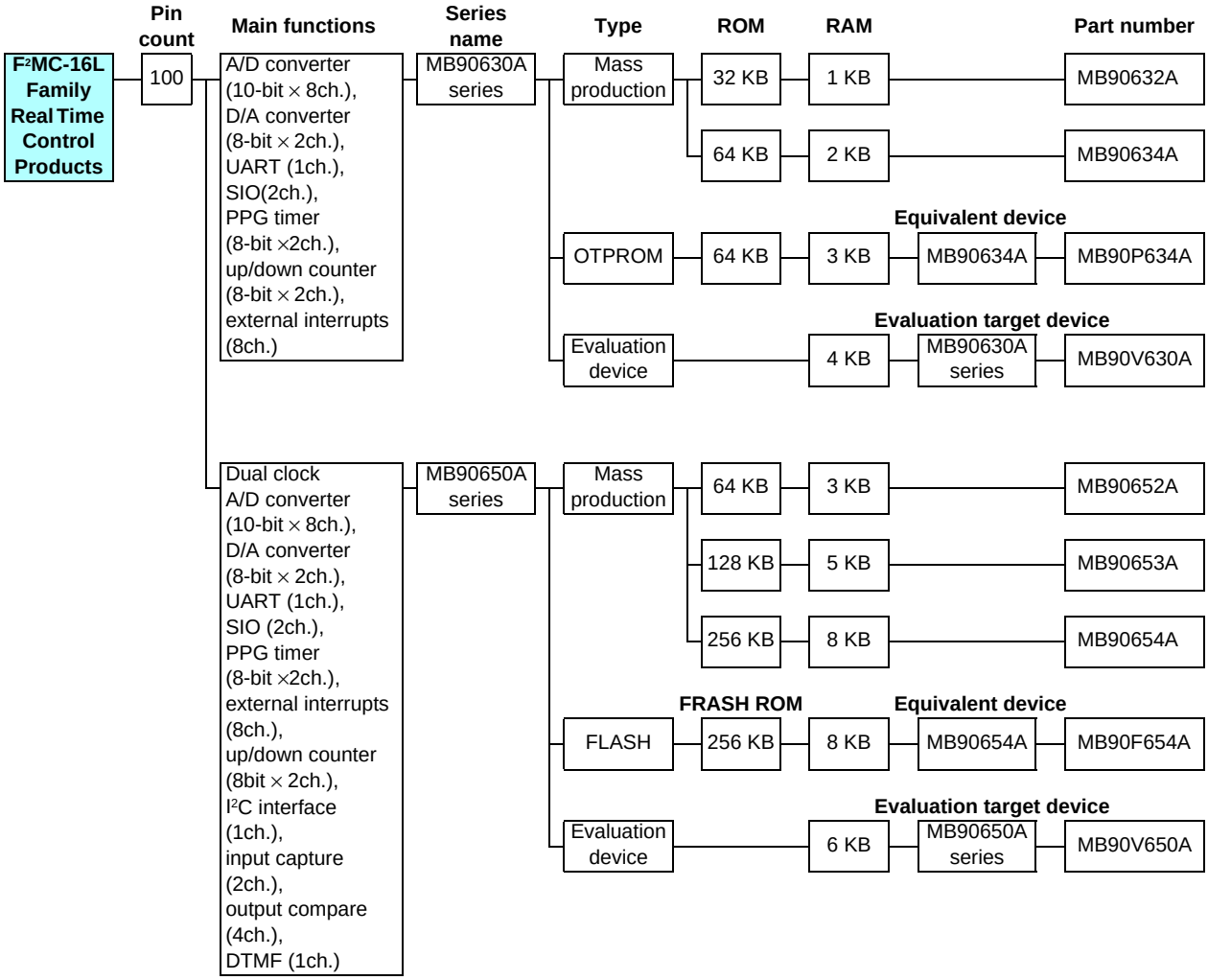

F²MC-16L Real Time Control Products

MB90630A Series

For consumer products, etc.

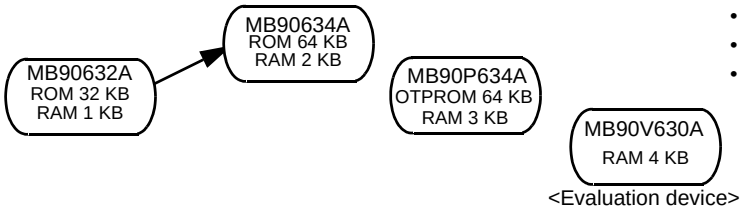

- Maximum internal clock frequency: 16 MHz
- Minimum execution time: 62.5 ns
- Operating temperature range: -40°C to +85°C

Part number	Operating power supply voltage (V)	Package			Functions
		LQFP	QFP	PGA	
MB90632A	+2.7 to +5.5	100P	100P	–	I/O ports: 82 Max. Timebase timer (WDT): 18-bit × 1 ch. PPG timer: 8-bit × 2ch. (16-bit × 1 ch.) UART: 2 ch. SIO: 2 ch. Real time I/O: 16-bit input capture unit (ICU) × 2 ch. 16-bit output compare unit (OCU) × 4 ch. 16-bit free running timer × 1 ch. Analog section: 10-bit A/D converter × 8 ch. 8-bit D/A converter × 2 ch. Encoder macro: 8-bit up/down counter × 2 ch. (16-bit × 1 ch.) External interrupts: 8 Low-power consumption modes:Sleep, stop, time base timer mode
MB90634A		100P	100P	–	
MB90P634A		100P	100P	–	
MB90V630A		–	–	256C	

Packages: P - plastic, C - ceramic

MB90650A Series

For cellular phones, battery backuped products, etc.

Part number	Operating power supply voltage (V)	Package			Functions
		QFP	LQFP	PGA	
MB90652A	+2.2 to +3.6	100P	100P	–	I/O ports: 79 Max. Dual clock Timebase timer (WDT): 18-bit × 1 ch. PPG timer: 8-bit × 2 ch. (16-bit × 1 ch.) UART: 1 ch. I²C interface: 1 ch. SIO: 2 ch. Real time I/O: 16-bit input capture unit (ICU) × 2 ch. 16-bit output compare unit (OCU).× 4 ch. Analog section: 10-bit A/D converter × 8 ch. 8-bit D/A converter× 2 ch. Encoder macro: 8-bit up/down counter × 2 ch. (16-bit × 1 ch.) DTMF: 1 ch. External interrupts: 8 When a dual power supply is used, a part of I/O is 5V pin. Low-power consumption modes:Sleep, stop, watch, CPU intermittent operation, time base timer mode
MB90653A		100P	100P	–	
MB90654A		100P	100P	–	
MB90F654A	+2.4 to +3.6	100P	100P	–	
MB90V650A	+2.7 to +3.6	–	–	256C	

Packages: P - plastic, C - ceramic

F²MC-16LX Family Features

- F²MC-16LX family is a high-performance 16-bit microcomputer having the upward compatibility with the F²MC-16L family.
- Supporting 16-Mbyte memory space.

Memory space

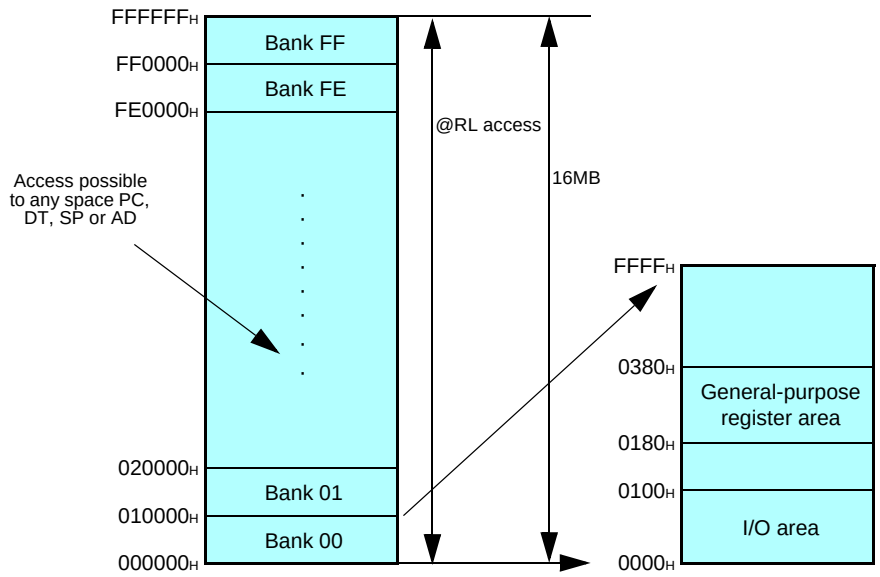

- Registers

Dedicated registers
General-purpose registers: 10 × 16-bit per bank, 32 banks Max.

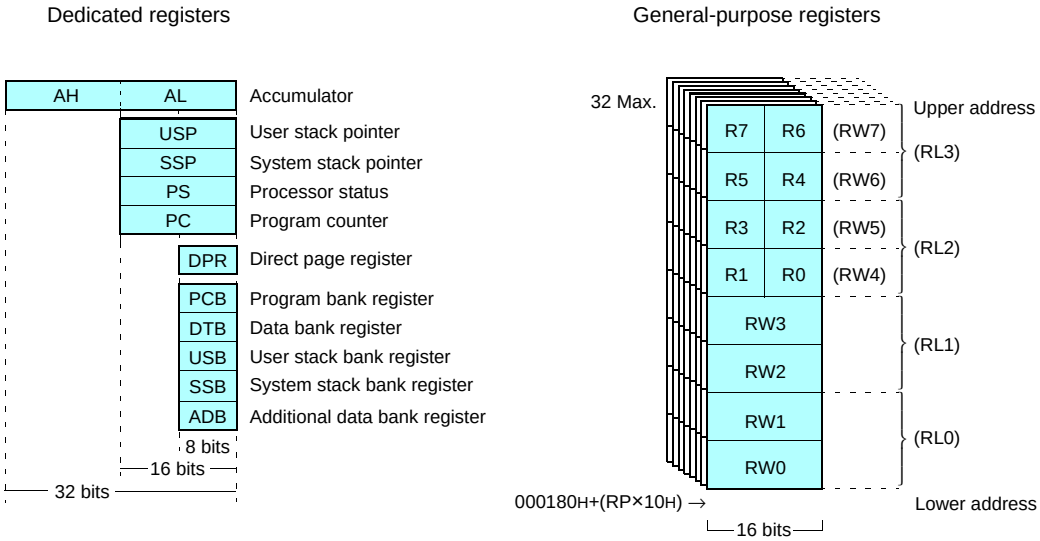

- Clock multiplier circuit (×1/2, ×2, ×3, and ×4) to protect your surrounding environment
  Reducing the radiation interference
  High-speed operation using the inexpensive low-speed oscillator (external 4 MHz; internal 16 MHz max.)
- Power management capabilities to contribute to the conservation of energy:
  STOP, SLEEP, subclock, hardware standby
- AL 2 layers 0.5 µm (reducing the chip footprint)
- Low-voltage, low-power voltage dissipation
  Supporting large memory (up to 256 Kbytes for ROM; up to 10 Kbytes for RAM)
- Power dissipation reduced by 60 % as compared to the earlier product (5 V compatible product)

- **Reduced power dissipation (5 V compatible products)**

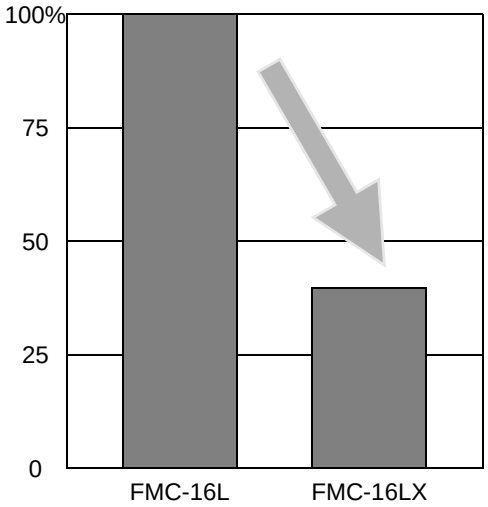

- Noise protection
  Adoptation of multiplier circuit
  Circuit optimization
  Built-in noise filters for all pins
- Bus control
  Bus sizing function: 8-bit or 16-bit bus width selectable
  Software switching between non-multibus and multibus (device)
  Supporting 8 ch. chip select (device)
- Built-in extended intelligent I/O service function (simple DMA function)
- Program patch processing function
  Avoiding bugs by applying patches on a masked ROM
- Addition of signed multiplication and division instruction
- High-speed interrupt transition
  High-speed transition achieved at the time of multiple interrupts
  Expansion achieved to low-voltage and high-speed operation
  5.0 V: Minimum machine clock of 62.5 ns/16 MHz
  2.2 V: Minimum machine clock of 100 ns/10 MHz

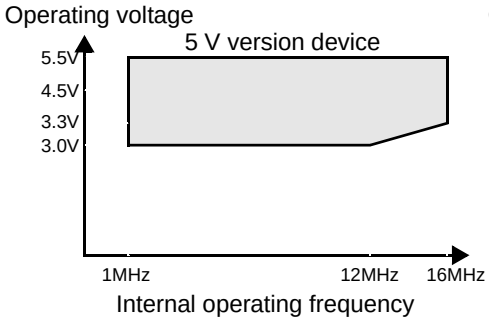

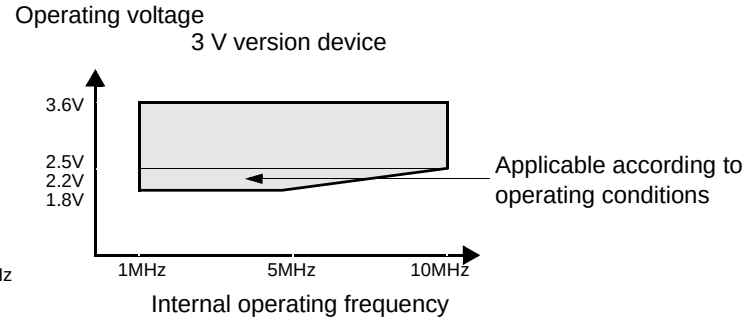

Main Addressing Modes (Can be used by transfer and arithmetic instructions)

- Bit addressing
  Direct bit: I/O area (2Kbits) + area inside DPR page (2Kbits)
  Any bit within 64 Kbytes may be specified.
- Indirect addressing
  @RWi, @RWi+, @RWi+disp16, @RLi+disp8, @RWj+disp8 (i = 0 to 3), (j = 0 to 7)
  @RW0+RW7
  @RW1+RW7
  @PC+disp16
  @A
- Direct addressing
  R0 to R7, RW0 to RW7, RL0 to RL3
  dir, addr16, io

Super Accumulator

- 32-bit accumulator using AH:AL (16 bits:16 bits) as a pair.
- Data precision verification function

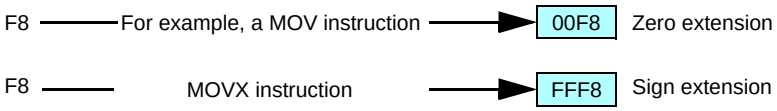

- Data keep function (available for data types of 16-bit word length and less)

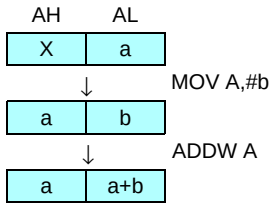

Fields for Product Expansion

Applicable to the following fields:

- Digital AV system→ (Serial communication enhancement, large size)
- Mobile equipment system→ (Low-power dissipation)
- File-related system→ (Signal processing enhancement)
- Network system→ (Telecommunication macro enhancement)

16-bit Proprietary F²MC-16LX Family Standard Products

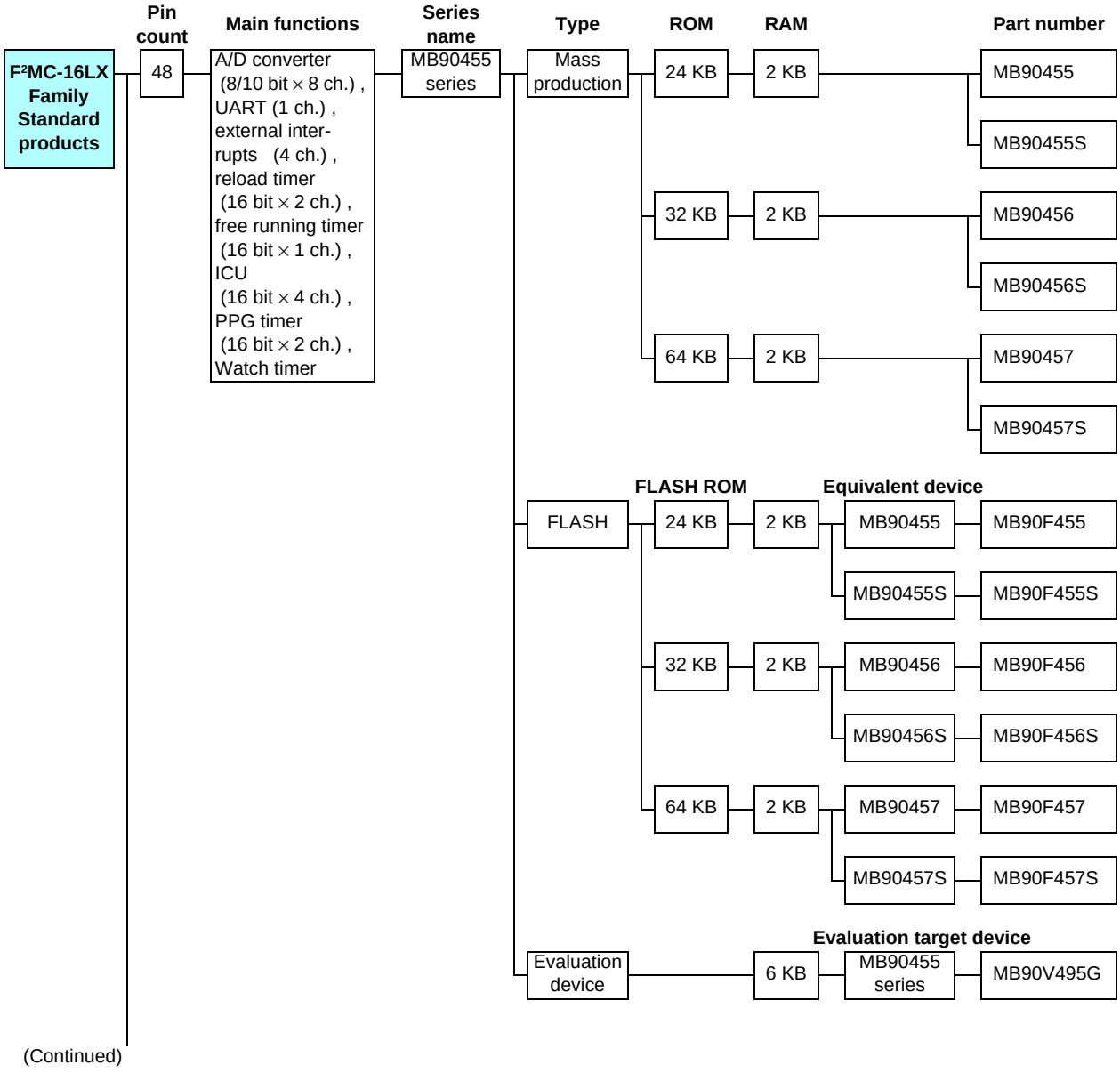

(Continued)

F²MC-16LX Family Standard Products

MB90455 Series

For AV equipment, high level home appliances, industrial applications, etc.

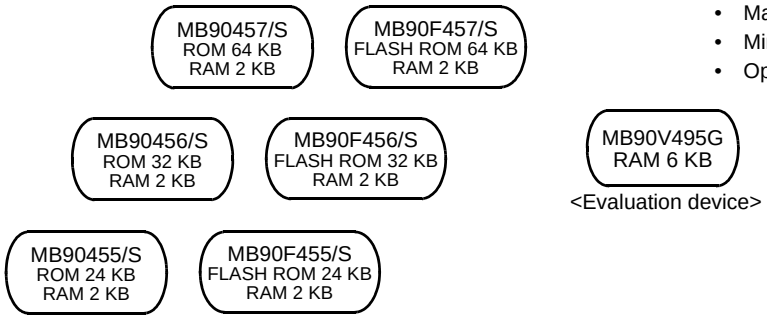

- Maximum clock frequency: 16 MHz (32.768 kHz)
- Minimum execution time: 62.5 ns (122.1 µs)
- Operating temperature range: –40°C to +105°C

Part number	Operating power supply voltage (V)	Package		Functions
		LQFP	PGA	
MB90455	+3.5 to +5.5	48P	–	I/O ports : 36 Max. (For clock one system) 34 Max. (For clock two systems) Timebase timer (WDT): 18-bit × 1 ch. Watch timer, PPG timer : 16-bit × 2 ch. (8-bit × 4 ch.) A/D converter: 8/10-bit × 8 ch. Real time I/O: 16-bit input capture unit (ICU) × 4 ch. 16-bit free-run timer × 1 ch. UART : 1 ch. For clock one system : MB90455S/456S/457S/F455S/F456S/F457S For clock two systems : MB90455/456/457/F455/F456/F457V495G External interrupts : 4 ch. Low-power consumption modes:Sleep, stop, time base timer, CPU intermittent operation , sub, watch mode
MB90455S		48P	–	
MB90456		48P	–	
MB90456S		48P	–	
MB90457		48P	–	
MB90457S		48P	–	
MB90F455		48P	–	
MB90F455S		48P	–	
MB90F456		48P	–	
MB90F456S		48P	–	
MB90F457		48P	–	
MB90F457S		48P	–	
MB90V495G		–	256C	

Packages: P - plastic, C - ceramic

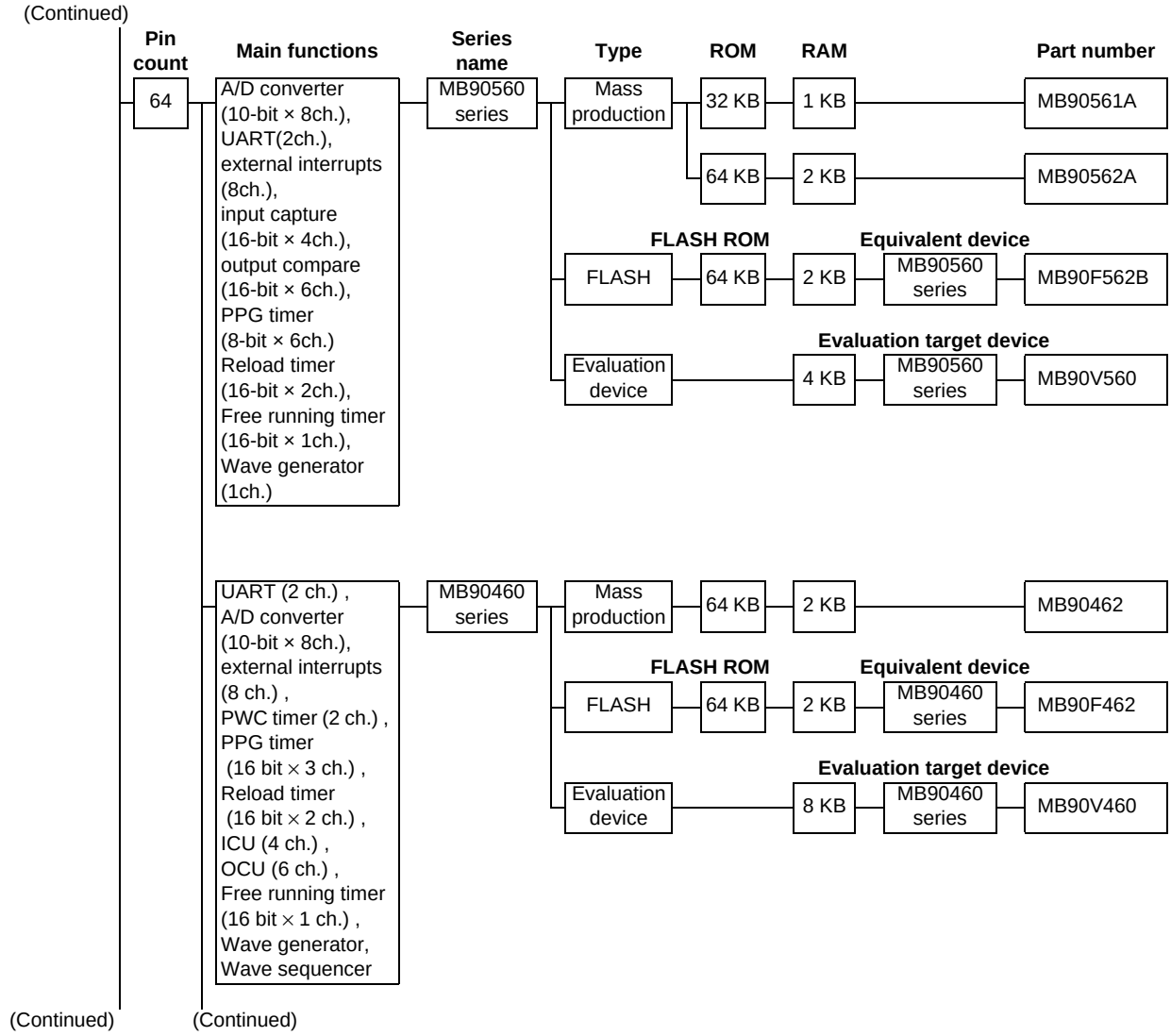
(Continued)
Pin count
Main functions
Series name
Type
ROM
RAM
Part number
64
A/D converter (10-bit × 8ch.), UART(2ch.), external interrupts (8ch.), input capture (16-bit × 4ch.), output compare (16-bit × 6ch.), PPG timer (8-bit × 6ch.) Reload timer (16-bit × 2ch.), Free running timer (16-bit × 1ch.), Wave generator (1ch.)
MB90560 series
Mass production
32 KB
1 KB
MB90561A
64 KB
2 KB
MB90562A
FLASH ROM
Equivalent device
FLASH
64 KB
2 KB
MB90560 series
MB90F562B
Evaluation target device
Evaluation device
4 KB
MB90560 series
MB90V560
UART (2 ch.) , A/D converter (10-bit × 8ch.), external interrupts (8 ch.) , PWC timer (2 ch.) , PPG timer (16 bit × 3 ch.) , Reload timer (16 bit × 2 ch.) , ICU (4 ch.) , OCU (6 ch.) , Free running timer (16 bit × 1 ch.) , Wave generator, Wave sequencer
MB90460 series
Mass production
64 KB
2 KB
MB90462
FLASH ROM
Equivalent device
FLASH
64 KB
2 KB
MB90460 series
MB90F462
Evaluation target device
Evaluation device
8 KB
MB90460 series
MB90V460
(Continued)
(Continued)

F²MC-16LX Family Internal AC/DC Motor Control Macro Products

MB90560 Series

For inverter control, etc.

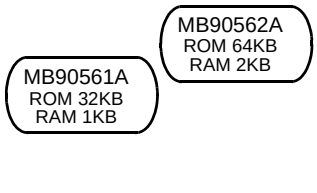

- Maximum internal clock frequency: 16 MHz
- Minimum execution time: 62.5 ns
- Operating temperature range: -40°C to +85°C

Part number	Operating power supply voltage (V)	Package				Functions
		QFP	LQFP	SH-DIP	PGA	
MB90561A	+3.0 to +5.5	64P (14 × 20 mm)	64P (12 × 12 mm)	64P	–	I/O ports: 51 Max. Timebase timer (WDT): 18-bit × 1ch. UART: 2ch. Analog section: 10-bit A/D converter × 8ch. Real time I/O: 16-bit input capture unit (ICU) × 4ch. 16-bit output compare unit (OCU) × 6ch. 16-bit free running timer × 1ch. PPG timer: 8-bit × 6ch. (16-bit × 3ch.) Reload timer: 16bit × 2ch. Wave generator: 1 ch. External interrupts: 8 ch. Low-power consumption modes:Sleep, stop, time base timer, CPU intermittent operation mode
MB90562A		64P (14 × 20 mm)	64P (12 × 12 mm)	64P	–	
MB90F562B	+4.5 to +5.5	64P (14 × 20 mm)	64P (12 × 12 mm)	64P	–	
MB90V560	+3.0 to +5.5	–	–	–	256C	

Packages: P - plastic, C - ceramic

MB90460 Series

For inverter control, etc.

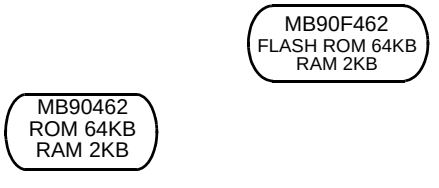

- Maximum internal clock frequency: 16 MHz
- Minimum execution time: 62.5 ns
- Operating temperature range: -40°C to +85°C

Part number	Operating power supply voltage (V)	Package				Functions
		QFP	LQFP	SH-DIP	PGA	
MB90462	+4.5 to +5.5	64P (14 × 20 mm)	64P (12 × 12 mm)	64P	–	I/O ports: 51 Max. Timebase timer (WDT): 18-bit × 1ch. Analog section: 10-bit A/D converter × 8ch. UART: 2 ch. PWC timer: 2 ch. Real time I/O: 16-bit input capture unit (ICU) × 4 ch. 16-bit output compare unit (OCU) × 6 ch. 16-bit free running timer × 1 ch. PPG timer: 16 bit × 3 ch. Reload timer: 16 bit × 2 ch. Wave generator Wave sequencer External interrupts: 8 ch. Low-power consumption modes:Sleep, stop, CPU intermittent operation mode, time base timer mode
MB90F462		64P (14 × 20 mm)	64P (12 × 12 mm)	64P	–	
MB90V460		–	–	–	256C	

Packages: P - plastic, C - ceramic

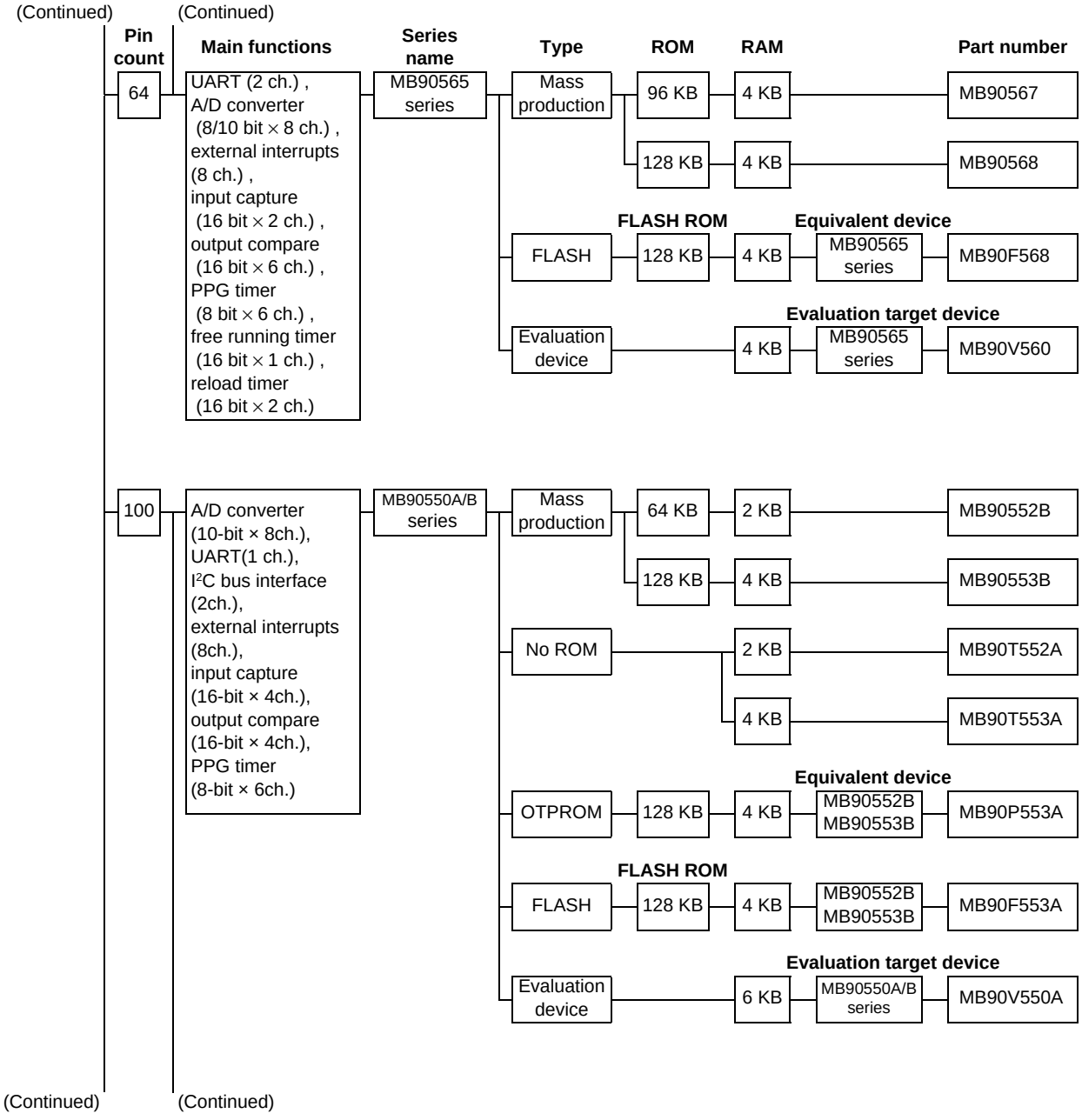
(Continued)
(Continued)
Pin count
Main functions
Series name
Type
ROM
RAM
Part number
64
UART (2 ch.) , A/D converter (8/10 bit × 8 ch.) , external interrupts (8 ch.) , input capture (16 bit × 2 ch.) , output compare (16 bit × 6 ch.) , PPG timer (8 bit × 6 ch.) , free running timer (16 bit × 1 ch.) , reload timer (16 bit × 2 ch.)
MB90565 series
Mass production
96 KB
4 KB
MB90567
128 KB
4 KB
MB90568
FLASH ROM
Equivalent device
FLASH
128 KB
4 KB
MB90565 series
MB90F568
Evaluation target device
Evaluation device
4 KB
MB90565 series
MB90V560
100
A/D converter (10-bit × 8ch.), UART(1 ch.), I²C bus interface (2ch.), external interrupts (8ch.), input capture (16-bit × 4ch.), output compare (16-bit × 4ch.), PPG timer (8-bit × 6ch.)
MB90550A/B series
Mass production
64 KB
2 KB
MB90552B
128 KB
4 KB
MB90553B
No ROM
2 KB
MB90T552A
4 KB
MB90T553A
Equivalent device
OTPROM
128 KB
4 KB
MB90552B MB90553B
MB90P553A
FLASH ROM
FLASH
128 KB
4 KB
MB90552B MB90553B
MB90F553A
Evaluation target device
Evaluation device
6 KB
MB90550A/B series
MB90V550A
(Continued)
(Continued)

F²MC-16LX Family Standard Products

MB90565 Series

For phone, etc.

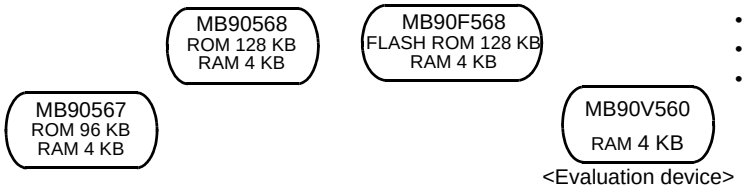

- Maximum internal clock frequency: 16 MHz
- Minimum execution time: 62.5 ns
- Operating temperature range: -40°C to +85°C

Part number	Operating power supply voltage (V)	Package			Functions
		QFP	LQFP	PGA	
MB90567	+2.7 to +3.6	64P (14 × 20 mm)	64P (12 × 12 mm)	–	I/O ports: 51 Max. Timebase timer (WDT): 18-bit × 1ch. Reload timer: 16-bit × 2 ch. PPG timer: 8-bit × 6ch. (16-bit × 3ch.) Analog section: 8/10-bit A/D converter × 8ch. Real time I/O: 16-bit input capture unit (ICU) × 4ch. 16-bit output compare unit (OCU) × 4ch. 16-bit free running timer × 1 ch. UART: 2ch. External interrupts: 8 Low-power consumption modes: Sleep, hardwarestandby, time base timer mode, CPU intermittent operation
MB90568		64P (14 × 20 mm)	64P (12 × 12 mm)	–	
MB90F568		64P (14 × 20 mm)	64P (12 × 12 mm)	–	
MB90V560	+3.0 to +5.5	–	–	256C	

Packages: P - plastic, C - ceramic

MB90550A/550B Series

For AV equipment, high level home appliances, industrial applications, etc.

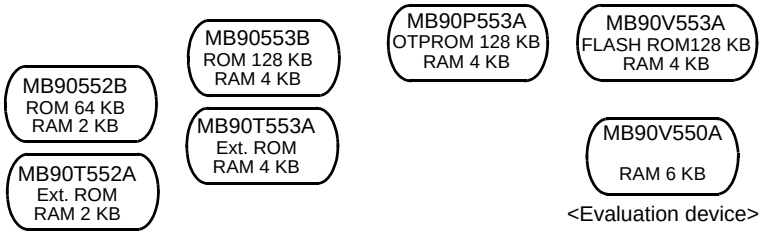

- Maximum internal clock frequency: 16 MHz
- Minimum execution time: 62.5 ns
- Operating temperature range: -40°C to +85°C

Part number	Operating power supply voltage (V)	Package			Functions
		QFP	LQFP	PGA	
MB90552B	+3.5 to +5.5	100P	100P	–	I/O ports: 83 Max. Timebase timer (WDT): 18-bit × 1 ch. UART: 1 ch. SIO: 1 ch. I²C bus interface: 2 ch. Analog section: 10-bit A/D converter × 8 ch. Real time I/O: 16-bit input capture unit (ICU) × 4 ch. 16-bit output compare unit (OCU) × 4 ch. 16-bit free running timer × 1 ch. PPG timer: 8-bit × 6 ch. (16-bit × 3 ch.) Reload timer : 16-bit × 2 ch. External interrupts: 8 Low-power consumption modes: Sleep,time base timer, stop, CPU intermittent operation
MB90T552A		100P	100P	–	
MB90553B		100P	100P	–	
MB90T553A		100P	100P	–	
MB90P553A	+4.5 to +5.5	100P	100P	–	
MB90F553A		100P	100P	–	
MB90V550A		–	–	256C	

Packages: P - plastic, C - ceramic

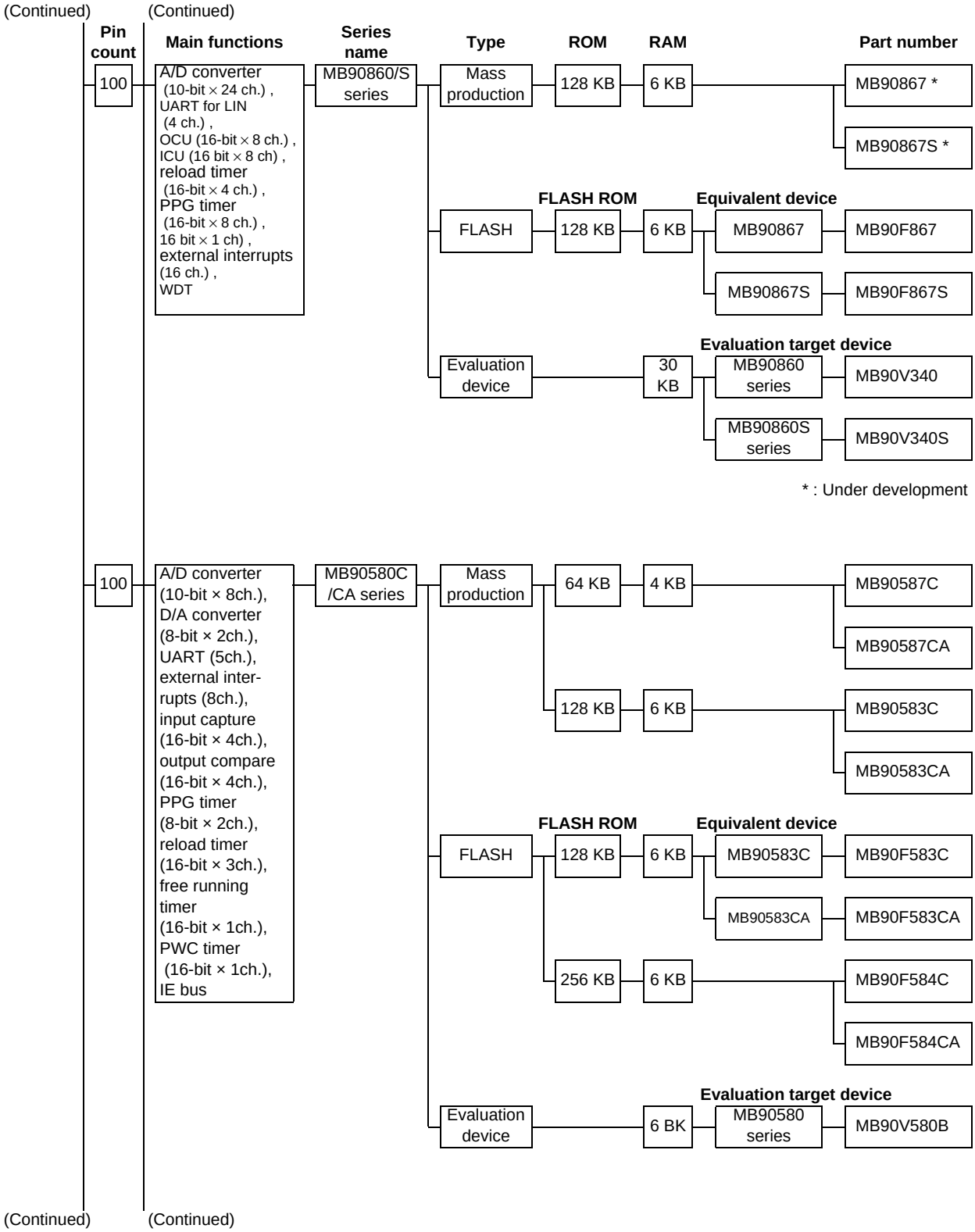
(Continued)
(Continued)
Pin count
Main functions
Series name
Type
ROM
RAM
Part number
100
A/D converter (10-bit × 24 ch.), UART for LIN (4 ch.), OCU (16-bit × 8 ch.), ICU (16 bit × 8 ch), reload timer (16-bit × 4 ch.), PPG timer (16-bit × 8 ch.), 16 bit × 1 ch), external interrupts (16 ch.), WDT
MB90860/S series
Mass production
128 KB
6 KB
MB90867 *
MB90867S *
FLASH ROM
Equivalent device
FLASH
128 KB
6 KB
MB90867
MB90F867
MB90867S
MB90F867S
Evaluation target device
Evaluation device
30 KB
MB90860 series
MB90V340
MB90860S series
MB90V340S
* : Under development
100
A/D converter (10-bit × 8ch.), D/A converter (8-bit × 2ch.), UART (5ch.), external interrupts (8ch.), input capture (16-bit × 4ch.), output compare (16-bit × 4ch.), PPG timer (8-bit × 2ch.), reload timer (16-bit × 3ch.), free running timer (16-bit × 1ch.), PWC timer (16-bit × 1ch.), IE bus
MB90580C /CA series
Mass production
64 KB
4 KB
MB90587C
MB90587CA
128 KB
6 KB
MB90583C
MB90583CA
FLASH ROM
Equivalent device
FLASH
128 KB
6 KB
MB90583C
MB90F583C
MB90583CA
MB90F583CA
256 KB
6 KB
MB90F584C
MB90F584CA
Evaluation target device
Evaluation device
6 BK
MB90580 series
MB90V580B
(Continued)
(Continued)

MB90860/860S Series

For Digtal home appliances, AV equipment, etc.

- Maximum internal clock frequency: 24 MHz (32.768 kHz)
- Minimum execution time: 42.0 ns (122.1 µs)
- Operating temperature range: –40°C+105°C

Part number	Operating power supply voltage (V)	Package		Functions
		LQFP	QFP	
◎MB90867	+3.5 to +5.5	100P	100P	I/O ports: 82 Max. (MB90867S/F867S : 1-clock sysytem) 80 Max. (MB90867/F867 : 2-clock system) Timebase timer (WDT): 18-bit × 1 ch. PPG timer: 8-bit × 16 ch. (16-bit × 8 ch.) Analog section:10-bit A/D converter × 24 ch. Real time I/O: 16-bit input capture unit (ICU) × 8 ch. 16-bit output compare unit (OCU) × 8 ch. 16-bit free running timer × 2 ch. UART for LIN : 4 ch. Reload timer :116 bit × 4 ch External interrupts: 16 ch. Low-power consumption modes:Sleep, stop, watch, sub, time base timer, CPU intermittent operation mode
◎MB90867S		100P	100P	
MB90F867		100P	100P	
MB90F867S		100P	100P	

Packages: P - plastic

◎: Under development

MB90580C/580CA Series

For car audio, etc.

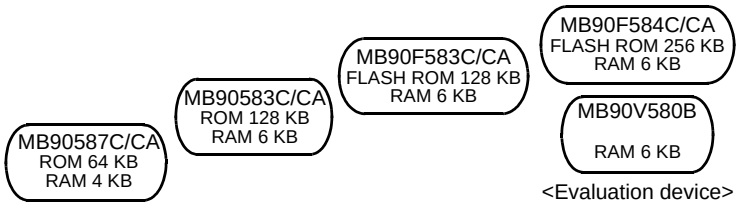

- Maximum internal clock frequency: 16 MHz (32.768 kHz)
- Minimum execution time: 62.5 ns (122.1 µs)
- Operating temperature range: -40°C to +85°C

Part number	Operating power supply voltage (V)	Package			Functions
		QFP	LQFP	PGA	
MB90583C	+3.0 to +5.5	100P	100P	–	I/O ports: 77 Max. Timebase timer (WDT): 18-bit × 1 ch. UART: 5 ch. Analog section: 10-bit A/D converter × 8 ch. 8-bit D/A converter × 2 ch. Real time I/O: 16-bit input capture unit (ICU) × 4 ch. 16-bit output compare unit (OCU) × 2 ch. 16-bit free running timer × 1 ch. PPG timer: 8-bit × 2ch. (16-bit × 1 ch.) PWC timer: 16-bit × 1 ch. Reload timer:16-bit × 3 ch. IE bus (MB90583C/CA, MB90F583C/CA,MB90V580B) For clock two systems : MB90583C/587C/F583C/F584C/V580B For clock one system : MB90583CA/587CA/F583CA/F584CA/V580B External interrupts: 8 Low-power consumption modes: Sleep, stop, watch, sub, time base timer, CPU intermittent operation mode
MB90583CA		100P	100P	–	
MB90587C		100P	100P	–	
MB90587CA		100P	100P	–	
MB90F583C	+4.5 to +5.5	100P	100P	–	
MB90F583CA		100P	100P	–	
MB90F584C		100P	100P	–	
MB90F584CA		100P	100P	–	
MB90V580B	+3.0 to +5.5	–	–	256C	

Packages: P - plastic, C - ceramic

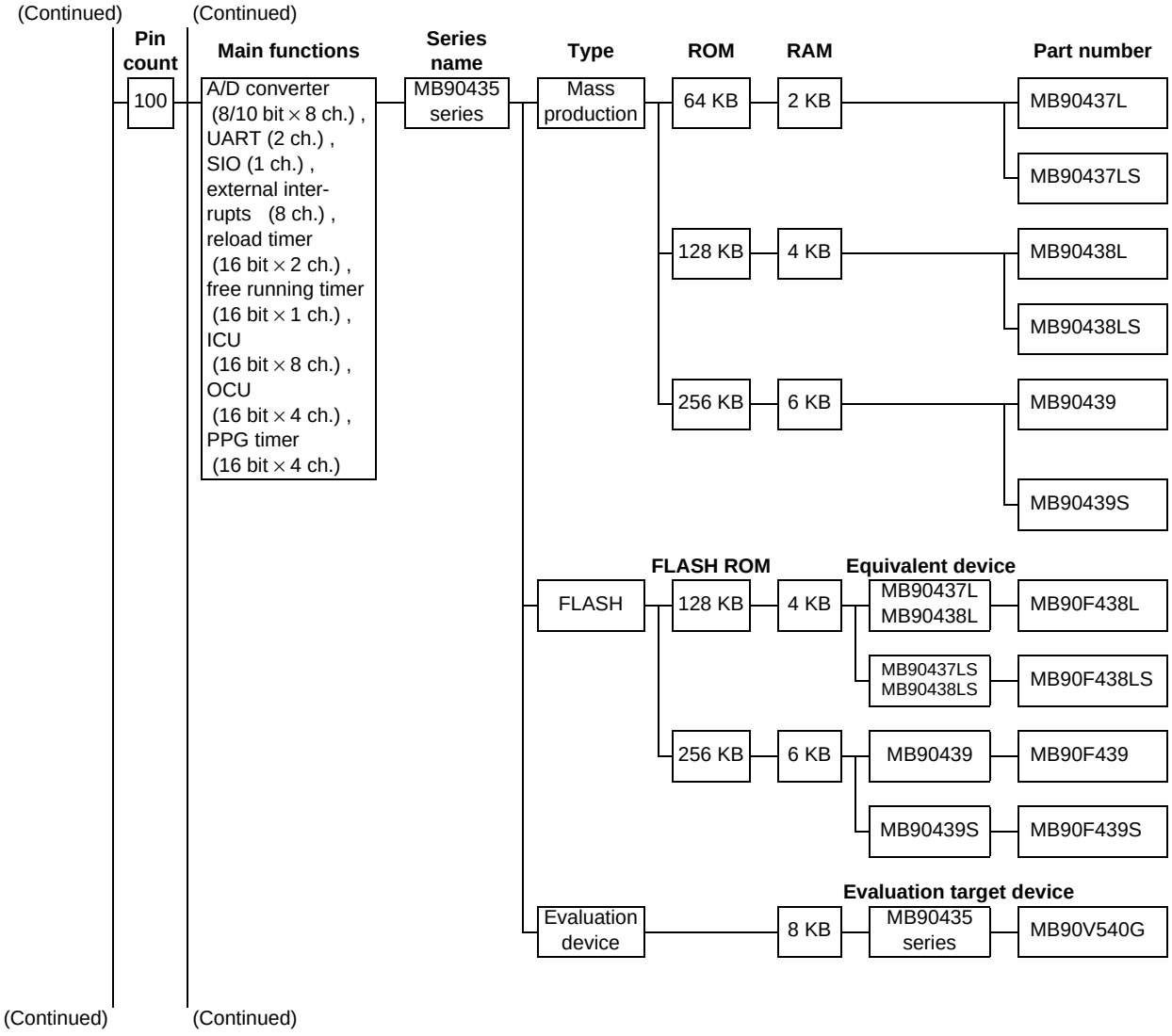
(Continued)
(Continued)
Pin count
Main functions
Series name
Type
ROM
RAM
Part number
100
A/D converter (8/10 bit × 8 ch.), UART (2 ch.), SIO (1 ch.), external interrupts (8 ch.), reload timer (16 bit × 2 ch.), free running timer (16 bit × 1 ch.), ICU (16 bit × 8 ch.), OCU (16 bit × 4 ch.), PPG timer (16 bit × 4 ch.)
MB90435 series
Mass production
64 KB
2 KB
MB90437L
MB90437LS
128 KB
4 KB
MB90438L
MB90438LS
256 KB
6 KB
MB90439
MB90439S
FLASH ROM
Equivalent device
FLASH
128 KB
4 KB
MB90437L MB90438L
MB90F438L
MB90437LS MB90438LS
MB90F438LS
256 KB
6 KB
MB90439
MB90F439
MB90439S
MB90F439S
Evaluation target device
Evaluation device
8 KB
MB90435 series
MB90V540G
(Continued)
(Continued)

MB90435 Series

For Digtal home appliances,AV equipment, etc.

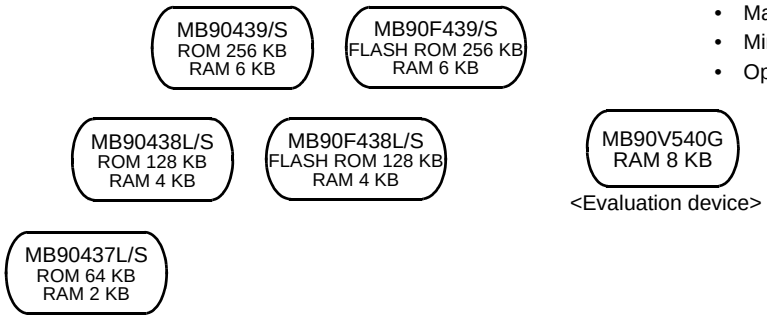

- Maximum clock frequency: 16 MHz (32.768 kHz)
- Minimum execution time: 62.5 ns (122.1 µs)
- Operating temperature range: –40°C to +105°C

Part number	Operating power supply voltage (V)	Package			Functions
		LQFP	QFP	PGA	
MB90437L *2	+3.5 to +5.5	100P	100P	–	I/O ports : 80 Max. Timebase timer (WDT): 18-bit × 1 ch. 8/16 bit PPG timer : 4 ch. SIO : 1 ch A/D converter: 8/10-bit × 8 ch. Real time I/O: 16-bit input capture unit (ICU) × 8 ch. 16-bit output compare (OCU) × 4 ch. 16-bit free-run timer × 1 ch. UART : 2 ch. Reload timer : 16-bit × 2 ch. For clock one system : MB90437LS/438LS/439S/F438LS/F439S For clock two systems : MB90437L/438L/439/F438L/F439/V540G External interrupts : 8 ch. Low-power consumption modes:Sleep, stop, time base timer, CPU intermittent operation , sub, watch mode
MB90437LS *1		100P	100P	–	
MB90438L *2		100P	100P	–	
MB90438LS *1		100P	100P	–	
MB90439 *2	+4.5 to +5.5	100P	100P	–	
MB90439S *1		100P	100P	–	
MB90F438L *2	+3.5 to +5.5	100P	100P	–	
MB90F438LS *1		100P	100P	–	
MB90F439 *2	+4.5 to +5.5	100P	100P	–	
MB90F439S *1		100P	100P	–	
MB90V540G *2		–	–	256C	

Packages: P - plastic, C - ceramic

(Continued) (Continued)

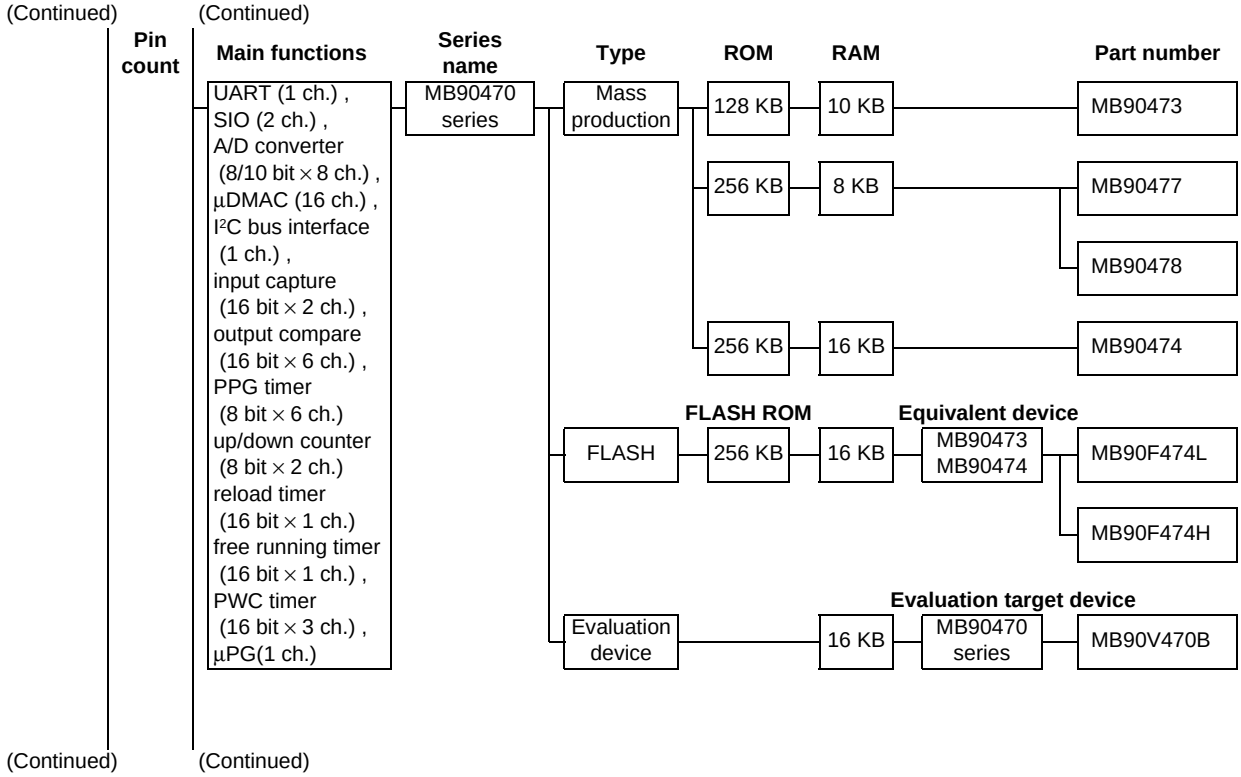

(Continued) (Continued)

MB90470 Series

For AV equipment, high level home appliances, industrial applications, etc.

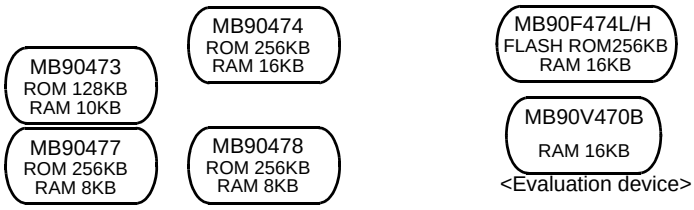

- Maximum internal clock frequency: 20 MHz(32.768 kHz)
- Minimum execution time: 50 ns(122.1 µs)
- Operating temperature range: -40°C to +85°C

Part number	Operating power supply voltage (V)	Package			Functions
		QFP	LQFP	PGA	
MB90473	+1.8 to +3.6	100P	100P	–	I/O ports: 84 Max. Timebase timer (WDT): 18 bit × 1 ch. Up/down counter: 8 bit × 2 ch. (16bit × 1 ch.) PPG timer: 8 bit × 6 ch. (16bit × 3 ch.) SIO: 2 ch. Analog section: 8/10bit A / D converter × 8 ch. I²C bus interface :1 ch. (Excluding MB90478) Real time I/O : 16-bit input capture unit (ICU) × 2 ch 16-bit output compare unit (OCU) × 6 ch 16-bit free running timer × 1 ch. UART: 1 ch. Reload timer: 16 bit × 1 ch. PWC timer: 16 bit × 3 ch. µDMAC : 16 ch.(Request for DTP input × 8 ch., maximum clock frequency : 16 MHz) µPG: 1 ch. External interrupts: 8 When a dual power supply is used, a part of I/O is 5V pin. Low-power consumption modes:Sleep,stop(hardware),watch, sub, CPU intermittent operation, time base timer mode
MB90477		100P	100P	–	
MB90474		100P	100P	–	
MB90478		100P	100P	–	
MB90F474L *1	+2.4 to +3.6	100P	100P	–	
MB90F474H *2	+3.0 to +3.6	100P	100P	–	
MB90V470B		–	–	256C	

Packages: P - plastic, C - ceramic
*1 : Low voltage type (maximum clock frequency : 12MHz, Vcc = 2.5V to 3.6V)
*2 : High speed type (maximum clock frequency : 20MHz, Vcc = 3.13V to 3.6V)

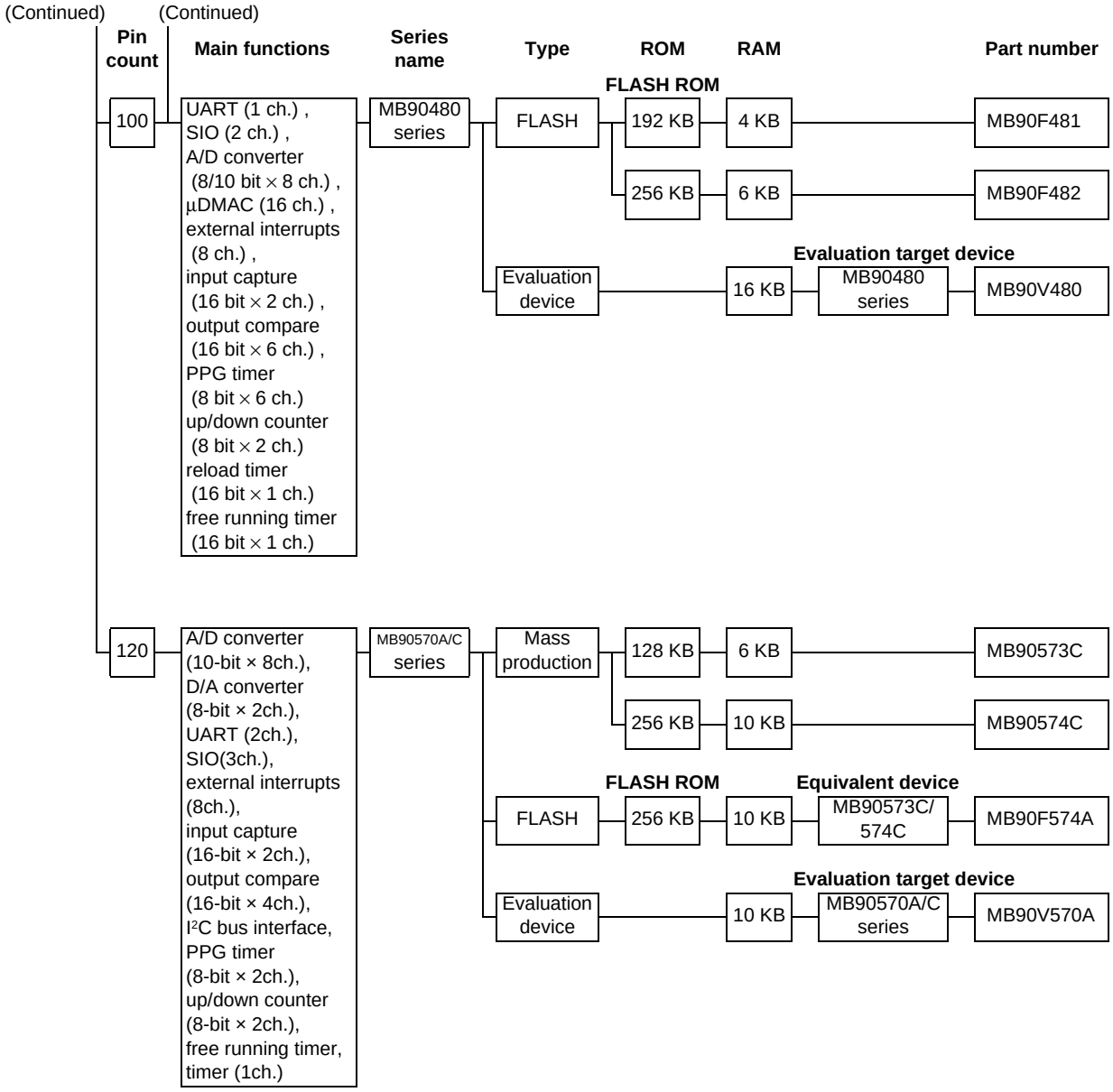
(Continued)
(Continued)
Pin count
Main functions
Series name
Type
ROM
RAM
Part number
FLASH ROM
100
UART (1 ch.) , SIO (2 ch.) , A/D converter (8/10 bit × 8 ch.) , µDMAC (16 ch.) , external interrupts (8 ch.) , input capture (16 bit × 2 ch.) , output compare (16 bit × 6 ch.) , PPG timer (8 bit × 6 ch.) up/down counter (8 bit × 2 ch.) reload timer (16 bit × 1 ch.) free running timer (16 bit × 1 ch.)
MB90480 series
FLASH
192 KB
4 KB
MB90F481
256 KB
6 KB
MB90F482
Evaluation target device
Evaluation device
16 KB
MB90480 series
MB90V480
120
A/D converter (10-bit × 8ch.), D/A converter (8-bit × 2ch.), UART (2ch.), SIO(3ch.), external interrupts (8ch.), input capture (16-bit × 2ch.), output compare (16-bit × 4ch.), I²C bus interface, PPG timer (8-bit × 2ch.), up/down counter (8-bit × 2ch.), free running timer, timer (1ch.)
MB90570A/C series
Mass production
128 KB
6 KB
MB90573C
256 KB
10 KB
MB90574C
FLASH ROM
Equivalent device
FLASH
256 KB
10 KB
MB90573C/ 574C
MB90F574A
Evaluation target device
Evaluation device
10 KB
MB90570A/C series
MB90V570A

MB90480 Series

For AV equipment, high level home appliances, industrial applications, etc.

Part number	Operating power supply voltage (V)	Package			Functions
		QFP	LQFP	PGA	
MB90F481	+2.7 to +3.6	100P	100P	–	I/O ports: 84 Max. Timebase timer (WDT): 18 bit × 1 ch. Up/down counter: 8 bit × 2 ch. (16bit × 1 ch.) PPG timer: 8 bit × 6 ch. (16bit × 3 ch.) SIO: 2 ch. Analog section: 8/10bit A / D converter × 8 ch. Real time I/O : 16-bit input capture unit (ICU) × 2 ch 16-bit output compare unit (OCU) × 6 ch 16-bit free running timer × 1 ch. UART: 1 ch. Reload timer: 16 bit × 1 ch. µDMAC : 16 ch. External interrupts: 8 ch. Low-power consumption modes: Sleep,stop(hardware),watch, sub, CPU intermittent operation, time base timer mode
MB90F482		100P	100P	–	
MB90V480	+2.7 to +3.6	–	–	299C	

Packages: P - plastic, C - ceramic

MB90570A/570C Series

For car audio

Part number	Operating power supply voltage (V)	Package			Functions
		QFP	LQFP	PGA	
MB90573C	+3.0 to +5.5	120P (16 × 16 mm)	120P	–	

Packages: P - plastic, C - ceramic

16-bit Proprietary F²MC-16LX Family CAN Controller Products

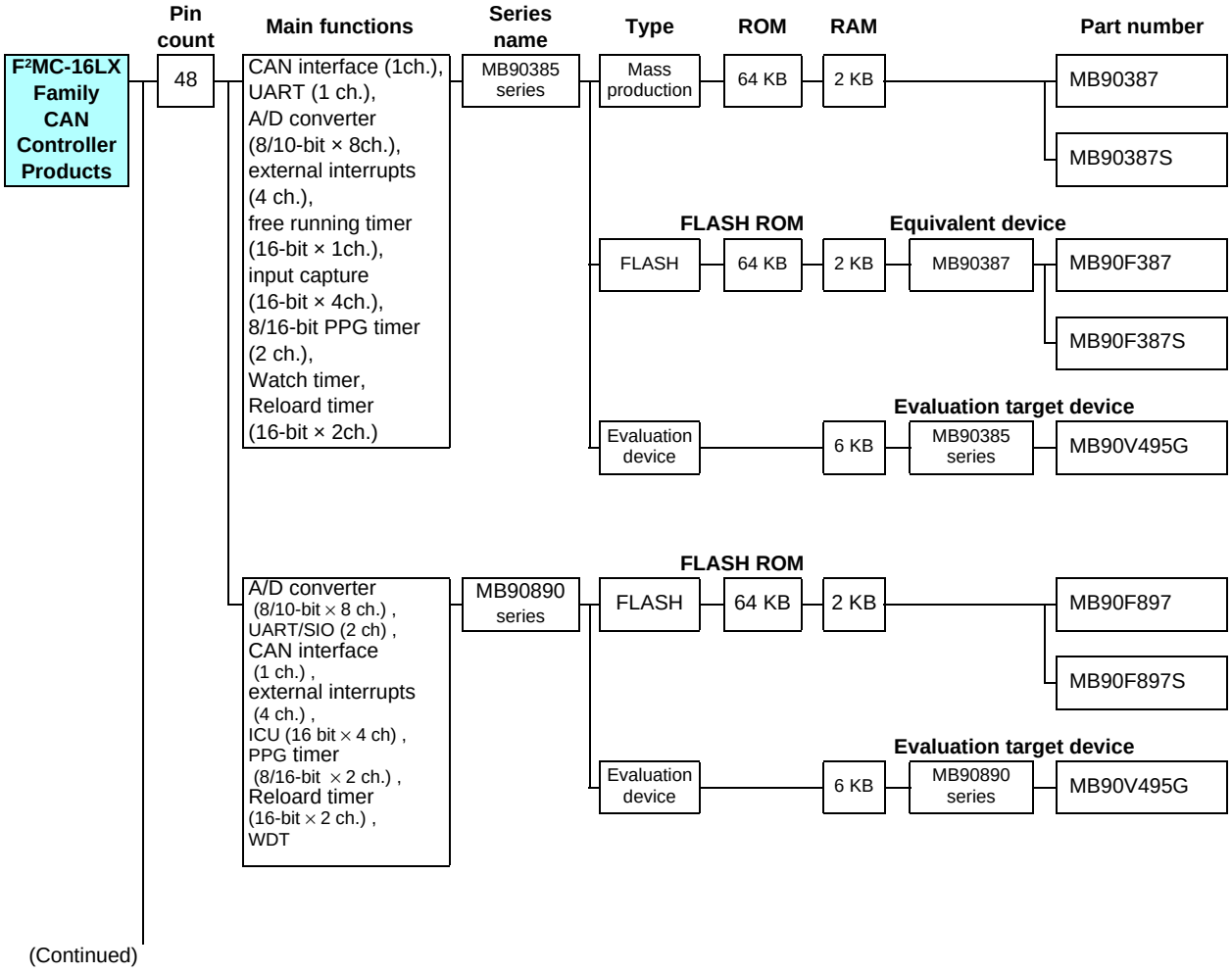

F²MC-16LX Family CAN Controller Products

MB90385 Series

For car bodies control, etc.

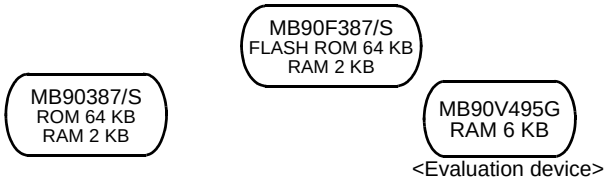

- Maximum clock frequency: 16 MHz (32.768 kHz)
- Minimum execution time: 62.5 ns (122.1 µs)
- Operating temperature range: –40°C to +105°C

Part number	Operating power supply voltage (V)	Package		Functions
		LQFP	PGA	
MB90387	+3.5 to +5.5	48P	–	I/O ports : 36 Max. (MB90387S/F387S) 34 Max. (MB90387/F387/V495G) CAN interface : 1ch. Timebase timer (WDT): 18-bit × 1 ch. Watch timer PPG timer : 16-bit × 2 ch. (8-bit × 4 ch.) A/D converter: 8/10-bit × 8 ch. Real time I/O: 16-bit input capture unit (ICU) × 4 ch. 16-bit free-run timer × 1 ch. UART : 1 ch. Reload timer : 16-bit × 2 ch. For clock one system : MB90387S/F387S For clock two systems : MB90387/F387/V495G External interrupts : 4ch. Low-power consumption modes:Sleep, stop, sub, watch, time base timer, CPU intermittent operation mode
MB90387S		48P	–	
MB90F387		48P	–	
MB90F387S		48P	–	
MB90V495G		–	256C	

Packages: P - plastic, C - ceramic

MB90890 Series

Built-in dual operation FLASH memory

- Maximum clock frequency: 16 MHz(32.768 kHz)
- Minimum execution time: 62.5 ns(122.1 µs)
- Operating temperature range: –40 °C to +105 °C

Part number	Operating power supply voltage (V)	Package		Functions
		LQFP	PGA	
MB90F897	+3.5 to +5.5	48P	–	I/O ports : 34 Max. (MB90F897 : 2-clock system) , 36 Max. (MB90F897S : 1-clock system) CAN interface : 1ch. Timebase timer (WDT): 18-bit × 1 ch. Watch timer PPG timer : 16-bit × 2 ch. (8-bit × 4 ch.) A/D converter: 8/10-bit × 8 ch. Real time I/O: 16-bit input capture unit (ICU) × 4 ch. UART : 2 ch. Reload timer : 16-bit × 2 ch. External interrupts : 4ch. Low-power consumption modes:Sleep, stop, sub, watch, time base timer, CPU intermittent operation mode
MB90F897S		48P	–	
MB90V495G	+4.5 to +5.5	–	256C	

Packages: P - plastic, C - ceramic

(Continued)

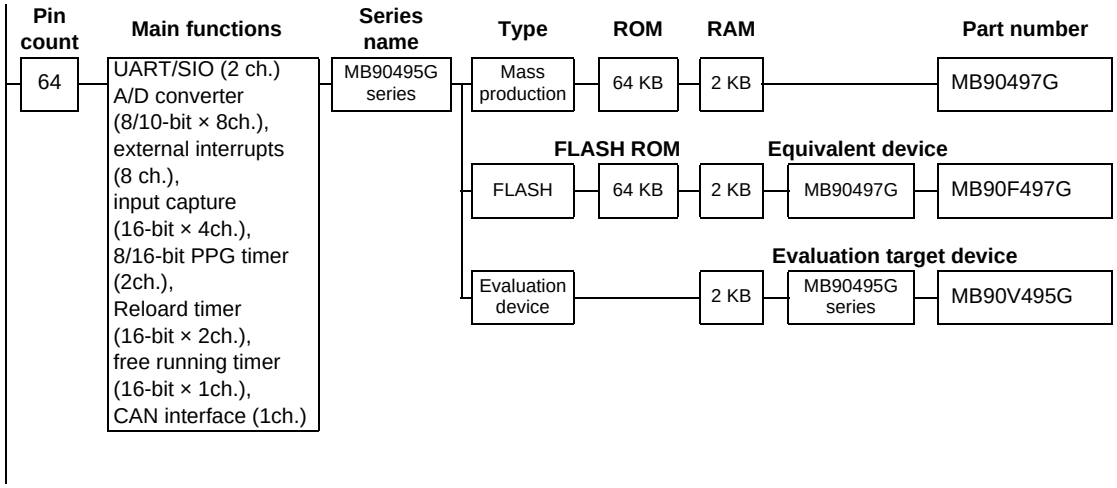

(Continued)

MB90495G Series

For car bodies control, etc.

MB90497G
ROM 64 KB
RAM 2 KB

MB90F497G
FLASH ROM 64 KB
RAM 2 KB

MB90V495G
RAM 2 KB
<Evaluation device>

- Maximum clock frequency: 16 MHz(32.768 kHz)
- Minimum execution time: 62.5 ns(122.1 µs)
- Operating temperature range: -40°C to +105°C

Part number	Operating power supply voltage (V)	Package			Functions
		QFP	LQFP	PGA	
MB90497G	+4.5 to +5.5	64P	64P	–	I/O ports : 49 Max. Timebase timer (WDT) : 18-bit × 1 ch. PPG timer : 16-bit × 2 ch. (8-bit × 4 ch.) UART/SIO : 1ch. Analog section : 8/10-bit A/D converter × 8 ch. Real time I/O : 16-bit input capture unit (ICU) × 4 ch. 16-bit free-run timer × 1 ch. Reload timer : 16-bit × 2 ch. CAN interface : 1 ch. Watch timer External interrupt: 8ch. Low-power consumption modes:Sleep, stop, sub, watch, CPU intermittent operation, time base timer mode
MB90F497G		64P	64P	–	
MB90V495G		–	–	256C	

Packages: P - plastic, C - ceramic
SMC: Stepper motor controller

(Continued)

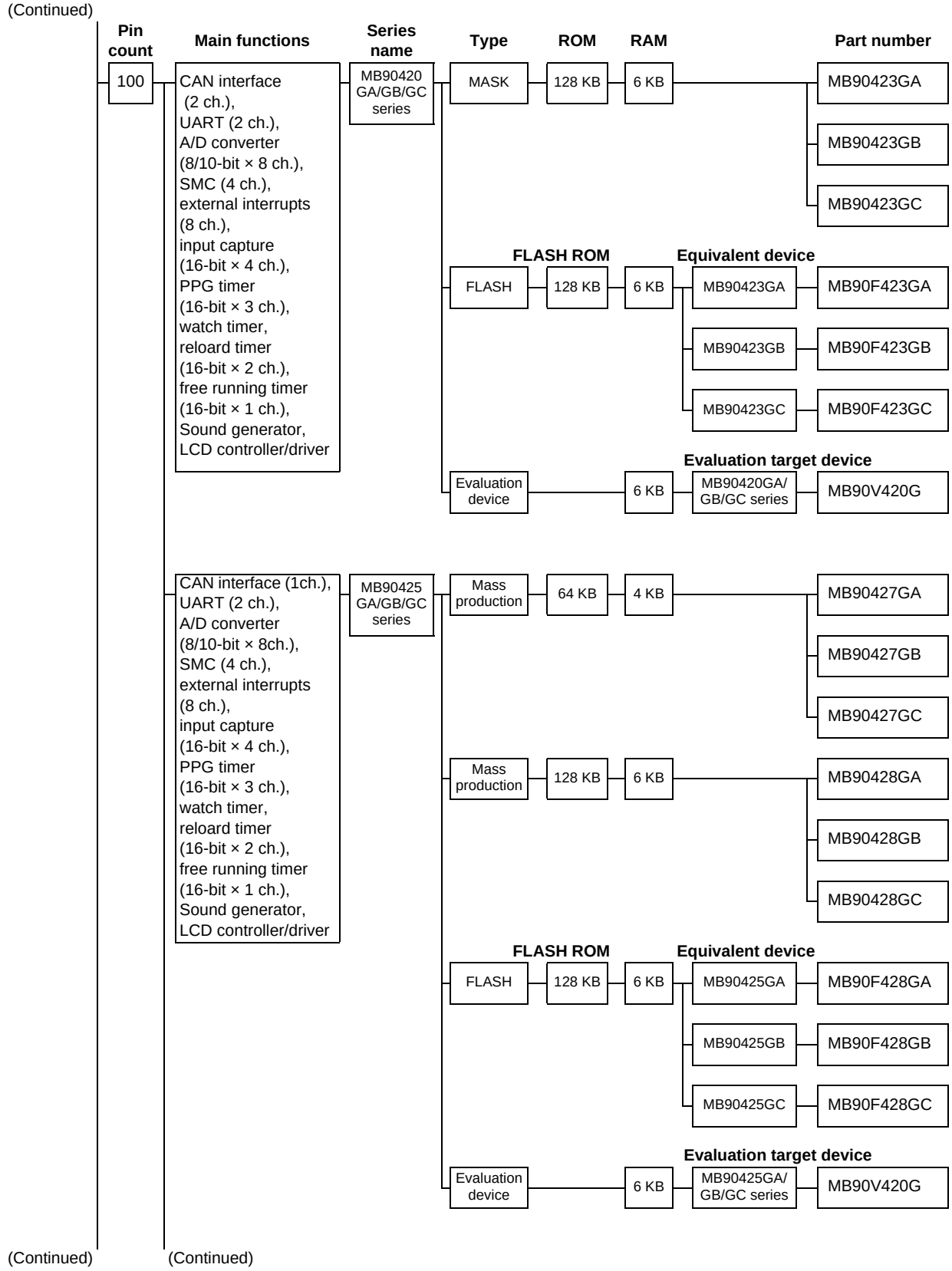

(Continued) (Continued)

MB90420GA/420GB/420GC Series

Automotive Aplications, etc.

MB90423GA/GB/GC
ROM 128 KB
RAM 6 KB

MB90F423GA/GB/GC
FLASH ROM 128 KB
RAM 6 KB

MB90V420G
RAM 6 KB
<Evaluation device>

- Maximum clock frequency: 16 MHz (32.768 kHz)
- Minimum execution time: 62.5 ns (122.1 µs)
- Operating temperature range: –40°C to +105°C

Part number	Operating power supply voltage (V)	Package			Functions
		QFP	LQFP	PGA	
MB90423GA	+4.5 to +5.5	100P	100P	–	I/O ports : 58 Max. CAN interface : 2ch. Timebase timer (WDT): 18-bit × 1 ch. Watch timer, Sound generator PPG timer : (16-bit × 3 ch.) Analog section : 8/10-bit A/D converter × 8 ch. Real time I/O: 16-bit input capture unit (ICU) × 4 ch. 16-bit free-run timer × 1 ch. UART : 2 ch., Reload timer : 16-bit × 2 ch. Stepper motor controller : 4 ch. LCD controller/driver: 96 elements, 2 to 4 common, 12 to 24 segments, 16 × 8-bit LCD display RAM For clock one system : MB90423GA/F423GA For clock two systems : MB90423GB/GC/F423GB/GC/V420G External interrupts : 8ch. Low-voltage detection reset (MB90423GA/GB/F423GA/GB) Low-power consumption modes:Sleep, stop, sub, watch, time base timer, CPU intermittent operation mode
MB90423GB		100P	100P	–	
MB90423GC		100P	100P	–	
MB90F423GA		100P	100P	–	
MB90F423GB		100P	100P	–	
MB90F423GC		100P	100P	–	
MB90V420G		–	–	256C	

Packages: P - plastic, C - ceramic

MB90425GA/425GB/425GC Series

Automotive Aplications, etc.

MB90427GA/GB/GC
ROM 64KB
RAM 4KB

MB90428GAGB/GC
ROM 128KB
RAM 6KB

MB90F428GA/GB/GC
ROM 128KB
RAM 6KB

MB90V420G
RAM 6KB
<Evaluation device>

- Maximum clock frequency: 16 MHz(32.768 kHz)
- Minimum execution time: 62.5 ns(122.1 µs)
- Operating temperature range: -40°C to +105°C

Part number	Operating power supply voltage (V)	Package			Functions
		QFP	LQFP	PGA	
MB90427GA	+4.5 to +5.5	100P	100P	–	I/O ports: 58 Max. CAN interface : 1ch. (2ch. : MB90V420) Timebase timer (WDT): 18-bit × 1ch. Watch timer (main clock) Sound generator PPG timer : 16-bit × 3 ch. Analog section : 8/10-bit A/D converter × 8ch. Real time I/O: 16-bit input capture unit (ICU) × 4 ch. 16-bit free-run timer × 1ch. UART : 2 ch. Reload timer : 16-bit × 2 ch. Stepper motor controller : 4 ch. LCD controller/driver: 96 elements, 2 to 4 common, 12 to 24 segments, 16 × 8-bit LCD display RAM For clock one system : MB90427GA/428GA/F428GA For clock two systems : MB90427GB/GC/428GB/GC /F428GB/GC/V420G External interrupts : 8 ch. Low-voltage detection reset (MB90427GA/GB/428GA/GB/F428GA/GB) Low-power consumption modes:Sleep, stop, sub, watch, time base timer, CPU intermittent operation mode
MB90427GB		100P	100P	–	
MB90427GC		100P	100P	–	
MB90428GA		100P	100P	–	
MB90428GB		100P	100P	–	
MB90428GC		100P	100P	–	
MB90F428GA		100P	100P	–	
MB90F428GB		100P	100P	–	
MB90F428GC		100P	100P	–	
MB90V420G		–	–	256C	

Packages: P - plastic, C - ceramic

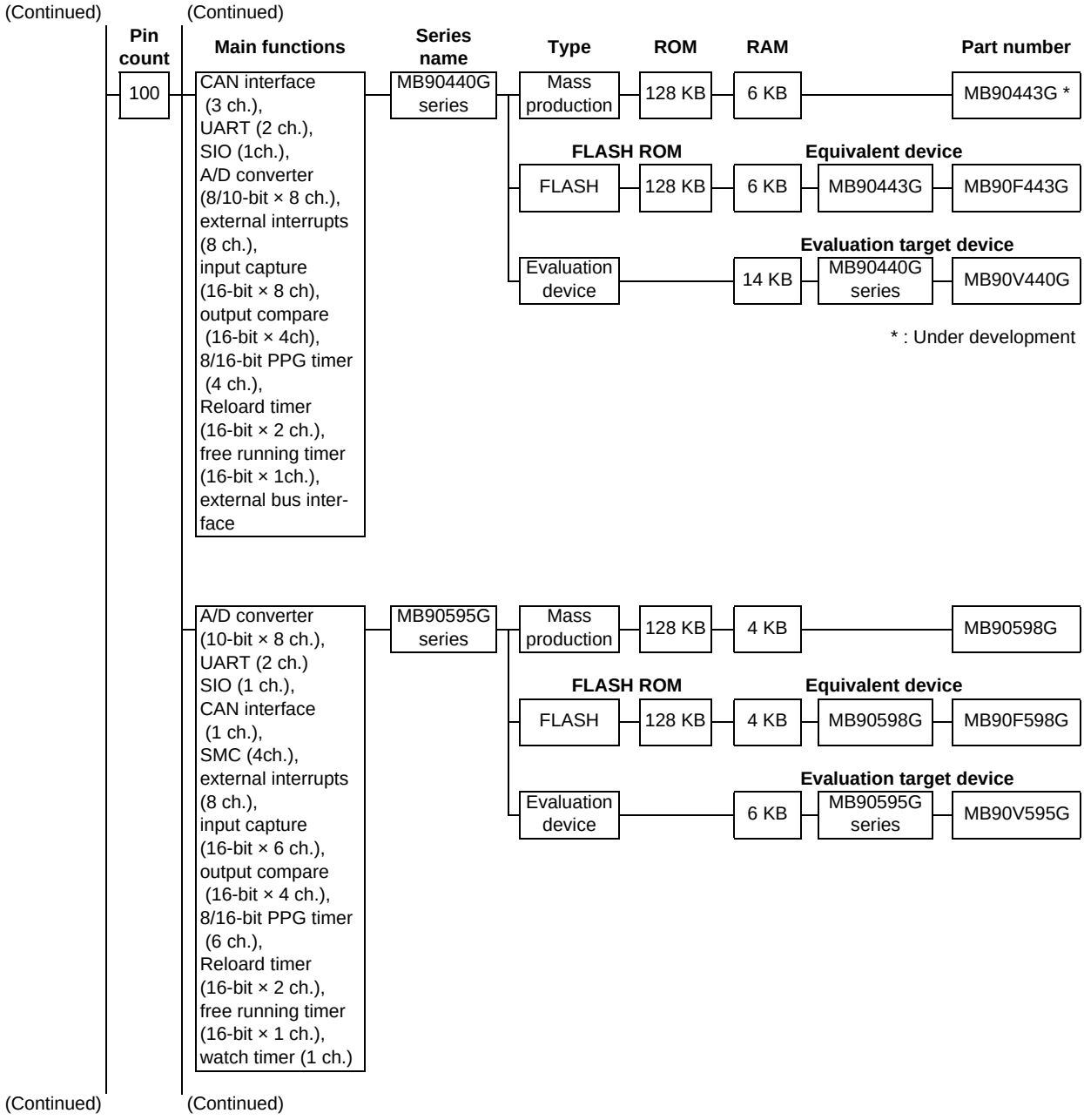
(Continued)
(Continued)
Pin count
Main functions
Series name
Type
ROM
RAM
Part number
100
CAN interface (3 ch.), UART (2 ch.), SIO (1ch.), A/D converter (8/10-bit × 8 ch.), external interrupts (8 ch.), input capture (16-bit × 8 ch), output compare (16-bit × 4ch), 8/16-bit PPG timer (4 ch.), Reload timer (16-bit × 2 ch.), free running timer (16-bit × 1ch.), external bus interface
MB90440G series
Mass production
128 KB
6 KB
MB90443G *
FLASH ROM
Equivalent device
FLASH
128 KB
6 KB
MB90443G
MB90F443G
Evaluation target device
Evaluation device
14 KB
MB90440G series
MB90V440G
* : Under development
A/D converter (10-bit × 8 ch.), UART (2 ch.) SIO (1 ch.), CAN interface (1 ch.), SMC (4ch.), external interrupts (8 ch.), input capture (16-bit × 6 ch.), output compare (16-bit × 4 ch.), 8/16-bit PPG timer (6 ch.), Reload timer (16-bit × 2 ch.), free running timer (16-bit × 1 ch.), watch timer (1 ch.)
MB90595G series
Mass production
128 KB
4 KB
MB90598G
FLASH ROM
Equivalent device
FLASH
128 KB
4 KB
MB90598G
MB90F598G
Evaluation target device
Evaluation device
6 KB
MB90595G series
MB90V595G
(Continued)
(Continued)

MB90440G Series

For gateway, etc.

MB90443G
ROM 128 KB
RAM 6 KB
Under development

MB90F443G
FLASH ROM 128 KB
RAM 6 KB

MB90V440G
RAM 14 KB
<Evaluation device>

- Maximum clock frequency: 16 MHz (32.768 kHz)
- Minimum execution time: 62.5 ns (125 µs)
- Operating temperature range: -40°C to +105°C

Part number	Operating power supply voltage (V)	Package		Functions
		QFP	PGA	
◎MB90443G	+4.5 to +5.5	100P	–	I/O ports: 81 CAN interface: 3 ch. Timebase timer (WDT): 18-bit × 1 ch. 8/16-bit PPG timer: 4 ch. Analog section: 8/10-bit A/D converter × 8 ch. Real time I/O:16-bit input capture unit (ICU) × 8 ch. 16-bit output compare unit (OCU) × 4 ch. 16-bit free-run timer × 1 ch. UART: 2 ch. SIO: 1 ch. Reload timer: 16-bit × 2 ch. External interrupts: 8 ch. external bus interface Low-power consumption modes: Sleep, stop, sub, watch, CPU intermittent operation, time base timer mode
MB90F443G		100P	–	
MB90V440G		–	256C	

Packages: P - plastic, C - ceramic
◎: Under development

MB90595G Series

For dashboard, car audio, etc.

MB90598G
ROM 128KB
RAM 4 KB

MB90F598G
FLASH ROM 128KB
RAM 4 KB

MB90V595G
RAM 6 KB
<Evaluation device>

- Maximum clock frequency: 16 MHz
- Minimum execution time: 62.5 ns
- Operating temperature range: -40°C to +85°C

Part number	Operating power supply voltage (V)	Package		Functions
		QFP	PGA	
MB90598G	+4.5 to +5.5	100P	–	I/O ports: 78 Timebase timer (WDT): 18-bit × 1 ch. UART: 2 ch. Analog section:10-bit A/D converter × 8ch. Real time I/O:16-bit input capture unit (ICU) × 4 ch. 16-bit output compare unit (OCU) × 4 ch. 16-bit free-run timer × 1 ch. 8/16-bit PPG timer: 6 ch. SIO: 1 ch. Reload timer: 16-bit × 2 ch. CAN interface: 1 ch. SMC: 4 ch. External interrupts: 8 ch. Low-power consumption modes: Sleep, stop, time base timer, CPU intermittent operation mode
MB90F598G		100P	–	
MB90V595G		–	256C	

Packages: P - plastic, C - ceramic
SMC: Stepper motor controller

(Continued) (Continued)

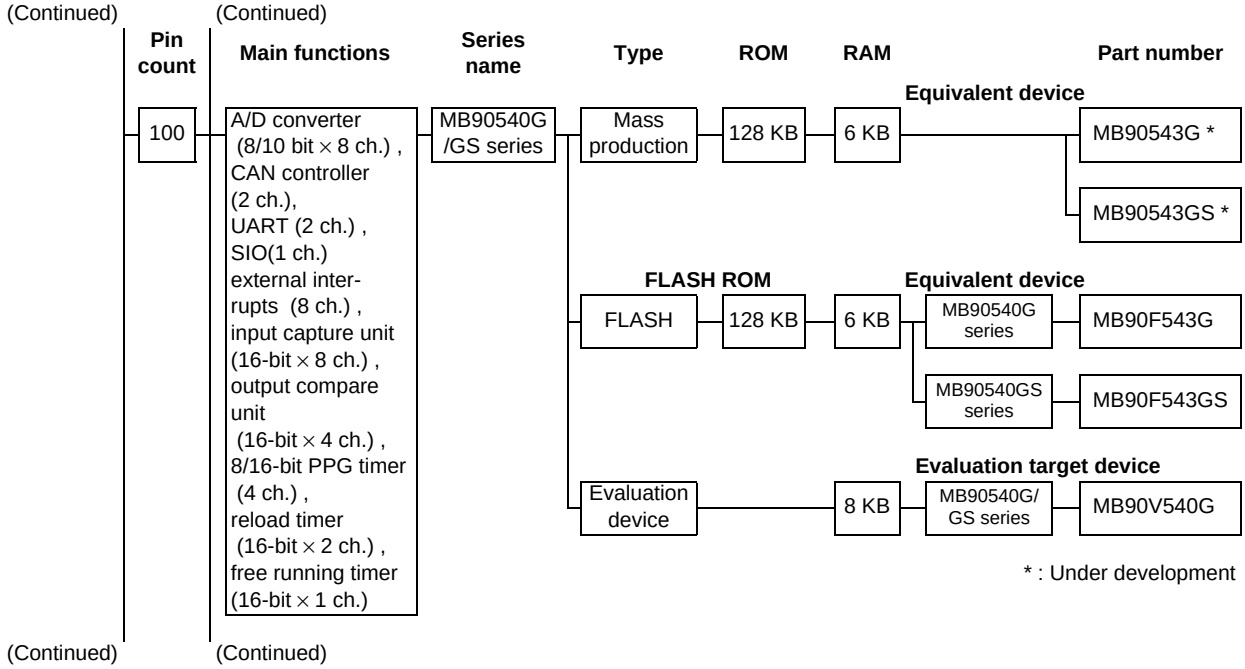

* : Under development

(Continued) (Continued)

MB90540G/540GS Series

For dashboard, car audio, etc.

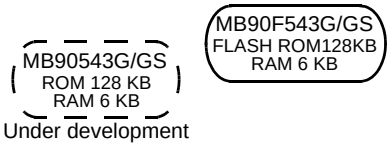

- Maximum internal clock frequency: 16 MHz (32.768 kHz)
- Minimum execution time: 62.5 ns (122.1 µs)
- Operating temperature range: -40°C to +105°C

Part number	Operating power supply voltage (V)	Package			Functions
		QFP	LQFP	PGA	
◎MB90543G	+3.5 to +5.5	100P	100P	–	I/O ports : 81 Max. Timebase timer (WDT) : 18-bit × 1 ch. CAN controller : 2 ch. 8/16-bit PPG timer : 4 ch. SIO : 1 ch. Analog section : 8/10-bit A/D converter × 8 ch. Real time I/O : 16-bit input capture unit (ICU) × 8 ch. 16-bit output compare unit (OCU) × 4 ch. 16-bit free running timer × 1 ch. UART : 2 ch. Reload timer : 16-bit × 2 ch. For clock one system : MB90543GS/F543GS For clock two systems : MB90543G/F543G/V540G External interrupts : 8 ch. Low-power consumption modes : Sleep, stop, sub, CPU intermittent operation, watch, time base timer mode
MB90F543G	+4.5 to +5.5	100P	100P	–	
◎MB90543GS	+3.5 to +5.5	100P	100P	–	
MB90F543GS	+4.5 to +5.5	100P	100P	–	
MB90V540G		–	–	256C	

Packages: P - plastic, C - ceramic

◎: Under development

16-bit Proprietary F²MC-16LX Family CAN Controller Products

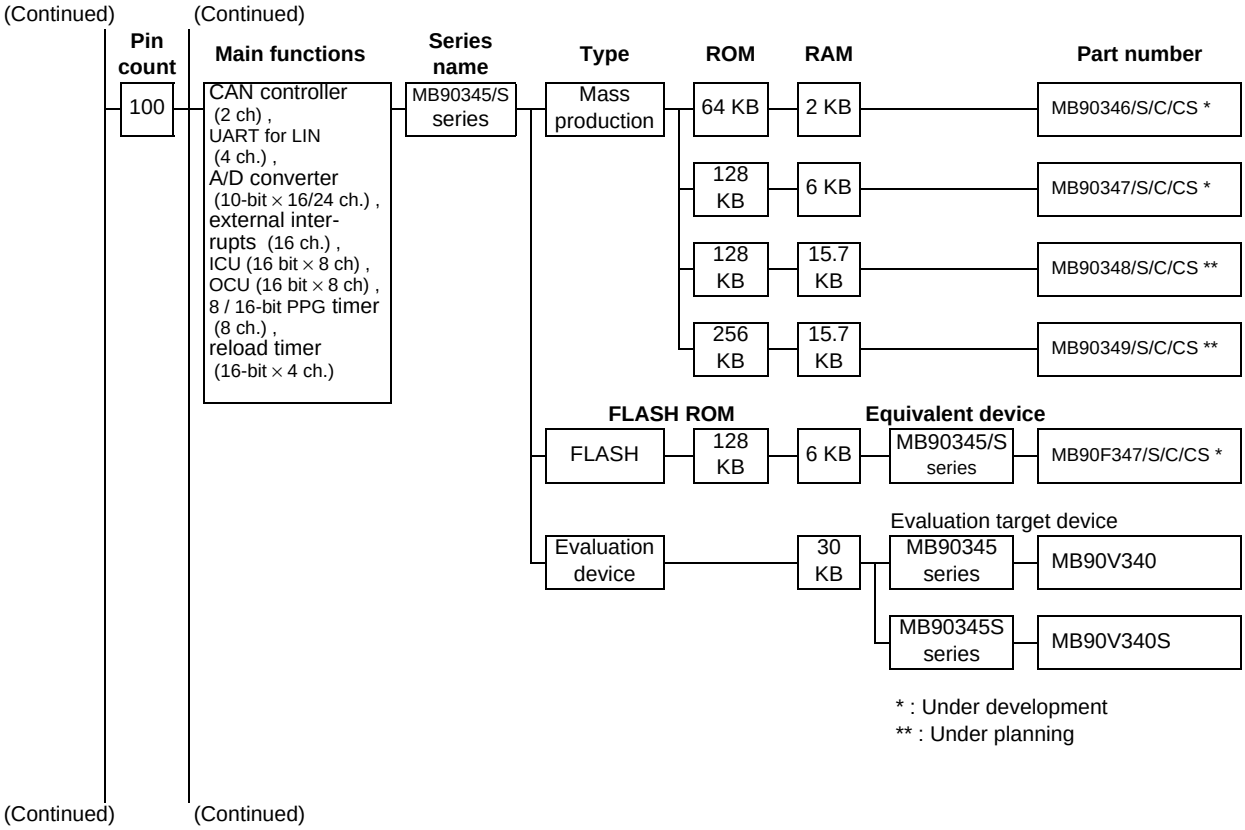

MB90345/345S Series

For car air-conditioner, etc.

- Maximum internal clock frequency: 24 MHz (32.768 kHz)
- Minimum execution time: 42.0 ns
- Operating temperature range: –40°C to +105 °C

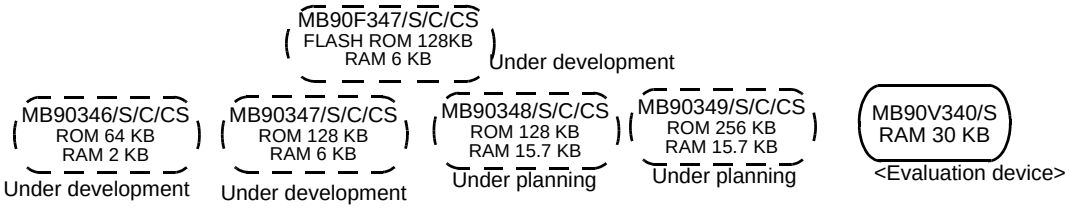

Part number	Operating power supply voltage (V)	Package			Functions
		LQFP	QFP	PGA	
MB90346C	+3.5 to +5.5	100P	100P	–	I/O ports : 80 (MB90346/346C/347/347C/F347/F347C/348/348C/349/349C/V340 : 2-clock system) 82 (MB90346S/346CS/347S/347CS/F347S/F347CS/348S/348CS/349S/349CS/V340S : 1-clock system) Timebase timer (WDT) : 18-bit × 1 ch. CAN controller : 1 ch. (MB90V340/340S : 3 ch.) 8/16-bit PPG timer : 16 bit × 8 ch. (16 bit × 16 ch.) Analog section : 8/10-bit A/D converter × 16 ch. (MB90346/346S/347/347S/F347/F347S/348/348S/349/349S) 8/10-bit A/D converter × 24 ch. (MB90346C/346CS/347C/347CS/F347C/F347CS/348C/348CS/349C/349CS/V340/V340S) Real time I/O : 16-bit input capture unit (ICU) × 8 ch. 16-bit output compare unit (OCU) × 8 ch. UART for LIN × 4 ch. (MB90V340/V340S : 5 ch.) Reload timer : 16 bit × 4 ch. I²C bus interface : 2 ch. (MB90346C/346CS/347C/347CS/348C/348CS/349C/349CS/V340/V340S) External interrupts : 16 ch. Low-power consumption modes : Sleep, stop, sub, CPU intermittent operation, watch, time base timer mode
MB90346CS		100P	100P	–	
MB90347		100P	100P	–	
MB90347S		100P	100P	–	
MB90347C		100P	100P	–	
MB90347CS		100P	100P	–	
MB90F347		100P	100P	–	
MB90F347S		100P	100P	–	
MB90F347C		100P	100P	–	
MB90F347CS		100P	100P	–	
MB90348		100P	100P	–	
MB90348S		100P	100P	–	
MB90348C		100P	100P	–	
MB90348CS		100P	100P	–	
MB90349		100P	100P	–	
MB90349S		100P	100P	–	
MB90349C		100P	100P	–	
MB90349CS		100P	100P	–	
MB90V340	+4.5 to +5.5	–	–	299C	
MB90V340S		–	–	299C	

Packages: P - plastic

: Under development

: Under planning

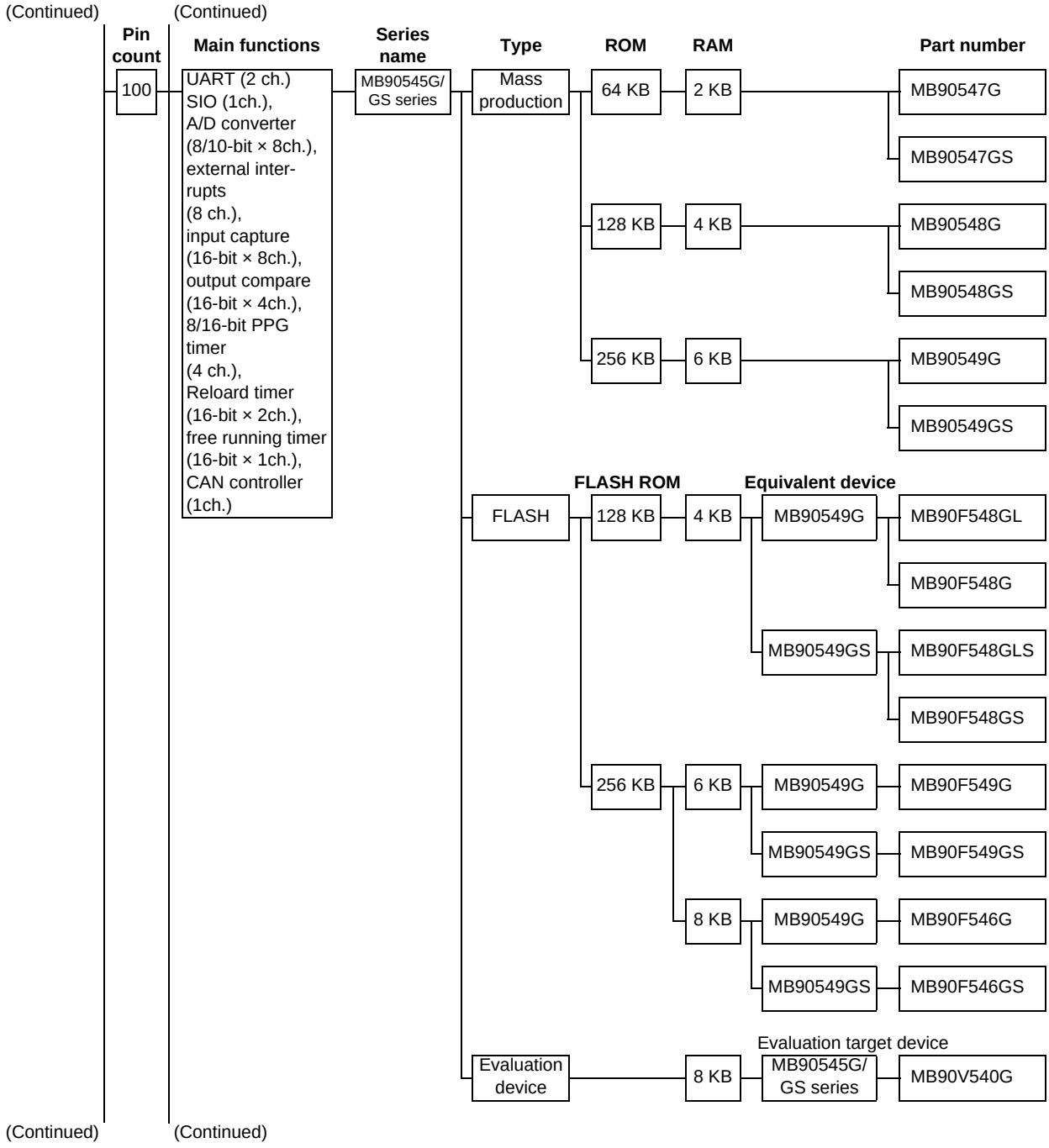
(Continued)
(Continued)
Pin count
Main functions
Series name
Type
ROM
RAM
Part number
100
UART (2 ch.) SIO (1ch.), A/D converter (8/10-bit × 8ch.), external interrupts (8 ch.), input capture (16-bit × 8ch.), output compare (16-bit × 4ch.), 8/16-bit PPG timer (4 ch.), Reload timer (16-bit × 2ch.), free running timer (16-bit × 1ch.), CAN controller (1ch.)
MB90545G/ GS series
Mass production
64 KB
2 KB
MB90547G
MB90547GS
128 KB
4 KB
MB90548G
MB90548GS
256 KB
6 KB
MB90549G
MB90549GS
FLASH ROM
Equivalent device
FLASH
128 KB
4 KB
MB90549G
MB90F548GL
MB90F548G
MB90549GS
MB90F548GLS
MB90F548GS
256 KB
6 KB
MB90549G
MB90F549G
MB90549GS
MB90F549GS
8 KB
MB90549G
MB90F546G
MB90549GS
MB90F546GS
Evaluation target device
Evaluation device
8 KB
MB90545G/ GS series
MB90V540G
(Continued)
(Continued)

MB90545G/545GS Series

For dashboard, car audio, etc.

- Maximum clock frequency: 16 MHz(32.768 kHz)
- Minimum execution time: 62.5 ns(122.1 µs)
- Operating temperature range: -40°C to +105°C

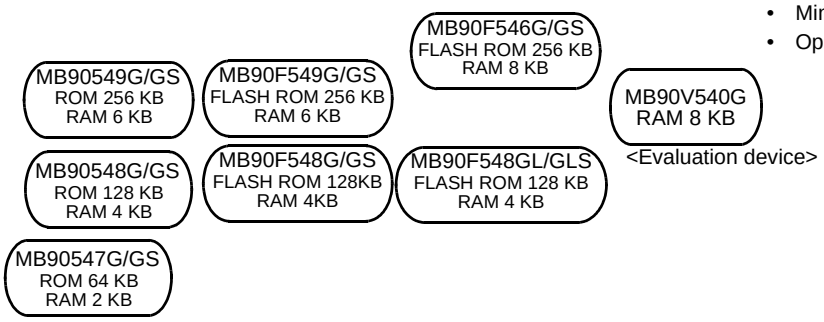

Part number	Operating power supply voltage (V)	Package			Functions
		QFP	LQFP	PGA	
MB90547G	+3.5 to +5.5	100P	100P	–	I/O ports: 80 Max. Timebase timer (WDT): 18-bit × 1 ch. CAN controller : 1 ch. 8/16-bit PPG timer : 4 ch. SIO : 1ch. Analog section : 8/10-bit A/D converter × 8 ch. Real time I/O: 16-bit input capture unit (ICU) × 8 ch. 16-bit output compare unit (OCU) × 4 ch. 16-bit free-run timer × 1 ch. UART : 2 ch. Reload timer : 16-bit × 2 ch. For clock one system : MB90549GS/F546GS/F548GS/F548GLS/547GS/548GS/F549GS For clock two systems : MB90549G/F546G/F548G/F548GL/F549G/547G/548G/V540G External interrupts : 8 ch. Low-power consumption modes: Sleep, stop, sub, CPU intermittent operation, watch, time base timer mode
MB90547GS		100P	100P	–	
MB90548G		100P	100P	–	
MB90548GS		100P	100P	–	
MB90549G	+4.5 to +5.5	100P	100P	–	
MB90549GS		100P	100P	–	
MB90F546G		100P	100P	–	
MB90F546GS		100P	100P	–	
MB90F548G		100P	100P	–	
MB90F548GS		100P	100P	–	
MB90F548GL	+3.5 to +5.5	100P	100P	–	
MB90F548GLS		100P	100P	–	
MB90F549G	+4.5 to +5.5	100P	100P	–	
MB90F549GS		100P	100P	–	
MB90V540G		–	–	256C	

Packages: P - plastic, C - ceramic

16-bit Proprietary F²MC-16LX Family CAN Controller Products

(Continued) (Continued)

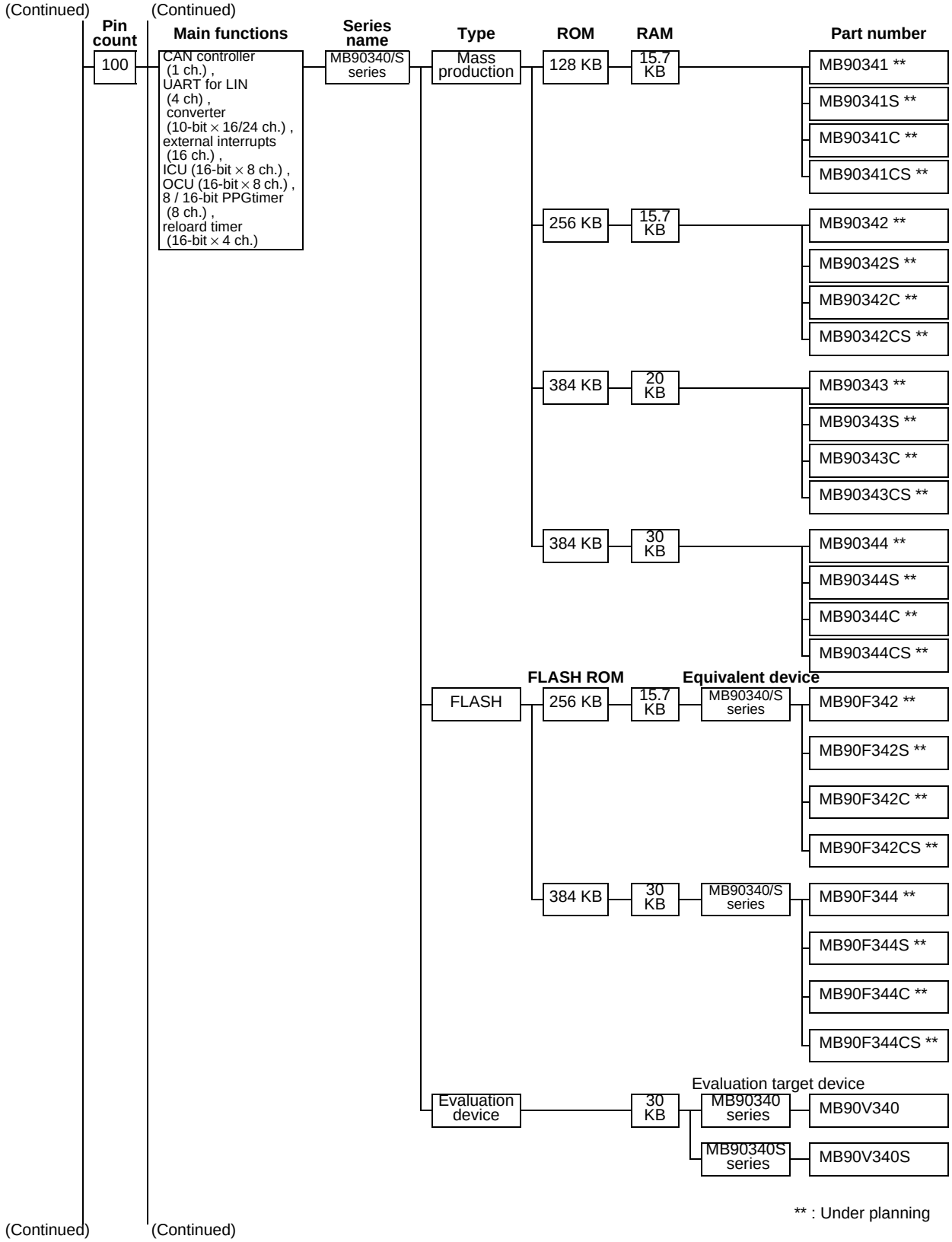

** : Under planning

(Continued) (Continued)

MB90340/340S Series

For car audio, etc.

- Maximum clock frequency: 16 MHz (32.768 kHz)
- Minimum execution time: 42.0 ns
- Operating temperature range: –40 °C to +105 °C

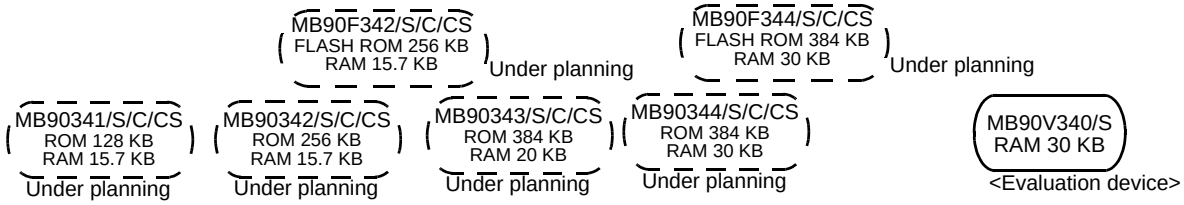

Part number	Operating power supply voltage (V)	Package			Functions
		LQFP	QFP	PGA	
○ MB90341	+3.5 to +5.5	100P	100P	–	I/O ports: 80 (MB90341/341C/342/342C/F342/F342C/343/343C/344/344C/F344/F344C/V340 : 2-clock system) 82 (MB90341S/341CS/342S/342CS/F342S/F342CS/343S/343CS/344S/344CS/F344S/F344CS/V340S : 1-clock system) Timebase timer (WDT): 18-bit × 1 ch. CAN controller : 2 ch. (MB90V340/V340S : 3 ch.) PPG timer : 16-bit × 8 ch. (8-bit × 16 ch.) Analog section: 8/10-bit A/D converter × 16 ch (MB90341/341S/342/342S/F342/F342S/343/343S/344/344S/F344/F344S) 8/10-bit A/D converter × 24 ch (MB90341C/341CS/342C/342CS/F342C/F342CS/343C/343CS/344C/344CS/F344C/F344CS/V340/V340S) Real time I/O: 16-bit input capture unit (ICU) × 8 ch. 16-bit output compare unit (OCU) × 8 ch. UART for LIN × 4 ch. (MB90V340/V340S : 5 ch.) Reload timer: 16-bit × 4 ch. I²C bus interface : 2 ch. (MB90341C/341CS/342C/342CS/F342C/F342CS/343C/343CS/344C/344CS/F344C/F344CS/V340/V340S) External interrupts: 16 ch Low-power consumption modes:Sleep, stop, sub, watch, time base timer, CPU intermittent operation mode
○ MB90341S		100P	100P	–	
○ MB90341C		100P	100P	–	
○ MB90341CS		100P	100P	–	
○ MB90342		100P	100P	–	
○ MB90342S		100P	100P	–	
○ MB90342C		100P	100P	–	
○ MB90342CS		100P	100P	–	
○ MB90F342		100P	100P	–	
○ MB90F342S		100P	100P	–	
○ MB90F342C		100P	100P	–	
○ MB90F342CS		100P	100P	–	
○ MB90343		100P	100P	–	
○ MB90343S		100P	100P	–	
○ MB90343C		100P	100P	–	
○ MB90343CS		100P	100P	–	
○ MB90344		100P	100P	–	
○ MB90344S		100P	100P	–	
○ MB90344C		100P	100P	–	
○ MB90344CS		100P	100P	–	
○ MB90F344		100P	100P	–	
○ MB90F344S		100P	100P	–	
○ MB90F344C		100P	100P	–	
○ MB90F344CS		100P	100P	–	
MB90V340	+4.5 to +5.5	–	–	299C	
MB90V340S		–	–	299C	

Packages: P - plastic

○: Under planning

(Continued)

(Continued)

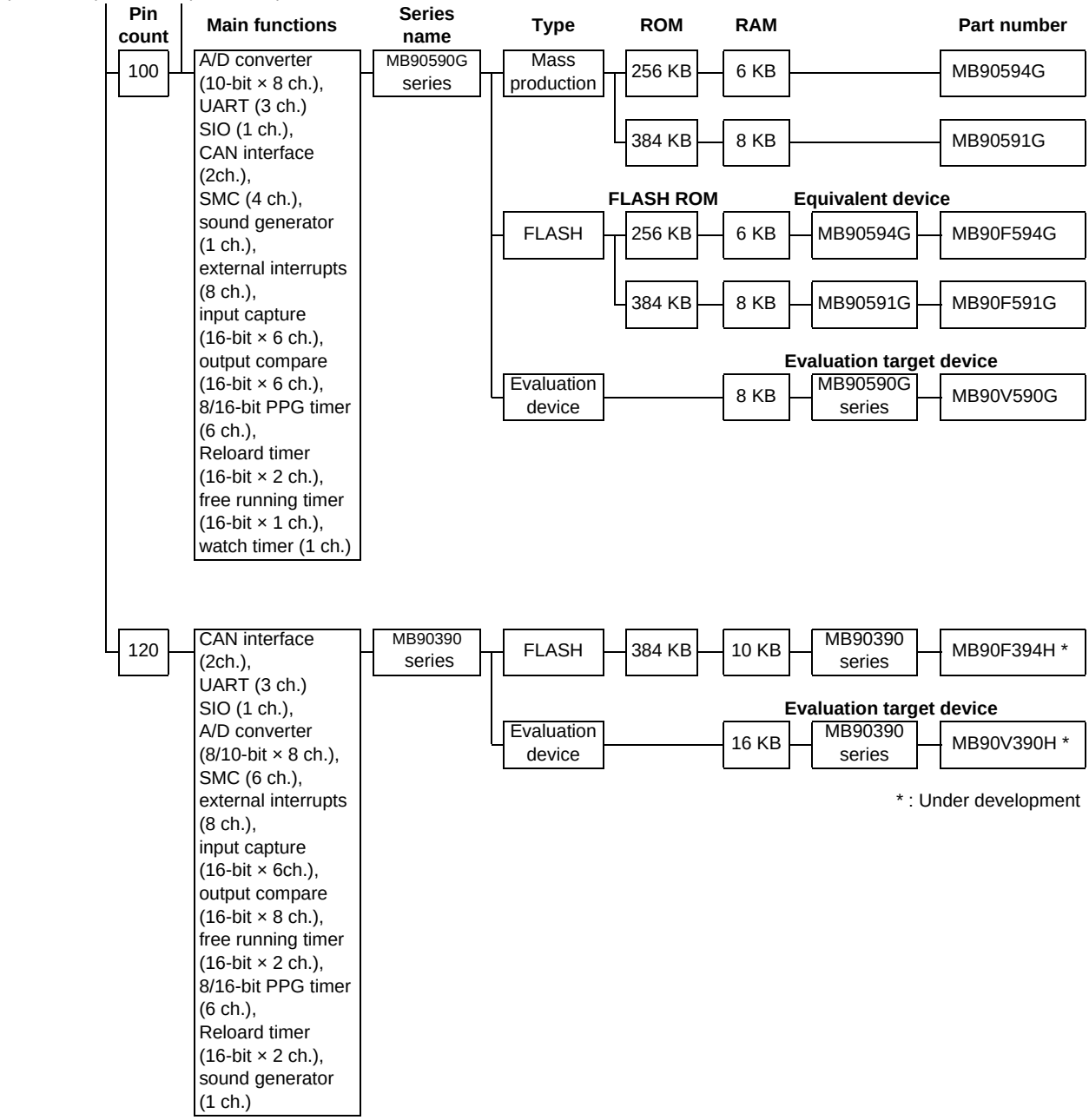

* : Under development

MB90590G Series

For dashboard, etc.

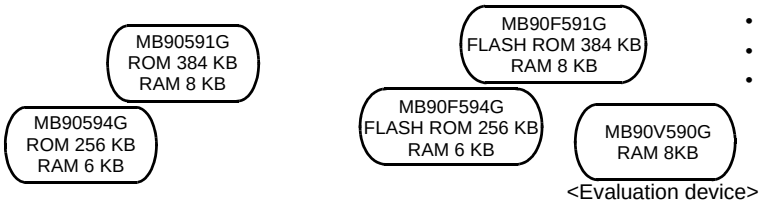

- Maximum clock frequency: 16 MHz
- Minimum execution time: 62.5 ns
- Operating temperature range: -40°C to +85°C

Part number	Operating power supply voltage (V)	Package		Functions
		QFP	PGA	
MB90591G	+4.75 to +5.25	100P	–	I/O ports: 78 MAX. Timebase timer (WDT): 18-bit × 1 ch. UART: 3ch. Analog section:10-bit A/D converter × 8 ch. Real time I/O:16-bit input capture unit (ICU) × 6 ch. 16-bit output compare unit (OCU) × 6 ch. 16-bit free-run timer × 1 ch. 8/16-bit PPG timer : 6 ch. SIO: 1 ch. Reload timer: 16-bit × 2 ch. CAN interface: 2 ch. SMC: 4ch Sound generator: 1 ch. Watch timer: 1 ch. External interrupts: 8 ch. Low-power consumption modes: Sleep, stop, time base timer, CPU intermittent operation mode
MB90594G	+4.5 to +5.5	100P	–	
MB90F591G	+4.75 to +5.25	100P	–	
MB90F594G	+4.5 to +5.5	100P	–	
MB90V590G		–	256C	

Packages: P - plastic, C - ceramic
SMC: Stepper motor controller

MB90390 Series

For dashboard, etc.

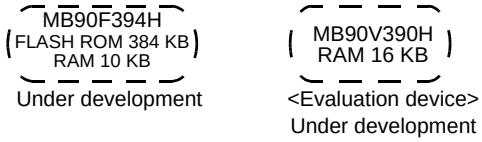

- Maximum clock frequency: 20 MHz
- Minimum execution time: 50 ns
- Operating temperature range: -40°C to +85°C

Part number	Operating power supply voltage (V)	Package		Functions
		QFP	PGA	
◎MB90F394	+3.5 to +5.5	120P	–	I/O ports: 96 MAX. CAN interface: 2 ch. Timebase timer (WDT): 18-bit × 1 ch. Real time watch timer: 1 ch. Sound generator: 1 ch. 8/16-bit PPG timer : 6 ch. Analog section: 8/10-bit A/D converter × 8 ch. Real time I/O:16-bit input capture unit (ICU) × 6 ch. 16-bit output compare unit (OCU) × 8 ch. 16-bit free-run timer × 2 ch. UART: 3 ch. Reload timer: 16-bit × 2 ch. SIO: 1 ch. SMC: 6 ch. External interrupts: 8 ch. Low-power consumption modes: Sleep, stop, time base timer, CPU intermittent operation mode
◎MB90V390	+4.5 to +5.5	–	299C	

Packages: P - plastic, C - ceramic
SMC: Stepper motor controller

◎: Under development

16-bit Proprietary F²MC-16LX Family LCD Controller/Driver Products

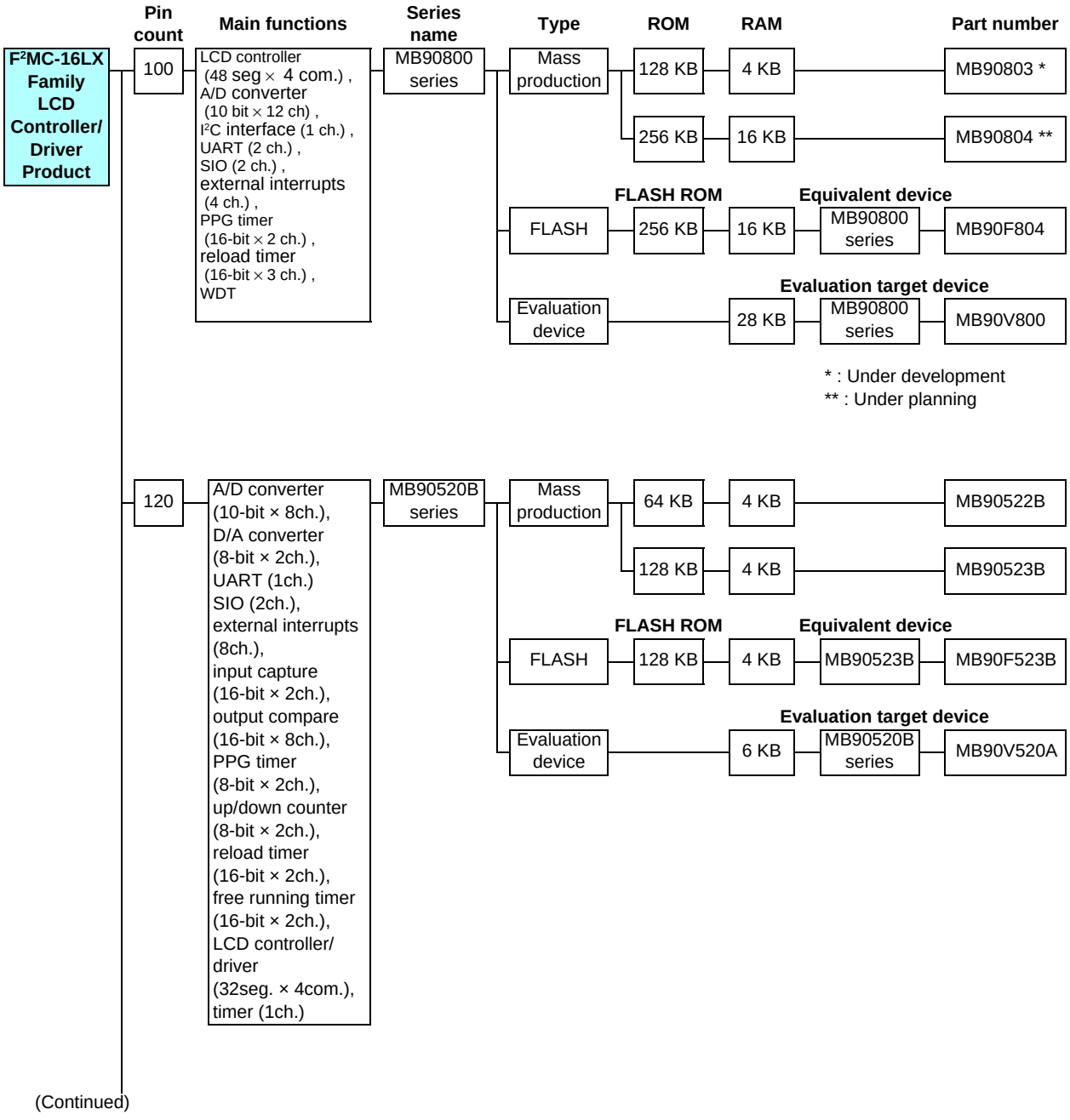

F²MC-16LX Family LCD Controller/Driver Products

MB90800 Series

For home audio, electric power meter, compact camera, phone, etc.

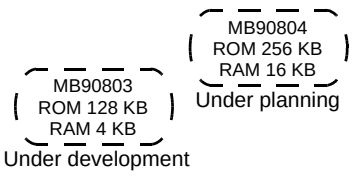

- Maximum internal clock frequency: 25 MHz (32.768 kHz)
- Minimum execution time: 40.0 ns (122.1 µs)
- Operating temperature range: –40 °C to +85 °C

Part number	Operating power supply voltage (V)	Package		Functions
		QFP	PGA	
◎MB90803	+3.0 to +3.6	100P	–	I/O ports: 70 Max. (sub clock : 68 Max.) Timebase timer (WDT) : 18-bit × 1 ch. UART : 2 ch. I²C bus interface× 1 ch. Analog section: 10-bit A/D converter × 12 ch. Real time I/O: 16-bit input capture unit (ICU) × 2 ch. 16-bit output compare unit (OCU) × 2 ch. 16-bit free running timer × 1 ch. PPG timer: 16-bit × 2 ch. SIO : 2 ch. Reload timer:16-bit × 3 ch. LCD controller: 192 elements, 2 to 4 common, 12 to 48 segments, 24 × 8-bit LCD display RAM External interrupts: 4ch. Low-power consumption modes:Sleep, stop, watch, time base timer, sub, CPU intermittent operation mode
○MB90804		100P	–	
MB90F804		100P	–	
MB90V800		–	299C	

Packages : P - plastic

◎: Under development, ○: Under planning

MB90520B Series

For cameras

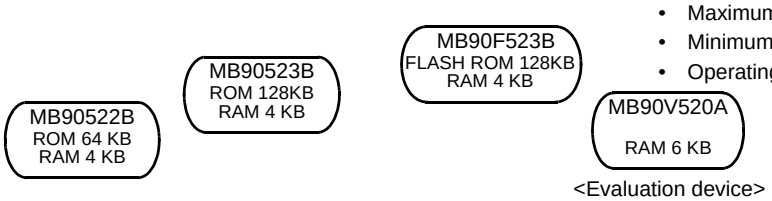

- Maximum internal clock frequency: 16 MHz (32.768 kHz)
- Minimum execution time: 62.5 ns (122.1 µs)
- Operating temperature range: -40°C to +85°C

Part number	Operating power supply voltage (V)	Package			Functions
		QFP	LQFP	PGA	
MB90522B	+3.0 to +5.5	120P	120P	–	I/O ports: 85 Max. Timebase timer (WDT): 18-bit × 1 ch. UART: 1ch. Analog section: 10-bit A/D converter × 8 ch. 8-bit D/A converter × 2ch. Real time I/O: 16-bit input capture unit (ICU) × 2 ch. 16-bit output compare unit (OCU) × 8 ch. 16-bit free running timer × 2 ch. Up/down counter: 8-bit × 2ch. (16-bit × 1 ch.) PPG timer: 8-bit × 2ch. (16-bit × 1 ch.) SIO: 2 ch. Reload timer:16-bit × 2 ch. LCD controller/driver: 128 elements, 2 to 4 common, 8 to 32 segments, 16 × 8-bit LCD display RAM Timer: 1 ch. External interrupts: 8 Low-power consumption modes:Sleep, stop, watch, time base timer, sub,CPU intermittent operation mode
MB90523B		120P	120P	–	
MB90F523B		120P	120P	–	
MB90V520A		–	–	256C	

Packages : P - plastic, C - ceramic

(Continued)

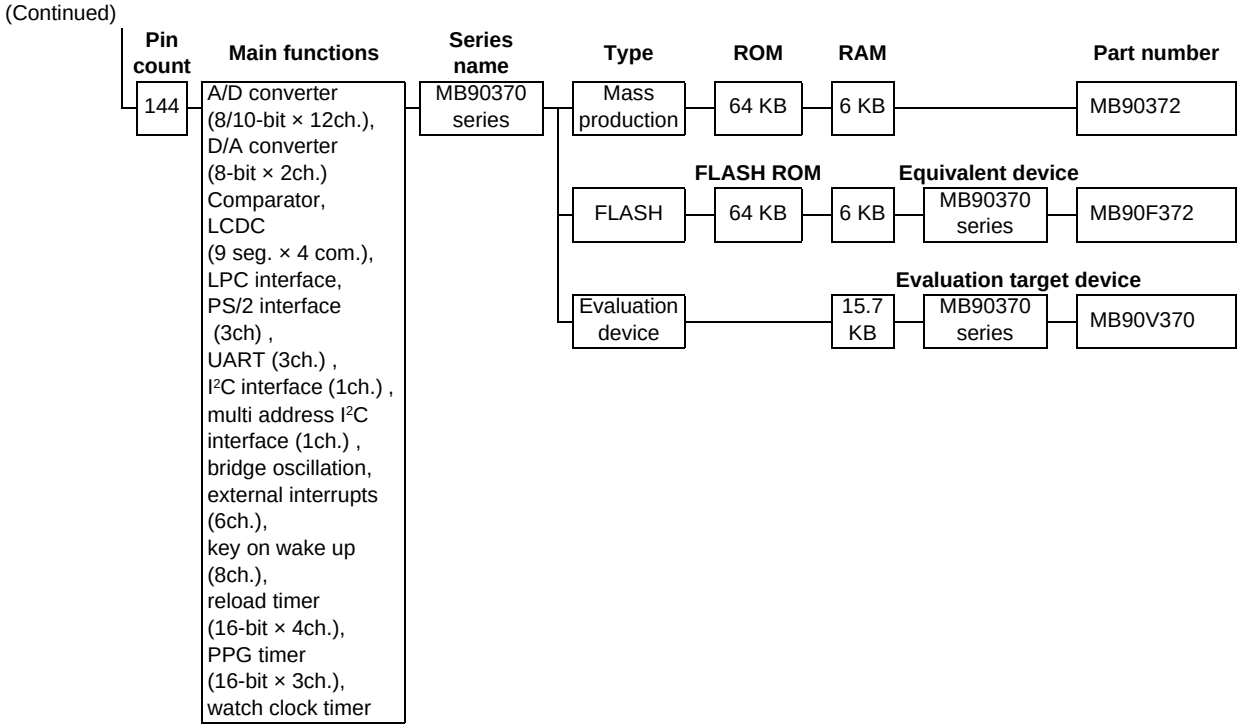
Pin count
Main functions
Series name
Type
ROM
RAM
Part number
144
A/D converter (8/10-bit × 12ch.), D/A converter (8-bit × 2ch.) Comparator, LCDC (9 seg. × 4 com.), LPC interface, PS/2 interface (3ch) , UART (3ch.) , I²C interface (1ch.) , multi address I²C interface (1ch.) , bridge oscillation, external interrupts (6ch.), key on wake up (8ch.), reload timer (16-bit × 4ch.), PPG timer (16-bit × 3ch.), watch clock timer
MB90370 series
Mass production
64 KB
6 KB
MB90372
FLASH ROM
Equivalent device
FLASH
64 KB
6 KB
MB90370 series
MB90F372
Evaluation target device
Evaluation device
15.7 KB
MB90370 series
MB90V370

MB90370 Series

For Notebook personul computer

- Maximum internal clock frequency: 16 MHz (32.768 kHz)
- Minimum execution time: 62.5 ns (122.1 µs)
- Operating temperature range: -40°C to +85°C

MB90372
ROM 64KB
RAM 6KB

MB90F372
FLASH ROM 64KB
RAM 6KB

MB90V370
RAM 15.7KB
<Evaluation device>

Part number	Operating power supply voltage (V)	Package		Functions
		LQFP	PGA	
MB90372	+3.0 to +3.6	144P	–	I/O ports: 120 Max. LPC interface PS/2 interface I²C bus interface: 1ch. Multi address I²C bus interface: 1ch. bridge oscillation LCD controller/driver: 9 segments × 4 common Watch clock timer PPG timer: 16-bit × 3ch. Reload timer:16-bit × 4ch. Analog section: 8/10-bit A/D converter × 8ch. 8-bit D/A converter × 2ch. UART: 3ch. External interrupts: 4ch. Key on wake up: 8ch. Timebase timer (WDT): 18-bit × 1ch. Low-power consumption modes:Sleep, stop, time base timer, CPU intermittent operation, sub, watch, mode
MB90F372		144P	–	
MB90V370		–	256C	

Packages : P - plastic, C - ceramic

16-bit Proprietary F²MC-16LX Family FL Controller Products

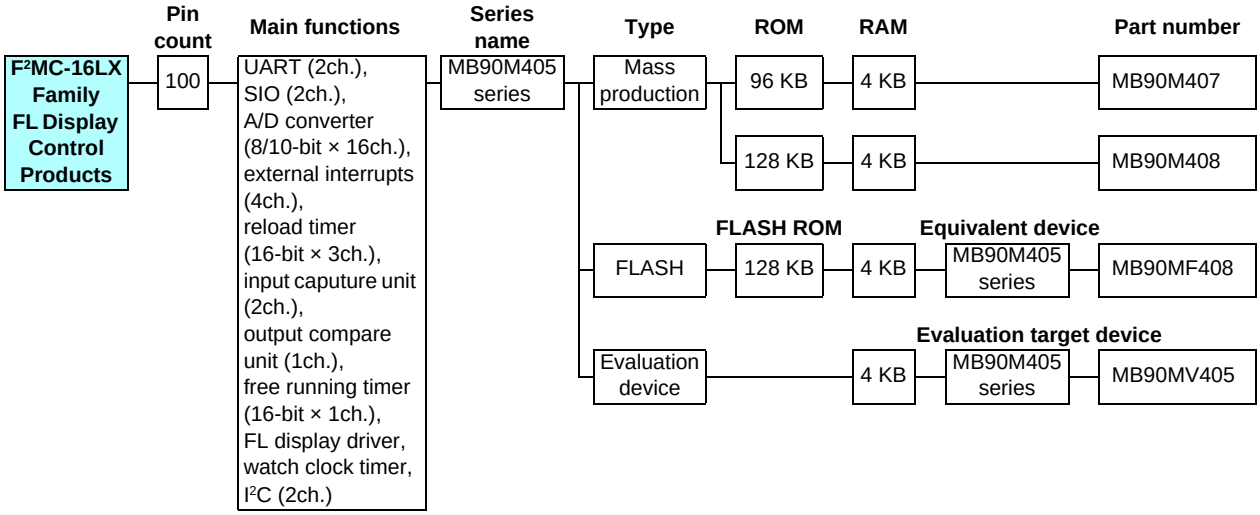

F²MC-16LX Family FL (Fluorescent) Display Controller Products

MB90M405 Series

FL display panel control

MB90M407
ROM 96KB
RAM 4KB

MB90M408
ROM 128KB
RAM 4KB

MB90MF408
FLASH ROM 128KB
RAM 4KB

MB90MV405
RAM 4KB
<Evaluation device>

- Maximum internal clock frequency: 16.8 MHz
- Minimum execution time: 59.5 ns
- Operating temperature range: -40°C to +85°C

Part number	Operating power supply voltage (V)	Package		Functions
		QFP	PGA	
MB90M407	+3.0 to +3.6	100P	–	I/O ports: 26 Max. Timebase timer (WDT): 18-bit × 1 ch. UART: 2 ch. Analog section: 8/10-bit A/D converter × 16 ch. Real time I/O: 16-bit input capture unit (ICU) × 2 ch. 16-bit output compare unit (OCU) × 1 ch. 16-bit free running timer × 1 ch. SIO: 2 ch. I²C interface: 1 ch. FL display driver controller Reload timer: 16-bit × 3 ch. Watch clock timer External interrupts: 4 Low-power consumption modes: Sleep, stop, time base timer, CPU intermittent operation mode
MB90M408	+3.0 to +3.6	100P	–	
MB90MF408	+3.0 to +3.6	100P	–	
MB90MV405	+3.0 to +3.6	–	256C	

Packages : P - plastic, C - ceramic

16-bit Proprietary F²MC-16LX Family USB function Products

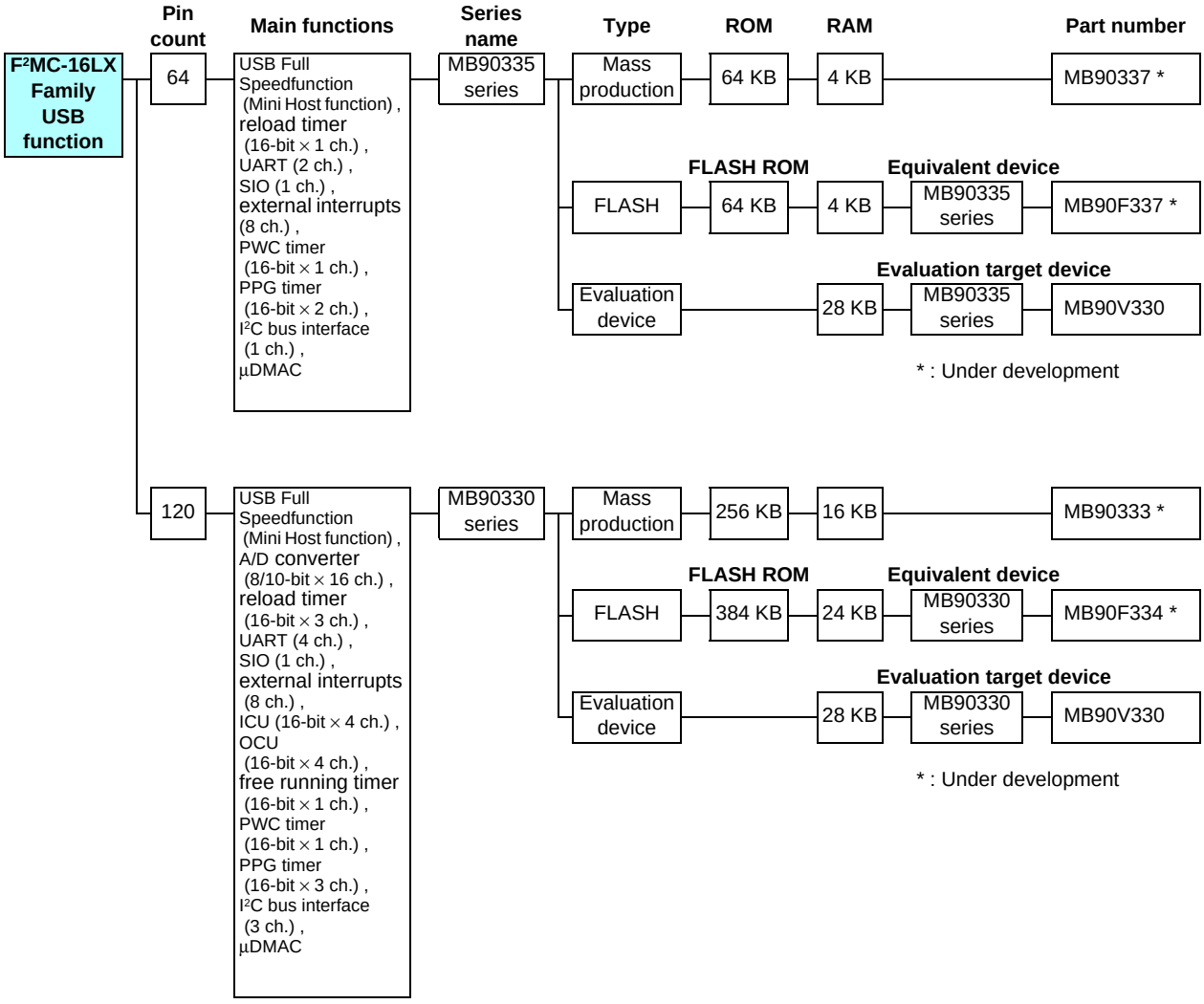

F²MC-16LX Family USB function

MB90335 Series

USB Full Speed fundtion (Mini Host function)

MB90337
ROM 64KB
RAM 4KB
Under development

MB90F337
FLASH ROM 64KB
RAM 4KB
Under development

MB90V330
RAM 28KB
Evaluation device

- Maximum internal clock frequency: 24 MHz
- Minimum execution time: 41.6 ns
- Operating temperature range: –40 °C to +85 °C (USB function : 0 °C to +70 °C)

Part number	Operating power supply voltage (V)	Package		Functions
		LQFP (0.65 mm pitch)	PGA	
◎MB90337	+3.0 to +3.6	64P	–	II/O ports: 45 Max. USB Full Speed function : Mini Host function (Hub not supported) Endpoint : 6 Max. µDMAC : 16 ch. Timebase timer (WDT): 18-bit × 1ch. PWC timer : 16-bit × 1 ch. PPG timer : 8-bit × 4 ch. (16-bit × 2 ch.) Reload timer: 16-bit × 2 ch. UART : 2 ch. SIO : 1 ch. I²C bus interface : 1 ch. External interrupts: 8 Low-power consumption modes:Sleep, stop, CPU intermittent operation, time base timer, mode
◎MB90F337		64P	–	
MB90V330		–	299C	

Packages : P - plastic, C - ceramic

◎: Under development

MB90330 Series

USB Full Speed fundtion (Mini Host function)

MB90333
ROM 256KB
RAM 16KB
Under development

MB90F334
FLASH ROM 384KB
RAM 24KB
Under development

MB90V330
RAM 28KB
Evaluation device

- Maximum internal clock frequency: 24 MHz (32.768 kHz)
- Minimum execution time: 41.6 ns (122.1 µs)
- Operating temperature range: –40 °C to +85 °C (USBfunction : 0 °C to +70 °C)

Part number	Operating power supply voltage (V)	Package			Functions
		LQFP (0.4 mm pitch)	LQFP (0.5 mm pitch)	PGA	
◎ MB90333	+3.0 to +3.6	120P	120P	–	I/O ports: 94 Max. USB Full Speed function : Mini Host function (Hub not supported) Endpoint : 6 Max. µDMAC : 16 ch. Analog section:8/10-bit × 16 ch. Timebase timer (WDT): 18-bit × 1ch. Real time I/O: 16-bit input capture unit (ICU) × 4 ch. 16-bit output compare unit (OCU) × 4 ch. 16-bit free running timer × 1 ch. PWC timer : 16-bit × 1 ch. PPG timer : 8-bit × 6 ch. (16-bit × 3 ch.) Reload timer: 16-bit × 3 ch. UART : 4 ch. SIO : 1 ch. I²C bus interface : 3 ch. External interrupts: 8 ch. Watch timer Low-power consumption modes:Sleep, stop, watch, sub,CPU intermittent operation, time base timer mode
◎ MB90F334		120P	120P	–	
MB90V330		–	–	299C	

Packages : P - plastic, C - ceramic

◎: Under development

F²MC-16F Family Features

- About 3 times faster version of the F²MC-16 (MB90700 series) with object code upward compatibility
- Various extended instructions including signed division
- Easy programming with plenty of data types, bit (1 bit), nibble (4 bits), byte (8 bits), word (16 bits), and long word (32-bit), and 25 different addressing
- Bank and linear support of 16Mbytes large memory space makes migration
  From external large memory space to single chip systems easy

Memory space

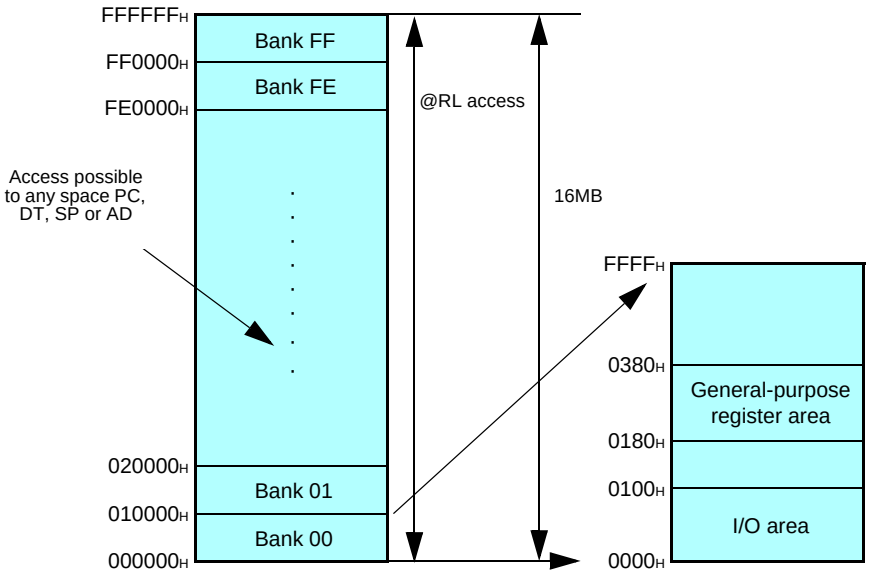

- Registers

Dedicated registers
General-purpose registers: 8 × 16-bit per bank, 32 banks Max.

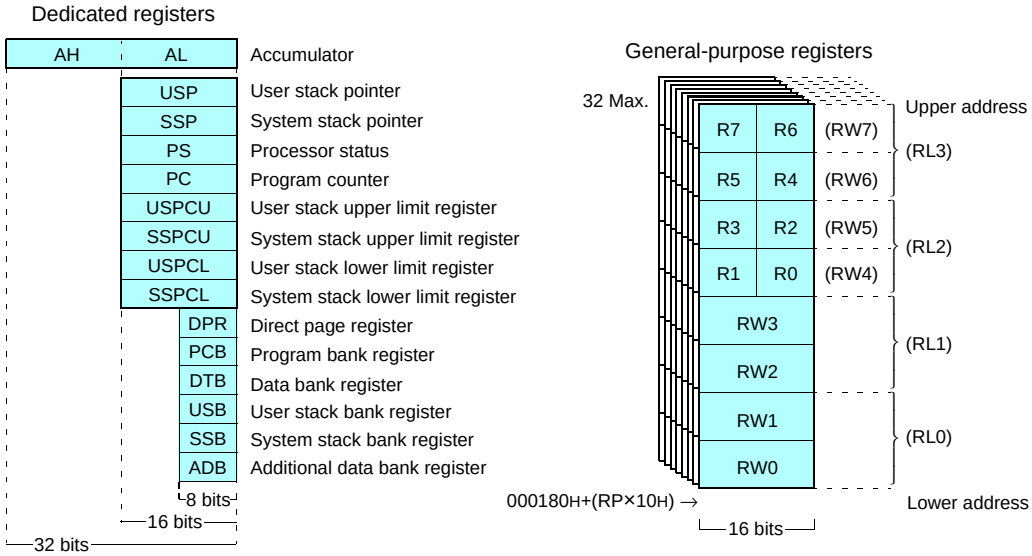

- Pipeline processing using 8-byte cue (minimum instruction execution time: 62.5ns/16MHz)
- Function for checking stack area in real time.
- Powerful real time processing using 8-level hardware support priority interrupts and extended intelligent I/O service functions.
- Enhanced C language and real time operating system instructions (in SP indirect addressing, RETIQ, etc.)
- Number of basic instructions: 412

Main Addressing Modes (Can be used by transfer and arithmetic)

- Bit addressing
  Direct bit: I/O area (2Kbits) + area inside DPR page (2Kbits)
  Any bit within 64Kbytes may be specified.
- Indirect addressing
  @RWi, @RWi+, @RWi+disp16, @RLi+disp8, @RWj+disp8 (i = 0 to 3), (j = 0 to 7)
  @RW0+RW7
  @RW1+RW7
  @PC+disp16
  @A
  @SP+disp8
- Direct addressing
  R0 to R7, RW0 to RW7, RL0 to RL3
  dir, addr16, io, addr24

Super Accumulator

- 32-bit accumulator using AH:AL (16 bits:16 bits) as a pair.
- Data precision verification function

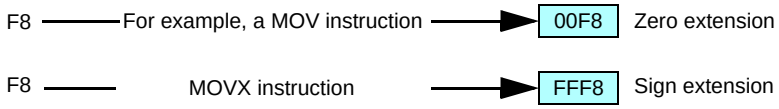

- Data keep function (available for data types of 16-bit word length and less)

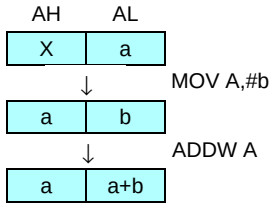

Extended Intelligent I/O Service (EI²OS)

- In addition to programming being made easier, because there in no need to execute unnecessary program transfers higher speeds for transfer service response and overall system control are realized.
- Since CPU micro-instructions execute transfer functions, multi-channel systems can be realized at no extra cost.
- Since I/O transfers can be stopped when a condition is generated such as when invalid data is received, performance loss due to transfering unnecessary data can be avoided because there is no programming load.
- It is possible to specify incrementing or decrementing of buffer addresses and I/O register addresses can be specified.
- It is possible to specify the entire 00 bank as I/O register addresses.
- It is possible to specify the data counter to count up to 64K.
- Execution speed

  From request to completion of transfer: 28 cycles = 1.75µs (@16 MHz)

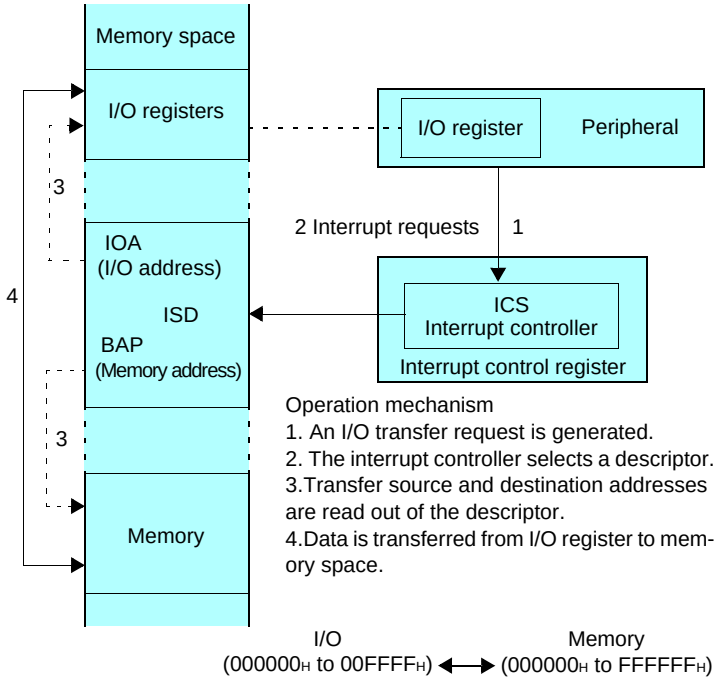

Operation mechanism
1. An I/O transfer request is generated.
2. The interrupt controller selects a descriptor.
3.Transfer source and destination addresses are read out of the descriptor.
4.Data is transferred from I/O register to memory space.

F²MC-16F Family Product Range

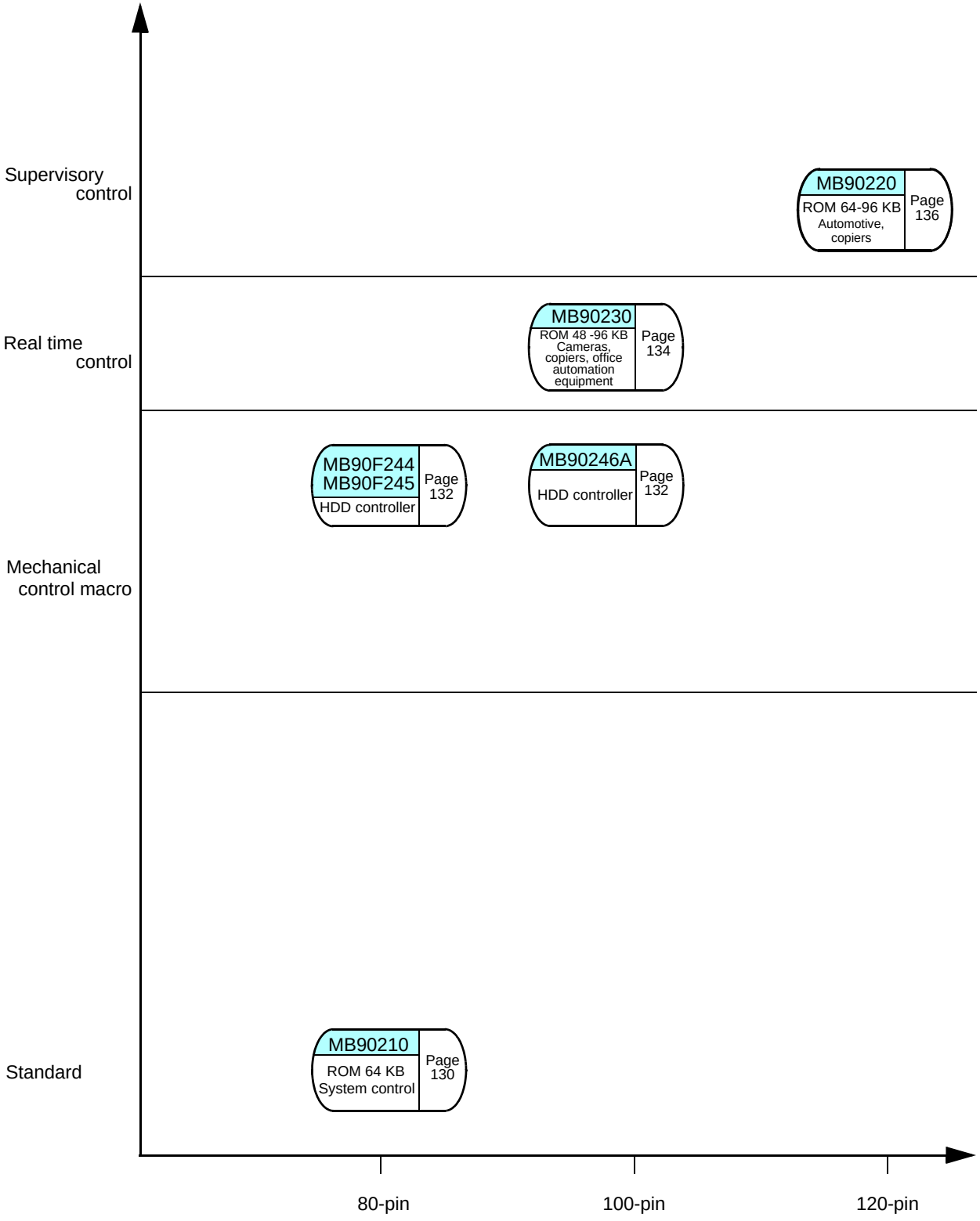

16-bit Proprietary F²MC-16F Family Standard Products

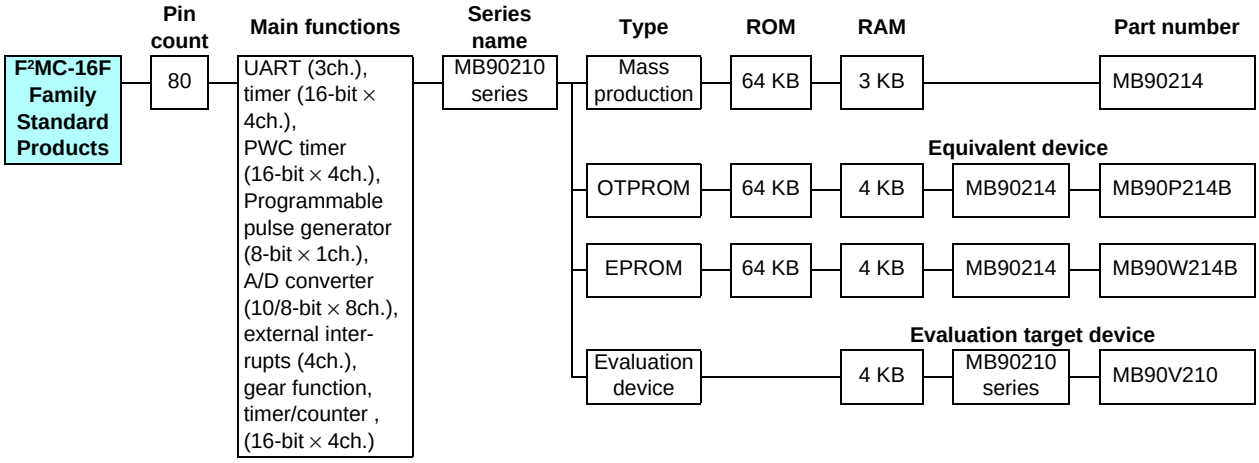

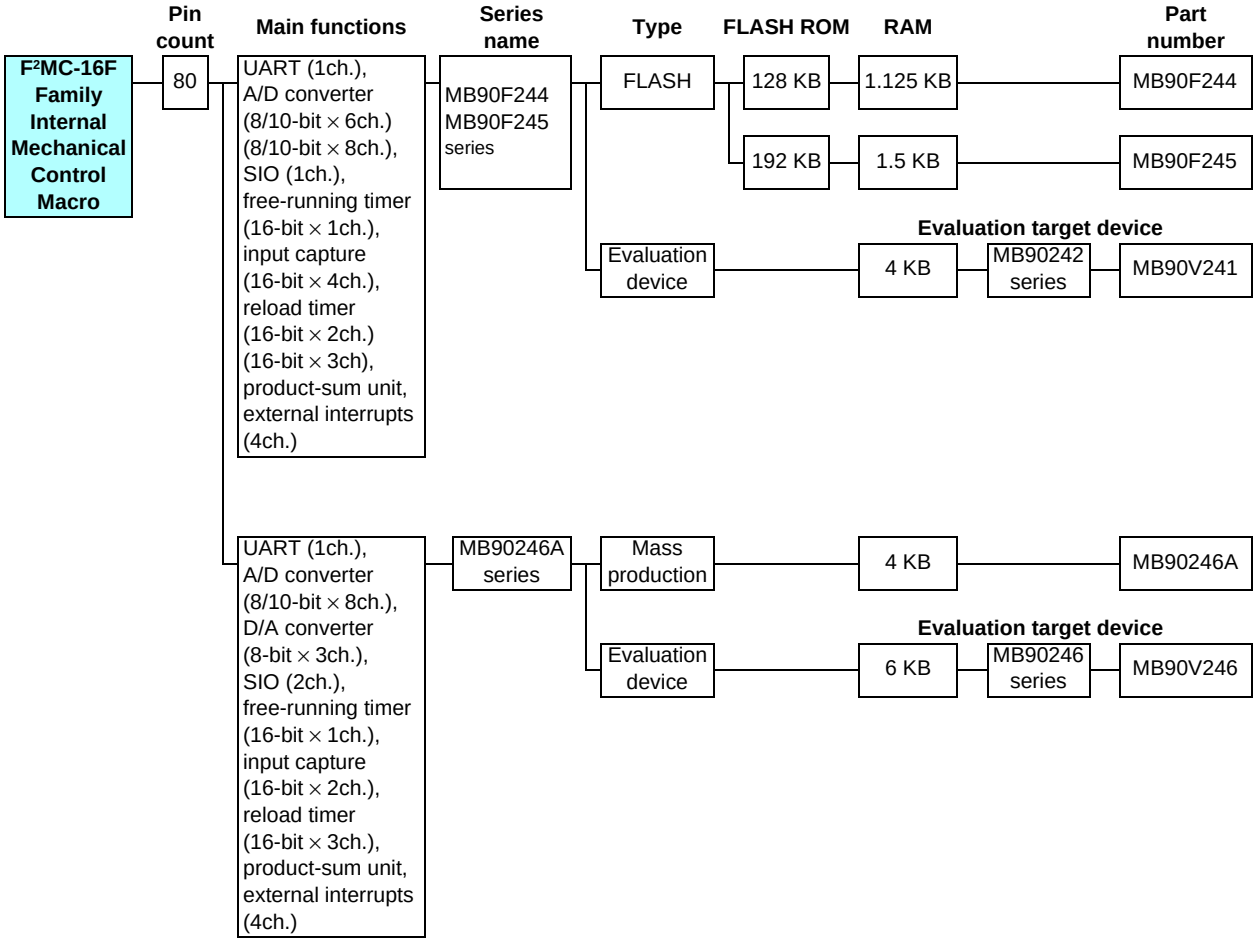
F²MC-16F Family Internal Mechanical Control Macro
Pin count
Main functions
Series name
Type
FLASH ROM
RAM
Part number
80
UART (1ch.), A/D converter (8/10-bit × 6ch.) (8/10-bit × 8ch.), SIO (1ch.), free-running timer (16-bit × 1ch.), input capture (16-bit × 4ch.), reload timer (16-bit × 2ch.) (16-bit × 3ch), product-sum unit, external interrupts (4ch.)
MB90F244 MB90F245 series
FLASH
128 KB
1.125 KB
MB90F244
192 KB
1.5 KB
MB90F245
Evaluation target device
Evaluation device
4 KB
MB90242 series
MB90V241
UART (1ch.), A/D converter (8/10-bit × 8ch.), D/A converter (8-bit × 3ch.), SIO (2ch.), free-running timer (16-bit × 1ch.), input capture (16-bit × 2ch.), reload timer (16-bit × 3ch.), product-sum unit, external interrupts (4ch.)
MB90246A series
Mass production
4 KB
MB90246A
Evaluation target device
Evaluation device
6 KB
MB90246 series
MB90V246

F²MC-16F Family Internal Mechanical Control Macro

MB90F244, MB90F245 Series

For HDD controller

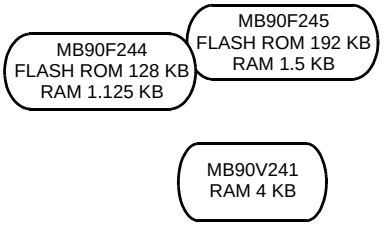

<Evaluation device>

- Maximum clock frequency
  MB90V241: 32 MHz
  MB90F244: 50MHz
  MB90F245: 64MHz
- Minimum execution time
  MB90V241: 62.5 ns
  MB90F244: 40ns
  MB90F245: 31.25ns
- Operating temperature range:
  MB90F244/F245: 0°C to +70°C

Part number	Operating power supply voltage (V)	Package			Functions
		LQFP	TQFP	PGA	
MB90F244	+3.3 ±0.3 +5 ±0.5	–	80P	–	I/O ports: 63 Max. (MB90F244) 58 Max. (MB90F245) Timebase timer (WDT): 18-bit × 1ch. UART: 1ch. SIO: 1ch. Real time I/O: 16-bit input capture (ICU) × 4ch. 16-bit free-run timer × 1ch. Reload timer: 16-bit × 2ch.(MB90F245) 16-bit × 3ch (MB90F244/V241) Analog section: 8/10-bit A/D converter × 6ch.(MB90V241), 8ch. (MB90F244/F245) External interrupts: 4 Low-power consumption modes: Sleep, stop
MB90F245	+3.3 ±0.3	–	80P	–	
MB90V241	+5 ±10%	–	–	256C	

Packages: P - plastic, C - ceramic

MB90246A Series

For HDD controller

<Evaluation device>

- Maximum clock frequency: 16 MHz
- Minimum execution time: 62.5 ns
- Operating temperature range: -30°C to +70°C

Part number	Operating power supply voltage (V)	Package		Functions
		LQFP	PGA	
MB90246A	+5 ±10%	100P	–	I/O ports: 57 Max. Timebase timer (WDT): 18-bit × 1ch. UART: 1ch. SIO: 2ch. Real time I/O: 16-bit input capture (ICU) × 2ch. 16-bit free running timer × 1ch. Reload timer: 16-bit × 3ch. Analog section: 8/10-bit A/D converter × 8ch. 8-bit D/A converter × 3ch. Product-sum unit External interrupts: 4 Low-power consumption modes: Sleep, stop
MB90V246		–	256C	

Packages: P - plastic, C - ceramic

16-bit Proprietary F²MC-16F Family Real Time Control Products

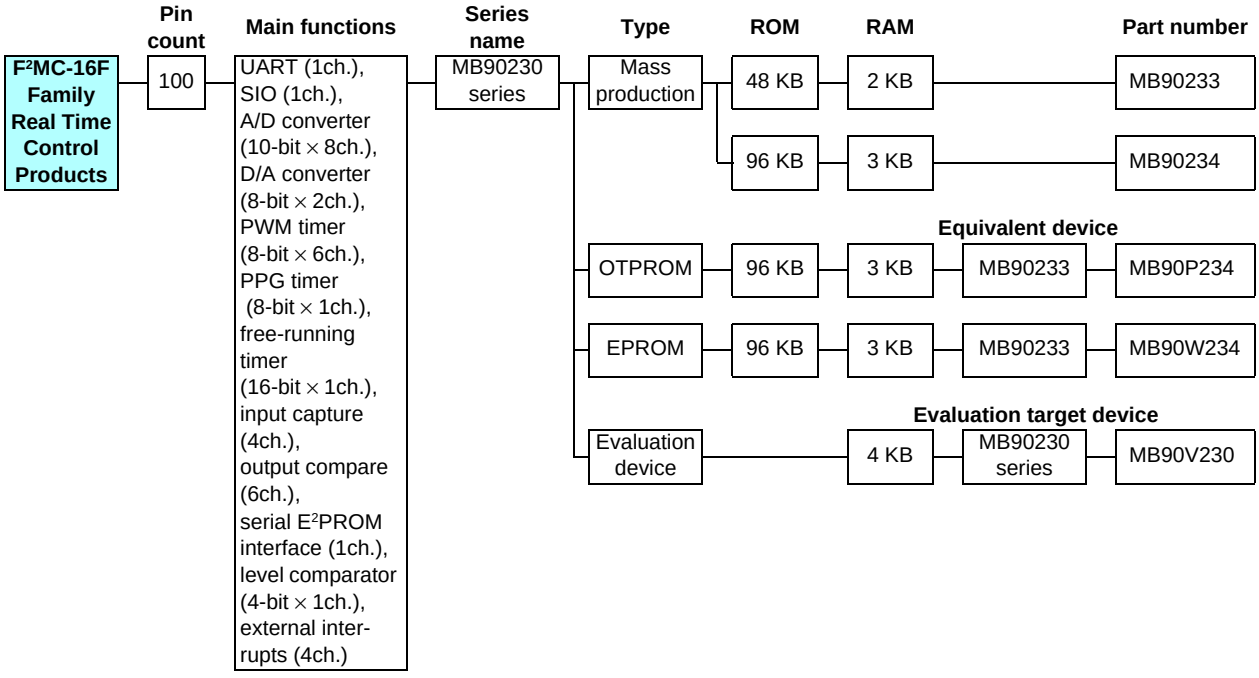

F²MC-16F Family Real Time Control Products

MB90230 Series

Standard products (extended analog, camera control, copier control, etc.)

MB90234
ROM 96KB
RAM 3KB

MB90P234
OTPROM 96KB
RAM 3KB

MB90W234
EPROM 96KB
RAM 3KB

- Maximum clock frequency: 16 MHz
- Minimum execution time: 62.5 ns
- Operating temperature range: -40°C to +70°C
  (in external bus mode: 0°C to +70°C)

MB90233
ROM 48KB
RAM 2KB

MB90V230
RAM 4KB

<Evaluation device>

Part number	Operating power supply voltage (V)	Package		Functions
		LQFP	PGA	
MB90233	+5 ±5%	100P	–	I/O ports: 84 Max. Timebase timer (WDT): 18-bit × 1ch. PWM timer: 8-bit × 6ch. PPG timer: 8-bit × 1ch. UART: 1ch. SIO: 1ch. Serial E²PROM interface: 1ch. Communications prescaler: 1ch. Real time I/O: 16-bit timer × 1ch. input capture unit (ICU) × 4ch. output compare unit (OCU) × 6ch. Analog section: 10/8-bit A/D converter × 8ch. 8-bit D/A converter × 2ch. level comparator × 1ch.(with internal 4-bit D/A converter) External interrupts: 4 Low-power consumption modes: Gear function, sleep, stop started by hardware/software
MB90234		100P	–	
MB90P234		100P	–	
MB90W234		100C	–	
MB90V230		–	256C	

Packages: P - plastic, C - ceramic

16-bit Proprietary F²MC-16F Family Supervisory Control Products

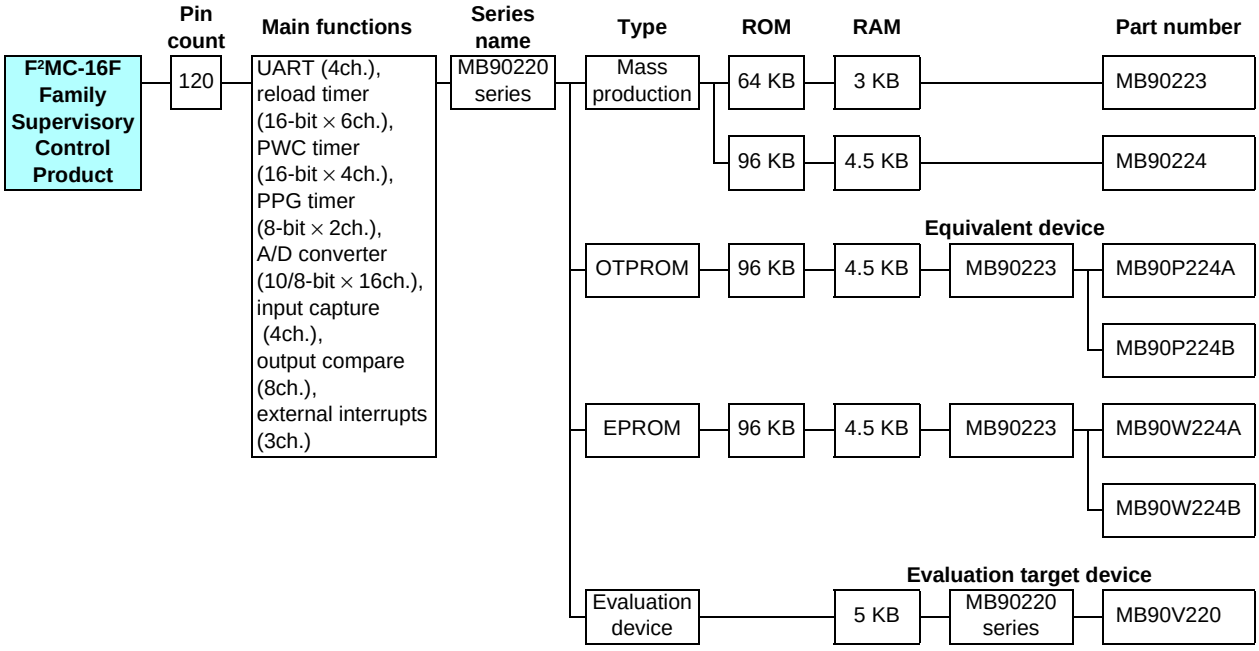

F²MC-16F Family Supervisory Control Products

MB90220 Series

For mechanical electronics control

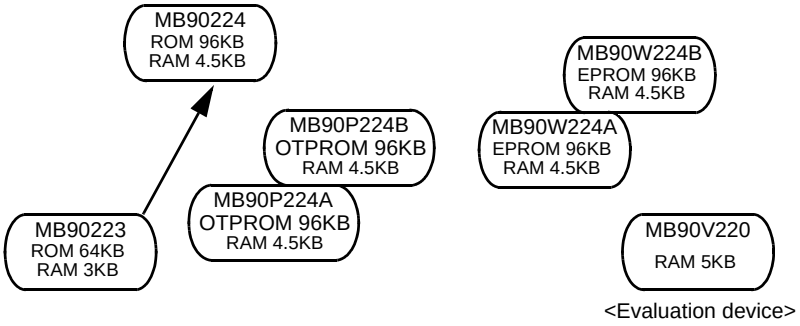

- Maximum clock frequency: 16 MHz
  (Only MB90223: 12 MHz)
- Minimum execution time: 62.5 ns
- Operating temperature range:
  -40°C to +105°C
  In external bus mode: -40°C to +70°C
  Only MB90P224A and MB90W224A:
  -40°C to +85°C

Part number	Operating power supply voltage (V)	Package		Functions
		QFP	PGA	
MB90223	+5 ±10%	120P	–	I/O ports: 102 Max. Timer/counter: 16-bit × 6ch. Timebase timer (WDT): 18-bit × 1ch. PPG timer: 16-bit × 2ch. PWC timer: 16-bit × 4ch. UART: 4ch. Real time I/O: 24-bit timer × 1ch. input capture unit (ICU) × 4ch. output compare unit (OCU) × 8ch. Analog section: 10-bit A/D converter × 16ch. Programming-protected RAM: 512 bytes External interrupts: 8 Low-power consumption modes: Gear function, sleep, stop started by hardware/software
MB90224		120P	–	
MB90P224A		120P	–	
MB90P224B		120P	–	
MB90W224A		120C	–	
MB90W224B		120C	–	
MB90V220		–	256C	

Packages: P - plastic, C - ceramic

Development Environment Features

(1) Enhancement of development efficiency

- Provides integrated total environment
  SOFTUNE V3 Workbench (Manager + Debugger)
  SOFTUNE V3 Workbench (Manager + Debugger) integrates programming language and debugging tools to improve the efficiency of the code-compile-debug cycle.
- High programming efficiency
  C compiler support
  SOFTUNE C checker and C analyzer support
  Structured assembly language support
- High programming development efficiency
  Provides real time OS (SOFTUNE REALOS/907)
  Provides C library
  Support C language and assembly source debugging function
- Easy operation by multi windows
  SOFTUNE V3 Workbench (manager + debugger)
  SOFTUNE C checker
  SOFTUNE C analyzer
  SOFTUNE V3 REALOS/907 configurator

(2) Efficient system development tools

- Provides real time debugging using real target board
  Evaluation tool + SOFTUNE V3 Workbench emulator debugger
- Provides software debugging without target board
  SOFTUNE V3 Workbench simulator debugger

(3) Total development environment

- Personal computer (IBM-PC)
- ICE tool (MB2140A series)

(4) Conformity with standards

Improves versatility and portability of software resource

- C language: conforms to ANSI standard
- C library: conforms to ANSI standard
- Real time OS: conforms to µITRON specification

SOFTUNE V3

1. The SOFTUNE Integrated Development Environment

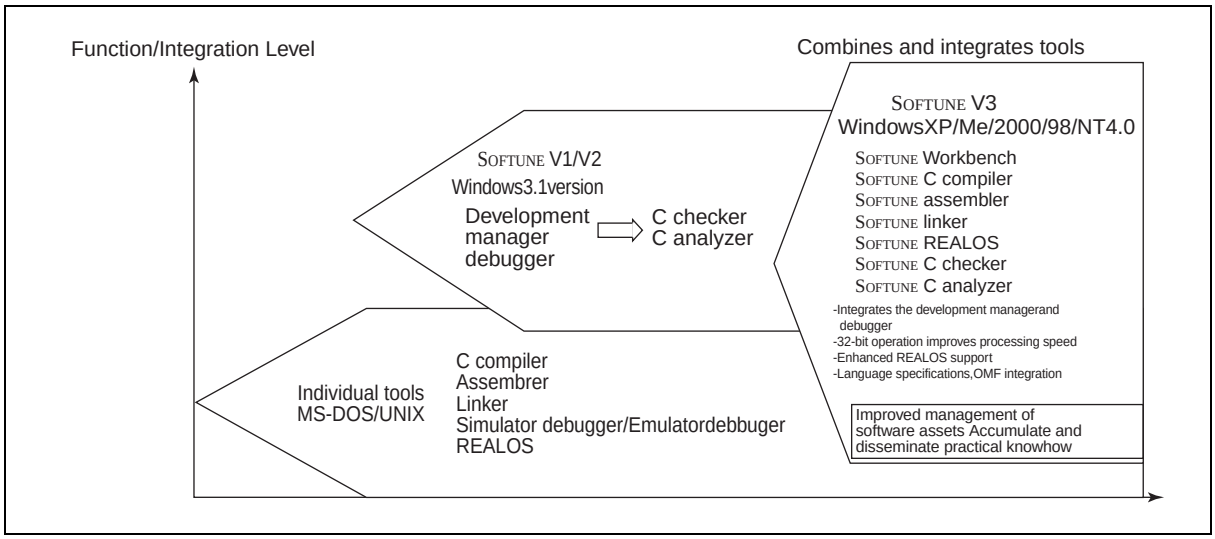

2. SOFTUNE V3 Structure and Features

Workbench Integrated project manager and debugger modules

Errors can be corrected on the fly, as they are discovered, and the resulting code can be debugged on the spot.

A variety of tools to support C-language coding

"C Checker" confirms code operation and "C Analyzer" analyzes the code's structure.

Includes such tools as Configurator and Analyzer to facilitate the use of REALOS, which conforms to the µITRON specifications(Analyzer:under development).

(1) Removing the Annoying Settings which are Part of Program Development

Developing programs for different systems requires the programmer to edit source code, perform actual builds and confirm program operation (debug). Finally, the programmer returns to the editing process to incorporate necessary changes, as indicated by debugging results.

SOFTUNE V3 is an integrated developing environment which is designed to perform such repetitive processes smoothly and efficiently. It is the third generation of SOFTUNE, which has evolved to meet various needs of our customers.

(2) Program Flow

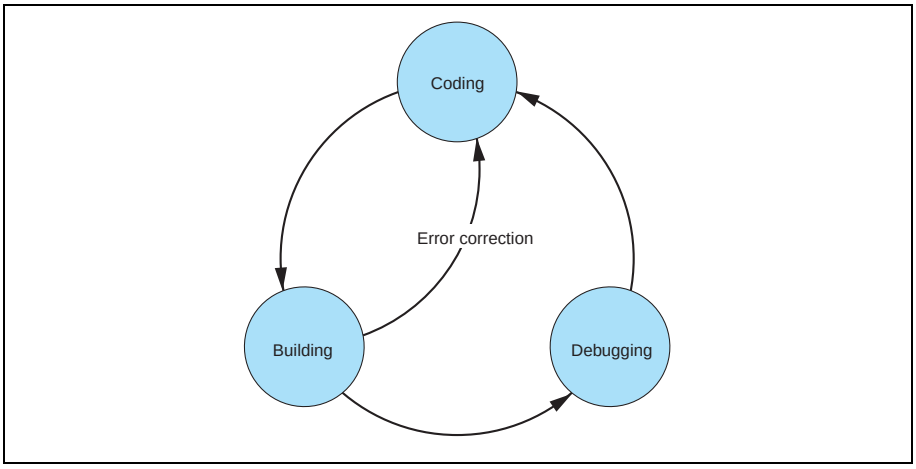

(3) Structure of SOFTUNE V3

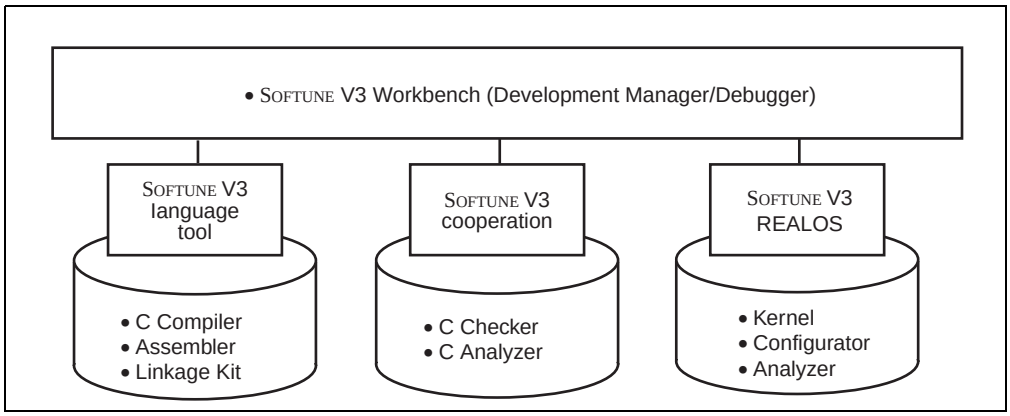

(4) Environment with SOFTUNE V3

The Efficient and Easy-to-Use Integrated Developing Environment

Program development requires repeated editing, make/build, and debugging operations. Performing these functions smoothly and effectively contributes to improved efficiency.
The SOFTUNE V3 integrated developing system is designed to meet program developers' numerous demands, while ensuring ease of use.

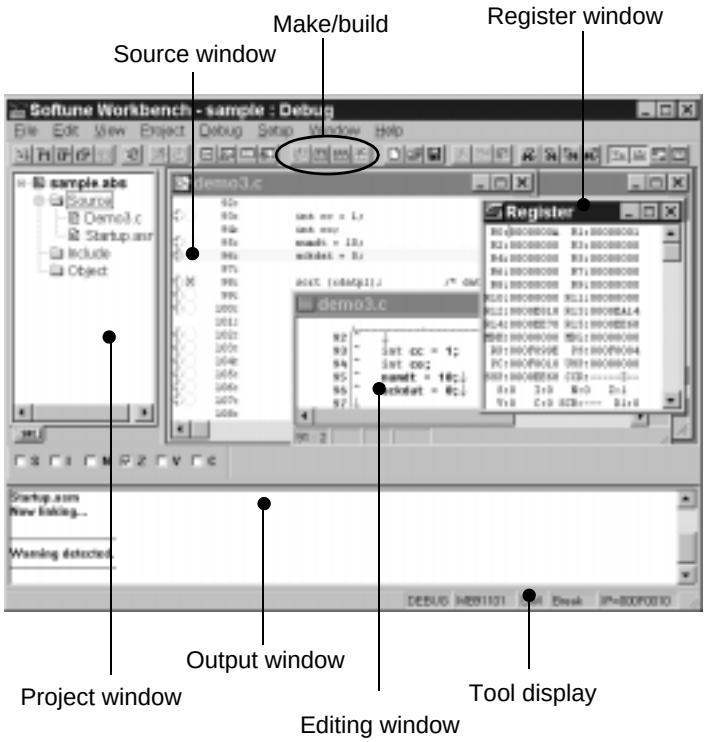

3. Manager Functions

Software programming proceeds according to the "project file, " which contains all the information needed for program development.

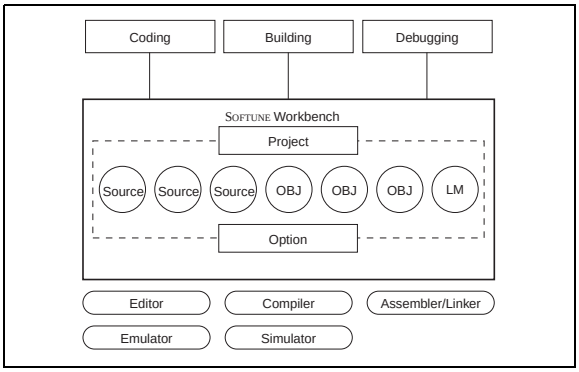

(1) Effective Project Usage

Whether working alone on several projects simultaneously or developing a project as a group, project files can be used to create a simple developing environment.

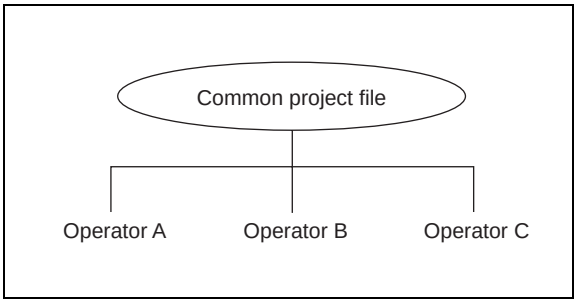

(2) Extremely Easy to Use

- Built-in Editor
  The built-in editor comes complete with many useful functions, such as visual keyword emphasis and auto-indent.
- Error Jump and On-line Help
  Errors that occur during builds are displayed in the output window at the bottom of the screen.
  To make a "Tag-jump" Double-click Mouse.Once on the error press "F1 key" for a more detailed error display.
- Cooperation with Commercially Available Editors
  To meet developers' requests to use editors to which they are accustomed, SOFTUNE can be configured to use the following commercially available editors:(Codewright32, TextPAD32 and others)

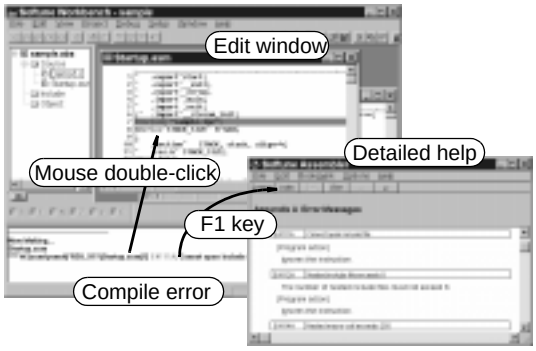

(3) Customizable Environment

When sharing files, cooperation with source generation management tools is assured, and file type conversion tools are called up, so that each person can operate in his or her own customized developing environment.

4. Debugger Function

SOFTUNE Workbench supports three debuggers that are needed at various stages of development. The appropriate debugger environment can be selected to match the situation.

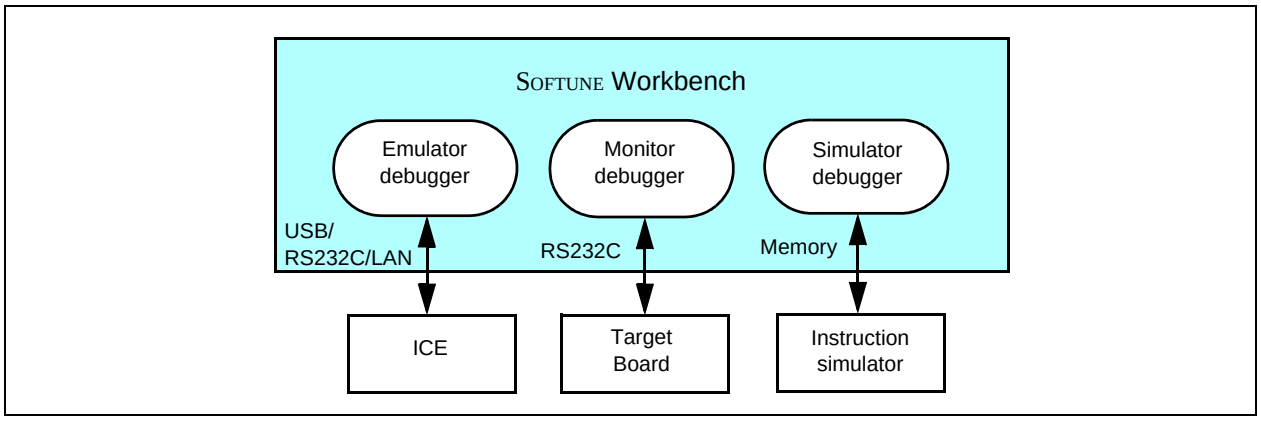

(1) Easy-to see Screen Information

The user can freely change the screen layout by selecting the necessary windows. In addition, the displayed information can be selected to provide only the infomation that is necessary.

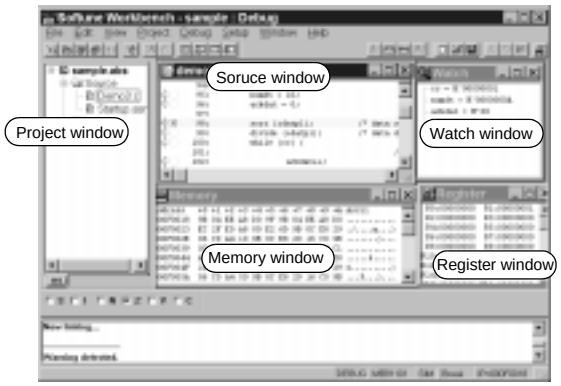

(2) Simple Environment Setting

- Debugging Environment: Setup Wizard

  The setup wizard supports the selection of communication lines with emulation pods and boards, as well as window settings.
- MCU Operating Environment

  The so-called “CPU information file,” which contains the information required to support all MCUs, is provided as standard. Necessary information such as I/O port locations, ROM/RAM capacity and initial addresses can be set automatically.
- Saving and Restoring the Debugging Environment

  Previous debugging environment specifications, such as window locations, breakpoint settings, and memory mapping information, are saved, so that these settings are restored the next time the program is initiated.

5. Cooperation

In cooperation with SOFTUNE Workbench, the following SOFTUNE components help improve the quality of C-language programming, which greatly increases reviewing and documentation efficiency.

1) SOFTUNE C Checker

Designed to meet the following requests from beginners through advanced users:

- Eliminate all coding mistakes.
- Review programs quickly and efficiently.
- Enable even C-language beginners to create quality code.
- Maximize coding skills.
- Use software assets on Fujitsu CPUs.

The SOFTUNE C Checker checks code for maintainability, methods of expanding specifications and transportability; indicates areas where quality and performance could be improved; and reports these results to the user. The user can then review the C-language code.

(1) Outline

Recent software for embedded microcontrollers has been developed in the C language. However, it is difficult to understand messages output from a compiler unless the language specifications are well known.
This development support tool checks C-source programs to display and print advice for better quality and performance. It also has a facility for selecting necessary advice carefully.

(2) Features

- Outputs advice suitable for objectives: Portability, coding error, performance, porting to Fujitsu CPU
- Allows customization to a programmer level.
- Works with C compilers for Fujitsu microcontrollers.
- Provides easy operation and simple display over a GUI.

(3) Advising Function

The following pieces of advice are given. “Reason of check”, “Example of program”, “Suggestion of correction”, and “One-point advice” are displayed and explained for each check item.

- Portability

  This tool makes a close check on the items “processing-definded operation” and “undefined operation” which can be a problem in portability in the ANSI standard.
  It also gives an explanation of the operation of C compilers (Fcc911, Fcc907 and Fcc896) for Fujitsu microcontrollers.

  For example, the tool gives the user proper advice on many problems (such as a data type acceptable to a structure, code, and its arrangement at the time of porting).

- Coding error

  This tool indicates the items which are not wrong in the language specifications but may cause an error and the items which are logically inconsistent.

  For example, the equivalent expression "**`if`** (**`a==0`**)" in the if statement is likely to be typed as the assignment expression "**`if`** (**`a=0`**)" by mistake. Most compilers cannot detect such an error.

- Performance

  This tool indicates the items which generally provide better performance and the items which are essential and effective for the FR family and F²MC-16 family.
  Stress is especially, put on the detection of object size reduction which can be a problem in software for embedded microcontrollers.

  For example, if a function return value is a structure of the double type, an area is reserved for the return value and an object to be transferred to the area is output.

  This tool advises the user to transfer the function return value by a pointer and largely reduce the objects size.

- Porting to Fujitsu CPU’s

  This tool advises the user what to consider in porting exsting software from other makers’ CPU to Fujitsu CPU in the FR family and F²MC-16 family.

  For example, in porting software resources created for the F²MC-16 family to the FR family, this tool advises the user to delete the expansion specifications (**`__far, __near, and __direct etc.`**) inherent to the F²MC-16 family.

- Indicated messages output

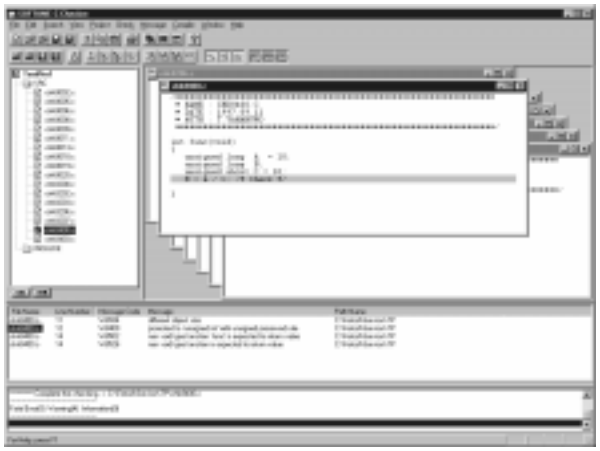

- Coding error indicated and advice displayed

- Advice for porting to Fujitsu C compilers displayed

- Quality-related massages listed

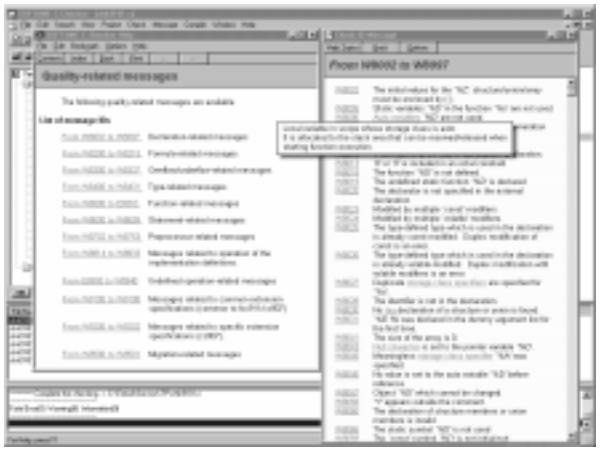

2) SOFTUNE C Analyzer

Designed to meet the following user situations:

- One wishes to examine a program's structure or processing, but the programmer is absent or documentation is unavailable.
- During program development, one wishes to create a structural program while taking into account structure and processing.
- One wishes to examine the range of effects caused by program modification.
- One wishes to create a program's internal documentation.
- One wishes to explore the possibilities of a more efficient program.

The structure and usage of data in a C-language source program are displayed visually, and the internal data structure, functional tree, stack usage and other infomation can be acquired and stored in a file.

(1) Outline

Recent software (ROM) for embedded microcontrollers is increasingly extending its development scale. This situation is created from development by many programmers, diversion of exsting resources, and use of package programs.
This development support tool statically analyzes the C-source program to visually display and print the function-to-function structure, reference data, and statistical data. This tool creates data necessary for design and maintenance, as well as having a feature peculiar to C compilers for Fujitsu microcontrollers (a feature of calculating the maximum amount of stacks used), considering its embedded feature.

(2) Features

- Displays and prints the function-to-function structure, reference data, and statistical data.
- Supports the embedded capability of C compilers for Fujitsu microcontrollers.
- Provides easy operation and simple display over a GUI.

(3) Explanation of Features

The following data is enabled for development, maintenance, and higher porting efficiency.

- Graphic flow

  This feature diplays the "call" function in the block structure way. It also allows the display of the entire function and calls from any function and the retrieval of functions.
- Logic flow

  This feature visually displays the internal structure of the C-source program.
  For example, it shapes the control structure of **`for`** and **`switch`** statements and structure declarations. A jump feature for retrieval by functions, variable, tag, and macro names is also provided.
- Displaying statistical data

  This feature displays the complexity and line count of a programs every function, the source of destination function name, and the count of appearances of **`if`**, **`for`** and **`asm`** statements, etc.
- Displaying argument data

  This feature displays data about the function-called file name and line number, the return value of the declared function, and the type of argument. It also checks the adjustability of dummy arguments with actual arguments.
- Displaying cross-reference data

  This feature displays functions, variables, tag and macro declarations in its function and its line number.
- Displaying global data

  This feature displays the function using global variables. It also detects unused global variables.
- Program checking

  This feature checks and displays the adjustabiltiy of dummy arguments with actual arguments.
- Calculating the maximum amount of stacks used

  This feature calculates and displays the amount of stacks used in the entire function, as well as in any function. This calculation is made on the basis of the output of C compilers (Fcc911s, Fcc907s and Fcc896s) for Fujitsu microcontrollers (FR family, F²MC-16 family and F²MC-8L family).

- Displaying graphic flow

- Displaying logic flow, statistical and cross-reference data

- Displaying logic flow (focus), argument and global data

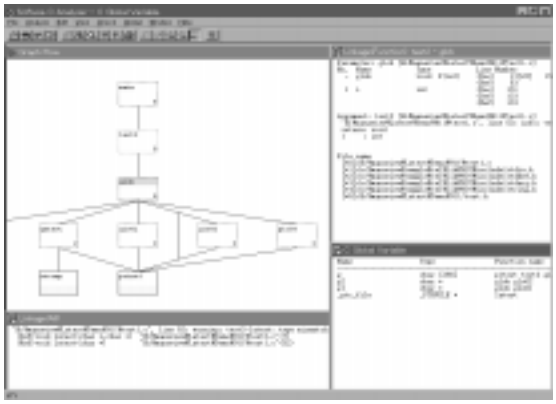

- Displays stack use volume (green numbers) and largest stack configuration (orange numbers)

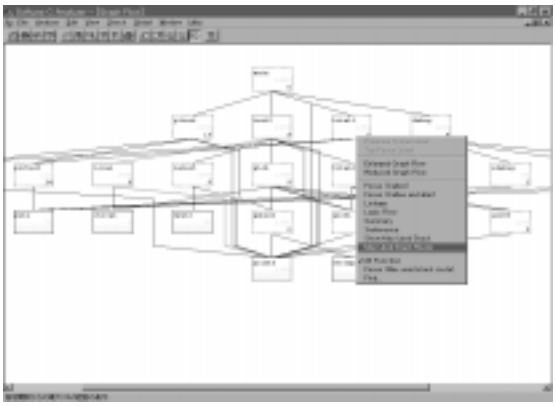

6. µITRON-Compliant Real Time OS for F²MC-16L/16LX/16F Family (SOFTUNE REALOS/907)

(1) Overview

REALOS/907 is the real time OS for the F²MC-16L/16LX/16F family of Fujitsu proprietary 16-bit MCUs, conforming to the µITRON 2.01 specifications.

- Features
  µITRON 2.01 compliant
  System design customized for 16-bit MCUs for control purposes
  In-line expansion of system call functions
  High-speed interrupt processing
  Providing a sample program
  Support for REALOS configurator
  Support for multi task debugger function
  Support for REALOS analyzer

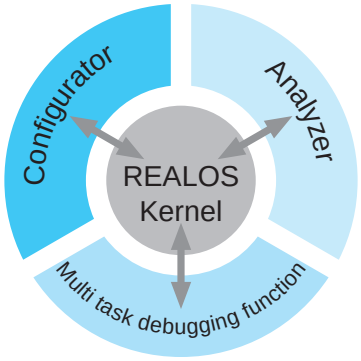

- **REALOS/907 specifications**

Name	Description
Target CPU	F²MC-16L/16LX/16F family
Maximum number of task	255
Maximum number of priority levels	16
Scheduling method	Priority-base, event-driven type
Number of system calls	46
Complying specifications	µITRON 2.01 specifications
Kernel coding	Assembly language
Application coding	C and assembly languages
Kernel size	About 0.8 KB (resident) to about 5.9 KB (maximum configuration)

(2) Configuration

- Kernel

  The kernel of the real time OS provides its basic functions. It is an event-driven, multitasking real time OS. The functions to be used by application programs can be selected as system calls.

- System calls

Function	Instruction	Description
Task management functions	**sta_tsk**	Start task
	ext_tsk	Exit local task successfully
	ter_tsk	Terminate remote task forcibly
	chg_pri	Change task priority
	rot_rdq	Rotate task ready queue
	get_tid	Get local task ID
	tsk_sts	Reference for task status
Task-supplied synchronization functions	**sus_tsk**	Move the task to the suspended state
	rsm_tsk	Resume the task in the suspended state
	frsm_tsk	Forcibly resume the task in the suspended state
	slp_tsk	Move the task into the wait state
	wai_tsk	Move the task into the wait state for a given time
	wup_tsk	Wake up the task in the wait state
	can_wup	Cancel the wakeup request of the task
Synchronization/transmission functions	**set_flg**	Set a single-bit event flag
	set_flg	Set a single-word event flag
	clr_flg	Clear a single-bit event flag
	clr_flg	Clear a single-word event flag
	wai_flg	Wait for a single-bit event flag (no clear)
	wai_flg	Wait for a single-word event flag
	cwai_flg	Wait for a single-bit event flag (clear)
	pol_flg	Poll a single-bit event flag (no clear)
	pol_flg	Poll a single-word event flag
	cpol_flg	Poll a single-bit event flag (clear)
	flg_sts	Reference event flag status
	sig_sem	Signal operation to the semaphore (V instruction)
	wai_sem	Wait operation to the semaphore (P instruction)
	preq_sem	Poll and request the semaphore resources
	sem_sts	Reference the semaphore status
	snd_msg	Send data to the mailbox
	rcv_msg	Wait for the receive from the mailbox
	prcv_msg	Poll and receive message from the mailbox
	mbx_sts	Reference the mailbox status
Interrupt management function	**ret_int**	Return from interrupt handler
	ret_wup	Return to the interrupt processing for task wakeup
	chg_ilv	Change the interrupt level
	ilv_sts	Reference the interrupt level status
Memory pool management functions	**get_blk**	Wait for the receiving of the fixed length memory block
	pget_blk	Poll and get fixed length memory block
	rel_blk	Release the fixed length memory block
	mpl_sts	Reference the memory pool status
Time management functions	**set_tim**	Set system clock
	get_tim	Reference system clock
	def_cyc	Define cyclic handler
	act_cyc	Activate/control cyclic handler
	cyh_sts	Reference cyclic handler status
	def_alm	Define alarm handler
	alh_sts	Reference alarm handler status
	ret_tmr	Return from timer handler
System management function	**get_ver**	Get version number

(3) REALOS Configurator

The configurator helps when setting conditions for creating the REALOS kernel, Necessary settings are made according to the display on the configurator screen, simplifying kernel configuration.

(4) Multitask Debugging Function

The following debugging functions are supported, which are necessary for configuring a system using REALOS.

- Displaying object conditions
- Issuing a system call
- Track trace function
- Breaking a system call
- Breaking a task dispatch

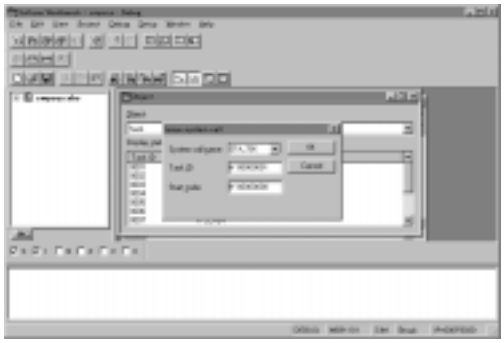

(5) REALOS Analyzer

The performance of the system by which REALOS is built in and the state transition of the tasks are analyzed and displayed to Graphically.

- Task transition flow, transition tree
- Task status, stack monitor
- Analyzed o fexecution time
- Object or cue list

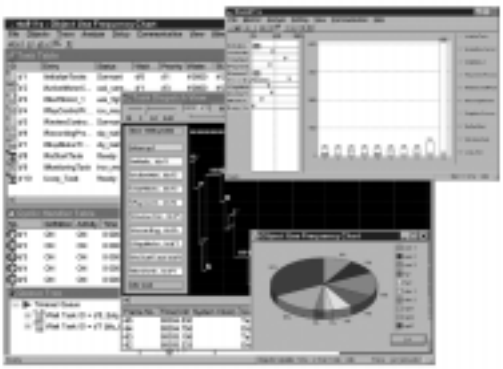

SOFTUNE V3 Support Software Product List

Software		Part number *1			Remarks
PackProducts	SOFTUNE V3 Professional Pack	SP3607Z008-P01	—	—	SOFTUNE V3 workbench SOFTUNE V3 C compiler SOFTUNE V3 assembler pack SOFTUNE V3 analyzer set SOFTUNE V3 checker
Individual Products	SOFTUNE V3 workbench	SP3607W008-P01	—	—	Integrated Manager and debugger functions
	SOFTUNE V3 C compiler	SP3607C008-P01	SP2707C018	SP3607C008-P01	ANSI standard conforming
	SOFTUNE V3 assembler pack	SP3607K008-P01	SP2707K018	SP3607K008-P01	Object format converter Assembler, linker, librarian,
	SOFTUNE V3 analyzer	SP3691X008-P01	—	—	For the FR, F²MC-16, and F²MC-8L
	SOFTUNE V3 C checker	SP3691Y008-P01	—	—	For the FR, F²MC-16, and F²MC-8L
	Real time OS SOFTUNE V3 REALOS/907 basic	SP3607M008BA	—	—	Kernel (source code provided) Configurator, analyzer
	Real time OS SOFTUNE V3 REALOS/907 evaluation	SP3607M008EV	—	—	Kernel (no source code) Configurator, analyzer For evaluation
Compatible emulator hardware (ICE)		MB2140 series - MB2141A/B - MB2145-506/507 MB2147 series - MB2147-01 - MB2147-10/20	—	—	—
Personal computers *2	Operating machine	FMV and similar IBM compatibles	Workstation SunSPARC	Workstation HP90000/7000	—
	Operating OS *4	WindowsXP WindowsMe Windows2000 Windows98 WindowsNT4.0	Solaris2.5 or higher	HP-UX10.0 or higher	—
	Media	CD-ROM *3			—

*1: The product code suffix (Pxx) indicates the number of licenses. Licensing of each product is available in a number of forms(3,5or10copies).
*2: Pentium or higher CPU recommended. 64MB or more memory recommended.200MB of a disk capacity is required. The part number is an ordered number of the newest version.
*3: An electronic manual (PDF format) is provided with each product (Japanese and English). Printed manuals are sold separately.
*4: Operating OS corresponds to Japanese and English.

F²MC-16L/16LX/16F Family Evaluation Tools (MB2141B)

Features

- Microcontroller operating voltage : +2.7V to +5.5V
  The range (Max. and Min.) of Microcontroller operating voltage and operating freqency depend on each Microcontroller. See the document including Data Sheet and check the range of Microcontroller operating voltage and operating freqency.
- Supports debugging of source level (assembly and C languages, a mixed indication)
- Simplified graphic interface operation execution using pull-down menu and buttons
- On-The-Fly function (commands can be run during microcontroller execution)
- Powerful real time trace function
- Displays source codes, variables, register, memory and trace on multi windows
- Event trigger allows a wide range of conditions to be specified (× 8)
- Sequential control in 8 conditions and 8 levels
- Performance measurement function(measurement of execution speed between two points, iteration count measurement)
- C0 coverage measurement function (program execution coverage rate measurement)
- Host I/F (standard accessories) : RS-232C (115 Kbps) , LAN (10BASE-T)

System Overview

System configuration

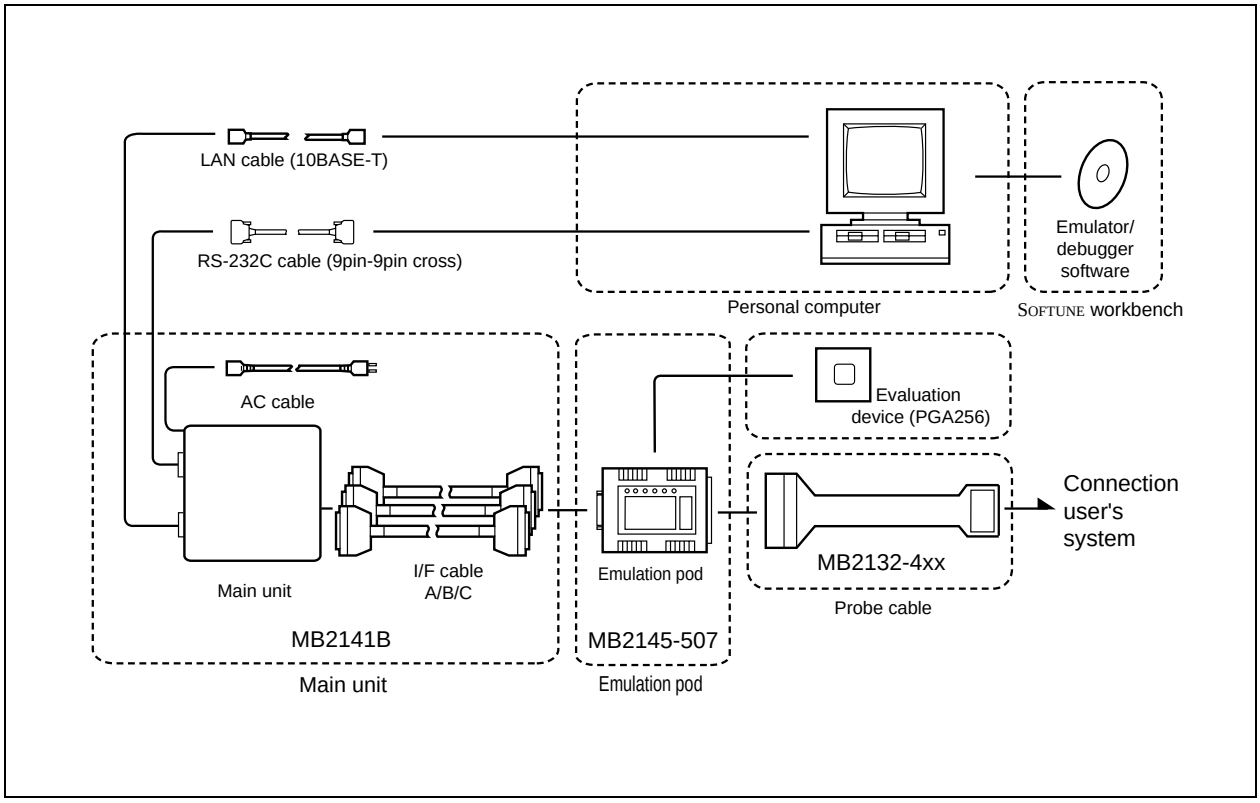

F²MC-16L/16LX/16F Family Evaluation Tools (MB2147-01 High speed version)

Features

- Microcontroller operating frequency : max 25 MHz
- Microcontroller operating voltage : +2.7V to +5.5V
  The range (Max. and Min.) of Microcontroller operating voltage and operating freqency depend on each Microcontroller.
  See the document including Data Sheet and check the range of Microcontroller operating voltage and operating freqency.
- Emulation memory : 1 M × 4 area
- Supports debugging of source level (assembly and C languages, a mixed indication)
- Simplified graphic interface operation execution using pull-down menu and buttons
- On-The-Fly function (commands can be run during micro-controller execution)
- Powerful real time trace function
- Displays source codes, variables, register, memory and trace on multi windows
- Event trigger allows a wide range of conditions to be specified (code × 8 / data × 8)
- Sequential control in 4 conditions and 3 levels
- C0 coverage measurement function (program execution coverage rate measurement)
- Host I/F (standard accessories) : RS-232C (max 115 Kbps) , LAN (10BASE-T, 100BASE-TX) , USB 1.1

System Overview

System configuration

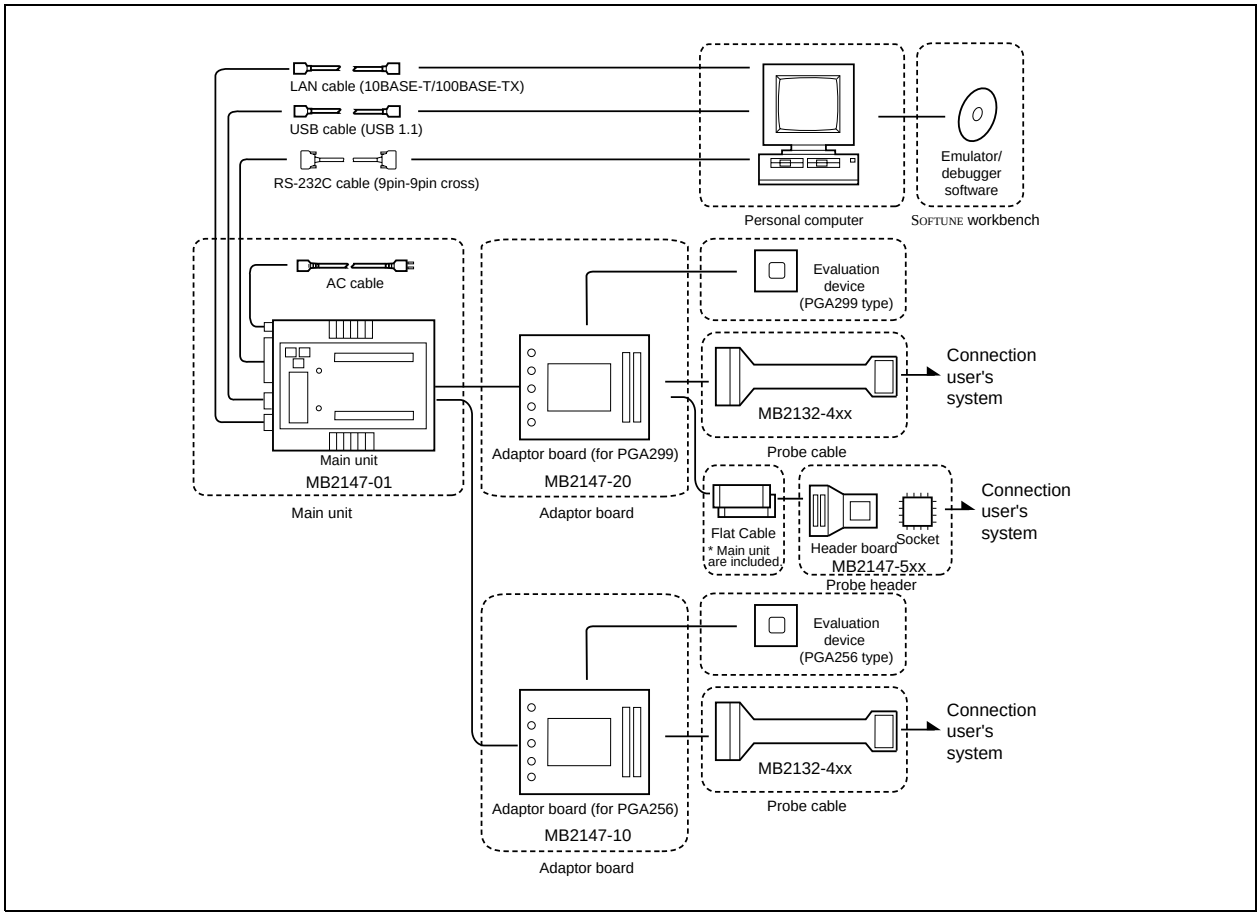

Name		Part	Remarks	Cable
Main unit		MB2141B	Same for all F²MC-16L/16LX/16F family. (evaluation device : PGA256) Power supply voltage : AC100V or AC200V Host I/F : RS-232C, LAN (10BASE-T) Dimensions : 210mm (width) × 297mm (depth) × 77mm (height) Weight : 2.9 kg Includes : manual, AC cable × 1, I/F cable × 3	
Emulation pod *4		MB2145-507	For the F²MC-16L/16LX/16F family. (evaluation device : PGA256) Dimensions : 158mm (width) × 126mm (depth) × 38mm (height) Weight : 0.5 kg Includes : manual	
Adaptor for MB90M405		MB2145-910	For MB90M405 series.	
High speed version main unit		MB2147-01	Same for all F²MC-16L/16LX family. (evaluation device : PGA256, PGA299) Power supply voltage : AC100V or AC200V Host I/F : RS-232C, LAN (10BASE-T, 100BASE-TX) , USB 1.1 Dimensions : W150 × D210 × H46 mm Weight : 1.0 kg Includes : manual, AC cable × 1, flat cable(10/20cm) × 2	
Adaptor board (evaluation device : for PGA256)		MB2147-10	For F²MC-16L/16LX family (evaluation device : for PGA256) Dimensions : W110 × D199 × H20 mm Weight : 0.2 kg	
High speed version adaptor board (evaluation device : for PGA299)		MB2147-20	For F²MC-16LXfamily high speed type (evaluation device : for PGA299) For MB90340/390/480/800 series Dimensions : W110 × D199 × H20 mm Weight : 0.2 kg Includes : manual	
Probe cable	For LQFP-48 0.5mm pitch □7 × 17 mm	MB2132-466	For MB90385 series. Package code:FPT-48P-M26 Includes : - NQPACK048SD , HQPACK048SD *3 NQPACK048SD enables ICE probe cable connection and mounted IC evaluation. - manual	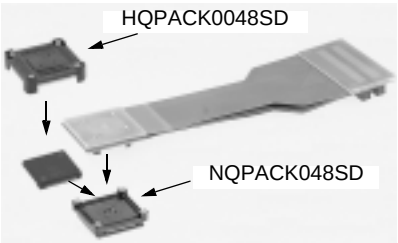
	For SH-DIP-64	MB2132-433	For MB90660A series. Package code:DIP-64P-M01 Includes : manual	
		MB2132-434	For MB90460/560 series. Package code:DIP-64P-M01 Includes : manual	

(Continued)

Name		Part	Remarks	Cable
Probe cable	For LQFP-64 0.65mm pitch □12 × 12 mm	MB2132-433	For MB90660A series. Package code:FPT-64P-M09 Conversion adapter (64SD-64QF2-8L) is separately required.*2 Made by Sun Hayato Co. Ltd. Includes : manual	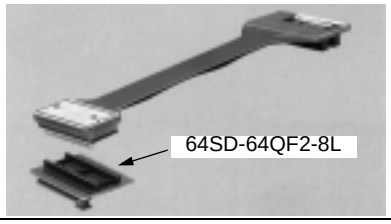
		MB2132-461	For MB90460/495/560/565 series. Package code:FPT-64P-M09 Includes : - NQPACK064SB, HQPACK064SB140 *3 NQPACK064SB enables ICE probe cable connection and mounted IC evaluation. - manual	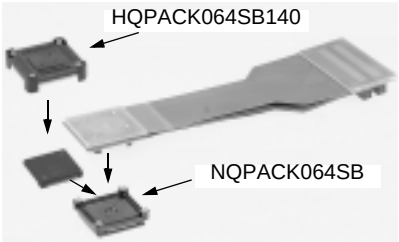
	For LQFP-64 0.65 mm pitch □12 × 12 mm	MB2132-493	For MB90330/MB90335series. Package code:FPT-64P-M09 Includes : - NQPACK064SB, HQPACK064SB140 *3 NQPACK064SB enables ICE probe cable connection and mounted IC evaluation. - manual	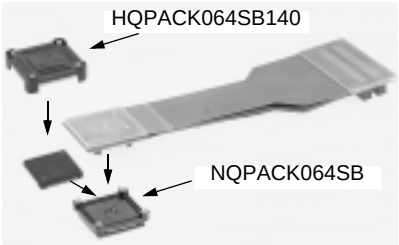
	For QFP-64 1.0mm pitch □14 × 20mm	MB2132-434	For MB90460/495G/560/565 series. Package code:FPT-64P-M06 Conversion adapter (64SD-64QF-8L) is separately required. *2 Made by Sun Hayato Co. Ltd. Includes : manual	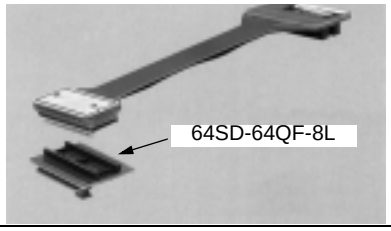
	For QFP-80 0.8mm pitch □14 × 20mm	MB2132-454	For MB90670 series. Package code:FPT-80P-M06 IC149-080-012-S5 is separately required. *1 Made by Yamaichi Electronics Inc. Includes : manual	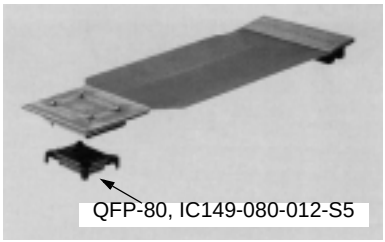
	For LQFP-80 0.5mm pitch □12 × 12mm	MB2132-444	For MB90670 series. Package code:FPT-80P-M05 TQPACK080SD and TQSOCKET080SDG are separately required. *3 Made by Tokyo Eletech Ltd. Includes : manual	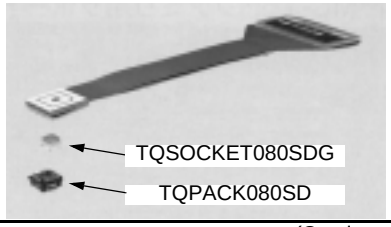

(Continued)

Name		Part number	Remarks	Cable
Probe cable	For QFP-100 0.65mm pitch □14 × 20mm	MB2132-457	For MB902xx/4xx/5xx/6xx series. Package code:FPT-100P-M06 IC149-100-□14-S5 is separately required. *1 Support power supply one system . Not support power supply two systems. Made by Yamaichi Electronics Inc. Includes : manual	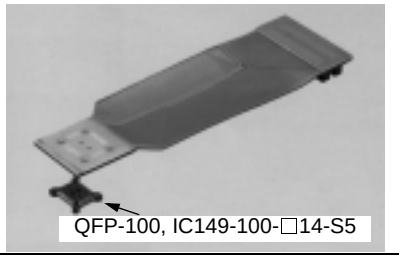
		MB2147-582 (under development)	For MB90340/800 series. Package code:FPT-100P-M06 Includes : - NQPACK100RB, HQPACK100RB 179 *3 NQPACK100RB enables ICE probe cable connection and mounted IC evaluation. - manual	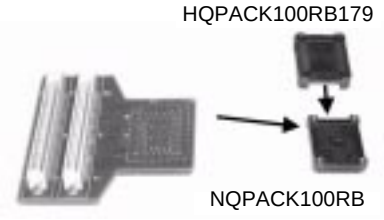
	For LQFP-100 0.5mm pitch □14 × 14mm	MB2147-581	For MB90340 series. Package code:FPT-100P-M05 Includes : - NQPACK100SD, HQPACK100SD *3 NQPACK100SD enables ICE probe cable connection and mounted IC evaluation. - manual	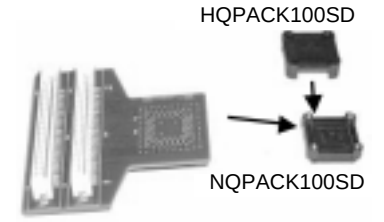
		MB2132-496	For MB902xx/4xx/5xx/6xx series. Package code:FPT-100P-M05 Includes : - NQPACK100SD, HQPACK100SD *3 NQPACK100SD enables ICE probe cable connection and mounted IC evaluation. - manual	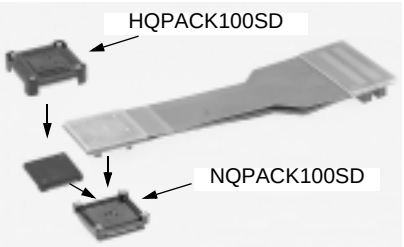
		MB2132-457	For MB902xx/4xx/5xx/6xx series. Package code:FPT-100P-M05 Conversion adapter (100QF-100SQF-16F) is separately required.*2 Made by Sun Hayato Co. Ltd. Support power supply one system . Not support power supply two systems. Includes : manual	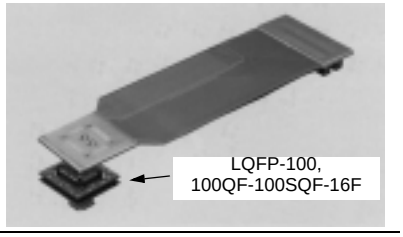
	For QFP-120 0.8mm pitch □28 × 28mm	MB2132-458	For MB90220/260 series. Package code:FPT-120P-M03 IC149-120K-13449-B0 is separately required.*1 Made by Yamaichi Electronics Inc. Includes : manual	

(Continued)

(Continued)

Name		Part number	Remarks	Cable
Probe cable	For LQFP-120 0.4 mm pitch □14 × 14 mm	MB2132-491	For MB90330 series. Package code:FPT-120P-M05 Includes : - NQPACK120SE, HQPACK120SE *3 NQPACK120SE enables ICE probe cable connection and mounted IC evaluation. - manual	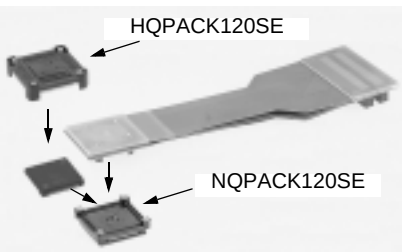
	For LQFP-144 0.4mm pitch □16 × 16mm	MB2132-471	For MB90370 series. Package code:FPT-144P-M12 Includes : - NQPACK144SE, HQPACK144SE *3 NQPACK144SE enables ICE probe cable connection and mounted IC evaluation. - manual	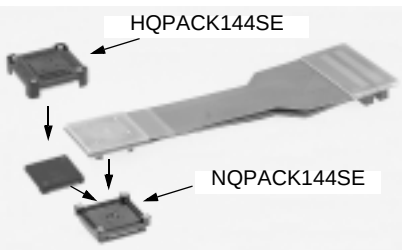

*1: The probe cable requires an IC socket from Yamaichi Electronics Inc.
For QFP-80 (lead pitch: 0.8 mm, body size: 14 × 20 mm): IC149-080-012-S5
For QFP-100 (lead pitch: 0.65 mm, body size: 14 × 20 mm): IC149-100-□14-S5
(□ = "0": No positioning post, □ = "1": positioning post provided)
For QFP-120 (lead pitch: 0.8 mm, body size: 28 × 28 mm): IC149-120K-13449-□
(□ = "0": No positioning post, □ = "1": positioning post provided)
Contact for details:

•USA:		Yamaichi Electronics Inc. TEL(408)4520797
•Europe	Denmark:	Elmatok A.S. TEL(65)351446
	England:	Radiatron Components Ltd. TEL(01)8911221
		AB Connector Ltd. TEL(0604)712000
	Finland:	Dualtek Oy TEL(80)8019911
	France:	Manudax-France TEL(1)4342-2050
	Germany:	Macrotran AG TEL(089)4208148
		Glyn GmbH TEL(49)61278077
		Connector Service GmbH TEL(089)429277
	Italy:	Eurosab International s.r.l TEL(02)93169781
	Spain:	S.A Generalde Imporciones Electronicas TEL(1)416-92-61
	Sweden:	Bexab Electronics TEL(08)7680560
	Switzerland:	Slcovend AG TEL(01)8303161
•Asia	Singapore:	Yamco Electronics Pte Ltd. TEL(336)6522
	Korea:	Asia Yamaichi Electronics, Inc. TEL(02)482-7263
	Taiwan:	Sing Way Co. TEL(02)718-5971
		Joung Lai Trading Co. Ltd. TEL(02)754-1022

*2:The probe cable requires a conversion adapter from Sun Hayato Co. Ltd.
Conversion adapter for LQFP-100: QFP-100 (0.65 mm, 14 × 20 mm) → LQFP-100 (0.5 mm, 14 × 14 mm, product no. 100QF-100SQF-16F)
Conversion adapter for LQFP-64: SH-DIP-64 → LQFP-64 (0.65 mm, 12 × 12 mm, product no. 64SD-64QF2-8L)
Conversion adapter for QFP-64 (lead pitch : 1.0 mm): SH-DIP-64→ QFP-64 (1.0 mm, 14 × 20 mm, product no. 64SD-64QF-8L)
Contact for details:Tokyo Japan: Sun Hayato Co. Ltd. FAX(81)3-5396-9106

*3:The probe cable requires TQ-pack or NQ-pack.
Note: Care is required in printed circuit board pattern design because the position of the board connector part (the flat section at the pin tips) of the TQ-pack differs from the mass production product package (the NQ-pack pins are shifted a few millimeters inwards).
Contact for details:

•USA:		Daimaru New York Co. TEL(212)575-0820/0821
		OESS Co. Head Office TEL(201)288-4422
		OESS Co. Los Angeles Office TEL(714)220-1878
		OESS Co. San Jose Office TEL(408)441-1855
•Europe	Germany:	OESS GmbH TEL(06106)75013
•Asia	Hong Kong:	Daimaru Kogyo, Ltd. Hong Kong Office TEL(852)8939457/8939108
	Singapore:	Daimaru Kogyo, Ltd. Singapore Office TEL(65)2251636
Tokyo Eletech Co. Ltd.		TEL(81)3-5295-1661
		Osaka office TEL(81)6-244-6675

*4:Fujitsu has stopped manufacturing the conventional emulation pod MB2145-506 and developed the MB2145-507 as succeeding version in it's place. The emulation memory for the MB2145-507 has been enhanced to 3.5 Mbytes (64 Kbytes × 56 banks) from the conventional MB2145-506 (448 Kbytes: 64 Kbytes × 7 banks).
The MB2145-507 allows the emulation memory, which enables high-speed emulation of internal ROM to be expanded up to 512 KB(64 KB × 8 bank). The conventional MB2145-506 only allowed up to 256 Kbytes (64 Kbytes × 4 banks) for high-speed emulation.

Support Board for the F²MC-16LX Family

- Evaluation of the F²MC-16LX Family can be performed in both single chip and external bus modes using the MB2141B emulator/debugger.
- User specific hardware circuits can be incorporated via the connectors on the support board.
- The configuration when used with the MB2141B emulator/debugger is:

  MB2141B + MB2145-507 + Evaluation device(MB90V550A) + MB2132-457 + support boad

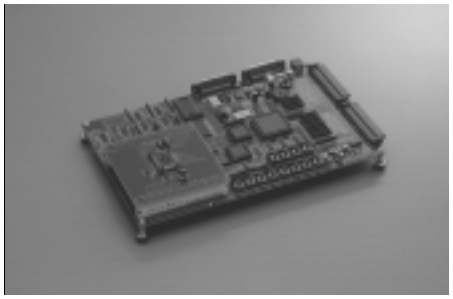

- **Support board for connection**

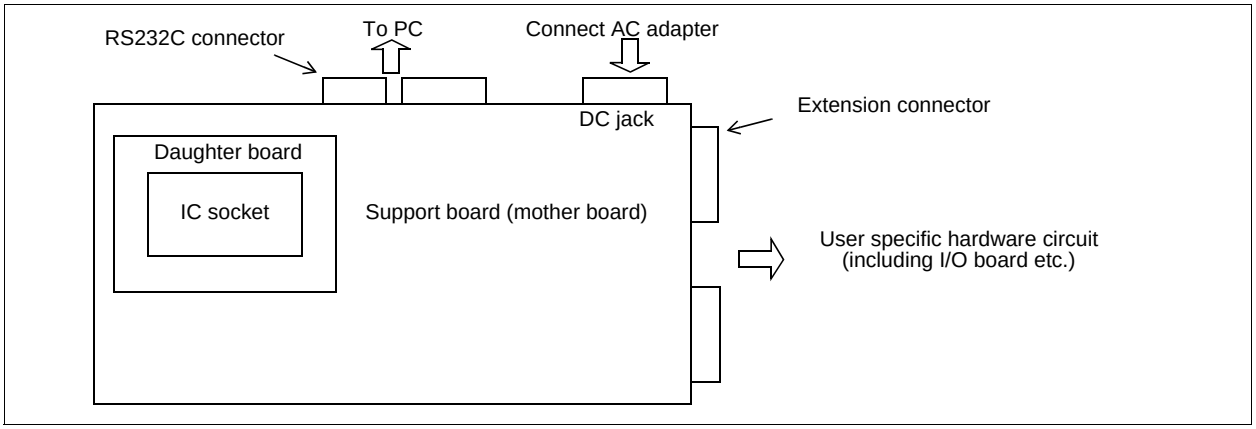

Compatible MCU	Support board(mother board)	Daughter board	Hardware configuration
F²MC-16LX family MB90550A	MB2176-01E (AC adapter is not attached)	MB2176-10	FLASH memory SRAM LED RS-232C connector I/O connector

- **Specifications of support board (mother board)**

Item	Description	Remarks
MCU	F²MC-16LX family MB90550A	-
Memory	Flash memory : 1MB	256 K × 16 × 2
	SRAM : 256KB	128 K × 8 × 2
	EEPROM : 1024 bits	1 K × 1 × 1
Connector	96-pin DIN connector × 2	For connection to daughter board
	D-SUB 25 pins × 2	External UART × 1, UART for internal MCU × 1
	96-pin half pitch × 2	For extension bus
Switch	Rotary switch × 12	For memory bank select
	8-bit DIP switch × 2	For functional switching
	Push switch × 2	For Reset/external interrupt
	Slide switch x 1	For turning on power
Buzzer	Separate excitation type × 1	Connect to reload timer output
LED	Status display Orange × 1, Red × 1, Green × 1	Settable for enable/disable for green/red LEDs
Land	Signal line monitor land	Available for each signal line
Power supply	Supplied by AC adapter	Generated for +5V, +3V, being on-board regulated

MB2000 : CAN FLASH EVALUATION BOARD

The Flash/CAN100 board was developed, in order to allow a fast software design start for customers wishing to use Fujitsu Flash and / or CAN MCUs in the 100-pin QFP package. Since Fujitsu in-circuit emulators require a target system that provides Vcc and Gnd, as well as an oscillation circuit, that enables customers to start development or evaluation work straight away without having to wait for their own target hardware.

Features

- 100-pin socket adaptor for device or emulator connection
- On-board regulator allows for a 7-14V unstabilised external DC power supply
- 5V and 3.7V internal power supply available for emulator
- Two high-speed CAN drivers
- RS232 interface
- All MCU pins brought out twice to external connectors
- Optional sub-clock
- RST, HST push-button
- 8 test LEDs
- External reset via RS232

The Flash/CAN100 is supplied with the MB90F598 single-CAN and 128 KByte flash microcontroller. It is capable of supporting all of the following device types:

- MB90540 = MB90V540, MB90F543, MB90543
- MB90545 = MB90V540, MB90F549, MB90F548, MB90548
- MB90550A = MB90V550A, MB90F553A, MB90553A
- MB90580 = MB90V580, MB90F583B, MB90583B
- MB90590 = MB90V590, MB90F594A,MB90594, MB90F591, MB90591
- MB90595 = MB90V595, MB90F598, MB90598

The order code for the kit is FLASH-CAN2-100P-M06 and it is delivered with:

- The Flash/CAN100 board itself
- Two 50-pin socket connectors
- Power supply connector
- MB90F598 - 128kB Flash microcontrollers
- 11 Jumpers
- 1 socket adapter cover
- English documentation

F²MC-16L/16LX/16F Family Adaptors

- **Programming adaptors for one-time PROM microcontrollers and EPROM microcontrollers**

OTPROM/FLASH microcontrollers	Package (leadpitch, body size) (mm)		Package code	Adaptor socket
MB90P214BPF	QFP-80	(0.80 mm, □14 × 20 mm)	FPT-80P-M06	ROM-80QF-32DP-16F *1
MB90W214BZF	QFP-80	(0.80mm, □14 × 20 mm)	FPT-80C-C02	ROM-80QF-32DP-16F *1
MB90P224APF	QFP-120	(0.80 mm, □28 × 28 mm)	FPT-120P-M03	ROM-120QF-32DP-16F *1
MB90W224BZF	QFP-120	(0.80 mm, □28 × 28 mm)	FPT-120C-C02	ROM-120QF-32DP-16F *1
MB90P234PF	QFP-100	(0.65 mm, □14 × 20 mm)	FPT-100P-M06	ROM-100QF-32DP-FMC16F *1
MB90P234PFV	LQFP-100	(0.50 mm, □14 × 14 mm)	FPT-100P-M05	ROM-100SQF-32DP-FMC16F *1
MB90W234CF *2	QFP-100	(0.65 mm, □14 × 20 mm)	FPT-100C-A02	ROM-100QF-32DP-FMC16F *1
MB90W234ZFV	LQFP-100	(0.50 mm, □14 × 14 mm)	FPT-100C-C01	ROM-100SQF-32DP-FMC16F *1
MB90F243	LQFP-80	(0.50 mm, □12 × 12 mm)	FPT-80P-M05	FLASH-80SQFP-32DP-16L *4
	TQFP-80	(0.50 mm, □12 × 12 mm)	FPT-80P-M15	
MB90P263PF	QFP-120	(0.80 mm, □28 × 28 mm)	FPT-120P-M03	ROM-120QF-32DP-16F
MB90P263PFV	QFP-120	(0.50 mm, □20 × 20 mm)	FPT-120P-M13	ROM-120QF/CAR-32DP-16F
MB90W263ZF *2	QFP-120	(0.80 mm, □28 × 28 mm)	FPT-120C-C02	ROM-120QF-32DP-16F
MB90P553APF	QFP-100	(0.65 mm, □14 × 20 mm)	FPT-100P-M06	ROM-100QF-32DP-16L *1
MB90P623APFV	LQFP-100	(0.50 mm, □14 × 14 mm)	FPT-100P-M05	ROM-100SQF-32DP-16L *1
MB90P634APF	QFP-100	(0.65 mm, □14 × 20 mm)	FPT-100P-M06	ROM-100QF-32DP-16L *1
MB90P634APFV	LQFP-100	(0.50 mm, □14 × 14 mm)	FPT-100P-M05	ROM-100SQF-32DP-16L *1
MB90P641APF	QFP-100	(0.65 mm, □14 × 20 mm)	FPT-100P-M06	ROM-100QF-32DP-FMC16F *1
MB90P641APFV	LQFP-100	(0.50 mm, □14 × 14 mm)	FPT-100P-M05	ROM-100SQF-32DP-FMC16F *1
MB90P653APF	QFP-100	(0.65 mm, □14 × 20 mm)	FPT-100P-M06	ROM-100QF-32DP-16L *1
MB90P653APFV	LQFP-100	(0.50 mm, □14 × 14 mm)	FPT-100P-M05	ROM-100SQF-32DP-16L *1
MB90P663AP-SH	SH-DIP-64	(1.778 mm, □58 × 17 mm)	DIP-64P-M01	ROM-64SD-32DP-16L *1
MB90P663APFM	LQFP-64	(0.65 mm, □12 × 12 mm)	FPT-64P-M09	ROM-64QF-32DP-16L *1
MB90P673PF	QFP-80	(0.80 mm, □14 × 20 mm)	FPT-80P-M06	ROM-80QF-32DP-16L *1
MB90P673PFV	LQFP-80	(0.50 mm, □12 × 12 mm)	FPT-80P-M05	ROM-80SQF-32DP-16L *1
MB90P678PF	QFP-100	(0.65 mm, □14 × 20 mm)	FPT-100P-M06	ROM-100QF-32DP-16L *1
MB90P678PFV	LQFP-100	(0.50 mm, □14 × 14 mm)	FPT-100P-M05	ROM-100SQF-32DP-16L *1
MB90W678ZF *2	QFP-100	(0.65 mm, □14 × 20 mm)	FPT-100C-A02	ROM-100QF-32DP-16L *1
MB90W678ZFV *2	LQFP-100	(0.50 mm, □14 × 14 mm)	FPT-100C-C01	ROM-100SQF-32DP-16L *1

*1:Use a general-purpose EPROM programmer that is able to program a MBM27C1000.
The above adaptor sockets can be purchased from Sun Hayato Co. Ltd.
Contact for details : Tokyo Japan: Sun Hayato Co. Ltd. FAX (81)3-5396-9106
*2:Under planning
*3:Under development
*4:Recommended EPROM programmer : model 1890A + OU910 (Ver 4.32B)
Contact for details : MINATO ELECTRONICS INC. FAX (81)45-591-6451)

Notes:
A signal-socket ROM programmer is recommended. Also, contact Fujitsu for programming mounted devices.
Take care to avoid bending the leads when programming QFP packages.
The recommended screening practice before mounting is high temperature aging (+150°C, 48H).

Evaluation Board for USB

It is an evaluation board corresponding to microcontroller for USB.It contributes to the rise of that the simple evaluation of operation before including in a visitor's system is possible, and development efficiency.
It is constituted by evaluation board for USB, and a main board and a daughter board. A main board is common to each microcontroller products. By changing a daughter board, debugging by ICE combined with the emulator debugger for microcontroller can be performed.

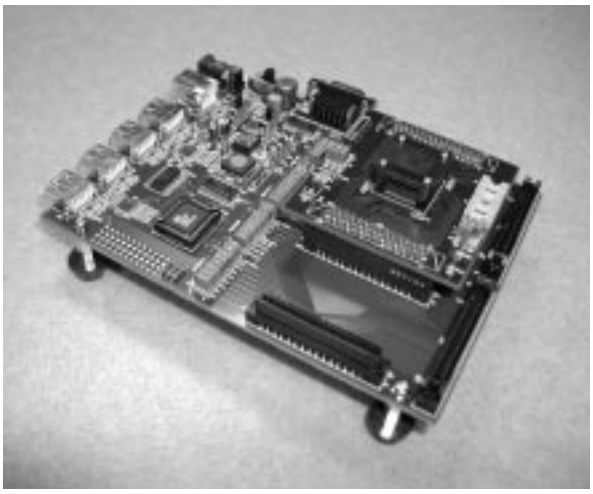

System configuration

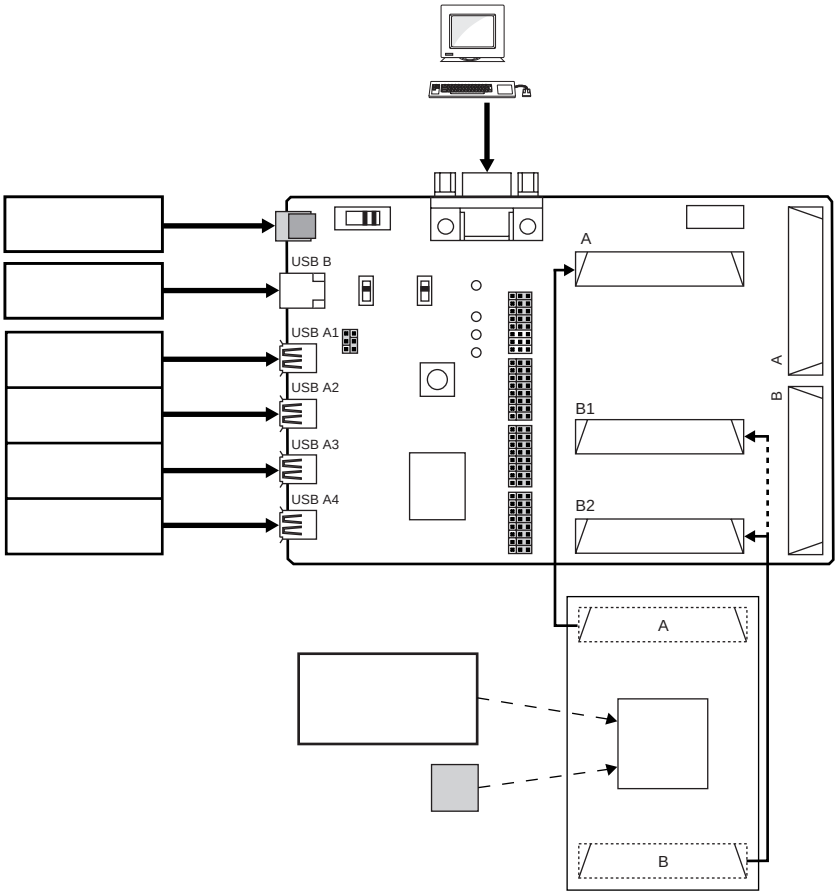

Evaluation board configuration

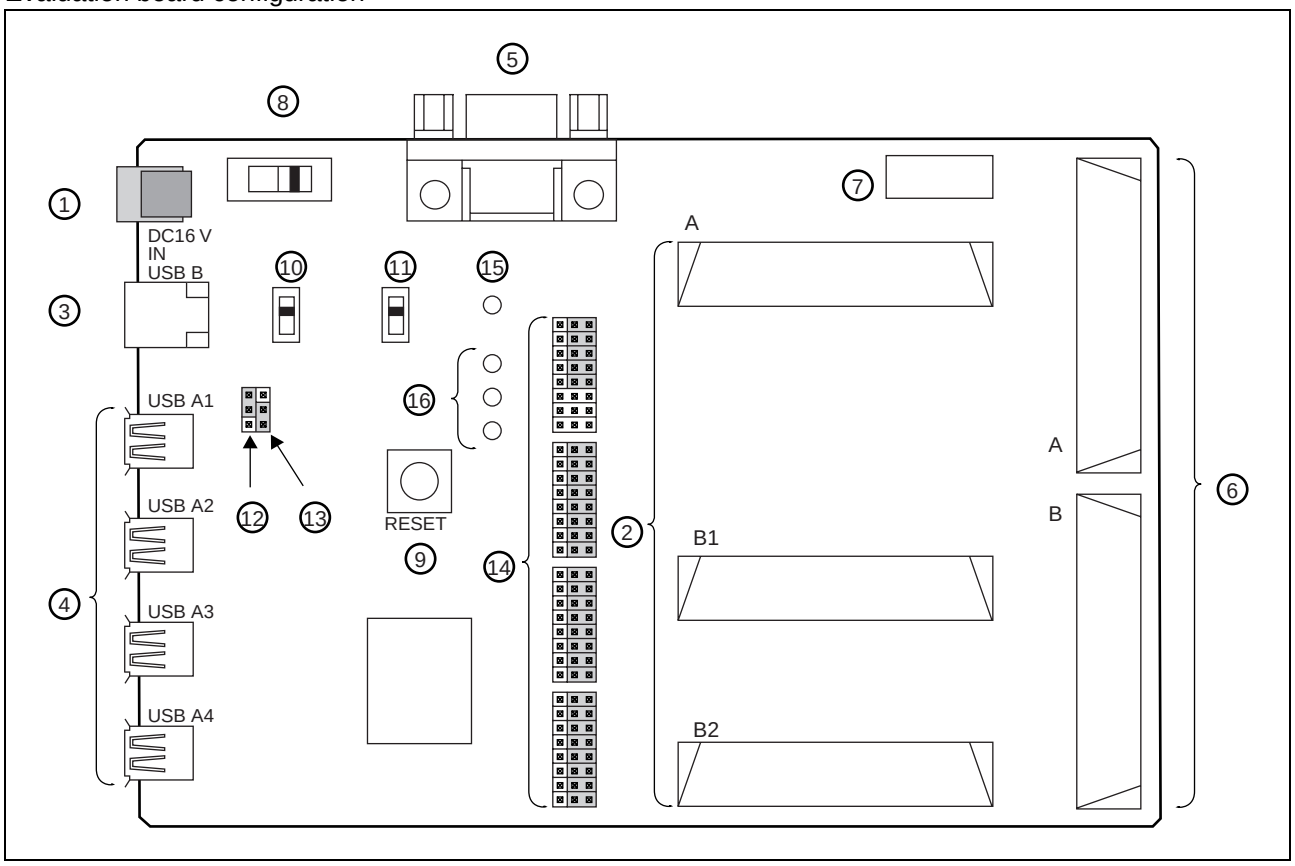

① Power connector
② Daughter I/F connector

Part number	Target microcontroller	Package
MB2031-10	MB89P585B/BW	LQFP-64 (0.5 mm, □10 mm × 10 mm)
MB2031-11	MB89P589B	LQFP-64 (0.65 mm, □12 mm × 12 mm)
MB2031-20	MB89F334	LQFP-120 (0.4 mm, □14 mm × 14 mm)

③ USB-B connector
④ USB-A connector
⑤ RS-232C connector
⑥ General I/F connector
⑦ IC socket for clock mounting
⑧ Power switch
⑨ Reset switch
⑩ USB transmission speed setting switch
⑪ USB transmission speed control switch
⑫ Short plug for a Power Mode setup (selection of a self-power supply or bus power supply)
⑬ Short plug for a MCU Power setup (selection of 3.3 V or 5 V)
⑭ Short plug for a functional setup
⑮ MCU power LED
⑯ USB-LED

F²MC-16LX Family Evaluation Board (BBF2001) : Sun Hayato

This is an evaluation board made by Sunhayato corp. in correspondence with Fujitsu F²MC-16LX families. It can be used to verify the operating status of F²MC-16LX families before they are actually embedded into a customer's system. As a consequence, development efficiency is accelerated.
This board consists of a mainboard and a daughterboard. By changing the daughterboard, it can be used for debugging with the (ICE) tool combined with the emulator debugger, evaluating a microcomputer with built-in flash memory and a serial programming. The board is adaptable to various series by changing the daughterboard, while the mainboard is common to each part.

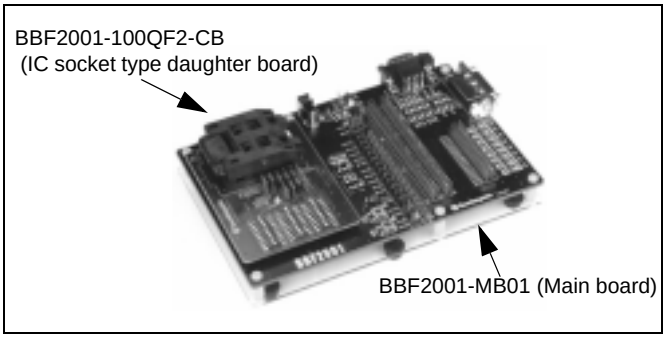

- **Evaluation board configuration**

Main board (BBF2001-MB01)

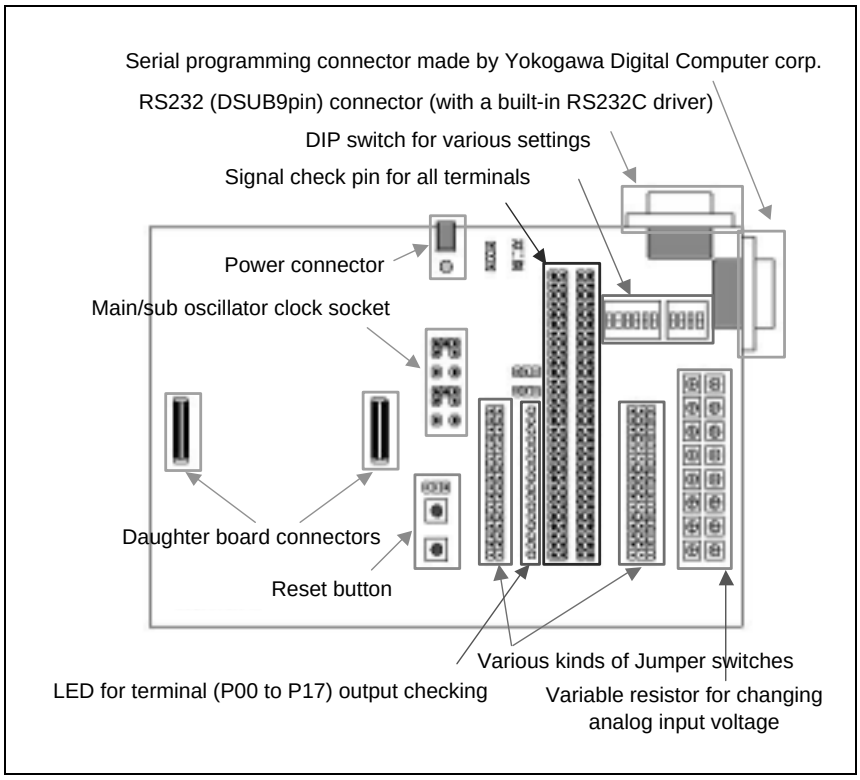

IC socket (clam shell type)
(BBF2001-100QF2-CB)

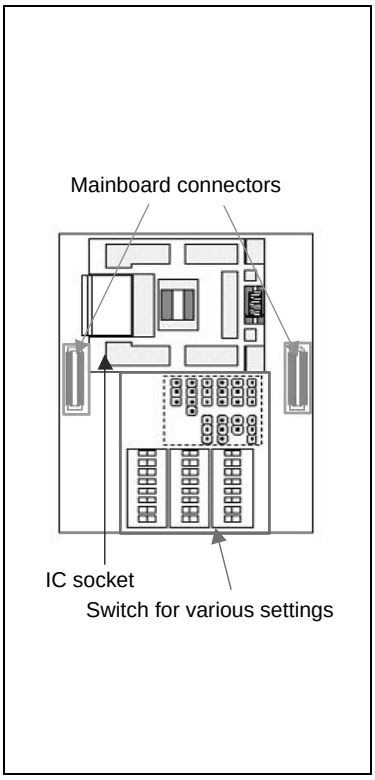

- **Product configuration**

Main board

Part number	Description
BBF2001-MB01	- Locating signal check pin to all terminals - Capability of changing input voltage to analog input terminal (by variable resistor) - Function of LED lightning for output port (P00 to P17) - Evaluate the capability of communication between PC and microcomputer with UART (mounted DSUB 9pin) - Can be use the serial programmer made by FUJITSU - Can be use the serial programmer made by Yokogawa Digital Computer corp. - Can be use the main board for FR60Lite

Daughter board

Part number	Description	Target microcontroller	Usage
BBF2001-48CL2-NB *1	NQPACK type (0.50 mm pitch, □7 mm × 7 mm)	MB90385series MB90455series MB90890series	Evaluation board connectable with (ICE) tool.
BBF2001-64QF2-NB *2	NQPACK type (0.65mm pitch, □12 mm × 12 mm)	MB90560series MB90565series MB90460series MB90495series	
BBF2001-100QF2-NB	NQPACK type (0.65mm pitch, □14mm × 20mm)	MB90540series MB90545series MB90550Aseries MB90580Cseries MB90580CAseries MB90590Gseries MB90595Gseries MB90M405series MB90420Gseries MB90425Gseries MB90470series MB90650Aseries MB90435series	
BBF2001-100CL2-NB *1	NQPACK type (0.65mm pitch, □14mm × 20mm)	MB90340series MB90865series MB90800series	
BBF2001-120TQF2-NB	NQPACK type (0.40mm pitch, □14mm × 14mm)	MB90520Aseries MB90570series	
BBF2001-48CL2-CB *1	IC socket (clam shell type) (0.50mm pitch, □7mm × 7mm)	MB90385series MB90455series MB90890series	Board for writing and evaluating a microcontroller with a built-in flash memory.
BBF2001-64QF2-CB *2	IC socket (clam shell type) (0.65mm pitch, □12mm × 12mm)	MB90560series MB90565series MB90460series MB90495series	
BBF2001-100QF2-CB	IC socket (clam shell type) (0.65mm pitch, □14mm × 20mm)	MB90540series MB90545series MB90550Aseries MB90580Cseries MB90580CAseries MB90590Gseries MB90595Gseries MB90M405series MB90420Gseries MB90425Gseries MB90470series MB90650Aseries MB90435series	
BBF2001-100CL2-CB	IC socket (clam shell type) (0.65 mm pitch, □14 mm × 20 mm)	MB90340series MB90865series MB90800series	
BBF2001-120TQF2-CB	IC socket (clam shell type) (0.40mm pitch, □14mm × 14mm)	MB90520Aseries MB90570series	

*1 : Includes CAN transceiver and LIN transceiver
*2 : Includes CAN transceiver

Main board ＋ Daughter board

Part number	Description	Target microcontroller	Usage
BBF2001-48CL2-NS *1	Main board ＋ NQPACK type (0.50mm pitch, □7mm × 7mm)	MB90385series MB90455series MB90890series	Evaluation board connectable with ICE) tool.
BBF2001-64CAN2-NS *2	Main board ＋ NQPACK type (0.65mm pitch, □12mm × 12mm)	MB90560series MB90565series MB90460series MB90495series	
BBF2001-100QF2-NS	Main board ＋ NQPACK type (0.65mm pitch, □14mm × 20mm)	MB90540series MB90545series MB90550Aseries MB90580Cseries MB90580CAseries MB90590Gseries MB90595Gseries MB90M405series MB90420Gseries MB90425Gseries MB90470series MB90650Aseries MB90435series	
BBF2001-100CL2-NSc	Main board ＋ NQPACK type (0.65 mm pitch, □14 mm × 20 mm)	MB90340series MB90865series MB90800series	
BBF2001-120TQF2-NS	Main board ＋ NQPACK type (0.40mm pitch, □14mm × 14mm)	MB90520Aseries MB90570series	
BBF2001-48CL2-CS *1	Main board ＋ IC socket (clam shell type) (0.50mm pitch, □7mm × 7mm)	MB90385series MB90455series MB90890series	Board for writing and evaluating a microcomputer with a built-in flash memory.
BBF2001-64CAN2-CS *2	Main board ＋ IC socket (clam shell type) (0.65mm pitch, □12mm × 12mm)	MB90560series MB90565series MB90460series MB90495series	
BBF2001-100QF2-CS	Main board ＋ IC socket (clam shell type) (0.65mm pitch, □14mm × 20mm)	MB90540series MB90545series MB90550Aseries MB90580Cseries MB90580CAseries MB90590Gseries MB90595Gseries MB90M405series MB90420Gseries MB90425Gseries MB90470series MB90650Aseries MB90435series	
BBF2001-100CL2-CS *1	Main board ＋ IC socket (clam shell type) (0.65 mm pitch, □14 mm × 20 mm)	MB90340series MB90865series MB90800series	
BBF2001-120TQF2-CS	Main board ＋ IC socket (clam shell type) (0.40mm pitch, □14mm × 14mm)	MB90520Aseries MB90570series	

*1 : The doughter board includes CAN transceiver and LIN transceiver .
*2 : The doughter board includes CAN transceiver .

Target microcontroller

Series name	Package (leadpitch, body size) (mm)	
MB90340 series	QFP-100	(0.65 mm pitch, □14 mm × 20 mm)
MB90385 series *1	LQFP-48	(0.5 mm pitch, □7 mm × 7 mm)
MB90M405 series	QFP-100	(0.65 mm pitch, □14 mm × 20 mm)
MB90420G/425G series	QFP-100	(0.65 mm pitch, □14 mm × 20 mm)
MB90435 series	QFP-100	(0.65 mm pitch, □14 mm × 20 mm)
MB90455 series *1	LQFP-48	(0.5 mm pitch, □7 mm × 7 mm)
MB90460 series	LQFP-64	(0.65 mm pitch, □12 mm × 12 mm)
MB90470 series	QFP-100	(0.65 mm pitch, □14 mm × 20 mm)
MB90495G series *2	LQFP-64	(0.65 mm pitch, □12 mm × 12 mm)
MB90520A series	LQFP-120	(0.40 mm pitch, □14 mm × 14 mm)
MB90540/545 series	QFP-100	(0.65 mm pitch, □14 mm × 20 mm)
MB90550A series	QFP-100	(0.65 mm pitch, □14 mm × 20 mm)
MB90560/565 series	LQFP-64	(0.65 mm pitch, □12 mm × 12 mm)
MB90570 series	LQFP-120	(0.40 mm pitch, □14 mm × 14 mm)
MB90580C/CA series	QFP-100	(0.65 mm pitch, □14 mm × 20 mm)
MB90590/G series	QFP-100	(0.65 mm pitch, □14 mm × 20 mm)
MB90595G series	QFP-100	(0.65 mm pitch, □14 mm × 20 mm)
MB90650A series	QFP-100	(0.65 mm pitch, □14 mm × 20 mm)
MB90800 series	QFP-100	(0.65 mm pitch, □14 mm × 20 mm)
MB90865series	QFP-100	(0.65 mm pitch, □14 mm × 20 mm)
MB90890 series	LQFP-48	(0.5 mm pitch, □7 mm × 7 mm)

*1 : The doughter board for MB90495G seriesincludes CAN transceiver.
*2 : The doughter board for MB90385 series, MB90455 series, MB90890 series includes CAN transceiver and LIN transceiver.
Contact for details: Sun Hayato Co., Ltd.

16

Se

The se
F²MC-8

AF22

- **Syste**

- **FLASH microcontroller for programming**

FLASH microcontroller (FLASH memory size)		Control Module *1	Status
MB90F347/S	(128KB)	FF201	Supported
MB90F387/S	(64KB)	FF201	Supported
MB90F394H	(384KB)	FF201	Supported
MB90MF408	(128KB)	FF201	Supported *2
MB90F428G/GA	(128KB)	FF201	Supported
MB90F438L/LS	(128KB)	FF201	Supported
MB90F439/S	(256KB)	FF201	Supported
MB90F443G	(128KB)	FF201	Supported
MB90F455/S	(24KB)	FF201	Supported
MB90F456/S	(32KB)	FF201	Supported
MB90F457/S	(64KB)	FF201	Supported
MB90F462	(64KB)	FF201	Supported
MB90F474L/H	(256KB)	FF201	Supported *2
MB90F481	(192KB)	FF201	Supported *2
MB90F482	(256KB)	FF201	Supported *2
MB90F497G	(64KB)	FF201	Supported
MB90F523/A	(128KB)	FF201	Supported
MB90F523B	(128KB)	FF201	Supported
MB90F543G (S) /F548G (S) /F548GL (S)	(128KB)	FF201	Supported
MB90F549G (S) /F546G (S)	(256KB)	FF201	Supported
MB90F553A	(128KB)	FF201	Supported
MB90F562B	(64KB)	FF201	Supported
MB90F568	(128KB)	FF201	Supported *2
MB90F574A	(256KB)	FF201	Supported
MB90F583C/CA	(128KB)	FF201	Supported
MB90F584C/CA	(256KB)	FF201	Supported
MB90F591G	(384KB)	FF201	Supported
MB90F594G	(256KB)	FF201	Supported
MB90F598G	(128KB)	FF201	Supported
MB90F654A	(256KB)	FF201	Supported *2
MB90F804	(256KB)	FF201	Supported *2
MB90F867/S	(128KB)	FF201	Supported
MB90F897	(64KB)	FF201	Supported

*1 : In control module FF201, AF200 (cereal programmer of an old version) is available.
*2 : Needs optional adapter AZ264 (3V Conversion Adapter).

ITF2000 (Serial Gang programmer) : Interface

- **System configuration**

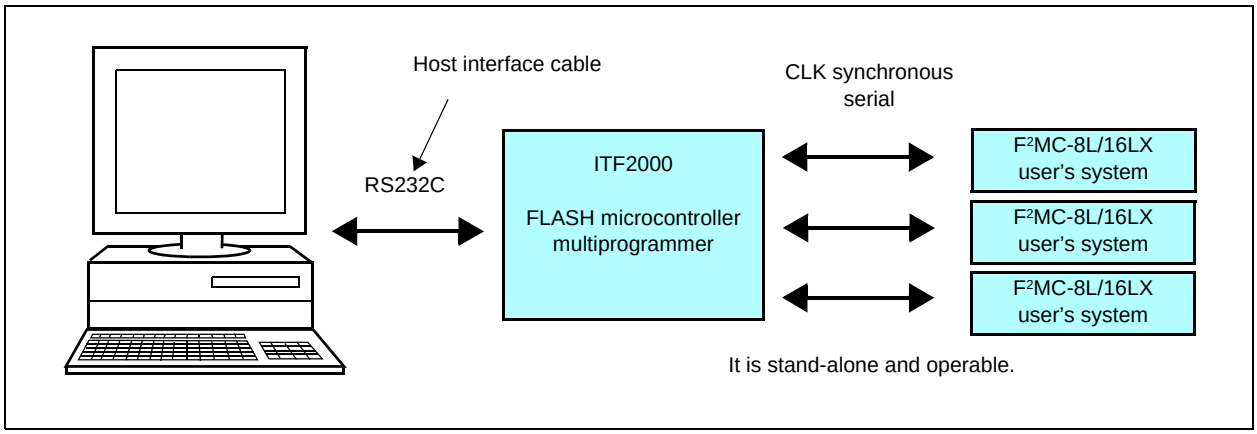

- **Product configuration**

Product	Function
ITF2000	Main unit of FLASH microcontroller multiprogrammer (with remote software)
ISP2000	Adaptor for on board programming (with main cable)
CF001(for F²MC-16LX family)	Control software
WF001/F001(for MB90P553A)	Microcontroller module

- **Programming adaptor**

Part number	Package	Programming adaptor
MB90F553A	QFP-100	TOP2000/QFP100TP1/P1 (single) TOP2000/QFP100TP1/P10 (10 sets)
	LQFP-100	TOP2000/LQFP100TP1/P1 (single) TOP2000/LQFP100TP1/P10 (10 sets)

Parallel programmer for FLASH microcontroller

The parallel programmer in FLASH memory of the F2MC-16L/LX family is supported as the following programmer.

Ando Electric Co., Ltd.

- **Flash Programmer**

  AF9708 (Ver 1.78 or more) , AF9709 (Ver 1.78 or more) : 3 V-products , 5 V-products.

AF9708

AF9709

- **Gang programmer**

  AF9723 (Ver 1.81 or more) : 3 V-products , 5 V-products

MINATO ELECTRONICS INC.

- **Universal Programmer**

  MODEL 1890A + OU910 (Ver. 4.32b or more)

Notes :

This programmer ended in September, 2000. It is a schedule of correspondence with MODEL1881 (The current state uncorresponds) for the future. Please confirm to MINATO ELECTRONICS INC. when you buy.
MODEL1890A is scheduled to be done in the future to support.

- **Gang Programmer**

  MODEL 1893 (Ver. 1.10L or more) , MODEL 1931 (Ver 1.10L or more)
  MODEL 1930 + SU3000LX (Ver. 4.10L or more)

MODEL 1893

- **Gang programmer**

  MODEL1940 (Ver. 1.32C or more)

MODEL 1940

Data I/O Corporation

- **Universal Programmer**
  OPTIMA, Dual-Package

OPTIMA

Dual-Package

- **Gang Programmer**
  OCTAL, QUAD

OCTAL

Adaptor socket for Flash Microcomputer

5 V-products

Flash Microcontrollers	Package (leadpitch, body size) (mm)	Package code	Ando Electric Co., Ltd.	MINATO ELECTRONICS INC.		Data I/O Corporation
			AF9708 AF9709 AF9723	MODEL 1890A MODEL 1930 MODEL 1931 MODEL 1893	MODEL 1940	OPTIMA Dual-Packge OCTAL QUAD
MB90F347PF MB90F347SPF	QFP-100 (0.65 mm, □14 × 20 mm)	FPT-100P-M06	TEF110-328F12AP-2	Not supported	Not supported	Not supported
MB90F347PFV MB90F347SPFV	LQFP-100 (0.5 mm, □14 × 14 mm)	FPT-100P-M05	TEF110-328F13AP-2	Not supported	Not supported	Not supported
MB90F387 MB90F387S MB90F456 MB90F456S MB90F457 MB90F457S	LQFP-48 (0.5 mm, □7 × 7 mm)	FPT-48P-M26	TEF110-387F15AP-2	—	—	—
MB90F428GPF MB90F428GAPF	QFP-100 (0.65 mm, □14 × 20 mm)	FPT-100P-M06	TEF110-553F01AP-2	MF00-989	MF05-989	S5023
MB90F428GPFV MB90F428GAPFV	LQFP-100 (0.5 mm, □14 × 14 mm)	FPT-100P-M05	TEF110-580F03AP-2	MF00-709	MF05-709	Not supported
MB90F443GPF	QFP-100 (0.65 mm, □14 × 20 mm)	FPT-100P-M06	TEF110-553F01AP-2	MF00-989	MF05-989	S5023
MB90F462P	SH-DIP-64	DIP-64P-M01	TEF110-562F05AP-2	MF13-787	Under planning	Not supported
MB90F462PF	QFP-64 (1.0 mm, □14 × 20 mm)	FPT-64P-M06	TEF110-562F06AP-2	MF13-785	Under planning	
MB90F462PFM	QFP-64 (0.65 mm, □12 × 12 mm)	FPT-64P-M09	TEF110-562F07AP-2	MF13-786	Under planning	
MB90F497GPF	QFP-64 (1.0 mm, □14 × 20 mm)	FPT-64P-M06	TEF110-562F06AP-2	MF13-785A	MF05-785A	Not supported
MB90F497GPFM	QFP-64 (0.65 mm, □12 × 12 mm)	FPT-64P-M09	TEF110-562F07AP-2	MF13-786A	MF05-786A	
MB90F523BPFV	QFP-120 (0.5 mm, □20 × 20 mm)	FPT-120P-M13	TEF110-574F02AP-2	MF00-23A	MF05-23A	S5024
MB90F523BPFF	LQFP-120 (0.4 mm, □14 × 14 mm)	FPT-120P-M05	TEF110-523F08AP-2	MF00-22A	MF05-22A	Not supported
MB90F438LPF MB90F438LSPF MB90F439PF MB90F439SPF MB90F543GPF MB90F543GSPF MB90F546GPF MB90F546GSPF MB90F548GPF MB90F548GSPF MB90F548GLPF MB90F548GLSPF MB90F549GPF MB90F549GSPF	QFP-100 (0.65 mm, □14 × 20 mm)	FPT-100P-M06	TEF110-553F01AP-2	MF00-989	MF05-989	S5023

(Continued)

(Continued)

Flash Microcontrollers	Package (leadpitch, body size) (mm)	Package code	Ando Electric Co., Ltd.	MINATO ELECTRONICS INC.		Data I/O Corporation
			AF9708 AF9709 AF9723	MODEL 1890A MODEL 1930 MODEL 1931 MODEL 1893	MODEL 1940	OPTIMA Dual-Packge OCTAL QUAD
MB90F438LPF MB90F438LSPF MB90F439PF MB90F439SPF MB90F543GPFV MB90F543GSPFV MB90F546GPFV MB90F546GSPFV MB90F548GPFV MB90F548GSPFV MB90F548GLPFV MB90F548GLSPFV MB90F549GPFV MB90F549GSPFV	LQFP-100 (0.5 mm, □14 × 14 mm)	FPT-100P-M05	TEF110-580F03AP-2	MF00-709	Under planning	Not supported
MB90F553APF	QFP-100 (0.65 mm, □14 × 20 mm)	FPT-100P-M06	TEF110-553F01AP-2	MF00-989	MF05-989	S5023
MB90F553APFV	LQFP-100 (0.5 mm, □14 × 14 mm)	FPT-100P-M05	TEF110-580F03AP-2	MF00-709	MF05-709	Not supported
MB90F562BP	SH-DIP-64	DIP-64P-M01	TEF110-562F05AP-2	MF13-787	MF05-787	Not supported
MB90F562BPF	QFP-64 (1.0 mm, □14 × 20 mm)	FPT-64P-M06	TEF110-562F06AP-2	MF13-785	Under planning	
MB90F562BPFM	QFP-64 (0.65 mm, □12 × 12 mm)	FPT-64P-M09	TEF110-562F07AP-2	MF13-786	MF05-786	
MB90F574APFV	QFP-120 (0.5 mm, □20 × 20 mm)	FPT-120P-M13	TEF110-574F02AP-2	MF00-23	MF05-23	S5024
MB90F574APFF	LQFP-120 (0.4 mm, □14 × 14 mm)	FPT-120P-M05	TEF110-523F08AP-2	MF00-22	Under planning	Not supported
MB90F574APMT	QFP-120 (0.5 mm, □16 × 16 mm)	FPT-120P-M21	TEF110-574AF04AP-2	MF00-729	MF05-729	
MB90F583CPF MB90F583CAPF MB90F584CPF MB90F584CAPF	QFP-100 (0.65 mm, □14 × 20 mm)	FPT-100P-M06	TEF110-553F01AP-2	MF00-989	MF05-989	S5023
MB90F583CPFV MB90F583CAPFV MB90F584CPFV MB90F584CAPFV	LQFP-100 (0.5 mm, □14 × 14 mm)	FPT-100P-M05	TEF110-580F03AP-2	MF00-709	MF05-709	Not supported
MB90F591GPF	QFP-100 (0.65 mm, □14 × 20 mm)	FPT-100P-M06	TEF110-553F01AP-2	MF00-989A	MF05-989A	S5023
MB90F594GPF	QFP-100 (0.65 mm, □14 × 20 mm)	FPT-100P-M06	TEF110-553F01AP-2	MF00-989A	MF05-989A	S5023
MB90F598GPF	QFP-100 (0.65 mm, □14 × 20 mm)	FPT-100P-M06	TEF110-553F01AP-2	MF00-989	MF05-989	S5023
MB90F867PF MB90F867SPF	QFP-100 (0.65 mm, □14 × 20 mm)	FPT-100P-M06	TEF110-328F12AP-2	Not supported	Not supported	Not supported
MB90F867PFV MB90F867SPFV	LQFP-100 (0.5 mm, □14 × 14 mm)	FPT-100P-M05	TEF110-328F13AP-2	Not supported	Not supported	Not supported

3 V-products

Flash Microcontrollers	Package (leadpitch, body size) (mm)	Package code	Ando Electric Co., Ltd.	MINATO ELECTRONICS INC.		Data I/O Corporation
			AF9708 AF9709 AF9723	MODEL 1890A MODEL 1930 MODEL 1931 MODEL 1893	MODEL 1940	OPTIMA Dual-Packge OCTAL QUAD
MB90F654APF	QFP-100 (0.65 mm, □14 × 20 mm)	FPT-100P-M06	TEF110-553F01AP-2	MF00-989	MF05-989	S5023
MB90F654APFV	LQFP-100 (0.5 mm, □14 × 14 mm)	FPT-100P-M05	TEF110-580F03AP-2	MF00-709	MF05-709	Not supported
MB90F474LPF MB90F474HPF	QFP-100 (0.65 mm, □14 × 20 mm)	FPT-100P-M06	TEF110-553F01AP-2	MF00-989	MF05-989	S5023
MB90F474LPFV MB90F474HPFV	LQFP-100 (0.5 mm, □14 × 14 mm)	FPT-100P-M05	TEF110-580F03AP-2	MF00-709	MF05-709	Not supported
MB90F481PF MB90F482PF	QFP-100 (0.65 mm, □14 × 20 mm)	FPT-100P-M06	TEF110-553F01AP-2	MF00-989A	MF05-989A	S5023
MB90F481PFV MB90F482PFV	LQFP-100 (0.5 mm, □14 × 14 mm)	FPT-100P-M05	TEF110-580F03AP-2	MF00-709A	MF05-709A	Not supported
MB90F568PF	QFP-64 (1.0 mm, □14 × 20 mm)	FPT-64P-M06	TEF110-562F06AP-2	MF13-785	MF05-785	Not supported
MB90F568PFM	QFP-64 (0.65 mm, 12 × 12 mm)	FPT-64P-M09	TEF110-562F07AP-2	MF13-786	MF05-786	
MB90F372	LQFP-144 (0.4 mm, □16 × 16 mm)	FPT-144P-M12	TEF110-372F17AP-2	Not supported	Not supported	Not supported

FR Family Features

- CPU core capable of running at a peak rate of 64 VAX MIPS (CPU core performance) at 50 MHz while featuring its compactness equivalent to 16-bit microcontrollers
- 5-stage pipelining and harvard-bus architecture, allowing efficient execution
- Implementation of, basically, 16-bit fixed length commands, providing high object code efficiency
- The command group enhanced for controllers and an algorithm engine, resulting in faster execution of instructions
- A variety of resources including the sum-of-product units
- Many kinds of internal peripheral devices

- **FR architecture features**

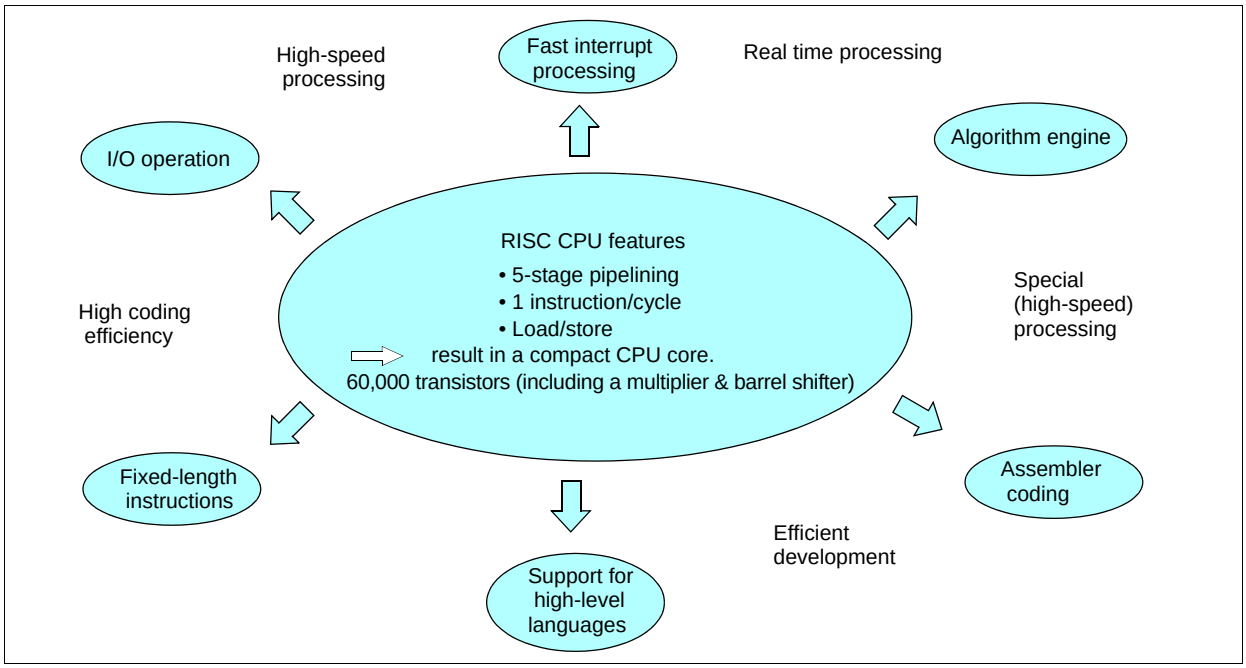

- **Fujitsu embedded RISC controller**
  The FR family is designed for optimum use in control systems while the SPARClite is suitable for data processing systems.

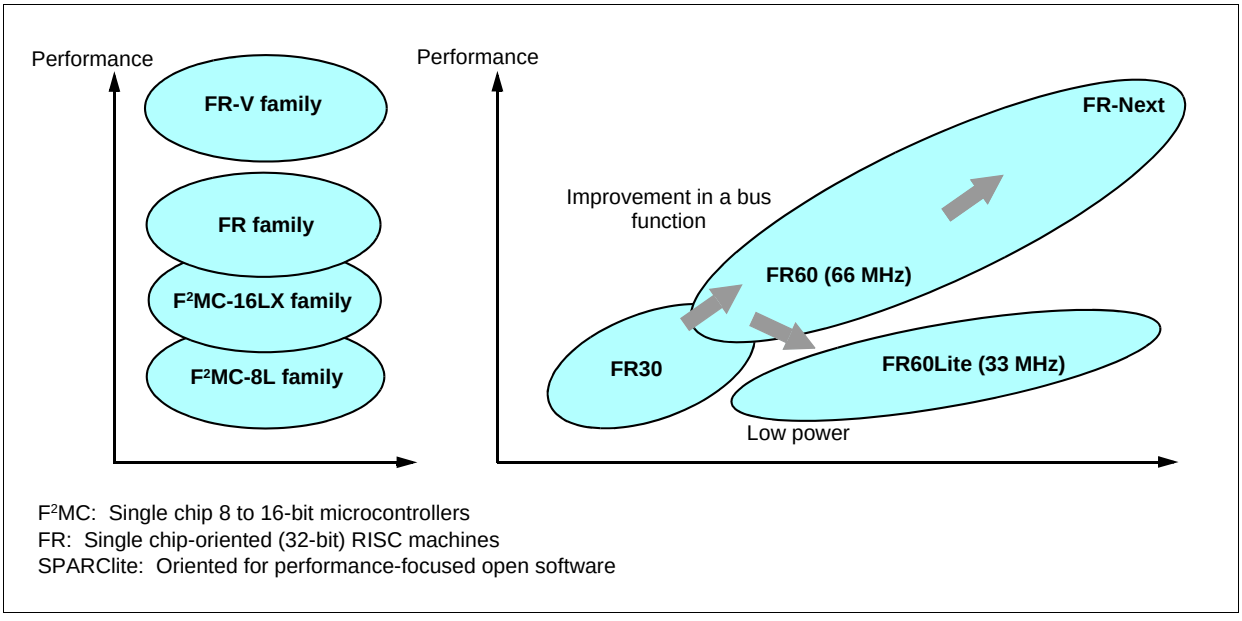

F²MC: Single chip 8 to 16-bit microcontrollers
FR: Single chip-oriented (32-bit) RISC machines
SPARClite: Oriented for performance-focused open software

FR Family Product Range

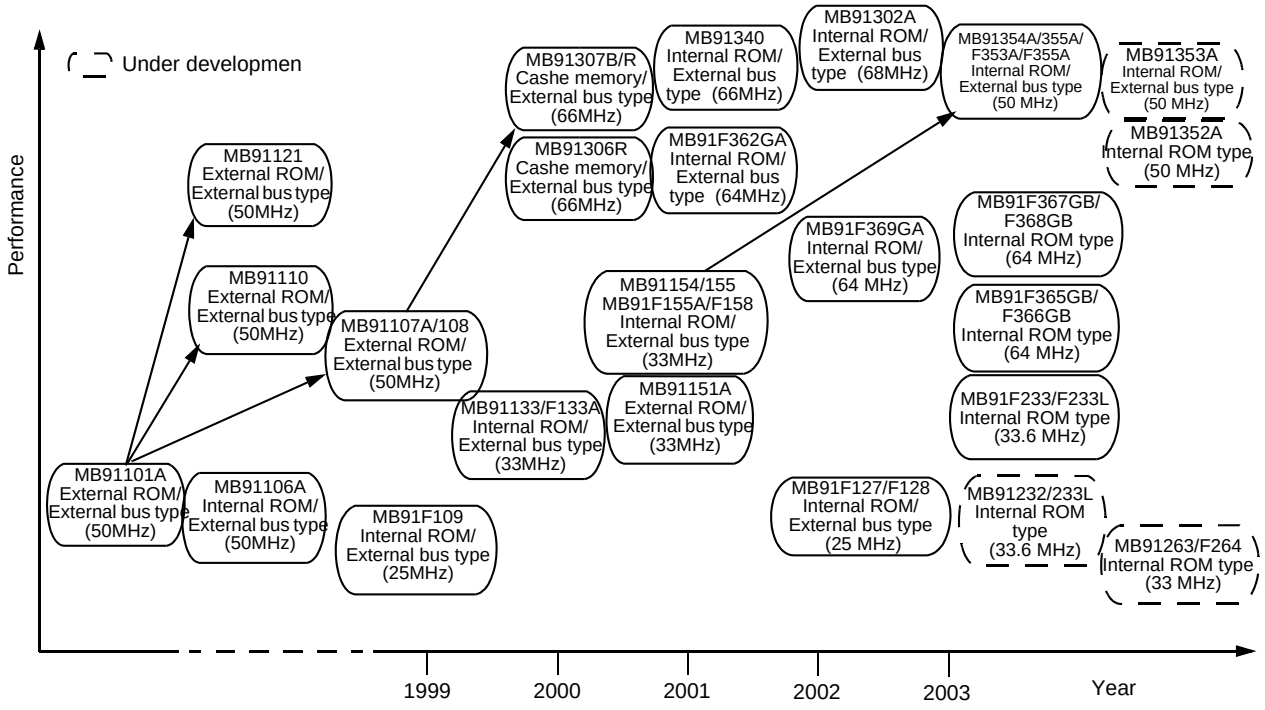

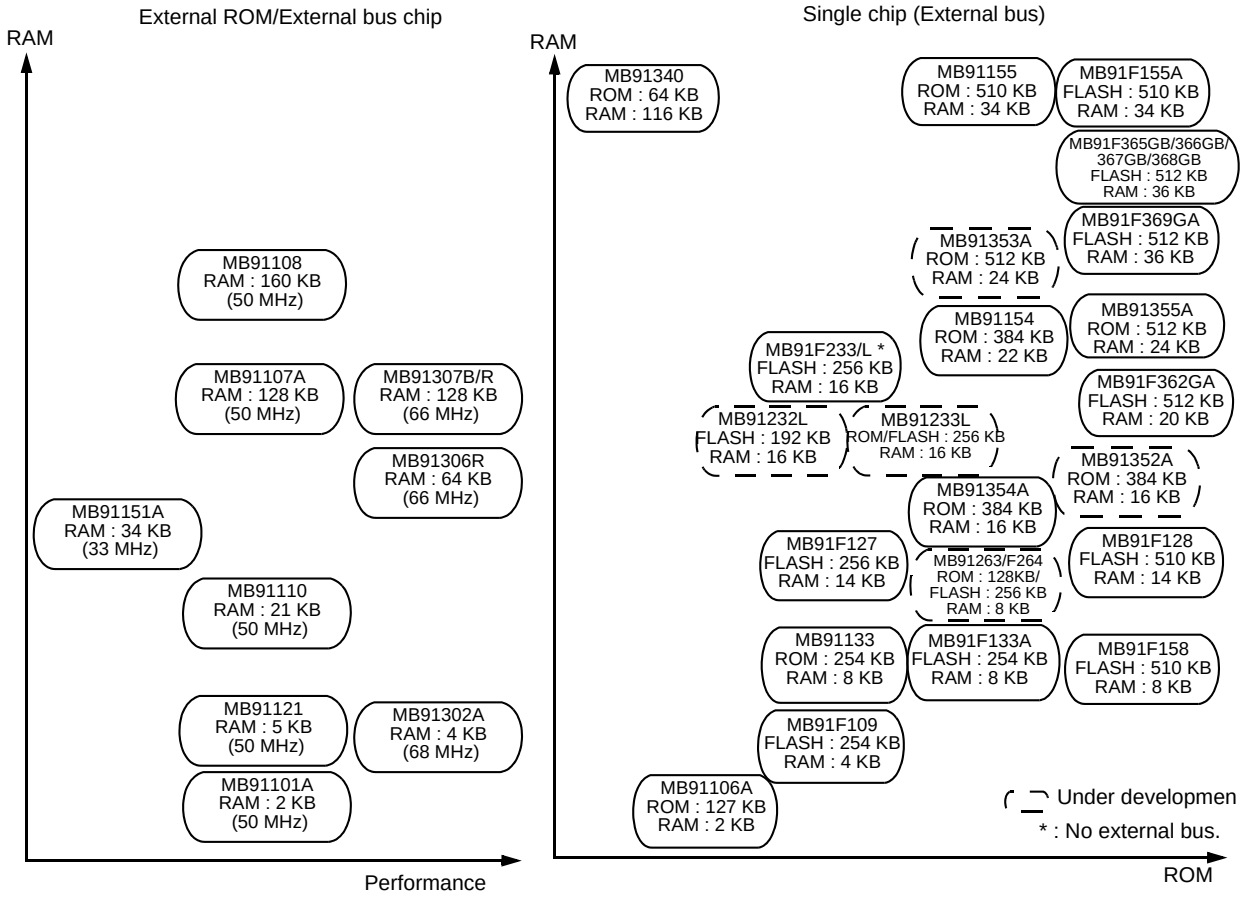

32-bit FR Family

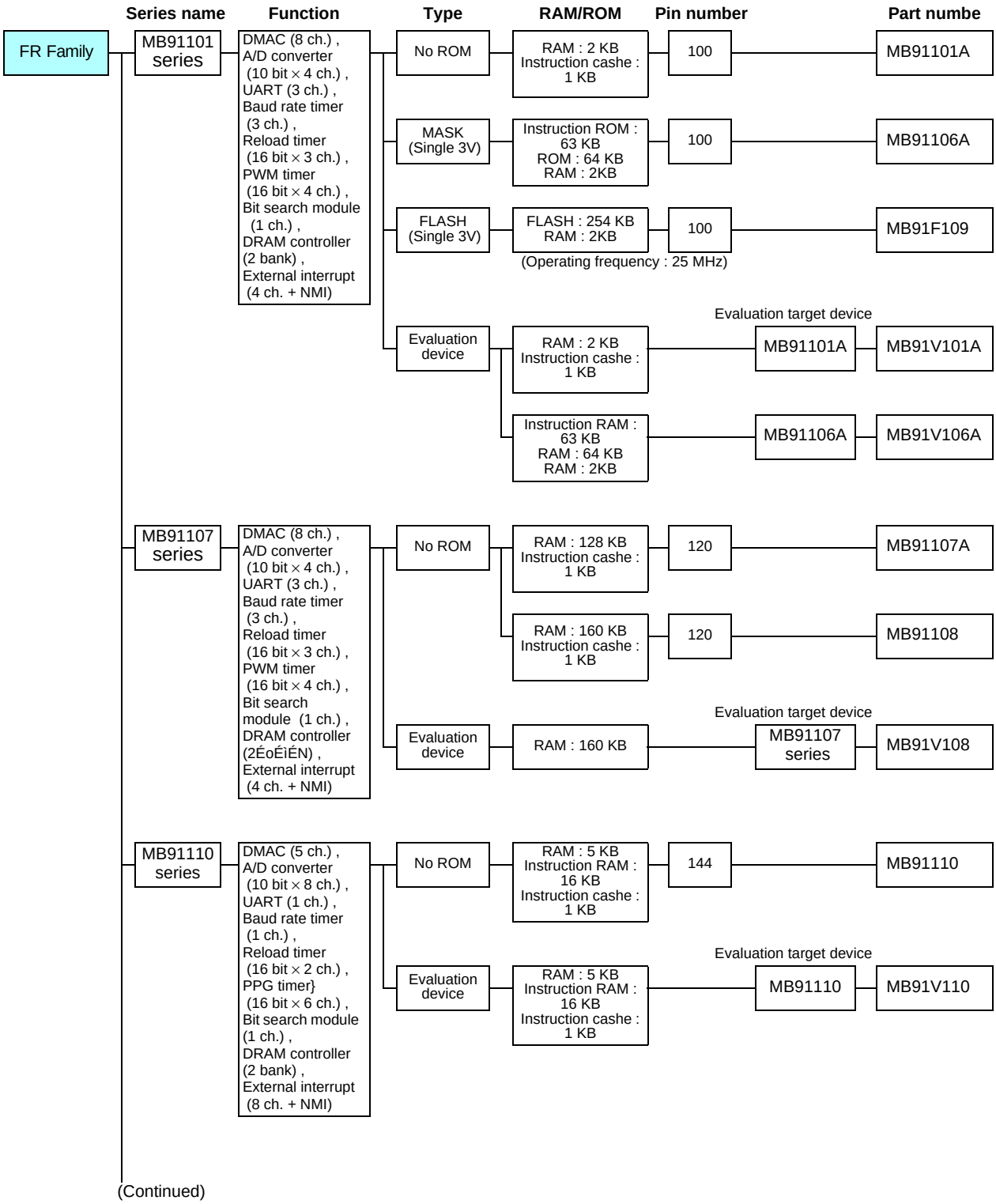

(Continued)

FR Family

MB91101 series

- For externai bus, electronic musical instrument, game machine, etc.

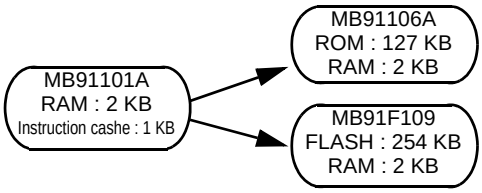

- Maximum clock frequency : 50 MHz
- Operating temperature range : 0 °C to +70 °C
- Operating power supply voltage : +5 V ± 10% / +3 V ± 10%

Part number	Operating power supply voltage (V)	Package		Functions	
		QFP (0.65 mm)	LQFP (0.5 mm)		
MB91101A	+5 ± 10 % or +3.3 (+3) ± 10 %	100P	100P	Maximum operating frequency : 50 MHz(MB91101A/106A) 25 MHz(MB91F109) ROM : 127KB (MB91106A) FLASH memory : 254KB (MB91F109) RAM : 2 KB (MB91101A/106A) 4 KB (MB91F109) Cashe : Instruction cashe 1 KB (MB91101A)	DRAM controller : 2 bank DMA controller : 8 ch. (External 3 ch.) UART/Baud rate timer : 3 ch./3 ch. A/D converter : 10 bit × 4 ch. PWM timer : 4 ch. Reload timer : 16 bit × 3 ch. Bit search module : 1 ch. External interrupt input : 4 ch. + NMI I/O port : 54 port (multiplex with other signals)
MB91106A	+3.3 ± 0.3	100P	100P		
MB91F109		100P	100P		

Package: P-plastic

MB91107 series

- For DVD player, printer, CD-ROM,etc.

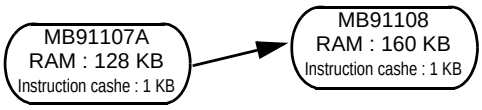

- Maximum clock frequency : 50 MHz
- Operating temperature range : 0 °C to +70 °C
- Operating power supply voltage : +3.3 V ± 0.3 V

Part number	Operating power supply voltage (V)	Package	Functions	
		LQFP (0.5 mm)		
MB91107A	+3.3 ± 0.3	120P	Maximum operating frequency : 50 MHz RAM : 128KB(MB91107A) 160KB(MB91108) Cashe : Instruction cashe 1 KB DRAM controller : 2 bank DMA controller : 8 ch. (External 3 ch.) UART/Baud rate timer : 3 ch./3 ch.	A/D conberter : 10 bit × 4 ch. PWM timer : 4 ch. Reload timer : 16 bit × 3 ch. Bit search module : 1 ch. External interrupt input : 4 ch. + NMI I/O port : 54 port (multiplex with other signals)
MB91108		120P		

Package: P-plastic

MB91110 series

- For printer, DVD player, CD-ROM, etc.

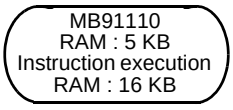

- Maximum clock frequency : 50 MHz
- Operating temperature range : 0 °C to +70 °C
- Operating power supply voltage : +5 V ± 10% / +3.3 V ± 5%

Part number	Operating power supply voltage (V)	Package	Functions	
		LQFP (0.5 mm)		
MB91110	+5 ± 10 % +3.3 ± 5 %	144P	Maximum operating frequency : 50 MHz RAM : 5 KB Instruction executionRAM : 16 KB Cashe : Instruction cashe 1 KB DRAM controller : 2 bank DMA controller : 5 ch.	UART/Baud rate timer : 1 ch./1 ch. A/D converter : 10 bit × 8 ch. PPG timer : 16 bit × 6 ch. Reload timer : 16 bit × 2 ch. Bit search module : 1 ch. External interrupt input : 8 ch.

Package: P-plastic

(Continued)

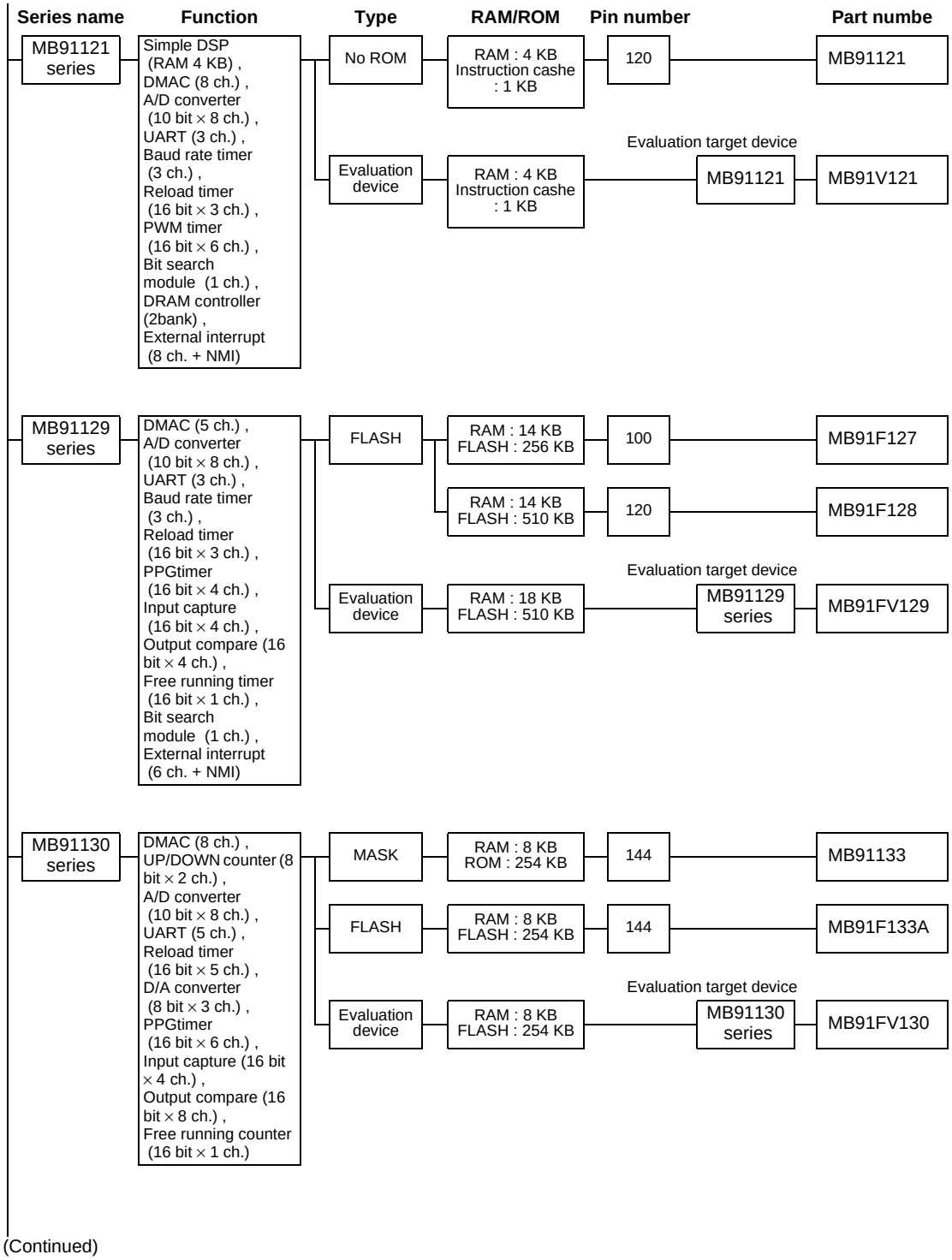

(Continued)

MB91121 series

- For motor control, printer, DVD player, etc.

MB91121
RAM : 4 KB
Simple DSP

- Maximum clock frequency : 50 MHz
- Operating temperature range : 0 °C to +70 °C
- Operating power supply voltage : +3.3 V ± 0.3 V

Part number	Operating power supply voltage (V)	Package	Functions	
		LQFP (0.5 mm)		
MB91121	+3.3 ± 0.3	120P	Maximum operating frequency : 50 MHz RAM : 4 KB Cashe : Instruction cashe 1 KB Simple DSP : 16-bit fixed point operations DMA controller : 8 ch.	UART/Baud rate timer : 3 ch./3 ch. A/D converter : 10 bit × 8 ch. PWM timer : 16 bit × 4 ch. Reload timer : 16 bit × 3 ch.

Package: P-plastic

MB91129 series

- For mechatronics control, AV, home electric appliances control, etc.

- Maximum clock frequency : 25 MHz
- Operating temperature range : –30 °C to

Part number	Operating power supply voltage (V)	Package	Functions	
		LQFP (0.5 mm)		
MB91F127	+3.3 ± 0.3	100P	Maximum operating frequency : 25 MHz FLASH memory : 256 KB(MB91F127) 510 KB(MB91F128) RAM : 14 KB PPGtimer : 4 ch. DMA controller : 5 ch. Input capture : 16 bit × 4 ch.	Output compare : 16 bit × 4 ch. Free running timer : 16 bit × 1 ch. A/D converter : 8/10 bit × 8 ch. Reload timer : 16 bit × 3 ch. UART : 3 ch. External interrupt input : 6 ch.
MB91F128				

Package: P-plastic

MB91130 series

- For mechatronics control, AV, home electric appliances control, etc.

Part number	Operating power supply voltage (V)	Package		Functions	
		LQFP (0.5 mm)	BGA		
MB91133	+5 ± 10% +3.0 to +3.6	144P	144P	Operating frequency : 33 MHz ROM : 254 KB(MB91133) FLASH memory : 254 KB(MB91F133A) RAM : 8 KB DMA controller : 8 ch. UP/DOWN counter : 8 bit × 2 ch. A/D converter : 10 bit × 8 ch. (With level comparator : 1 ch.)	UART : 5 ch. Reload timer : 16 bit × 5 ch. D/A converter : 8 bit × 3 ch. PPGtimer : 16 bit × 6 ch. Input capture : 16 bit × 4 ch. Output compare : 16 bit × 8 ch. Free running counter : 16 bit × 1 ch.
MB91F133A		144P	—		

Package: P-plastic

(Continued)

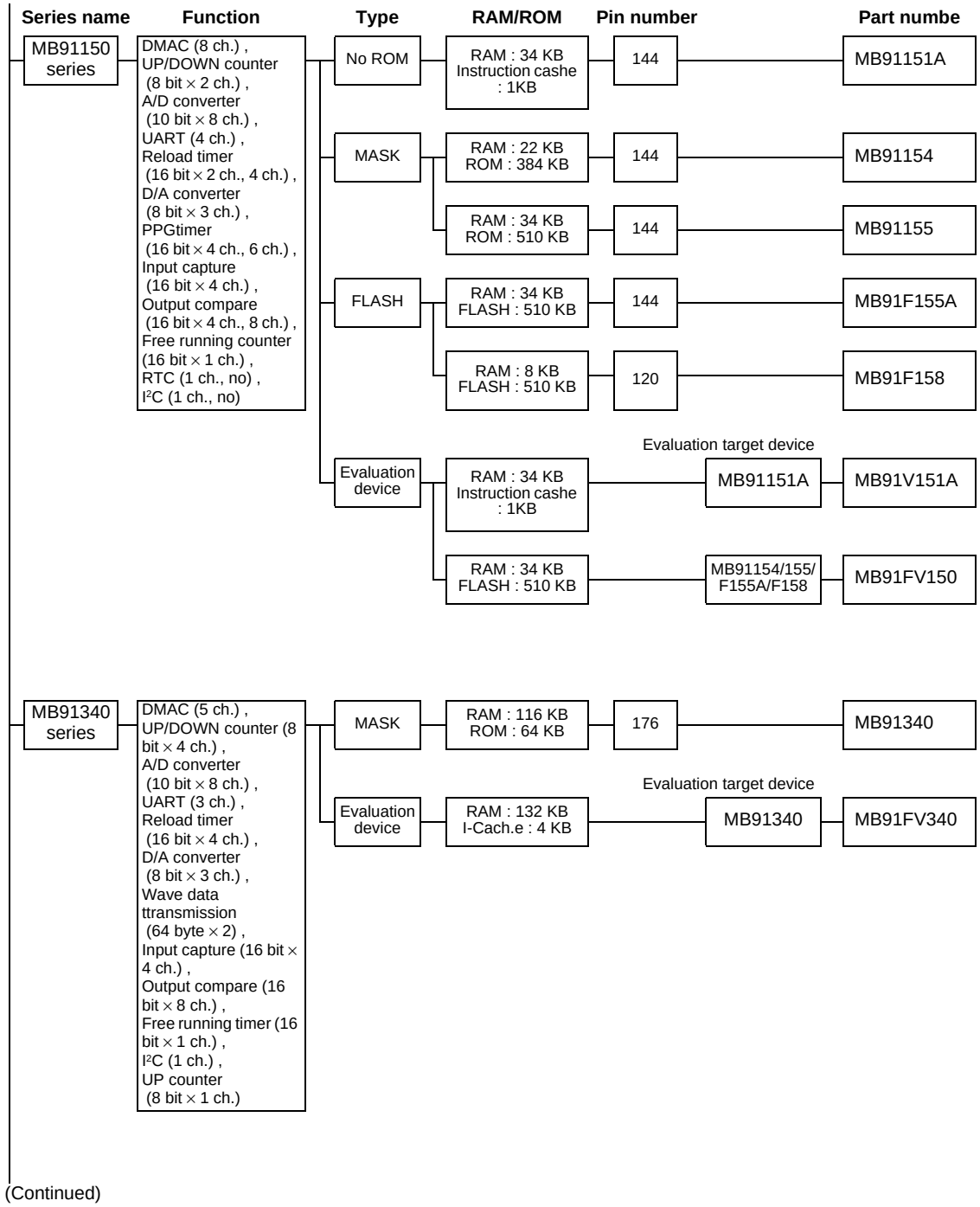

(Continued)

MB91150 series

- For mechatronics control, AV, home electric appliances control, etc.

- Maximum clock frequency : 33 MHz
- Operating temperature range : 0 °C to +70 °C
- Operating power supply voltage : +3.15 V to +3.6 V
  +3.2 V to +3.5 V (MB91F158)

Part number	Operating power supply voltage (V)	Package LQFP (0.5 mm)	Functions	
MB91151A	+3.15 to +3.6	144P	Maximum operating frequency : 33 MHz ROM : 384 KB(MB91154) 510 KB(MB91155) FLASH memory : 510 KB(MB91F155A) RAM : 34 KB (MB91151A/155/F155A) 22 KB (MB91154) Cash : Instruction cashe : 1 KB (MB91151A) DMA controller : 8 ch. UP/DOWN counter : 8 bit × 2 ch. A/D converter : 10 bit × 8 ch.	UART : 4 ch. Reload timer : 16 bit × 4 ch. D/A converter : 8 bit × 3 ch. PPGtimer : 16 bit × 6 ch. Input capture : 16 bit × 4 ch. Output compare : 16 bit × 8 ch. Free running timer : 16 bit × 1 ch. I²C : 1 ch. (MB91154/155/F155A) RTC : 1 ch. (MB91154/155/F155A)
MB91154		144P		
MB91155		144P		
MB91F155A		144P		
MB91F158	+3.2 to +3.5	120P	Operating frequency : 33 MHz FLASH memory : 510 KB RAM : 8 KB UP/DOWN counter : 8 bit × 2 ch. A/D converter : 10 bit × 8 ch. UART : 2 ch.	Reload timer : 16 bit × 2 ch. D/A converter : 8 bit × 3 ch. PPGtimer : 16 bit × 4 ch. Input capture : 16 bit × 4 ch. Output compare : 16 bit × 4 ch. Free running timer : 16 bit × 1 ch.

Package: P-plastic

MB91340 series

- DVD player, CD-ROM

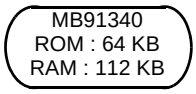

- Maximum clock frequency : 66 MHz
- Operating temperature range : 0 °C to +70 °C
- Operating power supply voltage :
  +3.0 V to +3.6 V (external)
  +2.3 V to +2.7 V (internal)

Part number	Operating power supply voltage (V)	Package LQFP (0.5 mm)	Functions	
MB91340	+3.3 ± 0.3 +2.5 ± 0.2	176P	Maximum operating frequency : 66 MHz RAM : 112 KB ROM : 64 KB DATA RAM : 4 KB UART : 3 ch. External interrupt input : 9 ch. I²C : 1 ch. A/D converter : 10 bit × 8 ch. D/A converter : 8 bit × 3 ch.	DMA controller : 5 ch. (External 3 ch.) Input capture : 16 bit × 4 ch. Output compare : 16 bit × 8 ch. Watch. Dog Timer Reload timer : 16 bit × 4 ch. Up counter : 8 bit × 1 ch. Free running timer : 16 bit × 1 ch. UP/DOWN counter : 8 bit × 4 ch. (16 bit × 2 ch.)

Package: P-plastic

(Continued)

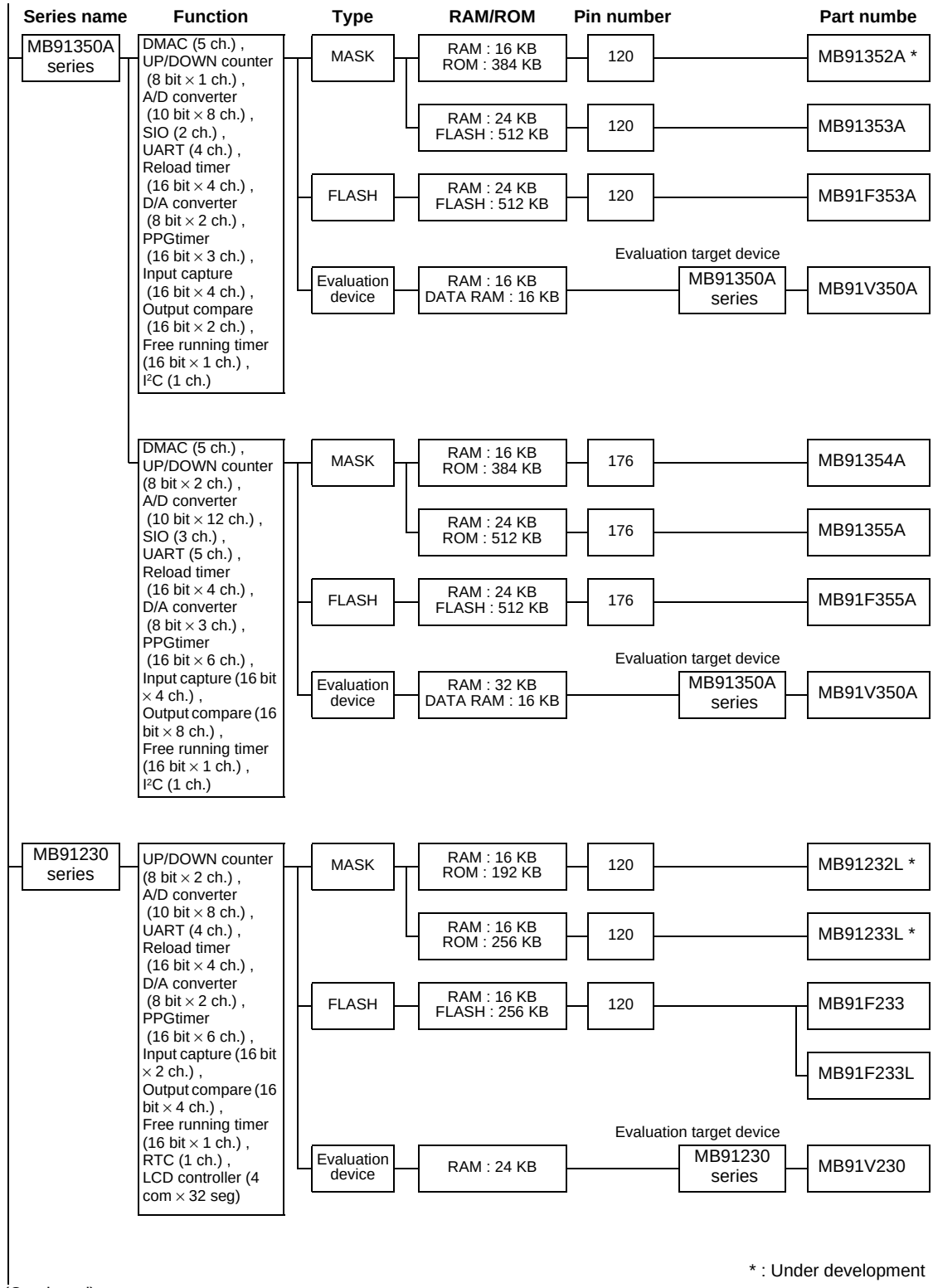

* : Under development

(Continued)

MB91350A series

- For mechatronics control, AV, home electric appliances control, etc.

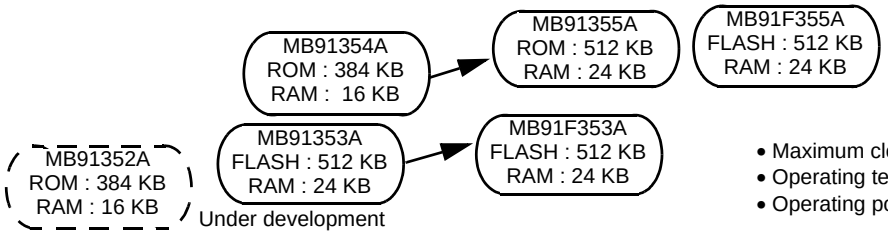

- Maximum clock frequency : 50 MHz
- Operating temperature range : –40 °C to +85 °C
- Operating power supply voltage : +3.0 V to +3.6 V

Part number	Operating power supply voltage (V)	Package LQFP (0.5 mm)	Functions	
◎MB91352A	+3.3 ± 0.3	120P	Maximum operating frequency : 50 MHz RAM : 8 KB ROM : 384 KB (MB91352A) FLASH memory : 512 KB (MB91F353A) DATA RAM : 8 KB (MB91352A) 16 KB (MB91F353A) UART : 4 ch. External interrupt input : 9 ch. I²C : 1 ch. A/D converter : 10 bit × 8 ch.	D/A converter : 8 bit × 2 ch. DMAC : 5 ch. Input capture : 16 bit × 4 ch. Output compare : 16 bit × 2 ch. Watch. DOG Timer Reload timer : 16 bit × 4 ch. Free running timer : 16 bit × 1 ch. UP/DOWN counter : 8 bit × 1 ch. SIO : 1 ch. PPG : 16 bit × 3 ch.
MB91353A		120P		
MB91F353A		120P		
MB91354A		176P	Maximum operating frequency : 50 MHz RAM : 8 KB ROM : 384 KB (MB91354A) 512 KB (MB91355A) FLASH memory : 512 KB (MB91F355A) DATA RAM : 8 KB (MB91354A) 16 KB (MB91355A/F355A) UART : 5 ch. External interrupt input : 17 ch. I²C : 1 ch. A/D converter : 10 bit × 12 ch.	D/A converter : 8 bit × 3 ch. DMAC : 5 ch. Input capture : 16 bit × 4 ch. Output compare : 16 bit × 8 ch. Watch. DOG Timer Reload timer : 16 bit × 4 ch. Free running timer : 16 bit × 1 ch. UP/DOWN counter : 8 bit × 2 ch. SIO : 3 ch. PPG : 16 bit × 6 ch.
MB91355A		176P		
MB91F355A		176P		

Package: P-plastic

◎: Under development

MB91230 series FR60Lite

- For camera, IC recorder, home electric appliances control, etc.

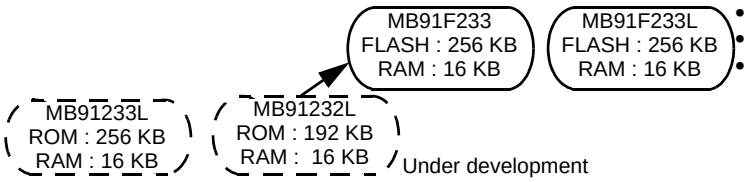

- Maximum clock frequency : 33.6 MHz
- Operating temperature range : 0 °C to +70 °C
- Operating power supply voltage
  MB91F233/V230 : +4.0 V to +5.25 V (External)
  +3.0 V to +3.6 V (Internal)
  MB91232L/F233L : +3.0 V to +3.6 V
  A/D, D/A input : +3.0 V to +3.6 V

Part number	Operating power supply voltage (V)	Package LQFP (0.4 mm)	Functions	
◎MB91232L	+3.0 to +3.6	120P	Maximum operating frequency : 33 MHz RAM : 16 KB ROM : 192 KB (MB91232L) 256 KB (MB91233L) FLASH memory : 256 KB (MB91F233/F233L) A/D converter : 10 bit × 8 ch. D/A converter : 8 bit × 2 ch. External interrupt input : 16 ch. UART : 4 ch. PPG : 16 bit × 6 ch.	Up/down counter : 16 bit × 2 ch. Reload timer : 16 bit × 4 ch. Free running timer : 8 bit × 2 ch. Watch timer : 15 bit × 1 ch. PWCtimer : 8 bit × 2 ch. Input capture : 16 bit × 2 ch. Output compare : 16 bit × 4 ch. LCDC : SEG00-31/COM0-3 Watch Dog Timer Bit search module
◎MB91233L		120P		
MB91F233	+4.0 V to +5.25 V (External) +3.0 V to +3.6 V (Internal)	120P		
MB91F233L	+3.0 to +3.6	120P		

Package: P-plastic

◎: Under development

(Continued)

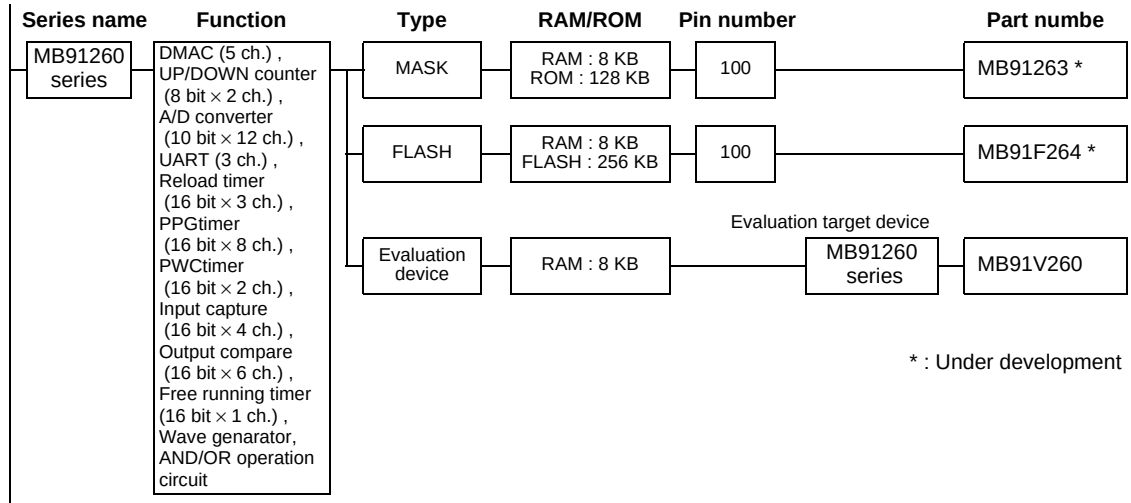

* : Under development

(Continued)

MB91260 series FR60Lite

• For inverter machine, cooking machine, etc.

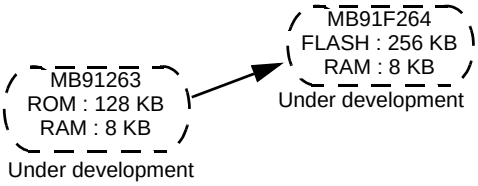

- Maximum clock frequency : 33 MHz
- Operating temperature range : –40 °C to +85 °C
- Operating power supply voltage : +4.0 V to +5.5 V

Part number	Operating power supply voltage (V)	Package LQFP (0.5 mm)	Functions	
◎MB91263	+4.0 to +5.5	100P	Maximum operating frequency : 33 MHz FLASH memory : 256 KB (MB91F264) ROM : 128 KB (MB91263) RAM : 8 KB DMA controller : 5 ch. UP/DOWN counter : 8 bit × 2 ch. A/D conberter : 10bit × 12 ch. UART : 3 ch. Reload timer : 16 bit × 3 ch.	PPGtimer : 16 bit × 8 ch. PWCtimer : 16 bit × 2 ch. External interrupt input : 10 ch. Input capture : 16 bit × 4 ch. Output compare : 16 bit × 6 ch. Free running timer : 16 bit × 1 ch. Wave genarator (for motor drive) AND/OR operation circuit
◎MB91F264		100P		

Package: P-plastic

◎: Under development

(Continued)

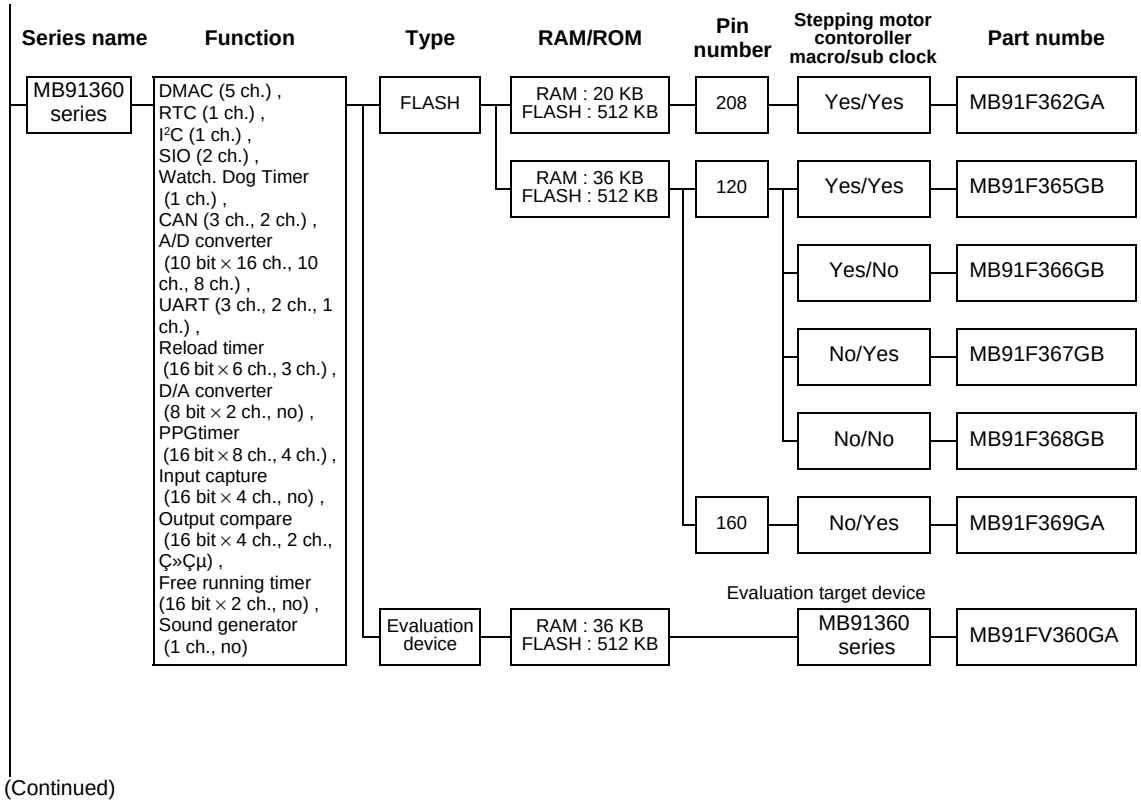

(Continued)

MB91360 series

• For meter, mechatronics control, etc.

• Maximum clock frequency : 64 MHz
• Operating temperature range : –40 °C to +85 °C
• Operating power supply voltage : +4.25 V to +5.25 V

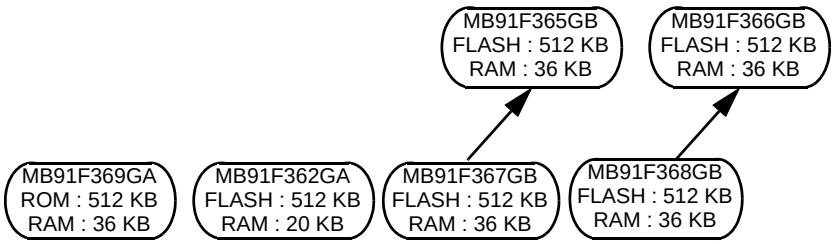

Part number	Operating power supply voltage (V)	Package		Functions	
		QFP (0.65 mm)	QFP (0.5 mm)		
MB91F362GA	+4.25 to +5.25	—	208P	Maximum operating frequency : 64 MHz FLASH memory : 512 KB RAM : 4 KB Instruction RAM : 4 KB DATA RAM : 12 KB DMA controller : 5 ch. (External 1 ch.) Stepping motor contoroller : 4 ch. A/D converter : 10bit × 16 ch. D/A converter : 10 bit × 2 ch. SIO : 2 ch. UART : 3 ch. I²C : 1 ch.	External interrupt : 8 ch. Input capture : 16 bit × 4 ch. Output compare : 16 bit × 4 ch. Free running timer : 16 bit × 2 ch. Reload timer : 16 bit × 6 ch. Watch. DOG Timer CAN : 3 ch. U-Timer : 3 ch. Real time clock : 1 ch. PPG : 8 ch. Sound generator : 1 ch.
MB91F365GB	+4.25 to +5.25	—	120P	Maximum operating frequency : 64 MHz FLASH memory : 512 KB RAM : 16 KB Instruction RAM : 4 KB DATA RAM : 16 KB DMA controller : 5 ch. Stepping motor contoroller : 4 ch. A/D converter : 10bit × 8 ch. D/A converter : 10 bit × 2 ch. (MB91F365GB) SIO : 2 ch. UART : 2 ch.	I²C : 1 ch. External interrupt : 8 ch. Input capture : 16 bit × 4 ch. Output compare : 16 bit × 2 ch. Free running timer : 16 bit × 2 ch. Reload timer : 16 bit × 6 ch. Watch. DOG Timer CAN : 2 ch. Real time clock : 1 ch. PPG : 16 bit × 8 ch. Sound generator : 1 ch.
MB91F366GB		—	120P		
MB91F367GB	+4.25 to +5.25	—	120P	Maximum operating frequency : 64 MHz FLASH memory : 512 KB RAM : 16 KB Instruction RAM : 4 KB DATA RAM : 16 KB DMA controller : 5 ch. A/D converter : 10bit × 8 ch. SIO : 2 ch. UART : 1 ch. I²C : 1 ch.	External interrupt : 8 ch. Input capture : 16 bit × 4 ch. Output compare : 16 bit × 2 ch. Free running timer : 16 bit × 2 ch. Reload timer : 16 bit × 3 ch. Watch. DOG Timer CAN : 2 ch. Real time clock : 1 ch. PPG : 16 bit × 4 ch.
MB91F368GB		—	120P		
MB91F369GA	+4.25 to +5.25	160P	—	Maximum operating frequency : 64 MHz FLASH memory : 512 KB RAM : 16 KB Instruction RAM : 4 KB DATA RAM : 16 KB DMA controller : 5 ch. (External 1 ch.) CAN : 2 ch. A/D converter : 10bit × 10 ch. SIO : 2 ch.	UART/U-Timer : 1 ch. I²C : 1 ch. External interrupt : 8 ch. Reload timer : 16 bit × 6 ch. Watch. DOG Timer Real time clock : 1 ch. Sound generator : 1 ch. PPG : 4 ch.

Package: P-plastic

(Continued)

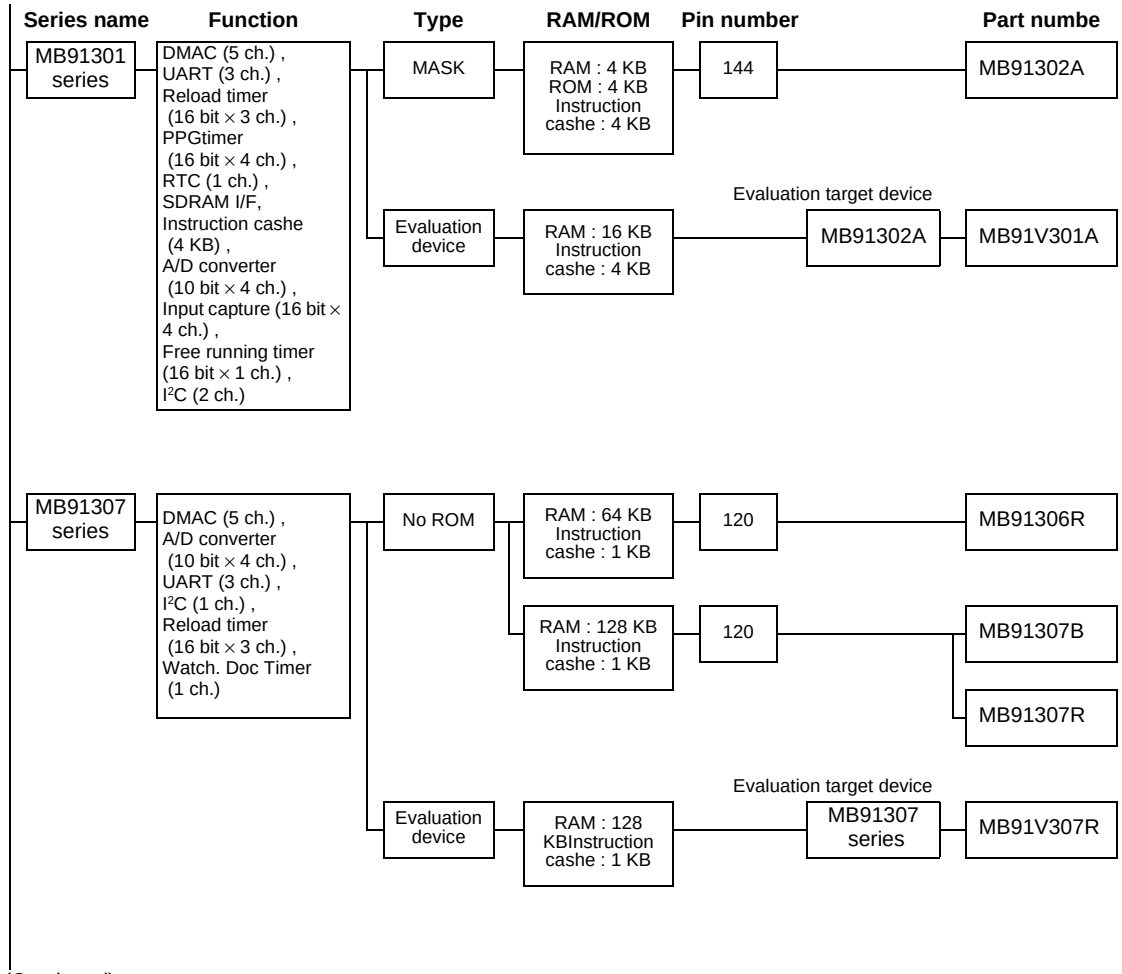

(Continued)

MB91301 series

• For printer, FAX, image processing, etc.

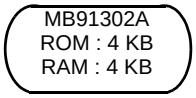

- Maximum clock frequency : 68 MHz
- Operating temperature range : 0 °C to +70 °C
- Operating power supply voltage : +3.0 V to +3.6 V

Part number	Operating power supply voltage (V)	Package LQFP (0.4 mm)	Functions	
MB91302A	+3.3 ± 0.3	144P	Maximum operating frequency : 68 MHz RAM : 4 KB ROM : 4 KB Instruction cashe 4 KB UART : 3 ch. External interrupt input : 9 ch. I²C : 2 ch.	Input capture : 16 bit × 4 ch. SDRAM I/F DMA controller : 5 ch. PPGtimer : 16 bit × 4 ch. A/D converter : 10 bit × 4 ch. Reload timer : 16 bit × 3 ch. Bit search module

Package: P-plastic

MB91307 series

• For FAX, printer, DVD player, etc.

- Maximum clock frequency : 66 MHz
- Operating temperature range : 0 °C to +70 °C
- Operating power supply voltage :
  MB91307B +3.0 V to +3.6 V
  MB91306R/307R +3.0 V to +3.6 V, +1.65 V to +1.95 V

Part number	Operating power supply voltage (V)	Package LQFP (0.5 mm)	Functions	
MB91306R	+3.3 ± 0.3 +1.8 ± 0.15	120P	Maximum operating frequency : 66 MHz RAM : 64 KB Cashe : Instruction cashe 1 KB UART : 3 ch. External interrupt input : 9 ch. I²C : 1 ch.	U-Timer : 3 ch. Reload timer : 16 bit × 3 ch. A/D converter : 10 bit × 4 ch. Watch. DOG Timer DMAC : 5 ch. (External 3 ch.)
MB91307B	+3.3 ± 0.3	120P	Maximum operating frequency : 66 MHz RAM : 128 KB Cashe : Instruction cashe 1 KB UART : 3 ch. External interrupt input : 9 ch. I²C : 1 ch.	U-Timer : 3 ch. Reload timer : 16 bit × 3 ch. A/D converter : 10 bit × 4 ch. Watch. DOG Timer DMAC : 5 ch. (External 3 ch.)
MB91307R	+3.3 ± 0.3 +1.8 ± 0.15	120P	Maximum operating frequency : 66 MHz RAM : 128 KB Cashe : Instruction cashe 1 KB UART : 3 ch. External interrupt input : 9 ch. I²C : 1 ch.	U-Timer : 3 ch. Reload timer : 16 bit × 3 ch. A/D converter : 10 bit × 4 ch. Watch. DOG Timer DMAC : 5 ch. (External 3 ch.)

Package: P-plastic

Features of Support Environments

(1) Comprehensive Development Environments (SOFTUNE Workbench) around C language

- Achieving effective development environments
- Enhancing the concerted use of independent development tools, allowing all tools to behave as if they were a single tool
- Support in collaboration with source generation management tools
- Made available both in Japan and Britain simultaneously

(2) Supporting the tools for quality, performance, analysis of source programs

- SOFTUNE C/C++ Checker
  Investigating the description form of a source to display the information to enhance portability/maintainability
- SOFTUNE C/C++ Analyzer
  Analyzing the source description; displaying the overall hierarchical organization; effective for maintainability/ portability

(3) Embedded type Real-time OS being provided

- Real-time OS in conformance with µITRON 3.0
- Conformance with the national industry standard µITRON specifications
- Level R (Required), Level S (Standard), part of Level E (Extended) (including memory pool, timer handler)
- Building block scheme
  Kernel code size: 2.7 KB (min.) to 8.4 KB (max.)
- High-speed task switch with delayed interrupt capability
- Fast task schedule with the bit search module

(4) Robust support of development using REALOS

- REALOS Configurator (REALOS/FR, SOFTUNE REALOS/FR):Easy-to-configure parameters for kernel generation
- REALOS debugger
- Supporting the in-line deployment options for C compiler REALOS system call
- REALOS Analyzer (SOFTUNE REALOS/FR): Analyzing the transition of task states to visually display the results

Development Procedure (When Fujitsu product is used.)

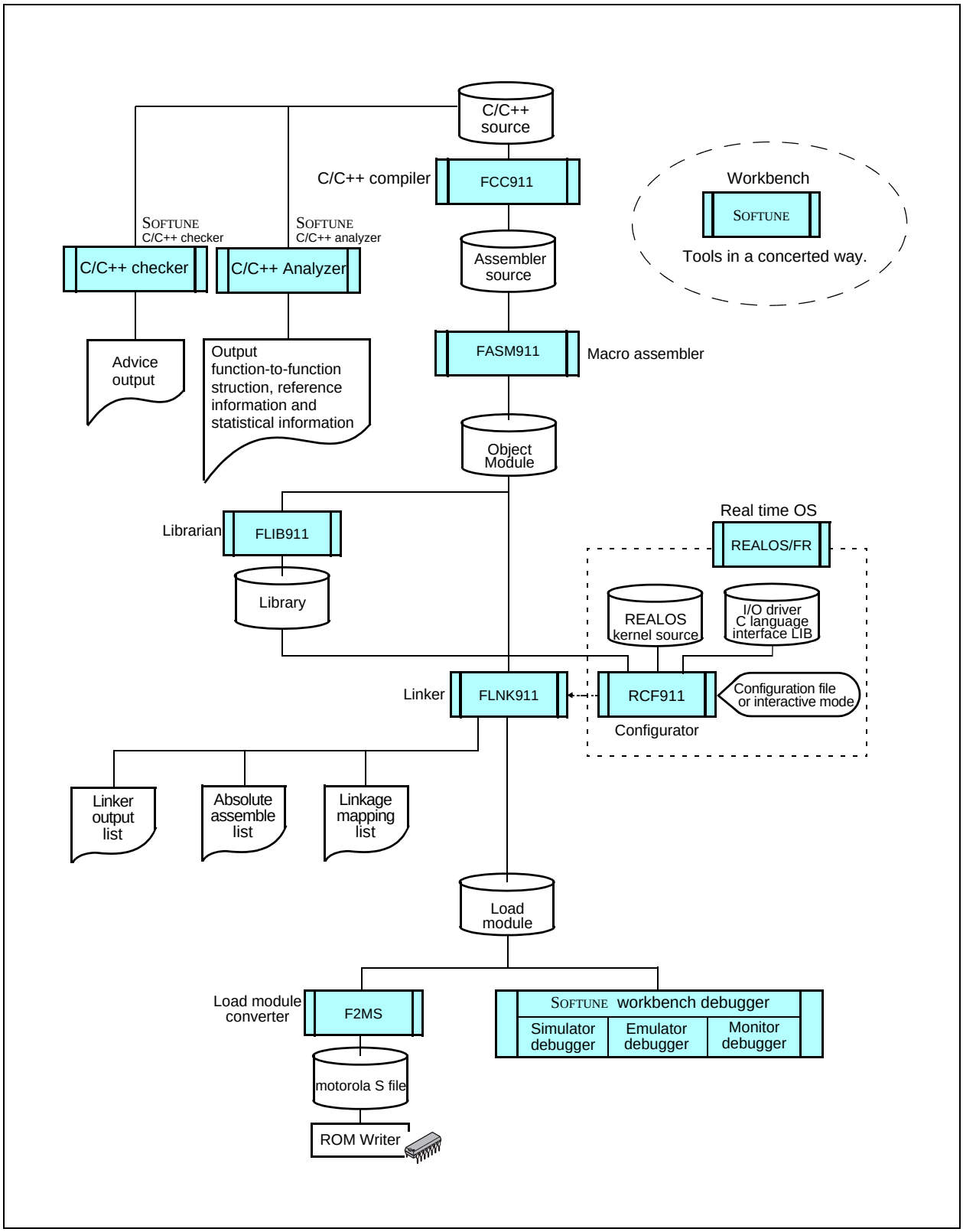

SOFTUNE V6 Support Software Product List (For FR Family)

Software	Operating Environment	Product number	Remarks
SOFTUNE V6 Professional Pack <Component> - Workbench - C/C++ compiler - Assembler Pack - C/C++ analyzer pack - C/C++ checker	- Personal computers FMV and similar IBM compatibles - Operating OS WindowsXP WindowsMe Windows2000 Windows98 WindowsNT4.0 - ICE MB2197 series MB2198 series	SP365030118QAC	1 license
		SP365030118QBC	3 licenses
		SP365030118QCC	5 licenses
		SP365030118QDC	10 licenses
SOFTUNE V6 REALOS/FR BASIC <Component> - Kernel - Configurator - REALOS Analyzer		SP365000218RCC	License free Kernel (source code provided)
SOFTUNE V6 REALOS/FR EVALUATION <Component> - Kernel - Configurator - REALOS Analyzer		SP365000218EVC	For evaluation Kernel (no source code)
SOFTUNE V6 Language Pack <Component> - C/C++ compiler - Assembler Pack	- Workstasion SunSPARC - Operating OS Solaris	SP275030218QAC	1 license
	- Workstasion HP9000/700 - Operating OS HP-UX	SP265030218QAC	1 license

- Pentium or higher CPU recommended. 64MB or more memory recommended. 200MB of a disk capacity is required.
- The part number is an ordered number of the newest version.
- An electronic manual (PDF format) is provided with each product (Japanese and English). Printed manuals are sold separately.
- Operating OS corresponds to Japanese and English.

Third party Support Software Product List (For FR Family)

Tool	**advice** Yokogawa Digital Computer Corporation	**OPENplus** GAIO TECHNOLOGY CO., LTD.	**MULT2000** GHS
Operating machine	PC98, DOS/V, SunSPARC, HP9000/700	Sun, HP, DEC, IBM, PC	PC, EWS
Operating OS	DOS, Windows, SunOS, Solaris, HP-UX	SunOS, Solaris, HP-UX, WindowsNT	Windows, UNIX
Media	3.5FD, DDS	CMT, DAT, 3.5FDD, etc.	CMT, DAT, 3.5FDD, etc.
C compiler	Fujitsu or GAIO TECHNOLOGY	XCC-V + definition for FR Family	ccfr20
Assembler pack		XASS-V, XLNK-V, XLIB-V, XOUT-V, XABS-V + definition for FR Family	asfr20 lx ax elf2sr
Linkage kit Linker Librarian Load module converter			
Absolute assemble list preparation tool			
Simulator debugger	—	XDEB-V + definition for FR Family	MULTI
Emulator debugger	microVIEW-G Debugger data converter	XDDI-V + definition for FR Family	
ICE	advice (Yokogawa Digital Computer)		—

<Contact>
Yokogawa Digital Computer Corporation TEL: 81-423-33-6222
GAIO TECHNOLOGY CO., LTD. TEL: 81-3-3662-3041
Advanced Data Controls, Corp. TEL: 81-3-3576-5351 (GHSêª (Green Hills Software))

SOFTUNE

1. The SOFTUNE Integrated Development Environment

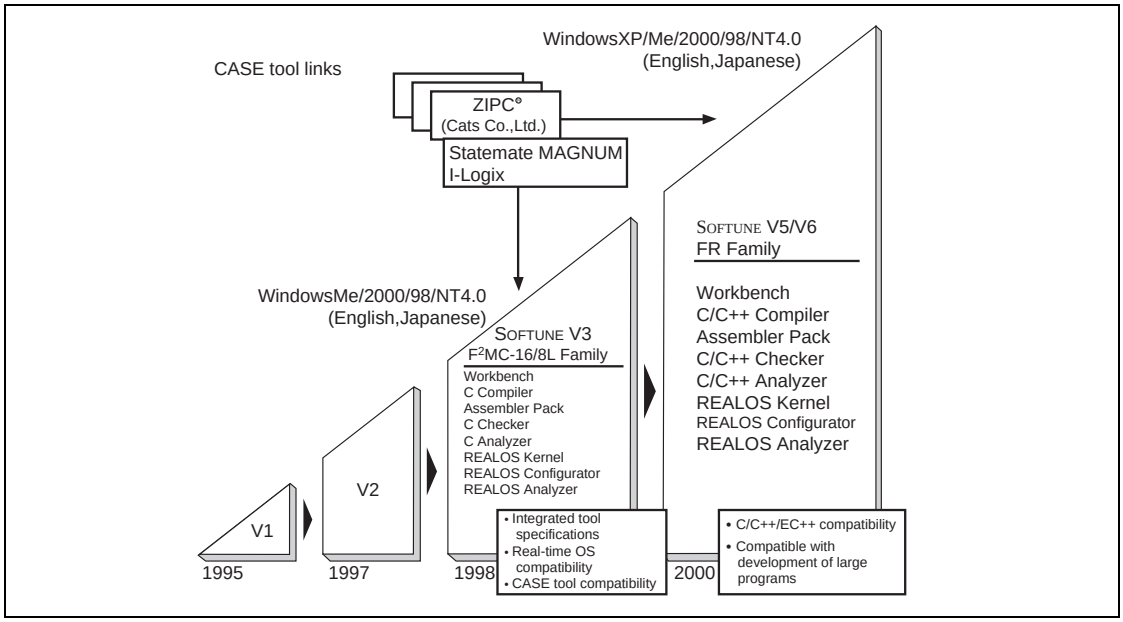

2. SOFTUNE Structure and Features

Integrated manager and debugger modules
Errors can be corrected on the fly, as they are discovered, and the resulting code can be debugged on the spot.
A variety of tools to support C/C++-language coding
"C/C++ Checker" confirms code operation and "C/C++ Analyzer" analyzes the code's structure.
Includes such tools as Configurator and Analyzer to facilitate the use of REALOS, which conforms to the µITRON specifications.

(1) Removing the Annoying Settings which are Part of Program Development

Developing programs for different systems requires the programmer to edit source code, perform actual builds and confirm program operation (debug). Finally, the programmer returns to the editing process to incorporate necessary changes, as indicated by the debugging results.
SOFTUNE is an integrated developing environment which is designed to perform such repetitive processes smoothly and efficiently. It is the next generation of SOFTUNE, which has evolved to meet various needs of our customers.

(2) Program Flow

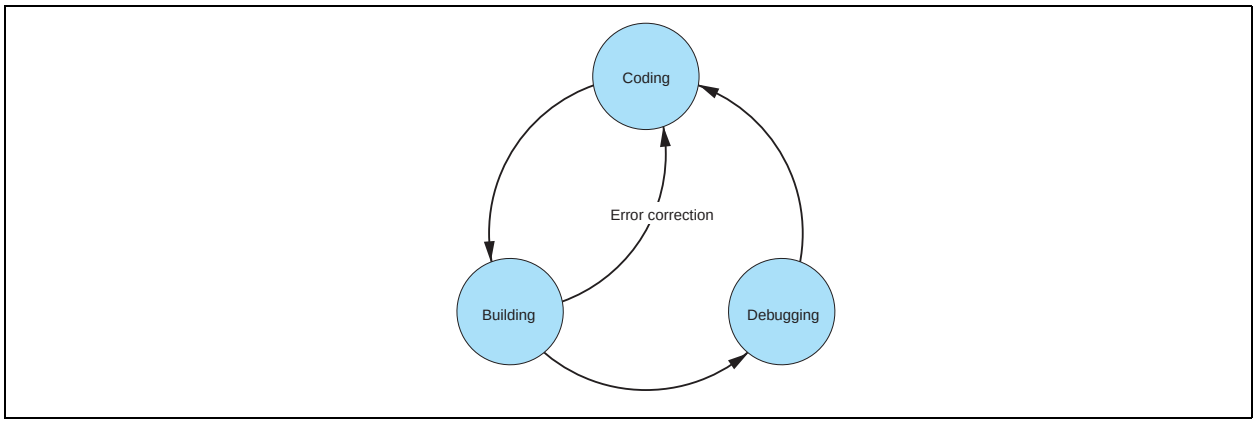

(3) Structure of SOFTUNE

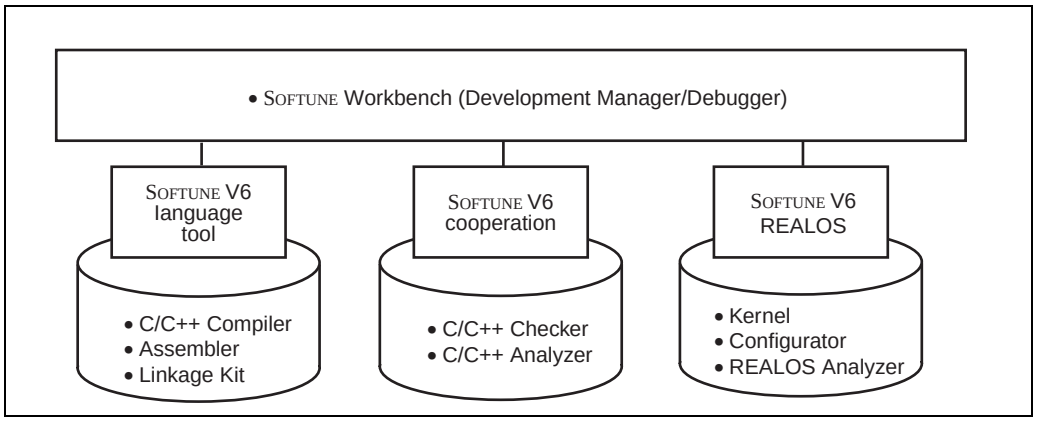

(4) Environment with SOFTUNE

The Efficient and Easy-to-Use Integrated Developing Environment

Program development requires repeated editing, make/build, and debugging operations. Performing these functions smoothly and effectively contributes to improved efficiency.

The SOFTUNE integrated developing system is designed to meet program developers' numerous demands, while ensuring ease of use.

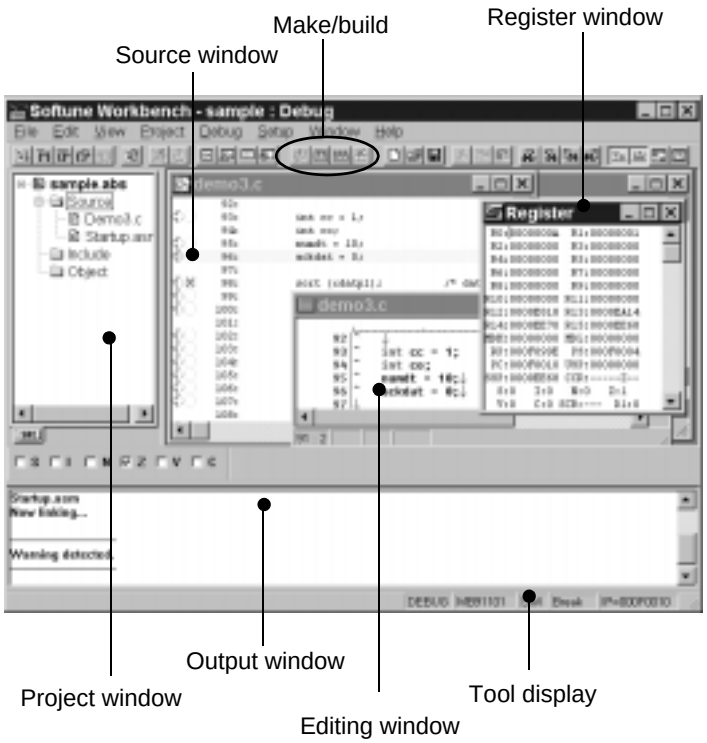

3. Manager Functions

Software programming proceeds according to the “project file, ” which contains all the information needed for programdevelopment.

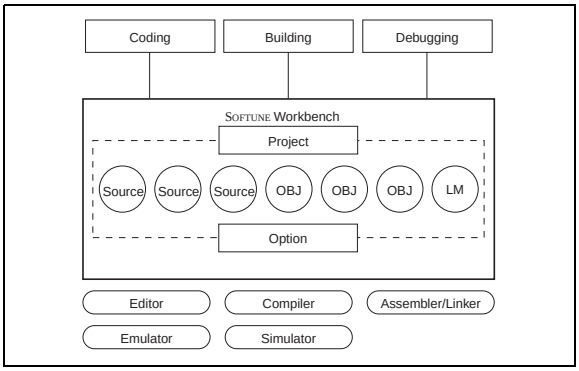

(1) Effective Project Usage

Whether working alone on several projects simultaneously or developing a project as a group, project files can be used to create a simple developing environment.

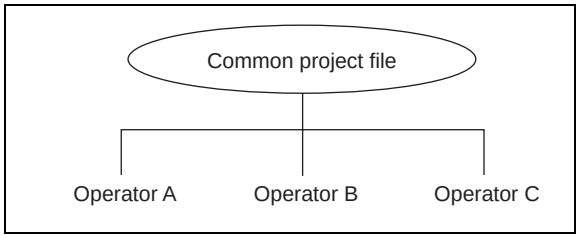

(2) Extremely Easy to Use

- Built-in Editor

  The built-in editor comes complete with many useful functions, such as visual keyword emphasis and auto-indent.
- Error Jump and On-line Help

  Errors that occur during builds are displayed in the output window at the bottom of the screen.

  To make a "Tag-jump" Double-click Mouse.Once on the error press "F1 key" for a more detailed error display.
- Cooperation with Commercially Available Editors

  To meet developers’ requests to use editors to which they are accustomed, SOFTUNE can be configured to use the following commercially available editors:

  Codewright32, TextPAD32 and others.

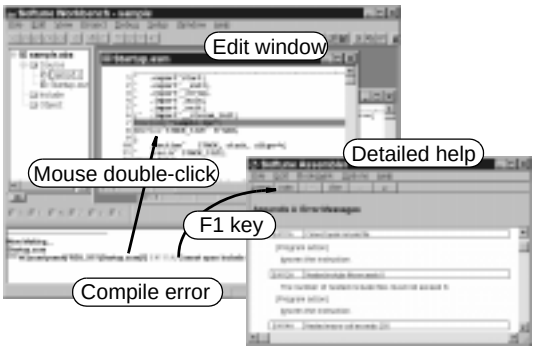

(3) Customizable Environment

When sharing files, cooperation with source generation management tools is assured, and file type conversion tools are called up, so that each person can operate in his or her own customized developing environment.

4. Debugger Function

SOFTUNE Workbench supports three debuggers that are needed at various stages of development. The appropriate debugger environment can be selected to match the situation.

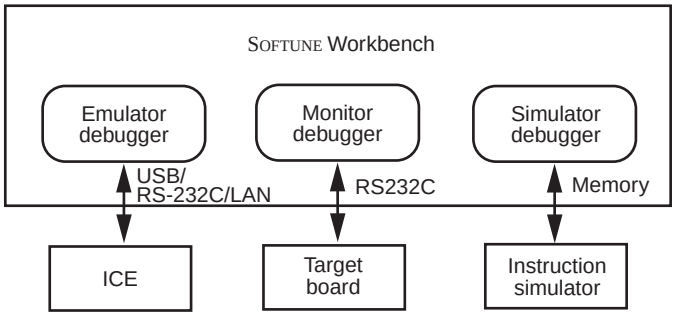

(1) Easy-to see Screen Information

The user can freely change the screen layout by selecting the necessary windows. In addition, the displayed information can be selected to provide only the infomation that is necessary.

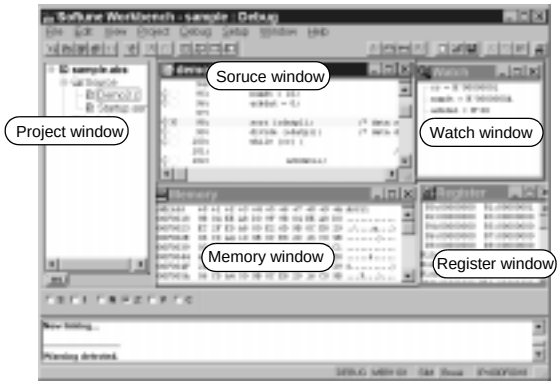

(2) Simple Environment Setting

- Debugging Environment: Setup Wizard
  The setup wizard supports the selection of communication lines with emulation pods and boards, as well as window settings.
- MCU Operating Environment
  The so-called “CPU information file,” which contains the information required to support all MCUs, is provided as standard. Necessary information such as I/O port locations, ROM/RAM capacity and initial addresses can be set automatically.
- Saving and Restoring the Debugging Environment
  Previous debugging environment specification, such as window locations, breakpoint settings, and memory mapping information, are saved, so that these settings are restored the next time the program is initiated.

5.Cooperation

In cooperation with SOFTUNE Workbench, the following SOFTUNE components help improve the quality of C-language programming, which greatly increases reviewing and documentation efficiency.

1) SOFTUNE C/C++ Checker

Designed to meet the following requests from beginners through to advanced users:

- Eliminate all coding mistakes.
- Review programs quickly and efficiently.
- Enable even C-language beginners to create quality code.
- Maximize coding skills.
- Use software assets on Fujitsu CPUs.

The SOFTUNE C Checker checks code for maintainability, methods of expanding specifications and transportability; indicates areas where quality and performance could be improved; and reports these results to the user. The user can then review the C-language code.Outline

Recent software (ROM) for embedded microcontrollers has been developed in the C language. However, it is difficult to understand messages which are output from a compiler unless the language specifications are well known.
This development support tool checks C-source programs to display and print advice for better quality and performance. It also has the facility for selecting necessary advice carefully.

(1) Features

- Outputs advice suitable for objectives: Portability, coding error
  performance, porting to Fujitsu CPU's
- Allows customization to a programmers level.
- Works with C compilers for Fujitsu microcontrollers.
- Provides easy operation and simple display over a GUI.

(2) Advising Function

The following pieces of advice are given. "Reason of Check", "Example of Program", "Suggestion of Correction", and "One-point Advice" are displayed and explained for each check item.

- Portability

  This tool makes a close check on the items "processing-definded operation" and "undefined operation" which can be problems in portability in the ANSI standard.
  It also gives an explanation of the operation of C compilers (fcc911 and cc907) for Fujitsu microcontrollers.
  For example, the tool gives the user proper advice on many problems (such as a data type acceptable to a structure, code, and its arrangement) at the time of printing.
- Coding error

  This tool indicates the items which are not wrong in the language specifications but may cause an error and the items which are logically inconsistent.
  For example, the equivalent expression "**`if (a==0)`**" in the if statement is likely to be typed as the assignment expression "**`if (a=0)`**" by mistake. Most compilers cannot detect such an error.
- Performance

  This tool indicates the items which generally provide better performance and the items which are essential and effective for the FR family and F²MC-16 family.
  Stress is especially, put on the detection of object size reduction which can be a problem in software for embedded microcontrollers.
  For example, if a function return value is a structure of the double type, an area is reserved for the return value and an object to be transferred to the area is output.
- This tool advises the user to transfer the function return value by a pointer and largely reduce the objects size.
- Porting to Fujitsu CPU's

  This tool advises the user what to consider in porting exsting software from other makers' CPU to Fujitsu CPU in the FR family and F²MC-16 family.
  For example, in porting software resources created for the F²MC-16 family to the FR family, this tool advises the user to delete the expansion specifications (**`__far, __near, and __direct etc.`**) inherent to the F²MC-16 family.

- Indicated messages output

- Coding error indicated and advice displayed

- Advice for porting to Fujitsu C compilers displayed

- Massages indicated on quality listed

2) SOFTUNE C/C++ Analyzer

Designed to meet the following user situations:

- One wishes to examine a program's structure or processing, but the programmer is absent or documentation is unavailable.
- During program development, one wishes to create a structural program that takes into account structure and processing.
- One wishes to examine the range of effects that altering a program will create.
- One wishes to create a program's internal documentation.
- One wishes to explore the possibilities of a more efficient program.

The structure and usage of data in a C-language source programs are displayed visually, and the internal data structure, functional tree, stack usage and other infomation can be acquired and stored in a file.

(1) Outline

Recent software(ROM) for embedded microcontrollers is increasingly extending its development scale. This situation is created from development by many programmers, diversion of exsting resources, and use of package programs.

This development support tool statically analyzes the C-source program to visually display and print the function-to-function structure, reference data, and statistical data. This tool creates data necessary for design and maintenance, as well as having a feature peculiar to C compilers for Fujitsu Microcontrollers (a feature of calculating the maximum amount of stacks used), considering its embedded feature.

(2) Features

- Displays and prints the function-to-function structure, reference data, and statistical data.
- Supports the embedded capability of C compilers for Fujitsu microcontrollers.
- Provides easy operation and simple display over a GUI.

(3) Explanation of Features

The following data is enabled for development, maintenance, and higher porting efficiency.

- Graphic flow

  This feature block-structures function calls for visual display. It also allows the display of the entire function and calls from any function and the retrieval of functions.
- Logic flow

  This feature visually displays the internal structure of the C-source program.
  For example, it shapes the control structure of **`for`** and **`switch`** statements and structure declarations. A jump feature for retrieval by functions, variable, tag, and macro names is also provided.
- Displaying statistical data

  This feature displays the complexity and line count of a programs every function, the source of destination function name, and the count of appearance of (**`if`**, **`for`** and **`asm`** statements etc.).
- Displaying argument data

  This feature displays data about the function-called file name and line number, the return value of the declared function, and the type of argument. It also checks the adjustability of dummy argument with actual argument.
- Displaying cross-reference data

  This feature displays data about the functions and variables that a function is using, tag and macro declarations, and the appearing line number.
- Displaying global data

  This feature displays the function using global variables. It also detects unused global variables.
- Program checking

  This feature checks and displays the adjustability of dummy argument with actual argument.
- Calculating the maximum amount of stacks used

  This feature calculates and displays the amount of stacks used in the entire function, as well as in any function. This calculation is made on the basis of the output of C compilers (fcc911 and cc907) for Fujitsu microcontrollers (FR family and F^{2}MC-16 family).

- Displaying graphic flow

- Displaying logic flow, statistical and cross-reference data

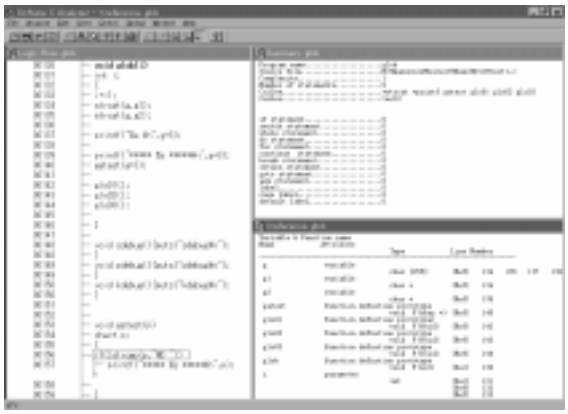

- Displaying logic flow (focus), argument and global data

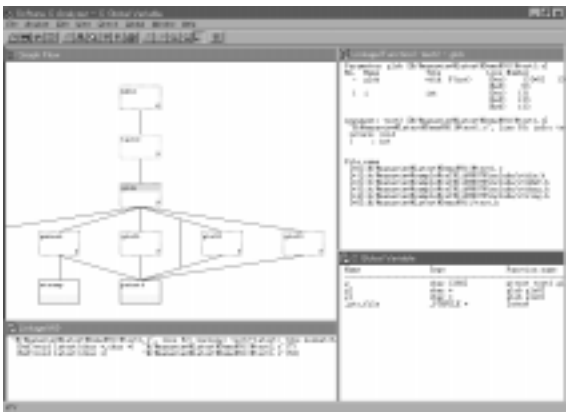

- Displays stack use volume (green numbers) and largest stack configuration (orange numbers)

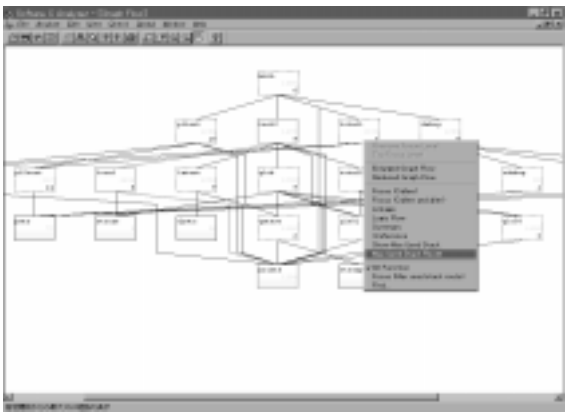

3) SOFTUNE C/C++ Compiler

The C/C++ compiler supports C/C++/EC++ and three language modes.

(1) C++ Mode

This mode is compatible with ANSI/ISO-compliant C++ language, allowing code to remain highly transferable.

(2) EC++ * Mode

This mode removes C++ language specifications that can cause the object efficiency of built-in programs to deteriorate. Developing in EC++ mode allows the creation of applications that meet stringent object size and speed limitations on built-in programs, resulting in efficient code.

(3) C Mode

This mode is a C-language specification mode that supports ANSI/ISO-compliant code. C Mode permits the use of existing C-language program assets, and allows development to be divided into C-language and C++ language codes.

In addition, these three modes all continue to support embedded extended language specifications (assembler description function, interception description function, I/O area access description function, etc.), allowing the specification of highly efficient MCU-specific programs.

Furthermore, the compiler and linker automatically generate C++ language templates themselves, allowing users to generate templates having minimal object size without complicated procedures.

* :EC++ (Embedded C++) Language Specifications: A subset of ISO/ANSI C++ language specifications including those specifications pertaining to embedding.

6. µITRON-Compliant Real Time OS for FR Family(SOFTUNE REALOS/FR)

(1) Overview

REALOS/FR is the real time OS for the FR Family of Fujitsu proprietary 32-bit MCUs, conforming to the µITRON 3.0 specifications.

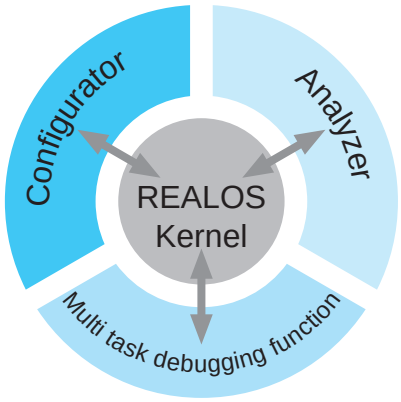

- **Features**

  µITRON 3.0 compliant
  System design customized for 32-bit MCUs for control purposes
  High-speed dispatch and interrupt processing
  In-line expansion of system call functions
  Providing a sample I/O driver
  Support for a multi window configurator
  Support for a REALOS dedicated, multi window debugger

- **REALOS/FR Specifications**

Name	Description
Target CPU	FR
Maximum number of task	32, 767
Maximum number of priority levels	32
Scheduling method	Priority-base, event-driven type
Number of system calls	SOFTUNE REALOS/FR:58
Complying specifications	µITRON 3.0 specifications
Kernel coding	Assembly language
Application coding	C and assembly languages
Kernel size	About 2.7 KB (resident) to About 7.2 KB (maximum configuration)

(2) Configuration

- **Kernel**

  The kernel provides the basic functions of the real time OS. It is an event-driven, multitasking real time OS. The functions to be used by application programs can be selected as system calls.

- **System calls**

Function	Instruction	Description
Task management functions	**sta_tsk**	Start task
	ext_tsk	Exit local task
	ter_tsk	Terminate remote task
	dis_dsp	Disable dispatch
	ena_dsp	Enable dispatch
	chg_pri	Change task priority
	rot_rdq	Rotate task ready queue
	rel_wai	Release remote task from wait state
	get_tid	Get local task ID
	tsk_sts	Reference task status
Task-supplied synchronization functions	**sus_tsk**	Force remote task into wait state
	rsm_tsk	Resume task in forced wait state
	frsm_tsk	Force task in forced wait state to resume execution
	slp_tsk	Put local task into sleep state
	tslp_tsk	Put local task into sleep state (to sleep until timeout)
	wup_tsk	Wake up remote task
	can_wup	Cancel task wakeup request
Synchronization/transmission functions	**sig_sem**	Return semaphore resource
	wai_sem	Poll semaphore resource
	preq_sem	Poll semaphore resource (polling)
	ref_sem	Reference semaphore status
	set_flg	Set event flag
	clr_flg	Clear event flag
	wai_flg	Wait for event flag
	pol_flg	Wait for event flag (polling)
	twai_flg	Wait for event flag (with timeout)
	ref_flg	Reference event flag status
	snd_msg	Send data to mailbox
	rcv_msg	Receive data from mailbox
	prcv_msg	Poll and receive message from mailbox (polling)
	trcv_msg	Receive data from mailbox (with timeout)
	ref_mbx	Reference mailbox status
Variable length memory pool	**get_blk**	Get variable length memory block
	pget_blk	Get variable length memory block (polling)
	rel_blk	Return variable length memory block
	ref_mpl	Reference variable length memory block
Fixted length memory pool	**get_blf**	Get fixed length memory block
	pget_blf	Get fixed length memory block (polling)
	tget_blf	Get fixed length memory block (with timeout)
	rel_blf	Return fixed length memory block
	ref_mpl	Reference fixed length memory block status
Interrupt mqnqgement function	**ret_int**	Return from interrupt handler
	loc_cpu	Disable interrupt and dispatch
	uni_cpu	Enable interrupt and dispatch
	chg_ilm	Change interrupt level
	ref_ilm	Reference interrupt level status
Time management functions	**set_tim**	Set system clock
	get_tim	Reference system clock
	dly_tsk	Delay task
	def_cyc	Define cyclic handler
	act_cyc	Activate/control cyclic handler
	ref_cyc	Reference cyclic handler status
	def_alm	Define alarm handler
	ref_alm	Reference alarm handler status
	ret_tmr	Return from timer handler
System management function	**get_ver**	Get version number
	ref_sys	Reference system status

- **Sample programs**

  Sample programs are provided as practical coding examples for user training purposes.

(1) REALOS Configurator

The configurator helps when setting conditions for creating the REALOS kernel, Necessary settings are made according to the display on the configurator screen, simplifying kernel configuration.

(2) Multitask Debugging Function

The following debugging functions are supported, which are necessary for configuring a system using REALOS.

- Displaying object conditions
- Issuing a system call
- Task trace function
- Breaking a system call
- Breaking a task dispatch

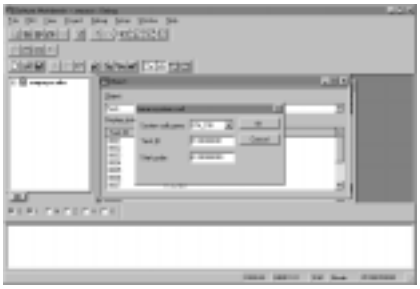

(3) REALOS Analyzer

The performance of the system by which REALOS is built in and the state transition of the task are analyzed and displayed by Graphic.

- Task transition flow, transition tree
- Task status, stack monitor
- Analyzed of execution time
- List of object or cue

Evaluation Tools for Support Hardware FR families (MB2197 emulator)

Features

- Linear power supply voltage support from +2.7V to +5.5V
- Supports debugging of source level (assembly and C languages, a mixed indication)
- Simplified graphic interface operation execution using pull-down menu and buttons
- Real time trace function
- Displays source codes, variables, register, memory and trace on multi windows
- Hardwear break × 5, softwear break × 8192, code event × 2, data event × 2
- Operation cycle measurement function
- Host I/F (standard accessories) : RS-232C (max 19.2 Kbps) , LAN (10BASE-2)

System Overview

System configuration

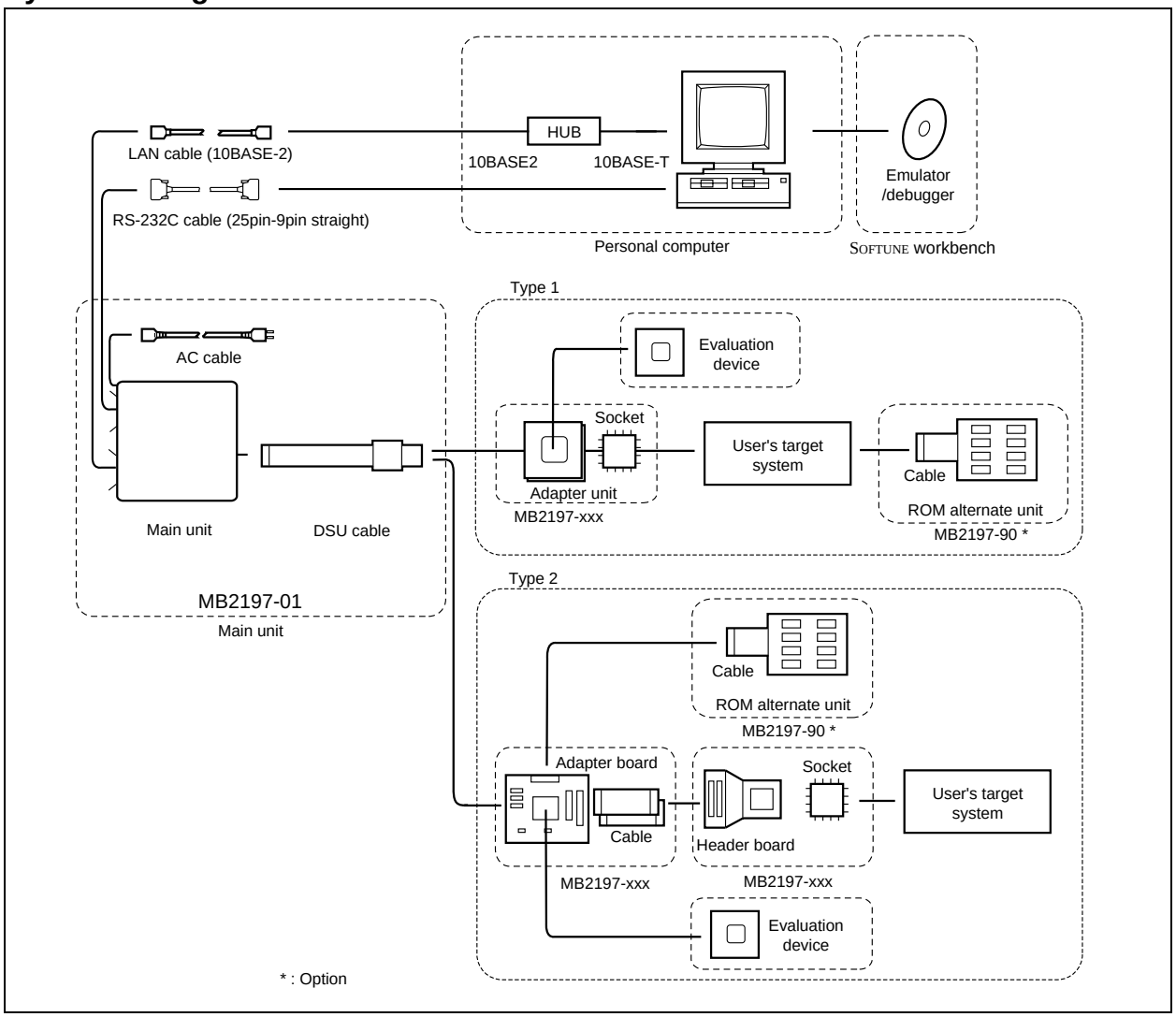

Evaluation Tools for Support Hardware FR families (MB2198 emulator)

Features

- Linear power supply voltage support from +2.7V to +5.5V
- Supports debugging of source level (assembly and C languages, a mixed indication)
- Simplified graphic interface operation execution using pull-down menu and buttons
- Real time trace function
- Displays source codes, variables, register, memory and trace on multi windows
- Hardwear break × 5, softwear break × 8192, code event × 2, data event × 2
- Operation cycle measurement function
- Host I/F (standard accessories) : RS-232C (max 115 Kbps) , LAN (10BASE-T, 100BASE-TX) , USB 1.1

System Overview

System configuration

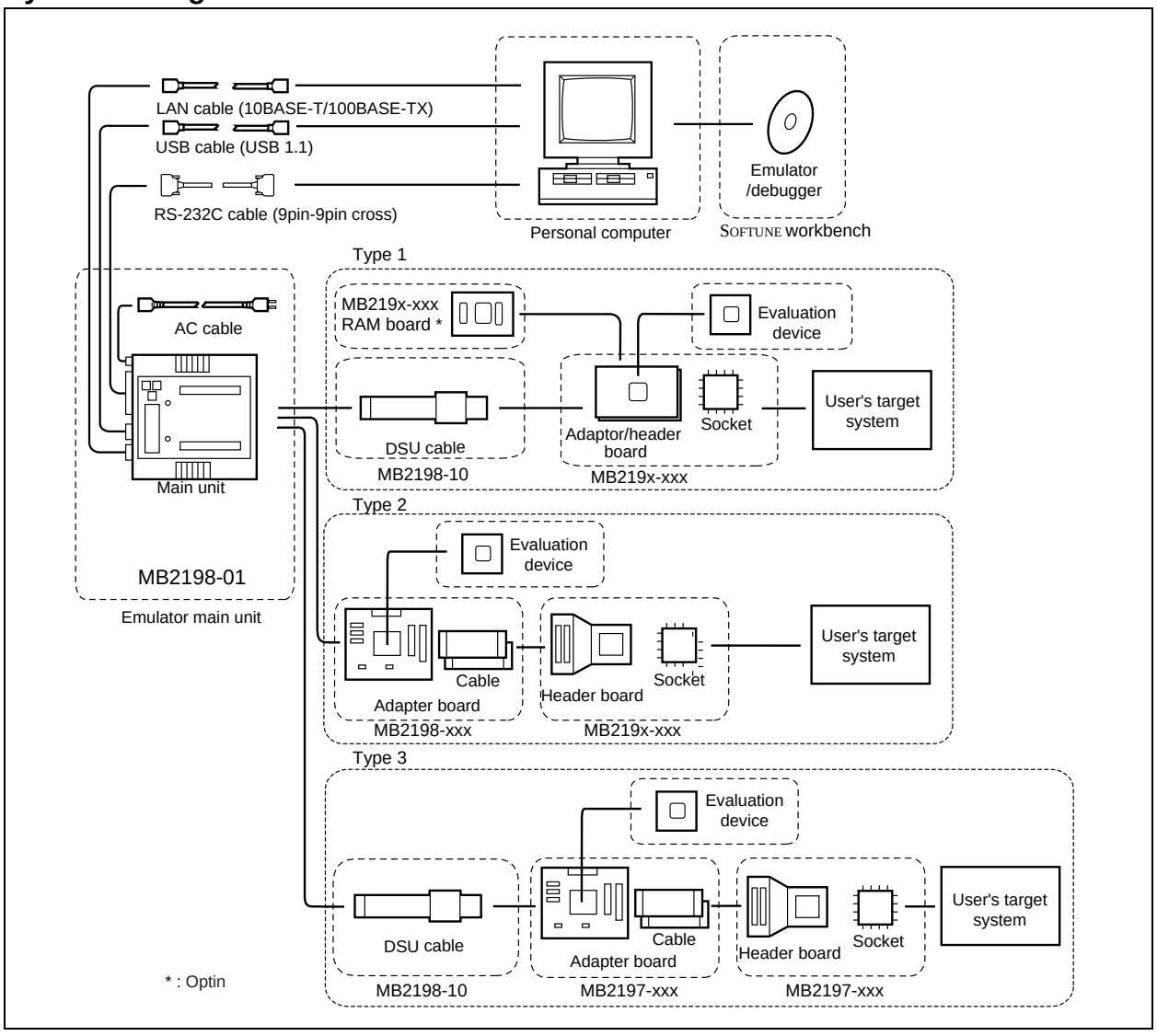

- **System configuration for MB91101A, MB91107A, MB91121**

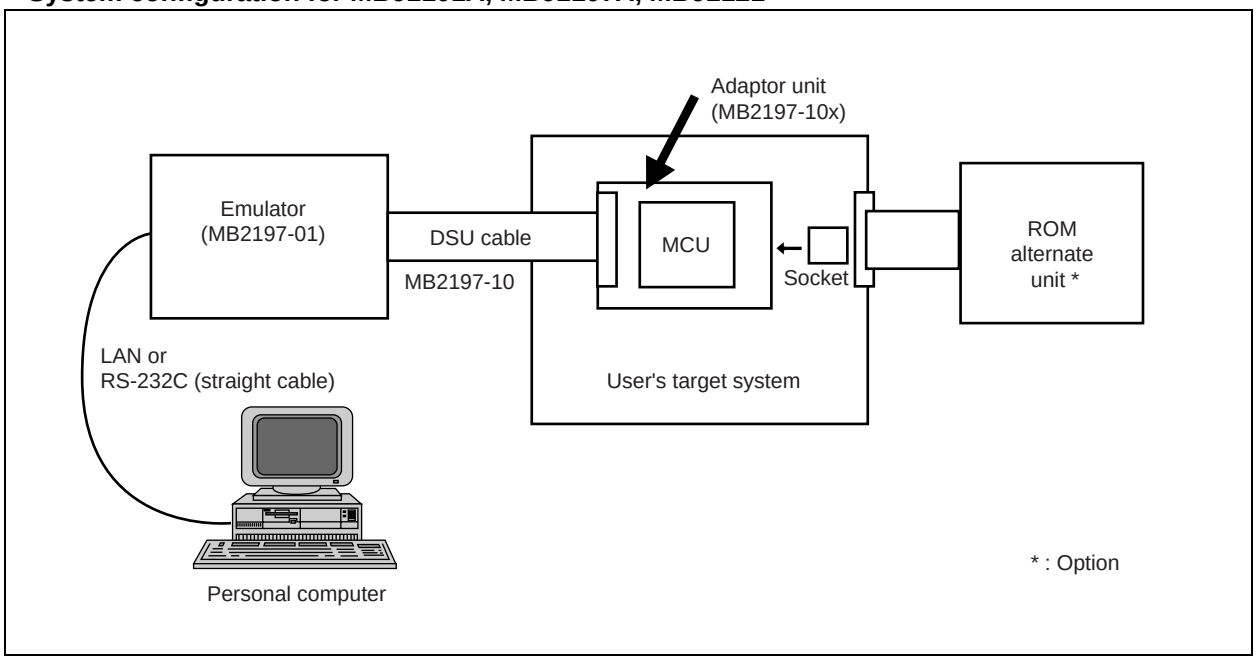

- **System configuration for MB91106A, MB91F109, MB91110**

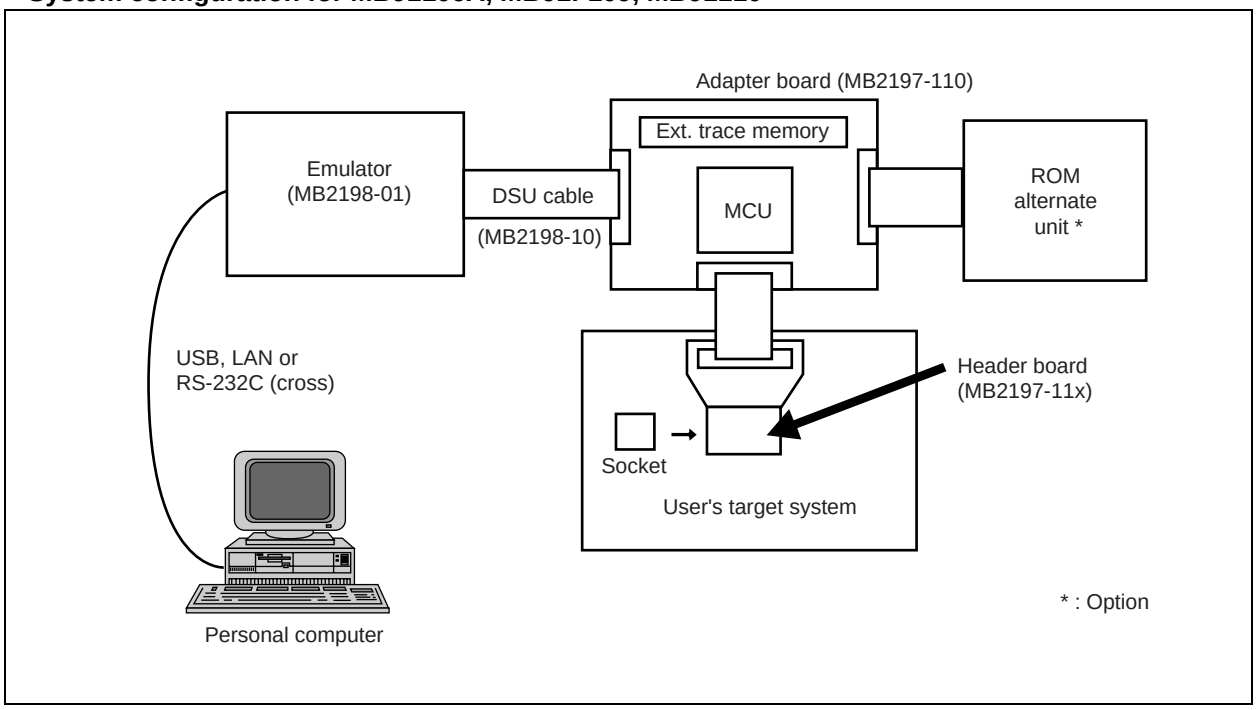

- **System configuration for MB91130, MB91150, MB91340**

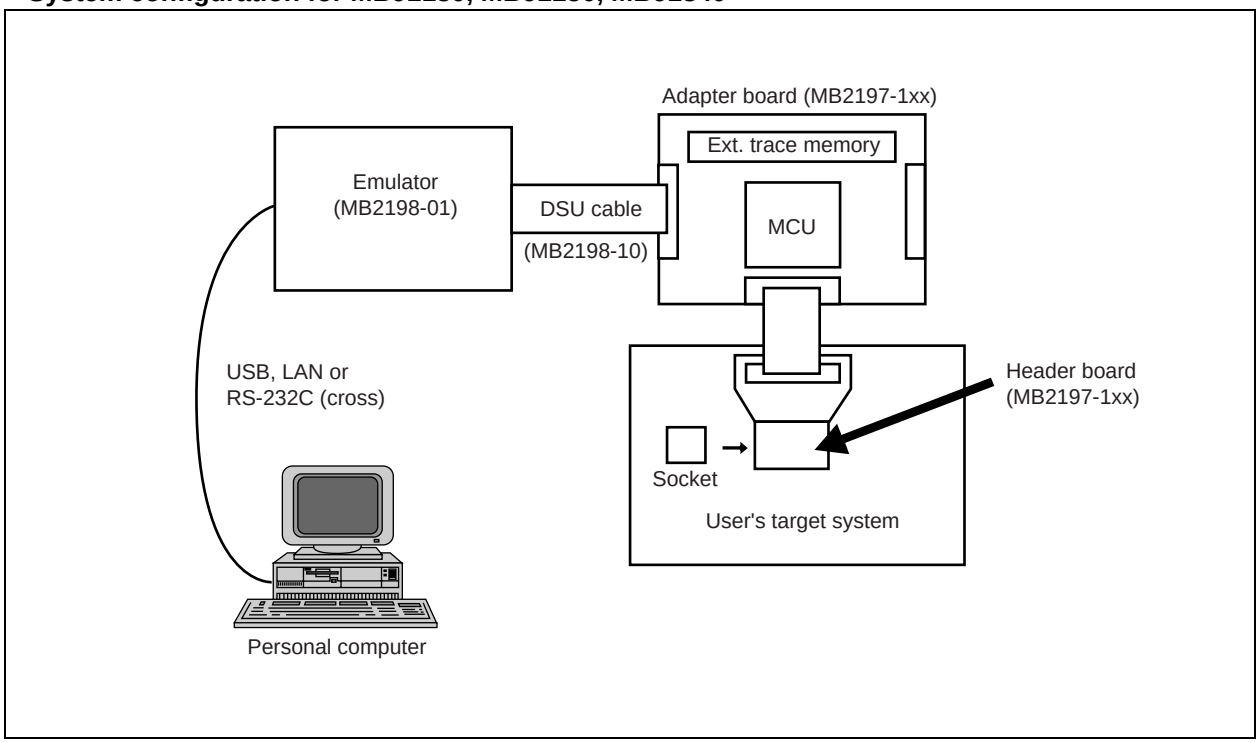

- **System configuration for MB91302A**

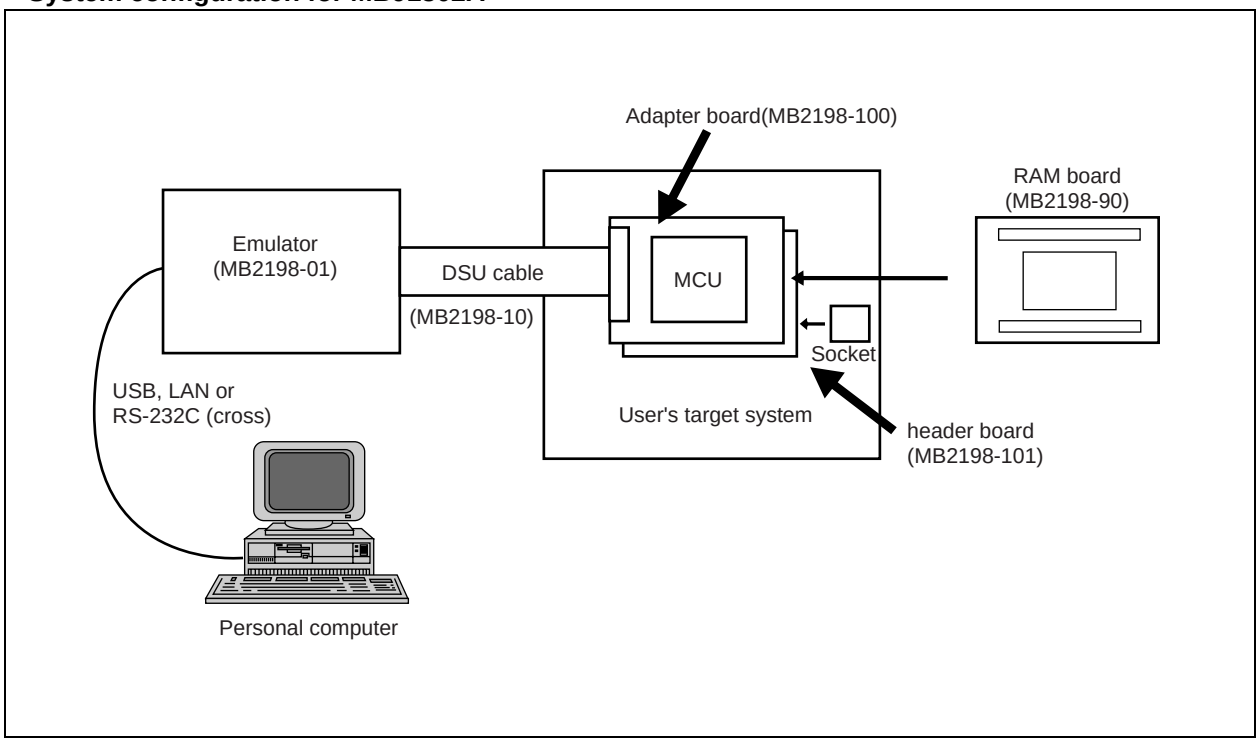

System

• For FR (DSU2/3) Emulator

Name	Model type	Remarks
Emulator main unit for FR (DSU2/3)	MB2197-01	• The systems development support tool which used MCU for evaluating FR and builds in DSU interface. • Power supply voltage : AC100V or AC200 V • Dimensions : 210 mm (width) × 297 mm (depth) × 87 mm (height) Weight : 2.7 kg • With MB2197-10 (DSU2/3 cable)
DSU2/3 cable	MB2197-10	Used to connect the emulator main unit to the adaptor unit or the adapter board.
ROM alternate unit *	MB2197-90 (with 100-V AC adapter)	• Option for FR family • Memory board: Capable of substituting the memory on the target board • Memory size: 4 Mbytes • Data bus size: Selectable from among 8, 16, and 32-bit configurations • Write protect function

*: The ROM alternate unit is directly connected to the CPU bus. To use the unit, therefore, the target board must be designed so that the unit can be connected on the board.

• For FR (DSU3/4) Emulator

Name	Model type	Remarks
Emulator main unit for FR (DSU3/4)	MB2198-01	• The systems development support tool which used MCU for evaluating FR and builds in DSU interface. • Power supply voltage : AC100V or AC200 V • Dimensions : 150 mm (width) × 210 mm (depth) × 46 mm (height) Weight : 2.7 kg
DSU3/4 cable	MB2198-10	Used to connect the MB2198-01 to the adapter board.

For MB91101A

ICE (made by Fujitsu)

• Standard tool

Name	Model type	Note
Evaluation device	MB91V101A	—
Emulator main unit for FR (DSU2/3)	MB2197-01	• The systems development support tool which used MCU for evaluating FR and builds in DSU interface. • Power supply voltage : AC100V or AC200 V • Dimensions : 210 mm (width) × 297 mm (depth) × 87 mm (height) Weight : 2.7 kg • With MB2197-10 (DSU2/3 cable)

• Adapter

Name	Model type	Note
Adapter unit (LQFP-100)	MB2197-101	• Adapter unit to connect the user system using an LQFP100. • IC149-100-□25-B5 for MB91101A *1. The MB91V101A is required separately.
Adapter unit (QFP-100)	MB2197-102	• Adapter unit to connect the user system using a QFP100. • IC149-100-□14-B5 for MB91101A *1. The MB91V101A is required separately.

• Option tool

Name	Model type	Note
ROM alternate unit *3	MB2197-90 (with 100-V AC adapter)	• Memory board: Capable of substituting the memory on the target board • Memory size: 4 Mbytes • Data bus size: Selectable from among 8, 16, and 32-bit configurations • Write protect function

• Option

Name	Model type	Note
DSU2/3 cable	MB2197-10	Used to connect the emulator main unit to the adaptor unit or the adapter board.

LQFP-100

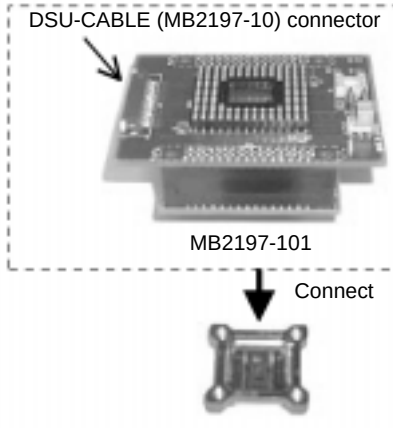

IC149-100-□25-B5 *2
(Purchase separately.)

QFP-100

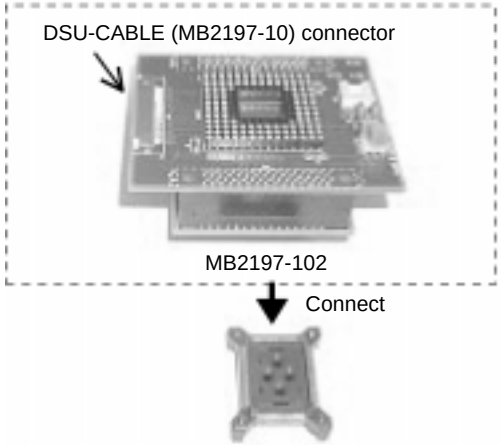

IC149-100-□14-B5 *2
(Purchase separately.)

Evaluation board

Name	Model type	Note
Evaluation board (Main board)	MB91906EB	• Main board + daughter board • For 5 V, 3 V products
Daughter board for MB91101A	MB91901EB	• For ICE (made by Fujitsu) • Combined use main board (MB91906EB) • Buit-in MB91V101A
	MB91902EB	• For ICE for MB91101A (Yokogawa Digital Computer Corporation) • Combined use main board (MB91906EB)

• Simple target board

Name	Model type	Note
ICE Simple target board for MB91101A (FR30SRAM board)	MB91903EB	• Main board + Simple target board • Buit-in MB91V101A • Connection to ICE (made by Fujitsu) • RAM 2 KB

Third party

Company name	Name	Note
SOPHIA SYSTEMS CO., LTD	UniSTAC for FR30	Package : LQFP100 pin (0.5 mm pitch) QFP100 pin (0.65 mm pitch)
Yokogawa Digital Computer Corporation	Advice (AD250 series)	Package : LQFP100 pin (0.5 mm pitch) QFP100 pin (0.65 mm pitch)

*1 : The adapter requires an IC socket manufactured by YAMAICHI ELECTRONICS Co., Ltd. (Separately priced)
<Contact> Yamaichi Electric Mfg. TEL: 81-3-3778-6121
*2 : The IC socket is mounted on the foot pattern on the user board.
*3 : A ROM alternate unit is used connecting with a CPU bus. In the case of use, it is necessary to design so that ROM alternate unit can be connected on target board.

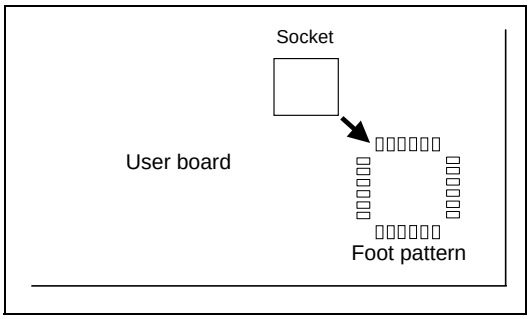

For MB91106A/F109

ICE (made by Fujitsu)

• Standard tool

Name	Model type	Note
Evaluation device	MB91V106A	—
Emulator main unit for FR (DSU3/4)	MB2198-01	• The systems development support tool which used MCU for evaluating FR and builds in DSU interface. • Power supply voltage : AC100 V or AC200 V • Dimensions : 150 mm (width) × 210 mm (depth) × 46 mm (height) Weight : 2.7 kg • MB2198-10 (DSU3/4 cable) is required separatery
DSU3/4 cable	MB2198-10	Used to connect the MB2198-01 to the adapter board.
PGA299P evaluation board for FR-DSU3	MB2197-110	• Connection to MB2197-10. Combined use MB2197-111 or MB2197-112. • Capable of connection to ROM alternate unit (MB2197-90) .Header cable is bundled • MB91V106A is required separatery

• Header

Name	Model type	Note
LQFP 100P header for MB2197-110	MB2197-111	• LQFP100 header board for MB2197-110. Used to connect the evaluation board to the user board. NQPACK100SD, HQPACK100SD is bundled. *5 • 0.5 mm pitch
QFP100P header for MB2197-110	MB2197-112	• QFP100 header board for MB2197-110. Used to connect the evaluation board to the user board. NQPACK100RB, HQPACK100RB179 is bundled. *5 • 0.65 mm pitch

• Option tool

Name	Model type	Note
ROM alternate unit *5	MB2197-90 (with 100-V AC adapter)	• Memory board: Capable of substituting the memory on the target board • Memory size: 4 Mbytes • Data bus size: Selectable from among 8, 16, and 32-bit configurations • Write protect function

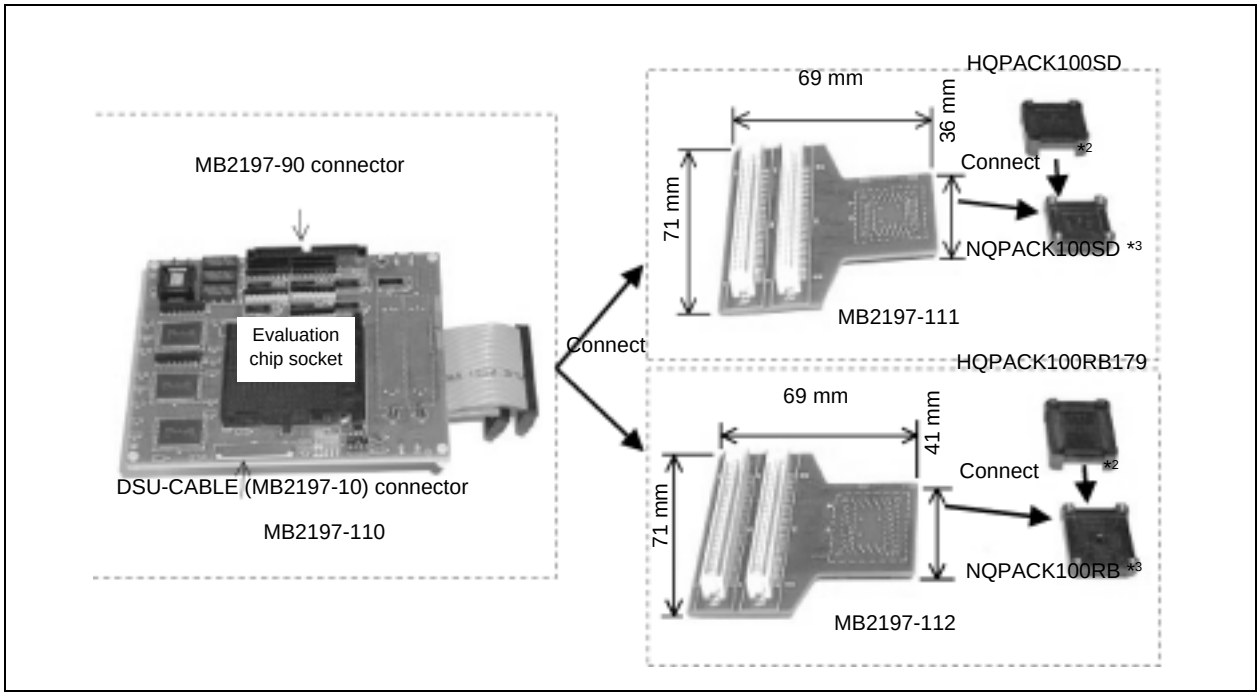

Evaluation board

Name	Model type	Note
Evaluation board (Main board)	MB91906EB	• Main board + daughter board • For 5 V, 3 V products
Daughter board for MB91106A/F109	MB91910EB	Combined use main board (MB91906EB)

Programmer for FLASH microcontroller

• Parallel programmer

Product name	Package	Package code	Adapter unit
			MINATO ELECTRONICS INC. *3
MB91F109PF	QFP-100 (0.65 mm,□14 × 20 mm)	FPT-100P-M06	MF00-783
MB91F109PFV	LQFP-100 (0.65 mm,□14 × 14 mm)	FPT-100P-M05	MF00-782

• Serial programmer

Product name	Serial programmer
	Yokogawa Digital Computer Corporation*4
MB91F109PF MB91F109PFV	NETIMPRESS

*1 : The adapter requires an IC socket manufactured by YAMAICHI ELECTRONICS Co., Ltd. (Separately priced)
<Contact> Yamaichi Electric Mfg. TEL: 81-3-3778-6121

*2 : The IC socket is mounted on the foot pattern on the user board.

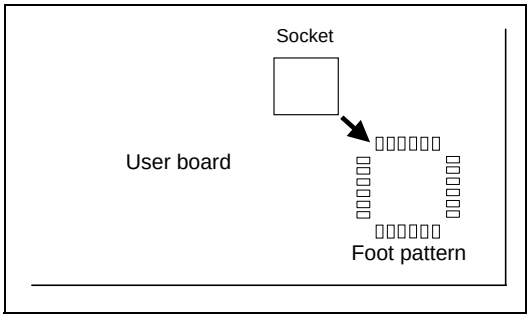

*3 : MINATO ELECTRONICS INC.
<Contact> TEL : 045-591-5611, FAX : 045-592-2854 http://www.minato.co.jp/index_e.html

*4 : Yokogawa Digital Computer Corporation
<Contact> TEL042-333-6224 FAX : 042-352-6107 http://www.ydc.co.jp/micom/index_E.htm

*5 : A ROM alternate unit is used connecting with a CPU bus. In the case of use, it is necessary to design so that ROM alternate unit can be connected on target board.

For MB91107A/108

ICE (made by Fujitsu)

• Standard tool

Name	Model type	Note
Evaluation device	MB91V108	—
Emulator main unit for FR (DSU2/3)	MB2197-01	• The systems development support tool which used MCU for evaluating FR and builds in DSU interface. • Power supply voltage : AC100 V or AC200 V • Dimensions : 210 mm (width) × 297 mm (depth) × 87 mm (height) Weight : 2.7 kg • With MB2197-10 (DSU2/3 cable)
Adapter (LQFP-120)	MB2197-103	• Adapter unit to connect the user system using an LQFP120. • NQPACK120SD and HQPACK120SD are bundled *9 • MB91V108 is required separatery

• Option tool

Name	Model type	Note
ROM alternate unit *3	MB2197-90 (with 100-V AC adapter)	• Memory board: Capable of substituting the memory on the target board • Memory size: 4 Mbytes • Data bus size: Selectable from among 8, 16, and 32-bit configurations • Write protect function

• Option

Name	Model type	Note
DSU2/3 cable	MB2197-10	Used to connect the emulator main unit to the adaptor unit or the adapter board.

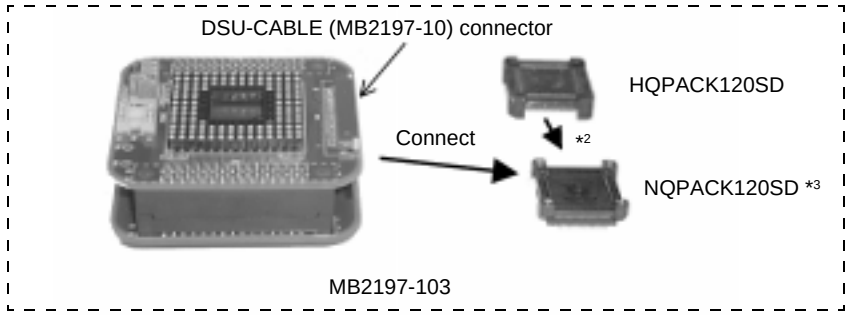

Evaluation board

Name	Model type	Note
Evaluation board (Main board)	MB91906EB	• Main board + daughter board • For 5 V, 3 V products
Daughter board for MB91107A/108/121	MB91907EB	• Connection to ICE (made by Fujitsu) • Combined use main board(MB91906EB)

Third party

Company name	Name	Note
SOPHIA SYSTEMS CO., LTD	UniSTAC for MB91107/108/121	FR TYPE 2

*1 : The adapter requires an IC socket manufactured by YAMAICHI ELECTRONICS Co., Ltd. (Separately priced)
<Contact> Yamaichi Electric Mfg.TEL: 81-3-3778-6121
*2 : The IC socket is mounted on the foot pattern on the user board.

*3 : A ROM alternate unit is used connecting with a CPU bus. In the case of use, it is necessary to design so that ROM alternate unit can be connected on target board.

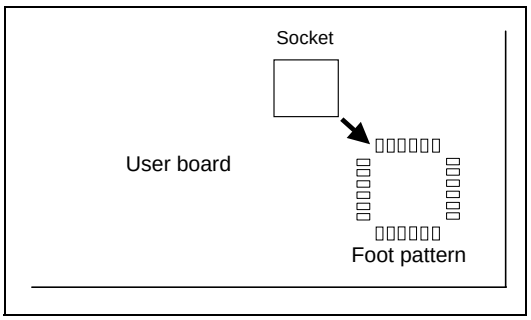

For MB91110

ICE (made by Fujitsu)

• Standard tool

Name	Model type	Note
Evaluation device	MB91V110	—
Emulator main unit for FR (DSU3/4)	MB2198-01	• The systems development support tool which used MCU for evaluating FR and builds in DSU interface. • Power supply voltage : AC100 V or AC200 V • Dimensions : 150 mm (width) × 210 mm (depth) × 46 mm (height) Weight : 2.7 kg • MB2198-10 (DSU3/4 cable) is required separatery
DSU3/4 cable	MB2198-10	• Used to connect the MB2198-01 to the adapter board.
PGA299P evaluation board for FR-DSU3	MB2197-110	• Connection to MB2197-10. Combined use MB2197-115. • Capable of connection to ROM alternate unit (MB2197-90) .Header cable is bundled. • MB91V110 is required separatery
LQFP-144 Header for MB2197-110	MB2197-115	• QFP144 header board for MB2197-110 • Used to connect the evaluation board to the user board • NQPACK144SD and HQPACK144SD *1, 2 are bundled

• Option tool

Name	Model type	Note
ROM alternate unit *3	MB2197-90 (with 100-V AC adapter)	• Memory board: Capable of substituting the memory on the target board • Memory size: 4 Mbytes • Data bus size: Selectable from among 8, 16, and 32-bit configurations • Write protect function

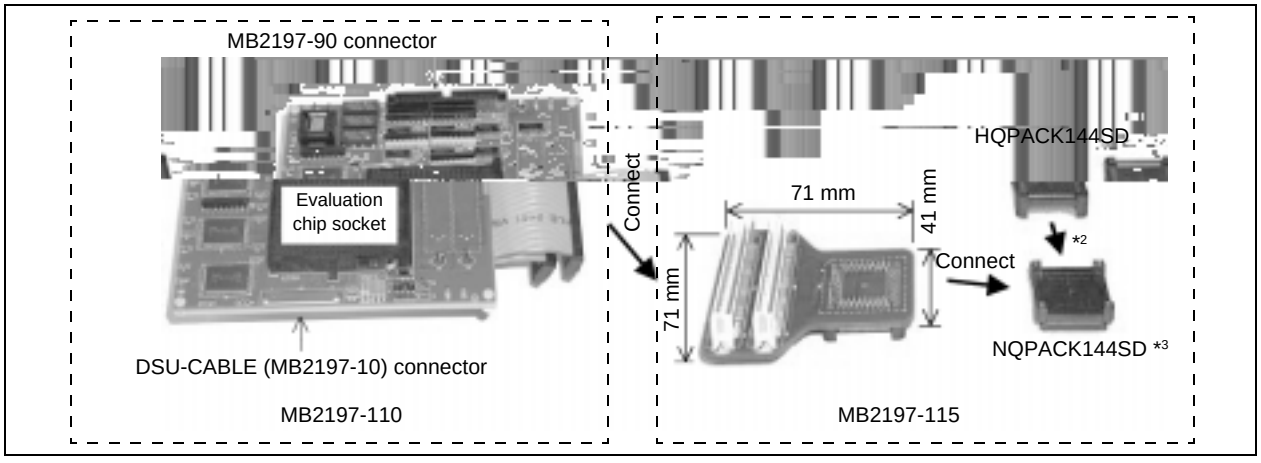

Evaluation board

Name	Model type	Note
Evaluation board (Main board)	MB91906EB	• Main board + daughter board • For 5 V, 3 V products
Daughter board for MB91110	MB91904EB	Used to connect the adapter to the ICE (made by Fujitsu) .

*1 : The adapter requires an IC socket manufactured by YAMAICHI ELECTRONICS Co., Ltd. (Separately priced)
<Contact> Yamaichi Electric Mfg.TEL: 81-3-3778-6121
*2 : The IC socket is mounted on the foot pattern on the user board.

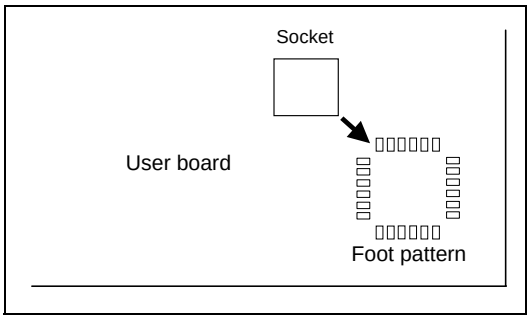

*3 : A ROM alternate unit is used connecting with a CPU bus. In the case of use, it is necessary to design so that ROM alternate unit can be connected on target board.

For MB91121

ICE (made by Fujitsu)

• Standard tool

Name	Model type	Note
Evaluation device	MB91V121	—
Emulator main unit for FR (DSU2/3)	MB2197-01	• The systems development support tool which used MCU for evaluating FR and builds in DSU interface. • Power supply voltage : AC100V or AC200 V • Dimensions : 210 mm (width) × 297 mm (depth) × 87 mm (height) Weight : 2.7 kg • With MB2197-10 (DSU2/3 cable)
Adapter (LQFP-120)	MB2197-103	• Adapter unit to connect the user system using an LQFP120. • NQPACK120SD, HQPACK120SD is bundled *9 • MB91V108 is required separatery

• Option tool

Name	Model type	Note
ROM alternate unit *3	MB2197-90 (with 100-V AC adapter)	• Memory board: Capable of substituting the memory on the target board • Memory size: 4 Mbytes • Data bus size: Selectable from among 8, 16, and 32-bit configurations • Write protect function

• Option

Name	Model type	Note
DSU2/3 cable	MB2197-10	Used to connect the emulator main unit to the adaptor unit or the adapter board.

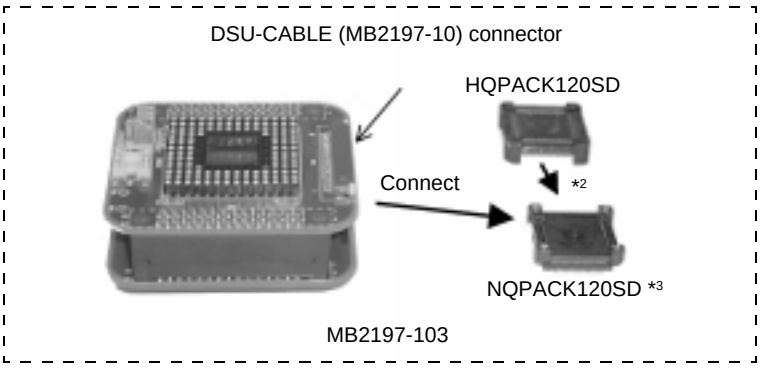

Evaluation board

Name	Model type	Note
Evaluation board (Main board)	MB91906EB	• Main board + daughter board • For 5 V, 3 V products
Daughter board for MB91107A/108/121	MB91907EB	• Connection to ICE (made by Fujitsu) • Combined use main board (MB91906EB)

*1 : The adapter requires an IC socket manufactured by YAMAICHI ELECTRONICS Co., Ltd. (Separately priced)
<Contact> Yamaichi Electric Mfg. TEL: 81-3-3778-6121

*2 : The IC socket is mounted on the foot pattern on the user board.

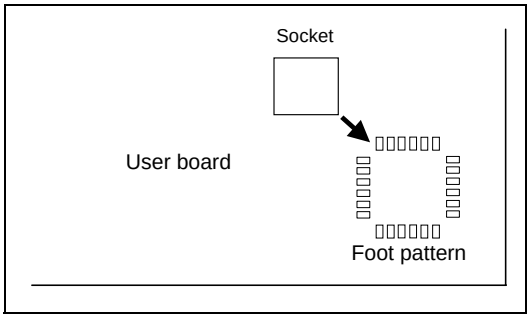

*3 : A ROM alternate unit is used connecting with a CPU bus. In the case of use, it is necessary to design so that ROM alternate unit can be connected on target board.

For MB91F127/128

ICE (made by Fujitsu)

• Standard tool

Name	Model type	Note
Evaluation device	MB91FV129	—
Emulator main unit for FR (DSU3/4)	MB2198-01	• The systems development support tool which used MCU for evaluating FR and builds in DSU interface • Power supply voltage : AC100 V or AC200 V • Dimensions : 150 mm (width) × 210 mm (depth) × 46 mm (height) Weight : 2.7 kg • MB2198-10 (DSU3/4 cable) is required separatery
DSU3/4 cable	MB2198-10	Used to connect the MB2198-01 to the adapter board
PGA299P adapter board type 3 for MB91FV129	MB2197-160	• User alternate memory : 4 MB • Header cable is bundled • MB91FV129 is required separatery
LQFP-100Pheader board	MB2197-162	• QFP100 header board for MB2197-160 • Used to connect the adapter board to the user board • NQPACK100SD and HQPACK100SD *1, 2 are bundled

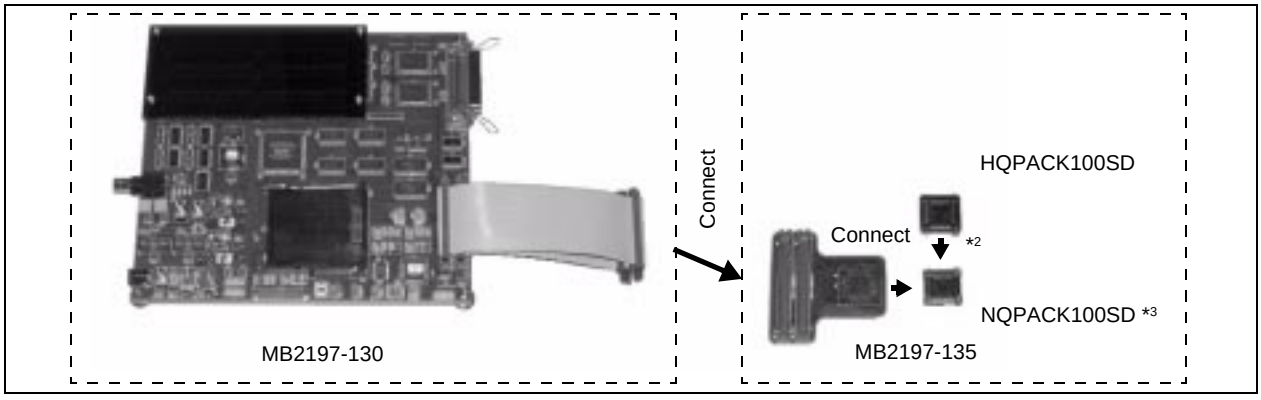

Evaluation board

Name	Model type	Note
Evaluation board (Main board)	MB91906EB	• Main board + daughter board • For 5 V, 3 V products
Daughter board for MB91106A/109	MB91910EB	Used to connect the adapter to the ICE (made by Fujitsu)

Programmer for FLASH microcontroller

• Parallel programmer

Product name	Package (leadpitch, body size)	Package code	Adapter unit	
			AndoElectricCo., Ltd. *3	MINATO ELECTRONICS INC. *4
MB91F127PFV MB91F128PFV	LQFP-100 (0.5 mm, □14 × 14 mm)	FPT-100P-M05	TE110-123F14AP	—

• Serial programmer

Product name	Serial programmer
	Yokogawa Digital Computer Corporation *5
MB91F127PFV MB91F128PFV	NETIMPRESS

*1 : The adapter requires an IC socket manufactured by YAMAICHI ELECTRONICS Co., Ltd. (Separately priced)
<Contact> Yamaichi Electric Mfg.TEL: 81-3-3778-6121
*2 : The IC socket is mounted on the foot pattern on the user board.

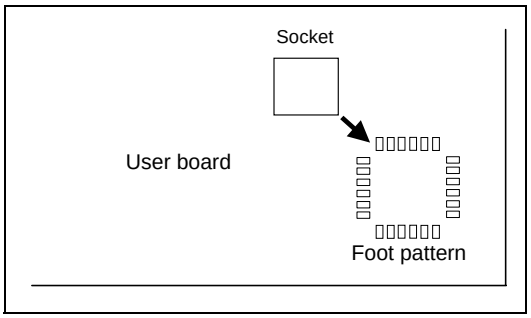

*3 : AndoElectricCo., Ltd.
<Contact> TEL : 044-549-7300 http://info.tactnet.co.jp/ando-fsg/e/
*4 : MINATO ELECTRONICS INC.
<Contact> TEL : 045-591-5611, FAX : 045-592-2854 http://www.minato.co.jp/index_e.html
*5 : Yokogawa Digital Computer Corporation
<Contact> TEL042-333-6224 FAX : 042-352-6107 http://www.ydc.co.jp/micom/index_E.htm

For MB91133, MB91F133A

ICE (made by Fujitsu)

• Standard tool

Name	Model type	Note
Evaluation device	MB91FV130	—
Emulator main unit for FR (DSU3/4)	MB2198-01	• The systems development support tool which used MCU for evaluating FR and builds in DSU interface • Power supply voltage : AC100V or AC200 V • Dimensions : 150 mm (width) × 210 mm (depth) × 46 mm (height) Weight : 2.7 kg • MB2198-10 (DSU3/4 cable) is required separatery
DSU3/4 cable	MB2198-10	Used to connect the MB2198-01 to the adapter board.
PGA299P evaluation board type 2 for FR-DSU3	MB2197-130	• Connection to MB2197-10. Combined use MB2197-135. • Header cable is bundled • MB91FV130 is required separatery
LQFP-144 Header type 2	MB2197-135	• LQFP144P header board for MB2197-130 • Used to connect the evaluation board to the user board • NQPACK144SD and HQPACK144SD are bundled *1

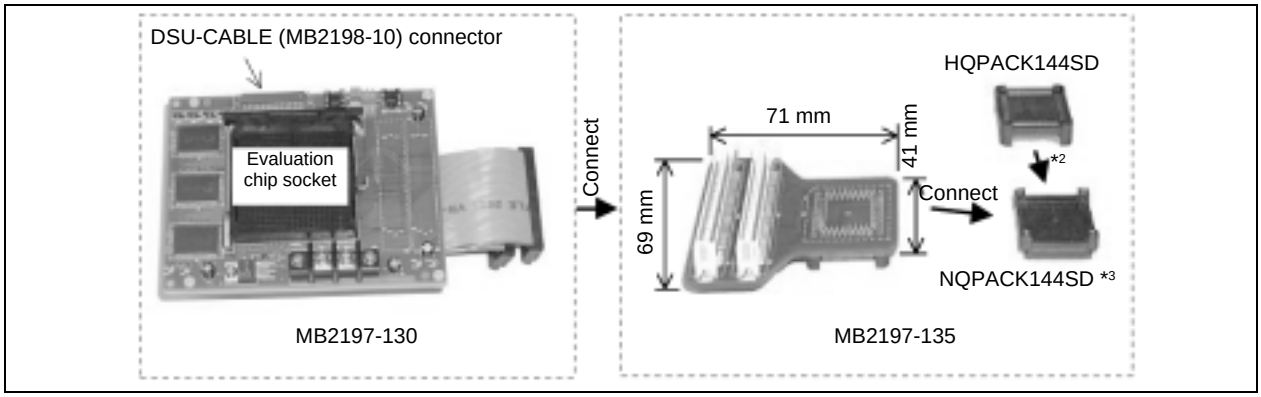

• Option tool

Name	Model type	Note
ROM alternate unit *4	MB2197-90 (with 100-V AC adapter)	• Memory board: Capable of substituting the memory on the target board • Memory size: 4 Mbytes • Data bus size: Selectable from among 8, 16, and 32-bit configurations • Write protect function

Evaluation board

Name	Model type	Note
Evaluation board (Main board)	MB91906EB	• Main board + daughter board • For 5 V, 3 V products
Evaluation board for MB91130 series	MB91908EB	It can be used only.

Programmer for FLASH microcontroller

• Parallel programmer

Product name	Package (leadpitch,body size)	Package code	Adapter unit	
			AndoElectricCo., Ltd.*5	MINATO ELECTRONICS INC.*6
MB91F133APMT2	LQFP-144 (0.5 mm, □20 × 20 mm)	FPT-144P-M08	—	MF00-871
MB91F133APBT	BGA-144 (0.8 mm, □12 × 12 mm)	BGA-144P-M01	—	MF00-870

• Serial programmer

Product name	Serial programmer
	Yokogawa Digital Computer Corporation*7
MB91F133APMT2 MB91F133APBT	NETIMPRESS

Third party

Company name	Name	Note
Yokogawa Digital Computer Corporation *8	Advice (AD250 series)	Package : LQFP-144 (0.5 mmpitch)

*1 : The header requires the NQPACK manufactured by Tokyo Eletech Co.
<Contact>TEL: 81-3-5295-1661

*2 : The IC socket is mounted on the foot pattern on the user board.

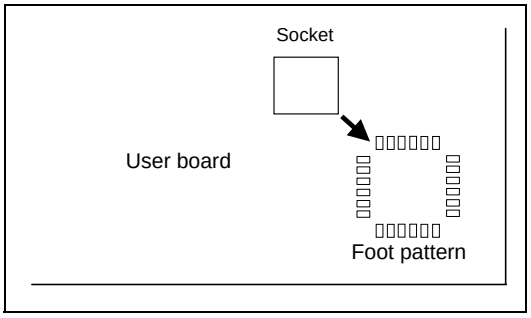

*3 : The NQPACK and HQPACK can be used to hold and cover a chip, respectively.

*4 : A ROM alternate unit is used connecting with a CPU bus. In the case of use, it is necessary to design so that ROM alternate unit can be connected on target board.

*5 : AndoElectricCo., Ltd.
<Contact> TEL : 044-549-7300 http://info.tactnet.co.jp/ando-fsg/e/

*6 : MINATO ELECTRONICS INC.
<Contact> TEL : 045-591-5611, FAX : 045-592-2854 http://www.minato.co.jp/index_e.html

*7 : Yokogawa Digital Computer Corporation
<Contact> TEL042-333-6224 FAX : 042-352-6107 http://www.ydc.co.jp/micom/index_E.htm

*8 : Yokogawa Digital Computer Corporation
<Contact> TEL : 042-333-6222 FAX : 042-352-6107 http://www.ydc.co.jp/advice/advice-e/index.htm

For MB91151A/154/155/F155A

ICE (made by Fujitsu)

• Standard tool

Name	Model type	Note
Evaluation device	MB91V151A MB91FV150	—
Emulator main unit for FR (DSU3/4)	MB2198-01	• The systems development support tool which used MCU for evaluating FR and builds in DSU interface. • Power supply voltage : AC100 V or AC200 V • Dimensions : 150 mm (width) × 210 mm (depth) × 46 mm (height) Weight : 2.7 kg • MB2198-10 (DSU3/4 cable) is required separatery
DSU3/4 cable	MB2198-10	Used to connect the MB2198-01 to the adapter board.
Adapter unit	MB2197-150	• Connection to MB2198-10 • Capable of real-time display of internal RAM (6 points) • Built-in function for measuring two-point execution time • Combined use MB2197-155
LQFP-144header board	MB2197-155	• Used to connect the adapter board to the user board. • NQPACK144SD and HQPACK144SD are bundled *1

• Evaluation device

Name	Model type	Note
Evaluation device for MB91151A	MB91V151A	For MB91151A
Evaluation device for MB91154, MB91155, MB91F155A	MB91FV150	For MB91154, MB91155 and MB91F155A

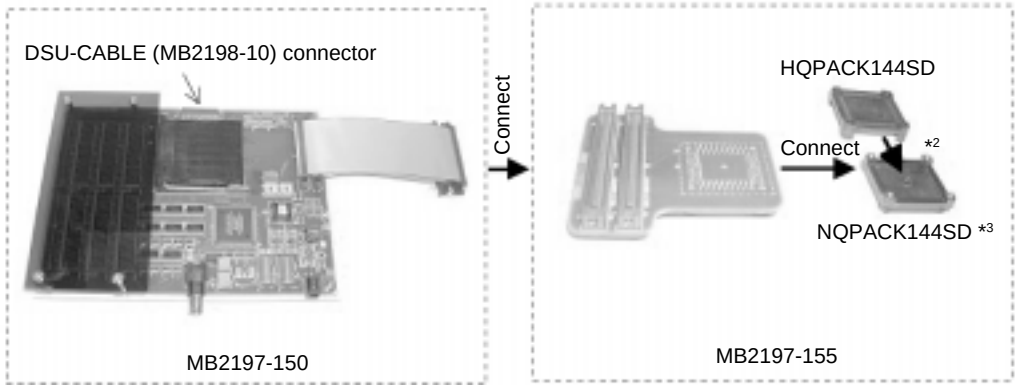

• Option

Name	Model type	Note
ROM alternate unit *4	MB2197-90 (with 100-V AC adapter)	• Memory board: Capable of substituting the memory on the target board • Memory size: 4 Mbytes • Data bus size: Selectable from among 8, 16, and 32-bit configurations • Write protect function

Evaluation board

Name	Model type	Note
Evaluation board	MB91906EB	• Main board + daughter board • FlashROM, DRAM, etc. Built-in • AC100 V, ACAdapter is bundled.
Evaluation board for MB91150 series	MB91911EB	It can be used only.

Programmer for FLASH microcontroller

• Parallel programmer

FProduct name	Package (leadpitch, body size)	Package code	Adapter unit	
			AndoElectricCo., Ltd.*5	MINATO ELECTRONICS INC.*6
MB91F155APMT2	LQFP-144 (0.5 mm, □20 × 20 mm)	FPT-144P-M08	TE110-155F10AP	MF00-871

• Serial programmer

Product name	Serial programmer
	Yokogawa Digital Computer Corporation*7
MB91F155APMT2	NETIMPRESS

Third party

Company name	Name	Note
SOPHIA SYSTEMS CO., LTD *8	UniSTAC (US72003G)	Package : LQFP-144 (0.5 mm pitch)

*1 : The header requires the NQPACK manufactured by Tokyo Eletech Co.
<Contact>TEL: 81-3-5295-1661

*2 : The IC socket is mounted on the foot pattern on the user board.

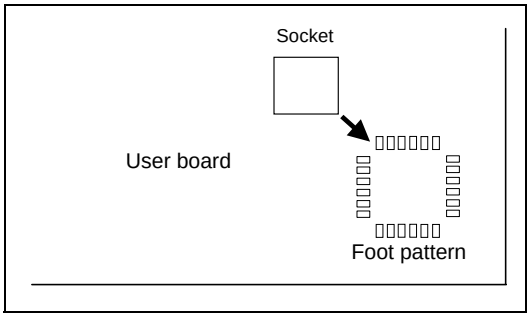

*3 : The NQPACK and HQPACK can be used to hold and cover a chip, respectively.

*4 : A ROM alternate unit is used connecting with a CPU bus. In the case of use, it is necessary to design so that ROM alternate unit can be connected on target board.

*5 : AndoElectricCo., Ltd.
<Contact> TEL : 044-549-7300 http://info.tactnet.co.jp/ando-fsg/e/

*6 : MINATO ELECTRONICS INC.
<Contact> TEL : 045-591-5611, FAX : 045-592-2854 http://www.minato.co.jp/index_e.html

*7 : Yokogawa Digital Computer Corporation
<Contact> TEL042-333-6224 FAX : 042-352-6107 http://www.ydc.co.jp/micom/index_E.htm

*8 : SOPHIA SYSTEMS CO., LTD
<Contact> 044-989-7253 FAX : 044-989-7104 http://www.sophia.com/

For MB91230 series

ICE (made by Fujitsu)

• Standard tool

Name	Model type	Note
Evaluation device	MB91V230	—
Emulator main unit for FR (DSU4)	MB2198-01	• The systems development support tool which used MCU for evaluating FR and builds in DSU interface. • Power supply voltage : AC100V or AC200 V • Dimensions : 150 mm (width) × 210 mm (depth) × 46 mm (height) • Weight : 2.7 kg • With MB2197-10 (DSU4 cable)
Adapter (BGA-401)	MB2198-120	• Connection to MB2198-01 • Combined use MB2198-121 • HeaderI/F cable is bundled
Header (LQFP-120)	MB2198-121	• LQFP120 header board for MB2198/120 • Used to connect the adapter board to the user board • HQPACK120SD and NQPACK120SD are bundled *1

Programmer for FLASH microcontroller

• Parallel programme

Product name	Package (leadpitch, body size)	Package code	Adapter unit	
			AndoElectricCo., Ltd. *4	MINATO ELECTRONICS INC. *5
MB91F233	LQFP-120 (0.4 mm, □14 × 14 mm)	FPT-120P-M05	TEF110-233F20AP	MF13-1330

• Serial programmer

Product name	Serial programmer
	Yokogawa Digital Computer Corporation *6
MB91F233	NETIMPRESS

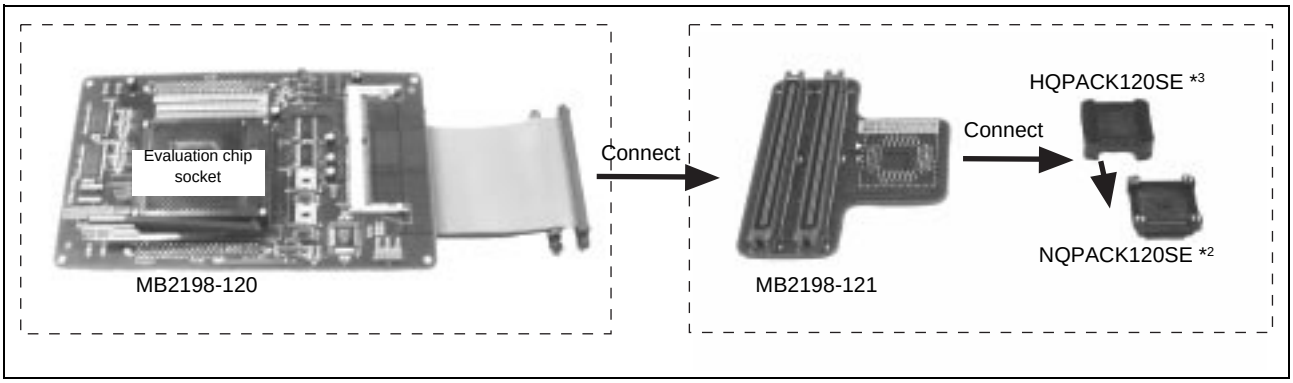

Evaluation board

Name	Model type	Note
Evaluation board for MB91F233	Under development	It can be used only.

Third party

Company name	Name	Note
Yokogawa Digital Computer Corporation *7	AdvicePLUS POD : YF700	Package : LQFP-144 (0.4 mm pitch)

*1 : The header requires the NQPACK manufactured by Tokyo Eletech Co.
<Contact>TEL: 81-3-5295-1661
*2 : The IC socket is mounted on the foot pattern on the user board.

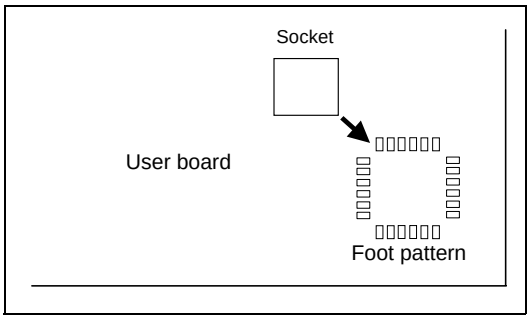

*3 : The NQPACK and HQPACK can be used to hold and cover a chip, respectively.
*4 : AndoElectricCo., Ltd.
<Contact> TEL : 044-549-7300 http://info.tactnet.co.jp/ando-fsg/e/
*5 : MINATO ELECTRONICS INC.
<Contact> TEL : 045-591-5611, FAX : 045-592-2854 http://www.minato.co.jp/index_e.html
*6 : Yokogawa Digital Computer Corporation
<Contact> TEL042-333-6224 FAX : 042-352-6107 http://www.ydc.co.jp/micom/index_E.htm
*7 : Yokogawa Digital Computer Corporation
<Contact> TEL : 042-333-6222 FAX : 042-352-6107 http://www.ydc.co.jp/advice/advice-e/index.htm

For MB91260 series

ICE (made by Fujitsu)

• Standard tool

Name	Model type	Note
Evaluation device	MB91V260	—
Emulator main unit for FR (DSU4)	MB2198-01	• The systems development support tool which used MCU for evaluating FR and builds in DSU interface. • Power supply voltage : AC100 V or AC200 V • Dimensions : 150 mm (width) × 210 mm (depth) × 46 mm (height) Weight : 2.7 kg • With MB2197-10 (DSU4 cable)
Adapter board	MB2198-120	• Connection to MB2198-01 • Combined use MB2198-121 • Header I/F cable is bundled
Adapter (LQFP-120)	MB2197-103	• NQPACK120SD, HQPACK120SD is bundled *9 • MB91V108 is required separatery
header board (QFP-100)	MB2198-122	• QFP100header board for MB2198-120 • Adapter unit to connect the user system • HQPACK100SD and NQPACK100SD are bundled*1

Programmer for FLASH microcontroller

• Parallel programmer

Product name	Package (leadpitch, body size)	Package code	Adapter unit	
			AndoElectricCo., Ltd. *4	MINATO ELECTRONICS INC. *5
MB91F264	QFP-100 (0.65 mm, □14 × 20 mm)	FPT-100P-M06	TEF110-264F21AP	MF13-1427

• Serial programmer

Product name	Serial programmer
	Yokogawa Digital Computer Corporation *6
MB91F264	NETIMPRESS

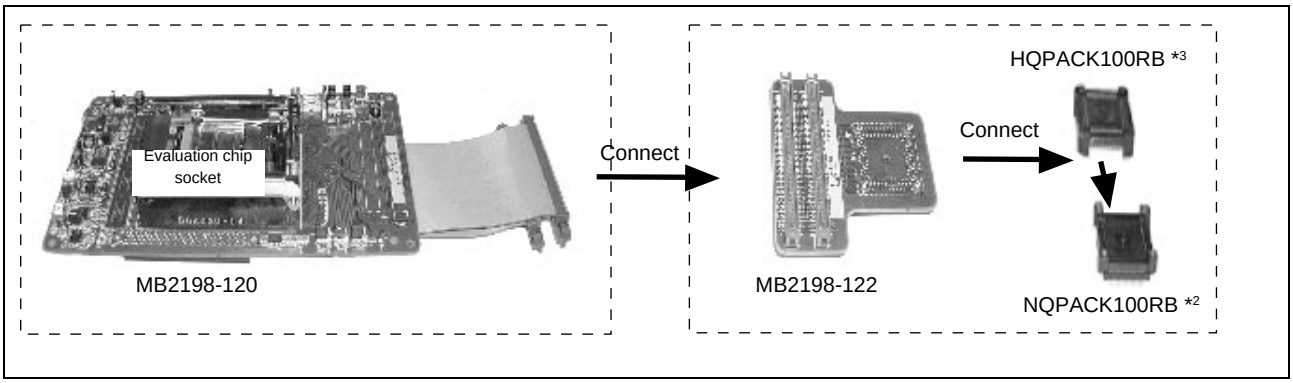

Evaluation board

Name	Model type	Note
Evaluation board for MB91F264	Under development	It can be used only.

Third party

• Evaluation board

Sunhayato Corporation *7		
Name	**Model type**	**Note**
Main board	BBF2001-MB01	• Connection to ICE (MB2198-01 : made by Fujitsu) • Main board + daughter board • Locating signal check pin to all terminals • Input voltage change for an analog input terminal is possible (variable resistance) • Function of LED lightning for output port (P00 to P17) • Evaluate the capability of communication between PC and microcomputer with UART (mounted DSUB 9pin) • Bult-in connector for serial programmer (Yokogawa Digital Computer Corporation)
Daughter board for MB91260 series	BBF-2001 -FR100CAN2-NB	• NQPACK type (0.65 mm pitch, □14 mm × 20 mm) • Combined use main board (BBF2001-MB01)
Main board + daughter board	BBF-2001 -FR100CAN2-NS	Main board (BBF2001-MB01) + daughter board (BBF-2001-FR100CAN2-NB)

*1 : The header requires the NQPACK manufactured by Tokyo Eletech Co.
<Contact>TEL: 81-3-5295-1661

*2 : The IC socket is mounted on the foot pattern on the user board.

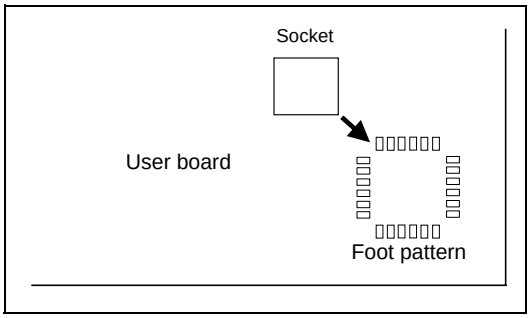

*3 : The NQPACK and HQPACK can be used to hold and cover a chip, respectively.

*4 : AndoElectricCo., Ltd.
<Contact> TEL : 044-549-7300 http://info.tactnet.co.jp/ando-fsg/e/

*5 : MINATO ELECTRONICS INC.
<Contact> TEL : 045-591-5611, FAX : 045-592-2854 http://www.minato.co.jp/index_e.html

*6 : Yokogawa Digital Computer Corporation
<Contact> TEL042-333-6224 FAX : 042-352-6107 http://www.ydc.co.jp/micom/index_E.htm

*7 : Sunhayato Corporation
<Contact> TEL03-3984-7791 FAX03-3971-0535 http://www.sunhayato.co.jp/adapter/cpu/cpusouko.html

For MB91302A

ICE (made by Fujitsu)

• Standard tool

Name	Model type	Note
Evaluation device	MB91V301A	—
Emulator main unit for FR (DSU3/4)	MB2198-01	• The systems development support tool which used MCU for evaluating FR and builds in DSU interface. • Power supply voltage : AC100V or AC200 V • Dimensions : 150 mm (width) × 210 mm (depth) × 46 mm (height) Weight : 2.7 kg • MB2198-10 (DSU3/4 cable) is required separatery
DSU3/4 cable	MB2198-10	Used to connect the MB2198-01 to the adapter board.
Adapter board for MB91V301A	MB2198-100	• Connection to MB2198-01/10 • Combined use MB2198-101 • MB91V301A is required separatery
Header board for LQFP-144	MB2198-101	• Header board connect to the user system using an LQFP-144 • NQPACK144SE and HQPACK144SE are bundled *1

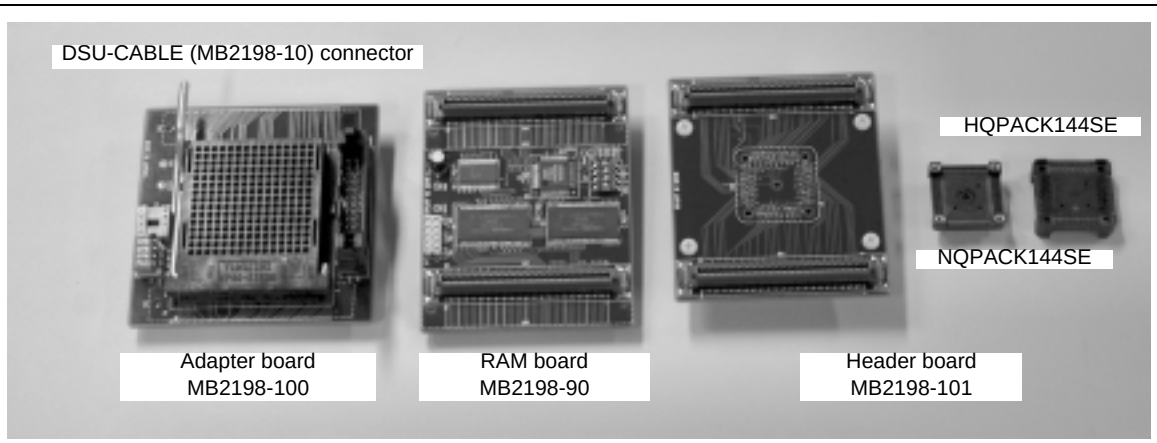

• Option tool

Name	Model type	Note
RAM board	MB2198-90	• Used to external ROM alternate memory • 32-bit bus : 4 MB, 16-bit bus : 2 MB
ROM alternate unit *4	MB2197-90 (with 100-V AC adapter)	• Memory board: Capable of substituting the memory on the target board • Memory size: 4 Mbytes • Data bus size: Selectable from among 8, 16, and 32-bit configurations • Write protect function

Evaluation board

Name	Model type	Note
Evaluation board	MB91906EB	• Main board + daughter board • FlashROM, DRAM, etc. Built-in • AC100 V, ACAdapter is bundled.
Evaluation board for MB91302A	MB91914EB	It can be used only.

*1 : The header requires the NQPACK manufactured by Tokyo Eletech Co.
<Contact>TEL: 81-3-5295-1661

*2 : The IC socket is mounted on the foot pattern on the user board.

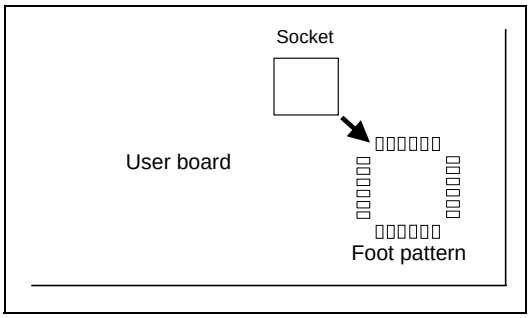

*3 : The NQPACK and HQPACK can be used to hold and cover a chip, respectively.
*4 : A ROM alternate unit is used connecting with a CPU bus. In the case of use, it is necessary to design so that ROM alternate unit can be connected on target board.

For MB91306R, MB91307B, MB91307R

ICE (made by Fujitsu)

• Standard tool

Name	Model type	Note
Evaluation device	MB91V307R	—
Emulator main unit for FR (DSU3/4)	MB2198-01	• The systems development support tool which used MCU for evaluating FR and builds in DSU interface. • Power supply voltage : AC100 V or AC200 V • Dimensions : 150 mm (width) × 210 mm (depth) × 46 mm (height) Weight : 2.7 kg • MB2198-10 (DSU3/4 cable) is required separatery
DSU3/4 cable	MB2198-10	Used to connect the MB2198-01 to the adapter board.
DSU-FR emulator PGA-135PAdapter	MB2197-170A	• Adapter board for MB91V307R • MB2197-170A + MB2197-172 or MB2197-170A + MB2197-91 + MB2197-172 • MB91V307R is required separatery
DSU-FR emulator LQFP-120PHeader type 2	MB2197-172	• Header board connect to the user system using an LQFP-120 • NQPACK120SD, HQPACK120SD is bundled *1

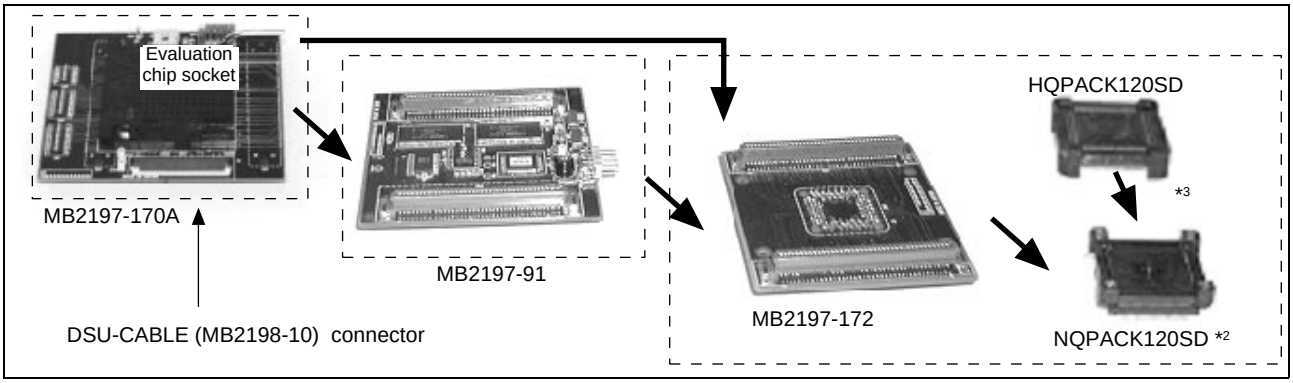

• Option tool

Name	Model type	Note
RAM board	MB2197-91	• Used to external ROM alternate memory • 32-bit bus : 4 MB, 16-bit bus : 2 MB
ROM alternate unit *4	MB2197-90 (with 100-V AC adapter)	• Memory board: Capable of substituting the memory on the target board • Memory size: 4 Mbytes • Data bus size: Selectable from among 8, 16, and 32-bit configurations • Write protect function

Evaluation board

Name	Model type	Note
Evaluation board	MB91906EB	• Main board + daughter board • FlashROM, DRAM, etc. Built-in • AC100 V, ACAdapter is bundled.
Evaluation board for MB91306/307	MB91915EB	It can be used only.

Third party

Company name	Name	Note
Yokogawa Digital Computer Corporation *5	Advice (AD250 series)	Package : LQFP-120 (0.5 mm pitch)

*1 : The header requires the NQPACK manufactured by Tokyo Eletech Co.
<Contact>TEL: 81-3-5295-1661
*2 : The IC socket is mounted on the foot pattern on the user board.

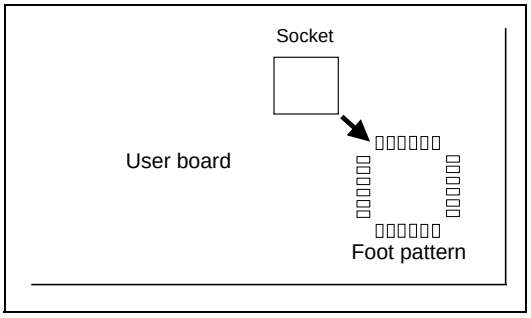

*3 : The NQPACK and HQPACK can be used to hold and cover a chip, respectively.
*4 : A ROM alternate unit is used connecting with a CPU bus. In the case of use, it is necessary to design so that ROM alternate unit can be connected on target board.
*5 : Yokogawa Digital Computer Corporation
<Contact> TEL : 042-333-6222 FAX : 042-352-6107 http://www.ydc.co.jp/advice/advice-e/index.htm

For MB91340 series

ICE (made by Fujitsu)

• Standard tool

Name	Model type	Note
Evaluation device	MB91V340	—
Emulator main unit for FR (DSU2/3)	MB2197-01	• The systems development support tool which used MCU for evaluating FR and builds in DSU interface. • Power supply voltage : AC100 V or AC200 V • Dimensions : 210 mm (width) × 297 mm (depth) × 87 mm (height) • Weight : 2.7 kg • With MB2197-10 (DSU2/3 cable)
Adapter board	MB2197-140	• Connection to MB2197-10 • Combined use MB2197-147 • Header I/F cable is bundled
LQFP-176header board	MB2197-147	• Header board for MB2197-140 • Used to connect the adapter board to the user board. • HQPACK176SD and NQPACK176SD are bundled *1

• Option tool

Name	Model type	Note
ROM alternate unit *4	MB2197-90 (with 100-V AC adapter)	• Memory board: Capable of substituting the memory on the target board • Memory size: 4 Mbytes • Data bus size: Selectable from among 8, 16, and 32-bit configurations • Write protect function

• Option

Name	Model type	Note
DSU cable	MB2197-10 DSU (2/3 cable)	Used to connect the Emulator main unit to the adapter board

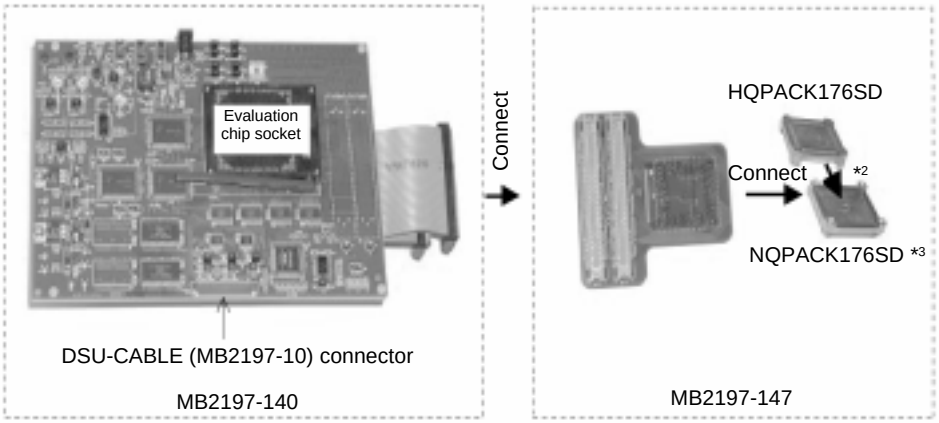

Evaluation board

Name	Model type	Note
Evaluation board (Main board)	MB91906EB	• Main board + daughter board • For 5 V, 3 V products
Daughter board for MB91340	MB91912EB	Combined use main board (MB91906EB)

*1 : The header requires the NQPACK manufactured by Tokyo Eletech Co.
<Contact>TEL: 81-3-5295-1661

*2 : The IC socket is mounted on the foot pattern on the user board.

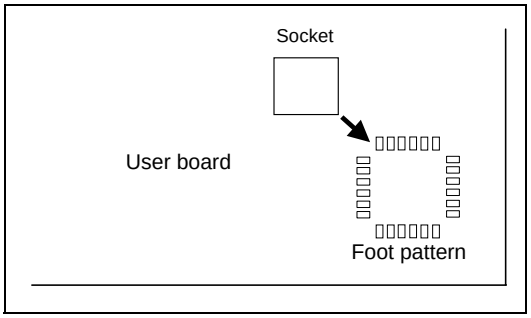

*3 : The NQPACK and HQPACK can be used to hold and cover a chip, respectively.

*4 : A ROM alternate unit is used connecting with a CPU bus. In the case of use, it is necessary to design so that ROM alternate unit can be connected on target board.

For MB91350A series

ICE (made by Fujitsu)

• Standard tool

Name	Model type	Note
Evaluation device	MB91V350A	—
Emulator main unit for FR (DSU4)	MB2198-01	• The systems development support tool which used MCU for evaluating FR and builds in DSU interface. • Power supply voltage : AC100 V or AC200 V • Dimensions : 150 mm (width) × 210 mm (depth) × 46 mm (height) • Weight : 2.7 kg • With MB2197-10 (DSU4 cable)
Adapter board for MB91350A	MB2198-110	• Connection to MB2198-01 • Combined use MB2198-111 or MB2198-112 • Header I/F cable is bundled • Bult-in emulation memory

• Header

Name	Model type	Note
Header for MB91352A/ MB91353A/MB91F353A (LQFP-120)	MB2198-112	• LQFP120 header board for MB2198-110 • Used to connect the adapter board to the user board. • NQPACK120SD and HQPACK120SD are bundled *1
Header for MB91354A/ MB91355A/MB91F355A (LQFP-176)	MB2198-111	• LQFP176 header board for MB2198-110 • Used to connect the adapter board to the user board • HQPACK176SD and NQPACK176SD are bundled *1

Programmer for FLASH microcontroller

• Parallel programmer

Product name	Package (leadpitch, body size)	Package code	Adapter unit	
			AndoElectricCo., Ltd. *4	MINATO ELECTRONICS INC. *5
MB91F353A	LQFP-120 (0.5mm, □16 × 16 mm)	FPT-120P-M21	TEF110-353F18AP	Under development
MB91F355A	LQFP-176 (0.5 mm, □24 × 24 mm)	FPT-176P-M02	TEF110-355F19AP	MF13-1361

• Serial programmer

FR Familyïiñº	Serial programmer
	Yokogawa Digital Computer Corporation *6
MB91F353A MB91F355A	NETIMPRESS

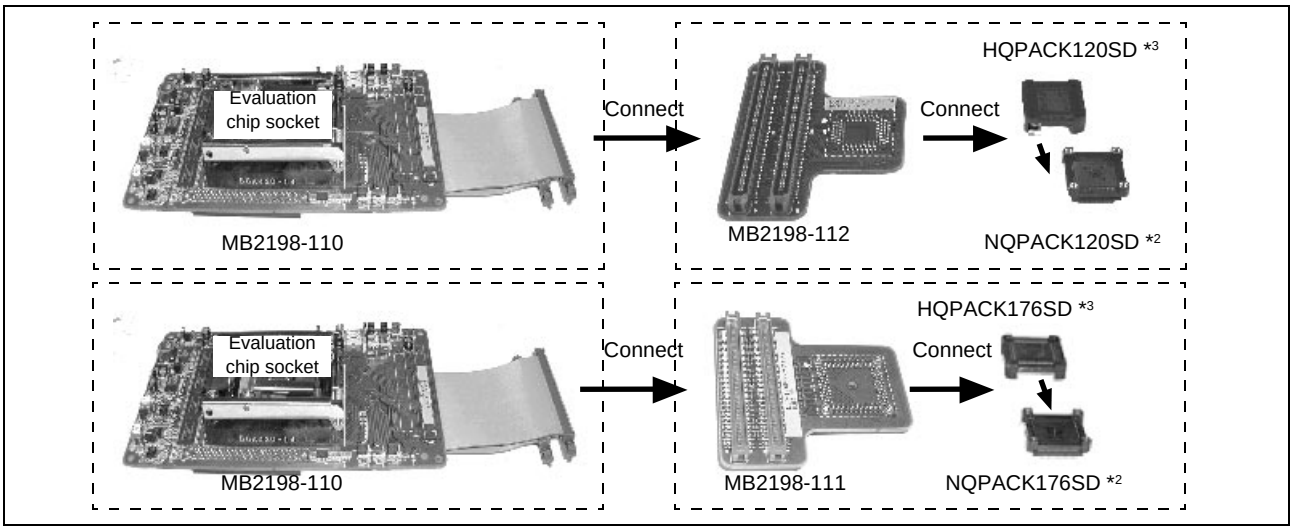

Evaluation board

• Main board

Name	Model type	Note
Evaluation board (Main board)	MB91906EB	• Main board + daughter board • For 5 V, 3 V products

• Daughter board

Name	Model type	Note
Daughter board for MB91F353A	Under development	—
Daughter board for MB91F355A	MB91916EB	Combined use main board (MB91906EB)

*1 : The header requires the NQPACK manufactured by Tokyo Eletech Co.
<Contact>TEL: 81-3-5295-1661

*2 : The IC socket is mounted on the foot pattern on the user board.

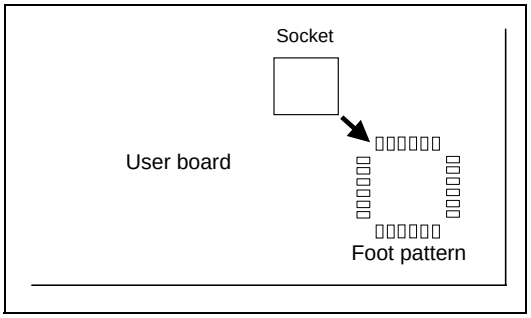

*3 : The NQPACK and HQPACK can be used to hold and cover a chip, respectively.

*4 : AndoElectricCo., Ltd.
<Contact> TEL : 044-549-7300 http://info.tactnet.co.jp/ando-fsg/e/

*5 : MINATO ELECTRONICS INC.
<Contact> TEL : 045-591-5611, FAX : 045-592-2854 http://www.minato.co.jp/index_e.html

*6 : Yokogawa Digital Computer Corporation
<Contact> TEL042-333-6224 FAX : 042-352-6107 http://www.ydc.co.jp/micom/index_E.htm

For MB91360 series

ICE (made by Fujitsu)

• Standard tool

Name	Model type	Note
Evaluation device	MB91FV360GA	—
Emulator main unit for FR (DSU3/4)	MB2198-01	• The systems development support tool which used MCU for evaluating FR and builds in DSU interface. • Power supply voltage : AC100 V or AC200 V • Dimensions : 150 mm (width) × 210 mm (depth) × 46 mm (height) • Weight : 2.7 kg • MB2198-10 (DSU3/4 cable) is required separatery
DSU3/4 cable	MB2198-10	Used to connect the MB2198-01 to the adapter board
PGA401P Adapter board for MB91360	MB2197-120	• Connection to MB2197-10 • Combined use MB2197-127 • Bult-in external trace for evaluation device and user overlay memory • MB91FV360 is required separatery

• Header board

Name	Model type	Note
120Pin header boardL for MB91360	MB919360-120L	• FPT-120P-M21 header board for MB2197-120. Connection to user board. • NQPACK120SD and HQPACK120SD are bundled *1
120Pin header boardH for MB91360	MB919360-120H	• FPT-120P-M21 header board for MB2197-120. Connection to user board. • NQPACK120SD and HQPACK120SD are bundled *1
160Pin header board for MB91360	MB919360-160	• FRT-160P-M15 header board for MB2197-120. Connection to user board • NQPACK160SD and HQPACK160SD are bundled *1
QFP208Pin header board for MB91360	MB2197-127	• QFP208 header board for MB2197-120. Connection to user board. • NQPACK208SD and HQPACK208SD are bundled *1

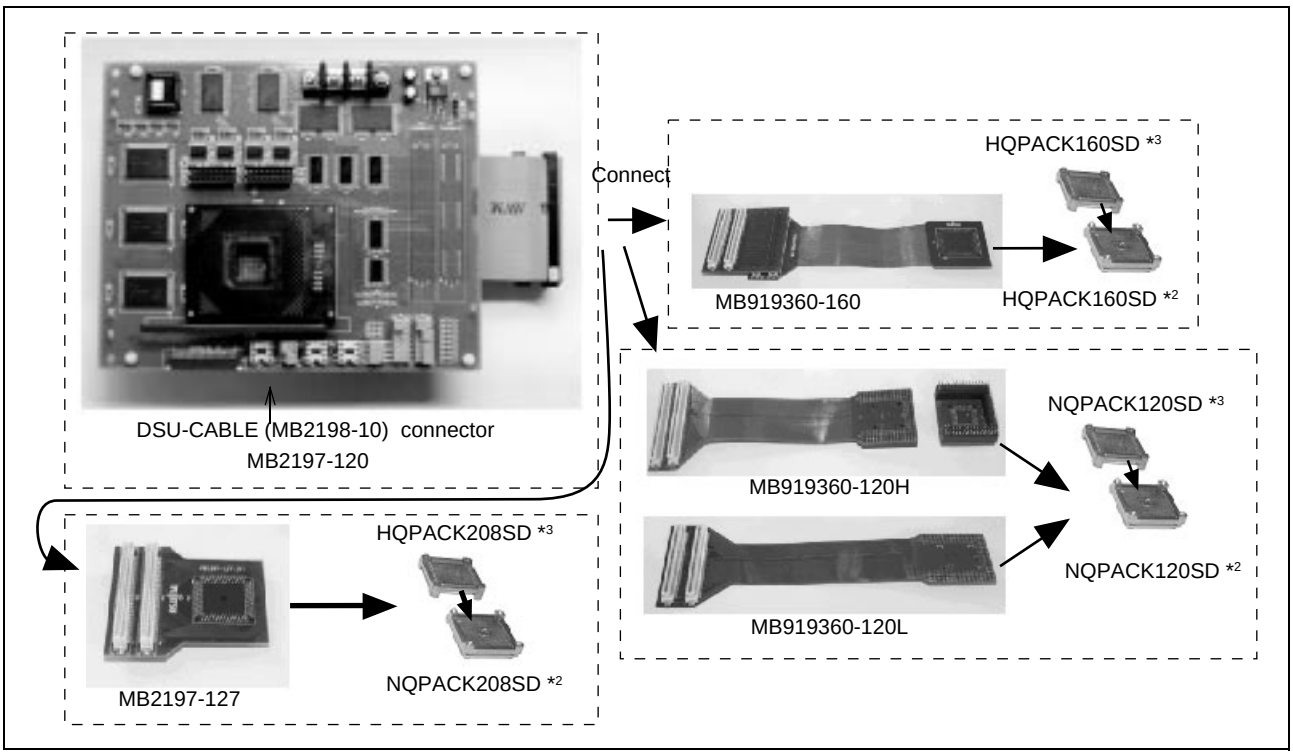

• Option tool

Name	Model type	Note
ROM alternate unit *4	MB2197-90 (with 100-V AC adapter)	• Memory board: Capable of substituting the memory on the target board • Memory size: 4 Mbytes • Data bus size: Selectable from among 8, 16, and 32-bit configurations • Write protect function

Evaluation board

Name	Model type	Note
Evaluation board	MB91906EB	• Main board + daughter board • FlashROM, DRAM, etc. Built-in • AC100 V, ACAdapter is bundled.
Evaluation board for MB91362GA	MB91913EB	It can be used only.

Programmer for FLASH microcontroller

• Parallel programmer

Product name	Package (leadpitch, body size)	Package code	Adapter unit	
			AndoElectricCo., Ltd. *5	MINATO ELECTRONICS INC. *6
MB91F362GAPFVS	QFP-208 (0.5mm, □28 × 28 mm)	FPT-208P-M04	—	MF00-892
MB91F369GA	QFP-160 (0.65mm, □28 × 28 mm)	FPT-160P-M15	—	MF00-1272

• Serial programmer

Product name	Serial programmer
	Yokogawa Digital Computer Corporation *7
MB91F362GAPFVS MB91F369GA	NETIMPRESS

*1 : The header requires the NQPACK manufactured by Tokyo Eletech Co.
<Contact>TEL: 81-3-5295-1661

*2 : The IC socket is mounted on the foot pattern on the user board.

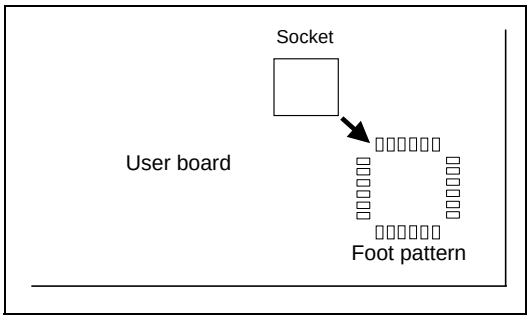

*3 : The NQPACK and HQPACK can be used to hold and cover a chip, respectively.

*4 : A ROM alternate unit is used connecting with a CPU bus. In the case of use, it is necessary to design so that ROM alternate unit can be connected on target board.

*5 : AndoElectricCo., Ltd.
<Contact> TEL : 044-549-7300 http://info.tactnet.co.jp/ando-fsg/e/

*6 : MINATO ELECTRONICS INC.
<Contact> TEL : 045-591-5611, FAX : 045-592-2854 http://www.minato.co.jp/index_e.html

*7 : Yokogawa Digital Computer Corporation
<Contact> TEL042-333-6224 FAX : 042-352-6107 http://www.ydc.co.jp/micom/index_E.htm

FLASH Adaptor unit for FR families

Part number	Package (leadpitch, body size)		Package code	Adaptor unit *1, *2
MB91F109PF	QFP-100	(0.65 mm, □14 × 20 mm)	FPT-100P-M06	MF00-783 *2
MB91F109PFV	LQFP-100	(0.65 mm, □14 × 14 mm)	FPT-100P-M05	MF00-782 *2
MB91F127	LQFP-100	(0.5 mm, □14 × 14 mm)	FPT-100P-M05	TE110-123F14AP *1
MB91F128	LQFP-100	(0.5 mm, □14 × 14 mm)	FPT-100P-M05	TE110-123F14AP *1
MB91F133APMT2	LQFP-144	(0.5 mm, □20 × 20 mm)	FPT-144P-M08	MF00-871 *2
MB91F133APBT	BGA-144	(0.8 mm, □12 × 12 mm)	BGA-144P-M01	MF00-870 *2
MB91F155APMT2	QFP-144	(0.5 mm , □20 × 20 mm)	FPT-144P-M08	TE110-123F14AP *1 MF13-1003 *2
MB91F233	LQFP-120	(0.4 mm , □14 × 14 mm)	FPT-120P-M05	Under development *1 MF13-1330 *2
MB91F355	LQFP-176	(0.5 mm , □24 × 24 mm)	FPT-176P-M02	TEF110-355F19AP *1 MF13-1361 *2
MB91F353	LQFP-120	(0.5 mm , □16 × 16 mm)	FPT-120P-M21	TEF110-353F18AP *1 Under development *2
MB91F362GAPFVS	QFP-208	(0.5 mm , □28 × 28 mm)	FPT-208P-M04	MF00-892 *2
MB91F369GA	QFP-160	(0.65 mm, □28 × 28 mm)	FPT-160P-M15	MF00-1272 *2

*1: Adapter socket was supply from Ando Electric : TEL (81)53-576-1560FAX (81)53-576-1578

*2: Recommended EPROM programer: Minato Electronics MODEL 1890A + OU910 later than ver. 4.32q.
TEL (81)45-591-5611 FAX (81)45-591-6451

FR families Evaluation Board

- The FR30 series evaluation board can be used as a target board for running the emulator.

Main Board

Name	Part number	Remarks
Evaluation board for FR families (NEW MAIN BOARD)	MB91906EB	• With 100-V AC adapter. • It is available according to the combination of daughter board as the target board of FR family for 3V or 5V power supply voltage (MB91130 is excluded). • The capacity of Flash ROM or DRAM is increased. • The succeeding model of MB91900EB (the evaluation board for FR family) .

Daughter Board

Name	Part number	Remarks
Daughter board for MB91101A	MB91901EB	• It is two piece composition of NEW MAIN BOARD (MB91906EB) + daughter board and available. • MB91V101A premounted. • Connectable with ICE made by Fujitsu.
	MB91902EB	Connectable with ICE for MB91101A made by Yokogawa Digital Computer Corporation.
Daughter board for MB91106/F109	MB91910EB	It is two piece composition of NEW MAIN BOARD (MB91906EB) + daughter board and available.
Daughter board for MB91107/108/121	MB91907EB	Connectable with ICE made by Fujitsu. It is two piece composition of NEW MAIN BOARD (MB91906EB) + daughter board and available.
Daughter board for MB91110	MB91904EB	Connectable with ICE for MB91110 made by Fujitsu.
Daughter board for MB91F130	MB91908EB	Connectable with ICE made by Fujitsu by using the evaluation board.
Daughter board for MB91150 series	MB91911EB	It is two piece composition of NEW MAIN BOARD (MB91906EB) + daughter board and available.
Daughter board for MB91306/307	MB91915EB	It is two piece composition of NEW MAIN BOARD (MB91906EB) + daughter board and available.
Daughter board for MB91340 series	MB91912EB	It is two piece composition of NEW MAIN BOARD (MB91906EB) + daughter board and available.
Daughter board for MB91362GA	MB91913EB	It is two piece composition of NEW MAIN BOARD (MB91906EB) + daughter board and available.
Daughter board for MB91302A	MB91914EB	It is two piece composition of NEW MAIN BOARD (MB91906EB) + daughter board and available.
Daughter board for MB91369GA	Under development	It is two piece composition of NEW MAIN BOARD (MB91906EB) + daughter board and available.
Daughter board for MB91F355	MB91916EB	It is two piece composition of NEW MAIN BOARD (MB91906EB) + daughter board and available.
Evaluation board for MB91F233	Under development	Use only on an evaluation board is possible.

Simple Target Board

Name	Part number	Remarks
Simple target board for ICE connection for MB91101A (FR30 SRAM board)	MB91903EB	• It is two piece composition of NEW MAIN BOARD (MB91906EB) + simple target board and available. • MB91V101A premounted. • Connectable with ICE for MB91101A made by Fujitsu.

FR60Lite Family Evaluation Board (BBF2001) : Sun Hayato

This is an evaluation board made by Sunhayato corp. in correspondence with Fujitsu FR families. It can be used to verify the operating status of F²MC-16LX families before they are actually embedded into a customer's system. As a consequence, development efficiency is accelerated.
This board consists of a Sun Hayato mainboard and a Sun Hayato daughterboard. By changing the Sun Hayato daughterboard, it can be used for debugging with the (ICE) tool combined with the emulator debugger, evaluating a microcomputer with built-in flash memory and a serial programming. The board made by Sun Hayato is adaptable to various series by changing the daughterboard, while the mainboard is common to each part.

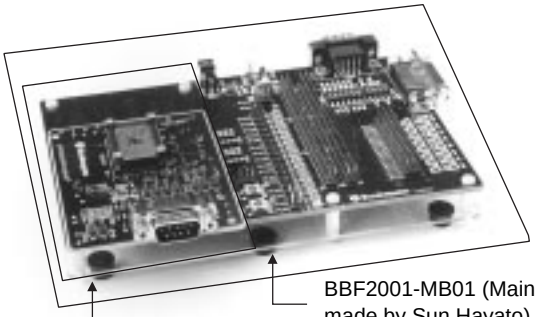

- **Evaluation board configuration**

Sun Hayato main board (BBF2001-MB01)

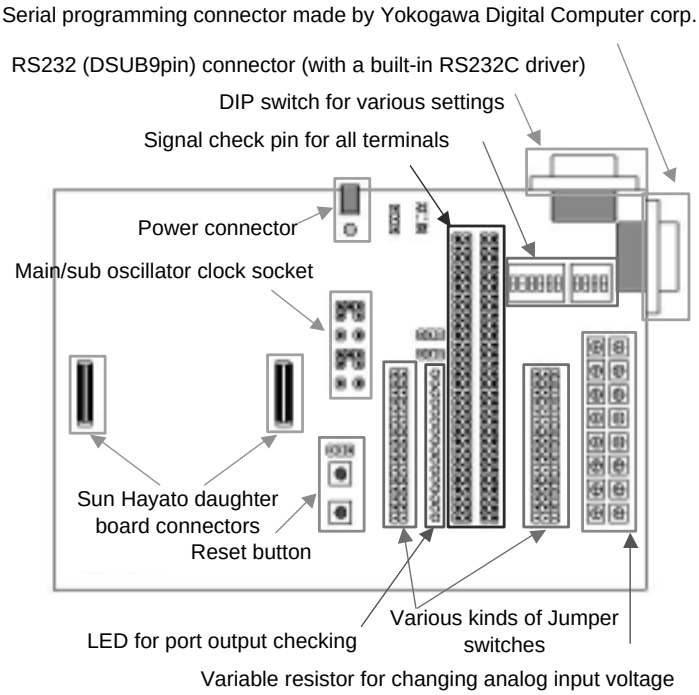

IC socket (clam shell type) daughter board (BBF2001-FR100CAN2-NB)

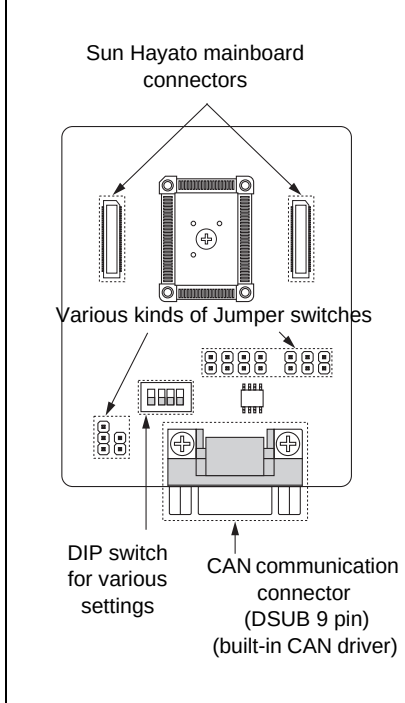

- **Product configuration**

Sun Hayato main board

Part number	Description
BBF2001-MB01	• Locating signal check pin to all terminals • Capability of changing input voltage to analog input terminal (by variable resistor) • Function of LED lightning for output port (P00 to P17) • Evaluate the capability of communication between PC and microcomputer with UART (mounted DSUB 9pin) • Can be use the serial programmer made by Fujitsu • Can be use the serial programmer made by Yokogawa Digital Computer corp. • Can be use the main board for F²MC-16LX

Sun Hayato daughter board

Part number	Description	Target microcontroller	Usage	note
BBF2001-FR100CAN2-NB	NQPACK type (0.65 mm pitch, □14 mm × 20 mm)	MB91260series	• Evaluation board connectable with (ICE) tool. • Can be use the serial programmerfor FLASH microcontroller	Built-in CAN trans-ceiver for extension on a daughter board

Sun Hayato main board ＋ Sun Hayato daughter board

Part number	Description	Target microcontroller	Usage	note
BBF2001-FR100CAN2-NS	Main ＋ NQPACK type (0.65 mm pitch, □14 mm × 20 mm)	MB91260 series	• Evaluation board connectable with (ICE) tool. • Can be use the serial programmerfor FLASH microcontroller	Built-in CAN trans-ceiver for extension on a daughter board

Target microcontroller

Series name	Package (leadpitch, body size) (mm)	note
MB91260 series	QFP-100 (0.65 mm pitch, □14 mm × 20 mm)	Built-in CAN transceiver for extension on a daughter board

Contact for details: Sun Hayato Co,. td. TEL : (81)3-3986-0403 FAX : (81)3-5396-9106

FR-V Family

FR-V Family Features

VLIW (Very Long Instruction Word) flexible architecture
A performance range large from 2way to 8way of instruction parallel at the same architecture is realized.
Sophisticated media processing for parallel data processing
A high performance is realized to media processing and Imaging processing for SIMD (Single Instruction Stream-Multiple Data Stream) execution.
It develops as a core for SoC (System on Chip)
A peripheral circuit and an application specialization function are realized with one chip.

FR-V Family Product Range

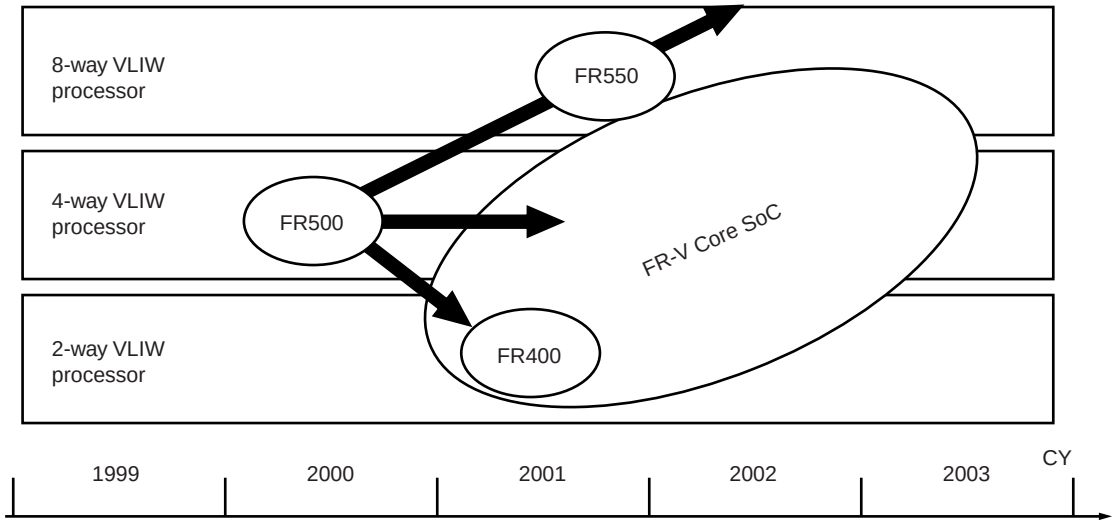

Hardwear Configuration

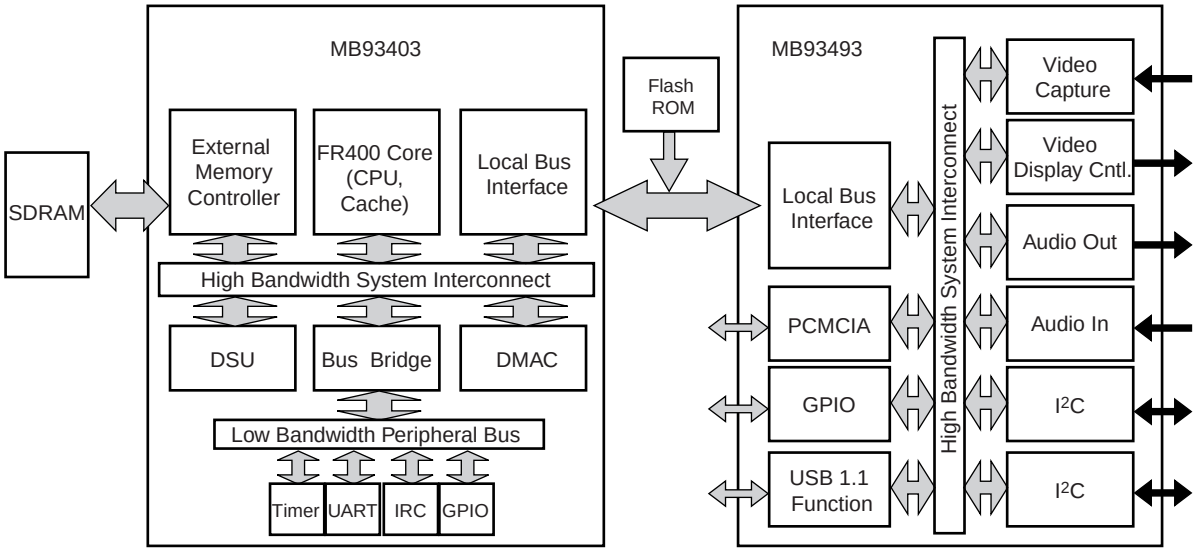

FR-V Family

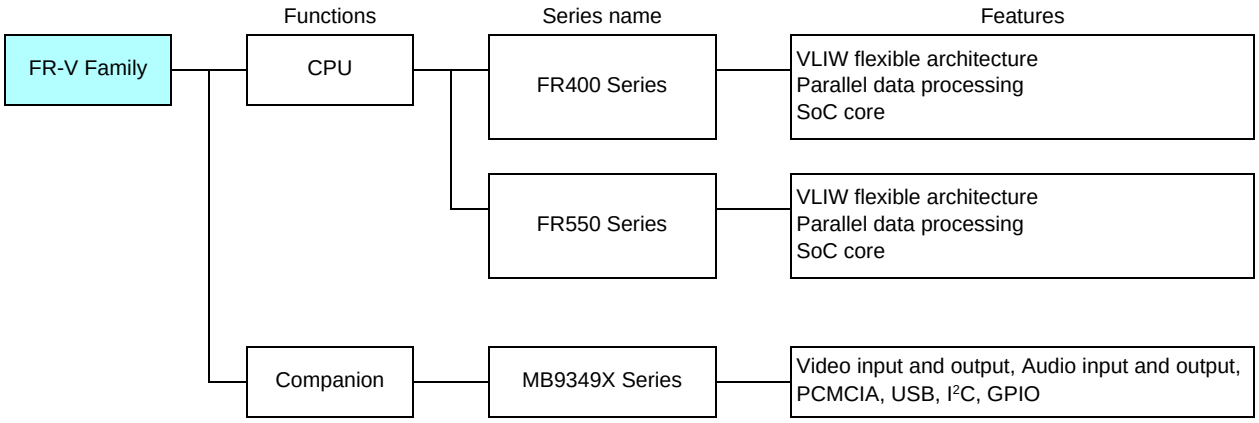
Functions
Series name
Features
FR-V Family
CPU
FR400 Series
VLIW flexible architecture
Parallel data processing
SoC core
FR550 Series
VLIW flexible architecture
Parallel data processing
SoC core
Companion
MB9349X Series
Video input and output, Audio input and output,
PCMCIA, USB, I2C, GPIO

FR-V Family

CPU

Series name	Part number	Operating power supply voltage	Package	Functions					Peripherals
				VLIW issues *	operation frequency (MHz)	Register	Cache	Peak performance	
FR400	MB93403	External : 3.3 V ± 0.15 V Internal : 1.8 V ± 0.09 V	PBGA 256P	2way (I, I, M, M, B)	266/ 200	32b × 32w (5R/3W)	Inst : 8KB/ 2way (1RW) Data : 8KB/ 2way (1RW) Single Load Single Store Non-Blocking	532MIPS 2128MOPS	SDRAMC IRC UART/ TIMER DMAC GPIO
FR550	○MB9355X	External : 3.3 V ± 0.15 V Internal : 1.3 V ± 0.05 V	BGA 352P	8way (I, I, I, I, F, F, F, F, F M, M, M, M, B, B)	333MHz/ 300MHz	32b × 64w (10R/6W)	Inst : 32KB/ 4way (1RW) Data : 32KB/ 4way (2RW) Dual Load Dual Store Non-Blocking	1332MIPS 7992MOPS 1332MFLOPS	SDRAMC IRC UART/ TIMER DMAC GPIO

* : instruction set (I : Integer, F : Floting, M : Media, B : Branch)
○ : Under development

Companion

Series name	Part number	Operating power supply voltage	Package	Functions
MB9349X	MB93493	3.3 V ± 0.15 V	PBGA 256P	Video input and output (progressive/ interlace correspondence) Audio input and output (3 line type serial and PCM highway correspondence) PCMCIA (PCMCIA2.1/JEIDA4.2 conformity) USB (USB 1.1 conformity function) I^2C (100 Kbps, 400 Kbps) GPIO (40 bit)

Integrated Development Environment

Fujitsu SOFTUNE/REALOS integrating a series of development tools and an open-source environment of GNUPro/ axLinux are available.

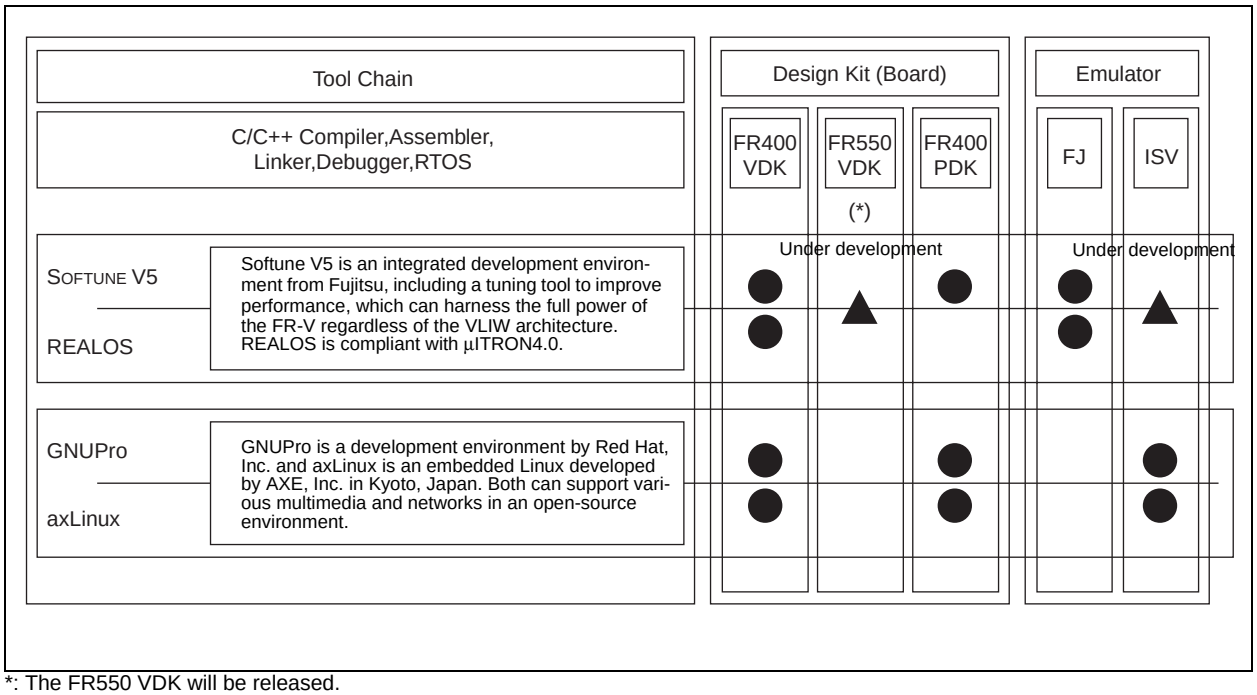

*: The FR550 VDK will be released.

SOFTUNE V5

Integrated environment covering the development processes from source coding and binary building to debugging, providing simple operations and high efficiency.

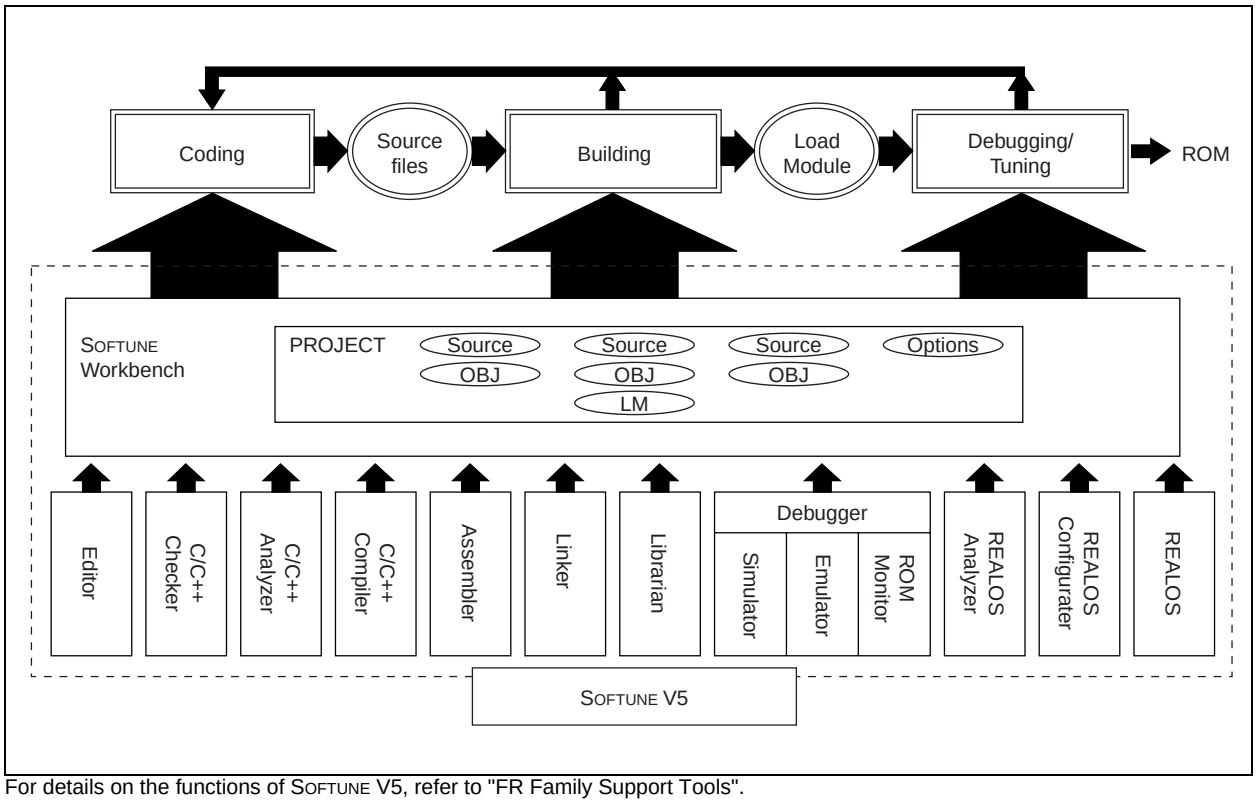

For details on the functions of SOFTUNE V5, refer to "FR Family Support Tools".

1. C/C++ Compiler

Incorporating the advanced VLIW optimization technology refined in the field of supercomputers, the C/C++ compiler gets the most out of the FR-V.

- High instruction-level parallelism
  Global scheduling using predicated and non-excepting instructions, providing high instruction-level parallelism.

- High coding efficiency
  Eliminating Nop instructions from empty slots and by using the packing flag, resulting in a compact code size

- C/C++/EC++ language support
  Capable of utilizing and saving platform-independent program resources

2. Debugger

The debugger enables debugging at both of the source code and assembly language levels as easily as with ordinary microcontrollers. It offers a choice of three debugging selectable depending on your situation.

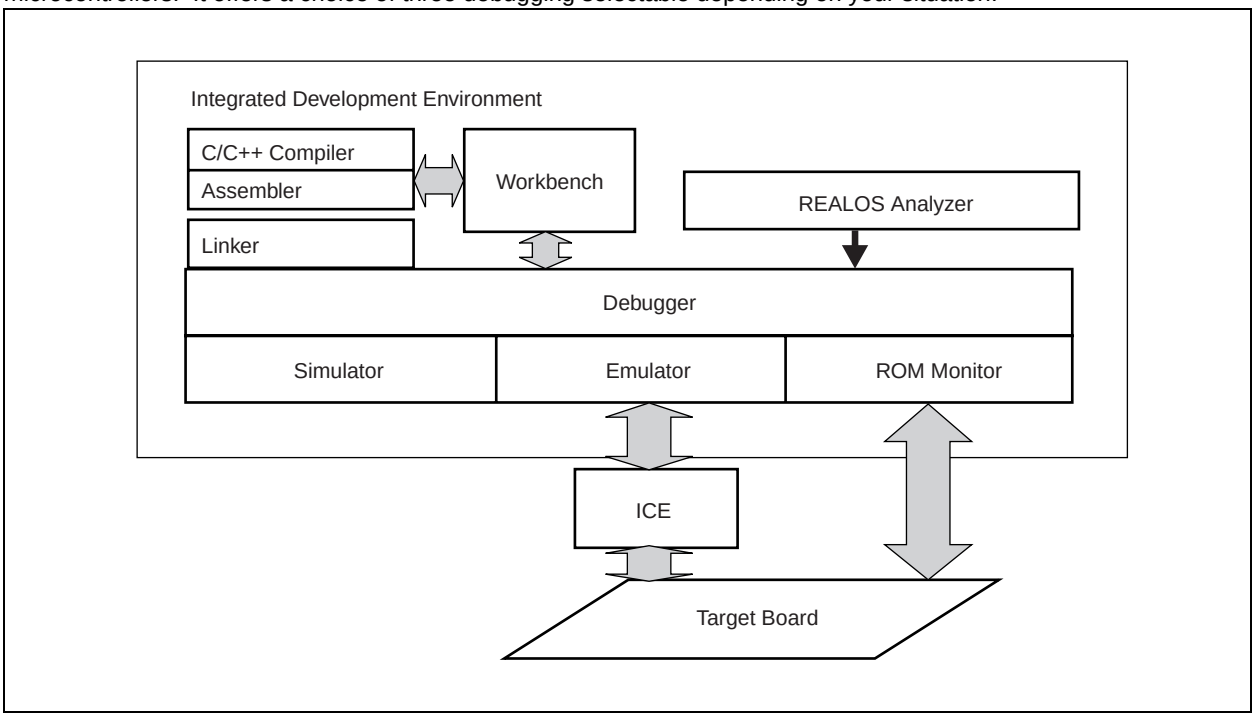

3. REALOS/FRV

REALOS/FRV conforms to an industry standard of the mITRON4.0 Specification. The OS is optimized for the architecture of the FR-V and is based on a fast, compact kernel.

- µITRON4.0 compliant
  Conforming to an industry standard of the mITRON Specification

- High speed processing
  Context switching time: 1.95 microsecond (FR400 at 266 MHz)

- Compact
  Kernel code size: 25 KB (minimum)

- REALOS support tools
  Configurator
  Multitasking debugger
  C/C++ compiler REALOS system call inline expansion
  Task state transition analysis tool (REALOS analyzer)

- TCP/IP support
  Conforming to the ITRON TCP/IP Specification; supporting the BSD4.3 Socket Interface

Software Products

SOFTUNE V5 products

Package product name	Product model No.	Version	Component products
FR-V Family SOFTUNE Professional Pack	SP3660Z058	Rev : 500008	Workbench C/C++ compiler Assembler pack C/C++ analyzer C/C++ checker
FR-V Family SOFTUNE REALOS/FRV BASIC	SP3660M058BA *	Rev : 500005	Kernel Configurator REALOS analyzer
FR-V Family SOFTUNE REALOS/FRV EVALUATION	SP3660M058EV	Rev : 500005	
FR-V Family SOFTUNE REALOS/FRV BASIC eTCP/IP	SP3660M058BB *	Rev : 500005	Kernel Configurator REALOS analyzer eTCP/IP
FR-V Family SOFTUNE REALOS/FRV EVALUATION eTCP/IP	SP3660M058EB	Rev : 500005	

- Operating environment: WindowsXP/Me/2000/98/NT4.0
- Each software product can be licensed for multiple packages (1, 3, 5, or 10 packages). Check the end (-P01, -P03, -P05, -P10) of the model number of each product to specify the number of packages to be licensed.

*: BASIC products are available with kernel source contained. Check the end (-S) of the model number of each BASIC product to specify the package containing the kernel source.

ISV products

Type	Product name	HOST	Vendor
Cross software tools (compiler, assembler, linker, debugger, etc.)	GNUPro	SPARC station/Solaris PC/Windows PC/Linux	Red Hat K.K. 3F Shin-Kanda Building, 2-15-2 Soto-Kanda Chiyoda-ku, Tokyo 101-0021, Japan TEL: +81-3-3257-0411, FAX: +81-3-3257-0410 Website: http://www.jp.redhat.com/
Realtime OSS	axLinux (Embedded Linux)	PC/Linux	AXE, Inc. 8F, Carney Place Kyoto Karasumaru 280, Makieya-machi, Nijo Noboru, Karasuma-dori, Nakagyo-ku Kyoto-shi, Kyoto Prefecture 604-0857, Japan TEL: +81-75-213-7075, FAX: +81-75-213-7076 Website: http://www.axe-inc.co.jp/

Emulator

- Full-speed emulation using the Debug Support Unit (DSU)
- Capable of downloading via the DSU
- Capable of ROM debugging with hardware breakpoints

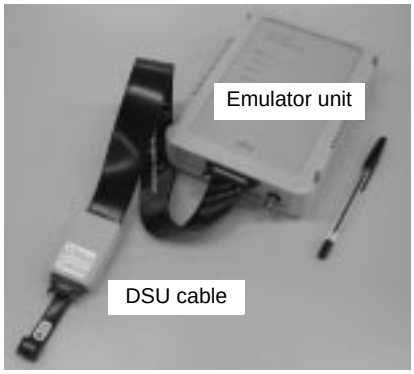

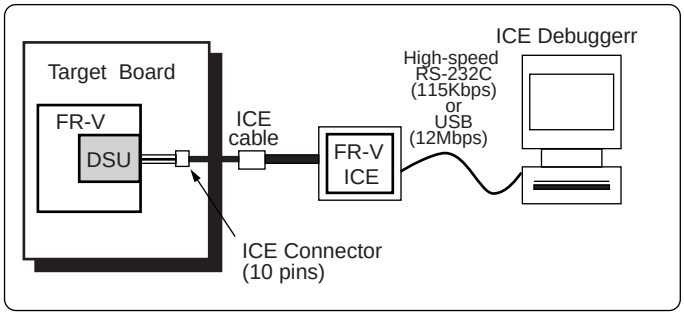

Emulator unit: MB2199-01
DSU cable: MB2199-10

Evaluation Board (FR-V Design Kit - VDK)

- System evaluation/development environment provided as a kit
- Easy setup
- Performance/function evaluation to application development platform
- Support for dedicated ICE/OS/integrated development environment

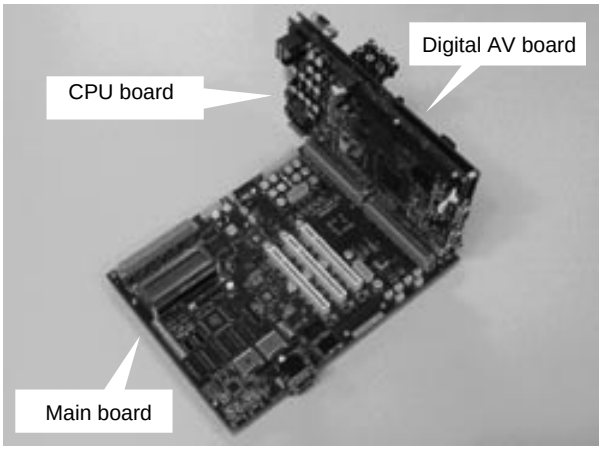

VDK Products

Product name	On-board CPU	Product model No.
CPU board	FR400 series	MB93091-CB30
	FR550 series	Under development
Main board	—	MB93090-MB00
Digital AV board	FR400 series Companion	MB93092-EX00

The CPU board and the main board are used in pairs.
The Digital AV board is required for system evaluation which uses FR400 series CPU and Companion.

PDK (FR-V Portable Demonstration Kit)

- PDK is a digital AV reference kit and consists of the hardware and software based on FR400 series CPU.
- PDK is an evaluation/development kit quipped with external input/output interfaces for video/audio besides a LCD and a touch panel.
- Use of the middleware (MPEG-4 Visual Codec and MPEG-4/2 AAC Audio Codec, etc.) optimized for FR-V enables efficient evaluation and development of applications.
- Installing axLinux on PDK makes file systems and network functions available.

Middleware Products

Category	Name	Description	Target CPU	OS	Product model No.	Applicable fields
Graphics	2D Graphics Library for FR400 (axLinux) V01	These libraries are used to draw two-dimensional graphics and process and display images on the FR400-based system. These can be used for equipment which has a GUI such as operation menus or which displays color and monochrome images.	FR400 series	axLinux	Evaluation SP406245018EVC Base SP406245018QAC	- Display devices - F/A equipment - Amusement equipment - Printer/fax
Still image	JPEG Baseline Process Encoder/Decoder Library for FR400 V03	This library is used to encode/decode JPEG images on the FR400-based system. Using this library allows your system to easily input/output JPEG images.	FR400 series	REALOS	Evaluation SP366241118EVJ Base SP366241118QAJ	- Digital still camera - Amusement equipment - Printer/fax - Still image device
Video	MPEG-1 Decoder Library for FR400 V01	This library is used to decode MPEG-1 video/audio. Using this library allows your system to easily play MPEG-1 video/audio.	FR400 series	REALOS	Evaluation SP366241618EVJ Base SP366241618QAJ	- Digital AV equipment (Home/portable) - Imaging device - In-vehicle equipment
	MPEG-4 Visual Simple Profile Decoder Library for FR400 V01	This library is used to decode the stream compliant with MPEG-4 Visual Simple Profile. Using this library allows your system to easily decode MPEG-4 visual simple profiles.	FR400 series	REALOS	Evaluation SP366241918EVJ Base SP366241918QAJ	
	MPEG-4 Visual Simple Profile Decoder Library for FR400 (axLinux) V01			axLinux	Evaluation SP366242718EVJ Base SP366242718QAJ	
	MPEG-4 Visual Simple Profile Encoder Library for FR400 V01	This library is used in order to generate the stream compliant with MPEG-4 Visual Simple Profile. Using this library allows your system to easily encod MPEG-4 Visual Simple Profile from original picture image.	FR400 series	REALOS	Evaluation SP366242818EVJ Base SP366242818QAJ	
	MPEG-4 Visual Simple Profile Encoder Library for FR400 (axLinux) V01			axLinux	Evaluation SP366242918EVJ Base SP366242918QAJ	
Audio	MPEG-2 AAC LC Decoder Library for FR400 V01	This library is used to decode of the stream compliant with MPEG-2/4 AAC LC. Using this library allows your system to easily decode MPEG-2/4 AAC LC.	FR400 series	REALOS	Evaluation SP366243518EVJ Base SP366243518QAJ	- Digital AV equipment (Home/portable) -Audio equipment - In-vehicle equipment
	MPEG-2 AAC LC Decoder Library for FR400 (axLinux) V01			axLinux	Evaluation SP366244218EVJ Base SP366244218QAJ	
	MPEG-4 AAC LC Decoder Library for FR400 V01			REALOS	Evaluation SP366243318EVJ Base SP366243318QAJ	
	MPEG-4 AAC LC Decoder Library for FR400 (axLinux) V01			axLinux	Evaluation SP366244018EVJ Base SP366244018QAJ	

(Continued)

(Continued)

Category	Name	Description	Target CPU	OS	Product model No.	Applicable fields
Player / recorder	Media Play Master library for FR400 V01	This library can realize real-time decoding processing and a trick play, etc. required as a digital A/V system.	FR400 series	REALOS	Evaluation SP366244618EVJ Base SP366244618QAJ	- Digital AV equipment (Home/portable) - Imaging device - In-vehicle-mounted equipment
	Media Play Master library for FR400 (axLinux) V01			axLinux	Evaluation SP406244718EVJ Base SP406244718QAJ	
	Media Record Master for FR400 V01	This library can realize real-time encoding processing required as a digital A/V system.	FR400 series	REALOS	Evaluation SP366244818EVJ Base SP366244818QAJ	
	Media Record Master for FR400 (axLinux) V01			axLinux	Evaluation SP406244918EVJ Base SP406244918QAJ	
	MP4 File Format Library for FR400 (REALOS) V01	This library is used when multiplexing each encoded AV stream to MP4 file format or demultiplexing MP4 file format to each AV stream, and it can realize AV synchronous function.	FR400 series	REALOS	Evaluation SP366245118EVJ Base SP366245118QAJ	
	MP4 File Format Library for FR400 (axLinux) V01			axLinux	Evaluation SP406245218EVJ Base SP406245218QAJ	
Media software evaluation set	Multimedia Library Evaluation Pack for FR400 V01	This library is used for evaluation of the MPEG-4 visual simple profile decoder and JPEG codec.	FR400 series	REALOS	SP366243018EVJ	- Digital AV equipment (Home/portable) - Imaging device - In-vehicle equipment
	Multimedia Library Evaluation Pack for FR400 (axLinux) V01			axLinux	SP366243218EVJ	

32-bit SPARC Family SPARClite

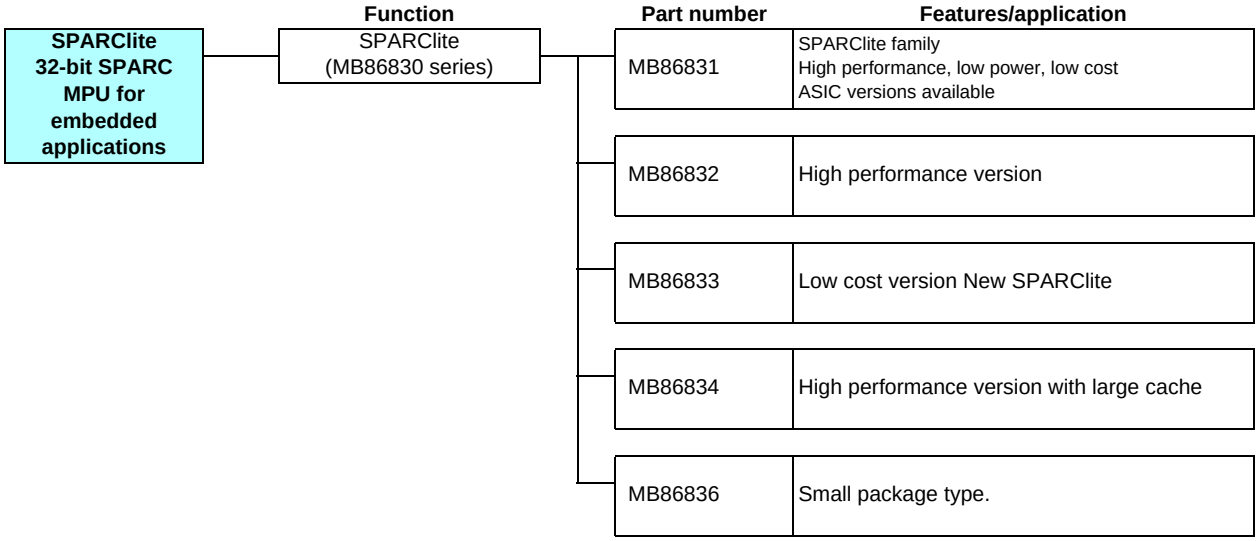

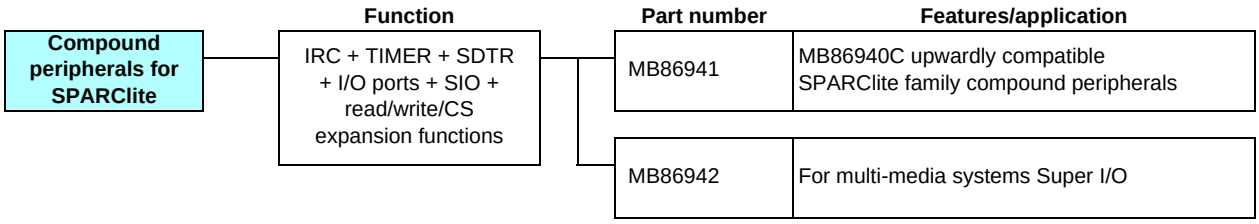

SPARClite 32-bit MPU for Embedded Applications

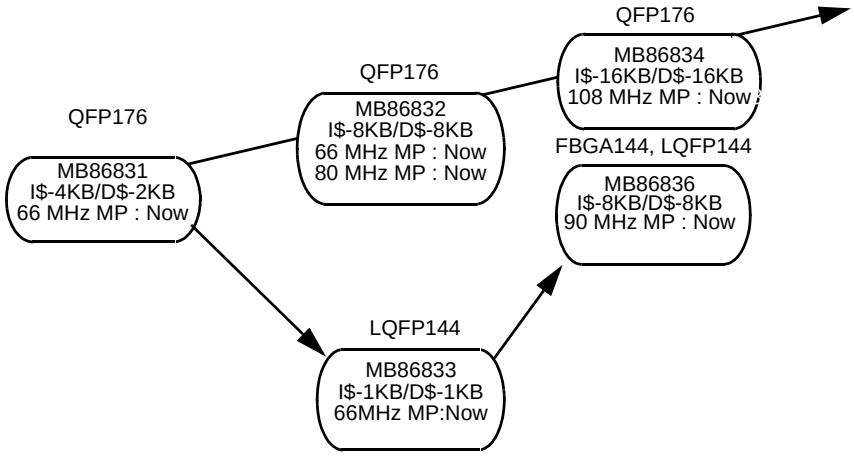

Part number	Operating power supply voltage (V)	Maximum Operating Frequency	Package			Functions								
			QFP	LQFP	BGA	Internal FPU	Clock doubler	Internal cache (instruction/data)	DMAC	DRAM controller	SDRAM controller	Interrupt controller	Timer	JTAG
MB86831	+5±0.25/ +3.3±0.15 *3	66MHz (33MHz external)	176P*1	—	—	—	○	4K/2K	—	○	—	8 ch	—	—
MB86832		80MHz (40MHz external)	176P*1	—	—	—		8K/8K						
MB86833		66MHz (33MHz external)	—	144P*2	—	—		1K/1K						
MB86834	+3.3±0.15 +2.5±0.1 *4	108MHz (36MHz external)	176P*1	—	—	—		16K/16K						
MB86836	+3.3±0.15 *4	90MHz (40MHz external)	—	144P*2	144P	—		8K/8K		—			○	

*1: 0.5mm pitch QFP
*2: 0.5mm pitch LQFP
*3: When an external 3.3V interface used = 3.3V single power supply is required.
When an external 5V interface used = 3.3V/5V dual power supplys are required.
*4: 2.5(± 0.1)V/3.3V dual power supplys are required.
Package: P - Plastic, C - Ceramic

Compound Peripherals for SPARClite

Part number	Operating power supply voltage (V)	Maximum Operating Frequency	Package	Functions
MB86941	+5 ± 5%	40 MHz	QFP-144P (0.5 mm pitch)	IRC + TIMER + SDTR + I/O ports + SIO + read/write/CS expansion functions
MB86942	+3.3 ± 0.15%	50 MHz	QFP-144P (0.5 mm pitch)	RC + TIMER + SDTR + I/O ports + SIO + read/write/CS expansion functions

SPARClite Development Procedure

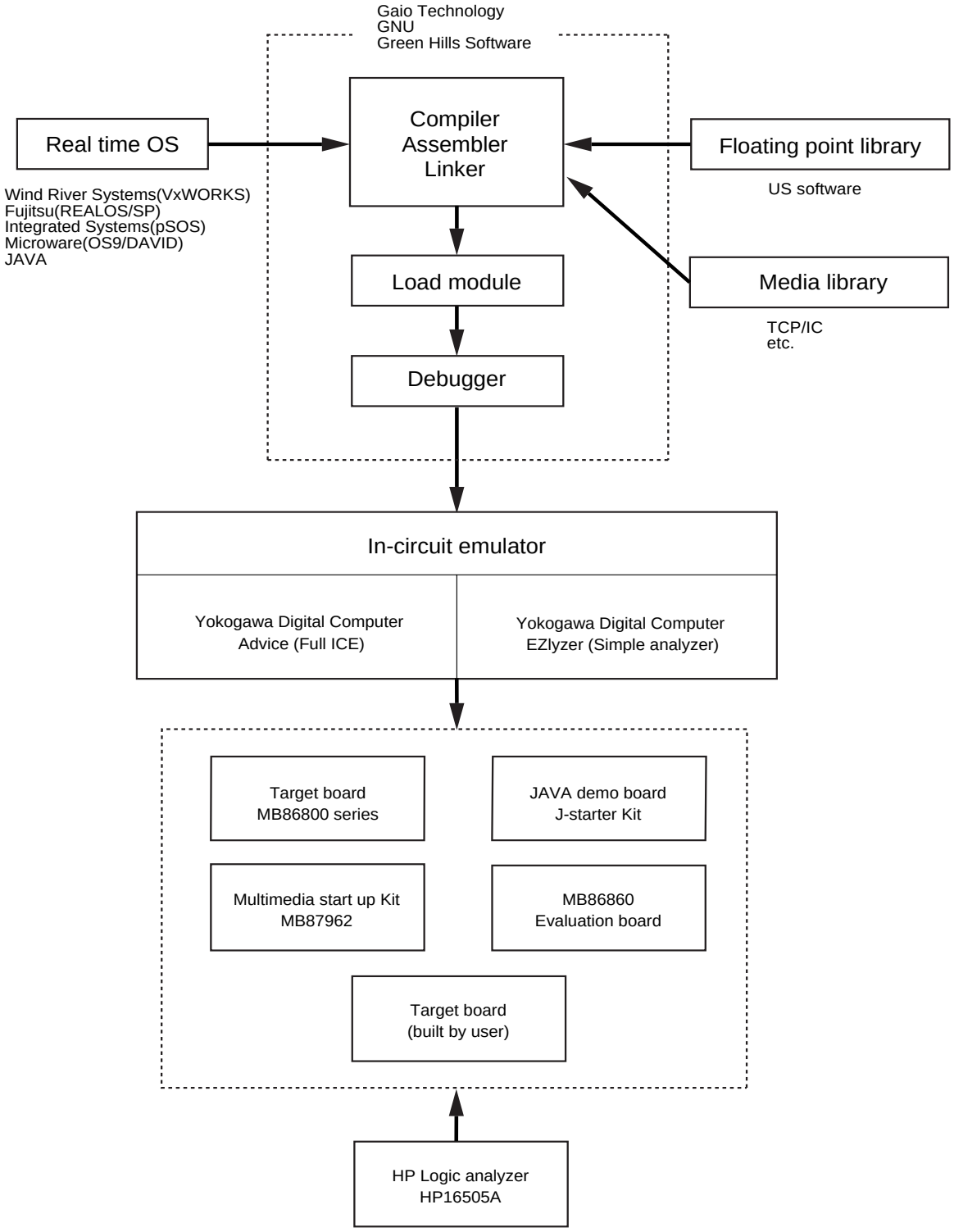

Global Contact

The contacts only in North America and Japan are listed here. See "CONTACT" website for the contacts in other countries.

• Green Hills Software Inc.
WEBSITE: http://www.ghs.com/
CONTACT: http://www.ghs.com/html/sales.html

North America
Ada Sales
TEL: +1-813-781-4909 FAX: +1-813-781-3915
EMAIL: adasales@ghs.com

Japan
Advanced Data Controls
WEBSITE: http://www.adac.co.jp/
TEL: +81-3-3576-5351 FAX: +81-3-3576-1772

• Cygnus Solutions
WEBSITE: http://www.cygnus.com/
CONTACT: http://www.cygnus.com/contact/

North America
Corporate Headquarters
TEL: +1-408-542-9600 800-cygnus-1(toll free in USA)
FAX: +1-408-542-9699
EMAIL: info@cygnus.com

Japan
Nihon Cygnus Solutions
WEBSITE: http://www.cygnus.co.jp/
TEL: +81-3-3234-3896 FAX: +81-3-3239-3300
EMAIL: info@cygnus.co.jp

• US Software
WEBSITE: http://www.ussoftware.com/
CONTACT: http://www.ussoftware.com/

North America
TEL: +1-503-844-6614 800-356-7097(toll free in USA)
FAX: +1-503-844-6480
EMAIL: info@ussw.com

Japan
A.I.Corporation
WEBSITE: www.aicp.co.jp
TEL: +81-3-3493-7981 FAX: +81-3-3493-7993
EMAIL: sales@aicp.co.jp

• Wind River systems
WEBSITE: http://www.wrs.com/
CONTACT: http://www.wrs.com/corporate/html/wrintoff.html

North America
TEL: +1-510-748-4100 800-545-WIND(toll free in USA)
FAX: +1-510-749-2010
EMAIL: inquiries@wrs.com

Japan
TEL: +81-03-5467-5900 FAX: +81-03-5467-5877

• Integrated Systems Inc.
WEBSITE: http://www.isi.com/
CONTACT: http://www.isi.com/AboutISI/Contacts/

North America
TEL: +1-408-542-1500 800-543-pSOS(toll free in USA)
FAX: +1-408-542-1950
EMAIL: info@isi.com

Japan
Tachibana (pSOSystem)
TEL: +81-3-3791-1511 FAX: +81-3-3791-1516
EMAIL: tactomo@magical.egg.or.jp

• Microware Systems Corporation
WEBSITE: http://www.microware.com/index.html
CONTACT: http://www.microware.com/html/contact.html

North America
TEL: +1-515-223-8000 800-475-9000(toll free in USA)
FAX: +1-515-224-1352
E-mail: info@microware.com

Japan
TEL: +81-3-3257-9000 FAX: +81-3-3257-9200
E-mail:info@microware.co.jp

• Accelerated Technology Incorporated
WEBSITE: http://www.nucleus.com/
CONTACT: http://www.atinucleus.com/intro.htm

North America
Toll Free in USA: 1-800-468-6853
TEL: +1-334-661-5770 FAX: +1-334-661-5788
EMAIL: info@atinucleus.com

Japan
Grape Systems, Inc.
TEL: +81-45-323-6541 FAX: +81-45-323-6545
EMAIL: nakajo@yokahama.grape.co.jp

• Synopsys
WEBSITE: http://www.synopsys.com/home.html
CONTACT: http://www.synopsys.com/company/locations/japan.html

North America
TEL: +1-602-468-6900 FAX: +1-602-468-9055
http://www.synopsys.com/company/locations/us.html

Japan
Nihon Synopsys Co., Ltd
TEL: +81-3-3346-7030 FAX: +81-3-3346-7050

• Yokogawa Digital Computer Corporation

North America
Orion Instruments Inc.
WEBSITE: http://www.oritools.com
TEL: +1-408-747-0440 FAX: +1-408-747-0688

Europe
Ashling Microsystems Limited
WEBSITE: http://www.ashling.com
TEL: +44-1256-811998 FAX: +44-1256-811761

Japan and other area
Yokogawa Digital Computer Corporation
WEBSITE:http://www.ydc.co.jp
TEL: +81-42-333-6222 FAX: +81-42-352-6107

• Yokogawa Electric Corporation
WEBSITE: http://www.yokogawa.co.jp/
CONTACT: http://www.yokogawa.co.jp/Eda/ceeds/contact_e/contact_e.htm

North America
Kanematsu USA Inc. Semiconductor Dept.
TEL: +1-408-522-9753 FAX: +1-408-773-1126
EMAIL:sam.yoshikawa@webjapan.com

Japan
EDA Cente, Yokogawa Electric Corporation
TEL: +81-422-52-5589 FAX: +81-422-52-4892
EMAIL: edainfo@mls.yokogawa.co.jp

µITRON Specification Real Time OS for SPARClite (REALOS/SP)

(1) Product Overview

REALOS/SP is a real time OS for the SPARClite (MB86930) series. The SPARClite series is a 32-bit RISC chip from Fujitsu that uses the SPARC architecture and is aimed at embedded applications.
REALOS/SP complies with the µITRON 3.0 specifications.

- Features
  Complies with the µITRON 3.0 specifications
  System design suitable for use with 32-bit MCUs in control applications
  High speed dispatch and interrupt processing
  Configurator support uses a multi-window system
  Supports modular loading
  Sample I/O drivers are provided
- REALOS/SP Specifications

Item	Description
Target CPU	SPARClite series (MB86930 series)
Maximum number of tasks	65 or 535
Maximum number of priorities	32
Scheduling method	Priority-based, event-driven
Number of system calls	50
Standards compliance	Complies with µITRON 3.0 specifications
Kernel programming language	Assembly language
Application programming languages	C, assembly languages
Kernel size	Approximately 5.0KB (resident) to approximately 10.0KB (maximum configuration)

(2) Product Structure

- Kernel

  Provides the basic functions of the real time OS. This is an event-driven, multi-tasking, real time OS. You can selectively incorporate only those system calls that are used by the application.

- System Calls

Function	Instruction	DescriptionDescription
Task management	**sta_tsk**	Start task
	ext_tsk	Terminate own task
	ter_tsk	Forcibly terminate other task
	dis_dsp	Disable dispatching
	ena_dsp	Enable dispatching
	chg_pri	Change task priority
	rot_rdq	Rotate task ready queue
	rel_wai	Release other task from wait
	get_tid	Get own task ID
	ref_tsk	Get task state
Task synchronization	**sus_tsk**	Forcibly set other task to wait state (suspend)
	rsm_tsk	Restart suspended task
	frsm_tsk	Forcibly restart suspended task
	slp_tsk	Set own task to wait for wakeup
	tslp_tsk	Set own task to wait for wakeup (with timeout)
	wup_tsk	Wakeup other task
	can_wup	Cancel task wakeup request
Synchronization and communications	**sig_sem**	Signal a semaphore
	wai_sem	Wait on a semaphore
	preq_sem	Wait on a semaphore (polling)
	ref_sem	Get semaphore state
	set_flg	Set event flag
	clr_flg	Clear event flag
	wai_flg	Wait on an event flag
	pol_flg	Wait on an event flag (polling)
	ref_flg	Get event flag state
	snd_msg	Send to mailbox
	rcv_msg	Receive from mailbox
	prcv_msg	Receive from mailbox (polling)
	ref_mbx	Get mailbox state
Interrupt management	**ret_int**	Return from interrupt handler
	loc_cpu	Disable interrupts and dispatching
	uni_cpu	Enable interrupts and dispatching
	chg_ipl	Change interrupt level
	ref_ipl	Get interrupt level
Memory pool management	**get_blk**	Get memory block
	pget_blk	Get memory block (polling)
	rel_blk	Release memory block
	ref_mpl	Get memory pool state
Time management	**set_tim**	Set system clock
	get_tim	Read system clock
	dly_tsk	Delay task
	def_cyc	Define cyclic handler
	act_cyc	Control/activate cyclic handler
	ref_cyc	Get state of cyclic handler
	def_alm	Define alarm handler
	ref_alm	Get state of alarm handler
	ret_tmr	Return from timer handler
System management	**get_ver**	Get version number
	ref_sys	Get system state

- Configurator

  A configurator program with a multi-window user interface is provided to generate executable programs with an optimized execution environment for the kernel and application.

- Sample I/O drivers

  Source code is provided for sample I/O drivers.

- Sample programs

  These provide practical programming examples for user training.

Digital Signal Processor Hi-Perion Family

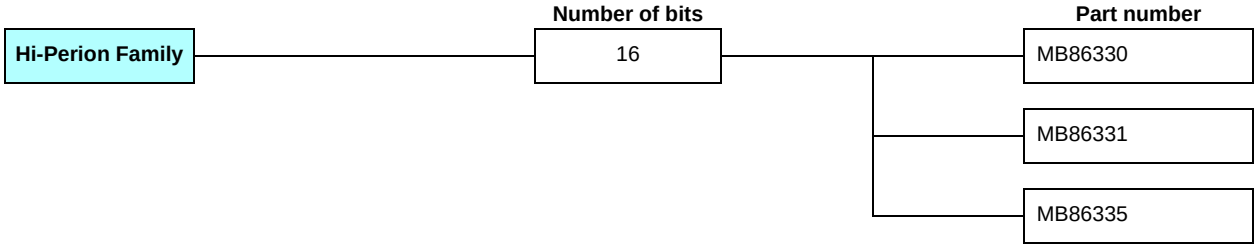

Hi-Perion Family

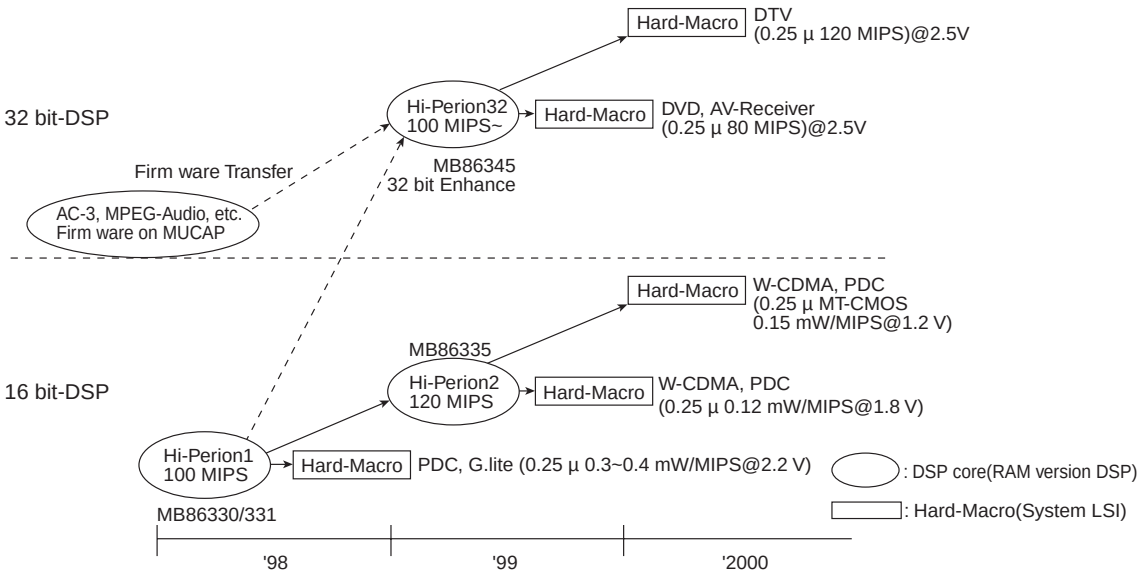

Part Number	Operating Power Supply Voltage(V)	Package		Features
		QFP	PGA	
MB86330	3.3 single	—	256C	Fixed point operations: Multiplication 16bit × 16bit → 31bit Addition 40bit + 40bit → 40bit Sum of products 40bit ± 16bit × 16 bit → 40bit Processing performance 100MIPS max. Data RAM: dual-port simultaneous access structure Supports external RAM (ERAM) Uses memory-mapped I/O (I/O is assigned to addresses in the memory space.) Instruction RAM ← 48KW x 16-bit Table RAM ← 16KW x 16-bit Addressing: Two independent addressing units Eight general-purpose registers Register-update addressing Circular addressing Two address update registers
MB86331	3.3 single	208P	—	Fixed point operations: Multiplication 16bit × 16bit → 31bit Addition 40bit + 40bit → 40bit Sum of products 40bit ± 16bit × 16bit → 40bit Processing performance 80MIPS max.@2.5 V Data RAM: dual-port simultaneous access structure Supports external RAM (ERAM) Uses memory-mapped I/O (I/O is assigned to addresses in the memory space.) Instruction RAM ← 62KW x 16-bit Table RAM ← 20KW x 16-bit Addressing: Two independent addressing units Eight general-purpose registers Register-update addressing Circular addressing Two address update registers
MB86335	3.3 single	208P	—	Fixed point operations: Multiplication 16bit × 16bit → 31bit Addition 40bit + 40bit → 40bit Sum of products 40bit ± 16bit × 16bit → 40bit Processing performance 120MIPS max.@2.5 V Data RAM: dual-port simultaneous access structure Supports external RAM (ERAM) Uses memory-mapped I/O (I/O is assigned to addresses in the memory space.) Instruction RAM ← 62KW x 16-bit Table RAM ← 32KW x 16-bit Addressing: Two independent addressing units Eight general-purpose registers Register-update addressing Circular addressing Two address update registers

Packages: P - plastic, C - ceramic

Hi-Perion Family Development Tools

(1) C compiler

ANSI C compliant XCC-V C compiler from GAIO.

Runs on Windows and UNIX operating systems.

(2) Analyzer

XASS-V series from GAIO.

Full support for Hi-Perion assembly mnemonics.

Supports user-defined structure macros using XMAC-V.

Link using XLNK-V.

User libraries can be created using the XLIB-V librarian.

Runs on Windows and UNIX operating systems.

(3) Simulator

XDBX-V simulator debugger from GAIO.

Full support for Hi-Perion assembly code.

Supports source level debugging.

Runs on Windows and UNIX operating systems.

(4) Emulator 1

XDDI-V ICE debugger from GAIO

Supports source level debugging.

Runs on Windows and UNIX operating systems.

(5) Emulator 2

MicroVIEW-G ICE debugger from Yokogawa Digital Computer.

Supports source level debugging.

Runs on Windows operating system.

(6) ICE

Full emulation using ADVICE (ICE pod) from Yokogawa Digital Computer.

Supports 10Base-T interface

Max. 100MHz operation

(7) System Simulator

DSP model (Cadence SPW™)

I.S.S. (Instruction set Simulator) model

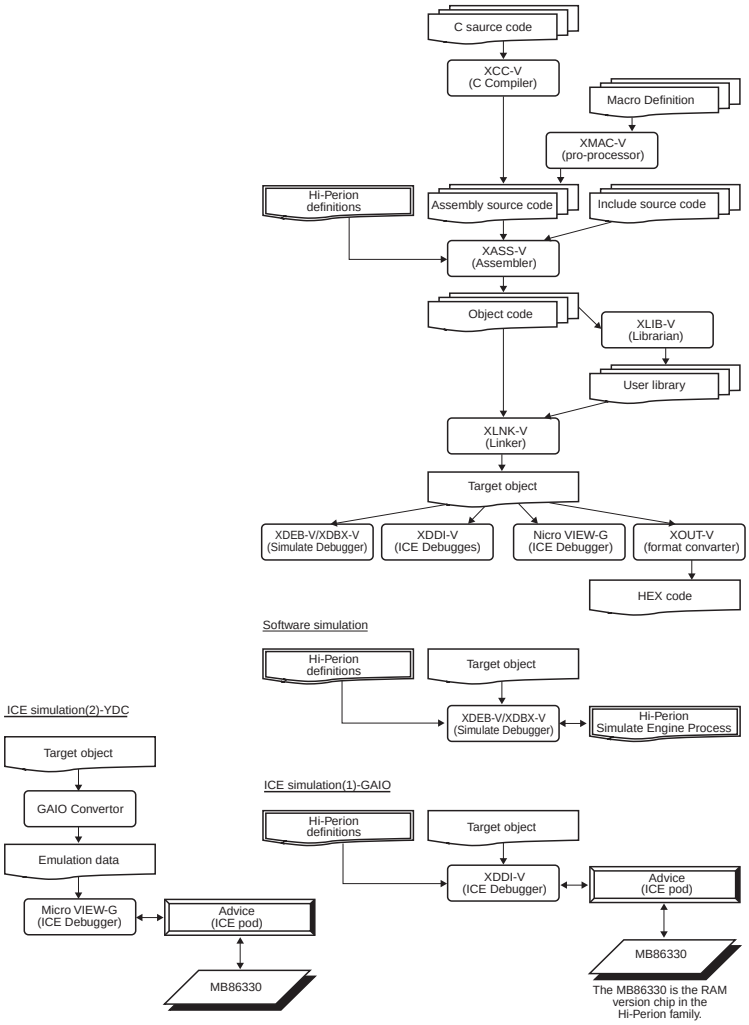

<Contact for development environment>

Gaio Technology Co. Ltd.
TEL: 03-3662-3041
Yokogawa Digital Computer Corporarion North America
Orion Instruments Inc.
1376 Borregas Avenue Sunnyvale, California 94089-1004
U.S.A
Dennis 0' Donnel (Shotaro Saito)
Tel. 408-747-0440
Fax. 408-747-0688
http://www.oritools. com
Europe
Ashling Microsystems Limited
Intec 2, Wade Road, Basingstoke, Hants. RG24 8NE U.K
Keith Potter
Tel. 01256-811998
Fax. 01256-811761
Email: sales@ash-uk. demon. co. uk
http://www.ashling.com
YD Systems Co. Ltd.

- Gaio Technology Co. Ltd. XASS-V series Assembler/XDBX-V Sofrware Simulator

Command Window

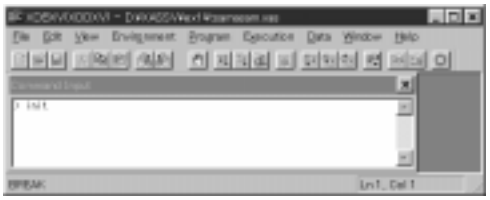

Command Button Panel

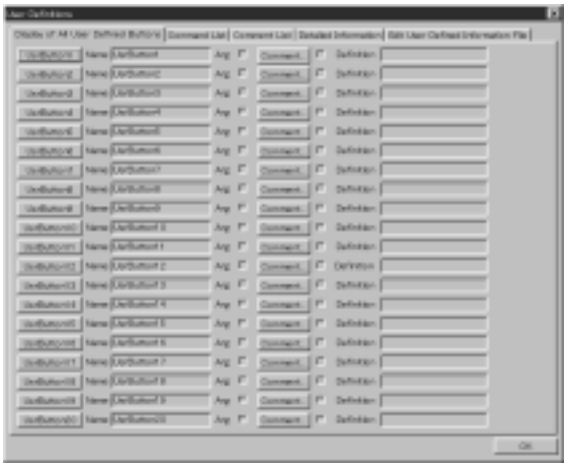

Output Window

Source Window

- Evaluation Board

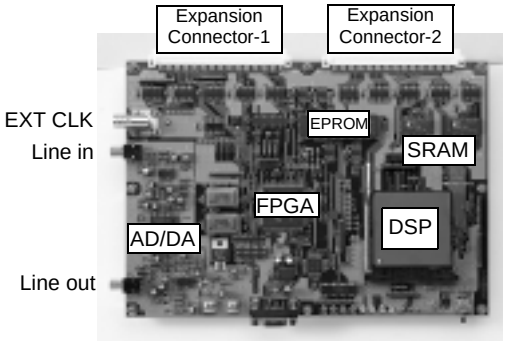

MB86331
Adaptor boad

- Advice

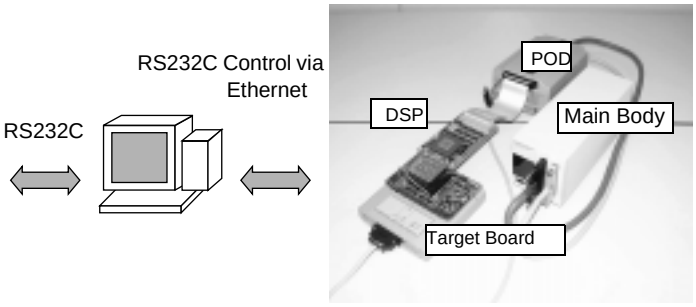

Digital Processor Support Tools

- Yokogawa Digital Computer Corporation advice/micro VIEW-G

Source Window

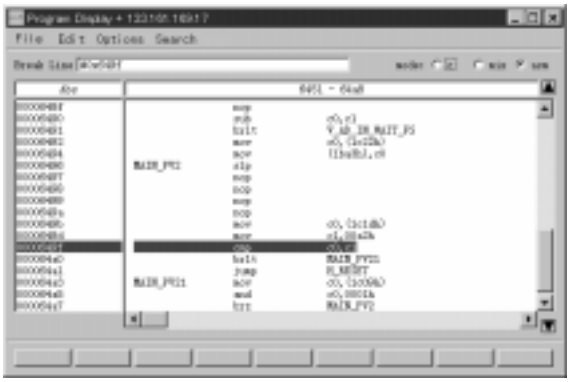

Memory Dump Window

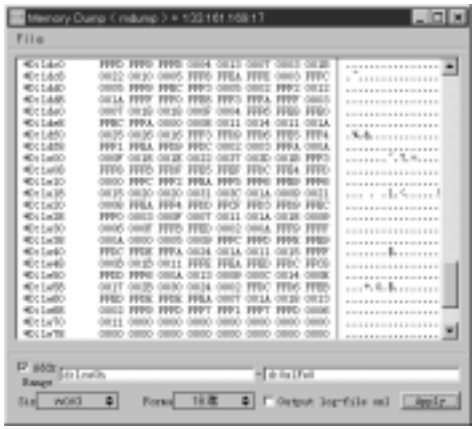

Main Window

Register Window

- Cadence Design Systems, Inc. Signal Processing Worksystem ™ (SPW)

SPW system design and verification environment

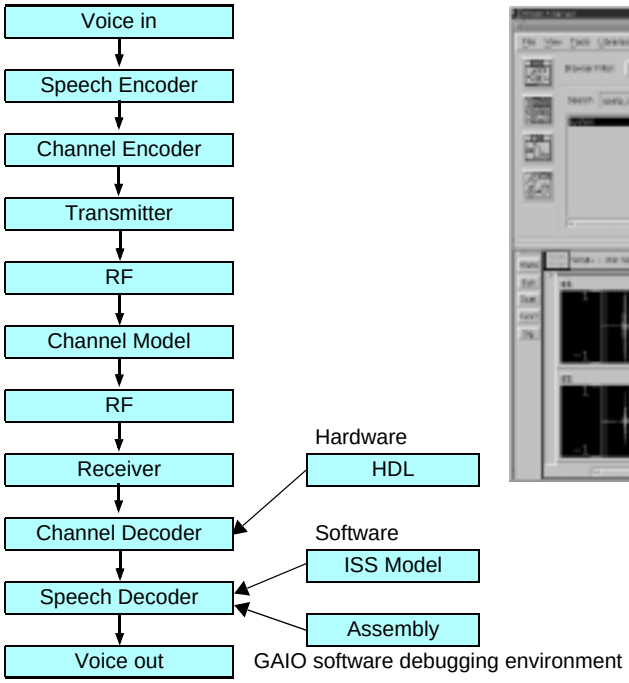

GAIO software debugging environment

Piezoelectric Resonator for FAR Series

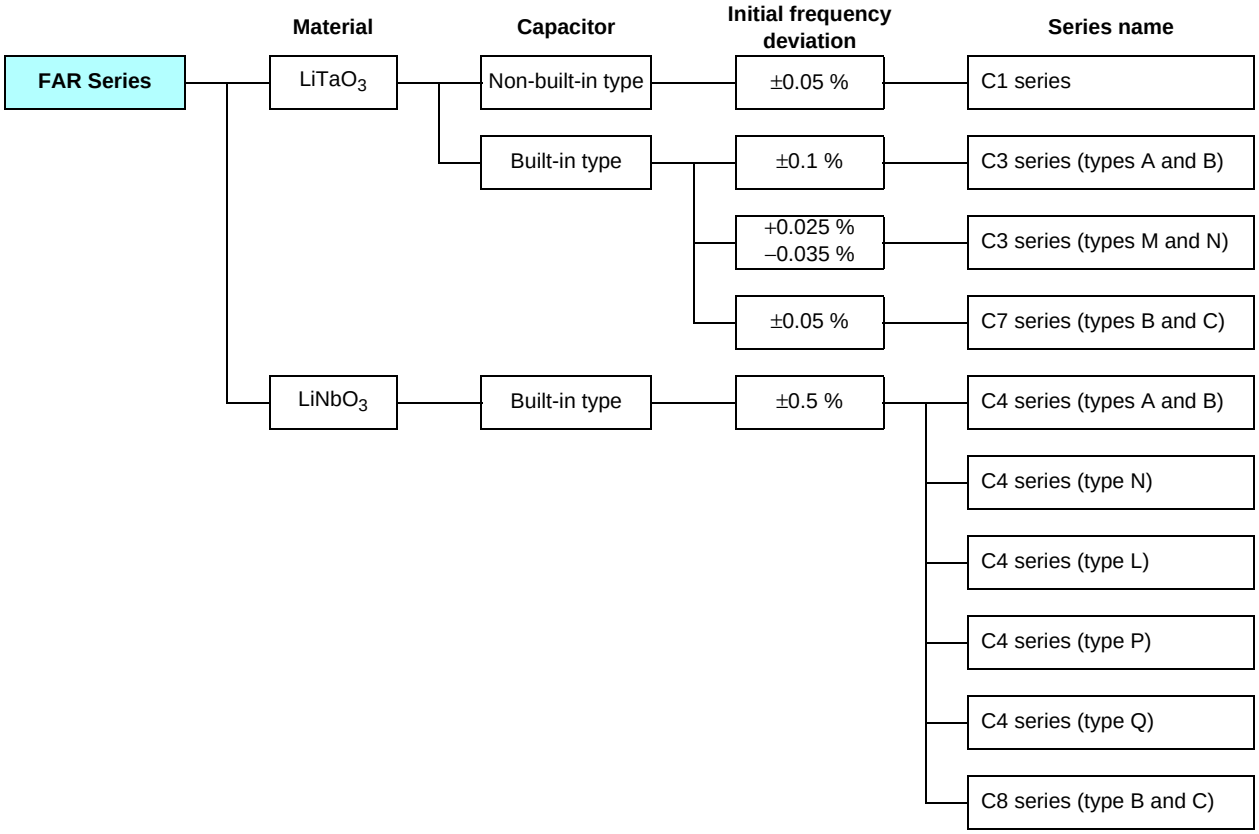

Product of FUJITSU MEDIA DEVICE LIMITED.

Piezoelectric Resonator for FAR Series

FAR Series

Series Name	Features	Frequency (MHz)	Initial Frequency tolerance (%)	Temperature Characteristics (%)	Capacity of built-in capacitor (pF)	Operating Temperature (°C)	Aging stability (%)	Package CHIP
C1 series	High precision Available in tape packaging	3.58 to 16	±0.05	±0.02 *1	—	–30 to +85	Within ±0.1	○
C3 series (types A and B)	Specifically for microcontroller clocks Reduce internal capacitor Available in tape packaging		±0.1	±0.05 *1				○
C3 series (types M and N)	Internal capacitor High precision	4 to 20	+0.025 –0.035	+0.035 –0.025	20±8 (typ.)		Within ±0.04	○
C4 series (types A and B)	Specifically for microcontroller clocks Internal capacitor Available in tape packaging	3 to 23.9	±0.5 *3	±0.5 *1			Within ±0.1	○
C4 series (type N)		4 to 23.9						○
C4 series (type L)		24 to 60		±0.5 *2				○
C4 series (type P)	PCT guaranteed for automobile use Specifically for microcontroller clocks	4 to 5.9		+0.9 *4 –1.0		–40 to +105		○
C4 series (type Q)	Using of an internal capacitor reduces the number of components, Available in tape packaging	6 to 20						○

*1 : For a temperature characteristics of –20°C to +60°C.
*2 : For a temperature characteristics of –30°C to +85°C.
*3 : ±1.0% for frequency ranges of 17 MHz or above and below 24 MHz.
*4 : For a temperature characteristics of –40°C to +105°C

Types Lead-Free solder

Series Name	Features	Frequency (MHz)	Initial Frequency tolerance (%)	Temperature Characteristics (%)	Capacity of built-in capacitor (pF)	Operating Temperature (°C)	Aging stability (%)	Package CHIP
C7 series (types B and C)	Lead-Free solder Specifically for microcontroller clocks Internal capacitor High precision	4 to 16	±0.05	+0.1 –0.05	10 ± 4 (Type B) 5 ± 2 (Type C)	–30 to +85	Within ±0.1	○
C8 series (type B and C)	Lead-Free solder Specifically for microcontroller clocks Internal capacitor	4 to 16	±0.5	±0.75				○

Microcontrollers (8-bit Proprietary F²MC-8L Family)

8-bit Proprietary F²MC-8L Family

F²MC-8L		ROM (KB)	RAM (B)	Instruction Cycle (µs)	I/O Port	Package	Operating Voltage	Operating temperature range	Ext. Interrupts	Clock	I²C	UART	8-bit serial	LCD controller / driver
051 series	MB89051 *	32	2K	0.33	41	LQFP-64P	+3.0 to +5.5	-40 to +85 (USB operation : 0 to +70)	7	1	Yes	1 ch.	-	-
	MB89F051	32	2K	0.33	41	LQFP-64P	+3.0 to +5.5	-40 to +85 (USB operation : 0 to +70)	7	1	Yes	1 ch.	-	-
120 series	MB89121	4	128	0.95	36	QFP-48P *1	+2.2 to +6.0	-40 to +85	3	2	-	-	1 ch.	-
	MB89123A	8	256	0.95	36	QFP-48P *1	+2.2 to +6.0	-40 to +85	11	2	-	-	1 ch.	-
	MB89125A	16	256	0.95	36	QFP-48P *1	+2.2 to +6.0	-40 to +85	11	2	-	-	1 ch.	-
130 series	MB89131	4	128	0.95	36	QFP-48P *1	+2.2 to +6.0	-40 to +85	3	2	-	-	1 ch.	-
	MB89P131	4	128	0.95	36	QFP-48P *1	+2.7 to +6.0	-40 to +85	3	2	-	-	1 ch.	-
	MB89133A	8	256	0.95	36	QFP-48P *1 SDIP-48P	+2.2 to +6.0	-40 to +85	11	2	-	-	1 ch.	-
	MB89P133A	8	256	0.95	36	QFP-48P *1 SDIP-48P	+2.7 to +6.0	-40 to +85	11	2	-	-	1 ch.	-
	MB89135A	16	256	0.95	36	QFP-48P *1	+2.2 to +6.0	-40 to +85	11	2	-	-	1 ch.	-
	MB89P135A	16	512	0.95	36	QFP-48P *1	+2.7 to +6.0	-40 to +85	11	2	-	-	1 ch.	-
140 series	MB89143A	8	256	0.5	55	SDIP-64P	+4.0 to +6.0	-40 to +85	2	2	-	-	1 ch.	-
	MB89144A	12	256	0.5	55	SDIP-64P	+4.0 to +6.0	-40 to +85	2	2	-	-	1 ch.	-
	MB89145	16	512	0.5	55	SDIP-64P, QFP-64P *2	+2.7 to +6.0	-40 to +85	2	2	-	-	1 ch.	-
	MB89146	24	768	0.5	55	SDIP-64P, QFP-64P *2	+2.7 to +6.0	-40 to +85	2	2	-	-	1 ch.	-
	MB89P147	32	1024	0.5	55	SDIP-64P, QFP-64P *2	+2.7 to +6.0	-40 to +85	2	2	-	-	1 ch.	-
150 series	MB89151/A	4	128	0.95	43	QFP-80P, LQFP-80P	+2.2 to +6.0	-40 to +85	12	2	-	-	1 ch.	36seg x 4com
	MB89152/A	6	256	0.95	43	QFP-80P, LQFP-80P	+2.2 to +6.0	-40 to +85	12	2	-	-	1 ch.	36seg x 4com
	MB89153/A	8	256	0.95	43	QFP-80P, LQFP-80P	+2.2 to +6.0	-40 to +85	12	2	-	-	1 ch.	36seg x 4com
	MB89154/A	12	256	0.95	43	QFP-80P, LQFP-80P	+2.2 to +6.0	-40 to +85	12	2	-	-	1 ch.	36seg x 4com
	MB89155/A	16	256	0.95	43	QFP-80P, LQFP-80P	+2.2 to +6.0	-40 to +85	12	2	-	-	1 ch.	36seg x 4com
	MB89P155	16	256	0.95	43	QFP-80P, LQFP-80P	+2.7 to +6.0	-40 to +85	12	2	-	-	1 ch.	36seg x 4com
160 series	MB89161/A	4	128	0.95	54	QFP-80P, LQFP-80P	+2.2 to +6.0	-40 to +85	12	2	-	-	1 ch.	24seg x 4com
	MB89163/A	8	256	0.95	54	QFP-80P, LQFP-80P	+2.2 to +6.0	-40 to +85	12	2	-	-	1 ch.	24seg x 4com
	MB89165/A	16	512	0.95	54	QFP-80P, LQFP-80P	+2.2 to +6.0	-40 to +85	12	2	-	-	1 ch.	24seg x 4com
	MB89P165	16	512	0.95	54	QFP-80P LQFP-80P	+2.7 to +6.0	-40 to +85	12	2	-	-	1 ch.	24seg x 4com

* : Under development *1 : QFP-48P(Leadpitch 0.8 mm, body size □10 × 10 mm) *2 : QFP-64P(Leadpitch 1.00 mm, body size □14 × 20 mm)

Microcontrollers (8-bit Proprietary F²MC-8L Family)

Buzzer output	Output Compare	Input Capture	MPG / PPG	PWM timer	PWC Timer	ADC	8-bit Timer	16-bit Timer	Watch Prescaler	Special Features	F²MC-8L	Page
-	-	-	-	2 ch.	-	-	-	-	-	USB Function	MB89051 *	58
-	-	-	-	2 ch.	-	-	-	-	-	USB Function	MB89F051	
Yes	-	-	-	-	-	-	(2)	1	Yes		MB89121	10
Yes	-	-	-	-	-	-	(2)	1	Yes	Remote control carrier generator	MB89123A	
Yes	-	-	-	-	-	-	(2)	1	Yes	Remote control carrier generator	MB89125A	
Yes	-	-	-	-	-	8 bit x 4ch.	(2)	1	Yes		MB89131	10
Yes	-	-	-	-	-	8 bit x 4ch.	(2)	1	Yes		MB89P131	
Yes	-	-	-	-	-	8 bit x 4ch.	(2)	1	Yes	Remote control carrier generator	MB89133A	
Yes	-	-	-	-	-	8 bit x 4ch.	(2)	1	Yes	Remote control carrier generator	MB89P133A	
Yes	-	-	-	-	-	8 bit x 4ch.	(2)	1	Yes	Remote control carrier generator	MB89135A	
Yes	-	-	-	-	-	8 bit x 4ch.	(2)	1	Yes	Remote control carrier generator	MB89P135A	
Yes	-	-	-	-	-	8 bit x 8ch.	(2)	1	Yes	VFD Driver, Clock Timer	MB89143A	52
Yes	-	-	-	-	-	8 bit x 8ch.	(2)	1	Yes	VFD Driver, Clock Timer	MB89144A	
Yes	-	-	Yes	Yes	-	10 bit 12ch.	(2)	1	Yes	VFD Driver, Clock Timer	MB89145	
Yes	-	-	Yes	Yes	-	10 bit 12ch.	(2)	1	Yes	VFD Driver, Clock Timer	MB89146	
Yes	-	-	Yes	Yes	-	10 bit 12ch.	(2)	1	Yes	VFD Driver, Clock Timer	MB89P147	
Yes	-	-	-	-	-	-	(2)	1	Yes	Remote control carrier generator	MB89151/A	40
Yes	-	-	-	-	-	-	(2)	1	Yes	Remote control carrier generator	MB89152/A	
Yes	-	-	-	-	-	-	(2)	1	Yes	Remote control carrier generator	MB89153/A	
Yes	-	-	-	-	-	-	(2)	1	Yes	Remote control carrier generator	MB89154/A	
Yes	-	-	-	-	-	-	(2)	1	Yes	Remote control carrier generator	MB89155/A	
Yes	-	-	-	-	-	-	(2)	1	Yes	Remote control carrier generator	MB89P155	
Yes	-	-	-	Yes	-	8 bit x 8ch.	(2)	1	Yes	Remote control carrier generator	MB89161/A	42
Yes	-	-	-	Yes	-	8 bit x 8ch.	(2)	1	Yes	Remote control carrier generator	MB89163/A	
Yes	-	-	-	Yes	-	8 bit x 8ch.	(2)	1	Yes	Remote control carrier generator	MB89165/A	
Yes	-	-	-	Yes	-	8 bit x 8ch.	(2)	1	Yes	Remote control carrier generator	MB89P165	

Standard Features : Power-on Reset, Standby Mode, Watchdog Timer Reset, Clock Gear

(Continued)

The meaning of (x): It serve as both UART and 8-bit serial,or 8-bit Timer and 16-bit Timer.

Microcontrollers (8-bit Proprietary F²MC-8L Family)

F²MC-8L		ROM (KB)	RAM (B)	Instruction Cycle (µs)	I/O Port	Package	Operating Voltage	Operating temperature range	Ext. Interrupts	Clock	I²C	UART	8-bit serial	LCD controller / driver
170 series	MB89173	8	384	1.1	37	QFP-48P	+2.2 to +6.0	-40 to +85	11	2	-	-	1 ch.	-
	MB89174A	12	512	0.6	37	QFP-48P	+2.2 to +6.0	-40 to +85	11	2	-	-	1 ch.	-
	MB89P173	8	384	1.1	37	QFP-48P	+2.7 to +6.0	-40 to +85	11	2	-	-	1 ch.	-
	MB89P175A	16	512	0.6	37	QFP-48P	+2.7 to +6.0	-40 to +85	11	2	-	-	1 ch.	-
170L series	MB89173L	8	384	0.6	37	QFP-48P	+2.2 to +6.0	-40 to +85	11	1	-	-	1 ch.	-
	MB89174L	12	512	0.6	37	QFP-48P	+2.2 to +6.0	-40 to +85	11	1	-	-	1 ch.	-
180 series	MB89181	4	128	0.95	43	QFP-64P LQFP-64P	+2.2 to +6.0	-40 to +85	12	2	-	-	1 ch.	32seg x 4com
	MB89182	6	256	0.95	43	QFP-64P LQFP-64P	+2.2 to +6.0	-40 to +85	12	2	-	-	1 ch.	32seg x 4com
	MB89183	8	256	0.95	43	QFP-64P LQFP-64P	+2.2 to +6.0	-40 to +85	12	2	-	-	1 ch.	32seg x 4com
	MB89184	12	256	0.95	43	QFP-64P LQFP-64P	+2.2 to +6.0	-40 to +85	12	2	-	-	1 ch.	32seg x 4com
	MB89185	16	256	0.95	43	QFP-64P LQFP-64P	+2.2 to +6.0	-40 to +85	12	2	-	-	1 ch.	32seg x 4com
	MB89P185	16	256	0.95	43	QFP-64P LQFP-64P	+2.7 to +6.0	-40 to +85	12	2	-	-	1 ch.	32seg x 4com
190 series	MB89191	4	128	0.95	22	SOP-28P SDIP-28P	+2.2 to +6.0	-40 to +85	11	1	-	-	1 ch.	-
	MB89193	8	256	0.95	22	SOP-28P SDIP-28P	+2.2 to +6.0	-40 to +85	11	1	-	-	1 ch.	-
	MB89195	16	256	0.95	22	SOP-28P SDIP-28P	+2.2 to +6.0	-40 to +85	11	1	-	-	1 ch.	-
	MB89P195	16	256	0.95	22	SOP-28P DIP-28P	+2.7 to +6.0	-40 to +85	11	1	-	-	1 ch.	-
190A series	MB89191A	4	128	0.95	20	SOP-28P SDIP-28P	+2.2 to +6.0	-40 to +85	11	1	-	-	1 ch.	-
	MB89191AH	4	128	0.95	20	SOP-28P SDIP-28P	+2.2 to +6.0	-40 to +85	11	1	-	-	1 ch.	-
	MB89193A	8	256	0.95	20	SOP-28P SDIP-28P	+2.2 to +6.0	-40 to +85	11	1	-	-	1 ch.	-
	MB89193AH	8	256	0.95	20	SOP-28P SDIP-28P	+2.2 to +6.0	-40 to +85	11	1	-	-	1 ch.	-
	MB89195A	16	256	0.95	20	SOP-28P SDIP-28P	+2.2 to +6.0	-40 to +85	11	1	-	-	1 ch.	-
	MB89P195A	16	256	0.95	20	SOP-28P SDIP-28P	+2.7 to +6.0	-40 to +85	11	1	-	-	1 ch.	-
210 series	MB89215 *	16	512	0.32	21	SSOP-30P	+3.5 to +5.5	-40 to +85	3	1	-	1 ch.	1 ch.	-
	MB89P215 *	16	512	0.32	21	SSOP-30P	+3.5 to +5.5	-40 to +85	3	1	-	1 ch.	1 ch.	-
475 series	MB89475	16	512	0.32	39	LQFP-48P	+2.2 to +5.5	-40 to +85	9	2	-	2 ch.	-	-
	MB89P475	16	512	0.32	39	LQFP-48P	+3.5 to +5.5	-40 to +85	9	2	-	2 ch.	-	-
485 series	MB89485L	16	512	0.32	42	LQFP-64P SDIP-64P	+2.2 to +3.6	-40 to +85	12	2	-	2 ch	-	31seg x 4com
	MB89485	16	512	0.32	42	LQFP-64P SDIP-64P	+3.5 to +5.5	-40 to +85	12	2	-	1 ch	-	31seg x 4com
	MB89P485L	16	512	0.32	42	LQFP-64P SDIP-64P	+2.7 to +3.6	-40 to +85	12	2	-	1 ch	-	31seg x 4com
	MB89P485	16	512	0.32	42	LQFP-64P SDIP-64P	+3.5 to +5.5	-40 to +85	12	2	-	1 ch	-	31seg x 4com

* : Under development

Microcontrollers (8-bit Proprietary F²MC-8L Family)

Buzzer output	Output Compare	Input Capture	MPG / PPG	PWM timer	PWC Timer	ADC	8-bit Timer	16-bit Timer	Watch Prescaler	Special Features	F²MC-8L	Page
Yes	-	-	-	-	-	-	(2)	1	Yes	DTMF Generator	MB89173	54
Yes	-	-	-	-	-	-	(2)	1	Yes	DTMF Generator	MB89174A	
Yes	-	-	-	-	-	-	(2)	1	Yes	DTMF Generator	MB89P173	
Yes	-	-	-	-	-	-	(2)	1	Yes	DTMF Generator	MB89P175A	
Yes	-	-	-	-	-	-	(2)	1	Yes		MB89173L	8
Yes	-	-	-	-	-	-	(2)	1	Yes		MB89174L	
Yes	-	-	-	-	-	-	(2)	1	Yes	Remote control carrier generator	MB89181	34
Yes	-	-	-	-	-	-	(2)	1	Yes	Remote control carrier generator	MB89182	
Yes	-	-	-	-	-	-	(2)	1	Yes	Remote control carrier generator	MB89183	
Yes	-	-	-	-	-	-	(2)	1	Yes	Remote control carrier generator	MB89184	
Yes	-	-	-	-	-	-	(2)	1	Yes	Remote control carrier generator	MB89185	
Yes	-	-	-	-	-	-	(2)	1	Yes	Remote control carrier generator	MB89P185	
Yes	-	-	-	-	-	-	(2)	1	-	Remote control carrier generator	MB89191	6
Yes	-	-	-	-	-	-	(2)	1	-	Remote control carrier generator	MB89193	
Yes	-	-	-	-	-	-	(2)	1	-	Remote control carrier generator	MB89195	
Yes	-	-	-	-	-	-	(2)	1	-	Remote control carrier generator	MB89P195	
Yes	-	-	-	-	-	8 bit x 8ch.	(2)	1	-	Remote control carrier generator	MB89191A	6
Yes	-	-	-	-	-	8 bit x 8ch.	(2)	1	-	Remote control carrier generator	MB89191AH	
Yes	-	-	-	-	-	8 bit x 8ch.	(2)	1	-	Remote control carrier generator	MB89193A	
Yes	-	-	-	-	-	8 bit x 8ch.	(2)	1	-	Remote control carrier generator	MB89193AH	
Yes	-	-	-	-	-	8 bit x 8ch.	(2)	1	-	Remote control carrier generator	MB89195A	
Yes	-	-	-	-	-	8 bit x 8ch.	(2)	1	-	Remote control carrier generator	MB89P195A	
-	-	-	1 ch.	1 ch.	-	-	-	1	-	UART for LIN	MB89215 *	22
-	-	-	1 ch.	1 ch.	-	-	-	1	-	UART for LIN	MB89P215 *	
Yes	-	-	-	1 ch.	1 ch.	10 bit x 8ch.	(4)	2	Yes		MB89475	22
Yes	-	-	-	1 ch.	1 ch.	10 bit x 8ch.	(4)	2	Yes		MB89P475	
Yes	-	-	1 ch.	1 ch.	1 ch.	10 bit x 4ch.	(4)	2	Yes		MB89485L	38
Yes	-	-	1 ch.	1 ch.	1 ch.	10 bit x 4ch.	(4)	2	Yes		MB89485	
Yes	-	-	1 ch.	1 ch.	1 ch.	10 bit x 4ch.	(4)	2	Yes		MB89P485L	
Yes	-	-	1 ch.	1 ch.	1 ch.	10 bit x 4ch.	(4)	2	Yes		MB89P485	

Standard Features : Power-on Reset, Standby Mode, Watchdog Timer Reset, Clock Gear

(Continued)

The meaning of (x): It serve as both UART and 8-bit serial,or 8-bit Timer and 16-bit Timer.

Microcontrollers (8-bit Proprietary F²MC-8L Family)

F²MC-8L		ROM (KB)	RAM (B)	Instruction Cycle (µs)	I/O Port	Package	Operating Voltage	Operating temperature range	Ext. Interrupts	Clock	I²C	UART	8-bit serial	LCD controller / driver
530 series	MB89537	32	1024	0.32	53	QFP-64P, LQFP-64P, SDIP-64P	+2.2 to +3.6	-40 to +85	12	2	-	2 ch.	1 ch.	-
	MB89537C	32	1024	0.32	53	QFP-64P, LQFP-64P, SDIP-64P	+2.2 to +3.6	-40 to +85	12	2	Yes	2 ch.	1 ch.	-
	MB89537H	32	1024	0.32	53	QFP-64P, LQFP-64P, SDIP-64P	+3.5 to +5.5	-40 to +85	12	2	-	2 ch.	1 ch.	-
	MB89537HC	32	1024	0.32	53	QFP-64P, LQFP-64P, SDIP-64P	+3.5 to +5.5	-40 to +85	12	2	Yes	2 ch.	1 ch.	-
	MB89538	48	2048	0.32	53	QFP-64P, LQFP-64P, SDIP-64P	+2.2 to +3.6	-40 to +85	12	2	-	2 ch.	1 ch.	-
	MB89538C	48	2048	0.32	53	QFP-64P, LQFP-64P, SDIP-64P	+2.2 to +3.6	-40 to +85	12	2	Yes	2 ch.	1 ch.	-
530 series	MB89538H	48	2048	0.32	53	QFP-64P, LQFP-64P, SDIP-64P	+3.5 to +5.5	-40 to +85	12	2	-	2 ch.	1 ch.	-
	MB89538HC	48	2048	0.32	53	QFP-64P, LQFP-64P, SDIP-64P	+3.5 to +5.5	-40 to +85	12	2	Yes	2 ch.	1 ch.	-
	MB89P538	48	2048	0.32	53	QFP-64P, LQFP-64P, SDIP-64P	+2.7 to +5.5	-40 to +85	12	2	Yes	2 ch.	1 ch.	-
530A series	MB89535A	16	512	0.32	53	QFP-64P, LQFP-64P, SDIP-64P, BCC-64P	+2.2 to +5.5	-40 to +85	12	2	-	2 ch.	1 ch.	-
	MB89537A	32	1024	0.32	53	QFP-64P, LQFP-64P, SDIP-64P	+2.2 to +5.5	-40 to +85	12	2	-	2 ch.	1 ch.	-
	MB89537AC	32	1024	0.32	53	QFP-64P, LQFP-64P, SDIP-64P	+2.2 to +5.5	-40 to +85	12	2	Yes	2 ch.	1 ch.	-
	MB89538A	48	2048	0.32	53	QFP-64P, LQFP-64P, SDIP-64P	+2.2 to +5.5	-40 to +85	12	2	-	2 ch.	1 ch.	-
	MB89538AC	48	2048	0.32	53	QFP-64P, LQFP-64P, SDIP-64P	+2.2 to +5.5	-40 to +85	12	2	Yes	2 ch.	1 ch.	-
	MB89F538L *	48	2048	0.32	52	QFP-64P, LQFP-64P, SDIP-64P, BCC-64P	+2.4 to +3.6	-40 to +85	12	2	Yes	2 ch.	1 ch.	-
	MB89F538	48	2048	0.32	52	QFP-64P, LQFP-64P, SDIP-64P	+3.5 to +5.5	-40 to +85	12	2	Yes	2 ch.	1 ch.	-
550 series	MB89557A	32	1024	0.32	66	TQFP-100P, LQFP-100P	Vcc1=+2.2 to +3.6 Vcc2=+2.7 to +5.5	-40 to +85	16	2	-	2 ch.	(1 ch.)	32seg x 4com
	MB89558A	48	2048	0.32	66	TQFP-100P, LQFP-100P	Vcc1=+2.2 to +3.6 Vcc2=+2.7 to +5.5	-40 to +85	16	2	-	2 ch.	(1 ch.)	32seg x 4com
	MB89P558A	48	2048	0.32	66	TQFP-100P, LQFP-100P	+2.7 to +5.5	-40 to +85	16	2	-	2 ch.	(1 ch.)	32seg x 4com

Microcontrollers (8-bit Proprietary F²MC-8L Family)

Buzzer output	Output Compare	Input Capture	MPG / PPG	PWM timer	PWC Timer	ADC	8-bit Timer	16-bit Timer	Watch Prescaler	Special Features	F²MC-8L	Page
-	-	-	3 ch.	2 ch.	1 ch.	10 bit x 8ch.	-	Yes	Yes		MB89537	30
-	-	-	3 ch.	2 ch.	1 ch.	10 bit x 8ch.	-	Yes	Yes		MB89537C	
-	-	-	3 ch.	2 ch.	1 ch.	10 bit x 8ch.	-	Yes	Yes		MB89537H	
-	-	-	3 ch.	2 ch.	1 ch.	10 bit x 8ch.	-	Yes	Yes		MB89537HC	
-	-	-	3 ch.	2 ch.	1 ch.	10 bit x 8ch.	-	Yes	Yes		MB89538	
-	-	-	3 ch.	2 ch.	1 ch.	10 bit x 8ch.	-	Yes	Yes		MB89538C	
-	-	-	3 ch.	2 ch.	1 ch.	10 bit x 8ch.	-	Yes	Yes		MB89538H	30
-	-	-	3 ch.	2 ch.	1 ch.	10 bit x 8ch.	-	Yes	Yes		MB89538HC	
-	-	-	3 ch.	2 ch.	1 ch.	10 bit x 8ch.	-	Yes	Yes		MB89P538	
-	-	-	3 ch.	2 ch.	1 ch.	10 bit x 8ch.	-	Yes	Yes		MB89535A	28
-	-	-	3 ch.	2 ch.	1 ch.	10 bit x 8ch.	-	Yes	Yes		MB89537A	
-	-	-	3 ch.	2 ch.	1 ch.	10 bit x 8ch.	-	Yes	Yes		MB89537AC	
-	-	-	3 ch.	2 ch.	1 ch.	10 bit x 8ch.	-	Yes	Yes		MB89538A	
-	-	-	3 ch.	2 ch.	1 ch.	10 bit x 8ch.	-	Yes	Yes		MB89538AC	
-	-	-	3 ch.	2 ch.	1 ch.	10 bit x 8ch.	-	Yes	Yes		MB89F538L *	
-	-	-	3 ch.	2 ch.	1 ch.	10 bit x 8ch.	-	Yes	Yes		MB89F538	
-	-	-	1 ch.	2 ch.	1 ch.	10 bit x 8ch.	(4)	3	Yes	DAC: 8bit x 2ch	MB89557A	50
-	-	-	1 ch.	2 ch.	1 ch.	10 bit x 8ch.	(4)	3	Yes	DAC: 8bit x 2ch	MB89558A	
-	-	-	1 ch.	2 ch.	1 ch.	10 bit x 8ch.	(4)	3	Yes	DAC: 8bit x 2ch	MB89P558A	

Standard Features : Power-on Reset, Standby Mode, Watchdog Timer Reset, Clock Gear

(Continued)

The meaning of (x): It serve as both UART and 8-bit serial,or 8-bit Timer and 16-bit Timer.

Microcontrollers (8-bit Proprietary F²MC-8L Family)

F²MC-8L		ROM (KB)	RAM (B)	Instruction Cycle (µs)	I/O Port	Package	Operating Voltage	Operating temperature range	Ext. Interrupts	Clock	I²C	UART	8-bit serial	LCD controller / driver
560 series	MB89567	32	1024	0.32	50	QFP-80P, LQFP-80P	+2.2 to +3.6	-40 to +85	12	2	-	2 ch.	1 ch.	24seg x 4com
	MB89567A	32	1024	0.32	50	QFP-80P, LQFP-80P	+2.2 to +5.5	-40 to +85	12	2	-	2 ch.	1 ch.	24seg x 4com
	MB89567AC	32	1024	0.32	50	QFP-80P, LQFP-80P	+2.2 to +5.5	-40 to +85	12	2	Yes	2 ch.	1 ch.	24seg x 4com
	MB89567C	32	1024	0.32	50	QFP-80P, LQFP-80P	+2.2 to +3.6	-40 to +85	12	2	Yes	2 ch.	1 ch.	24seg x 4com
	MB89567H	32	1024	0.32	50	QFP-80P, LQFP-80P	+3.5 to +5.5	-40 to +85	12	2	-	2 ch.	1 ch.	24seg x 4com
	MB89567HC	32	1024	0.32	50	QFP-80P, LQFP-80P	+3.5 to +5.5	-40 to +85	12	2	Yes	2 ch.	1 ch.	24seg x 4com
	MB89P568	48	1024	0.32	50	QFP-80P, LQFP-80P	+2.7 to +5.5	-40 to +85	12	2	Yes	2 ch.	1 ch.	24seg x 4com
570 series	MB89577	32	3072	0.4	82	LQFP-100P, TQFP-100P	+2.2 to +3.7	-40 to +85	4	2	1 ch.	1 ch.	-	14seg x 4com
	MB89P579A	60	3072	0.4	82	LQFP-100P, TQFP-100P	+2.2 to +3.7	-40 to +85	4	2	1 ch.	1 ch.	-	14seg x 4com
580B/BW series	MB89583B	8	512	0.33	53	LQFP-64P	+3.0 to +5.5	-40 to +85	8	1	-	1 ch.	-	-
	MB89583BW	8	512	0.33	53	LQFP-64P	+3.0 to +5.5	-40 to +85	8	1	-	1 ch.	-	-
	MB89585B	16	1024	0.33	53	LQFP-64P	+3.0 to +5.5	-40 to +85	8	1	-	1 ch.	-	-
	MB89585BW	16	1024	0.33	53	LQFP-64P	+3.0 to +5.5	-40 to +85	8	1	-	1 ch.	-	-
	MB89P585B	16	1024	0.33	53	LQFP-64P	+3.0 to +5.5	-40 to +85	8	1	-	1 ch.	-	-
	MB89P585BW	16	1024	0.33	53	LQFP-64P	+3.0 to +5.5	-40 to +85	8	1	-	1 ch.	-	-
	MB89589B	16	18K	0.33	53	LQFP-64P	+3.0 to +5.5	-40 to +85	8	1	-	1 ch.	-	-
	MB89P589B	16	18K	0.33	53	LQFP-64P	+3.0 to +5.5	-40 to +85	8	1	-	1 ch.	-	-
600 series	MB89601R	4	80	0.5	33	LQFP-48P	+2.2 to +6.0	-40 to +85	1	1	-	-	1 ch.	-
	MB89P601	4	80	0.5	33	LQFP-48P	+2.7 to +6.0	-40 to +85	1	1	-	-	1 ch.	-
	MB89603	8	80	0.5	33	LQFP-48P	+2.7 to +6.0	-40 to +85	1	1	-	-	1 ch.	-
610 series	MB89613R	8	256	0.4	53	SH-DIP-64P, QFP-64P, LQFP-64P	+2.2 to +6.0	-40 to +85	4	1	-	-	2 ch.	-
	MB89615R	16	512	0.4	53	SH-DIP-64P, QFP-64P, LQFP-64P	+2.2 to +6.0	-40 to +85	4	1	-	-	2 ch.	-

Microcontrollers (8-bit Proprietary F²MC-8L Family)

Buzzer output	Output Compare	Input Capture	MPG / PPG	PWM timer	PWC Timer	ADC	8-bit Timer	16-bit Timer	Watch Prescaler	Special Features	F²MC-8L	Page
-	-	-	2 ch.	2 ch.	1 ch.	10 bit x 8ch.	(2)	1	Yes	16bit timer=2 x 8 bit timer	MB89567	44
-	-	-	2 ch.	2 ch.	1 ch.	10 bit x 8ch.	(2)	1	Yes	16bit timer=2 x 8 bit timer	MB89567A	
-	-	-	-	2 ch.	1 ch.	10 bit x 8ch.	(2)	1	Yes	16bit timer=2 x 8 bit timer	MB89567AC	
-	-	-	2 ch.	2 ch.	1 ch.	10 bit x 8ch.	(2)	1	Yes	16bit timer=2 x 8 bit timer	MB89567C	
-	-	-	2 ch.	2 ch.	1 ch.	10 bit x 8ch.	(2)	1	Yes	16bit timer=2 x 8 bit timer	MB89567H	
-	-	-	2 ch.	2 ch.	1 ch.	10 bit x 8ch.	(2)	1	Yes	16bit timer=2 x 8 bit timer	MB89567HC	
-	-	-	2 ch.	2 ch.	1 ch.	10 bit x 8ch.	(2)	1	Yes	16bit timer=2 x 8 bit timer	MB89P568	
-	-	-	-	-	-	10 bit x 12ch.	(2)	1	Yes	DAC: 8bit x 2ch.	MB89577	20
-	-	-	-	-	-	10 bit x 12ch.	(2)	1	Yes	DAC: 8bit x 2ch.	MB89P579A	
-	-	-	-	2 ch.	-	-	-	-	-	USB Function	MB89583B	58
-	-	-	-	2 ch.	-	-	-	-	-	USB Function	MB89583BW	
-	-	-	-	2 ch.	-	-	-	-	-	USB Function	MB89585B	
-	-	-	-	2 ch.	-	-	-	-	-	USB Function	MB89585BW	
-	-	-	-	2 ch.	-	-	-	-	-	USB Function	MB89P585B	
-	-	-	-	2 ch.	-	-	-	-	-	USB Function	MB89P585BW	
-	-	-	-	2 ch.	-	-	-	-	-	USB Function	MB89589B	
-	-	-	-	2 ch.	-	-	-	-	-	USB Function	MB89P589B	
-	-	-	-	1 ch.	-	-	-	-	-		MB89601R	12
-	-	-	-	1 ch.	-	-	-	-	-		MB89P601	
-	-	-	-	1 ch.	-	-	-	-	-		MB89603	
Yes	-	-	-	1 ch.	1 ch.	-	-	Yes	-	External bus	MB89613R	14
Yes	-	-	-	1 ch.	1 ch.	-	-	Yes	-	External bus	MB89615R	

Standard Features : Power-on Reset, Standby Mode, Watchdog Timer Reset, Clock Gear

(Continued)

Microcontrollers (8-bit Proprietary F²MC-8L Family)

F²MC-8L		ROM (KB)	RAM (B)	Instruction Cycle (µs)	I/O Port	Package	Operating Voltage	Operating temperature range	Ext. Interrupts	Clock	I²C	UART	8-bit serial	LCD controller / driver
620 series	MB89T623	Ext.	256	0.4	53	SH-DIP-64P, QFP-64P, LQFP-64P	+2.7 to +6.0	-40 to +85	4	1	-	-	2 ch.	-
	MB89623R	8	256	0.4	53	SH-DIP-64P, QFP-64P, LQFP-64P	+2.2 to +6.0	-40 to +85	4	1	-	-	2 ch.	-
	MB89T625	Ext.	512	0.4	53	SH-DIP-64P, QFP-64P, LQFP-64P	+2.7 to +6.0	-40 to +85	4	1	-	-	2 ch.	-
	MB89625R	16	512	0.4	53	SH-DIP-64P, QFP-64P, LQFP-64P	+2.2 to +6.0	-40 to +85	4	1	-	-	2 ch.	-
	MB89P625	16	512	0.4	53	SH-DIP-64P, QFP-64P, LQFP-64P	+2.7 to +6.0	-40 to +85	4	1	-	-	2 ch.	-
	MB89626R	24	768	0.4	53	SH-DIP-64P, QFP-64P, LQFP-64P	+2.2 to +6.0	-40 to +85	4	1	-	-	2 ch.	-
	MB89P627	32	1024	0.4	53	SH-DIP-64P, QFP-64P, LQFP-64P	+2.7 to +6.0	-40 to +85	4	1	-	-	2 ch.	-
	MB89T627R	Ext.	1024	0.4	53	SH-DIP-64P, QFP-64P, LQFP-64P	+2.7 to +6.0	-40 to +85	4	1	-	-	2 ch.	-
	MB89627R	32	1024	0.4	53	SH-DIP-64P, QFP-64P, LQFP-64P	+2.2 to +6.0	-40 to +85	4	1	-	-	2 ch.	-
	MB89628R	24	3072	0.4	53	SH-DIP-64P, QFP-64P	+2.2 to +6.0	-40 to +85	4	1	-	-	2 ch.	-
	MB89629R	32	3072	0.4	53	SH-DIP-64P, QFP-64P	+2.2 to +6.0	-40 to +85	4	1	-	-	2 ch.	-
	MB89P629	32	4096	0.4	53	SH-DIP-64P, QFP-64P	+2.7 to +6.0	-40 to +85	4	1	-	-	2 ch.	-
630 series	MB89635	16	512	0.4	53	SH-DIP-64P, QFP-64P, LQFP-64P	+2.2 to +6.0	-40 to +85	4	2	-	1 ch.	1 ch.	-
	MB89635R	16	512	0.4	53	SH-DIP-64P, QFP-64P, LQFP-64P	+2.2 to +6.0	-40 to +85	4	2	-	1 ch.	1 ch.	-
	MB89T635	Ext.	512	0.4	53	SH-DIP-64P, QFP-64P, LQFP-64P	+2.7 to +6.0	-40 to +85	4	2	-	1 ch.	1 ch.	-
	MB89T635R	Ext.	512	0.4	53	SH-DIP-64P, QFP-64P, LQFP-64P	+2.7 to +6.0	-40 to +85	4	2	-	1 ch.	1 ch.	-
	MB89636R	24	768	0.4	53	SH-DIP-64P, QFP-64P, LQFP-64P	+2.2 to +6.0	-40 to +85	4	2	-	1 ch.	1 ch.	-
	MB89637	32	1024	0.4	53	SH-DIP-64P, QFP-64P, LQFP-64P	+2.2 to +6.0	-40 to +85	4	2	-	1 ch.	1 ch.	-
	MB89637R	32	1024	0.4	53	SH-DIP-64P, QFP-64P, LQFP-64P	+2.2 to +6.0	-40 to +85	4	2	-	1 ch.	1 ch.	-
	MB89T637	Ext.	1024	0.4	53	SH-DIP-64P, QFP-64P, LQFP-64P	+2.7 to +6.0	-40 to +85	4	2	-	1 ch.	1 ch.	-
	MB89T637R	Ext.	1024	0.4	34	SH-DIP-64P, QFP-64P, LQFP-64P	+2.7 to +6.0	-40 to +85	4	2	-	1 ch.	1 ch.	-
	MB89P637	32	1024	0.4	53	SH-DIP-64P, QFP-64P	+2.7 to +6.0	-40 to +85	4	2	-	1 ch.	1 ch.	-

Microcontrollers (8-bit Proprietary F²MC-8L Family)

Buzzer output	Output Compare	Input Capture	MPG / PPG	PWM timer	PWC Timer	ADC	8-bit Timer	16-bit Timer	Watch Prescaler	Special Features	F²MC-8L	Page
Yes	-	-	-	1 ch.	1 ch.	8 bit x 8ch.	-	Yes	-	External bus	MB89T623	16
Yes	-	-	-	1 ch.	1 ch.	8 bit x 8ch.	-	Yes	-	External bus	MB89623R	
Yes	-	-	-	1 ch.	1 ch.	8 bit x 8ch.	-	Yes	-	External bus	MB89T625	
Yes	-	-	-	1 ch.	1 ch.	8 bit x 8ch.	-	Yes	-	External bus	MB89625R	
Yes	-	-	-	1 ch.	1 ch.	8 bit x 8ch.	-	Yes	-	External bus	MB89P625	
Yes	-	-	-	1 ch.	1 ch.	8 bit x 8ch.	-	Yes	-	External bus	MB89626R	
Yes	-	-	-	1 ch.	1 ch.	8 bit x 8ch.	-	Yes	-	External bus	MB89P627	
Yes	-	-	-	1 ch.	1 ch.	8 bit x 8ch.	-	Yes	-	External bus	MB89T627R	
Yes	-	-	-	1 ch.	1 ch.	8 bit x 8ch.	-	Yes	-	External bus	MB89627R	
Yes	-	-	-	1 ch.	1 ch.	8 bit x 8ch.	-	Yes	-		MB89628R	
Yes	-	-	-	1 ch.	1 ch.	8 bit x 8ch.	-	Yes	-		MB89629R	
Yes	-	-	-	1 ch.	1 ch.	8 bit x 8ch.	-	Yes	-		MB89P629	
Yes	-	-	-	2 ch.	1 ch.	10 bit x 8ch.	-	Yes	Yes	Clock Timer, External bus	MB89635	26
Yes	-	-	-	2 ch.	1 ch.	10 bit x 8ch.	-	Yes	Yes	Clock Timer, External bus	MB89635R	
Yes	-	-	-	2 ch.	1 ch.	10 bit x 8ch.	-	Yes	Yes	Clock Timer, External bus	MB89T635	
Yes	-	-	-	2 ch.	1 ch.	10 bit x 8ch.	-	Yes	Yes	Clock Timer, External bus	MB89T635R	
Yes	-	-	-	2 ch.	1 ch.	10 bit x 8ch.	-	Yes	Yes	Clock Timer, External bus	MB89636R	
Yes	-	-	-	2 ch.	1 ch.	10 bit x 8ch.	-	Yes	Yes	Clock Timer, External bus	MB89637	
Yes	-	-	-	2 ch.	1 ch.	10 bit x 8ch.	-	Yes	Yes	Clock Timer, External bus	MB89637R	
Yes	-	-	-	2 ch.	1 ch.	10 bit x 8ch.	-	Yes	Yes	Clock Timer, External bus	MB89T637	
Yes	-	-	-	2 ch.	1 ch.	10 bit x 8ch.	-	Yes	Yes	Clock Timer, External bus	MB89T637R	
Yes	-	-	-	2 ch.	1 ch.	10 bit x 8ch.	-	Yes	Yes	Clock Timer, External bus	MB89P637	

Standard Features : Power-on Reset, Standby Mode, Watchdog Timer Reset, Clock Gear

(Continued)

The meaning of (x): It serve as both UART and 8-bit serial,or 8-bit Timer and 16-bit Timer.

Microcontrollers (8-bit Proprietary F²MC-8L Family)

F²MC-8L		ROM (KB)	RAM (B)	Instruction Cycle (µs)	I/O Port	Package	Operating Voltage	Operating temperature range	Ext. Interrupts	Clock	I²C	UART	8-bit serial	LCD controller / driver
640 series	MB89643	8	256	0.4	65	QFP-80P LQFP-80P	+2.2 to +6.0	-40 to +85	9	2	-	-	2 ch.	-
	MB89645	16	512	0.4	65	QFP-80P LQFP-80P	+2.2 to +6.0	-40 to +85	9	2	-	-	2 ch.	-
	MB89646	24	768	0.4	65	QFP-80P LQFP-80P	+2.2 to +6.0	-40 to +85	9	2	-	-	2 ch.	-
	MB89647	32	1024	0.4	65	QFP-80P LQFP-80P	+2.2 to +6.0	-40 to +85	9	2	-	-	2 ch.	-
	MB89P647	32	1024	0.4	65	QFP-80P LQFP-80P	+2.7 to +6.0	-40 to +85	9	2	-	-	2 ch.	-
650 series	MB89653AR	8	256	0.4	64	QFP-100P, LQFP-100P	+2.2 to +6.0	-40 to +85	16	2	-	-	1 ch.	32seg x 4com
	MB89655AR	16	512	0.4	64	QFP-100P, LQFP-100P	+2.2 to +6.0	-40 to +85	16	2	-	-	1 ch.	32seg x 4com
	MB89656AR	24	768	0.4	64	QFP-100P, LQFP-100P	+2.2 to +6.0	-40 to +85	16	2	-	-	1 ch.	32seg x 4com
	MB89657AR	32	1024	0.4	64	QFP-100P, LQFP-100P	+2.2 to +6.0	-40 to +85	16	2	-	-	1 ch.	32seg x 4com
	MB89P657A	32	1024	0.4	64	QFP-100P, LQFP-100P	+2.7 to +6.0	-40 to +85	16	2	-	-	1 ch.	32seg x 4com
660 series	MB89663	8	256	0.4	52	SH-DIP-64P, QFP-64P	+2.2 to +6.0	-40 to +85	4	1	-	1 ch.	1 ch.	-
	MB89663R	8	256	0.4	52	SH-DIP-64P, QFP-64P	+2.2 to +6.0	-40 to +85	4	1	-	1 ch.	1 ch.	-
	MB89665	16	512	0.4	52	SH-DIP-64P, QFP-64P	+2.2 to +6.0	-40 to +85	4	1	-	1 ch.	1 ch.	-
	MB89665R	16	512	0.4	52	SH-DIP-64P, QFP-64P	+2.2 to +6.0	-40 to +85	4	1	-	1 ch.	1 ch.	-
	MB89P665	16	512	0.4	52	SH-DIP-64P, QFP-64P	+2.7 to +6.0	-40 to +85	4	1	-	1 ch.	1 ch.	-
670 series	MB89673	8	384	0.4	69	QFP-80P LQFP-80P	+2.2 to +6.0	-40 to +85	8	1	-	1 ch.	1 ch.	-
	MB89673R	8	384	0.4	69	QFP-80P LQFP-80P	+2.2 to +6.0	-40 to +85	8	1	-	1 ch.	1 ch.	-
	MB89673AR	8	384	0.4	69	QFP-80P LQFP-80P	+2.2 to +6.0	-40 to +85	8	1	-	1 ch.	1 ch.	-
	MB89675R	16	512	0.4	69	QFP-80P LQFP-80P	+2.2 to +6.0	-40 to +85	8	1	-	1 ch.	1 ch.	-
	MB89675AR	16	512	0.4	69	QFP-80P LQFP-80P	+2.2 to +6.0	-40 to +85	8	1	-	1 ch.	1 ch.	-
	MB89677A	32	1024	0.4	69	QFP-80P LQFP-80P	+2.2 to +6.0	-40 to +85	8	1	-	1 ch.	1 ch.	-
	MB89677AR	32	1024	0.4	69	QFP-80P LQFP-80P	+2.2 to +6.0	-40 to +85	8	1	-	1 ch.	1 ch.	-
	MB89P677A	32	1024	0.4	69	QFP-80P LQFP-80P	+2.7 to +6.0	-40 to +85	8	1	-	1 ch.	1 ch.	-
680 series	MB89689	60	2048	0.5	85	QFP-100P	+2.2 to +6.0	-40 to +85	16	2	-	1 ch.	1 ch.	-
	MB89P689	60	2048	0.5	85	QFP-100P	+2.7 to +6.0	-40 to +85	16	2	-	1 ch.	1 ch.	-
800 series	MB89803	8	256	0.4	32	QFP-100P, LQFP-100P	+2.2 to +6.0	-40 to +85	5	1	-	1 ch.	-	70seg x 4com
	MB89805	16	512	0.4	32	QFP-100P, LQFP-100P	+2.2 to +6.0	-40 to +85	5	1	-	1 ch.	-	70seg x 4com
	MB89P808	48	2048	0.4	32	QFP-100P, LQFP-100P	+2.7 to +6.0	-40 to +85	5	1	-	1 ch.	-	70seg x 4com

Microcontrollers (8-bit Proprietary F²MC-8L Family)

Buzzer output	Output Compare	Input Capture	MPG / PPG	PWM timer	PWC Timer	ADC	8-bit Timer	16-bit Timer	Watch Prescaler	Special Features	F²MC-8L	Page
Yes	-	-	-	2 ch.	1 ch.	8 bit x 8ch.	-	Yes	Yes	DAC: 8bit x 2ch, Clock Timer, External bus	MB89643	18
Yes	-	-	-	2 ch.	1 ch.	8 bit x 8ch.	-	Yes	Yes	DAC: 8bit x 2ch, Clock Timer, External bus	MB89645	
Yes	-	-	-	2 ch.	1 ch.	8 bit x 8ch.	-	Yes	Yes	DAC: 8bit x 2ch, Clock Timer, External bus	MB89646	
Yes	-	-	-	2 ch.	1 ch.	8 bit x 8ch.	-	Yes	Yes	DAC: 8bit x 2ch, Clock Timer, External bus	MB89647	
Yes	-	-	-	2 ch.	1 ch.	8 bit x 8ch.	-	Yes	Yes	DAC: 8bit x 2ch, Clock Timer, External bus	MB89P647	
Yes	-	-	-	2 ch.	-	8 bit x 8ch.	(4)	2	Yes		MB89653AR	48
Yes	-	-	-	2 ch.	-	8 bit x 8ch.	(4)	2	Yes		MB89655AR	
Yes	-	-	-	2 ch.	-	8 bit x 8ch.	(4)	2	Yes		MB89656AR	
Yes	-	-	-	2 ch.	-	8 bit x 8ch.	(4)	2	Yes		MB89657AR	
Yes	-	-	-	2 ch.	-	8 bit x 8ch.	(4)	2	Yes		MB89P657A	
-	2ch	2ch	-	1 ch.	-	8 bit x 8ch.	(2)	1	-		MB89663	28
-	2ch	2ch	-	1 ch.	-	8 bit x 8ch.	(2)	1	-		MB89663R	
-	2ch	2ch	-	1 ch.	-	8 bit x 8ch.	(2)	1	-		MB89665	
-	2ch	2ch	-	1 ch.	-	8 bit x 8ch.	(2)	1	-		MB89665R	
-	2ch	2ch	-	1 ch.	-	8 bit x 8ch.	(2)	1	-		MB89P665	
Yes	-	-	-	3 ch.	-	10 bit x 8ch.	(2)	1	-	Up/Down counter, External bus	MB89673	30
Yes	-	-	-	3 ch.	-	10 bit x 8ch.	(2)	1	-	Up/Down counter, External bus	MB89673R	
Yes	-	-	-	6 ch.	-	10 bit x 8ch.	(2)	1	-	Up/Down counter, External bus	MB89673AR	
Yes	-	-	-	3 ch.	-	10 bit x 8ch.	(2)	1	-	Up/Down counter, External bus	MB89675R	
Yes	-	-	-	6 ch.	-	10 bit x 8ch.	(2)	1	-	Up/Down counter, External bus	MB89675AR	
Yes	-	-	-	6 ch.	-	10 bit x 8ch.	(2)	1	-	Up/Down counter, External bus	MB89677A	
Yes	-	-	-	6 ch.	-	10 bit x 8ch.	(2)	1	-	Up/Down counter, External bus	MB89677AR	
Yes	-	-	-	6 ch.	-	10 bit x 8ch.	(2)	1	-	Up/Down counter, External bus	MB89P677A	
Yes	-	-	-	1 ch.	-	8 bit x 8ch.	(2)	1	Yes	MSK Software Modem Output	MB89689	20
Yes	-	-	-	1 ch.	-	8 bit x 8ch.	(2)	1	Yes	MSK Software Modem Output	MB89P689	
-	-	-	-	1 ch.	1 ch.	-	-	-	-		MB89803	48
-	-	-	-	1 ch.	1 ch.	-	-	-	-		MB89805	
-	-	-	-	1 ch.	1 ch.	-	-	-	-		MB89P808	

Standard Features : Power-on Reset, Standby Mode, Watchdog Timer Reset, Clock Gear

(Continued)

The meaning of (x): It serve as both UART and 8-bit serial,or 8-bit Timer and 16-bit Timer.

* : Timer / counter with 8-bit capture + 8-bit timer.

Microcontrollers (8-bit Proprietary F²MC-8L Family)

F²MC-8L		ROM (KB)	RAM (B)	Instruction Cycle (µs)	I/O Port	Package	Operating Voltage	Operating temperature range	Ext. Interrupts	Clock	I²C	UART	8-bit serial	LCD controller / driver
810 series	MB89816A	24	2048	0.8	53	QFP-64P	+2.2 to +6.0	-40 to +85	8	2	-	1 ch.	1 ch.	-
	MB89P817A	32	2048	0.8	53	QFP-64P	+2.7 to +6.0	-40 to +85	8	2	-	1 ch.	1 ch.	-
820 series	MB89821	4	128	0.8	32	LQFP-80P	+2.2 to +6.0	-40 to +85	2	1	-	1 ch.	1 ch.	50seg x 4com
	MB89823	8	256	0.8	32	LQFP-80P	+2.2 to +6.0	-40 to +85	2	1	-	1 ch.	1 ch.	50seg x 4com
	MB89P825	16	256	0.8	32	LQFP-80P	+2.7 to +6.0	-40 to +85	2	1	-	1 ch.	1 ch.	50seg x 4com
850 series	MB89855	16	512	0.4	53	SH-DIP-64P	+2.7 to +6.0	-40 to +85	4	1	-	1 ch.	1 ch.	-
	MB89855A	16	512	0.4	53	QFP-64P SH-DIP-64P	+2.7 to +6.0	-40 to +85	4	1	-	1 ch.	1 ch.	-
	MB89T855	Ext.	512	0.4	53	SH-DIP-64P	+2.7 to +5.5	-40 to +85	4	1	-	1 ch.	1 ch.	-
	MB89855R	16	512	0.4	53	QFP-64P SH-DIP-64P	+2.7 to +6.0	-40 to +85	4	1	-	1 ch.	1 ch.	-
	MB89857	32	1024	0.4	53	SH-DIP-64P	+2.7 to +6.0	-40 to +85	4	1	-	1 ch.	1 ch.	-
	MB89P857	32	1024	0.4	53	QFP-64P SH-DIP-64P	+2.7 to +5.5	-40 to +85	4	1	-	1 ch.	1 ch.	-
860 series	MB89865	16	512	0.4	68	QFP-80P	+2.7 to +6.0	-40 to +85	4	1	-	1 ch.	1 ch.	-
	MB89867	32	1024	0.4	68	QFP-80P	+2.7 to +6.0	-40 to +85	4	1	-	1 ch.	1 ch.	-
	MB89P867	32	1024	0.4	68	QFP-80P	+2.7 to +5.5	-40 to +85	4	1	-	1 ch.	1 ch.	-
870 series	MB89875	16	512	0.4	45	QFP-80P LQFP-80P	+2.2 to +6.0	-40 to +85	8	2	-	-	1 ch.	24seg x 4com
	MB89P875	16	512	0.4	45	QFP-80P LQFP-80P	+2.7 to +6.0	-40 to +85	8	2	-	-	1 ch.	24seg x 4com
890 series	MB89898	48	1536	0.5	85	QFP-100P	+2.2 to +6.0	-20 to +85	16	2	-	-	2 ch.	-
	MB89899	60	2048	0.5	85	QFP-100P	+2.2 to +6.0	-20 to +85	16	2	-	-	2 ch.	-
	MB89P899	60	2048	0.5	85	QFP-100P	+2.7 to +6.0	-20 to +85	16	2	-	-	2 ch.	-
910 series	MB89913	8	256	0.5	39	SH-DIP-48, QFP-48P	+3.8 to +5.5	-40 to +85	2	2	-	-	1 ch.	-
	MB89915	16	512	0.5	39	SH-DIP-48, QFP-48P	+3.8 to +5.5	-40 to +85	2	2	-	-	1 ch.	-
	MB89P915	16	512	0.5	39	SH-DIP-48, QFP-48P	+3.8 to +5.5	-40 to +85	2	2	-	-	1 ch.	-
920 series	MB89923	8	256	0.5	69	QFP-80P	+2.2 to +6.0	-40 to +85	4	1	-	1 ch.	1 ch.	28seg x 4com
	MB89925	16	512	0.5	69	QFP-80P	+2.2 to +6.0	-40 to +85	4	1	-	1 ch.	1 ch.	28seg x 4com
	MB89P928	48	1024	0.5	69	QFP-80P	+2.7 to +6.0	-40 to +85	4	1	-	1 ch.	1 ch.	28seg x 4com
930A/B series	MB89935B	16	512	0.4	21	SSOP-30P	+2.2 to +5.5	-40 to +85	11	1	-	1 ch.	1 ch.	-
	MB89P935B	16	512	0.4	21	SSOP-30P	+2.7 to +5.5	-40 to +85	11	1	-	1 ch.	1 ch.	-
940 series	MB89943	8	512	0.5	37	QFP-48P	+3.5 to +5.5	-40 to +85	3	1	-	-	-	17seg x 4com
	MB89945	16	512	0.5	37	QFP-48P	+3.5 to +5.5	-40 to +85	3	1	-	-	-	17seg x 4com
	MB89P945	16	512	0.5	37	QFP-48P	+3.5 to +5.5	-40 to +85	3	1	-	-	-	17seg x 4com

Microcontrollers (8-bit Proprietary F²MC-8L Family)

Buzzer output	Output Compare	Input Capture	MPG / PPG	PWM timer	PWC Timer	ADC	8-bit Timer	16-bit Timer	Watch Prescaler	Special Features	F²MC-8L	Page
-	-	-	-	2 ch.	-	-	-	1	Yes		MB89816A	24
-	-	-	-	2 ch.	-	-	-	1	Yes		MB89P817A	
-	-	-	-	1 ch.	1 ch.	-	-	-	-	DTMF Generator	MB89821	42
-	-	-	-	1 ch.	1 ch.	-	-	-	-	DTMF Generator	MB89823	
-	-	-	-	1 ch.	1 ch.	-	-	-	-	DTMF Generator	MB89P825	
-	-	-	-	2 ch.	-	10 bit x 8ch.	-	-	-	Inverter control circuit, External bus	MB89855	56
-	-	-	-	2 ch.	-	10 bit x 8ch.	-	-	-	Inverter control circuit, External bus	MB89855A	
-	-	-	-	2 ch.	-	10 bit x 8ch.	-	-	-	Inverter control circuit, External bus	MB89T855	
-	-	-	-	2 ch.	-	10 bit x 8ch.	-	-	-	Inverter control circuit, External bus	MB89855R	
-	-	-	-	2 ch.	-	10 bit x 8ch.	-	-	-	Inverter control circuit, External bus	MB89857	
-	-	-	-	2 ch.	-	10 bit x 8ch.	-	-	-	Inverter control circuit, External bus	MB89P857	
-	-	-	-	2 ch.	-	10 bit x 8ch.	-	-	-	Inverter control circuit, External bus	MB89865	56
-	-	-	-	2 ch.	-	10 bit x 8ch.	-	-	-	Inverter control circuit, External bus	MB89867	
-	-	-	-	2 ch.	-	10 bit x 8ch.	-	-	-	Inverter control circuit, External bus	MB89P867	
Yes	-	-	-	1 ch.	-	10 bit x 8ch.	(2)	1	Yes		MB89875	46
Yes	-	-	-	1 ch.	-	10 bit x 8ch.	(2)	1	Yes		MB89P875	
Yes	-	-	-	1 ch.	-	8 bit x 8ch.	(2)	1	Yes	DTMF Generator	MB89898	54
Yes	-	-	-	1 ch.	-	8 bit x 8ch.	(2)	1	Yes	DTMF Generator	MB89899	
Yes	-	-	-	1 ch.	-	8 bit x 8ch.	(2)	1	Yes	DTMF Generator	MB89P899	
Yes	-	-	-	1 ch.	-	8 bit x 8ch.	-	Yes	Yes	VFD Driver, Low Voltage Detect Reset	MB89913	52
Yes	-	-	-	1 ch.	-	8 bit x 8ch.	-	Yes	Yes	VFD Driver, Low Voltage Detect Reset	MB89915	
Yes	-	-	-	1 ch.	-	8 bit x 8ch.	-	Yes	Yes	VFD Driver, Low Voltage Detect Reset	MB89P915	
Yes	2 ch.	2 ch.	-	2 ch.	-	10 bit x 8ch.	-	-	-	Low Voltage Detect Reset	MB89923	46
Yes	2 ch.	2 ch.	-	2 ch.	-	10 bit x 8ch.	-	-	-	Low Voltage Detect Reset	MB89925	
Yes	2 ch.	2 ch.	-	2 ch.	-	10 bit x 8ch.	-	-	-	Low Voltage Detect Reset	MB89P928	
Yes	-	1 ch.	12 bit x 1ch	1 ch.	-	10 bit x 8ch.	1	1 *	-		MB89935B	22
Yes	-	1 ch.	12 bit x 1ch	1 ch.	-	10 bit x 8ch.	1	1 *	-		MB89P935B	
-	-	-	-	2 ch.	-	8 bit x 2ch.	(2)	1	-	Low Voltage Reset, Ext. Voltage Moniter	MB89943	32
-	-	-	-	2 ch.	-	8 bit x 2ch.	(2)	1	-	Low Voltage Reset, Ext. Voltage Moniter	MB89945	
-	-	-	-	2 ch.	-	8 bit x 2ch.	(2)	1	-	Low Voltage Reset, Ext. Voltage Moniter	MB89P945	

(Continued)

Standard Features : Power-on Reset, Standby Mode, Watchdog Timer Reset, Clock Gear
The meaning of (x): It serve as both UART and 8-bit serial,or 8-bit Timer and 16-bit Timer.
* : Timer / counter with 8-bit capture + 8-bit timer.

Microcontrollers (8-bit Proprietary F²MC-8L Family)

(Continued)

F²MC-8L		ROM (KB)	RAM (B)	Instruction Cycle (µs)	I/O Port	Package	Operating Voltage	Operating temperature range	Ext. Interrupts	Clock	I²C	UART	8-bit serial	LCD controller / driver
950 series	MB89951	4	128	0.8	33	LQFP-64P	+2.2 to +6.0	-40 to +85	2	1	-	1 ch.	1 ch.	42seg x 4com
	MB89953	8	256	0.8	33	LQFP-64P	+2.2 to +6.0	-40 to +85	2	1	-	1 ch.	1 ch.	42seg x 4com
	MB89953A	8	256	0.8	33	LQFP-64P	+2.2 to +6.0	-40 to +85	2	1	-	1 ch.	1 ch.	42seg x 4com
	MB89P955	16	512	0.8	33	LQFP-64P	+2.7 to +6.0	-40 to +85	2	1	-	1 ch.	1 ch.	42seg x 4com
960 series	MB89965	16	512	0.4	35	QFP-48P, LQFP-48P	+3.5 to +5.5	-40 to +85	11	2	-	-	1 ch.	-
	MB89965C	16	512	0.4	35	QFP-48P, LQFP-48P	+3.5 to +5.5	-40 to +85	11	2	Yes	-	1 ch.	-
	MB89P965A	16	512	0.4	35	QFP-48P, LQFP-48P	+3.5 to +5.5	-40 to +85	11	2	Yes	-	1 ch.	-
	MB89F969A	60	1024	0.4	35	LQFP-64P	+3.5 to +5.5	-40 to +85	11	2	Yes	-	1 ch.	-
980 series	MB89983	8	256	0.95	47	LQFP-64P	+2.2 to +6.0	-40 to +85	12	2	-	-	-	14seg x 4com
	MB89P985	16	512	0.95	47	LQFP-64P	+2.7 to +6.0	-40 to +85	12	2	-	-	-	14seg x 4com
990 series	MB89997	32	128	0.95	22	SH-DIP-28P, SOP-28P	+2.2 to +6.0	-40 to +85	11	1	-	-	-	-

Microcontrollers (8-bit Proprietary F²MC-8L Family)

Buzzer output	Output Compare	Input Capture	MPG / PPG	PWM timer	PWC Timer	ADC	8-bit Timer	16-bit Timer	Watch Prescaler	Special Features	F²MC-8L	Page
-	-	-	-	1 ch.	1 ch.	-	-	-	-		MB89951	34
-	-	-	-	1 ch.	1 ch.	-	-	-	-		MB89953	
-	-	-	-	1 ch.	1 ch.	-	-	-	-		MB89953A	
-	-	-	-	1 ch.	1 ch.	-	-	-	-		MB89P955	
-	-	-	-	-	-	10 bit x 4ch.	(2)	1	Yes		MB89965	12
-	-	-	-	-	-	10 bit x 4ch.	(2)	1	Yes		MB89965C	
-	-	-	-	-	-	10 bit x 4ch.	(2)	1	Yes		MB89P965A	
-	-	-	-	-	-	10 bit x 4ch.	(2)	1	Yes		MB89F969A	
Yes	-	-	-	2 ch.	-	8 bit x 4ch.	(2)	1	Yes	Remote-control Carrier Frequency	MB89983	36
Yes	-	-	-	2 ch.	-	8 bit x 4ch.	(2)	1	Yes	Remote-control Carrier Frequency	MB89P985	
-	-	-	-	-	-	-	(2)	1	-	Remote-control Carrier Frequency	MB89997	6

Standard Features : Power-on Reset, Standby Mode, Watchdog Timer Reset, Clock Gear
The meaning of (x): It serve as both UART and 8-bit serial,or 8-bit Timer and 16-bit Timer.
* : Timer / counter with 8-bit capture + 8-bit timer.

16-bit Proprietary F²MC-16L Family

F²MC-16L		ROM (KB)	RAM (KB)	Instruction Cycle (ns)	I/O Port	Package	Operating Voltage	Operating temperature range	Ext. Interrupts	Clock	I²C	UART	8-bit serial	LCD controller / driver
610 series	MB90611A	-	1	62.5	57	QFP-100P, LQFP-100P	+2.7 to +5.5	-40 to +85	8	1	-	3 ch.	(3)	-
	MB90613A	-	3	62.5	57	QFP-100P, LQFP-100P	+2.7 to +5.5	-40 to +85	8	1	-	3 ch.	(3)	-
620 series	MB90622A	32	1.64	83.3	59	LQFP-100P	4 to 5.5	-40 to +85	8	2	-	1 ch.	1 ch.	32seg × 4com
	MB90623A	48	2	83.3	59	LQFP-100P	4 to 5.5	-40 to +85	8	2	-	1 ch.	1 ch.	32seg × 4com
	MB90P623A	48	2	83.3	59	LQFP-100P	4 to 5.5	-40 to +85	8	2	-	1 ch.	1 ch.	32seg × 4com
630 series	MB90632A	32	1	62.5	82	LQFP-100P	+2.7 to +5.5	-40 to +85	8	1	-	2 ch.	2 ch.	-
	MB90634A	64	2	62.5	82	LQFP-100P	+2.7 to +5.5	-40 to +85	8	1	-	2 ch.	2 ch.	-
	MB90P634A	64	3	62.5	82	LQFP-100P	+2.7 to +5.5	-40 to +85	8	1	-	2 ch.	2 ch.	-
640 series	MB90641A	64	2	58.8	83	QFP-100P, LQFP-100P	+4.5 to +5.5	-40 to +85	8	1	-	2 ch.	-	-
	MB90P641A	64	2	58.8	83	QFP-100P, LQFP-100P	+4.5 to +5.5	-40 to +85	8	1	-	2 ch.	-	-
650 series	MB90652A	64	3	62.5	79	QFP-100P, LQFP-100P	+2.2 to +3.6	-40 to +85	8	2	Yes	1 ch.	2 ch.	-
	MB90653A	128	5	62.5	79	QFP-100P, LQFP-100P	+2.2 to +3.6	-40 to +85	8	2	Yes	1 ch.	2 ch.	-
	MB90654A	256	8	62.5	79	QFP-100P, LQFP-100P	+2.2 to +3.6	-40 to +85	8	2	Yes	1 ch.	2 ch.	-
	MB90F654A	256	8	62.5	79	QFP-100P, LQFP-100P	+2.4 to +3.6	-40 to +85	8	2	Yes	1 ch.	2 ch.	-
660 series	MB90662A	32	1.64	62.5	51	SDIP-64P, LQFP-64P	+2.7 to +5.5	-40 to +85	8	1	-	1 ch.	-	-
	MB90663A	48	2	62.5	51	SDIP-64P, LQFP-64P	+2.7 to +5.5	-40 to +85	8	1	-	1 ch.	-	-
	MB90P663A	48	2	62.5	51	SDIP-64P, LQFP-64P	+2.7 to +5.5	-40 to +85	8	1	-	1 ch.	-	-
670 series	MB90671	16	0.64	62.5	65	QFP-80P, LQFP-80P	+2.7 to +5.5	-40 to +85	4	1	-	2 ch.	-	-
	MB90672	32	1.64	62.5	65	QFP-80P, LQFP-80P	+2.7 to +5.5	-40 to +85	4	1	-	2 ch.	-	-
	MB90673	48	2	62.5	65	QFP-80P, LQFP-80P	+2.7 to +5.5	-40 to +85	4	1	-	2 ch.	-	-
	MB90T673	-	2	62.5	65	QFP-80P, LQFP-80P	+2.7 to +5.5	-40 to +85	4	1	-	2 ch.	-	-
	MB90P673	48	2	62.5	65	SDIP-80P, LQFP-80P	+2.7 to +5.5	-40 to +85	4	1	-	2 ch.	-	-
675 series	MB90676	32	1.64	62.5	84	QFP-100P, LQFP-100P	+2.7 to +5.5	-40 to +85	4	1	Yes	2 ch.	-	-
	MB90677	48	2	62.5	84	QFP-100P, LQFP-100P	+2.7 to +5.5	-40 to +85	4	1	Yes	2 ch.	-	-
	MB90678	64	3	62.5	84	QFP-100P, LQFP-100P	+2.7 to +5.5	-40 to +85	4	1	Yes	2 ch.	-	-
	MB90T678	-	3	62.5	84	QFP-100P, LQFP-100P	+2.7 to +5.5	-40 to +85	4	1	Yes	2 ch.	-	-
	MB90P678	64	3	62.5	84	QFP-100P, LQFP-100P	+2.7 to +5.5	-40 to +85	4	1	Yes	2 ch.	-	-

Microcontrollers (16-bit Proprietary F²MC-16L Family)

Up/down counter	Output Compare	Input Capture	PPG (2 × 8bit or 1 × 16bit)	PWM Timer	PWC Timer	ADC	8-bit Timer	16-bit Timer	Clock Prescaler	Special Features	F²MC-16L	Page
-	-	-	1 ch.	-	-	10 bit × 8 ch.	-	2 ch.	-	Multi/Non-multi Prexed Bus	MB90611A	86
-	-	-	1 ch.	-	-	10 bit × 8 ch.	-	2 ch.	-	Multi/Non-multi Prexed Bus	MB90613A	
-	-	-	16 bit 2 ch.	-	-	10 bit × 4 ch.	-	3 ch.	-		MB90622A	88
-	-	-	16 bit 2 ch.	-	-	10 bit × 4 ch.	-	3 ch.	-		MB90623A	
-	-	-	16 bit 2 ch.	-	-	10 bit × 4 ch.	-	3 ch.	-		MB90P623A	
Yes	4 ch.	2 ch.	1 ch.	-	-	10 bit × 8 ch.	-	Free Run Timer	-	DAC: 8 bit × 2 ch.	MB90632A	90
Yes	4 ch.	2 ch.	1 ch.	-	-	10 bit × 8 ch.	-	Free Run Timer	-	DAC: 8 bit × 2 ch.	MB90634A	
Yes	4 ch.	2 ch.	1 ch.	-	-	10 bit × 8 ch.	-	Free Run Timer	-	DAC: 8 bit × 2 ch.	MB90P634A	
-	-	-	1 ch.	-	-	-	-	5 ch.	-		MB90641A	86
-	-	-	1 ch.	-	-	-	-	5 ch.	-		MB90P641A	
Yes	4 ch.	2 ch.	1 ch.	-	-	10 bit × 8 ch.	-	Free Run Timer	Yes	DAC: 8 bit × 2 ch.	MB90652A	90
Yes	4 ch.	2 ch.	1 ch.	-	-	10 bit × 8 ch.	-	Free Run Timer	Yes	DAC: 8 bit × 2 ch.	MB90653A	
Yes	4 ch.	2 ch.	1 ch.	-	-	10 bit × 8 ch.	-	Free Run Timer	Yes	DAC: 8 bit × 2 ch.	MB90654A	
Yes	4 ch.	2 ch.	1 ch.	-	-	10 bit × 8 ch.	-	Free Run Timer	Yes	DAC: 8 bit × 2 ch.	MB90F654A	
-	-	-	-	8bit 1ch	-	10 bit × 8 ch.	-	4 ch.	-	Inverter Motor Control	MB90662A	88
-	-	-	-	8bit 1ch	-	10 bit × 8 ch.	-	4 ch.	-	Inverter Motor Control	MB90663A	
-	-	-	-	8bit 1ch	-	10 bit × 8 ch.	-	4 ch.	-	Inverter Motor Control	MB90P663A	
-	8 ch.	4 ch.	1 ch.	-	-	10 bit × 8 ch.	-	2 ch.	-		MB90671	84
-	8 ch.	4 ch.	1 ch.	-	-	10 bit × 8 ch.	-	2 ch.	-		MB90672	
-	8 ch.	4 ch.	1 ch.	-	-	10 bit × 8 ch.	-	2 ch.	-		MB90673	
-	8 ch.	4 ch.	1 ch.	-	-	10 bit × 8 ch.	-	2 ch.	-		MB90T673	
-	8 ch.	4 ch.	1 ch.	-	-	10 bit × 8 ch.	-	2 ch.	-		MB90P673	
-	8 ch.	4 ch.	1 ch.	-	-	10 bit × 8 ch.	-	2 ch.	-		MB90676	84
-	8 ch.	4 ch.	1 ch.	-	-	10 bit × 8 ch.	-	2 ch.	-		MB90677	
-	8 ch.	4 ch.	1 ch.	-	-	10 bit × 8 ch.	-	2 ch.	-		MB90678	
-	8 ch.	4 ch.	1 ch.	-	-	10 bit × 8 ch.	-	2 ch.	-		MB90T678	
-	8 ch.	4 ch.	1 ch.	-	-	10 bit × 8 ch.	-	2 ch.	-		MB90P678	

Standard Features : Power-on Reset, Standby Mode, Watchdog Timer Reset, PLL Clock Multiplier (or Clock Gear)

Microcontrollers (16-bit Proprietary F²MC-16LX Family)

16-bit Proprietary F²MC-16LX Family

F²MC-16LX		ROM (KB)	RAM (KB)	Instruction Cycle (ns)	I/O Port	Package	Operating Voltage (V)	Operating temperature range	Ext. Interrupts	Clock	I²C	UART	8-bit serial	LCD controller / driver
330 series	MB90333 *	256	16	41.6	94	LQFP-120P	+3.0 to +3.6	-40 to +85 (USB operation : 0 to 70)	8	2	3 ch.	4 ch.	1 ch.	-
	MB90F334 *	384	24	41.6	94	LQFP-120P	+3.0 to +3.6	-40 to +85 (USB operation : 0 to 70)	8	2	3 ch.	4 ch.	1 ch.	-
335 series	MB90337 *	64	4	41.6	45	LQFP-64P	+3.0 to +3.6	-40 to +85 (USB operation : 0 to 70)	8	1	1 ch.	2 ch.	1 ch.	-
	MB90F337 *	64	4	41.6	45	LQFP-64P	+3.0 to +3.6	-40 to +85 (USB operation : 0 to 70)	8	1	1 ch.	2 ch.	1 ch.	-
340/S series	MB90341 **	128	15.7	42.0	80	QFP-100P LQFP-100P	+3.5 to +5.5	-40 to +105	16	2	-	4 ch.	-	-
	MB90341S **	128	15.7	42.0	82	QFP-100P LQFP-100P	+3.5 to +5.5	-40 to +105	16	1	-	4 ch.	-	-
	MB90341C **	128	15.7	42.0	80	QFP-100P LQFP-100P	+3.5 to +5.5	-40 to +105	16	2	2 ch.	4 ch.	-	-
	MB90341CS **	128	15.7	42.0	82	QFP-100P LQFP-100P	+3.5 to +5.5	-40 to +105	16	1	2 ch.	4 ch.	-	-
	MB90342 **	256	15.7	42.0	80	QFP-100P LQFP-100P	+3.5 to +5.5	-40 to +105	16	2	-	4 ch.	-	-
	MB90342S **	256	15.7	42.0	82	QFP-100P LQFP-100P	+3.5 to +5.5	-40 to +105	16	1	-	4 ch.	-	-
	MB90342C **	256	15.7	42.0	80	QFP-100P LQFP-100P	+3.5 to +5.5	-40 to +105	16	2	2 ch.	4 ch.	-	-
	MB90342CS **	256	15.7	42.0	82	QFP-100P LQFP-100P	+3.5 to +5.5	-40 to +105	16	1	2 ch.	4 ch.	-	-
	MB90F342 **	256	15.7	42.0	80	QFP-100P LQFP-100P	+3.5 to +5.5	-40 to +105	16	2	-	4 ch.	-	-
	MB90F342S **	256	15.7	42.0	82	QFP-100P LQFP-100P	+3.5 to +5.5	-40 to +105	16	1	-	4 ch.	-	-
	MB90F342C **	256	15.7	42.0	80	QFP-100P LQFP-100P	+3.5 to +5.5	-40 to +105	16	2	2 ch.	4 ch.	-	-
	MB90F342CS **	256	15.7	42.0	82	QFP-100P LQFP-100P	+3.5 to +5.5	-40 to +105	16	1	2 ch.	4 ch.	-	-
	MB90343 **	384	20	42.0	80	QFP-100P LQFP-100P	+3.5 to +5.5	-40 to +105	16	2	-	4 ch.	-	-
	MB90343S **	384	20	42.0	82	QFP-100P LQFP-100P	+3.5 to +5.5	-40 to +105	16	1	-	4 ch.	-	-
	MB90343C **	384	20	42.0	80	QFP-100P LQFP-100P	+3.5 to +5.5	-40 to +105	16	2	2 ch.	4 ch.	-	-
	MB90343CS **	384	20	42.0	82	QFP-100P LQFP-100P	+3.5 to +5.5	-40 to +105	16	1	2 ch.	4 ch.	-	-
	MB90344 **	384	30	42.0	80	QFP-100P LQFP-100P	+3.5 to +5.5	-40 to +105	16	2	-	4 ch.	-	-
	MB90344S **	384	30	42.0	82	QFP-100P LQFP-100P	+3.5 to +5.5	-40 to +105	16	1	-	4 ch.	-	-
	MB90344C **	384	30	42.0	80	QFP-100P LQFP-100P	+3.5 to +5.5	-40 to +105	16	2	2 ch.	4 ch.	-	-
	MB90344CS **	384	30	42.0	82	QFP-100P LQFP-100P	+3.5 to +5.5	-40 to +105	16	1	2 ch.	4 ch.	-	-
	MB90F344 **	384	30	42.0	80	QFP-100P LQFP-100P	+3.5 to +5.5	-40 to +105	16	2	-	4 ch.	-	-
	MB90F344S **	384	30	42.0	82	QFP-100P LQFP-100P	+3.5 to +5.5	-40 to +105	16	1	-	4 ch.	-	-
	MB90F344C **	384	30	42.0	80	QFP-100P LQFP-100P	+3.5 to +5.5	-40 to +105	16	2	2 ch.	4 ch.	-	-
	MB90F344CS **	384	30	42.0	82	QFP-100P LQFP-100P	+3.5 to +5.5	-40 to +105	16	1	2 ch.	4 ch.	-	-

* : Under development

Microcontrollers (16-bit Proprietary F²MC-16LX Family)

Up/down counter	Output Compare	Input Capture	8/16 bit PPG	PWM Timer	PWC Timer	ADC	8-bit Timer	16-bit Timer	Clock Prescaler	Special Features	F²MC-16LX	Page
-	4 ch.	4 ch.	8 bit 6 ch.	-	1 ch.	10 bit × 16 ch.	-	3 ch.	Yes	USB full speed function	MB90333 *	110
-	4 ch.	4 ch.	8 bit 6 ch.	-	1 ch.	10 bit × 16 ch.	-	3 ch.	Yes	USB full speed function	MB90F334 *	
-	-	-	8 bit 6 ch.	-	1 ch.	-	-	1 ch.	-	USB full speed function	MB90337 *	110
-	-	-	8 bit 6 ch.	-	1 ch.	-	-	1 ch.	-	USB full speed function	MB90F337 *	
-	8 ch.	8 ch.	8 bit 16 ch.	-	-	10 bit × 16 ch.	-	4 ch.	Yes	CAN × 2 ch.	MB90341 **	110
-	8 ch.	8 ch.	8 bit 16 ch.	-	-	10 bit × 16 ch.	-	4 ch.	-	CAN × 2 ch.	MB90341S **	
-	8 ch.	8 ch.	8 bit 16 ch.	-	-	10 bit × 24 ch.	-	4 ch.	Yes	CAN × 2 ch.	MB90341C **	
-	8 ch.	8 ch.	8 bit 16 ch.	-	-	10 bit × 24 ch.	-	4 ch.	-	CAN × 2 ch.	MB90341CS **	
-	8 ch.	8 ch.	8 bit 16 ch.	-	-	10 bit × 16 ch.	-	4 ch.	Yes	CAN × 2 ch.	MB90342 **	
-	8 ch.	8 ch.	8 bit 16 ch.	-	-	10 bit × 16 ch.	-	4 ch.	-	CAN × 2 ch.	MB90342S **	
-	8 ch.	8 ch.	8 bit 16 ch.	-	-	10 bit × 24 ch.	-	4 ch.	Yes	CAN × 2 ch.	MB90342C **	
-	8 ch.	8 ch.	8 bit 16 ch.	-	-	10 bit × 24 ch.	-	4 ch.	-	CAN × 2 ch.	MB90342CS **	
-	8 ch.	8 ch.	8 bit 16 ch.	-	-	10 bit × 16 ch.	-	4 ch.	Yes	CAN × 2 ch.	MB90F342 **	
-	8 ch.	8 ch.	8 bit 16 ch.	-	-	10 bit × 16 ch.	-	4 ch.	-	CAN × 2 ch.	MB90F342S **	
-	8 ch.	8 ch.	8 bit 16 ch.	-	-	10 bit × 24 ch.	-	4 ch.	Yes	CAN × 2 ch.	MB90F342C **	
-	8 ch.	8 ch.	8 bit 16 ch.	-	-	10 bit × 24 ch.	-	4 ch.	-	CAN × 2 ch.	MB90F342CS **	
-	8 ch.	8 ch.	8 bit 16 ch.	-	-	10 bit × 16 ch.	-	4 ch.	Yes	CAN × 2 ch.	MB90343 **	
-	8 ch.	8 ch.	8 bit 16 ch.	-	-	10 bit × 16 ch.	-	4 ch.	-	CAN × 2 ch.	MB90343S **	
-	8 ch.	8 ch.	8 bit 16 ch.	-	-	10 bit × 24 ch.	-	4 ch.	Yes	CAN × 2 ch.	MB90343C **	
-	8 ch.	8 ch.	8 bit 16 ch.	-	-	10 bit × 24 ch.	-	4 ch.	-	CAN × 2 ch.	MB90343CS **	
-	8 ch.	8 ch.	8 bit 16 ch.	-	-	10 bit × 16 ch.	-	4 ch.	Yes	CAN × 2 ch.	MB90344 **	
-	8 ch.	8 ch.	8 bit 16 ch.	-	-	10 bit × 16 ch.	-	4 ch.	-	CAN × 2 ch.	MB90344S **	
-	8 ch.	8 ch.	8 bit 16 ch.	-	-	10 bit × 24 ch.	-	4 ch.	Yes	CAN × 2 ch.	MB90344C **	
-	8 ch.	8 ch.	8 bit 16 ch.	-	-	10 bit × 24 ch.	-	4 ch.	-	CAN × 2 ch.	MB90344CS **	
-	8 ch.	8 ch.	8 bit 16 ch.	-	-	10 bit × 16 ch.	-	4 ch.	Yes	CAN × 2 ch.	MB90F344 **	
-	8 ch.	8 ch.	8 bit 16 ch.	-	-	10 bit × 16 ch.	-	4 ch.	-	CAN × 2 ch.	MB90F344S **	
-	8 ch.	8 ch.	8 bit 16 ch.	-	-	10 bit × 24 ch.	-	4 ch.	Yes	CAN × 2 ch.	MB90F344C **	
-	8 ch.	8 ch.	8 bit 16 ch.	-	-	10 bit × 24 ch.	-	4 ch.	-	CAN × 2 ch.	MB90F344CS **	

Standard Features : Power-on Reset, Standby Mode, Watchdog Timer Reset, PLL Clock Multiplier (or Clock Gear)

(Continued)

Microcontrollers (16-bit Proprietary F²MC-16LX Family)

F²MC-16LX		ROM (KB)	RAM (KB)	Instruction Cycle (ns)	I/O Port	Package	Operating Voltage (V)	Operating temperature range	Ext. Interrupts	Clock	I²C	UART	8-bit serial	LCD controller / driver
345/S series	MB90346 *	64	15.7	42.0	80	QFP-100P LQFP-100P	+3.5 to +5.5	-40 to +105	16	2	-	4 ch.	-	-
	MB90346S *	64	15.7	42.0	82	QFP-100P LQFP-100P	+3.5 to +5.5	-40 to +105	16	1	-	4 ch.	-	-
	MB90346C *	64	15.7	42.0	80	QFP-100P LQFP-100P	+3.5 to +5.5	-40 to +105	16	2	2 ch.	4 ch.	-	-
	MB90346CS *	64	15.7	42.0	82	QFP-100P LQFP-100P	+3.5 to +5.5	-40 to +105	16	1	2 ch.	4 ch.	-	-
	MB90347 *	128	6	42.0	80	QFP-100P LQFP-100P	+3.5 to +5.5	-40 to +105	16	2	-	4 ch.	-	-
	MB90347S *	128	6	42.0	82	QFP-100P LQFP-100P	+3.5 to +5.5	-40 to +105	16	1	-	4 ch.	-	-
	MB90347C *	128	6	42.0	80	QFP-100P LQFP-100P	+3.5 to +5.5	-40 to +105	16	2	2 ch.	4 ch.	-	-
	MB90347CS *	128	6	42.0	82	QFP-100P LQFP-100P	+3.5 to +5.5	-40 to +105	16	1	2 ch.	4 ch.	-	-
	MB90F347 *	128	6	42.0	80	QFP-100P LQFP-100P	+3.5 to +5.5	-40 to +105	16	2	-	4 ch.	-	-
	MB90F347S *	128	6	42.0	82	QFP-100P LQFP-100P	+3.5 to +5.5	-40 to +105	16	1	-	4 ch.	-	-
	MB90F347C *	128	6	42.0	80	QFP-100P LQFP-100P	+3.5 to +5.5	-40 to +105	16	2	2 ch.	4 ch.	-	-
	MB90F347CS *	128	6	42.0	82	QFP-100P LQFP-100P	+3.5 to +5.5	-40 to +105	16	1	2 ch.	4 ch.	-	-
	MB90348 **	128	15.7	42.0	80	QFP-100P LQFP-100P	+3.5 to +5.5	-40 to +105	16	2	-	4 ch.	-	-
	MB90348S **	128	15.7	42.0	82	QFP-100P LQFP-100P	+3.5 to +5.5	-40 to +105	16	1	-	4 ch.	-	-
	MB90348C **	128	15.7	42.0	80	QFP-100P LQFP-100P	+3.5 to +5.5	-40 to +105	16	2	2 ch.	4 ch.	-	-
	MB90348CS **	128	15.7	42.0	82	QFP-100P LQFP-100P	+3.5 to +5.5	-40 to +105	16	1	2 ch.	4 ch.	-	-
	MB90349 **	256	15.7	42.0	80	QFP-100P LQFP-100P	+3.5 to +5.5	-40 to +105	16	2	-	4 ch.	-	-
	MB90349S **	256	15.7	42.0	82	QFP-100P LQFP-100P	+3.5 to +5.5	-40 to +105	16	1	-	4 ch.	-	-
	MB90349C **	256	15.7	42.0	80	QFP-100P LQFP-100P	+3.5 to +5.5	-40 to +105	16	2	2 ch.	4 ch.	-	-
	MB90349CS **	256	15.7	42.0	82	QFP-100P LQFP-100P	+3.5 to +5.5	-40 to +105	16	1	2 ch.	4 ch.	-	-
370 series	MB90372	64	6	62.5	120	LQFP-144P	+3.0 to +3.6	-40 to +85	4	2	2 ch.	3 ch.	-	9seg × 4com
	MB90F372	64	6	62.5	120	LQFP-144P	+3.0 to +3.6	-40 to +85	4	2	2 ch.	3 ch.	-	-
385 series	MB90387	64	2	62.5	34	LQFP-48P	+3.5 to +5.5	-40 to +85	4	2	-	1 ch.	-	-
	MB90387S	64	2	62.5	36	LQFP-48P	+3.5 to +5.5	-40 to +85	4	1	-	1 ch.	-	-
	MB90F387	64	2	62.5	34	LQFP-48P	+3.5 to +5.5	-40 to +85	4	2	-	1 ch.	-	-
	MB90F387S	64	2	62.5	36	LQFP-48P	+3.5 to +5.5	-40 to +85	4	1	-	1 ch.	-	-
390 series	MB90F394H *	384	10K	50	96	LQFP-120P	+3.5 to +5.5	-40 to +85	8	1	-	3 ch.	1 ch.	-
M405 series	MB90M407	96	4	59.5	26	QFP-100P	+3.0 to +3.6	-40 to +85	4	1	1 ch.	2 ch.	2 ch.	-
	MB90M408	128	4	59.5	26	QFP-100P	+3.0 to +3.6	-40 to +85	4	1	1 ch.	2 ch.	2 ch.	-
	MB90MF408	128	4	59.5	26	QFP-100P	+3.0 to +3.6	-40 to +85	4	1	1 ch.	2 ch.	2 ch.	-

* : Under development

Microcontrollers (16-bit Proprietary F²MC-16LX Family)

Up/down counter	Output Compare	Input Capture	8/16 bit PPG	PWM Timer	PWC Timer	ADC	8-bit Timer	16-bit Timer	Clock Prescaler	Special Features	F²MC-16LX	Page
-	8 ch.	8 ch.	8 bit 16 ch.	-	-	10 bit × 16 ch.	-	4 ch.	Yes	CAN × 1 ch.	MB90346 *	110
-	8 ch.	8 ch.	8 bit 16 ch.	-	-	10 bit × 16 ch.	-	4 ch.	-	CAN × 1 ch.	MB90346S *	
-	8 ch.	8 ch.	8 bit 16 ch.	-	-	10 bit × 24 ch.	-	4 ch.	Yes	CAN × 1 ch.	MB90346C *	
-	8 ch.	8 ch.	8 bit 16 ch.	-	-	10 bit × 24 ch.	-	4 ch.	-	CAN × 1 ch.	MB90346CS *	
-	8 ch.	8 ch.	8 bit 16 ch.	-	-	10 bit × 16 ch.	-	4 ch.	Yes	CAN × 1 ch.	MB90347 *	
-	8 ch.	8 ch.	8 bit 16 ch.	-	-	10 bit × 16 ch.	-	4 ch.	-	CAN × 1 ch.	MB90347S *	
-	8 ch.	8 ch.	8 bit 16 ch.	-	-	10 bit × 24 ch.	-	4 ch.	Yes	CAN × 1 ch.	MB90347C *	
-	8 ch.	8 ch.	8 bit 16 ch.	-	-	10 bit × 24 ch.	-	4 ch.	-	CAN × 1 ch.	MB90347CS *	
-	8 ch.	8 ch.	8 bit 16 ch.	-	-	10 bit × 16 ch.	-	4 ch.	Yes	CAN × 1 ch.	MB90F347 *	
-	8 ch.	8 ch.	8 bit 16 ch.	-	-	10 bit × 16 ch.	-	4 ch.	-	CAN × 1 ch.	MB90F347S *	
-	8 ch.	8 ch.	8 bit 16 ch.	-	-	10 bit × 24 ch.	-	4 ch.	Yes	CAN × 1 ch.	MB90F347C *	
-	8 ch.	8 ch.	8 bit 16 ch.	-	-	10 bit × 24 ch.	-	4 ch.	-	CAN × 1 ch.	MB90F347CS *	
-	8 ch.	8 ch.	8 bit 16 ch.	-	-	10 bit × 16 ch.	-	4 ch.	Yes	CAN × 1 ch.	MB90348 **	
-	8 ch.	8 ch.	8 bit 16 ch.	-	-	10 bit × 16 ch.	-	4 ch.	-	CAN × 1 ch.	MB90348S **	
-	8 ch.	8 ch.	8 bit 16 ch.	-	-	10 bit × 24 ch.	-	4 ch.	Yes	CAN × 1 ch.	MB90348C **	
-	8 ch.	8 ch.	8 bit 16 ch.	-	-	10 bit × 24 ch.	-	4 ch.	-	CAN × 1 ch.	MB90348CS **	
-	8 ch.	8 ch.	8 bit 16 ch.	-	-	10 bit × 16 ch.	-	4 ch.	Yes	CAN × 1 ch.	MB90349 **	
-	8 ch.	8 ch.	8 bit 16 ch.	-	-	10 bit × 16 ch.	-	4 ch.	-	CAN × 1 ch.	MB90349S **	
-	8 ch.	8 ch.	8 bit 16 ch.	-	-	10 bit × 24 ch.	-	4 ch.	Yes	CAN × 1 ch.	MB90349C **	
-	8 ch.	8 ch.	8 bit 16 ch.	-	-	10 bit × 24 ch.	-	4 ch.	-	CAN × 1 ch.	MB90349CS **	
-	-	-	16 bit 3 ch.	-	-	10 bit × 8 ch.		4 ch.	Yes		MB90372	120
-	-	-	16 bit 3 ch.	-	-	10 bit × 8 ch.		4 ch.	Yes		MB90F372	
-	-	4 ch.	8 bit 4 ch.	-	-	10 bit × 8 ch.	-	2 ch.	Yes	CAN	MB90387	108
-	-	4 ch.	8 bit 4 ch.	-	-	10 bit × 8 ch.	-	2 ch.	-	CAN	MB90387S	
-	-	4 ch.	8 bit 4 ch.	-	-	10 bit × 8 ch.	-	2 ch.	Yes	CAN	MB90F387	
-	-	4 ch.	8 bit 4 ch.	-	-	10 bit × 8 ch.	-	2 ch.	-	CAN	MB90F387S	
-	8 ch.	6 ch.	8 bit 12 ch.	-	-	10 bit × 8 ch.	-	2 ch.	Yes	CAN	MB90F394H *	118
-	1 ch.	2 ch.	-	-	-	10 bit × 16 ch.	-	3 ch.	-	FL Controller	MB90M407	124
-	1 ch.	2 ch.	-	-	-	10 bit × 16 ch.	-	3 ch.	-	FL Controller	MB90M408	
-	1 ch.	2 ch.	-	-	-	10 bit × 16 ch.	-	3 ch.	-	FL Controller	MB90MF408	

(Continued)

Microcontrollers (16-bit Proprietary F²MC-16LX Family)

F²MC-16LX		ROM (KB)	RAM (KB)	Instruction Cycle (ns)	I/O Port	Package	Operating Voltage (V)	Operating temperature range	Ext. Interrupts	Clock	I²C	UART	8-bit serial	LCD controller / driver
420G/GA series	MB90423GA	128	6	62.5	58	QFP-100P LQFP-100P	+4.5 to +5.5	-40 to +85	8	1	-	2 ch.	-	24seg × 4com
	MB90423GB	641 28	6	62.5	58	QFP-100P LQFP-100P	+4.5 to +5.5	-40 to +85	8	2	-	2 ch.	-	24seg × 4com
	MB90423GC	128	6	62.5	58	QFP-100P LQFP-100P	+4.5 to +5.5	-40 to +85	8	2	-	2 ch.	-	24seg × 4com
	MB90F423GA	128	6	62.5	58	QFP-100P LQFP-100P	+4.5 to +5.5	-40 to +85	8	1	-	2 ch.	-	24seg × 4com
	MB90F423GB	128	6	62.5	58	QFP-100P LQFP-100P	+4.5 to +5.5	-40 to +85	8	2	-	2 ch.	-	24seg × 4com
	MB90F423GC	128	6	62.5	58	QFP-100P LQFP-100P	+4.5 to +5.5	-40 to +85	8	2	-	2 ch.	-	24seg × 4com
420G/GA series	MB90427GA	64	4	62.5	58	QFP-100P LQFP-100P	+4.5 to +5.5	-40 to +85	8	1	-	2 ch.	-	24seg × 4com
	MB90427GB	64	4	62.5	58	QFP-100P LQFP-100P	+4.5 to +5.5	-40 to +85	8	2	-	2 ch.	-	24seg × 4com
	MB90427GC	64	4	62.5	58	QFP-100P LQFP-100P	+4.5 to +5.5	-40 to +85	8	2	-	2 ch.	-	24seg × 4com
	MB90428GA	128	6	62.5	58	QFP-100P LQFP-100P	+4.5 to +5.5	-40 to +85	8	1	-	2 ch.	-	24seg × 4com
	MB90428GB	128	6	62.5	58	QFP-100P LQFP-100P	+4.5 to +5.5	-40 to +85	8	2	-	2 ch.	-	24seg × 4com
	MB90428GC	128	6	62.5	58	QFP-100P LQFP-100P	+4.5 to +5.5	-40 to +85	8	2	-	2 ch.	-	24seg × 4com
	MB90F428GA	128	6	62.5	58	QFP-100P LQFP-100P	+4.5 to +5.5	-40 to +85	8	1	-	2 ch.	-	24seg × 4com
	MB90F428GB	128	6	62.5	58	QFP-100P LQFP-100P	+4.5 to +5.5	-40 to +85	8	2	-	2 ch.	-	24seg × 4com
	MB90F428GC	128	6	62.5	58	QFP-100P LQFP-100P	+4.5 to +5.5	-40 to +85	8	2	-	2 ch.	-	24seg × 4com
435 series	MB90437L	64	2	62.5	80	QFP-100P LQFP-100P	+3.5 to +5.5	-40 to +85	8	2	-	2 ch.	1 ch.	-
	MB90437LS	64	2	62.5	80	QFP-100P LQFP-100P	+3.5 to +5.5	-40 to +85	8	1	-	2 ch.	1 ch.	-
	MB90438L	128	4	62.5	80	QFP-100P LQFP-100P	+3.5 to +5.5	-40 to +85	8	2	-	2 ch.	1 ch.	-
	MB90438LS	128	4	62.5	80	QFP-100P LQFP-100P	+3.5 to +5.5	-40 to +85	8	1	-	2 ch.	1 ch.	-
	MB90439	256	6	62.5	80	QFP-100P LQFP-100P	+4.5 to +5.5	-40 to +85	8	2	-	2 ch.	1 ch.	-
	MB90439S	256	6	62.5	80	QFP-100P LQFP-100P	+4.5 to +5.5	-40 to +85	8	1	-	2 ch.	1 ch.	-
	MB90F438L	128	4	62.5	80	QFP-100P LQFP-100P	+3.5 to +5.5	-40 to +85	8	2	-	2 ch.	1 ch.	-
	MB90F438LS	128	4	62.5	80	QFP-100P LQFP-100P	+3.5 to +5.5	-40 to +85	8	1	-	2 ch.	1 ch.	-
	MB90F439	256	6	62.5	80	QFP-100P LQFP-100P	+4.5 to +5.5	-40 to +85	8	2	-	2 ch.	1 ch.	-
	MB90F439S	256	6	62.5	80	QFP-100P LQFP-100P	+4.5 to +5.5	-40 to +85	8	1	-	2 ch.	1 ch.	-
440G series	MB90443G *	128	6	62.5	81	QFP-100P LQFP-100P	+4.5 to +5.5	-40 to +105	8	2	-	2 ch.	1 ch.	-
	MB90F443G	128	6	62.5	81	QFP-100P LQFP-100P	+4.5 to +5.5	-40 to +105	8	2	-	2 ch.	1 ch.	-

* : Under development

Microcontrollers (16-bit Proprietary F²MC-16LX Family)

Up/down counter	Output Compare	Input Capture	8/16 bit PPG	PWM Timer	PWC Timer	ADC	8-bit Timer	16-bit Timer	Clock Prescaler	Special Features	F²MC-16LX	Page
-	-	4 ch.	16 bit 3 ch.	-	-	10 bit × 8 ch.	-	2 ch.	Yes	CAN	MB90423GA	110
-	-	4 ch.	16 bit 3 ch.	-	-	10 bit × 8 ch.	-	2 ch.	Yes	CAN	MB90423GB	
-	-	4 ch.	16 bit 3 ch.	-	-	10 bit × 8 ch.	-	2 ch.	Yes	CAN	MB90423GC	
-	-	4 ch.	16 bit 3 ch.	-	-	10 bit × 8 ch.	-	2 ch.	Yes	CAN	MB90F423GA	
-	-	4 ch.	16 bit 3 ch.	-	-	10 bit × 8 ch.	-	2 ch.	Yes	CAN	MB90F423GB	
-	-	4 ch.	16 bit 3 ch.	-	-	10 bit × 8 ch.	-	2 ch.	Yes	CAN	MB90F423GC	
-	-	4 ch.	16 bit 3 ch.	-	-	10 bit × 8 ch.	-	2 ch.	Yes	CAN	MB90427GA	110
-	-	4 ch.	16 bit 3 ch.	-	-	10 bit × 8 ch.	-	2 ch.	Yes	CAN	MB90427GB	
-	-	4 ch.	16 bit 3 ch.	-	-	10 bit × 8 ch.	-	2 ch.	Yes	CAN	MB90427GC	
-	-	4 ch.	16 bit 3 ch.	-	-	10 bit × 8 ch.	-	2 ch.	Yes	CAN	MB90428GA	
-	-	4 ch.	16 bit 3 ch.	-	-	10 bit × 8 ch.	-	2 ch.	Yes	CAN	MB90428GB	
-	-	4 ch.	16 bit 3 ch.	-	-	10 bit × 8 ch.	-	2 ch.	Yes	CAN	MB90428GC	
-	-	4 ch.	16 bit 3 ch.	-	-	10 bit × 8 ch.	-	2 ch.	Yes	CAN	MB90F428GA	
-	-	4 ch.	16 bit 3 ch.	-	-	10 bit × 8 ch.	-	2 ch.	Yes	CAN	MB90F428GB	
-	-	4 ch.	16 bit 3 ch.	-	-	10 bit × 8 ch.	-	2 ch.	Yes	CAN	MB90F428GC	
-	4 ch.	8 ch.	8/16 bit 4 ch.	-	-	10 bit × 8 ch.	-	2 ch.			MB90437L	102
-	4 ch.	8 ch.	8/16 bit 4 ch.	-	-	10 bit × 8 ch.	-	2 ch.			MB90437LS	
-	4 ch.	8 ch.	8/16 bit 4 ch.	-	-	10 bit × 8 ch.	-	2 ch.			MB90438L	
-	4 ch.	8 ch.	8/16 bit 4 ch.	-	-	10 bit × 8 ch.	-	2 ch.			MB90438LS	
-	4 ch.	8 ch.	8/16 bit 4 ch.	-	-	10 bit × 8 ch.	-	2 ch.			MB90439	
-	4 ch.	8 ch.	8/16 bit 4 ch.	-	-	10 bit × 8 ch.	-	2 ch.			MB90439S	
-	4 ch.	8 ch.	8/16 bit 4 ch.	-	-	10 bit × 8 ch.	-	2 ch.			MB90F438L	
-	4 ch.	8 ch.	8/16 bit 4 ch.	-	-	10 bit × 8 ch.	-	2 ch.			MB90F438LS	
-	4 ch.	8 ch.	8/16 bit 4 ch.	-	-	10 bit × 8 ch.	-	2 ch.			MB90F439	
-	4 ch.	8 ch.	8/16 bit 4 ch.	-	-	10 bit × 8 ch.	-	2 ch.			MB90F439S	
-	4 ch.	8 ch.	8/16 bit 4 ch.	-	-	10 bit × 8 ch.	-	2 ch.	Yes	CAN	MB90443G *	112
-	4 ch.	8 ch.	8/16 bit 4 ch.	-	-	10 bit × 8 ch.	-	2 ch.	Yes	CAN	MB90F443G	

(Continued)

Microcontrollers (16-bit Proprietary F²MC-16LX Family)

F²MC-16LX		ROM (KB)	RAM (KB)	Instruction Cycle (ns)	I/O Port	Package	Operating Voltage (V)	Operating temperature range	Ext. Interrupts	Clock	I²C	UART	8-bit serial	LCD controller / driver
455 series	MB90455	24	2	62.5	34	LQFP-48P	+3.5 to +5.5	-40 to +85	4	2	-	1 ch.	-	-
	MB90455S	24	2	62.5	36	LQFP-48P	+3.5 to +5.5	-40 to +85	4	1	-	1 ch.	-	-
	MB90456	32	2	62.5	34	LQFP-48P	+3.5 to +5.5	-40 to +85	4	2	-	1 ch.	-	-
	MB90456S	32	2	62.5	36	LQFP-48P	+3.5 to +5.5	-40 to +85	4	1	-	1 ch.	-	-
	MB90457	64	2	62.5	34	LQFP-48P	+3.5 to +5.5	-40 to +85	4	2	-	1 ch.	-	-
	MB90457S	64	2	62.5	36	LQFP-48P	+3.5 to +5.5	-40 to +85	4	1	-	1 ch.	-	-
	MB90F455	24	2	62.5	34	LQFP-48P	+3.5 to +5.5	-40 to +85	4	2	-	1 ch.	-	-
	MB90F455S	24	2	62.5	36	LQFP-48P	+3.5 to +5.5	-40 to +85	4	1	-	1 ch.	-	-
	MB90F456	32	2	62.5	34	LQFP-48P	+3.5 to +5.5	-40 to +85	4	2	-	1 ch.	-	-
	MB90F456S	32	2	62.5	36	LQFP-48P	+3.5 to +5.5	-40 to +85	4	1	-	1 ch.	-	-
	MB90F457	64	2	62.5	34	LQFP-48P	+3.5 to +5.5	-40 to +85	4	2	-	1 ch.	-	-
	MB90F457S	64	2	62.5	36	LQFP-48P	+3.5 to +5.5	-40 to +85	4	1	-	1 ch.	-	-
460 series	MB90462	64	2	62.5	51	QFP-64P LQFP-64P SH-DIP-64P	+4.5 to +5.5	-40 to +85	8	1	-	2 ch.	-	-
	MB90F462	64	2	62.5	51	QFP-64P LQFP-64P SH-DIP-64P	+4.5 to +5.5	-40 to +85	8	1	-	2 ch.	-	-
470 series	MB90473	128	10	50	84	QFP-100P LQFP-100P	+1.8 to +3.6	-40 to +85	8	2	1 ch.	1 ch.	2 ch.	-
	MB90474	256	16	50	84	QFP-100P LQFP-100P	+1.8 to +3.6	-40 to +85	8	2	1 ch.	1 ch.	2 ch.	-
	MB90477	256	8	50	84	QFP-100P LQFP-100P	+1.8 to +3.6	-40 to +85	8	2	1 ch.	1 ch.	2 ch.	-
	MB90478	256	8	50	84	QFP-100P LQFP-100P	+1.8 to +3.6	-40 to +85	8	2	-	1 ch.	2 ch.	-
	MB90F474H	256	16	50	84	QFP-100P LQFP-100P	+3.0 to +3.6	-40 to +85	8	2	1 ch.	1 ch.	2 ch.	-
	MB90F474L	256	16	50	84	QFP-100P LQFP-100P	+2.4 to +3.6	-40 to +85	8	2	1 ch.	1 ch.	2 ch.	-
480 series	MB90F481	192	4	40	84	QFP-100P LQFP-100P	+2.7 to +3.6	-40 to +85	8	2	-	1 ch.	2 ch.	-
	MB90F482	256	6	40	84	QFP-100P LQFP-100P	+2.7 to +3.6	-40 to +85	8	2	-	1 ch.	2 ch.	-
495 series	MB90497G	64	4	62.5	49	QFP-64P LQFP-64P	+4.5 to +5.5	-40 to +85	8	2	-	2 ch.	-	-
	MB90F497G	64	4	62.5	49	QFP-64P LQFP-64P	+4.5 to +5.5	-40 to +85	8	2	-	2 ch.	-	-
	MB90F498G	128	4	62.5	49	QFP-64P LQFP-64P	+4.5 to +5.5	-40 to +85	8	2	-	2 ch.	-	-
520B series	MB90522B	64	4	62.5	85	QFP-120P	+3.0 to +5.5	-40 to +85	8	2	-	1 ch.	2 ch.	32seg × 4com
	MB90523B	128	4	62.5	85	QFP-120P LQFP-120P	+3.0 to +5.5	-40 to +85	8	2	-	1 ch.	2 ch.	32seg × 4com
	MB90F523B	128	4	62.5	85	LQFP-120P	+3.0 to +5.5	-40 to +85	8	2	-	1 ch.	2 ch.	32seg × 4com

Microcontrollers (16-bit Proprietary F²MC-16LX Family)

Up/down counter	Output Compare	Input Capture	8/16 bit PPG	PWM Timer	PWC Timer	ADC	8-bit Timer	16-bit Timer	Clock Prescaler	Special Features	F²MC-16LX	Page
-	-	4 ch.	8 bit 4 ch.	-	-	10 bit × 8 ch.	-	2 ch.			MB90455	96
-	-	4 ch.	8 bit 4 ch.	-	-	10 bit × 8 ch.	-	2 ch.			MB90455S	
-	-	4 ch.	8 bit 4 ch.	-	-	10 bit × 8 ch.	-	2 ch.			MB90456	
-	-	4 ch.	8 bit 4 ch.	-	-	10 bit × 8 ch.	-	2 ch.			MB90456S	
-	-	4 ch.	8 bit 4 ch.	-	-	10 bit × 8 ch.	-	2 ch.			MB90457	
-	-	4 ch.	8 bit 4 ch.	-	-	10 bit × 8 ch.	-	2 ch.			MB90457S	
-	-	4 ch.	8 bit 4 ch.	-	-	10 bit × 8 ch.	-	2 ch.			MB90F455	
-	-	4 ch.	8 bit 4 ch.	-	-	10 bit × 8 ch.	-	2 ch.			MB90F455S	
-	-	4 ch.	8 bit 4 ch.	-	-	10 bit × 8 ch.	-	2 ch.			MB90F456	
-	-	4 ch.	8 bit 4 ch.	-	-	10 bit × 8 ch.	-	2 ch.			MB90F456S	
-	-	4 ch.	8 bit 4 ch.	-	-	10 bit × 8 ch.	-	2 ch.			MB90F457	
-	-	4 ch.	8 bit 4 ch.	-	-	10 bit × 8 ch.	-	2 ch.			MB90F457S	
-	6 ch.	4 ch.	16 bit 3 ch.	-	2 ch.	10 bit × 8 ch.	-	2 ch.	-	Wave Generator	MB90462	98
-	6 ch.	4 ch.	16 bit 3 ch.	-	2 ch.	10 bit × 8 ch.	-	2 ch.	-	Wave Generator	MB90F462	
Yes	6 ch.	2 ch.	3 ch.	-	3 ch.	10 bit × 8 ch.	-	1 ch.	Yes		MB90473	104
Yes	6 ch.	2 ch.	3 ch.	-	3 ch.	10 bit × 8 ch.	-	1 ch.	Yes		MB90474	
Yes	6 ch.	2 ch.	3 ch.	-	3 ch.	10 bit × 8 ch.	-	1 ch.	Yes		MB90477	
Yes	6 ch.	2 ch.	3 ch.	-	3 ch.	10 bit × 8 ch.	-	1 ch.	Yes		MB90478	
Yes	6 ch.	2 ch.	3 ch.	-	3 ch.	10 bit × 8 ch.	-	1 ch.	Yes		MB90F474H	
Yes	6 ch.	2 ch.	3 ch.	-	3 ch.	10 bit × 8 ch.	-	1 ch.	Yes		MB90F474L	
Yes	6 ch.	2 ch.	3 ch.	-	-	10 bit × 8 ch.	-	1 ch.	Yes	CAN	MB90F481	106
Yes	6 ch.	2 ch.	3 ch.	-	-	10 bit × 8 ch.	-	1 ch.	Yes	CAN	MB90F482	
-	-	4 ch.	1 ch.	-	-	10 bit × 8 ch.	-	2 ch.	Yes	CAN	MB90497G	108
-	-	4 ch.	1 ch.	-	-	10 bit × 8 ch.	-	2 ch.	Yes	CAN	MB90F497G	
-	-	4 ch.	1 ch.	-	-	10 bit × 8 ch.	-	2 ch.	Yes	CAN	MB90F498G	
Yes	8 ch.	2 ch.	1 ch.	-	-	10 bit × 8 ch.	-	2 ch.	Yes		MB90522B	122
Yes	8 ch.	2 ch.	1 ch.	-	-	10 bit × 8 ch.	-	2 ch.	Yes	DAC: 8 bit × 2ch., Clock Timer	MB90523B	
Yes	8 ch.	2 ch.	1 ch.	-	-	10 bit × 8 ch.	-	2 ch.	Yes	DAC: 8 bit × 2 ch., Clock Timer	MB90F523B	

(Continued)

Microcontrollers (16-bit Proprietary F²MC-16LX Family)

(Continued)

F²MC-16LX		ROM (KB)	RAM (KB)	Instruction Cycle (ns)	I/O Port	Package	Operating Voltage (V)	Operating temperature range	Ext. Interrupts	Clock	I²C	UART	8-bit serial	LCD controller / driver
540G/GS series	MB90543G *	128	6	62.5	81	QFP-100P LQFP-100P	+3.5 to +5.5	-40 to +85	8	2	-	2 ch.	1 ch.	-
	MB90543GS *	128	6	62.5	81	QFP-100P LQFP-100P	+3.5 to +5.5	-40 to +85	8	1	-	2 ch.	1 ch.	-
	MB90F543G	128	6	62.5	81	QFP-100P LQFP-100P	+4.5 to +5.5	-40 to +85	8	2	-	2 ch.	1 ch.	-
	MB90F543GS	128	6	62.5	81	QFP-100P LQFP-100P	+4.5 to +5.5	-40 to +85	8	1	-	2 ch.	1 ch.	-
545G series	MB90F546G	256	8	62.5	81	QFP-100P LQFP-100P	+4.5 to +5.5	-40 to +85	8	2	-	2 ch.	1 ch.	-
	MB90F546GS	256	8	62.5	81	QFP-100P LQFP-100P	+4.5 to +5.5	-40 to +85	8	1	-	2 ch.	1 ch.	-
	MB90547G	64	2	62.5	81	QFP-100P LQFP-100P	+3.5 to +5.5	-40 to +85	8	2	-	2 ch.	1 ch.	-
	MB90547GS	64	2	62.5	81	QFP-100P LQFP-100P	+3.5 to +5.5	-40 to +85	8	1	-	2 ch.	1 ch.	-
	MB90548G	128	4	62.5	81	QFP-100P LQFP-100P	+3.5 to +5.5	-40 to +85	8	2	-	2 ch.	1 ch.	-
	MB90548GS	128	4	62.5	81	QFP-100P LQFP-100P	+3.5 to +5.5	-40 to +85	8	1	-	2 ch.	1 ch.	-
	MB90F548G	128	4	62.5	81	QFP-100P LQFP-100P	+4.5 to +5.5	-40 to +85	8	2	-	2 ch.	1 ch.	-
	MB90F548GL	128	4	62.5	81	QFP-100P LQFP-100P	+3.5 to +5.5	-40 to +85	8	2	-	2 ch.	1 ch.	-
	MB90F548GLS	128	4	62.5	81	QFP-100P LQFP-100P	+3.5 to +5.5	-40 to +85	8	1	-	2 ch.	1 ch.	-
	MB90F548GS	128	4	62.5	81	QFP-100P LQFP-100P	+4.5 to +5.5	-40 to +85	8	1	-	2 ch.	1 ch.	-
	MB90549G	256	6	62.5	81	QFP-100P LQFP-100P	+4.5 to +5.5	-40 to +85	8	2	-	2 ch.	1 ch.	-
	MB90549GS	256	6	62.5	81	QFP-100P LQFP-100P	+4.5 to +5.5	-40 to +85	8	1	-	2 ch.	1 ch.	-
	MB90F549G	256	6	62.5	81	QFP-100P LQFP-100P	+4.5 to +5.5	-40 to +85	8	2	-	2 ch.	1 ch.	-
	MB90F549GS	256	6	62.5	81	QFP-100P LQFP-100P	+4.5 to +5.5	-40 to +85	8	1	-	2 ch.	1 ch.	-
550A/B series	MB90552B	64	2	62.5	83	QFP-100P, LQFP-100P	+3.5 to +5.5	-40 to +85	8	1	2 ch.	1 ch.	2 ch.	-
	MB90553B	128	4	62.5	83	QFP-100P, LQFP-100P	+3.5 to +5.5	-40 to +85	8	1	2 ch.	1 ch.	2 ch.	-
	MB90P553A	128	4	62.5	83	QFP-100P, LQFP-100P	+4.5 to +5.5	-40 to +85	8	1	2 ch.	1 ch.	2 ch.	-
	MB90F553A	128	4	62.5	83	QFP-100P, LQFP-100P	+4.5 to +5.5	-40 to +85	8	1	2 ch.	1 ch.	2 ch.	-
560 series	MB90561A	32	1	62.5	51	QFP-64P, LQFP-64P, SH-DIP-64P	+3.0 to +5.5	-40 to +85	8	1	-	2 ch.	-	-
	MB90562A	64	2	62.5	51	QFP-64P, LQFP-64P, SH-DIP-64P	+3.0 to +5.5	-40 to +85	8	1	-	2 ch.	-	-
	MB90F562B	64	2	62.5	51	QFP-64P, LQFP-64P, SH-DIP-64P	+4.5 to +5.5	-40 to +85	8	1	-	2 ch.	-	-
565 series	MB90567	96	4	62.5	51	QFP-64P, LQFP-64P	+2.7 to +3.6	-40 to +85	8	1	-	2 ch.	-	-
	MB90568	128	4	62.5	51	QFP-64P, LQFP-64P	+2.7 to +3.6	-40 to +85	8	1	-	2 ch.	-	-
	MB90F568	128	4	62.5	51	QFP-64P, LQFP-64P	+2.7 to +3.6	-40 to +85	8	1	-	2 ch.	-	-

Microcontrollers (16-bit Proprietary F²MC-16LX Family)

Up/down counter	Output Compare	Input Capture	8/16 bit PPG	PWM Timer	PWC Timer	ADC	8-bit Timer	16-bit Timer	Clock Prescaler	Special Features	F²MC-16LX	Page
-	4 ch.	8 ch.	4 ch.	-	-	10 bit × 8 ch.	-	2 ch.	Yes	CAN	MB90543G *	114
-	4 ch.	8 ch.	4 ch.	-	-	10 bit × 8 ch.	-	2 ch.	-	CAN	MB90543GS *	
-	4 ch.	8 ch.	4 ch.	-	-	10 bit × 8 ch.	-	2 ch.	Yes	CAN	MB90F543G	
-	4 ch.	8 ch.	4 ch.	-	-	10 bit × 8 ch.	-	2 ch.	-	CAN	MB90F543GS	
-	4 ch.	8 ch.	4 ch.	-	-	10 bit × 8 ch.	-	2 ch.	Yes	CAN	MB90F546G	116
-	4 ch.	8 ch.	4 ch.	-	-	10 bit × 8 ch.	-	2 ch.	-	CAN	MB90F546GS	
-	4 ch.	8 ch.	4 ch.	-	-	10 bit × 8 ch.	-	2 ch.	Yes	CAN	MB90547G	
-	4 ch.	8 ch.	4 ch.	-	-	10 bit × 8 ch.	-	2 ch.	-	CAN	MB90547GS	
-	4 ch.	8 ch.	4 ch.	-	-	10 bit × 8 ch.	-	2 ch.	Yes	CAN	MB90548G	
-	4 ch.	8 ch.	4 ch.	-	-	10 bit × 8 ch.	-	2 ch.	-	CAN	MB90548GS	
-	4 ch.	8 ch.	4 ch.	-	-	10 bit × 8 ch.	-	2 ch.	Yes	CAN	MB90F548G	
-	4 ch.	8 ch.	4 ch.	-	-	10 bit × 8 ch.	-	2 ch.	Yes	CAN	MB90F548GL	
-	4 ch.	8 ch.	4 ch.	-	-	10 bit × 8 ch.	-	2 ch.	-	CAN	MB90F548GLS	
-	4 ch.	8 ch.	4 ch.	-	-	10 bit × 8 ch.	-	2 ch.	-	CAN	MB90F548GS	
-	4 ch.	8 ch.	4 ch.	-	-	10 bit × 8 ch.	-	2 ch.	Yes	CAN	MB90549G	
-	4 ch.	8 ch.	4 ch.	-	-	10 bit × 8 ch.	-	2 ch.	-	CAN	MB90549GS	
-	4 ch.	8 ch.	4 ch.	-	-	10 bit × 8 ch.	-	2 ch.	Yes	CAN	MB90F549G	
-	4 ch.	8 ch.	4 ch.	-	-	10 bit × 8 ch.	-	2 ch.	-	CAN	MB90F549GS	
-	4 ch.	4 ch.	3 ch.	-	-	10 bit × 8 ch.	-	2 ch.	-		MB90552B	100
-	4 ch.	4 ch.	3 ch.	-	-	10 bit × 8 ch.	-	2 ch.	-		MB90553B	
-	4 ch.	4 ch.	3 ch.	-	-	10 bit × 8 ch.	-	2 ch.	-		MB90P553A	
-	4 ch.	4 ch.	3 ch.	-	-	10 bit × 8 ch.	-	2 ch.	-		MB90F553A	
-	6 ch.	4 ch.	3 ch.	-	-	10 bit × 8 ch.	-	2 ch.	-	Wave Generator	MB90561A	98
-	6 ch.	4 ch.	3 ch.	-	-	10 bit × 8 ch.	-	2 ch.	-	Wave Generator	MB90562A	
-	6 ch.	4 ch.	3 ch.	-	-	10 bit × 8 ch.	-	2 ch.	-	Wave Generator	MB90F562B	
-	6 ch.	4 ch.	3 ch.	-	-	10 bit × 8 ch.	-	2 ch.	-		MB90567	100
-	6 ch.	4 ch.	3 ch.	-	-	10 bit × 8 ch.	-	2 ch.	-		MB90568	
-	6 ch.	4 ch.	3 ch.	-	-	10 bit × 8 ch.	-	2 ch.	-		MB90F568	

Microcontrollers (16-bit Proprietary F²MC-16LX Family)

F²MC-16LX		ROM (KB)	RAM (KB)	Instruction Cycle (ns)	I/O Port	Package	Operating Voltage (V)	Operating temperature range	Ext. Interrupts	Clock	I²C	UART	8-bit serial	LCD controller / driver
570/A/C series	MB90573C	128	6	62.5	97	QFP-120P, LQFP-120P	+3.0 to +5.5	-40 to +85	8	2	1 ch.	2 ch.	3 ch.	-
	MB90574C	256	10	62.5	97	QFP-120P, LQFP-120P	+3.0 to +5.5	-40 to +85	8	2	1 ch.	2 ch.	3 ch.	-
	MB90F574A	256	10	62.5	97	QFP-120P, LQFP-120P	+4.5 to +5.5	-40 to +85	8	2	1 ch.	2 ch.	3 ch.	-
580/C/CA series	MB90583C	128	6	62.5	77	QFP-100P, LQFP-100P	+3.0 to +5.5	-40 to +85	8	2	-	5 ch.	-	-
	MB90583CA	128	6	62.5	77	QFP-100P, LQFP-100P	+3.0 to +5.5	-40 to +85	8	1	-	5 ch.	-	-
	MB90F583C	128	6	62.5	77	QFP-100P, LQFP-100P	+4.5 to +5.5	-40 to +85	8	2	-	5 ch.	-	-
	MB90F583CA	128	6	62.5	77	QFP-100P, LQFP-100P	+4.5 to +5.5	-40 to +85	8	1	-	5 ch.	-	-
	MB90F584C	256	6	62.5	77	QFP-100P, LQFP-100P	+4.5 to +5.5	-40 to +85	8	2	-	5 ch.	-	-
	MB90F584CA	256	6	62.5	77	QFP-100P, LQFP-100P	+4.5 to +5.5	-40 to +85	8	1	-	5 ch.	-	-
	MB90587C	64	4	62.5	77	QFP-100P, LQFP-100P	+3.0 to +5.5	-40 to +85	8	2	-	5 ch.	-	-
	MB90587CA	64	4	62.5	77	QFP-100P, LQFP-100P	+3.0 to +5.5	-40 to +85	8	1	-	5 ch.	-	-
590 series	MB90591G	384	8	62.5	78	QFP-100P	+4.5 to +5.5	-40 to +80	8	1	-	3 ch.	1 ch.	-
	MB90F591G	384	8	62.5	78	QFP-100P	+4.5 to +5.5	-40 to +80	8	1	-	3 ch.	1 ch.	-
	MB90594G	256	6	62.5	78	QFP-100P	+4.5 to +5.5	-40 to +80	8	1	-	3 ch.	1 ch.	-
	MB90F594G	256	6	62.5	78	QFP-100P	+4.5 to +5.5	-40 to +80	8	1	-	3 ch.	1 ch.	-
595 series	MB90598G	128	4	62.5	78	QFP-100P	+4.5 to +5.5	-40 to +80	8	1	-	2 ch.	1 ch.	-
	MB90F598G	128	4	62.5	78	QFP-100P	+4.5 to +5.5	-40 to +80	8	1	-	2 ch.	1 ch.	-
800 series	MB90803 *	128	4	40.0	70	QFP-100P	+3.0 to +3.6	-40 to +85	4	1 or 2	1 ch.	2 ch.	2 ch.	48seg × 4com
	MB90804 **	256	4	40.0	70	QFP-100P	+3.0 to +3.6	-40 to +85	4	1 or 2	1 ch.	2 ch.	2 ch.	48seg × 4com
	MB90F804	256	4	40.0	70	QFP-100P	+3.0 to +3.6	-40 to +85	4	1 or 2	1 ch.	2 ch.	2 ch.	48seg × 4com
860 series	MB90867 *	128	6	42.0	80	QFP-100P LQFP-100P	+3.5 to +5.5	-40 to +105	16	2	-	4 ch.	-	-
	MB90867S *	128	6	42.0	82	QFP-100P LQFP-100P	+3.5 to +5.5	-40 to +105	16	1	-	4 ch.	-	-
	MB90F867	128	6	42.0	80	QFP-100P LQFP-100P	+3.5 to +5.5	-40 to +105	16	2	-	4 ch.	-	-
	MB90F867S	128	6	42.0	82	QFP-100P LQFP-100P	+3.5 to +5.5	-40 to +105	16	1	-	4 ch.	-	-
890 series	MB90F897	64	2	62.5	34	LQFP-48P	+3.5 to +5.5	-40 to +105	4	2	-	2 ch.	-	-
	MB90F897S	64	2	62.5	36	LQFP-48P	+3.5 to +5.5	-40 to +105	4	1	-	2 ch.	-	-

* : Under development
** : Under planning

Microcontrollers (16-bit Proprietary F²MC-16LX Family)

Up/down counter	Output Compare	Input Capture	8/16 bit PPG	PWM Timer	PWC Timer	ADC	8-bit Timer	16-bit Timer	Clock Prescaler	Special Features	F²MC-16LX	Page
Yes	4 ch.	2 ch.	1 ch.	-	-	10 bit × 8 ch.	-	-	Yes	DAC: 8 bit × 2 ch., Clock Timer	MB90573C	106
Yes	4 ch.	2 ch.	1 ch.	-	-	10 bit × 8 ch.	-	-	Yes	DAC: 8 bit × 2 ch., Clock Timer	MB90574C	
Yes	4 ch.	2 ch.	1 ch.	-	-	10 bit × 8 ch.	-	-	Yes	DAC: 8 bit × 2 ch., Clock Timer	MB90F574A	
-	2 ch.	4 ch.	1 ch.	-	1 ch.	10 bit × 8 ch.	-	3 ch.	Yes	IE Bus, DAC: 8 bit × 2ch.	MB90583C	104
-	2 ch.	4 ch.	1 ch.	-	1 ch.	10 bit × 8 ch.	-	3 ch.	-	IE Bus, DAC: 8 bit × 2ch.	MB90583CA	
-	2 ch.	4 ch.	1 ch.	-	1 ch.	10 bit × 8 ch.	-	3 ch.	Yes	IE Bus, DAC: 8 bit × 2ch.	MB90F583C	
-	2 ch.	4 ch.	1 ch.	-	1 ch.	10 bit × 8 ch.	-	3 ch.	-	IE Bus, DAC: 8 bit × 2ch.	MB90F583CA	
-	2 ch.	4 ch.	1 ch.	-	1 ch.	10 bit × 8 ch.	-	3 ch.	Yes	IE Bus, DAC: 8 bit × 2ch.	MB90F584C	
-	2 ch.	4 ch.	1 ch.	-	1 ch.	10 bit × 8 ch.	-	3 ch.	-	IE Bus, DAC: 8 bit × 2ch.	MB90F584CA	
-	2 ch.	4 ch.	1 ch.	-	1 ch.	10 bit × 8 ch.	-	3 ch.	Yes	IE Bus, DAC: 8bit × 2ch.	MB90587C	
-	2 ch.	4 ch.	1 ch.	-	1 ch.	10 bit × 8 ch.	-	3 ch.	-	IE Bus, DAC: 8bit × 2ch.	MB90587CA	
-	6 ch.	6 ch.	6 ch.	-	-	10 bit × 8 ch.	-	-	-	Stteper Motor Controller 4 ch., CAN 2 ch., Sound Generator	MB90591G	118
-	6 ch.	6 ch.	6 ch.	-	-	10 bit × 8 ch.	-	-	-	Stteper Motor Controller 4 ch., CAN 2 ch., Sound Generator	MB90F591G	
-	6 ch.	6 ch.	6 ch.	-	-	10 bit × 8 ch.	-	-	-	Stteper Motor Controller 4 ch., CAN 2 ch/, Sound Generator, 2 ch. Clock Timer	MB90594G	
-	6 ch.	6 ch.	6 ch.	-	-	10 bit × 8 ch.	-	-	-	Stteper Motor Controller 4 ch., CAN 2 ch., Sound Generator, 2 ch. Clock Timer	MB90F594G	
-	4 ch.	4 ch.	6 ch.	-	-	10 bit × 8 ch.	-	-	-	Stteper Motor Controller 4 ch., CAN 1 ch., 2 ch. Clock Timer	MB90598G	112
-	4 ch.	4 ch.	6 ch.	-	-	10 bit × 8 ch.	-	-	-	Stteper Motor Controller 4 ch., CAN 1 ch., 2 ch. Clock Timer	MB90F598G	
-	2 ch.	2 ch.	2 ch.	-	-	10 bit × 12 ch.	-	3 ch.	Yes		MB90803 *	112
-	2 ch.	2 ch.	2 ch.	-	-	10 bit × 12 ch.	-	3 ch.	Yes		MB90804 **	
-	2 ch.	2 ch.	2 ch.	-	-	10 bit × 12 ch.	-	3 ch.	Yes		MB90F804	
-	8 ch.	8 ch.	16 ch.	-	-	10 bit × 24 ch.	-	4 ch.	Yes		MB90867 *	112
-	8 ch.	8 ch.	16 ch.	-	-	10 bit × 24 ch.	-	4 ch.	-		MB90867S *	
-	8 ch.	8 ch.	16 ch.	-	-	10 bit × 24 ch.	-	4 ch.	Yes		MB90F867	
-	8 ch.	8 ch.	16 ch.	-	-	10 bit × 24 ch.	-	4 ch.	-		MB90F867S	
-	-	4 ch.	4 ch.	-	-	10 bit × 8 ch.	-	2 ch.	Yes	CAN	MB90F897	112
-	-	4 ch.	4 ch.	-	-	10 bit × 8 ch.	-	2 ch.	-	CAN	MB90F897S	

Standard Features : Power-on Reset, Standby Mode, Watchdog Timer Reset, PLL Clock Multiplier (or Clock Gear)

Microcontrollers (16-bit Proprietary F²MC-16F Family)

16-bit Proprietary F²MC-16F Family

F²MC-16F		ROM (KB)	RAM (KB)	Instruction Cycle (ns)	I/O Port	Package	Operating Voltage	Operating temperature range	Ext. Interrupts	Clock	I²C	UART	8-bit serial	LCD controller / driver
210 series	MB90214	64	3	62.5	65	QFP-80P	+5 ± 10 %	-40 to +105 (ext bus: -40 to +70)	4	1	-	3 ch.	-	-
	MB90P214B	64	4	62.5	65	QFP-80P	+5 ± 10 %	-40 to +105 (ext bus: -40 to +70)	4	1	-	3 ch.	-	-
	MB90W214B	64	4	62.5	65	QFP-80C	+5 ± 10 %	-40 to +105 (ext bus: -40 to +70)	4	1	-	3 ch.	-	-
220 series	MB90223	64	3	83.4	102	QFP-120P	+5 ± 10 %	-40 to +105 (ext bus: -40 to +70)	8	1	-	4 ch.	-	-
	MB90224	96	4.5	62.5	102	QFP-120P	+5 ± 10 %	-40 to +105 (ext bus: -40 to +70)	8	1	-	4 ch.	-	-
	MB90P224A	96	4.5	62.5	102	QFP-120P	+5 ± 10 %	-40 to +85 (ext bus: -40 to +70)	8	1	-	4 ch.	-	-
	MB90P224B	96	4.5	62.5	102	QFP-120P	+5 ± 10 %	-40 to +85 (ext bus: -40 to +70)	8	1	-	4 ch.	-	-
	MB90W224A	96	4.5	62.5	102	QFP-120P	+5 ± 10 %	-40 to +85 (ext bus: -40 to +70)	8	1	-	4 ch.	-	-
	MB90W224B	96	4.5	62.5	102	QFP-120P	+5 ± 10 %	-40 to +105 (ext bus: -40 to +70)	8	1	-	4 ch.	-	-
230 series	MB90233	48	2	62.5	84	QFP-100P, LQFP-100P	+5 ± 10 %	-40 to +105 (ext bus: -40 to +70)	4	1	-	1 ch.	1 ch.	-
	MB90234	96	3	62.5	84	QFP-100P, LQFP-100P	+5 ± 10 %	-40 to +105 (ext bus: -40 to +70)	4	1	-	1 ch.	1 ch.	-
	MB90P234	96	3	62.5	84	QFP-100P, LQFP-100P	+5 ± 10 %	-40 to +105 (ext bus: -40 to +70)	4	1	-	1 ch.	1 ch.	-
	MB90W234	96	3	62.5	84	QFP-100P, LQFP-100P	+5 ± 10 %	-40 to +105 (ext bus: -40 to +70)	4	1	-	1 ch.	1 ch.	-
240 series	MB90F244	128	1.125	40	63	TQFP-80P	+3.3 ± 0.3, +5 ± 0.5	0 to +70	4	1	-	1 ch.	1 ch.	-
	MB90F245	192	1.5	31.25	58	TQFP-80P	+3.3 ± 0.3	0 to +70	4	1	-	1 ch.	1 ch.	-
	MB90246A	-	4	62.5	57	LQFP-100P	+5 ± 10 %, +3 ± 10 %	-30 to +70	4	1	-	1 ch.	2 ch.	-

Microcontrollers (16-bit Proprietary F²MC-16F Family)

Up/down counter	Output Compare	Input Capture	PPG (2 × 8bit or 1 × 16bit)	PWM Timer	PWC Timer	ADC	8-bit Timer	16-bit Timer	Clock Prescaler	Special Features	F²MC-16F	Page
-	-	-	1 ch.	-	4 ch.	10 bit × 8 ch.	-	4 ch.	-		MB90214	130
-	-	-	1 ch.	-	4 ch.	10 bit × 8 ch.	-	4 ch.	-		MB90P214B	
-	-	-	1 ch.	-	4 ch.	10 bit × 8 ch.	-	4 ch.	-		MB90W214B	
-	8 ch.	4 ch.	2 ch.	-	4 ch.	10 bit × 16 ch.	-	6 ch.	-		MB90223	136
-	8 ch.	4 ch.	2 ch.	-	4 ch.	10 bit × 16 ch.	-	6 ch.	-		MB90224	
-	8 ch.	4 ch.	2 ch.	-	4 ch.	10 bit × 16 ch.	-	6 ch.	-		MB90P224A	
-	8 ch.	4 ch.	2 ch.	-	4 ch.	10 bit × 16 ch.	-	6 ch.	-		MB90P224B	
-	8 ch.	4 ch.	2 ch.	-	4 ch.	10 bit × 16 ch.	-	6 ch.	-		MB90W224A	
-	8 ch.	4 ch.	2 ch.	-	4 ch.	10 bit × 16 ch.	-	6 ch.	-		MB90W224B	
-	6 ch.	4 ch.	1 ch.	6 ch.	-	10 bit × 8 ch.	-	-	-	E²PROM I/F 1 ch., DAC 8 bit × 2 ch., Level Comparator	MB90233	134
-	6 ch.	4 ch.	1 ch.	6 ch.	-	10 bit × 8 ch.	-	-	-	E²PROM I/F 1 ch., DAC 8 bit × 2 ch., Level Comparator	MB90234	
-	6 ch.	4 ch.	1 ch.	6 ch.	-	10 bit × 8 ch.	-	-	-	E²PROM I/F 1 ch., DAC 8 bit × 2 ch., Level Comparator	MB90P234	
-	6 ch.	4 ch.	1 ch.	6 ch.	-	10 bit × 8 ch.	-	-	-	E²PROM I/F 1 ch., DAC 8 bit × 2 ch., Level Comparator	MB90W234	
-	-	4 ch.	-	-	-	10 bit × 8 ch.	-	3 ch.	-		MB90F244	132
-	-	4 ch.	-	-	-	10 bit × 8 ch.	-	3 ch.	-		MB90F245	
-	-	2 ch.	-	4 ch.	-	10 bit × 8 ch.	-	3 ch.	-	Products-sum unit, DAC 8 bit × 3 ch.	MB90246A	

Standard Features : Power-on Reset, Standby Mode, Watchdog Timer Reset, PLL Clock Multiplier (or Clock Gear)

Microcontrollers (32-bit Proprietary FR Family)

32-bit FR Family

32-bit FR	ROM (KB)	RAM (KB)	Cashe (KB)	Instruction Cycle (ns)	I/O Port	Package	Operating Voltage (V)	Operating temperature range (°C)	Ext. Interrupts	Clock	PLL clock	Ext. bus	DRAM controller	SDRAM I/F	I²C	UART	Serial	RTG	CAN	DMAC	Software DMA transfer	Sound generator	Up/down counter
MB91101A	-	2	1	20	50	QFP-100 SQFP-100	5.0 ± 10% 2.7 to 3.6	0 to 70	5	1	Yes	Yes	Yes	-	-	3	-	-	-	8	-	-	-
MB91106A	127	2	-	20	78	QFP-100 LQFP-100	3.0 to 3.6	0 to 70	5	1	Yes	Yes	Yes	-	-	3	-	-	-	8	-	-	-
MB91107	-	128	1	20	69	LQFP-120	3.0 to 3.6	0 to 70	9	1	Yes	Yes	Yes	-	-	3	-	-	-	8	-	-	-
MB91108	-	160	1	20	69	LQFP-120	3.0 to 3.6	0 to 70	9	1	Yes	Yes	Yes	-	-	3	-	-	-	8	-	-	-
MB91F109	254	4	-	40	78	QFP-100 SQFP-100	3.0 to 3.6	0 to 70	5	1	Yes	Yes	Yes	-	-	3	-	-	-	8	-	-	-
MB91110	-	21	1	20	68	LQFP-144	3.0 to 3.6	0 to 70	9	1	Yes	Yes	Yes	-	-	1	-	-	-	5	Yes	-	-
MB91121	-	5	1	20	64	LQFP-120	3.0 to 3.6	0 to 70	9	1	Yes	Yes	Yes	-	-	3	-	-	-	8	Yes	-	-
MB91F127	256	14	-	37	83	LQFP-100	3.0 to 3.6	–30 to 70	6	1	Yes	Yes	-	-	-	3	-	-	-	5	-	-	-
MB91F128	510	14	-	37	83	LQFP-100	3.0 to 3.6	–30 to 70	6	1	Yes	Yes	-	-	-	3	-	-	-	5	-	-	-
MB91133A	254	8	-	31	116	LQFP-144 FBGA-144	5.0 ± 10% 2.7 to 3.6	0 to 70	24	2	Yes	Yes	-	-	-	5	-	-	-	8	-	-	2
MB91F133	254	8	-	31	116	LQFP-144 FBGA-144	5.0 ± 10% 3.0 to 3.6	0 to 70	24	2	Yes	Yes	-	-	-	5	-	-	-	8	-	-	2
MB91151A	-	34	1	28	112	LQFP-144	3.15 to 3.6	0 to 70	16	1	Yes	Yes	-	-	-	4	-	-	-	8	-	-	2
MB91154	384	22	-	31	112	LQFP-144	3.15 to 3.6	0 to 70	16	2	Yes	Yes	-	-	1	4	-	-	-	8	-	-	2
MB91155	510	34	-	31	112	LQFP-144	3.15 to 3.6	0 to 70	16	2	Yes	Yes	-	-	1	4	-	-	-	8	-	-	2
MB91F155A	510	34	-	31	112	LQFP-144	3.15 to 3.6	0 to 70	16	2	Yes	Yes	-	-	1	4	-	-	-	8	-	-	2
MB91F158	510	34	-	31	112	LQFP-144	3.15 to 3.6	0 to 70	16	1	Yes	Yes	-	-	-	2	-	-	-	-	-	-	2
MB91232L *	192	16	-	31	96	LQFP-120	3.0 to 3.6	–40 to 85	16	2	Yes	-	-	-	-	4	-	-	-	-	-	-	2
MB91233L *	256	16	-	31	96	LQFP-120	3.0 to 3.6	–40 to 85	16	2	Yes	-	-	-	-	4	-	-	-	-	-	-	2
MB91F233	256	16	-	31	96	LQFP-120	3.0 to 3.6	–40 to 85	16	2	Yes	-	-	-	-	4	-	-	-	-	-	-	2
MB91F233L	256	16	-	31	96	LQFP-120	3.0 to 3.6	–40 to 85	16	2	Yes	-	-	-	-	4	-	-	-	-	-	-	2
MB91263 *	128	8	-	31	78	QFP-100	4.0 to 5.5	–40 to 85	10	1	Yes	-	-	-	-	3	-	-	-	5	-	-	2
MB91F264	256	8	-	31	78	QFP-100	4.0 to 5.5	–40 to 85	10	1	Yes	-	-	-	-	3	-	-	-	5	-	-	2
MB91302A	4	4	4	15	80	LQFP-144	3.0 to 3.6	0 to 70	9	1	Yes	Yes	-	Yes	2	3	-	-	-	5	-	-	-
MB91306R	-	64	1	16	69	LQFP-120	3.0 to 3.6 1.65 to 1.95	0 to 70	9	1	Yes	Yes	-	-	1	3	-	-	-	5	Yes	-	-
MB91307B	-	128	1	16	69	LQFP-120	3.0 to 3.6	0 to 70	9	1	Yes	Yes	-	-	1	3	-	-	-	5	Yes	-	-
MB91307R	-	128	1	16	69	LQFP-120	3.0 to 3.6 1.65 to 1.95	0 to 70	9	1	Yes	Yes	-	-	1	3	-	-	-	5	Yes	-	-
MB91340	64	116	-	16	107	LQFP-176	3.0 to 3.6 2.3 to 2.7	–10 to 70	9	1	Yes	Yes	-	-	1	3	-	-	-	5	Yes	-	4
MB91352A *	384	16	-	20	82	LQFP120	3.0 to 3.6	0 to 70	9	2	Yes	Yes	-	-	1	4	2	-	-	5	-	-	1
MB91353A *	512	24	-	20	82	LQFP-120	3.0 to 3.6	0 to 70	9	2	Yes	Yes	-	-	1	4	2	-	-	5	-	-	1
MB91F353A	512	24	-	20	84	LQFP-120	3.0 to 3.6	0 to 70	9	2	Yes	Yes	-	-	1	4	1	-	-	5	-	-	1
MB91354A	384	16	-	20	126	LQFP-176	3.0 to 3.6	0 to 70	17	2	Yes	Yes	-	-	1	5	3	-	-	5	-	-	2
MB91355A	512	24	-	20	126	LQFP-176	3.0 to 3.6	0 to 70	17	2	Yes	Yes	-	-	1	5	3	-	-	5	-	-	2
MB91F355A	512	24	-	20	126	LQFP-176	3.0 to 3.6	0 to 70	17	2	Yes	Yes	-	-	1	5	3	-	-	5	-	-	2
MB91F362GA	512	20	-	16	102	QFP-208	4.25 to 5.25	–40 to 85	8	2	Yes	Yes	-	-	1	3	2	-	3	5	-	1	-
MB91F365GB	512	36	-	16	80	QFP-120	4.25 to 5.25	–40 to 85	8	1	Yes	-	-	-	1	2	2	-	2	5	-	1	-
MB91F366GB	512	36	-	16	80	QFP-120	4.25 to 5.25	–40 to 85	8	2	Yes	-	-	-	1	2	2	-	2	5	-	1	-
MB91F367GB	512	36	-	16	80	QFP-120	4.25 to 5.25	–40 to 85	8	1	Yes	-	-	-	1	1	2	-	2	5	-	-	-
MB91F368GB	512	36	-	16	80	QFP-120	4.25 to 5.25	–40 to 85	8	2	Yes	-	-	-	1	1	2	-	2	5	-	-	-
MB91F369GA	512	36	-	16	54	QFP-160	4.25 to 5.25	–40 to 85	8	2	Yes	Yes	-	-	1	1	2	-	2	5	-	1	-

* : Under development

Microcontrollers (32-bit Proprietary FR Family)

Output Compare	Input Capture	Clock Prescaler	FG	Output waveform generator	Waveform data t ransmitter	Stepping motor controller	Level comparator	Alarm comparator	PPG	PWM timer	PWC timer	A/D converter	D/A converter	16-bit reload timer	Up counter	DSP	LCDC	Watch Dog Timer	Watch timer	Bit search module	Power-on reset	Power-down reset	Software reset	Standby mode	Evaluation device	Part number	Page
-	-	-	-	-	-	-	-	-	-	4	-	4	-	3	-	-	-	Yes	-	Yes	Yes	-	Yes	Yes	MB91V101A	MB91101A	174
-	-	-	-	-	-	-	-	-	-	4	-	4	-	3	-	-	-	Yes	-	Yes	Yes	-	Yes	Yes	MB91V106A	MB91106A	
-	-	-	-	-	-	-	-	-	-	4	-	4	-	3	-	-	-	Yes	-	Yes	Yes	-	Yes	Yes	MB91V108	MB91107	
-	-	-	-	-	-	-	-	-	-	4	-	4	-	3	-	-	-	Yes	-	Yes	Yes	-	Yes	Yes	MB91V108	MB91108	
-	-	-	-	-	-	-	-	-	-	4	-	4	-	3	-	-	-	Yes	-	Yes	Yes	-	Yes	Yes	MB91V106A	MB91F109	
-	-	-	-	-	-	-	-	-	6	-	-	8	-	2	-	-	-	Yes	-	Yes	Yes	-	Yes	Yes	MB91V110	MB91110	
-	-	-	-	-	-	-	-	-	-	4	-	8	-	3	-	Yes	-	Yes	-	Yes	Yes	-	Yes	Yes	MB91V121	MB91121	
4	4	-	-	-	-	-	-	-	4	-	-	8	-	3	-	-	-	Yes	-	Yes	Yes	-	Yes	Yes	MB91FV129	MB91F127	
4	4	-	-	-	-	-	-	-	4	-	-	8	-	3	-	-	-	Yes	-	Yes	Yes	-	Yes	Yes	MB91FV129	MB91F128	
8	4	-	-	Yes	-	-	Yes	-	6	-	-	8	3	5	-	-	-	Yes	-	Yes	Yes	-	Yes	Yes	MB91FV130	MB91133	
8	4	-	-	Yes	-	-	Yes	-	6	-	-	8	3	5	-	-	-	Yes	-	Yes	Yes	-	Yes	Yes	MB91FV130	MB91F133A	
8	4	-	-	-	-	-	-	-	6	-	-	8	3	4	-	-	-	Yes	-	Yes	Yes	-	Yes	Yes	MB91FV151A	MB91151A	176
8	4	-	-	-	-	-	-	-	6	-	-	8	3	4	-	-	-	Yes	Yes	Yes	Yes	-	Yes	Yes	MB91FV150	MB91154	176
8	4	-	-	-	-	-	-	-	6	-	-	8	3	4	-	-	-	Yes	Yes	Yes	Yes	-	Yes	Yes	MB91FV150	MB91155	
8	4	-	-	-	-	-	-	-	6	-	-	8	3	4	-	-	-	Yes	Yes	Yes	Yes	-	Yes	Yes	MB91FV150	MB91F155A	
4	4	-	-	-	-	-	-	-	4	-	-	8	3	2	-	-	-	Yes	-	Yes	Yes	-	Yes	Yes	MB91FV150	MB91F158	
4	2	-	-	-	-	-	-	-	6	-	2	8	2	4	-	-	Yes	Yes	Yes	Yes	-	-	Yes	Yes	MB91V230	MB91232L *	180
4	2	-	-	-	-	-	-	-	6	-	2	8	2	4	-	-	Yes	Yes	Yes	Yes	-	-	Yes	Yes	MB91V230	MB91233L *	180
4	2	-	-	-	-	-	-	-	6	-	2	8	2	4	-	-	Yes	Yes	Yes	Yes	-	-	Yes	Yes	MB91V230	MB91F233	180
4	2	-	-	-	-	-	-	-	6	-	2	8	2	4	-	-	Yes	Yes	Yes	Yes	-	-	Yes	Yes	MB91V230	MB91F233L	180
6	4	-	-	Yes	-	-	-	-	8	-	2	12	-	3	-	Yes	-	Yes	-	Yes	-	-	Yes	Yes	MB91V260	MB91263 *	180
6	4	-	-	Yes	-	-	-	-	8	-	2	12	-	3	-	Yes	-	Yes	-	Yes	-	-	Yes	Yes	MB91V260	MB91F264	180
-	4	-	-	-	-	-	-	-	4	-	-	4	-	3	-	-	-	Yes	-	Yes	-	-	Yes	Yes	MB91V301A	MB91302A	
-	-	-	-	-	-	-	-	-	-	-	-	4	-	3	-	-	-	Yes	-	Yes	-	-	Yes	Yes	MB91V307R	MB91306R	
-	-	-	-	-	-	-	-	-	-	-	-	4	-	3	-	-	-	Yes	-	Yes	-	-	Yes	Yes	MB91V307R	MB91307B	
-	-	-	-	-	-	-	-	-	-	-	-	4	-	3	-	-	-	Yes	-	Yes	-	-	Yes	Yes	MB91V307R	MB91307R	
8	4	-	-	-	2	-	-	-	-	-	-	8	3	4	1	-	-	Yes	-	Yes	-	-	Yes	Yes	MB91V340	MB91340	
2	4	-	-	-	-	-	-	-	3	-	-	8	2	4	-	-	-	Yes	Yes	Yes	-	-	Yes	Yes	MB91V350A	MB91352A *	
2	4	-	-	-	-	-	-	-	3	-	-	8	2	4	-	-	-	Yes	Yes	Yes	-	-	Yes	Yes	MB91V350A	MB91353A *	
2	4	-	-	-	-	-	-	-	3	-	-	8	2	4	-	-	-	Yes	Yes	Yes	-	-	Yes	Yes	MB91V350A	MB91F353A	
8	4	-	-	-	-	-	-	-	6	-	2	12	3	4	-	-	-	Yes	Yes	Yes	-	-	Yes	Yes	MB91V350A	MB91354A	
8	4	-	-	-	-	-	-	-	6	-	2	12	3	4	-	-	-	Yes	Yes	Yes	-	-	Yes	Yes	MB91V350A	MB91355A	
8	4	-	-	-	-	-	-	-	6	-	-	12	3	4	-	-	-	Yes	Yes	Yes	-	-	Yes	Yes	MB91V350A	MB91F355A	
4	4	-	-	-	-	4	-	1	8	-	-	16	2	6	-	-	-	Yes	Yes	Yes	-	Yes	Yes	Yes	MB91FV360	MB91F362GA	178
2	4	-	-	-	-	4	-	1	8	-	-	8	2	6	-	-	-	Yes	Yes	Yes	-	Yes	Yes	Yes	MB91FV360GA	MB91F365GB	
2	4	-	-	-	-	4	-	1	8	-	-	8	-	6	-	-	-	Yes	Yes	Yes	-	Yes	Yes	Yes	MB91FV360GA	MB91F366GB	
2	4	-	-	-	-	-	-	1	4	-	-	8	-	3	-	-	-	Yes	Yes	Yes	-	Yes	Yes	Yes	MB91FV360GA	MB91F367GB	
2	4	-	-	-	-	-	-	1	4	-	-	8	-	3	-	-	-	Yes	Yes	Yes	-	Yes	Yes	Yes	MB91FV360GA	MB91F368GB	
-	-	-	-	-	-	-	-	1	4	-	-	10	-	6	-	-	-	Yes	Yes	Yes	-	Yes	Yes	Yes	MB91FV360	MB91F369GA	

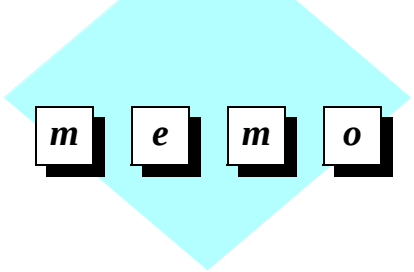
m e m o

Microprocessor List (32-bit SPARClite)

32-bit SPARClite

Part Number		MB86831	MB86832	MB86833	MB86834	MB86836
Processor functions	Performance [VAXMIPS]	80 (66 MHz)	97 (80 MHz)	80 (66 MHz)	130 (108 MHz)	109 (90 MHz)
	Internal supply voltage [V]	3.3	3.3	3.3	2.5	3.3
	External supply voltage [V]	3.3/5	3.3/5	3.3/5	3.3	3.3/5
	Internal FPU	66	80	66	108	90
	FPU performance (peak) [MFLOPS]	○	○	○	○	○
	Operating frequency [MHz]	256M	256M/ (4G)	16M/ (256M)	256M/ (4G)	256M
	PLL	16	16/ (1)	16/ (1)	16/ (1)	16
	Address space [B]	136 (32 bit)	136 (32 bit)	136 (32 bit)	136 (32 bit)	136 (32 bit)
	Number of address spaces [space]	8	8	8	8	8
	Number of internal general-purpose registers	4K/2K	8K/8K	1K/1K	1K/1K	8K/8K
	Number of register windows	○	○	—	○	○
	Internal cache (instruction/data) [B]	○	○	○	○	○
	Cache function (2-way set associative)	—	—	—	—	—
	Cache function (burst mode)	—	—	—	—	—
	Number of interrupt channels (channels/levels)	8/15	8/15	8/15	8/15	8/15
	Process (gate width/number of Al wiring layers)	0.35 µm/2layer	0.35 µm/2layer	0.35 µm/2layer	0.25 µm/2layer	0.35 µm/2layer
	Package	QFP-176P	QFP-176P	QFP-144P	QFP-176P	BGA-144P
Internal peripheral devices	Chip select generation [lines]	6	6	6	6	6
	Wait state generation	○	○	○	○	○
	Page mode DRAM support	○	○	○	○	○
	DRAM refresh counter	○	○	○	○	○
	Clock generation	—	—	—	—	—
	8/16-bit boot ROM interface	○	○	○	○	○
	8/16-bit bus interface	○	○	○	○	○
	SRAM interface	—	—	—	—	—
	DRAM controller (direct connection of DRAM)	○	○	○	○	—
	SDRAM controller	—	—	—	—	—
	Interrupt controller (number of interrupt channels)	8	8	8	8	8
	Emulator (ICE) support	—	○	—	—	—
	Other	—	—	—	—	—
	Performance	—	—	—	—	JTAG

Page	266

Support Hardware for F²MC-8L Family

Development Tools						
Target Microcontroller			Fujitsu ICE		Yokogawa Digital Computer ICE *4	
Series name	Product name	Package (Lead pitch, body size)	Probe	Equipment common to series	Pod	Equipment common to series
MB89051	MB89051 *1 MB89F051	LQFP-64P (0.65 mm, 12 × 12 mm) FPT-64P-M09	Cable : MB2144-210A + Header : MB2144-227-01	• Main unit : MB2141B • Pod : MB2144-508 (operates at 3 to 5V) • Emulator debugger software : SOFTUNE • • RS-232C cable or LAN cable	Not supported	• advice (main unit) : AD200 • • Dummy target (option) : /DUT
MB89120	MB89121	QFP-48P (0.8mm, 10 × 10mm) FPT-48P-M13	MB2144-203		PF034 (operates 3 to 5V)	
MB89120A	MB89123A	QFP-48P (0.8mm, 10 × 10mm) FPT-48P-M13	MB2144-203		PF034 (operates 3 to 5V)	
	MB89125A	QFP-48P (0.8mm, 10 × 10mm) FPT-48P-M13				
MB89130	MB89131	QFP-48P (0.8mm, 10 × 10mm) FPT-48P-M13	MB2144-203		PF034 (operates 3 to 5V)	
	MB89P131 MB89P135A	QFP-48P (0.8mm, 10 × 10mm) FPT-48P-M13				
MB89130A	MB89133A	QFP-48P (0.8mm, 10 × 10mm) FPT-48P-M13	MB2144-203		PF034 (operates 3 to 5V)	
		SHDIP-48P DIP-48P-M01				
	MB89P133A	QFP-48P (0.8mm, 10 × 10mm) FPT-48P-M13				
		SHDIP-48P DIP-48P-M01				
	MB89135A	QFP-48P (0.8mm, 10 × 10mm) FPT-48P-M13				
	MB89P135A	QFP-48P (0.8mm, 10 × 10mm) FPT-48P-M13				
MB89140 MB89140A	MB89143A MB89144A MB89145 MB89146 MB89P147	SH-DIP-64P DIP-64P-M01	MB2144-201		PF031 (operates at 3 to 5V)	
		QFP-64P (1.0mm, 14 × 20mm) FPT-64P-M06	MB2144-202		PF032 (operates 3 to 5V)	
	MB89W147	SH-DIP-64C DIP-64C-A06	MB2144-201		PF031 (operates 3 to 5V)	

Support Hardware for F²MC-8L Family

Development Tools		Equipment for Program to OTP/EPROM			Target Microcontroller
Evaluation Device (Lead pitch, body size)	IC Package Conversion Adapter *3 (Converting foot patterns of evaluation device)	Microcontroller Subject to Program Product name	EPROM Programmer	IC Package Conversion Adapter *3 (for Program to OTP/EPROM)	Product name
*2	Unnecessary	MB89F051	General-purpose EPROM Programmer *10	FLASH-64QF2-32DP-8LF3	MB89051 *1 MB89F051
Piggyback and evaluation (separately available) MB89PV130A, MQP-48C-P01 (0.8mm, 15 × 15mm) *6	Unnecessary	MB89P131	General-purpose EPROM Programmer *7 (capable of programming to MBM27C256A)	ROM-48QF2-28DP-8L	MB89121
	Unnecessary	MB89P133A		ROM-48QF2-28DP-8L	MB89123A
	Unnecessary	MB89P135A		ROM-48QF2-28DP-8L	MB89125A
	Unnecessary	MB89P131 MB89P135		ROM-48QF2-28DP-8L	MB89131
	Unnecessary	MB89P131 MB89P135		ROM-48QF2-28DP-8L	MB89P131 MB89P135A
	Unnecessary	MB89P133A		ROM-48QF2-28DP-8L	MB89133A
	48QF-48SD-8L	MB89P133A		ROM-48SD-28DP-8L2	
	Unnecessary	MB89P133A		ROM-48QF2-28DP-8L	MB89P133A
	48QF-48SD-8L	MB89P133A		ROM-48SD-28DP-8L2	
	Unnecessary	MB89P135A		ROM-48QF2-28DP-8L	MB89135A
	Unnecessary	MB89P135A		ROM-48QF2-28DP-8L	MB89P135A
Piggyback and evaluation (separately available) MB89PV140, MDIP-64C-P02	Unnecessary	MB89P147		ROM-64SD-28DP-8L4	MB89143A MB89144A MB89145 MB89146 MB89P147
Piggyback and evaluation (separately available) MB89PV140 MQP-64C-P01 (1.0mm, 16 × 22mm) *6				ROM-64QF-28DP-8L4	
Piggyback and evaluation (separately available) MB89PV140 MDIP-64C-P02		MB89P147		ROM-64SD-28DP-8L4	MB89W147

Support Hardware for F²MC-8L Family

Development Tools						
Target Microcontroller			Fujitsu ICE		Yokogawa Digital Computer ICE *4	
Series name	Product name	Package (Lead pitch, body size)	Probe	Equipment common to series	Pod	Equipment common to series
MB89150	MB89151 MB89152 MB89153 MB89154 MB89155 MB89P155 -101 to 105	LQFP-80P (0.5mm, 12 × 12mm) FPT-80P-M05	MB2144-202	• Main unit : MB2141B • Pod : MB2144-508 (operates at 3 to 5V) • Emulator debugger software : SOFTUNE • RS-232C cable or LAN cable	PF032 (operates 3 to 5V)	• advice (main unit) : AD200 • Dummy target (option) : /DUT
		LQFP-80P (0.65mm, 14 × 14mm) FPT-80P-M11				
		QFP-80P (0.8mm, 14 × 20mm) FPT-80P-M06				
MB89150A	MB89151A MB89152A MB89153A MB89154A MB89155A MB89P155 -201 to 205	LQFP-80P (0.5mm, 12 × 12mm) FPT-80P-M05	MB2144-202		PF032 (operates 3 to 5V)	
		LQFP-80P (0.65mm, 14 × 14mm) FPT-80P-M11				
		QFP-80P (0.8mm, 14 × 20mm) FPT-80P-M06				
MB89160	MB89161 MB89163 MB89165 MB89P165 -101 to 105	LQFP-80P (0.5mm, 12 × 12mm) FPT-80P-M05	MB2144-202		PF032 (operates 3 to 5V)	
		LQFP-80P (0.65mm, 14 × 14mm) FPT-80P-M11				
		QFP-80P (0.8mm, 14 × 20mm) FPT-80P-M06				
	MB89W165	QFP-80C (0.8mm, 14 × 20mm) FPT-80C-A02				
MB89160A	MB89161A MB89163A MB89165A MB89P165 -201 to 205	LQFP-80P (0.5mm, 12 × 12mm) FPT-80P-M05	MB2144-202		PF032 (operates 3 to 5V)	
		LQFP-80P (0.65mm, 14 × 14mm) FPT-80P-M11				
		QFP-80P (0.8mm, 14 × 20mm) FPT-80P-M06				
MB89170	MB89173 MB89173L MB89P173 MB89174A MB89174L MB89P175A	QFP-48P (0.8mm, 12 × 12mm) FPT-48P-M16	MB2144-203		PF034 (operates 3 to 5V)	
MB89180	MB89181 MB89182 MB89183 MB89184 MB89185 MB89P185	LQFP-64P (0.65mm, 12 × 12mm) FPT-64P-M09	MB2144-202		PF032 (operates 3 to 5V)	
		QFP-64P (1.0mm, 14 × 20mm) FPT-64P-M06				
MB89190	MB89191 MB89193 MB89195 MB89P195	SOP-28P (17.75 × 8.6 mm) FPT-28P-M17	MB2144-203		PF034 (operates 3 to 5V)	
		SH-DIP-28P DIP-28P-M03				
		DIP-28P DIP-28P-M05				

Support Hardware for F²MC-8L Family

Development Tools		Equipment for Program to OTP/EPROM			Target Microcontroller
Evaluation Device (Lead pitch, body size)	IC Package Conversion Adapter *3 (Converting foot patterns of evaluation device)	Microcontroller Subject to Program Product name	EPROM Programmer	IC Package Conversion Adapter *3 (for Program to OTP/EPROM)	Product name
Piggyback and evaluation (separately available) MB89PV150-101 to 105 MQP-80C-P01 (0.8mm, 16 × 22mm) *6	80QF-80QF2-8L-UP 80QF-80QF2-8L-DWN	MB89P155-101 to 105	General-purpose EPROM Programmer *7 (capable of programming to MBM27C256A)	ROM-80SQF-28DP-8L	MB89151 MB89152 MB89153 MB89154 MB89155 MB89P155 -101 to 105
	80QF-80QF2-8L-UP 80QF-80QF2-8L-DWN			ROM-80QF2-28DP-8L2	
	Unnecessary			ROM-80QF-28DP-8L3	
Piggyback and evaluation (separately available) MB89PV150-101 to 105 MQP-80C-P01 (0.8mm, 16 × 22mm) *6	80QF-80QF2-8L-UP 80QF-80QF2-8L-DWN	MB89P155-201 to 205		ROM-80SQF-28DP-8L	MB89151A MB89152A MB89153A MB89154A MB89155A MB89P155 -201 to 205
				ROM-80QF2-28DP-8L2	
	Unnecessary			ROM-80QF-28DP-8L3	
Piggyback and evaluation (separately available) MB89PV160-101 to 105 MQP-80C-P01 (0.8mm, 16 × 22mm) *6	80QF-80QF2-8L-UP 80QF-80QF2-8L-DWN	MB89P165-101 to 105		ROM-80SQF-28DP-8L	MB89161 MB89163 MB89165 MB89P165 -101 to 105
				ROM-80QF2-28DP-8L2	
	Unnecessary			ROM-80QF-28DP-8L3	
	Unnecessary	MB89W165		ROM-80QF-28DP-8L3	MB89W165
Piggyback and evaluation (separately available) MB89PV160-101 to 105 MQP-80C-P01 (0.8mm, 16 × 22mm) *6	80QF-80QF2-8L-UP 80QF-80QF2-8L-DWN	MB89P165-201 to 205		ROM-80SQF-28DP-8L	MB89161A MB89163A MB89165A MB89P165 -201 to 205
	80QF-80QF2-8L-UP 80QF-80QF2-8L-DWN			ROM-80QF2-28DP-8L2	
	Unnecessary			ROM-80QF-28DP-8L3	
Piggyback and evaluation (separately available) MB89PV170A MQP-48C-P01 (0.8mm, 15 × 15mm) *6	Unnecessary	MB89P173 MB89P175A		ROM-48QF-28DP-8L	MB89173 MB89173L MB89P173 MB89174A MB89174L MB89P175A
Piggyback and evaluation (separately available) MB89PV180 MQP-64C-P01 (1.0mm, 16 × 22mm) *6	Not supported	MB89P185		ROM-64QF2-28DP-8L2	MB89181 MB89182 MB89183 MB89184 MB89185 MB89P185
	Unnecessary			ROM-64QF-28DP-8L3	
Piggyback and evaluation (separately available) MB89PV190 MQP-48C-P01 (0.8mm, 15 × 15mm) *6	48QF-28SOP-8L	MB89P195	General-purpose EPROM Programmer *8	ROM-28SOP-28DP-8L	MB89191 MB89193 MB89195 MB89P195
	48QF-28SD-8L			OTP product unprovided	
	48QF-28DP-8L			ROM-28DP-28DP-8L	

Support Hardware for F²MC-8L Family

Development Tools						
Target Microcontroller			Fujitsu ICE		Yokogawa Digital Computer ICE *4	
Series name	Product name	Package (Lead pitch, body size)	Probe	Equipment common to series	Pod	Equipment common to series
MB89190A	MB89191A/H MB89193A/H MB89195A MB89P195A	SOP-28P (17.75 × 8.6 mm) FPT-28P-M17	MB2144-203	• Main unit : MB2141B • Pod : MB2144-508 (operates at 3 to 5V) • Emulator debugger software : SOFTUNE • RS-232C cable or LAN cable	PF034 (operates 3 to 5V)	• advice (main unit) : AD200 • Dummy target (option) : /DUT
		SH-DIP-28P DIP-28P-M03				
		DIP-28P DIP-28P-M05				
MB89210	MB89215 MB89P215	SSOP-30P (0.65mm, 5.6 × 9.7mm) FPT-30P-M02	MB2144-203		PF034 (operates 3 to 5V)	
MB89470	MB89475 MB89P475	LQFP-48P (0.5mm, 7 × 7mm) FPT-48P-M05	MB2144-203		PF034 (operates 3 to 5V)	
MB89480	MB89485 MB89P485 MB89485L MB89P485L	LQFP-64P (0.65mm, 12 × 12mm) FPT-64P-M09	MB2144-201		PF031 (operates 3 to 5V)	
		SH-DIP-64P DIP-64P-M01				
MB89530	MB89535A MB89537 MB89537A MB89537AC MB89537C MB89537H MB89537HC MB89538 MB89538A MB89538AC MB89538C MB89538H MB89538HC MB89P538 MB89F538 MB89F538L *1	SH-DIP-64P DIP-64P-M01	MB2144-201		PF031 (operates 3 to 5V)	
		LQFP-64P (0.5mm, 10 × 10mm) FPT-64P-M03				
		LQFP-64P (0.65mm, 12 × 12mm) FPT-64P-M09				
		QFP-64P (1.0mm, 14 × 20mm) FPT-64P-M06	MB2144-202		PF032 (operates 3 to 5V)	
	MB89535A MB89F538L *1	BCC-64P (9 × 9mm) LCC-64P-M19	MB2144-202			
MB89550A	MB89557A MB89558A MB89P558A	TQFP-100P (0.4mm, 12 × 12mm) FPT-100P-M18	MB2144-203		PF034 (operates 3 to 5V)	
		LQFP-100P (0.5mm, 14 × 14mm) FPT-100P-M05				

Support Hardware for F²MC-8L Family

Development Tools		Equipment for Program to OTP/EPROM			Target Microcontroller
Evaluation Device (Lead pitch, body size)	IC Package Conversion Adapter *3 (Converting foot patterns of evaluation device)	Microcontroller Subject to Program Product name	EPROM Programmer	IC Package Conversion Adapter *3 (for Program to OTP/EPROM)	Product name
Piggyback and evaluation (separately available) MB89PV190A MQP-48C-P01 (0.8mm, 15 × 15mm) *6	48QF-28SOP-8L	MB89P195A	General-purpose EPROM Programmer *8	ROM-28SOP-28DP-8L	MB89191A/H MB89193A/H MB89195A MB89P195A
	48QF-28SD-8L			OTP product unprovided	
	48QF-28DP-8L			ROM-28DP-28DP-8L	
MB89PV210 MQFP-48C-P01 (0.8mm, 15 × 15mm) *6	48QF-30SOP-8L2	MB89P215	Serial programmer made by Yokogawa Digital Computer Corporation	ROM3-FPT30M02-8L3	MB89215 MB89P215
MB89PV470 MQP-48C-P01 (0.8 mm, 15 × 15 mm) *6	48QF-48SQF-8L-UP + 48QF-48SQF-8L-DWN	MB89P475	General-purpose EPROM Programmer *10	ROM2-48LQF-32DP-8LA2	MB89475 MB89P475
MB89PV480 MDIP-64C-P02	64SD-64QF2-8L	MB89P485 MB89P485L	General-purpose EPROM Programmer *10	ROM2-64QF2-32DP-8LA3	MB89485 MB89P485 MB89485L MB89P485L
	Unnecessary			ROM2-64SD-32DP-8LA3	
Piggyback and evaluation (separately available) MB89PV530 MDIP-64C-P02	Unnecessary	MB89P538	General-purpose EPROM Programmer *7(capable of programming to MBM27C1001)	ROM-64SD-32DP-8LA2	MB89535A MB89537 MB89537A MB89537AC MB89537C MB89537H MB89537HC MB89538 MB89538A MB89538AC MB89538C MB89538H MB89538HC MB89P538 MB89F538 MB89F538L *1
		MB89F538	General-purpose EPROM Programmer *10	FLASH-64SD-32DP-8LF	
	64SD-64SQF-8L	OTP and FLASH product unprovided	—	OTP and FLASH product unprovided	
	64SD-64QF2-8L	MB89P538	General-purpose EPROM Programmer *7 (capable of programming to MBM27C1001)	ROM-64QF2-32DP-8LA	
		MB89F538	General-purpose EPROM Programmer *10	FLASH-64QF2-32DP-8LF2	
Piggyback and evaluation (separately available) MB89PV530 MQP-64C-P01 (1.0mm, 16 × 22mm) *6	Unnecessary	MB89P538	General-purpose EPROM Programmer *7(capable of programming to MBM27C1001)	ROM-64QF-32DP-8LA2	
		MB89F538	General-purpose EPROM Programmer *10	FLASH-64QF-32DP-8LF	
	CST-64QF10-PB-92855 + CST-64QF10-POD-92854	MB89F538L		FLASH-64BCC-32DP-8LF	MB89535A MB89F538L *1
Piggyback and evaluation (separately available) MB89PV550A MQP-100C-P02 (0.5mm, 15 × 15mm) *6	100SQF-100TQF-8L	MB89P558A	General-purpose EPROM Programmer *7 (capable of programming to MBM27C1001)	ROM-100TQF-32DP-8LA	MB89557A MB89558A MB89P558A
	Unnecessary			ROM-100SQF-32DP-8LA2	

Support Hardware for F²MC-8L Family

Development Tools						
Target Microcontroller			Fujitsu ICE		Yokogawa Digital Computer ICE *4	
Series name	Product name	Package (Lead pitch, body size)	Probe	Equipment common to series	Pod	Equipment common to series
MB89560	MB89567 MB89567A MB89567AC MB89567C MB89567H MB89567HC MB89P568	LQFP-80P (0.5mm, 12 × 12mm) FPT-80P-M05	MB2144-202	• Main unit : MB2141B • Pod : MB2144-508 (operates at 3 to 5V) • Emulator debugger software : SOFTUNE • RS-232C cable or LAN cable	PF032 (operates 3 to 5V)	• advice(main unit) : AD200 • Dummy target (option) : /DUT
		QFP-80P (0.8mm, 14 × 20mm) FPT-80P-M06				
		LQFP-80P (0.65mm, 14 × 14mm) FPT-80P-M11				
MB89570	MB89577 MB89P579A	TQFP-100P (0.4mm, 12 × 12mm) FPT-100P-M18	MB2144-203		Not supported	
		LQFP-100P (0.5mm, 14 × 14mm) FPT-100P-M05			Not supported	
MB89580B	MB89583B MB89585B MB89P585B	LQFP-64 (0.5mm, 10 × 10mm) FPT-64P-M03	Cable : MB2144-210A + Header : MB2144-217-01 *5		Not supported	
	MB89589B MB89P589B	LQFP-64 (0.65mm, 12 × 12mm) FPT-64P-M09	Cable : MB2144-210A + Header : MB2144-224-01 *5			
MB89580BW	MB89583BW MB89585BW MB89P585BW	LQFP-64 (0.5mm, 10 × 10mm) FPT-64P-M03	Cable : MB2144-210A + Header : MB2144-225-01 *5		Not supported	
MB89600/R	MB89601R MB89603 MB89P601	LQFP-48P (0.5mm, 7 × 7mm) FPT-48P-M05	MB2144-201 or MB2144-202		PF031 (operates 3 to 5V) or PF032 (operates 3 to 5V)	
MB89610/R	MB89613R MB89615R MB89P625	SH-DIP-64P DIP-64P-M01	MB2144-201		PF031 (operates 3 to 5V)	
	MB89613R MB89615R	LQFP-64P (0.5mm, 10 × 10mm) FPT-64P-M03				
	MB89613R MB89615R MB89P625	LQFP-64P (0.65mm, 12 × 12mm) FPT-64P-M09				
		QFP-64P (1.0mm, 14 × 20mm) FPT-64P-M06	MB2144-202		PF032 (operates 3 to 5V)	

Support Hardware for F²MC-8L Family

Development Tools		Equipment for Program to OTP/EPROM			Target Microcontroller
Evaluation Device (Lead pitch, body size)	IC Package Conversion Adapter *3 (Converting foot patterns of evaluation device)	Microcontroller Subject to Program Product name	EPROM Programmer	IC Package Conversion Adapter *3 (for Program to OTP/EPROM)	Product name
Piggyback and evaluation (separately available) MB89PV560 MQP-80C-P01 (0.8mm, 14 × 20mm) *6	80QF-80QF2-8L-UP 80QF-80SQF-8L-DWN	MB89P568	General-purpose EPROM Programmer *7 (capable of programming to MBM27C1001)	ROM-80SQF-32DP-8LA	MB89567 MB89567A MB89567AC MB89567C MB89567H MB89567HC MB89P568
	Unnecessary			ROM-80QF-32DP-8LA2	
	80QF-80QF2-8L-UP 80QF-80SQF-8L-DWN			ROM-80QF2-32DP-8LA2	
Piggyback and evaluation (separately available) MB89PV570 MQP-100C-P02 (0.5mm, 15 × 15mm)	100SQF-100TQF-8L	MB89P579A	General-purpose EPROM Programmer *9	ROM2-100TQF2-32DP-8LA	MB89577 MB89P579A
	Unnecessary			ROM2-100LQF-32DP-8LA	
OTP evaluation MB89P585B LQFP64 Inplemented in probe header	Unnecessary	MB89P585B		ROM2-64LQF-32DP-8LA	MB89583B MB89585B MB89P585B
OTP evaluation MB89P589B LQFP64 Inplemented in probe header		MB89P589B		ROM2-64QF2-32DP-8LA2	MB89589B MB89P589B
OTP evaluation MB89P585BW LQFP64 Inplemented in probe header	Unnecessary	MB89P585BW	*9	ROM2-64LQF-32DP-8LA	MB89583BW MB89585BW MB89P585BW
Piggyback and evaluation (separately available) MB89PV620 MDIP-64C-P02 or MB89PV620 MQP-64C-P01 (1.0mm, 16 × 22mm) *6	Not supported	MB89P601	General-purpose EPROM Programmer *7 (capable of programming to MBM27C256A)	ROM-48SQF-28DP-8L	MB89601R MB89603 MB89P601
Piggyback and evaluation (separately available) MB89PV620 MDIP-64C-P02	Unnecessary	MB89P625 MB89W625	General-purpose EPROM Programmer *7 (capable of programming to MBM27C256A)	ROM-64SD-28DP-8L	MB89613R MB89615R MB89P625
	64SD-64SQF-8L	—		—	MB89613R MB89615R
	64SD-64QF2-8L	MB89P625		ROM-64QF2-28DP-8L	MB89613R MB89615R MB89P625
Piggyback and evaluation (separately available) MB89PV620 MQP-64C-P01 (1.0mm, 16 × 22mm) *6	Unnecessary	MB89P625 MB89P627		ROM-64QF-28DP-8L	

Support Hardware for F²MC-8L Family

Development Tools						
Target Microcontroller			Fujitsu ICE		Yokogawa Digital Computer ICE *4	
Series name	Product name	Package (Lead pitch, body size)	Probe	Equipment common to series	Pod	Equipment common to series
MB89620/R	MB89623R MB89T623 MB89T623R MB89625R MB89T625	SH-DIP-64P DIP-64P-M01	MB2144-201	• Main unit : MB2141B • Pod : MB2144-508 (operates at 3 to 5V) • Emulator debugger software : SOFTUNE • RS-232C cable or LAN cable	PF031 (operates 3 to 5V)	• advice(main unit) : AD200 • Dummy target (option) : /DUT
		LQFP-64P (0.5mm, 10 × 10mm) FPT-64P-M03				
		LQFP-64P (0.65mm, 12 × 12mm) FPT-64P-M09				
		QFP-64P (1.0mm, 14 × 20mm) FPT-64P-M06	MB2144-202		PF032 (operates 3 to 5V)	
	MB89P625 MB89626R MB89T626R MB89627R MB89T627R	SH-DIP-64P DIP-64P-M01	MB2144-201		PF031 (operates 3 to 5V)	
		LQFP-64P (0.65mm, 12 × 12mm) FPT-64P-M09				
		QFP-64P (1.0mm, 14 × 20mm) FPT-64P-M06	MB2144-202		PF032 (operates 3 to 5V)	
	MB89P627 MB89P629 MB89628R MB89629R	QFP-64P (1.0mm, 14 × 20mm) FPT-64P-M06	MB2144-202		PF032 (operates 3 to 5V)	
		SH-DIP-64P DIP-64P-M01	MB2144-201		PF031 (operates 3 to 5V)	
	MB89W625 MB89W627 MB89W629	SH-DIP-64P DIP-64C-A06				

Support Hardware for F²MC-8L Family

Development Tools		Equipment for Program to OTP/EPROM			Target Microcontroller
Evaluation Device (Lead pitch, body size)	IC Package Conversion Adapter *3 (Converting foot patterns of evaluation device)	Microcontroller Subject to Program Product name	EPROM Programmer	IC Package Conversion Adapter *3 (for Program to OTP/EPROM)	Product name
Piggyback and evaluation (separately available) MB89PV620 MDIP-64C-P02	Unnecessary	MB89P625/7 MB89W625/7	General-purpose EPROM Programmer *7 (capable of programming to MBM27C256A)	ROM-64SD-28DP-8L	MB89623R MB89T623 MB89T623R MB89625R MB89T625
	64SD-64SQF-8L	—		—	
	64SD-64QF2-8L	MB89P625		ROM-64QF2-28DP-8L	
Piggyback and evaluation (separately available) MB89PV620 MQP-64C-P01 (1.0mm, 16 × 22mm) *6	Unnecessary	MB89P625 MB89P627		ROM-64QF-28DP-8L	
Piggyback and evaluation (separately available) MB89PV620 MDIP-64C-P02	Unnecessary	MB89P625		ROM-64SD-28DP-8L	MB89P625 MB89626R MB89T626R MB89627R MB89T627R
	64SD-64QF2-8L			ROM-64QF2-28DP-8L	
Piggyback and evaluation (separately available) MB89PV620 MQP-64C-P01 (1.0mm, 16 × 22mm) *6	Unnecessary			ROM-64QF-28DP-8L	
Piggyback and evaluation (separately available) MB89PV620 MQP-64C-P01 (1.0mm, 16 × 22mm) *6	Unnecessary	MB89P627 MB89P629		ROM-64QF-28DP-8L	MB89P627 MB89P629 MB89628R MB89629R
Piggyback and evaluation (separately available) MB89PV620 MDIP-64C-P02				ROM-64SD-28DP-8L	
		MB89W625 MB89W627 MB89W629		ROM-64SD-28DP-8L	MB89W625 MB89W627 MB89W629

Support Hardware for F²MC-8L Family

Development Tools						
Target Microcontroller			Fujitsu ICE		Yokogawa Digital Computer ICE *4	
Series name	Product name	Package (Lead pitch, body size)	Probe	Equipment common to series	Pod	Equipment common to series
MB89630/R	MB89635 MB89635R MB89T635 MB89T635R MB89636R MB89T636R MB89637 MB89637R MB89T637R	SH-DIP-64P DIP-64P-M01	MB2144-201	• Main unit : MB2141B • Pod : MB2144-508 (operates at 3 to 5V) • Emulator debugger software : SOFTUNE • RS-232C cable or LAN cable	PF031 (operates 3 to 5V)	• advice(main unit) : AD200 • Dummy target (option) : /DUT
		LQFP-64P (0.65mm, 12 × 12mm) FPT-64P-M09				
		QFP-64P (1.0mm, 14 × 20mm) FPT-64P-M06	MB2144-202		PF032 (operates 3 to 5V)	
	MB89P637	SH-DIP-64P DIP-64P-M01	MB2144-201		PF031 (operates 3 to 5V)	
		QFP-64P (1.0mm, 14 × 20mm) FPT-64P-M06	MB2144-202		PF032 (operates 3 to 5V)	
	MB89W637	SH-DIP-64C DIP-64C-A06	MB2144-201		PF031 (operates 3 to 5V)	
MB89640	MB89643 MB89645 MB89646 MB89647 MB89P647	QFP-80P (0.8mm, 14 × 20mm) FPT-80P-M06	MB2144-202		PF032 (operates 3 to 5V)	
		LQFP-80P (0.65mm, 14 × 14mm) FPT-80P-M11				
MB89650AR	MB89653AR MB89655AR MB89656AR MB89657AR MB89P657A	QFP-100P (0.65mm, 14 × 20mm) FPT-100P-M06	MB2144-203		PF034 (operates 3 to 5V)	
		LQFP-100P (0.5mm, 14 × 14mm) FPT-100P-M05				
MB89660/R	MB89663/R MB89665/R MB89P665	SH-DIP-64P DIP-64P-M01	Cable : MB2144-210A + Header : MB2144-216-01		Not supported	
	MB89W665	SH-DIP-64C DIP-64C-A06				
	MB89663/R MB89665/R MB89P665	QFP-64P (1.0mm, 14 × 20mm) FPT-64P-M06	Cable : MB2144-210A + Header : MB2144-215-01 *5 (for QFP-64P)		Not supported	
	MB89W665	QFP-64C (1.0mm, 14 × 20mm) FPT-64C-A02				

Support Hardware for F²MC-8L Family

Development Tools		Equipment for Program to OTP/EPROM			Target Microcontroller
Evaluation Device (Lead pitch, body size)	IC Package Conversion Adapter *3 (Converting foot patterns of evaluation device)	Microcontroller Subject to Program Product name	EPROM Programmer	IC Package Conversion Adapter *3 (for Program to OTP/EPROM)	Product name
Piggyback and evaluation (separately available) MB89PV630 MDIP-64C-P02	Unnecessary	MB89P637 MB89W637	General-purpose EPROM Programmer (capable of programming to MBM27C256A)	ROM-64SD-28DP-8L	MB89635 MB89635R MB89T635 MB89T635R MB89636R MB89T636R MB89637 MB89637R MB89T637R
	64SD-64QF2-8L	—		—	
Piggyback and evaluation (separately available) MB89PV630 MQP-64C-P01 (1.0mm, 16 × 22mm) *6	Unnecessary	MB89P637		ROM-64QF-28DP-8L	
Piggyback and evaluation (separately available) MB89PV630 MDIP-64C-P02	Unnecessary	MB89P637		ROM-64SD-28DP-8L	MB89P637
Piggyback and evaluation (separately available) MB89PV630 MQP-64C-P01 (1.0mm, 16 × 22mm) *6	Unnecessary			ROM-64QF-28DP-8L	
Piggyback and evaluation (separately available) MB89PV630 MDIP-64C-P02	Unnecessary	MB89W637		ROM-64SD-28DP-8L	MB89W637
Piggyback and evaluation (separately available) MB89PV640 MQP-80C-P01 (0.8mm, 16 × 22mm) *6	Unnecessary	MB89P647	General-purpose EPROM Programmer (capable of programming to MBM27C256A)	ROM-80QF-28DP-8L2	MB89643 MB89645 MB89646 MB89647 MB89P647
	80QF-80QF2-8L-UP 80QF-80QF2-8L-DWN			ROM-80QF2-28DP-8L	
Piggyback and evaluation (separately available) MB89PV650A MQP-100C-P02 (0.5mm, 15 × 15mm) *6	100SQF-100QF-8L	MB89P657A		ROM-100QF-28DP-8L2	MB89653AR MB89655AR MB89656AR MB89657AR MB89P657A
	Unnecessary			ROM-100SQF-28DP-8L	
OTP evaluation MB89P665 SH-DIP-64P Inplemented in probe header	Unnecessary	MB89P665		ROM-64SD-28DP-8L	MB89663/R MB89665/R MB89P665
		MB89W665		ROM-64SD-28DP-8L	MB89W665
OTP evaluation MB89P665 QFP-64P Inplemented in probe header	Unnecessary	MB89P665		ROM-64QF-28DP-8L	MB89663/R MB89665/R MB89P665
		MB89W665		ROM-64QF-28DP-8L5	MB89W665

Support Hardware for F²MC-8L Family

Development Tools						
Target Microcontroller			Fujitsu ICE		Yokogawa Digital Computer ICE *4	
Series name	Product name	Package (Lead pitch, body size)	Probe	Equipment common to series	Pod	Equipment common to series
MB89670/ MB89670A	MB89673 MB89673R MB89673AR MB89675R MB89675AR MB89677A MB89677AR MB89P677A	QFP-80P (0.8mm, 14 × 20mm) FPT-80P-M06	MB2144-202	• Main unit : MB2141B • Pod : MB2144-508 (operates at 3 to 5V) • Emulator debugger software : SOFTUNE • RS-232C cable or LAN cable	PF032 (operates 3 to 5V)	• advice(main unit) : AD200 • Dummy target (option) : /DUT
		LQFP-80P (0.65mm, 14 × 14mm) FPT-80P-M11				
MB89680	MB89689 MB89P689	LQFP-100P (0.5mm, 14 × 14mm) FPT-100P-M05	MB2144-202		PF032 (operates 3 to 5V)	
		QFP-100P (0.65mm, 14 × 20mm) FPT-100P-M06				
	MB89W689	QFP-100C (0.65mm, 14 × 20mm) FPT-100C-A02				
MB89800	MB89803 MB89805 MB89P808	QFP-100P (0.65mm, 14 × 20mm) FPT-100P-M06	MB2144-203		PF034 (operates 3 to 5V)	
		LQFP-100P (0.5mm, 14 × 14mm) FPT-100P-M05				
MB89810A	MB89816A MB89P817A	QFP-64P (1.0mm, 14 × 20mm) FPT-64C-M06	Cable : MB2144-210A + Header : MB2144-214-01A		Not supported	
MB89820	MB89821 MB89823 MB89P825	LQFP-80P (0.65mm, 14 × 14mm) FPT-80P-M11	MB2144-202		PF032 (operates 3 to 5V)	
MB89850	MB89855A MB89855R MB89P857	QFP-64P (1.0mm, 14 × 20mm) FPT-64P-M06	Cable : MB2144-210A + Header : MB2144-212-01A		PF026	
	MB89W857	QFP-64C (1.0mm, 14 × 20mm) FPT-64C-A02				
	MB89855 MB89855A MB89855R MB89T855 MB89857 MB89P857	SH-DIP-64P DIP-64P-M01				
	MB89W857	SH-DIP-64C DIP-64C-A06				
MB89863	MB89863	QFP-48P (0.8mm, 10 × 10mm) FPT-48P-M04	Cable : MB2144-210A + Header : MB2144-212-01A		PF026	

Support Hardware for F²MC-8L Family

Development Tools		Equipment for Program to OTP/EPROM			Target Microcontroller
Evaluation Device (Lead pitch, body size)	IC Package Conversion Adapter *3 (Converting foot patterns of evaluation device)	Microcontroller Subject to Program Product name	EPROM Programmer	IC Package Conversion Adapter *3 (for Program to OTP/EPROM)	Product name
Piggyback and evaluation (separately available) MB89PV670A MQP-80C-P01 (0.8mm, 16 × 22mm) *6	Unnecessary	MB89P677A	General-purpose EPROM Programmer (capable of programming to MBM27C256A)	ROM-80QF-28DP-8L2	MB89673 MB89673R MB89673AR MB89675R MB89675AR MB89677A MB89677AR MB89P677A
	80QF-80QF2-8L-UP 80QF-80QF2-8L-DWN			ROM-80QF2-28DP-8L	
Piggyback and evaluation (separately available) MB89PV680 MQP-100C-P01 (0.65mm, 16 × 22mm) *6	Not supported	MB89P689 MB89W689	General-purpose EPROM Programmer *7 (capable of programming to MBM27C1001)	ROM-100SQF-32DP-8LA	MB89689 MB89P689
	Unnecessary			ROM-100QF-32DP-8LA	
				ROM-100QF-32DP-8LA	MB89W689
Piggyback and evaluation (separately available) MB89PV800 MQP-100C-P02 (0.5mm, 15 × 15mm)	100SQF-100TQF-8L	MB89P808		ROM-100QF-32DP-8LA2	MB89803 MB89805 MB89P808
	Unnecessary			ROM-100SQF-32DP-8LA3	
OTP evaluation MB89P817 QFP-64P (1.00mm, 14 × 20mm) Inplemented in probe header	Unnecessary	MB89P817A	General-purpose EPROM Programmer (capable of programming to MBM27C256A)	ROM-64QF-28DP-8L	MB89816A MB89P817A
Piggyback and evaluation (separately available) MB89PV820 MQP-80C-P01 (0.8mm, 16 × 22mm) *6	Not supported	MB89P825		ROM-80QF2-28DP-8L3	MB89821 MB89823 MB89P825
OTP evaluation MB89P857 SH-DIP-64P Inplemented in probe header	64SD-64QF-8L	MB89P857		ROM-64QF-28DP-8L	MB89855A MB89855R MB89P857
		MB89W857		ROM-64QF-28DP-8L5	MB89W857
	Unnecessary	MB89P857		ROM-64SD-28DP-8L	MB89855 MB89855A MB89855R MB89T855 MB89857 MB89P857
		MB89P857 MB89W857			MB89W857
OTP evaluation MB89P857 SH-DIP-64P Inplemented in probe header	64SD-48QF-8L	MB89W857		ROM-64SD-28DP-8L	MB89863

Support Hardware for F²MC-8L Family

Development Tools						
Target Microcontroller			Fujitsu ICE		Yokogawa Digital Computer ICE *4	
Series name	Product name	Package (Lead pitch, body size)	Probe	Equipment common to series	Pod	Equipment common to series
MB89860	MB89865 MB89867 MB89P867	QFP-80P (0.8mm, 14 × 20mm) FPT-80P-M06	Cable : MB2144-210A + Header : MB2144-211-01A (for QFP-80 *5)	• Main unit : MB2141B • Pod : MB2144-508 (operates at 3 to 5V) • Emulator debugger software : SOFTUNE • RS-232C cable or LAN cable	Not supported	• advice(main unit) : AD200 • • Dummy target (option) : /DUT
	MB89W867	QFP-80C (0.8mm, 14 × 20mm) FPT-80C-A02				
MB89870	MB89875 MB89P875	QFP-80P (0.8mm, 14 × 20mm) FPT-80P-M06	MB2144-202		PF032 (operates 3 to 5V)	
		LQFP-80P (0.5mm, 12 × 12mm) FPT-80P-M05				
MB89890	MB89898 MB89899 MB89P899	QFP-100 (0.65mm, 14 × 20mm) FPT-100P-M06	MB2144-202		PF032 (operates 3 to 5V)	
MB89910	MB89913 MB89915 MB89P915	SH-DIP-48P (13.8 × 43.69mm) DIP-48P-M01	MB2144-201		PF031 (operates 3 to 5V)	
		QFP-48P *2 (0.8mm, 12 × 12mm) FPT-48P-M15				
MB89920	MB89923 MB89925 MB89P928	QFP-80P (0.8mm, 14 × 20mm) FPT-80P-M06	MB2144-202		PPF032 (operates 3 to 5V)	
MB89930A/B	MB89935B MB89P935B	SSOP-30 (0.65mm, 5.6 × 9.7mm) FPT-30P-M02	MB2144-203		PF034 (operates 3 to 5V)	
MB89940	MB89943 MB89945 MB89P945	QFP-48P (0.8mm, 12 × 12mm) FPT-48P-M16	MB2144-203		PF034 (operates 3 to 5V)	
MB89950	MB89951 MB89953 MB89953A MB89P955	LQFP-64 (0.65mm, 12 × 12mm) FPT-64P-M09	MB2144-202		PF032 (operates 3 to 5V)	

Support Hardware for F²MC-8L Family

Development Tools		Equipment for Program to OTP/EPROM			Target Microcontroller
Evaluation Device (Lead pitch, body size)	IC Package Conversion Adapter *3 (Converting foot patterns of evaluation device)	Microcontroller Subject to Program Product name	EPROM Programmer	IC Package Conversion Adapter *3 (for Program to OTP/EPROM)	Product name
OTP evaluation MB89P867 QFP-80P (14 × 20mm) Inplemented in probe header	Unnecessary	MB89P867	General-purpose EPROM Programmer (capable of programming to MBM27C256A)	ROM-80QF-28DP-8L2	MB89865 MB89867 MB89P867
		MB89W867			MB89W867
Piggyback and evaluation (separately available) MB89PV870 MQP-80C-P01 (0.8mm, 16 × 22mm) *6	Unnecessary	MB89P875		ROM-80QF-28DP-8L3	MB89875 MB89P875
	Not supported			ROM-80SQF-28DP-8L	
Piggyback and evaluation (separately available) MB89PV890 MQP-100C-P01 (0.65mm, 16 × 22mm) *6	Unnecessary	MB89P899	General-purpose EPROM Programmer (capable of programming to MBM27C1001)	ROM-100QF-32DP-8LA	MB89898 MB89899 MB89P899
Piggyback and evaluation (separately available) MB89PV910 MDIP-64C-P02	64SD-48SD-8L2	MB89P915	General-purpose EPROM Programmer *8	ROM-48SD-28DP-8L	MB89913 MB89915 MB89P915
	Not supported			ROM-48QF-28DP-8L2	
Piggyback and evaluation (separately available) MB89PV920 MQP-80C-P01 (0.8mm, 16 × 22mm) *6	Unnecessary	MB89P928	General-purpose EPROM Programmer (capable of programming to MBM27C1001)	ROM-80QF-32DP-8LA	MB89923 MB89925 MB89P928
Piggyback and evaluation (separately available) MB89PV930A MQP-48C-P01 (0.8mm, 15 × 15mm) *6	48QF-30SOP-8L	MB89P935B	Serial writer : Yokogawa Digital Computer Corporation	ROM3-FPT30M02-8L	MB89935B MB89P935B
Piggyback and evaluation (separately available) MB89PV940 MQP-48C-P01 (0.8mm, 15 × 15mm) *6	Unnecessary	MB89P945	General-purpose EPROM Programmer *7 (capable of programming to MBM27C256A)	ROM-48QF-28DP-8L3	MB89943 MB89945 MB89P945
Piggyback and evaluation (separately available) MB89PV950 MQP-64C-P01 (1.0mm, 16 × 22mm)	Not supported	MB89P955		ROM-64QF2-28DP-8L3	MB89951 MB89953 MB89953A MB89P955

Support Hardware for F²MC-8L Family

*1 : Under development
*2 : Being planned
*3 : The IC package conversion adapter is provided by Sunhayato Corp. Contact details
Sales Info:
Advanced Interconnectics: URL: http://advintcorp.com
*4 : Contact details: Yokogawa Digital Computer Corporation TEL(81-42)333-6222 FAX(81-42)352-6107
*5 : For QFP-48 : TQ-PACK048SA and TQ-SOCKET048SAG (each provided)
For QFP-64 : TQ-PACK060RZ and TQ-SOCKET064RZG (each provided)
For LQFP-64 : TQ-PACK064SD and TQ-SOCKET064SD (each provided)
For QFP-64 (MB89P589B) : NQPACK064SB and HQPACK064SB140 (each provided)
For QFP-80 : TQ-PACK080SA and TQ-SOCKET080RAZ (each provided)

Support Hardware for F²MC-8L Family

Development Tools		Equipment for Program to OTP/EPROM			Target Microcontroller
Evaluation Device (Lead pitch, body size)	IC Package Conversion Adapter *3 (Converting foot patterns of evaluation device)	Microcontroller Subject to Program Product name	EPROM Programmer	IC Package Conversion Adapter *3 (for Program to OTP/EPROM)	Product name
Piggyback and evaluation (separately available) MB89PV960 MQP-48C-P01 (0.8mm, 15 × 15mm) *6	48QF-48SQF-8L-UP + 48QF-48SQF-8L-DWN	MB89P965A	General-purpose EPROM Programmer *9	ROM2-48LQF-32DP-8LA	MB89965 MB89965C MB89P965A
	Unnecessary			ROM2-48QF-32DP-8LA	
	Unnecessary			ROM2-48QF2-32DP-8LA	
	Not supported	MB89F969A	General-purpose EPROM Programmer *10	FLASH-64QF2-32DP-8LF	MB89F969A
Piggyback and evaluation (separately available) MB89PV980 MQP-64C-P01 (1.0mm, 16 × 22mm)	Not supported	MB89P985	General-purpose EPROM Programmer (capable of programming to MBM27C256A)	ROM-64QF2-28DP-8L4	MB89983 MB89P985
	Not supported			ROM-64SQF-28DP-8L3	
Piggyback and evaluation (separately available) MB89PV190 MQP-48C-P01 (0.8mm, 15 × 15mm)	48QF-28SOP-8L	MB89P195	General-purpose EPROM Programmer *8	ROM-28SOP-28DP-8L	MB89997 MB89P195
	48QF-28SD-8L	—		—	MB89997

*6 : It should be noted that there is a slight difference in footprint size of mass-produced packages. therefore, caution is required in designing the footprint of the print board.

*7 : Recommended EPROM programmer for OTP/EPROM microcontroller
- •UNISITE, 3900, 2900; Contact detailes: Data I/O TEL(81-3)3779-2151
- • MODELs 1890A and 1891; Contact detailes: Minato Electronics Inc. TEL(81)45-591-5611
- • R4945, R4949A; Contact detailes: Advantest URL: http://www.advantest.co.jp/index-e.html

*8 : Recommended EPROM programmer for MB89P195/P195A, MB89P915
- • MODEL 1890A(Ver. 2.1 or higher)+OU910(Ver. 4.07 or higher); Contact detailes: Minato Electronics Inc. TEL(81)45-591-5611
- • AF9708, AF9709, AF9723; Contact detailes: Ando Electric TEL(81)44-549-7300

*9 : Recommended EPROM programmer
- • MODEL 1890A(Ver. 2.8 or higher)+OU-910(Ver. 4.32t1 or higher) is requited 3 V board (ML 01-781) ;Contact detailes: Minato Electronics Inc. TEL(81)45-591-5611
- • AF9708, AF9709, AF9723; Contact detailes: Ando Eletric Co., Ltd. TEL(81)44-549-7300

*10 : Recommended EPROM programmer
- • MODEL 1890A+OU-910(Ver. 4.32t1 or higher); Contact detailes: Minato Electronics Inc. TEL(81)45-591-5611
  A conversion board (H910-1148) is required.
- • AF9708(Ver. 1.60P or higher), AF9709(Ver. 1.60P or higher); Contact detailes: Ando Electric Co., Ltd. TEL(81)44-549-7300

Support Hardware for F²MC-16L Family

Development Tools				
Target Microcontroller			Fujitsu ICE	
Series name	Product name	Package (Lead pitch, body size)	Probe	Main unit, Other
MB90610A	MB90611A MB90613A	QFP-100 (0.65mm, 14 × 20mm) FPT-100P-M06	MB2132-464 *5 or MB2132-457 *4	• Main unit : MB2147-01 • Adaptor : MB2147-10 • Evaluation device : separately available • Emulator debugger software : SOFTUNE • RS-232C cable or USB cable or LAN cable or • Main unit : MB2141B • Pod : MB2145-507 • Evaluation device : separately available • Emulator debugger software : SOFTUNE • RS-232C cable or LAN cable
		LQFP-100 (0.5mm, 14 × 14mm) FPT-100P-M05	MB2132-496 *5 or MB2132-457 + 100QF-100SQF-16F *3	
MB90620A	MB90622A MB90623A MB90P623A	LQFP-100 (0.5mm, 14 × 14mm) FPT-100P-M05	MB2132-496 *5 or MB2132-457 + 100QF-100SQF-16F *3	
MB90630A	MB90632A MB90634A MB90P634A	QFP-100 (0.65mm, 14 × 20mm) FPT-100P-M06	MB2132-464 *5 or MB2132-457 *4	
		LQFP-100 (0.5mm, 14 × 14mm) FPT-100P-M05	MB2132-496 *5 or MB2132-457 + 100QF-100SQF-16F *3	
MB90640A	MB90641A MB90P641A	QFP-100 (0.65mm, 14 × 20mm) FPT-100P-M06	MB2132-464 *5 or MB2132-457 *4	
		LQFP-100 (0.5mm, 14 × 14mm) FPT-100P-M05	MB2132-496 *5 or MB2132-457 + 100QF-100SQF-16F *3	
MB90650A	MB90652A MB90653A MB90P653A MB90654A MB90F654A	QFP-100 (0.65mm, 14 × 20mm) FPT-100P-M06	MB2132-464 *5	
		LQFP-100 (0.5mm, 14 × 14mm) FPT-100P-M05	MB2132-496 *5	
MB90660A	MB90662A MB90663A MB90P663A	LQFP-64 (0.65mm, 12 × 12mm) FPT-64P-M9	MB2132-433 + 64SD-64QF2-8L *3	
		SHDIP-64 DIP-64P-M01	MB2132-433	
MB90670	MB90671 MB90672 MB90673 MB90T673 MB90P673	QFP-80 (0.8mm, 14 × 20mm) FPT-80P-M06	MB2132-454 *4	
		LQFP-80 (0.5mm, 12 × 12mm) FPT-80P-M05	MB2132-444 *5	
MB90675	MB90676 MB90677 MB90678 MB90T678 MB90P678	QFP-100 (0.65mm, 14 × 20mm) FPT-100P-M06	MB2132-464 *5 or MB2132-457 *4	
		LQFP-100 (0.5mm, 14 × 14mm) FPT-100P-M05	MB2132-496 *5 or MB2132-457 + 100QF-100SQF-16F *3	

Contact details for information on tool vender tools: Yokogawa Digital Computer Corporation;
TEL(81-423)33-6222; FAX(81-423)52-6107
Email: info@advice.ydc.co.jp Website: http : //www.ydc.co.jp/advice

*1 : Under development
*2 : Being planned
*3 : The IC package conversion adapter provided by Sunhayato is required for connecting the probe cable (separately available).
100QF-100SQF-16F : For QFP-100 (0.65mm, 14 × 20mm) to SQFP-100 (0.5mm, 14 × 14mm)
64SD-64QF2-8L : For SHDIP-64 to QFP-64
Sales Info: Advanced Interconnectics http://advintcorp.com
*4 : The Yamaichi Electronics IC socket is always required for connecting each probe cable (separately available).
IC149-080-012-S5 for QFP-80 (lead pitch : 0.8mm, body size : 14 × 20mm)
IC149-100-_14-S5 (_ = "0" positioning post unavailable, _ = "1" positioning post available) for QFP-100 (lead pitch : 0.65mm, body size : 14 × 20mm)
IC149-120K-13449-_ (_ = "0" positioning post unavailable, _ = "1" positioning post available) for QFP-120 (lead pitch : 0.8mm, body size : 28 × 28mm)
Sales Info:
• USA: Yamaichi Electronics Inc. TEL(408)4520797
• Europe Denmark: Wlmatok A.S. TEL(65)351446
England: Radiatron Components Ltd. TEL(01)8911221
AB Connector Ltd. TEL(0604)712000
Finland: Dualtek Oy TEL(80)8019911
France: Manudax-France TEL(1)4342-2050
Germany: Macrotron AG TEL(089)4208148
Glyn GmbH TEL:(49)61278077
Connector Service GmbH TEL:(089)429277
Italy: Eurosab International s.r.l TEL(02)93169781
Spain: S.A Generalde Imporciones Electronicas TEL(1)416-92-61

Development Tools				Equipment for program to OTP/EPROM			Target Microcontroller
Yokogawa Digital Computer ICE			Evaluation device	Microcontroller subject Program	EPROM programmer	IC Package Conversion Adapter (for program to OTP/EPROM)	
Pod	Conversion Adapter	Main unit, Other		Product name			Product name
PF455	QF455	• advice (main unit) : AD200 • Dummy target (option) : /DUT • Evaluation chip : attached • Emulator debugger software : micro VIEW-G	MB90V610A (PGA-256C)	—	General-purpose EPROM Programmer (capable of Programming to MBM27C1000)	—	MB90611A MB90613A
PF455	—					—	
PF453	—		MB90V620A (PGA-256C)	MB90P623A		ROM-100SQF-32DP-16L	MB90622A MB90623A MB90P623A
PF452	QF452		MB90V630A (PGA-256C)	MB90P634A		ROM-100QF-32DP-16L	MB90632A MB90634A MB90P634A
PF452	—					ROM-100SQF-32DP-16L	
PF456	QF456		MB90V640A (PGA-256C)	MB90P641A		ROM-100QF-32DP-FMC16F	MB90641A MB90P641A
PF456	—					ROM-100SQF-32DP-FMC16F	
PF457	QF457		MB90V650A (PGA-256C)	MB90P653A		ROM-100QF-32DP-16L	MB90652A MB90653A MB90P653A MB90654A MB90F654A
PF457	—					ROM-100SQF-32DP-16L	
PF454	—		MB90V660A (PGA-256C)	MB90P663A		ROM-64QF-32DP-16L	MB90662A MB90663A MB90P663A
PF454	F454					ROM-64SD-32DP-16L	
PF450A	—		MB90V670 (PGA-256C)	MB90P673		ROM-80QF-32DP-16L	MB90671 MB90672 MB90673 MB90T673 MB90P673
PF450A	QF450					ROM-80SQF-32DP-16L	
PF451	QF451		MB90V670 (PGA-256C)	MB90P678		ROM-100QF-32DP-16L	MB90676 MB90677 MB90678 MB90T678 MB90P678
PF451	—					ROM-100SQF-32DP-16L	

Sweden: Bexab Electronics TEL(08)7680560
Switzerland: Slcovend AG TEL(01)8303161
• Asia Singapore: Yamco Electronics Pte Ltd. TEL(336)6522
Korea: Asia Yamaichi Electronics,Inc. TEL(02)482-7263
Taiwan: Sing Way Co. TEL(02)718-5971
Joung Lai Trading Co. Ltd. TEL(02)754-1022

For IC sockets, it should be noted that there is a slight difference in footprint size between these and other mass-produced packages. Therefore, caution is required in designing the footprint of the print board.

*5: TQPACK and NQPACK required for the connecting target of probe cable:
NQPACK064SB and HQPACK064SB140 (each provided) for QFP-64 (lead pitch: 0.65mm; body size: 12 × 12 mm)
TQPACK080SD and TQSOCKET080SDG (available separately) for LQFP-80 (lead pitch: 0.5 mm; body size: 12 × 12 mm)
NQPACK100RB and HQPACK100RB179 (each provided) for QFP-100 (lead pitch:0.65 mm; body size: 14 × 20 mm)
NQPACK100SD and HQPACK100SD (each provided) for LQFP-100 (lead pitch: 0.5mm; body size: 14 × 14 mm)
NQPACK120SD220 and HQPACK120SD226 (each provided) for QFP-120 (lead pitch:0.5 mm; body size: 20 × 20 mm)
TQPACK120/144SD and TQSOCKET120/144SDP (each provided) for QFP-120 (lead pitch: 0.5 mm; body size: 20 × 20 mm)
NQPACK120SD and HQPACK120SD (each provided) for QFP-120 (lead pitch: 0.5mm; body size: 16 × 16 mm)
NQPACK120SE and HQSOCKET120SE (provided) for LQFP-120 (lead pitch: 0.4 mm; body size: 14 × 14 mm)
Caution: For the TQPACK and NQPACK, it should be noted that there is a slight difference in footprint size between these and other mass-produced packages.
Therefore,caution is required in designing the footprint of the print board.
Sales Info:
• USA: Daimaru New York Co. TEL(212)575-0820/0821
OESS Co. Head Office TEL(201)288-4422
OESS Co. Los Angeles Office TEL(714)220-1878
OESS Co. San Jose Office TEL(408)441-1855
• Europe Germany: OESS GmbH TEL(06106)75013
• Asia Hong Kong: Daimaru Kogyo,Ltd. Hong Kong Office TEL(852)8939457/8939108
Singapore: Daimaru Kogyo,Ltd. Singapore Office TEL(65)2251636

Support Hardware for F²MC-16LX Family

Development Tools						
Target Microcontroller			Fujitsu ICE		Yokogawa Digital Computer ICE (advice)	
Series name	Product name	Package (Lead pitch, body size)	Probe	Main unit, other	Pod	Main unit, other
MB90330	MB90333 *1 MB90F334 *1	LQFP-120P (0.4 mm, 14 × 14 mm) FPT-120P-M05	MB2132-491 *5	• Main unit : MB2147-01 • Adaptor board : MB2147-10 • Evaluation device : separately available • Emulator debugger software : SOFTUNE • RS-232C cable or USB cable or LAN cable	Not supported	Not supported
		LQFP-120P (0.5 mm, 16 × 16 mm) FPT-120P-M21 (Under planning)	Under planning		Not supported	Not supported
MB90335	MB90337 *1 MB90F337 *1	LQFP-64P (0.65 mm, 12 × 12 mm) FPT-64P-M09	MB2132-493 *5		Not supported	Not supported
MB90340	MB90341 *2 MB90341S *2 MB90341C *2 MB90341CS *2 MB90342 *2 MB90342S *2 MB90342C *2 MB90342CS *2 MB90F342 *2 MB90F342S *2 MB90F342C *2 MB90F342CS *2 MB90343 *2 MB90343S *2 MB90343C *2 MB90343CS *2 MB90344 *2 MB90344S *2 MB90344C *2 MB90344CS *2 MB90F344 *2 MB90F344S *2 MB90F344C *2 MB90F344CS *2	LQFP-100P (0.5 mm, 14 × 14 mm) FPT-100P-M05	MB2147-581 *5		Not supported	Not supported
		QFP-100P (0.65 mm, 14 × 20 mm) FPT-100P-M06	MB2147-582 *5		Not supported	Not supported
MB90345	MB90346 *1 MB90346S *1 MB90346C *1 MB90346CS *1 MB90347 *1 MB90347S *1 MB90347C *1 MB90347CS *1 MB90F347 *1 MB90F347S *1 MB90F347C *1 MB90F347CS *1 MB90348 *2 MB90348S *2 MB90348C *2 MB90348CS *2 MB90349 *2 MB90349S *2 MB90349C *2 MB90349CS *2	LQFP-100P (0.5 mm, 14 × 14 mm) FPT-100P-M05	MB2147-581 *5		Not supported	Not supported
		QFP-100P (0.65 mm, 14 × 20 mm) FPT-100P-M06	MB2147-582 *5		Not supported	Not supported
MB90370	MB90372 MB90F372	LQFP-144P (0.4mm, 16 × 16mm) FPT-144P-M12	MB2132-471		Not supported	Not supported
MB90385	MB90387 MB90387S MB90F387 MB90F387S	LQFP-48P (0.5mm, 7 × 7mm) FPT-48P-M26	MB2132-466 *5		Not supported	Not supported

Support Hardware for F²MC-16LX Family

Development Tools	Equipment for Program to FLASH/OTP/EPROM				Target Microcontroller
	Microcontroller subject Program	Parallel Programmer		Serial Programmer	
Evaluation Device	Product name	Programmer (manufacturer)	IC Package Conversion Adapter (for program)	Programmer (manufacture)	Product name
MB90V330 (PGA-299C)	MB90F334 LQFP-120P (0.4 mm pitch)	Ando Electric	Under development	Yokogawa Digital Computer • Main unit: AF2xx • Control modules compatible with various microcontrollers • Other options	MB90333 MB90F334
	MB90F334 LQFP-120P (0.5 mm pitch)				
MB90V330 (PGA-299C)	MB90F337 LQFP-64P	Ando Electric	Under development		MB90337 MB90F337
MB90V340 (PGA-299C, clock 1-system) MB90V340S (PGA-299C clock 2-system)	MB90F347PFV MB90F347SPFV LQFP-100P	Ando Electric	TEF110-328F13AP-2 *8		MB90341 *2 MB90341S *2 MB90341C *2 MB90341CS *2 MB90342 *2 MB90342S *2 MB90342C *2 MB90342CS *2 MB90F342 *2 MB90F342S *2 MB90F342C *2 MB90F342CS *2 MB90343 *2 MB90343S *2 MB90343C *2 MB90343CS *2 MB90344 *2 MB90344S *2 MB90344C *2 MB90344CS *2 MB90F344 *2 MB90F344S *2 MB90F344C *2 MB90F344CS *2
	MB90F347PF MB90F347SPF QFP-100P	Ando Electric	TEF110-328F12AP-2 *8		
MB90V340 (PGA-299C, clock 1-system) MB90V340S (PGA-299C clock 2-system)	MB90F347PFV MB90F347SPFV LQFP-100P	Ando Electric	TEF110-328F13AP-2 *8		MB90346 *1 MB90346S *1 MB90346C *1 MB90346CS *1 MB90347 *1 MB90347S *1 MB90347C *1 MB90347CS *1 MB90F347 *1 MB90F347S *1 MB90F347C *1 MB90F347CS *1 MB90348 *2 MB90348S *2 MB90348C *2 MB90348CS *2 MB90349 *2 MB90349S *2 MB90349C *2 MB90349CS *2
	MB90F347PF MB90F347SPF QFP-100P	Ando Electric	TEF110-328F12AP-2 *8		
MB90V370 (PGA-256C)	MB90F372 LQFP-144P	Ando Electric	TE110-372F17AP *8	Not supported	MB90372 MB90F372
MB90V495G (PGA-256C)	MB90F387 MB90F387S LQFP-48	Ando Electric	TEF110-387F15AP-2 *8	Not supported	MB90387 MB90387S MB90F387S MB90F387

Support Hardware for F²MC-16LX Family

Development Tools						
Target Microcontroller			Fujitsu ICE		Yokogawa Digital Computer ICE (advice)	
Series name	Product name	Package (Lead pitch, body size)	Probe	Main unit, other	Pod	Main unit, other
MB90390	MB90F394H *1	LQFP-120P (0.5mm, 16 × 16mm) FPT-120P-M21	MB2132-469 *5	• Main unit : MB2147-01 • Adaptor board : MB2147-20 • Evaluation device : (separately available) • RS-232C cable or USB cable or LAN cable • Emulator debugger software : SOFTUNE	Not supported	Not supported
MB90M405	MB90M407 MB90M408 MB90MF408	QFP-100P (0.65mm, 14 × 20mm) FPT-100P-M06	MB2132-464 *5	• Main unit : MB2147-01 • Adaptor board : MB2147-10 • Evaluation device : separately available • Emulator debugger software : SOFTUNE • RS-232C cable or USB cable or LAN cable	Not supported	• advice (main unit) : AD-250 or AD200B-S86/89 • Dummy target (option) : /DUT • Evaluation device : attached • Emulator debugger software : micro VIEW-G
MB90420G MB90425G	MB90423GA MB90423GB MB90423GC MB90F423GA MB90F423GB MB90F423GC MB90427GA MB90427GB MB90427GC MB90428GA MB90428GB MB90428GC MB90F428GA MB90F428GB MB90F428GC	QFP-100P (0.65mm, 14 × 20mm) FPT-100P-M06	MB2132-464 *5		PF503	
		LQFP-100P (0.5mm, 14 × 14mm) FPT-100P-M05	MB2132-496 *5		PF503-HS1	
MB90435	MB90437L MB90437LS MB90438L MB90438LS MB90439 MB90439S MB90F438L MB90F438LS MB90F439 MB90F439S	QFP-100P (0.65mm, 14 × 20mm) FPT-100P-M06	MB2132-464 *5 or MB2132-457 *4		PF504	
		LQFP-100P (0.5mm, 14 × 14mm) FPT-100P-M05	MB2132-496 *5 or MB2132-457 + 100QF-100SQF-16F *3		PF504-HS1	
MB90440G	MB90443G *1 MB90F443G	QFP-100P (0.65mm, 14 × 20mm) FPT-100P-M06	MB2132-464 *5		Not supported	
MB90455	MB90455 MB90455S MB90456 MB90456S MB90457 MB90457S MB90F456 MB90F456S MB90F457 MB90F457S	LQFP-48P (0.5mm, 7 × 7mm) FPT-48P-M26	MB2132-466 *5		Not supported	Not supported

Support Hardware for F²MC-16LX Family

Development Tools	Equipment for Program to FLASH/OTP/EPROM				Target Microcontroller
	Microcontroller subject Program	Parallel Programmer		Serial Programmer	
Evaluation Device	Product name	Programmer (manufacturer)	IC Package Conversion Adapter (for program)	Programmer (manufacture)	Product name
MB90V390H (PGA-299C)	MB90F394H LQFP-120	Under planning	Under development	Yokogawa Digital Computer • Main unit: AF2xx • Control modules compatible with various microcontrollers • Other options	MB90F394H *
MB90V405 (PGA-256C)	MB90MF408 QFP-100	Not supported	—		MB90M407 MB90M408 MB90MF408
MB90V420G (PGA-256C)	MB90F428G MB90F428GA QFP-100	Minato Electronics	MF00-989 *6 MF05-989 *9		MB90423GA MB90423GB MB90423GC MB90F423GA MB90F423GB MB90F423GC MB90427GA MB90427GB MB90427GC MB90428GA MB90428GB MB90428GC MB90F428GA MB90F428GB MB90F428GC
		Ando Electric	TEF110-553F01AP-2 *8		
		Data I/O *2	S5023		
	MB90F428G MB90F428GA LQFP-100	Minato Electronics	MF00-709 *6 MF05-709 *9		
		Ando Electric	TEF110-580F03AP-2 *8		
		Data I/O *2	Not supported		
MB90V540G (PGA-256C)	MB90F438L MB90F438LS MB90F439 MB90F439S QFP-100	Minato Electronics	MF00-989 *6 MF05-989 *9		MB90437L MB90437LS MB90438L MB90438LS MB90439 MB90439S MB90F438L MB90F438LS MB90F439 MB90F439S
		Ando Electric	TEF110-553F01AP-2 *8		
		Data I/O *2	S5023		
	MB90F438L MB90F438LS MB90F439 MB90F439S LQFP-100	Minato Electronics	MF00-709 *6		
		Ando Electric	TEF110-580F03AP-2 *8		
		Data I/O *2	Not supported		
MB90V440G (PGA-256C)	MB90F443G	Minato Electronics	MF00-989 *6 MF05-989 *6		MB90443G *1 MB90F443G
		Ando Electric	TEF110-553F01AP-2 *8		
		Data I/O *2	S5023		
MB90V495G (PGA-256C)	MB90F456 MB90F456S MB90F457 MB90F457S LQFP-48	Ando Electric	TEF110-387F15AP-2 *8		MB90455 MB90455S MB90456 MB90456S MB90457 MB90457S MB90F456 MB90F456S MB90F457 MB90F457S

Support Hardware for F²MC-16LX Family

Development Tools						
Target Microcontroller			Fujitsu ICE		Yokogawa Digital Computer ICE (advice)	
Series name	Product name	Package (Lead pitch, body size)	Probe	Main unit, other	Pod	Main unit, other
MB90460	MB90462 MB90F462	SH-DIP-64P DIP-64P-M01	MB2132-434	• Main unit : MB2147-01 • Adaptor board : MB2147-10 • Evaluation device : separately available • Emulator debugger software : SOFTUNE • RS-232C cable or USB cable or LAN cable	PF509-HS1	• advice (main unit) : AD-250 or AD200B-S86/89 • Dummy target (option) : /DUT • Evaluation device : attached • Emulator debugger software : micro VIEW-G
		QFP-64 (1.0mm, 14 × 20mm) FPT-64P-M06	MB2132-434 + 64SD-64QF-8L *3		PF509-HS1 + 64SD-64QF-8L *3	
		LQFP-64P (0.65mm, 12 × 12mm) FPT-64P-M09	MB2132-461 *5		PF509	
MB90470	MB90473 MB90474 MB90F474L MB90F474H MB90477 MB90478	QFP-100P (0.65mm, 14 × 20mm) FPT-100P-M06	MB2132-464 *5		PF511	
		LQFP-100P (0.5mm, 14 × 14mm) FPT-100P-M05	MB2132-496 *5		PF511-HS1	
MB90480	MB90F481 MB90F482 MB90F483 *1	QFP-100P (0.65mm, 14 × 20mm) FPT-100P-M06	MB2132-464 *5	• Main unit : MB2147-01 • Adaptor board : MB2147-20 • Evaluation device : (separately available) • Emulator debugger software : SOFTUNE • RS-232C cable or USB cable or LAN cable	Not supported	Not supported
		LQFP-100P (0.5mm, 14 × 14mm) FPT-100P-M05	MB2132-496 *5		Not supported	
MB90495G	MB90497G MB90F497G	QFP-64 (1.0mm, 14 × 20mm) FPT-64P-M06	MB2132-434 + 64SD-64QF-8L *3		PF509-HS1 + 64SD-64QF-8L *3	• advice (main unit) : AD-250 or AD200B-S86/89 • Dummy target (option) : /DUT • Evaluation device : attached • Emulator debugger software : micro VIEW-G
		LQFP-64 (0.65mm, 12 × 12mm) FPT-64P-M09	MB2132-461 *5		PF509	
MB90520 MB90520 A MB90520 B	MB90522 MB90522A MB90522B MB90523 MB90523A MB90523B MB90F523 MB90F523A MB90F523B	QFP-120 (0.5mm, 20 × 20mm) FPT-120P-M13	MB2132-468 *5 or (MB2132-448 *5)		PF501-HS1	
		LQFP-120 (0.4mm, 14 × 14mm) FPT-120P-M05	MB2132-498 *5		PF501	

Support Hardware for F²MC-16LX Family

Development Tools	Equipment for Program to FLASH/OTP/EPROM				Target Microcontroller
	Microcontroller subject Program	Parallel Programmer		Serial Programmer	
Evaluation Device	Product name	Programmer (manufacturer)	IC Package Conversion Adapter (for program)	Programmer (manufacture)	Product name
MB90V460 (PGA-256C)	MB90F462 SDIP-64	Minato Electronics	MF13-787 *6	Yokogawa Digital Computer • Main unit: AF2xx • Control modules compatible with various microcontrollers • Other options	MB90462 MB90F462
		Ando Electric	TEF110-562F05AP-2 *8		
		Data I/O *2	Not supported		
	MB90F462 QFP-64 (1.0mm pitch)	Minato Electronics	MF13-785 *6		
		Ando Electric	TEF110-562F06AP-2 *8		
		Data I/O *2	Not supported		
	MB90F462 QFP-64 (0.65mm pitch)	Minato Electronics	MF13-786 *6		
		Ando Electric	TEF110-562F07AP-2 *8		
		Data I/O *2	Not supported		
MB90V470B (PGA-256C)	MB90F474L MB90F474H QFP-100	Minato Electronics	MF00-989 *6 MF05-989 *9		MB90473 MB90474 MB90F474L MB90F474H MB90477 MB90478
		Ando Electric	TEF110-553F01AP-2 *8		
		Data I/O *2	S5023		
	MB90F474L MB90F474H LQFP-100	Minato Electronics	MF00-709 *6 MF05-709 *9		
		Ando Electric	TEF110-580F03AP-2 *8		
		Data I/O *2	Not supported		
MB90V480 (PGA-299C) (Under devel-opmet)	MB90F481 MB90F482 MB90F483 QFP-100	Minato Electronics	MF00-989A *6 MF05-989A *9		MB90F481 MB90F482 MB90F483 *1
		Ando Electric	TEF110-553F01AP-2 *8		
		Data I/O *2	S5023 *7		
	MB90F481 MB90F482 MB90F483 LQFP-100	Minato Electronics	MF00-709A *6 MF05-709A *9		
		Ando Electric	TEF110-580F03AP-2 *8		
		Data I/O *2	Not supported		
MB90V495G (PGA-256C)	MB90F497G QFP-64 (1.0mm pitch)	Minato Electronics	MF13-785 *6 MF05-785 *9		MB90497G MB90F497G
		Ando Electric	TEF110-562F06AP-2 *8		
		Data I/O *2	Not supported		
	MB90F497G QFP-64 (0.65mm pitch)	Minato Electronics	MF13-786 *6 MF05-786 *9		
		Ando Electric	TEF110-562F07AP-2 *8		
		Data I/O *2	Not supported		
MB90V520A (PGA-256C)	MB90F523A MB90F523B QFP-120	Minato Electronics	MF00-23A *6 MF05-23A *9		MB90522 MB90522A MB90522B MB90523 MB90523A MB90523B MB90F523 MB90F523A MB90F523B
		Ando Electric	TEF110-574F02AP-2 *8		
		Data I/O *2	S5024		
	MB90F523A MB90F523B LQFP-120	Minato Electronics	MF00-22A *6 MF05-22A *9		
		Ando Electric	TEF110-523F08AP-2 *8		
		Data I/O *2	Not supported		

Support Hardware for F²MC-16LX Family

Development Tools						
Target Microcontroller			Fujitsu ICE		Yokogawa Digital Computer ICE (advice)	
Series name	Product name	Package (Lead pitch, body size)	Probe	Main unit, other	Pod	Main unit, other
MB90540G	MB90543G *1 MB90543GS *1 MB90F543G MB90F543GS	QFP-100 (0.65mm, 14 × 20mm) FPT-100P-M06	MB2132-464 *5 or MB2132-457 *4	• Main unit : MB2147-01 • Adaptor board : MB2147-10 • Evaluation device : (separately available) • Emulator debugger software : SOFTUNE • RS-232C cable or USB cable or LAN cable	PF504	• advice (main unit) : AD-250 or AD200B-S86/89 • Dummy target (option) : /DUT • Evaluation device : attached • Emulator debugger software : micro VIEW-G
		LQFP-100 (0.5mm, 14 × 14mm) FPT-100P-M05	MB2132-496 *5 or MB2132-457 + 100QF-100SQF-16F *3		PF504-HS1	
MB90545G	MB90F546G MB90F546GS MB90547G MB90547GS MB90548G MB90548GS MB90F548G MB90F548GL MB90F548GLS MB90F548GS MB90549G MB90549GS MB90F549G MB90F549GS	QFP-100 (0.65mm, 14 × 20mm) FPT-100P-M06	MB2132-464 *5 or MB2132-457 *4		PF504	
		LQFP-100 (0.5mm, 14 × 14mm) FPT-100P-M05	MB2132-496 *5 or MB2132-457 + 100QF-100SQF-16F *3		PF504-HS1	
MB90550A MB90550B	MB90552B MB90T552A MB90553B MB90T553A MB90P553A MB90F553A	QFP-100 (0.65mm, 14 × 20mm) FPT-100P-M06	MB2132-464 *5 or MB2132-457 *4		PF500	
		LQFP-100 (0.5mm, 14 × 14mm) FPT-100P-M05	MB2132-496 *5 or MB2132-457 + 100QF-100SQF-16F *3		PF500-HS1	
MB90560	MB90561A MB90562A MB90F562B	SH-DIP64 DIP-64P-M01	MB2132-434		PF510-HS1	
		LQFP-64 (0.65mm, 12 × 12mm) FPT-64P-M09	MB2132-461 *5		PF510	
		QFP-64 (1.0mm, 14 × 20mm) FPT-64P-M06	MB2132-434 + 64SD-64QF-8L *3		PF510HS1 + 64SD-64QF-8L *3	

Support Hardware for F²MC-16LX Family

Development Tools	Equipment for Program to FLASH/OTP/EPROM				Target Microcontroller
	Microcontroller subject Program	Parallel Programmer		Serial Programmer	
Evaluation Device	Product name	Programmer (manufacturer)	IC Package Conversion Adapter (for program)	Programmer (manufacture)	Product name
MB90V540G (PGA-256C)	MB90F543G/GS QFP-100	Minato Electronics	MF00-989 *6 MF05-989 *9	Yokogawa Digital Computer • Main unit: AF2xx • Control modules compatible with various microcontrollers • Other options	MB90543G *1 MB90543GS *1 MB90F543G MB90F543GS
		Ando Electric	TEF110-553F01AP-2 *8		
		Data I/O *2	S5023		
	MB90F543G/GS LQFP-100	Minato Electronics	MF00-709 *6 MF05-709 *9		
		Ando Electric	TEF110-580F03AP-2 *8		
		Data I/O *2	Not supported		
	MB90F546G/GS MB90F548G/GS MB90F548GL/GLS MB90F549G/GS QFP-100	Minato Electronics	MF00-989 *6 MF05-989 *9		MB90F546G MB90F546GS MB90547G MB90547GS MB90548G MB90548GS MB90F548G MB90F548GL MB90F548GLS MB90F548GS MB90549G MB90549GS MB90F549G MB90F549GS
		Ando Electric	TEF110-553F01AP-2 *8		
		Data I/O *2	S5023		
	MB90F546G/GS MB90F548G/GS MB90F548GL/GLS MB90F549G/GS LQFP-100	Minato Electronics	MF00-709 *6		
		Ando Electric	TEF110-580F03AP-2 *8		
		Data I/O *2	Not supported		
MB90V550A (PGA-256C)	MB90P553A QFP-100	General-purpose EPROM Programmer capable of programming to MBM27C1000	ROM-100QF-32DP-16L *3	—	MB90552B MB90T552A MB90553B MB90T553A MB90P553A MB90F553A
	MB90F553A QFP-100	Minato Electronics	MF00-989 *6 MF05-989 *9	Yokogawa Digital Computer • Main unit: AF2xx • Control modules compatible with various microcontrollers • Other options	
		Ando Electric	TEF110-553F01AP-2 *8		
		Data I/O *2	S5023		
	MB90F553A LQFP-100	Minato Electronics	MF00-709 *6 MF05-709 *9		
		Ando Electric	TEF110-580F03AP-2 *8		
		Data I/O *2	Not supported		
MB90V560 (PGA-256C)	MB90F562B SH-DIP-64	Minato Electronics	MF13-787 *6 MF05-787 *9		MB90561A MB90562A MB90F562B
		Ando Electric	TEF110-562F05AP-2 *8		
		Data I/O *2	Not supported		
	MB90F562B QFP-64 (0.65mm pitch)	Minato Electronics	MF13-786 *6 MF05-786 *9		
		Ando Electric	TEF110-562F07AP-2 *8		
		Data I/O *2	Not supported		
	MB90F562B QFP-64 (1.0mm pitch)	Minato Electronics	MF13-785 *6		
		Ando Electric	TEF110-562F06AP-2 *8		
		Data I/O *2	Not supported		

Support Hardware for F²MC-16LX Family

Development Tools						
Target Microcontroller			Fujitsu ICE		Yokogawa Digital Computer ICE (advice)	
Series name	Product name	Package (Lead pitch, body size)	Probe	Main unit, other	Pod	Main unit, other
MB90565	MB90567 MB90568 MB90F568	QFP-64 (1.0mm, 14 × 20mm) FPT-64P-M06	MB2132-434 + 64SD-64QF-8L	• Main unit : MB2147-01 • Adaptor board : MB2147-10 • Evaluation device : (separately available) • Emulator debugger software : SOFTUNE • RS-232C cable or USB cable or LAN cable	PF510HS1 + 64SD-64QF-8L *3	• advice (main unit) : AD-250 or AD200B-S86/89 • Dummy target (option) : /DUT • Evaluation device : attached • Emulator debugger software : micro VIEW-G
		LQFP-64 (0.65mm, 12 × 12mm) FPT-64P-M05	MB2132-461 *5		PF510	
MB90570A MB90570C	MB90573C MB90574C MB90F574A	LQFP-120 (0.5mm, 16 × 16mm) FPT-120P-M21	MB2132-497 *5		Not supported	
		QFP-120 (0.5mm, 20 × 20mm) FPT-120P-M13	MB2132-468 *5 or (MB2132-448 *5)		PF502-HS1	
		LQFP-120 (0.4mm, 14 × 14mm) FPT-120P-M05	MB2132-498 *5		PF502	
MB90580C MB90580CA	MB90583C MB90583CA MB90F583C MB90F583CA MB90F584C MB90F584CA MB90587C MB90587CA	QFP-100 (0.65mm, 14 × 20mm) FPT-100P-M06	MB2132-464 *5 or MB2132-457 *4		PF505	
		LQFP-100 (0.5mm, 14 × 14mm) FPT-100P-M05	MB2132-496 *5 or MB2132-457 + 100QF-100SQF-16F *3		PF505-HS1	
MB90590G	MB90591G MB90F591G MB90594G MB90F594G	QFP-100 (0.65mm, 14 × 20mm) FPT-100P-M06	MB2132-464 *5 or MB2132-457 *4		PF506	
MB90595G	MB90598G MB90F598G	QFP-100 (0.65mm, 14 × 20mm) FPT-100P-M06	MB2132-464 *5 or MB2132-457 *4		PF507	

Support Hardware for F²MC-16LX Family

Development Tools	Equipment for Program to FLASH/OTP/EPROM				Target Microcontroller
	Microcontroller subject Program	Parallel Programmer		Serial Programmer	
Evaluation Device	Product name	Programmer (manufacturer)	IC Package Conversion Adapter (for program)	Programmer (manufacture)	Product name
MB90V560 (PGA-256C)	MB90F568 QFP-64 (1.0mm pitch)	Minato Electronics	MF13-785 *6	Yokogawa Digital Computer • Main unit: AF2xx • Control modules compatible with various microcontrollers • Other options	MB90567 MB90568 MB90F568
		Ando Electric	TEF110-562F06AP-2 *8		
		Data I/O *2	Not supported		
	MB90F568 QFP-64 (0.65mm pitch)	Minato Electronics	MF13-786 *6 MF05-786 *9		
		Ando Electric	TEF110-562F07AP-2 *8		
		Data I/O *2	Not supported		
MB90V570A (PGA-256C)	MB90F574A QFP-120 (16 × 16 mm)	Minato Electronics	MF00-729 *6 MF05-729 *9		MB90573C MB90574C MB90F574A
		Ando Electric	TEF110-574F04AP-2 *8		
		Data I/O *2	Not supported		
	MB90F574A QFP-120 (20 × 20 mm)	Minato Electronics	MF00-23 *6 MF05-23 *9		
		Ando Electric	TEF110-574F02AP-2 *8		
		Data I/O *2	S5024 *7		
	MB90F574A LQFP-120	Minato Electronics	MF00-22 *6		
		Ando Electric	TEF110-523F08AP-2 *8		
		Data I/O *2	Not supported		
MB90V580B (PGA-256C)	MB90F583C MB90F583CA QFP-100	Minato Electronics	MF00-989 *6 MF05-989 *9		MB90583C MB90583CA MB90F583C MB90F583CA MB90F584C MB90F584CA MB90587C MB90587CA
		Ando Electric	TEF110-553F01AP-2 *8		
		Data I/O *2	S5023 *7		
	MB90F583C MB90F583CA LQFP-100	Minato Electronics	MF00-709 *6 MF05-709 *9		
		Ando Electric	TEF110-580F03AP-2 *8		
		Data I/O *2	Not supported		
MB90V590G (PGA-256C)	MB90F591G MB90F594G QFP-100	Minato Electronics	MF00-989A *6 MF05-989A *9		MB90591G MB90F591G MB90594G MB90F594G
		Ando Electric	TEF110-553F01AP-2 *8		
		Data I/O *2	S5023 *7		
MB90V595G (PGA-256C)	MB90F598G QFP-100	Minato Electronics	MF00-989 *6 MF05-989 *9		MB90598G MB90F598G
		Ando Electric	TEF110-553F01AP-2 *8		
		Data I/O *2	S5023 *7		

Support Hardware for F²MC-16LX Family

Development Tools						
Target Microcontroller			Fujitsu ICE		Yokogawa Digital Computer ICE (advice)	
Series name	Product name	Package (Lead pitch, body size)	Probe	Main unit, other	Pod	Main unit, other
MB90860	MB90867 *1 MB90867S *1 MB90F867 MB90F867S	LQFP-100 (0.5 mm, 14 × 14 mm) FPT-100P-M05	MB2147-581 *5	• Main unit : MB2147-01 • Adaptor board : MB2147-10 • Evaluation device : (separately available) • Emulator debugger software : SOFTUNE • RS-232C cable or USB cable or LAN cable	Not supported	Not supported
		QFP-100 (0.65 mm, 14 × 20 mm) FPT-100P-M06	MB2147-582 *5		Not supported	Not supported
MB90800	MB90803 *1 MB90804 *2 MB90F804	QFP-100 (0.65 mm, 14 × 20 mm) FPT-100P-M06	MB2147-582 *5		Not supported	Not supported
MB90890	MB90F897 *1 MB90F897S *1	LQFP-48 (0.5 mm, 7 × 7 mm) FPT-48P-M26	MB2132-466 *5		Not supported	Not supported

Contact details for information on tool vender tools:Yokogawa Digital Computer Corporation;
TEL(81-423)33-6222 FAX(81-423)52-6107
Email: info@advice.ydc.co.jp Website: http : //www.ydc.co.jp/advice

*1 : Under development
*2 : Being planned
*3 : The IC package conversion adapter provided by Sunhayato is required for connecting the probe cable (separately available).
100QF-100SQF-16F : For QFP-100 (0.65mm, 14 × 20mm) to SQFP-100 (0.5mm, 14 × 14mm)
64SD-64QF2-8L : For SHDIP-64 to QFP-64
Sales Info: Advanced Interconnectics http://advintcorp.com
*4 : The Yamaichi Electronics IC socket is always required for connecting each probe cable (separately available).
IC149-080-012-S5 for QFP-80 (lead pitch : 0.8mm, body size : 14 × 20mm)
IC149-100-_14-S5 (_ = "0" positioning post unavailable, _ = "1" positioning post available) for QFP-100 (lead pitch : 0.65mm, body size : 14 × 20mm)
IC149-120K-13449-_ (_ = "0" positioning post unavailable, _ = "1" positioning post available) for QFP-120 (lead pitch : 0.8mm, body size : 28 × 28mm)
Sales Info:
• USA: Yamaichi Electronics Inc. TEL(408)4520797
• Europe Denmark: Wlmatok A.S. TEL(65)351446
England: Radiatron Components Ltd. TEL(01)8911221
AB Connector Ltd. TEL(0604)712000
Finland: Dualtek Oy TEL(80)8019911
France: Manudax-France TEL(1)4342-2050
Germany: Macrotron AG TEL(089)4208148
Glyn GmbH TEL:(49)61278077
Connector Service GmbH TEL:(089)429277
Italy: Eurosab International s.r.l TEL(02)93169781
Spain: S.A Generalde Imporciones Electronicas TEL(1)416-92-61
Sweden: Bexab Electronics TEL(08)7680560
Switzerland: Slcovend AG TEL(01)8303161
• Asia Singapore: Yamco Electronics Pte Ltd. TEL(336)6522
Korea: Asia Yamaichi Electronics,Inc. TEL(02)482-7263
Taiwan: Sing Way Co. TEL:(02)718-5971
Joung Lai Trading Co. Ltd. TEL:(02)754-1022
For IC sockets, it should be noted that there is a slight difference in footprint size between these and other mass-produced packages. Therefore, caution is required in designing the footprint of the print board.

Support Hardware for F²MC-16LX Family

Development Tools	Equipment for Program to FLASH/OTP/EPROM				Target Microcontroller
	Microcontroller subject Program	Parallel Programmer		Serial Programmer	
Evaluation Device	Product name	Programmer (manufacturer)	IC Package Conversion Adapter (for program)	Programmer (manufacture)	Product name
MB90V340 (PGA-299C, 1-clock system) MB90V340S ((PGA-299C, 2-clock system)	MB90F867PFV MB90F867SPFV LQFP-100	Ando Electric	TEF110-328F13AP-2 *8	Yokogawa Digital Computer • Main unit: AF2xx • Control modules compatible with various microcontrollers • Other options	MB90867 *1 MB90867S *1 MB90F867 MB90F867S
	MB90F867PF MB90F867SPF QFP-100	Ando Electric	TEF110-328F12AP-2 *8		
MB90V800 (PGA-299C)	MB90F804PF QFP-100	Ando Electric	TEF110-328F12AP-2 *8		MB90803 *1 MB90804 *2 MB90F804
MB90V495G (PGA-299C)	MB90F897 MB90F897S LQFP-48	Ando Electric	Under development		MB90F897 *1 MB90F897S *1

*5: TQPACK and NQPACK required for the connecting target of probe cable:
NQPACK048SD and HQPACK048SD140 (attached) for LQFP-48 (lead pitch: 0.5 mm; body size: 7 × 7 mm)
NQPACK064SB and HQPACK064SB140 (attached) for LQFP-64 (lead pitch: 0.65 mm; body size: 12 × 12 mm)
TQPACK080SD and TQSOCKET080SDG (available separately) for LQFP-80 (lead pitch: 0.5 mm; body size: 12 × 12 mm)
NQPACK100RB and HQPACK100RB179 (attached) for QFP-100 (lead pitch:0.65 mm; body size: 14 × 20 mm)
NQPACK100SD and HQPACK100SD (attached) for LQFP-100 (lead pitch: 0.5 mm; body size: 14 × 14 mm)
NQPACK120SD220 and HQPACK120SD226 (attached) for QFP-120 (lead pitch:0.5 mm; body size: 20 × 20 mm)
TQPACK120/144SD and TQSOCKET120/144SDP (attached) for QFP-120 (lead pitch: 0.5 mm; body size: 20 × 20 mm)
NQPACK120SD and HQPACK120SD (attached) for QFP-120 (lead pitch: 0.5 mm; body size: 16 × 16 mm)
NQPACK120SE (attached) for LQFP-120 (lead pitch: 0.4 mm; body size: 14 × 14 mm)
Caution: For the TQPACK and NQPACK, it should be noted that there is a slight difference in footprint size between these and other mass-produced packages.
Therefore,caution is required in designing the footprint of the print board.
Sales Info:
• USA: Daimaru New York Co. TEL(212)575-0820/0821
OESS Co. Head Office TEL(201)288-4422
OESS Co. Los Angeles Office TEL(714)220-1878
OESS Co. San Jose Office TEL(408)441-1855
• Europe Germany: OESS GmbH TEL(06106)75013
• Asia Hong Kong: Daimaru Kogyo,Ltd. Hong Kong Office TEL(852)8939457/8939108
Singapore: Daimaru Kogyo,Ltd. Singapore Office TEL(65)2251636

*6: Compatible Minato Electronics ROM programmers: MODEL 1890A (Ver. 2.5 or later) + OU910 (Ver. 4.32r or later), MODEL 1893 (Ver. 1.10l or higher) , MODEL 1931 (Ver. 1.10l or higher) , MODEL 1930 + SU3000LX (Ver. 4.10l or higher) ;
Contact details: TEL (81-45) 591-5611; FAX (81-45) 592-2854

*7: Compatible Data I/O ROM programmers: OPTIMA, Dual-Package, OCTAL, QUAD: TEL(81-3) 3779-2534

*8: Compatible Ando Electric ROM programmers: AF9708 (Ver. 1.78 or higher) , AF9709 (Ver. 1.78 or higher) , AF9723 (Ver. 1.81 or higher) : URL http://www.j-fsg.co.jp/

*9: Adaptor for MODEL-1940

Support Hardware for FR Family

Target Microcontroller		Development Tools			
		Fujitsu ICE			Fujitsu
Product name	Package (Lead pitch, body size)	Adapter, header	Main unit, other	- Evaluation Device - Package - DSU type	Evaluation board
MB91101A	- LQFP-100 - 0.5 mm, 14 × 14 mm - FPT-100P-M05	- Adapter unit : MB2197-101 *2 Note : Yamaichi Electronics IC socket is required separately (Option : IC149-100-□25-B5).	- Main unit : MB2197-01 - DSU cable : MB2197-10 - Evaluation device : separately available - Option ROM alternate unit : MB2197-90 - RS232C cable or LAN cable - Debugger software : SOFTUNE	- MB91V101A - PGA135 - DSU2	1) - Mother board : MB91906EB - Daughter board : MB91901EB * : Simple substance use is possible. (Evaluation device is with mounting. Connection use of ICE is possible (DSU) . 2) - Mother board : MB91906EB - Daughter board : MB91902EB * : Simple substance use is possible. (Option : MB91101A , Connection use of SOPHIA SYSTEMS or YDC ICE is possible. (NQPACK socket Note : Fujitsu ICE is not connectable (Yamaichi Electronics socket). 3) - Mother board : MB91906EB - Simple target for ICE : MB91903EB * : Simple substance use is possible. (Evaluation device is with mounting. Connection use of ICE is possible (DSU) .
	- QFP-100 - 0.65mm,14 × 20 mm - FPT-100P-M06	- Adapter unit : MB2197-102 *2 Note : Yamaichi Electronics IC socket is required separately (Option : IC149-100-□14-B5).			
MB91107A MB91108	- LQFP-120 - 0.5mm, 16 × 16 mm - FPT-120P-M21	- Adapter unit : MB2197-103 *3 Note : Tokyo EletechIC socket is required separately (1-set is bundled. : NQPACK120SD, HQPACK120SD) .		- MB91V108 - PGA135 - DSU2	- Mother board : MB91906EB - Daughter board : MB91907EB * : Connection use of ICE is possible (NQPACK socket is used) .
MB91121	- LQFP-120 - 0.5 mm, 16 × 16 mm - FPT-120P-M21	- Adapter unit : MB2197-103 *3 Note : Tokyo EletechIC socket is required separately (1-set is bundled : NQPACK120SD, HQPACK120SD).		- MB91V121 - PGA135 - DSU2	- Mother board : MB91906EB - Daughter board : MB91907EB * : Simple substance use is possible (Option : MB911121 , Connection use of ICE is possible(NQPACK socket is used) .
MB91106A	- LQFP-100 - 0.5 mm, 14 × 14 mm - FPT-100P-M05	- Adapter board : MB2197-110 - Header : MB2197-111 *3 Note : Tokyo EletechIC socket is required separately (1-set is bundled : NQPACK100SD, HQPACK100SD) .	- Main unit : MB2198-01 - DSU cable : MB2198-10 - Evaluation device : separately available - RS232C cable or USB cable or LAN cable - Debugger software : SOFTUNE	- MB91V106A - PGA299 - DSU3	- Mother board : MB91906EB - Daughter board : MB91910EB * : Simple substance use is possible. (Option : MB91106A , Connection use of ICE is possible (NQPACK socket is used).
	- QFP-100 - 0.65 mm,14 × 20 mm - FPT-100P-M06	- Adapter board : MB2197-110 - Header : MB2197-112 *3 Note : Tokyo EletechIC socket is required separately (1-set is bundled. : NQPACK100RB, HQPACK100RB) .			
MB91F109	- LQFP-100 - 0.5 mm, 14 × 14 mm - FPT-100P-M05	- Adapter board : MB2197-110 - Header : MB2197-111 *3 Note : Tokyo EletechIC socket is required separately (1-set is bundled. : NQPACK100SD, HQPACK100SD) .		- MB91V106A - PGA299 - DSU3 Note : *1 The emulation of built-in FLASH 254 KB of MB91F109 has restriction.	- Mother board : MB91906EB - Daughter board : MB91910EB * : Simple substance use is possible (Option : MB91F109 , Connection use of ICE is possible(NQPACK socket is used) .
	- QFP-100 - 0.65 mm, 14 × 20 mm - FPT-100P-M06	- Adapter board : MB2197-110 - Header : MB2197-112 *3 Note : Tokyo EletechIC socket is required separately (1-set is bundled. : NQPACK100RB, HQPACK100RB) .			
MB91110	- LQFP-144 - 0.5 mm, 20 × 20 mm - FPT-144P-M08	- Adapter board : MB2197-110 - Header : MB2197-115 *3 Note : Tokyo EletechIC socket is required separately (1-set is bundled. : NQPACK144SD, HQPACK144SD) .		- MB91V110 - PGA299 - DSU3	- Mother board : MB91906EB - Daughter board : MB91904EB * : Simple substance use is possible (Option : MB91110 , Connection use of ICE is possible(NQPACK socket is used) .
MB91F127 MB91F128	- LQFP-100 - 0.5 mm, 14 × 14 mm - FPT-100P-M05	- Adapter board : MB2197-160 - Header : MB2197-162 *3 Note : Tokyo EletechIC socket is required separately (1-set is bundled. : NQPACK100SD, HQPACK100SD351) .	- Main unit : MB2198-01 - DSU cable : MB2198-10 - Evaluation device : separately available - RS232C cable, USB cable or LAN cable - Debugger software : SOFTUNE	- MB91FV129 - PGA299 - DSU3	Not supported

Support Hardware for FR Family

Development Tools	Development Tools				Equipment for Program to FLASH				Target Microcontroller
Sun Hayato Co., Ltd.	SOPHIA SYSTEMS ICE *4		Yokogawa Digital Computer ICE *5		Microcontroller Subject to Program	Parallel programmer		Serial programmer	
Evaluation board	Adapter	Equipment common to series	Pod	Equipment common to series	Product name (Package)	Maker name	Programming adapter	Maker name Product name	Product name
—	CS2372A FR30-PB-QF100SD-AD CS2360B YQPACK100SD CS2360C NQPACK100SD	- Host I/F board - UniSTAC (US72000) - Evaluation device : Bundled - Debugger software : WATCHPOINT	PF951	- advice (AD250) - Evaluation device : Bundled - Debugger software : YDC micro-VIEW-G	—	—	—	—	MB91101A
—	CS2372E FR30-PB-QF100RB-AD CS2360X YQPACK100RB CS2360Y NQPACK100RB		—		—	—	—	—	
—	CS2373A FR TYPE II -PB-QF120SD-AD CS2373B YQPACK120SD CS2373C NQPACK120SD	- Host I/F board - UniSTAC (US72001G) - Evaluation device : Bundled - Debugger software : WATCHPOINT	PF953		—	—	—	—	MB91107A MB91108
—	CS2373A FR TYPE II -PB-QF120SD-AD CS2373B YQPACK120SD CS2373C NQPACK120SD	- Host I/F board - UniSTAC (US72001G) - Evaluation device : Bundled - Debugger software : WATCHPOINT	Not supported		—	—	—	—	MB91121
—	Not supported	Not supported	Not supported		—	—	—	—	MB91106A
—	Not supported		Not supported		—	—	—	—	
—	Not supported	Not supported	Not supported		MB91F109 (LQFP-100)	Minato Electronics *6	MF00-782	Yokogawa Digital Computer NETIMPRESS *8	MB91F109
—	Not supported	Not supported	Not supported		MB91F109 (QFP-100)	Minato Electronics *6	MF00-783	Yokogawa Digital Computer NETIMPRESS *8	
—	Not supported	Not supported	Not supported		—	—	—	—	MB91110
—	Not supported	Not supported	Not supported		MB91F128 (LQFP-100)	Ando Electric	TE110-123F14AP	Not supported	MB91F127 MB91F128

Support Hardware for FR Family

Target Microcontroller		Development Tools			
		Fujitsu ICE			Fujitsu
Product name	Package (Lead pitch, body size)	Adapter, header	Main unit, other	- Evaluation Device - Package - DSU type	Evaluation board
MB91133 MB91F133A	- LQFP-144 - 0.5 mm, 20 × 20 mm - FPT-144P-M08	- Adapter board : MB2197-130 - Header : MB2197-135 *3 Note : Tokyo EletechIC socket is required separately (1-set is bundled : NQPACK144SD, HQPACK144SD) .	- Main unit : MB2198-01 - DSU cable : MB2198-10 - Evaluation device : separately available - Debugger software : SOFTUNE - RS232C cable : Commercial product (9pin-9pin closs) - USB1.1 cable : Commercial product - LAN cable : Commercial product	- MB91FV130 - PGA299 - DSU3	- Mother board : MB91906EB - Daughter board : MB91908EB * : Simple substance use is possible. (Option : MB91F133A , Connection use of ICE is possible(NQPACK socket is used) .
MB91151A	- LQFP-144 - 0.5 mm, 20 × 20 mm - FPT-144P-M08	- Adapter board : MB2197-150 - Header : MB2197-155 *3 Note : Tokyo EletechIC socket is required separately (1-set is bundled : NQPACK144SD, HQPACK144SD) .		- MB91V151A - PGA299 - DSU3	- Mother board : MB91906EB - Daughter board : MB91911EB * : Simple substance use is possible. (Option : MB91F155A , Connection use of ICE is possible(NQPACK socket is used) .
MB91154 MB91155 MB91F155A	- LQFP-144 - 0.5 mm, 20 × 20 mm - FPT-144P-M08	- Adapter board : MB2197-150 - Header : MB2197-155 *3 Note : Tokyo EletechIC socket is required separately (1-set is bundled : NQPACK144SD, HQPACK144SD) .		- MB91FV150 - PGA299 - DSU3	- Mother board : MB91906EB - Daughter board : MB91911EB * : Simple substance use is possible. (Option : MB91F155A , Connection use of ICE is possible(NQPACK socket is used) .
MB91232 MB91F233 MB91F233L	- LQFP-120 - 0.4 mm, 16 × 16 mm - FPT-120P-M05	- Adapter board : MB2198-120 - Header : MB2198-121 Note : Tokyo EletechIC socket is required separately (1-set is bundled : NQPACK120SE, HQPACK120SE) .		- MB91V230 - PGA401 - DSU4	Evaluation board : under development
MB91263 MB91F264	- LQFP-100 - 0.65 mm, 14 × 20 mm - FPT-100P-M06	- Adapter board : MB2198-120 - Header : MB2198-122		- MB91V260 - PGA401 - DSU4	Under development
MB91302A	- LQFP-144 - 0.4 mm, 16 × 16 mm - FPT-144P-M12	- Adapter board : MB2198-100 - Header : MB2198-101 *3 Note : Tokyo EletechIC socket is required separately (1-set is bundled : NQPACK144SE, HQPACK144SE) . - RAM board (Option) : MB2198-90		- MB91V301A - PGA179 - DSU4	- Mother board : MB91906EB - Daughter board : MB91914EB
MB91306R MB91307B MB91307R	- LQFP-120 - 0.5mm,16 × 16mm - FPT-120P-M21	- Adapter board : MB2197-170A - Header : MB2197-172 Note : Tokyo EletechIC socket is required separately (1-set is bundled : NQPACK120SD, HQPACK120SD. - RAM board (Option) : MB2197-91		- MB91V307R - PGA135 - DSU3	- Mother board : MB91906EB - Daughter board : MB91915EB
MB91340	- LQFP-176 - 0.5 mm, 24 × 24 mm - FPT-176P-M02	- Adapter board : MB2197-140 - Header : MB2197-147		- MB91V340 - PGA361 - DSU3	- Mother board : MB91906EB - Daughter board : MB91912EB * : Connection use of ICE is possible (NQPACK socket is used) .
MB91352A MB91353A MB91F353A	- LQFP-120 - 0.5 mm, 16 × 16 mm - FPT-120P-M21	- Adapter board : MB2198-110 - Header : MB2198-112 Note : Tokyo EletechIC socket is required separately (1-set is bundled : NQPACK120SD, HQPACK120SD.		- MB91V350A - BGA420 - DSU4	Not supported

Support Hardware for FR Family

Development Tools	Development Tools				Equipment for Program to FLASH				Target Microcontroller
Sun Hayato Co., Ltd.	SOPHIA SYSTEMS ICE *4		Yokogawa Digital Computer ICE *5		Microcontroller Subject to Program	Parallel programmer		Serial programmer	
Evaluation board	Adapter	Equipment common to series	Pod	Equipment common to series	Product name (Package)	Maker name	Programming adapter	Maker name Product name	Product name
—	Not supported	Not supported	PF960	- advice (AD250) - Evaluation device : Bundled - Debugger software : VIEW-G	MB91F133A (LQFP-144)	Minato Electronics *6	MF00-871	Yokogawa Digital Computer NETIMPRESS *8	MB91133 MB91F133A
—	CS2374A FR TYPE III-PB-QF144-AD CS2246B YQPACK144SD CS2246C NQPACK144SD	- Host I/F board - UniSTAC (US72003G) - Evaluation device : Bundled - Debugger software : WATCHPOINT	Not supported		—	—	—	—	MB91151A
—						—	—		
—	CS2374A FR TYPE III-PB-QF144-AD CS2246B YQPACK144SD CS2246C NQPACK144SD	- Host I/F board - UniSTAC (US72003G) - Evaluation device : Bundled - Debugger software : WATCHPOINT	Not supported		MB91F155A (LQFP-144)	Minato Electronics *6	MF13-1003	Yokogawa Digital Computer NETIMPRESS *8	MB91154 MB91155 MB91F155A
—						Ando Electric	TE110-155F10AP *7		
Evaluation board : under development	Not supported	Not supported	YF700	- advicePLUS - Debugger software : YDC micro-VIEW-PLUS	MB91F233 MB91F233L (LQFP-120)	Minato Electronics *6	MF13-11330	Yokogawa Digital Computer NETIMPRESS *8	MB91232 MB91F233 MB91F233L
						Ando Electric	Under development		
Under development	Not supported	Not supported	Not supported	Not supported	MB91F264 (QFP-100)	Minato Electronics *6	Under development	Yokogawa Digital Computer Under development *8	MB2163 MB91F264
						Ando Electric	Under planning		
—	Not supported	Not supported	Not supported	Not supported	—	—	—	—	MB91302A
—	Not supported	Not supported	PF961	- advice (AD250 - Evaluation device : Bundled - Debugger software : YDC micro-VIEW-G	—	—	—	—	MB91306R MB91307B MB91307R
Not supported	Not supported	Not supported	Not supported	Not supported	—	—	—	—	MB91340
—	Not supported	Not supported	Not supported	Not supported	MB91F353A (LQFP-120)	Minato Electronics *6	Under development	Yokogawa Digital Computer NETIMPRESS *8	MB91352A MB91353A MB91F353A
—						Ando Electric	TEF110-353F18AP		

Support Hardware for FR Family

Target Microcontroller		Development Tools			
		Fujitsu ICE			Fujitsu
Product name	Package (Lead pitch, body size)	Adapter, header	Main unit, other	- Evaluation Device - Package - DSU type	Evaluation board
MB91354A MB91355A MB91F355A	- LQFP-176 - 0.5 mm, 24 × 24 mm - FPT-176P-M02	- Adapter board : MB2198-110 - Header : MB2198-121 Note : Tokyo EletechIC socket is required separately (1-set is bundled : NQPACK176SD, HQPACK176SD.	- Main unit : MB2198-01 - Evaluation device : separately available - Debugger software : SOFTUNE - RS232C cable : Commercial product(9pin-9pin closs) - USB1.1 cable : Commercial product - LAN cable : Commercial product	- MB91V350A - BGA420 - DSU4	- Mother board : MB91906EB - Daughter board : MB91916EB
MB91340	- LQFP-176 - 0.5 mm, 24 × 24 mm - FPT-176P-M02	- Adapter board : MB2197-140 - Header : MB2197-147 *3 Note : Tokyo EletechIC socket is required separately (1-set is bundled. : NQPACK176SD, HQPACK176SD) .		- MB91V340 - PGA361 - DSU3	- Mother board : MB91906EB - Daughter board : MB91912EB * : Connection use of ICE is possible (NQPACK socket is used) .
MB91F362GA	- QFP-208 - 0.5 mm, 28 × 28 mm - FPT-208P-M04	- Adapter board : MB2197-120 - Header : MB2197-127 *3 Note : Tokyo EletechIC socket is required separately (1-set is bundled. : NQPACK208SD, HQPACK208SD) .		- MB91FV360GA - PGA401 - DSU3	- Mother board : MB91906EB - Daughter board : MB91913EB * : Simple substance use is possible (Option : MB91F362GA , Connection use of ICE is possible (NQPACK socket is used).
MB91F365GB *1	- LQFP-120 - 0.5 mm, 16 × 16 mm - FPT-120P-M21	- Adapter board : MB2197-120 - Hheader : MB919360-120L or MB919360-120H			Not supported
MB91F366GB *1	- LQFP-120 - 0.5 mm, 16 × 16 mm - FPT-120P-M21				Not supported
MB91F367GB *1	- LQFP-120 - 0.5 mm, 16 × 16 mm - FPT-120P-M21				Not supported
MB91F368GB *1	- LQFP-120 - 0.5 mm, 16 × 16 mm - FPT-120P-M21				Not supported
MB91F369GA	- LQFP-160 - 0.65 mm, 28 × 28 mm - FPT-160P-M15	- Adapter board : MB2197-120 - Header : MB919360-160			Under development

Support Hardware for FR Family

Development Tools	Development Tools				Equipment for Program to FLASH				Target Microcontroller
Sun Hayato Co., Ltd.	SOPHIA SYSTEMS ICE *4		Yokogawa Digital Computer ICE *5		Microcontroller Subject to Program	Parallel programmer		Serial programmer	
Evaluation board	Adapter	Equipment common to series	Pod	Equipment common to series	Product name (Package)	Maker name	Programming adapter	Maker name Product name	Product name
—	Not supported	Not supported	Not supported	Not supported	MB91F355A (LQFP-176)	Minato Electronics *6	MF13-1361	Yokogawa Digital Computer NETIMPRESS *8	MB91354A MB91355A MB91F355A
—						Ando Electric	TEF110-355F19AP		
—	Not supported	Not supported	Not supported	Not supported	—	—	—	—	MB91340
—	Not supported	Not supported	Not supported	Not supported	MB91F362GA (QFP-208)	Minato Electronics *6	MF00-892 *6	Yokogawa Digital Computer *5 NETIMPRESS *8	MB91F362GA
—	Not supported	Not supported	Not supported	Not supported	MB91F365GB	Not supported	Not supported	Not supported	MB91F365BG *1
—	Not supported	Not supported	Not supported	Not supported	MB91F366GB	Not supported	Not supported	Not supported	MB91F366GB *1
—	Not supported	Not supported	Not supported	Not supported	MB91F367GB	Not supported	Not supported	Not supported	MB91F367GB *1
—	Not supported	Not supported	Not supported	Not supported	MB91F368GB	Not supported	Not supported	Not supported	MB91F368GB *1
—	Not supported	Not supported	Not supported	Not supported	MB91F369GA (QFP-160)	—	—	Yokogawa Digital Computer *5	MB91F369GA

*1 : The emulation function of built-in FLASH254K byte of MB91F109 has restriction in part.
Please ask for details the operating section in your duty or a support section.
*2 : A Yamaichi Electronics IC socket is required for connection of an adapter.
Contact details : TEL : (81-3)3778-6104, FAX : (81-3)3778-6171, http://www.yamaichi.co.jp/e/index.shtml
*3 : A Tokyo Eletech IC socket is required for connection of an adapter (side of user's board)
Contact details : TEL : (81-3)5295-1661, FAX : (81-3)5295-1663, http://www.tetc.co.jp/e_tet.htm
*4 : SOPHIA SYSTEMS CO.,LTD.
Contact details : TEL : (81-44)989-7253, FAX : (81-44)989-7014, http://www.sophia.com/
*5 : Yokogawa Digital Computer Corporation
Contact details : TEL : (81-42)333-6222, FAX : (81-42)352-6107, http://www.ydc.co.jp/advice/advice-e/index.htm
*6 : MINATO ELECTRONICS INC.Contact details : TEL : (81-45)591-5611, FAX : (81-45)592-2854,
http://www.minato.co.jp/indext_e.html
*7 : Ando ElectricContact details : TEL : (81-44)549-7300, http://info.tactnet.co.jp/ando-fsg/e/
*8 : Yokogawa Digital Computer Corporation
Contact details : TEL : (81-42)333-6224, FAX : (81-42)352-6107, http://www.ydc.co.jp/micom/index_E.htm