HEWLETT PACKARD

English

HP DeskJet 520

Printer for IBM and compatible computers

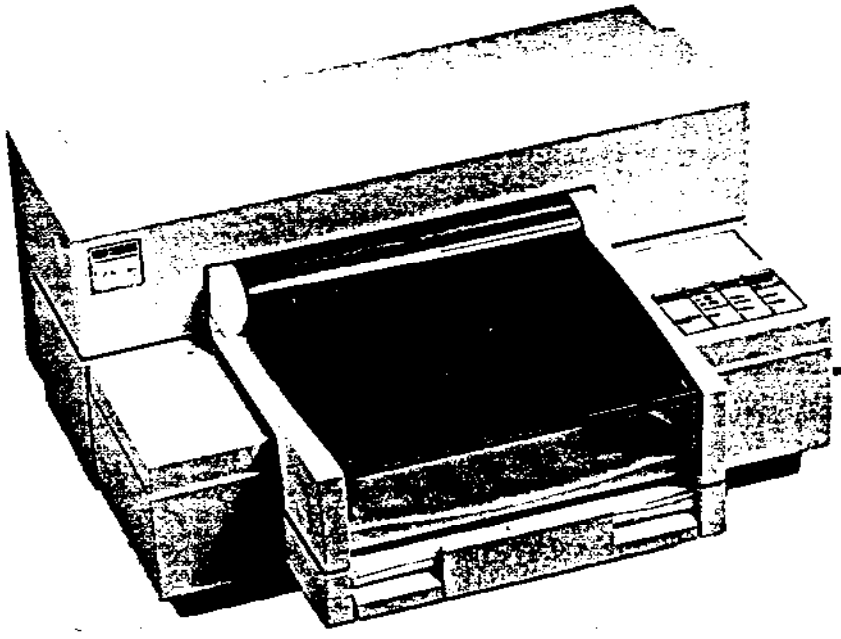

User's Guide

Customer Support

If your printer is not operating properly, use these instructions to obtain help:

1. See the Troubleshooting and Maintenance chapter in this user's guide for suggestions to solve the problem or obtain information by fax through HP FIRST (U.S. and Europe). See "Support Information by FAX" below.

For customers in the U.K., France, Germany, Switzerland, Austria, Belgium, Norway, Sweden, Denmark, Finland and the Netherlands:

Use the suggestions listed above or contact the HP European Customer Support Center. This phone service is available at no charge during the printer warranty period. Phone numbers are given in a document shipped with the printer. For more information, call your dealer or nearest HP Sales and Support Office.

Customer support representatives can answer your questions regarding the setup, configuration, installation, and operation of your printer. They can also help troubleshoot and diagnose printer problems and give instructions for service and repair.

2. If you are unable to determine the cause of the failure, contact your local dealer or nearest HP Sales and Support Office for information on service and repair.

Support Information by FAX

HP FIRST (FAX Information Retrieval Support Technology) is a no-charge, 24-hour self-help service that provides answers to the most common questions about your printer. Through HP FIRST, you can receive ordering information, software application notes and printer driver update request forms.

Simply dial the HP FIRST number from a touch tone phone or Group 3 facsimile machine and follow the voice prompts that guide you to select an index of available support and product documents.

For service in English outside U.K.	(31) 20 681 5792
U.K.	0800 96 02 71
Netherlands	06 02 22 420
Belgium	078 11 19 06
Belgium (French)	078 11 70 43
Germany	0130 810061
France	05 905900
Switzerland	155 1527
Switzerland (French)	155 1526
Austria	0660 8128
U.S.	1-800-333-1917

HP DeskJet 520 Printer

User's Guide

Manual Part Number
C2170-90011

Acknowledgments

Times Roman™, Helvetica™, and Univers™ are trademarks of Linotype AG and/or its subsidiaries.

CG Times is a product of Agfa Corporation is based on Times New Roman under license from The Monotype Corporation plc, and scalable outlines are licensed from Agfa Division of Miles Inc.

Microsoft® is a U.S. registered trademark of Microsoft Corporation.

Windows™ is a trademark of Microsoft Corporation.

TrueType™ is a U.S. trademark of Apple Computer, Inc.

Monotype® is a U.S. registered trademark of The Monotype Typography Ltd.

Arial® is a U.S. registered trademark of The Monotype Corporation.

PL is a trademark of Photolettering Inc.

Graphite is a trademark of David Siegel.

Gills Sans® is a U.S. registered trademark of The Monotype Corporation.

Milestones™ is a trademark of The Monotype Corporation.

Notice

The information contained in this document is subject to change without notice.

Hewlett-Packard makes no warranty of any kind with regard to this material, including, but not limited to, the implied warranties of merchantability and fitness for a particular purpose.

Hewlett-Packard shall not be liable for errors contained herein or for incidental or consequential damages in connection with the furnishing, performance, or use of this material.

No part of this document may be photocopied, reproduced, or translated to another language without the prior written consent of Hewlett-Packard Company.

Printing History

Edition 1 December 1993

© Copyright 1993 by Hewlett-Packard Company

Table of Contents

Chapter 1 ***Welcome***

The Parts of the Printer 1-2

Printer Features 1-3

The Printer Control Panel 1-4

Managing Printer Features 1-6

Chapter 2 ***Using Paper and Other Media***

Selecting and Storing Media 2-2

Adding Media 2-3

Loading Media 2-11

Removing Executive Size Paper and Envelopes 2-12

Chapter 3 ***Using Print Cartridges***

Storing and Using Print Cartridges 3-2

Removing the Print Cartridge 3-3

Installing the Print Cartridge 3-5

Chapter 4 *Troubleshooting and Maintenance*

When the Printer Won't Print 4-2
When the Lights Blink 4-3
Printer Self-Test Problems 4-4
Printing Problems 4-5
Media Problems 4-7
Print Cartridge Problems 4-10
Maintaining Your Printer 4-11
Customer Support 4-12

Chapter 5 *Reference*

The Configuration Switches 5-2
Print Settings 5-4
Fonts 5-6
Installing Cartridges 5-8
Character Sets 5-9
Printer Commands 5-18
IBM Proprinter Compatibility Mode 5-27
Specifications 5-33
Regulatory Notices 5-35
Interface and Cable Requirements 5-37
Increasing Printer Performance 5-38
Ordering Information 5-39

Glossary

Index

1

Welcome

This chapter introduces you to the HP DeskJet 520 printer.

The Parts of the Printer 1-2
Printer Features 1-3
The Printer Control Panel 1-4
Managing Printer Features 1-6
A Word About Printer Drivers 1-7

The Parts of the Printer

Before you use your printer, identify these parts.

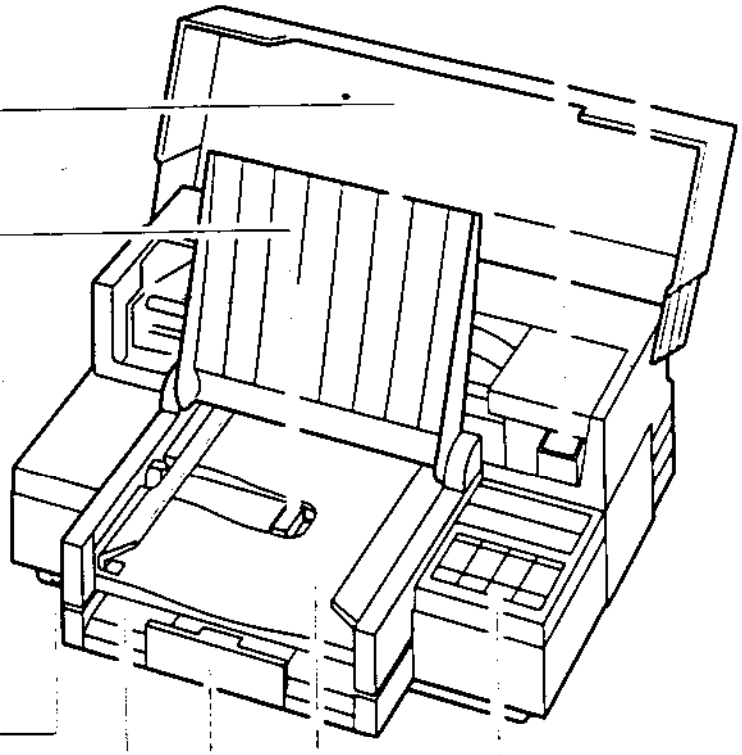

Printer Features

Your new HP DeskJet 520 printer is a quiet, professional-quality, desktop printer with many unique features. Some of the printer's features include:

Quality Supports high-quality plain paper printing with 600 x 300 dots per inch (dpi) for text and graphics.

Media Supports many media types and sizes, including plain paper, glossy paper, transparency films, European A4 size, U.S. letter and legal sizes, and executive size. Also supports U.S. No. 10 size or European DL size envelopes. See chapter 2 to learn more about media and its use with the printer.

Fonts Supports a wide range of fonts, including internal fonts, scalable fonts, cartridge fonts, and soft fonts. See chapter 5 to learn more about fonts.

Graphics The graphics support is limited by the support provided by your software application. See your software application manual to learn how to print graphics.

Software Supports software control from Microsoft Windows 3.1 applications, DOS applications, and OS/2 applications when using the appropriate printer drivers.

The Printer Control Panel

The buttons on the printer control panel allow you to control the operations and mechanics of the printer. Any settings you make with your application software override settings made with the printer control panel. The lights on the printer control panel show the printer's status and report error conditions.

Reset — Returns printer to default settings.

Clean — Begin print cartridge cleaning process.

Self Test— Begin printer self-test.

Install Print Cartridge — Move print cartridge cradle for access to the print cartridge. This indicator lights when the print cartridge is missing.

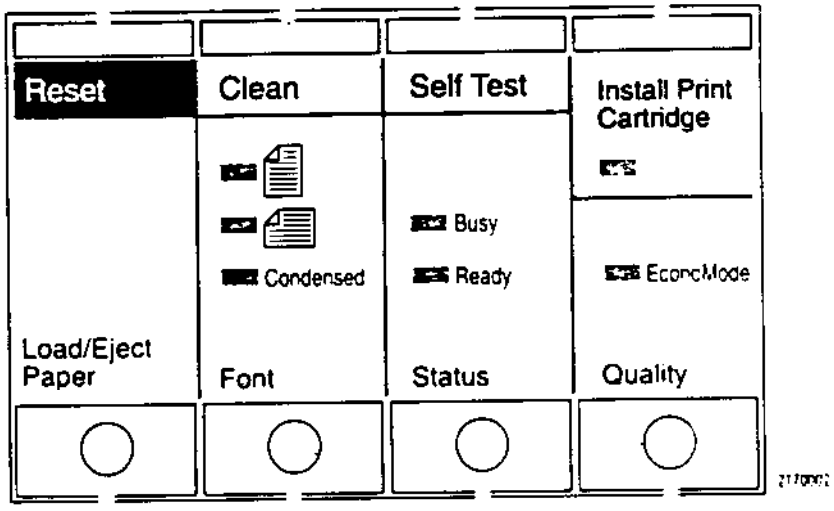

Load/Eject Paper — Advance media into or ejects media from printer.

Font — Select internal fonts, font cartridges, and orientation.

Status — Toggle between offline and online. Press button during printing to pause; press again to resume.

Quality — Toggle between economode and letter quality printing. Letter quality is the default.

NOTE

The lights blink in different combinations, to indicate printer errors. See chapter 4 to solve printer errors.

Portrait Font — Indicates a portrait font is selected.

Landscape Font — Indicates a landscape font is selected.

Condensed Font — Indicates a condensed font is selected.

Busy —Indicates printer is receiving information.

Ready — Indicates printer is online and ready to print.

EconoMode — When lit, indicates economode quality print is selected; otherwise, letter quality print is selected.

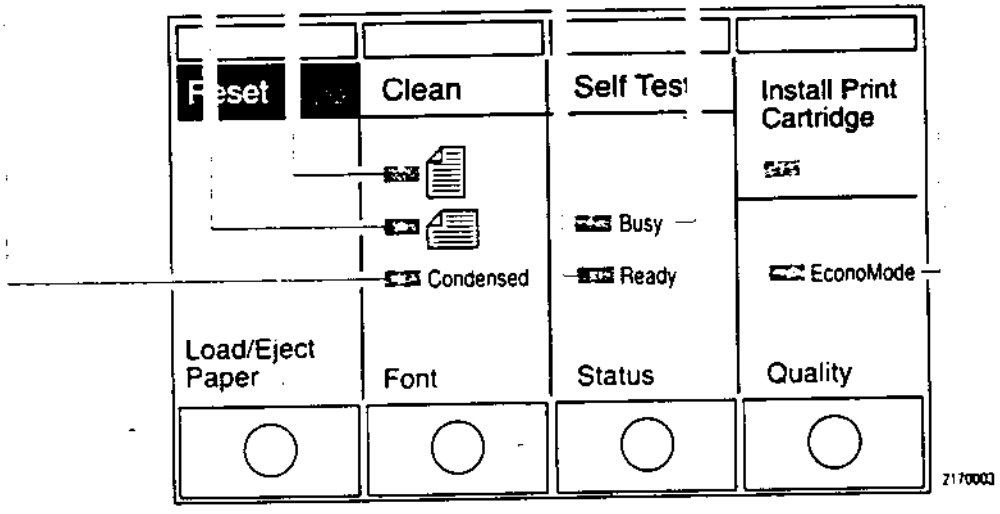

Managing Printer Features

You select and control the printing features of the HP DeskJet 520 printer with your software application in conjunction with a printer driver, with printer commands, with the printer's control panel, or with the printer's configuration switches. As shown, each method allows you to set some or all of the printing features that control the appearance of your printed documents.

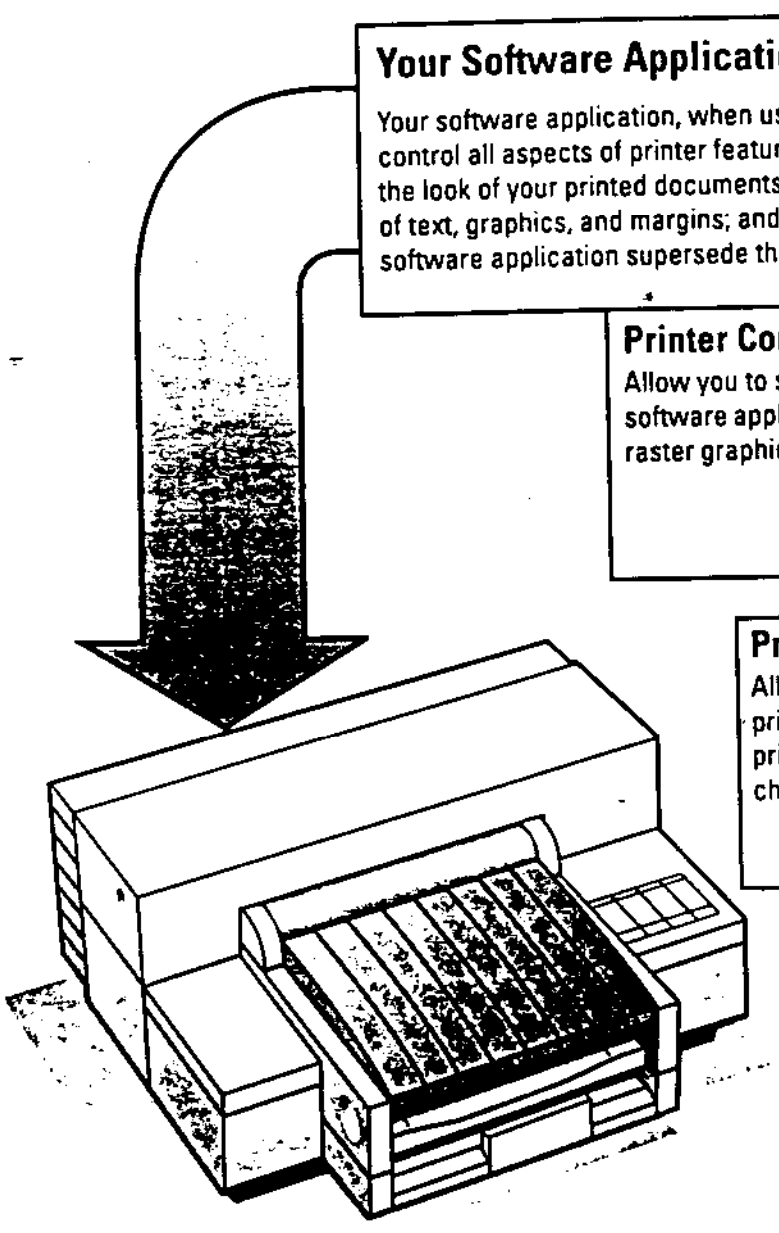

Your Software Application

Your software application, when used with the appropriate printer driver, can control all aspects of printer features. This is the easiest method for controlling the look of your printed documents including typeface style and size; placement of text, graphics, and margins; and so on. In general, settings made with your software application supersede those made with other control methods.

Printer Commands

Allow you to select settings not usually available in your software application such as stroke weight, cursor position, raster graphics control, and so on. See chapter 5 for details.

Printer Control Panel Buttons

Allow you to select basic printing modes, start a printer self-test, clean the print cartridge, put the printer online, and take the printer offline. See chapter 4 for details.

Configuration Switches

Allow you to set the default printer settings such as paper/envelope size, text lines per page, and so on. See chapter 5 for details.

A Word About Printer Drivers

When using a software application, selecting the correct printer driver can mean the difference between being able to use all of the printer's features or only some of them. The best printer driver to use is always the one that most closely matches the name of your printer. Before you can print documents from your software application, install the appropriate printer driver on your computer.

If you use Microsoft Windows 3.1 applications:

For best results, use the printer driver for the HP DeskJet 520 printer provided on the diskette with the printer. Refer to the *HP DeskJet 500 Series Printer Software Guide for Microsoft Windows* for information on installing the printer driver.

If you use OS/2 applications:

Use the HP DeskJet 520 or DeskJet 510 printer driver supplied by IBM and installed with the instructions provided by IBM. If an HP DeskJet 520 or DeskJet 510 printer driver is not listed contact your IBM representative.

If you use DOS applications:

For each DOS software application that you intend to use with the HP DeskJet 520 printer, you must install a printer driver. Your DOS software application supplies you with printer drivers for many printer models. A printer driver that supports the HP DeskJet 520 printer features may already be available through your software application.

To determine if your software application provides a printer driver appropriate for your printer, check your software application's printer selection or printer setup menu for a list of printer model names. The next table identifies recommended printer driver selections and the type of support available with each.

Printer Driver Selection	Type of Printer Support
HP DeskJet 520 printer	Supports all printer features.
HP DeskJet 510 printer	Supports all printer features.
HP DeskJet 550C printer	Supports all printer features.
HP DeskJet Portable printer	Supports all printer features except envelope printing.
HP DeskJet 500 printer	Supports all printer features except for some fonts and envelope printing.

NOTE

If your application software does not provide the appropriate printer driver, contact your software manufacturer or distributor and request one. The instructions for installing a printer driver vary depending on the application software. See your software application manual for instructions.

2

Using Paper and Other Media

This chapter explains how to select, load, and store paper, envelopes, and other media.

Selecting and Storing Media 2-2
- Selecting Paper 2-2
- Selecting Envelopes 2-2
- Selecting Transparencies and Other Media 2-3
- Storing Media 2-3

Adding Media 2-3

Loading Media 2-3
- Loading Full Size Paper 2-4
- Loading Executive Size Paper 2-7
- Loading Envelopes 2-9

Removing Executive Size Paper and Envelopes 2-12

Selecting and Storing Media

The HP DeskJet 520 printer prints on plain paper and other media, such as HP LX JetSeries Glossy Paper and HP LX JetSeries Transparency Film. All three media types are available in U.S. letter size and European A4 size. Chapter 5 lists the media part numbers.

Selecting Paper

Most plain paper manufactured for photocopying yields good printing results. Because cotton bond paper yields excellent printing results, you should use it for your letterhead stationery. Use these guidelines to select paper:

- Print on both sides of a few sheets of paper before you purchase large quantities.
- Choose paper in the 60 to 135 g/m^2 (16 to 36 lb) range.
- Be sure that your paper does not have tears, dust, wrinkles, or curled or bent edges.

Selecting Envelopes

Use these guidelines to select envelopes:

- Print on a few envelopes before you purchase large quantities.
- Choose envelopes within the 75 to 90 g/m^2 (20 to 24 lb) range.
- Use high-quality envelopes that are thin and sharply creased.
- Use only U.S. No. 10 (104 x 241.3 mm) (4 ⅛ x 9 ½ in.) or European DL (220 x 110 mm) size envelopes.
- Do not use envelopes with thick or crooked edges, or envelopes that are damaged, curled, wrinkled, or irregularly shaped.
- Do not use envelopes that are extremely shiny or embossed, or envelopes with clasps or windows.

Selecting Transparencies and Other Media

Use these guidelines to select transparencies and other media:

- Use the media sizes listed in Chapter 5.
- Choose media within the 60 g/m^2 to 135 g/m^2 (16 lb to 36 lb) range.
- Do not use media that is damaged, curled, or wrinkled.
- Use HP LX JetSeries Transparency Film.
- Do not use media with cutouts or perforations.
- Do not use multiple-part forms or adhesive labels.
- Do not use media that is heavily textured or embossed.

Storing Media

Store your media in its packaging until you use it. Protect media from temperature and humidity extremes by wrapping it tightly in plastic.

Adding Media

To add media, remove all remaining media from the IN tray and combine it with a new stack of the same media type. The stack should not exceed 1 cm (½ in.).

Loading Media

Insert all media and envelopes *print side down* into the IN tray of the printer. The printer advances media around the paper feed rollers and delivers it print side up in the OUT tray.

Use these guidelines while loading media:

- Load only one media type at a time in the IN tray, and make sure the media sits evenly in the tray.
- Make sure the OUT tray is in the printer.
- Always load media print side down for best print quality.
- Never load more than 1 cm (½ in.) of media into the IN tray at one time.

Loading Full Size Paper

To load U.S. letter, U.S. legal size, or European A4 size paper in your printer:

1. Open the OUT tray cover.
2. Pull out the paper tray extender and remove all remaining media from the IN tray.

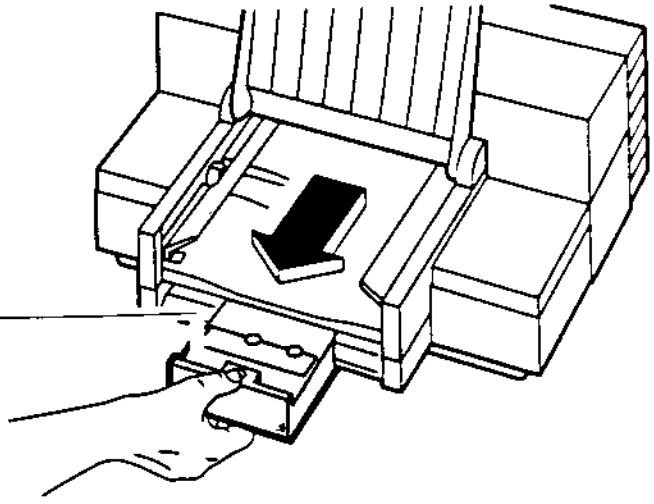

3. Slide the paper width adjustment lever to the appropriate size setting.

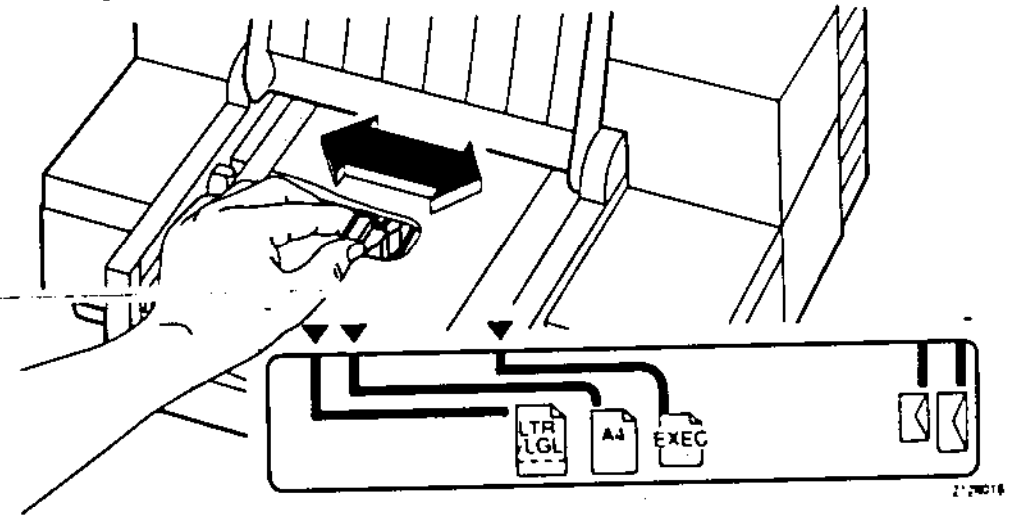

4. Remove a 1 cm (½ in.) stack of media from its packaging and tap the short edge of the stack on a flat surface to even the stack.

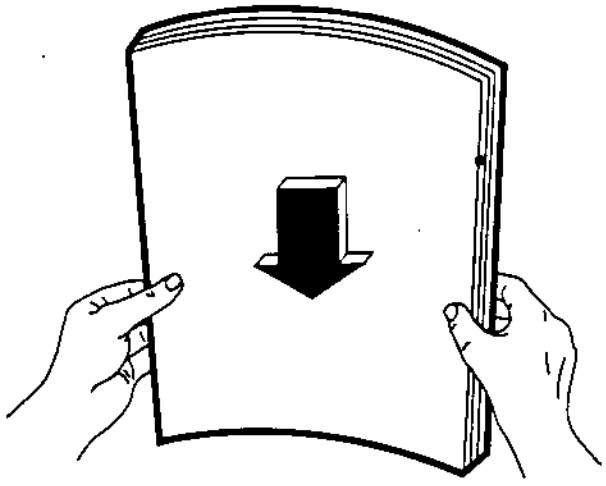

2124025

5. Insert the media evenly into the IN tray, *print side down*, until it stops.

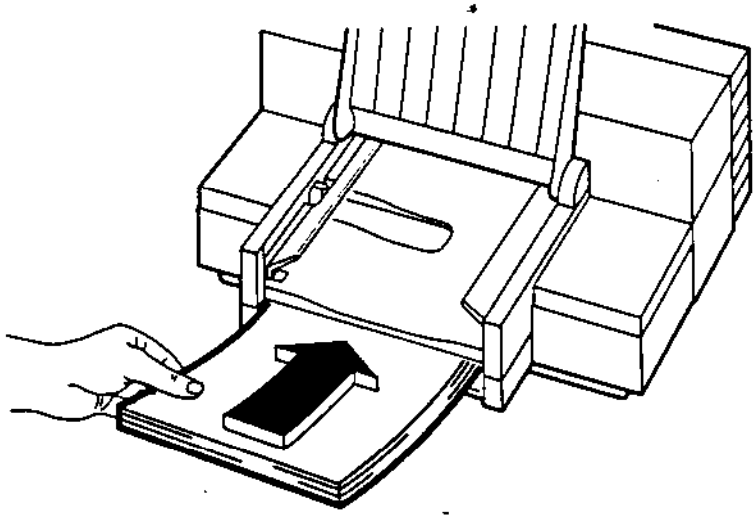

2128601

- For plain paper, the print side is identified by a symbol or word on the packaging. Load the *print side down*.
- For HP LX JetSeries Glossy Paper load the *glossy side down*.

- For letterhead paper, load the *letterhead side down and forward.*
- For HP LX JetSeries Transparency Film, load the *rough side down with the adhesive strip forward.*

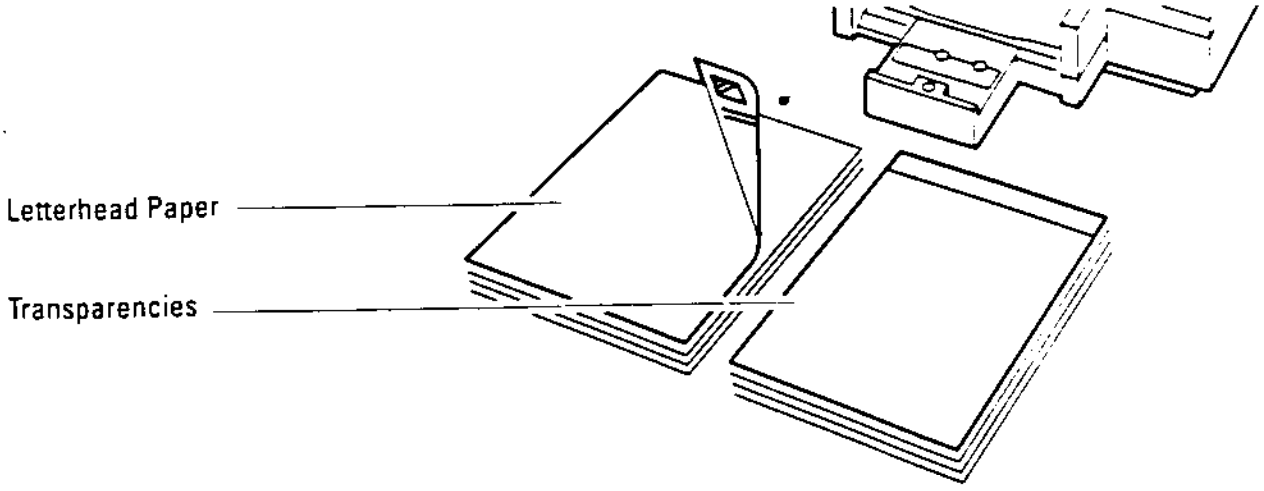

6. Push the paper tray extender in toward the printer, making sure the paper does not bend in the IN tray.

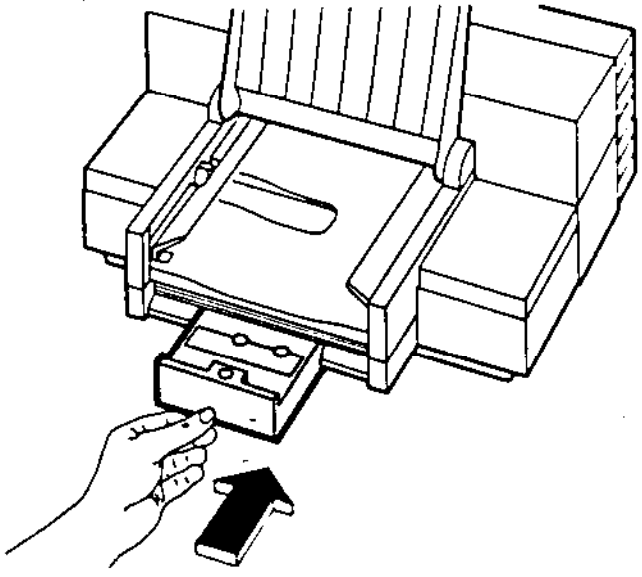

7. Close the OUT tray cover.

Loading Executive Size Paper

To load executive size paper in your printer follow these instructions:

1. Open the OUT tray cover.
2. Pull out the paper tray extender and remove all remaining media from the IN tray.

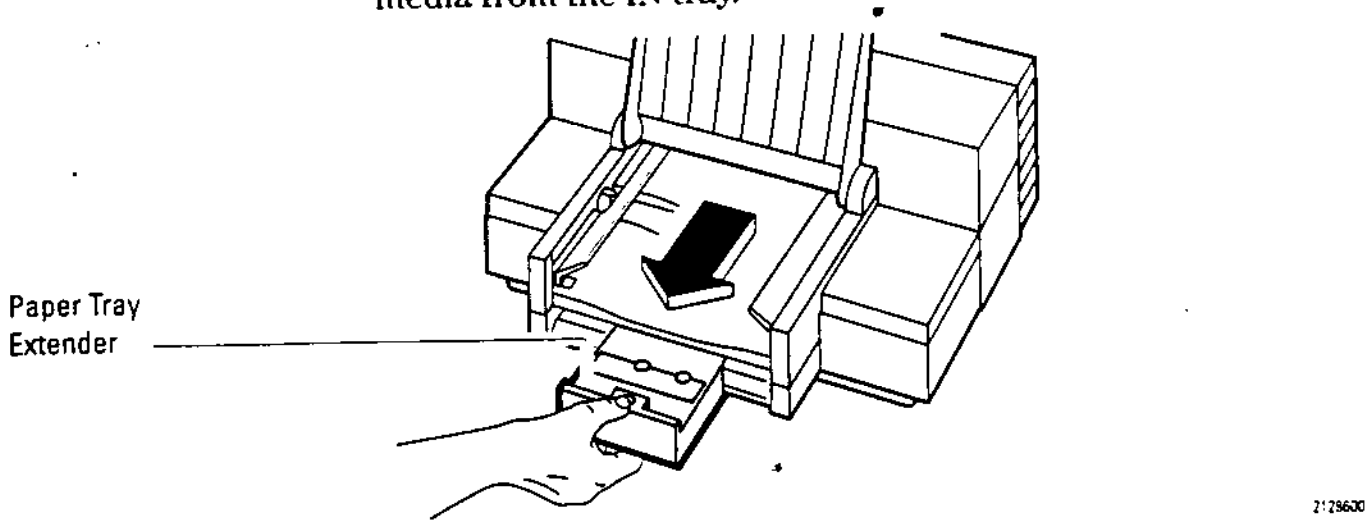

3. Slide the paper width adjustment lever to the executive paper size setting.

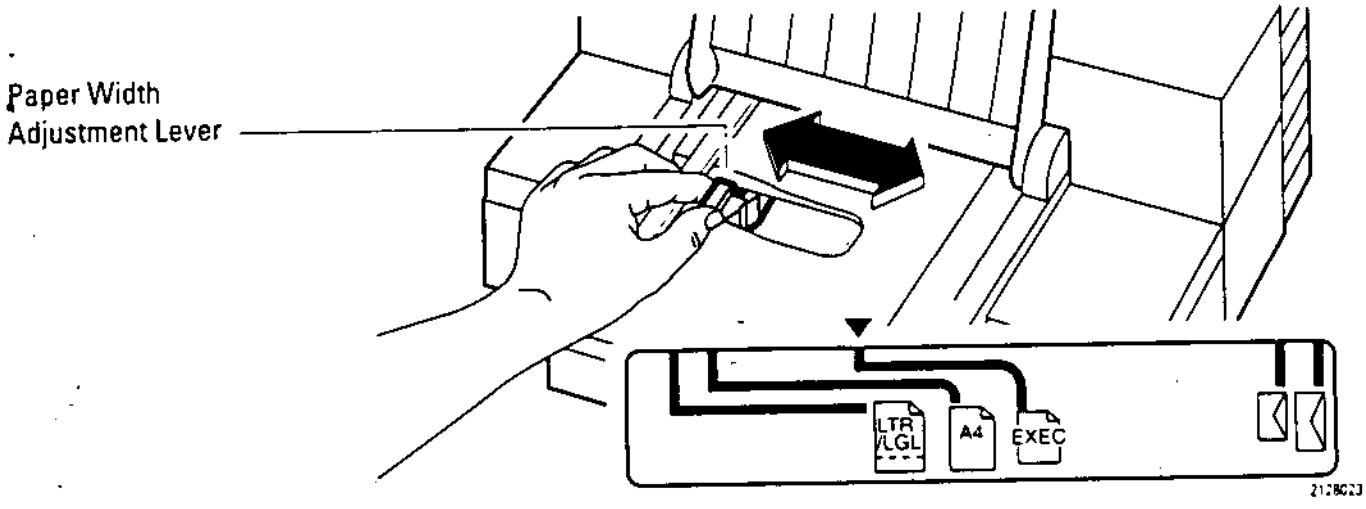

4. Remove a 1 cm (½ in.) stack of media from its packaging and tap the short edge of the stack on a flat surface to even the stack.

5. Insert the paper into the IN tray past the green envelope stop. Align the right edge of the paper stack with the right side of the printer.

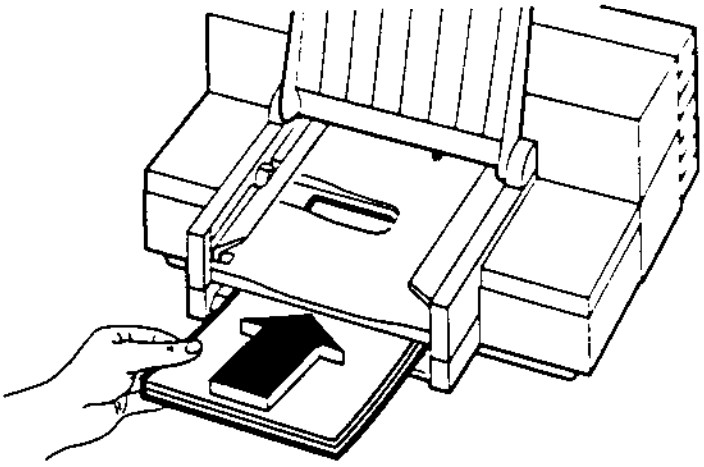

6. Raise the green envelope stop.

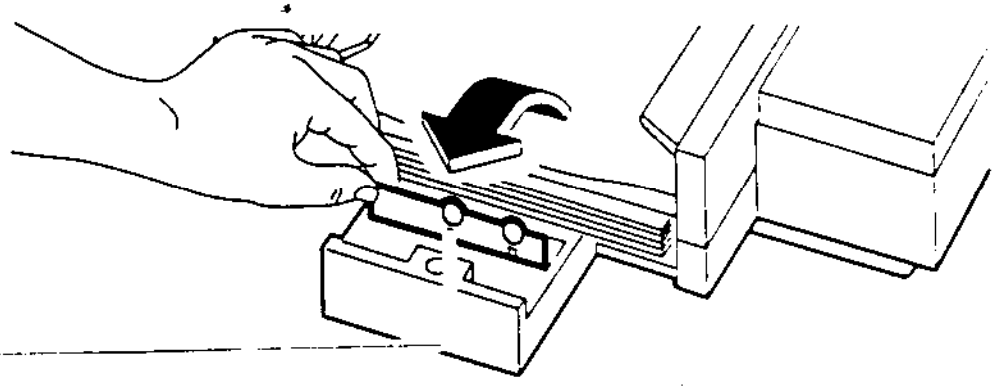

7. Push the paper tray extender in toward the printer until it stops. Make sure the paper does not bend in the IN tray.
8. Close the OUT tray cover.

Loading Envelopes

To load envelopes in your printer:

1. Open the OUT tray cover.
2. Pull out the paper tray extender and remove any media from the IN tray.

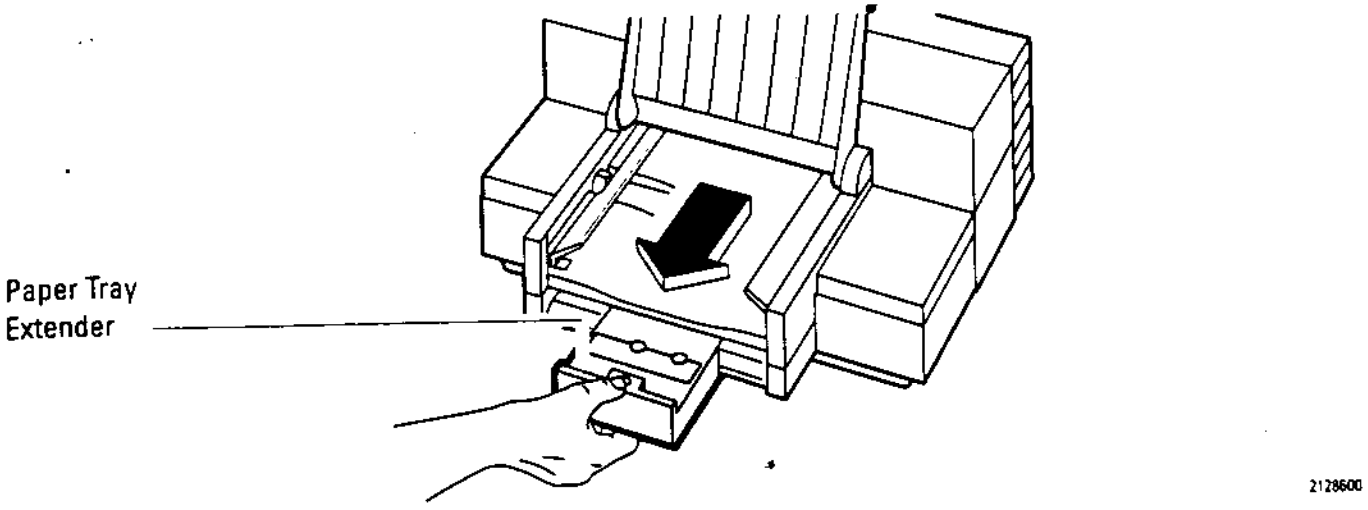

3. Slide the paper width adjustment lever to the appropriate envelope setting.

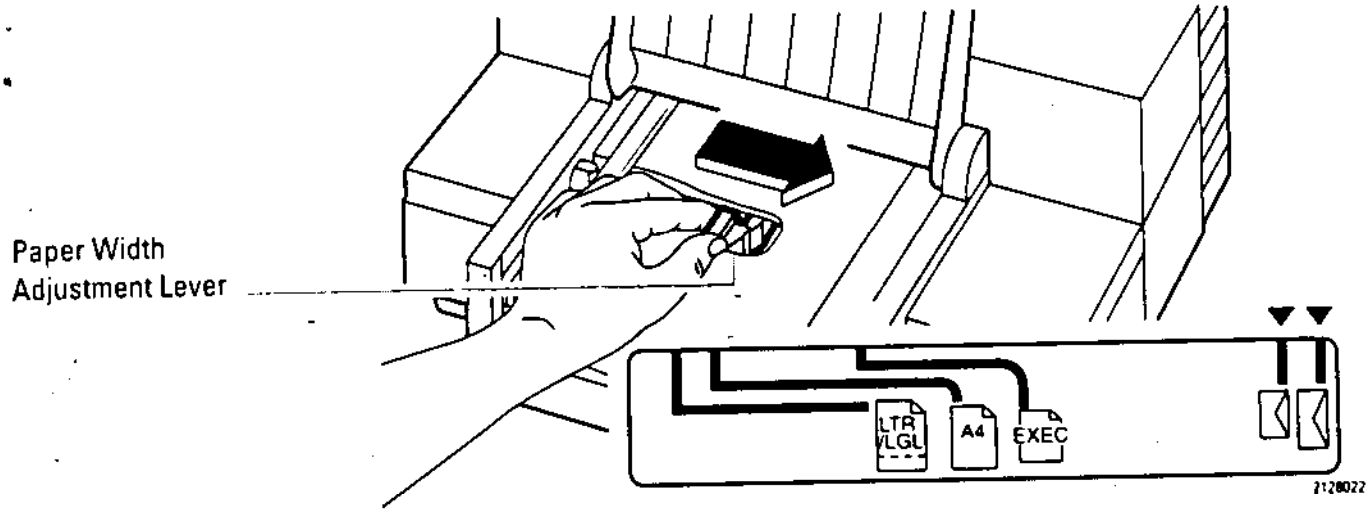

4. Remove up to 20 envelopes from their packaging and tap the short edge of the envelopes on a flat surface to even the stack.

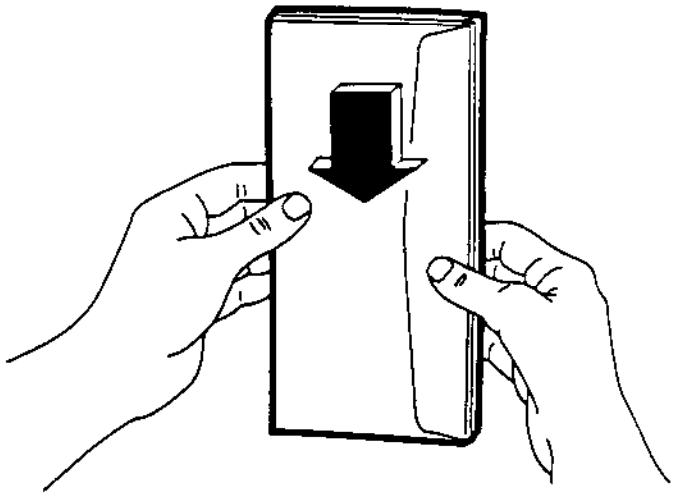

5. Slide the envelopes evenly into the IN tray, *address side down* (flap side up), past the green envelope stop.

   Make sure the creased flap edge of the stack aligns with the right side of the printer.

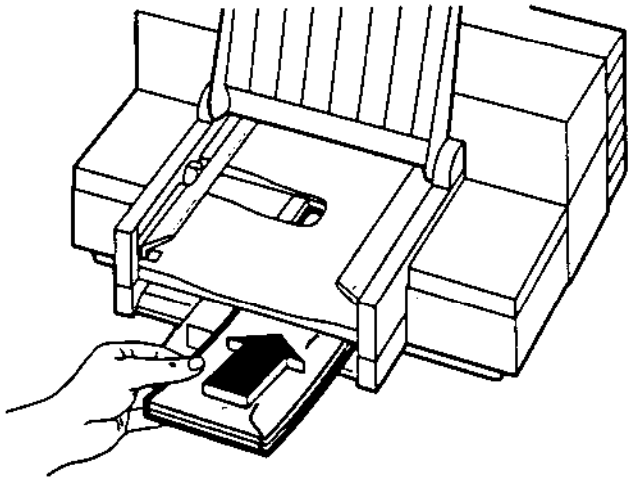

6. Raise the green envelope stop.

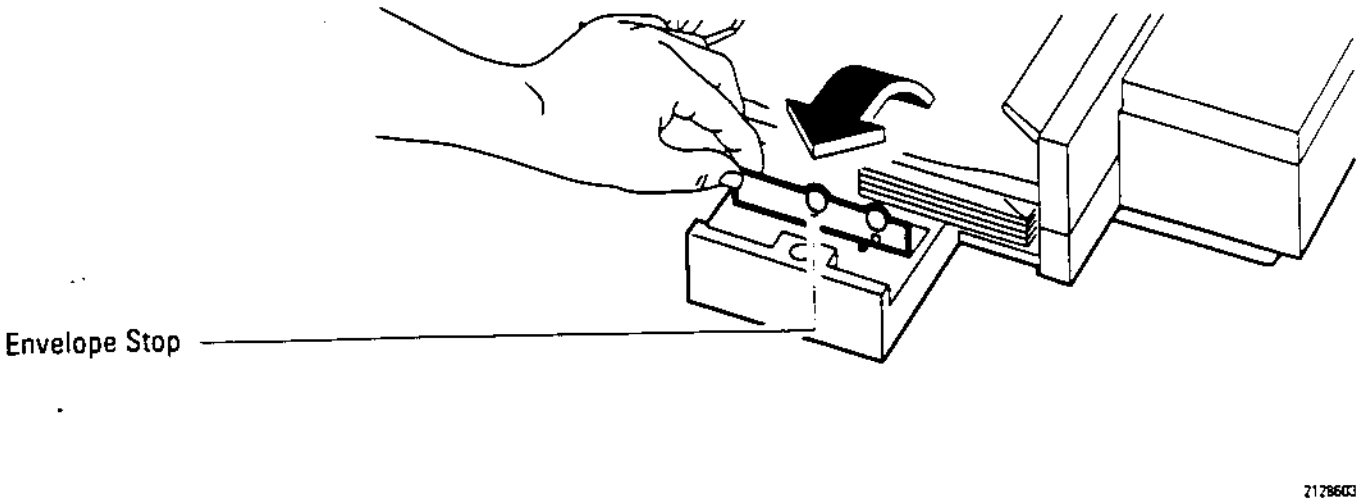

7. Push the paper tray extender in toward the printer until it stops. Make sure the envelopes do not bend in the IN tray.
8. Close the OUT tray cover.

Removing Executive Size Paper and Envelopes

To remove unused executive size paper or envelopes from the IN tray:

1. Remove the OUT tray and remove the paper or envelopes.

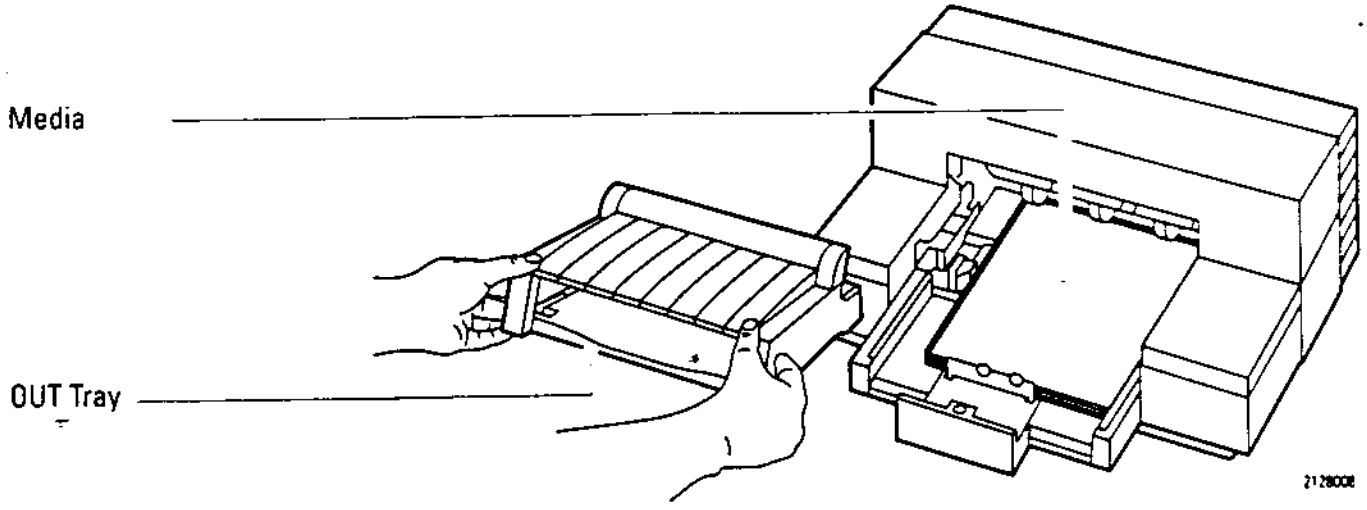

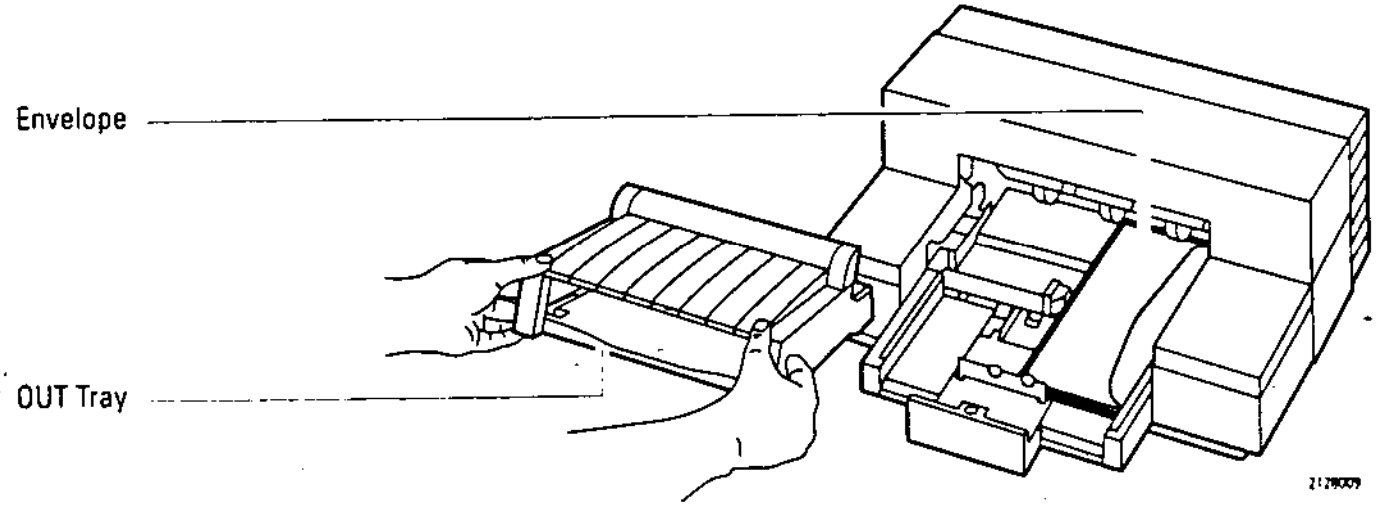

2. Lower the green envelope stop and replace the OUT tray.

   If you have problems while loading or removing media, see chapter 4.

3

Using Print Cartridges

This chapter explains how to store, remove, and install print cartridges.

Storing and Using Print Cartridges 3-2
Removing the Print Cartridge 3-3
Installing the Print Cartridge 3-5

Storing and Using Print Cartridges

To maintain excellent print quality from your print cartridges:

- Keep print cartridges in their sealed packages, at room temperature (15.6° – 26.6°C), until you are ready to use them.
- Keep the print cartridge in the print cartridge cradle at all times.
- Do not turn off the printer before printing is complete and the print cartridge has returned to the right side of the printer.

CAUTION

The ink in the cartridges has been carefully formulated by Hewlett-Packard to ensure superior print quality and compatibility with the printer. Damage to the printer or print cartridge resulting from modifying or refilling the print cartridge is not the responsibility of Hewlett-Packard.

Removing the Print Cartridge

1. Turn on the printer.
2. Open the printer's top cover.
3. Press the **Install Print Cartridge** button on the printer control panel. The print cartridge cradle moves to the left side of the printer.

Install Print Cartridge Button

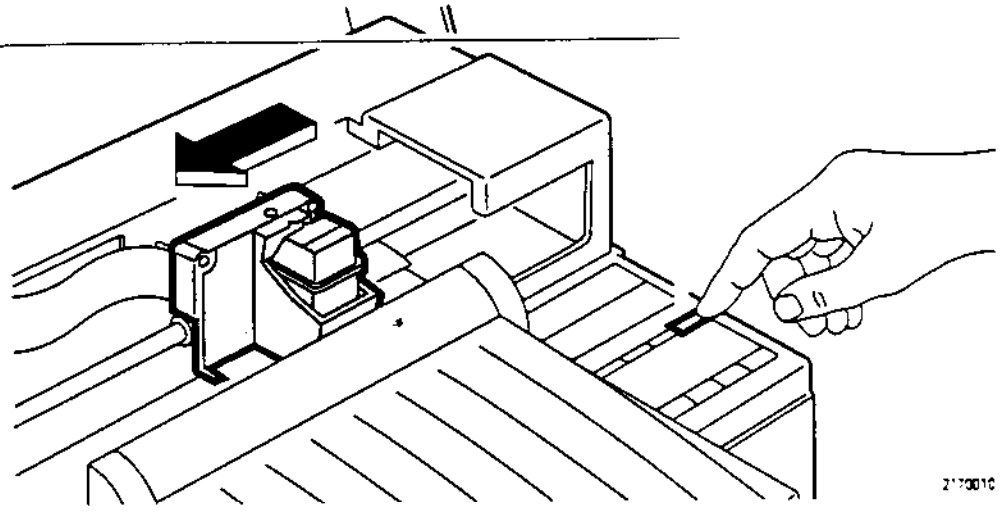

4. Grasp the top of the print cartridge and pull it toward you until the cartridge becomes loose.

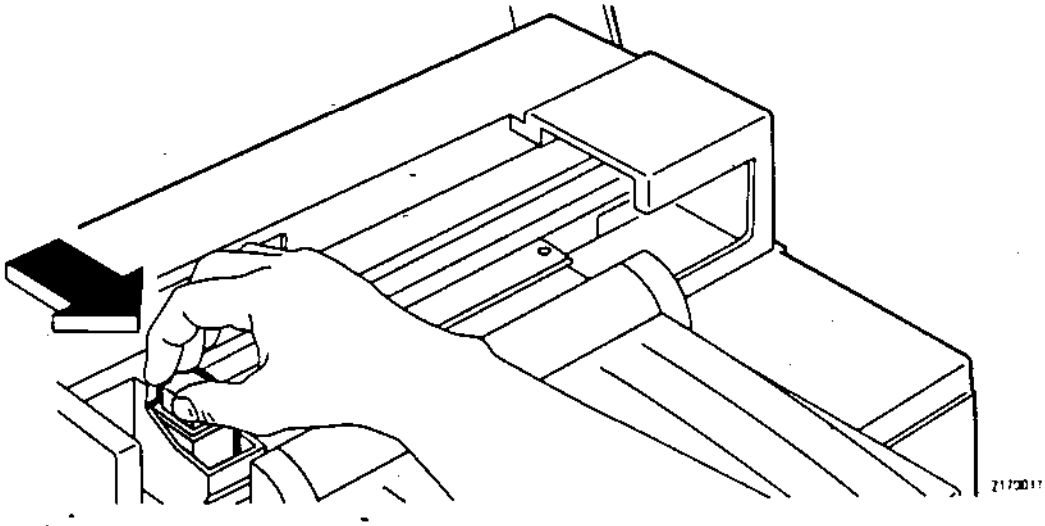

5. Lift the empty print cartridge out of the cradle and discard it.

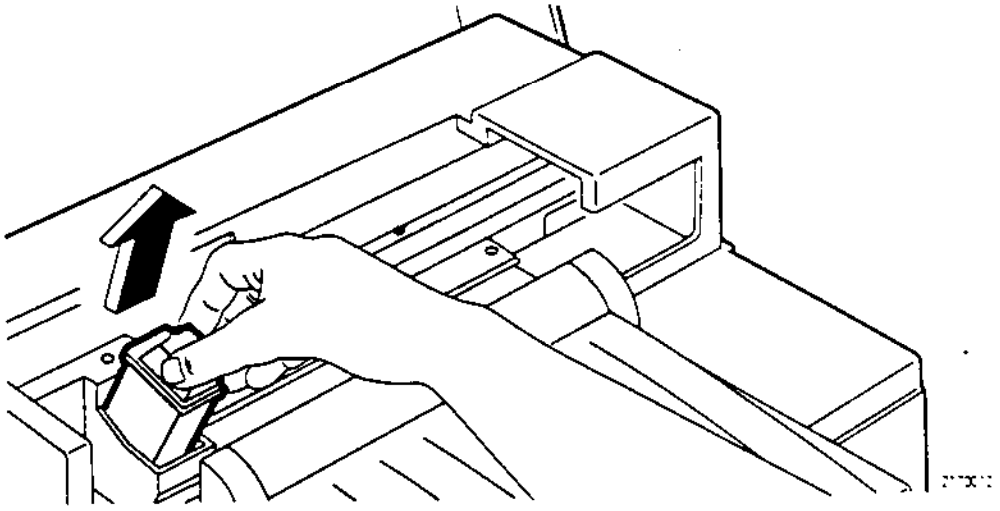

CAUTION

Keep new and used cartridges out of the reach of children.

Installing the Print Cartridge

1. Open the print cartridge box and container. Grasp the print cartridge by the green top and remove the cartridge from the container.
2. Gently remove both pieces of tape covering the ink nozzles:

   Do not touch the copper ribbon or the ink nozzles.

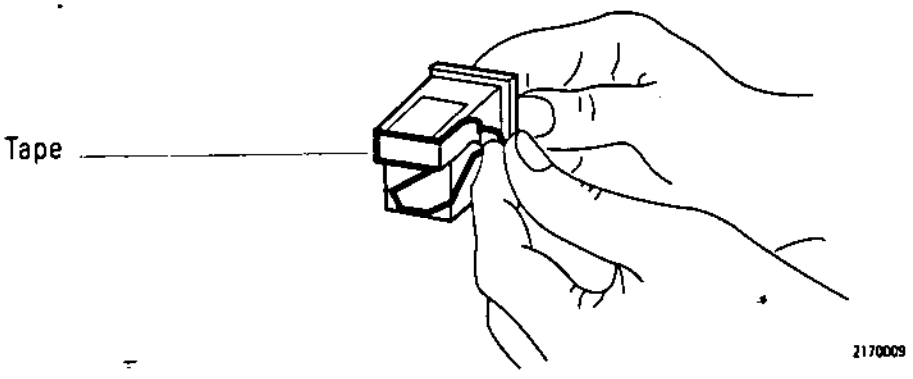

3. Drop the print cartridge into the empty cradle. Align the green arrow on the cartridge top with the green dot on the cartridge cradle.

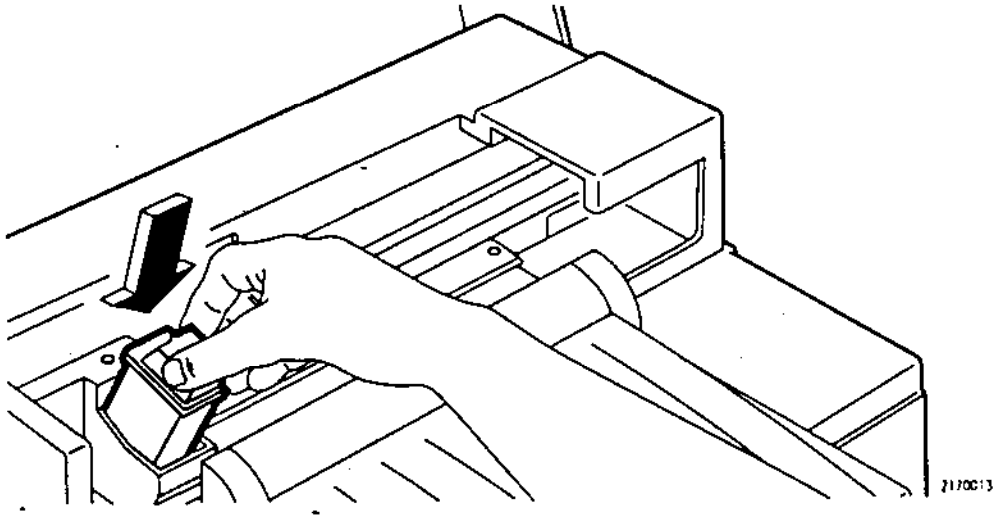

4. Push the green arrow toward the dot, until the cartridge snaps into place.

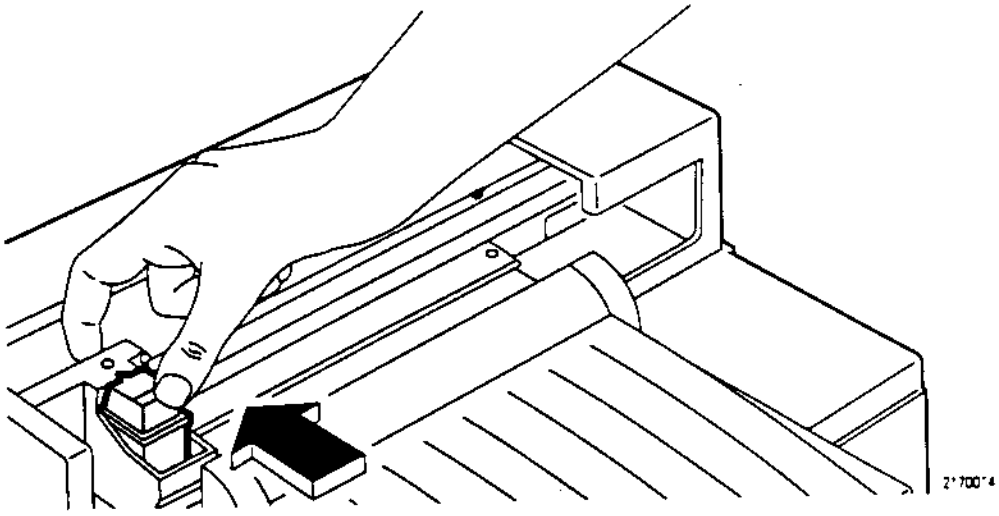

5. Press the **Install Print Cartridge** button on the printer control panel to move the print cartridge cradle to the right side of the printer.
6. Close the printer's top cover.

4

Troubleshooting and Maintenance

This chapter describes how to solve printer problems and maintain your printer.

When the Printer Does Not Print 4-2
When the Lights Blink 4-3
Printer Self-Test Problems 4-4
Printing Problems 4-5
Media Problems 4-7
Print Cartridge Problems 4-10
Maintaining Your Printer 4-11
Customer Support 4-12

When the Printer Does Not Print

If media is loaded and the printer does not print, use this information to solve your problem. If the self test does not print, see Printer Self-Test Problems later in this chapter.

Symptom	Cause	Solution
Nothing happens when you turn on the printer. All control panel lights are off.	Printer is improperly connected to the power source.	Turn off the printer and turn it on again. Next, make sure: Make sure the power module plug is *firmly* inserted in the printer's power socket and the other end of the cord is plugged into an outlet; any attached power strip is turned on and plugged into an outlet; any installed font or RAM cartridge is firmly seated in its slot.
The printer is on, but nothing prints.	Printer is not ready to print.	Press the Status button on the printer control panel to turn on the Ready light.
	Printer is improperly connected.	Make sure the interface cable is firmly connected to the parallel port of the printer and the computer.
	Your software is not setup for the printer.	Follow the instructions in your software manual for setting up the software to work with the printer.
	Tape covers the print cartridge ink nozzles.	Remove the print cartridge and remove any tape covering the ink nozzles. Reinstall the print cartridge.
	Print cartridge is improperly installed.	Make sure the print cartridge snaps into place with the green arrow aligned with the dot on the cradle top.
	Print cartridge is out of ink.	Replace the empty print cartridge.
Nothing prints and the Ready light is blinking.	Media is incorrectly loaded.	Remove media and reload it. Push the paper tray extender toward the printer until it stops. Make sure the paper does not bend in the IN tray. Press the Status button on the printer control panel for the Ready light to stop blinking.

When the Lights Blink

Some printer errors cause the lights on the printer control panel to remain on or to blink in different combinations.

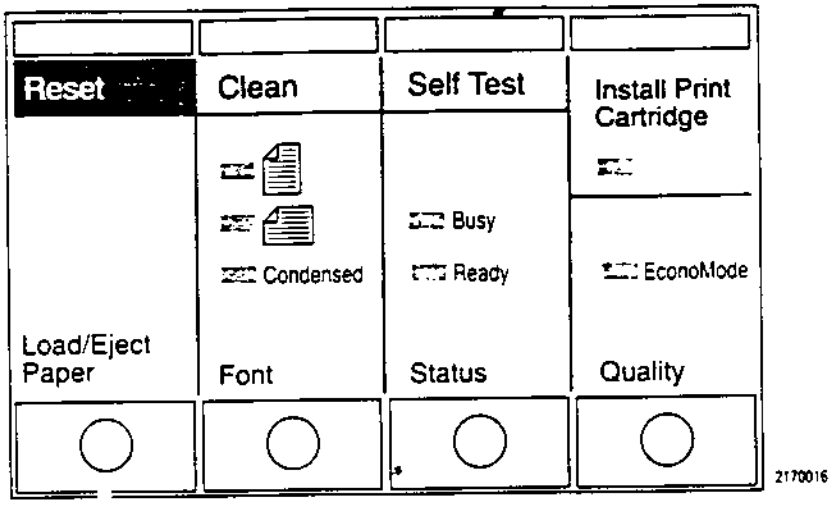

Symptom	Cause	Solution
The* Ready *light is blinking.	Printer is out of media.	Load media in the printer's IN tray. If media is loaded, push the paper tray extender toward the printer until it stops. Then, press the Load/Eject Paper button on the printer control panel to resume printing.
	An installed font cartridge failed.	Turn off the printer and remove installed font cartridges. Turn the printer on. If the lights stop blinking, a font cartridge failed. If the lights continue to blink, see Customer Support later in this chapter.
The* Busy and Ready *lights blink.	The media jammed.	See the discussion for Media Problems.
All printer control panel lights blink simultaneously or are on.	Either the printer failed or the computer-to-printer communication failed.	Turn off the printer, disconnect the interface cable from the bottom of the printer, and turn the printer on again. If the problem continues, see Customer Support later in this chapter. If the problem is corrected, check the interface cable, the cable connections, and the computer port.

Symptom	Cause	Solution
All control panel lights are on.	Printer failed.	Turn off the printer and turn it on again. If the lights stay on, see Customer Support later in this chapter
The* Busy *light is blinking and the printer will not print in landscape orientation.	Printer is waiting for a command to print.	Press the Load/Eject Paper button.
All printer control panel lights blink alternately.	Power module connection is loose.	Insert the power module plug firmly into the printer's power socket.
	Print cartridge cradle cannot move.	Turn off the printer. Open the printer's top cover and remove any object blocking the print cartridge cradle. Move the print cartridge cradle to the left and right with your hand. Then, turn on the printer.

Printer Self-Test Problems

To test the printer's operation, press the **Self Test** button on the printer control panel to print a 3-page self-test pattern. Do not use executive size paper for this test. If the pattern does not print, try the following solutions.

Symptom	Cause	Solution
The printer self-test pattern will not print.	Tape covers the print cartridge ink nozzles.	Remove the print cartridge and remove any tape covering the ink nozzles. Reinstall the print cartridge.
	The print cartridge is improperly installed.	Align the green arrow on the cartridge top to the dot on the cradle top; snap the print cartridge into place.
	The printer is improperly connected to the computer.	Make sure the interface cable is disconnected and perform the test again. If you cannot perform the self-test, see Customer Support at the end of this chapter.
	The computer is off.	Turn off the printer, turn on the printer, and turn on the computer. Your computer may require a different sequence for turning on the equipment. Refer to your computer manual.

Printing Problems

Symptom	Cause	Solution
Margins are not printing as expected.	Margins are incorrectly set.	Check your margin settings in the software.
	The media is incorrectly loaded.	Align the media stack against the right side of the printer. Make sure media is not over the paper width adjustment lever.
Print is slanted on the media.	Media is unevenly loaded.	Align the media stack evenly against the right side of the printer. See Media Problems in this chapter.
Font selections are not printing.	The fonts were not installed or selected properly.	See your software application manual for selecting fonts within the application. If you use font cartridges, make sure the cartridge is firmly placed in the font cartridge slot. For soft fonts, make sure the fonts are downloaded. For scalable fonts, see the on-line help for the HP DeskJet Printer Setup dialog box under Microsoft Windows. Emulation cartridges are not supported.
The printout is wrong.	The wrong printer driver is selected.	Select the correct printer driver.
The printer seems to work but nothing prints.	Tape covers the print cartridge ink nozzles.	Remove the print cartridge and remove any tape covering the ink nozzles. Reinstall the print cartridge.
	The print cartridge is out of ink.	Install a new print cartridge.
Characters, dots, or lines are incomplete or missing.	The print cartridge has a problem.	See Print Cartridge Problems in this chapter.
Print density is inconsistent.	The print cartridge ink nozzles are clogged.	See Print Cartridge Problems in this chapter.
	Media selection is inappropriate.	Try another type of media. See chapter 2.

Symptom	Cause	Solution
Print is fuzzy.	Media selection is inappropriate.	Try another type of media. See chapter 2.
	The print side was not used.	Turn over the media in the IN tray.
	Printer driver settings need adjustment.	See your software manual. If you use Windows, see the on-line help for HP DeskJet Printer Setup dialog box.
Ink is smearing or paper is wrinkling.	Too much ink on the page.	See your software application manual. If you use Windows, see the on-line help for HP DeskJet Printer Setup dialog box for information on adjusting intensity settings.
	Media selection is inappropriate.	Try another type of media. See chapter 2.
Print is fading.	The print cartridge is running out of ink.	Install a new print cartridge.

Media Problems

Symptom	Cause	Solution
Media does not load into the IN tray.	The paper path in the IN tray is blocked.	Remove the OUT tray and remove any media from the IN tray. Make sure the paper width adjustment lever is not preventing paper from loading. Reinstall the OUT tray and load media.
	More than a 1 cm (1/2 in.) stack of media is loaded.	Remove a few sheets of media.
Media does not advance into the printer.	Media is improperly loaded.	Remove the media stack and make sure the stack is even. Reload the stack evenly in the IN tray so the stack's right side aligns with the printer's right side. Push the paper tray extender toward the printer until it stops. Do not bend the media.
	The OUT tray is improperly installed.	Make sure the OUT tray is fully installed into the printer and rests evenly on the IN tray.
	Media was incorrectly added.	Remove the media from the IN tray and combine it with a new stack of the same type of media. Reload the media.
	Different media types or weights are loaded.	Remove media and reload only one media type.
	Media is damaged, wrinkled, or curled.	Remove damaged media from the IN tray. Always store media in its packaging.
Media does not eject from the printer.	The computer was turned off during printing.	Turn off the printer. Turn on the computer and printer in the appropriate sequence. Refer to your computer manual.
	Media is curling and catching on the OUT tray cover.	Open the OUT tray cover.

Symptom	Cause	Solution
Media does not fully eject from the printer and the* Busy *and* Ready *lights blink.	Media is jammed.	Turn off the printer and open the top cover. Remove the OUT tray and pull the jammed media out of the printer. 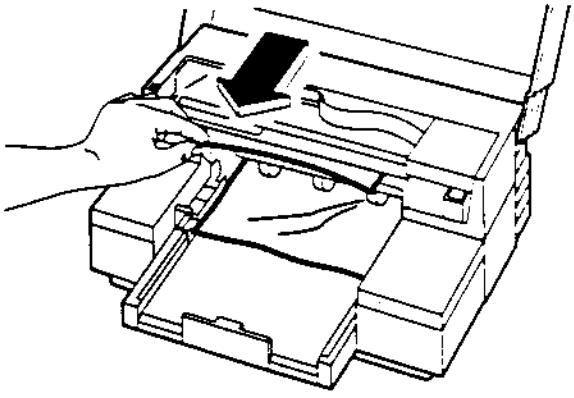 Remove all torn pieces of media from the paper path. Small scraps of media left within the printer can cause further media jams. Remove wrinkled or torn media from the IN tray. Reload the media stack. Replace the OUT tray and close the top cover. Turn on the printer.
Printer advances multiple sheets of media.	Media is stuck together.	Remove the media, separate stuck media, and reload it. Make sure the media is appropriate for use with the printer. See chapter 2.
	More than a 1 cm ($^1/_2$ in.) stack of media is loaded.	Remove a few sheets of media.
	Different media types or weights are loaded.	Remove media and reload only one media type or weight. See chapter 2.
	Media was improperly added.	To add media, remove media from IN tray and combine it with a new stack of the same type of media. Reload the media.
	The OUT tray is improperly installed.	Make sure the OUT tray is installed fully into the printer and that it rests evenly on the IN tray.
	The paper is bent in the IN tray.	Remove the media and reload it. Push the paper tray extender toward the printer until it stops. Do not bend the media.

Symptom	Cause	Solution
Envelopes do not advance into the printer.	Envelopes are incorrectly loaded.	Slide the paper width adjustment lever to the appropriate envelope setting. Raise the envelope stop and push the paper tray extender toward the printer until it stops. Do not bend the envelopes.
	Envelope settings are incorrect.	Select envelopes for printing in your software application.*
Printing is slanted on envelopes.	Envelopes are not evenly loaded.	Remove the OUT tray and tap the envelope stack to even the stack. Align the stack against the right side of the printer. Make sure the paper width adjustment lever is in the correct position for the size of envelopes you are printing. Reinstall the OUT tray.
Printing is slanted on the media.	Media is not evenly loaded.	Remove the OUT tray and align the media against the right side of the printer. Reinstall the OUT tray.
	Different media types or weights are loaded.	Remove media and reload only one media type or weight.
	More than a 1 cm ($^1/_2$ in.) stack of media is loaded.	Remove a few sheets of media.
	The paper width adjustment lever is bending the media.	Move the paper width adjustment lever to the left so the media lays flat.
	The media is inappropriate for use.	Use media, including envelopes, that meets the recommendations in chapter 2. When using preprinted forms, make sure they were printed straight.
	The OUT tray is improperly installed.	Fully install the OUT tray into the printer so it rests evenly on the IN tray.

Print Cartridge Problems

You can often solve print quality problems by using only the *print side* of the media, or by loading a different media type. However, if lines or dots are missing from your printouts, you have a print cartridge problem.

Symptom	Cause	Solution
Lines or dots are missing from the characters in the printout. For example: sum dolor sit amet elit, sed diam nor cidunt ut labore et rat volupat. Ut er	Poor connection between print cartridge and cradle contacts.	Remove the print cartridge, reinstall it, and press the Self Test button. You might need to repeat this several times before the ink resumes a continuous flow.
	The contacts are dirty.	Remove the print cartridge. Use a foam-rubber swab or lint-free cloth moistened with isopropyl alcohol to gently clean the contacts on the print cartridge and the print cartridge cradle. 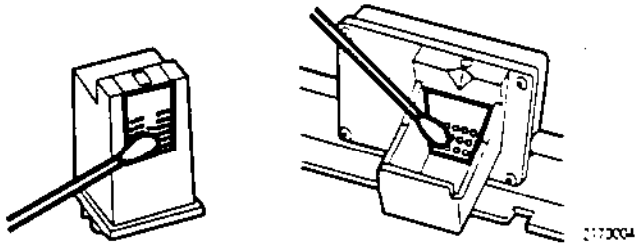 Do not clean the ink nozzles; doing so can damage the print cartridge. 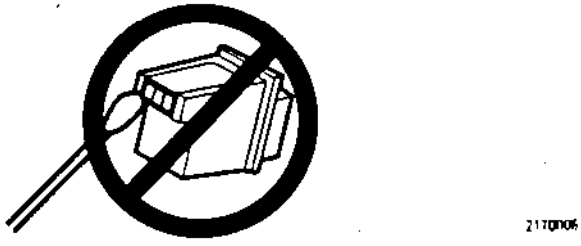 Reinstall the print cartridge and perform a self-test. If the print quality is not improved, replace the print cartridge. If the problem persists, see Customer Support later in this chapter.

Maintaining Your Printer

- Use a soft cloth moistened with water to wipe dust, smudges, and stains off of the printer's exterior case.
- Keep print cartridges in their sealed packages, at room temperature, until you are ready to use them.
- Keep the print cartridge in the print cartridge cradle at all times.
- Do not turn off the printer before printing is complete; doing so can dry out the print cartridge.
- The interior of the printer does not require cleaning. Keep fluids away from the interior of the printer.

Customer Support

The information in this chapter suggests solutions to common problems. If your printer is not operating properly and these suggestions do not solve your problem, use the following set of instructions appropriate for your country to obtain help.

For customers in the U.K., France, Germany, Switzerland, Austria, Belgium, Norway, Sweden, Denmark, Finland and the Netherlands:

If your printer fails *during* the warranty period:

1. Follow the Troubleshooting procedures in this chapter or consult our HP FIRST facsimile assistance services.
2. If you are still unable to determine the cause of the failure, contact your local dealer or the European Customer Support Center.

Customer support representatives can answer your questions regarding the setup, configuration, installation, and operation of your printer. They can also troubleshoot and diagnose printer problems and, if necessary, can give instructions for getting the printer serviced and repaired.

If available for your country and language, phone numbers for HP FIRST and the European Customer Support Center are given in a separate document shipped with the printer. If you need additional information, please call your dealer or nearest HP Sales and Support Office.

If your printer fails *after* the warranty period:

1. Follow the Troubleshooting procedures in this chapter.
2. If you are unable to determine the cause of the failure, contact your local dealer or nearest HP Sales and Support Office for instructions on returning your printer for service and repair.

For customers elsewhere in the world

If your printer fails during or after the warranty period:

1. Follow the Troubleshooting procedures in this chapter.
2. If you are unable to determine the cause of the failure, contact your local dealer or nearest HP Sales and Support Office for instructions on returning your printer for service and repair.

5

Reference

This chapter provides technical procedures and information for your HP DeskJet 520 printer.

The Configuration Switches 5-2
Print Settings 5-4
Fonts 5-6
Installing Cartridges 5-8
Character Sets 5-9
Printer Commands 5-18
IBM Proprinter Compatibility Mode 5-27
Specifications 5-33
Regulatory Notices 5-35
Interface and Cable Requirements 5-37
Increasing Printer Performance 5-38
Ordering Information 5-39

Selecting Character Sets

The default character set is PC-8. To change the character set, use configuration switches A1 through A4.

Character Set	A1	A2	A3	A4
PC-8	down	down	down	down
HP Roman8	down	down	down	up
PC-8 Danish/Norwegian	down	down	up	down
United Kingdom (ISO 4)	down	down	up	up
German (ISO 21)	down	up	down	down
French (ISO 69)	down	up	down	up
Italian (ISO 15)	down	up	up	down
Norwegian v.1 (ISO 60)	down	up	up	up
Swedish Names (ISO 11)	up	down	down	down
Spanish (ISO 17)	up	down	down	up
ASCII	up	down	up	down
Portuguese (ISO 16)	up	down	up	up
PC-850	up	up	down	down
ECMA-94 Latin 1	up	up	down	up
HP Legal	up	up	up	down
Default in front font cartridge slot	up	up	up	up

Additional character set support is available through the HP22706W WordPerfect font cartridge, and the HP DeskJet 500 Series Printer Driver for Microsoft Windows.

Paper/Envelope Size

The factory default setting is U.S. letter size (8 ½ x 11 in.) paper. To change the default paper/envelope size, use configuration switches A5 and A6. Paper and envelope size settings in your software supersede settings made with these switches.

Paper/Envelope Size	Switch A5	Switch A6
U.S. letter size 216 x 279 mm (8.5 x 11 in.)	down	down
European A4 size (210 x 297 mm)	down	up
U.S. legal size 216 x 356 mm (8.5 x 14 in.)	up	down
Envelopes (U.S. No. 10, European DL)	up	up

Print Settings

This section describes how to set up your page for printing, including how to set the top and bottom margins with Perforation Skip Mode and Text Scale Mode.

Page Orientation

The HP DeskJet 520 printer prints in portrait or landscape orientation. Portrait orientation is the default. When you change page orientation during printing, the printer ejects the current page and then changes orientation.

Portrait

Landscape

You can select the page orientation:

- From your software application.
- By pressing the Font button on the printer control panel until the desired Font light turns on.
- Using a printer command, if possible with your software. (Refer to your software manual.)

All control codes and printer commands behave the same regardless of the selected page orientation, with one exception: The automatic underlining (E_C & d # D) command is not supported in landscape orientation. (Your software manual might describe how to underline without this command.)

Default Margins for Portrait Orientation

Paper Size	Left Margin	Right Margin	Top Margin*	Bottom Margin
U.S. letter 216 x 279 mm (8.5 x 11 in.)	6.35 mm (.25 in.)	6.35 mm (25 in.)	12.7 mm (.5 in.)	11.7 mm (.46 in.)
European A4 (210 x 297 mm)	3.1 mm (.125 in.)	3.6 mm (.142 in.)	12.7 mm (.5 in.)	11.7 mm (.46 in.)
U.S. legal 216 x 356 mm (8.5 x 14 in.)	6.35 mm (.25 in.)	6.35 mm (.25 in.)	12.7 mm (.5 in.)	11.7 mm (.46 in.)
Executive 184 x 267 mm (7.25 x 10.5 in.)	6.35 mm (.25 in.)	6.35 mm (.25 in.)	12.7 mm (.5 in.)	11.7 mm (.46 in.)

*Top margin is 0.4 when Perforation Skip Mode is off and three lines at 6 lpi with Perforation Skip Mode on.
NOTE: The numbers listed above are based on DOS software applications, the printable area will vary when using MS Windows software applications.

Default Margins for Landscape Orientation

Paper Size	Left Margin*	Right Margin	Top and Bottom Margins**
European A4 (210 x 297 mm)	15 mm (.59 in.)	2 mm (.08 in.)	3.1 mm (top), 3.6 mm (bottom)
U.S. letter 216 x 279 mm (8.5 x 11 in.)	15 mm (.59 in.)	2 mm (.08 in.)	6.35 mm (.25 in.)
U.S. legal 216 x 356 mm (8.5 x 14 in.)	15 mm (.59 in.)	2 mm (.08 in.)	6.35 mm (.25 in.)
Executive 184 x 267 mm (7.25 x 10.5 in.)	15 mm (.59 in.)	2 mm (.08 in.)	6.35 mm (.25 in.)

*You can not decrease the left margin.
**Top and bottom margins are based on Perforation Skip Mode off. If Perforation Skip Mode is on, add 6 mm.
Note: Text Scale Mode has no effect in landscape orientation.

Lines of Text Per Page

Line spacing is the vertical distance between printed lines on the page. The default line spacing for the HP DeskJet 520 printer is six printed vertical lines per inch (lpi).

NOTE

When you print a page that uses less than the available lines without sending a form-feed command, the media advances into the printer and the **Busy** light blinks. Press the **Load/Eject Paper** button to begin printing.

Number of Lines/Characters in Landscape Orientation

Paper Size	Lines Per Page		Characters Per Line		
	6 lpi	8 lpi	10 cpi	16.67 cpi	20 cpi
U.S. letter	45 (48)*	60 (64)*	103	172	206
European A4	45 (48)*	60 (63)*	110	183	220
U.S. legal	45 (48)*	60 (64)*	133	222	266

* Perforation Skip Mode off

Perforation Skip Mode

Perforation Skip Mode controls the printing of the top and bottom margins on a page. By default, Perforation Skip Mode is on and the top and bottom margins are 13 mm (½ in.) and the page length is 60 lines. Information beyond 60 lines prints on the next page.

To print 63 lines with no top margin and 13 mm (½ in.) bottom margin, set configuration switch A8 to the up position to turn off Perforation Skip Mode. Then reset the printer and change the margin or page length settings in your software application. To print more than 63 lines on a page, see Text Scale Mode.

Text Scale Mode

Use Text Scale Mode to print 66 lines of text on a portrait-oriented page. Text Scale Mode does not affect printing in landscape orientation or graphics mode.

To use Text Scale Mode:

1. Turn off Perforation Skip Mode by changing configuration switch A8 to the up position.
2. Turn on Text Scale Mode by changing configuration switch B1 to the up position.
3. Reset the printer and change margin or page length settings in your application software.

You can also use printer commands, described later in this chapter, to set the Perforation Skip Mode and Text Scale Mode.

Fonts

This section describes the fonts you can use with the HP DeskJet 520 printer and how to select them. You can use internal fonts, scalable printer fonts, cartridge fonts, and soft fonts with the HP DeskJet 520 printer.

Internal Fonts

Internal fonts are bitmapped fonts stored in the printer. The following internal fonts are available:

Typeface	Orientation	Pitch	Point Size	Style	Stroke Weight
Courier	portrait	5, 10, 16.67, 20	6, 12	upright,	medium, bold
		5, 10, 20	6, 12	italic	medium, bold
Courier	landscape	10, 16.67, 20	6, 12, 24	upright	medium, bold
CG Times	portrait	proportional	5, 6, 7, 8, 10, 12, 14	upright, italic	medium, bold
Letter Gothic	portrait	6, 12, 24	6, 12	upright, italic	medium, bold
Letter Gothic	landscape	12, 24	6, 12, 24	upright	medium, bold
		16.67	4.75, 9.5, 19	upright	medium, bold
Univers	portrait	proportional	5, 6, 7, 8, 10, 12, 14	upright	medium, bold
	portrait	proportional	5, 6, 10, 12	italic	medium, bold

The default font is a portrait-oriented Courier 10 pitch, 12 point, upright, medium-weight. It prints if you do not select a font.

Scalable Fonts

Scalable fonts are the outlines of the characters and symbols stored in mathematical form. Scalable fonts are available when you use the HP DeskJet 500 Series Printer Driver for Microsoft Windows (for Microsoft Windows version 3.1 or later). Your printer includes a printer driver with 10 TrueType typefaces scalable up to 127 point. See the *HP DeskJet 500 Series Printer Software Guide for Microsoft® Windows™* for installation and use instructions.

Milestones Font

Milestones is one of the scalable fonts available with your HP DeskJet 500 Series Printer Driver for Microsoft Windows. To access the various symbols, type the key indicated and then select the Milestones Font from your software application.

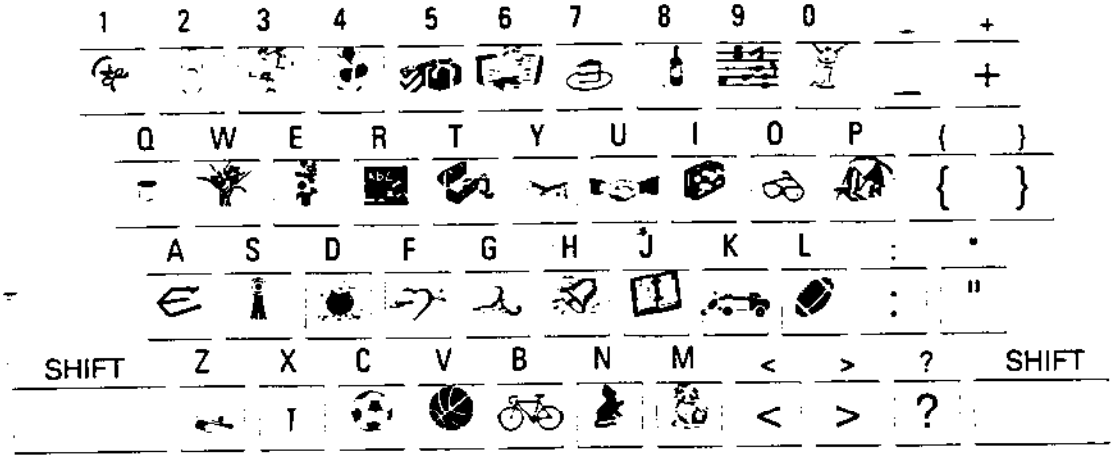

Cartridge Fonts

Cartridge fonts are bitmapped fonts stored in cartridges you install into the printer. You can use DeskJet, DeskJet PLUS, or DeskJet 500 font cartridges with this printer. *Emulation cartridges are not supported for use with the HP DeskJet 520 printer.*

Soft Fonts

Soft fonts are bitmapped fonts stored on a disk. If you use many fonts frequently, soft fonts are the most cost effective. To install soft fonts you need at least one 256K RAM cartridge. (You can use up to two 256K RAM cartridges.) Your computer transfers (downloads) the fonts from a disk file to the printer. Each soft font product contains a downloading utility and documentation that describes how to use soft fonts.

After the fonts are downloaded and you select a printer driver, select a soft font in your software application the same way you select an internal or cartridge font. Soft fonts do not reside permanently in the printer; they are eliminated each time the printer is turned off.

Selecting Fonts

You can select fonts through your application software, the printer control panel, or by sending printer commands. The method you use to select fonts depends on your application software.

Selecting Fonts With Your Application Software	Your application software plays a major role in selecting and printing fonts. The printer driver determines the number of fonts available and the steps you use to select a font. Printer drivers are discussed in chapter 1. See your application software manual for instructions.
Selecting Fonts From the Printer Control Panel	Press the Font button to select between the Courier 10 and 16.67 pitch fonts in portrait orientation. (You cannot select Letter Gothic, CG Times, Univers, and some Courier fonts with the printer control panel.) To select the landscape Courier 10 pitch font with the control panel, press the Font button until the Landscape Font light turns on. To select other internal fonts, use your software application or printer commands. Some software applications override font selections you make with the printer control panel. See your application software manual.
Selecting Fonts With Printer Commands	When you send a command to the printer to select fonts, it sorts through various font characteristics in a particular sequence to locate a font. See Printer Commands later in this chapter.

Installing Cartridges

You can install up to two font or RAM cartridges in the cartridge slots on the printer. Using RAM cartridges can improve the performance of your printer (see Improving Printer Performance later in this chapter).

1. Turn off the printer.
2. Pry off the cartridge slot cover with the tip of a pen and set the slot cover aside. (Replace the slot covers when cartridges are not installed.)

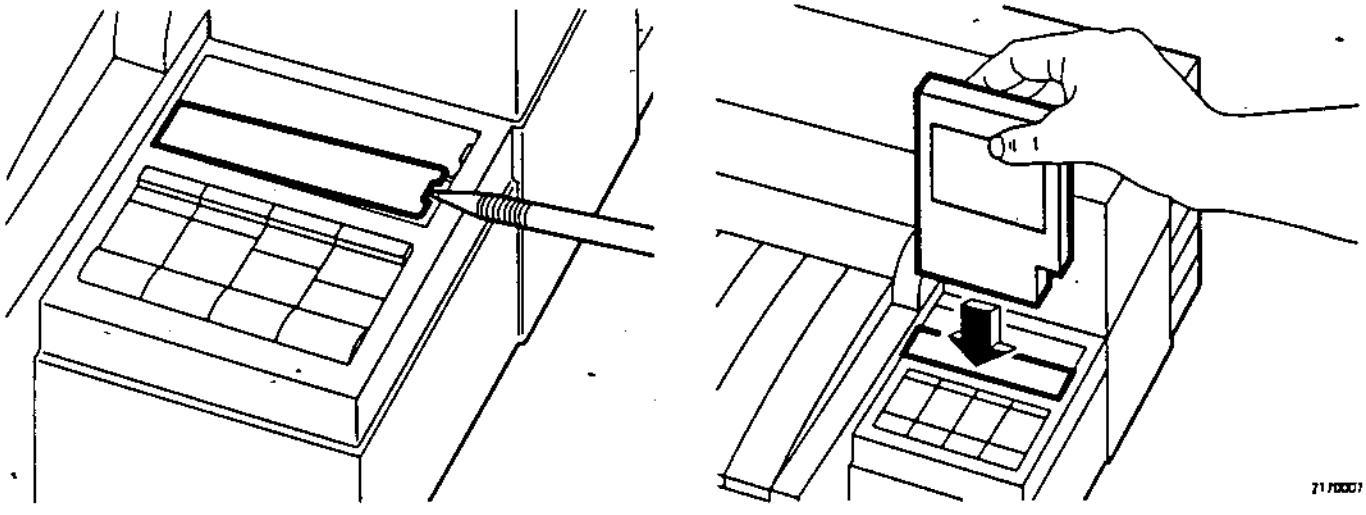

3. Insert the cartridge with the label facing you and the connectors facing down. *Do not touch the connector on the bottom of the cartridge or the connector in the printer.*
4. Push down firmly on the top of the cartridge until it snaps into place.
5. Turn on the printer.
6. Select fonts from installed font cartridges through your software application. If your software application does not provide a printer driver for a particular font, you can use the **Font** button on the printer control panel.

If you install a RAM cartridge, change configuration switch B2 to the up position to use the RAM as additional input butter, to use the RAM cartridge for downloading soft fonts B2 should be down, then reset the printer.

Warning: Inserting or removing the font cartridges while the printer is on may result in damage to the printer or the font cartridge.

Character Sets

A character set is a collection of the symbols and characters that constitute all elements of a language or discipline (legal), including punctuation and numbers. This section describes the character sets available and provides examples.

The types of character sets include 128-character sets and 256-character sets. Character sets containing 128 characters are *7-bit* character sets because only seven bits of the character byte are used to designate the character. Character sets containing 256 characters are *8-bit* character sets because the eighth bit of the character byte is used to access all 256 characters. Additional character set support is available through HP22706W WordPerfect font cartridge and the HP DeskJet 500 Series Printer Driver for Microsoft Windows.

7- bit Character Sets

The 7-bit character sets conform to standard definitions set forth by the International Standards Organization (ISO). This printer supports: United Kingdom (ISO 4), German (ISO 21), French (ISO 69), Italian (ISO 15), Norwegian 1 (ISO 60), Norwegian 2 (ISO 61), Sweden: Names (ISO 11), Swedish (ISO 10), Spanish (ISO 17), ANSI ASCII (ISO 6), PC-850 (ISO 14), Portuguese (ISO 16), IRV (ISO 2), and HP Legal.

8-bit Character Sets

The definitions of the first 128 characters in the 8-bit character set are standardized to the American Standard Code for Information Interchange (ASCII). This printer supports: PC-8, HP Roman8, PC-850, PC-8 Danish/Norwegian, and ECMA-94 Latin 1. Other character sets are supported through optional font cartridges.

HP Roman8 Character Set

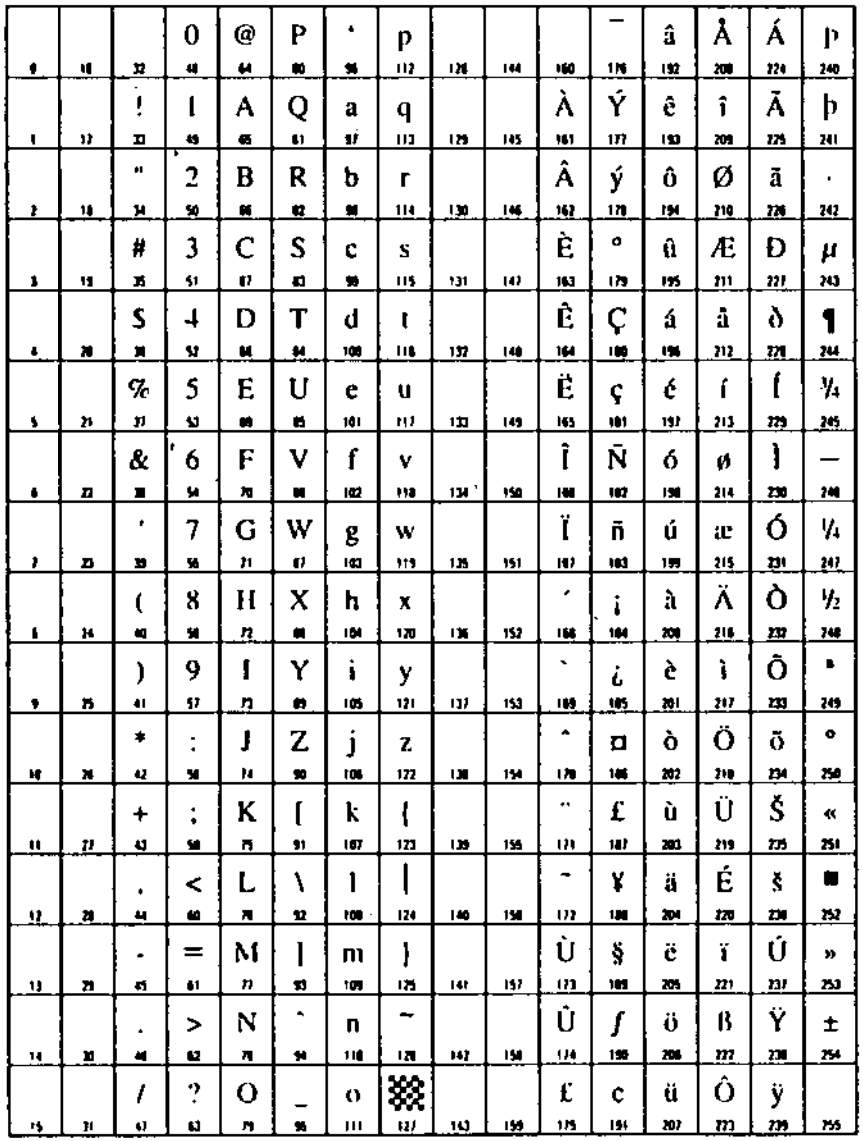

PC-8 Character Set

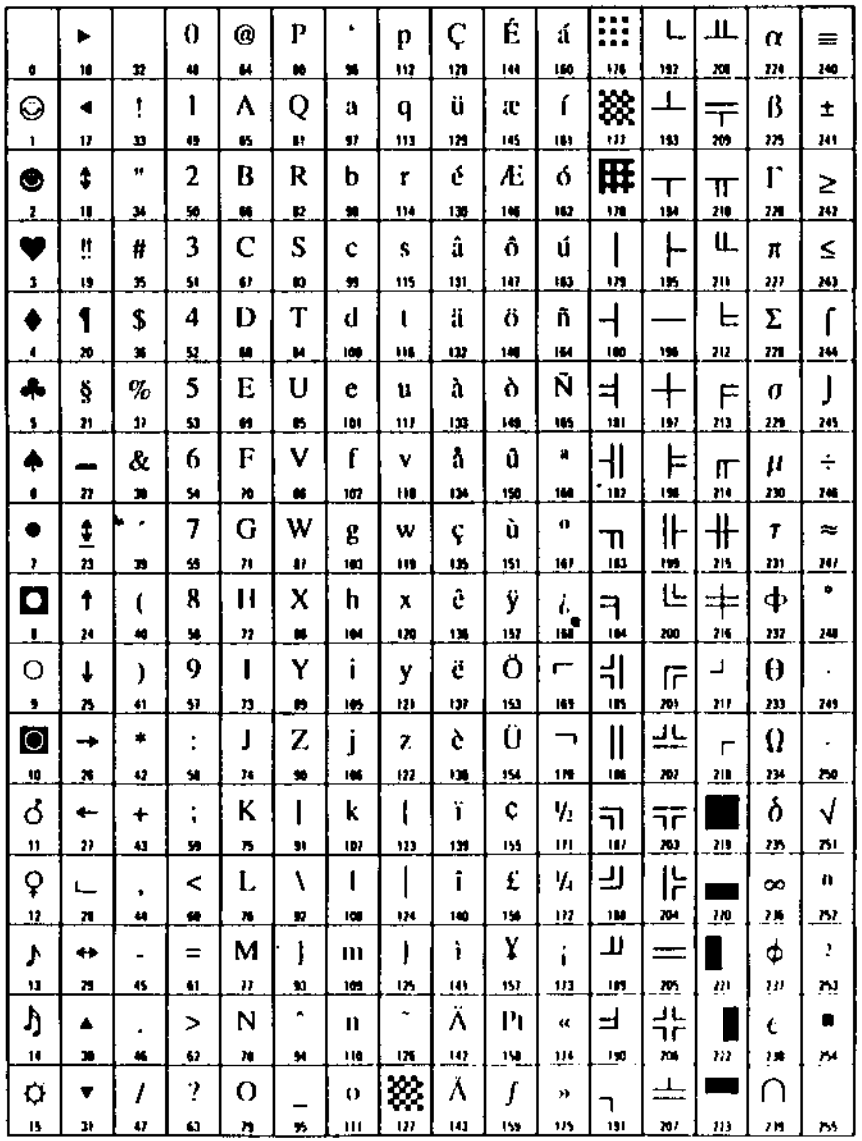

PC-850 Character Set

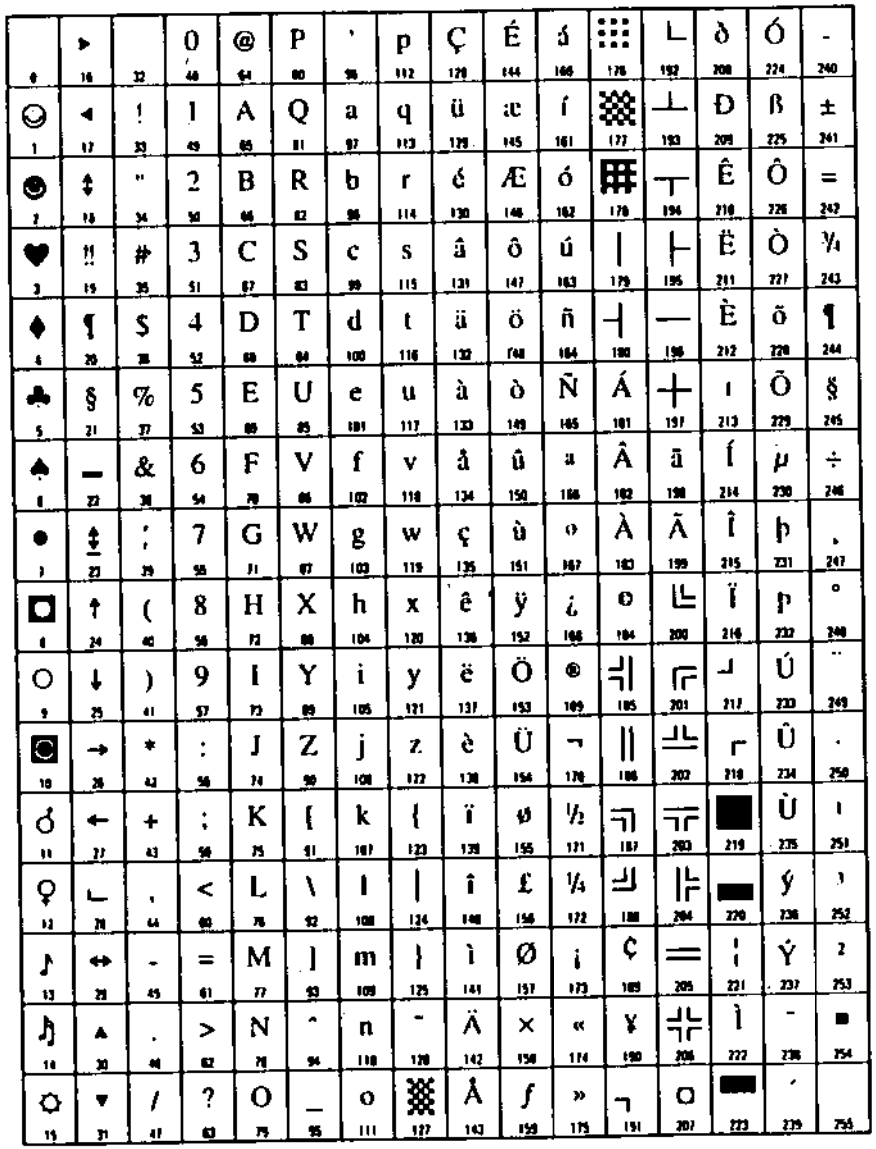

PC-8 Danish/Norwegian Character Set

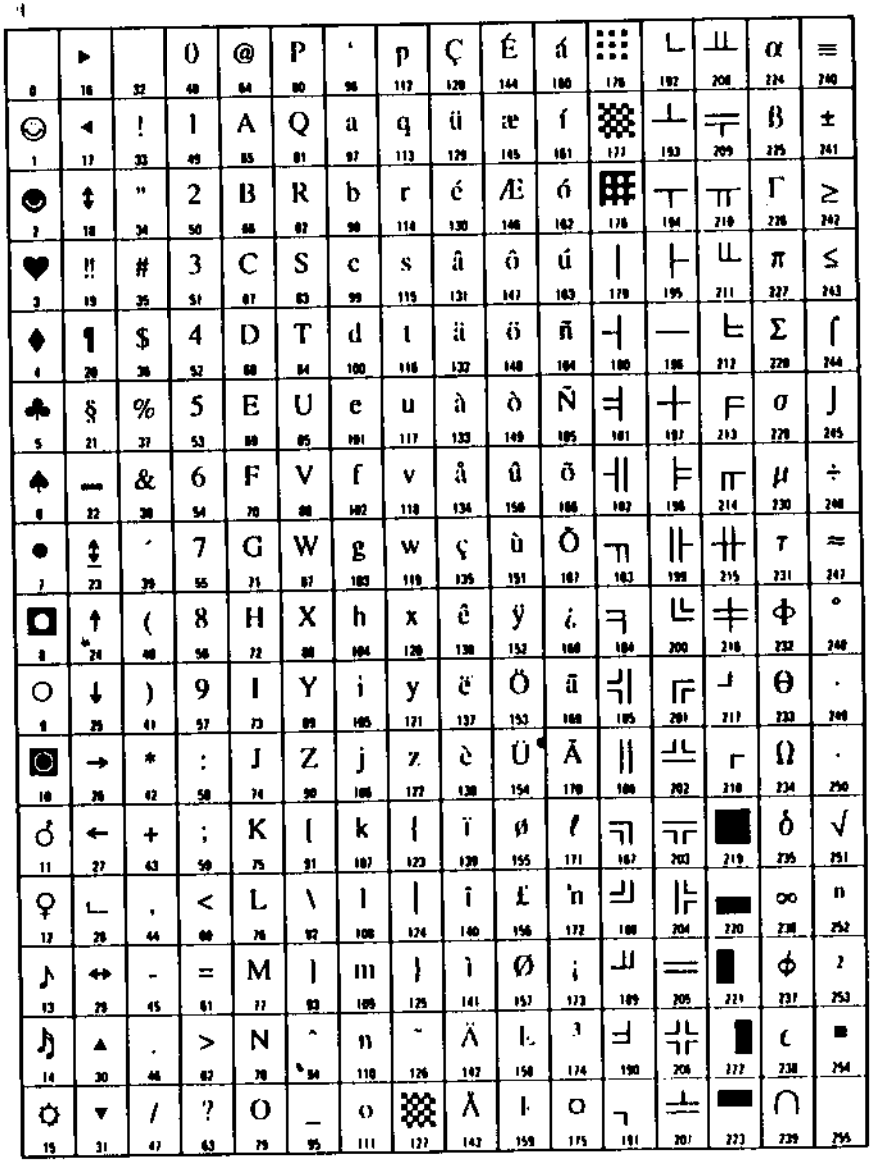

International (ISO) Character Set Substitution Table

The ISO character sets contain the same characters as the ASCII character set, except for the characters in the positions identified below. Refer to this table for the values of characters contained in the ISO character sets that differ from the characters in the ANSI ASCII character set.

ISO No.	Character Set Name	Decimal Character Equivalents												
		ID	35	36	64	91	92	93	94	96	123	124	125	126
6	ANSI ASCII	0U	#	$	@	[	\	]	^	`	{		}	~
11	Swedish Names	0S	#	¤	É	Ä	Ö	Å	Ü	`	ä	ö	å	ü
10	Swedish	3S	#	¤	@	Ä	Ö	Å	^	`	ä	ö	å	
17	Spanish	2S	£	$	§	¡	Ñ	¿	^	`	°	ñ	ç	~
69	French	1F	£	$	à	°	ç	§	^	µ	é	ù	è	
21	German	1G	#	$	§	Ä	Ö	Ü	^	`	ä	ö	ü	ß
4	UK	1E	£	$	@	[	\	]	^	`	{		}	
16	Portuguese	4S	#	$	§	Ã	Ç	Õ	^	`	ã	ç	õ	°
60	Norwegian1	0D	#	$	@	Æ	Ø	Å	^	`	æ	ø	å	
61	Norwegian2	1D	§	$	@	Æ	Ø	Å	^	`	æ	ø	å	¦
2	IRV		#	¤	@	[	\	]	^	`	{		}	
15	Italian	0I	£	$	§	°	ç	é	^	`	à	ò	è	ì

HP Legal Character Set

0 16		32	0 48	@ 64	P 80	° 96	p 112
1 17		! 33	1 49	A 65	Q 81	a 97	q 113
2 18		" 34	2 50	B 66	R 82	b 98	r 114
3 19		# 35	3 51	C 67	S 83	c 99	s 115
4 20		$ 36	4 52	D 68	T 84	d 100	t 116
5 21		% 37	5 53	E 69	U 85	e 101	u 117
6 22		& 38	6 54	F 70	V 86	f 102	v 118
7 23		' 39	7 55	G 71	W 87	g 103	w 119
8 24		(40	8 56	H 72	X 88	h 104	x 120
9 25		) 41	9 57	I 73	Y 89	i 105	y 121
10 26		* 42	: 58	J 74	Z 90	j 106	z 122
11 27		+ 43	; 59	K 75	[91	k 107	§ 123
12 28		, 44	= 60	L 76	® 92	l 108	¶ 124
13 29		- 45	= 61	M 77	] 93	m 109	† 125
14 30		. 46	ç 62	N 78	© 94	n 110	TM 126
15 31		/ 47	? 63	O 79	_ 95	o 111	127

ECMA-94 Latin 1 Character Set

0 16		32	0 48	@ 64	P 80	' 96	p 112	128	144	160	° 176	À 192	Ð 208	à 224	ð 240
1 17		! 33	1 49	A 65	Q 81	a 97	q 113	129	145	¡ 161	± 177	Á 193	Ñ 209	á 225	ñ 241
2 18		" 34	2 50	B 66	R 82	b 98	r 114	130	146	¢ 162	² 178	Â 194	Ò 210	â 226	ò 242
3 19		# 35	3 51	C 67	S 83	c 99	s 115	131	147	£ 163	³ 179	Ã 195	Ó 211	ã 227	ó 243
4 20		$ 36	4 52	D 68	T 84	d 100	t 116	132	148	¤ 164	´ 180	Ä 196	Ô 212	ä 228	ô 244
5 21		% 37	5 53	E 69	U 85	e 101	u 117	133	149	¥ 165	µ 181	Å 197	Õ 213	å 229	õ 245
6 22		& 38	6 54	F 70	V 86	f 102	v 118	134	150	¦ 166	¶ 182	Æ 198	Ö 214	æ 230	ö 246
7 23		' 39	7 55	G 71	W 87	g 103	w 119	135	151	§ 167	· 183	Ç 199	× 215	ç 231	+ 247
8 24		(40	8 56	H 72	X 88	h 104	x 120	136	152	¨ 168	¸ 184	È 200	Ø 216	è 232	ø 248
9 25		) 41	9 57	I 73	Y 89	i 105	y 121	137	153	© 169	¹ 185	É 201	Ù 217	é 233	ù 249
10 26		* 42	: 58	J 74	Z 90	j 106	z 122	138	154	ª 170	º 186	Ê 202	Ú 218	ê 234	ú 250
11 27		+ 43	; 59	K 75	[91	k 107	{ 123	139	155	« 171	» 187	Ë 203	Û 219	ë 235	û 251
12 28		, 44	< 60	L 76	\ 92	l 108	| 124	140	156	¬ 172	¼ 188	Ì 204	Ü 220	ì 236	ü 252
13 29		- 45	= 61	M 77	] 93	m 109	} 125	141	157	173	½ 189	Í 205	Ý 221	í 237	ý 253
14 30		. 46	> 62	N 78	^ 94	n 110	~ 126	142	158	® 174	¾ 190	Î 206	Þ 222	î 238	þ 254
15 31		/ 47	? 63	O 79	_ 95	o 111	127	143	159	¯ 175	¿ 191	Ï 207	ß 223	ï 239	ÿ 255

Math7 Character Set

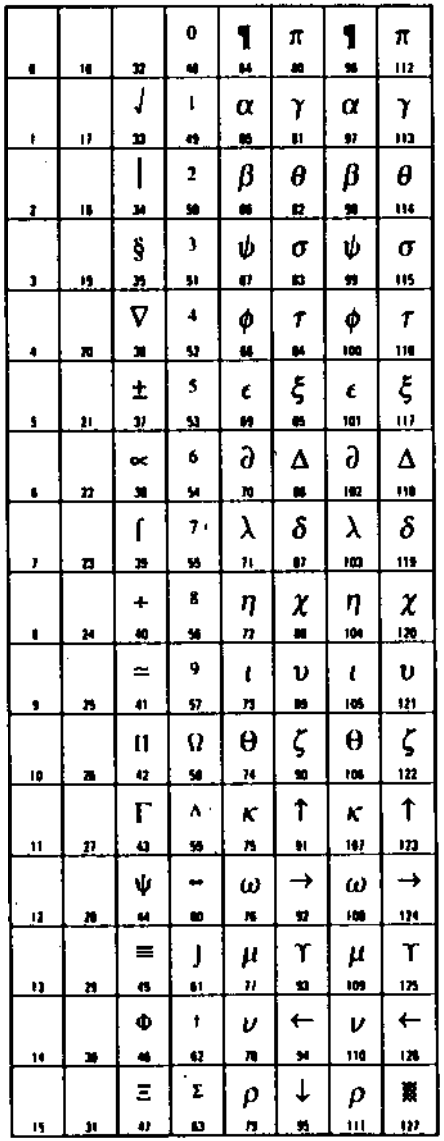

Available through the HP 22706B font cartridge.

HP Line Draw Character Set

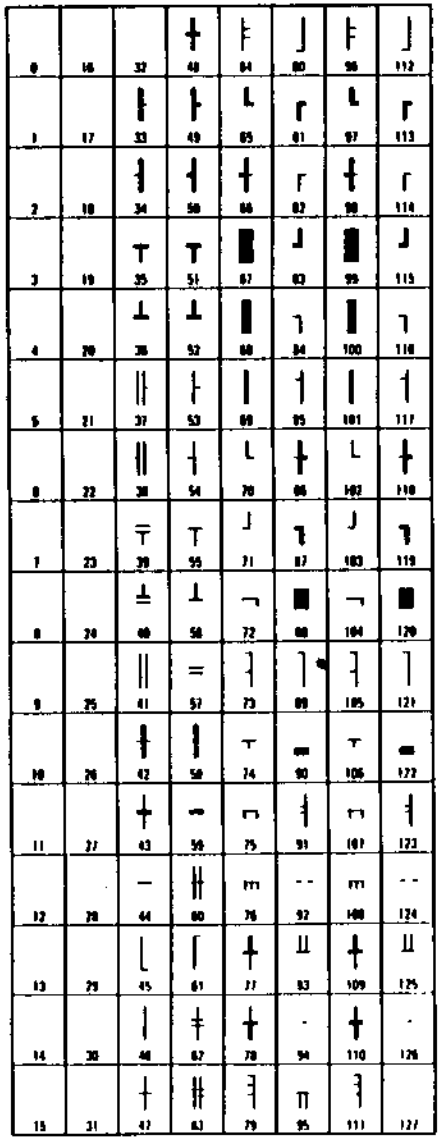

Available through these optional font cartridges: HP 22706B, HP 22706C, and HP 22706M

PIFont Character Set

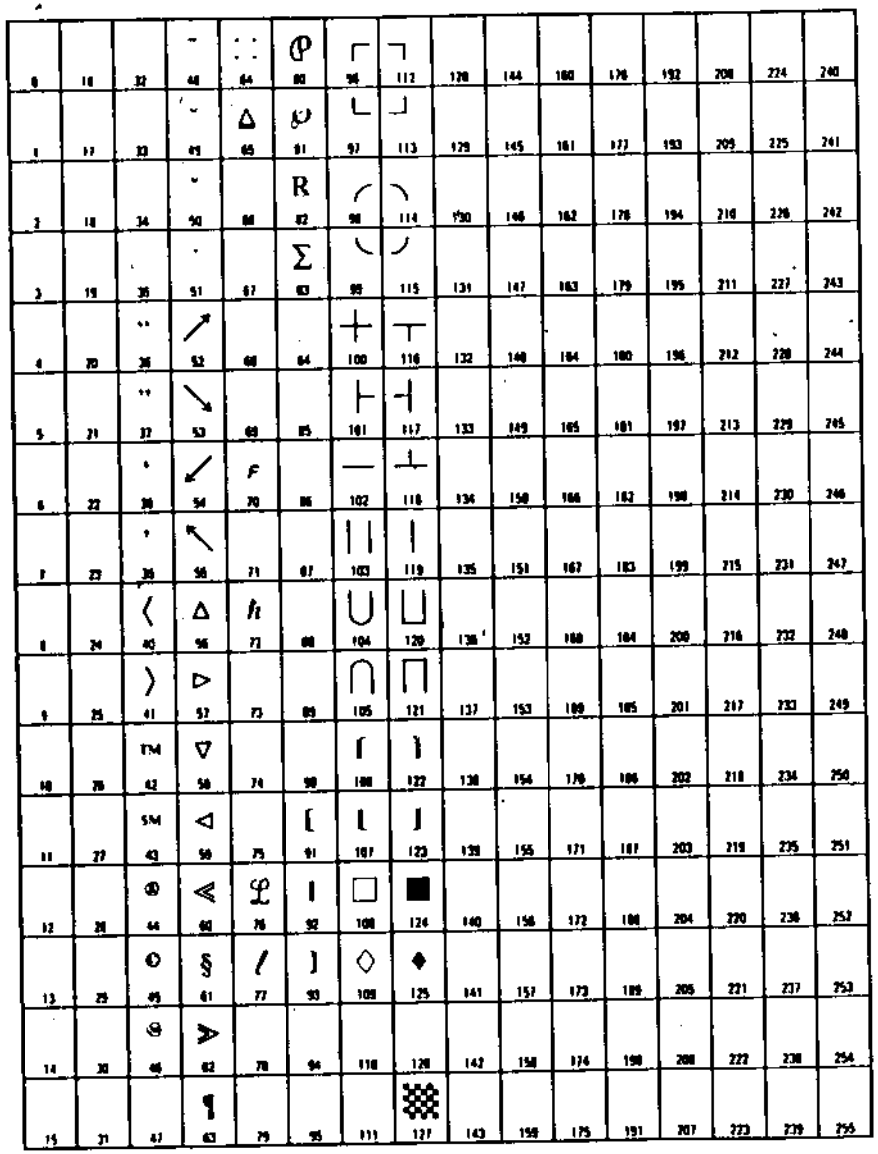

Available through the HP 22706B font cartridge.

Math8 Character Set

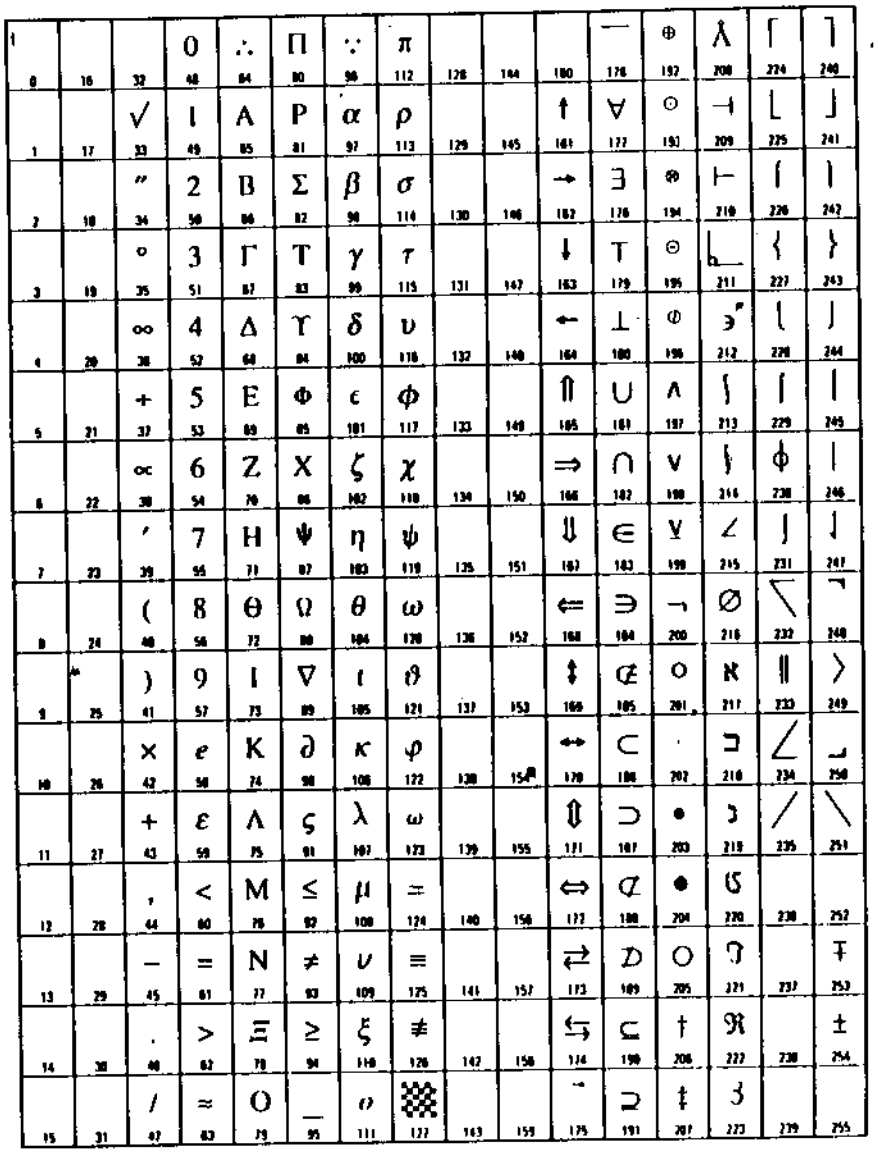

Available through the HP 22706B font cartridge.

MS Windows Symbol Set

NUL 0	DLE 16	32	0 48	@ 64	P 80	` 96	p 112	128	144	NBS 160	° 176	À 192	Ð 208	à 224	ð 240
SOH 1	DC1 17	! 33	1 49	A 65	Q 81	a 97	q 113	129	' 145	¡ 161	± 177	Á 193	Ñ 209	á 225	ñ 241
STX 2	DC2 18	" 34	2 50	B 66	R 82	b 98	r 114	, 130	' 146	¢ 162	² 178	Â 194	Ò 210	â 226	ò 242
ETX 3	DC3 19	# 35	3 51	C 67	S 83	c 99	s 115	ƒ 131	" 147	£ 163	³ 179	Ã 195	Ó 211	ã 227	ó 243
EOT 4	DC4 20	$ 36	4 52	D 68	T 84	d 100	t 116	,, 132	" 148	¤ 164	´ 180	Ä 196	Ô 212	ä 228	ô 244
ENQ 5	NAK 21	% 37	5 53	E 69	U 85	e 101	u 117	... 133	• 149	¥ 165	µ 181	Å 197	Õ 213	å 229	õ 245
ACK 6	SYN 22	& 38	6 54	F 70	V 86	f 102	v 118	† 134	– 150	¦ 166	¶ 182	Æ 198	Ö 214	æ 230	ö 246
BEL 7	ETB 23	' 39	7 55	G 71	W 87	g 103	w 119	‡ 135	— 151	§ 167	· 183	Ç 199	× 215	ç 231	÷ 247
BS 8	CAN 24	(40	8 56	H 72	X 88	h 104	x 120	ˆ 136	˜ 152	¨ 168	¸ 184	È 200	Ø 216	è 232	ø 248
HT 9	EM 25	) 41	9 57	I 73	Y 89	i 105	y 121	‰ 137	™ 153	© 169	¹ 185	É 201	Ù 217	é 233	ù 249
LF 10	SUB 26	* 42	: 58	J 74	Z 90	j 106	z 122	Š 138	š 154	ª 170	º 186	Ê 202	Ú 218	ê 234	ú 250
VT 11	ESC 27	+ 43	; 59	K 75	[91	k 107	{ 123	‹ 139	› 155	« 171	» 187	Ë 203	Û 219	ë 235	û 251
FF 12	FS 28	, 44	< 60	L 76	\ 92	l 108	| 124	Œ 140	œ 156	¬ 172	¼ 188	Ì 204	Ü 220	ì 236	ü 252
CR 13	GS 29	- 45	= 61	M 77	] 93	m 109	} 125	141	157	- 173	½ 189	Í 205	Ý 221	í 237	ý 253
SO 14	RS 30	. 46	> 62	N 78	^ 94	n 110	~ 126	142	158	® 174	¾ 190	Î 206	Þ 222	î 238	þ 254
SI 15	US 31	/ 47	? 63	O 79	_ 95	o 111	▒ 127	143	Ÿ 159	¯ 175	¿ 191	Ï 207	ß 223	ï 239	ÿ 255

Available through the HP DeskJet 500 Series Printer Driver for Microsoft Windows.

DeskTop Character Set

0	16	32	0 48	@ 64	P 80	` 96	p 112	128	144	160	" 176	– 192	‹ 208	ª 224	´ 240
1	17	! 33	1 49	A 65	Q 81	a 97	q 113	129	145	¶ 161	" 177	± 193	› 209	º 225	` 241
2	18	" 34	2 50	B 66	R 82	b 98	r 114	130	146	§ 162	µ 178	× 194	« 210	æ 226	ˆ 242
3	19	# 35	3 51	C 67	S 83	c 99	s 115	131	147	† 163	‰ 179	÷ 195	» 211	Æ 227	¨ 243
4	20	$ 36	4 52	D 68	T 84	d 100	t 116	132	148	‡ 164	• 180	° 196	, 212	ð 228	¯ 244
5	21	% 37	5 53	E 69	U 85	e 101	u 117	133	149	© 165	● 181	' 197	,, 213	Ð 229	˘ 245
6	22	& 38	6 54	F 70	V 86	f 102	v 118	134	150	® 166	○ 182	" 198	· 214	ij 230	˚ 246
7	23	' 39	7 55	G 71	W 87	g 103	w 119	135	151	™ 167	○ 183	¼ 199	¡ 215	IJ 231	˜ 247
8	24	(40	8 56	H 72	X 88	h 104	x 120	136	152	‰ 168	■ 184	½ 200	¿ 216	ł 232	˙ 248
9	25	) 41	9 57	I 73	Y 89	i 105	y 121	137	153	¢ 169	■ 185	¾ 201	Pt 217	Ł 233	˙ 249
10	26	* 42	: 58	J 74	Z 90	j 106	z 122	138	154	– 170	¦ 186	¹ 202	ℓ 218	œ 234	¯ 250
11	27	+ 43	; 59	K 75	| 91	k 107	{ 123	139	155	— 171	¦ 187	² 203	£ 219	Œ 235	¸ 251
12	28	, 44	< 60	L 76	\ 92	l 108	| 124	140	156	... 172	' 188	³ 204	¥ 220	ø 236	¸ 252
13	29	- 45	= 61	M 77	] 93	m 109	} 125	141	157	fi 173	¬ 189	/ 205	¤ 221	Ø 237	˙ 253
14	30	. 46	> 62	N 78	^ 94	n 110	~ 126	142	158	fl 174	¦ 190	206	ƒ 222	þ 238	˙ 254
15	31	/ 47	? 63	O 79	_ 95	o 111	▒ 127	143	159	175	¿ 191	207	ß 223	Þ 239	255

Available through the HP 22706W WordPerfect font cartridge.

ASCII Decimal-Hexadecimal Conversion Table

This table provides the decimal-and hexadecimal equivalent of each character in the HP Roman8 character set. The HP Roman8 character set is an 8-bit symbol set. In addition to the characters and symbols of the standard ASCII character set, it contains international characters and symbols. Use this table to convert printer commands to decimal or hexadecimal values.

Char	Dec.	Hex.
ctrl@	0	00
ctrlA	1	01
ctrlB	2	02
ctrlC	3	03
ctrlD	4	04
ctrlE	5	05
ctrlF	6	06
ctrlG	7	07
ctrlH	8	08
ctrlI	9	09
ctrlJ	10	0A
ctrlK	11	0B
ctrlL	12	0C
ctrlM	13	0D
ctrlN	14	0E
ctrlO	15	0F
ctrlP	16	10
ctrlQ	17	11
ctrlR	18	12
ctrlS	19	13
ctrlT	20	14
ctrlU	21	15
ctrlV	22	16
ctrlW	23	17
ctrlX	24	18
ctrlY	25	19
ctrlZ	26	1A
ctrl[	27	1B
ctrl\	28	1C
ctrl]	29	1D
ctrl^	30	1E
ctrl_	31	1F

Char	Dec.	Hex.
	32	20
!	33	21
"	34	22
#	35	23
$	36	24
%	37	25
&	38	26
'	39	27
(	40	28
)	41	29
*	42	2A
+	43	2B
,	44	2C
-	45	2D
.	46	2E
/	47	2F
0	48	30
1	49	31
2	50	32
3	51	33
4	52	34
5	53	35
6	54	36
7	55	37
8	56	38
9	57	39
:	58	3A
;	59	3B
<	60	3C
=	61	3D
>	62	3E
?	63	3F

Char	Dec.	Hex.
@	64	40
A	65	41
B	66	42
C	67	43
D	68	44
E	69	45
F	70	46
G	71	47
H	72	48
I	73	49
J	74	4A
K	75	4B
L	76	4C
M	77	4D
N	78	4E
O	79	4F
P	80	50
Q	81	51
R	82	52
S	83	53
T	84	54
U	85	55
V	86	56
W	87	57
X	88	58
Y	89	59
Z	90	5A
[	91	5B
\	92	5C
]	93	5D
^	94	5E
_	95	5F

Char	Dec.	Hex.
`	96	60
a	97	61
b	98	62
c	99	63
d	100	64
e	101	65
f	102	66
g	103	67
h	104	68
i	105	69
j	106	6A
k	107	6B
l	108	6C
m	109	6D
n	110	6E
o	111	6F
p	112	70
q	113	71
r	114	72
s	115	73
t	116	74
u	117	75
v	118	76
w	119	77
x	120	78
y	121	79
z	122	7A
{	123	7B
|	124	7C
}	125	7D
~	126	7E
▒	127	7F

Char	Dec.	Hex.
$_{80}$	128	80
$_{81}$	129	81
$_{82}$	130	82
$_{83}$	131	83
$_{84}$	132	84
$_{85}$	133	85
$_{86}$	134	86
$_{87}$	135	87
$_{88}$	136	88
$_{89}$	137	89
$_{8A}$	138	8A
$_{8B}$	139	8B
$_{8C}$	140	8C
$_{8D}$	141	8D
$_{8E}$	142	8E
$_{8F}$	143	8F
$_{90}$	144	90
$_{91}$	145	91
$_{92}$	146	92
$_{93}$	147	93
$_{94}$	148	94
$_{95}$	149	95
$_{96}$	150	96
$_{97}$	151	97
$_{98}$	152	98
$_{99}$	153	99
$_{9A}$	154	9A
$_{9B}$	155	9B
$_{9C}$	156	9C
$_{9D}$	157	9D
$_{9E}$	158	9E
$_{9F}$	159	9F

Char	Dec.	Hex.
	160	A0
À	161	A1
Â	162	A2
È	163	A3
Ê	164	A4
Ë	165	A5
Î	166	A6
Ï	167	A7
´	168	A8
`	169	A9
^	170	AA
¨	171	AB
~	172	AC
Ù	173	AD
Û	174	AE
£	175	AF
¯	176	B0
Ý	177	B1
ý	178	B2
°	179	B3
Ç	180	B4
ç	181	B5
Ñ	182	B6
ñ	183	B7
¡	184	B8
¿	185	B9
¤	186	BA
£	187	BB
¥	188	BC
§	189	BD
ƒ	190	BE
¢	191	BF

Char	Dec.	Hex.
â	192	C0
ê	193	C1
ô	194	C2
û	195	C3
á	196	C4
é	197	C5
ó	198	C6
ú	199	C7
à	200	C8
è	201	C9
ò	202	CA
ù	203	CB
ä	204	CC
ë	205	CD
ö	206	CE
ü	207	CF
Å	208	D0
î	209	D1
ø	210	D2
Æ	211	D3
å	212	D4
í	213	D5
ø	214	D6
æ	215	D7
Ä	216	D8
ì	217	D9
Ö	218	DA
Ü	219	DB
É	220	DC
ï	221	DD
ß	222	DE
Ô	223	DF

Char	Dec.	Hex
Ì	224	E0
Ã	225	E1
ã	226	E2
Ð	227	E3
ð	228	E4
Í	229	E5
Ì	230	E6
Ó	231	E7
Ò	232	E8
Õ	233	E9
õ	234	EA
Š	235	EB
š	236	EC
Ú	237	ED
Ÿ	238	EE
ÿ	239	EF
Þ	240	F0
þ	241	F1
·	242	F2
µ	243	F3
¶	244	F4
¾	245	F5
—	246	F6
¼	247	F7
½	248	F8
ª	249	F9
º	250	FA
«	251	FB
»	252	FC
±	253	FD
‗	254	FE
DEL	255	FF

Printer Commands

This section summarizes the printer commands and control codes available for the printer. See your software application manual or the technical reference manual for more information on printer commands.

Printer Command Basics

This guide uses these conventions for printer commands in examples:

Lowercase "l" = "ℓ" Number "one" = "1"
Uppercase "O" = "O" Number "zero"= "0"

The "ℓ" character will not appear on your screen.

When using printer commands, note these rules:

- Spaces appear in the printer command examples for reading only. Do not enter spaces in the printer commands.
- The printer recognizes printer commands only when the uppercase and lowercase letters are entered correctly.
- If you send a printer command to change a feature, it remains in effect until you send another printer command to change it.
- The printer returns to its default configuration switch settings when you turn it off and on, or when you press the Reset button on the printer control panel. If you send the printer command E_c E (printer reset), the printer returns to the mode and font settings you selected through the printer control panel.

Combining Printer Commands

You can combine printer commands that have the same two characters following the Escape character. To do so, begin the printer command with E_c and the two shared characters, then append the remaining characters from each command.

EXAMPLE

These printer commands: E_c (s 3 T E_c (s 3 B E_c (s 2 Q
can be combined into: E_c (s 3 b 3 t 2 Q
"Ec (s" is the portion of the printer command that all three commands share. In the combined command, "b" and "t" are now lowercase, while "Q" remains uppercase to notify the printer that the command is complete.

Guidelines for combining printer commands are:

- Only printer commands that have the same two characters immediately following "E_c" can be combined.
- All alphabetic characters within the combined printer commands must be lowercase, except for the last character.
- The last character in the combined printer command must be uppercase to notify the printer that the command is complete.
- Printer commands take effect as your software encounters them (from left to right). Combine printer commands in the order the printer should perform them.

Using Decimal or Hexadecimal Equivalents

Your software application might require you to enter printer commands in decimal or hexadecimal form. When converting an ASCII escape sequence to its decimal or hexadecimal equivalent, the characters which appear to be numeric values are actually only ASCII characters. Therefore, the escape sequence E_c(15U is the series of characters: E_c, (, 1, 5, U, which when converted to their decimal equivalents are 027 040 049 053 085.

The three forms of printer commands for landscape page orientation are:

Escape Sequence	E_c & l 1 O
Decimal Equivalent	027 038 108 049 079
Hexadecimal Equivalent	1B 26 6C 31 4F

Using Printer Commands to Select Fonts

When you send a command to select fonts, it sorts through various font characteristics to print a font. Each characteristic has a printer command and priority.

Priority	Characteristic	Printer Command	# = numeric value
1	Orientation	E_c & l # O	0 = portrait, 1 = landscape
2	Character Set	E_c (# U	see Printer Command tables for values
3	Spacing	E_c (s # P	0 = fixed, 1 = proportional
4	Pitch	E_c (s # H	depends on pitches available
5	Point Size	E_c (s # V	depends on point sizes available
6	Style	E_c (s # S	0 = upright, 1 = italic
7	Stroke Weight	E_c (s # B	0 = normal, 3 = bold
8	Typeface	E_c (s # T	see Printer Command tables for values

When you select a font with a printer command, you must send the appropriate command for each characteristic. Use the printer's priority list to ensure that the correct font prints.

EXAMPLE

To select the Letter Gothic 12 pitch, 12 point font, send the pitch command. The default value for the pitch characteristic is 10. If you do not send the command for 12 pitch, the default Courier 10 pitch font prints because the pitch characteristic is higher in priority than typeface.

As another example, to select Courier, Italic, 10 pitch, 12 point, you would send the printer command:

$dE_c\&l0O\ 10U\ 0p\ 10h\ 12v\ 1s\ 0b\ 3t$

Or, to select CG Times (PS, 12 point), you would send the printer command:

$E_c\&l0O\ 10U\ 1p\ \ 12v\ 0s\ 0b\ 410t.$

HP PCL Printer Command Summary

Printer Feature	Printer Command	Decimal Equivalent	Hex. Equivalent
Printer Control			
Reset	E_cE	027 069	1B 45
Self test	E_cz	027 122	1B 7A
Paper Input Control (Media Source)			
Eject page	$E_c\&l0H$	027 038 108 048 072	1B 26 6C 30 48
Feed from tray	$E_c\&l1H$	027 038 108 049 072	1B 26 6C 31 48
Envelope feed	$E_c\&l3H$	027 038 108 051 072	1B 26 6C 33 48
Print Mode (Text)			
Unidirectional left to right	$E_c\&k0W$	027 038 107 048 087	1B 26 6B 30 57
Bidirectional	$E_c\&k1W$	027 038 107 049 087	1B 26 6B 31 57
Unidirectional right to left	Ec&k2W	027 038 107 050 087	1B 26 6B 32 57
Underline			
Single fixed	$E_c\&d1D$	027 038 100 049 068	1B 26 64 31 44
Double fixed	$E_c\&d2D$	027 038 100 050 068	1B 26 64 32 44
Single floating	$E_c\&d3D$	027 038 100 051 068	1B 26 64 33 44
Double floating	$E_c\&d4D$	027 038 100 052 068	1B 26 64 34 44
Turn off	$E_c\&d@$	027 038 100 064	1B 26 64 40

*These printer commands are listed in the order in which they must be sent.
#Indicates the numeric value field.

Printer Feature	Printer Command	Decimal Equivalent	Hex. Equivalent
Printer Control, Cont.			
Line Termination			
CR ⇒ CR. LF ⇒ LF. FF ⇒ FF	E_c&k0G	027 038 107 048 071	1B 26 6B 30 47
CR ⇒ CR+LF. LF ⇒ LF. FF ⇒ FF	E_c&k1G	027 038 107 049 071	1B 26 6B 31 47
CR ⇒ CR. LF ⇒ CR + LF. FF ⇒ CR+FF	E_c&k2G	027 038 107 050 071	1B 26 6B 32 47
CR ⇒ CR+LF. LF ⇒ CR+LF. FF ⇒ CR+FF	E_c&k3G	027 038 107 051 071	1B 26 6B 33 47
End-of-Line Wrap			
Turn on	E_c&s0C	027 038 115 048 067	1B 26 73 30 43
Turn off	E_c&s1C	027 038 115 049 067	1B 26 73 31 43
Transparent Print Mode			
No. of bytes	E_c&p#X[data]	027 038 112 # 088 [data]	1B 26 70 # 58 [data]
Display Functions Mode			
Turn on	E_cY	027 089	1B 59
Turn off	E_cZ	027 090	1B 5A
Page Control			
Page Orientation*			
Landscape	E_c&l1O	027 038 108 049 079	1B 26 6C 31 4F
Portrait	E_c&l0O	027 038 108 048 079	1B 26 6C 30 4F
Page Size*			
Default size	E_c&l0A	027 038 108 048 065	1B 26 6C 30 41
US Letter	E_c&l2A	027 038 108 050 065	1B 26 6C 32 41
US Legal	E_c&l3A	027 038 108 051 065	1B 26 6C 33 41
US Executive	E_c&l1A	027 038 108 049 065	1B 26 6C 31 41
A4	E_c&l26A	027 038 108 050 054 065	1B 26 6C 32 36 41
No. 10 envelope (landscape)	E_c&l-81A	027 038 108 045 056 049 065	1B 26 6C 2D 38 31 41
DL envelope (landscape)	E_c&l-90A	027 038 108 045 057 048 065	1B 26 6C 2D 39 30 41
Line Spacing			
Lines per inch (no. of lines)	E_c&l#D	027 038 108 # 068	1B 26 6C # 44
Page Length*			
Number of lines	E_c&l#P	027 038 108 # 080	1B 26 6C # 50
Perforation Skip Mode*			
On	E_c&l1L	027 038 108 049 076	1B 26 6C 31 4C
Off	E_c&l0L	027 038 108 048 076	1B 26 6C 30 4C
Top Margin*			
Number of lines	E_c&l#E	027 038 108 # 069	1B 26 6C # 45
Text Length*			
Number of lines	E_c&l#F	027 038 108 # 070	1B 26 6C # 46

*These printer commands are listed in the order in which they must be sent.

#Indicates the numeric value field.

Printer Feature	Printer Command	Decimal Equivalent	Hex. Equivalent
Page Control, Cont.			
Side Margins*			
Clear	E_c9	027 057	1B 39
Left (column no.)	E_c&a#L	027 038 097 # 076	1B 26 61 # 4C
Right (column no.)	E_c&a#M	027 038 097 # 077	1B 26 61 # 4D
Text Scale Mode			
Off	E_c&k5W	027 038 107 053 087	1B 26 6B 35 57
On	E_c&k6W	027 038 107 054 087	1B 26 6B 36 57
Cursor Positioning			
Horizontal motion index no. of 1/120th in. moves	E_c&k#H	027 038 107 # 072	1B 26 6B # 48
Move to column no.	E_c&a#C	027 038 097 # 067	1B 26 61 # 43
Horizontal no. (decipoints)	E_c&a#H	027 038 097 # 072	1B 26 61 # 48
Horizontal no. (dots)	E_c*p#X	027 042 112 # 088	1B 2A 70 # 58
Vertical motion index no. of 1/48 in. moves	E_c&*l*#C	027 038 108 # 067	1B 26 6C # 43
Move to row no.	E_c&a#R	027 038 097 # 082	1B 26 61 # 52
Vertical no. (decipoints)	E_c&a#V	027 038 097 # 086	1B 26 61 # 56
Vertical no. (dots)	E_c*p#Y	027 042 112 # 089	1B 2A 70 # 59
Font Selection			
Character Set*			
PC-8	E_c(10U	027 040 049 048 085	1B 28 31 30 55
HP Roman8	E_c(8U	027 040 056 085	1B 28 38 55
PC-8 Danish/Norwegian	E_c(11U	027 040 049 049 085	1B 28 31 31 55
PC-850	E_c(12U	027 040 049 050 085	1B 28 31 32 55
ECMA-94 Latin 1	E_c(0N	027 040 048 078	1B 28 30 4E
German (ISO 21)	E_c(1G	027 040 049 071	1B 28 31 47
French (ISO 69)	E_c(1F	027 040 049 070	1B 28 31 46
Italian (ISO 15)	E_c(0I	027 040 048 073	1B 28 30 49
Spanish (ISO 17)	E_c(2S	027 040 050 083	1B 28 32 53
Swedish Names (ISO 11)	E_c(0S	027 040 048 083	1B 28 30 53
Swedish (ISO 10)	E_c(3S	027 040 051 083	1B 28 33 53
Norwegian1 (ISO 60)	E_c(0D	027 040 048 068	1B 28 30 44
Norwegian2 (ISO 61)	E_c(1D	027 040 049 068	1B 28 31 44
Portuguese (ISO 16)	E_c(4S	027 040 052 083	1B 28 34 53
United Kingdom (ISO 4)	E_c(1E	027 040 049 069	1B 28 31 45
ANSI ASCII (ISO 6)	E_c(0U	027 040 048 085	1B 28 30 55
JIS ASCII	E_c(0K	027 040 048 075	1B 28 30 4B
HP Legal	E_c(1U	027 040 049 085	1B 28 31 55
ISO IRV	E_c(2U	027 040 051 085	1B 28 32 55

*These printer commands are listed in the order in which they must be sent.

#Indicates the numeric value field

Printer Feature	Printer Command	Decimal Equivalent	Hex. Equivalent
Font Selection, Cont.			
Character Set*			
Line Draw (optional)	E_c(0L	027 040 048 076	1B 28 30 4C
Math7 (optional)	E_c(0M	027 040 048 077	1B 28 30 4D
Math 8 (optional)	E_c(8M	027 040 056 077	1B 28 38 4D
Math8a (optional)	E_c(0Q	027 040 048 081	1B 28 30 51
Math8b (optional)	E_c(1Q	027 040 049 081	1B 28 31 51
PIFont (optional)	E_c(15U	027 040 049 053 085	1B 28 31 35 55
PIFonta (optional)	E_c(2Q	027 040 050 081	1B 28 32 51
Spacing*			
Proportional	E_c(s1P	027 040 115 049 080	1B 28 73 31 50
Fixed	E_c(s0P	027 040 115 048 080	1B 28 73 30 50
Print Pitch*			
Number of characters per inch	E_c(s#H	027 040 115 # 072	1B 28 73 # 48
Point Size (Character Height)*			
Number of 1/72nd in.	E_c(s#V	027 040 115 # 086	1B 28 73 # 56
Style*			
Upright	E_c(s0S	027 040 145 048 083	1B 28 73 30 53
Italic	E_c(s1S	027 040 115 049 083	1B 28 73 31 53
Stroke Weight*			
Bold	E_c(s3B	027 040 115 051 066	1B 28 73 33 42
Normal	E_c(s0B	027 040 115 048 066	1B 28 73 30 42
Extra bold (optional)	E_c(s7B	027 040 115 055 066	1B 28 73 37 42
Typeface*			
Courier	E_c(s3T	027 040 115 051 084	1B 28 73 33 54
CG Times	E_c(s4101T	027 040 115 052 049 048 049 084	1B 28 73 34 31 30 31 54
Letter Gothic	E_c(s6T	027 040 115 054 084	1B 28 73 36 54
Univers	E_c(s52T	027 040 115 053 050 084	1B 28 73 35 32 54
Pica (optional)	E_c(s1T	027 040 115 049 084	1B 28 73 31 54
Line Printer (optional)	E_c(s0T	027 040 115 048 084	1B 28 73 30 54
Pica (optional)	E_c(s1T	027 040 115 049 084	1B 28 73 31 54
Prestige (optional)	E_c(s8T	027 040 115 056 084	1B 28 73 38 54
Elite (optional)	E_c(s2T	027 040 115 050 084	1B 28 73 32 54
Script (optional)	E_c(s7T	027 040 115 055 084	1B 28 73 37 54
Helvetica (optional)	E_c(s4T	027 040 115 052 084	1B 28 73 34 54
Presentations (optional)	E_c(s11T	027 040 115 049 049 084	1B 28 73 31 31 54
Times Roman (optional)	E_c(s5T	027 040 115 053 084	1B 28 73 35 54
CG Century Schoolbook (optional)	E_c(s23T	027 040 115 050 051 084	1B 28 73 32 33 54
Brush (optional)	E_c(s32T	027 040 115 051 050 084	1B 28 73 33 32 54

*These printer commands are listed in the order in which they must be sent.

#Indicates the numeric value field

Printer Feature	Printer Command	Decimal Equivalent	Hex. Equivalent
Font Selection, Cont.			
Typeface*			
Dom Casual (optional)	E_c(s61T	027 040 115 054 049 084	1B 28 73 36 31 54
Univers Condensed (optional)	E_c(s85T	027 040 115 056 053 084	1B 28 73 38 35 54
Garamond (optional)	E_c(s101T	027 040 115 049 048 049 084	1B 28 73 31 30 31 54
CG Triumvirate (optional)	E_c(s4T	027 040 115 052 084	1B 28 73 34 54
Print Quality			
Letter	E_c(s2Q	027 040 115 050 081	1B 28 73 32 51
EconoMode (draft)	E_c(s1Q	027 040 115 049 081	1B 28 73 31 51
Download Font Management			
Font ID no.	E_c*c#D	027 042 099 # 068	1B 2A 63 # 44
ASCII code no.	E_c*c#E	027 042 099 # 069	1B 2A 63 # 45
Delete all	E_c*c0F	027 042 099 048 070	1B 2A 63 30 46
Delete temporary	E_c*c1F	027 042 099 049 070	1B 2A 63 31 46
Delete last	E_c*c2F	027 042 099 050 070	1B 2A 63 32 46
Make temporary	E_c*c4F	027 042 099 052 070	1B 2A 63 34 46
Make permanent	E_c*c5F	027 042 099 053 070	1B 2A 63 35 46
Create font number of bytes	E_c)s#W[data]	027 041 115 # 087 [data]	1B 29 73 # 57 [data]
Download chr. No. of bytes	E_c(s#W[data]	027 040 115 # 087 [data]	1B 28 73 # 57 [data]
Select primary ID no.	E_c(#X	027 040 # 088	1B 28 # 58
Select secondary ID no.	E_c)#X	027 041 # 088	1B 29 # 58
Raster Graphics			
Start Raster Graphics			
At left most position	E_c*r0A	027 042 114 048 065	1B 2A 72 30 41
Current cursor position	E_c*r1A	027 042 114 049 065	1B 2A 72 31 41
End Raster Graphics			
End Graphics	E_c*rbC	027 042 114 098 067	1B 2A 72 62 43

*These printer commands are listed in the order in which they must be sent.
#Indicates the numeric value field.

Printer Feature	Printer Command	Decimal Equivalent	Hex. Equivalent
Raster Graphics, Cont.			
Resolution			
75 dots per inch	E_c*t75R	027 042 116 055 053 082	1B 2A 74 37 35 52
100 dots per inch	E_c*t100R	027 042 116 049 048 048 082	1B 2A 74 31 30 30 52
150 dots per inch	E_c*t150R	027 042 116 049 053 048 082	1B 2A 74 31 35 30 52
300 dots per inch	E_c*t300R	027 042 116 051 048 048 082	1B 2A 74 33 30 30 52
Set Raster Graphics Width			
Number of pixels	E_c*r#S	027 042 114 # 083	1B 2A 72 # 53
Print Mode (Graphics)			
Graphics default (no break)	E_c*p0N	027 042 112 048 78	1B 2A 70 30 4E
Bidirectional	E_c*p1N	027 042 112 049 78	1B 2A 70 31 4E
Left to right	E_c*p2N	027 042 112 050 78	1B 2A 70 32 4E
Right to left	E_c*p3N	027 042 112 051 78	1B 2A 70 33 4E
Conditional bidirectional	E_c*p4N	027 042 112 052 78	1B 2A 70 34 4E
Set Raster Graphics Compression			
Method 0	E_c*b0M	027 042 098 048 077	1B 2A 62 30 4D
Method 1	E_c*b1M	027 042 098 049 077	1B 2A 62 31 4D
Method 2	E_c*b2M	027 042 098 050 077	1B 2A 62 32 4D
Method 3	E_c*b3M	027 042 098 051 077	1B 2A 62 33 4D
Method 9	E_c*b9M	027 042 098 057 077	1B 2A 62 39 4D
Seed Row Source	E_c*b#S	027 042 098 # 083	1B 2A 62 # 53
Transfer Raster Graphics			
Number of bytes	E_c*b#W[data]	027 042 098 # 087 [data]	1B 2A 62 # 57 [data]
Relative Vertical Pixel Movement (formerly known as Y Offset)			
Number of dots	E_c*b#Y	027 042 098 # 089	1B 2A 62 # 59
Set Graphics Quality			
Quality EconoMode (draft)	E_c*r1Q	027 042 114 049 081	1B 2A 72 31 51
Similar to letter quality	E_c*r2Q	027 042 114 050 081	1B 2A 72 32 51
Set Number of Raster Planes Per Row			
Single plane palette	E_c*r1U	027 042 114 049 085	1B 2A 72 31 55
Misc. Raster Graphics Commands			
Raster graphics shingling	E_c *o#Q	027 042 111 # 081	1B 2A 6F # 51
Raster graphics depletion	E_c*o#D	027 042 111 # 068	1B 2A 6F # 44

*These printer commands are listed in the order in which they must be sent.

#Indicates the numeric value field.

HP PCL Control Codes

A control code is a character that starts a printer function. In this guide, control codes begin with CTRL. To send CTRL, press the control key on the computer keyboard while typing the character. This control key is labeled as CTRL, CNTL, or CTL.

The following are HP PCL control codes the printer recognizes. The Keystroke column lists the letter to type with the CTRL key to send a control code. The "current print position" in the Description column is where the next character prints.

Code Names	Symbol	Description	Dec. Value	Hex. Value	Keystroke
Backspace	B_S	Moves the current print position one character position to the left.	08	08	CTRL H
Horizontal Tab	H_T	Moves to the next predefined tab position. (Tabs are located every eighth character position, beginning at the left margin).	09	09	CTRL I
Line Feed	L_F	Advances the media one line at the current line spacing.	10	0A	CTRL J
Form Feed	F_F	Advances the media to the next top-of-form. Top-of-form is the first line of printing on the next page.	12	0C	CTRL L
Carriage Return	C_R	Moves the current print position to the left margin. Does not advance paper.	13	0D	CTRL M
Shift Out	S_O	Selects the currently designated secondary font for use.	14	0E	CTRL N
Shift In	S_I	Selects the currently designated primary font for use.	15	0F	CTRL O
Escape	E_C	Indicates to the printer that the characters immediately following are part of a printer command.	27	1B	CTRL [

IBM Proprinter Compatibility Mode

The IBM Proprinter Compatibility Mode lets you print from software that cannot print to HP DeskJet printers, but can print to an IBM Proprinter. To ensure maximum compatibility, select the IBM Proprinter printer driver with your software.

If an IBM Proprinter printer driver is not available, choose one of the following:

- IBM Proprinter II driver
- IBM Proprinter XL driver
- IBM Proprinter III driver
- IBM Proprinter III XL driver

NOTE

If you use one of the alternate printer drivers, these IBM Proprinter features are *not* accessible: Set Initial Condition, NLQ II Printing and Downloads; Double-High Printing, and Proportional Spaced Fonts.

To set the printer to the IBM Proprinter Compatibility Mode:

1. Set configuration switch B4 to the up position.
2. Press the **Reset** button to establish the new setting.
3. Press the **Self Test** button. A one page self-test prints with the compatibility mode identified in the upper left.

The HP DeskJet 520 printer in IBM Proprinter Compatibility Mode does *not* support the following printer commands.

Print Feature	Printer Command
Printer Control	
Bell	BE
Select Printer	D1
Deselect Printer	D3
Deselect Printer	E_cQ3
Page Format	
Set Top of Form	E_c4

These IBM Proprinter commands are supported by the HP DeskJet 520 printer in the IBM Proprinter Compatibility Mode:

Printer Feature	Printer Command
Print Modes	
Start Double wide printing by line	E_cSO
Start Continuous Double wide printing	E_cW1
Cancel Continuous Double wide printing	E_cW0
Start Condensed printing	E_cSI
Quality Modes	
Start Emphasized printing	E_cE
Cancel Emphasized printing	E_cF
Start Double Strike printing (NLQ)	E_cG
Cancel Double Strike printing (NLQ)	E_cH
Start Normal Quality (not download)	E_cI0
Start NLQ (not download)	E_cI2
Start Superscript printing	E_cS0
Start Subscript printing	E_cS1
Cancel Sub/superscript printing	E_cT
Start Continuous Underscore	E_c-1
Cancel Continuous Underscore	E_c-0
Start Continuous Overscore	E_c_1
Cancel Continuous Overscore	E_c_0
Vertical Movement	
Line Spacing=1/8 in. (8lpi)	E_c0
Line Spacing=7/72 in.	E_c1
Start Text Line Spacing (default=1/6)	E_c2
Graphics Line Spacing= 'n'/216 in.	$E_c3'n'$
Store Text Line Spacing= 'n'/72 in.	$E_cA'n'$
One-time LF of 'n'/216 in. without CR	$E_cJ'n'$

Printer Feature	Printer Command
Tabs	
Set VT at n1,n2,...nk (k<<64)	$E_cB'nn'0$
Clear all vertical tabs	E_cB0
Set HT at n1,n2,...nk (nk<<28)	$E_cD'nn'0$
Clear all horizontal tabs	E_cD0
Set all tabs to power on defaults	E_cR
Page Format	
Form length='n' lines ('n'=1 to 255)	$E_cC'n'$
Form length='n' lines ('n'=0 to 22)	$E_cC0'n'$
Perf Skip ='n' lines ('n'=1 to 255)	$E_cN'n'$
Cancel Automatic Perforation Skip	E_cO
Graphics Modes	
Single Density ON (width=n1+256*n2)	$E_cK'n1n2'$
Double Density Graphics ON	$E_cL'n1n2'$
High Speed Double Density Graphics ON	$E_cY'n1n2'$
Quadruple Density Graphics ON	$E_cZ'n1n2'$
Printer Control	
Start Automatic Line Feed Mode	E_c5I
Cancel Automatic Line Feed Mode	E_c5O
Start Unidirectional Print Mode	E_cU1
Cancel Unidirectional, Start Bidirectional	E_cU0
Character Selection	
Select Character Set Table 2	E_c6
Select Character Set Table 1	E_c7
Print Continuous from All Character Table	$E_cV'n'$
Print one character from All Character Table	$E_c^$

Download Fonts and Character Set Mapping

The default for IBM Proprinter Compatibility Mode is download fonts enabled (switch A1 down). To disable the download fonts mode, set switch A1 up and select one of following character sets using switches A3 and A4.

Character Set	A3	A4
IBM Proprinter	Down	Down
PC-8	Up	Up
PC-850	Up	Down
PC-8 Danish/Norwegian	Down	Up

Downloaded fonts result in slower printing speed and 9-wire print quality.

The IBM Proprinter Compatibility Mode supports two mappings of the character sets:

- Character Set 1 mapping has control codes (non-printable areas) in two places: between ASCII 0 and ASCII 32, and between ASCII 128 and ASCII 159.
- Character Set 2 mapping has control codes (non-printable areas) in one place: between ASCII 0 and ASCII 32.

See Character Sets earlier in this chapter for more information.

IBM All Characters Chart

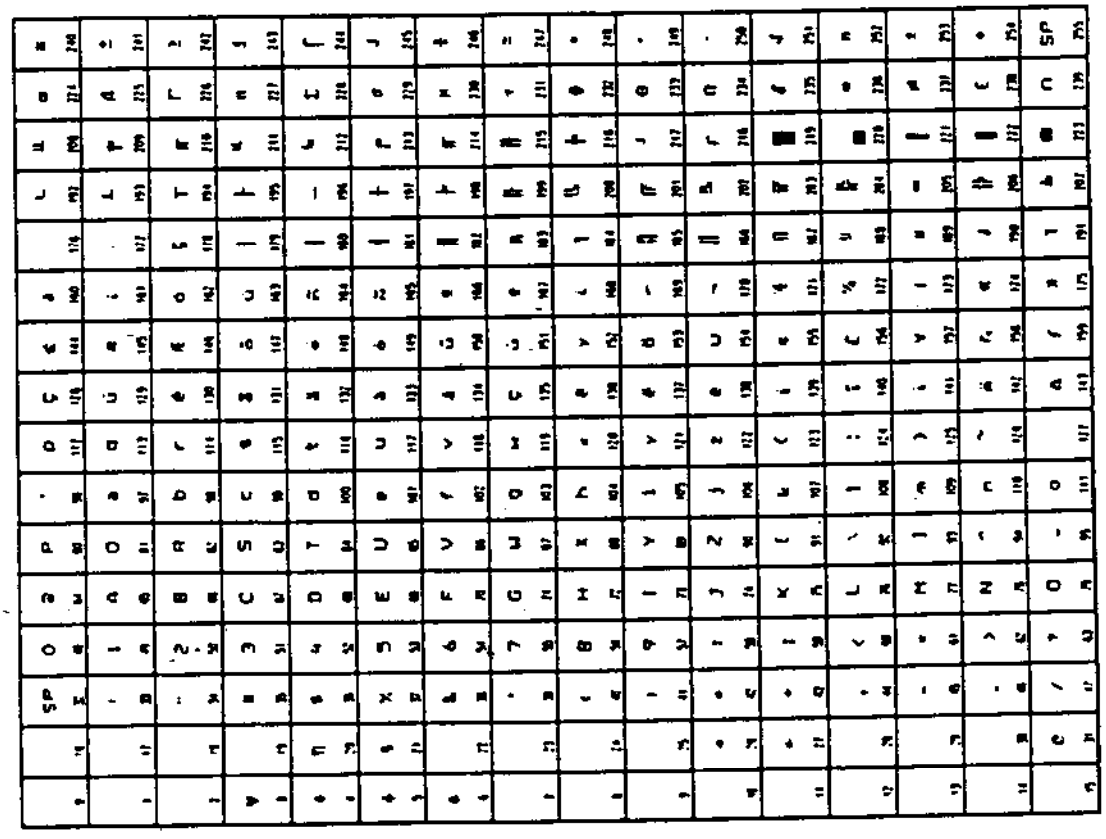

IBM Character Set 2 Mapping

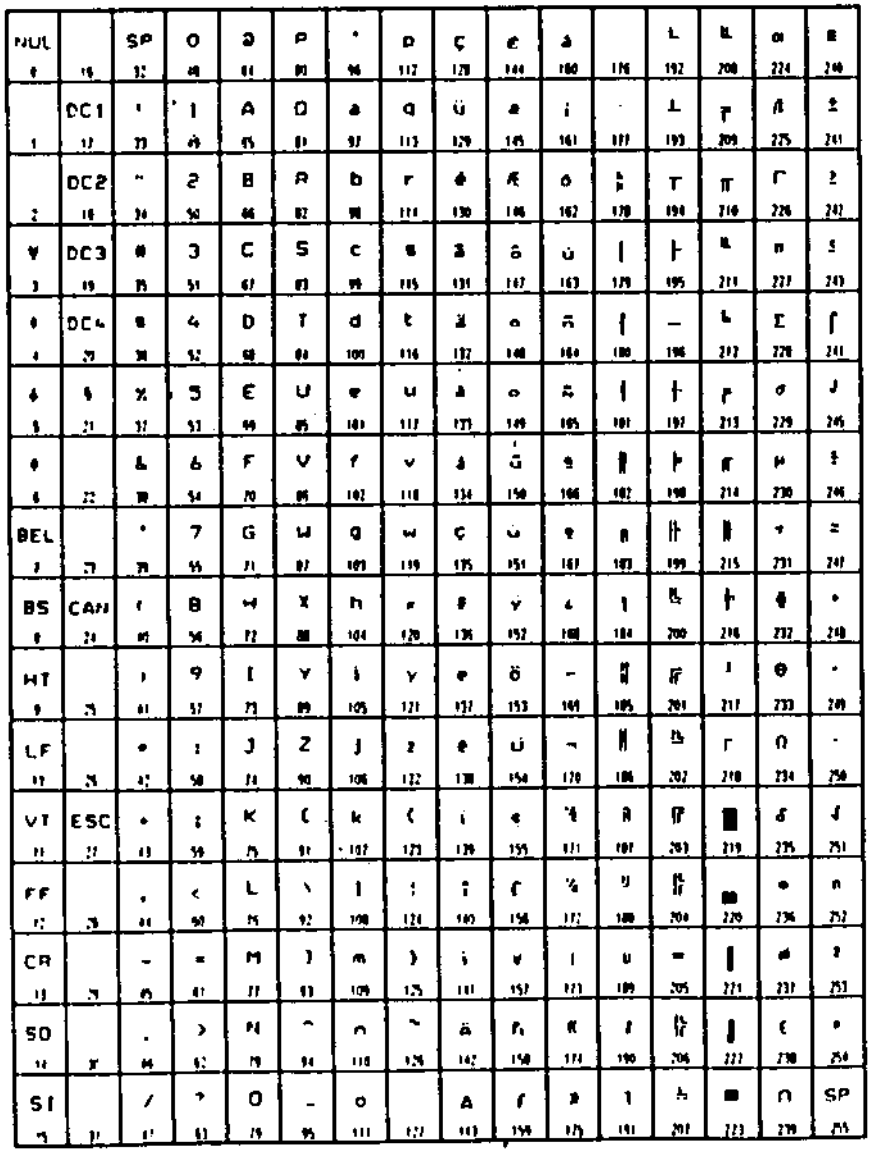

IBM Character Set 1 Mapping

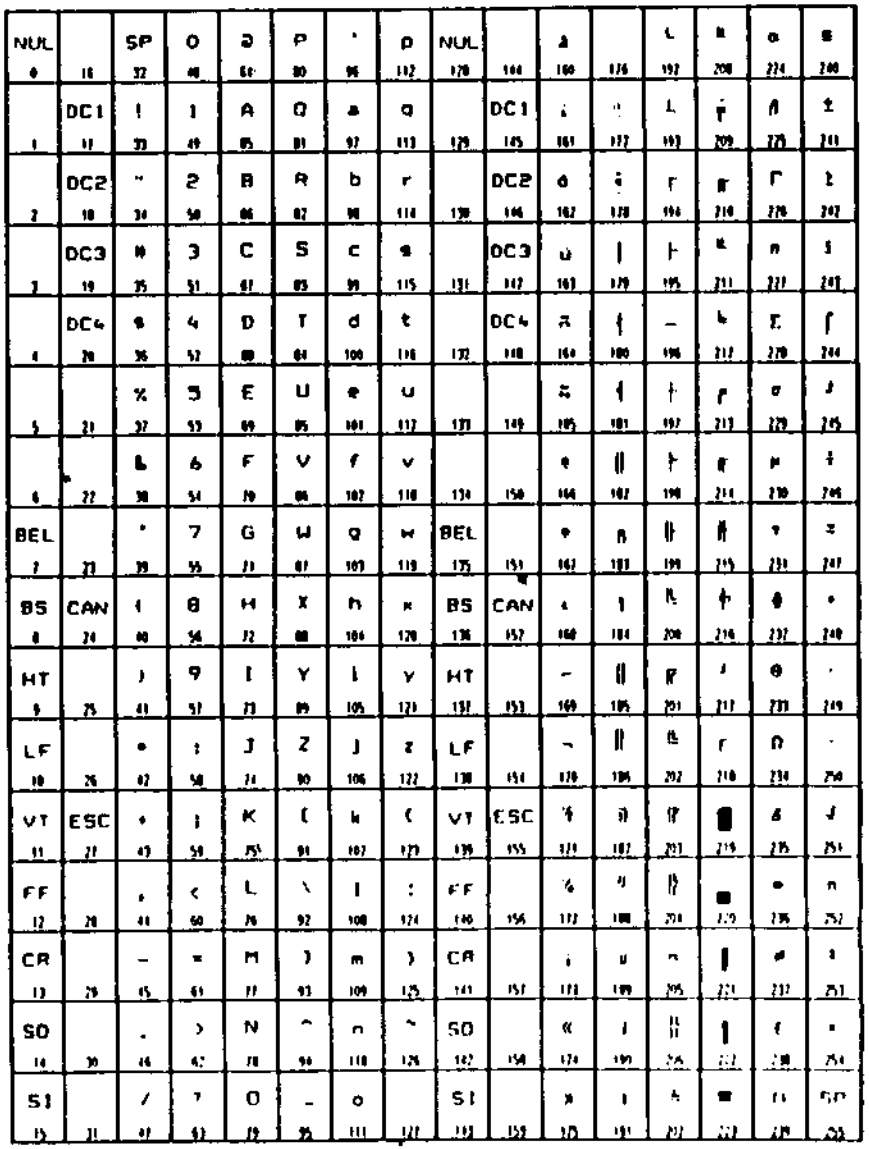

Differences Between the IBM Proprinter and the IBM Proprinter Compatibility Mode

Feature	Difference
Emphasized text	The IBM Proprinter supports double-strike for Compressed and Elite text but does not emphasize them. The IBM Proprinter Compatibility Mode prints double-strike and emphasized as bold Compressed or Elite text.
Print mode	The IBM Proprinter defaults to draft mode. The IBM Proprinter Compatibility Mode defaults to LQ mode.
Line-draw characters	Compressed (17.1 pitch) and expanded compressed (8.5 pitch) line-draw characters are not contiguous in the IBM Proprinter Compatibility Mode. On the IBM Proprinter, only the compressed line-draw characters are not contiguous.
Character alignment	The IBM Proprinter Compatibility Mode centers characters vertically in the character cell. The IBM Proprinter aligns characters top justified in the character cell.
Overscore mode	Overscore mode does not work in IBM Proprinter Compatibility Mode if the overscored characters are preceded on the same line by non-overscored downloaded characters or normal column graphics.
Superscript and subscript characters	The IBM Proprinter prints superscript and subscript characters in draft mode. In IBM Proprinter Compatibility Mode, these are printed in NLQ mode. Superscript mode does not work in IBM Proprinter Compatibility Mode if the superscripted characters are preceded on the same line by non-superscript downloaded characters or normal column graphics.
Automatic perforation skip location	The IBM Proprinter assumes that space allocated for perforation skip is at the bottom of the page. The IBM Proprinter Compatibility Mode divides the perforation skip space, placing half at the top of the page and half at the bottom.
Page length change	When the IBM Proprinter changes the page length, it sets the top-of-form at the current vertical position. In the IBM Proprinter Compatibility Mode, if the current page has printed and the printer receives a request to change the page length, it ejects the current sheet, and sets the top-of-form at the top of the next sheet.
Set top-of-form	The IBM Proprinter allows the top-of-form setting to be at any position on a page of continuous form paper. The HP DeskJet 520 printer considers the top-of-form to be at the top of a cut-sheet page. Therefore, the top-of-form printer command is ignored in the IBM Proprinter Compatibility Mode.
Downloaded characters	If a downloaded character does not fit at the end of a line, the IBM Proprinter puts it on the next line. The IBM Proprinter Compatibility Mode prints the part of the character that fits and truncates the rest of it. Subsequent characters are put on the next line.
Default lines per page	When you enable Perforation Skip Mode on the HP DeskJet 520 printer, it prints 60 lines per page. (You must use a printer command to set Perforation Skip Mode on the IBM Proprinter.) When Perforation Skip Mode is disabled, the IBM Proprinter prints 66 lines per page and the HP DeskJet 520 printer prints 64 lines on the first page and 2 lines on the second page. To stop the 2 lines from printing on the next page, either change the page length setting to 63 lines in your software or enable Text Scale Mode. This allows 66 lines per page in text printing.

NOTE

In IBM Proprinter Compatibility Mode, you cannot use Text Scale Mode to print graphics or merged text and graphics.

The combinations for Perforation Skip Mode and Text Scale Mode include:

Lines Per Page	Perforation Skip Mode	Text Scale Mode
60	ON	OFF
64	OFF	OFF
60	ON	ON
66	OFF	ON

Specifications

Print Method

Plain paper drop-on-demand thermal inkjet printing

Print Speed*

MS Windows Print Speed

Presentation mode: 1 page per minute
Normal mode: 2.5 pages per minute
Fast mode: 3 pages per minute
EconoMode: 3 pages per minute

DOS Mechanism Speed

Letter quality mode: 167 cps at 10 cpi
EconoMode: 240 cps at 10 cpi

Resolution

MS Windows (text and graphics)

Presentation mode: 600 x 300 dpi
Normal mode: 600 x 300 dpi
Fast mode: 300 x 300
EconoMode: 150 x 300 dpi

DOS (text)

Letter quality mode: 600 x 300 dpi
EconoMode: 150 x 300 dpi

DOS (graphics)

Full-page 75, 100, 150, 300 dpi

Printer Command Language

HP PCL Level 3

Character Set Support

HP Roman8, PC-8, PC-8 (D/N), ISO 7 bit languages (German, French, Italian, Norwegian, Portuguese, Swedish, Spanish, U.K.) PC-850, ASCII, ECMA-94 Latin 1, HP Legal, HP Line Draw, Math, and PI.

Vertical Alignment

±0.002 in.

Emulation

IBM Proprinter I emulation

** Approximate figures. Exact speed will vary depending on the system configuration, software application, and document complexity.*

Built-in (internal) Fonts

Courier (Portrait Orientation)

Pitch: 5, 10, 16.67, 20 cpi
Point size: 6, 12 pt.
Style: Upright (Italic: 5, 10, 20 cpi only)
Stroke weight: Normal, Bold

CG Times (Portrait Orientation)

Pitch: Proportional
Point size: 5, 6, 7, 8, 10, 12, 14 pt
Style: Upright, Italic
Stroke weight: Normal, Bold

Letter Gothic (Portrait Orientation)

Pitch: 6, 12, 24 cpi
Point size: 6, 12 pt.
Style: Upright, Italic
Stroke weight: Normal, Bold

Univers (Portrait Orientation)

Pitch: Proportional
Point size: 5, 6, 7, 8, 10, 12, 14 pt
Style: Upright (Italic: 5, 6, 10, 12 pt only)
Stroke weight: Normal, Bold

Courier (Landscape Orientation)

Pitch: 10, 16.67, 20 cpi
Point size: 6, 12, 24
Style: Upright
Stroke weight: Normal, Bold

Letter Gothic (Landscape Orientation)

Point and Pitch: 6, 12, 24 pt for 12, 24 cpi
4.75, 9.5, 19 pt for 16.67 cpi
Style: Upright
Strokeweight: Normal, Bold

Scalable TrueType Fonts for Microsoft Windows

Arial® Black, CG Goudy Old Style, Phyllis, Graphite Light, CG Poster Bodoni, Lucida® Casual, Gill Sans® Shadow, Milestones™ Font, Signet Roundhand, and PL Benguiat Frisky

Software Compatibility

MS Windows v3.1 Compatible
Compatible with an extensive range of DOS software applications
OS/2 v1.3, 2.0, 2.1 Compatible

Media Weight

Paper: 60 to 135 g/m^2 (16 to 36 lb)
Envelopes: 75 to 90 g/m^2 (20 to 24 lb)

Media Size

US letter 216 x 279 mm (8.5 x 11 in.)
European A4 (210 x 297 mm)
US legal 216 x 356 mm (8.5 x 14 in.)
U.S. transparency 216 x 279 mm (8.5 x 11 in.)
European A4 transparency (210 x 297 mm)
U.S. glossy 216 x 279 mm (8.5 x 11 in.)
European A4 glossy (210 x 297 mm)
Executive 184 x 267 mm (7.25 x 10.5 in.)
US No. 10 envelope 104.7 x 241.3 mm (4.12 x 9.5 in.)
European DL envelope (220 x 110 mm)

Media Handling

Built-in sheet feeder (up to 100 sheets)
Built-in envelope feeder (up to 20 envelopes)
Built-in OUT tray (up to 50 sheets)

Control Panel

Buttons

Reset, Clean, Self Test, Install Print Cartridge, Load/Eject Paper, Font, Status, Quality

Lights

Landscape Font, Portrait Font, Condensed Font, Busy, Ready, Print Cartridge, EconoMode

I/O Interface

Centronics parallel

Buffer Size

16 Kbyte receive buffer

Power Requirements

Power modules:
Input Voltage (depends on power module ordered):
100, 120, 220, or 240 VAC (+10%, -10%)
Frequency:

100 VAC	50/60 Hz (+3 Hz, -3 Hz)
120 VAC	60 Hz (+3 Hz, -3 Hz)
220 VAC	50 Hz (+3Hz, -3 Hz)
240 VAC	50 Hz (+3 Hz, -3 Hz)

Power consumption:

8 watts maximum non-printing
25 watts maximum printing

Operating Environment

Maximum operating temperature:
5°C (41°F) to 40°C (104°F)
Recommended operating temperature for best print quality: 15°C (59°F) to 35°C (95°F)
Storage temperature: -40°C (-40°F) to 60°C (140°F)
Humidity: 10-80% RH non-condensing
Noise Levels per ISO 9296:

	Letter Quality	EconoMode
Sound Power, LwAd:	6.1 B(A)	6.4 B(A)
Sound Pressure, LpAm:	47 dB(A)	49 dB(A)

Dimensions

443 mm (17.5 in.) W x 206 mm (8.2 in.) H
x 389 mm (15.3 in.)D

Weight

6.6 kg (14.5 lb)

Reliability

60,000 page life. 20,000 hours MTBF
2000 hours power-on and 12,000 printed pages per year
1000 total pages per month maximum use

Product Certifications

Safety Certifications - Power Module: UL, CSA, TUV SEMKO, NEMKO, FEI, LCIE, SECV
Safety Certifications - Printer with Power Module: UL, CSA, TUV, ETL. Others not required
EMI Certifications - Printer with Power Module: FCC Class B when used with a Class B computing device (USA), EMC Directive 89/336/EEC (European Community), VCCI (Japan), SABS (South Africa), RRL (South Korea)

Regulatory Notices

FCC Statement (USA)

The United States Federal Communications Commission (in 47 CFR 15.105) has specified that the following notice be brought to the attention of users of this product.

This equipment has been tested and found to comply with the limits for a Class B digital device, pursuant to part 15 of the FCC Rules. These limits are designed to provide reasonable protection against harmful interference in a residential installation. This equipment generates, uses and can radiate radio frequency energy and, if not installed and used in accordance with the instructions may cause harmful interference to radio communications. However, there is no guarantee that interference will not occur in a particular installation. If this equipment does cause harmful interference to radio or television reception, which can be determined by turning the equipment off and on, the user is encouraged to try and correct the interferences by one or more of the following measures:

- reorient the receiving antenna
- increase the separation between the equipment and the receiver
- connect the equipment into and outlet on a circuit different from that to which the receiver is connected
- consult the dealer or an experienced radio/TV technician for help

The user may find the following booklet prepared by the Federal Communications Commission, helpful: *How to Identify and Resolve Radio/TV Interference Problems.* This booklet is available from the U.S. Government Printing Office, Washington, D.C. 20402, Stock No. 004-000-00345-4.

Use of a shielded cable is required to comply within Class B limits of Part 15 of FCC Rules.

Pursuant to Part 15.21 if the FCC Rules any changes or modifications to this equipment not expressly approved by Hewlett-Packard Company may cause harmful interference and void the FCC authorization to operate this equipment.

Power Module Statement

The power module cannot be repaired. If it is defective it should be discarded or returned to the supplier.

Observera!

Skadas sladden till denna nätadapter skall enheten kasseras. Sladden går ej att byta ut.

Svenska

Får endast anslutas till jordat nätuttag.

VCCI

被障害について	この装置は、第二種情報装置(住宅地域又はその隣接した地域において使用されるべき情報装置)で住宅地域での電波障害防止を目的とした情報処理装置等電波障害自主規制協議会(VCCI)基準に適合しております。 しかし、本装置をラジオ、テレビジョン受信機に近接してご使用になると、受信障害の原因になることがあります。 取扱説明書に従って正しい取り扱いをして下さい。

사용자 안내문

기종별	사용자 안내문
A급 기기	이 기기는 업무용으로 전자파 장해검정을 받은 기기이오니 판매자 또는 사용자는 이 점을 주의하시기 바라며, 만약 잘못 구입하셨을 때에는 구입한 곳에서 비업무용으로 교환하시기 바랍니다.
B급 기기	이 기기는 비업무용으로 전자파장해검정을 받은 기기로서 주거지역에서는 물론 모든 지역에서 사용할 수 있습니다

비고 A급 업무용 기기를 말한다
B급 업무용 기기 외의 기기를 말한다

DECLARATION OF CONFORMITY

according to ISO/IEC Guide 22 and EN 45014

Manufacturer's Name: Hewlett-Packard Company

Manufacturer's Address:

Hewlett-Packard Co.
Vancouver Division
18110 S.E. 34th Street
Camas, WA 98607

Hewlett-Packard Singapore (PTE) Ltd.
Asia Peripherals Division
20 Gul Way
Singapore 2262

Hewlett-Packard Espanola, S.A.
Barcelona Peripherals Operation
Avenida Graells, 501
08190 Sant Cugat del Valles
Barcelona, Spain

declares, that the product(s):

Product Name: DeskJet and DeskWriter Printers

Model Number(s): C2106A, 2279A, C2113A, C2114A, C2121A, C2124A, C2127A, C2128A, C2168A, C2169A, C2170A, and C2171A

Product Options: All

conforms to the following Product Specifications:

Safety: IEC 950 (1991) Second Edition without amendments/EN 60950 (1988)

EMC: EN55022 (1988) Class B/CISPR 22 (1985) Class B
IEC 801-2 (1991) Second Edition/prEN 55101-2 (1990):4 kV CD, 8 kV AD
IEC 801-3 (1984)/prEN 55024-3 (1991): 3 V/m
IEC 801-4 (1988)/prEN 55024-4 (1992): 1 kV

Supplementary Information:

The products herewith comply with the requirements of the Low Voltage Directive 73/23/EEC and the EMC Directive 89/336/EEC. The products were tested in a typical configuration.

Camas, WA., Dec, 20, 1993

Nilesh Gheewala
Customer Assurance Manager

European Contact: Your local Hewlett-Packard Sales and Service Office or Hewlett-Packard GmbH, Department ZQ/ Standards Europe, Herrenberger Straße 130, D-71034 Böblingen FAX:+49-7031-143143

Interface and Cable Requirements

The Centronics parallel interface port, which is a standard 36-pin Amphenol type with two metal-wire retaining clips.

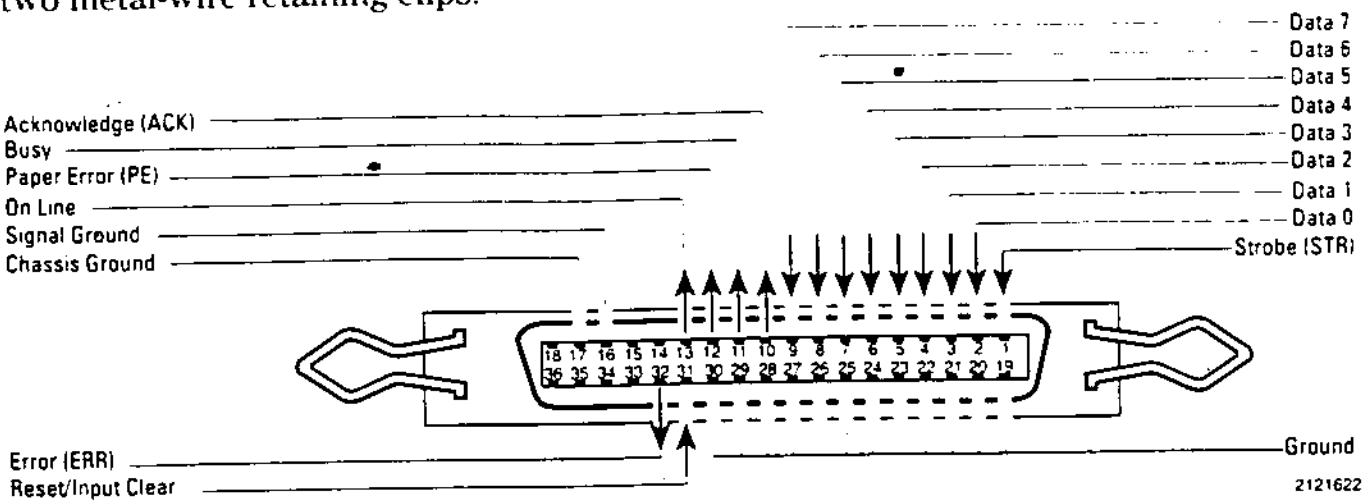

Pin No.	Signal	Description
1	Strobe[1]	A low pulse causes the printer to read one byte of data.
2 - 9	Data 0 - Data 7	Data lines. Data 0 is the least significant bit (LSB).
10	Acknowledge[1]	The printer sends a low pulse to indicate that it has accepted a byte of data and is ready for more data.
11	Busy	The printer sends a high logic level to indicate to the computer that it cannot receive data due to data entry, a full buffer, or error status.
12	Paper Error	The printer sends a high logic level to indicate to the computer that it is out of paper.
13	Ready	The printer sends a high logic level to indicate to the computer that it is in an online condition.
16	Gnd	Signal interface ground.
17	Chassis Gnd	Chassis ground.
18	+5 V	The printer outputs a +5 volt high logic level through a 2.2K ohm resistor.
19 - 30	Sig Gnd	Signal ground.
31	Reset/Input Clear	A low pulse sent by the computer resets the printer and clears the printer's input buffer. The printer does not work when this line is held low.
32	Error[1]	The printer sends a low logic level to the computer to indicate that it is in an error state.

[1]Indicates active low

Cable Requirements

Computer Model	Host Interface	HP Cable #	Non-HP Cable #
Vectra PC Family	HP24540A/B Serial/Parallel Interface Card	C2912A or 24542D	
HP Terminals: 2392A, 2393A, 2394A, 2397A	Opt 093 or HP40210P	40242D	
700/96, 700/98	Built In	24542D, C2912A	
IBM PC, PC/XT	IBM Serial/Parallel Adaptor	C2912A or 24542D	IBM Parallel Printer Cable
IBM PC/AT	IBM Serial/Parallel Adaptor	C2912A or 24542D	IBM Parallel Printer Cable
IBM PS/2	Built-in	C2912A or 24542D	
IBM Convertible PC	IBM Serial/Parallel Adaptor	C2912A or 24542D	

If your computer has only a serial port, you need a serial/parallel converter kit. Contact your computer dealer to obtain a kit.

Increasing Printer Performance

The printing speed of the HP DeskJet 520 printer can be affected by:

- Amount of RAM in your computer
- Which printer driver is installed on your computer
- Which printer is selected from your application software program

To enhance the printer's performance:

- Increase the amount of RAM in your computer.
- Install the appropriate printer driver.
- Limit the number of application programs or documents you open at a time.
- Delete screen fonts or printer fonts you do not often use.
- Delete large screen fonts you do not often use.
- Use the printer settings recommended for enhanced printer performance. If you use Microsoft Windows 3.1, refer to the on-line help for the HP DeskJet Printer Setup dialog box. Otherwise, refer to the printing section of your application software's manual.

Ordering Information

The Standard Unit

The standard unit includes: One HP DeskJet 520 printer, one print cartridge, one power module, one user's guide kit containing one user's guide and one setup guide, two disk envelopes containing printer software and printer software guides. The interface cable is not included.

Ordering Supplies and Accessories

To order printer supplies or accessories, call your nearest HP dealer. If your dealer does not have the supplies, call HP DIRECT for fast shipping service:

- **Within the U.S.**: 1-800-538-8787
- **Toronto**: 416-671-8383
- **Other Canadian Provinces**: 1-800-387-3154

Write or call:

- **Europe/Africa/Middle East**: (31) 20/547 999, Hewlett-Packard S.A., Central Mailing Department, PO. Box 529,1180 Amstelveen, The Netherlands
- **Australia/ New Zealand**: (03) 895-2895, China Resources Bldg., 26 Harbour Road, Wanchai, Hong Kong
- **Latin America**: (525)326-40-00, Latin American Region Headquarters, Monte Pelyoux 111 Colonia Lomas de Chapultepec, Codigo Postal 11000, Mexico, D.F.
- **Japan**: (03) 331-6111, Yokogawa-Hewlett-Packard Ltd. 29-21, Takaido-Higashi 3-chome, Suginami-ku, Tokyo 168
- **Elsewhere in the World**: Hewlett-Packard Company, Intercontinental Headquarters, 3495 Deer Creek Road, Palo Alto, CA 94304, U.S.A.

Available Font Cartridges

Number/Name	Font	Pitch	Point Size	Style	Character Set Support
22706B Prestige Elite	Prestige Elite	12, 24, 16.67, 33.34	10, 7	Upright, Italic Upright	HP Roman8, ASCII, Roman Ext., HP Legal, PC8, ECMA-94 Latin 1, ISO7 Includes Math and PI font
	HP Line Draw	12	12	Upright	
22706C Letter Gothic	Letter Gothic	12, 24, 16.67, 33.34	9.5, 12	Upright, Italic	HP Roman8, ASCII, Roman Ext., HP Legal, PC8, ECMA-94 Latin 1, ISO7
	HP Line Draw	12	12	Upright	
22706L Landscape Fonts	Letter Gothic	12, 24, 16.67	12, 24	Upright, Italic	HP Roman8, ASCII, Roman Ext., HP Legal, PC8, ECMA-94 Latin 1, ISO7
	Courier	10, 20	12	Upright	
22706M Presentations	Presentations	6.5, 13, 8.1, 16.2, 10, 20	14, 16, 18	Upright	ASCII*
	Letter Gothic	10, 20	14	Upright	
	HP Line Draw	10,	12	Upright	
22706U Times Roman Headlines	Times Roman	Proportional	15, 30	Upright	HP Roman8, ASCII, HP Legal, PC-8, PC-8 D/N, PC-850, ISO7, ECMA-94 Latin 1
22706V Helvetica Headlines	Helvetica	Proportional	15, 30	Upright	HP Roman8, ASCII, HP Legal, PC-8, PC-8 D/N, PC-850, ISO7, ECMA-94 Latin 1
22706W WordPerfect Font	CG Times	Proportional	6, 24 8, 10, 12, 14	Upright Upright, Italic	DeskTop Symbols
	CG Times Bold	Proportional	18	Upright	
	Univers	Proportional	14, 18, 24	Upright	
C2109B Global Text (kerned)		Proportional	8, 10	Upright	PC-8, PC-8 D/N, PC-850, HP Roman-8, US-ASCII, ECMA-94 Latin 1
	CG Triumvirate	Proportional	10, 14	Upright	
C2109C Garamond Collection	Garamond Antiqua	Proportional	8	Upright, Italic	PC-8, PC-8 D/N, PC-850, HP Roman-8, US-ASCII, ECMA-94 Latin 1
	Garamond Antiqua/ Kursiv (Italic)	Proportional	10, 12	Upright	
	Garamond Halbfett (bold)	Proportional	14	Upright	
C2109D Dom Casual**	Dom Casual	Proportional	12, 14, 18, 24	Upright	Ecma-94 Latin 1
C2109E Brush (kerned)**	Brush	Proportional	12, 14, 18, 24	Upright	Ecma-94 Latin 1

* This font cartridge contains ASCII characters only and may not be suitable for use in some countries.
**Bold is not available.

See Character Sets in this chapter for a listing of all character sets.

Supplies and Accessories List

Supply/Accessory	HP Reorder Number
Print Cartridge	
High Capacity Inkjet Print Cartridge	51626A
Media	
LX JetSeries Transparency Film (U.S. letter)	51636F
LX JetSeries Transparency Film (European A4)	51636G
LX JetSeries Glossy Paper (U.S. Letter)	51636H
LX JetSeries Glossy Paper (European A4)	51636J
Soft Fonts/Font Cartridges	
Times Roman/Helvetica Soft Font*	22708C
256K RAM Cartridge	22707B
Misc. Accessories	
Printer dust cover	92250R
Printer organizer	92177Z
Power Module	
U.S.A., Canada, 120V/50/60H	17122B
Europe (except U.K. and Denmark), 220V/50H	17222B
Japan, 100V/50H	17322B
U.K., 240V/50H	17422B
Switzerland, 220V/50H	17522B
South Africa, 220V/50H	17622B
Australia, 240V/50H	17722B
Denmark, 220V/50H	17822B
China, 220V/50H	17922B
HP DeskJet 520 Printer User's Guide Kits	
U.S. English User's Guide Kit	C2170-60010
International English User's Kit	C2170-60011
Danish User's Guide Kit	C2170-60012
Dutch User's Guide Kit	C2170-60013
Finnish User's Guide Kit	C2170-60014
French User's Guide Kit	C2170-60015
German User's Guide Kit	C2170-60016
Italian User's Guide Kit	C2170-60017
Norwegian User's Guide Kit	C2170-60018
Portuguese User's Guide Kit	C2170-60019
Spanish User's Guide Kit	C2170-60020
Swedish User's Guide Kit	C2170-60021
Traditional Chinese User's Guide Kit	C2170-60022
Czechoslovakia User's Guide Kit	C2170-60041
Hungarian User's Guide Kit	C2170-60042
Polish User's Guide Kit	C2170-60043

*Requires at least one 256K RAM Cartridge

Glossary

ASCII

(American Standard Code for Information Interchange.) An 8-bit code that uses 7 bits to represent character information such as letters, punctuation, symbols, and control characters. The eighth bit can be used for parity.

bit

Binary digit; a bit represents an "on" or "off" electrical condition. It is the smallest unit of digital information used by a computer or peripheral device.

bitmapped font

Printer or screen font made of dot-by-dot patterns.

buffer

Segment of computer or printer memory where information for input or output is held until processed.

byte

Unit of information consisting of eight bits.

busy

When the printer is receiving information from the computer.

cable

Group of insulated wires that carry information between devices.

Centronics parallel interface

Standard interface for connecting printers and other peripheral devices to a computer. Unlike a serial interface, a parallel interface transmits a full byte of data at one time.

character

Printable letters and symbols.

character height

Height of a printed uppercase character. Character height is defined in points. One point is 1/72 of an inch.

character set

Unique sub-grouping of all available characters in a font. Each character set is defined for a specific purpose. Character sets are also called symbol sets.

clean print cartridge

To restore print quality of the print cartridge.

configure

Process of changing printer settings to allow the printer to communicate with a computer.

configuration

Hardware configuration is changed with configuration switch settings. Software configuration is changed by entering new data or setup strings.

See **configure**.

configuration switches

Two banks of switches located on the printer's front base, below the IN tray drawer, used to define default printer settings, such as page length or data communications.

control code

Instruction that tells the printer to perform a specific function.

cpi

Characters per inch, also called pitch. CPI describes the number of characters that print within one horizontal inch. For example, 10 pitch printing yields 10 characters per inch.

cps

Characters Per Second (cps) refers to printing speed. It is used in describing the number of characters that will print within one horizontal inch per second.

data communications

Transfer of information between a computer and peripheral device, such as a printer.

downloading

Process of transferring fonts stored on floppy disks from the computer to the printer's memory. Downloaded fonts are called soft fonts. Soft fonts remain in the printer until you turn off the printer.

dpi

Dots per inch. DPI describes the number of ink dots printed within one horizontal inch. Also known as print resolution.

draft quality

See **EconoMode**.

EconoMode

EconoMode printing saves ink and allows you to print a "draft" document faster.

embedded printer commands

Commands you type into a software file to change the printing options.

emulation

An alternate mode that allows the printer to act like another type of printer.

escape character

The escape character, Esc, is used to identify a printer command to the computer. This character is usually not a printable character. Use it as a command code for the printer.

factory default

Printer settings that are selected at the factory. These settings are in use unless you change them.

fixed-pitch spacing

Equal spacing between each character of a font. Each character takes up the same amount of space on a line. Also known as a monospaced font.

font

Collection of characters with a consistent size and style.

font cartridge

Fonts stored on a cartridge. The cartridges installs in either of the two font cartridge slots on the printer.

font characteristics

Characteristics such as orientation, character height, style, stroke weight, and typeface that determine what a printed font looks like.

font scaling

Method used by the printer driver to adjust font size to produce high-quality printed text. Scalable fonts are provided on the HP DeskJet 500 Series Printer Driver for Microsoft Windows.

grayscale

Representing color in black and white. Different colors and saturation levels of color appear as different shades of gray.

hardware

Electronic components of a computer or printer.

hexadecimal

Numbers represented to the base 16 (digits 0-9 and A,B,C,D,E,F). Referred to as "hex."

interface cable

Transmission cable that connects a printer or other device to a computer.

interface connector

Connector at the end of an interface cable that is inserted into the interface port on the computer or printer.

internal fonts

Fonts that reside in the printer. Also called resident or built-in fonts

kerning

Adjustment of spacing between proportionally spaced characters making them visually consistent and balanced.

landscape orientation

Refers to printing across the length of the page. The term landscape is derived from pictures of landscape, which are usually horizontal in format.

letter quality mode

Provides the best print quality for DOS applications.

lpi

Lines Per Inch describes the number of lines printed within one vertical inch. Most printing is 6 or 8 lpi.

media jam

When media gets stuck somewhere along the paper path.

offline

When the printer is offline, it does not accept information from the computer. The **Ready** light turns off when the printer is offline.

online

When the printer is online, it accepts information from the computer. When the **Ready** light is on, the printer is online.

outline fonts

Often referred to as scalable printer fonts. See **scalable fonts**.

page orientation

Direction of print on the page. Printing across the width of a page is known as portrait orientation. Printing across the length of a page is known as landscape orientation.

PCL commands

The HP PCL Level 3 printer language. The PCL printer language is a standard developed by Hewlett-Packard to ensure compatibility between current and future PCL printers. PCL commands provide access to printer features.

perforation skip area

Area outside the text area but within the physical page. The HP DeskJet 520 printer does not print characters in this area. Printing beyond the text area prints on the next page.

pitch

Number of characters printed in one horizontal inch. Also known as cpi.

point size

One point is 1/72 of an inch. Character height is given in points. For example, 12 point type is 1/6 of an inch tall.

portrait orientation

Printing across the width of the page. The term is derived from portraits of people, which are usually vertical in format.

power socket

Socket on the bottom of the printer into which you attach the power module.

primary font

In HP PCL printer language, you can define two fonts internally at the same time. Access to the primary font is via the control code S_I (Shift In) and access to a secondary font is via the control code S_O (Shift Out).

print cartridge

Removable cartridge containing the ink used for printing.

print density

Relative darkness of print on the page. Very dense print appears totally black. Less dense print looks lighter, and solid filled areas may not be totally black.

print quality

Determined by the print mode, such as EconoMode or letter quality.

See **EconoMode** and **letter mode.**

print resolution

Measure of image sharpness expressed as dots per inch (dpi). See **dpi.**

printer commands

Commands sent to change printing options such as page orientation, margins, and font selection. Also called escape sequences.

printer control panel

Buttons and lights on the right front corner of the printer where you can change some printer settings.

printer driver

Computer file that provides information needed for the software application to communicate with a printer. Each software application requires specific printer drivers.

printer interface port

Socket on the bottom of the printer where you connect a parallel interface cable.

proportional spacing

Font with spacing that varies according to the width of each character. Proportional spacing makes text easier to read.

ready

When the printer is online and can accept data from the computer. The printer is ready when the **Ready** light is on. The printer is offline and paused when the **Ready** light is off.

resolution

Number of dots available to represent graphic detail in a given area. In print, resolution is measured as dots per inch (dpi).

See also **print resolution.**

sans serif font

Typeface designed without crosslines or finishing strokes at the top and bottom of characters. Helvetica is a sans serif font.

scalable fonts

Outlines of characters and symbols of a font stored in mathematical form. These outlines are not point size specific. When you send the outlines to the printer, the printer driver can scale the outlines (reduced or enlarged) from 4 to 127 point. Often referred to as outline printer fonts.

screen fonts

Bitmapped images of printer fonts which can be created from scalable fonts to install with the HP DeskJet 500 Series Printer Driver for Microsoft Windows that came with the printer. Screen fonts give a close approximation on the screen of the printed text. Screen fonts do use system memory and hard disk space.

serif font

Typeface designed with crosslines or finishing strokes at the top and bottom of characters. Courier is an example of a serif font.

soft font

Fonts stored on floppy disks. Soft fonts are transferred to the printer's memory and used the same way as cartridge or resident fonts.

software application

Any word processing, graphics, programming or special application package that you use on your computer system.

spacing

The relative width spacing between characters. Fixed-pitch fonts have the same horizontal width between characters. Proportional spaced fonts have horizontal width spacing that varies by character.

stroke weight

Bold, medium, or light print density, or darkness.

style

For fonts, this refers to upright or italic printing.

top of form

The line of the page where printing can begin; the first line after the top margin.

troubleshooting

Process of locating the cause of a problem by stepping through a list of symptoms and suggested remedies until the solution is found.

typeface

Refers to the printed design of characters. For instance, Courier, Helvetica, and Letter Gothic typefaces all print characters of a different design.

Index

Numerics

7-bit character sets 5-9
8-bit character sets 5-9

A

A4 paper 5-34
accessing a printer driver 1-7, 1-8
accessories and supplies 5-41
adding media 2-3
alignment, bidirectional 5-33
all lights blink 4-4
ASCII character set 5-3
ASCII decimal-hex conversion 5-17
automatic underlining
  landscape limitation 5-4

B

bidirectional alignment 5-33
blinking lights
  Busy and Ready 4-3, 4-8
bond paper 2-2
bottom margin 5-4
buffer size 5-34
built-in fonts 5-33
Busy and Ready lights blinking 4-3, 4-8
Busy light 4-4
button
  Install Print Cartridge 3-3
buttons 5-34
  Font 1-4
  Load/Eject Paper 1-4, 4-3, 4-4
  Quality 1-4
  Reset 1-4
  Status 1-4, 4-2

C

cables 4-2, 5-39
caring for printer 4-11
CG Times font 5-33
changing print cartridge 3-3
character sets 5-33
  Desktop 5-16
  differences,support 5-9
  ECMA-94 Latin 1 5-13
  HP Legal 5-13
  HP Line Draw 5-14
  HP Roman8 5-10
  IBM All characters 5-29
  IBM character set 1 mapping 5-30
  IBM character set 2 mapping 5-30
  ISO substitution table 5-12
  Math7 5-14
  Math8 5-15
  MSWindows 5-16
  PC-8 5-10
  PC-8 Danish/Norwegian 5-11
  PC-850 5-11
  PIFont 5-15
  switch settings 5-3
Clean button 1-4
cleaning printer 4-11
codes
  printer control 5-26
combining media 2-3
combining printer commands 5-18
configuration switches 5-2, 5-29
control codes 5-26
control panel 1-2
  buttons 1-4
  lights 4-3, 4-4
control panel lights 4-2
conversion, ASCII decimal-hex 5-17
copper ribbon 3-5
Courier font 5-33
cradle
  print cartridge 1-2, 3-3
customer support 4-12

D

data communications 5-37
decimal values 5-17
default
  switch settings 5-2
Desktop character set 5-16
DL envelopes 5-3, 5-34

E

ECMA-94 Latin 1 character set 5-3, 5-13
EconoMode 1-4, 1-5, 5-33
eight-bit characters sets 5-9
emulation cartridge 4-5
envelopes
  DL 5-3
  loading 2-9, 4-9
  selecting 2-2
  settings 4-9
  sizes 2-2
  skewed or slanted 4-9
  switch settings 5-3
  to avoid 2-2
  U.S. 5-3
  weight 2-2
  won't load 4-9
environmental specifications 5-34
escape sequences, see also printer commands
european A4 paper 5-34
european DL envelopes 5-3, 5-34
executive size paper
  loading 2-7
  removing from printer 2-12

F

fading print 4-6
faint printing 4-6
FCC notice 5-35
Font button 1-4
font cartridge
  default slot 5-3
  failure 4-3, 4-4
Font lights 5-4
fonts
  cartridge 5-7
  internal 5-33
  scalable 5-33
  soft 5-7
French character set 5-3
fuzzy print 4-5

G

German character set 5-3
getting a printer driver 1-8
graphics resolution 5-33

H

heavy paper 2-2
help 4-12
hexadecimal values 5-17
high capacity print cartridge 5-41
HP Legal character set 5-3
HP PCL 5-20, 5-33
HP Roman8 character set 5-3, 5-10

I

I/O interface 5-34
IBM ALL Characters set 5-29
IBM character set 1 mapping 5-30
IBM character set 2 mapping 5-30
IBM Proprinter compatibility mode 5-29
IN tray 1-2, 4-3, 4-8
ink nozzles 3-5, 4-2
ink running out 4-6
ink smearing 4-6
input buffer 5-34
Install Print Cartridge button 3-3
installing print cartridge 3-5
interface cable 4-2, 5-39
internal fonts 5-33
ISO character sets 5-9
ISO substitution table 5-12
Italian character set 5-3

J

jammed media 4-3, 4-8
  clearing 4-8

L

landscape printing problem 4-4
left margin setting 5-4
legal size paper 5-3
Letter Gothic font 5-33
letter quality 1-4, 1-5
letter size paper 5-3, 5-34
letterhead paper 2-2, 2-6
lights 5-34
  Busy 1-5, 4-3
  Condensed Font 1-5
  EconoMode 1-5
  Landscape Font 1-5
  Portrait Font 1-5
  printer control panel 4-4
  Ready 1-5, 4-2, 4-3
Line Draw character set 5-14
line spacing 5-5
Load/Eject Paper button 1-4, 4-3, 4-4
loading
  envelopes 2-9
  problems 4-7
LX JetSeries Transparency Film 2-2

M

maintaining print cartridges 4-11
maintaining printer 4-11
margin problems 4-5
margin settings 5-4
Math7 character set 5-14
Math8 character set 5-15
media
  adding 2-3, 4-8
  clearing jams 4-8
  curling 4-7
  envelopes 2-2
  loading problems 4-3, 4-7
  mixing 4-7
  ordering information 5-41
  out 4-3
  problems 4-7
  selecting 2-2
  sizes 5-34
  skewed 4-9
  stuck 4-8
  to avoid 2-2
  weight 5-34
  won't eject 4-7
media problems 4-7
Milestones Font 5-7, 5-33
Microsoft Windows 1-7, 4-6, 5-3, 5-16, 5-33
MSWindows symbol set 5-16
multiple-part forms 2-2

N

normal mode 5-33
Norwegian character set 5-3

O

obtaining a printer driver 1-8
offline 1-4
ON/OFF switch 1-2
online 1-4
operating environment 5-34
out of media 4-3
OUT tray 1-2, 4-8
OUT tray cover 1-2, 4-7

P

paper
  bond 2-2
  clearing jams 4-8
  letterhead 2-2
  multiple-part forms 2-2
  path 4-7
  plain 2-2, 5-33
  problems 4-7
  sizes 2-2, 5-2, 5-34
  switch settings 5-3
  to avoid 2-2
  U.S. legal 5-34
  U.S.legal 5-34
  weight 2-2
paper width adjustment lever 1-2, 4-7, 4-9
paper/envelope size switch setting 5-2, 5-3
parts of the printer 1-2
pausing printing 1-4
PC-8 character set 5-3, 5-10
PC-8 Danish/Norwegian character set 5-3, 5-11
PC-850 character set 5-3, 5-11
PCL 5-20, 5-33
Perforation Skip Mode 5-2, 5-5
PIFont character set 5-15
plain paper 2-2, 2-5, 5-33
Portugese character set 5-3
power consumption 5-34
power module
  connection problems 4-2, 4-4
  ordering information 5-41
  statement 5-35
power requirements 5-34
power strip problems 4-2
power switch 1-2
preprinted forms 4-9
presentation mode 5-33

print cartridge
button 3-3
changing 3-3
cradle 3-3
installation problem 4-2
installing 3-5
solving problems 4-10
storing 3-2
print cartridge cradle 1-2
print cartridge missing 1-4
print cartridge problems
self-test 4-4
tape 4-2
print cartridges 4-2
drying out 4-11
maintenance 4-11
ordering information 5-41
storing 4-11
print method 5-33
print side 2-3
print speed 5-33
printer 5-34
buffer 5-34
busy 1-5
commands table 5-20
control codes 5-26
control panel 1-2, 1-4, 4-3
control panel lights 4-2
loads multiple sheets 4-8
no response 4-2
out of media 4-3
parts 1-2
ready to print 1-5
reliability 5-34
reset 1-4
resolution 5-33
self-test 4-4
speed 5-33
status 1-4
supplies and accessories 5-41
printer drivers 1-7
DOS 1-7
Microsoft Windows 1-7
OS/2 1-7
printing
dots or lines missing 4-10
fading 4-6
faint 4-6
fonts not printing 4-5
fuzzy 4-5
garbled 4-5
nothing prints 4-5
setting up software 1-7
skewed or slanted 4-5
problems
interface cable 4-2
media loading 4-7
media skewed 4-9
media won't eject 4-7
won't print 4-2

Q

Quality button 1-4

R

RAM cartridge
definition 5-3
part number 5-41
switch setting 5-2
Ready and Busy lights blinking 4-3
Ready light 4-2, 4-3
regulatory notices 5-35
reliability 5-34
removing executive size paper 2-12
removing print cartridge 3-3
Reset button 1-4
resolution 5-33
resume printing 1-4
Roman8 character set set 5-10
running out of ink 4-6

S

scalable fonts 5-33
selecting media 2-2
selecting paper 2-2
serial interface
baud rate switch settings 5-2
parity settings 5-2
settings
character sets 5-9
configuration switches 5-2
paper/envelope sizes 5-3
printer control panel 1-4, 1-5
seven-bit character sets 5-9
size
dimensions of printer 5-34
Spanish character set 5-3
special paper
ordering information 5-41
specifications 5-33
standard unit 5-39
start printing 1-4
Status button 1-4, 4-2
storing media 2-2, 2-3
storing print cartridges 3-2
supplies and accessories 5-41
support for printer 4-12
Swedish Names character set 5-3

T

tape 4-2
Text Scale Mode 5-2, 5-6
tips 5-18
selecting envelopes 2-2
selecting paper 2-2
using printer commands 5-19
top cover 1-2, 4-8
top margin 5-4
transparency film 2-6, 5-34
troubleshooting 4-1

U

U.S. legal size paper 5-3
U.S. letter size paper 5-3, 5-34
U.S. No. 10 envelopes 5-3, 5-34
United Kingdom character set 5-3
Univers font 5-33
using printer commands 5-18

V

values
ISO character sets 5-12
vertical alignment
bidirectional 5-33

Reduce, Reuse, Recycle

Protecting the Environment

Hewlett-Packard continuously improves the design and production processes of HP DeskJet 500 series and DeskWriter printers to minimize the negative impact on the office environment; on the communities where they are manufactured, shipped, and used; and in the disposal at the end of printing life.

Elimination

Ozone: All ozone-depleting chemicals (CFCs, for example) have been eliminated from Hewlett-Packard manufacturing processes.

Printer Packaging: Boxes for shipping individual printers from the factory to the distribution centers have been eliminated, saving roughly 50% in fuel and, therefore, fuel emissions. Boxes used to ship printers from the distribution centers are brown kraft paper made without bleach, eliminating the production of dioxin, a toxic substance.

Recycling

Printer Packaging: The boxes used to ship printers from the distribution centers, the expanded polystyrene packaging inserts, and the clear polyethylene bags containing the printer drivers are 100% recyclable.

Plastic Parts: All currently manufactured plastic parts weighing more than 25 grams (about one ounce) are marked as to the plastic content to facilitate product recycling.

Print Cartridges: Hewlett-Packard is conducting several pilot programs to take back print cartridges for material reclamation and environmentally-sound disposal. Call your Hewlett-Packard representative for current status.

Printers: Hewlett-Packard accepts used and obsolete printers for component recycling. Call your Hewlett-Packard sales office for instructions

Manuals: The manuals in this kit are printed on recycled paper.

Reduction and Reuse

Ink Packaging: The HP 51626A High Capacity black print cartridge delivers twice as much ink as older models, reducing the ink packaging waste by 50%.

Manuals: A new documentation format maintains the depth of product information while reducing the bulk of the user's guide by approximately 40%.

Energy Consumption

HP DeskJet 500 series and DeskWriter printers use only 8 watts in stand-by mode, which easily qualifies them as energy-saving computer printers under the U.S. Environmental Protection Agency's Energy Star Computers program. The EPA estimates that if all desktop PCs and peripherals in the U.S. were to qualify, the overall savings in electricity could amount to over $1 billion each year. It could also prevent the emission of 20 million tons of carbon dioxide per year (the equivalent output of 5 million cars).

The EPA, as a matter of policy, does not endorse any particular company or its products.

Printed on recycled paper

C2170-60011

Reorder Number C2170-60011
User's Guide Part Number C2170-90011
Printed in Singapore 12/93 CP

HEWLETT®
PACKARD