# DS-K1T642 Series Face Recognition Terminal

**User Manual**

# Legal Information

©2019 Hangzhou Hikvision Digital Technology Co., Ltd. All rights reserved.

## About this Manual

The Manual includes instructions for using and managing the Product. Pictures, charts, images and all other information hereinafter are for description and explanation only. The information contained in the Manual is subject to change, without notice, due to firmware updates or other reasons. Please find the latest version of this Manual at the Hikvision website ( ***https://www.hikvision.com/*** ).
Please use this Manual with the guidance and assistance of professionals trained in supporting the Product.

## Trademarks

HIKVISION and other Hikvision's trademarks and logos are the properties of Hikvision in various jurisdictions.
Other trademarks and logos mentioned are the properties of their respective owners.

## Disclaimer

TO THE MAXIMUM EXTENT PERMITTED BY APPLICABLE LAW, THIS MANUAL AND THE PRODUCT DESCRIBED, WITH ITS HARDWARE, SOFTWARE AND FIRMWARE, ARE PROVIDED “AS IS” AND “WITH ALL FAULTS AND ERRORS”. HIKVISION MAKES NO WARRANTIES, EXPRESS OR IMPLIED, INCLUDING WITHOUT LIMITATION, MERCHANTABILITY, SATISFACTORY QUALITY, OR FITNESS FOR A PARTICULAR PURPOSE. THE USE OF THE PRODUCT BY YOU IS AT YOUR OWN RISK. IN NO EVENT WILL HIKVISION BE LIABLE TO YOU FOR ANY SPECIAL, CONSEQUENTIAL, INCIDENTAL, OR INDIRECT DAMAGES, INCLUDING, AMONG OTHERS, DAMAGES FOR LOSS OF BUSINESS PROFITS, BUSINESS INTERRUPTION, OR LOSS OF DATA, CORRUPTION OF SYSTEMS, OR LOSS OF DOCUMENTATION, WHETHER BASED ON BREACH OF CONTRACT, TORT (INCLUDING NEGLIGENCE), PRODUCT LIABILITY, OR OTHERWISE, IN CONNECTION WITH THE USE OF THE PRODUCT, EVEN IF HIKVISION HAS BEEN ADVISED OF THE POSSIBILITY OF SUCH DAMAGES OR LOSS.
YOU ACKNOWLEDGE THAT THE NATURE OF INTERNET PROVIDES FOR INHERENT SECURITY RISKS, AND HIKVISION SHALL NOT TAKE ANY RESPONSIBILITIES FOR ABNORMAL OPERATION, PRIVACY LEAKAGE OR OTHER DAMAGES RESULTING FROM CYBER-ATTACK, HACKER ATTACK, VIRUS INSPECTION, OR OTHER INTERNET SECURITY RISKS; HOWEVER, HIKVISION WILL PROVIDE TIMELY TECHNICAL SUPPORT IF REQUIRED.
YOU AGREE TO USE THIS PRODUCT IN COMPLIANCE WITH ALL APPLICABLE LAWS, AND YOU ARE SOLELY RESPONSIBLE FOR ENSURING THAT YOUR USE CONFORMS TO THE APPLICABLE LAW. ESPECIALLY, YOU ARE RESPONSIBLE, FOR USING THIS PRODUCT IN A MANNER THAT DOES NOT INFRINGE ON THE RIGHTS OF THIRD PARTIES, INCLUDING WITHOUT LIMITATION, RIGHTS OF PUBLICITY, INTELLECTUAL PROPERTY RIGHTS, OR DATA PROTECTION AND OTHER PRIVACY RIGHTS. YOU SHALL NOT USE THIS PRODUCT FOR ANY PROHIBITED END-USES, INCLUDING THE DEVELOPMENT OR PRODUCTION OF WEAPONS OF MASS DESTRUCTION, THE DEVELOPMENT OR

PRODUCTION OF CHEMICAL OR BIOLOGICAL WEAPONS, ANY ACTIVITIES IN THE CONTEXT RELATED TO ANY NUCLEAR EXPLOSIVE OR UNSAFE NUCLEAR FUEL-CYCLE, OR IN SUPPORT OF HUMAN RIGHTS ABUSES.
IN THE EVENT OF ANY CONFLICTS BETWEEN THIS MANUAL AND THE APPLICABLE LAW, THE LATER PREVAILS.

### Data Protection

During the use of device, personal data will be collected, stored and processed. To protect data, the development of Hikvision devices incorporates privacy by design principles. For example, for device with facial recognition features, biometrics data is stored in your device with encryption method; for fingerprint device, only fingerprint template will be saved, which is impossible to reconstruct a fingerprint image.
As data controller, you are advised to collect, store, process and transfer data in accordance with the applicable data protection laws and regulations, including without limitation, conducting security controls to safeguard personal data, such as, implementing reasonable administrative and physical security controls, conduct periodic reviews and assessments of the effectiveness of your security controls.

# Symbol Conventions

The symbols that may be found in this document are defined as follows.

| Symbol | Description |
|---|---|
| **Danger** | Indicates a hazardous situation which, if not avoided, will or could result in death or serious injury. |
| **Caution** | Indicates a potentially hazardous situation which, if not avoided, could result in equipment damage, data loss, performance degradation, or unexpected results. |
| **Note** | Provides additional information to emphasize or supplement important points of the main text. |

# Regulatory Information

## FCC Information

Please take attention that changes or modification not expressly approved by the party responsible for compliance could void the user's authority to operate the equipment.
FCC compliance: This equipment has been tested and found to comply with the limits for a Class B digital device, pursuant to part 15 of the FCC Rules. These limits are designed to provide reasonable protection against harmful interference in a residential installation. This equipment generates, uses and can radiate radio frequency energy and, if not installed and used in accordance with the instructions, may cause harmful interference to radio communications. However, there is no guarantee that interference will not occur in a particular installation. If this equipment does cause harmful interference to radio or television reception, which can be determined by turning the equipment off and on, the user is encouraged to try to correct the interference by one or more of the following measures:
—Reorient or relocate the receiving antenna.
—Increase the separation between the equipment and receiver.
—Connect the equipment into an outlet on a circuit different from that to which the receiver is connected.
—Consult the dealer or an experienced radio/TV technician for help
This equipment should be installed and operated with a minimum distance 20cm between the radiator and your body.
FCC Conditions
This device complies with part 15 of the FCC Rules. Operation is subject to the following two conditions:
1. This device may not cause harmful interference.
2. This device must accept any interference received, including interference that may cause undesired operation.

## EU Conformity Statement

This product and - if applicable - the supplied accessories too are marked with "CE" and comply therefore with the applicable harmonized European standards listed

under the EMC Directive 2014/30/EU, RE Directive 2014/53/EU,the RoHS Directive 2011/65/EU

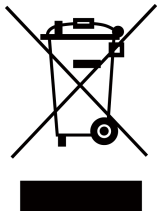

2012/19/EU (WEEE directive): Products marked with this symbol cannot be disposed of as unsorted municipal waste in the European Union. For proper recycling, return this product to your local supplier upon the purchase of equivalent new equipment, or dispose of it at designated collection points. For more information see: www.recyclethis.info

2006/66/EC (battery directive): This product contains a battery that cannot be disposed of as unsorted municipal waste in the European Union. See the product documentation for specific battery information. The battery is marked with this symbol, which may include lettering to indicate cadmium (Cd), lead (Pb), or mercury (Hg). For proper recycling, return the battery to your supplier or to a designated collection point. For more information see:www.recyclethis.info

# Safety Instruction

These instructions are intended to ensure that user can use the product correctly to avoid danger or property loss.

The precaution measure is divided into Dangers and Cautions:

**Dangers:** Neglecting any of the warnings may cause serious injury or death.

**Cautions:** Neglecting any of the cautions may cause injury or equipment damage.

| ⚠ | ⚠ |
|---|---|
| **Dangers:** Follow these safeguards to prevent serious injury or death. | **Cautions:** Follow these precautions to prevent potential injury or material damage. |

### ⚠ Danger:

- All the electronic operation should be strictly compliance with the electrical safety regulations, fire prevention regulations and other related regulations in your local region.
- Please use the power adapter, which is provided by normal company. The power consumption cannot be less than the required value.
- Do not connect several devices to one power adapter as adapter overload may cause over-heat or fire hazard.
- Please make sure that the power has been disconnected before you wire, install or dismantle the device.
- When the product is installed on wall or ceiling, the device shall be firmly fixed.
- If smoke, odors or noise rise from the device, turn off the power at once and unplug the power cable, and then please contact the service center.
- Do not ingest battery, Chemical Burn Hazard.
  This product contains a coin/button cell battery. If the coin/button cell battery is swallowed, it can cause severe internal burns in just 2 hours and can lead to death.
  Keep new and used batteries away from children. If the battery compartment does not close securely, stop using the product and keep it away from children. If you think batteries might have been swallowed or placed inside any part of the body, seek immediate medical attention.
- If the product does not work properly, please contact your dealer or the nearest service center. Never attempt to disassemble the device yourself. (We shall not assume any responsibility for problems caused by unauthorized repair or maintenance.)

### ⚠ Cautions:

- Do not drop the device or subject it to physical shock, and do not expose it to high electromagnetism radiation. Avoid the equipment installation on vibrations surface or places subject to shock (ignorance can cause equipment damage).
- Do not place the device in extremely hot (refer to the specification of the device for the detailed operating temperature), cold, dusty or damp locations, and do not expose it to high electromagnetic radiation.

- The device cover for indoor use shall be kept from rain and moisture.
- Exposing the equipment to direct sun light, low ventilation or heat source such as heater or radiator is forbidden (ignorance can cause fire danger).
- Do not aim the device at the sun or extra bright places. A blooming or smear may occur otherwise (which is not a malfunction however), and affecting the endurance of sensor at the same time.
- Please use the provided glove when open up the device cover, avoid direct contact with the device cover, because the acidic sweat of the fingers may erode the surface coating of the device cover.
- Please use a soft and dry cloth when clean inside and outside surfaces of the device cover, do not use alkaline detergents.
- Please keep all wrappers after unpack them for future use. In case of any failure occurred, you need to return the device to the factory with the original wrapper. Transportation without the original wrapper may result in damage on the device and lead to additional costs.
- Improper use or replacement of the battery may result in hazard of explosion. Replace with the same or equivalent type only. Dispose of used batteries according to the instructions provided by the battery manufacturer.
- Biometric recognition products are not 100% applicable to anti-spoofing environments. If you require a higher security level, use multiple authentication modes.
- Input voltage should meet both the SELV (Safety Extra Low Voltage) and the Limited Power Source with 100~240 VAC or 12 VDC according to the IEC60950-1 standard. Please refer to technical specifications for detailed information.

Use only power supplies listed in the user instructions:

| Model | Manufacturer | Standard |
|---|---|---|
| ADS-26FSG-12 12024EPG | Shenzhen Honor Electronic Co.,Ltd | PG |
| MSA-C2000IC12.0-24P-DE | MOSO Technology Co.,Ltd | PDE |
| ADS-26FSG-12 12024EPB | Shenzhen Honor Electronic Co.,Ltd | PB |
| ADS-26FSG-12 12024EPCU/EPC | Shenzhen Honor Electronic Co.,Ltd | PCU |
| ADS-26FSG-12 12024EPI-01 | Shenzhen Honor Electronic Co.,Ltd | PI |
| ADS-26FSG-12 12024EPBR | Shenzhen Honor Electronic Co.,Ltd | PBR |

# Contents

**Chapter 1 Overview ..... 1**
1.1 Overview ..... 1
1.2 Features ..... 1
**Chapter 2 Appearance ..... 2**
**Chapter 3 Installation ..... 3**
3.1 Installation Environment ..... 3
3.2 Wall Mounting ..... 3
3.3 Base Mounting ..... 5
**Chapter 4 Wiring ..... 6**
4.1 Terminal Description ..... 6
4.2 Wire Normal Device ..... 7
4.3 Wire Secure Door Control Unit ..... 8
4.4 Wire Fire Module ..... 8
**Chapter 5 Activation ..... 12**
5.1 Activate via Device ..... 12
5.2 Activate via Web Browser ..... 13
5.3 Activate via SADP ..... 13
5.4 Activate Device via Client Software ..... 14
**Chapter 6 Basic Operation ..... 16**
6.1 Set Application Mode ..... 16
6.2 Set Administrator ..... 16
6.3 Login ..... 17
6.3.1 Login by Administrator ..... 17
6.3.2 Login by Activation Password ..... 19
6.4 Communication Settings ..... 19
6.4.1 Set Network Parameters ..... 19

6.4.2 Set Wi-Fi Parameters ..... 20
6.4.3 Set RS-485 Parameters ..... 21
6.4.4 Set Wiegand Parameters ..... 22
6.5 User Management ..... 23
6.5.1 Add Face Picture ..... 23
6.5.2 Add Fingerprint ..... 25
6.5.3 Add Card ..... 26
6.5.4 Add Password ..... 27
6.5.5 Set Authentication Mode ..... 28
6.5.6 Search and Edit User ..... 28
6.6 Data Management ..... 29
6.6.1 Delete Data ..... 29
6.6.2 Import Data ..... 29
6.6.3 Export Data ..... 30
6.7 Identity Authentication ..... 30
6.7.1 Authenticate via Single Credential ..... 30
6.7.2 Authenticate via Multiple Credential ..... 31
6.8 Basic Settings ..... 31
6.9 Set Biometric Parameters ..... 32
6.10 Set Access Control Parameters ..... 34
6.11 Time and Attendance Status Settings ..... 35
6.11.1 Disable Attendance Mode via Device ..... 35
6.11.2 Set Manual Attendance via Device ..... 36
6.11.3 Set Auto Attendance via Device ..... 36
6.11.4 Set Manual and Auto Attendance via Device ..... 38
6.12 System Maintenance ..... 39
6.13 Two-Way Audio ..... 40
6.13.1 Call Client Software from Device ..... 40

6.13.2 Call Master Station from Device ..... 40
6.13.3 Call Device from Client Software ..... 41
6.13.4 Call Indoor Station from Device ..... 41
**Chapter 7 Operation via Web Browser ..... 43**
7.1 Login ..... 43
7.2 Live View ..... 43
7.3 Search Event ..... 44
7.4 Configuration ..... 44
7.4.1 View Device Information ..... 44
7.4.2 Set Time ..... 44
7.4.3 Set RS-485 Parameters ..... 45
7.4.4 Set Wiegand Parameters ..... 45
7.4.5 Set DST ..... 46
7.4.6 Upgrade and Maintenance ..... 46
7.4.7 Network Settings ..... 47
7.4.8 Set Video and Audio Parameters ..... 48
7.4.9 Customize Audio Content ..... 48
7.4.10 Set Video Intercom Parameters ..... 49
7.4.11 Set Access Control and Authentication Parameters ..... 50
7.4.12 Set Image Parameters ..... 50
7.4.13 Set Supplement Light Brightness ..... 51
7.4.14 Set Face Parameters ..... 52
**Chapter 8 Client Software Configuration ..... 54**
8.1 Configuration Flow of Client Software ..... 54
8.2 Device Management ..... 54
8.2.1 Add Device ..... 54
8.2.2 Reset Device Password ..... 63
8.3 Group Management ..... 63

8.3.1 Add Group ..... 63
8.3.2 Import Resources to Group ..... 64
8.3.3 Edit Resource Parameters ..... 64
8.3.4 Remove Resources from Group ..... 64
8.4 Person Management ..... 65
8.4.1 Add Organization ..... 65
8.4.2 Configure Basic Information ..... 65
8.4.3 Issue a Card by Local Mode ..... 66
8.4.4 Upload a Face Photo from Local PC ..... 68
8.4.5 Take a Photo via Client ..... 68
8.4.6 Collect Face via Access Control Device ..... 69
8.4.7 Collect Fingerprint via Client ..... 70
8.4.8 Collect Fingerprint via Access Control Device ..... 71
8.4.9 Configure Access Control Information ..... 71
8.4.10 Customize Person Information ..... 72
8.4.11 Configure Resident Information ..... 73
8.4.12 Configure Additional Information ..... 73
8.4.13 Import and Export Person Identify Information ..... 74
8.4.14 Import Person Information ..... 74
8.4.15 Import Person Pictures ..... 74
8.4.16 Export Person Information ..... 75
8.4.17 Export Person Pictures ..... 75
8.4.18 Get Person Information from Access Control Device ..... 76
8.4.19 Move Persons to Another Organization ..... 76
8.4.20 Issue Cards to Persons in Batch ..... 77
8.4.21 Report Card Loss ..... 77
8.4.22 Set Card Issuing Parameters ..... 78
8.5 Configure Schedule and Template ..... 79

8.5.1 Add Holiday ..... 79
8.5.2 Add Template ..... 80
8.6 Set Access Group to Assign Access Authorization to Persons ..... 81
8.7 Configure Advanced Functions ..... 82
8.7.1 Configure Device Parameters ..... 82
8.7.2 Configure Remaining Open/Closed ..... 87
8.7.3 Configure Multi-Factor Authentication ..... 89
8.7.4 Configure Custom Wiegand Rule ..... 91
8.7.5 Configure Person Authentication Mode ..... 92
8.7.6 Configure Card Reader Authentication Mode and Schedule ..... 93
8.7.7 Configure First Person In ..... 94
8.7.8 Configure Anti-Passback ..... 95
8.7.9 Configure Device Parameters ..... 96
8.8 Configure Linkage Actions for Access Control ..... 102
8.8.1 Configure Client Actions for Access Event ..... 102
8.8.2 Configure Device Actions for Access Event ..... 103
8.8.3 Configure Device Actions for Card Swiping ..... 104
8.8.4 Configure Device Actions for Person ID ..... 105
8.9 Control Door Status ..... 106
8.10 Event Center ..... 107
8.10.1 Enable Receiving Events from Devices ..... 107
8.10.2 View Real-Time Events ..... 108
8.10.3 Search Historical Events ..... 110
8.11 Time and Attendance ..... 113
8.11.1 Configure Attendance Parameters ..... 113
8.11.2 Add Timetable ..... 118
8.11.3 Add Shift ..... 119
8.11.4 Manage Shift Schedule ..... 120

8.11.5 Manually Correct Check-in/out Record ..... 123
8.11.6 Add Leave and Business Trip ..... 124
8.11.7 Calculate Attendance Data ..... 125
8.11.8 Attendance Statistics ..... 127
**Appendix A. Tips for Scanning Fingerprint ..... 130**
**Appendix B. Tips When Collecting/Comparing Face Picture ..... 132**
**Appendix C. Tips for Installation Environment ..... 134**
**Appendix D. Dimension ..... 135**
**Appendix E. Communication Matrix and Device Command ..... 136**

# Chapter 1 Overview

## 1.1 Overview

Face recognition terminal is a kind of access control device for face recognition, which is mainly applied in security access control systems, such as logistic centers, airports, university campuses, alarm centrals, dwellings, etc.

## 1.2 Features

- 4.3-inch touch screen
- 2 MP wide-angle dual-lens
- Face anti-spoofing
- Face recognition distance: 0.3 m to 3 m
- Deep learning algorithm
- 6,000 face capacity, 10,000 card capacity, 5,000 fingerprint capacity for device support fingerprint related functions, and 150,000 event capacity
- Face recognition duration ＜ 0.2 s/User; face recognition accuracy rate ≥ 99%
- Capture linkage and captured pictures storage
- Transmits card and user data from or to the client software via TCP/IP protocol and saves the data on the client software
- Imports pictures from the USB flash drive to the device or export pictures, events, from the device to the USB flash drive
- Stand-alone operation
- Manage, search and set device data after logging in the device locally
- Connects to one external card reader via RS-485 protocol
- Connects to secure door control unit via RS-485 protocol to avoid the door opening when the terminal is destroyed
- Connects to external access controller or Wiegand card reader via Wiegand protocol
- Two-way audio with indoor station and master station
- Supports 6 attendance status, including check in, check out, break in, break out, overtime in, overtime out
- Configuration via the web client
- Remotely opens door and starts live view via Hik-Connect
- Supports ISAPI and EHome 5.0 protocol

**Note**

Biometric recognition products are not 100% applicable to anti-spoofing environments. If you require a higher security level, use multiple authentication modes.

# Chapter 2 Appearance

Refer to the following contents for detailed information of the face recognition terminal:

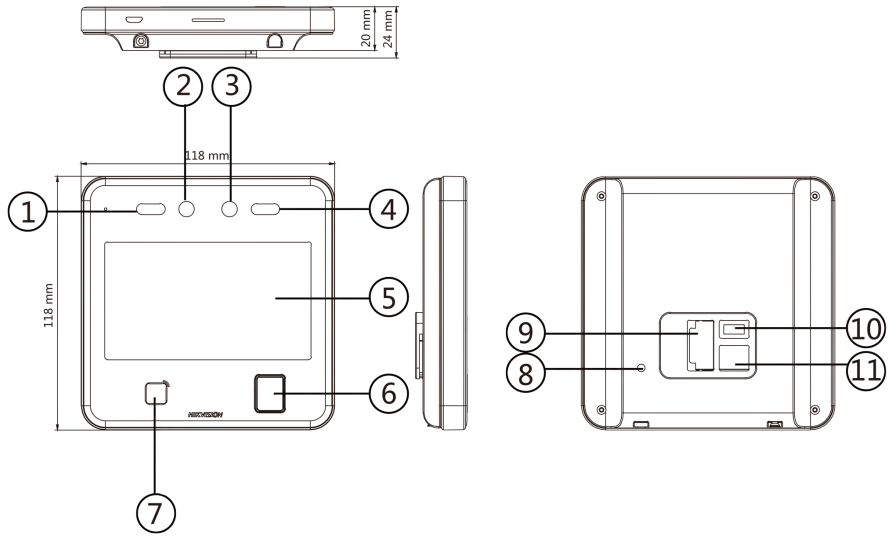


**Figure 2-1 Face Recognition Terminal Diagram**

**Table 2-1 Description of Face Recognition Terminal**

| No. | Description |
|---|---|
| 1 | White Light |
| 2 | Camera |
| 3 | Camera |
| 4 | White Light |
| 5 | Display Screen |
| 6 | Fingerprint Module<br>**Note**<br>Supported by parts of the device modules. |
| 7 | Card Presenting Area |
| 8 | TAMPER |
| 9 | Wiring Terminal |
| 10 | Debugging Port |
| 11 | Network Interface |

# Chapter 3 Installation

## 3.1 Installation Environment

- Avoid backlight, direct sunlight, and indirect sunlight.
- For better recognition, there should be light source in or near the installation environment.

**Note**

For details about installation environment, see *Tips for Installation Environment*.

## 3.2 Wall Mounting

**Steps**

**Note**

The additional force shall be equal to three times the weight of the equipment. The equipment ad its associated mounting means shall remain secure during the installation. After the installation, the equipment, including any associated mounting plate, shall not be damaged.

1. According to the datum line on the mounting template, stick the mounting template on the wall or other surfaces, 1.4 meters higher than the ground.
2. Drill holes on the wall or other surface according to the instructions on the mounting template.
3. Align the holes to the mounting plate and secure the mounting plate on the wall with the 4 supplied screws.

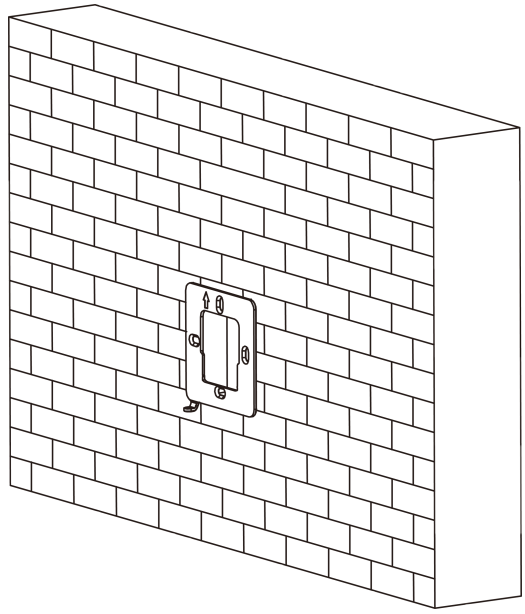

**Figure 3-1 Install Mounting Plate**

4. Route the cable through the cable hole of the mounting plate, and connect to corresponding external devices' cables.
5. Align the device with the mounting plate and hang the device on the mounting plate.

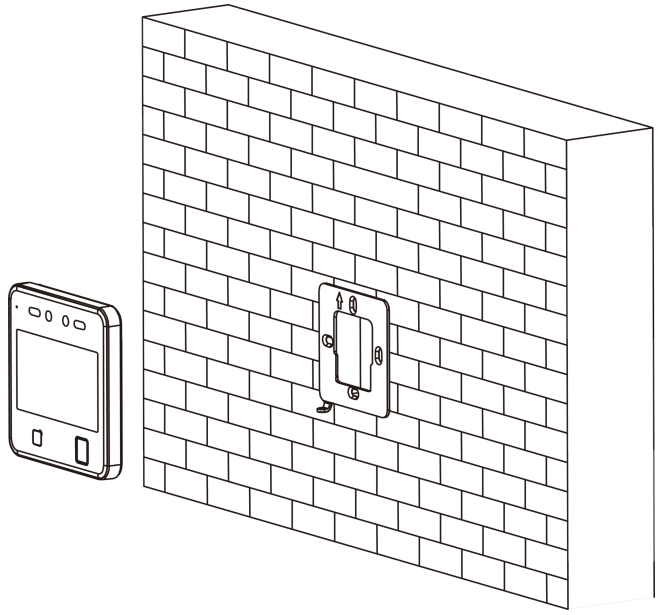

**Figure 3-2 Hang Device**

6. Use one supplied screw to secure the device and the mounting plate.

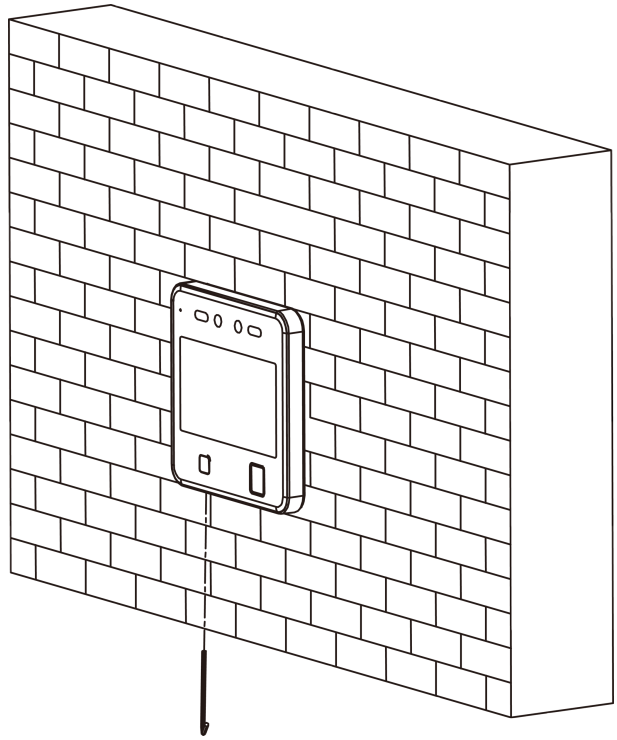

**Figure 3-3 Secure Device**

## 3.3 Base Mounting

**Steps**

1. Align the hole of the mounting bracket with the device interfaces on the back.

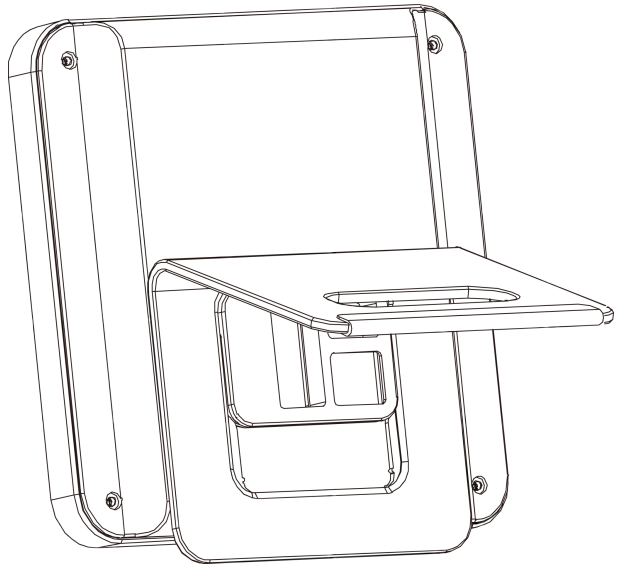

**Figure 3-4 Align Bracket and Device**

2. Push the bracket from bottom to top. Make sure the device is buckled with the bracket.

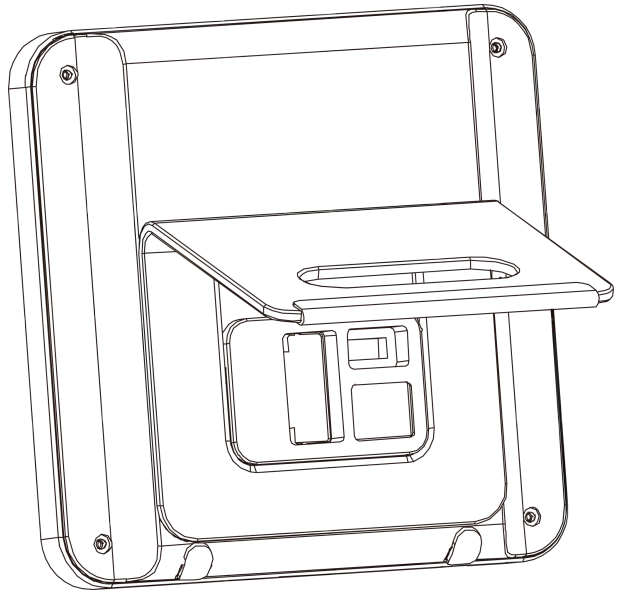

**Figure 3-5 Buckle**

3. Route the cable through the cable hole of the mounting plate, and connect to corresponding external devices' cables.
4. Put the mounted device on the desk or other surface.

# Chapter 4 Wiring

The device supports connecting to the RS-485 terminal, the door lock, the exit button, the alarm output/input devices, the Wiegand card reader, the access controller, and the power supply. You can wire the peripherals according to the descriptions below.

If connect the Wiegand card reader with the access controller, the face recognition terminal can transmit the authentication information to the access controller and the access controller can judge whether to open the door or not.

**Note**

- If the cable size is 18 AWG, you should use a 12 V switched-mode power supply. And the distance between the power supply and the device should be no more than 20 m.
- If the cable size is 15 AWG, you should use a 12 V switched-mode power supply. And the distance between the power supply and the device should be no more than 30 m.
- If the cable size is 12 AWG, you should use a 12 V switched-mode power supply. And the distance between the power supply and the device should be no more than 40 m.

## 4.1 Terminal Description

The terminals contains power input, RS-485, Wiegand output, and door lock.

The descriptions of the terminals are as follows:

**Table 4-1 Terminal Descriptions**

| Group | No. | Function | Color | Name | Description |
|---|---|---|---|---|---|
| Group A | A1 | Power Input | Red | +12 V | 12 VDC Power Supply |
| | A2 | | Black | GND | Ground |
| Group B | B1 | RS-485 | Yellow | 485+ | RS-485 Wiring |
| | B2 | | Blue | 485- | |
| | B3 | | Black | GND | Ground |
| Group C | C1 | Wiegand | Green | W0 | Wiegand Wiring 0 |
| | C2 | | White | W1 | Wiegand Wiring 1 |
| | C3 | | White/Black | GND | Ground |

| Group | No. | Function | Color | Name | Description |
|---|---|---|---|---|---|
| Group D | D1 | Door Lock | White/Purple | NC | Lock Wiring (NC) |
| | D2 | | White/Yellow | COM | Common |
| | D3 | | White/Red | NO | Lock Wiring (NO) |
| | D4 | | Yellow/Green | SENSOR | Door Contact |
| | D5 | | Black | GND | Ground |
| | D6 | | Yellow/Gray | BUTTON | Exit Door Wiring |
| | D7 | | Yellow/Black | GND | Ground |

## 4.2 Wire Normal Device

You can connect the terminal with normal peripherals.

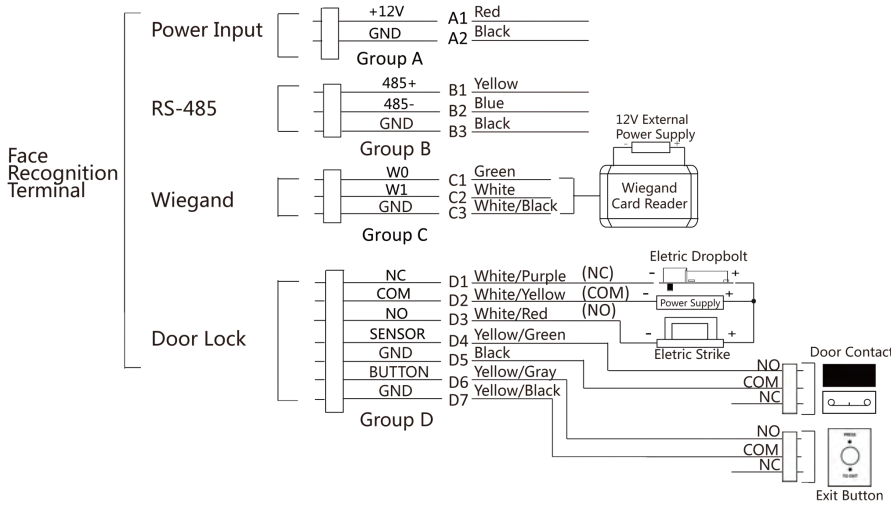


**Figure 4-1 Device Wiring**

**Note**

- You should set the face recognition terminal's Wiegand direction as **Input** to connect to a Wiegand card reader. If connects to an access controller, you should set the Wiegand direction as **Output** to transmit authentication information to the access controller.
- For details about Wiegand direction settings, see ***Set Wiegand Parameters*** .

## 4.3 Wire Secure Door Control Unit

You can connect the terminal with the secure door control unit.

The wiring diagram is as follows.

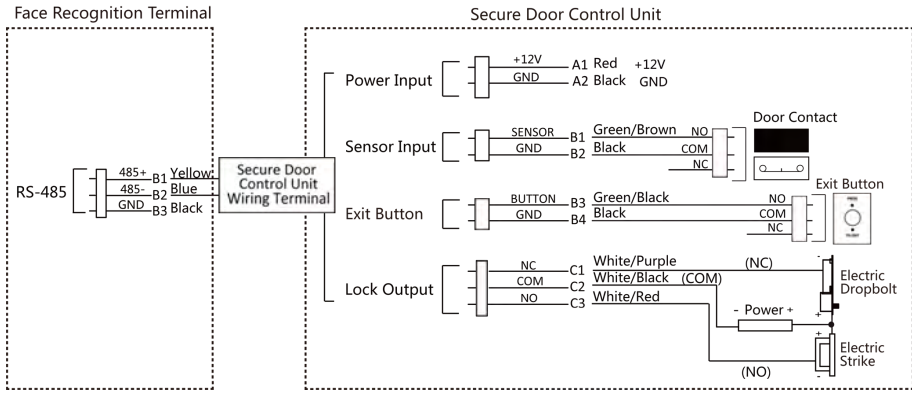


**Figure 4-2 Secure Door Control Unit Wiring**

**Note**

The secure door control unit should connect to an external power supply separately. The suggested external power supply is 12V, 0.5A.

## 4.4 Wire Fire Module

You can connect the terminal with the fire module. 6 wiring type are supported.

### Wiring Diagram without Secure Door Control Unit: Option 1

Lock Type: Anode Lock, Magnetic Lock, and Electric Bolt (NO)
Security Type: Door Open When Powering Off
Scenario: Installed in Fire Engine Access; Fire System Controls Power Supply of Access Control System

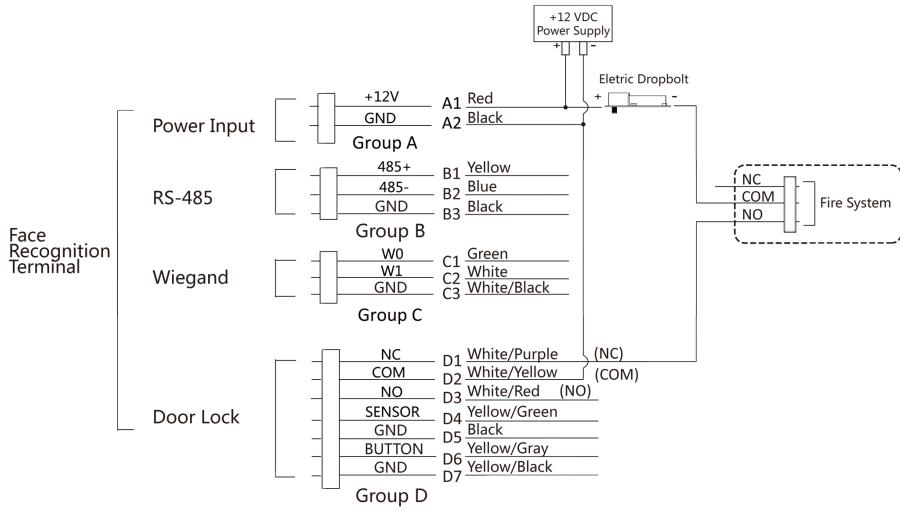


**Figure 4-3 Device Wiring**

## Wiring Diagram without Secure Door Control Unit: Option 2

Lock Type: Anode Lock, Magnetic Lock, and Electric Bolt (NO)
Security Type: Door Open When Powering Off
Scenario: Installed in Fire Engine Access; Fire System Controls Access Control Loop

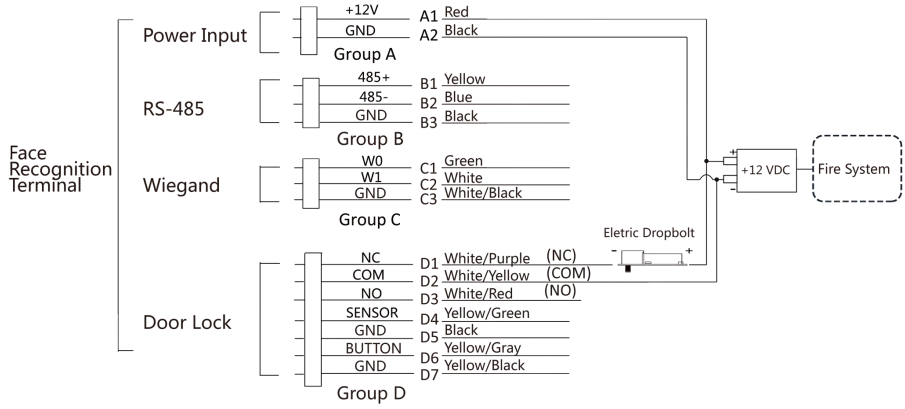


**Figure 4-4 Device Wiring**

**Note**

The fire system (NO and COM, normally open when powering off) is connected with the lock and the power supply in series. When an fire alarm is triggered, the door remains open. In normal times, NO and COM are closed.

## Wiring Diagram without Secure Door Control Unit: Option 3

Lock Type: Cathode Lock, Electric Lock, and Electric Bolt (NC)
Security Type: Door Locked When Powering Off
Scenario: Installed in Entrance/Exit with Fire Linkage; Uninterpretable Power Supply (UPS) Is Required

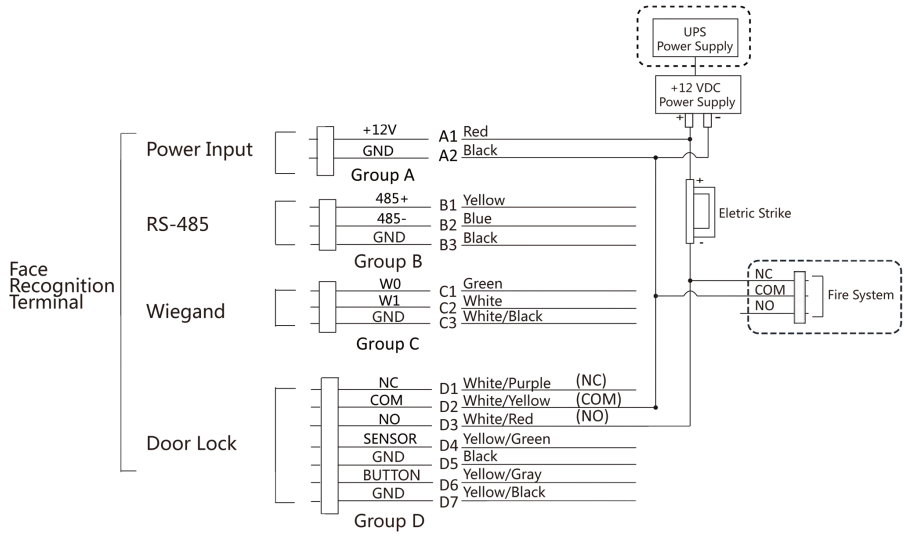


**Figure 4-5 Device Wiring**

**Note**

The fire system (NC and COM, normally closed when powering off) is connected with the lock and the power supply in series. When an fire alarm is triggered, the door remains open. In normal times, NC and COM are open.

## Wiring Diagram with Secure Door Control Unit: Option 1

Lock Type: Anode Lock, Magnetic Lock, and Electric Bolt (NO)
Security Type: Door Open When Powering Off
Scenario: Installed in Fire Engine Access; Fire System Controls Power Supply of Access Control System

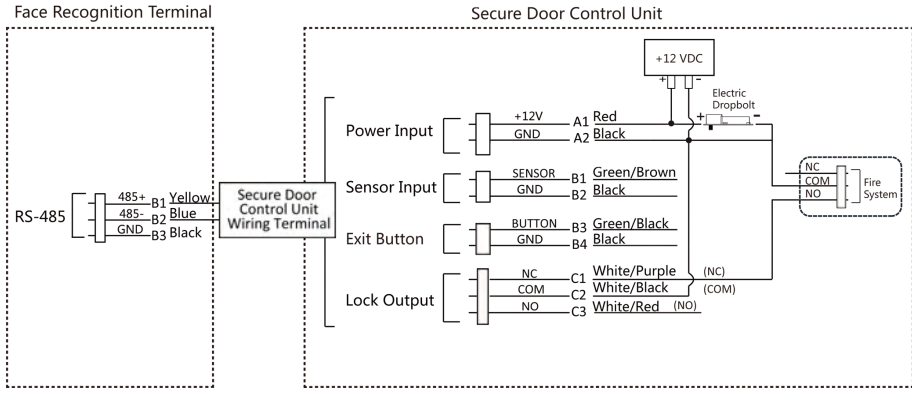


**Figure 4-6 Wiring Diagram**

## Wiring Diagram with Secure Door Control Unit: Option 2

Lock Type: Anode Lock, Magnetic Lock, and Electric Bolt (NO)
Security Type: Door Open When Powering Off

Lock Type: Anode Lock, Magnetic Lock, and Electric Bolt (NO)
Security Type: Door Open When Powering Off
Scenario: Installed in Fire Engine Access; Fire System Controls Access Control Loop

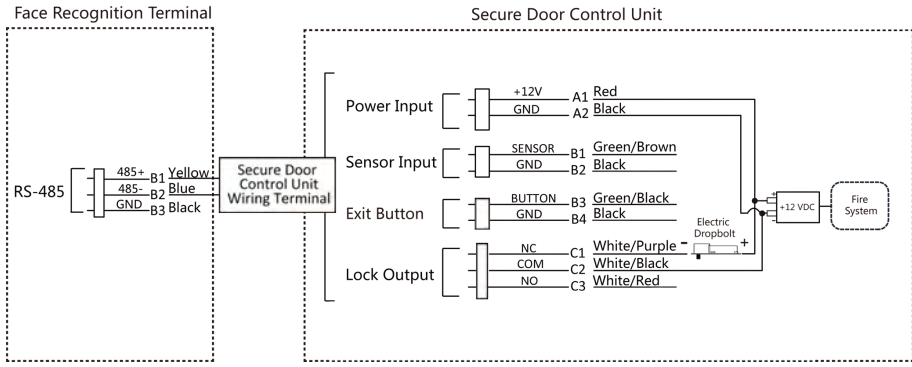


**Figure 4-7 Wiring Diagram**

**Note**

The fire system (NO and COM, normally open when powering off) is connected with the lock and the power supply in series. When an fire alarm is triggered, the door remains open. In normal times, NO and COM are closed.

### Wiring Diagram without Secure Door Control Unit: Option 3

Lock Type: Cathode Lock, Electric Lock, and Electric Bolt (NC)
Security Type: Door Locked When Powering Off
Scenario: Installed in Entrance/Exit with Fire Linkage; Uninterpretable Power Supply (UPS) Is Required

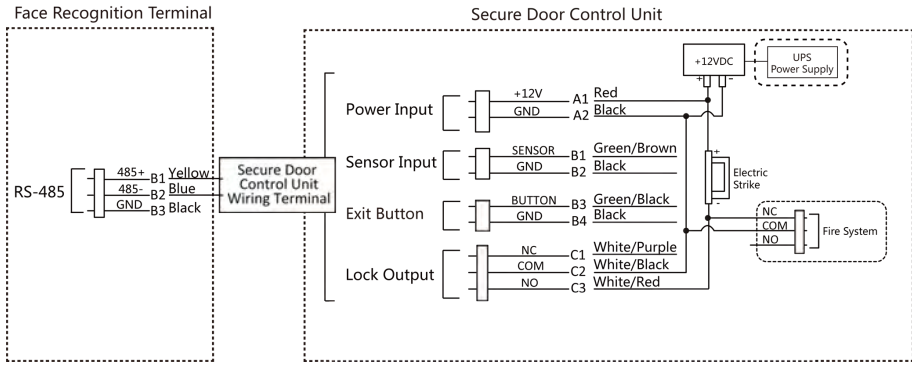


**Figure 4-8 Wiring Diagram**

**Note**

The fire system (NC and COM, normally closed when powering off) is connected with the lock and the power supply in series. When an fire alarm is triggered, the door remains open. In normal times, NC and COM are open.

# Chapter 5 Activation

You should activate the device before the first login. After powering on the device, the system will switch to Device Activation page.

Activation via the device, SADP tool and the client software are supported.

The default values of the device are as follows:

- The default IP address: 192.0.0.64
- The default port No.: 8000
- The default user name: admin

## 5.1 Activate via Device

If the device is not activated, you can activate the device after it is powered on.

On the Activate Device page, create a password and confirm the password. Tap **Activate** and the device will activated.

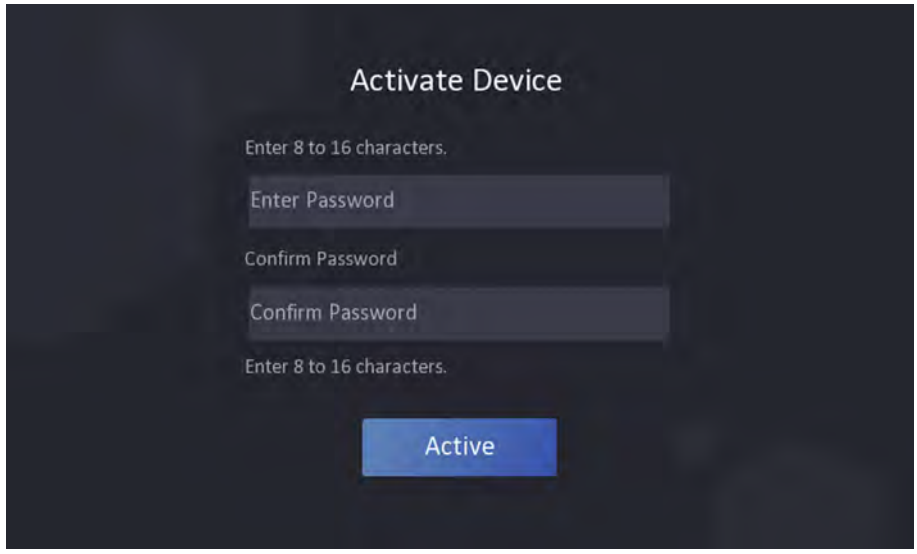


**Figure 5-1 Activation Page**

**Caution**

The password strength of the device can be automatically checked. We highly recommend you change the password of your own choosing (using a minimum of 8 characters, including at least three kinds of following categories: upper case letters, lower case letters, numbers, and special characters) in order to increase the security of your product. And we recommend you change your password regularly, especially in the high security system, changing the password monthly or weekly can better protect your product.

Proper configuration of all passwords and other security settings is the responsibility of the installer and/or end-user.

- After activation, you should select an application mode. For details, see ***Set Application Mode***
- After activation, if you need to add the device to the client software or other platforms, you should edit the device IP address. For details, see *Communication Settings*.

## 5.2 Activate via Web Browser

You can activate the device via the web browser.

**Steps**

1. Enter the device default IP address (192.0.0.64) in the address bar of the web browser, and press **Enter**.
2. Create a new password (admin password) and confirm the password.

   **Caution**

   STRONG PASSWORD RECOMMENDED-We highly recommend you create a strong password of your own choosing (using a minimum of 8 characters, including upper case letters, lower case letters, numbers, and special characters) in order to increase the security of your product. And we recommend you reset your password regularly, especially in the high security system, resetting the password monthly or weekly can better protect your product.

3. Click **Activate**.
4. Edit the device IP address. You can edit the IP address via the SADP tool, the device, and the client software.

## 5.3 Activate via SADP

SADP is a tool to detect, activate and modify the IP address of the device over the LAN.

**Before You Start**

- Get the SADP software from the supplied disk or the official website ***http://www.hikvision.com/en/*** , and install the SADP according to the prompts.
- The device and the PC that runs the SADP tool should be within the same subnet.

The following steps show how to activate a device and modify its IP address. For batch activation and IP addresses modification, refer to *User Manual of SADP* for details.

**Steps**

1. Run the SADP software and search the online devices.
2. Find and select your device in online device list.
3. Input new password (admin password) and confirm the password.

**Caution**

STRONG PASSWORD RECOMMENDED-We highly recommend you create a strong password of your own choosing (using a minimum of 8 characters, including upper case letters, lower case letters, numbers, and special characters) in order to increase the security of your product. And we recommend you reset your password regularly, especially in the high security system, resetting the password monthly or weekly can better protect your product.

4. Click **Activate** to start activation.

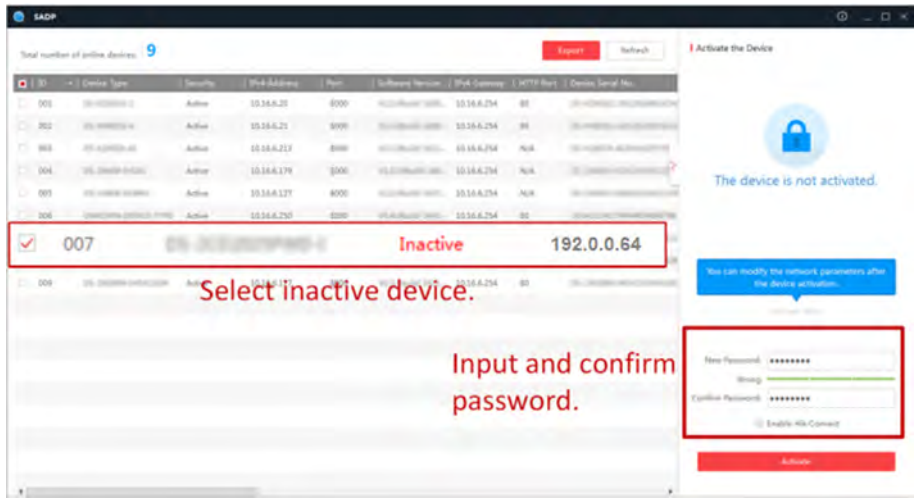


Status of the device becomes **Active** after successful activation.

5. Modify IP address of the device.
   1) Select the device.
   2) Change the device IP address to the same subnet as your computer by either modifying the IP address manually or checking **Enable DHCP**.
   3) Input the admin password and click **Modify** to activate your IP address modification.

## 5.4 Activate Device via Client Software

For some devices, you are required to create the password to activate them before they can be added to the software and work properly.

**Steps**

**Note**

This function should be supported by the device.

1. Enter the Device Management page.
2. Click on the right of **Device Management** and select **Device**.
3. Click **Online Device** to show the online device area.

   The searched online devices are displayed in the list.

4. Check the device status (shown on **Security Level** column) and select an inactive device.
5. Click **Activate** to open the Activation dialog.
6. Create a password in the password field, and confirm the password.

**Caution**

The password strength of the device can be automatically checked. We highly recommend you change the password of your own choosing (using a minimum of 8 characters, including at least three kinds of following categories: upper case letters, lower case letters, numbers, and special characters) in order to increase the security of your product. And we recommend you change your password regularly, especially in the high security system, changing the password monthly or weekly can better protect your product.
Proper configuration of all passwords and other security settings is the responsibility of the installer and/or end-user.

7. Click **OK** to activate the device.

# Chapter 6 Basic Operation

## 6.1 Set Application Mode

After activating the device, you should select an application mode for better device application.

**Steps**

1. On the Welcome page, select **Indoor** or **Others** from the drop-down list.

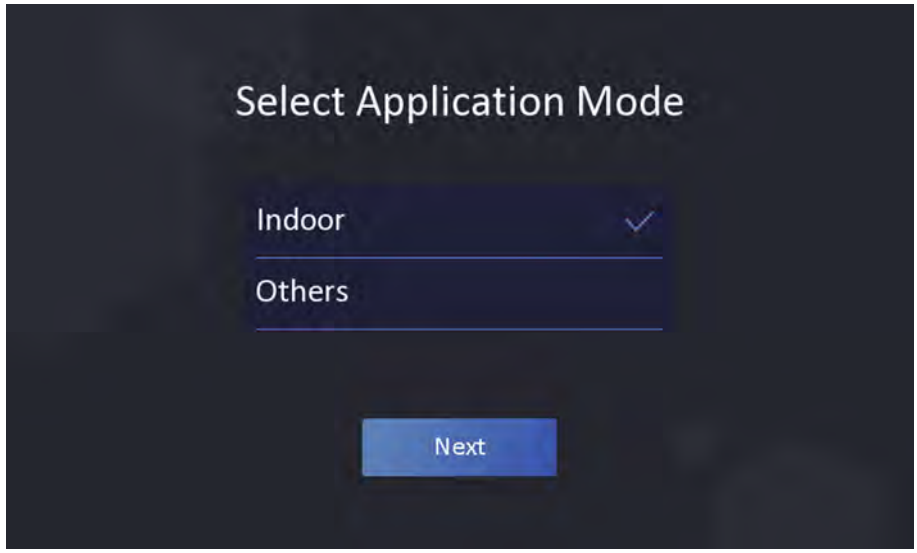


**Figure 6-1 Welcome Page**

2. Tap **OK** to save.

**Note**

- You can also change the settings in *System Settings*.
- If you install the device indoors near the window or the face recognition function is not working well, select **Others**.
- If you do not configure the application mode and tap **Next**, the system will select **Indoor** by default.
- If you activate the device via other tools remotely, the system will select **Indoor** as the application mode by default.

## 6.2 Set Administrator

After device activation, you can add an administrator to manage the backend.

**Before You Start**

Activate the device and select an application mode.

**Steps**

1. Enter the administrator's name and tap **Next**.
2. Select a credential to add.
   - : Face forward at the camera. Make sure the face is in the face recognition area. Click to capture and click to confirm.
   - : Press your finger according to the instructions on the device screen. Click to confirm.
   - : Enter the card No. or present card on the card presenting area. Click **OK**.
3. Click **OK**.

   You will enter the authentication page.

   Scan QR code to authenticate.

   **Note**

   The QR code can be obtained from the visitor terminal.

   - Enter the device room No. and tap **OK** to call.
   - Tap to call the center.

   **Note**

   The device should be added to the center, or the calling operation will be failed.

   Enter password to authenticate.

   **Note**

   You can configure those shortcut keys displayed on the screen. For details, see ***Basic Settings*** .

## 6.3 Login

Login the device backend to set the device basic parameters.

### 6.3.1 Login by Administrator

If you have added an administrator for the device, only the administrator can login the device for device operation.

**Steps**

1. Long tap on the initial page for 3 s and slide to the left/right by following the gesture to enter the admin login page.

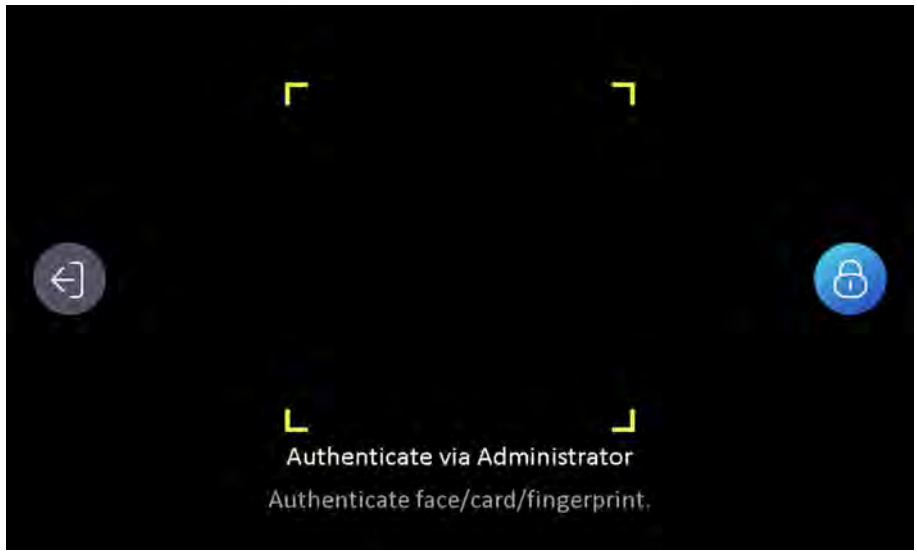


**Figure 6-2 Admin Login**

2. Authenticate the administrator's face or card to enter the home page.

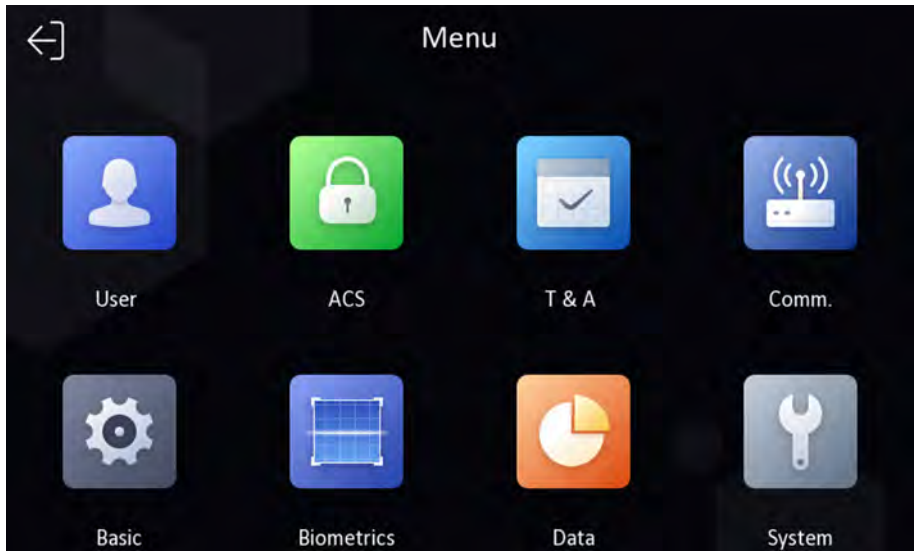


**Figure 6-3 Home Page**

**Note**

The device will be locked for 30 minutes after 5 failed fingerprint or card attempts.

3. **Optional:** Tap and you can enter the device activation password for login.
4. **Optional:** Tap and you can exit the admin login page.

### 6.3.2 Login by Activation Password

You should login the system before other device operations. If you do not configure an administrator, you should follow the instructions below to login.

**Steps**

1. Long tap on the initial page for 3 s and slide to the left/right by following the gesture to enter password entering page.
2. Tap the Password field and enter the device activation password.
3. Tap **OK** to enter the home page.

**Note**

The device will be locked for 30 minutes after 5 failed password attempts.

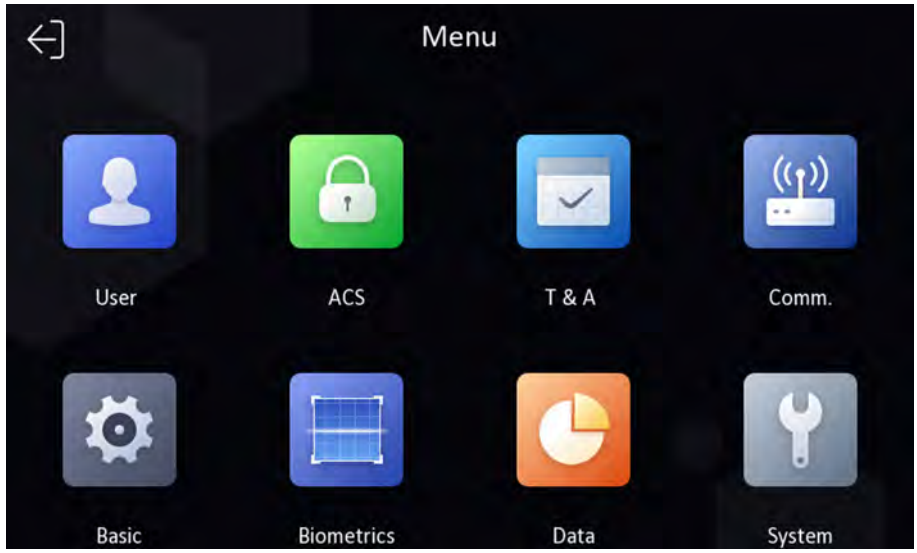


**Figure 6-4 Home Page**

## 6.4 Communication Settings

You can set the network parameters, the Wi-Fi parameter, the RS-485 parameters, and the Wiegand parameters on the communication settings page.

### 6.4.1 Set Network Parameters

You can set the device network parameters, including the IP address, the subnet mask, and the gateway.

**Steps**

1. Tap **Comm.** (Communication Settings) on the Home page to enter the Communication Settings page.
2. On the Communication Settings page, tap **Network**.

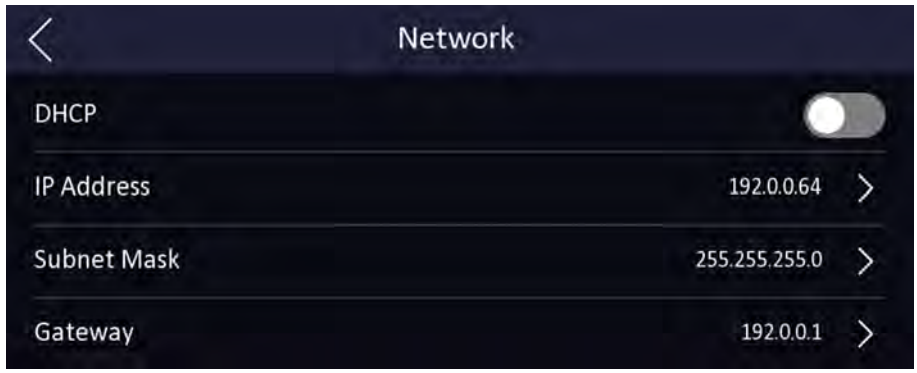


**Figure 6-5 Network Settings**

3. Set DHCP, IP Address, Subnet Mask, or Gateway.

**Note**

The device's IP address and the computer IP address should be in the same IP segment.

### 6.4.2 Set Wi-Fi Parameters

You can enable the Wi-Fi function and set the Wi-Fi related parameters.

**Steps**

**Note**

The function should be supported by the device.

1. Tap **Comm.** (Communication Settings) on the Home page to enter the Communication Settings page.
2. On the Communication Settings page, tap.

**Figure 6-6 Wi-Fi Settings**

3. Enable the Wi-Fi function.
4. Configure the Wi-Fi parameters.
   - Select a Wi-Fi from the list, and enter the Wi-Fi's password. Tap **OK**.
   - If the target Wi-Fi is not in the list,tap **Add Wi-Fi**. Enter the Wi-Fi's name and password. And tap **OK**.

**Note**

Only digits, letters, and special characters are allowed in the password.

5. Set the Wi-Fi's parameters.
   - By default, DHCP is enable. The system will allocate the IP address, the subnet mask, and the gateway automatically.
   - If disable DHCP, you should enter the IP address, the subnet mask, and the gateway manually.
6. Tap **OK** to save the settings and go back to the Wi-Fi tab.
7. Tap ✓ to save the network parameters.

### 6.4.3 Set RS-485 Parameters

The face recognition terminal can connect external access controller, secure door control unit or card reader via the RS-485 terminal.

**Steps**

1. Tap **Comm.** (Communication Settings) on the Home page to enter the Communication Settings page.
2. On the Communication Settings page, tap **RS-485** to enter the RS-485 tab.

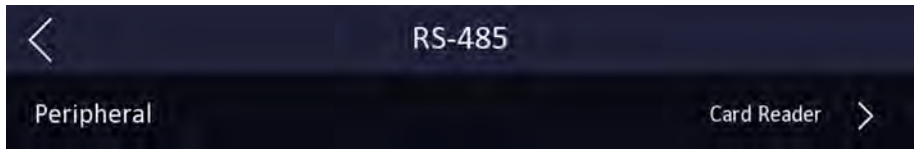


**Figure 6-7 Set RS-485 Parameters**

3. Select an peripheral type according to your actual needs.

**Note**

If you select **Access Controller**: If connect the device to a terminal via the RS-485 interface, set the RS-485 address as 2. If you connect the device to a controller, set the RS-485 address according to the door No.

4. Tap the back icon at the upper left corner and you should reboot the device if you change the parameters.

### 6.4.4 Set Wiegand Parameters

You can set the Wiegand transmission direction.

**Steps**

1. Tap **Comm.** (Communication Settings) on the Home page to enter the Communication Settings page.
2. On the Communication Settings page, tap **Wiegand** to enter the Wiegand tab.

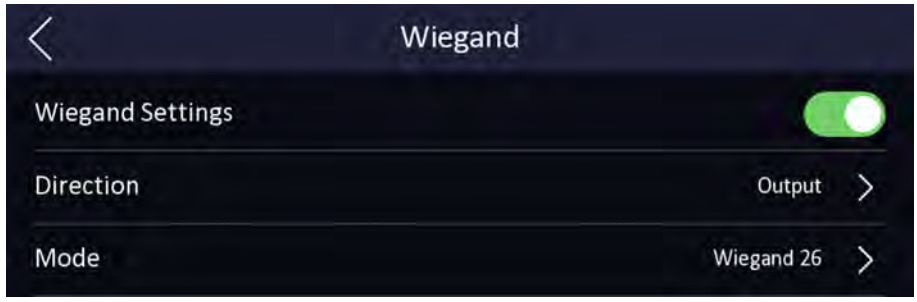


**Figure 6-8 Wiegand Settings**

3. Enable the Wiegand function.
4. Select a transmission direction.
   - Output: A face recognition terminal can connect an external access controller. And the two devices will transmit the card No. via Wiegand 26 or Wiegand 34.
   - Input: A face recognition terminal can connect a Wiegand card reader.
5. Tap ✓ to save the network parameters.

**Note**

If you change the external device, and after you save the device parameters, the device will reboot automatically.

## 6.5 User Management

On the user management interface, you can add, edit, delete and search the user.

### 6.5.1 Add Face Picture

Add user's face picture to the device. And the user can use the face picture to authenticate.

**Steps**

**Note**

Up to 6,000 face pictures can be added.

1. Long tap on the initial page for 3 s and slide to the left/right by following the gesture and log in the backend.
2. Tap **User → +** to enter the Add User page.
3. Edit the employee ID.

   **Note**

   - The employee ID should be less than 32 characters. And it can be a combination of lower letters, upper letters, and numbers.
   - The employee ID should not be duplicated.

4. Tap the Name field and input the user name on the soft keyboard.

   **Note**

   - Numbers, upper case letters, lower case letters, and special characters are allowed in the user name.
   - Up to 32 characters are allowed in the user name.

5. Tap the Face Picture field to enter the face picture adding page.

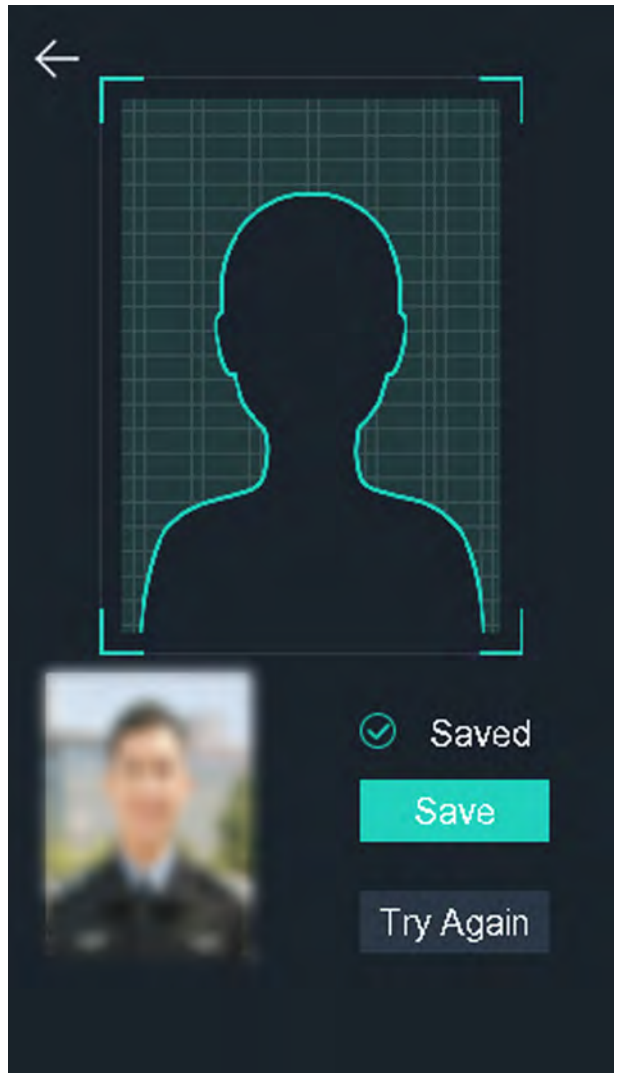


**Figure 6-9 Add Face Picture**

6. Look at the camera.

**Note**

- Make sure your face picture is in the face picture outline when adding the face picture.
- Make sure the captured face picture is in good quality and is accurate.
- For details about the instructions of adding face pictures, see ***Tips When Collecting/ Comparing Face Picture*** .

After completely adding the face picture, a captured face picture will be displayed at the upper right corner of the page.

7. Tap **Save** to save the face picture.
8. **Optional:** Tap **Try Again** and adjust your face position to add the face picture again.

**Note**

The maximum duration for adding a face picture is 15s. You can check the remaining time for adding a face picture on the left of the page.

9. Set the user role.

   **Administrator**

   The user is the administrator. Except for the normal attendance function, the user can also enter the Home page to operate after authenticating the permission.

   **Normal User**

   The User is the normal user. The user can only authenticate or take attendance on the initial page.

10. Tap ✓ to save the settings.

### 6.5.2 Add Fingerprint

Add a fingerprint for the user and the user can authenticate via the added fingerprint.

**Steps**

**Note**

- The function should be supported by the device.
- Up to 5,000 fingerprints can be added.

1. Long tap on the initial page for 3 s and slide to the left/right by following the gesture and enter the device backend.
2. Tap **User → +** to enter the Add User page.
3. Tap the Employee ID. field and edit the employee ID.

   **Note**

   - The employee ID should be less than 32 characters. And it can be a combination of lower letters, upper letters, and numbers.
   - The employee ID should not start with 0 and should not be duplicated.

4. Tap the Name field and input the user name on the soft keyboard.

   **Note**

   - Numbers, upper case letters, lower case letters, and special characters are allowed in the user name.
   - Up to 32 characters are allowed in the user name.

5. Tap the Fingerprint field to enter the Add Fingerprint page.
6. Follow the instructions to add a fingerprint.

**Note**

- The same fingerprint cannot be repeatedly added.
- Up to 10 fingerprints can be added for one user.
- You can also use the client software or the fingerprint recorder to record fingerprints.
  For details about the instructions of scanning fingerprints, see ***Tips for Scanning Fingerprint*** .

**7.** Set the user role.

**Administrator**

The user is the administrator. Except for the normal attendance function, the user can also enter the Home page to operate after authenticating the permission.

**Normal User**

The User is the normal user. The user can only authenticate or take attendance on the initial page.

**8.** Tap ✓ to save the settings.

### 6.5.3 Add Card

Add a card for the user and the user can authenticate via the added card.

**Steps**

**Note**

Up to 10,000 cards can be added.

**1.** Long tap on the initial page for 3 s and slide to the left/right by following the gesture and log in the backend.
**2.** Tap **User → +** to enter the Add User page.
**3.** Connect an external card reader according to the wiring diagram.
**4.** Tap the Employee ID. field and edit the employee ID.

**Note**

- The employee ID should be less than 32 characters. And it can be a combination of lower letters, upper letters, and numbers.
- The employee ID should not be duplicated.

**5.** Tap the Name field and input the user name on the soft keyboard.

**Note**

- Numbers, upper case letters, lower case letters, and special characters are allowed in the user name.
- Up to 32 characters are allowed in the user name.

**6.** Tap the Card field and input the card No.

7. Configure the card No.
   - Enter the card No. manually.
   - Present the card over the card presenting area to get the card No.

**Note**

- The card No. cannot be empty.
- Up to 20 characters are allowed in the card No.
- The card No. cannot be duplicated.

8. Set the user role.

   **Administrator**

   The user is the administrator. Except for the normal attendance function, the user can also enter the Home page to operate after authenticating the permission.

   **Normal User**

   The User is the normal user. The user can only authenticate or take attendance on the initial page.

9. Tap ✓ to save the settings.

### 6.5.4 Add Password

Add a password for the user and the user can authenticate via the password.

**Steps**

1. Long tap on the initial page for 3 s and slide to the left/right by following the gesture and log in the backend.
2. Tap **User → +** to enter the Add User page.
3. Tap the Employee ID. field and edit the employee ID.

**Note**

- The employee ID should be less than 32 characters. And it can be a combination of lower letters, upper letters, and numbers.
- The employee ID should not be duplicated.

4. Tap the Name field and input the user name on the soft keyboard.

**Note**

- Numbers, upper case letters, lower case letters, and special characters are allowed in the user name.
- Up to 32 characters are allowed in the user name.

5. Tap the Password field and create a password and confirm the password.

**Note**

- Only numbers are allowed in the password.
- Up to 8 characters are allowed in the password.

6. Set the user role.

   **Administrator**

   The user is the administrator. Except for the normal attendance function, the user can also enter the Home page to operate after authenticating the permission.

   **Normal User**

   The User is the normal user. The user can only authenticate or take attendance on the initial page.

7. Tap to save the settings.

### 6.5.5 Set Authentication Mode

After adding the user's face picture, fingerprint, password, or other credentials, you should set the authentication mode and the user can authenticate his/her identity via the configured authentication mode.

**Steps**

1. Long tap on the initial page for 3 s and slide to the left/right by following the gesture and log in the backend.
2. Tap **User → Add User/Edit User → Authentication Mode** .
3. Select Device or Custom as the authentication mode.

   **Device**

   If you want to select device mode, you should set the terminal authentication mode in Access Control Settings page first. For details see *Setting Access Control Parameters*.

   **Custom**

   You can combine different authentication modes together according to your actual needs.

4. Tap to save the settings.

### 6.5.6 Search and Edit User

After adding the user, you can search the user and edit it.

#### Search User

On the User Management page, Tap to enter the Search User page. Tap **Card** on the left of the page and select a search type from the drop-down list. Enter the employee ID, card No., or the user name for search. Tap to search.

**Edit User**

On the User Management page, select a user from the user list to enter the Edit User page. Follow the steps in ***User Management*** to edit the user parameters. Tap ✓ to save the settings.

**Note**

The employee ID cannot be edited.

## 6.6 Data Management

You can delete data, import data, and export data.

### 6.6.1 Delete Data

Delete user data.

On the Home page, tap **Data → Delete Data → User Data** . All user data added in the device will be deleted.

### 6.6.2 Import Data

**Steps**

1. Plug a USB flash drive in the device.
2. On the Home page, tap **Data → Import Data** .
3. Tap **User Data** or **Face Data** and the selected data will be imported to the device.

**Note**

- If you want to transfer all user information from one device (Device A) to another (Device B), you should export the information from Device A to the USB flash drive and then import from the USB flash drive to Device B. In this case, you should import the user data before importing the profile photo.
- The supported USB flash drive format is FAT32.
- The imported pictures should be saved in the root directory (enroll_pic) and the picture file's name should be follow the rule below:
  Card No._Name_Department_Employee ID_Gender.jpg
- If the file enroll_pic cannot save all imported pictures, you can create another files, named enroll_pic1, enroll_pic2, enroll_pic3, enroll_pic4, under the root directory.
- The employee ID should be less than 32 characters. It can be a combination of lower letters, upper letters, and numbers. It should not be duplicated, and should not start with 0.
- Requirements of face picture should follow the rules below: It should be taken in full-face view, directly facing the camera. Do not wear a hat or head covering when taking the face

picture. The format should be JPEG or JPG. The resolution should be 640 × 480 pixel or more than of 640 × 480 pixel. The picture size should be between 60 KB and 200 KB.

### 6.6.3 Export Data

**Steps**

1. On the Home page, tap **Data → Export Data** .
2. Tap **Event Data**, **User Data**, or **Face Data**
3. **Optional:** Create a password for exporting. When you should import those data to another device, you should enter the password.

**Note**

- The supported USB flash drive format is DB.
- The system supports the USB flash drive with the storage of 1G to 32G. Make sure the free space of the USB flash drive is more than 512M.
- The exported user data is a DB file, which cannot be edited.

## 6.7 Identity Authentication

After network configuration, system parameters configuration and user configuration, you can go back to the initial page for identity authentication. The system will authenticate person according to the configured authentication mode.

You can authenticate identity via 1:1 matching or 1:N matching.

**1:N Matching**

Compare the captured face picture with all face pictures stored in the device.

**1: 1 Matching**

Compare the captured face picture with all face pictures stored in the device.

### 6.7.1 Authenticate via Single Credential

Set the user authentication type before authentication. For details, see ***Set Authentication Mode*** .

Authenticate face, fingerprint, card or QR code.

**Face**

Face forward at the camera and start authentication via face.

**Fingerprint**

Place the enrolled fingerprint on the fingerprint module and start authentication via fingerprint.

**Card**

Present the card on the card presenting area and start authentication via card.

**Note**

The card can be normal IC card, or encrypted card.

**QR Code**

Put the QR code in front of the device camera to authenticate via QR code.

**Note**

Authentication via QR code should be supported by the device.

If authentication completed, a prompt "Authenticated" will pop up.

### 6.7.2 Authenticate via Multiple Credential

**Before You Start**

Set the user authentication type before authentication. For details, see ***Set Authentication Mode*** .

**Steps**

1. If the authentication mode is Card and Face, Password and Face, Card and Password, Card and Face and Fingerprint, authenticate any credential according to the instructions on the live view page.

   **Note**

   - The card can be normal IC card, or encrypted card.
   - If the QR Code Scanning function is enabled, you can put the QR code in front of the device camera to authenticate via QR code.

2. After the previous credential is authenticated, continue authenticate other credentials.

   **Note**

   - For detailed information about scanning fingerprint, see *Tips for Scanning Fingerprint*.
   - For detailed information about authenticating face, see *Tips When Collecting/Comparing Face Picture*.

   If authentication succeeded, the prompt "Authenticated" will pop up.

## 6.8 Basic Settings

You can set the shortcut key, volume, time, community No., building No., and Unit No.

Long tap on the initial page for 3 s and slide to the left/right by following the gesture and login the device home page. Tap **Basic**.

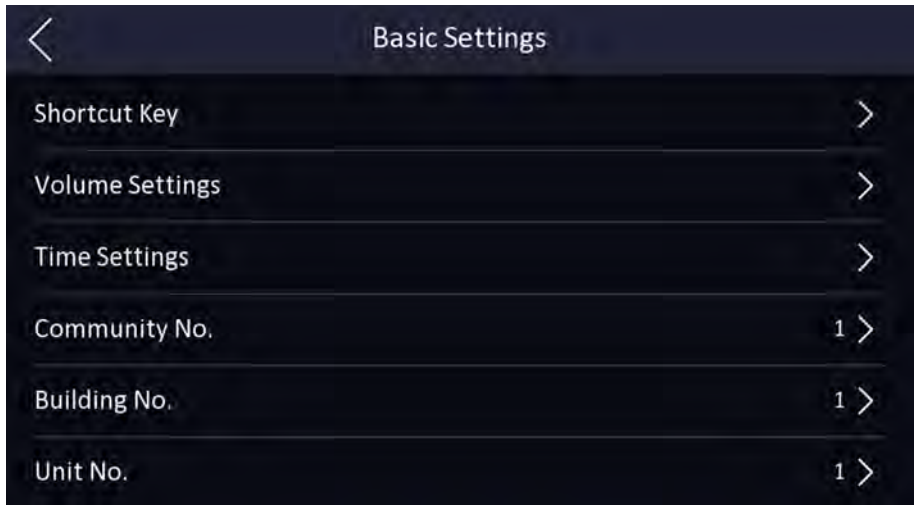


**Figure 6-10 Basic Settings Page**

shortcut key, volume, time, community No., building No., and Unit No

**Shortcut Key**

Choose the shortcut key that displayed on the authentication page, including the QR code function, the call function, and the password entering function.

**Volume**

You can enable/disable the audio prompt function and adjust the voice volume.

**Time**

Set the time zone, the device time and the DST.

**Community No.**

Set the device installed community No.

**Building No.**

Set the device installed building No.

**Unit No.**

Set the device installed unit No.

## 6.9 Set Biometric Parameters

You can customize the face parameters to improve the face recognition performance. The configurable parameters includes ECO mode, face liveness level, face recognition distance, face recognition interval, WDR, 1:N security level, and 1:1 security level.

Long tap on the initial page for 3 s and slide to the left/right by following the gesture and login the home page. Tap **Biometric**.

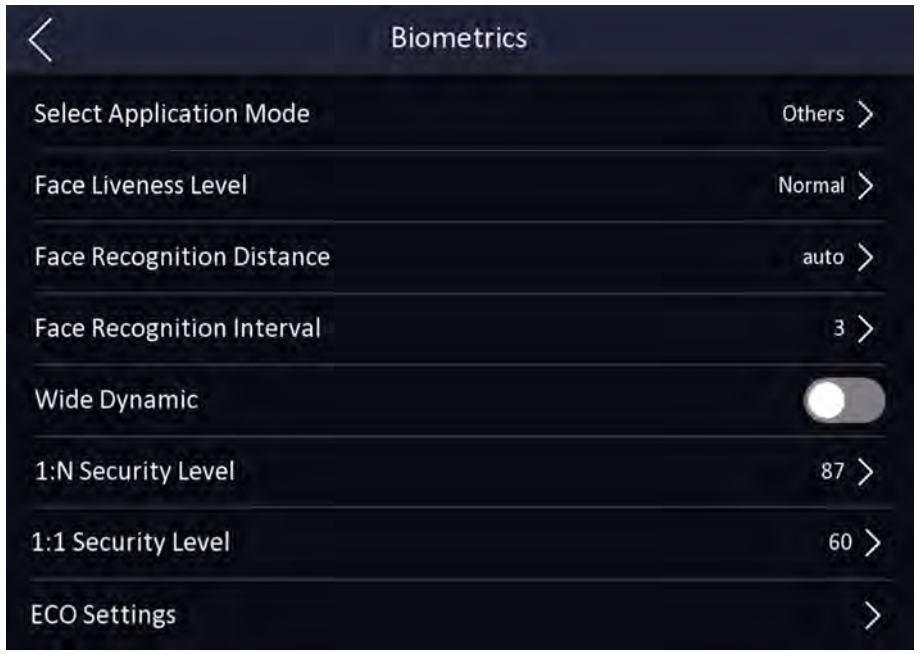


**Figure 6-11 Biometric Parameters Page**

**Table 6-1 Face Picture Parameters**

| Parameter | Description |
|---|---|
| Face Liveness Level | You can set the face anti-spoofing matching security level when performing live face authentication.<br>**Note**<br>Biometric recognition products are not 100% applicable to anti-spoofing environments. If you require a higher security level, use multiple authentication modes. |
| Face Recognition Distance | Set the valid distance between the user and the camera when authenticating. |
| Face Recognition Interval | The time interval between two continuous face recognitions when authenticating.<br>**Note**<br>You can input the number from 1 to 10. |
| WDR | When there are both very bright and very dark areas simultaneously in the view, you can enable the WDR function to balance the brightness of the whole image and provide clear images with details. |

| Parameter | Description |
|---|---|
| Face 1:N Security Level | Set the matching threshold when authenticating via 1:N matching mode. The larger the value, the smaller the false accept rate and the larger the false rejection rate. |
| Face 1:1 Security Level | Set the matching threshold when authenticating via 1:1 matching mode. The larger the value, the smaller the false accept rate and the larger the false rejection rate. |
| ECO Mode | After enabling the ECO mode, the device will use the IR camera to authenticate faces in the low light or dark environment. And you can set he ECO mode threshold, ECO mode (1:N), and ECO mode (1:1). |
| ECO Threshold | When enabling the ECO mode, you can set the ECO mode's threshold. The larger the value, the easier the device entering the ECO mode. |
| ECO Mode (1:N) | Set the matching threshold when authenticating via ECO mode 1:N matching mode. The larger the value, the smaller the false accept rate and the larger the false rejection rate. |
| ECO Mode (1:1) | Set the matching threshold when authenticating via ECO mode 1:1 matching mode. The larger the value, the smaller the false accept rate and the larger the false rejection rate. |

## 6.10 Set Access Control Parameters

You can set the access control permissions, including the functions of authentication mode, enable NFC card, door contact, and door open tim.

On the Home page, tap **ACS** (Access Control Settings) to enter the Access Control Settings page. Edit the access control parameters on this page.

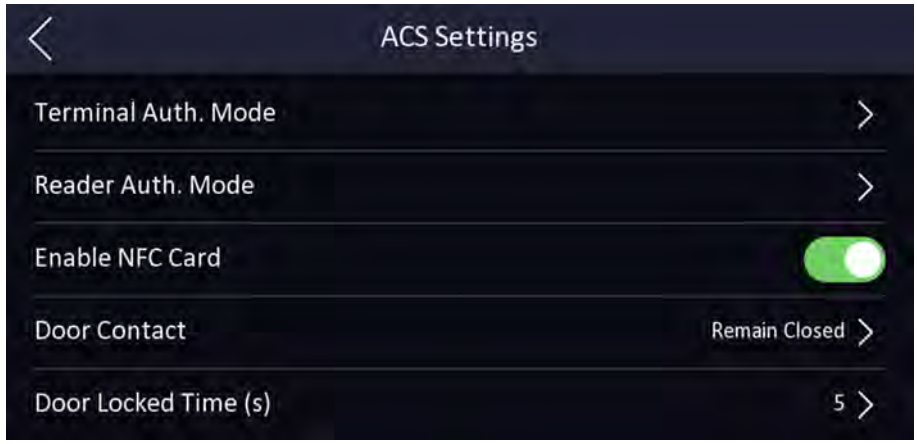


**Figure 6-12 Access Control Parameters**

The available parameters descriptions are as follows:

**Table 6-2 Access Control Parameters Descriptions**

| Parameter | Description |
|---|---|
| Terminal Auth. Mode (Terminal Authentication Mode) | Select the face recognition terminal's authentication mode. You can also customize the authentication mode.<br>**Note**<br>• Only the device with the fingerprint module supports the fingerprint related function.<br>• Biometric recognition products are not 100% applicable to anti-spoofing environments. If you require a higher security level, use multiple authentication modes.<br>• If you adopt multiple authentication modes, you should authenticate other methods before authenticating face. |
| Reader Auth. Mode (Card Reader Authentication Mode) | Select the card reader's authentication mode. |
| NFC Anti-Cloning | Enable the function and you cannot use the cloned card for authentication. |
| Door Contact | You can select "Open (Remain Open)" or "Close (Remian Closed)" according to your actual needs. By default, it is Close (Remian Closed). |
| Door Open Time | Set the door unlocking duration. If the door is not opened for the set time, the door will be locked. Available door locked time range: 1 to 255s. |

## 6.11 Time and Attendance Status Settings

Set time and attendance status. You can set the attendance mode as check in, check out, break out, break in, overtime in, and over according to your actual situation.

**Note**

The function should be used cooperatively with time and attendance function on the client software.

### 6.11.1 Disable Attendance Mode via Device

Disable the attendance mode and the system will not display the attendance status on the initial page.

Tap **T&A Status** to enter the T&A Status page.

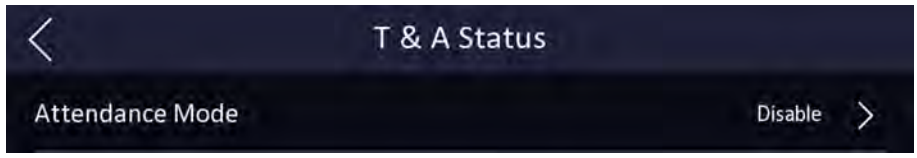


**Figure 6-13 Disable Attendance Mode**

Set the **Attendance Mode** as **Disable**.

You will not view or configure the attendance status on the initial page. And the system will follow the attendance rule that configured on the platform.

### 6.11.2 Set Manual Attendance via Device

Set the attendance mode as manual, and you can select a status manually when you take attendance.

**Before You Start**

Add at least one user, and set the user's authentication mode. For details, see *User Management*.

**Steps**

1. Tap **T&A Status** to enter the T&A Status page.
2. Set the **Attendance Mode** as **Manual**.

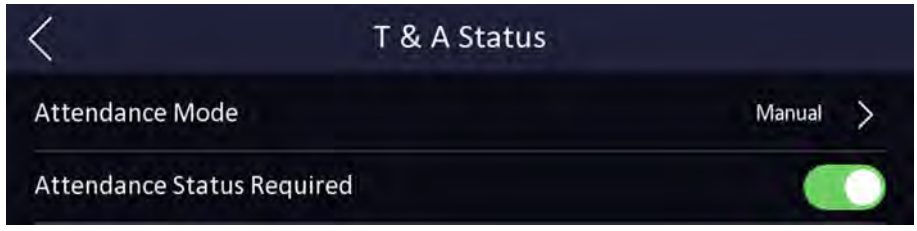


**Figure 6-14 Manual Attendance Mode**

3. Enable the **Attendance Status** function.

**Result**

You should select the attendance status manually after authentication.

**Note**

If you do not select a status, the authentication will be failed and it will not be marked as a valid attendance.

### 6.11.3 Set Auto Attendance via Device

Set the attendance mode as auto, and you can set the attendance status and its available schedule. The system will automatically change the attendance status according to the configured parameters.

**Before You Start**

Add at least one user, and set the user's authentication mode. For details, see *User Management*.

**Steps**

1. Tap **T&A Status** to enter the T&A Status page.
2. Set the **Attendance Mode** as **Auto**.

**Figure 6-15 Auto Attendance Mode**

3. Select an attendance status and set its schedule.
   1) Select **Check In**, **Check Out**, **Break Out**, **Break In**, **Overtime In**, or **Overtime Out** as the attendance status.
   2) Tap **Schedule**.
   3) Select **Monday**, **Tuesday**, **Wednesday**, **Thursday**, **Friday**, **Saturday**, or **Sunday**.
   4) Tap the select date and set the selected attendance status's start time.
   5) Tap **Confirm**.
   6) Repeat step 1 to 5 according to your actual needs.

**Note**

The attendance status will be valid within the configured schedule.

**Result**

When you authenticate on the initial page, the authentication will be marked as the configured attendance status according to the configured schedule.

**Example**

If set the **Break Out Schedule** as Monday 11:00, and **Break In Schedule** as Monday 12:00, the valid user's authentication from Monday 11:00 to 12:00 will be marked as break.

### 6.11.4 Set Manual and Auto Attendance via Device

Set the attendance mode as **Manual and Auto**, and the system will automatically change the attendance status according to the configured parameters. At the same time you can manually change the attendance status after the authentication.

**Before You Start**

Add at least one user, and set the user's authentication mode. For details, see *User Management*.

**Steps**

1. Tap **T&A Status** to enter the T&A Status page.
2. Set the **Attendance Mode** as **Manual and Auto**.

**Figure 6-16 Manual and Auto Mode**

3. Select an attendance status and set its schedule.
   1) Select **Check In**, **Check Out**, **Break Out**, **Break In**, **Overtime In**, or **Overtime Out** as the attendance status.
   2) Tap **Schedule**.
   3) Select **Monday**, **Tuesday**, **Wednesday**, **Thursday**, **Friday**, **Saturday**, or **Sunday**.
   4) Tap the select date and set the selected attendance status's start time.
   5) Tap **Confirm**.
   6) Repeat step 1 to 5 according to your actual needs.

**Note**

The attendance status will be valid within the configured schedule.

**Result**

On the initial page and authenticate. If you do not select a status, the authentication will be marked as the configured attendance status according to the schedule. If you tap **Select Status** and select a status to take attendance, the authentication will be marked as the selected attendance status.

**Example**
If set the **Break Out Schedule** as Monday 11:00, and **Break In Schedule** as Monday 12:00, the valid user's authentication from Monday 11:00 to 12:00 will be marked as break.

## 6.12 System Maintenance

You can view the system information and the capacity. You can also upgrade the device, restore to factory settings, and restore to default settings.

Long tap on the initial page for 3 s and slide to the left/right by following the gesture and login the home page. Tap **Maint.**.

**System Information**

You can view the device model, serial No., versions, address, production data, QR code, and open source code license.

**Note**

The page may vary according to different device models. Refers to the actual page for details.

**Capacity**

You can view the number of, user, face picture, card, event and fingerprint.

**Note**

Parts of the device models support displaying the fingerprint number. Refers to the actual page for details.

**Device Upgrade**

Plug the USB flash drive in the device USB interface. Tap **Upgrade**, and the device will read the *digicap.dav* file in the USB flash drive to start upgrading.

**Restore to Default**

All parameters, except for the communication settings, remotely imported user information, will be restored to the default settings. The system will reboot to take effect.

**Restore to Factory**

All parameters will be restored to the factory settings. The system will reboot to take effect.

## 6.13 Two-Way Audio

After adding the device to the client software, you can call the device from the client software, call the master station from the device, call the client software from the device, or call the indoor station from the device.

### 6.13.1 Call Client Software from Device

**Steps**

1. Get the client software from the supplied disk or the official website, and install the software according to the prompts.
2. Run the client software and the control panel of the software pops up.
3. Click **Device Management** to enter the Device Management interface.
4. Add the device to the client software.

   **Note**

   For details about adding device, see *Add Device*.

5. Call the client software.
   1) Tap **Call** on the device initial page.
   2) Input ***0*** in the pop-up window.
   3) Tap **Call** to call the client software.
6. Tap **Answer** on the pop-up page of the client software and you can start two-way audio between the device and the client software.

   **Note**

   If the device is added to multiple client softwares and when the device is calling the client software, only the first client software added the device will pop up the call receiving window.

### 6.13.2 Call Master Station from Device

**Steps**

1. Get the client software from the supplied disk or the official website, and install the software according to the prompts.
2. Run the client software and the control panel of the software pops up.
3. Click **Device Management** to enter the Device Management interface.
4. Add the master station and the device to the client software.

   **Note**

   For details about adding device, see *Add Device*.

5. Set the master station's IP address and SIP address in the remote configuration page.

**Note**

For details about the operation, see the user manual of the master station.

6. Answers the call via the master station and starts two-way audio.

**Note**

The device will call the master station in priority when tap .

### 6.13.3 Call Device from Client Software

**Steps**

1. Get the client software from the supplied disk or the official website, and install the software according to the prompts.
2. Run the client software and the control panel of the software pops up.
3. Click **Device Management** to enter the Device Management page.
4. Add the device to the client software.

**Note**

For details about adding device, see *Add Device*.

5. Enter the **Live View** page and double-click the added device to start live view.

**Note**

For details about operations in the **Live View** page, see *Live View* in the user manual of the client software.

6. Right click the live view image to open the right-click menu.
7. Click **Start Two-Way Audio** to start two-way audio between the device and the client software.

### 6.13.4 Call Indoor Station from Device

**Steps**

1. Get the client software from the supplied disk or the official website, and install the software according to the prompts.
2. Run the client software and the control panel of the software pops up.
3. Click **Device Management** to enter the Device Management interface.
4. Add the indoor station and the device to the client software.

**Note**

For details about adding device, see *Add Device*.

5. Link a user to an indoor station and set a room No. for the indoor station.
6. Tap on the authentication page of the device.

**7.** Input the room No. on the dial page and tap to call the indoor station.
**8.** After the indoor station answers the call, you can start two-way audio with the indoor station.

# Chapter 7 Operation via Web Browser

## 7.1 Login

You can login via the web browser or the remote configuration of the client software.

**Note**

Make sure the device is activated. For detailed information about activation, see ***Activation*** .

### Login via Web Browser

Enter the device IP address in the address bar of the web browser and press **Enter** to enter the login page.
Enter the device user name and the password. Click **Login**.

### Login via Remote Configuration of Client Software

Download and open the client software. After adding the device, click to open the login page.
Enter the device user name and the password. Click **Login**.

## 7.2 Live View

You can view the live video of the device.

After logging in, you will enter the live view page. You can perform the live view, capture, video recording, and other operations.

Function Descriptions:

Select the image size when starting live view.

Set the volume when starting live view.

**Note**

If you adjust the volume when starting two-way audio, you may hear a repeated sounds.

You can capture image when starting live view.

Reserved function. You can zoom in the live view image.

Unlock the linked door.

Start or stop live view.

Start or stop video recording.

Select the streaming type when starting live view. You can select from the main stream and the sub stream.

Select the window division type when starting live view.

Full screen view.

## 7.3 Search Event

Click **Search** to enter the Search page.

Enter the search conditions, including the employee ID, the name, the card No., the start time, and the end time, and click **Search**.

The results will be displayed on the right panel.

## 7.4 Configuration

### 7.4.1 View Device Information

View the device No., model, serial No., version, device capacity, etc.

Click **Configuration → System → System Settings → Basic Information** to enter the configuration page.

You can view the device No., model, serial No., version, device capacity, etc.

### 7.4.2 Set Time

Set the device's time zone, synchronization mode, and the device time.

Click **Configuration → System → System Settings → Time Settings** .

Click **Save** to save the settings after the configuration.

**Time Zone**

Select the device located time zone from the drop-down list.

**Synchronization**

**NTP**

You should set the NTP server's IP address, port No., and interval.

**Manual**

By default, the device time should be synchronized manually. You can set the device time manually or check **Sync. with Computer Time** to synchronize the device time with the computer's time.

### 7.4.3 Set RS-485 Parameters

You can set the RS-485 parameters including the peripheral, address, baud rate and output type.

Click **Configuration → System → System Settings → RS-485 Settings** .

Click **Save** to save the settings after the configuration.

**Peripheral Type**

Select a peripheral from the drop-down list according the actual situation. You can select from **Card Reader**, **Extension Module**, **Access Controller**, or **Disable**.

**Note**

After thee peripheral is changed and saved, the device will reboot automatically.

**RS-485 Address**

Set the RS-485 Address according to your actual needs.

**Note**

If you select **Access Controller**: If connect the device to a terminal via the RS-485 interface, set the RS-485 address as 2. If you connect the device to a controller, set the RS-485 address according to the door No.

**Baud Rate**

The baud rate when the devices are communicating via the RS-485 protocol.

**Output Type**

If you select **Access Controller** as the peripheral type, you should set the parameter. The device will output the card No. or the employee ID to the access controller.

### 7.4.4 Set Wiegand Parameters

You can set the Wiegand transmission direction.

**Steps**

1. Click **Configuration → System → System Settings → Wiegand Settings** .
2. Check **Wiegand** to enable the Wiegand function.
3. Set a transmission direction.

**Input**

The can connect an external access controller. And the two devices will transmit the card No. via Wiegand 26 or 34.

**Output**

The device can connect a Wiegand card reader.

4. Click **Save** to save the settings.

**Note**

If you change the peripheral, and after you save the device parameters, the device will reboot automatically.

### 7.4.5 Set DST

**Steps**

1. Click **Configuration → System → System Settings → DST** .
2. Check **Enable DST**.
3. Set the DST start time, end time and bias time.
4. Click **Save** to save the settings.

### 7.4.6 Upgrade and Maintenance

Reboot device, restore device parameters, and upgrade device version.

#### Reboot Device

Click **Configuration → System → Maintenance → Upgrade & Maintenance** .
Click **Reboot** to start reboot the device.

#### Restore Parameters

Click **Configuration → System → Maintenance → Upgrade & Maintenance** .

**Restore Factory**

All parameters will be restored to the factory settings. You should activate the device before usage.

**Restore Default**

The device will restore to the default settings, except for the device IP address.

#### Import and Export Parameters

Click **Configuration → System → Maintenance → Upgrade & Maintenance** .

**Export**

Click **Export** to export the logs.

**Import**

Click and select the file to import. Click **Import** to start import configuration file.

### Upgrade

Click **Configuration → System → Maintenance → Upgrade & Maintenance** .
Select an upgrade type from the drop-down list. Click and select the upgrade file from your local PC. Click **Upgrade** to start upgrading.

**Note**

Do not power off during the upgrading.

## 7.4.7 Network Settings

Set TCP/IP, port, and Wi-Fi parameters.

### Set Basic Network Parameters

Enter a short description of your concept here (optional).

### Set TCP/IP Parameters

Click **Configuration → Network → Basic Settings → TCP/IP** .
Click **Save** to save the settings.

**NIC Type**

Select a NIC type from the drop-down list. By default, it is **Auto**.

**DHCP**

If uncheck the function, you should set the IPv4 address, IPv4 subnet mask, IPv4 default gateway, MTU, and the device port.

If you check the function, the system will allocate the IPv4 address, IPv4 subnet mask, and the IPv4 default gateway automatically.

**DNS Server**

Set the preferred DNS server and the Alternate DNS server according to your actual need.

### Set Wi-Fi Parameters

Set the Wi-Fi parameters for device wireless connection.

**Steps**

**Note**

The function should be supported by the device.

1. Click **Configuration → Network → Basic Settings → Wi-Fi** .
2. Check **Enable Wi-Fi**.
3. Select a Wi-Fi
   - Click of a Wi-Fi in the list and enter the Wi-Fi password.
   - Click **Add** and enter a Wi-Fi's SSID, password, and encryption type. Click **Connect**. When the Wi-Fi is connected, click **OK**.
4. **Optional:** Set the WLAN parameters.
   1) Click **TCP/IP Settings**.
   2) Set the IP address, subnet mask, and default gateway. Or check**Enable DHCP** and the system will allocate the IP address, subnet mask, and default gateway automatically.
5. Click **Save**.

## 7.4.8 Set Video and Audio Parameters

Set the image quality, resolution, and the device volume.

### Set Video Parameters

Click **Configuration → Video/Audio → Video** .
Set the stream type, the video type, the bitrate type, the frame rate, and the Max. bitrate.
Click **Save** to save the settings after the configuration.

### Set Audio Parameters

Click **Configuration → Video/Audio → Audio** .
Drag the block to adjust the device output volume.
Click **Save** to save the settings after the configuration.

## 7.4.9 Customize Audio Content

Customize the output audio content when authentication succeeded and failed.

**Steps**

1. Click **Configuration → Video/Audio → Audio Prompt** .
2. Enable the function.
3. Select an appellation.
4. Set the time duration when authentication succeeded.
   1) Click **Add**.
   2) Set the time duration.

**Note**

If authentication is succeeded in the configured time duration, the device will broadcast the configured content.

3) Enter the audio content.
4) **Optional:** Repeat substep 1 to 3
5) **Optional:** Click to delete the configured time duration.

**5.** Click **Save** to save the settings.

### 7.4.10 Set Video Intercom Parameters

The device can be used as a door station or outer door station. You should set the device No. before usage.

#### Set Device No.

Click **Configuration → Video Intercom → Device No.** .
Click **Save** to save the settings after the configuration.

**Device Type**

The device can be used as a door station or outer door station. Select a device type from the drop-down list.

**Community No.**

Set the device installed community No.

**Building No.**

Set the device installed building No.

**Unit No.**

Set the device installed unit No.

**Floor No.**

Set the device installed floor No.

**No.**

When set the device type as **Door Station**, if it is a main door station, you should set the No. as **0**. If it is a sub door station, you should set the No. as **1**.

**Note**

If you change the No., you should reboot the device.

#### Set Linked Network Settings

Click **Configuration → Video Intercom → Linked Network Settings** .
You can set the device type, the SIP server's IP address, and the master station's IP address.

After setting the parameters, you can communicate among the access control device, door station, indoor station, master station, and the platform.
Click **Save** to save the settings after the configuration.

### 7.4.11 Set Access Control and Authentication Parameters

Set the access control parameters and the authentication parameters.

#### Set Door Parameters

Click **Configuration → Access Control → Door Parameters** .
Click **Save** to save the settings after the configuration.

**Door Contact**

You can select **Remain Open** or **Remain Closed** according to your actual needs. By default, it is **Remain Closed**.

**Open Time**

Set the door unlocking duration. If the door is not opened for the set time, the door will be locked.

**Door Open Timeout Alarm**

An alarm will be triggered if the door has not been closed within the configured time duration.

#### Set Authentication Parameters

Click **Configuration → Access Control → Authentication Settings** .
Click **Save** to save the settings after the configuration.

**Authentication Mode**

Select an authentication mode according to your actual needs from the drop-down list.

**Display Authentication Result**

Check **Face Picture**, **Name**, or **Employee ID**. When authentication is completed, the system will display the selected contents in the result.

**Minimum Card Presenting Interval**

If the interval between card presenting of the same card is less than the configured value, the card presenting is invalid.

### 7.4.12 Set Image Parameters

Set the video standard, WDR, brightness, contrast, saturation, and sharpness.

**Steps**

1. Click **Configuration → Image** .
2. Configure the parameters to adjust the image.

**Video Standard**

Set the video frame rate when performing live view remotely. After changing the standard, you should reboot the device to take effect.

**PAL**

25 frames per second. Suitable for mainland China, Hong Kong (China), the Middle East countries, Europe countries, etc.

**NTSC**

30 frames per second. Suitable for the USA, Canada, Japan, Taiwan (China), Korea, the Philippines, etc.

**WDR**

Enable or disable the WDR function.

When there are both very bright and very dark areas simultaneously in the view, WDR balances the brightness level of the whole image and provide clear images with details.

**Brightness/Contrast/Saturation/Sharpness**

Drag the block or enter the value to adjust the live video's brightness, contrast, saturation, and sharpness.

Start/end recording video.

Capture the image.

## 7.4.13 Set Supplement Light Brightness

Set the device supplement light brightness.

**Steps**

1. Click **Configuration → Image** .
2. Click **Supplement Light Brightness** in the Basic Parameter panel.
3. Select a supplement light type and mode from the drop-down list. If you select the mode as **Enable**, you should set the brightness.
4. **Optional:** Click **Default** to restore the parameters to the default settings.

**Example**

Enter an example that illustrates the current task (optional).

**What to do next**

Enter the tasks the user should do after finishing this task (optional).

### 7.4.14 Set Face Parameters

Enter a short description of your concept here (optional).

#### Set Basic Parameters

Click **Configuration → Biometric → Basic** .
Click **Save** to save the settings after the configuration.

**Face Anti-spoofing**

Enable or disable the live face detection function. If enabling the function, the device can recognize whether the person is a live one or not.

**Note**

Biometric recognition products are not 100% applicable to anti-spoofing environments. If you require a higher security level, use multiple authentication modes.

**Live Face Detection Security Level**

After enabling the face anti-spoofing function, you can set the matching security level when performing live face authentication.

**Face Recognition Distance**

Select the distance between the authenticating user and the device camera.

**Application Mode**

Select either others or indoor according to actual environment.

**Continuous Face Recognition Interval**

Set the time interval between two continuous face recognitions when authenticating.

**Pitch Angle**

The maximum pitch angle when starting face authentication.

**Yaw Angle**

The maximum yaw angle when starting face authentication.

**Face 1:1 Matching Threshold**

Set the matching threshold when authenticating via 1:1 matching mode. The larger the value, the smaller the false accept rate and the larger the false rejection rate.

**Face 1:N Matching Threshold**

Set the matching threshold when authenticating via 1:N matching mode. The larger the value, the smaller the false accept rate and the larger the false rejection rate.

**ECO Mode**

After enabling the ECO mode, the device will use the IR camera to authenticate faces in the low light or dark environment. And you can set the ECO mode threshold, ECO mode (1:N), and ECO mode (1:1).

**ECO Mode (1:1)**

Set the matching threshold when authenticating via ECO mode 1:1 matching mode. The larger the value, the smaller the false accept rate and the larger the false rejection rate.

**ECO Mode (1:N)**

Set the matching threshold when authenticating via ECO mode 1:N matching mode. The larger the value, the smaller the false accept rate and the larger the false rejection rate

**Fingerprint Security Level**

Select the fingerprint security level.

The higher is the security level, the lower is the false acceptance rate (FAR).

The higher is the security level, the higher is the false rejection rate (FRR).

## Set Recognition Area

Click **Configuration → Biometric → Area** .
Drag the yellow frame in the live video to adjust the recognition area. Only the face within the area can be recognized by the system.
Click **Save** to save the settings.
Click or to record videos or capture pictures.

# Chapter 8 Client Software Configuration

## 8.1 Configuration Flow of Client Software

Follow the flow diagram below to configure on the client software.

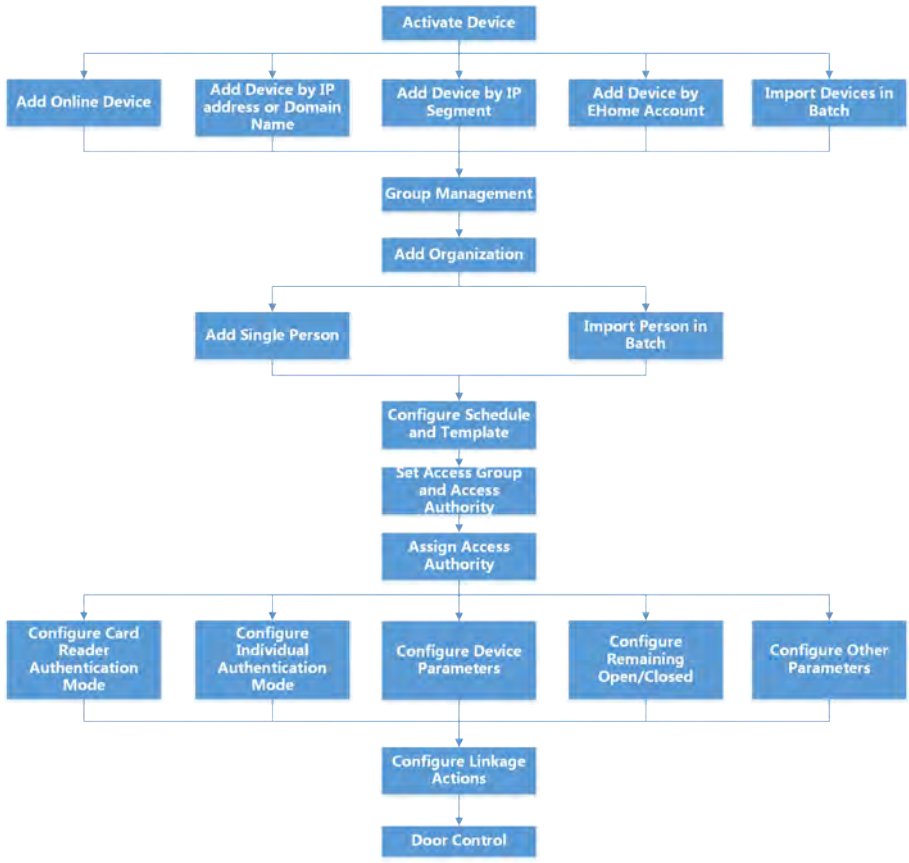


**Figure 8-1 Flow Diagram of Configuration on Client Software**

## 8.2 Device Management

You can manage devices on the client, including adding, editing, and deleting the devices. You can also perform operations such as checking device status.

### 8.2.1 Add Device

After launching the client, devices including network cameras, video encoders, DVRs, NVRs, access control devices, alarm devices, video intercom devices, etc., should be added to the client for the

remote configuration and management, such as live view, playback, event management, access control, etc.

## Add Online Device

The active online devices in the same local subnet with the client software will be displayed on the **Online Device** area.

**Note**

- You can click **Refresh per 60s** to refresh the information of the online devices.
- SADP log function can be enabled or disabled by right-clicking **Online Device**.

## Add Single Online Device

You can add single online device to the client software.

**Steps**

1. Enter the Device Management module.
2. **Optional:** Click on the right of **Device Management** and select **Device**.
3. Click **Online Device** to show the online device area.

   The searched online devices are displayed in the list.
4. Select an online device from the **Online Device** area.

   **Note**

   For the inactive device, you need to create the password for it before you can add the device properly. For detailed steps, refer to ***Activation*** .
5. Click **Add** to open the device adding window.
6. Enter the required information.

   **Name**

   Enter a descriptive name for the device.

   **Address**

   The IP address of the device is obtained automatically in this adding mode.

   **Port**

   The port number is obtained automatically.

   **User Name**

   By default, the user name is admin.

   **Password**

   Enter the device password.

**Caution**

The password strength of the device can be automatically checked. We highly recommend you change the password of your own choosing (using a minimum of 8 characters, including at least three kinds of following categories: upper case letters, lower case letters, numbers, and special characters) in order to increase the security of your product. And we recommend you change your password regularly, especially in the high security system, changing the password monthly or weekly can better protect your product.
Proper configuration of all passwords and other security settings is the responsibility of the installer and/or end-user.

7. **Optional:** Check **Synchronize Time** to synchronize the device time with the PC running the client after adding the device to the client.
8. **Optional:** Check **Import to Group** to create a group by the device name.

**Note**

You can import all the channels of the device to the corresponding group by default.

9. Click **OK** to add the device.

## Add Multiple Online Devices

You can add multiple online devices to the client software.

**Steps**

1. Enter the Device Management module.
2. Click on the right of **Device Management** and select **Device**.
3. Click **Online Device** to show the online device area.

   The searched online devices are displayed in the list.
4. Select multiple devices.

**Note**

For the inactive device, you need to create the password for it before you can add the device properly. For detailed steps, refer to ***Activation*** .

5. Click **Add** to open the device adding window.
6. Enter the required information.

   **User Name**

   By default, the user name is admin.

   **Password**

   Enter the device password.

**Caution**

The password strength of the device can be automatically checked. We highly recommend you change the password of your own choosing (using a minimum of 8 characters, including at least three kinds of following categories: upper case letters, lower case letters, numbers, and special characters) in order to increase the security of your product. And we recommend you change your password regularly, especially in the high security system, changing the password monthly or weekly can better protect your product.
Proper configuration of all passwords and other security settings is the responsibility of the installer and/or end-user.

7. **Optional:** Check **Synchronize Time** to synchronize the device time with the PC running the client after adding the devices to the client.
8. **Optional:** Check **Import to Group** to create a group by the device name.

**Note**

You can import all the channels of the device to the corresponding group by default.

9. Click **OK** to add the devices.

## Add Device by IP Address or Domain Name

When you know the IP address or domain name of the device to add, you can add devices to the client by specifying the IP address (or domain name), user name, password, etc.

**Steps**

1. Enter Device Management module.
2. Click **Device** tab on the top of the right panel.

   The added devices are displayed on the right panel.
3. Click **Add** to open the Add window, and then select **IP/Domain** as the adding mode.
4. Enter the required information.

   **Name**

   Create a descriptive name for the device. For example, you can use a nickname that can show the location or feature of the device.

   **Address**

   The IP address or domain name of the device.

   **Port**

   The devices to add share the same port number. The default value is ***8000***.

   **User Name**

   Enter the device user name. By default, the user name is ***admin***.

   **Password**

Enter the device password.

**Caution**

The password strength of the device can be automatically checked. We highly recommend you change the password of your own choosing (using a minimum of 8 characters, including at least three kinds of following categories: upper case letters, lower case letters, numbers, and special characters) in order to increase the security of your product. And we recommend you change your password regularly, especially in the high security system, changing the password monthly or weekly can better protect your product.
Proper configuration of all passwords and other security settings is the responsibility of the installer and/or end-user.

5. **Optional:** Check **Transmission Encryption (TLS)** to enable transmission encryption using TLS (Transport Layer Security) protocol for security purpose .

**Note**

- This function should be supported by the device.
- You can log into the device to get the certificate file by web browser.

6. Check **Synchronize Time** to synchronize the device time with the PC running the client after adding the device to the client.
7. **Optional:** Check **Import to Group** to create a group by the device name.
8. Finish adding the device.
   - Click **Add** to add the device and back to the device list page.
   - Click **Add and New** to save the settings and continue to add other device.
9. **Optional:** Perform the following operation(s).

| | |
|---|---|
| **Remote Configuration** | Click on Operation column to set remote configuration of the corresponding device.<br>**Note**<br>For detail operation steps for the remote configuration, see the user manual of the device. |
| **Device Status** | Click on Operation column to view device status, including cameras, recording status, signal status, hardware status, etc. |
| **Edit Device Information** | Click on Operation column to edit the device information, such as IP address, user name, and password. |
| **Check Online User** | Click on Operation column to check the online users who access the device, such as user name, user type, user's IP address, and login time. |
| **Refresh** | Click on Operation column to get the latest device information. |

| | |
|---|---|
| **Delete Device** | Select one or multiple devices and click **Delete** to delete the selected device(s) from the client. |

## Add Devices by IP Segment

If the devices share the same port No., user name and password, and their IP addresses are sharing an IP segment. You can specify the start IP address and the end IP address, port No., user name, password, etc of the devices to add them to the client.

**Steps**

1. Enter the Device Management module.
2. Click **Device** tab on the top of the right panel.

   The added devices are displayed on the right panel.
3. Click **Add** to open the Add window.
4. Select **IP Segment** as the adding mode.
5. Enter the required information.

   **Start IP**

   Enter a start IP address.

   **End IP**

   Enter an end IP address in the same network segment with the start IP.

   **Port**

   Enter the device port No. The default value is ***8000***.

   **User Name**

   By default, the user name is ***admin***.

   **Password**

   Enter the device password.

   **Caution**

   The password strength of the device can be automatically checked. We highly recommend you change the password of your own choosing (using a minimum of 8 characters, including at least three kinds of following categories: upper case letters, lower case letters, numbers, and special characters) in order to increase the security of your product. And we recommend you change your password regularly, especially in the high security system, changing the password monthly or weekly can better protect your product.
   Proper configuration of all passwords and other security settings is the responsibility of the installer and/or end-user.
6. **Optional:** Check **Transmission Encryption (TLS)** to enable transmission encryption using TLS (Transport Layer Security) protocol for security purpose .

**Note**

- This function should be supported by the device.
- You can log into the device to get the certificate file by web browser.

7. Check **Synchronize Time** to synchronize the device time with the PC running the client after adding the device to the client.
8. **Optional:** Check **Import to Group** to create a group by the device name.
9. Finish adding the device.
   - Click **Add** to add the device and back to the device list page.
   - Click **Add and New** to save the settings and continue to add other device.
10. **Optional:** Perform the following operation(s).

| | |
|---|---|
| **Remote Configuration** | Click on Operation column to set remote configuration of the corresponding device.<br>**Note**<br>For detail operation steps for the remote configuration, see the user manual of the device. |
| **Device Status** | Click on Operation column to view device status, including cameras, recording status, signal status, hardware status, etc. |
| **Edit Device Information** | Click on Operation column to edit the device information, such as IP address, user name, and password. |
| **Check Online User** | Click on Operation column to check the online users who access the device, such as user name, user type, user's IP address, and login time. |
| **Refresh** | Click on Operation column to get the latest device information. |
| **Delete Device** | Select one or multiple devices and click **Delete** to delete the selected device(s) from the client. |

## Add Device by EHome Account

For access control devices supports EHome 5.0 protocol, you can add them to the client by EHome protocol after entering device ID and key, if you have configured their server addresses, port No., and device IDs.

**Before You Start**

Make sure the devices have connected to the network properly.

**Steps**

1. Enter Device Management module.

   The added devices are displayed on the right panel.

2. Click **Add** to open the Add window.
3. Select **EHome** as the adding mode.
4. Enter the required information.

   **Device Account**

   Enter the account name registered on EHome protocol.

   **EHome Key**

   For EHome 5.0 devices, enter the EHome key if you have set it when configuring network center parameter for the device.

   **Note**

   This function should be supported by the device.

5. **Optional:** Check **Synchronize Time** to synchronize the device time with the PC running the client after adding the device to the client.
6. **Optional:** Check **Import to Group** to create a group by the device name, and import all the channels of the device to the group.
7. Finish adding the device.
   - Click **Add** to add the device and go back to the device list.
   - Click **Add and New** to save the settings and continue to add other device.

   **Note**

   Face pictures cannot be applied to devices added by EHome account.

8. **Optional:** Perform the following operation(s).

| | |
|---|---|
| **Device Status** | Click on Operation column to view device status. |
| **Edit Device Information** | Click on Operation column to edit the device information, such as device name, device account, and EHome key. |
| **Check Online User** | Click on Operation column to check the online users who access the device, such as user name, user type, user's IP address, and login time. |
| **Refresh** | Click on Operation column to get the latest device information. |
| **Delete Device** | Select one or multiple devices and click **Delete** to delete the selected device(s) from the client. |

## Import Devices in a Batch

The devices can be added to the software in a batch by entering the device information in the pre-defined CSV file.

**Steps**

1. Enter the Device Management page

2. Click **Add** to open the adding device window.
3. Select **Batch Import** as the adding mode.
4. Click **Export Template** and then save the pre-defined template (CSV file) on your PC.
5. Open the exported template file and enter the required information of the devices to be added on the corresponding column.

**Adding Mode**

You can enter ***0*** or ***1*** which indicated different adding modes. ***0*** indicates that the device is added by IP address or domain name; ***1*** indicates that the device is added via EHome.

**Address**

Edit the address of the device. If you set ***0*** as the adding mode, you should enter the IP address or domain name of the device; if you set ***1*** as the adding mode, this filed is not required.

**Port**

Enter the device port No. The default value is 8000.

**Device Information**

If you set ***0*** as the adding mode, this field is not required. If you set ***1*** as the adding mode, enter the EHome account.

**User Name**

Enter the device user name. By default, the user name is admin.

**Password**

If you set ***0*** as the adding mode, enter the password. If you set ***1*** as the adding mode, enter the EHome key.

**Caution**

The password strength of the device can be automatically checked. We highly recommend you change the password of your own choosing (using a minimum of 8 characters, including at least three kinds of following categories: upper case letters, lower case letters, numbers, and special characters) in order to increase the security of your product. And we recommend you change your password regularly, especially in the high security system, changing the password monthly or weekly can better protect your product.
Proper configuration of all passwords and other security settings is the responsibility of the installer and/or end-user.

**Import to Group**

You can enter ***1*** to create a group by the device name. All the channels of the device will be imported to the corresponding group by default. ***0*** indicates disabling this function.

6. Click ··· and select the template file.
7. Click **Add** to import the devices.

### 8.2.2 Reset Device Password

If you forgot the password of the detected online devices, you can reset the device password through the client.

**Steps**

1. Enter Device Management page.
2. Click **Online Device** to show the online device area.

   All the online devices in the same subnet will display in the list.
3. Select the device from the list and click on the Operation column.
4. Click **Export** to save the device file on your PC and then send the file to our technical support.

**Note**

For the following operations for resetting the password, contact our technical support.

**Caution**

The password strength of the device can be automatically checked. We highly recommend you change the password of your own choosing (using a minimum of 8 characters, including at least three kinds of following categories: upper case letters, lower case letters, numbers, and special characters) in order to increase the security of your product. And we recommend you change your password regularly, especially in the high security system, changing the password monthly or weekly can better protect your product.
Proper configuration of all passwords and other security settings is the responsibility of the installer and/or end-user.

## 8.3 Group Management

The resources added should be organized into groups for convenient management, such as access points. You can do some further operations of the device through the groups.

### 8.3.1 Add Group

You can add group to organize the added device for convenient management.

**Steps**

1. Enter the Device Management module.
2. Click **Device Management → Group** to enter the group management page.
3. Create a group.
   - Click **Add Group** and enter a group name as you want.
   - Click **Create Group by Device Name** and select an added device to create a new group by the name of the selected device.

### 8.3.2 Import Resources to Group

You can import the device resources to the added group in a batch.

**Before You Start**
Add a group for managing devices. Refer to ***Add Group*** .

**Steps**
1. Enter the Device Management module.
2. Click **Device Management → Group** to enter the group management page.
3. Select a group from the group list and select the resource type such as **Access Control Point**.
4. Click **Import**.
5. Select the channel names from the To Be Imported area.
6. Click **Import** to import the selected resources to the group.

### 8.3.3 Edit Resource Parameters

After importing the resources to the group, you can edit the resource parameters. For access points, you can edit the resource name.

**Before You Start**
Import the resources to group. Refer to ***Import Resources to Group*** .

**Steps**
1. Enter the Device Management module.
2. Click **Device Management → Group** to enter the group management page.
   All the added groups are displayed on the left.
3. Select a group on the group list and click a resource type.
   The resource channels imported to the group will display.
4. Click in the Operation column to open the Edit Camera window.
5. Edit the required information.
6. Click **OK** to save the new settings.

### 8.3.4 Remove Resources from Group

You can remove the added resources from the group.

**Steps**
1. Enter the Device Management module.
2. Click **Device Management → Group** to enter the group management page.
   All the added groups are displayed on the left.
3. Click a group to show the resources added to this group.
4. Select the resource(s) and click **Delete** to remove the resource(s) from the group.

## 8.4 Person Management

You can add person information to the system for further operations such as access control, video intercom, time and attendance, etc. You can manage the added persons such as issuing cards to them in a batch, importing and exporting person information in a batch, etc.

### 8.4.1 Add Organization

You can add an organization and import person information to the organization for effective management of the persons. You can also add a surbodinate organization for the added one.

**Steps**

1. Enter **Person** module.
2. Select a parent organization in the left column and click **Add** in the upper-left corner to add an organization.
3. Create a name for the added organization.

   **Note**

   Up to 10 levels of organizations can be added.

4. **Optional:** Perform the following operation(s).

| | |
|---|---|
| **Edit Organization** | Hover the mouse on an added organization and click to edit its name. |
| **Delete Organization** | Hover the mouse on an added organization and click to delete it.<br>**Note**<br>• The lower-level organizations will be deleted as well if you delete an organization.<br>• Make sure there is no person added under the organization, or the organization cannot be deleted. |
| **Show Persons in Sub Organization** | Check **Show Persons in Sub Organization** and select an organization to show persons in its sub organizations. |

### 8.4.2 Configure Basic Information

You can add person to the client software one by one and configure the person's basic information such as name, gender, phone number, etc.

**Steps**

1. Enter **Person** module.
2. Select an organization in the organization list to add the person.

3. Click **Add** to open the adding person window.

   The Person ID will be generated automatically.
4. Enter the basic information including person name, gender, tel, email address, etc.
5. **Optional:** Set the effective period of the person. Once expired, the credentials and access control settings of the person will be invalid and the person will have no authorization to access the doors\floors.

   **Example**

   For example, if the person is a visitor, his/her effective period may be short and temporary.
6. Confirm to add the person.
   - Click **Add** to add the person and close the Add Person window.
   - Click **Add and New** to add the person and continue to add other persons.

### 8.4.3 Issue a Card by Local Mode

If a card enrollment station is available, you can issue a card by local mode. To read the card number, you should connect the card enrollment station to the PC running the client by USB interface or COM, and place the card on the card enrollment station.

**Steps**

1. Enter **Person** module.
2. Select an organization in the organization list to add the person and click **Add** to enter Add Person panel.

   **Note**

   Enter the person's basic information first. For details about configuring person's basic information, refer to ***Configure Basic Information*** .
3. In the **Credential → Card** area, click **+**.
4. Click **Settings** to enter the Settings page.
5. Select **Local** as the card issuing mode.

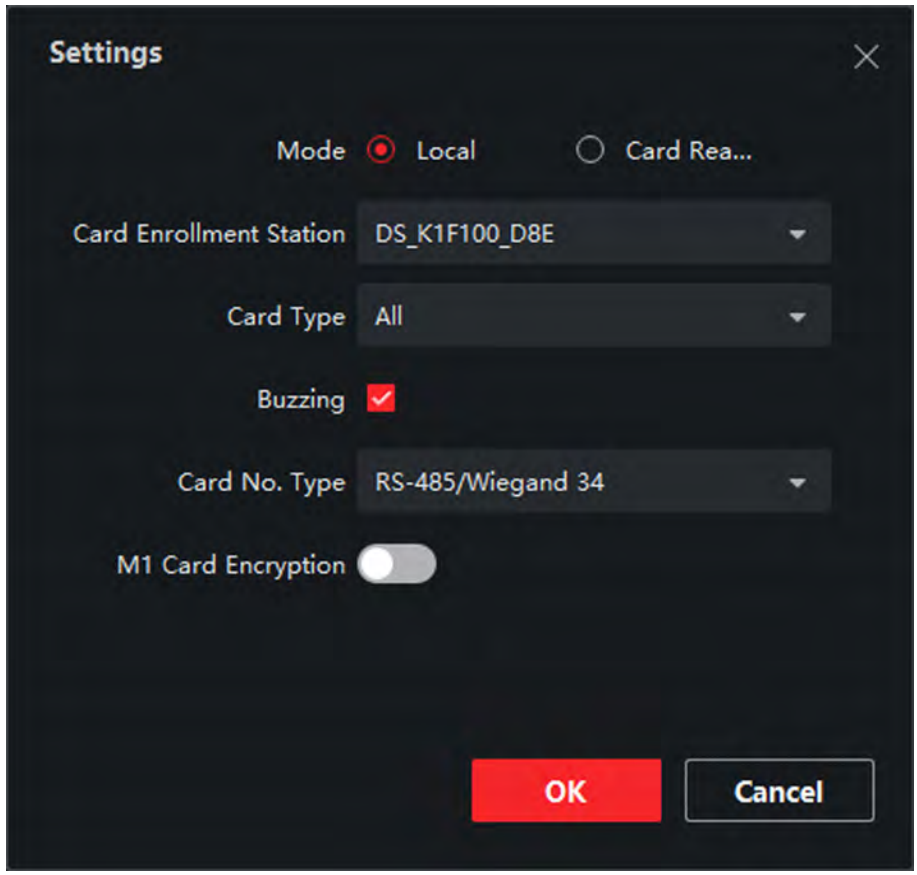


**Figure 8-2 Issue a Card by Local Mode**

6. Set other related parameters.

**Card Enrollment Station**

Select the model of the connected card enrollment station.

**Note**

Currently, the supported card enrollment station models include DS-K1F100-D8, DS-K1F100-M, DS-K1F100-D8E, and DS-K1F180-D8E.

**Card Type**

This field is only available when the model is DS-K1F100-D8E or DS-K1F180-D8E. Select the card type as EM card or Mifare card according to the actual card type.

**Buzzing**

Enable or disable the buzzing when the card number is read successfully.

**Card No. Type**

Select the type of the card number according to actual needs.

**M1 Card Encryption**

This field is only available when the model is DS-K1F100-D8, DS-K1F100-D8E, or DS-K1F180-D8E. If the card is M1 card, then you can enable the M1 Card Encryption function and select the sector of the card to encrypt.

7. Click **OK** to confirm the operation.
8. Place the card on the card enrollment station, and click **Read** to get the card number.

   The card number will display in the Card No. field automatically.
9. Click **Add**.

   The card will be issued to the person.

### 8.4.4 Upload a Face Photo from Local PC

When adding person, you can upload a face photo stored in local PC to the client as the person's profile.

**Steps**

1. Enter **Person** module.
2. Select an organization in the organization list to add the person and click **Add**.

   **Note**

   Enter the person's basic information first. For details about configuring person's basic information, refer to ***Configure Basic Information*** .
3. Click **Add Face** in the Basic Information panel.
4. Select **Upload**.
5. Select a picture from the PC running the client.

   **Note**

   The picture should be in JPG or JPEG format and smaller than 200 KB.
6. **Optional:** Enable **Verify by Device** to check whether the facial recognition device managed in the client can recognize the face in the photo.
7. Confirm to add the person.
   - Click **Add** to add the person and close the Add Person window.
   - Click **Add and New** to add the person and continue to add other persons .

### 8.4.5 Take a Photo via Client

When adding person, you can take a photo of the person by the webcam of the PC running the client and set this photo as the person's profile.

**Before You Start**

Add at least one access control device checking whether the face in the photo can be recognized by the facial recognition device managed by the client.

**Steps**

1. Enter **Person** module.
2. Select an organization in the organization list to add the person and click **Add**.

   **Note**

   Enter the person's basic information first. For details about configuring person's basic information, refer to ***Configure Basic Information*** .

3. Click **Add Face** in the Basic Information panel.
4. Select **Take Photo**.
5. Connect the face scanner to the PC running the client.
6. **Optional:** Enable **Verify by Device** to check whether the facial recognition device managed in the client can recognize the face in the photo.
7. Take a photo.
   1) Face to the webcam of the PC and make sure your face is in the middle of the collecting window.
   2) Click to capture a face photo.
   3) **Optional:** Click to capture again.
   4) Click **OK** to save the captured photo.
8. Confirm to add the person.
   - Click **Add** to add the person and close the Add Person window.
   - Click **Add and New** to add the person and continue to add other persons.

### 8.4.6 Collect Face via Access Control Device

When adding person, you can collect the person's face via access control device added to the client which supports facial recognition function.

**Steps**

1. Enter **Person** module.
2. Select an organization in the organization list to add the person and click **Add**.

   **Note**

   Enter the person's basic information first. For details about configuring person's basic information, refer to ***Configure Basic Information*** .

3. Click **Add Face** in the Basic Information panel.
4. Select **Remote Collection**.
5. Select an access control device which supports face recognition function from the drop-down list.
6. Collect face.
   1) Face to the camera of the selected access control device and make sure your face is in the middle of the collecting window.
   2) Click to capture a photo.

3) Click **OK** to save the captured photo.

7. Confirm to add the person.
   - Click **Add** to add the person and close the Add Person window.
   - Click **Add and New** to add the person and continue to add other persons .

### 8.4.7 Collect Fingerprint via Client

Collecting fingerprints locally means you can collect the fingerprint via the fingerprint recorder connected directly to the PC running the client. The fingerprints recorded can be used as credentials of the persons to access the authorized doors.

**Before You Start**

Connect the fingerprint recorder to the PC running the client.

**Steps**

1. Enter **Person** module.
2. Select an organization in the organization list to add the person and click **Add**.

   **Note**

   Enter the person's basic information first. For details about configuring person's basic information, refer to ***Configure Basic Information*** .

3. In the **Credential → Fingerprint** panel, click **+**.
4. In the pop-up window, select the collection mode as **Local**.
5. Select the model of the connected fingerprint recorder.

   **Note**

   If the fingerprint recorder is DS-K1F800-F, you can click **Settings** to select the COM the fingerprint recorder connects to.

6. Collect the fingerprint.
   1) Click **Start**.
   2) Place and lift your fingerprint on the fingerprint recorder to collect the fingerprint.
   3) Click **Add** to save the recorded fingerprint.
7. Confirm to add the person.
   - Click **Add** to add the person and close the Add Person window.
   - Click **Add and New** to add the person and continue to add other persons.

   **Note**

   Once the fingerprint is added, the fingerprint type cannot be changed.

### 8.4.8 Collect Fingerprint via Access Control Device

When adding person, you can collect fingerprint information via the access control device's fingerprint module. The fingerprints recorded can be used as credentials of the persons to access the authorized doors.

**Before You Start**
Make sure fingerprint collection is supported by the access control device.

**Steps**
1. Enter **Person** module.
2. Select an organization in the organization list to add the person and click **Add**.

   **Note**
   Enter the person's basic information first. For details about configuring person's basic information, refer to ***Configure Basic Information*** .

3. In the **Credential → Fingerprint** panel, click **+**.
4. In the pop-up window, select the collection mode as **Remote**.
5. Select an access control device which supports fingerprint recognition function from the drop-down list.
6. Collect the fingerprint.
   1) Click **Start**.
   2) Place and lift your fingerprint on the fingerprint scanner of the selected access control device to collect the fingerprint.
   3) Click **Add** to save the recorded fingerprint.
7. Confirm to add the person.
   - Click **Add** to add the person and close the Add Person window.
   - Click **Add and New** to add the person and continue to add other persons .

   **Note**
   Once the fingerprint is added, the fingerprint type cannot be changed.

### 8.4.9 Configure Access Control Information

When adding a person, you can set her/his access control properties, such as setting the person as visitor or as blacklist person, or as super user who has super authorization.

**Steps**
1. Enter **Person** module.
2. Select an organization in the organization list to add the person and click **Add**.

**Note**

Enter the person's basic information first. For details about configuring person's basic information, refer to ***Configure Basic Information*** .

3. In the **Access Control** panel, set the person's access control properties.

   **PIN Code**

   The PIN code must be used after card or fingerprint when accessing. It cannot be used independently. It should contain 4 to 8 digits.

   **Device Operator**

   For person with device operator role, he/she is authorized to operate on the access control devices.

**Note**

The Super User, Extended Door Open Time, Add to Blacklist, and Mark as Visitor functions cannot be enabled concurrently. For example, if one person is set as super user, you cannot enable extended door open time for her/him, add her/him to the blacklist, or set her/him as visitor.

4. Confirm to add the person.
   - Click **Add** to add the person and close the Add Person window.
   - Click **Add and New** to add the person and continue to add other persons.

### 8.4.10 Customize Person Information

You can customize the person properties which are not pre-defined in the client according to actual needs, e.g., place of birth. After customizing, when add a person, you can enter the custom information to make the person information complete.

**Steps**

1. Enter **Person** module.
2. Set the fields of custom information.
   1) Click **Custom Property**.
   2) Click **Add** to add a new property.
   3) Enter the property name.
   4) Click **OK**.
3. Set the custom information when adding a person.
   1) Select an organization in the organization list to add the person and click **Add**.

      **Note**

      Enter the person's basic information first. For details about configuring person's basic information, refer to ***Configure Basic Information*** .

   2) In the **Custom Information** panel, enter the person information.

3) Click **Add** to add the person and close the Add Person window, or click **Add and New** to add the person and continue to add other persons.

### 8.4.11 Configure Resident Information

If the person is resident, for video intercom purpose, you need to set the room number for her/him and bind an indoor station. After bound, you can call this person by calling the indoor station and perform video intercom with her/him.

**Steps**

1. Enter **Person** module.
2. Select an organization in the organization list to add the person and click **Add**.

   **Note**

   Enter the person's basic information first. For details about configuring person's basic information, refer to ***Configure Basic Information*** .

3. In the **Resident Information** panel, select the indoor station to bink it to the person.

   **Note**

   If you select **Analog Indoor Station**, the **Door Station** field will display and you are required to select the door station to communicate with the analog indoor station.

4. Enter the floor No. and room No. of the person.
5. Confirm to add the person.
   - Click **Add** to add the person and close the Add Person window.
   - Click **Add and New** to add the person and continue to add other persons.

### 8.4.12 Configure Additional Information

When adding person, you can configure the additional information for the person, such as person's identity type, identity No., country, etc., according to actual needs.

**Steps**

1. Enter **Person** module.
2. Select an organization in the organization list to add the person and click **Add**.

   **Note**

   Enter the person's basic information first. For details about configuring person's basic information, refer to ***Configure Basic Information*** .

3. In the **Additional Information** panel, enter the additional information of the person, including person's ID type, ID No., job title, etc., according to actual needs.
4. Confirm to add the person.
   - Click **Add** to add the person and close the Add Person window.

- Click **Add and New** to add the person and continue to add other persons .

### 8.4.13 Import and Export Person Identify Information

You can import the information and pictures of multiple persons to the client software in a batch. Meanwhile, you can also export the person information and pictures and save them in your PC.

### 8.4.14 Import Person Information

You can enter the information of multiple persons in a predefined template (a CSV file) to import the information to the client in a batch.

**Steps**

1. Enter the Person module.
2. Select an added organization in the list, or click **Add** in the upper-left corner to add an organization and then select it.
3. Click **Import** to open the Import panel.
4. Select **Person Information** as the importing mode.
5. Click **Download Template for Importing Person** to download the template.
6. Enter the person information in the downloaded template.

**Note**

- If the person has multiple cards, separate the card No. with semicolon.
- Items with asterisk are required.
- By default, the Hire Date is the current date.

7. Click ··· to select the CSV file with person information.
8. Click **Import** to start importing.

**Note**

- If a person No. already exists in the client's database, delete the existing information before importing.
- You can import information of no more than 10,000 persons.

### 8.4.15 Import Person Pictures

After importing face pictures for the added persons to the client, the persons in the pictures can be identified by an added face recognition terminal. You can either import person pictures one by one, or import multiple pictures at a time according to your need.

**Before You Start**

Be sure to have imported person information to the client beforehand.

**Steps**

1. Enter the Person module.
2. Select an added organization in the list, or click **Add** in the upper-left corner to add an organization and then select it.
3. Click **Import** to open the Import panel and check **Face**.
4. **Optional:** Enable **Verify by Device** to check whether face recognition device managed in the client can recognize the face in the photo.
5. Click ··· to select a face picture file.

**Note**

- The (folder of) face pictures should be in ZIP format.
- Each picture file should be in JPG format and should be no larger than 200 KB.
- Each picture file should be named as "Person ID_Name". The Person ID should be the same with that of the imported person information.

6. Click **Import** to start importing.

   The importing progress and result will be displayed.

### 8.4.16 Export Person Information

You can export the added persons' information to local PC as a CSV file.

**Before You Start**

Make sure you have added persons to an organization.

**Steps**

1. Enter the Person module.
2. **Optional:** Select an organization in the list.

**Note**

All persons' information will be exported if you do not select any organization.

3. Click **Export** to open the Export panel and check **Person Information** as the content to export.
4. Check desired items to export.
5. Click **Export** to save the exported CSV file in your PC.

### 8.4.17 Export Person Pictures

You can export face picture file of the added persons and save in your PC.

**Before You Start**

Make sure you have added persons and their face pictures to an organization.

**Steps**

1. Enter the Person module.

2. **Optional:** Select an organization in the list.

**Note**

All persons' face pictures will be exported if you do not select any organization.

3. Click **Export** to open the Export panel and check **Face** as the content to export.
4. Click **Export** to start exporting.

**Note**

- The exported file is in ZIP format.
- The exported face picture is named as "Person ID_Name_0" ("0" is for a full-frontal face).

### 8.4.18 Get Person Information from Access Control Device

If the added access control device has been configured with person information (including person details, fingerprint, and issued card information), you can get the person information from the device and import them to the client for further operations.

**Steps**

**Note**

- If the person name stored in the device is empty, the person name will be filled with the issued card No. after importing to the client.
- The gender of the persons will be **Male** by default.
- If the card number or person ID (employee ID) stored on the device already exists in the client database, the person with this card number or person ID will not be imported to the client.

1. Enter **Person** module.
2. Select an organization to import the persons.
3. Click **Get from Device**.
4. Select the access control device from the drop-down list.
5. Click **Get** to start importing the person information to the client.

   The person information, including person details, person's fingerprint information (if configured), and the linked cards (if configured), will be imported to the selected organization.

### 8.4.19 Move Persons to Another Organization

You can move the added persons to another organization if you need.

**Before You Start**

- Make sure you have added at least two organizations.
- Make sure you have imported person information.

**Steps**

1. Enter **Person** module.
2. Select an organization in the left panel.

   The persons under the organization will be displayed in the right panel.
3. Select the person to move.
4. Click **Change Organization**.
5. Select the organization to move persons to.
6. Click **OK**.

### 8.4.20 Issue Cards to Persons in Batch

The client provides a convenient way to issue cards to multiple persons in a batch.

**Steps**

1. Enter **Person** module.
2. Click **Batch Issue Cards**.

   All the added persons with no card issued will display.
3. Set the card issuing parameters. For details, refer to ***Set Card Issuing Parameters*** .
4. Click **Initialize** to initialize the card enrollment station or card reader to make it ready for issuing cards.
5. Click the card number column and enter the card number.
   - Place the card on the card enrollment station.
   - Swipe the card on the card reader.
   - Enter the card number manually and press **Enter** key on your keyboard.

   The card number will be read automatically and the card will be issued to the person in the list.
6. Repeat the above step to issue the cards to the persons in the list in sequence.

### 8.4.21 Report Card Loss

If the person lost his/her card, you can report the card loss so that the card's related access authorization will be inactive.

**Steps**

1. Enter **Person** module.
2. Select the person you want to report card loss for and click **Edit** to open the Edit Person window.
3. In the **Credential → Card** panel, click on the added card to set this card as lost card.

   After reporting card loss, the access authorization of this card will be invalid and inactive. Other person who gets this card cannot access the doors by swiping this lost card.
4. **Optional:** If the lost card is found, you can click to cancel the loss.

   After cancelling card loss, the access authorization of the person will be valid and active.

5. If the lost card is added in one access group and the access group is applied to the device already, after reporting card loss or cancelling card loss, a window will pop up to notify you to apply the changes to the device. After applying to device, these changes can take effect on the device.

### 8.4.22 Set Card Issuing Parameters

The client provides two modes for reading a card's number: via card enrollment station or via the card reader of the access control device. If a card enrollment station is available, connect it to the PC running the client by USB interface or COM, and place the card on the card enrollment to read the card number. If not, you can also swipe the card on the card reader of the added access control device to get the card number. As a result, before issuing a card to one person, you need to set the card issuing parameters including the issuing mode and related parameters.

When adding a card to one person, click **Settings** to open the Card Issuing Settings window.

#### Local Mode: Issue Card by Card Enrollment Station

Connect a card enrollment station to the PC running the client. You can place the card on the card enrollment station to get the card number.

**Card Enrollment Station**

Select the model of the connected card enrollment station

**Note**

Currently, the supported card enrollment station models include DS-K1F100-D8, DS-K1F100-M, DS-K1F100-D8E, and DS-K1F180-D8E.

**Card Type**

This field is only available when the model is DS-K1F100-D8E or DS-K1F180-D8E.

Select the card type as EM card or IC card according to the actual card type.

**Serial Port**

It is only available when the model is DS-K1F100-M.

Select the COM the card enrollment station connects to.

**Buzzing**

Enable or disable the buzzing when the card number is read successfully.

**Card No. Type**

Select the type of the card number according to actual needs.

**M1 Card Encryption**

This field is only available when the model is DS-K1F100-D8, DS-K1F100-D8E, or DS-K1F180-D8E.

If the card is M1 card, and if you need to enable the M1 Card Encryption function, you should enable this function and select the sector of the card to encrypt.

**Remote Mode: Issue Card by Card Reader**

Select an access control device added in the client and swipe the card on its card reader to read the card number.

## 8.5 Configure Schedule and Template

You can configure the template including holiday and week schedule. After setting the template, you can adopt the configured template to access groups when setting the access groups, so that the access group will take effect in the time durations of the template.

**Note**

For access group settings, refer to ***Set Access Group to Assign Access Authorization to Persons*** .

### 8.5.1 Add Holiday

You can create holidays and set the days in the holidays, including start date, end date, and holiday duration in one day.

**Steps**

**Note**

You can add up to 64 holidays in the software system.

1. Click **Access Control → Schedule → Holiday** to enter the Holiday page.
2. Click **Add** on the left panel.
3. Create a name for the holiday.
4. **Optional:** Enter the descriptions or some notifications of this holiday in the Remark box.
5. Add a holiday period to the holiday list and configure the holiday duration.

   **Note**

   Up to 16 holiday periods can be added to one holiday.

   1) Click **Add** in the Holiday List field.
   2) Drag the cursor to draw the time duration, which means in that duration of time, the configured access group is activated.

      **Note**

      Up to 8 time durations can be set to one holiday period.
   3) **Optional:** Perform the following operations to edit the time durations.

- Move the cursor to the time duration and drag the time duration on the timeline bar to the desired position when the cursor turns to .
- Click the time duration and directly edit the start/end time in the appeared dialog.
- Move the cursor to the start or the end of time duration and drag to lengthen or shorten the time duration when the cursor turns to .

4) **Optional:** Select the time duration(s) that need to be deleted, and then click in the Operation column to delete the selected time duration(s).
5) **Optional:** Click in the Operation column to clear all the time duration(s) in the time bar.
6) **Optional:** Click in the Operation column to delete this added holiday period from the holiday list.

**6.** Click **Save**.

### 8.5.2 Add Template

Template includes week schedule and holiday. You can set week schedule and assign the time duration of access authorization for different person or group. You can also select the added holiday(s) for the template.

**Steps**

**Note**

You can add up to 255 templates in the software system.

**1.** Click **Access Control → Schedule → Template** to enter the Template page.

**Note**

There are two default templates: All-Day Authorized and All-Day Denied, and they cannot be edited or deleted.

**All-Day Authorized**

The access authorization is valid in each day of the week and it has no holiday.

**All-Day Denied**

The access authorization is invalid in each day of the week and it has no holiday.

**2.** Click **Add** on the left panel to create a new template.
**3.** Create a name for the template.
**4.** Enter the descriptions or some notification of this template in the Remark box.
**5.** Edit the week schedule to apply it to the template.

1) Click **Week Schedule** tab on the lower panel.
2) Select a day of the week and draw time duration(s) on the timeline bar.

**Note**

Up to 8 time duration(s) can be set for each day in the week schedule.

3) **Optional:** Perform the following operations to edit the time durations.

- Move the cursor to the time duration and drag the time duration on the timeline bar to the desired position when the cursor turns to .
- Click the time duration and directly edit the start/end time in the appeared dialog.
- Move the cursor to the start or the end of time duration and drag to lengthen or shorten the time duration when the cursor turns to .

4) Repeat the two steps above to draw more time durations on the other days of the week.

**6.** Add a holiday to apply it to the template.

**Note**

Up to 4 holidays can be added to one template.

1) Click **Holiday** tab.
2) Select a holiday in the left list and it will be added to the selected list on the right panel.
3) **Optional:** Click **Add** to add a new holiday.

**Note**

For details about adding a holiday, refer to ***Add Holiday*** .

4) **Optional:** Select a selected holiday in the right list and click to remove the selected one, or click **Clear** to clear all the selected holiday(s) in the right list.

**7.** Click **Save** to save the settings and finish adding the template.

## 8.6 Set Access Group to Assign Access Authorization to Persons

After adding the person and configuring the person's credentials, you can create the access groups to define which person(s) can get access to which door(s) and then apply the access group to the access control device to take effect.

**Steps**

- For one person, you can add up to 4 access groups to one access control point of one device.
- You can add up to 128 access groups in total.
- When the access group settings are changed, you need to apply the access groups to the devices again to take effect. The access group changes include changes of template, access group settings, person's access group settings, and related person details (including card number, fingerprint, face picture, linkage between card number and fingerprint, linkage between card number and fingerprint, card password, card effective period, etc).

**1.** Click **Access Control → Access Group** to enter the Access Group interface.

**2.** Click **Add** to open the Add window.

**3.** In the **Name** text field, create a name for the access group as you want.

**4.** Select a template for the access group.

**Note**

You should configure the template before access group settings. Refer to ***Configure Schedule and Template*** for details.

5. In the left list of the Select Person field, select person(s) and the person(s) will be added to the selected list .
6. In the left list of the Select Door field, select door(s) or door station(s) for the selected persons to access, and the selected door(s) or door station(s) will be added to the selected list.
7. Click **OK**.
8. After adding the access groups, you need to apply them to the access control device to take effect.
   1) Select the access group(s) to apply to the access control device.

      To select multiple access groups, you can hold the **Ctrl** or **Shift** key and select access groups.
   2) Click **Apply All to Devices** to start applying all the selected access group(s) to the access control device or door station.

      **Caution**
      - Be careful to click **Apply All to Devices**, since this operation will clear all the access groups of the selected devices and then apply the new access group, which may brings risk to the devices.
      - You can click **Apply Changes to Devices** to only apply the changed part of the selected access group(s) to the device(s).
   3) View the apply status in the Status column or click **Applying Status**to view all the applied access group(s).

   The selected persons in the applied access groups will have the authorization to enter/exit the selected doors/door stations with their linked card(s) or fingerprints.
9. **Optional:** Click to edit the access group if necessary.

## 8.7 Configure Advanced Functions

You can configure the advanced functions of access control to meet some special requirements in different scene.

**Note**
- For the card related functions(the type of access control card), only the card(s) with access group applied will be listed when adding cards.
- The advanced functions should be supported by the device.
- Hover the cursor on the Advanced Function, and then Click to customize the advanced function(s) to be displayed.

### 8.7.1 Configure Device Parameters

After adding the access control device, you can configure the parameters of access control device, access control points.

## Configure Parameters for Access Control Device

After adding the access control device, you can configure its parameters, including overlaying user information on picture, uploading pictures after capturing, saving captured pictures, etc.

**Steps**

1. Click **Access Control → Advanced Function → Device Parameter** .

   **Note**

   If you can find Device Parameter in the Advanced Function list, Hover the cursor on the Advanced Function, and then Click ⚙ to select the Device Parameter to be displayed.

2. Select an access device to show its parameters on the right page.
3. Turn the switch to ON to enable the corresponding functions.

   **Note**

   - The displayed parameters may vary for different access control devices.
   - Some of the following parameters are not listed in the Basic Information page, click **More** to edit the parameters.

   **Voice Prompt**

   If you enable this function, the voice prompt is enabled in the device. You can hear the voice prompt when operating in the device.

   **Upload Pic. After Linked Capture**

   Upload the pictures captured by linked camera to the system automatically.

   **Save Pic. After Linked Capture**

   If you enable this function, you can save the picture captured by linked camera to the device.

   **Face Recognition Mode**

   **Normal Mode**

   Recognize face via the camera normally.

   **Deep Mode**

   The device can recognize a much wider people range than the normal mode. This mode is applicable to a more complicated environment.

   **Enable NFC Card**

   If enable the function, the device can recognize the NFC card. You can present NFC card on the device.

   **Enable M1 Card**

   If enable the function, the device can recognize the M1 card. You can present M1 card on the device.

   **Enable EM Card**

If enable the function, the device can recognize the EM card. You can present EM card on the device.

**Enable CPU Card**

Reserved. If enable the function, the device can recognize the CPU card. You can present CPU card on the device.

**Enable ID Card**

Reserved. If enable the function, the device can recognize the ID card. You can present ID card on the device.

4. Click **OK**.
5. **Optional:** Click **Copy to**, and then select the access control device(s) to copy the parameters in the page to the selected device(s).

## Configure Parameters for Door/Elevator

After adding the access control device, you can configure its access point (door) parameters.

**Steps**

1. Click **Access Control → Advanced Function → Device Parameter** .
2. Select an access control device on the left panel, and then click ▸ to show the doors or floors of the selected device.
3. Select a door or floor to show its parameters on the right page.
4. Edit the door or floor parameters.

**Note**

- The displayed parameters may vary for different access control devices.
- Some of the following parameters are not listed in the Basic Information page, click **More** to edit the parameters.

**Name**

Edit the card reader name as desired.

**Door Contact**

You can set the door sensor as remaining closed or remaining open. Usually, it is remaining closed.

**Exit Button Type**

You can set the exit button as remaining closed or remaining open. Usually, it is remaining open.

**Door Locked Time**

After swiping the normal card and relay action, the timer for locking the door starts working.

**Extended Open Duration**

The door contact can be enabled with appropriate delay after person with extended accesss needs swipes her/his card.

**Door Left Open Timeout Alarm**

The alarm can be triggered if the door has not been closed in a configured time period. If it is set as 0, no alarm will be triggered.

**Duress Code**

The door can open by inputting the duress code when there is duress. At the same time, the client can report the duress event.

**Super Password**

The specific person can open the door by inputting the super password.

**Note**

- The duress code and the super code should be different.
- The duress code and the super password should be different from the authentication password.
- The length of duress code and the super password is according the device, usually it should contains 4 to 8 digits.

5. Click **OK**.
6. **Optional:** Click **Copy to** , and then select the door to copy the parameters in the page to the selected doors.

**Note**

The door's status duration settings will be copied to the selected door(s) as well.

## Configure Parameters for Card Reader

After adding the access control device, you can configure its card reader parameters.

**Steps**

1. Click **Access Control → Advanced Function → Device Parameter** .
2. In the device list on the left, click ▸ to expand the door, select a card reader and you can edit the card reader's parameters on the right.
3. Edit the card reader basic parameters in the Basic Information page.

**Note**

- The displayed parameters may vary for different access control devices. There are part of parameters listed as follows. Refer to the user manual of the device for more details.
- Some of the following parameters are not listed in the Basic Information page, click **Advanced** to edit the parameters.

**Basic Information**

**Name**

Edit the card reader name as desired.

**Minimum Card Swiping Interval**

If the interval between card swiping of the same card is less than the set value, the card swiping is invalid. You can set it as 0 to 255.

**Alarm of Max. Failed Attempts**

Enable to report alarm when the card reading attempts reach the set value.

**Card Reader Type/Card Reader Description**

Get card reader type and description. They are read-only.

**Fingerprint Capacity**

View the maximum number of available fingerprints.

**Existing Fingerprint Number**

View the number of existed fingerprints in the device.

**Advanced**

**Enable Card Reader**

Enable the function and e device can be used as an card reader.

**OK LED Polarity/Error LED Polarity/Buzzer Polarity**

Set OK LED Polarity/Error LED Polarity/Buzzer LED Polarity of main board according to the card reader parameters. Generally, adopts the default settings.

**Max. Interval When Entering PWD**

When you inputting the password on the card reader, if the interval between pressing two digits is larger than the set value, the digits you pressed before will be cleared automatically.

**Tampering Detection**

Enable the anti-tamper detection for the card reader.

**Max. Times of Card Failure**

Set the max. failure attempts of reading card.

**Fingerprint Recognition Level**

Select the fingerprint recognition level in the drop-down list.

**Face 1:N Mathcing Threshold**

Set the matching security level when authenticating via 1:N matching mode. The larger the value, the smaller the false accept rate and the larger the false rejection rate when authentication.

**Face Recognition Interval**

The time interval between two continuous face recognitions when authenticating. By default, it is 2s.

**Face Anti-spoofing**

Enable or disable the face anti-spoofing function. If enabling the function, the device can recognize whether the person is a live one or not.

**Face 1:1 Matching Threshold**

Set the matching threshold when authenticating via 1:1 matching mode. The larger the value, the smaller the false accept rate and the larger the false rejection rate when authentication.

**Application Mode**

You can select indoor or others application modes according to actual environment.

**Lock Authentication Failed Face**

After enabling the Live Face Detection function, the system will lock the user's face for 5 minutes if the live face detection is failed for more than the configured attempts. The same user cannot authenticate via the fake face within 5 minutes. Within the 5 minutes, the user can authenticate via the real face twice continuously to unlock.

**Liveness Detection Security Level**

After enabling Live Face Detection function, you can set the matching security level when performing live face authentication.

4. Click **OK**.
5. **Optional:** Click **Copy to**, and then select the card reader(s) to copy the parameters in the page to the selected card reader(s).

## 8.7.2 Configure Remaining Open/Closed

You can set the status of the door as open or closed. For example, you can set the door remaining closed in the holiday, and set the door remaining open in the specified period of the work day.

**Before You Start**

Add the access control devices to the system.

**Steps**

1. Click **Access Control → Advanced Function → Remain Open/Closed** to enter the Remain Open/Closed page.
2. Select the door that need to be configured on the left panel.
3. To set the door status during the work day, click the **Week Schedule** and perform the following operations.
   1) Click **Remain Open** or **Remain Closed**.
   2) Drag the cursor to draw the time duration, which means in that duration of time, the configured access group is activated.

**Note**

Up to 8 time durations can be set to each day in the week schedule.

3) **Optional:** Perform the following operations to edit the time durations.
   - Move the cursor to the time duration and drag the time duration on the timeline bar to the desired position when the cursor turns to .
   - Click the time duration and directly edit the start/end time in the appeared dialog.
   - Move the cursor to the start or the end of time duration and drag to lengthen or shorten the time duration when the cursor turns to .
4) Click **Save**.

**Related Operations**

| | |
|---|---|
| **Copy to Whole Week** | Select one duration on the time bar, click **Copy to Whole Week** to copy all the duration settings on this time bar to other week days. |
| **Delete Selected** | Select one duration on the time bar, click **Delete Selected** to delete this duration. |
| **Clear** | Click **Clear** to clear all the duration settings in the week schedule. |

**4.** To set the door status during the holiday, click the **Holiday** and perform the following operations.
1) Click **Remain Open** or **Remain Closed**.
2) Click **Add**.
3) Enter the start date and end date.
4) Drag the cursor to draw the time duration, which means in that duration of time, the configured access group is activated.

**Note**

Up to 8 time durations can be set to one holiday period.

5) Perform the following operations to edit the time durations.
   - Move the cursor to the time duration and drag the time duration on the timeline bar to the desired position when the cursor turns to .
   - Click the time duration and directly edit the start/end time in the appeared dialog.
   - Move the cursor to the start or the end of time duration and drag to lengthen or shorten the time duration when the cursor turns to .
6) **Optional:** Select the time duration(s) that need to be deleted, and then click in the Operation column to delete the selected time duration(s).
7) **Optional:** Click in the Operation column to clear all the time duration(s) in the time bar.
8) **Optional:** Click in the Operation column to delete this added holiday period from the holiday list.
9) Click **Save**.

**5.** **Optional:** Click **Copy to** to copy the door status settings of this door to other door(s).

### 8.7.3 Configure Multi-Factor Authentication

You can manage the persons by group and set the authentication for multiple persons of one access control point (door).

**Before You Start**

Set access group and apply the access group to the access control device. For details, refer to ***Set Access Group to Assign Access Authorization to Persons*** .

Perform this task when you want to set authentications for multiple cards of one access control point (door).

**Steps**

1. Click **Access Control → Advanced Function → Multi-Factor Auth** .
2. Select an access control device in device list on the left panel.
3. Add a person/card group for the access control device.
   1) Click **Add** on the right panel.
   2) Create a name for the group as desired.
   3) Specify the start time and end time of the effective period for the person/card group.
   4) Select members(s) and card(s) in the Available list, and the selected member(s) and card(s) will be added to the Selected list.

      **Note**

      Make sure you have issue card to the person.
      Make sure you have set access group and apply the access group to the access control device successfully.

   5) Click **Save**.
   6) **Optional:** Select the person/card group(s), and then click **Delete** to delete it(them).
   7) **Optional:** Select the person/card group(s), and then click **Apply** to re-apply access group that failed to be applied previously to the access control device.
4. Select an access control point (door) of selected device on the left panel.
5. Enter the maximum interval when entering password.
6. Add an authentication group for the selected access control point.
   1) Click **Add** on the Authentication Groups panel.
   2) Select a configured template as the authentication template from the drop-down list.

      **Note**

      For setting the template, refer to ***Configure Schedule and Template*** .

   3) Select the authentication type as **Local Authentication**, **Local Authentication and Remotely Open Door**, or **Local Authentication and Super Password** from the drop-down list.

      **Local Authentication**

      Authentication by the access control device.

      **Local Authentication and Remotely Open Door**

Authentication by the access control device and by the client. When the person swipes the card on the device, a window will pop up. You can unlock the door via the client.

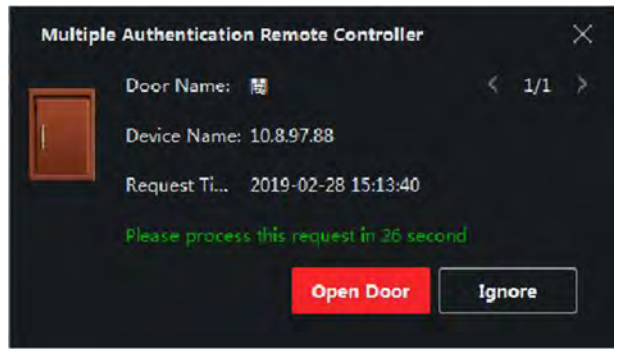


**Figure 8-3 Remotely Open Door**

**Note**

You can check **Offline Authentication** to enable the super password authentication when the access control device is disconnected with the client.

**Local Authentication and Super Password**

Authentication by the access control device and by the super password.

4) Select the added person/card group in the left list below and it will be added to the Selected list on the right as the authentication group.
5) Click the added authentication group in the right list to set authentication times in the Auth Times column.

**Note**

- The authentication times should be larger than 0 and smaller than the added personnel quantity in the personnel group.
- The maximum value of authentication times is 16.

6) Click **Save**.

**Note**

- For each access control point (door), up to four authentication groups can be added.
- For the authentication group of which authentication type is **Local Authentication**, up to 8 person/card groups can be added to the authentication group.
- For the authentication group of which authentication type is **Local Authentication and Super Password** or **Local Authentication and Remotely Open Door**, up to 7 person/card groups can be added to the authentication group.

**7.** Click **Save**.

### 8.7.4 Configure Custom Wiegand Rule

Based on the knowledge of uploading rule for the third party Wiegand, you can set multiple customized Wiegand rules to communicate between the device and the third party card readers.

**Before You Start**

Wire the third party card readers to the device.

**Steps**

**Note**

- By default, the device disables the custom wiegand function. If the device enables the custom Wiegand function, all wiegand interfaces in the device will use the customized wiegand protocol.
- Up to 5 custom Wiegands can be set.
- For details about the custom Wiegand, see Custom Wiegand Rule Descriptions.

1. Click **Access Control → Advanced Function → Custom Wiegand** to enter the Custom Wiegand page.
2. Select a custom Wiegand on the left.
3. Create a Wiegand name.

   **Note**

   Up to 32 characters are allowed in the custom Wiegand name.

4. Click **Select Device** to select the access control device for setting the custom wiegand.
5. Set the parity mode according to the property of the third party card reader.

   **Note**

   - Up to 80 bits are allowed in the total length.
   - The odd parity start bit, the odd parity length, the even parity start bit and the even parity length range from 1 to 80 bit.
   - The start bit of the card ID, the manufacturer code, the site code, and the OEM should range from 1 to 80 bit.

6. Set output transformation rule.
   1) Click **Set Rule** to open the Set Output Transformation Rules window.

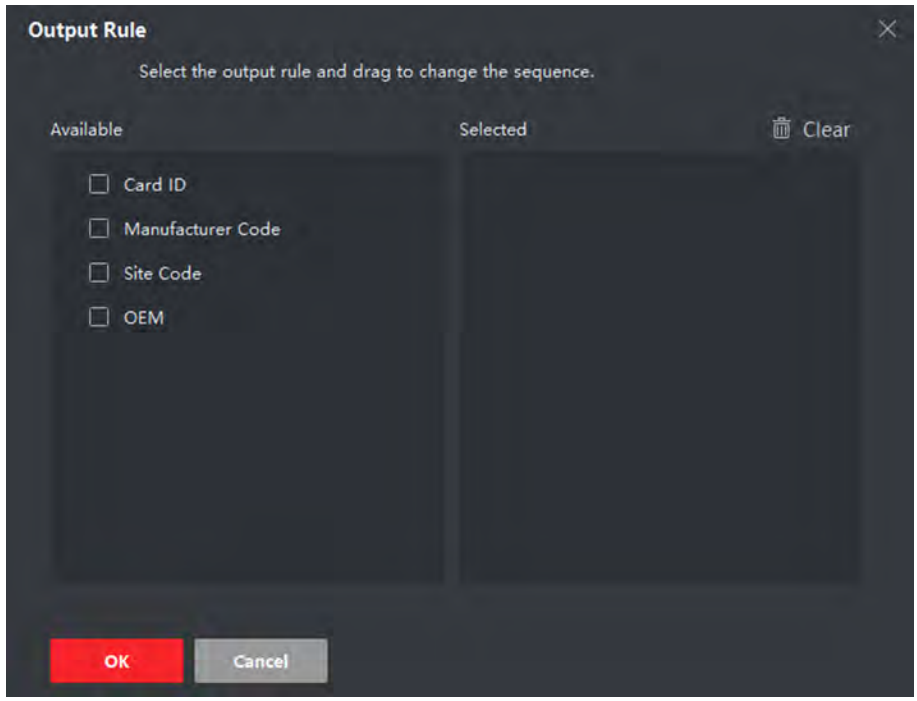


**Figure 8-4 Set Output Transformation Rule**

2) Select rules on the left list.

   The selected rules will be added to the right list.
3) **Optional:** Drag the rules to change the rule order.
4) Click **OK**.
5) In the Custom Wiegand tab, set the rule's start bit, length, and the decimal digit.

**7.** Click **Save**.

### 8.7.5 Configure Person Authentication Mode

You can set the passing rules for person to the specified the access control device according to your actual needs.

**Before You Start**

Make sure the access control device support the function of person authentication.

**Steps**

**1.** Click **Access Control → Advanced Function → Authentication** .

**2.** Select an access control device (support the function of person authentication) on the left panel to enter the person Authentication Mode page.

**3.** Click **Add** to enter the Add window.

**4.** Select the person(s) need to be configured on the left panel.

   The selected person(s) will be added to the right panel.

**5.** Select the authentication mode on the drop-down list of **Authentication Mode**.

6. Click **OK**.

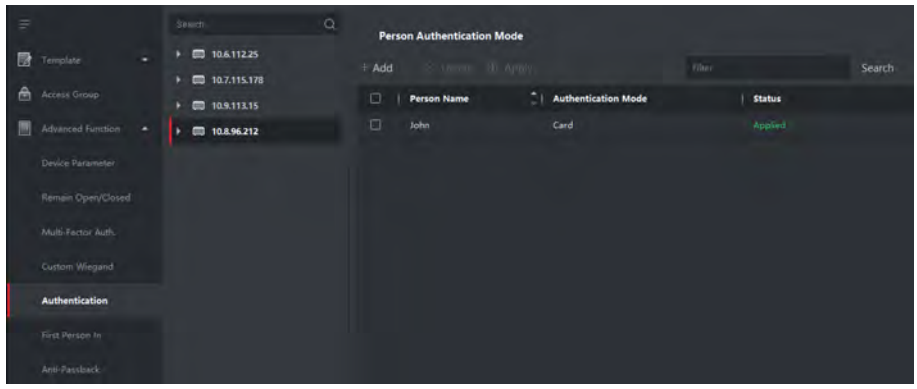


**Figure 8-5 Set Authentication Modes for Persons**

7. **Optional:** Select person(s) on the Person Authentication mode page, and then click **Apply** to apply the person authentication mode to the device.

**Note**

Person authentication has higher priority than other authentication mode. When the access control device has been configured person authentication mode, the person should authenticate on this device via person authentication mode.

## 8.7.6 Configure Card Reader Authentication Mode and Schedule

You can set the passing rules for the card reader of the access control device according to your actual needs.

Perform this task if you need to configure the card reader's authentication mode and schedule.

**Steps**

1. Click **Access Control → Advanced Function → Card Reader Authentication** to enter the card reader authentication configuration page.
2. Select a card reader on the left to configure.
3. Set card reader authentication mode.
   1) Click **Configuration**.

   **Note**

   - Password refers to the card password set when issuing the card to the person. For details, refer to *Add Single Person*.
   - Authentication password refers to the password set to open the door. Refer to Configure Authentication Password.
   - The supported card reader authentication mode varies according to different devices. For details, refer to the actual product.

   2) Select the modes and click » to add to the selected modes list.

3) **Optional:** Click ↑ or ↓ to adjust the display order.
4) Click **OK**.

After selecting the modes, the selected modes will display as icons.

4. Click the icon to select a card reader authentication mode, and drag on the day to draw a color bar on the schedule, which means in that period of time, the card reader authentication is valid.
5. Repeat the above step to set other time periods.
6. **Optional:** Select a configured day and click **Copy to Week** to copy the same settings to the whole week.
7. **Optional:** Click **Copy to** to copy the settings to other card readers.
8. Click **Save**.

### 8.7.7 Configure First Person In

You can set multiple first persons for one access control point. After the first person is authorized, it allows multiple persons access the door or other authentication actions.

**Before You Start**

Set the access group and apply the access group to the access control device. For details, refer to ***Set Access Group to Assign Access Authorization to Persons*** .

Perform this task when you want to configure opening door with first person.

**Steps**

1. Click **Access Control → Advanced Function → First Person In** to enter the First Person In page.
2. Select an access control device in the list on the left panel.
3. Select the current mode as **Enable Remaining Open after First Person** or **Disable Remaining Open after First Person** from the drop-down list for each access control point of the selected device.

   **Enable Remaining Open after First Person**

   The door remains open for the configured time duration after the first person is authorized until the remain open duration ends. If you select this mode, you should set the remain open duration.

   **Note**

   The remain open duration should be between 0 and 1440 minutes. By default, the remain open duration is 10 minutes.

   **Disable Remaining Open after First Person**

   Disable the function of first person in, namely normal authentication.

   **Note**

   You can authenticate by the first person again to disable the first person mode.

4. Click **Add** on the First Person List panel.

5. Select person(s) in the left list and the person(s) will be add to the selected persons as the first person(s) of the doors.

   The added first person(s) will list in the First Person List
6. **Optional:** Select a first person from the list and click **Delete** to remove the person from the first person list.
7. Click **Save**.

### 8.7.8 Configure Anti-Passback

You can set to only pass the access control point according to the specified path and only one person could pass the access control point after swiping the card.

**Before You Start**

Enable the anti-passing back function of the access control device.

Perform this task when you want to configure the anti-passing back for the access control device.

**Steps**

**Note**

Either the anti-passing back or multi-door interlocking function can be configured for an access control device at the same time. For the configuration of multi-door interlocking, refer to .

1. Click **Access Control → Advanced Function → Anti-Passback** to enter the anti-passing back configuration page.
2. Select an access control device in the list.
3. Select a card reader as the beginning of the path in the **First Card Reader** field.
4. Click the text field of the selected first card reader in the **Card Reader Afterward** column to open Select Card Reader dialog.
5. Select the afterward card readers for the first card reader.

   **Note**

   Up to four afterward card readers can be added for one card reader.
6. Click **OK** in the dialog to save the selections.
7. Click **Save** at the upper-right corner of Anti-Passback page to save the settings and take effect.

   **Note**

   Super credentials, such as super card, super password, super fingerprint, and so on, have the privilege of not following the anti-passback rules.

**Example**

Set Card Swiping Path

If you select Reader In_01 as the beginning, and select Reader In_02, Reader Out_04 as the linked card readers. Then you can only get through the access control point by swiping the card in the order as Reader In_01, Reader In_02 and Reader Out_04.

### 8.7.9 Configure Device Parameters

After adding the access control device, you can set its parameters such as network parameters.

#### Set Multiple NIC Parameters

If the device supports multiple network interfaces, you can set the network parameters of these NICs via the client, such as IP address, MAC address, port number, etc.

**Steps**

**Note**

This function should be supported by the device.

1. Enter the Access Control module.
2. On the navigation bar on the left, enter **Advanced Function → More Parameters** .
3. Select an access control device in the device list and click **NIC** to enter Multiple NIC Settings page.
4. Select an NIC you want to configure from the drop-down list.
5. Set its network parameters such as IP address, default gateway, subnet mask, etc.

   **MAC Address**

   A media access control address (MAC address) is a unique identifier assigned to the network interface for communications on the physical network segment.

   **MTU**

   The maximum transmission unit (MTU) of the network interface.
6. Click **Save**.

#### Set Network Parameters

After adding the access control device, you can set the device log uploading mode, and create EHome account via wired network.

#### Set Log Uploading Mode

You can set the mode for the device to upload logs via EHome protocol.

**Steps**

**Note**

Make sure the device is not added by EHome.

1. Enter the Access Control module.
2. On the navigation bar on the left, enter **Advanced Function → More Parameters** .
3. Select an access control device in the device list and enter **Network → Uploading Mode** .
4. Select the center group from the drop-down list.
5. Check **Enable** to enable to set the uploading mode.
6. Select the uploading mode from the drop-down list.
   - Enable **N1** or **G1** for the main channel and the backup channel.
   - Select **Close** to disable the main channel or the backup channel

   **Note**

   - The main channel and the backup channel cannot enable N1 or G1 at the same time.
   - N1 refers to wired network and G1 refers to GPRS.

7. Click **Save**.

## Create EHome Account in Wired Communication Mode

You can set the account for EHome protocol in wired communication mode. Then you can add devices via EHome protocol.

**Steps**

**Note**

- This function should be supported by the device.
- Make sure the device is not added by EHome.

1. Enter the Access Control module.
2. On the navigation bar on the left, enter **Advanced Function → More Parameters** .
3. Select an access control device in the device list and enter **Network → Network Center** .
4. Select the center group from the drop-down list.
5. Select the **Address Type** as **IP Address** or **Domain Name**.
6. Enter IP address or domain name according to the address type.
7. Enter the port number for the protocol.

   **Note**

   The port number of the wireless network and wired network should be consistent with the port number of EHome.

8. Select the **Protocol Type** as **EHome** and select EHome version.

**Note**

If set the EHome version as **5.0**, you should create an EHome key for the EHome account.

9. Set an account name for the network center.
10. Click **Save**.

## Set Device Capture Parameters

You can configure the capture parameters of the access control device, including manual capture and event triggered capture.

**Note**

- The capture function should be supported by the device.
- Before setting the capture parameters, you should set the picture storage first to define where the event triggered pictures are saved. For details, refer to *Set Picture Storage* in the user manual of the client software. .

## Set Triggered Capture Parameters

When an event occurs, the camera of the access control device can be triggered to capture picture(s) to record what happens when the event occurs. You can view the captured pictures when checking the event details in Event Center. Before that, you need to set the parameters for the capture such as number of pictures captured for one time.

**Before You Start**

Before setting the capture parameters, you should set the picture storage first to define where the captured pictures are saved. For details, refer to *Set Picture Storage* in the user manual of the client software.

**Steps**

**Note**

This function should be supported by the device

1. Enter the Access Control module.
2. On the navigation bar on the left, enter **Advanced Function → More Parameters → Capture** .
3. Select an access control device in the device list and select **Linked Capture**.
4. Set the picture size and quality.
5. Set the capture times once triggered which defines how many pictures will be captures for one time.
6. If the capture times is more than 1, set the interval for each capture.
7. Click **Save**.

## Set Manual Capture Parameters

In Status Monitoring module, you can capture a picture manually the access control device's camera by clicking a button. Before that, you need to set the parameters for the capture such as picture quality.

**Before You Start**

Before setting the capture parameters, you should set the saving path first to define where the captured pictures are saved. For details, refer to *Set Picture Storage* in the user manual of the client software.

**Steps**

**Note**

This function should be supported by the device

1. Enter the Access Control module.
2. On the navigation bar on the left, enter **Advanced Function → More Parameters → Capture** .
3. Select an access control device in the device list and select **Manual Capture**.
4. Select the resolution of the captured pictures from the drop-down list.
5. Select the picture quality as **High**, **Medium**, or **Low**. The higher the picture quality is, the larger size the picture will be.
6. Click **Save**.

## Set Parameters for Face Recognition Terminal

For face recognition terminal, you can set its parameters.

**Steps**

**Note**

This function should be supported by the device.

1. Enter the Access Control module.
2. On the navigation bar on the left, enter **Advanced Function → More Parameters** .
3. Select an access control device in the device list and click **Face Recognition Terminal**.
4. Set the parameters.

   **Note**

   These parameters displayed vary according to different device models.

   **Algorithm**

   Select **Deep Learning** as the face picture database.

   **Save Authenticating Face Picture**

If enabled, the captured face picture when authenticating will be saved on the device.

**ECO Mode**

After enabling the ECO mode, the device can authenticate faces in the low light or dark environment. And you can set he ECO mode threshold, ECO mode (1:N), and ECO mode (1:1).

**Note**

Only device in the normal mode supports configuring ECO mode parameters.

**Work Mode**

Set the device work mode as Access Control Mode. The access control mode is the device normal mode. You should authenticate your credential for accessing.

5. Click **Save**.

## Set RS-485 Parameters

You can set the access control device's RS-485 parameters including the baud rate, data bit, the stop bit, parity type, flow control type, communication mode, work mode, and connection mode.

**Steps**

**Note**

The RS-485 Settings should be supported by the device.

1. Enter the Access Control module.
2. On the navigation bar on the left, enter **Advanced Function → More Parameters** .
3. Select an access control device in the device list and click **RS-485** to enter the RS-485 Settings page.
4. Select the serial port number from the drop-down list to set the RS-485 parameters.
5. Set the baud rate, data bit, the stop bit, parity type, communication mode, working mode, and connection mode in the drop-down list.
6. Click **Save**.
   - The configured parameters will be applied to the device automatically.
   - After changing the working mode or connection mode, the device will reboot automatically.

## Set Wiegand Parameters

You can set the access control device's Wiegand channel and the communication mode. After setting the Wiegand parameters, the device can connect to Wiegand card reader via Wiegand communication.

**Steps**

**Note**

This function should be supported by the device.

1. Enter the Access Control module.
2. On the navigation bar on the left, enter **Advanced Function → More Parameters** .
3. Select an access control device in the device list and click **Wiegand** to enter the Wiegand Settings page.
4. Set the switch to on to enable the Wiegand function for the device.
5. Select the Wiegand channel No. and the communication mode from the drop-down list.

   **Note**

   If you set **Communication Direction** as **Sending**, you are required to set the **Wiegand Mode** as **Wiegand 26** or **Wiegand 34**.

6. Check **Enable Wiegand** to enable the Wiegand function.
7. Click **Save**.
   - The configured parameters will be applied to the device automatically.
   - After changing the communication direction, the device will reboot automatically.

## Enable M1 Card Encryption

M1 card encryption can improve the security level of authentication.

**Steps**

**Note**

The function should be supported by the access control device and the card reader.

1. Enter the Access Control module.
2. On the navigation bar on the left, enter **Advanced Function → More Parameters** .
3. Select an access control device in the device list and click **M1 Card Encryption** to enter the M1 Card Encryption page.
4. Set the switch to on to enable the M1 card encryption function.
5. Set the sector ID.

   **Note**

   - The sector ID ranges from 1 to 100.
   - By default, Sector 13 is encrypted. It is recommended to encrypt sector 13.

6. Click **Save** to save the settings.

## 8.8 Configure Linkage Actions for Access Control

You can configure different linkage actions for the event detected by the access control device. After that, linkage actions will be triggered once the event happens. This mechanism is used for notifying the security personnel the event, or triggering automatic access control in real time.

Two types of linkage actions are supported:

- **Client Actions:** When the event is detected, it will trigger the actions on the client, such as the client making an audible warning..
- **Device Actions:** When the event is detected, it will trigger the actions of a specific device, such as buzzing of a card reader and, opening/closing of a door, ..

### 8.8.1 Configure Client Actions for Access Event

Even if you are far away from an access point, you can still know what happens and how urgent the event is by configuring linked actions of access event on the client. You will be notified on the client once an event is triggered, so that you can response to the event instantly. You can also configure client actions of access points in a batch at a time.

**Steps**

**Note**

The linkage actions here refer to the linkage of the client software's own actions such as audible warning, email linkage, etc.

1. Click **Event Management → Access Control Event** .

   The added access control devices will display in the device list.
2. Select a resource (including device, alarm input, door/elevator, and card reader) from the device list.

   The event types which the selected resource supports will display.
3. Select the event(s) and click **Edit Priority** to define the priority for the event(s), which can be used to filter events in the Event Center.
4. Set the linkage actions of the event.
   1) Select the event(s) and click **Edit Linkage** to set the client actions when the events triggered.

      **Audible Warning**

      The client software gives an audible warning when alarm is triggered. You can select the alarm sound for audible warning.

      **Note**

      For setting the alarm sound, please refer to *Set Alarm Sound* in the user manual of client software..

**Send Email**

Send an email notification of the alarm information to one or more receivers.

For details about setting email parameters, refer to *Set Email Parameters* in the user manual of client software..

2) Click **OK**.

5. Enable the event so that when the event is detected, en event will be sent to the client and the linkage actions will be triggered.
6. **Optional:** Click **Copy to...** to copy the event settings to other access control device, alarm input, door, or card reader.

### 8.8.2 Configure Device Actions for Access Event

You can set the access control device's linkage actions for the access control device's triggered event. When the event is triggered, it can trigger the alarm output, host buzzer, and other actions on the same device.

**Steps**

**Note**

It should be supported by the device.

1. Click **Access Control → Linkage Configuration** .
2. Select the access control device from the list on the left.
3. Click **Add** button to add a new linkage.
4. Select the event source as **Event Linkage**.
5. select the event type and detailed event to set the linkage.
6. In the Linkage Target area, set the property target to enable this action.

   **Buzzer on Controller**

   The audible warning of access control device will be triggered.

   **Capture**

   The real-time capture will be triggered.

   **Access Point**

   The door status of open, close, remain open, and remain close will be triggered.

   **Note**

   The target door and the source door cannot be the same one.

7. Click **Save**.
8. **Optional:** After adding the device linkage, you can do one or more of the following:

| | |
|---|---|
| **Edit Linkage Settings** | Select the configured linkage settings in the device list and you can edit its event source parameters, including event source and linkage target. |

| | |
|---|---|
| **Delete Linkage Settings** | Select the configured linkage settings in the device list and click **Delete** to delete it. |

### 8.8.3 Configure Device Actions for Card Swiping

You can set the access control device's linkage actions for the specified card swiping. When you swipe the specified card, it can trigger the host buzzer, and other actions on the same device.

**Steps**

**Note**

It should be supported by the device.

1. Click **Access Control → Linkage Configuration** .
2. Select the access control device from the list on the left.
3. Click **Add** button to add a new linkage.
4. Select the event source as **Card Linkage**.
5. Enter the card number or select the card from the drop-down list.
6. Select the card reader where the card swipes to trigger the linked actions.
7. In the Linkage Target area, set the property target to enable this action.

   **Buzzer on Controller**

   The audible warning of access control device will be triggered.

   **Capture**

   The real-time capture will be triggered.

   **Access Point**

   The door status of open, close, remain open, or remain closed will be triggered.
8. Click **Save**.

   When the card (configured in Step 5) swipes on the card reader (configured in Step 6), it can trigger the linked actions (configured in step 7).
9. **Optional:** After adding the device linkage, you can do one or more of the following:

| | |
|---|---|
| **Delete Linkage Settings** | Select the configured linkage settings in the device list and click **Delete** to delete it. |
| **Edit Linkage Settings** | Select the configured linkage settings in the device list and you can edit its event source parameters, including event source and linkage target. |

### 8.8.4 Configure Device Actions for Person ID

You can set the access control device's linkage actions for the specified person ID. When access control device detects the specified person ID, it can trigger buzzer on card reader, and other actions.

**Steps**

**Note**

It should be supported by the device.

1. Click **Access Control → Linkage Configuration** .
2. Select the access control device from the list on the left.
3. Click **Add** to add a new linkage.
4. Select **Person Linkage** as the event source.
5. Enter the employee number or select the person from the drop-down list.
6. Select the card reader where the card swipes.
7. In the Linkage Target area, set the property target to enable this action.

   **Buzzer on Controller**

   The audible warning of access control device will be triggered.

   **Buzzer on Reader**

   The audible warning of card reader will be triggered.

   **Capture**

   An event-related picture will be captured when the selected event happens.

   **Recording**

   An event-related picture will be captured when the selected event happens.

   **Note**

   The device should support recording.

   **Access Point**

   The door status of open, close, remain open, or remain closed will be triggered.
8. Click **Save**.
9. **Optional:** After adding the device linkage, you can do one or more of the followings:

| | |
|---|---|
| **Delete Linkage Settings** | Select the configured linkage settings in the device list and click **Delete** to delete it. |
| **Edit Linkage Settings** | Select the configured linkage settings in the device list and you can edit its event source parameters, including event source and linkage target. |

## 8.9 Control Door Status

You can control the status for a single door, including opening door, closing door, remaining the door open, and remaining the door closed.

**Steps**

1. Click **Monitoring** to enter the status monitoring page.
2. Select an access point group on the upper-right corner.

   **Note**

   For managing the access point group, refer to *Group Management* in the user manual of the client software.

   The doors in the selected access control group will display.
3. Click a door icon to select a door, or press **Ctrl** and select multiple doors.
4. Click the following buttons to control the door.

   **Open Door**

   When the door is locked, unlock it and it will be open for once. After the open duration, the door will be closed and locked again automatically.

   **Close Door**

   When the door is unlocked, lock it and it will be closed. The person who has the access authorization can access the door with credentials.

   **Remain Open**

   The door will be unlocked (no matter closed or open). All the persons can access the door with no credentials required.

   **Remain Closed**

   The door will be closed and locked. No person can access the door even if he/she has the authorized credentials, except the super users.

   **Capture**

   Capture a picture manually.

   **Note**

   The **Capture** button is available when the device supports capture function. The picture is saved in the PC running the client. For setting the saving path, refer to *Set File Saving Path* in the user manual of the client software.

**Result**

The icon of the doors will change in real-time according to the operation if the operation is succeeded.

## 8.10 Event Center

In the Event Center, you can view the real-time events, search the historical events and view the pop-up alarm information.

Before the client can receive the event information from the device, you need to arm the device first. For details, refer to ***Enable Receiving Events from Devices*** .

Before the you can view the pop-up alarm information, you need to enable alarm triggered pop-up image in the event center. For details, refer to .

### 8.10.1 Enable Receiving Events from Devices

Before the client can receive the event information from the device, you need to arm the device first.

**Steps**

1. Click → **Tool** → **Device Arming Control** open Device Arming Control page.

   All the added devices display on this page.

2. In the Operation column, turn on the switch to enable auto-arming, or click **Arm All** to arm all the devices.

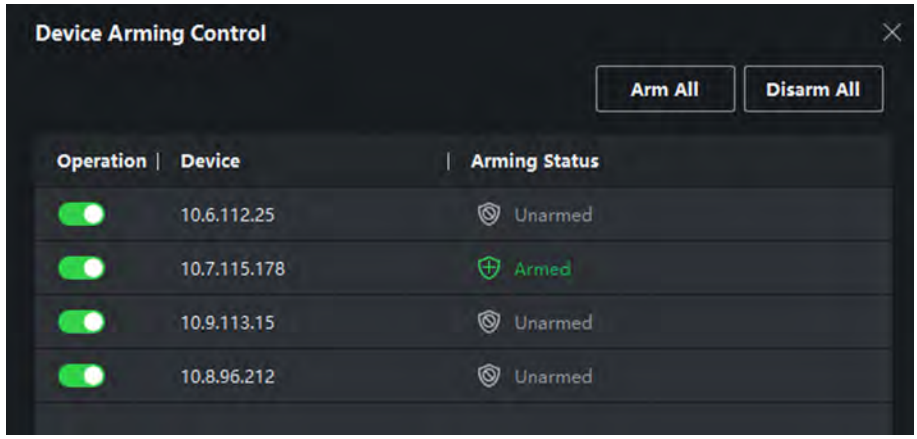


**Figure 8-6 Device Arming Control**

3. View the arming status of each device in the Arming Status column.

**Result**

The events of armed device(s) are automatically uploaded to the client when the event is triggered.

### 8.10.2 View Real-Time Events

In the Real-time Event module of the event center page, you can view the real-time event information, including event source, event time, priority, event key words, etc.

**Before You Start**

Enable receiving events from devices before the client can receive event information from the device, see ***Enable Receiving Events from Devices*** for details.

**Steps**

1. Click **Event Center → Real-time Event** to enter the real-time event page and you can view the real-time events received by the client.

   **Event Time**

   For video device, event time is the client time when it receives the event. For none-video device, event time is the time when the event is triggered.

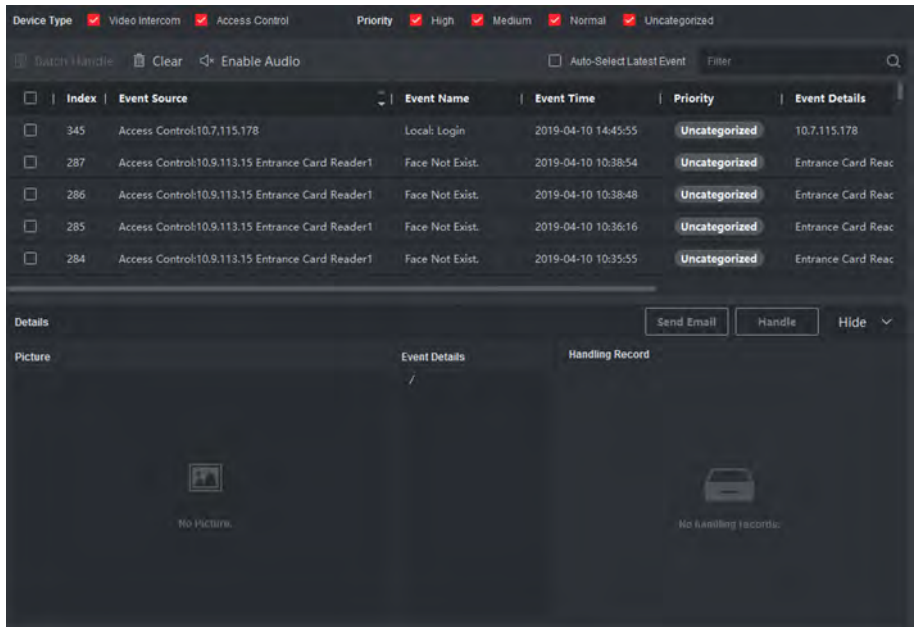


**Figure 8-7 View Real-Time Events**

2. Set the filter conditions or enter the event key word in the Filter text field to display the required events only.

   **Device Type**

   The type of device that occurred the event.

   **Priority**

   The priority of the event that indicates the urgent degree of the event.

3. **Optional:** Right click the table header of the event list to customize the event related items to be displayed in the event list.

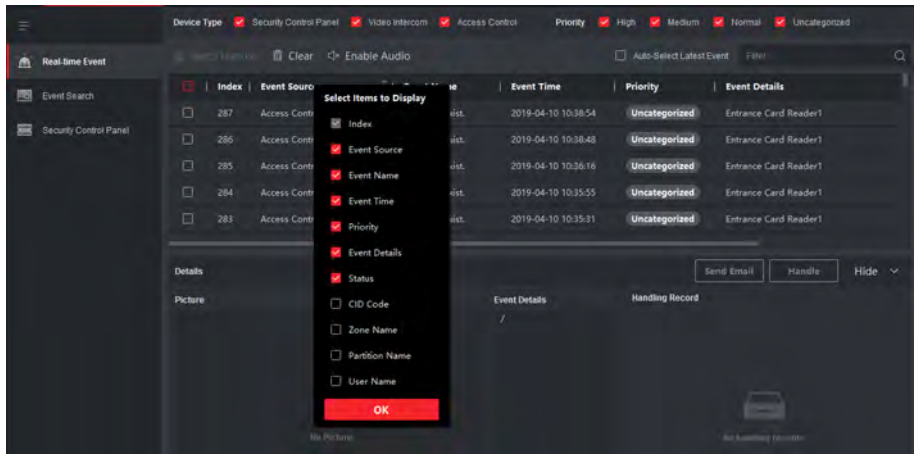


**Figure 8-8 Customize Event Related Items to be Displayed**

**4.** View the event information details.
1) Select an event in the event list.
2) Click **Expand** in the right-lower corner of the page.
3) View the related picture, detail description and handing records of the event.
4) **Optional:** Hover the cursor on the related picture, and then click the download icon on the upper-right corner of the picture to download it to the local PC. You can set the saving path manually.

**5. Optional:** Perform the following operations if necessary.

| | |
|---|---|
| **Handle Single Event** | Click **Handle** to enter the processing suggestion, and then click **Commit**.<br>**Note**<br>After an event is handled, the **Handle** button will become **Add Remark**, click **Add Remark** to add more remarks for this handled event. |
| **Handle Events in a Batch** | Select events that need to be processed, and then click **Handle in Batch**. Enter the processing suggestion, and then click **Commit**. |
| **Enable/Disable Alarm Audio** | Click **Enable Audio**/**Disable Audio** to enable/disable the audio of the event. |
| **Select the Latest Event Automatically** | Check **Auto-Select Latest Event** to select the latest event automatically and the event information details is displayed. |
| **Clear Events** | Click **Clear** to clear the all the events in the event list. |
| **Send Email** | Select an event and then click **Send Email**, and the information details of this event will be sent by email. |

**Note**

You should configure the email parameters first, see *Set Email Parameters* in the user manual of client software for details.

### 8.10.3 Search Historical Events

In the Event Search module of the event center page, you can search the historical events via time, device type, and other conditions according to the specified device type, and then process the events.

**Before You Start**

Enable receiving events from devices before the client can receive event information from the device,see ***Enable Receiving Events from Devices*** for details.

**Steps**

1. Click **Event Center → Event Search** to enter the event search page.

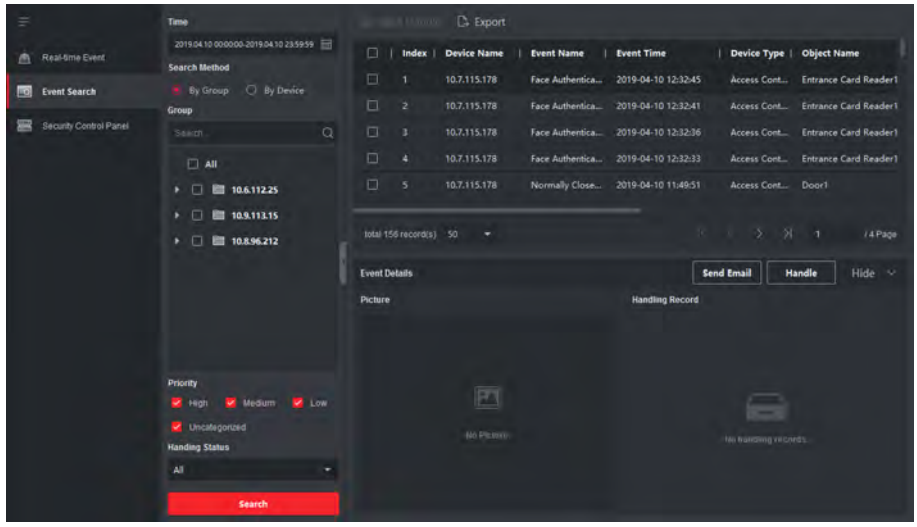


**Figure 8-9 Search History Event**

2. Set the filter conditions to display the required events only.

   **Time**

   The client time when the event starts.

   **Search by**

   **Group**: Search the events occurred on the resources in the selected group.

   **Device**: Search the events occurred on the selected device.

   **Device Type**

   The type of device that occurred the event.

**All**

All the device types, and you can set the following filter conditions: group, priority, and status.

**Video Intercom**

For the events of video intercom, you need to select searching scope: All Record and Only Unlocking.

- **All Records**: You can filter the events from all the video intercom events, and you need to set the following filter conditions: device, priority, status.
- **Only Unlocking**: You can filter the events from all the video intercom unlocking events, and you need to set the following filter conditions: device, unlocking type.

**Access Control**

For the events of access control, you can set the following filter conditions: device, priority, status, event type, card reader type, person name, card no., organization.

**Note**

Click **Show More** to set the event type, card reader type, person name, card no., organization.

**Group**

The group of the device that occurred the event. You should set the group as condition only when you select the Device Type as **All**.

**Device**

The device that occurred the event.

**Priority**

The priority including low, medium, high and uncategorized which indicates the urgent degree of the event.

**Status**

The handling status of the event.

3. Click **Search** to search the events according the conditions you set.
4. **Optional:** Right click the table header of the event list to customize the event related items to be displayed in the event list.

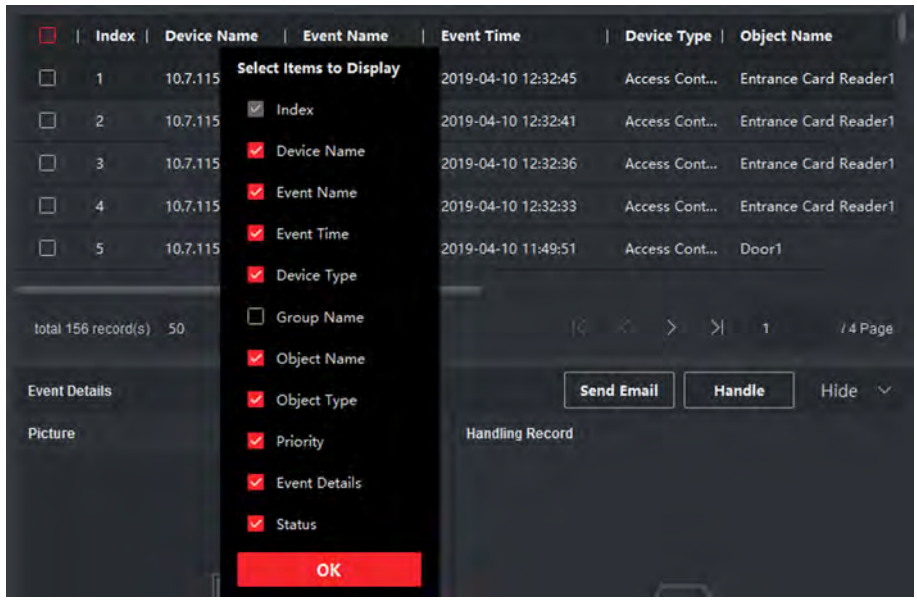


**Figure 8-10 Customize Event Related Items to be Displayed**

5. **Optional:** Handle the event(s).
   - Handle single event: Select one event that need to be processed, and then click **Handle** in the event information details page, and enter the processing suggestion.
   - Handle events in a batch: Select the events which need to be processed, and then click **Handle in Batch**, and enter the processing suggestion.

**Note**

After an event is handled, the **Handle** button will become **Add Remark**, click **Add Remark** to add more remarks for this handled event.

6. **Optional:** Select an event and then click **Send Email**, and the information details of this event will be sent by email.

**Note**

You should configure the email parameters first, see *Set Email Parameters* in the user manual of client software for details.

7. **Optional:** Click **Export** to export the event log or event pictures to the local PC in CSV format. You can set the saving path manually.
8. Hover the cursor on the related picture, and then click the download icon on the upper-right corner of the picture to download it to the local PC. You can set the saving path manually.

## 8.11 Time and Attendance

The Time and Attendance module provides multiple functionalities to track and monitor when employees start and stop work, and full control of employees working hours such as late arrivals, early departures, time taken on breaks and absenteeism.

**Note**

In this section, we introduce the configurations before you can getting the attendance reports. The access records recorded after these configurations will be calculated in the statistics.

### 8.11.1 Configure Attendance Parameters

You can configure the attendance parameters, including the general rule, overtime parameters, attendance check point, holiday, leave type, etc.

#### Configure General Rule

You can configure the general rule for attendance calculation, such as the week beginning, month beginning, weekend, absence, etc.

**Steps**

**Note**

The parameters configured here will be set as default for the newly added time period. It will not affect the existed one(s).

1. Enter Time & Attendance module.
2. Click **Attendance Settings → General Rule** .
3. Set the day as week beginning and the date as month beginning.
4. Select the day(s) as weekend.
5. Set absence parameters.
6. Click **Save**.

#### Configure Overtime Parameters

You can configure the overtime parameters for workday and non-workday, including overtime level, pay rate, attendance status for overtime, etc.

**Steps**

1. Enter Time & Attendance module.
2. Click **Attendance Settings → Overtime** .
3. Set required information.

**Overtime Level for Workday**

When you work for certain period after end-work time on workday, you will reach different overtime level: overtime level 1, overtime level 2 and overtime level 3 . You can set different pay rate for three overtime levels, respectively.

**Pay Rate**

Set corresponding pay rates for three overtime levels, which can be generally used to calculate total work hours.

**Overtime Rule for Non-Workday**

You can enable overtime rule for non-workday and set calculation mode.

4. Click **Save**.

## Configure Attendance Check Point

You can set the card reader(s) of the access point as the attendance check point, so that the authentication on the card readers will be recorded for attendance .

**Before You Start**

You should add access control device before configuring attendance check point. For details, refer to ***Add Device*** .

**Steps**

**Note**

By default, all card readers of the added access control devices are set as attendance checkpoint.

1. Enter the Time & Attendance module.
2. Click **Attendance Settings → Attendance Check Point** to enter the Attendance Check Point Settings page.
3. **Optional:** Set **Set All Card Readers as Check Points** switch to off.

   Only the card readers in the list will be set as the attendance check points.
4. Check the desired card reader(s) in the device list as attendance check point(s).
5. Set check point function as **Start/End-Work**, **Start-Work** or **End-Work**.
6. Click **Set as Check Point**.

   The configured attendance check point displays on the right list.

## Configure Holiday

You can add the holiday during which the check-in or check-out will not be recorded.

## Add Regular Holiday

You can configure a holiday which will take effect annually on regular days during the effective period, such as New Year's Day, Independence Day, Christmas Day, etc.

**Steps**

1. Enter the Time & Attendance module.
2. Click **Attendance Settings → Holiday** to enter the Holiday Settings page.
3. Check **Regular Holiday** as holiday type.
4. Custom a name for the holiday.
5. Set the first day of the holiday.
6. Enter the number of the holiday days.
7. Set the attendance status if the employee works on holiday.
8. **Optional:** Check **Repeat Annually** to make this holiday setting effective every year.
9. Click **OK**.

   The added holiday will display in the holiday list and calendar.

   If the date is selected as different holidays, it will be recorded as the first-added holiday.
10. **Optional:** After adding the holiday, perform one of the following operations.

| | |
|---|---|
| **Edit Holiday** | Click to edit the holiday information. |
| **Delete Holiday** | Select one or more added holidays, and click **Delete** to delete the holiday(s) from the holiday list. |

## Add Irregular Holiday

You can configure a holiday which will take effect annually on irregular days during the effective period, such as Bank Holiday.

**Steps**

1. Enter the Time & Attendance module.
2. Click **Attendance Settings → Holiday** to enter the Holiday Settings page.
3. Click **Add** to open the Add Holiday page.
4. Check **Irregular Holiday** as holiday type.
5. Custom a name for the holiday.
6. Set the start date of the holiday.

   **Example**

   If you want to set the forth Thursday in November, 2019 as the Thanksgiving Day holiday, you should select 2019, November, 4th, and Thursday from the four drop-down lists.
7. Enter the number of the holiday days.
8. Set the attendance status if the employee works on holiday.
9. **Optional:** Check **Repeat Annually** to make this holiday setting effective every year
10. Click **OK**.

The added holiday will display in the holiday list and calendar.

If the date is selected as different holidays, it will be recorded as the first-added holiday.

11. **Optional:** After adding the holiday, perform one of the following operations.

| | |
|---|---|
| **Edit Holiday** | Click to edit the holiday information. |
| **Delete Holiday** | Select one or more added holidays, and click **Delete** to delete the holiday(s) from the holiday list. |

## Configure Leave Type

You can customize the leave type (major leave type and minor leave type) according to actual needs. You can also edit or delete the leave type.

**Steps**

1. Enter the Time & Attendance module.
2. Click **Attendance Settings → Leave Type** to enter the Leave Type Settings page.
3. Click **Add** on the left to add a major leave type.
4. **Optional:** Perform one of the following operations for major leave type.

| | |
|---|---|
| **Edit** | Move the cursor over the major leave type and click to edit the major leave type. |
| **Delete** | Select one major leave type and click **Delete** on the left to delete the major leave type. |

5. Click **Add** on the right to add a minor leave type.
6. **Optional:** Perform one of the following operations for minor leave type.

| | |
|---|---|
| **Edit** | Move the cursor over the minor leave type and click to edit the minor leave type. |
| **Delete** | Select one or multiple major leave types and click **Delete** on the right to delete the selected minor leave type(s). |

## Synchronize Authentication Record to Third-Party Database

The attendance data recorded in client software can be used by other system for calculation or some other operations. You can enable synchronization function to apply the authentication record from client software to the third-party database automatically.

**Steps**

1. Enter Time & Attendance module.
2. Click **Attendance Settings → Third-Party Database** .
3. Set **Apply to Database** switch to on to enable synchronization function.
4. Set the required parameters of the third-party database, including database type, server IP address, database name, user name and password.

5. Set table parameters of database according to the actual configurations.
   1) Enter the table name of the third-party database.
   2) Set the mapped table fields between the client software and the third-party database.
6. Click **Connection Test** to test whether database can be connected.
7. Click **Save** to save the settings.

   The attendance data will be written to the third-party database.

## Configure Break Time

You can add break time and set start time, end time, duration, calculation mode and other parameters for the break. The added break time can also be edited or deleted.

**Steps**

1. Click **Time & Attendance → Timetable** .

   The added timetables are displayed in the list.
2. Select an added timetable or click **Add** to enter setting timetable page.
3. Click **Settings** in the break time area to enter break time management page.
4. Add break time.
   1) Click **Add**.
   2) Enter a name for the break time.
   3) Set related parameters for the break time.

      **Start Time / End Time**

      Set the time when the break starts and ends.

      **No Earlier Than / No Later Than**

      Set the earliest swiping time for starting break and the latest swiping time for ending break.

      **Break Duration**

      The duration from start time to end time of the break.

      **Calculation**

      **Auto Deduct**

      The fixed break duration will be excluded from work hours.

      **Must Check**

      The break duration will be calculated and excluded from work hours according to actual check-in and check-out time.

      **Note**

      If you select **Must Check** as calculation method, you need to set attendance status for late or early returning from break.
5. Click **Save** to save the settings.
6. **Optional:** Click **Add** to continue adding break time.

### Configure Report Display

You can configure display contents displayed in the attendance report, such as the company name, logo, date format, time format, and mark.

**Steps**

1. Enter Time & Attendance module.
2. Click **Attendance Statistics → Report Display** .
3. Set the display settings for attendance report.

   **Company Name**

   Enter a company name to display the name in the report.

   **Date Format / Time Format**

   Set the date format and time format according to the actual needs.

   **Attendance Status Mark in Report**

   Enter the mark and select the color. The related fields of attendance status in the report will display with the mark and color.

   **Weekend Mark in Report**

   Enter the mark and select the color. The weekend fields in the report will display with the mark and color.
4. Click **Save**.

## 8.11.2 Add Timetable

You can add the timetable for the shift schedule.

**Steps**

1. Click **Time & Attendance → Timetable** to enter timetable settings window.
2. Click **Add** to enter Add Timetable page.
3. Create a name for the timetable.
4. Select calculation method.

   **First In & Last Out**

   The first check-in time is recorded as start work time and the last check-out time is recorded as the end-work time.

   **Each Check-In/Out**

   Each check-in time and check-out time is valid and the sum of all periods between adjacent check-in and check-out time will be recorded as the valid working duration.

   You need to set **Valid Auth. Interval** for this calculation method. For example, if the interval between card swiping of the same card is less than the set value, the card swiping is invalid.
5. **Optional:** Set **Enable T&A Status** switch to on to calculate according to attendance status of the device.

6. Set the related attendance time.

   **Start/End-Work Time**

   Set the start-work time and end-work-time.

   **Valid Check-in/out Time**

   Set the time period during which the check-in or check-out is valid.

   **Calculated as**

   Set the duration calculated as the actual work duration.

   **Late/Early Leave Allowable**

   Set the time period for late or early leave.

7. **Optional:** Select break time to exclude the duration from work hours.

   **Note**

   You can click **Settings** to manage break time. For more details about configuring break time, refer to ***Configure Break Time*** .

8. Click **Save** to add the timetable.
9. **Optional:** Perform one or more following operations after adding timetable.

| | |
|---|---|
| **Edit Timetable** | Select a timetable from the list to edit related information. |
| **Delete Timetable** | Select a timetable from the list and click **Delete** to delete it. |

### 8.11.3 Add Shift

You can add the shift for the shift schedule.

**Before You Start**

Add a timetable first. See ***Add Timetable*** for details.

**Steps**

1. Click **Time & Attendance → Shift** to enter shift settings page.
2. Click **Add** to enter Add Shift page.
3. Enter the name for shift.
4. Select the shift period from the drop-down list.
5. Select the added timetable and click on the time bar to apply the timetable.

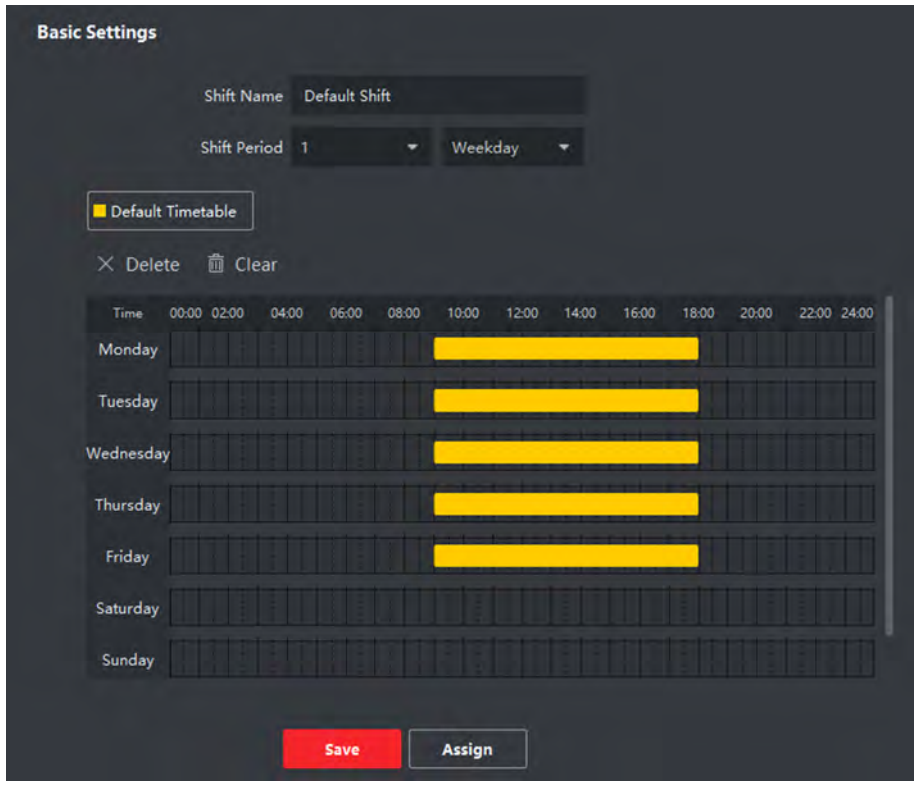


**Figure 8-11 Add Shift**

6. Click **Save**.

   The added shift lists on the left panel of the page. At most 64 shifts can be added.

7. **Optional:** Assign the shift to organization or person for a quick shift schedule.
   1) Click **Assign**.
   2) Select **Organization** or **Person** tab and check the desired organization(s) or person(s) box.

      The selected organizations or persons will list on the right page.
   3) Set the effective period for the shift schedule.
   4) Set other parameters for the shift schedule, including Check-in Not Required, Check-out Not Required, Effective for Holiday, and Effective for Overtime.
   5) Click **Save** to save the quick shift schedule.

### 8.11.4 Manage Shift Schedule

Shift work is an employment practice designed to make use of all 24 hours of the clock each day of the week. The practice typically sees the day divided into shifts, set periods of time during which different shifts perform their duties.

You can set department schedule, person schedule, and temporary schedule.

## Set Department Schedule

You can set the shift schedule for one department, and all the persons in the department will be assigned with the shift schedule.

**Before You Start**

In Time & Attendance module, the department list is the same with the organization. You should add organization and persons in Person module first. See ***Person Management*** for details.

**Steps**

1. Click **Time & Attendance → Shift Schedule** to enter the Shift Schedule Management page.
2. Click **Department Schedule** to enter Department Schedule page.
3. Select the department from the organization list on the left.

   **Note**

   If **Include Sub Organization** is checked, when selecting the organization, its sub organizations are selected at the same time.

4. Select the shift from the drop-down list.
5. Check the checkbox to enable **Multiple Shift Schedules**.

   **Note**

   After checking **Multiple Shift Schedules**, you can select the effective time period(s) from the added time periods for the persons in the department.

   **Multiple Shift Schedules**

   It contains more than one time periods. The person can check in/out in any of the time periods and the attendance will be effective.
   If the multiple shift schedules contains three time periods: 00:00 to 07:00, 08:00 to 15:00 and 16:00 to 23:00. The attendance of the person adopting this multiple shift schedules will be effective in any of the three time periods. If the person checks in at 07:50, it will apply the nearest time period 08:00 to 15:00 to the person's attendance.

6. Set the start date and end date.
7. Set other parameters for the schedule, including Check-in Not Required, Check-out Not Required, Effective for Holiday, and Effective for Overtime.
8. Click **Save**.

## Set Person Schedule

You can assign the shift schedule to one or more persons. You can also view and edit the person schedule details.

**Before You Start**

Add department and person in Person module. See ***Person Management*** for details.

**Steps**

**Note**

The person schedule has the higher priority than department schedule.

1. Click **Time & Attendance → Shift Schedule** to enter the Shift Schedule Management page.
2. Click **Person Schedule** to enter Person Schedule page.
3. Select the organization and select the person(s).
4. Select the shift from the drop-down list.
5. Check the checkbox to enable **Multiple Shift Schedules**.

   **Note**

   After checking the **Multiple Shift Schedules**, you can select the effective timetable(s) from the added timetables for the persons.

   **Multiple Shift Schedules**

   It contains more than one timetables. The person can check in/out in any of the timetables and the attendance will be effective.
   If the multiple shift schedules contains three timetables: 00:00 to 07:00, 08:00 to 15:00 and 16:00 to 23:00. The attendance of the person adopting this multiple shift schedules will be effective in any of the three timetables. If the person checks in at 07:50, it will apply the nearest timetable 08:00 to 15:00 to the person's attendance.

6. Set the start date and end date.
7. Set other parameters for the schedule, including Check-in Not Required, Check-out Not Required, Effective for Holiday, and Effective for Overtime.
8. Click **Save**.

## Set Temporary Schedule

You can add a temporary schedule for the person and the person will be assigned with the shift schedule temporarily. You can also view and edit the temporary schedule details.

**Before You Start**

Add department and person in Person module. See ***Person Management*** for details.

**Steps**

**Note**

The temporary schedule has higher priority than department schedule and person schedule.

1. Click **Time & Attendance → Shift Schedule** to enter the Shift Schedule Management page.
2. Click **Temporary Schedule** to enter Temporary Schedule page.
3. Select the organization and select the person(s).
4. Click one date or click and drag to select multiple dates for the temporary schedule.

5. Select **Workday** or **Non-Workday** from drop-down list.

   If **Non-Workday** is selected, you need to set the following parameters.

   **Calculated as**

   Select normal or overtime level to mark the attendance status for temporary schedule.

   **Timetable**

   Select a timetable from drop-down list.

   **Multiple Shift Schedule**

   It contains more than one timetables. The person can check in/out in any of the timetables and the attendance will be effective.

   If the multiple shift schedules contains three timetables: 00:00 to 07:00, 08:00 to 15:00 and 16:00 to 23:00. The attendance of the person adopting this multiple shift schedules will be effective in any of the three timetables. If the person checks in at 07:50, it will apply the nearest timetable 08:00 to 15:00 to the person's attendance.

   **Rule**

   Set other rule for the schedule, such as **Check-in Not Required**, and**Check-out Not Required**.

6. Click **Save**.

### Check Shift Schedule

You can check the shift schedule in calendar or list mode. You ca also edit or delete the shift schedule.

**Steps**

1. Click **Time & Attendance → Shift Schedule** to enter the Shift Schedule Management page.
2. Select the organization and corresponding person(s).
3. Click or to view the shift schedule in calendar or list mode.

   **Calendar**

   In calendar mode, you can view the shift schedule for each day in one month. You can click the temporary schedule for one day to edit or delete it.

   **List**

   In list mode, you can view the shift schedule details about one person or organization, such as shift name, type, effective period and so on. Check the shift schedule(s), and click **Delete** to delete the selected shift schedule(s).

## 8.11.5 Manually Correct Check-in/out Record

If the attendance status is not correct, you can manually correct the check-in or check out record. You can also edit, delete, search, or export the check-in or check-out record.

**Before You Start**

- You should add organizations and persons in Person module. For details, refer to ***Person Management*** .
- The person's attendance status is incorrect.

**Steps**

1. Click **Time & Attendance → Attendance Handling** to enter attendance handling page.
2. Click **Correct Check-In/Out** to enter adding the check-in/out correction page.
3. Select person from left list for correction.
4. Select the correction date.
5. Set the check-in/out correction parameters.
   - Select **Check-in** and set the actual start-work time.
   - Select **Check-out** and set the actual end-work time.

   **Note**

   You can click ⊕ to add multiple check in/out items. At most 8 check-in/out items can be supported.

6. **Optional:** Enter the remark information as desired.
7. Click **Save**.
8. **Optional:** After adding the check-in/out correction, perform one of the following operations.

| | |
|---|---|
| **View** | Click ▦ or ☰ to view the added attendance handling information in calendar or list mode.<br>**Note**<br>In calendar mode, you need to click **Calculate** to get the attendance status of the person in one month. |
| **Edit** | • In calendar mode, click the related label on date to edit the details.<br>• In list mode, double-click the related filed in Date, Handling Type, Time, or Remark column to edit the information. |
| **Delete** | Delete the selected items. |
| **Export** | Export the attendance handling details to local PC.<br>**Note**<br>The exported details are saved in CSV format. |

## 8.11.6 Add Leave and Business Trip

You can add leave and business trip when the employee want to ask for leave or go on a business trip.

**Before You Start**

You should add organizations and persons in the Person module. For details, refer to ***Person Management*** .

**Steps**

1. Click **Time & Attendance → Attendance Handling** to enter attendance handling page.
2. Click **Apply for Leave/Business Trip** to enter adding the leave/business trip page.
3. Select person from left list.
4. Set the date(s) for your leave or business trip.
5. Select the major leave type and minor leave type from the drop-down list.

   **Note**

   You can set the leave type in Attendance Settings. For details, refer to ***Configure Leave Type*** .

6. Set the time for leave.
7. **Optional:** Enter the remark information as desired.
8. Click **Save**.
9. **Optional:** After adding the leave and business trip, perform one of the following operations.

| | |
|---|---|
| **View** | Click or to view the added attendance handling information in calendar or list mode.<br>**Note**<br>In calendar mode, you need to click **Calculate** to get the attendance status of the person in one month. |
| **Edit** | • In calendar mode, click the related label on date to edit the details.<br>• In list mode, double-click the filed in Date, Handling Type, Time, or Remark column to edit the related information. |
| **Delete** | Delete the selected items. |
| **Export** | Export the attendance handling details to local PC.<br>**Note**<br>The exported details are saved in CSV format. |

## 8.11.7 Calculate Attendance Data

You need to calculate the attendance data before searching and viewing the overview of the attendance data, employees' detailed attendance data, employees' abnormal attendance data, the employees' overtime working data, and card swiping log.

## Automatically Calculate Attendance Data

You can set a schedule so that the client can calculate the attendance data automatically at the time you configured every day.

**Steps**

**Note**

It will calculate the attendance data till the previous day.

1. Enter the Time & Attendance module.
2. Click **Attendance Settings → General Rule** .
3. In the Auto-Calculate Attendance area, set the time that you want the client to calculate the data every day.
4. Click **Save**.

## Manually Calculate Attendance Data

You can calculate the attendance data manually by setting the data range.

**Steps**

1. Enter the Time & Attendance module.
2. Click **Attendance Statistics → Calculate Attendance** .
3. Set the start time and end time to define the attendance data range.
4. Set other conditions, including department, person name, employee No. and attendance status.
5. Click **Calculate**.

   **Note**

   It can only calculate the attendance data within three months.

6. Perform one of the following operations.

| | |
|---|---|
| **Correct Check-in/out** | Click **Correct Check-in/out** to add check-in/out correction. |
| **Report** | Click **Report** to generate the attendance report. |
| **Export** | Click **Export** to export attendance data to local PC.<br>**Note**<br>The exported details are saved in CSV format. |

### 8.11.8 Attendance Statistics

You can check the original attendance record, generate and export the attendance report based on the calculated attendance data.

#### Get Original Attendance Record

You can search the employee's attendance time, attendance status, check point, etc. in a time period to get an original record of the employees.

**Before You Start**

- You should add organizations and persons in Person module and the persons has swiped card. For details, refer to ***Person Management*** .
- Calculate the attendance data.

**Note**

- The client will automatically calculate the previous day's attendance data at 1:00 am on the next day.
- Keep the client running at 1:00 am or it cannot calculate the previous day's attendance data automatically. If not calculated automatically, you can calculate the attendance data manually. For details, refer to ***Manually Calculate Attendance Data*** .

**Steps**

1. Enter the Time & Attendance module.
2. Click **Attendance Statistics → Original Records** .
3. Set the attendance start time and end time that you want to search from.
4. Set other search conditions, such as department, person name, and employee No.
5. **Optional:** Click **Get from Device** to get the attendance data from the device.
6. **Optional:** Click **Reset** to reset all search conditions and edit the search conditions again.
7. Click **Search**.

   The result displays on the page. You can view the employee's required attendance status and check point.
8. **Optional:** After searching the result, perform one of the following operations.

| | |
|---|---|
| **Generate Report** | Click **Report** to generate the attendance report. |
| **Export Report** | Click **Export** to export the results to the local PC. |

#### Generate Instant Report

It supports to generate the a series of attendance reports manually to view the employees' attendance results.

**Before You Start**

Calculate the attendance data.

**Note**

You can calculate the attendance data manually, or set the schedule so that the client can calculate the data automatically every day. For details, refer to ***Calculate Attendance Data*** .

**Steps**

1. Enter the Time & Attendance module.
2. Click **Attendance Statistics → Report** .
3. Select a report type.
4. Select the department or person to view the attendance report.
5. Set the start time and end time during which the attendance data will be displayed in the report.
6. Click **Report** to generate the statistics report and open it.

## Custom Attendance Report

The client supports multiple report types and you can pre-define the report content and it can send the report automatically to the email address you configured.

**Steps**

**Note**

Set the email parameters before you want to enable auto-sending email functions. For details, refer to *Set Email Parameters* in the user manual of the client software.

1. Enter the Time & Attendance module.
2. Click **Attendance Statistics → Custom Report** .
3. Click **Add** to pre-define a report.
4. Set the report content.

   **Report Name**

   Enter a name for the report.

   **Report Type**

   Select one report type and this report will be generated.

   **Report Time**

   The time to be selected may vary for different report type.

   **Person**

   Select the added person(s) whose attendance records will be generated for the report.
5. **Optional:** Set the schedule to send the report to the email address(es) automatically.
   1) Check the **Auto-Sending Email** to enable this function.

2) Set the effective period during which the client will send the report on the selected sending date(s).
3) Select the date(s) on which the client will send the report.
4) Set the time at which the client will send the report.

**Example**

If you set the effective period as ***2018/3/10 to 2018/4/10***, select ***Friday*** as the sending date, and set the sending time as ***20:00:00***, the client will send the report at 8 p.m. on Fridays during 2018/3/10 to 2018/4/10.

**Note**

Make sure the attendance records are calculated before the sending time. You can calculate the attendance data manually, or set the schedule so that the client can calculate the data automatically every day. For details, refer to ***Calculate Attendance Data*** .

5) Enter the receiver email address(es).

**Note**

You can click **+** to add a new email address. Up to 5 email addresses are allowed.

6) **Optional:** Click **Preview** to view the email details.

**6.** Click **OK**.

**7. Optional:** After adding the custom report, you can do one or more of the followings:

| | |
|---|---|
| **Edit Report** | Select one added report and click **Edit** to edit its settings. |
| **Delete Report** | Select one added report and click **Delete** to delete it. |
| **Generate Report** | Select one added report and click **Report** to generate the report instantly and you can view the report details. |

# Appendix A. Tips for Scanning Fingerprint

### Recommended Finger

Forefinger, middle finger or the third finger.

### Correct Scanning

The figure displayed below is the correct way to scan your finger:

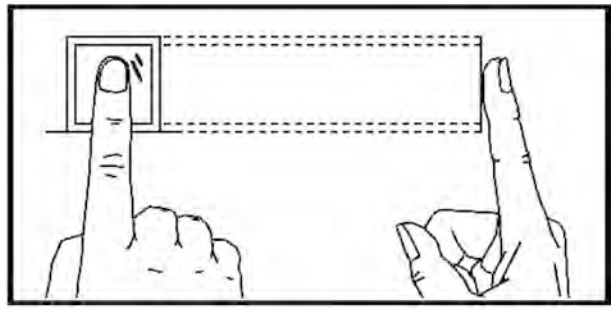

You should press your finger on the scanner horizontally. The center of your scanned finger should align with the scanner center.

### Incorrect Scanning

The figures of scanning fingerprint displayed below are incorrect:

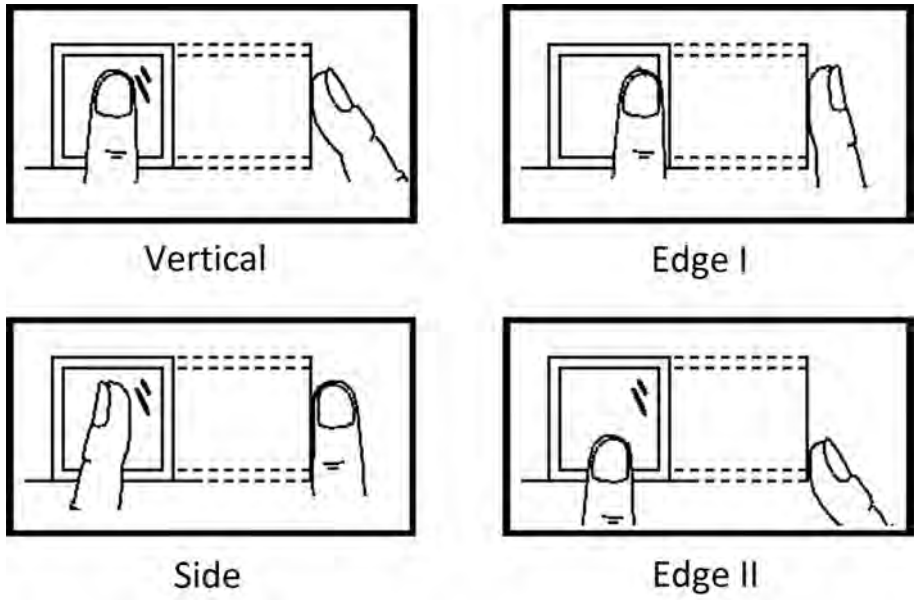


### Environment

The scanner should avoid direct sun light, high temperature, humid conditions and rain.
When it is dry, the scanner may not recognize your fingerprint successfully. You can blow your finger and scan again.

### Others

If your fingerprint is shallow, or it is hard to scan your fingerprint, we recommend you to use other authentication methods.
If you have injuries on the scanned finger, the scanner may not recognize. You can change another finger and try again.

# Appendix B. Tips When Collecting/Comparing Face Picture

The position when collecting or comparing face picture is as below:

### Positions (Recommended Distance: 0.5 m)

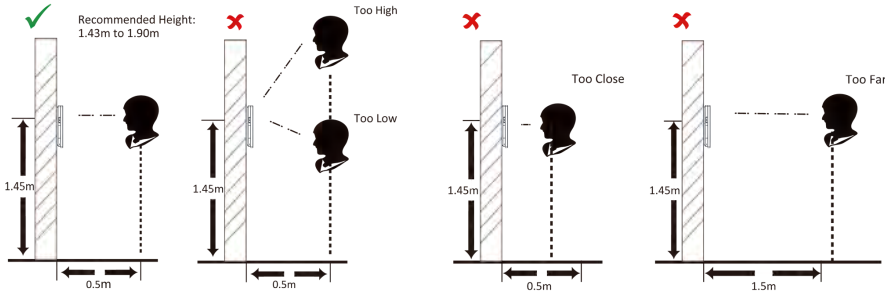


### Expression

- Keep your expression naturally when collecting or comparing face pictures, just like the expression in the picture below.

- Do not wear hat, sunglasses, or other accessories that can affect the facial recognition function.
- Do not make your hair cover your eyes, ears, etc. and heavy makeup is not allowed.

### Posture

In order to get a good quality and accurate face picture, position your face looking at the camera when collecting or comparing face pictures.

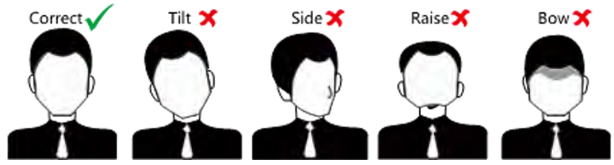


### Size

Make sure your face is in the middle of the collecting window.

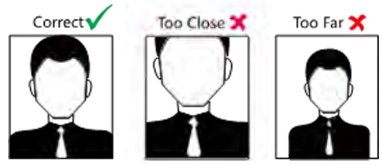
Correct
Too Close
Too Far

# Appendix C. Tips for Installation Environment

1. Light Source Illumination Reference Value

Candle: 10Lux

Bulb: 100~850Lux

Sunlight: More than 1200Lux

2. Install the device at least 2 meters away from the light, and at least 3 meters away from the window or door.

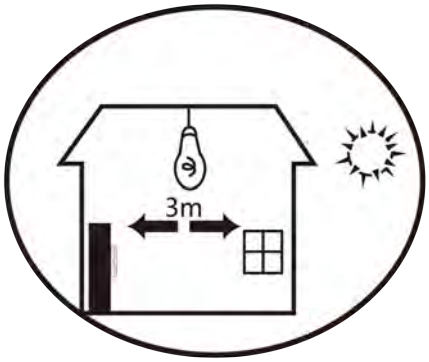

3.Avoid backlight, direct and indirect sunlight

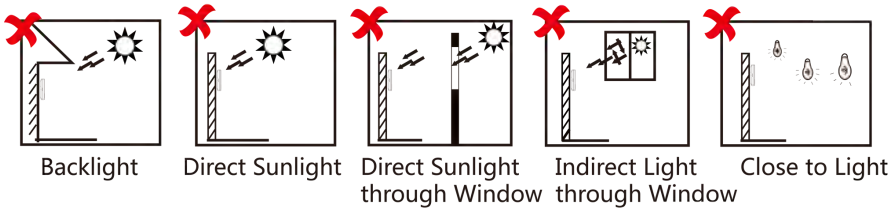

# Appendix D. Dimension

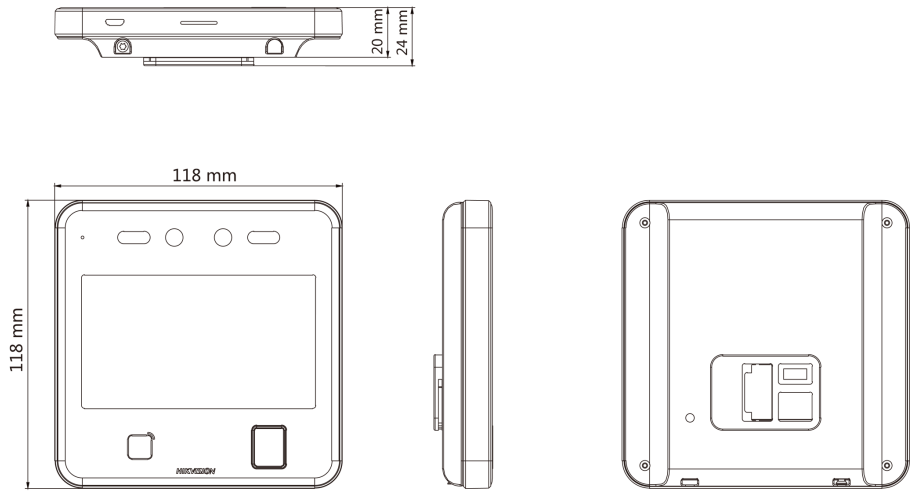


**Figure D-1 With Fingerprint**

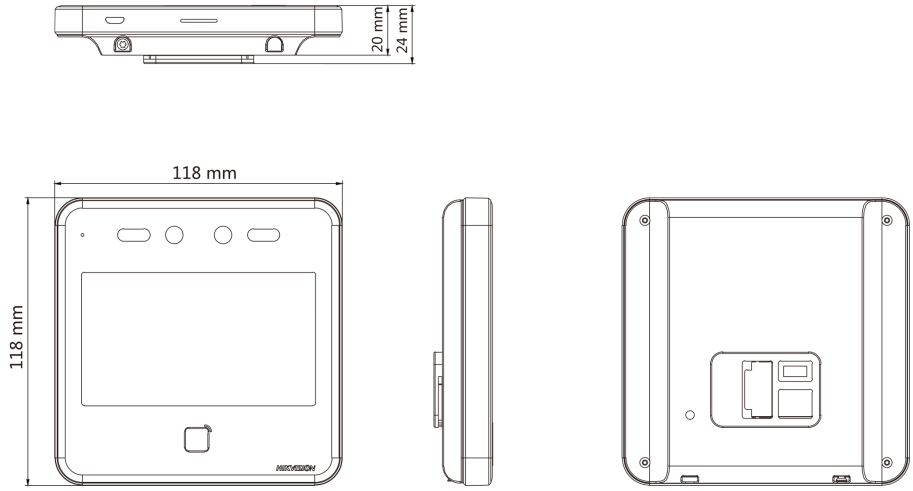


**Figure D-2 Without Fingerprint**

# Appendix E. Communication Matrix and Device Command

### Communication Matrix

Scan the following QR code to get the device communication matrix.
Note that the matrix contains all communication ports of Hikvision access control and video intercom devices.

**Figure E-1 QR Code of Communication Matrix**

### Device Command

Scan the following QR code to get the device common serial port commands.
Note that the command list contains all commonly used serial ports commands for all Hikvision access control and video intercom devices.

**Figure E-2 Device Command**

See Far, Go Further

UD00000B