HUAWEI C5600

CDMA 1X Mobile Phone

USER GUIDE

Copyright © 2009 Huawei Technologies Co., Ltd.

and other Huawei trademarks are the trademarks or registered trademarks of Huawei Technologies Co., Ltd. in the People's Republic of China and certain other countries. All other trademarks mentioned in this manual are the property of their respective holders. The information in this manual is subject to change without notice. Every effort has been made in the preparation of this manual to ensure accuracy of the contents, but all statements, information, and recommendations in this manual do not constitute the warranty of any kind, express or implied.

Huawei Technologies Co., Ltd.

Address: Huawei Industrial Base, Bantian, Longgang, Shenzhen 518129, People's Republic of China

Tel: +86-755-28780808 Global Hotline: +86-755-28560808

E-mail: mobile@huawei.com Website: www.huawei.com

Copyright © Huawei Technologies Co., Ltd. 2009. All rights reserved.

No part of this document may be reproduced or transmitted in any form or by any means without prior written consent of Huawei Technologies Co., Ltd.

The product described in this manual may include copyrighted software of Huawei Technologies Co., Ltd and possible licensors. Customers shall not in any manner reproduce, distribute, modify, decompile, disassemble, decrypt, extract, reverse engineer, lease, assign, or sublicense the said software, unless such restrictions are prohibited by applicable laws or such actions are approved by respective copyright holders under licenses.

Trademarks and Permissions

, HUAWEI, and are trademarks or registered trademarks of Huawei Technologies Co., Ltd.

Other trademarks, product, service and company names mentioned are the property of their respective owners.

Notice

Some features of the product and its accessories described herein rely on the software installed, capacities and settings of local network, and may not be activated or may be limited by local network operators or network service providers, thus the descriptions herein may not exactly match the product or its accessories you purchase.

Huawei Technologies Co., Ltd reserves the right to change or modify any information or specifications contained in this manual without prior notice or obligation.

NO WARRANTY

THE CONTENTS OF THIS MANUAL ARE PROVIDED “AS IS”. EXCEPT AS REQUIRED BY APPLICABLE LAWS, NO WARRANTIES OF ANY KIND, EITHER EXPRESS OR IMPLIED, INCLUDING BUT NOT LIMITED TO, THE IMPLIED WARRANTIES OF MERCHANTABILITY AND FITNESS FOR A PARTICULAR PURPOSE, ARE MADE IN RELATION TO THE ACCURACY, RELIABILITY OR CONTENTS OF THIS MANUAL.

TO THE MAXIMUM EXTENT PERMITTED BY APPLICABLE LAW, IN NO CASE SHALL HUAWEI TECHNOLOGIES CO., LTD BE LIABLE FOR ANY SPECIAL, INCIDENTAL, INDIRECT, OR CONSEQUENTIAL DAMAGES, OR LOST PROFITS, BUSINESS, REVENUE, DATA, GOODWILL OR ANTICIPATED SAVINGS.

Import and Export Regulations

Customers shall comply with all applicable export or import laws and regulations and will obtain all necessary governmental permits and licenses in order to export, re-export or import the product mentioned in this manual including the software and technical data therein.

Conventions

Term Conventions

This manual refers to HUAWEI C5600 CDMA 1X mobile phone as "the phone" or "your phone".

Operation Conventions

Operation	Meaning
Press and hold	Press a key for two to three seconds and then release it.
Press	Press a key and release it quickly.

GUI Conventions

Format	Meaning
Bold	Any string displayed on the phone screen is in boldface, such as "**Menu**".
>	Multi-level menus are spearated by ">". For example, "**Menu** > **MESSAGES**" indicates " **MESSAGES**" is the submenu of "**Menu**".

Symbols

Symbol	Description	Meaning
	Caution	Warnings and precautions for operations
	Note	Complementary descriptions for operations

Table of Contents

1 Getting to Know Your Phone 1
Your Phone 1
Interfaces 2
Keys and Functions 3
Screen Icons 5
2 Getting Started 7
Installing the Battery 7
Installing the Micro SD Card 7
Charging the Battery 7
Powering On/Off the Phone 8
Using the Function Menu 8
3 Voice Services 10
Making a Call 10
Answering a Call 11
Operations During a Call 11
4 Text Entry 13
Text Input Modes 13
Entering English 14
Entering Spanish 15

Entering Numbers 15
Entering Symbols 16
5 SMS 17
Writing and Sending a Message 17
Reading a Message 18
6 MMS 20
Writing and Sending a Multimedia Message 20
Receiving a Multimedia Message 20
Viewing a Multimedia Message 21
7 Contacts 22
Adding a Contact 22
Searching a Contact 22
Searching a Contact by Location 23
8 Alarm Clock 24
Enabling an Alarm Clock 24
Disabling an Alarm Clock 25
9 Security 26
Enabling/Disabling the Phone Lock 26
Changing the Phone Lock Code 26
Locking the Keypad 27
10 Music 28
Adding the Playlist 28

Launching the Media Player 28
Selecting a Playlist 29
Playing Music 29
Setting the Equalizer 30
11 Video Player 31
Selecting a Video File 31
Playing a Video File 31
12 Camera 33
Taking a Photos 33
Previewing a Photo 34
13 Video 36
Recording a Video Clip 36
Playing a Video Clip 38
14 Recorder 39
Recording a Sound Clip 39
Playing a Sound Clip 39
15 Radio 41
Switching On/Off the Radio 41
Recording 42
Searching for a Channel 42
16 Bluetooth® 44
Sending Data Through the Bluetooth Connection 44

Receiving Data Through the Bluetooth Connection.....46
Other Bluetooth Operations.....47
17 Troubleshooting 48
18 Warnings and Precautions 50

1 Getting to Know Your Phone

Your Phone

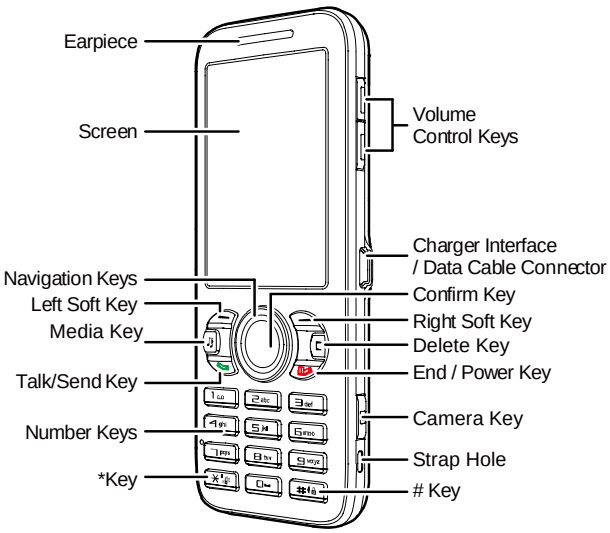

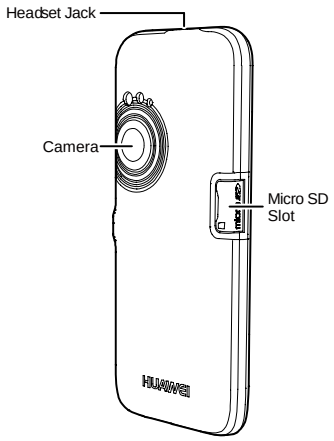

Interfaces

Interface	Description
Charger interface /Data cable connecto	Located at the right side of the phone. You can connect the charger or the data cable to it.
Headset jack	You can connect the headset to it.
Micro SD card slot	Located on the left side of the phone. You can insert a micro SD (micro secure data) card into it.

Keys and Functions

Press…	To…
	• View the call log in the standby mode. • Make a call or answer an incoming call.
	• Power on or off the phone (by pressing and holding the key). • End a call or reject an incoming call. • Return to the standby mode.
 （L）	• Select the option displayed on the lower left corner of the screen. • Display **Menu** in the standby mode.
 （R）	• Select the option displayed on the lower right corner of the screen. • Display **Contacts** in the standby mode.
	Delete characters in the editing mode or an item in an application.
	• Enter the * symbol, + symbol, P character, or T character by pressing it once, twice, three times or four times. • Switch between the **Meeting** profile and the current profile (by pressing and holding it).
	• Enter the # symbol. • Lock the keypad (by pressing and holding it). • Change input modes when editing texts.

Press…	To…
	Display **Media Player** in the standby mode.
	Launch the camera in the standby mode (by pressing and holding it).
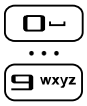	• Enter numbers, letters, and symbols. • Call the voice mail center in the standby mode (by pressing and holding the **1** key). • Speed-dial a phone number in the standby mode (by pressing and holding the **2-9** key). • Select a submenu item labeled with the corresponding number.
	: In the standby mode, access **Blue Tooth**; increase the volume during a call. : In the standby mode, access **Messages**; or access **Create Message** (by pressing and holding it); decrease the volume during a call. : In the standby mode, access **BREW**; decrease the volume during a call. : In the standby mode, access **WAP**； increase the volume during a call.

Press…	To…
	• Display **Menu** in the standby mode. • Confirm a selection.

Screen Icons

Icon	Meaning
	Indicates the signal strength. The more the bars are, the stronger the signal is.
	CDMA2000 1X network is activated.
	There is an incoming call; a call is being set up; or the phone is in conversation.
	The SMS inbox is full.
	A new message is received.
	A new MMS is received.
	The MMS inbox is full.
	A new voice mail is received.
	A new emergent message is received.
	The micro SD card is activated.
	The Bluetooth is activated.
	An alarm clock is enabled.

Icon	Meaning
	The **General** profile is activated.
	The **Silence** profile is activated.
	The **Meeting** profile is activated.
	The **Outdoor** profile is activated.
	The **My Profile 1** is activated.
	The **My Profile 2** is activated.
	Indicates the battery power level. The more the bars are, the more power of the battery is left.
	The battery power level is extremely low.

2 Getting Started

Installing the Battery

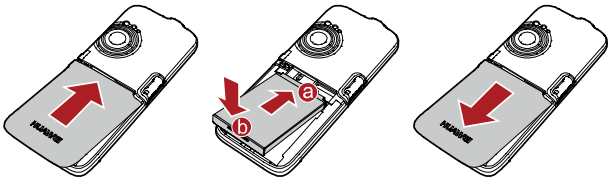

Installing the Micro SD Card

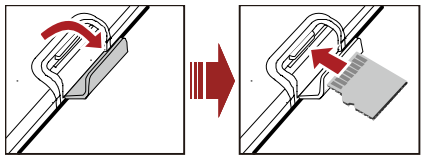

Install the micro SD card correctly to avoid damaging your phone or the micro SD card.

Charging the Battery

To charge the battery, do as follows:

1. Connect the charger to the charger interface at the bottom of the phone.

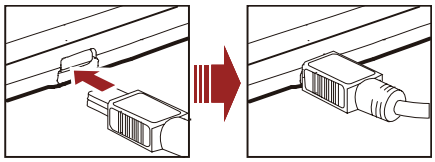

2. Connect the charger to an AC power socket.
   During the charging, appears on the upper right corner of the screen in an animated status.
3. Wait until the phone is fully charged.
   If becomes static, the battery is fully charged.
4. Disconnect the charger from the AC power socket.
5. Disconnect the charger from the phone.

- Do not use a damaged battery or charger.
- Before using the travel charger, ensure that the battery is installed in your phone.

Powering On/Off the Phone

- When the phone is powered off, press and hold to power it on.
- When the phone is powered on, press and hold to power it off.

Using the Function Menu

To use the function menu, do as follows:

1. In the standby mode, press (**Menu**).
2. Press to select the desired function menu.
3. Press (**Select**) or to display the selected menu.
4. Display the submenu in either of the following ways:

- Press to select a submenu, and then press (**Select**) or to display the selected submenu.
- Press the number key corresponding to the serial number of a submenu to display the submenu.

5. Press (**Back**) to return to the previous menu or exit the function menu.
   To return to the standby mode, press .

3 Voice Services

Making a Call

1. In the standby mode, enter the phone number.

- To make an international call, press twice to enter the international long distance code of "+". Then, enter the number to be dialed in the "country code + region code + phone number" format.
- To call a number through an extension, press three times to insert "**P**", or press four times to insert "**T**" between the phone number and the extension.

2. Press to dial the number.
3. Press or (**End**) to end the call.

- In the standby mode, press to select the required number from **All Calls**. Then, press to dial the number.
- When the phone is locked, enter the lock code to unlock the phone first; otherwise, you can only make emergency calls or answer calls.
- Select a contact from the phonebook and press to dial.
- Select a message in the inbox and press to dial.

Answering a Call

When there is an incoming call, you can press , (**Answer**) or to answer it; or press to reject it.

- When there is an incoming call, you can press (**Silence**) to mute the speaker, and then press (**Reject**) again to reject it. If the phone is in the **Silence** mode, you can press (**Reject**) to reject it.
- If the any-key answer function is enabled, you can press any key except and to answer an incoming call.
- If the headset auto-answer function is enabled, and the headset is connected to the phone, the incoming call is answered automatically.

You can set any-key answer function in the **Settings > Call Settings > Answer Mode**, and set the headset auto-answer function in the **Settings > Call Settings > Headset Auto Answer**.

Operations During a Call

You can press to enable or disable the speaker, or press (**Options**) to select the following options:

- **Mute/Unmute**: Mute or unmute your voice during a call.
  At first, the option is **Mute**. If you select it, the other party during the call cannot hear you any more.
  If you access the **Options** menu again, the option is **Unmute**. If you select it, the other party can hear you again.

This function is available only after the call is set up. You cannot mute/unmute the ringtone.

- **Start Record**: Allow you to record the call, you can select **This Side** or **The Other Side**.
- **Save Number**: Allows you to enter a phone number and save it to the phonebook.
- **Contacts**: Allows you to search for or create a contact.
- **Messages**: Allows you to display the **Messages** menu.
- **Call Memo**: Allows you to enter the call **Memo** menu.
- **Voice privacy**: Allows you to set the privacy mode, including **Activate** and **Deactivate**.

4 Text Entry

Text Input Modes

The indicator of the current input mode is displayed on the upper left corner of the screen. You can press [#] to change the input modes.

Indicator	Text Input Mode
En	Smart English
Smsp	Smart Spanish
Es	Spanish Alphabetical Text
Abc	English Alphabetical Text
123	Number

In the editing mode, press [C] once to delete the letter on the left of the cursor. Alternatively, press and hold [C] to clear all letters at one time. If there is no letter to delete, you can press [—] (**Back**) to return to the previous menu.

Entering English

■ Smart English Input

You can enter English letters as follows:

1. Corresponding to the sequence of the word, press the key labeled with the desired letter once.
   Then the phone displays the commonly used words according to the numeric sequence of key presses.
2. Press to view alternative words.
3. Press to switch between the uppercase and lowercase.
4. Press or to confirm the selection.
   Or, press to confirm the selection and enter a space after the word.

- Press to enter a full stop or symbol.
- Press to enter a space and press and hold it to enter **0**.
- Press to display the symbol list. Then you can enter symbols.

■ Alphabetical Text Input

The alphabetical text input allows you to enter uppercase or lowercase English letters. You can press the key labeled with the desired letter once to

enter the first letter on the key, twice to enter the second letter on the key, and so on.

When you enter letters, press to switch between the uppercase and lowercase of the highlighted letter.

If the letter you want to enter is on the same key as the previous one, you can enter the latter only after the cursor appears again or press to move the cursor to the next space.

- Press repeatedly to enter a commonly used punctuation.
- Press once to enter a space, twice to enter **0**.

Entering Spanish

You can enter Spanish words in the Spanish text input mode.

Traditional Spanish text input and smart Spanish text input are similar to traditional English text input and smart English input. For details, see "

Entering English" on page 14.

Entering Numbers

- In the "123" input mode, press number keys to enter numbers.
- In "Abc" input modes, press a number key repeatedly until the number appears.

- In the "En" input mode, press a number key and then press until the number appears.

Entering Symbols

In any input mode, you can enter a symbol as follows:

1. Press to display a symbol list.
2. Press to select a symbol.
3. Press or press the corresponding number key to enter the symbol.

Writing and Sending a Message

To write and send a message, do as follows:

1. Select **Menu** > **Messages** > **SMS** > **Create Message**.
   You can also access the **Create Message** menu by pressing and holding in the standby mode.
2. Write a message with entering up to 160 English letters or 160 Spanish letters.
   When writing a message, press (**Options**) to select the following options:

- **Send**: Allows you to send the message.
- **Save**: Allows you to save the message to the **Drafts**.
- **Insert Quick text**: Allows you to insert a commonly used phrase.
- **Insert Contact**: Allows you to select a contact from the phonebook and insert the phone number into the message.
- **Priority**: Allows you to set the priority of messages sent to the recipients. The priorities are **Normal** and **Urgent**. The message priority function is network dependent.
- **Callback Number**: Allows you to set the callback number.
  The callback number is sent to the message recipient by default. You can set it to either your phone number or other numbers. When the

recipient receives your message, the callback number can be viewed and provided for calling back.
Select **Activate** and enter the phone number.

3. Press in the text editing screen to send the message directly, or select **Options** > **Send** to send the message.
4. Enter the phone number of a recipient.
Up to 100 recipients can be added by the following options:

- Enter the phone number(s) directly.
- Press (**Search**). Then select **Contacts** to select the phone number(s).
- Press (**Search**). Then select **Groups** to select a group.

5. Press to send the message.

Reading a Message

To read a message stored in the inbox, do as follows:

1. Select **Menu** > **Messages** > **SMS** > **Inbox**.
2. Press to choose a message.
3. Press to read the message, or press (**Options**) to select the following options:

- **View**: Allows you to read the message.
- **Reply**: Allows you to edit a message to reply the message sender.

- **Delete**: Allows you to delete the message.
- **Delete Multiple**: Allows you to delete multiple messages at a time.
- **Forward**: Allows you to forward the message.
- **Extract**: Allows you to extract the number contained in the message, or the number of the message sender. You can select **Edit Before Call**, **Call** or **Save** the number.

6 MMS

Writing and Sending a Multimedia Message

1. Select **Menu >Messages> MMS > New Message**.
2. Enter the content of a multimedia message (MMS) in the following fields:

- **Recipient**: Allows you to enter the recipients of message. You can add up to 20 recipients.
- **Subject**: Allows you to enter the subject of message.
- **Slides**: Allows you to insert images, audio files, video files and texts into a slide. You can set the duration of displaying each slide for your preview.
- **Timing**: Allows you to set the duration of switching the slides.

🕮 The capacity of a MMS can be up to 300 KB, including slide.

3. After you write the multimedia message, select **Options** > **Send** and press to send it.

Receiving a Multimedia Message

If **MMS > Settings > Receive options > Download timing** setting is **Manual**, a notification will be received in Inbox and you can press to view the notification, then select **Options > Receive** to receive the MMS.

If **MMS > Settings > Receive options > Download timing** setting is **Automatic**, the MMS will be downloaded in Inbox directly.

Viewing a Multimedia Message

Do the following to view messages stored in the inbox:

1. Select **Menu** > **MESSAGES** > **MMS** > **Inbox**.
2. Press to view messages.
3. Press to view details or press (**Options**) to select the following items:

- **Open**: Allows you to view details of the message.
- **Reply**: Allows you to reply a message to the message sender.
- **Reply all**: Allows you to reply all the messages to the message senders.
- **Forward**: Allows you to forward the message.
- **Move**: Allows you to move the message(s) to **My folders**.
- **Delete**: Allows you to delete the message.
- **Delete all**: Delete all the messages in the inbox.
- **Sort**: Allows you to sort the messages in the inbox according to date or address.
- **Filter view**: Allows you to view the specified message(s).

7 Contacts

Adding a Contact

To add a contact, do as follows:

1. Select **Menu** > **CONTACTS** > **Add New**.
2. Press to enter information in **Name**, and then press (**OK**).
3. Enter the necessary information of contact.
   You can enter information in **Mobile Number**, **Home Number**, **Office Number**, and **Fax Number**(At least one number field is required). You can enter the email of the new contact and select a group, a notes, a custom tone and an image for the contact.
4. Press (**Save**) to save the contact to the phonebook.

Searching a Contact

To search a contact, do as follows:

1. Select **Menu** > **CONTACTS** > **Search**.
2. Enter the name of the contact. Then press (**Search**) or .
3. After searching the contact, press (**Options**) for the following options:

- **View**: Allows you to view the details.

- **Edit**: Allows you to edit the contact.
- **Add New**: Allows you to add a new contact.
- **Send Message**: Allows you to send a message to the contact.
- **Send Via Bluetooth**: Allows you to send a contact by Bluetooth.
- **Delete**: Allows you to delete the contact.
- **Call**: Allows you to making a call to the contact.
- **Edit Before call**: Allows you to modify the number before you call it.

- In the standby mode, press [—] to access **Contacts**.
- To quickly search a contact, you can press the number key (except [0] and [1]) to enter the first letter of the contact name. Then the phone lists English contacts that start with the letter.

Searching a Contact by Location

You can find a contact according to the sequence number. Each contact in the phonebook has an independent sequence number, which is from 1 to 1000. You can quickly search a contact by the sequence number.

To search a contact, do as follows:

4. Select **Menu** > **CONTACTS** > **Search By Location**.
5. Input the sequence number of the contact directly, and then press [—] (**View**) or [●] to view the details.

8 Alarm Clock

After the alarm clock is enabled, the phone notifies you at the specified time. You can set up to five alarm clocks.

Enabling an Alarm Clock

1. Select **Menu** > **TOOLS** > **Alarms**.
2. Press to select an alarm clock.
3. Press — (**On**) to turn on the alarm clock, or press OK to set the following options:

- **Title**: Allows you to set the title of the alarm clock.
- **Time**: Allows you to set the time.
- **Cycle**: Allows you to set the alerting cycle mode.
- **Ring**: Allows you to set the alerting ringtone.

4. Press — (**Save**) to save the alarm clock.

- When the alarm clock alerts, press (**Stop**) to stop it or press (**Snooze**) to snooze it for five minutes.
- If nothing is done to the alarm clock when it alerts, it stops temporarily after 45 seconds and alerts again five minutes later. It alerts five times before it stops thoroughly.
- If you select **Cycle** > **Custom**, press to scroll from Sunday to Saturday and press to select the days; press again to deselect the days, and then press (**OK**) to confirm.

Disabling an Alarm Clock

1. Select **Menu** > **TOOLS** > **Alarms**.
2. Press to select an alarm clock.

Press (**Off**) to disable the alarm clock.

Select **Menu** > **TOOLS** > **Alarms** > **Cancel All** to disable all alarm clocks.

9 Security

Enabling/Disabling the Phone Lock

The phone lock protects your phone from unauthorized use. The phone lock function is not enabled when you purchase the phone. You can change the default phone lock code "1234" to any numeric string of 4 to 8 digits.

1. Select **Menu** > **SETTING** > **Security Settings** > **Phone Lock**.
2. Select one of the following phone lock modes:

- **Immediate**: Lock the phone immediately.
- **Power On**: Enable the phone lock when the phone is powered on next time.
- **Off**: Disable your phone lock.

Changing the Phone Lock Code

Do remember your phone lock code. If you forget it, contact your local dealer.

1. Select **Menu** > **SETTING** > **Security Settings** > **Change Phone Code**.
2. Enter the correct phone lock code and press (**OK**).
3. Enter the new phone lock code and press (**OK**).
4. Enter the new phone lock code again and press (**OK**).

Locking the Keypad

When the keypad is locked, you can still answer an incoming call or make emergency calls by pressing .

■ Manually Locking the Keypad

In the standby mode, press and hold to lock the keypad.

■ Automatically Locking the Keypad

If the **Auto Keyguard** function is enabled, after the phone has been idle for a preset period in the standby mode, the keypad is locked automatically.

1. Select **Menu** > **SETTING** > **Phone Settings** > **Auto Keyguard**.
2. Press for the following options:

- **Off**: Disable the auto keyguard function.
- **15 Seconds**, **30 Seconds** or **1 Minute**: When the phone has been idle for the selected time in the standby mode, the keypad is locked automatically.

3. Press (**Select)** to save the settings.

■ Unlocking the Keypad

In the standby mode, press (**Unlock**) and then press to unlock the keypad.

10 Music

Adding the Playlist

1. In the standby mode, you can adding a playlist in either of the ways:
- Options when no playlist saved: Select **Menu** > **MULTIMEDIA**> **Media Player** > **Playlists ,** press (**Add**) to add to new playlist.
- Options when some playlist saved: Select a playlist, and then press (**Options**) to select **Add New Playlist**.

2. Enter the name of the playlist, and then press (**OK**).
3. Press (**Add**) to add the songs.
4. Press to select phone or micro SD card for the memory in use.
5. Press to select or deselect the songs in the play list.
6. Press (**Options**), select **Add** to save the settings.

Launching the Media Player

In the standby mode, you can launch the music player by the following options:

- Press and hold .
- Select **Menu** > **MULTIMEDIA** > **Media Player** > **Music NOW!**.

Selecting a Playlist

After launching the music player, you can do as follows:

1. Press (**Add Tracks)** to add tracks.
2. Press or to scroll the playlists,press to select a playlist, and then press (**Options)** to select **Add**.
3. Then the phone loads the playlist.

You can also select a playlist directly, and then press (**Options**) to select **Play** to load the playlist.

Playing Music

In the **Media Player** screen, you can do as follows:

1. Press to play a song.

- Press to play the next song.
- Press and hold to play the song by fast forward.
- Press to play the previous song.

- Press and hold to play the song by fast backward.
- Press to pause playing; press again to continue playing.
- Press to load the current playlist.
- Press to stop playing.

2. Press (**Minimize**) to return to the **Multimedia** screen.
   You can use other functions while the phone is playing the mp3 files.
3. Press to return to the standby mode and the music is playing also.

Setting the Equalizer

1. In the standby mode, select **Menu** > **MULTIMEDIA** > **Media Player** > **Music Now!** to launch the music player.
2. Press (**Options)** and select **Settings** for the following options:

- **Shuffle**: Allows you to set the shuffle mode.
- **Loop**: Allows you to set the loop mode.
- **Equalizer**: Allows you to set the Equalizer.

When the phone is playing songs, press the button on the headset to play the next song.

11 Video Player

Selecting a Video File

1. In the standby mode, select **Menu** > **MULTIMEDIA**> **My Files** > **Videos**.
2. Press to select phone or micro SD card for the memory in use.
3. Press to select a video file.

Playing a Video File

In the **Videos** interface, after you select a video file, you can do as follows:

1. Press to play a video file.

- Press to play the next video file.
- Press and hold to play the video file by fast forward.
- Press to play the previous video file.
- Press and hold to play the video file by fast backward.

- Press to pause playing; press again to continue playing.
- Press to stop playing.
- Press to display the full screen.
- Press to increase or decrease the volume.

2. Press (**Back**) to switch off the video player and return to the previous menu.

12 Camera

Taking a Photos

1. In the standby mode, select **Menu** > **CAMERA** to access the preview mode, or press and hold to launch the camera.

The phone can memorize the interface (camera or video camera interface) it displays at the last time.

For example, access the camera, press to enter the video camera interface, and exit. Then when you access the camera next time, the video camera interface is displayed.

2. Press (**Options**) for the following options:

- **Switch to Video Camera**: Allows you to use the functions of the video camera on your phone.
- **Shot Mode**: Allows you to take photos in rapid succession. if activated. You can select **Normal**, **4 Shots** or **9 Shots** to set the photo number.
- **Resolution**: Allows you to select the resolution.
- **Frame**: Allows you to select a fun frame for photos.
- **Self Timer**: Allows you to set the countdown time for the phone to take a photo automatically. If activated. you can select **5 Seconds** or **10 Seconds** to set the self timer.
- **Night Mode**: Allows you to enable or disable the night mode.

- **Effect**: Allows you to set the effect.
- **Shortcut Guide**: Allows you to view the shortcut keys.
- **Settings**: Allows you to set the **Quality**, **Shot Tone**, **Timer Reminder**, **Save Location**, and **Reset All**.
- **Go To My Files**: Allows you to access the **My Files**/**Pictures** directory to view pictures.

3. Focus the lens on the scene and press to take a photo.
   Then you can preview the picture and save it.
4. Press (**Options**) to select one of the following operations:

- **Delete**: Allows you to delete the photo.
- **Send**: Allows you to send the photo as MMS, send the photo to album and send the photo by Bluetooth.
- **Set**: Allows you to set the photo as the wallpaper or contact image.

Previewing a Photo

1. In the standby mode, select **Menu** > **CAMERA**.
2. Press (**Options**). Then select **Go To My Files** to access the phone album.
3. Press to select phone or micro SD card for the memory in use.
4. Press to select a photo.

5. Press to preview the photo, and then press to change photos.

6. Press (**Back**) to return to the photo list.

7. Press (**Options**) for the following options:

- **Full Screen**: Allows you to set the photo into the full screen.
- **Rotate**: Allows you to rotate the photo.
- **Set**: Allows you to set the photo as the wallpaper or contact image.
- **Send**: Allows you to send the photo as MMS, send the photo to album and send the photo by Bluetooth.
- **Delete**: Allows you to delete the current photo.

File Info: Allows you to view the name, size, resolution, DRM information and create time of the photo.

13 Video

Recording a Video Clip

1. In the standby mode, select **Menu** > **CAMERA** to access the camera preview screen, or press and hold to launch the camera, and then press to switch to the video camera.

The phone can memorize the interface (camera or video camera interface) it displays at the last time.

For example, access the camera, press to enter the video camera interface, and exit. Then when you access the camera next time, the video camera interface is displayed.

2. Press (**Options**) for the following options:

- **Switch To Camera**: Allows you to use the functions of the camera on your phone. For details, see "Camera" on page 33.
- **Video Size**: Allows you to set the video size. You can select **MMS Limite**, **3 Minutes** and **5 Minutes**.
- **Night Mode**: Allows you to enable or disable the night mode.
- **Effect**: Allows you to set the effect.
- **Shortcut Guide**: Allows you to view the shortcut keys.

- **Settings**: Allows you to set the **Video Quality**, **Audio Set** and **Reset All**.
- **Go To My Files**: Allows you to access the **My Files**/**Videos** directory to view videos.

3. Press to start recording.
4. Press (**Stop**) to stop recording, and save the video clip to **MULTIMEDIA** > **My Files** > **Videos** automatically.
5. Press (**Options**) for the following options:

- **Play**: Allows you to view the video clip.
- **Send As MMS**: Allows you to send the video clip as an MMS.
- **Sent To Album**: Let's your phone starts WAP function and logs on the specified websites provided by your network service provider. For details, consult your network service provider about this function.
- **Bluetooth**: Allows you to send the video by Bluetooth.
- **Delete:** Allows you to delete the current video clip.
- **Go To My Files**: Allows you to access the **My Files**/**Videos** directory to view videos.

Your phone supports video recording for up to five minutes. When five minutes is up, video recording is stopped and the video is saved automatically. Then the phone returns to the video preview screen.

Playing a Video Clip

1. In the standby mode, select **Menu** > **CAMERA** to access the camera preview screen, and then press to switch to the video.
2. Press (**Options**). Then select **Go To My File** to access the **Videos** screen.
3. Press to select phone or micro SD card for the memory in use.
4. Press to select a video clip.
5. Press to play the video clip, or press (**Options**) and select **Play**.
6. Press (**Back**) to return to the video clip list.

14 Recorder

Recording a Sound Clip

1. In the standby mode, select **Menu** > **MULTIMEDIA** > **Recorder**.
2. Press to start recording, press again to pause recording.
3. Press (**Back**) to stop recording, with displaying a prompt to confirm.
4. Press (**Yes**) to save the sound clip to **Menu** > **MULTIMEDIA** > **My Files** > **Musics** > **recorder**.
   Press (**No**) to return to the previous menu.

- When recording a sound clip, you can press (**Stop**) to save the sound clip to **Menu** > **MULTIMEDIA** > **My Files** > **Musics** > **recorder** automatically.
- When recording a sound clip, make the microphone of your phone near the sound source for a better recording effect.

Playing a Sound Clip

1. In the standby mode, select **Menu** > **MULTIMEDIA** > **Recorder**.
2. Press (**Voice Folder**).
3. Press to select phone or micro SD card.

4. Press to select a sound clip and then press to play it, or press (**Options**) to select **Play**.

5. Press (**Minimize**) to view the sound clip list.

6. Press (**Options**) for the following options:

- **Play**: Allows you to lay the sound clip.
- **Set**: Allows you to set the sound clip as the ringtone, contact tone, SMS tone, or MMS tone.
- **Send**: Allows you to **Send As MMS**, **Sent To Album** and **Bluetooth**.
- **Move To Memory Card/Move To Phone**: Allows you to move the sound clip to the micro SD card/Phone.
- **Copy To Memory Card/Copy To Phone**: Allows you to copy the sound clip to the micro SD card/Phone.
- **Delete**: Allows you to delete the sound clip.
- **Mange Multiple**: Allows you to **Play**, **Move To Memory Card/ Move To Phone**, **Copy To Memory Card/ Copy To Phone** or **Delete** multiple sound clips at a time.
- **Rename**: Allows you to rename the sound clip.
- **Sort**: Allows you to sort the sound clips according to name, size. or date.
- **File Info**: Allows you to view the name, size and create time of the sound clip.

15 Radio

Your phone integrates a frequency modulation (FM) radio. Before listening to the radio, insert the headset to the headset jack.

The headset cable functions as the antenna. When listening to the radio, do not bind or wind the headset cable. Keep the headset cable straight for a better effect.

Switching On/Off the Radio

■ Switching On the FM Radio

1. Insert the headset to the headset jack properly.
2. In the standby mode, select **Menu** > **MULTIMEDIA** > **Radio**. After loading, the phone plays a program.
3. Press (**Options**), select **Speaker On**/**Speaker Off** to enable/disable the speaker.
4. In the **Radio** screen:

- Press to increase or decrease the volume.
- Press to change the channel.

■ Switching Off the FM Radio

1. In the standby mode, select **Menu** > **MULTIMEDIA** > **Radio**.

🕮 When the FM Radio is switched on, the phone still plays the program and displays the current frequency in the standby mode.

2. Press — (**Option**) to select **Switch Off** to switch off the radio and return to the previous screen.

🕮 In the standby mode or in the **Radio** screen, press the button on the headset to change the channel; press and hold the button on the headset to switch off the FM Radio.

Recording

When the FM Radio is switched on, do as follows to record the program played on the radio:

1. Press — (**Options**) to select **Start Record**.
2. Press — (**Stop**) to stop recording. The program clip is saved to **Musics** of **My Files** automatically.

🕮 The program clips recorded from the FM Radio are saved into **.qcp** files.

Searching for a Channel

■ Automatic Tuning

1. In the **Radio** screen, press — (**Options**) to select **Tuning**.

2. Press to select **Automatic Tuning**.

3. The phone automatically searches for channels and saves them to the channel list.

16 Bluetooth®

You can use the built-in Bluetooth function of your phone to synchronize data between a PC and your phone, or exchange data with other Bluetooth devices. You can also talk by using the Bluetooth headset or Bluetooth loudspeaker.

You can set up a wireless connection between devices within a distance of ten meters by using Bluetooth. The Bluetooth wireless connection, however, can be disturbed by other electronic devices and blocked by obstacles such as walls.

In certain areas, use of the Bluetooth devices might be restricted or prohibited. Observe applicable laws and regulations.

Do not accept the connection request of an unknown device. Thus you can prevent your mobile phone from the intrusion of destructive contents.

🕮 The Bluetooth function supported by your phone meets the requirements of Bluetooth Specification 2.0. It can work normally only if you use it with compatible Bluetooth devices. For more information, refer to the user manuals of related devices, or consult the manufacturers of related devices.

Sending Data Through the Bluetooth Connection

🕮 You can set up only one Bluetooth connection each time.

1. Choose **Menu** > **SETTING** > **Phone Settings** > **Bluetooth** > **Switch On/Off** > **On** to activate Bluetooth.

2. Launch the application in which the contents need to be sent are saved. For example, if you want to send an image to another device, you need to launch the **Multimedia** application.

3. Select the content you want to send, press (**Options**), and choose **Send** > **Bluetooth**.

   If the Bluetooth function is not activated yet, the phone displays "Switch On Bluetooth?" on the screen.

   - Choose **Yes** to activate Bluetooth and access the **Device List** screen.
   - Choose **No** to reject activation of Bluetooth and return to the previous screen.

4. Choose the device you want to connect with from the device list.

   - If the devices on the device list are already paired with your phone, choose the device you want to connect with, and press to transmit data.
   - When the device list is null or the device to be connected with does not exist on the list, press (**Search**) to search for other Bluetooth activated devices in the effective range. The names of the found devices will be displayed on the screen of your phone. Press to stop searching.

5. If the device to be connected with requests identity authentication before connection, it displays "Enter PIN code:" on the screen of your phone. Create a shared password. After both ends enter the same password, the Bluetooth connection is set up.

6. After the connection is set up, information about the data being transmitted is displayed on your phone.

Receiving Data Through the Bluetooth Connection

1. When other device sends data to your phone through Bluetooth, it displays "Receive File?" on the screen. Press (**Yes)** to receive the data. The filename and receiving progress are displayed on the screen. Press (**No**) to reject the data.

   For the first time to connect with another device through Bluetooth, it displays "Enter PIN code:" on the screen of the phone to authenticate the identity of the device. Enter the password of one to eight digits, and press (**Select**). When the other end enters the same password, your phone starts to receive the data.

2. It displays "Receive Successful!" on the screen of your phone, indicating that the data is received and saved under **MULTIMEDIA** > **My Files**.

   If a micro SD card is installed in your phone, the phone saves the received data in the micro SD card by default. If your phone is not installed with a micro SD card, the phone saves the received data in the phone memory.

Other Bluetooth Operations

You can perform the basic settings for the Bluetooth functions. Select **SETTING > Phone Settings > Bluetooth** for the following operations.

- **Switch On/Off**: To set the Bluetooth device to **On** or **Off**.
- **Search**: To search for new Bluetooth devices.
- **Device List**: To view all paired Bluetooth devices.
- **Visibility**: To set whether your phone can be found by other devices when the Bluetooth function is enabled.
- **Rename**: To rename your phone.
- **My device Information**: To view the detailed information of your phone, such as the device name and device address.

17 Troubleshooting

If you encounter any problem when using your phone, try to solve the problem according to the following table. If the problem still occurs, contact the service provider or the dealer.

Problem	**Ensure that…**
The battery cannot be charged.	The charger is properly connected to your phone and the power socket.
The phone cannot be powered on.	The battery power is enough. The battery is properly installed. Press and hold .
You cannot make a call except an emergency call.	• The phone number is correct. • You are in the network service area. • You do not enable the call restriction function.
Bad call quality.	• The signal strength is strong enough. • If you are staying indoors, move near to a window.
During a call, the other side cannot hear your voice.	The microphone is not covered.

Problem	Ensure that…
The signal strength is not strong enough or your phone is often off line.	• The antenna is in good condition. • Move near to a place with strong signal strength.
Other Bluetooth devices cannot be found; sending or receiving data failed.	• The Bluetooth function is activated on both devices. • The distance between the two devices is less than ten meters. • No obstacles exist between the two devices. • The other device is not in the hidden state.
Your phone displays "No service found", "Service unavailable" or "Network problem".	• You are not in an area with weak magnetic field (in a tunnel or surrounded by buildings). If so, move to another area and try again. • Do not visit the service option without authorization from your service provider.

18 Warnings and Precautions

This section contains important information pertaining to the operating instructions of your device. It also contains information about how to use the mobile safely. Read this information carefully before using your device.

■ Electronic Device

Power off your device if using the device is prohibited. Do not use the device when it causes danger or interference with electronic devices.

■ Medical Device

- Power off your device and follow the rules and regulations set forth by the hospitals and health care facilities.
- Pacemaker manufacturers recommend that a minimum distance of 15 cm be maintained between a device and a pacemaker to prevent potential interference with the pacemaker. If you are using a pacemaker, use the device on the opposite side of the pacemaker and do not carry the device in your front pocket.
- Some wireless devices may affect the performance of the hearing aids. For any such problems, consult your service provider.

■ Potentially Explosive Atmospheres

Switch off your device in any area with a potentially explosive atmosphere, and comply with all signs and instructions. Areas that may have potentially explosive atmospheres include the areas where you would normally be

advised to turn off your vehicle engine. Triggering of sparks in such areas could cause an explosion or fire, resulting in bodily injuries or even deaths. Do not switch on the device at refueling points such as service stations. Comply with restrictions on the use of radio equipment in fuel depots, storage, and distribution areas, and chemical plants. Also, adhere to restrictions in areas where blasting operations are in progress. Before using the device, watch out for areas that have potentially explosive atmosphere that are often, but not always, clearly marked. Such locations include areas below the deck on boats, chemical transfer or storage facilities and areas where the air contains chemicals or particles such as grain, dust, or metal powders. Ask the manufacturers of vehicles using liquefied petroleum gas (such as propane or butane) if this device can be safely used in their vicinity.

■ Traffic Security

Observe local laws and regulations while using the device. Also, if using the device while driving a vehicle, please comply with the following guidelines:

- Concentrate on driving. Your first responsibility is to drive safely.
- Do not talk on the device while driving. Use hands-free accessories.
- When you have to make or answer a call, park the vehicle at the road side before using your device.
- RF signals may affect electronic systems of motor vehicles. For more information, consult the vehicle manufacturer.
- In a motor vehicle, do not place the device over the air bag or in the air bag deployment area. Otherwise, the device may hurt you owing to the strong force when the air bag inflates.
- Do not use your device while flying in an aircraft. Switch off your device before boarding an aircraft. Using wireless devices in an aircraft may be dangerous to the operation of the aircraft, disrupt the wireless telephone network, and may be considered illegal.

■ Operating Environment

- Do not use or charge the device in dusty, damp or dirty places or places with magnetic fields. Otherwise, the circuit may not function properly.
- The device complies with the RF specifications when the device is used near your ear or at a distance of 1.5 cm from your body. Ensure that the device accessories such as a device case and a device holster are not composed of metal components. Keep your device 1.5 cm away from your body to meet the requirement earlier mentioned.
- On a thunder and stormy day, do not use your device when it is being charged, to prevent any danger caused by lightning.
- When you are on a call, do not touch the antenna. Touching the antenna affects the call quality and results in increase in power consumption. As a result, the talk time and standby time are reduced.
- While using the device, observe the local laws and regulations, and respect others' privacy and legal rights.
- Use accessories authorized by manufacturers. Using unauthorized accessories will render the warranty null and void.

■ Preventing Hearing Damage

Using the receiver, earbuds, headphones, speakerphone, or earpieces at high volume can result in permanent hearing loss. Be extremely careful when listening at high decibel levels. Set the volume to a safe level. If you experience strange sounds in your ears like ringing or if you hear muffled speech, get your hearing checked. If you continue to use high volume, your hearing will soon get affected.

Hearing experts offer the following suggestions to protect your hearing:

- Reduce the time you use the receiver, earbuds, headphones, speakerphone, or earpieces at high volume.
- Do not increase the volume to block noisy surroundings.
- Reduce the volume if you can’t hear people speaking near you.

■ Safety of Children

Please comply with all precautions with regard to children's safety. Letting the child play with your device or its accessories, which may include parts that can be detached from the device, may prove dangerous, as it may present a choking hazard. Make sure that small children are kept away from the device and accessories.

■ Environment Protection

Follow all the local regulations regarding the disposal of your devices or electrical accessories (such as chargers, headsets, or batteries). Recycle them. Do not dispose of an exhausted battery or a used device in a garbage can.

■ Accessories

Use only the accessories, such as the charger, battery, and headset, delivered by manufacturer. Using accessories of other manufacturers or vendors with this device model might invalidate any approval or warranty applicable to the device, might result in the non-operation of the device, and might be dangerous.

■ Battery and Charger

- The battery can be charged and discharged hundreds of times before it eventually wears out. When the standby time and talk time are shorter than normal, replace the battery.
- Use the AC power supply defined in the specifications of the charger. An improper power voltage may cause fire or the charger may not function properly.
- Do not connect two poles of the battery with conductors such as metal materials, keys or jewelries. Otherwise, the battery may be short-circuiting and may cause injuries and burns on your body.

- Do not disassemble the battery or solder the battery poles. Otherwise, it may lead to electrolyte leakage, overheating, fire, or explosion.
- If battery electrolyte leaks out, make sure that the electrolyte does not touch your skin and eyes. When the electrolyte touches your skin or splashes into your eyes, wash your eyes with clean water immediately and consult a doctor.
- If the battery is damaged, or the color changes or gets abnormally heated while you charge or store the battery, remove the battery immediately and stop using it. Otherwise, it may lead to battery leakage, overheating, explosion, or fire.
- If the power cable is damaged (for example, the lead is exposed or broken), or the plug loosens, stop using the cable at once. Otherwise, it may lead to electric shock, short-circuit of the charger, or a fire.
- The travel charger of this device can meet safety requirements of the UL60950-1 certification. Comply with the security specifications in the UL manual.
- Do not dispose of batteries in fire as they may explode. Batteries may also explode if damaged.

■ Clearing and Maintenance

- The device, battery, and charger are not water-resistant Keep them dry. Protect the device, battery and charger from water or vapor. Do not touch the device and charger with a wet hand. Otherwise, it may lead to short-circuit or malfunction of the device and electric shock to the user.
- Do not place your device, battery, or charger in places where it can get damaged because of collision. Otherwise, it may lead to battery leakage, device malfunction, overheating, fire, or explosion.
- If the ambient temperature is considerably low or high, the capacity and life of the battery is reduced. When the temperature is lower than 0℃, performance of the battery is affected.

- Do not place magnetic storage media such as magnetic cards and floppy disks near the device. Radiation from the device may erase the information stored on them.
- Do not leave your device, battery, or charger in a very hot or cold place. Otherwise, they may not function properly and may lead to a fire or an explosion.
- Do not place sharp metal objects such as pins near the earpiece. The earpiece may attract these objects and hurt you when you are using the device.
- Before you clean or maintain the device, power off the device and disconnect it from the charger.
- Do not use any chemical detergent, powder, or other chemical agents (such as alcohol and benzene) to clean the device and the charger. Otherwise, parts of the device may get damaged or a fire can be caused. You can clean the device and the charger with a piece of damp and soft antistatic cloth.
- Do not dismantle the device or accessories. Otherwise, manufacturer is not liable to pay for damages as the device and accessories are not covered by warranty.

■ Emergency Call

You can use your device for emergency calls in the service area. The connection, however, cannot be guaranteed in all conditions. You should not rely solely on the device for essential communications.

■ Certification Information (SAR)

THIS DEVICE MEETS THE GOVERNMENT'S REQUIREMENTS FOR EXPOSURE TO RADIO FREQUENCY ELECTROMAGNETIC FIELD.

Your device is a low-power radio transmitter and receiver. When it is turned on, it emits low levels of radio frequency energy (also known as radio waves or radio frequency fields).

Governments around the world have adopted comprehensive international safety guidelines, developed by scientific organizations, e.g. International Commission on Non-Ionizing Radiation Protection (ICNIRP) and Institute of Electrical and Electronics Engineers Inc. (IEEE), through periodic and thorough evaluation of scientific studies. These guidelines establish permitted levels of radio wave exposure for the general population. The levels include a safety margin designed to assure the safety of all persons, regardless of age and health, and to account for any variations in measurements.

Specific Absorption Rate (SAR) is the unit of measurement for the amount of radio frequency energy absorbed by the body when using a device. The SAR value is determined at the highest certified power level in laboratory conditions, but the actual SAR level of the device while being operated can be well below the value. This is because the device is designed to use the minimum power required to reach the network.

Before a device model is available for sale to the public, it must be tested and certified by the Federal Communications Commission (FCC), ensuring that it does not exceed the limit established by the government-adopted requirement for safe exposure. The tests are performed in positions and locations (that is, at the ear and worn on the body) as required by the FCC for each model. For body worn operation, this device has been tested and meets FCC RF exposure guidelines when the handset is positioned a minimum of 15 mm from the body with an accessory that contains no metal part. Use of other accessories may not ensure compliance with FCC RF exposure guidelines.

The SAR limit adopted by USA and Canada is 1.6 watts/kilogram (W/kg) averaged over one gram of tissue. The highest SAR value reported to the FCC and IC for this device type when tested for use at the ear is 1.01W/kg, and when properly worn on the body is 1.24W/kg.

The SAR limit adopted by the CNIRP is 2.0 W/kg over one gram of tissue. The value guarantees a safe distance to protect device users and the

difference caused by measurement errors. Under different test requirements and frequency, the value varies.

■ Statement

This equipment has been tested and found to comply with the limits for a Class B digital device, pursuant to Part 15 of the FCC Rules.

This device complies with part 15 of the FCC Rules. Operation is subject to the following two conditions: (1) This device may not cause harmful interference, and (2) this device must accept any interference received, including interference that may cause undesired operation.

These limits are designed to provide reasonable protection against harmful interference in a residential installation. The operation is subject to the condition that this device does not cause harmful interface.

This equipment generates, uses and can radiate radio frequency energy and, if not installed and used in accordance with the instructions, may cause harmful interference to radio communications. There is no guarantee, however, that interference does not occur in a particular installation. If this equipment does cause harmful interference to radio or television reception, which can be determined by turning the equipment off and on, the user is encouraged to try to correct the interference by one or more of the following measures:

- Reorient or relocate the receiving antenna.
- Increase the separation between the equipment and receiver.
- Connect the equipment into an outlet on a circuit different from that to which the receiver is connected.
- Consult the dealer or an experienced radio/TV technician for help.

* This device should be installed and operated with a minimum distance of 20 cm between the radiator and your body when using it via USB cable.

Warning: Changes or modifications made to this equipment not expressly approved by manufacturer may void the FCC authorization to operate this equipment.