RRU3201 V100R001C01 Installation Guide

Issue: 01
Part Number:
Date: 2009-08-10

HUAWEI TECHNOLOGIES Co., Ltd.

Contents

Safety Information

Following All Safety Precautions

Before any operation, read the instructions and precautions in this document carefully to minimize the possibility of accidents.

The Danger, Caution, and Note items in the documents do not cover all the safety precautions that must be followed. They only provide the generic safety precautions for operations.

When operating Huawei products and equipment, you must comply with safety precautions and special safety instructions related to corresponding equipment provided by Huawei. The safety precautions in the document are related to only Huawei products. Huawei is not liable for any consequence that results from the violation of universal regulations for safety operations and safety codes on design, production, and equipment use.

Complying with the Local Safety Regulations

When operating the device, comply with the local safety regulations. The safety precautions provided in the documents are supplementary. You must comply with the local safety regulations.

Qualified Personnel Only

The personnel in charge of installation and maintenance must be trained and master the correct operating methods and safety precautions before beginning work.

Symbols

DANGER	*Indicates a hazard with a high level of risk, which if not avoided,will result in death or serious injury.*
WARNING	*Indicates a hazard with a medium or low level of risk, which if not avoided, could result in minor or moderate injury.*
CAUTION	*Indicates a potentially hazardous situation, which if not avoided,could result in equipment damage, data loss, performance degradation, or unexpected results.*
TIP	*Indicates a tip that may help you solve a problem or save time.*
NOTE	*Provides additional information to emphasize or supplement important points of the main text.*

Safety of Personnel

- The high voltage power supply provides power for running the system. Direct contact with the high voltage power supply or contact through damp objects may result in fatal danger.
- Non-standard and improper high voltage operations may result in fire and electric shock.
- In a thunderstorm, do not perform operations on high voltage and AC power supply facilities or on a steel tower and mast.
- Ground the device before powering on the device. Otherwise, the personnel and device are in danger.
- Power off the device before performing operations on the power supply equipment.
- High power radio-frequency signals are harmful to human body. Before installing or maintaining an antenna on a steel tower or mast with a large number of transmitter antennas, the operator should coordinate with all parties to ensure that the transmitter antennas are shut down.
- When handling optical fibers, do not stand close to, or look into the optical fiber outlet with unaided eyes.
- Protect yourself when drilling holes. Flying dust may hurt your eyes or you may inhale the dust.
- Power off the batteries before connecting the cables to the batteries. Otherwise, casualties may occur.
- When working at a height, be cautious about falling objects.

Device Safety

- Check the electrical connection of the device before operation and ensure that the device is reliably grounded.
- The static electricity generated by the human body may damage the electrostatic sensitive components on the circuit board, such as the large-scale integrated circuit (LIC). Wear an ESD wrist strap or ESD gloves when performing the operation.
- When working on batteries, take measures to prevent short circuits in the batteries and electrolyte spill/loss. The electrolyte may erode metal and boards, or even cause rust of the equipment or short circuits in the boards.
- When the equipment is unpacked, it must be powered on in 24 hours. The maximum duration of the power-off state of the equipment is 24 hours during maintenance.

Installation Tools

 Hammer drill	 ESD gloves	 Vacuum cleaner
 Heat gun	 Phillips screwdriver (M3～M6)	 Flat-head screwdriver (M3 to M6)
 Claw hammer	 Knife	 Wire Stripper
 Power cable crimping tool	 Cable cutter	 Adjustable wrench (with the diameter of at least 32 mm)
 Level	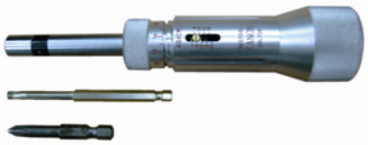 Torque screwdriver	 Combination wrench (21mm~21mm) for pole installation (17mm~17mm) for pole installation
 Multimeter	 Marker	 Measuring tape

Space Requirements (Unit: mm)

a RRU Dimensions

b Recommended Clearance for a Single RRU

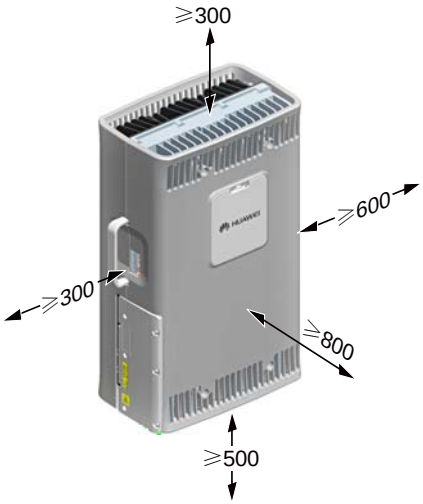

c Minimum Clearance for a Single RRU

d Recommended Clearance for Multiple Centralized RRUs

e Minimum Clearance for Multiple Centralized RRUs

Installation Modes

On a metal pole | On a wall | On a U-steel | On an angle steel

NOTE

The following figure shows the specifications of the metal pole, angle steel, and U-steel where the RRU is installed.

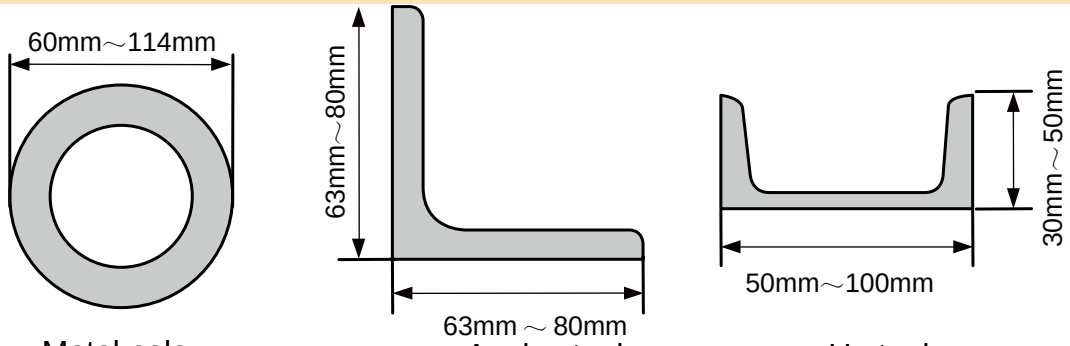

Metal pole | Angle steel | U-steel

WARNING

- A maximum of two RRUs can be installed on a metal pole with a diameter of 60 mm to 76 mm, and the installation mode must be standard mode. Three or more RRUs must be installed on a metal pole with a diameter of 76 mm to 114 mm in a centralized way.
- It is recommended that only one RRU be installed on a U-steel or angle steel.
- When installed on a tower, one RRU can be installed only in standard mode or reverse mode rather than side-mounted. Two RRUs cannot be installed in back-to-back mode.

The RRU can be installed on the tower. For details, see page 24 Lifting the RRU and Installation Components to the Tower.

The following figures show the installations of multiple RRUs on the metal poles.

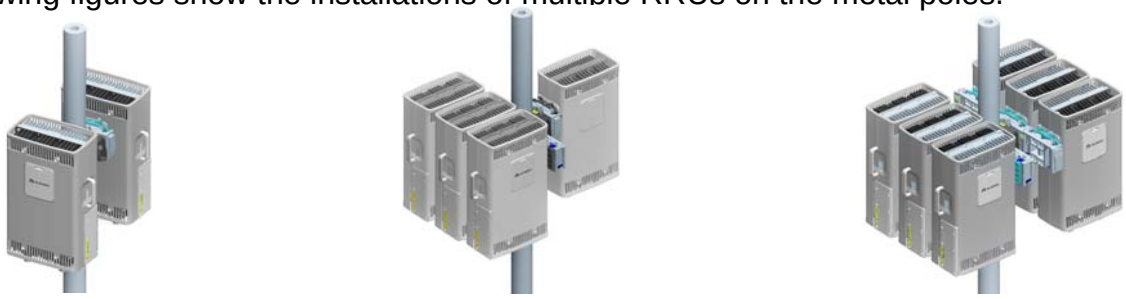

2RRU | 4RRU | 6RRU

Installation Modes

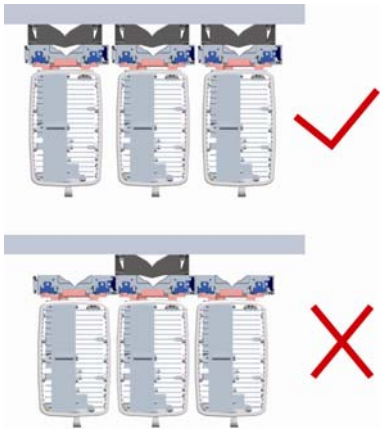

WARNING

The brackets cannot be combined when the RRUs are installed on the wall.

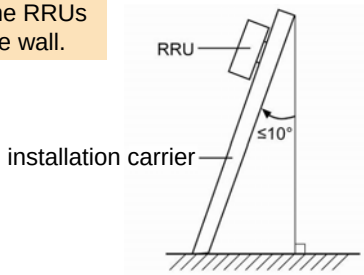

When the RRU is installed on a U-steel or angle steel, the angle between the U-steel or angle steel and the longitudinal direction cannot exceed 10 degrees.

Installation Procedure

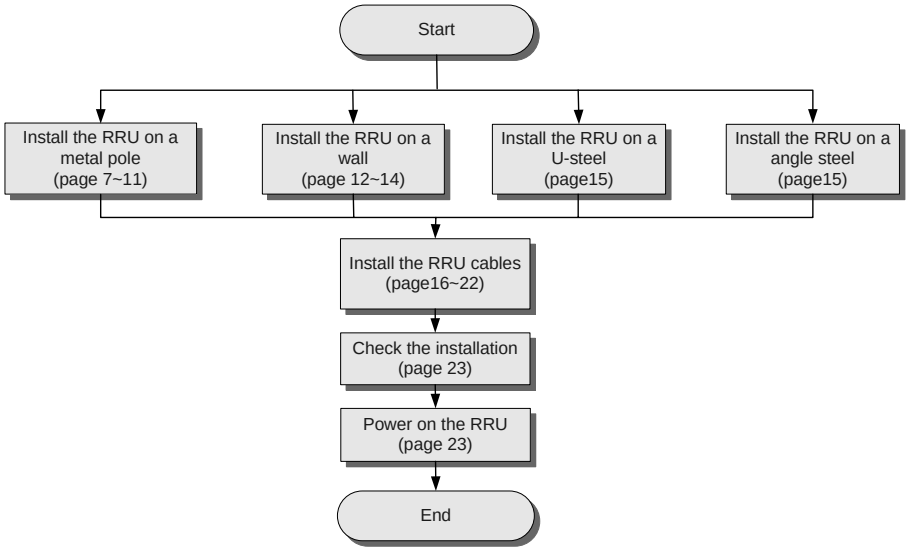

Components Delivered with the RRU

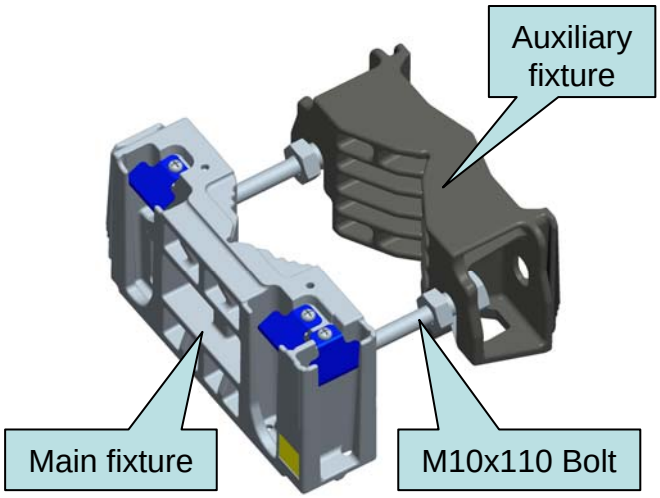

Fixture assembly for installing the RRU

Front of the RRU

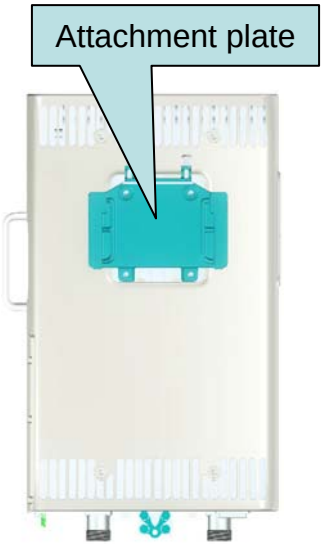

Back of the RRU

Installing the RRU on a Metal Pole

a Installing a Single RRU in Ordinary Mode

1. Install the main fixture.

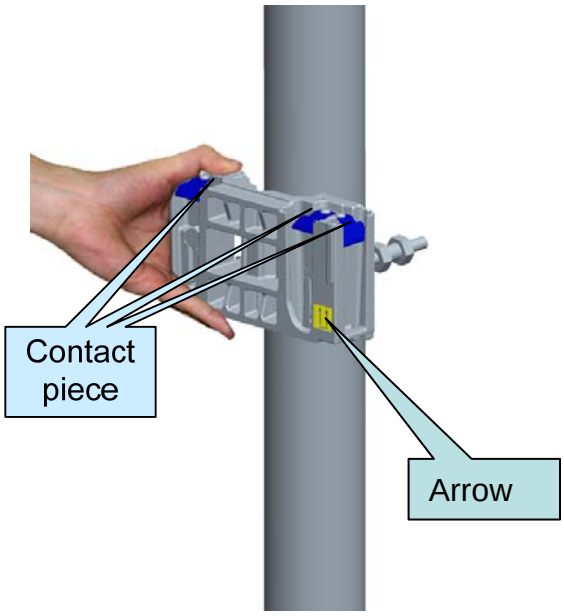

CAUTION

1. Before installing the main fixture, ensure that the contact piece on the fixture is fixed.
2. When installing the main fixture, keep the arrow on the main fixture upward.

NOTE

It is recommended that the bottom of the main fixture be 1200 mm to 1600 mm above the ground for easy maintenance.

2. Install the auxiliary fixture between the nuts of the dual-nut bolt assembly on the main fixture.

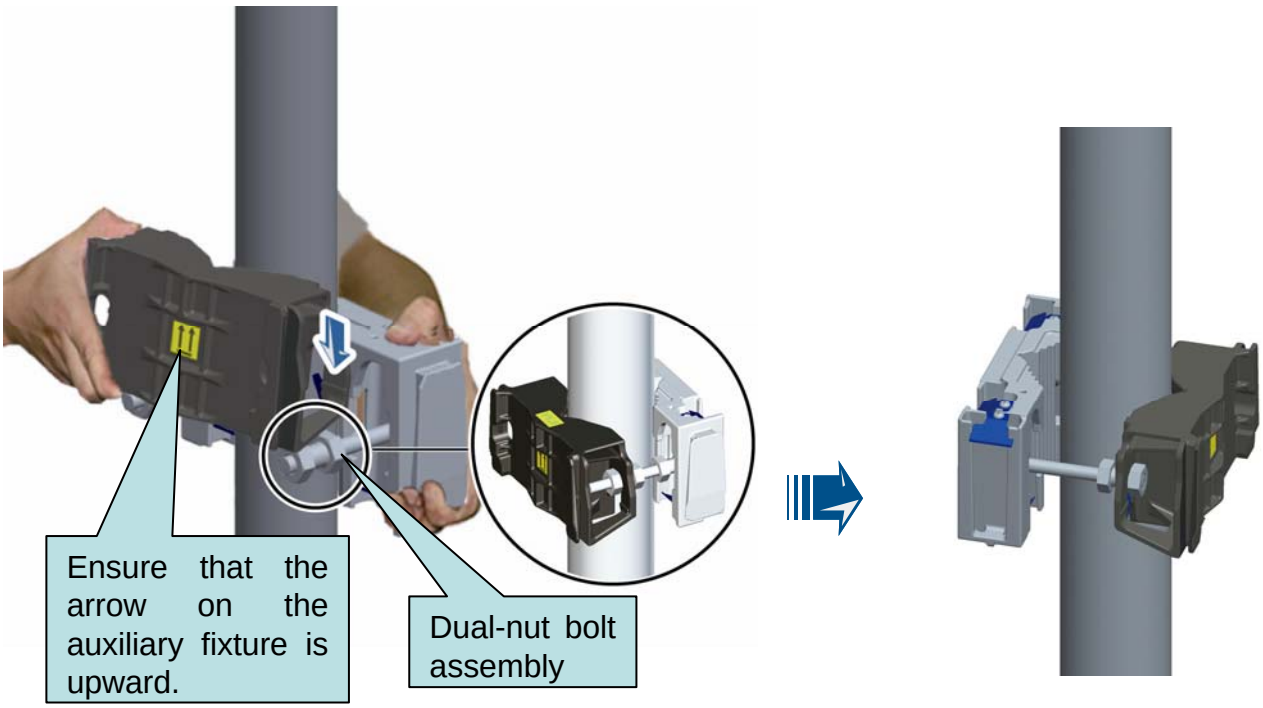

TIP

You can fit the auxiliary fixture on one of the dual-nut bolt assemblies before the installation. Thus, you can simply install the auxiliary fixture by fitting the other end of it on the other dual-nut bolt assembly.

NOTE

Fit the auxiliary fixture into the dual-nut bolt assemblies.

Installing the RRU on a Metal Pole

3. Use an adjustable wrench (with the diameter of at least 21 mm) to tighten the dual-nut bolt assemblies. In this way, the main and auxiliary fixtures are securely mounted on the pole.

CAUTION

When tightening the nuts, ensure that the two dual-nut bolt assemblies are tightened simultaneously. The fastening torque is 40 N• m.

4. Install the RRU on the main fixture.

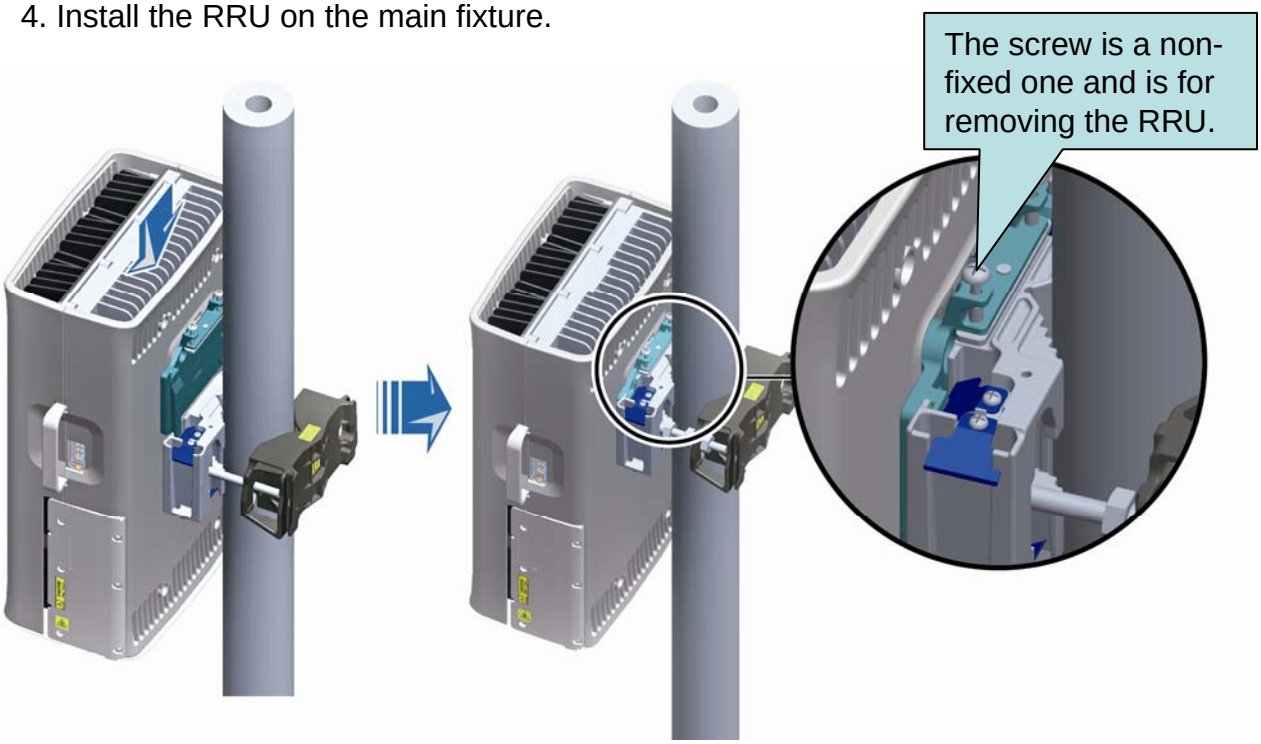

CAUTION

1. When you perform this operation, you need to place the foam pads or paper under the RRU to avoid any damage to the shell.
2. The RF port at the bottom of the RRU does not have load bearing capacity. Do not place the RRU on the ground on its bottom during the installation.

Installing the RRU on a Metal Pole

b Installing Two RRUs in Back-To-Back Mode

1. Install an RRU first. For details, see page 7 Installing a Single RRU in Ordinary Mode.

2. Install the main fixture of another RRU. Ensure that the main and auxiliary fixtures are perfectly fitted.

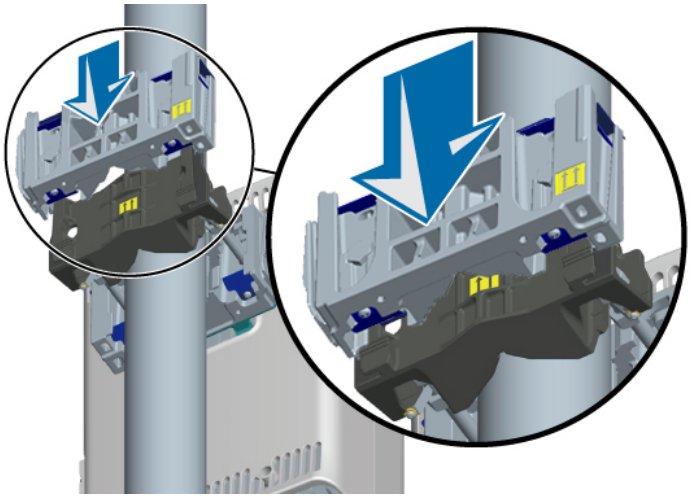

3. Reinstall the cover plate and attachment plate on the second RRU to interchange their positions.

4. Install the second RRU on the main fixture in reverse mode.

NOTE
Ensure that the cabling cavities of the two RRUs face the same direction when installing the RRUs

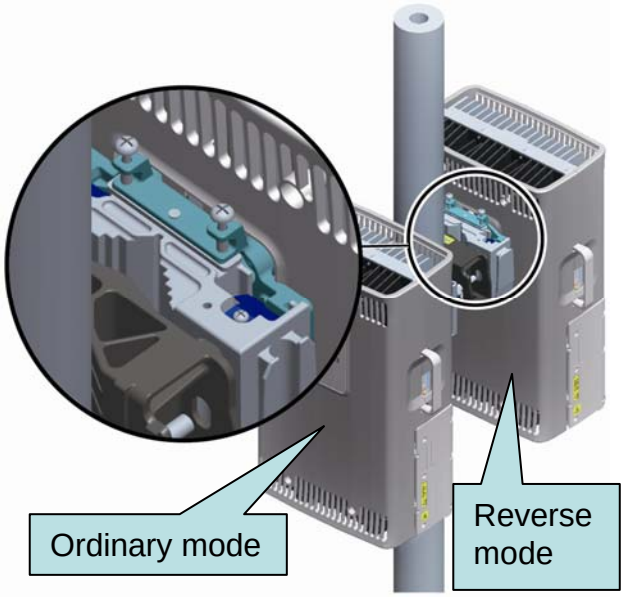

Installing the RRU on a Metal Pole

C Installing Multiple RRUs in Centralized Mode

1. Reinstall the attachment plate on the back and cover plate on one side to interchange their positions.

2. Install an RRU on a main fixture.

3.Install another main fixture.

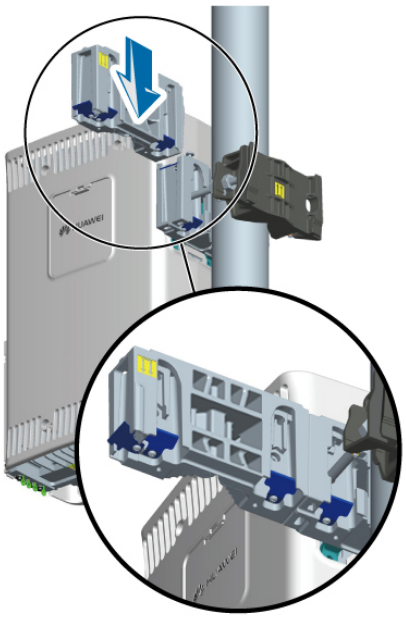

4. Install another RRU on the second main fixture.

Installing the RRU on a Metal Pole

C Installing Multiple RRUs in Centralized Mode

5. nstall a third main fixture.

6. Install a third RRU on the third main fixture.

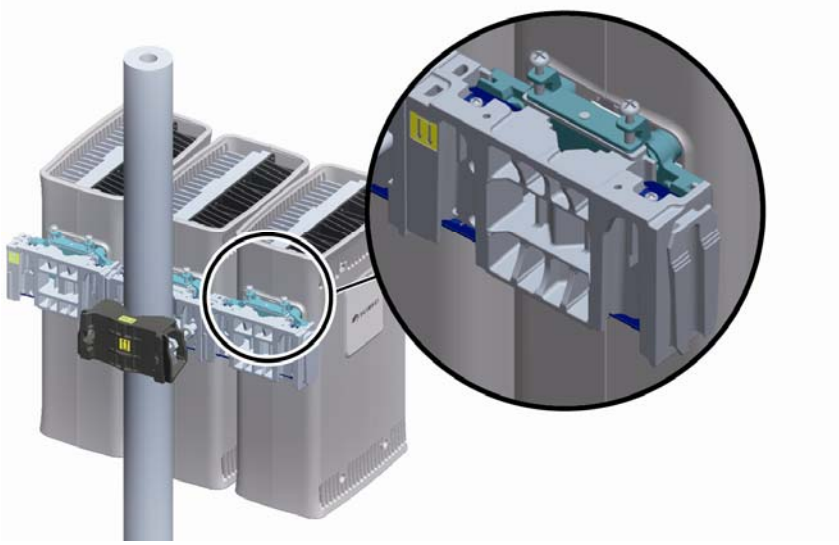

7. Install a fourth RRU on the main fixture. For details, see step 2 to step 4 on page 9 Installing Two RRUs in Back-To-Back Mode.

Installing the RRU on a Wall

1. Place the auxiliary fixture on the wall at the installation position , use a level bar to measure the levelness of the fixture, and then mark the anchor points by using a marking pen.

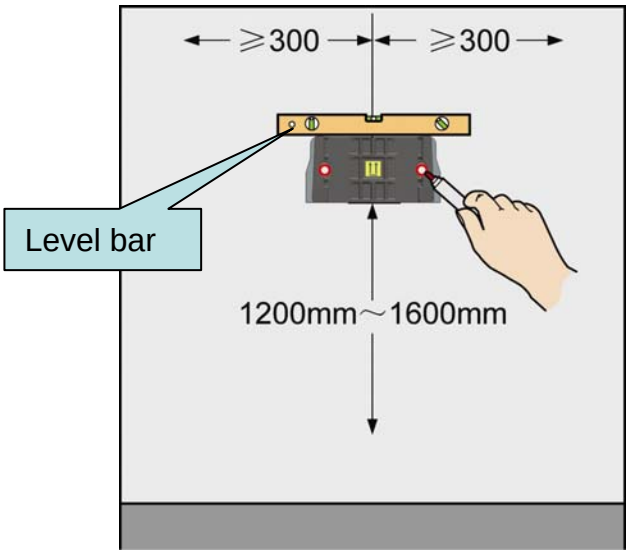

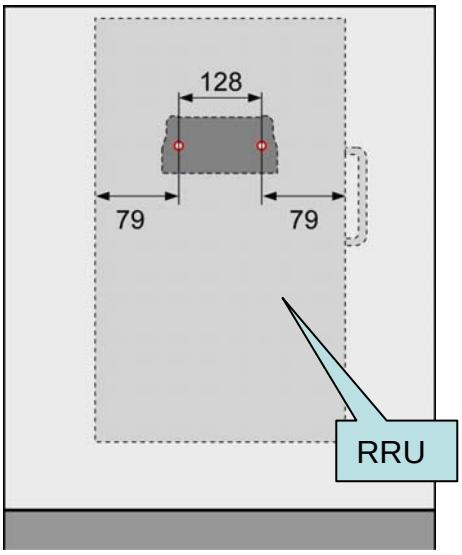

NOTE

It is recommended that the bottom of the auxiliary fixture be 1200 mm to 1600 mm above the ground.

2. Drill holes at the anchor points and then install the expansion bolt assemblies.

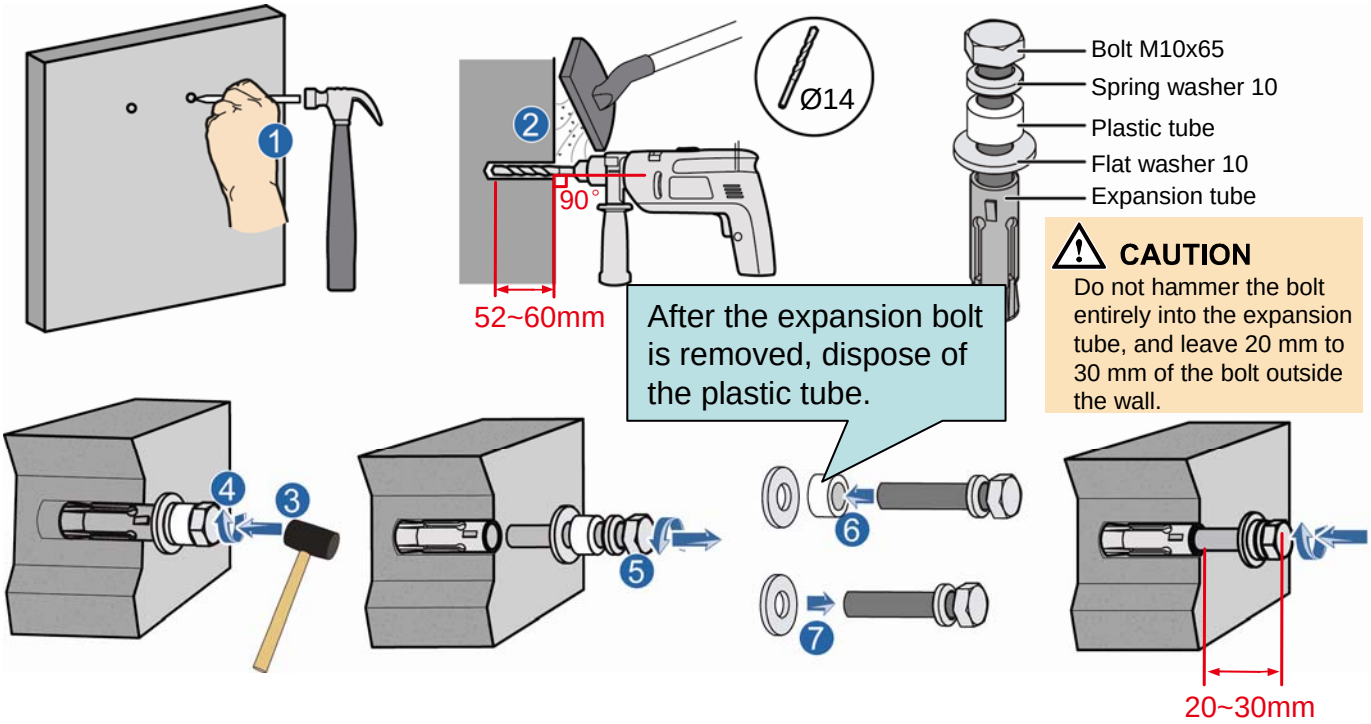

CAUTION

Do not hammer the bolt entirely into the expansion tube, and leave 20 mm to 30 mm of the bolt outside the wall.

CAUTION

When RRUs are installed on a wall, the specifications of the wall are as follows:

- For one RRU, the wall has a weight-bearing capacity of 76 kg.
- The fastening torque of the expansion bolt reaches 30 N·m, the expansion bolt works properly, and no damages such as cracks are on the wall.

3. Fit the auxiliary fixture on the expansion bolts downward, and then tighten the bolts by using a combination wrench (with the diameter of at least 17 mm).

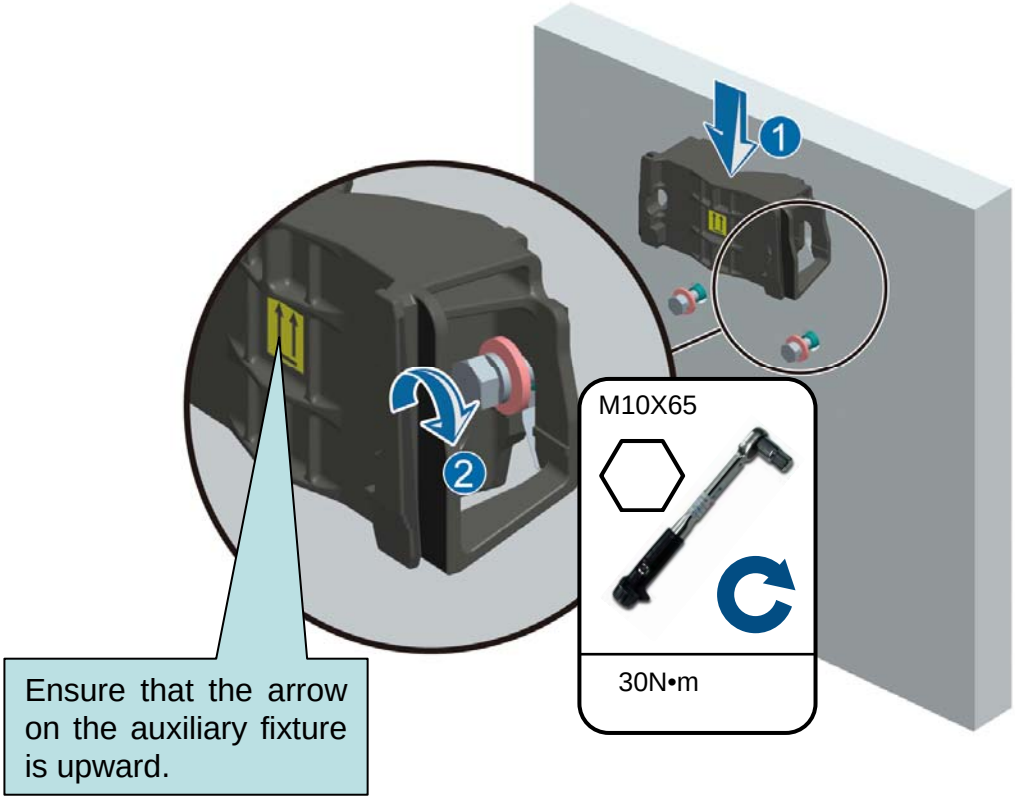

4. Install the main fixture.

Installing the RRU on a Wall

5. Install the RRU.

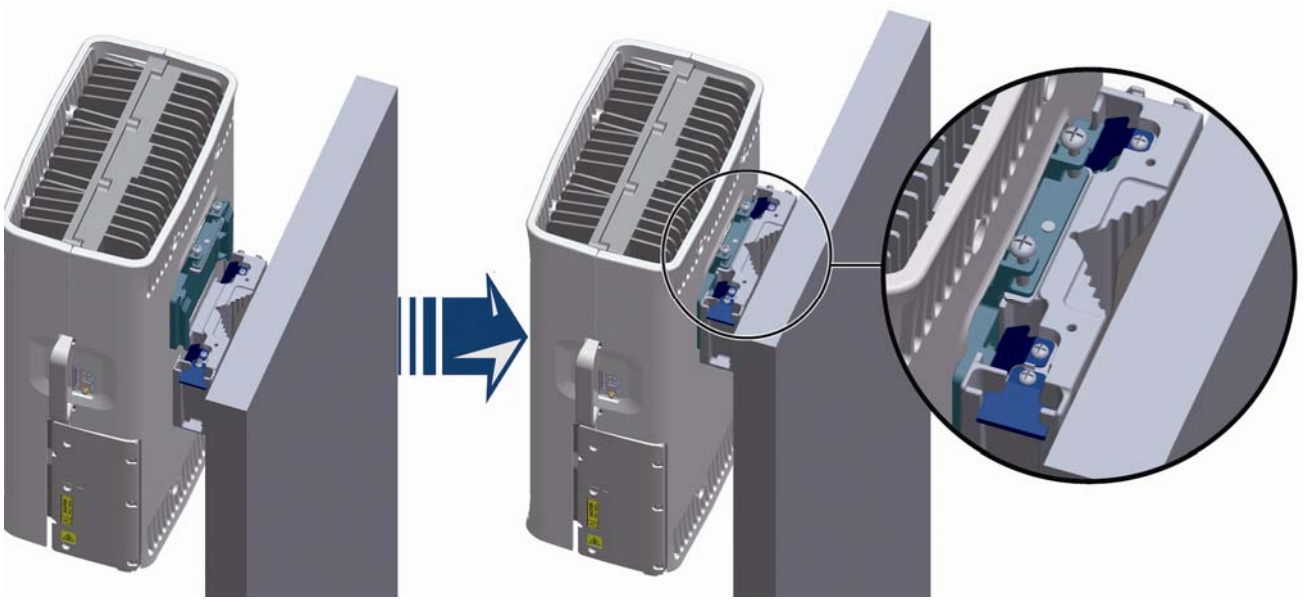

6. Install Multiple RRUs.

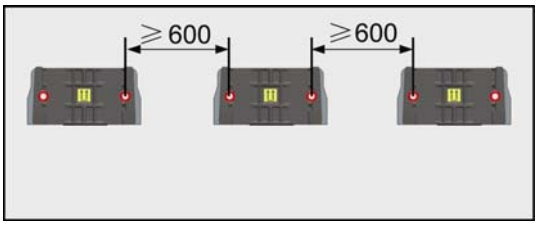

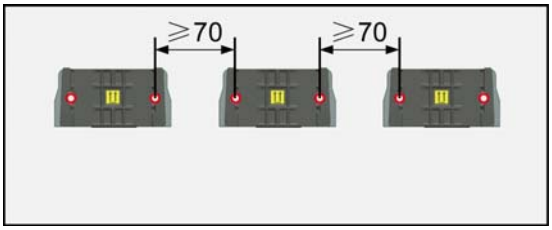

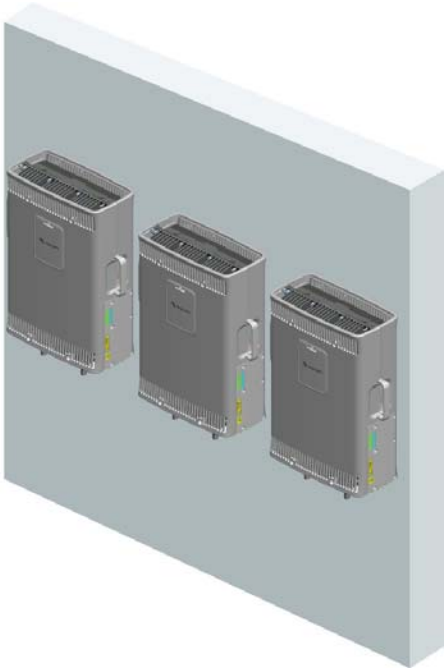

Installing the RRU on a U-Steel

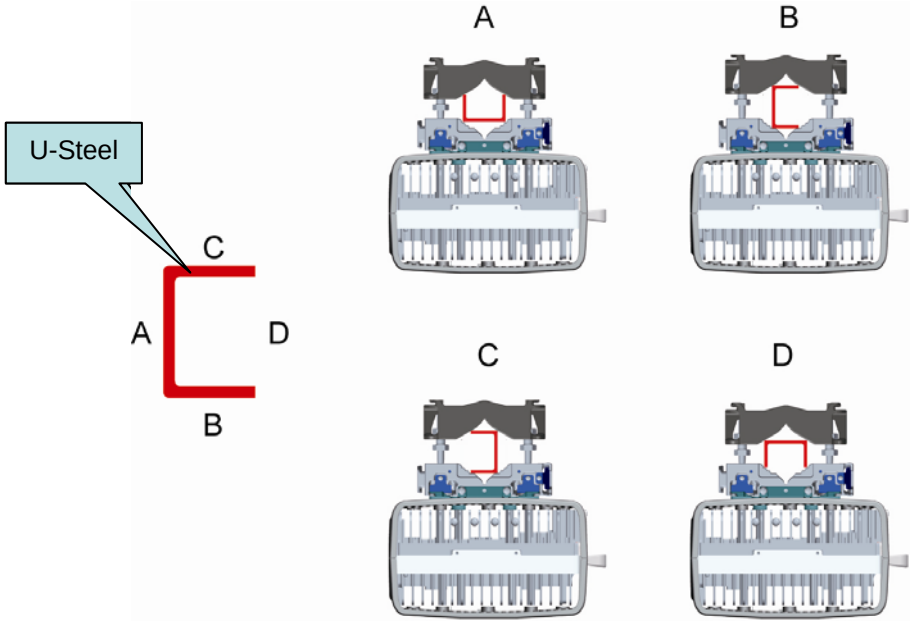

Top view

NOTE

The procedure for installing the RRU on a U-steel is the same as that for installing the RRU on a metal pole.

Installing the RRU on an Angle Steel

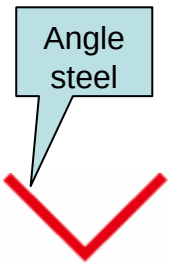

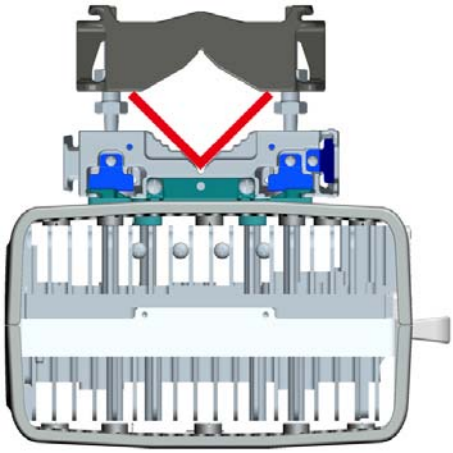

Top view

NOTE

The procedure for installing the RRU on an angle steel is the same as that for installing the RRU on a metal pole.

Installing the RRU Cables

a RRU Cable Connections

Cable List

Cable	Connector Type	Connector to…
1 PGND cable (16mm²)	OT terminal（M6)	Grounding bolt on the RRU
	OT terminal	Nearest grounding bar
2 Antenna jumper	DIN male connector	Ports labeled ANT_TX/RXA and ANT_TX/RXB on the RRU (Only the ANT_TX/RXA port supports the OOK signal).
	DIN male connector	Feeder or antenna
3 Power cable	Two OT terminals (M4）	The blue OT terminal is connected to socket labeled NEG(-)0 in the RRU cabling cavity. And the black OT terminal is connected to socket labeled RTN(+)0.
	Bare wire	External power supply
4 CPRI optical cable	DLC connector	The connectors labeled 1A and 1B are connected to the optical module on the port labeled CPRI_W on the RRU
	DLC connector	The connectors labeled 2A and 2B are connected to port labeled CPRI0, CPRI1 or CPRI2 on the LBBP board of the BBU.
5 Alarm cable	DB9 male connector	Port labeled RET/MON at the bottom of the RRU
	Eight cord end terminals	External alarm devices
6 AISG multi-wire cable	Waterproof DB9 connector	Port labeled RET/MON on the RRU
	Standard AISG female connector	Standard AISG male connector of the AISG extension cable or RCU
7 AISG extension cable	Standard AISG male connector	Standard AISG female connector of the AISG multi-wire cable
	Standard AISG female connector	Standard AISG male connector of the RCU

Single RRU

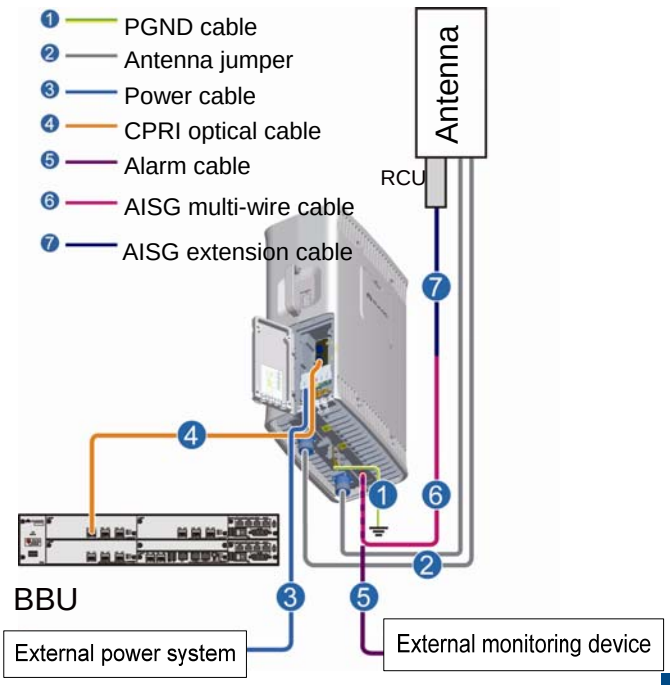

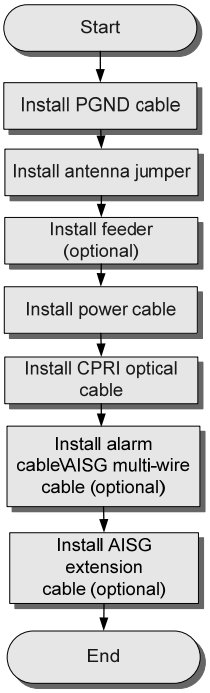

NOTE

The RET/MON port on the RRU is multi-functional, and can be installed with either AISG multi-wire cable or alarm cable. When the length of the AISG multi-wire cable is not enough, you can choose the optional AISG extension cable.

Installing the RRU Cables

Multiple RRU

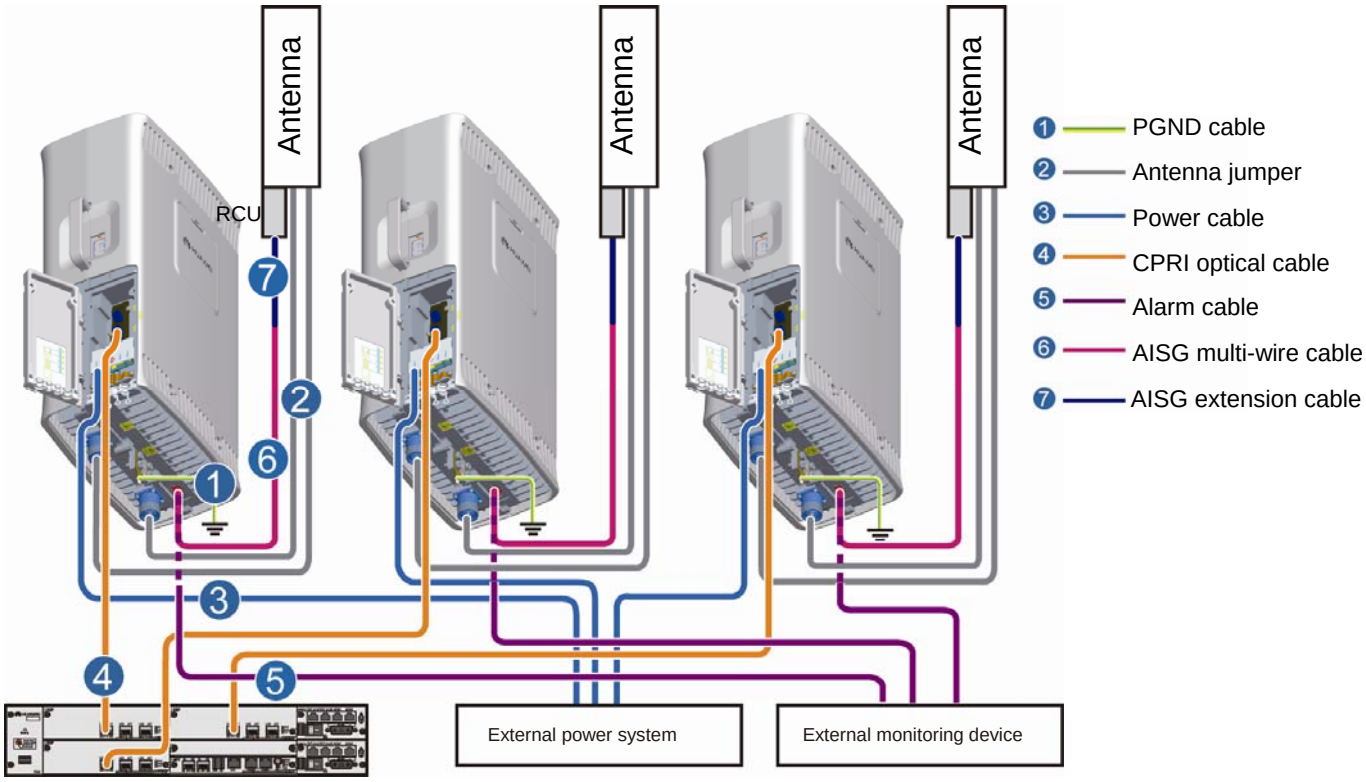

NOTE

For detail information of the cable, see Cable List on Page 17.

b Open the cover plate of the RRU cabling cavity

Installing the RRU Cables

c Cabling Cavity of the RRU

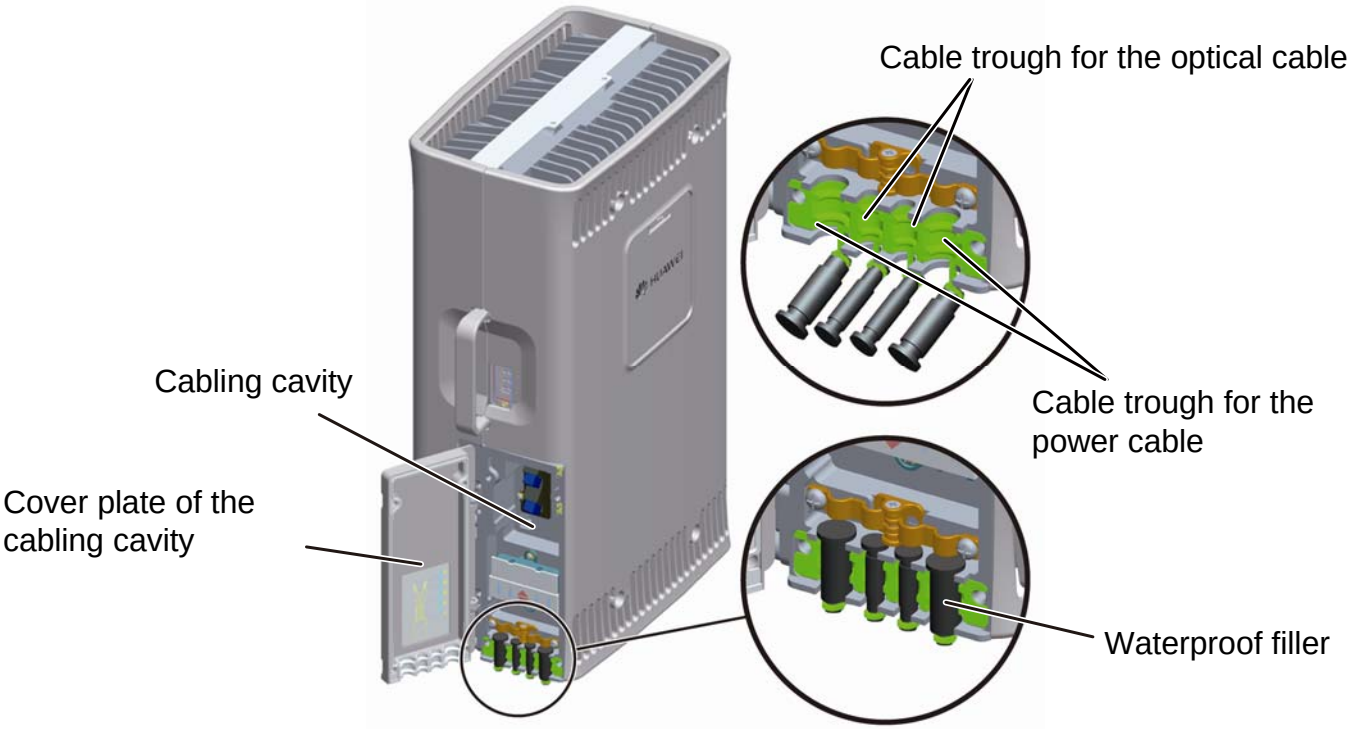

d Cable Connections of the RRU

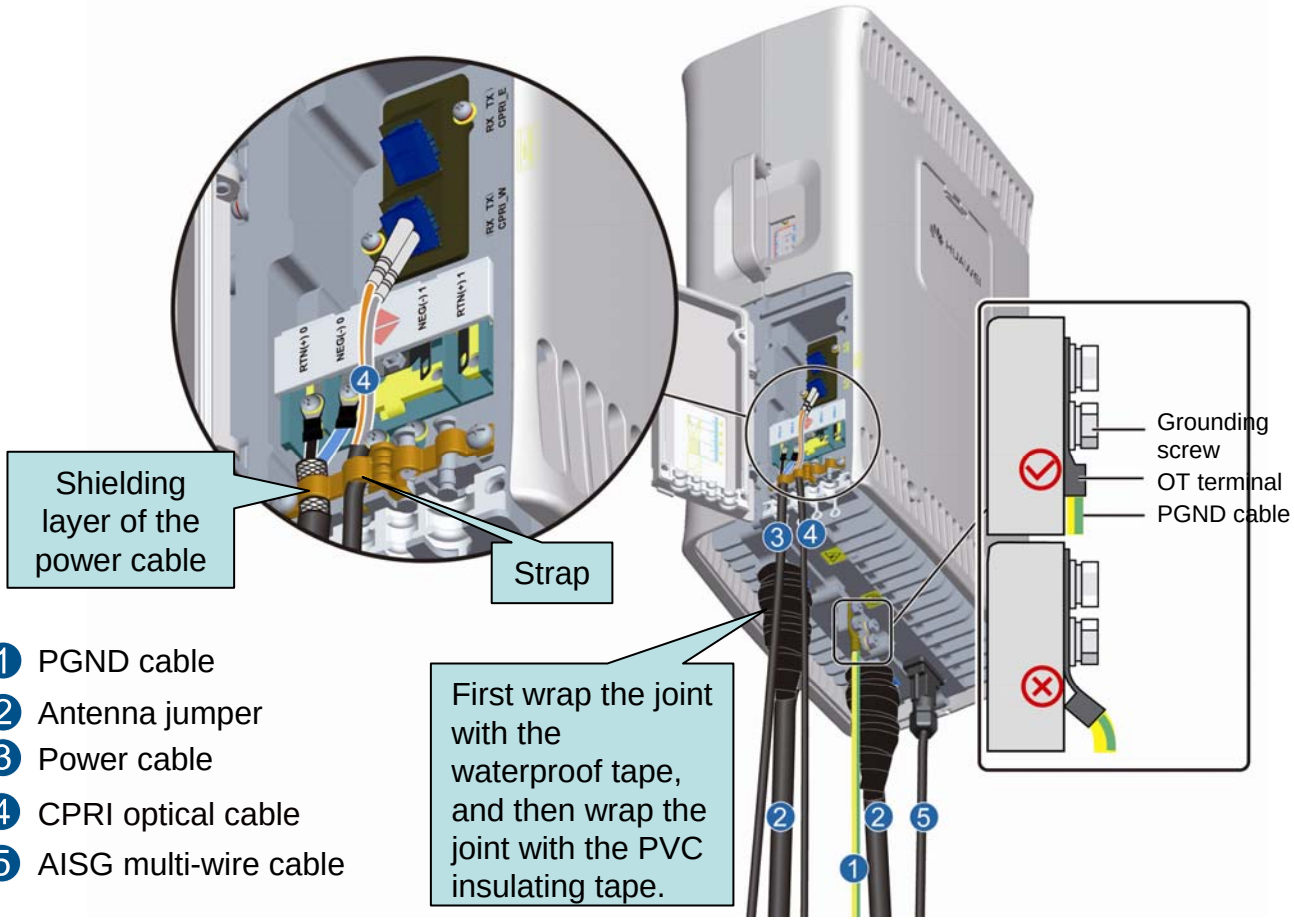

1. PGND cable
2. Antenna jumper
3. Power cable
4. CPRI optical cable
5. AISG multi-wire cable

Installing the RRU Cables

f Cable Connections of the RRU

CAUTION

- Use the power cable clip to press the shielding layer tightly and ensure that the lower part of the shielding layer does not exceed the position shown in the preceding figure.
- The grounding resistance of the PGND cable should be less than 10 ohms. The PGND cable cannot be connected to the grounding terminal.
- Ground the shielding layer of the other end of the power cable.
- After the cables are installed on the RRU, insert the waterproofing fillers into the idle cable holes.

NOTE

- When wrapping the waterproofing tape, apply even force to extend the tape until the width of the tape is 1/2 of the original width.
- Wrap the joint spirally upward, downward, and then upward again. In other words, the joint is wrapped by three layers of the tape. Ensure that the upper layer of the tape covers about half of the lower layer when wrapping up the tape.
- Do not remove the dustproof cap from the idle antenna port. Perform the waterproof, dustproof, and smokeproof treatment if necessary. Use the waterproof tape to wrap the joints in outdoor applications.

For details on how to add the OT terminals to the power cable, see pages 26 to 27 Adding OT Terminals to the Power Cable of the RRU.

For details installing the Optical Module, see page 28 Installing the Optical Module.

e Close the cover plate of the RRU cabling cavity

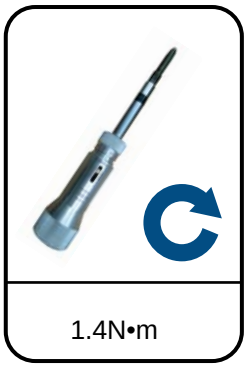

CAUTION

1. The screw on the cover plate is tightened until the fastening torque is 1.4 N• m.
2. The screws on the cover plate are tightened in the order shown in the preceding figure.

Installing the RRU Cables

g RRU+APM30H

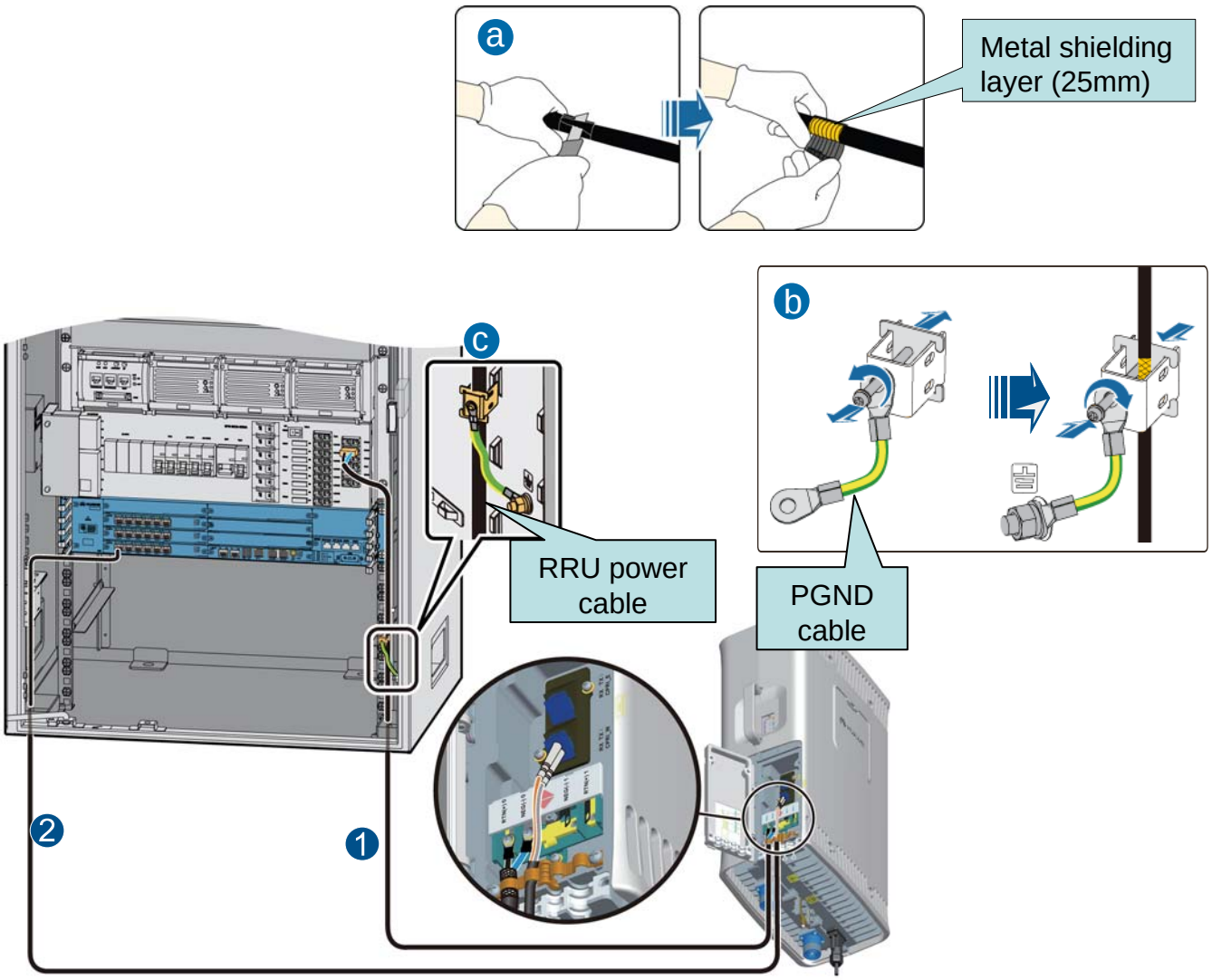

1. RRU power cable
2. CPRI optical cable

NOTE

1. The RRU power cable is connected to one group of the RRU0 to RRU5 terminals of the PDU.
2. Strip the jacket off the RRU power cable for a small part, press the exposed shielding layer on the strap, and then connect the PGND cable on the strap to the nearest grounding bolt on the side in the APM30/APM30H, as shown in a, b, and c.

Installing the RRU Cables

g RRU+BBU on the wall

❶ RRU power cable

❷ CPRI optical cable

❸ BBU power cable

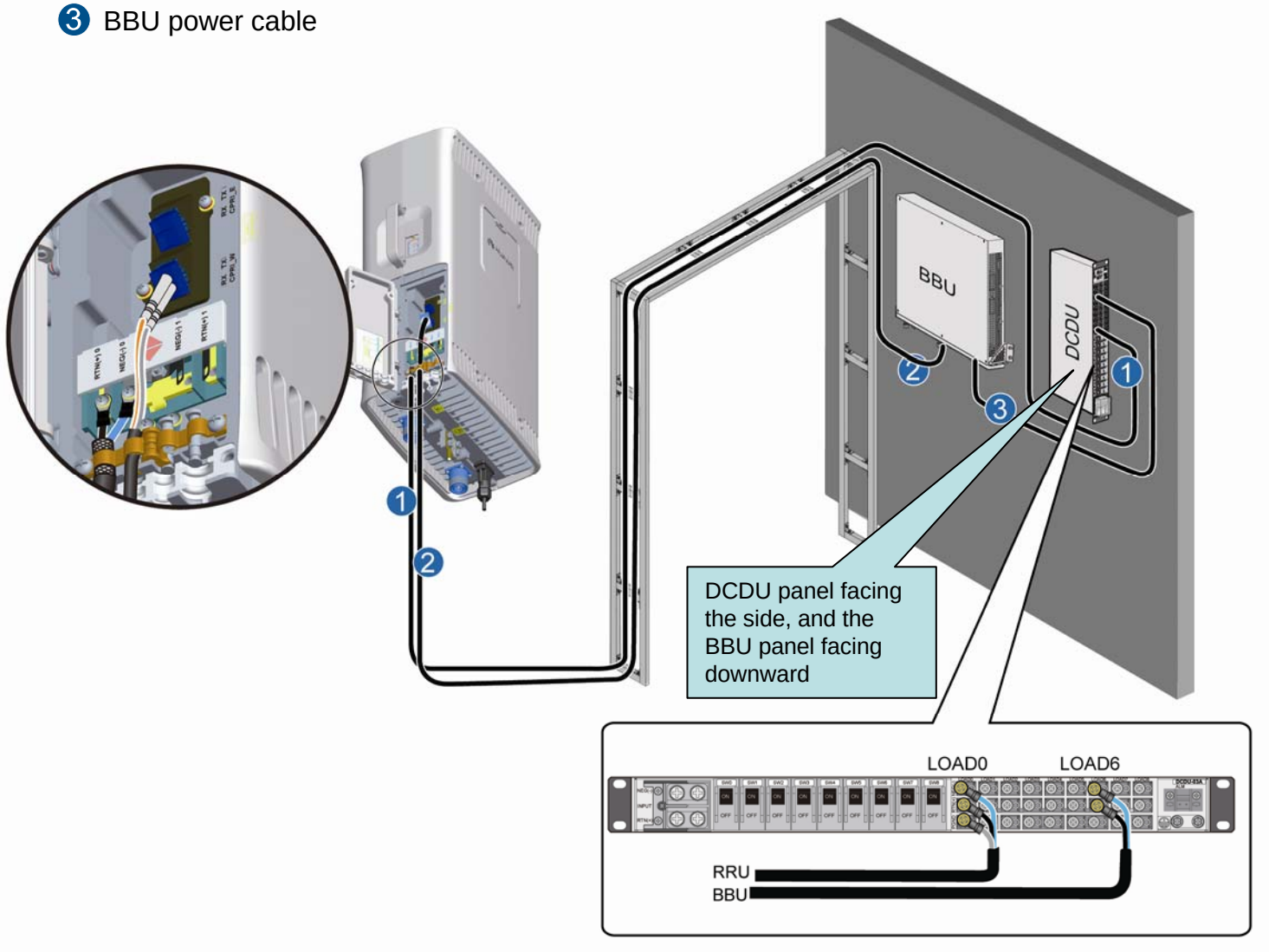

NOTE

- The RRU power cable is connected to LOAD0 to LOAD5 on the DCDU-03C.

Installing the RRU Cables

h RRU+19-Inch cabinet

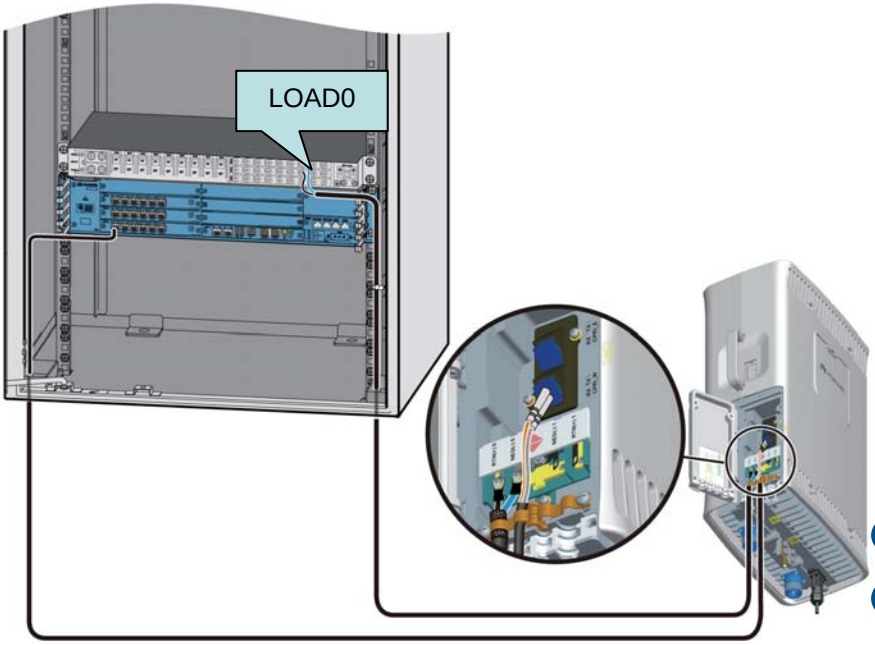

1 RRU power cable

2 CPRI optical cable

NOTE

- At the end of the RRU power cable connected to the DCDU-03C, you need to make the shielding layer of the power cable into an OT terminal, and then connect the OT terminal to the PGND terminal of the corresponding port on the DCDU-03C. For details about making an OT terminal, see pages 26 and 27.
- The RRU power cable is connected to LOAD0 to LOAD5 on the DCDU-03C.

i RRU+TMC/TMC11H

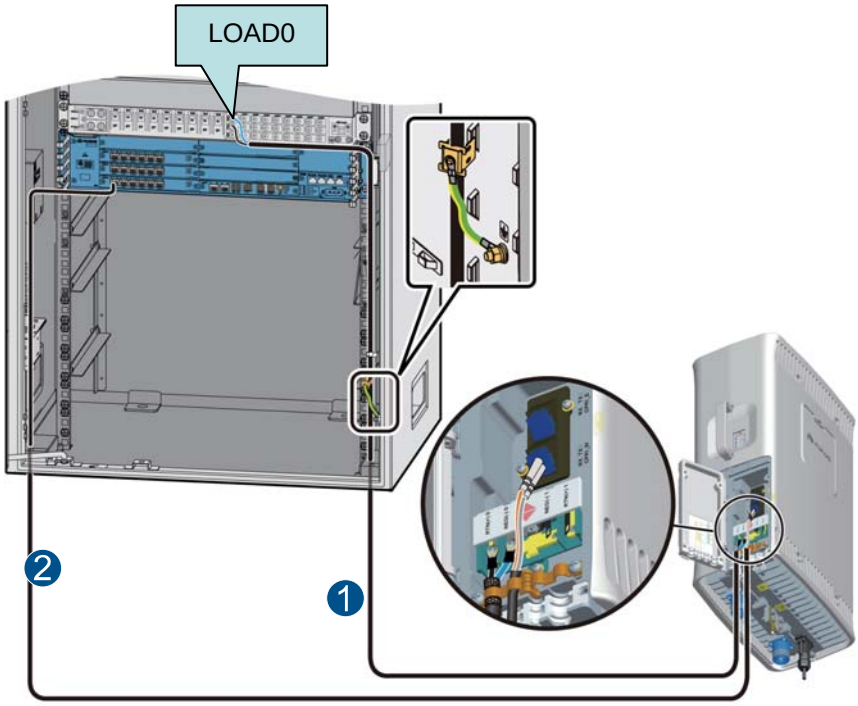

1 RRU power cable

2 CPRI optical cable

NOTE

- At the end of the RRU power cable connected to the DCDU-03C, you need to make the shielding layer of the power cable into an OT terminal, and then connect the OT terminal to the PGND terminal of the corresponding port on the DCDU-03C. For details about making an OT terminal, see pages 26 and 27.
- The RRU power cable is connected to LOAD0 to LOAD5 on the DCDU-03C.

RRU Hardware Installation Checklist

No.	Items
1	The position for each equipment conforms to the engineering design and meets the space requirement. Sufficient space is reserved for equipment maintenance.
2	The RRU is properly installed.
3	The cover plate is fastened to the RRU cabling cavity.
4	Waterproof check: The empty cable troughs in the cabling cavity of the RRU are waterproofed. The cover plate is tightly buckled on the cabling cavity of the RRU. The RF ports that are not connected with RF cables are capped and waterproofed. The waterproof caps are fastened.
5	No joint lies in the middle of the power cable or the PGND cable.
6	The lugs at both ends of the power cable or the PGND cable are securely soldered or crimped.
7	The power cable and PGND cable are not short-circuited or reversely connected and are not damaged or broken.
8	The power cable, PGND cable and other cables need to be bound separately.
9	The operating grounding and protection grounding of the base station and the lightning protection grounding of the building share one group of grounding conductors.
10	The connectors of signal cables are intact and securely linked. And the signal cables are not damaged or broken.
11	All labels, tags, and nameplates are correct, legible, and complete. All the labels at both ends of the cables, jumpers and feeders should match.

Powering On the RRU

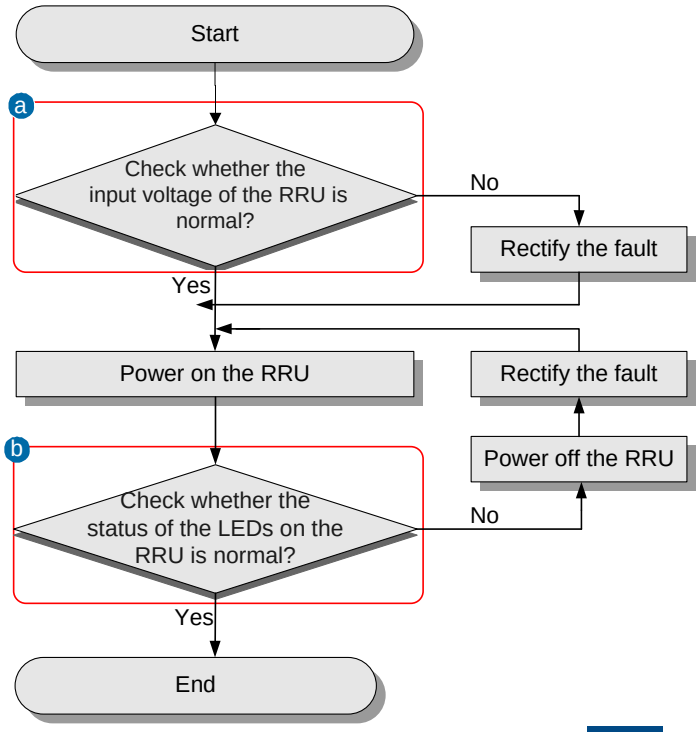

a Normal input voltage of the RRU:
If the BBU is supplied with -48 V DC power, the external input power voltage ranges from -57 V DC to -36 V DC.

b Normal status of the LEDs on the RRU:
- RUN LED: ON for 1s and OFF for 1s
- ALM LED: OFF

CAUTION

The RRU should be powered on in 24 hours after being unpacked. The power off duration of the RRU cannot exceed 24 hours during maintenance.

Reference

a Lift the RRU and installation components to the tower.

1. Lead the lifting rope along the lower part of the adapting piece and then bind the RRU by using the lifting rope at the handle of the RRU. Bind the main fixture and auxiliary fixture by using the lifting rope. Bind the handle of the RRU by using the pulling rope. See the following figure.

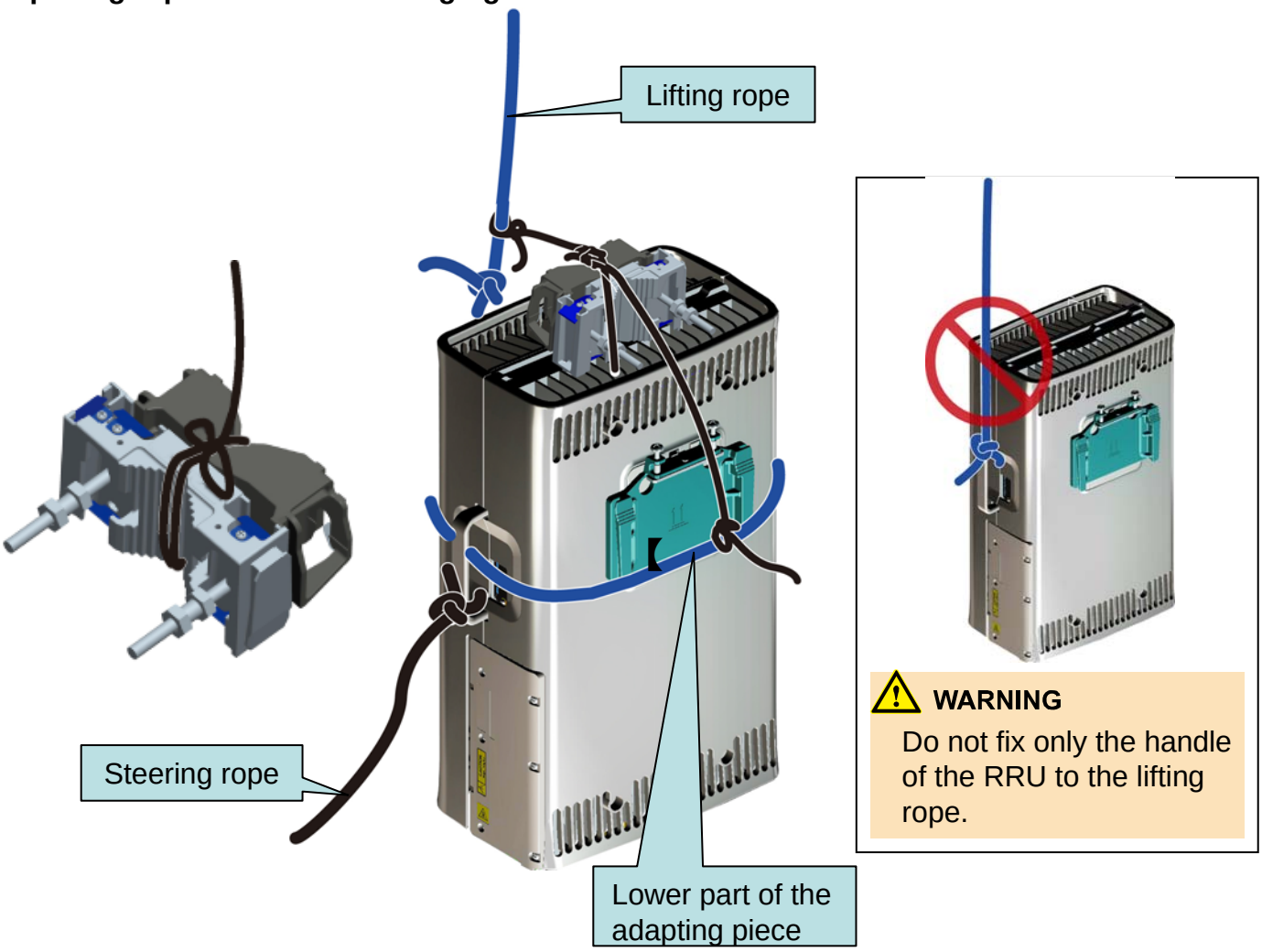

CAUTION

- When lifting the RRU to the tower, avoid collision of the RRU with the tower.
- Lift the RRU to the tower before it is installed on the metal pole, angle steel, or U-steel.

Reference

a Lift the RRU and installation components to the tower.

2. Lift the RRU and installation components to the tower.

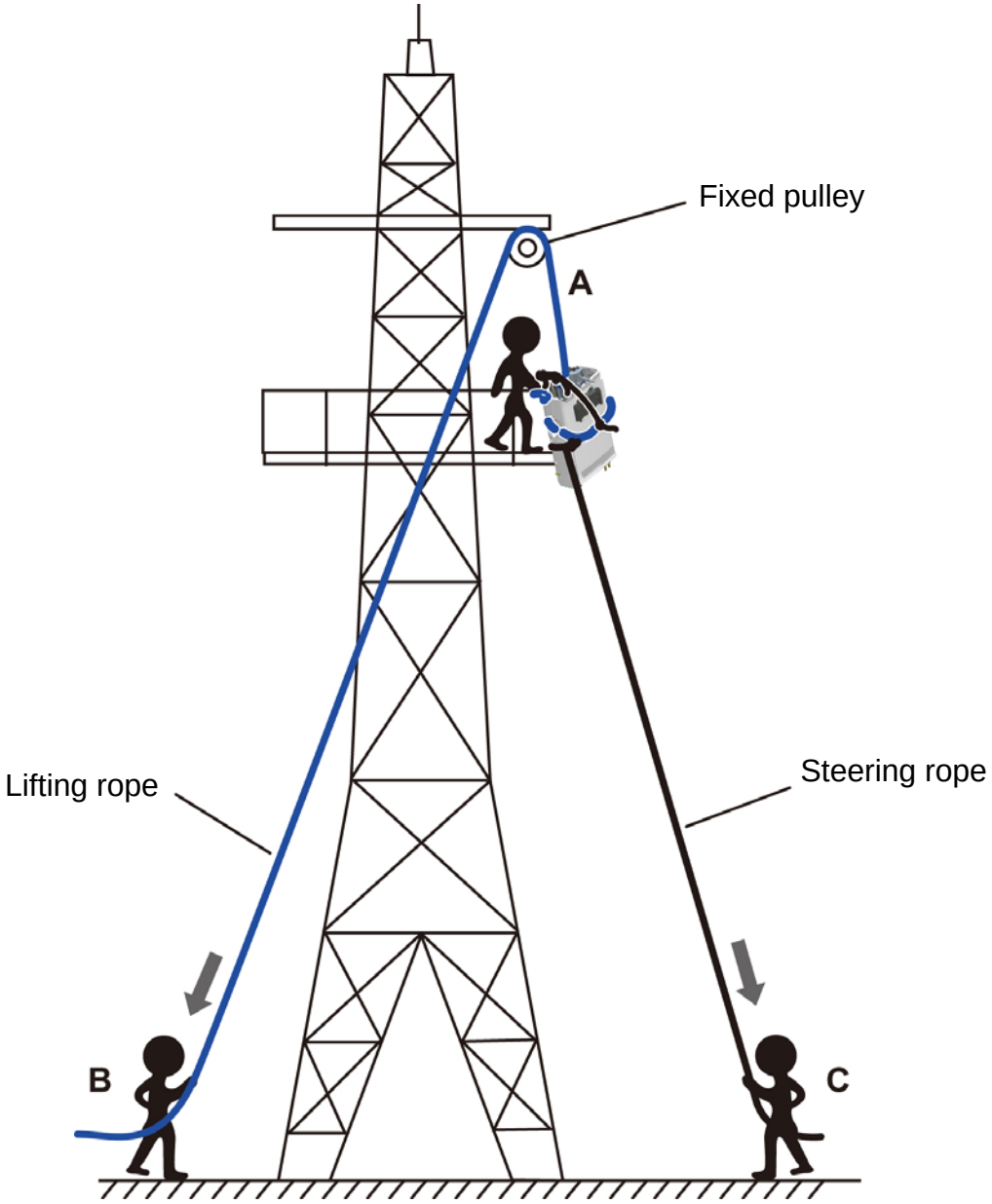

NOTE

- Installer A climbs up to the tower, installs the fixed pulley on the support of the tower platform, and then leads the lifting rope through the fixed pulley.
- Installer C binds the RRU and installation parts using the lifting rope and fixes the handle of the RRU to the pulling rope.
- Installer B pulls the lifting rope downwards. At the same time, installer C pulls the steering rope outwards to avoid collision of the RRU with the installation parts or tower.
- Installers A catches the RRU and installation parts and then loosen the rope.
- On a tower, multiple RRUs cannot be installed in centralized mode.

b Adding OT Terminals to the Power Cable of the RRU

1. OT terminals on the power cable:

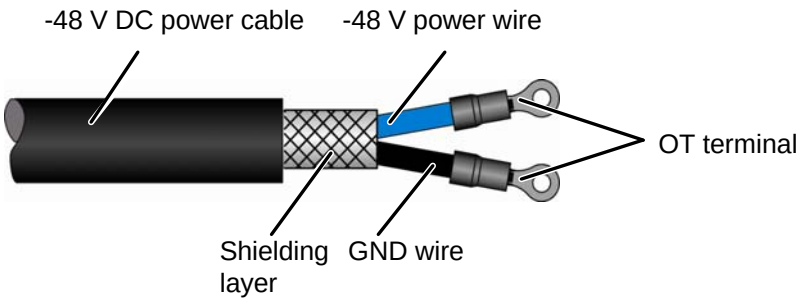

To assemble the OT terminals, perform the following steps:

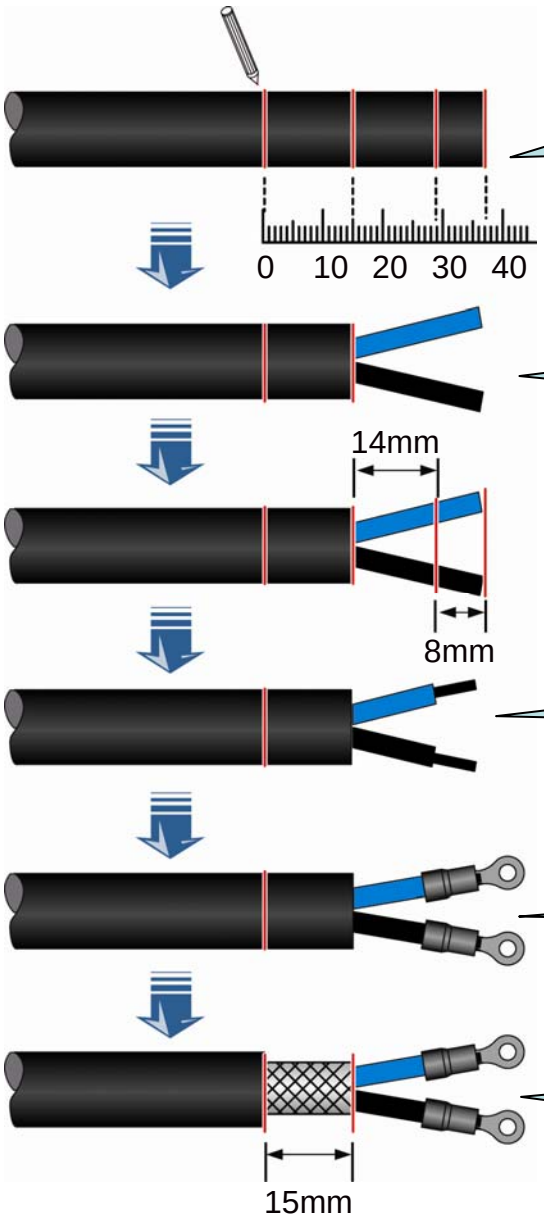

Determine lengths of power cables for different operations according to the scales on the inner side of the cover plate of the cabling cavity.

Based on the determined length, remove the jacket and shielding layer off the power cable.

Remove the jacket of a specified length from each wire.

Add an OT terminal to each wire.

Remove about 15 mm jacket off the power cable to expose the shielding layer.

b Adding OT Terminals to the Power Cable of the RRU

2.Assemble an OT terminal on the power cable at the end connecting to the power supply device.

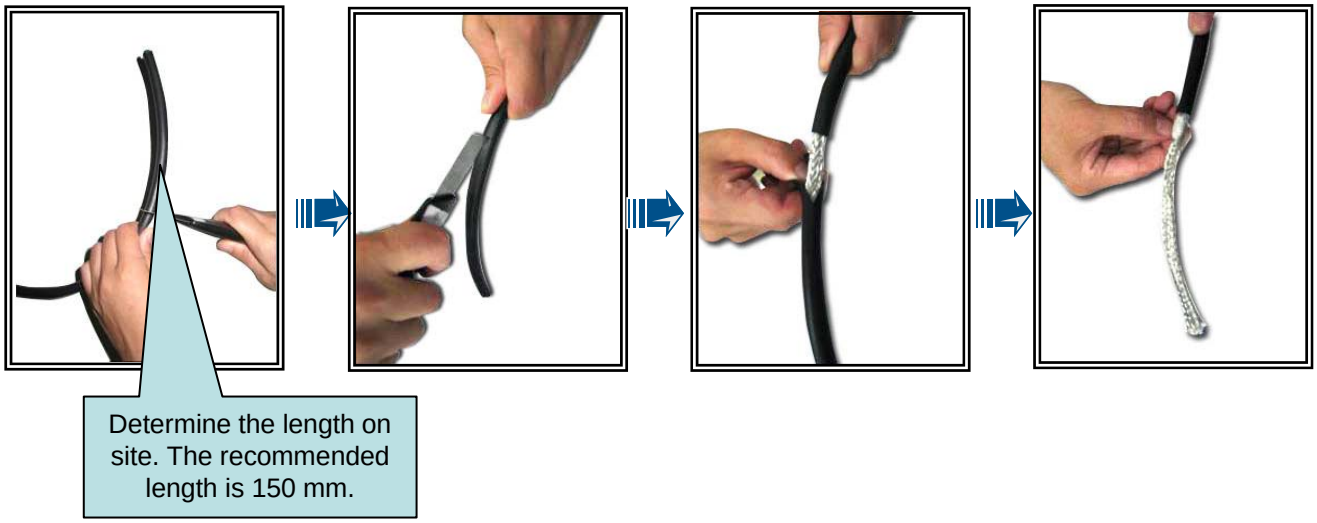

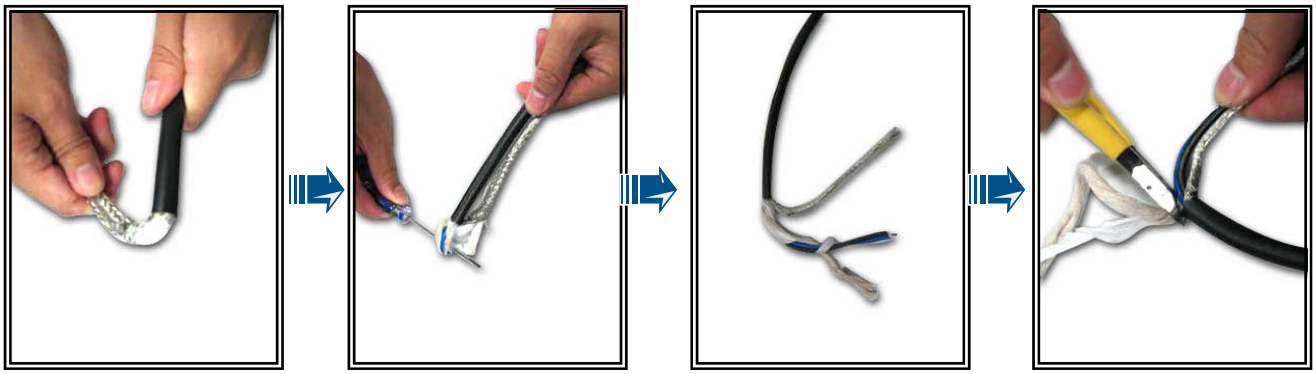

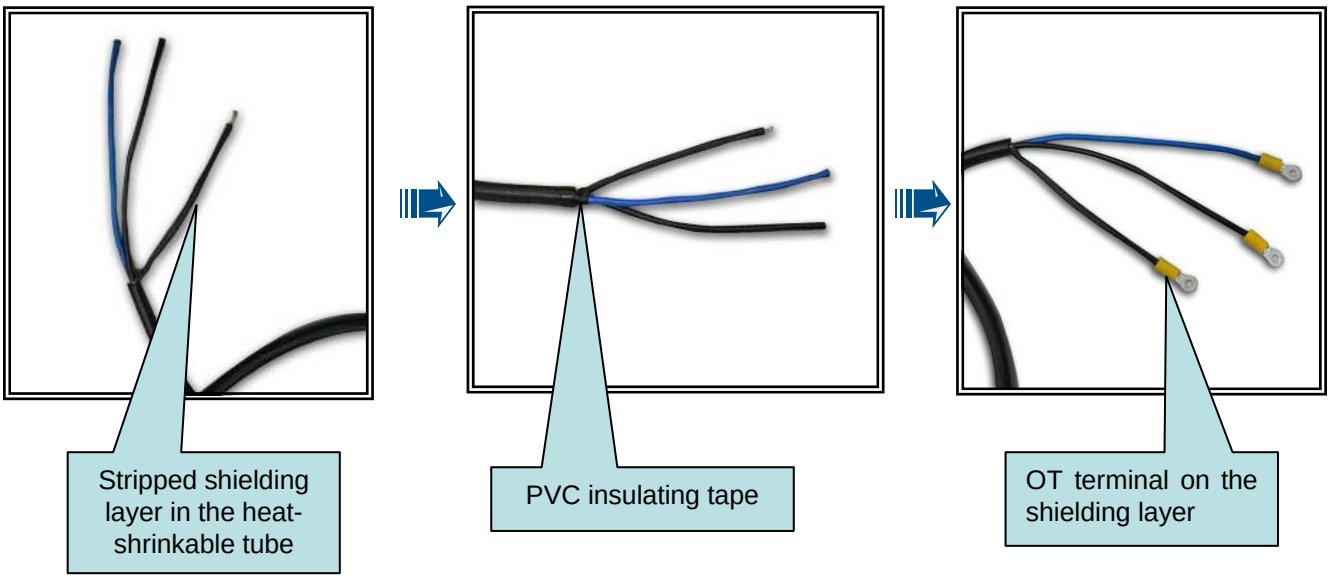

Reference

c Waterproofing the outdoor cables

⚠ CAUTION

1. The waterproof tape should be wrapped for an extra length of 20 mm away from the connectors at both ends.
2. The tapes are wrapped around the connector from the lower part to the upper part. When wrapped for another layer, the tapes may not be cut off.
3. Apply average force to pull the tape until the width of the tape is 1/2 of the original width before wrapping up the waterproofing tape.
4. Ensure that the upper layer of the tape covers over 50% of the lower layer when wrapping up the tape.
5. The Insulation tape should be wrapped for an extra length of 20 mm away from the edge of the waterproof tape at both ends.
6. Make sure that the last layer of the waterproof tape is wrapped from lower part to the upper part so that the rain flows along the wrapped waterproof tape.

Waterproof tape

Insulation tape

1. Wrap up the connectors with three layers of waterproofing tape

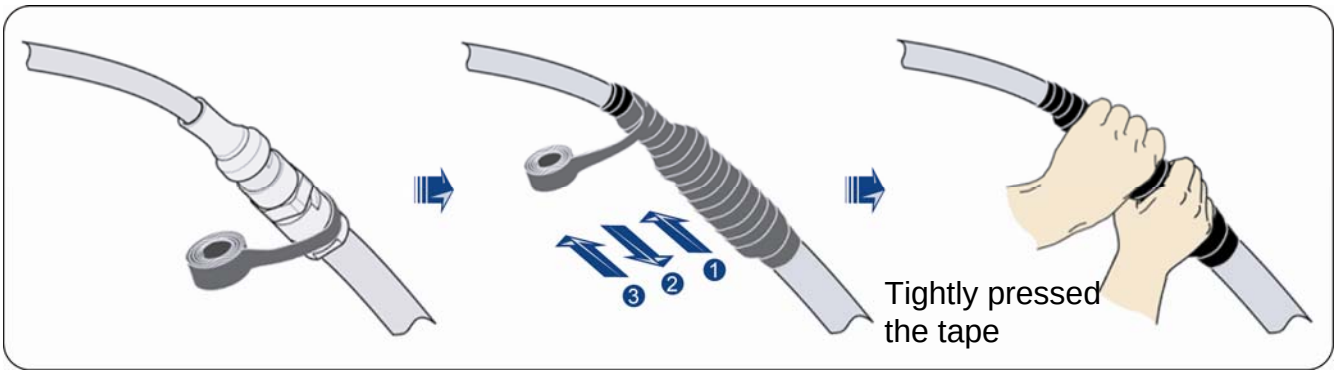

2. Wrap up the connectors with three layers of Insulation tape

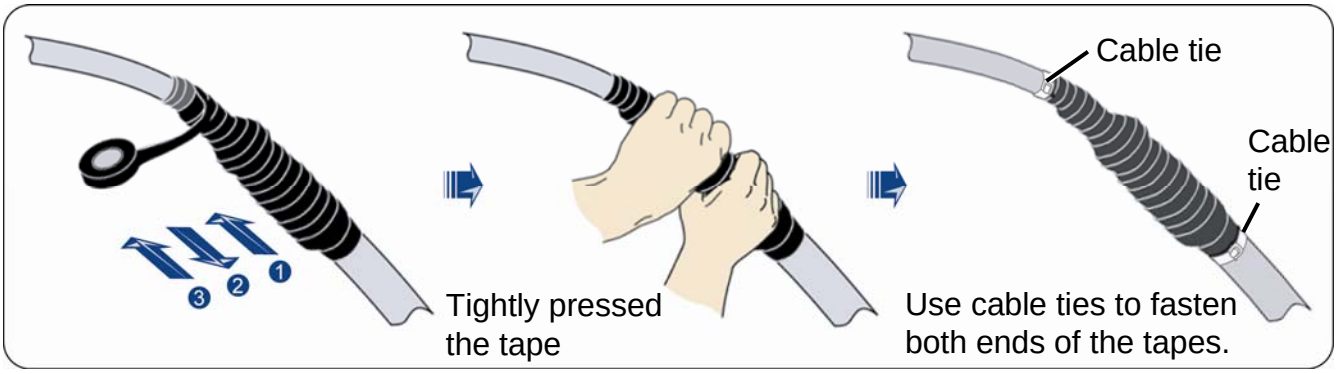

d Installing the optical Module

f Pin Assignment of the RRU AISG Extension cable

Pin of the AISG male connector	Pin of the AISG female connector	Wire Color	Wire Type	Instruction
X1.1	X2.1	White/blue	Twisted pair	+12V
		Blue		
X1.7	X2.7	White/orange	Twisted pair	DC Return A
		Orange		
X1.3	X2.3	White/green	Twisted pair	RS485 B
X1.5	X2.5	Green		RS485 A
X1.6	X2.6	White/brown	Twisted pair	+24V
		Brown		

g Pin Assignment for the Wires of the RRU Alarm Cable

DB9 waterproof Connector	Pin Name	Wire Color	Wire Type	Cord End Terminal	Label
X1.2	SWITCH_INPUT0+	White/blue	Twisted pair	X2	SWITCH_INPUT0+
X1.4	GND	Blue		X3	GND
X1.7	SWITCH_INPUT1+	White/orange	Twisted pair	X4	SWITCH_INPUT1+
X1.4	GND	Orange		X5	GND
X1.6	RS485_TX-	White/green	Twisted pair	X6	APM RX-
X1.8	RS485_TX+	Green		X7	APM RX+
X1.5	RS485_RX-	White/brown	Twisted pair	X8	APM TX-
X1.3	RS485_RX+	Brown		X9	APM TX+
X1.shell	-	-	Shield	-	-

Change History

This describes the changes in the *RRU3201 V100R001C01 Installation Guide*

01 (2009-08-10)

This is the draft release.

HUAWEI TECHNOLOGIES CO., LTD.
Huawei Industrial Base Bantian Longgang
Shenzhen 518129
People’s Republic of China
www.huawei.com