ICOM INSTALLATION GUIDE

VHF AIR BAND TRANSCEIVER

IC-A220

Thank you for choosing this Icom product. **READ ALL INSTRUCTIONS** carefully and completely before using this product.

1 SUPPLIED ACCESSORIES

The following accessories are supplied with the transceiver.
Carefully check the quantity of each part.

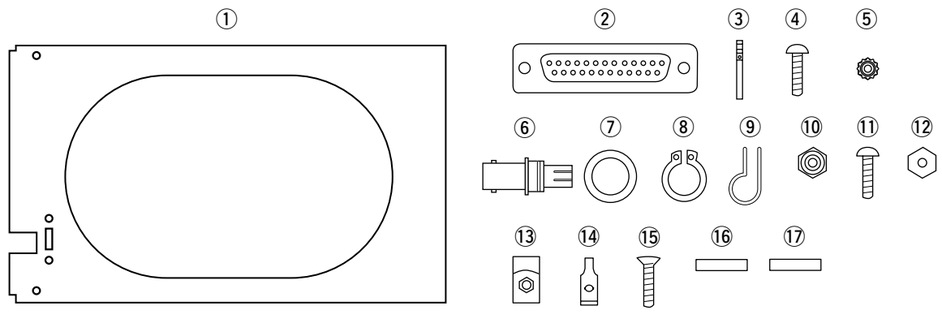

① Mounting bracket 1
② D-Sub 25 pin connector 1
③ Connector pins (M39029/63-368) 25
④ Screws Bind UNC (No. 4 × 3/8) 2
⑤ K-Lock Nut (No. 4) 2
⑥ BNC-LP 1
⑦ Washer (Icom washer V) 1
⑧ C-shaped ring 1
⑨ Antenna cable clip 1
⑩ Self crimping nut (No. 6) 1
⑪ Screw (No. 6 × 1/2) 1
⑫ Nut (No. 6) 1
⑬ Crimp nuts (No. 6) 6
⑭ Speed nut UNC (No. 6) 4
⑮ Screws (No. 6 × 1/2) 6
⑯ COMM1 sticker 1
⑰ COMM2 sticker 1

The following items are required for installation but are **NOT** supplied with the transceiver.
- VHF antenna for the air communication band
- Various cables
- An antenna cable with a BNC connectors (50 Ω)
- Switches to be mounted on the aircraft yoke
- Headphones. (500 Ω)
- Low-impedance carbon or dynamic microphone
- Preamplifier for a dynamic microphone

◇ COMM1 and COMM2 stickers

When 2 transceivers are installed, attach the supplied COMM1 and COMM2 stickers to distinguish one from the another.

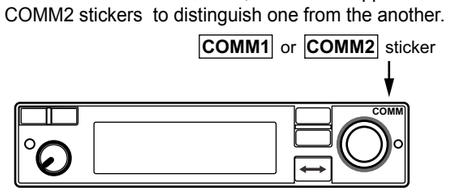

Icom, Icom Inc. and Icom logo are registered trademarks of Icom Incorporated (Japan) in Japan, the United States, the United Kingdom, Germany, France, Spain, Russia, Australia, New Zealand, and/or other countries.

2 IMPORTANT

READ THIS INSTALLATION GUIDE CAREFULLY before install the transceiver. This installation guide contains important safety instructions.
NEVER install the transceiver where normal navigation of the aircraft may be hindered.
NEVER install an antenna near any aircraft projection, engine, or propeller.
Install a circuit breaker between the aircraft battery and the transceiver.

Check operation after installation.
Install the transceiver according to the procedures of this installation guide.

The antenna should be spaced at least 40 cm (1.3 feet) from any position occupied by any person on board the aircraft or the vehicle.

3 INSTALLATION PROCEDURES

1. Check the quantity of parts.
   See **1 SUPPLIED ACCESSORIES**.
2. Prepare miscellaneous items required for installation.
   See miscellaneous items in **1 SUPPLIED ACCESSORIES**.
3. Prepare the required wiring.
   See **6 CONNECTOR INFORMATION** and **7 CONNECTING THE CABLES FOR D-SUB 25 PIN**.
   - If you want to use the MBA-3 connector, see **5 USING THE MBA-3** and **8 CONNECTING THE CABLES FOR CARD EDGE CONNECTOR**.
4. Assemble supplied mounting bracket and other parts.
   See **9 MOUNTING BRACKET ASSEMBLY**.
5. Cut the mounting hole.
   See **10 MARKING A MOUNTING HOLE**.
6. Mount the transceiver into the mounting bracket.
   See **11 MOUNTING TO THE BRACKET**.
7. Check the transceiver operation.
   See **12 OPERATION CHECK**.

4 PRECAUTIONS

NEVER bend the cables sharply or place the cables too near the aircraft control cables.
NEVER connect the transceiver to a power source using reverse polarity. Reverse polarity will damage the transceiver.
DO NOT place the transceiver where hot or cold air blows directly on it.
DO NOT place the transceiver in areas with temperatures below –20˚C or above +55˚C (–4˚F to +131˚F).
To prevent voltage drops, solder or crimp the cable lug when connecting the DC power cable to the power supply.

Use a 50 Ω, vertically polarized, VHF air band antenna.

VSWR should be less than 2.5:1.

Mount the antenna on a flat metal surface or install a ground plane of at least 120 cm^2 (18 in^2).

5 USING THE MBA-3

When installing the transceiver with card edge connector, use the optional MBA-3 as described below.

◇ Attachment

1. Unscrew the 10 bottom screws, then remove the bottom cover from the transceiver.
2. Unscrew the four rear plate screws.
3. Disconnect the I/O cable connectors J3, J4, and coaxial J6, and then remove the rear plate from the transceiver.

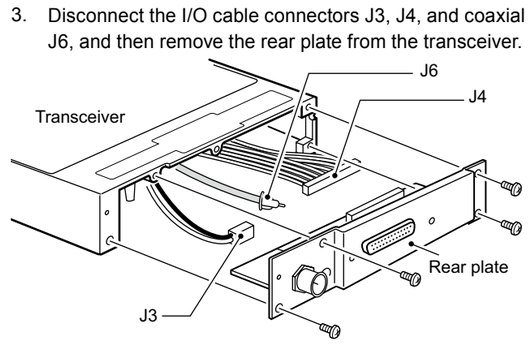

4. Connect the I/O cable connectors and coaxial onto the MBA-3 as illustrated below.

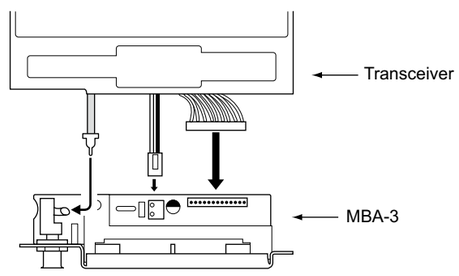

5. Attach the MBA-3 to the transceiver with the five rear plate screws.
6. Replace the removed bottom cover and 10 screws.

6 CONNECTOR INFORMATION

◇ D-sub 25-pin

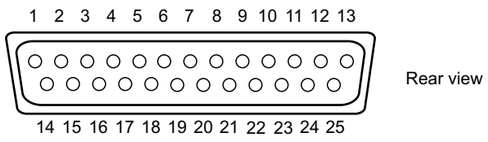

Pin	I/O	Description	Pin	I/O	Description
1	In	Memory Channel Switch*	14	–	Aircraft ground
2	In	Transmit/receive Interlock	15	–	Aircraft ground
3	In	Frequency Exchange Switch*	16	In	PTT*
4	In	DC power ⊕ (13.8/27.5 V)	17	In	Intercom switch*
5	In	DC power ⊕ (13.8/27.5 V)	18	Out	External speaker (4 Ω/5 W)
6	–	RS-232C Serial data (GND)	19	–	External speaker (GND)
7	Out	RS-232C Serial data (TXD)	20	Out	Headphones audio (500 Ω/60 mW)
8	In	RS-232C Serial data (RXD)	21	In	External Dimmer control
9	–	Microphone (GND)	22	–	Headphones audio (GND)
10	In	Microphone 1 (600 Ω)	23	In	Auxiliary audio 3
11	In	Microphone 2 (600 Ω)	24	–	(reserved)
12	In	Auxiliary audio 1	25	–	(reserved)
13	In	Auxiliary audio 2			

*Ground to activate.

◇ Card edge connector (For optional MBA-3)

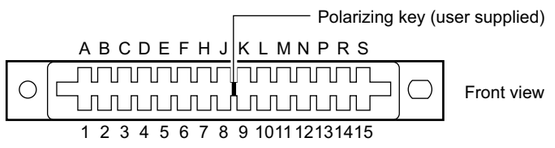

Pin	I/O	Description	Pin	I/O	Description
A	I	External Dimmer Control	1	Out	RS-232C Serial data (TXD)
B	–	(reserved)	2	In	RS-232C Serial data (RXD)
C	In	Auxiliary audio 2	3	In	Auxiliary audio 3
D	In	Auxiliary audio 1	4	–	Auxiliary audio 1/2/3 (GND)
E	Out	External speaker (4 Ω/5 W)	5	–	External speaker (GND)
F	–	Aircraft ground	6	–	Aircraft ground
H	Out	Headphones audio (500 Ω/60 mW)	7	–	Headphones audio (GND)
J	In	Microphone 1 (600 Ω)	8	–	Microphone (GND)
K	In	Microphone 2 (600 Ω)	9	In	PTT*
L	In	Memory channel switch*	10	In	Intercom switch*
M	–	(reserved)	11	–	(reserved)
N	I	Transmit/receive interlock	12	In	Frequency exchange switch*
P	–	(reserved)	13	–	(reserved)
R	In	DC power ⊕ (13.8/27.5 V)	14	In	DC power ⊕ (13.8/27.5 V)
S	–	Aircraft ground	15	–	Aircraft ground

*Ground to activate.

7 CONNECTING THE CABLES FOR D-SUB 25 PIN

◇ Power cable wiring

Use 2 pairs of #20 AWG wire for the power and power grounding connections.

Rear view

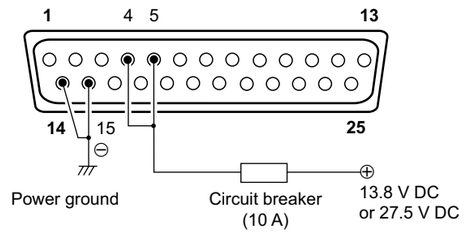

- **Circuit breaker**
To prevent physical damage, a 10 A circuit breaker **MUST** be installed in the DC power line in the aircraft. Install the circuit breaker in the aircraft breaker panel or instrument panel to ensure easy access during flight.
- **Power Ground**
Connect the transceiver power ground to the aircraft ground.

◇ Yoke-mounted memory and frequency exchange switches

For the yoke-mounted memory and frequency exchange switches, use a two-position spring loaded rocker switch or 2 separate momentary push switches.

Rear view

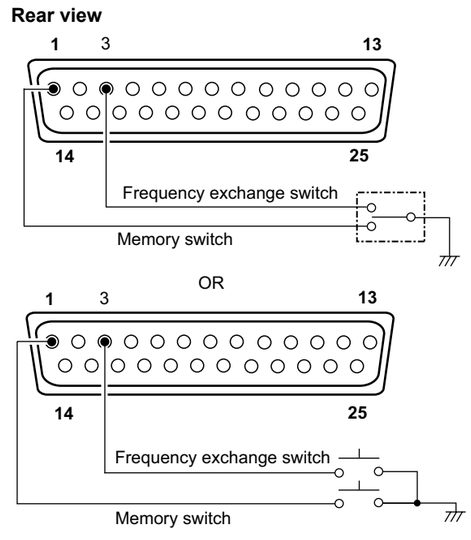

◇ Transmit/receive interlock connections

When 2 transceivers are installed, connect pin 2 to the other transceiver's PTT line, and connect pin 16 to the other transceiver's interlock line to prevent both transceivers from simultaneously transmitting.
However, when 2 transceivers are installed through a dual audio panel, the connections are not necessary.

◇ Audio line connections

Use #20 ~ #24 AWG wires for connections.

Rear view

- Connecting 2 headsets with intercom

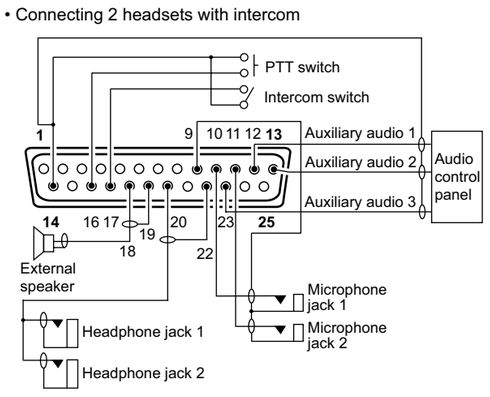

- Connecting 1 headset

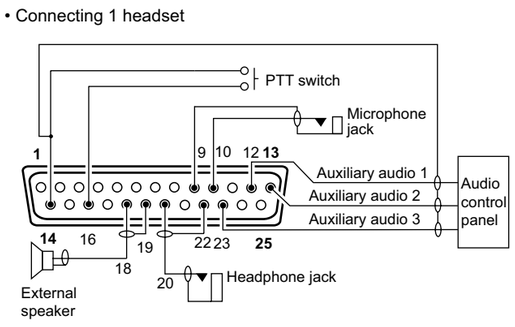

◇ GPS receiver connection

Connect the GPS receiver's input terminal to the pin 7, and output terminal to pin 8.

Rear view

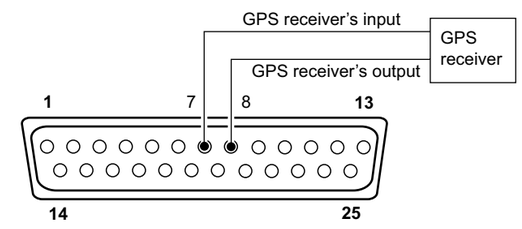

8 CONNECTING THE CABLES FOR CARD EDGE CONNECTOR (MBA-3)

◇ Power cable wiring

Use 2 pairs of #18 AWG wire for the power and power connections.

Front view

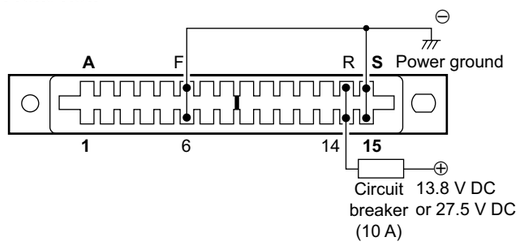

• **Circuit breaker**
To prevent physical damage, a 10 A circuit breaker **MUST** be installed in the DC power line in the aircraft. Install the circuit breaker in the aircraft breaker panel or instrument panel to ensure easy access during flight.
• **Power Ground**
Connect the transceiver power ground to the aircraft ground.

◇ Yoke-mounted memory and frequency exchange switches

For the yoke-mounted memory and frequency exchange switches, use a two-position spring loaded rocker switch or 2 separate momentary push switches.

Front view

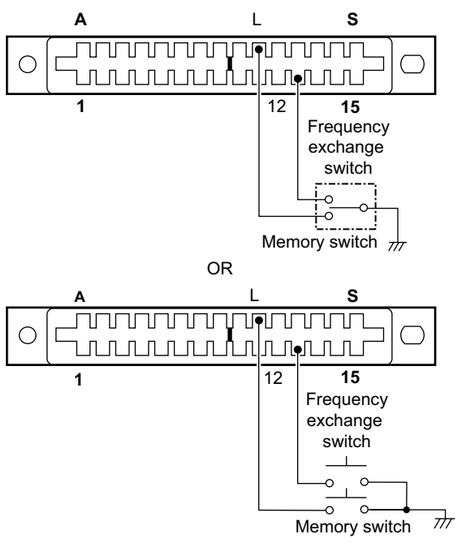

◇ Transmit/receive interlock connections

When 2 transceivers are installed, connect pin N to the other transceiver's PTT line, and connect pin 9 to the other transceiver's interlock line to prevent both transceivers from simultaneously transmitting.
However, when 2 transceivers are installed through a dual audio panel, the connections are not necessary.

◇ Audio line connection

Use #24 AWG wire for the connections.

• Connecting 2 headsets to the intercom

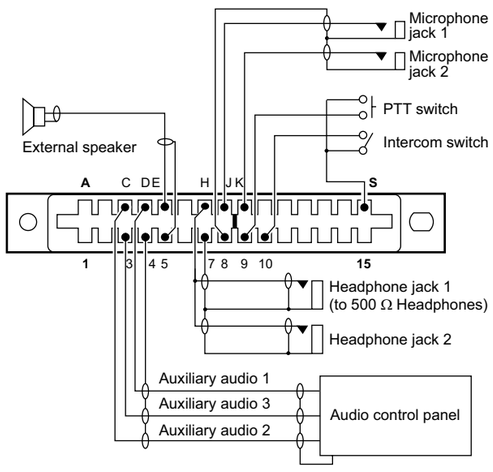

• Connecting 1 headset

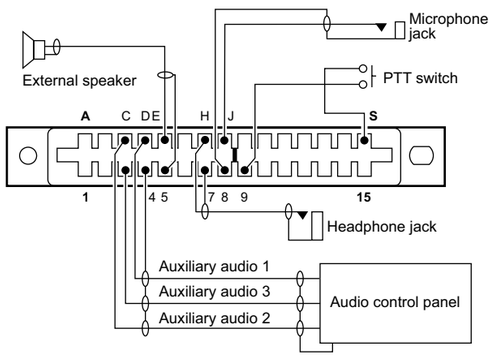

◇ GPS receiver connection

Connect the GPS receiver's input terminal to the pin 1, and output terminal to pin 2.

Front view

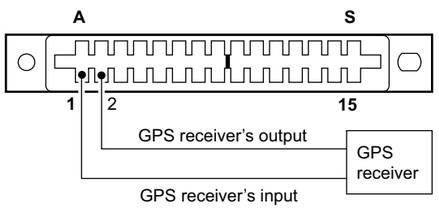

9 MOUNTING BRACKET ASSEMBLY

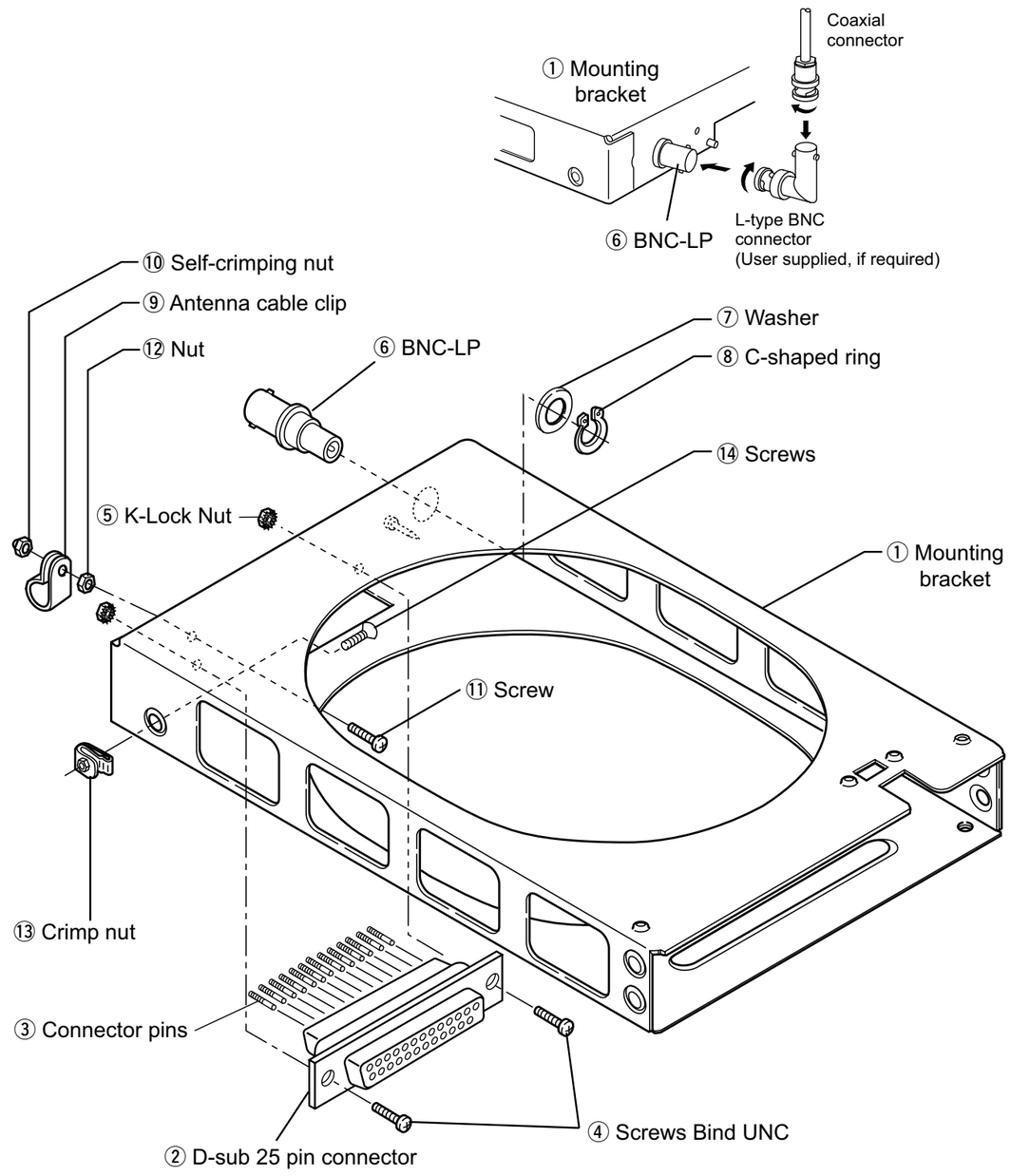

10 MARKING A MOUNTING HOLE

◇ Notes for making the mounting hole

The transceiver can be mounted securely in the supplied mounting bracket.
Remember to allow adequate space for installation of cables and connectors.
When installing 2 or more transceivers in a stack, the mounting bracket should be 1.3 mm (0.05″) apart.

The mounting bracket has 0.6 mm (0.024″) dimples in the top, bottom, and both sides for proper spacing.
Mark and cut the mounting holes.
To support the mounting bracket, the rear mounting bosses should be attached to the airframe.

◇ Mounting bracket dimensions

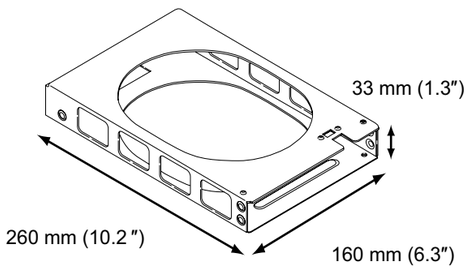

◇ Front panel dimensions

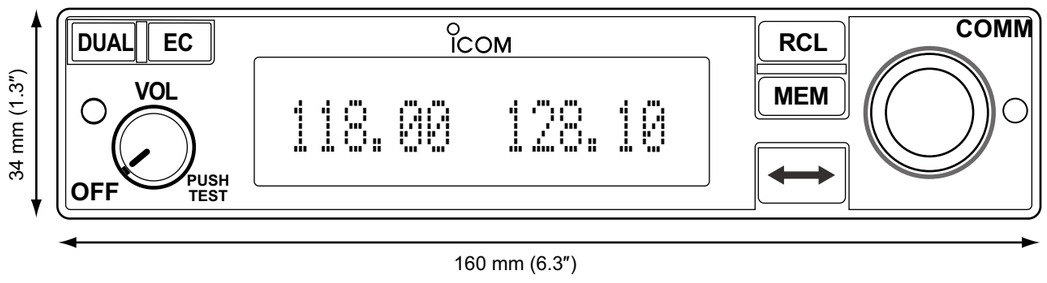

Allow space for the front panel as shown above.

◇ Template

Cut out dimensions for the mounting bracket as follows.

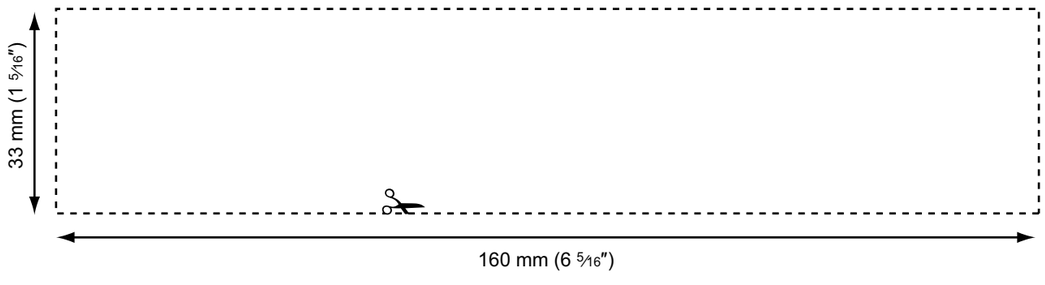

11 MOUNTING TO THE BRACKET

◇ Transceiver installation

1. Remove the front panel from the transceiver's main unit.
   - Use a 3/32″ allen driver.
   - Carefully disconnect the cable from the front panel. (Fig. 1)
2. Insert a 3/32″ allen driver into the lock screw and rotate the driver counterclockwise until the metal catch touches the back of the lock chassis. (Fig. 2)

Main unit front view

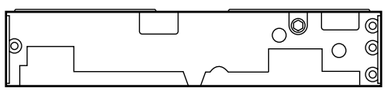

3. Insert the main unit (transceiver) into the mounting bracket. (Fig. 3)
4. Turn the lock screw clockwise until the main unit (transceiver) is fixed to the bracket. (Fig. 4)
5. Connect the cable. (Fig. 5)
6. Attach the front panel and tighten the allen screws. (Fig. 5)

CAUTION: Make sure that the cable between the transceiver and front panel is securely connected. The transceiver may not function properly when loose or when a wrong connection is made.
Improper cable connection can cause damage and result in severe non-warranty repair.

◇ Transceiver removal

The transceiver can be easily removed from the mounting bracket, if required.

1. Remove the front panel from the transceiver's main unit.
   - Use a 3/32″ allen driver.
   - Carefully disconnect the cable from the front panel.
2. Insert a 3/32″ allen driver into the lock screw and rotate the driver counterclockwise until the metal catch touches the back of the lock chassis.
3. Slowly pull the transceiver out from the mounting bracket.
4. Connect the cable to the front panel.
5. Attach the front panel and tighten the allen screws.

Fig. 1

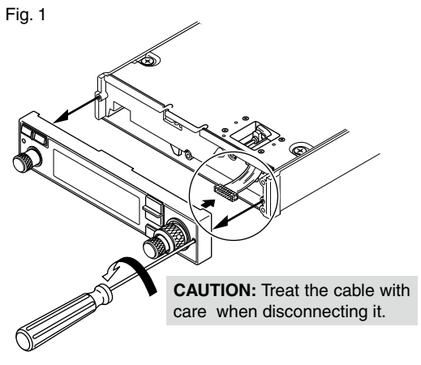

Fig. 2

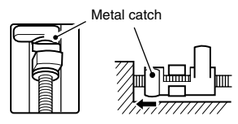

Fig. 3

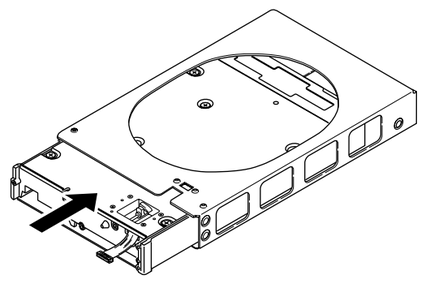

Fig. 4

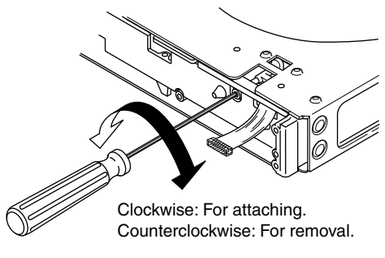

Fig. 5

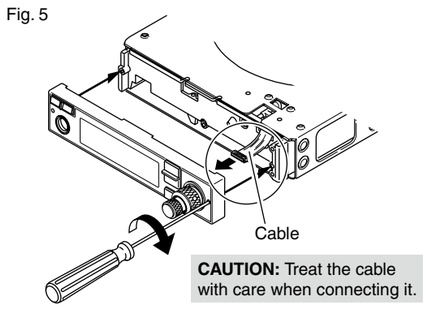

12 OPERATION CHECK

Check the following points after transceiver installation.

- Polarity of the power supply.
- **NO** interference caused to other equipment.
- **NO** noise or interference from other equipment.
- VSWR is less than 2.5:1.
- Communication capability on both the highest and lowest communication frequencies, if possible.

Icom Inc.
1-1-32 Kamiminami, Hirano-ku, Osaka 547-0003, Japan
Printed on recycled paper with soy ink.
Count on us!
A-7210D-2EX-③
Printed in Japan

© 2015–2017 Icom Inc.