Kapsch TrafficCom

Janus™ Interior Transponder Mounting Instructions For Passenger Vehicles

Janus interior transponders mount to the inside of the vehicle windshield using 3M™ Dual Lock™ fasteners. Arrows on the transponder provide the correct mounting orientation.

Requirements

- For reliable operation of the transponder, the vehicle should not be equipped with more than one transponder of similar design while passing through a toll facility. Other transponders present in or on the vehicle must be switched off or enclosed in an RF shield.
- The mounting location must provide direct line-of-sight communication between the transponder and the toll facility overhead antenna.
- Do not mount the interior transponder in vehicles:
  - with non-metallic roofs.
  - with windshields covered in RF-blocking material (ex. metal oxide).
  - with a metallic center windshield dividing post.
  - without center-mounted rear view mirrors.
- Handheld mobile communication devices must not be located within 12” (30 cm) of the transponder.
- Metal objects (except for the rear view mirror and the roof) must not be located within 6” (15 cm) of the transponder.
- Interior transponders cannot be used where local regulations prohibit mounting transponders on the windshield.

Transponder Mounting Instructions

Choose the appropriate mounting location of the transponder (preferred or alternative) before affixing it to the windshield using the provided 3M™ Dual Lock™ reclosable fasteners.

Preferably the transponder should be mounted between the roofline and the rear view mirror mounting post, such that the top of the transponder is ½" (1¼ cm), but no more than 2" (5 cm) from the roofline, and the bottom of the transponder is a minimum of ½" (1¼ cm) from the rear view mirror post.

If the transponder cannot be mounted in the preferred mounting location, mount it within the alternative mounting area shown below:

Preferred Mounting Location – Front View

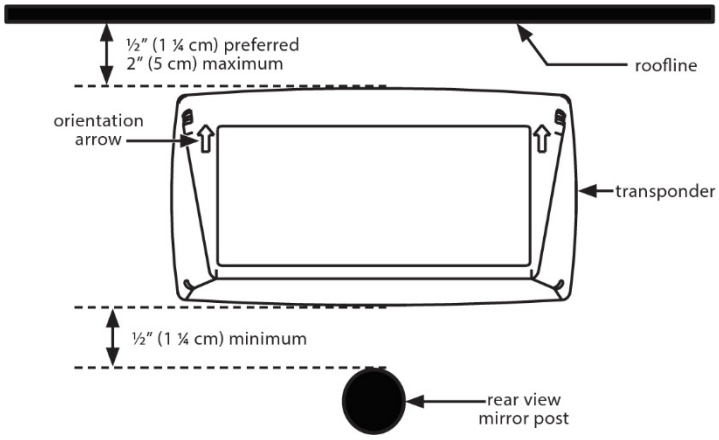

Alternative Mounting Location

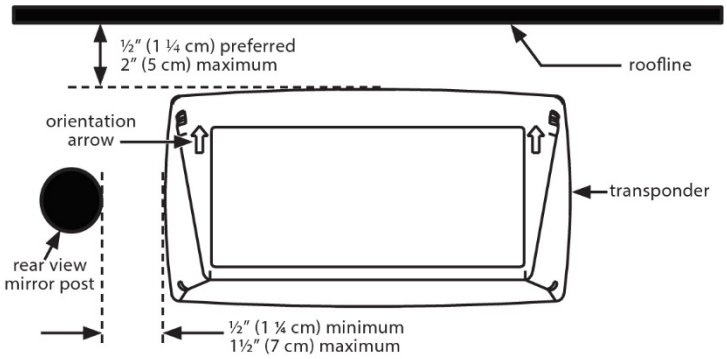

Preferred Mounting Location – Side View

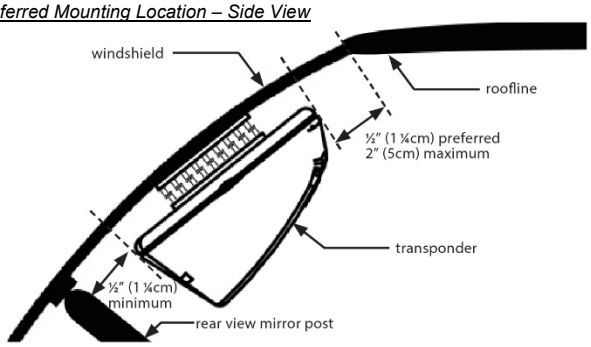

Transponder – Rear View

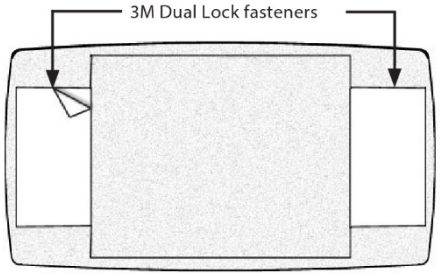

1. Select the appropriate mounting location for the transponder.
2. Prepare the area on the windshield where the transponder will be mounted in accordance with 3M™ document *70-0709-4029-4*.
3. Remove the protective backing from the two 3M™ Dual Lock™ reclosable fasteners and press the transponder into place, ensuring the orientation arrows are pointing upwards.
4. Firmly press the transponder against the windshield and maintain pressure on the transponder for approximately 15 seconds to ensure a good bond to the windshield.
5. To remove the transponder from the windshield, lift any corner with sufficient force to separate the Dual Lock™ reclosable fastener strips. Do not reuse the 3M™ Dual Lock™ reclosable fasteners strips if removing them from the windshield. Obtain new strips as required.

FCC License Notice – This device complies with Part 15 of the FCC rules. Operation is subject to the condition that this device does not cause harmful interferences.

Kapsch TrafficCom is a provider of intelligent transportation systems in the fields of tolling, traffic management, smart urban mobility, traffic safety and security, and connected vehicles. As a one-stop solutions provider, Kapsch TrafficCom offers end-to-end solutions covering the entire value creation chain of its customers, from components and design to the implementation and operation of systems. The mobility solutions supplied by Kapsch TrafficCom help make road traffic safer and more reliable, efficient, and comfortable in urban areas and on highways alike.

>>> www.kapsch.net

Kapsch TrafficCom USA, Inc. | 8201 Greensboro Drive | Suite 1002 | McLean, VA 22102 | U.S.A. | P +1 703 885 1976 | F +1 703 790 9100
ktc.us-dc.info@kapsch.net | www.kapsch.net

© Kapsch TrafficCom AG. All rights reserved. Contents subject to change without notice.

801850-008 Rev E_EN-US