bizhub 40P
User's Guide

A0DX-9564-00A

Thank You

Thank you for purchasing a bizhub 40P. You have made an excellent choice.

Your bizhub 40P is specially designed for optimal performance in Windows, Macintosh and Linux environments.

Trademarks

KONICA MINOLTA and the KONICA MINOLTA logo are trademarks or registered trademarks of KONICA MINOLTA HOLDINGS, INC.

bizhub and PageScope are trademarks or registered trademarks of KONICA MINOLTA BUSINESS TECHNOLOGIES, INC.

All other trademarks and registered trademarks are the property of their respective owners.

Copyright Notice

Copyright © 2007 KONICA MINOLTA BUSINESS TECHNOLOGIES, INC., Marunouchi Center Building, 1-6-1 Marunouchi, Chiyoda-ku, Tokyo, 100-0005, Japan. All Rights Reserved. This document may not be copied, in whole or part, nor transferred to any other media or language, without written permission of KONICA MINOLTA BUSINESS TECHNOLOGIES, INC.

Notice

KONICA MINOLTA BUSINESS TECHNOLOGIES, INC. reserves the right to make changes to this guide and to the equipment described herein without notice. Considerable effort has been made to ensure that this guide is free of inaccuracies and omissions. However, KONICA MINOLTA BUSINESS TECHNOLOGIES, INC. makes no warranty of any kind including, but not limited to, any implied warranties of merchantability and fitness for a particular purpose with regard to this guide. KONICA MINOLTA BUSINESS TECHNOLOGIES, INC. assumes no responsibility for, or liability for, errors contained in this guide or for incidental, special, or consequential damages arising out of the furnishing of this guide, or the use of this guide in operating the equipment, or in connection with the performance of the equipment when so operated.

SOFTWARE LICENSE AGREEMENT

This package contains the following materials provided by Konica Minolta Business Technologies, Inc. (KMBT): software included as part of the printing system, the digitally-encoded machine-readable outline data encoded in the special format and in the encrypted form ("Font Programs"), other software which runs on a computer system for use in conjunction with the Printing Software ("Host Software"), and related explanatory written materials ("Documentation"). The term "Software" shall be used to describe Printing Software, Font Programs and/or Host Software and also include any upgrades, modified versions, additions, and copies of the Software.

The Software is being licensed to you under the terms of this Agreement.

KMBT grants to you a non-exclusive sublicense to use the Software and Documentation, provided that you agree to the following:

1. You may use the Printing Software and accompanying Font Programs for imaging to the licensed output device(s), solely for your own internal business purposes.
2. In addition to the license for Font Programs set forth in Section 1 ("Printing Software") above, you may use Roman Font Programs to reproduce weights, styles, and versions of letters, numerals, characters and symbols ("Typefaces") on the display or monitor for your own internal business purposes.
3. You may make one backup copy of the Host Software, provided your backup copy is not installed or used on any computer. Notwithstanding the above restrictions, you may install the Host Software on any number of computers solely for use with one or more printing systems running the Printing Software.
4. You may assign its rights under this Agreement to an assignee of all of Licensee's right and interest to such Software and Documentation ("Assignee") provided you transfer to Assignee all copies of such Software and Documentation Assignee agrees to be bound by all of the terms and conditions of this Agreement.
5. You agree not to modify, adapt or translate the Software and Documentation.
6. You agree that you will not attempt to alter, disassemble, decrypt, reverse engineer or decompile the Software.
7. Title to and ownership of the Software and Documentation and any reproductions thereof shall remain with KMBT and its Licensor.
8. Trademarks shall be used in accordance with accepted trademark practice, including identification of the trademark owner's name. Trademarks can only be used to identify printed output produced by the Software. Such use of any trademark does not give you any rights of ownership in that trademark.
9. You may not rent, lease, sublicense, lend or transfer versions or copies of the Software that the Licensee does not use, or Software contained on any unused media, except as part of the permanent transfer of all Software and Documentation as described above.
10. In no event will KMBT or its licensor be liable to you for any consequential, incidental INDIRECT, PUNITIVE or special damages, including any lost profits or lost saving, even if KMBT has been advised of the possibility of such damages, or for any claim by any third party. KMBT or its licensor disclaims all warranties with regard to the software, express or implied, including, without limitation implied warranties of merchantability, fitness for a particular purpose, title and non-infringement of third party rights. Some states or jurisdictions do not allow the exclusion or limitation of incidental, consequential or special damages, so the above limitations may not apply to you.

11. Notice to Government End Users: The Software is a “commercial item,” as that term is defined at 48 C.F.R.2.101, consisting of “commercial computer software” and “commercial computer software documentation,” as such terms are used in 48 C.F.R. 12.212. Consistent with 48 C.F.R. 12.212 and 48 C.F.R. 227.7202-1 through 227.7202-4, all U.S. Government End Users acquire the Software with only those rights set forth herein.
12. You agree that you will not export the Software in any form in violation of any applicable laws and regulations regarding export control of any countries.

For EU member states only

This symbol means: **Do not dispose of this product together with your household waste!**

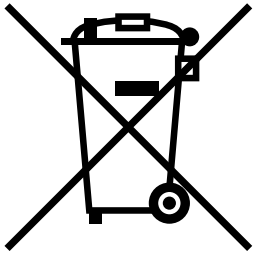

Please contact the Local Authority for appropriate disposal instructions. In the case of a new device being purchased, the used one can also be given to our dealer for appropriate disposal. Recycling of this product will help to conserve natural resources and prevent potential negative consequences for the environment and human health caused by inappropriate waste handling.

This product complies with RoHS (2002/95/EC) directive.

Contents

1 Introduction 1
Getting Acquainted with Your Printer 2
Space Requirements 2
Printer Parts 4
Front View 4
Rear View 4
Internal View 5
Front View with Options 6

2 About the Software 7
Printer Driver CD-ROM 8
PostScript Drivers 8
PCL Drivers 8
XPS Drivers 8
PPD Files 9
Utilities and Documentation CD-ROM 9
Utilities 9
System Requirements 11
Selecting Driver Options/Defaults (for Windows) 12

Windows Vista/XP/Server 2003/2000 (KONICA MINOLTA bizhub 40P PCL, KONICA MINOLTA bizhub 40P PS) 12
Uninstalling the Printer Driver (for Windows) 14
Windows Vista/XP/Server 2003/2000 (KONICA MINOLTA bizhub 40P PCL, KONICA MINOLTA bizhub 40P PS) 14
Displaying Printer Driver Settings (for Windows) 15
Windows Vista 15
Windows XP/Server 2003 15
Windows 2000 15
Using the Postscript and PCL Printer Driver 16
Common Buttons 16
OK 16
Cancel 16
Apply 16
Help 16
Favorite Setting 16
Paper View 17
Printer View 17
Quality View 17
Default 17
Advanced Tab (PostScript Printer Driver Only) 17
Basic Tab 17
Layout Tab 18
Finish tab 18
Cover Page Tab 18
Watermark/Overlay Tab 19
Quality Tab 19
Other Tab 20
Limitations on printer driver functions installed with Point and Print 20

3 Using the Status Monitor (Windows Only) 21
Working with the Status Monitor 22
Introduction 22
Operating Environment 22
Opening the Status Monitor 22
Using the Status Monitor 22
Recognizing Status Monitor Alerts 23
Recovering from a Status Monitor Alert 23
Closing the Status Monitor 23

4 Printer Control Panel and Configuration Menu 25
About the Control Panel 26
Control Panel Keys and Port 26
Message Window 28

Help Screens 29
Configuration Menu Overview 30
Main Menu 30
PROOF/PRINT MENU 31
Printing/Deleting a Stored Job 31
Entering the Password 33
PRINT MENU 34
PAPER MENU 36
QUALITY MENU 49
MEMORY DIRECT 52
INTERFACE MENU 55
SYS DEFAULT MENU 63
MAINTENANCE MENU 74
SERVICE MENU 77

5 Memory Direct 79
Memory Direct 80
Printing From a Connected USB Memory Device 80

6 Using Media 83
Media Specifications 84
Media Types 85
Plain Paper (Recycled Paper) 85
Thick Stock 87
Envelopes 87
Labels 88
Postcards 89
Thin Paper 90
Transparencies 91
What Is the Guaranteed Imageable (Printable) Area? 92
Imageable Area—Envelopes 92
Page Margins 92
Loading Media 93
Loading Media (Tray 1/2/3/4) 93
Loading Plain Paper 93
Other Media 95
Loading Envelopes 96
Loading Label sheets/Postcards/Thick Stock/Thin paper/Transparencies 99
Loading the Paper Larger than A4 102
Loading Banner paper in the Tray 1 105
Duplexing 108
Output Tray 109
Finishing 110
Job Separation Printing 110
Offset Printing 111

Media Storage 112

7 Replacing Consumables 113
Replacing Consumables 114
About toner cartridge 114
Replacing a Toner Cartridge 116
Replacing the Fuser Unit 118
Replacing the Transfer Roller 124
Replacing the Feed Roller 126
Replacing the Feed Roller (in the Tray) 127
Replacing the Feed Roller (inside the Printer) 130
Replacing the Backup Battery 132

8 Maintaining the Printer 137
Maintaining the Printer 138
Cleaning the Printer 140
Exterior 140
Cleaning the Feed Roller (inside the Tray) 141
Cleaning the Feed Roller (inside the Printer) 143
Cleaning the Duplex Feed Rollers 145
Cleaning the Offset Tray Feed Rollers 146
Cleaning the Laser Lens 147

9 Troubleshooting 149
Introduction 150
Printing a Configuration Page 150
Preventing Media Misfeeds 151
Understanding the Media Path 152
Clearing Media Misfeeds 153
Media Misfeed Messages and Clearing Procedures 154
Clearing a Media Misfeed at the Paper Tray 155
Clearing a Media Misfeed at the Duplex 158
Clearing a Media Misfeed at the Fuser Unit 160
Clearing a Media Misfeed at the Transfer Roller 163
Clearing a Media Misfeed at the Offset Tray 166
Solving Problems with Media Misfeeds 169
Solving Other Problems 171
Solving Problems with Printing Quality 176
Status, Error, and Service Messages 181
Standard Status Messages 181
Error Messages (Warning:) 182
Error Messages (Operator Call:) 185
Service Messages: 188

10 Installing Accessories 189
Introduction 190

Antistatic Protection 191
Dual In-Line Memory Module (DIMM) 192
Installing a DIMM 192
Hard Disk Kit 196
Installing the Hard Disk kit 196
CompactFlash 200
Installing the CompactFlash card 200
Duplex 205
Installing the Duplex 205
Lower Feeder Unit 208
Kit Contents 208
Installing the Lower Feeder Unit 209
Offset Tray 214
Installing the Offset Tray 214

A Appendix 217
Technical Specifications 218
Printer 218
Consumable Life Expectancy Chart 222
Our Concern for Environmental Protection 223
What is an ENERGY STAR product? 223

1 Introduction

Getting Acquainted with Your Printer

Space Requirements

To ensure easy operation, consumable replacement and maintenance, adhere to the recommended space requirements detailed below.

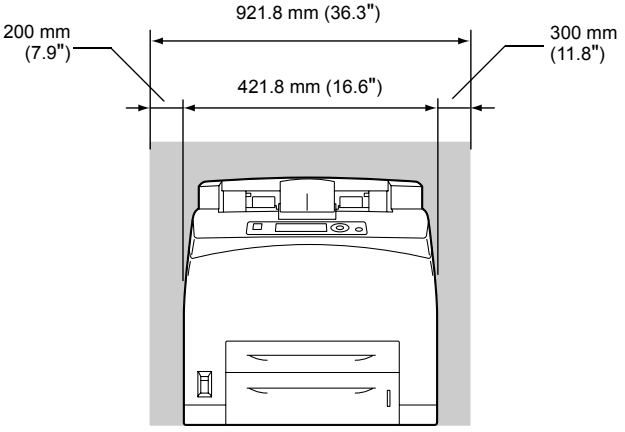

Front View

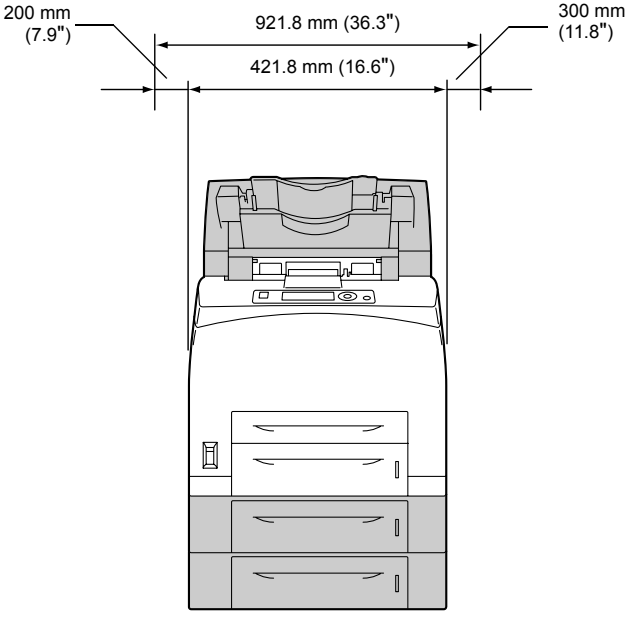

Front View with Options

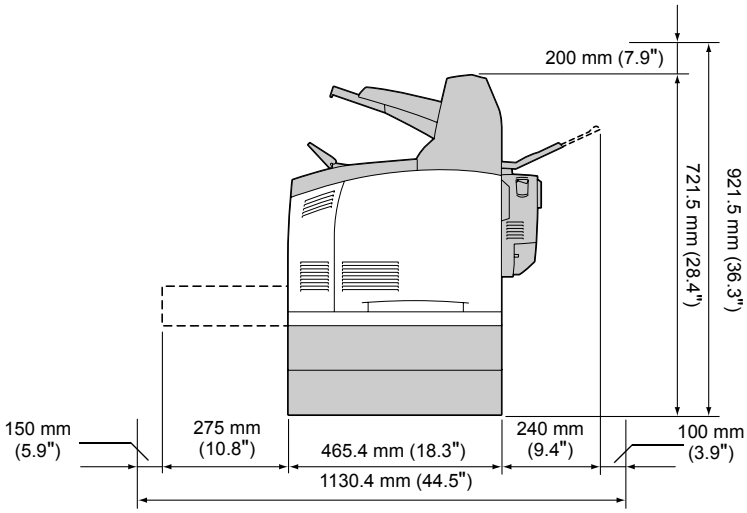

Side View with Options

The option appears shaded in the above illustrations.

Printer Parts

The following drawings illustrate the parts of your printer referred to throughout this guide, so please take some time to become familiar with them.

Front View

1—Center output tray

2—Control panel

3—Ventilation grilles

4—Paper meter

5—Tray1 (A4/150sheets)

6—Tray2 (A4/550sheets)

7—Power switch

8—Paper stopper

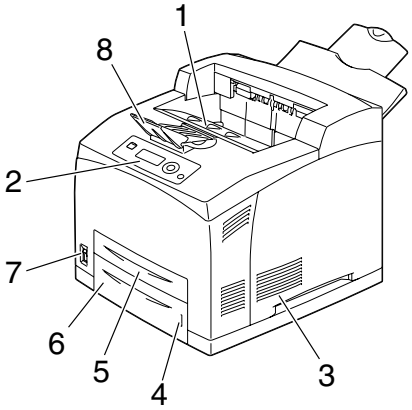

Rear View

1—Exhaust port

2—Duplex connector

3—Power connection

4—USB port

5—10Base-T/100Base-TX/ 1000Base-T Ethernet Interface port

6—Parallel port

7—Face up tray

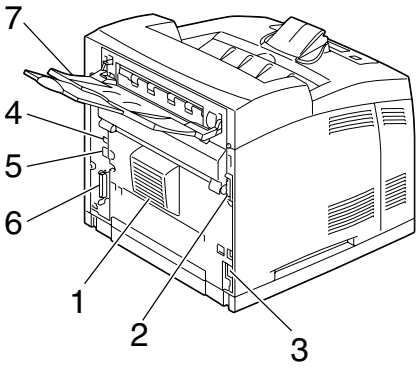

Internal View

1—Paper stopper

2—Toner cartridge

3—Top cover

4—Fuser unit

5—Transfer roller

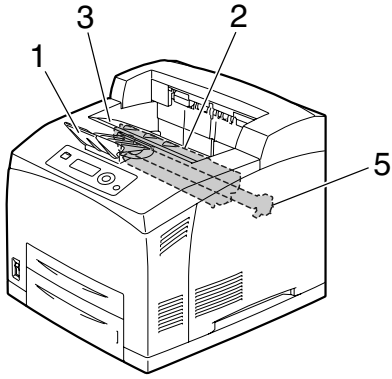

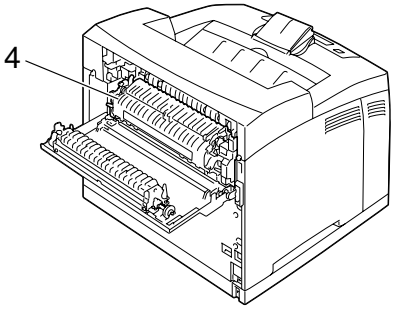

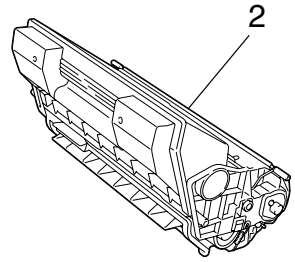

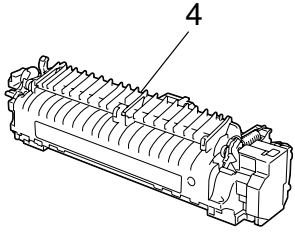

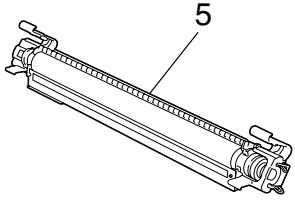

Front View with Options

1—Duplex

2—Lower feeder units (Tray 3 and Tray 4)

3—Sub tray

4—Offset tray

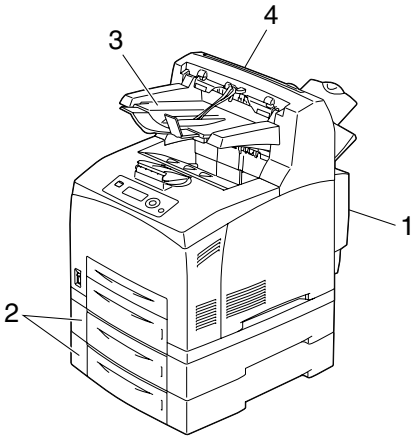

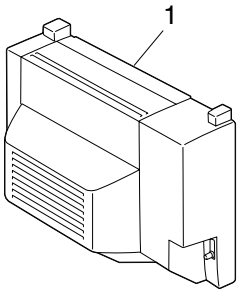

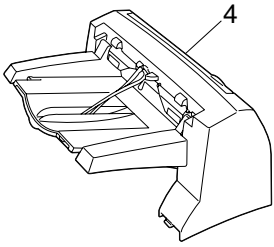

2 About the Software

Printer Driver CD-ROM

PostScript Drivers

Operating System	Use/Benefit
Windows Vista/XP/Server 2003/2000	These drivers give you access to all of the printer features, including finishing and advanced layout. See also “Displaying Printer Driver Settings (for Windows)” on page 15.
Windows Vista/XP/Server 2003 for 64bit	

A specific PPD file has been prepared for applications (such as PageMaker and Corel Draw) that require that a PPD file be specified when printing.
When specifying a PPD file while printing on Windows Vista, XP, Server 2003 and 2000, use the specific PPD file provided on the Printer Driver CD-ROM.

PCL Drivers

Operating System	Use/Benefit
Windows Vista/XP/Server 2003/2000	These drivers give you access to all of the printer features, including finishing and advanced layout. See also “Displaying Printer Driver Settings (for Windows)” on page 15.
Windows Vista/XP/Server 2003 for 64bit	

XPS Drivers

Operating System	Use/Benefit
Windows Vista	These mini drivers for Windows Vista are based on the Windows core. For details on the installation method and functions, refer to the Reference Guide on the Utilities and Documentation CD-ROM.
Windows Vista for 64bit	

The XPS driver cannot be installed by using the auto-play installation feature of the Printer Driver CD-ROM. For more details, see the Reference Guide on the Utilities and Documentation CD-ROM.

PPD Files

Operating System	Use/Benefit
Windows Vista/XP/Server 2003/2000	These PPD files allow you to install the printer for a variety of platforms, drivers, and applications.
Macintosh OS X Linux	These files are required in order to use the printer driver for each operating system. For details of the Macintosh and Linux printer drivers, refer to the Reference Guide on the Utilities and Documentation CD-ROM.

For details on the installation of the Windows printer drivers, refer to the Installation Guide on the Utilities and Documentation CD-ROM.

Utilities and Documentation CD-ROM

Utilities

Utility	Use/Benefit
Download Manager (Windows Vista/XP/Server 2003/ 2000, Macintosh OS 10.2.x or later)	This utility, which can be used only if an optional hard disk kit is installed, enables fonts and overlay data to be downloaded to the hard disk. For details, refer to the Download Manager online help for all of the functions.
Status Monitor (Windows only)	The current status of the printer in addition to the status of consumables and error information can be viewed. For details, refer to See “Using the Status Monitor (Windows Only)” on page 21.
PageScope Net Care	Printer management functions such as status monitoring and network settings can be accessed. For details, refer to the PageScope Net Care Quick Guide on the Utilities and Documentation CD-ROM.

Utility	Use/Benefit
PageScope Web Connection	With a Web browser, the status of printers can be checked, and the various settings can be changed. For details, refer to the Reference Guide on the Utilities and Documentation CD-ROM.
PageScope Network Setup	Using the TCP/IP and IPX protocols, basic network printer settings can be specified. For details, refer to the PageScope Network Setup User Manual on the Utilities and Documentation CD-ROM.
PageScope Plug and Print	This utility automatically detects a new printer connected to the network and creates a print object on the Windows print server. For details, refer to the PageScope Plug and Print Quick Guide on the Utilities and Documentation CD-ROM.
PageScope NDPS Gateway	This network utility enables printers and KONICA MINOLTA multifunctional products to be used in an NDPS environment. For details, refer to the PageScope NDPS Gateway User Manual on the Utilities and Documentation CD-ROM.
PageScope Direct Print	This application provides functions for sending PDF and TIFF files directly to a printer to be printed. For details, refer to the PageScope Direct Print User's Guide on the Utilities and Documentation CD-ROM.

System Requirements

- Personal computer
  - Pentium 2: 400 MHz (Pentium 3: 500 MHz or higher is recommended)
  - Power Mac G3 or later (G4 or later is recommended)
  - Macintosh equipped with an Intel processor
- Operating System
  - Microsoft Windows Vista Home Basic/Home Premium/Ultimate/Business/Enterprise, Windows Vista Home Basic/Home Premium/Ultimate /Business/Enterprise x64 Edition, Microsoft Windows XP Home Edition/Professional (Service Pack 2 or later is recommended), Windows XP Professional x64 Edition, Windows Server 2003, Windows Server 2003 x64 Edition, Windows 2000 (Service Pack 4 or later)
  - Mac OS X (10.2 or later; We recommend installing the newest patch), Mac OS X Server (10.2 or later)
  - Red Hat Linux 9.0, SuSE Linux 8.2
- Free hard disk space
  - Approximately 20 MB of free hard disk space for printer driver and Status Monitor
  - Approximately 128 MB of free hard disk space for image processing
- RAM
  128 MB or more
- CD/DVD-ROM drive
- I/O interface
  - 10Base-T/100Base-TX/1000Base-T Ethernet interface port
  - USB Revision 2.0 compliant port
  - Parallel (IEEE 1284) port

For details of the XPS, Macintosh and Linux printer drivers, refer to the Reference Guide on the Utilities and Documentation CD-ROM.

Selecting Driver Options/Defaults (for Windows)

Before you start working with your printer, you are advised to verify/change the default driver settings. Also, in case you have options installed, you should “declare” the options in the driver.

Windows Vista/XP/Server 2003/2000 (KONICA MINOLTA bizhub 40P PCL, KONICA MINOLTA bizhub 40P PS)

1 Choose the driver’s properties as follows:

- (Windows Vista)
  From the **Start** menu, click **Control Panel**, then **Hardware and Sound**, and then click **Printers** to open the Printers directory. Right-click the KONICA MINOLTA bizhub 40P PCL or KONICA MINOLTA bizhub 40P PS printer icon, and then click **Properties**.
- (Windows XP/Server 2003)
  From the **Start** menu, choose **Printers and Faxes** to display the **Printers and Faxes** directory. Right-click the KONICA MINOLTA bizhub 40P PCL or KONICA MINOLTA bizhub 40P PS printer icon and choose **Properties**.
- (Windows 2000)
  From the **Start** menu, choose **Settings** and then **Printers** to display the **Printers** directory. Right-click the KONICA MINOLTA bizhub 40P PCL or KONICA MINOLTA bizhub 40P PS printer icon and choose **Properties**.

2 If you have installed options, proceed with the next step. Otherwise, skip to step 9.

3 Select the **Configure** tab.

4 Check that the installed options are correctly listed. If not, proceed with the next step. Otherwise, continue with step 8.

5 Click the **Refresh** to automatically configure installed options.

*The **Refresh** is available only if bi-directional communication is available with the printer; otherwise it is grayed out.*

6 From the **Device Options** list, select an option, one at a time, and then select **Enable** or **Disable** from the **Settings** menu.

*If **Printer Memory** is selected, select **128 MB**, **256 MB or 384 MB**, according to the installed memory. The factory default setting is **128 MB**.*

*If **Memory Card** is selected, select **Disable**, **Enable (1 GB Under)**, or **Enable (1 GB Over)**, according to the installed CompactFlash card.*

7 Click **Apply**.

*Depending on the version of the operating system, **Apply** may not appear. If this is the case, continue with the next step.*

8 Select the **General** tab.

9 Click **Printing Preferences**.
Printing Preference dialog box appears.

10 Select the default settings for your printer, such as the default media format you use, in the appropriate tabs.

11 Click **Apply**.

12 Click **OK** to exit from the Print preference dialog box.

13 Click **OK** to exit from the Properties dialog box.

Uninstalling the Printer Driver (for Windows)

This section describes how to uninstall the KONICA MINOLTA bizhub 40P printer driver if necessary.

Windows Vista/XP/Server 2003/2000 (KONICA MINOLTA bizhub 40P PCL, KONICA MINOLTA bizhub 40P PS)

1 Close all applications.

2 Choose the Uninstall Program as follows:

- (Windows Vista/XP/Server 2003)
  From the **Start** menu, choose **All programs**, **KONICA MINOLTA**, **bizhub 40P**, and then **Uninstall Printer Driver**.
- (Windows 2000)
  From the **Start** menu, choose **Programs**, **KONICA MINOLTA**, **bizhub 40P**, and then **Uninstall Printer Driver**.

3 When the Uninstall dialog box appears, select the name of the driver to be deleted, and then click the **Uninstall** button.

4 Click **Uninstall**.

5 Click **OK**, and restart your computer.

6 The KONICA MINOLTA bizhub 40P printer driver will be uninstalled from your computer.

Displaying Printer Driver Settings (for Windows)

Windows Vista

1 From the **Start** menu, click **Control Panel**, then **Hardware and Sound**, and then click **Printers** to open the Printers directory.

2 Right-click the KONICA MINOLTA bizhub 40P PCL or KONICA MINOLTA bizhub 40P PS printer icon and choose **Printer Preferences**.

Windows XP/Server 2003

1 From the **Start** menu, choose **Printers and Faxes** to display the **Printers and Faxes** directory.

2 Right-click the KONICA MINOLTA bizhub 40P PCL or KONICA MINOLTA bizhub 40P PS printer icon and choose **Printing Preferences**.

Windows 2000

1 From the **Start** menu, point to **Settings**, and then click **Printers** to display the **Printers** directory.

2 Right-click the KONICA MINOLTA bizhub 40P PCL or KONICA MINOLTA bizhub 40P PS printer icon and choose **Printer Properties**.

Using the Postscript and PCL Printer Driver

Common Buttons

The buttons described below appear on each tab.

OK

Click to exit the Properties dialog box, saving any changes made.

Cancel

Click to exit the Properties dialog box without saving any changes made.

Apply

Click to save all changes without exiting the Properties dialog box.

Help

Click to view the help.

Favorite Setting

This allows the current settings to be saved. To save the current settings, specify the desired settings, and then click **Add**. Specify the settings described below, and the click **OK**.

- **Name:** Type in the name of the settings to be saved.
- **Comment:** Add a simple comment to the settings to be saved.
- **Icon:** Select an icon from the icon list to easily identify the settings. The selected icon appears in the drop-down list.
- **Sharing:** Specify whether or not the settings to be saved can be used by other users logged onto the computer.

Afterward, the saved settings can be selected from the drop-down list. To change the registered setting, click **Edit**.

Select **Defaults** from the drop-down list to reset the functions in all tabs to their default values.

Paper View

Click the button to display a sample of the page layout in the figure area.

*This button does not appear on the **Advanced** and **Quality** tabs.*

Printer View

Click the button to display an image of the printer (with all installed options) in the figure area.

*This button does not appear on the **Advanced** tab.*

Quality View

Click this button to display a sample of the settings selected in the **Quality** tab.

Default

Click this button to reset the settings to their defaults.

*This button does not appear on the **Advanced** tab.*

Advanced Tab (PostScript Printer Driver Only)

The Advanced Tab allows you to

- Select whether to enable or disable the settings for advanced printing functions (such as booklet printing)
- Specify the PostScript output method
- Specify whether or not the error messages of a print job are printed
- Print a mirror image
- Specify whether or not the application can directly output PostScript data
- Specify whether or not the Negative Output is performed

Basic Tab

The Basic Tab allows you to

- Specify the orientation of the media
- Specify the size of the original document
- Select the output media size

- Zoom (expand/reduce) documents
- Specify the paper source
- Specify the type of media
- Specify the number of copies
- Turn on/off job collation
- Turn on/off offset
- Save a print job on the printer and print it later (Job Retention)
- Save a confidential job on the printer and protect it with a password
- Print a single copy for proofing
- Specify user authentication and account track settings
- Print on the back side of paper that has already been printed on

Do not use the following types of paper.
- Paper that has been printed on with an inkjet printer
- Paper that has been printed on with a monochrome/color laser printer/copier
- Paper that has been printed on with any other printer or fax machine

Layout Tab

The Layout Tab allows you to

- Print several pages of a document on the same page (N-up printing)
- Specify booklet printing
- Rotate the print image 180 degrees
- Specify duplex (double-sided) printing
- Specify whether or not blank pages are printed (PCL printer driver only)
- Adjust the binding margin
- Specify the position on the paper where the document is to be printed
- Adjust the printing position (PCL printer driver only)

Finish tab

The Finish Tab allows you to specify the output tray to use.

Cover Page Tab

The Cover Page Tab allows you to

- Print front and back cover pages and separator pages

- Specify the tray that contains the paper for the front and back cover pages and separator pages.

Watermark/Overlay Tab

Be sure to use overlays with print jobs with a paper size and orientation that matches the overlay form.
In addition, if settings have been specified for "N-up" or "Booklet" in the printer driver, the overlay form cannot be adjusted to match the specified settings.

The settings in the "Overlay" function of the Watermark/Overlay tab allows you to

- Select the form to use
- Add or delete overlay files
- Launch Download Manager to download a form (PostScript printer driver only)

Download Manager Application should be installed earlier.

- Create a form (PCL printer driver only)
- Specify that the document and form are printed overlapping (PCL printer driver only)
- Display the form information (PCL printer driver only)
- Print the form on All Pages, First Page, Even Pages and Odd Pages
- Place the form in back of the document or in front on the printed document (PCL printer driver only)

The settings in the "Watermark" function of the Watermark/Overlay tab allows you to

- Select the watermark to be used
- Create, edit or delete watermarks
- Lighten the density of the watermark
- Print a frame around watermarks
- Print transparent (shaded) watermarks
- Print the watermark on only the first page
- Print the watermark repeatedly throughout the all pages

Quality Tab

The Quality Tab allows you to

- Specify the printer settings (Quick Settings)

- Specify the resolution for the printout
- Select whether or not economy printing is used
- Specify the format of fonts that are to be downloaded
- Print using the printer's fonts
- Control the tones (Contrast) of an image (PCL printer driver only)
- Control the darkness (Brightness) of an image
- Specify the amount of details in graphic patterns (PCL printer driver only)

Other Tab

The Other Tab allows you to

- Select that Microsoft Excel sheets are not to be divided when printing
- Select that the white background of Microsoft PowerPoint data does not hide overlay files (PCL printer driver only)
- Send a notification by e-mail when printing is finished
- Shows the version information for the printer driver
- Prevent loss when printing fine lines

Limitations on printer driver functions installed with Point and Print

If Point and Print is performed with the following server and client combinations, there are limitations on some printer driver functions.

- Server and client combinations
  Server: Windows Server 2003/Vista/XP/2000
  Client: Windows Server 2003/Vista/XP/2000
- Functions with limitations applied
  Booklet, Skip Blank Pages, Front Cover Page, Back Cover Page, Separator Page, Create Overlay, Print Overlay, Watermark
  *JOBNAME, USERNAME, and HOSTNAME output of PJL

3

Using the Status Monitor (Windows Only)

Working with the Status Monitor

Introduction

The Status Monitor shows information about the current status of the printer.

The Status Monitor can be installed from the Utilities and Documentation CD-ROM.

For details on the installation, refer to the Reference Guide on the Utilities and Documentation CD-ROM.

Operating Environment

The Status Monitor can be used on computers running Windows Vista/XP/Server 2003/2000 connected to the printer using an Ethernet connection.

Opening the Status Monitor

Use one of the following steps to open the Status Monitor:

- **Windows Vista/XP/Server 2003**—From the **Start** menu, choose **All Programs**, **KONICA MINOLTA**, and then **Status Monitor**. Double-click the Status Monitor icon displayed in the task bar.
- **Windows 2000**—From the **Start** menu, choose **Programs**, **KONICA MINOLTA**, and then **Status Monitor**. Double-click the Status Monitor icon displayed in the task bar.

Using the Status Monitor

Status Tab

- **Select Printer**—Selects the printer whose status is displayed. In addition, the messages that appear in the message window of the selected printer are displayed.
- **Graphic**—Shows a graphic representation of the printer and indicates where the problem is. When the background of the printer graphic is red or yellow, there is an error and the job has been interrupted.
- **Advanced Options**—Click **Advanced Options** to display the Advanced Options dialog box. From the Advanced Options dialog box, select whether the Status Monitor automatically starts when the operating system is started.
- **Printer Alerts**—Displays text messages that alert you of conditions such as low toner.

- **Recovery Instructions**—Provides you with explanations of what you need to do in order to correct problems and recover from error conditions.

Consumables Tab

Displays the usage status (approximate percentage remaining) of each consumables.

- **Refresh**—Rechecks the supplies and displays their status.

*Click **Help** to display windows containing explanations of the Status Monitor functions. Refer to this help for detailed information.*

Recognizing Status Monitor Alerts

When the Status Monitor detects a printing problem, the icon on the Windows task bar changes from green (normal) to yellow (warning), magenta or red (error), depending on the severity of the printer problem.

Recovering from a Status Monitor Alert

When the Status Monitor notifies you of a printing problem, double-click its icon on the Windows task bar to open the Status Monitor. The Status Monitor identifies what type of error has occurred.

Closing the Status Monitor

Click **Close** to close the Status Monitor window. To exit Status Monitor, right-click the Status Monitor icon in the taskbar, and then click **Exit**.

4

Printer Control Panel and Configuration Menu

About the Control Panel

The control panel, located on the top of the printer, allows you to direct the printer's operation. In addition, it displays the current status of the printer, including any condition that needs your attention.

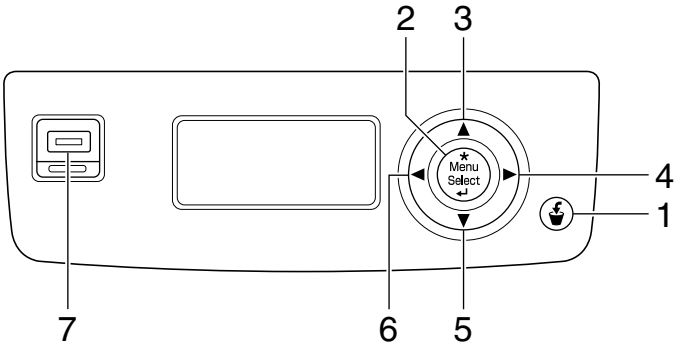

Control Panel Keys and Port

No.	Item	Explanation
1	Cancel	■ Cancels the currently displayed menu or menu choice ■ Allows you to cancel one or all print jobs that are currently being printed or processed: 1. Press the **Cancel** key. 2. Press the △ or ▽ keys to select either `CURRENT JOB` or `ALL JOBS`. 3. Press the **Menu/Select** key. The print job(s) is (are) cancelled.
2	* Menu Select ↵	■ Enters the menu system ■ Moves down in the menu structure ■ Applies the selected setting ■ MENU appears in the message window

No.	Item	Explanation
3		■ Moves the cursor up ■ Returns to the status screen from the help screen ■ Within a menu choice that is changeable character by character, scrolls upward through the available characters ■ , appears in the message window
4		■ Moves the cursor to the right ■ Displays the next help screen ■ appears in the message window
5		■ Moves the cursor down ■ Displays the help screen when an error occurs ■ Within a menu choice that is changeable character by character, scrolls downward through the available characters ■ , appears in the message window
6		■ Moves the cursor to the left ■ Displays the previous help screen ■ appears in the message window
7	Memory Direct Print Port	Used to plug the USB memory device into this port for printing PDF, XPS, JPEG, and TIFF files saved on the memory device. For details, refer to “MEMORY DIRECT” on page 52.

Message Window

The current status of the printer, the amount of toner remaining, and any error messages can be viewed from the message window.

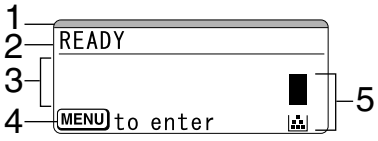

No.	Details
1	The printer status is indicated by the color of the indicator and lighting/flashing of the message window. ■ READY: Indicator lit up in blue and window lit up ■ PROCESSING or PRINTING: Indicator flashing and window lit up ■ ENERGY SAVE: Indicator lit up in blue and window goes off ■ ERROR: Indicator lit up in red and window lit up
2	The current status of the printer is displayed. ■ If the operator or service representative must be called, the symbol and the error status are displayed. ■ If a warning occurs, the symbol appears. ■ When a USB memory device is plugged into the Memory Direct Print Port, the symbol appears on the right side of the message window. ■ While a print job is being received, the symbol appears on the right side of the message window.
3	■ Error messages are displayed. ■ While a print job is being received, the user name and the print progress are displayed. ■ While updating the firmware, the type of firmware being updated and the update progress are displayed.
4	Key information is displayed.
5	The approximate amount of toner remaining is displayed.

Help Screens

The help screens appear when the ▽ key is pressed after an error occurred, such as a media misfeed, so that the error can be corrected.

Configuration Menu Overview

The configuration menu accessible from the control panel is structured as shown below.

Main Menu

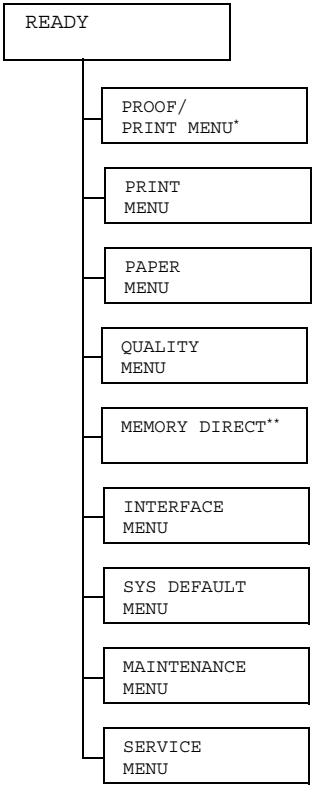

** This menu item appears only if an optional hard disk kit is installed.*
*** This menu item appears when an optional hard disk kit or a CompactFlash card is installed, and `INTERFACE MENU/MEMORY DIRECT` is set to `ENABLE`.*

`MEMORY DIRECT` does not appear if public user access has not been permitted through authentication settings. For details on the authentication settings, refer to the Reference Guide on the Utilities and Documentation CD-ROM.

PROOF/PRINT MENU

This menu item appears only if an optional hard disk kit is installed.

With this menu item, print jobs that were set to be saved on the hard disk by using Job Retention on the Basic tab of the printer driver can be printed or deleted.

All factory default values are shown in bold.

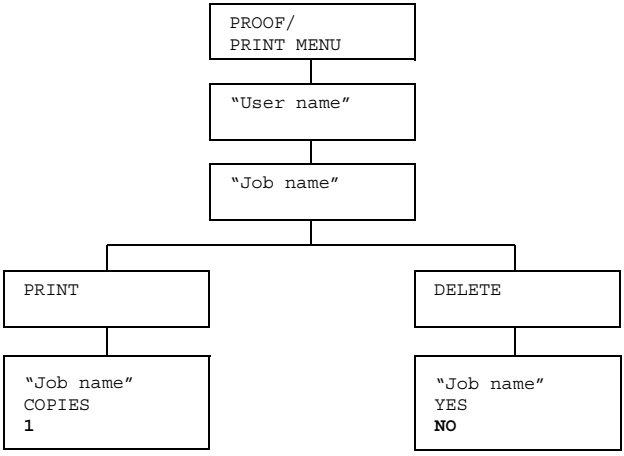

Printing/Deleting a Stored Job

1 Follow the procedure described below to select a job.

Press Key	Until Display Reads
* Menu Select ↵	PROOF/PRINT MENU
* Menu Select ↵	"User name" If no print jobs have been stored on the hard disk, NO STORED JOB appears.

Press Key	Until Display Reads
△, ▽ Press until the desired user name appears.	Desired user name
* Menu Select ↵	"Job name"
△, ▽ Press until the desired job name appears.	Desired job name
* Menu Select ↵	PRINT DELETE If the selected print job was set as a secured job from the printer driver, a screen for entering the password appears. For details on typing the password, refer to "Entering the Password" on page 33.

2 Select PRINT or DELETE, and then press the **Menu/Select** key.

If PRINT was selected, continue with step 3.
If DELETE was selected, continue with step 5.

3 Press the △ and ▽ keys to specify the number of copies to be printed. (Settings: 1 to 999; Default: 1)

4 Press the **Menu/Select** key.

Printing begins.

5 Select YES or NO.

6 Press the **Menu/Select** key.

If YES was selected, the print job is deleted.
If NO was selected, the PRINT/DELETE selection screen appears again.

Entering the Password

If the print job selected in the PROOF/PRINT MENU is a secured job, a screen for entering the password appears. Follow the procedure described below to type in the four-digit password specified from the printer driver.

1 Press the △ to increase or the ▽ to decrease the first digit of the password.

2 Press the ▷ key to move the cursor to the next digit.

3 Press the △ to increase or the ▽ to decrease the second digit of the password.

4 Continue these steps until all four digits of the password are specified.

5 Press the **Menu/Select** key.

The PRINT/DELETE selection screen appears.

If an incorrect password is entered, INVALID ENTRY appears and the screen for entering the password appears again.

PRINT MENU

With this menu, printer information, such as the configuration page and the statistics page, can be printed.

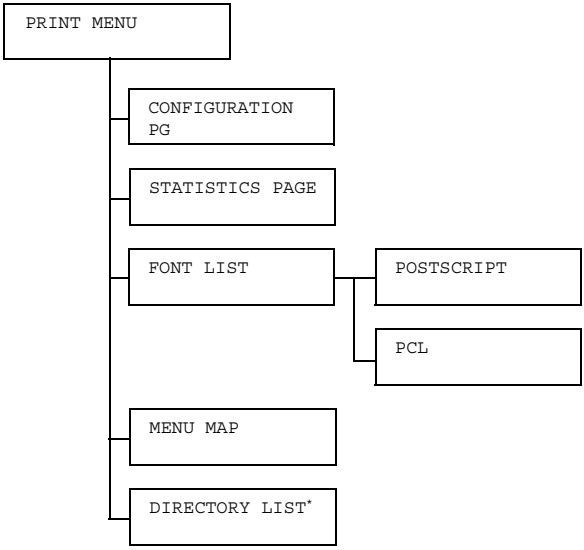

** This menu item appears only if an optional hard disk kit or a CompactFlash card is installed.*

All factory default values are shown in bold.

CONFIGURATION PG	Settings	**PRINT**/CANCEL	
	Prints the configuration page.		
STATISTICS PAGE	Settings	**PRINT**/CANCEL	
	Prints the statistics page such as the number of pages printed.		
FONT LIST	POST SCRIPT	Settings	**PRINT**/CANCEL
		Prints the PostScript font list.	
	PCL	Settings	**PRINT**/CANCEL
		Prints the PCL font list.	
MENU MAP	Settings	**PRINT**/CANCEL	
	Prints the menu map.		

DIRECTORY LIST	Settings	**PRINT**/CANCEL
	Prints the directory list of the hard disk or CompactFlash card.	

PAPER MENU

With this menu, the paper used for printing can be managed.

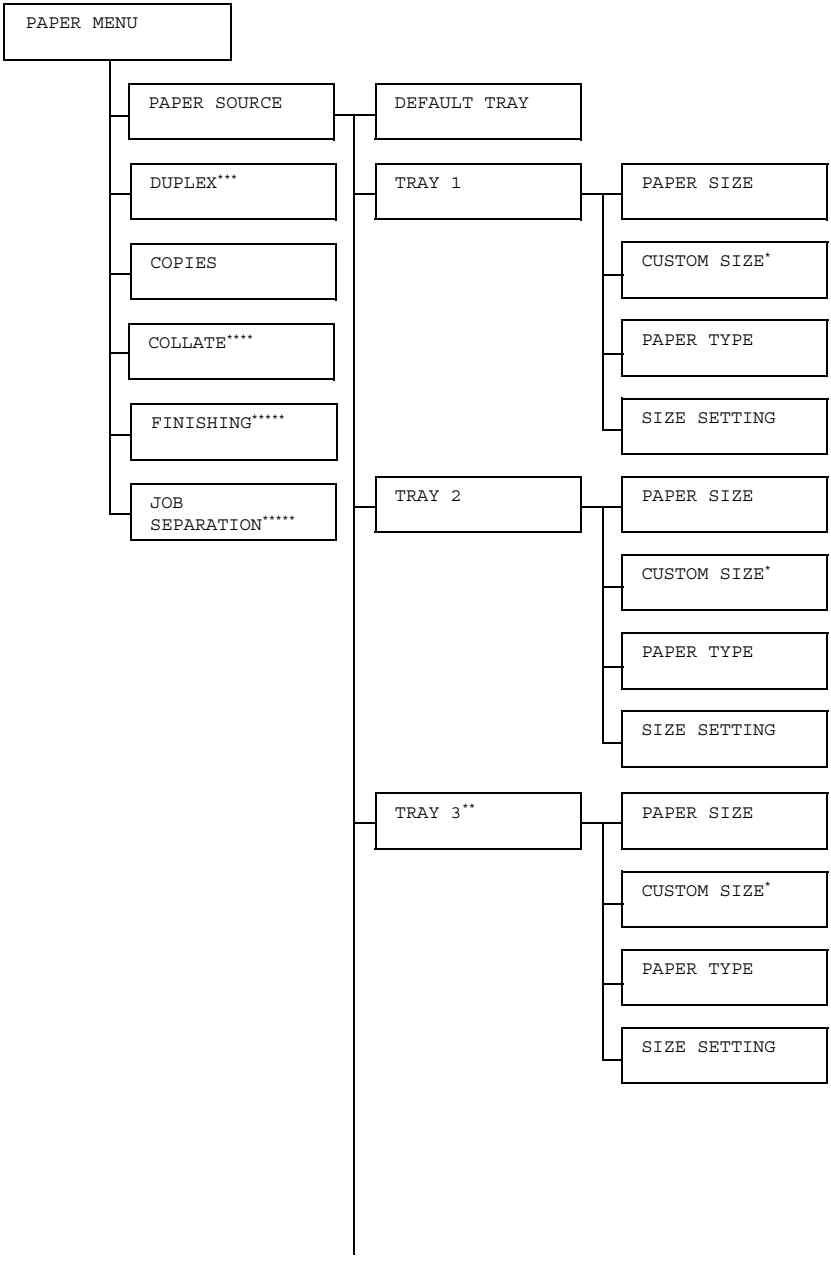

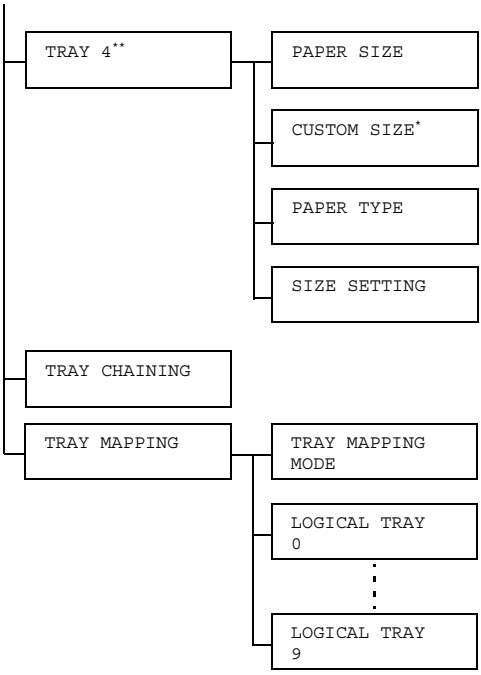

** This menu item appears only when you select* `CUSTOM` *from the* `TRAY X/PAPER SIZE` *menu.*
*** These menu items appear only if one or both of the optional lower feeder units are installed.*
**** This menu item appears only if a duplex is installed.*
***** This menu item appears only if an optional hard disk kit or a CompactFlash card of 1 GB or more is installed.*
****** This menu item appears only if the optional offset tray is installed.*

All factory default values are shown in bold.

PAPER SOURCE	DEFAULT TRAY	Settings		**TRAY 1**/TRAY 2/ TRAY 3/TRAY 4
		Select the setting for the default tray. *TRAY 3 and TRAY 4 appear only if the optional lower feeder units are installed.*		
	TRAY 1	PAPER SIZE	Settings	ANY/**LETTER**/LEGAL/ EXECUTIVE/**A4**/A5/A6/ B5(JIS)/B6(JIS)/GOVT LETTER/STATEMENT/ FOLIO/SP FOLIO/UK QUARTO/FOOLSCAP/GOVT LEGAL/16K/KAI 16/KAI 32/ENV C5/ENV C6/ENV DL/ENV MONARCH/ENV CHOU#3/ENV CHOU#4/ B5(ISO)/ENV #10/ENV YOU#4/JPOST/JPOST-D/ CUSTOM
			Select the setting for the size of paper loaded into Tray 1. *The default setting for North America is LETTER. The default setting for all other regions is A4.* *If AUTO is selected from the PAPER MENU/PAPER SOURCE/TRAY 1/SIZE SETTING menu, the printer automatically detects the paper size.*	

		CUSTOM SIZE	Specify the paper size when custom-sized paper is loaded into Tray 1. The setting units can be switched between millimeters and inches with the SYS DEFAULT MENU/PAPER/UNIT OF MEASURE setting. Setting range for WIDTH ■ For MILLIMETERS: 76 to 216 mm (default) – North America: 216 mm – All other regions: 210 mm ■ For INCHES: 3.00 to 8.50 inches (default) – North America: 8.50 inches – All other regions: 8.27 inches Setting range for LENGTH ■ For MILLIMETERS: 127 to 900 mm (default) – North America: 279 mm – All other regions: 297 mm ■ For INCHES: 5.00 to 35.43 inches (default) – North America: 11.00 inches – All other regions: 11.69 inches *This menu item appears only if PAPER SIZE is set to CUSTOM.*

		PAPER TYPE	Settings	ANY/**PLAIN PAPER**/ RECYCLED/THICK 1/ THICK 2/THICK 3/ LABEL/TRANSPARENCY/ ENVELOPE/POSTCARD/ THIN PAPER
			Select the setting for the type of paper loaded into Tray 1.	
		SIZE SET-TING	Settings	**AUTO**/USER SELECT
			If AUTO is selected, the printer automatically detects the paper size. If USER SELECT is selected, a user can select the paper size.	
	TRAY 2	PAPER SIZE	Settings	**LETTER**/LEGAL/ EXECUTIVE/**A4**/A5/A6/ B5(JIS)/B6(JIS)/GOVT LETTER/STATEMENT/ FOLIO/SP FOLIO/UK QUARTO/FOOLSCAP/GOVT LEGAL/16K/KAI 16/KAI 32/ENV C6/ENV DL/ENV MONARCH/ENV CHOU#3/ B5(ISO)/ENV #10/ENV YOU#4/JPOST/JPOST-D/ CUSTOM
			Select the setting for the size of paper loaded into Tray 2. *The default setting for North America is LETTER. The default setting for all other regions is A4.* *If AUTO is selected from the PAPER MENU/PAPER SOURCE/TRAY 2/SIZE SETTING menu, the printer automatically detects the paper size.*	

		CUSTOM SIZE	Specify the paper size when custom-sized paper is loaded into Tray 2. The setting units can be switched between millimeters and inches with the SYS DEFAULT MENU/PAPER/UNIT OF MEASURE setting. Setting range for WIDTH ■ For MILLIMETERS: 98 to 216 mm (default) – North America: 216 mm – All other regions: 210 mm ■ For INCHES: 3.87 to 8.50 inches (default) – North America: 8.50 inches – All other regions: 8.27 inches Setting range for LENGTH ■ For MILLIMETERS: 148 to 356 mm (default) – North America: 279 mm – All other regions: 297 mm ■ For INCHES: 5.83 to 14.00 inches (default) – North America:11.00 inches – All other regions: 11.69 inches This menu item appears only if PAPER SIZE is set to CUSTOM.

		PAPER TYPE	Settings	ANY/**PLAIN PAPER**/ RECYCLED/THICK 1/ THICK 2/THICK 3/ LABEL/TRANSPARENCY/ ENVELOPE/POSTCARD/ THIN PAPER
			Select the setting for the type of paper loaded into Tray 2.	
		SIZE SET-TING	Settings	**AUTO**/USER SELECT
			If AUTO is selected, the printer automatically detects the paper size. If USER SELECT is selected, a user can select the paper size.	
	TRAY 3	PAPER SIZE	Settings	**LETTER**/LEGAL/ EXECUTIVE/**A4**/A5/A6/ B5(JIS)/B6(JIS)/GOVT LETTER/STATEMENT/ FOLIO/SP FOLIO/UK QUARTO/FOOLSCAP/GOVT LEGAL/16K/KAI 16/KAI 32/ENV C6/ENV DL/ENV MONARCH/ENV CHOU#3/ B5(ISO)/ENV #10/ENV YOU#4/JPOST/JPOST-D/ CUSTOM
			Select the setting for the size of paper loaded into Tray 3. *The default setting for North America is LETTER. The default setting for all other regions is A4.* *If AUTO is selected from the PAPER MENU/PAPER SOURCE/TRAY 3/SIZE SETTING menu, the printer automatically detects the paper size.*	

		CUSTOM SIZE	Specify the paper size when custom-sized paper is loaded into Tray 3. The setting units can be switched between millimeters and inches with the SYS DEFAULT MENU/PAPER/UNIT OF MEASURE setting. Setting range for WIDTH ■ For MILLIMETERS: 98 to 216 mm (default) – North America: 216 mm – All other regions: 210 mm ■ For INCHES: 3.87 to 8.50 inches (default) – North America: 8.50 inches – All other regions: 8.27 inches Setting range for LENGTH ■ For MILLIMETERS: 148 to 356 mm (default) – North America: 279 mm – All other regions: 297 mm ■ For INCHES: 5.83 to 14.00 inches (default) – North America:11.00 inches – All other regions: 11.69 inches This menu item appears only if PAPER SIZE is set to CUSTOM.

		PAPER TYPE	Settings	ANY/**PLAIN PAPER**/ RECYCLED/THICK 1/ THICK 2/THICK 3/ LABEL/TRANSPARENCY/ ENVELOPE/POSTCARD/ THIN PAPER
			Select the setting for the type of paper loaded into Tray 3.	
		SIZE SET-TING	Settings	**AUTO**/USER SELECT
			If AUTO is selected, the printer automatically detects the paper size. If USER SELECT is selected, a user can select the paper size.	
	TRAY 4	PAPER SIZE	Settings	**LETTER**/LEGAL/ EXECUTIVE/**A4**/A5/A6/ B5(JIS)/B6(JIS)/GOVT LETTER/STATEMENT/ FOLIO/SP FOLIO/UK QUARTO/FOOLSCAP/GOVT LEGAL/16K/KAI 16/KAI 32/ENV C6/ENV DL/ENV MONARCH/ENV CHOU#3/ B5(ISO)/ENV #10/ENV YOU#4/JPOST/JPOST-D/ CUSTOM
			Select the setting for the size of paper loaded into Tray 4. *The default setting for North America is LETTER. The default setting for all other regions is A4.* *If AUTO is selected from the PAPER MENU/PAPER SOURCE/TRAY 4/SIZE SETTING menu, the printer automatically detects the paper size.*	

		CUSTOM SIZE	Specify the paper size when custom-sized paper is loaded into Tray 4. The setting units can be switched between millimeters and inches with the SYS DEFAULT MENU/PAPER/UNIT OF MEASURE setting. Setting range for WIDTH ■ For MILLIMETERS: 98 to 216 mm (default) – North America: 216 mm – All other regions: 210 mm ■ For INCHES: 3.87 to 8.50 inches (default) – North America: 8.50 inches – All other regions: 8.27 inches Setting range for LENGTH ■ For MILLIMETERS: 148 to 356 mm (default) – North America: 279 mm – All other regions: 297 mm ■ For INCHES: 5.83 to 14.00 inches (default) – North America:11.00 inches – All other regions: 11.69 inches This menu item appears only if PAPER SIZE is set to CUSTOM.

		PAPER TYPE	Settings	ANY/**PLAIN PAPER**/ RECYCLED/THICK 1/ THICK 2/THICK 3/ LABEL/TRANSPARENCY/ ENVELOPE/POSTCARD/ THIN PAPER
			Select the setting for the type of paper loaded into Tray 4.	
		SIZE SET-TING	Settings	**AUTO**/USER SELECT
			If AUTO is selected, the printer automatically detects the paper size. If USER SELECT is selected, a user can select the paper size.	
	TRAY CHAINING	Settings	**ON**/OFF	
		If ON is selected and the specified tray runs out of paper during printing, a tray loaded with paper of the same size is automatically selected so printing can continue. If OFF is selected and the specified tray runs out of paper, printing stops.		
	TRAY MAPPING	TRAY MAPPING MODE	Settings	ON/**OFF**
			Select whether or not the Tray Mapping function is used.	
		LOGICAL TRAY 0-9	Settings	PHYSICAL TRAY1/ PHYSICAL TRAY2/ PHYSICAL TRAY3/ PHYSICAL TRAY4
			Select the tray that is used for printing when a print job is received from another manufacturer's printer driver. The default setting for LOGICAL TRAY 2 is PHYSICAL TRAY 2. The default settings for all other trays are PHYSICAL TRAY 1. PHYSICAL TRAY3 *and* PHYSICAL TRAY4 *appear only if an optional lower feeder unit is installed.*	

DUPLEX	Settings	**OFF**/LONG EDGE/SHORT EDGE
	If LONG EDGE is selected, the pages will be printed on both sides of the paper for long-edge binding. If SHORT EDGE is selected, the pages will be printed on both sides of the paper for short-edge binding. The setting specified in the printer driver will override this menu setting.	
COPIES	Settings	**1**-9999
	Specify the number of copies to be printed. The setting specified in the printer driver will override this menu setting.	
COLLATE	Settings	ON/**OFF**
	If ON is selected, all pages of the document are printed before the next copy is printed. If OFF is selected, all copies of the document are not printed separately. The setting specified in the printer driver will override this menu setting. *This menu item appears only if an optional hard disk kit or a CompactFlash card of 1 GB or more is installed.*	
FIN-ISHING	Settings	SUB TRAY/**MAIN TRAY**/OFFSET
	When SUB TRAY is selected, the paper is fed to the sub output tray. When MAIN TRAY is selected, the paper is fed to the main output tray. When OFFSET is selected, the paper is fed to the sub output tray with each copy slightly shifted. The setting specified in the printer driver will override this menu setting. *The paper size available for SUB TRAY or OFFSET is as follows:* *Width: 89 to 216 mm (3.5 to 8.5 inches)* *Length: 140 to 356 mm (5.5 to 14.0 inches)* *OFFSET can be set only when COLLATE is ON.*	

JOB SEPA-RATION	Settings	ON/**OFF**
	The paper is fed to the sub output tray with each print job slightly shifted. *If FINISHING is set to MAIN TRAY, the print jobs are fed out stacked on the top of each other without being shifted.*	

QUALITY MENU

With this menu, settings for the print quality can be specified.

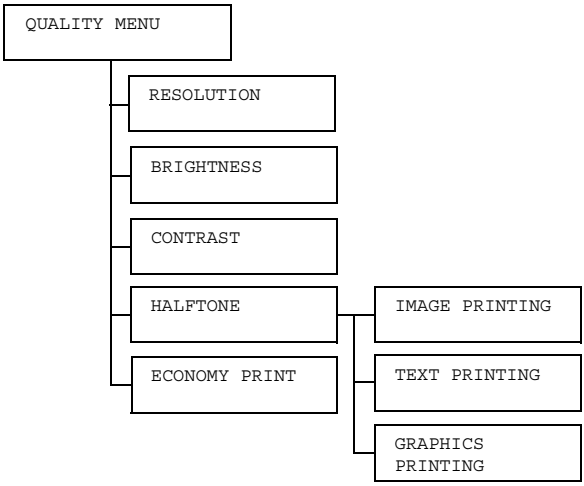

All factory default values are shown in bold.

RESOLU-TION	Settings	**600**/1200
	The resolution of the print image (600dpi or 1200dpi) can be specified.	
BRIGHT-NESS	Settings	-15%/-10%/-5%/**0%**/+5%/+10%/+15%
	The brightness of the printed image can be adjusted.	
CONTRAST	Settings	-15%/-10%/-5%/**0%**/+5%/+10%/+15%
	The contrast of the print image can be adjusted.	

HALFTONE	IMAGE PRINTING	Settings	LINE ART/**DETAIL**/ SMOOTH
		Select how halftones in images are reproduced. If LINE ART is selected, halftones are reproduced with high precision. If DETAIL is selected, halftones are reproduced with detail. If SMOOTH is selected, halftones are reproduced with smoothness.	
	TEXT PRINTING	Settings	**LINE ART**/DETAIL/ SMOOTH
		Select how halftones in text are reproduced. If LINE ART is selected, halftones are reproduced with high precision. If DETAIL is selected, halftones are reproduced with detail. If SMOOTH is selected, halftones are reproduced with smoothness.	
	GRAPHICS PRINTING	Settings	LINE ART/**DETAIL**/ SMOOTH
		Select how halftones in graphics are reproduced. If LINE ART is selected, halftones are reproduced with high precision. If DETAIL is selected, halftones are reproduced with detail. If SMOOTH is selected, halftones are reproduced with smoothness.	

ECONOMY PRINT	Settings	ON/**OFF**
	Select whether to print graphics with a reduced density by reducing the amount of toner that is used. If ON is selected, the amount of toner used is reduced when printing. If OFF is selected, the amount of toner used is not reduced when printing.	

MEMORY DIRECT

This menu item appears when an optional hard disk kit or a CompactFlash card is installed, and INTERFACE MENU/MEMORY DIRECT is set to ENABLE.

In addition, this menu item does not appear if public user access has not been permitted through authentication settings. For details on the authentication settings, refer to the Reference Guide on the Utilities and Documentation CD-ROM.

With this menu, settings for “memory direct” function can be specified.

For details on memory direct, refer to “Memory Direct” on page 80.

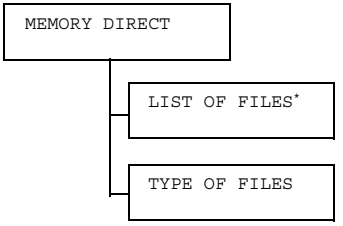

** This menu items appears when a USB memory device is plugged into the memory direct print port on the control panel.*

All factory default values are shown in bold.

LIST OF FILES	Select the file that you wish to output, and then press the **Menu/Select** key. If the file to be printed is in a folder, select the folder, and then press the **Menu/Select** key.	
	Settings	PRINT
	Select this setting to output a file.	
	Settings	CANCEL
	Select this setting to stop outputting and to return to the file list.	

	LETTER/ A4	Settings	**LETTER**/LEGAL/EXECUTIVE/**A4**/ A5/A6/B5(JIS)/B6(JIS)/GOVT LETTER/STATEMENT/FOLIO/SP FOLIO/UK QUARTO/FOOLSCAP/ GOVT LEGAL/16K/KAI 16/KAI 32/ENV C5/ENV C6/ENV DL/ENV MONARCH/ENV CHOU#3/ENV CHOU#4/B5(ISO)/ENV #10/ENV YOU#4/JPOST/JPOST-D/CUSTOM
		Change the size of the paper. *The value selected for SYS DEFAULT MENU/DEFAULT PAPER is displayed as the default for this setting.* *This menu item does not appear if the selected file type is a PDF file or an XPS file.*	
	DUPLEX: OFF	Settings	LONG EDGE/SHORT EDGE/**OFF**
		Select whether to perform duplex printing. If LONG EDGE is selected, the page will be printed on both sides of the paper for long edge binding. If SHORT EDGE is selected, the page will be printed on both sides of the paper for short edge binding. If OFF is selected, duplex printing is not performed. *This menu item appears only if a duplex is installed.*	
	COPIES:1	Settings	**1**-9999
		Specify the number of copies to be printed (between 1 and 9999).	

	COLLATE	Settings	ON/**OFF**
		Select whether to collate the copies. If ON is selected, collated printing is performed. If OFF is selected, collated printing is not performed. *This menu item appears only if an optional hard disk kit or a CompactFlash card of 1GB or more is installed.*	
	MAIN TRAY	Settings	SUB TRAY/**MAIN TRAY**/OFFSET
		Select the output tray and finishing settings. When SUB TRAY is selected, the paper is fed to the sub output tray. When MAIN TRAY is selected, the paper is fed to the main output tray. When OFFSET is selected, the paper is fed to the sub output tray with each copy slightly shifted. *This menu item appears only if the optional offset tray is installed.*	
TYPE OF FILES	Settings	PDF,XPS,JPEG,TIFF/**PDF,XPS**	
	Select the type of files to be displayed.		

INTERFACE MENU

With this menu, interface settings can be specified.

Restart the printer after changing settings in the ETHERNET menu.

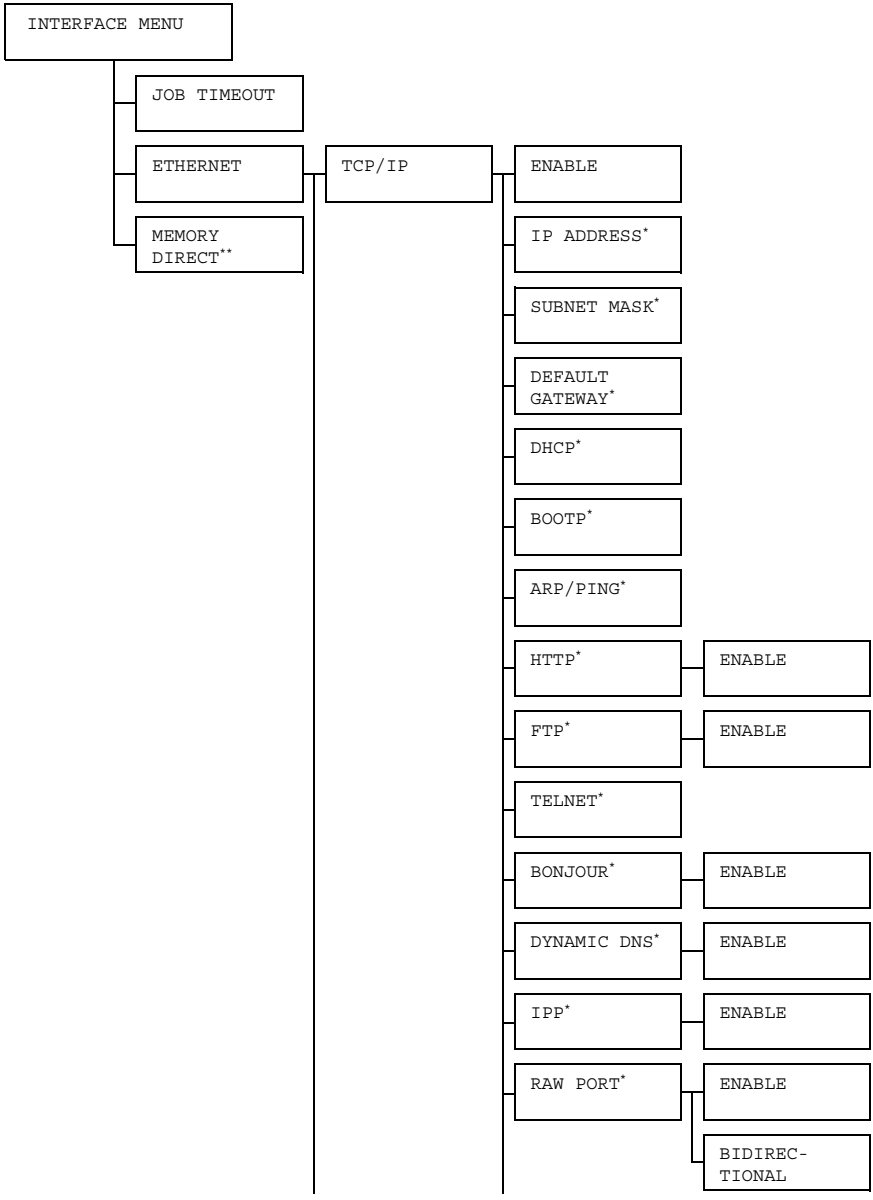

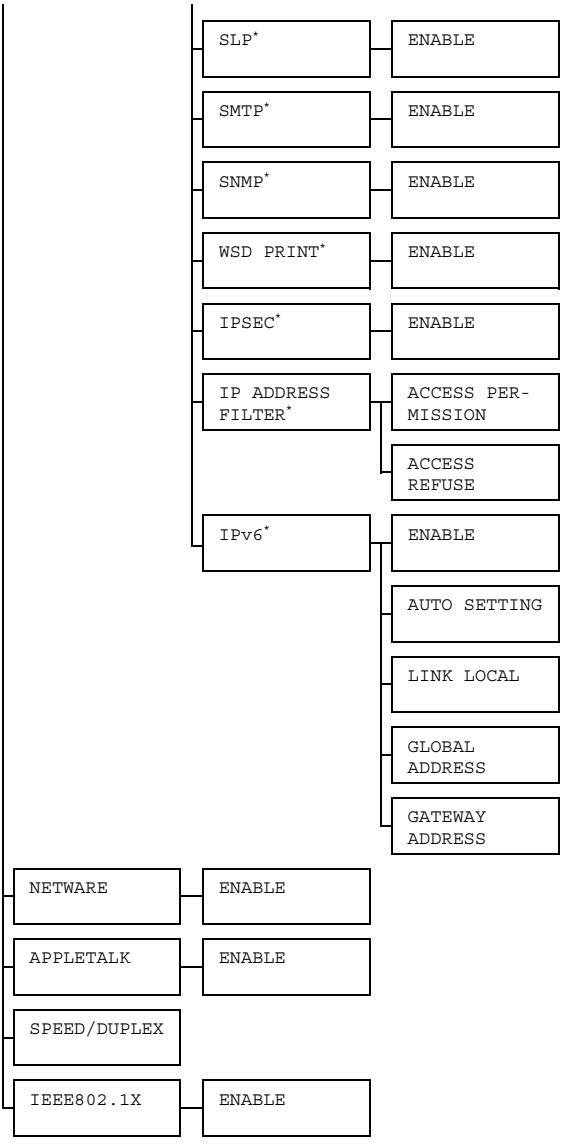

* *These menu items appear when* INTERFACE MENU/ETHERNET/TCP/IP/ENABLE *is set to* YES.

** *This menu item appears only if an optional hard disk kit or a CompactFlash card is installed.*

All factory default values are shown in bold.

JOB TIME-OUT	Settings	5 seconds-**15 seconds**-300 seconds		
	Specify the timeout interval for a print job being received.			
ETHER-NET	TCP/IP	ENABLE	Settings	**YES**/NO
			If YES is selected, TCP/IP is enabled. If NO is selected, TCP/IP is disabled.	
		IP ADDRESS	Setting	**000.000.000.000**
			Set the IP address for this printer on the network. Use the △, ▽, ◁, and ▷ keys to specify the value. If the IP address is manually specified, DHCP/BOOTP is automatically set to OFF.	
		SUBNET MASK	Setting	**255.255.000.000**
			Specify the subnet mask for the network. Use the △, ▽, ◁, and ▷ keys to specify the value.	
		DEFAULT GATEWAY	Setting	**000.000.000.000**
			Specify the IP address of the router if one is on the network. Use the △, ▽, ◁, and ▷ keys to specify the value.	
		DHCP	Settings	**ON**/OFF
			Select whether or not the IP address is automatically acquired. If ON is selected, the IP address is automatically acquired. If OFF is selected, the IP address is not automatically acquired.	

		BOOTP	Settings	ON/**OFF**	
			Select whether or not the IP address is automatically acquired. If ON is selected, the IP address is automatically acquired. If OFF is selected, the IP address is not automatically acquired.		
		ARP/ PING	Settings	ON/**OFF**	
			Select whether or not the IP address is automatically acquired. If ON is selected, the IP address is automatically acquired. If OFF is selected, the IP address is not automatically acquired.		
		HTTP	ENABLE	Settings	**YES**/NO
				If YES is selected, HTTP is enabled. If NO is selected, HTTP is disabled.	
		FTP	ENABLE	Settings	**YES**/NO
				If YES is selected, FTP is enabled. If NO is selected, FTP is disabled.	
		TELNET	Settings	**ENABLE**/DISABLE	
			Select whether to enable or disable Telnet transmissions. When ENABLE is selected, Telnet transmissions are enabled. When DISABLE is selected, Telnet transmissions are disabled.		

		BON-JOUR	ENABLE	Settings	**YES**/NO
				If YES is selected, BONJOUR is enabled. If NO is selected, BONJOUR is disabled.	
		DYNAMIC DNS	ENABLE	Settings	YES/**NO**
				If YES is selected, DYNAMIC DNS is enabled. If NO is selected, DYNAMIC DNS is disabled.	
		IPP	ENABLE	Settings	**YES**/NO
				If YES is selected, IPP is enabled. If NO is selected, IPP is disabled.	
		RAW PORT	ENABLE	Settings	**YES**/NO
				If YES is selected, RAW PORT is enabled. If NO is selected, RAW PORT is disabled.	
			BIDI-REC-TIONAL	Settings	ON/**OFF**
				If ON is selected, RAW PORT is enabled for bi-directional communication. If OFF is selected, RAW PORT is disabled for bi-directional communication.	
		SLP	ENABLE	Settings	**YES**/NO
				If YES is selected, SLP is enabled. If NO is selected, SLP is disabled.	

		SMTP	ENABLE	Settings	**YES**/NO
				If YES is selected, SMTP is enabled. If NO is selected, SMTP is disabled.	
		SNMP	ENABLE	Settings	**YES**/NO
				If YES is selected, SNMP is enabled. If NO is selected, SNMP is disabled.	
		WSD PRINT	ENABLE	Settings	**YES**/NO
				If YES is selected, WSD PRINT is enabled. If NO is selected, WSD PRINT is disabled.	
		IPSEC	ENABLE	Settings	YES/**NO**
				If YES is selected, IPSEC is enabled. If NO is selected, IPSEC is disabled.	
		IP ACCESS FILTER	ACCESS PER-MIS-SION	Settings	ENABLE/ **DISABLE**
				If ENABLE is selected, ACCESS PERMISSION is enabled. If DISABLE is selected, ACCESS PERMISSION is disabled.	
			ACCESS REFUSE	Settings	ENABLE/ **DISABLE**
				If ENABLE is selected, ACCESS REFUSE is enabled. If DISABLE is selected, ACCESS REFUSE is disabled.	

		IPv6	ENABLE	Settings	**YES**/NO
				If YES is selected, IPv6 is enabled. If NO is selected, IPv6 is disabled.	
			AUTO SETTING	Settings	**YES**/NO
				If YES is selected, IPv6 address is automatically obtained. If NO is selected, IPv6 auto configuration is disabled.	
			LINK LOCAL	Displays the link-local address of IPv6.	
			GLOBAL ADDRESS	Displays the global address of IPv6.	
			GATEWAY ADDRESS	Displays the gateway address of IPv6.	
	NETWARE	ENABLE	Settings	YES/**NO**	
			If YES is selected, NetWare is enabled. If NO is selected, NetWare is disabled.		
	APPLE TALK	ENABLE	Settings	**YES**/NO	
			If YES is selected, AppleTalk is enabled. If NO is selected, AppleTalk is disabled.		
	SPEED/ DUPLEX	Settings	**AUTO**/10BASE FULL/10BASE HALF/100BASE FULL/100BASE HALF/1000BASE FULL		
		Specify the transmission speed for the network and the transmission method for bi-directional transmission.			
	IEEE802.1X	ENABLE	Settings	YES/**NO**	
			If YES is selected, IEEE802.1X is enabled. If NO is selected, IEEE802.1X is disabled.		

MEMORY DIRECT	Settings	**ENABLE**/DISABLE
	Select whether to enable or disable memory direct printing. If ENABLE is selected, memory direct printing is enabled. If DISABLE is selected, memory direct printing is disabled.	

SYS DEFAULT MENU

With this menu, settings can be specified to adjust the operation of the printer, such as the display language of the message window and the time until the machine enters Energy Saver mode.

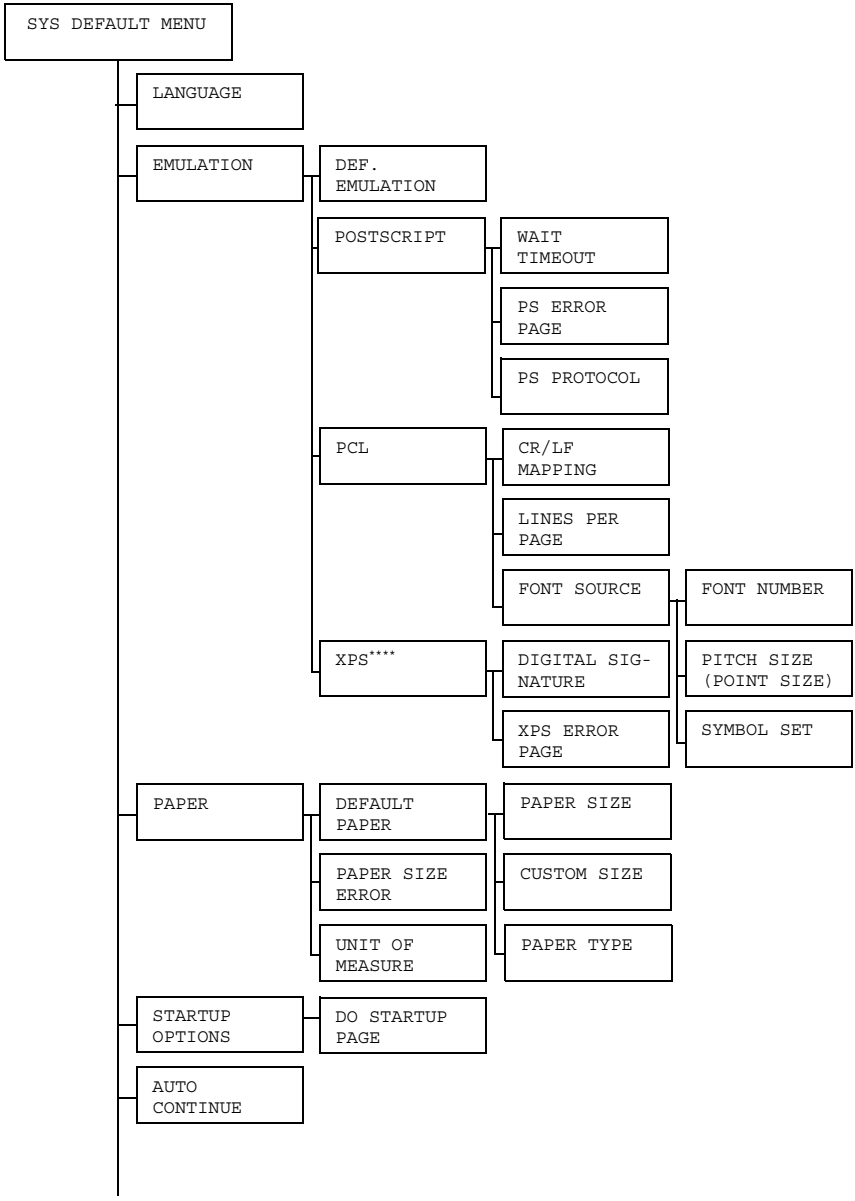

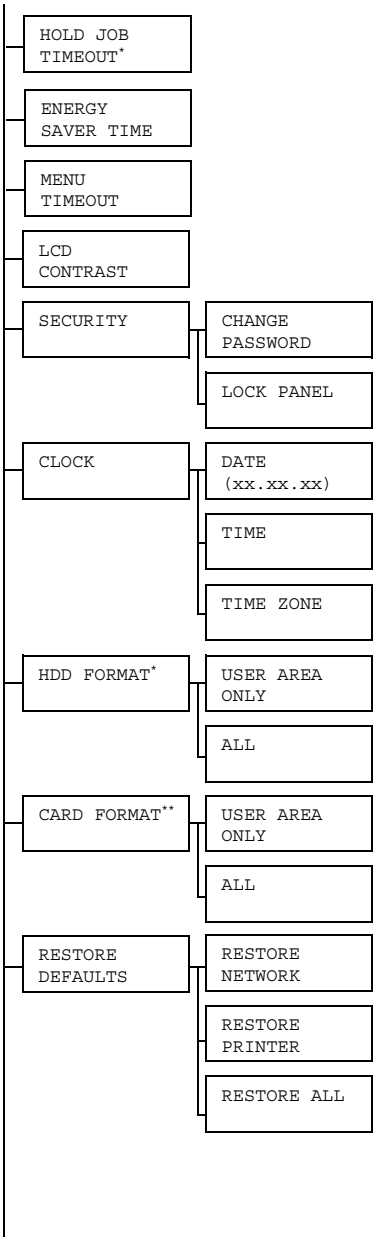
HOLD JOB TIMEOUT*
ENERGY SAVER TIME
MENU TIMEOUT
LCD CONTRAST
SECURITY
CHANGE PASSWORD
LOCK PANEL
CLOCK
DATE (xx.xx.xx)
TIME
TIME ZONE
HDD FORMAT*
USER AREA ONLY
ALL
CARD FORMAT**
USER AREA ONLY
ALL
RESTORE DEFAULTS
RESTORE NETWORK
RESTORE PRINTER
RESTORE ALL

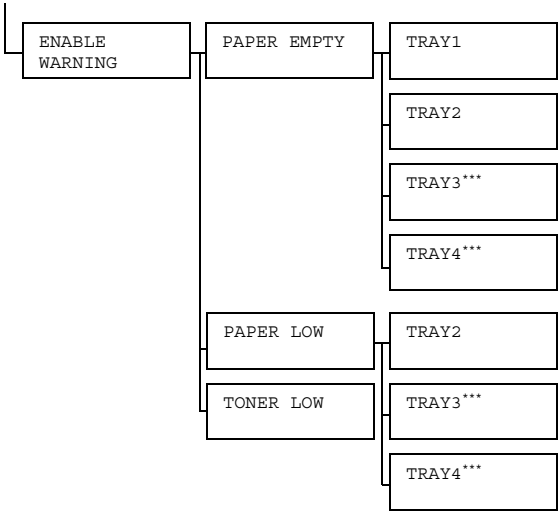

** This menu item appears only if an optional hard disk kit is installed.*
*** This menu item appears only if an optional CompactFlash card is installed.*
**** These menu items appear only if the optional lower feeder unit is installed.*
***** This menu item appears only if an optional hard disk kit or a CompactFlash card is installed.*

All factory default values are shown in bold.

LANGUAGE	Settings	**ENGLISH**/FRENCH/GERMAN/SPANISH/ITALIAN/PORTUGUESE/CZECH/JAPANESE/KOREAN/SIMPLIFIED CHINESE/TRADITIONAL CHINESE/DUTCH/RUSSIAN/POLISH		
	The display language of the message window can be changed to the selected language. The language selections appear in the message window in the corresponding language. For example, GERMAN appears as DEUTSCH.			
EMULATION	DEF. EMULATION	Settings	**AUTO**/POSTSCRIPT/PCL	
		Specify the printer emulation language. If AUTO is selected, the printer automatically selects the printer emulation language from the data stream.		
	POSTSCRIPT	WAIT TIME OUT	Settings	**0**-300
			Specify the time until an error is determined to be a PostScript error. If 0 is selected, no timeout is performed.	
		PS ERROR PAGE	Settings	ON/**OFF**
			Select whether or not an error page is printed when a Postscript error occurs.	
		PS PROTOCOL	Settings	**AUTO**/NORMAL/BINARY
			Specify the protocol for data transmissions with a PostScript data stream. If AUTO is selected, the printer automatically selects an applicable protocol from the data stream.	

	PCL	CR/LF MAP-PING	Settings	**CR=CR LF=LF**/CR=CRLF LF=LF/CR=CR LF=LFCR/CR=CRLF LF=LFCR	
			Select the definitions of the CR/LF codes in the PCL language.		
		LINES PER PAGE	Settings	5-**60**-128	
			Specify the number of lines per page in the PCL language.		
		FONT SOURCE	FONT NUMBER	Settings	**0**-102
				Specify the default font in the PCL language. The font numbers that appear correspond to the PCL font list. For details on printing the font list, refer to “PRINT MENU” on page 34.	
			PITCH SIZE (POINT SIZE)	Settings	0.44-**10.00**-99.99 (4.00-**12.00**-999.75)
				Specify the font size in the PCL language. If the selected FONT NUMBER is for a bitmap font, PITCH SIZE appears. If the selected FONT NUMBER is for an outline font, POINT SIZE appears.	
			SYMBOL SET	Specify the symbol set used with the PCL language. The default setting is PC8.	

	XPS	DIGITAL SIGNATURE	Settings	ENABLE/**DISABLE**
			If ENABLE is selected, DIGITAL SIGNATURE is enabled. If DISABLE is selected, DIGITAL SIGNATURE is disabled.	
		XPS ERROR PAGE	Settings	**ON**/OFF
			If ON is selected, an XPS error page is printed when an XPS error occurs. If OFF is selected, no XPS error page is printed when an XPS error occurs.	
PAPER	DEFAULT PAPER	PAPER SIZE	Settings	**LETTER**/LEGAL/EXECUTIVE/**A4**/A5/A6/B5(JIS)/B6(JIS)/GOVT LETTER/STATEMENT/FOLIO/SP FOLIO/UK QUARTO/FOOLSCAP/GOVT LEGAL/16K/KAI 16/KAI 32/ENV C5/ENV C6/ENV DL/ENV MONARCH/ENV CHOU#3/ENV CHOU#4/B5(ISO)/ENV #10/ENV YOU#4/JPOST/JPOST-D/CUSTOM
			Select the size of media that is normally used. *The default setting for North America is LETTER. The default setting for all other regions is A4.*	

		CUSTOM SIZE	Specify the media size when PAPER SIZE is set to CUSTOM. The setting units can be switched between millimeters and inches with the SYS DEFAULT MENU/PAPER/UNIT OF MEASURE setting. Setting range for WIDTH ■ For MILLIMETERS: 76 to 216 mm (default) – North America: 216 mm – All other regions: 210 mm ■ For INCHES: 3.00 to 8.50 inches (default) – North America: 8.50 inches – All other regions: 8.27 inches Setting range for LENGTH ■ For MILLIMETERS: 127 to 356 mm (default) – North America: 279 mm – All other regions: 297 mm ■ For INCHES: 5.00 to 14.00 inches (default) – North America: 11.00 inches – All other regions: 11.69 inches

		PAPER TYPE	Settings	**PLAIN PAPER**/ RECYCLED/THICK 1/ THICK 2/THICK 3/ LABEL/TRANSPARENCY/ ENVELOPE/POSTCARD/ THIN PAPER
			Select the type of media that is normally used.	
	PAPER SIZE ERROR	Settings	**ENABLE**/DISABLE	
		If ENABLE is selected, a paper size error is detected. If DISABLE is selected, no paper size error is detected.		
	UNIT OF MEA-SURE	Settings	**INCHES**/**MILLIMETERS**	
		The units for specifying the size of custom media can be switched between inches and millimeters. *The default setting for North America is INCHES. The default setting for all other regions is MILLIMETERS.*		
STARTUP OPTIONS	DO START-UP PAGE	Settings	ON/**OFF**	
		Select whether or not a startup page is printed when the printer is turned on.		
AUTO CON-TINUE	Settings	ON/**OFF**		
	Select whether or not printing continues if the size or type of media in the selected tray is different from the size or type of media for the print job. If AUTO CONTINUE is set to ON, printing automatically continues after about 10 seconds under the following conditions. At this time, printing will be performed even if the media size is different. No media: PAPER EMPTY (Page 186)/TRAY EMPTY (Page 187) Different media size/type: PAPER ERROR (Page 186)/TRAY x PAPER ERR (Page 187)			

HOLD JOB TIME OUT	Settings	**DISABLE**/1 hour/4 hours/1 day/ 1 week
	Specify the length of time until print jobs saved on the hard disk are deleted. If DISABLE is selected, print jobs are not deleted at a specific time.	
ENERGY SAVER TIME	Settings	**5 minutes**/6 minutes/7 minutes/8 minutes/9 minutes/10 minutes/11 minutes/12 minutes/13 minutes/14 minutes/15 minutes/30 minutes/1 hour
	Specify the length of time until the machine enters Energy Saver mode.	
MENU TIME OUT	Settings	OFF/1 minute/**2 minutes**
	Specify the length of time until the status screen is displayed when no operation is performed while a menu or help screen is displayed in the message window. If OFF is selected, no timeout occurs.	
LCD CON-TRAST	Settings	-3/-2/-1/**0**/+1/+2/+3
	Adjust the contrast of the message window. The darkest level setting is -3 and the brightest level setting is +3.	
SECU-RITY	CHANGE PASS-WORD	Specify the password for locking the control panel. If the password is set to 0000 (default), the control panel is not locked. In order to lock the control panel, be sure to specify a password other than 0000.
	LOCK PANEL	Settings: **OFF**/MINIMUM/ON
		Specify how the control panel is locked. If OFF is selected, the control panel is not locked. If MINIMUM is selected, the INTERFACE MENU and SYS DEFAULT MENU are protected with a password. If ON is selected, all menus are protected with a password. In order to lock the control panel, be sure to specify a password other than 0000.

CLOCK	DATE (xx.xx.xx)	Specify the date for the printer's internal clock. The date for Asia and China is set in the order year, month, then day (YY.MM.DD). The date for the Americas is set in the order month, day, then year (MM.DD.YY). The date for Europe is set in the order day, month, then year (DD.MM.YY).	
	TIME	Specify the time for the printer's internal clock.	
	TIME ZONE	Settings	-12:00-**00:00**-+13:00
		Specify the time zone.	
HDD FORMAT	USER AREA ONLY	Initialize the user area of the hard disk. When this menu item is selected, the printer is automatically restarted.	
	ALL	Initialize the hard disk. When this menu item is selected, the printer is automatically restarted.	
CARD FORMAT	USER AREA ONLY	Initialize the user area of the CompactFlash card. When this menu item is selected, the printer is automatically restarted.	
	ALL	Initialize the CompactFlash card. When this menu item is selected, the printer is automatically restarted.	
RESTORE DEFAULTS	RESTORE NETWORK	Reset the network settings to their defaults. When this menu item is selected, the printer is automatically restarted.	
	RESTORE PRINTER	Reset the printer settings to their defaults. When this menu item is selected, the printer is automatically restarted.	
	RESTORE ALL	Reset all settings to their defaults. When this menu item is selected, the printer is automatically restarted.	

ENABLE WARNING	PAPER EMPTY	TRAY1	Settings	**ON**/OFF
			Select whether or not a warning appears when Tray 1 runs out of media.	
		TRAY2	Settings	**ON**/OFF
			Select whether or not a warning appears when Tray 2 runs out of media.	
		TRAY3	Settings	**ON**/OFF
			Select whether or not a warning appears when Tray 3 runs out of media.	
		TRAY4	Settings	**ON**/OFF
			Select whether or not a warning appears when Tray 4 runs out of media.	
	PAPER LOW	TRAY2	Settings	**ON**/OFF
			Select whether or not to display a warning when Tray 2 is about to run out of media.	
		TRAY3	Settings	**ON**/OFF
			Select whether or not to display a warning when Tray 3 is about to run out of media.	
		TRAY4	Settings	**ON**/OFF
			Select whether or not to display a warning when Tray 4 is about to run out of media.	
	TONER LOW	Settings	ON/**OFF**	
			Select whether or not to display a warning when the toner is about to run out.	

MAINTENANCE MENU

With this menu, maintenance on this printer can be performed.

In order to use this menu, the administrator password must be entered.

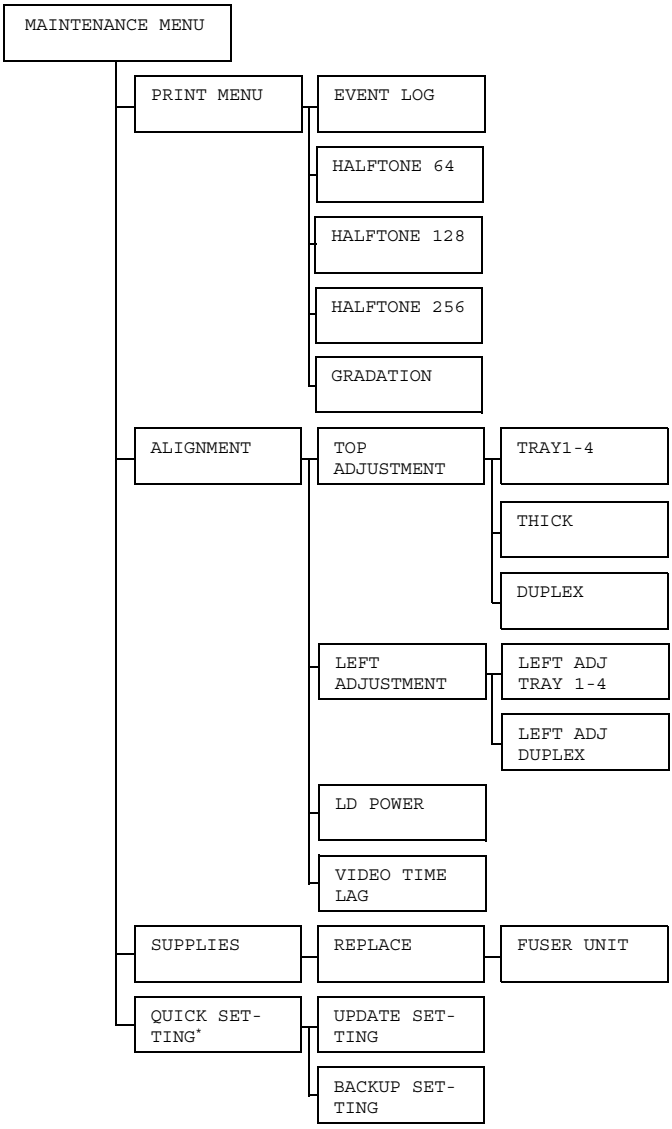

** This menu item appears only if a USB memory device is connected to the printer.*

All factory default values are shown in bold.

PRINT MENU	EVENT LOG	Settings	**PRINT**/CANCEL	
		Prints the event log.		
	HALF-TONE 64	Settings	**PRINT**/CANCEL	
		Print halftones at 64 gradations.		
	HALF-TONE 128	Settings	**PRINT**/CANCEL	
		Print halftones at 128 gradations.		
	HALF-TONE 256	Settings	**PRINT**/CANCEL	
		Print halftones at 256 gradations.		
	GRADA-TION	Settings	**PRINT**/CANCEL	
		Prints the gradation.		
ALIGN-MENT	TOP ADJUST MENT	TRAY1	Settings	-8-0-7
			When printing on media in Tray 1, specify the size of the top margin.	
		TRAY2	Settings	-8-0-7
			When printing on media in Tray 2, specify the size of the top margin.	
		TRAY3	Settings	-8-0-7
			When printing on media in Tray 3, specify the size of the top margin.	
		TRAY4	Settings	-8-0-7
			When printing on media in Tray 4, specify the size of the top margin.	
		THICK	Settings	-8-0-7
			When printing on thick paper, specify the size of the top margin.	
		DUPLEX	Settings	-8-0-7
			When printing on media using duplex pass, specify the size of the top margin.	

	LEFT ADJUSTMENT	LEFT ADJ TRAY1	Settings	-8-0-7
			When printing on media in Tray 1, specify the size of the left margin.	
		LEFT ADJ TRAY2	Settings	-8-0-7
			When printing on media in Tray 2, specify the size of the left margin.	
		LEFT ADJ TRAY3	Settings	-8-0-7
			When printing on media in Tray 3, specify the size of the left margin.	
		LEFT ADJ TRAY4	Settings	-8-0-7
			When printing on media in Tray 4, specify the size of the left margin.	
		LEFT ADJ DUPLEX	Settings	-8-0-7
			When printing on media using duplex pass, specify the size of the left margin.	
	LD POWER	Settings	0-7	
		Adjust the intensity of laser output.		
	VIDEO TIME LAG	Settings	0-15	
		When resolution is set to 1200 dpi, adjust the video output start point horizontally in the even lines.		
SUPPLIES	REPLACE	FUSER UNIT	Settings	YES/**NO**
			Reset the service life counter for the fuser unit.	
QUICK SETTING	UPDATE SETTING	Setup	**EXECUTE**/CANCEL	
		Select whether or not to update the printer settings from the definitions file on the USB memory device. If EXECUTE is selected, the printer settings are updated. If CANCEL is selected, the settings are not updated.		
	BACKUP SETTING	Setup	**EXECUTE**/CANCEL	
		Select whether or not to save the printer settings information on a USB memory device. If EXECUTE is selected, the printer settings are saved on a USB memory device. If CANCEL is selected, the settings are not saved.		

SERVICE MENU

With this menu, the service representative can adjust the printer and perform maintenance operations. This menu cannot be used by the user.

5

Memory Direct

Memory Direct

PDF, XPS, JPEG and TIFF files saved on USB memory devices can be printed by plugging the USB memory device into the printer.

Memory direct can be used only if an optional hard disk kit or a CompactFlash card is installed.
In order to perform collated printing with memory direct, an optional hard disk kit or a CompactFlash card of 1 GB or more must be installed.

For details on specifying settings with the control panel, refer to "MEMORY DIRECT" on page 52.

Printing From a Connected USB Memory Device

1 Open the memory direct print port cover.

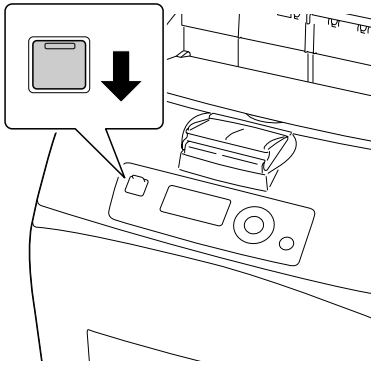

2 Plug the USB memory device into the memory direct print port. The USB icon appears in the upper-left corner of the message window, and the `Memory Direct` menu appears.

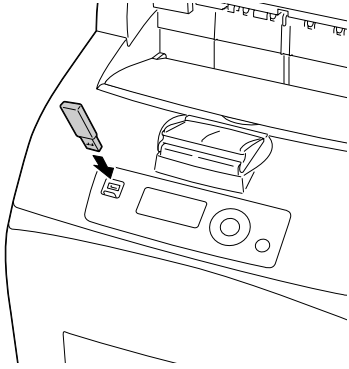

3 Select `LIST OF FILES`, and then press the **Menu/Select** key.

When all files (PDF, XPS, JPEG and TIFF) are displayed, select `Type OF FILES`*, and then press the* ***Menu/Select*** *key.*

4 From the file list, select the file that you wish to print, and then press the **Menu/Select** key.
If the file to be printed is in a folder, select the folder, and then press the **Menu/Select** key.

A maximum of 99 folders and files can be displayed.

Up to 8 folder levels can be displayed.

5 Select `PRINT`, and then press the **Menu/Select** key.
When printing is finished, the status screen appears again.

Settings can be specified for the paper size, duplex printing, number of copies, collating, the output tray, and memory direct print.

Do not unplug the USB memory device from the memory direct print port during memory direct printing.

6 Using Media

Media Specifications

Supported media types/sizes

The following table shows the information about the media types and sizes supported by this printer.

For the information about custom size, see “Custom size” on page 85.

Media	Media Size		Tray*	Duplex (double-sided)
	Inch	Millimeter		
Letter	8.5 x 11.0	215.9 x 279.4	1/2/3/4	Yes
Legal	8.5 x 14.0	215.9 x 355.6	1/2/3/4	Yes
Statement	5.5 x 8.5	139.7 x 215.9	1/2/3/4	Yes
Executive	7.25 x 10.5	184.2 x 267.0	1/2/3/4	Yes
A4	8.2 x 11.7	210.0 x 297.0	1/2/3/4	Yes
A5	5.9 x 8.3	148.0 x 210.0	1/2/3/4	Yes
A6	4.1 x 5.8	105.0 x 148.0	1/2/3/4	Yes
B5 (JIS)	7.2 x 10.1	182.0 x 257.0	1/2/3/4	Yes
B6	5.0 x 7.2	128.0 x 182.0	1/2/3/4	Yes
Folio	8.3 x 13.0	210.0 x 330.0	1/2/3/4	Yes
SP Folio	8.5 x 12.69	215.9 x 322.3	1/2/3/4	Yes
Foolscap	8.0 x 13.0	203.2 x 330.2	1/2/3/4	Yes
UK Quarto	8.0 x 10.0	203.2 x 254.0	1/2/3/4	Yes
Government Letter	8.0 x 10.5	203.2 x 266.7	1/2/3/4	Yes
Government Legal	8.5 x 13.0	215.9 x 330.2	1/2/3/4	Yes
16 K	7.7 x 10.6	195.0 x 270.0	1/2/3/4	Yes
Kai 16	7.3 x 10.2	185.0 x 260.0	1/2/3/4	Yes
Kai 32	5.1 x 7.3	130.0 x 185.0	1/2/3/4	Yes
Japanese Postcard	3.9 x 5.8	100.0 x 148.0	1/2/3/4	Yes**
Japanese Postcard-D	5.8 x 7.9	148.0 x 200.0	1/2/3/4	Yes**
B5 (ISO)	6.9 x 9.8	176.0 x 250.0	1/2/3/4	Yes
Envelope #10	4.125 x 9.5	104.8 x 241.3	1/2/3/4	No
Envelope DL	4.3 x 8.7	110.0 x 220.0	1/2/3/4	No
Envelope C5	6.4 x 9.0	162.0 x 229.0	1	No
Envelope C6	4.5 x 6.4	114.0 x 162.0	1/2/3/4	No
Envelope Monarch	3.875 x 7.5	98.4 x 190.5	1/2/3/4	No
Envelope Chou #3	4.7 x 9.2	120.0 x 235.0	1/2/3/4	No
Envelope Chou #4	3.5 x 8.1	90.0 x 205.0	1	No
Envelope You #4	4.1 x 9.3	105.0 x 235.0	1/2/3/4	No

Notes: * Tray 3 and 4 are the optional lower feeder units.
** Print quality is not guaranteed.

If PAPER MENU/PAPER SOURCE/TRAY1/2/3/4/SIZE SETTING is set to AUTO, the printer automatically detects the paper size of Letter, Legal, Government Legal, Executive, A4, A5, and B5 (JIS).

Custom size

Tray 1	**Simplex**	Width: 76.2-215.9 mm (3.0 - 8.5 inch) Length: 127.0-900 mm (5.0 - 35.43 inch)
	Duplex	Width: 88.9-215.9 mm (3.5 - 8.5 inch) Length: 139.7-355.6 mm (5.5 - 14.0 inch)
Tray 2/3/4	**Simplex**	Width: 98.4-215.9 mm (3.87 - 8.5 inch) Length: 148.0-355.6 mm (5.83 - 14.0 inch)
	Duplex	

For custom size, you can use either the printer driver or printer's control panel to specify the settings within the range shown in the table on previous page.

Media Types

Before purchasing a large quantity of special media, do a trial print with the same media and check the print quality. For a list of approved media, refer to printer.konicaminolta.com.

Plain Paper (Recycled Paper)

Capacity	**Tray 1**	Up to 150 sheets, depending on the paper weight.
	Tray 2/3/4	Up to 550 sheets, depending on the paper weight.
Orientation	**Tray 1**	Face up
	Tray 2/3/4	Face up
Driver Media Type	Plain Paper (Recycled)	
Weight	68-105 g/m^2 (18-28 lb bond)	
Duplexing	See page 84 for supported sizes.	

Use media that is

Suitable for plain paper laser printers, such as standard or recycled office paper.

Note

Do not use the media types listed below. These could cause poor print quality, media misfeeds, or damage to the printer.

DO NOT use media that is

- Coated with a processed surface (such as carbon paper, and colored paper that has been treated)
- Carbon backed
- Unapproved iron-on transfer media (such as heat-sensitive paper, heat-pressure paper, and heat-press transfer paper)
- Cold-water-transfer paper
- Pressure sensitive
- Designed specifically for inkjet printers (such as superfine paper, glossy paper, glossy film, and postcards)
- Paper that has already been printed on
  - Paper that has been printed on with an inkjet printer
  - Paper that has been printed on with a monochrome/color laser printer/ copier
  - Paper that has been printed on with a heat-transfer printer
  - Paper that has been printed on with any other printer or fax machine
- Dusty
- Wet (or damp)

  Keep media between 35% and 85% relative humidity. Toner does not adhere well to moist or wet paper.
- Layered
- Adhesive
- Folded, creased, curled, embossed, warped, or wrinkled
- Perforated, three-hole punched, or torn
- Too slick, too coarse, or too textured
- Different in texture (roughness) on the front and back
- Too thin or too thick
- Stuck together with static electricity
- Composed of foil or gilt; too luminous
- Heat sensitive or cannot withstand the fusing temperature (180°C [356°F])
- Irregularly shaped (not rectangular or not cut at right angles)
- Attached with glue, tape, paper clips, staples, ribbons, hooks, or buttons
- Acidic
- Any other media that is not approved

Thick Stock

Paper thicker than 106 g/m^2 (28 lb bond) is referred to as thick stock. Test all thick stock to ensure acceptable performance and to ensure that the image does not shift.

Capacity	**Tray 1**	Up to 60 thick stock sheets, depending on their thickness.
	Tray 2/3/4	Up to 160 thick stock sheets, depending on their thickness.
Orientation	Face up	
Driver Media Type	Thick 1 (106 - 159 g/m^2 / 28-42 lb bond) Thick 2 (160 - 216 g/m^2 / 43-57 lb bond) Thick 3 (106-216 g/m^2 / 28-57 lb bond)	
Weight	106–216 g/m^2	
Duplexing	Thick 1 and 2 are supported. See page 84 for supported sizes.	

Banner Paper
Length: 356 - 900 mm
Banner paper is not supported for printing at 1200 dpi.
Image quality of the area from 356 to 900 mm in length is not guaranteed.

DO NOT use thick stock that is

- Mixed with any other media in a tray (as this will cause printer misfeeding)

Envelopes

Print on the front (address) side only. Some parts of the envelope consist of three layers of paper—the front, back, and flap. Anything printed in these layered regions may be lost or faded.

Capacity	**Tray 1**	Up to 15 envelopes, depending on their thickness
	Tray 2/3/4	Up to 80 envelopes, depending on their thickness.
Orientation	Face up	
Driver Media Type	Envelope	
Duplexing	Not supported	

Use envelopes that are

- Common office envelopes approved for laser printing with diagonal joints, sharp folds and edges, and ordinary gummed flaps

  Because the envelopes pass through heated rollers, the gummed area on the flaps may seal. Using envelopes with emulsion-based glue avoids this problem.

- Approved for laser printing
- Dry

DO NOT use envelopes that have

- Sticky flaps
- Tape seals, metal clasps, paper clips, fasteners, or peel-off strips for sealing
- Transparent windows
- Too rough of a surface
- Material that will melt, vaporize, offset, discolor, or emit dangerous fumes
- Been presealed

Labels

A sheet of labels consists of a face sheet (the printing surface), adhesive, and a carrier sheet:

- The face sheet must follow the plain paper specification.
- The face sheet surface must cover the entire carrier sheet, and no adhesive should come through on the surface.

You can print continuously with label sheets. However, this could affect the media feed, depending on the media quality and printing environment. If problems occur, stop the continuous printing and print one sheet at a time.

Try printing your data on a sheet of plain paper first to check placement. Check your application documentation for more information on printing labels.

Capacity	**Tray 1**	Up to 100 label sheets, depending on their thickness
	Tray 2/3/4	Up to 290 label sheets, depending on their thickness.
Orientation	Face up	
Driver Media Type	Label	
Duplexing	Not supported	

Use label sheets that are

- Recommended for laser printers
- Letter or A4 size (adhesive label stock)

DO NOT use label sheets that

- Have labels that easily peel off or have parts of the label already removed
- Have backing sheets that have peeled away or have exposed adhesive

  Labels may stick to the fuser, causing them to peel off and media misfeeds to occur.

- Are precut or perforated

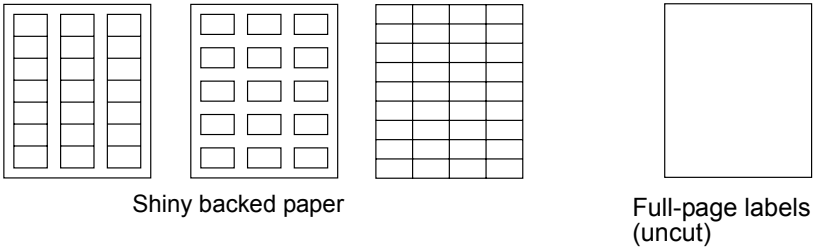

Postcards

Try printing your data on a sheet of plain paper first to check placement.

Capacity	**Tray 1**	Up to 55 postcards, depending on their thickness
	Tray 2/3/4	Up to 200 postcards, depending on their thickness.
Orientation	Face up	
Driver Media Type	Postcard	
Duplexing	See page 84 for supported sizes.	

Use postcards that are

- Approved for laser printers

DO NOT use postcards that are

- Coated
- Designed for inkjet printers

- Precut or perforated
- Preprinted or multicolored

If the postcard is warped, press on the warped area before putting it in the tray.

Thin Paper

Test all thin paper to ensure acceptable performance.

Capacity	**Tray 1**	Up to 150 sheets of thin paper, depending on their thickness.
	Tray 2/3/4	Up to 550 sheets of thin paper, depending on their thickness.
Orientation	Face up	
Driver Media Type	Thin	
Weight	64-67 g/m^2 (17-18 lb bond)	
Duplexing	See page 84 for supported sizes.	

Transparencies

Do not fan transparencies before loading them. Resulting static electricity may cause printing errors.

If you touch the face of the transparencies with your bare hands, print quality may be affected.

Keep the printer path clean. Transparencies are especially sensitive to a dirty media path. If there are shadows on either the top or the bottom of the sheets, see chapter 8, "Maintaining the Printer" .

Remove transparencies as soon as possible from the output tray to avoid static buildup.

You can print continuously with transparencies. However, this could affect the media feed, depending on the media quality, static buildup, and printing environment.

Try printing your data on a sheet of plain paper first to check placement.

If you have problems feeding 100 sheets, try loading only 1–50 sheets at a time. Loading a large number of transparencies at one time may cause static buildup, thus causing feeding problems.

Capacity	**Tray 1**	Up to 100 transparencies, depending on their thickness
	Tray 2/3/4	Up to 100 transparencies, depending on their thickness.
Orientation	Face up	
Driver Media Type	Transparency	
Duplexing	Not supported	

Always first test a small quantity of a particular type of transparency.

Use transparencies that are

- Approved for laser printing

DO NOT use transparencies that

- Have static electricity that will cause them to stick together
- Are specified for inkjet printers only

What Is the Guaranteed Imageable (Printable) Area?

The printable area on all media sizes is up to 4.2 mm (0.165") from the edges of the media.

Each media size has a specific imageable area, the maximum area on which the printer can print clearly and without distortion.

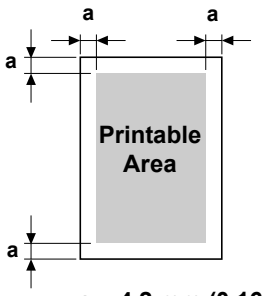

a = 4.2 mm (0.165")

This area is subject to both hardware limits (the physical media size and the margins required by the printer) and software constraints (the amount of memory available for the full-page frame buffer). The guaranteed imageable (printable) area for all media sizes is the page size minus 4.2 mm (0.165") from all edges of the media.

When printing on Banner Paper, the bottom margin is 10 mm (0.393").

Banner Paper
Length: 356 - 900 mm

Imageable Area—Envelopes

Envelopes have a nonguaranteed imageable area that varies with envelope type.

The envelope print orientation is determined by your application.

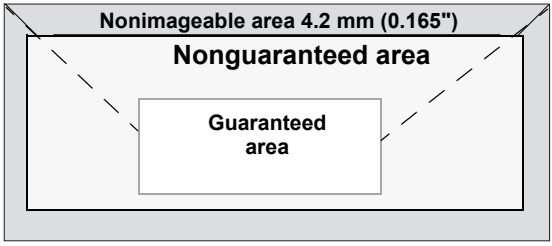

Page Margins

Margins are set through your application. Some applications allow you to set custom page sizes and margins while others have only standard page sizes and margins from which to choose. If you choose a standard format, you may lose part of your image (due to imageable area constraints). If you can custom-size your page in your application, use those sizes given for the imageable area for optimum results.

Loading Media

How do I load media?

Take off the top and bottom sheets of a ream of paper. Holding a stack of approximately 100 sheets at a time, fan the stack to prevent static buildup before inserting it in a tray.

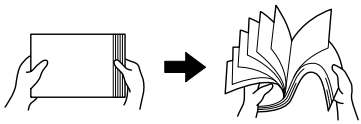

Do not fan transparencies.

Note

Although this printer was designed for printing on a wide range of media types, it is not intended to print exclusively on a single media type except plain paper. Continuous printing on media other than plain paper (such as envelopes, labels, thick stock, or transparencies) may adversely affect print quality or reduce engine life.

When refilling media, first remove any media remaining in the tray. Stack it with the new media, even the edges, then reload it.

Loading Media (Tray 1/2/3/4)

For details on the types and sizes of media that can be printed, refer to “Media Specifications” on page 84.

Loading Plain Paper

1 Open the tray and place it on a flat surface.

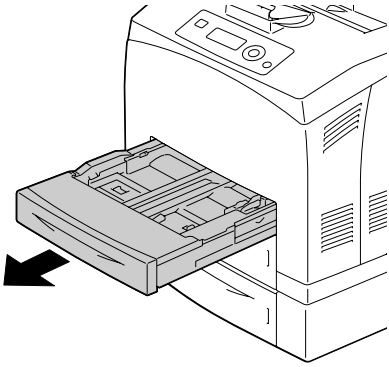

2 Remove the lid of the tray.

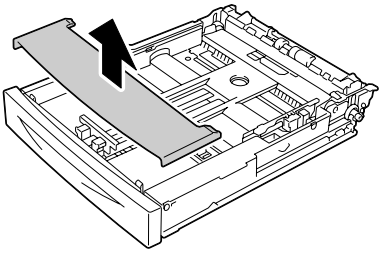

3 If the media pressure plate is raised, press down the media pressure plate to lock it into place.

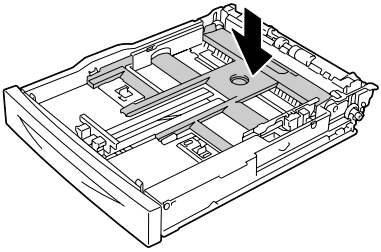

4 Squeeze the media guide (length) and slide it to the desired size.

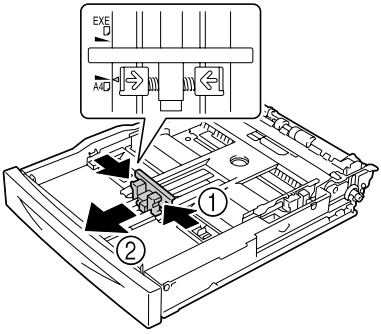

5 Squeeze the media guide (width) and slide it to the desired size.

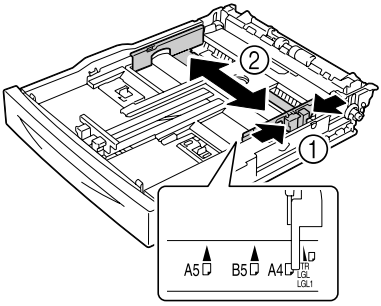

6 Load the paper face up in the tray.

Do not load the paper above the ↑ mark. For the information on the tray capacity for each media, see "Media Types" on page 85".

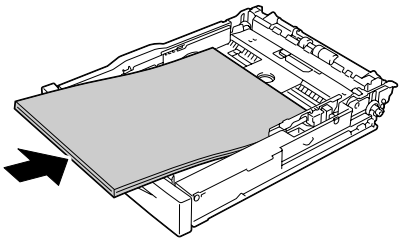

7 Reattach the lid of the tray.

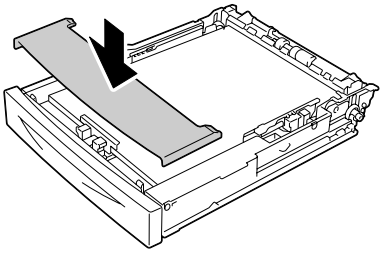

8 Push the tray completely into the printer.

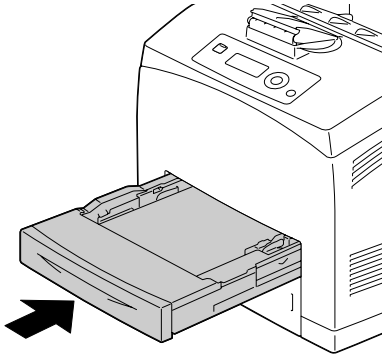

9 Select `PAPER MENU/PAPER SOURCE/TRAY X (Tray 1/2/3/4)/PAPER SIZE` and `PAPER TYPE` in the configuration menu, and then select the setting for the size and type of media that is loaded. See also "PAPER MENU" on page 36.

Other Media

When loading media other than plain paper, set the media mode (Envelope, Label, Thick 1, Thick 2, Thick 3, Postcard, Thin paper, or Transparency) in the driver for optimum print quality.

Loading Envelopes

The following procedure is given taking Envelop #10 as an example.

Load the envelope with its flap side down.

1 Open Tray 1.

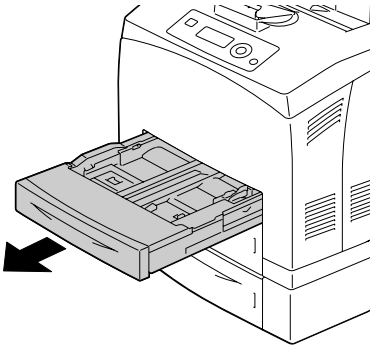

2 Remove the lid of the tray.

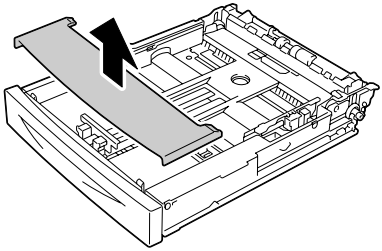

3 If the media pressure plate is raised, press down the media pressure plate to lock it into place.

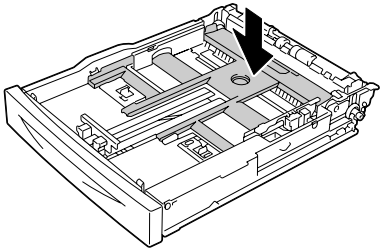

4 Load the envelope with its flap to the right.

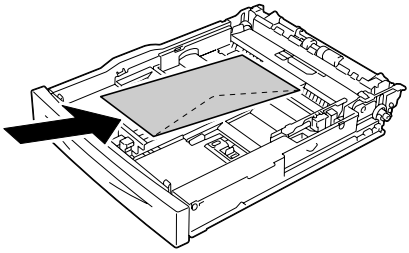

Do not load the paper above the ↑ mark. For the information on the tray capacity for each media, see "Media Types" on page 85".

For envelopes with the flap along the short edge, load the envelopes with the flap side down.

5 Squeeze the media guide (length) and slide it to the desired size.

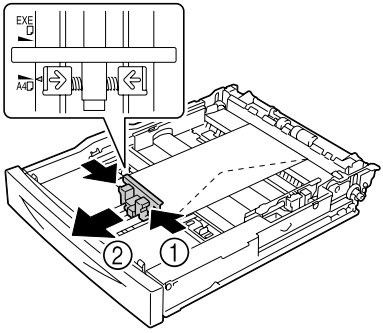

6 Squeeze the media guide (width) and slide it to the desired size.

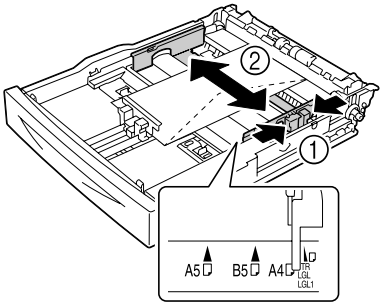

7 Reattach the lid of the tray.

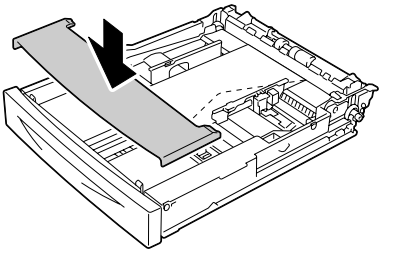

8 Push the tray completely into the printer.

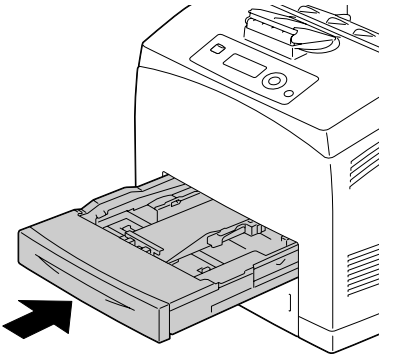

9 Select PAPER MENU/PAPER SOURCE/TRAY X (TRAY 1/2/3/4)/PAPER SIZE and PAPER TYPE in the configuration menu, and then select the setting for the size and type of the media that is loaded. See also “PAPER MENU” on page 36.

Loading Label sheets/Postcards/Thick Stock/Thin paper/ Transparencies

Transparencies for full-color printing cannot be used. Using them may lead to a printer malfunction.

Remove transparencies as soon as they are output to the center output tray to prevent them sticking together.

1 Open the tray and place it on a flat surface.

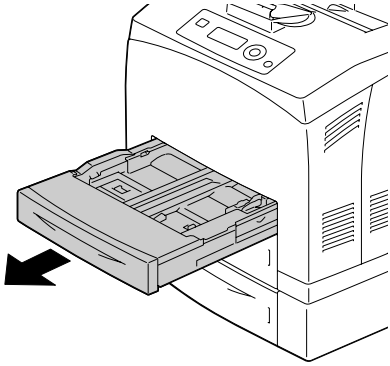

2 Remove the lid of the tray.

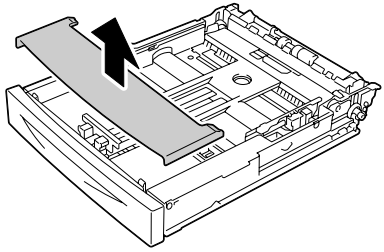

3 If the media pressure plate is raised, press down the media pressure plate to lock it into place.

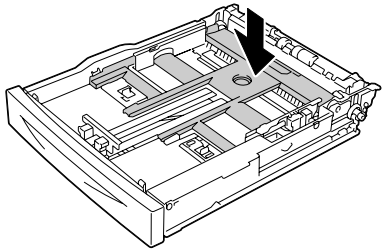

4 Squeeze the media guide (length) and slide it to the desired size.

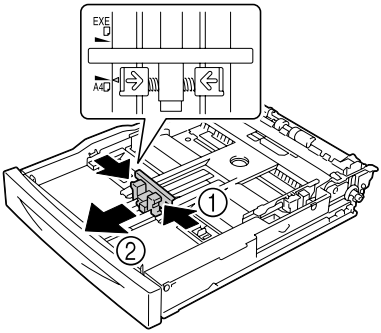

5 Squeeze the media guide (width) and slide it to the desired size.

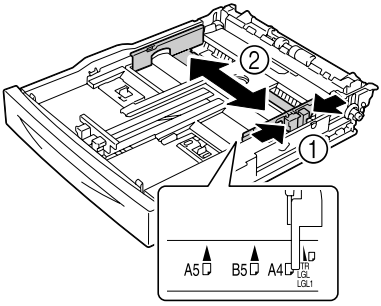

6 Load the paper face up in the tray.

Do not load the paper above the ↑ mark. For the information on the tray capacity for each media, see "Media Types" on page 85.

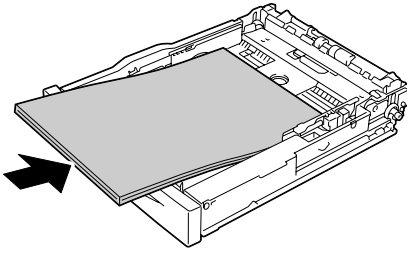

7 Reattach the lid of the tray.

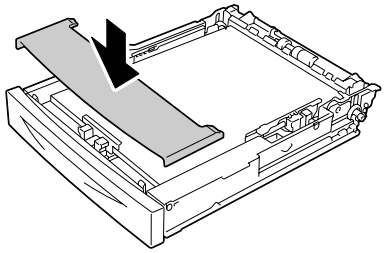

8 Push the tray completely into the printer.

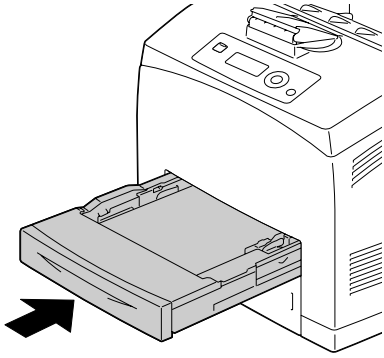

9 Select PAPER MENU/PAPER SOURCE/TRAY X (Tray 1/2/3/4)/PAPER SIZE and PAPER TYPE in the configuration menu, and then select the setting for the size and type of the media that is loaded. See also “PAPER MENU” on page 36.

Loading the Paper Larger than A4

1 Open the tray and place it on a flat surface.

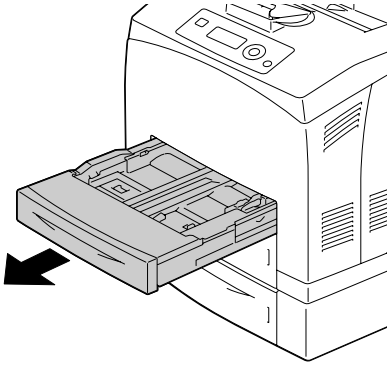

2 Remove the lid of the tray.

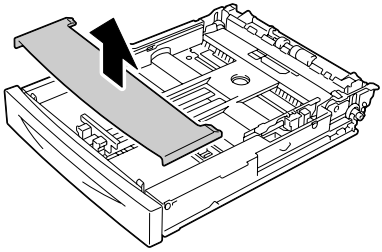

3 Slide the right and left lock tabs in the tray outwards to unlock them.

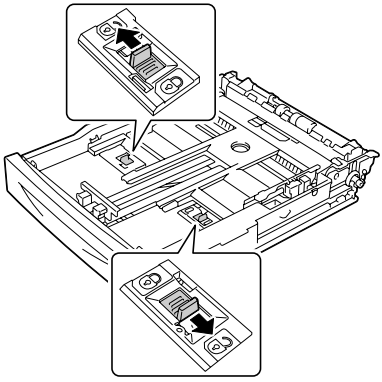

4 Hold the grip of the tray and pull its extendable part to the front until it reaches the desired paper size.

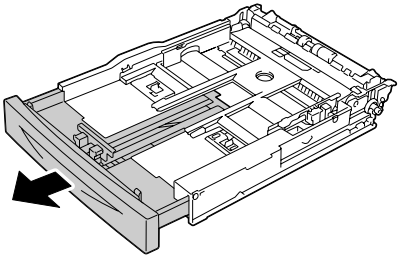

5 Squeeze the media guide (length) and slide it to the desired paper size.

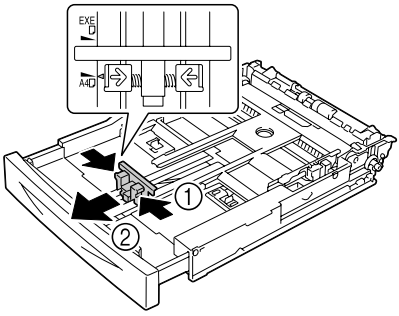

6 Squeeze the media guide (width) and slide it to the desired paper size.

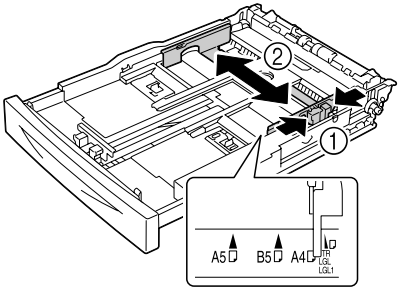

7 Load the paper face up in the tray.

Do not load the paper above the ↑ mark. For the information on the tray capacity for each media, see "Media Types" on page 85.

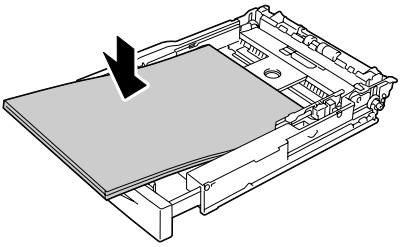

8 Reattach the lid of the tray.

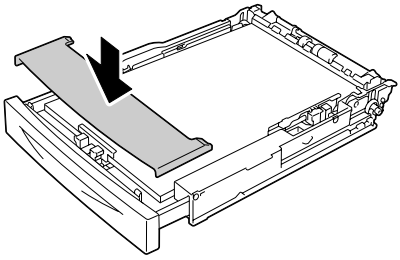

9 Push the tray completely into the printer.

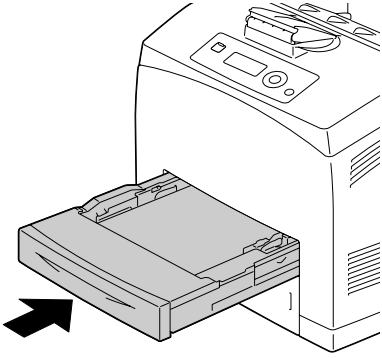

10 Select `PAPER MENU/PAPER SOURCE/TRAY X (Tray 1/2/3/4)/PAPER SIZE` and `PAPER TYPE` in the configuration menu, and then select the setting for the size and type of the media that is loaded. See also "PAPER MENU" on page 36.

Loading Banner paper in the Tray 1

1 Open the tray and place it on a flat surface.

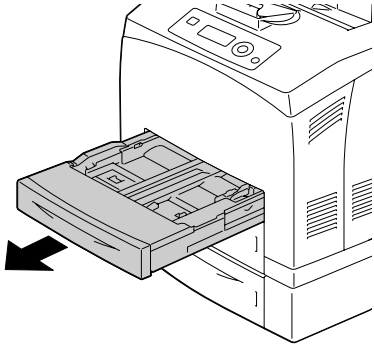

2 Remove the lid of the tray.

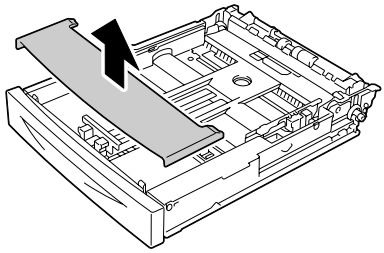

3 Slide the right and left lock tabs in the tray outwards to unlock them.

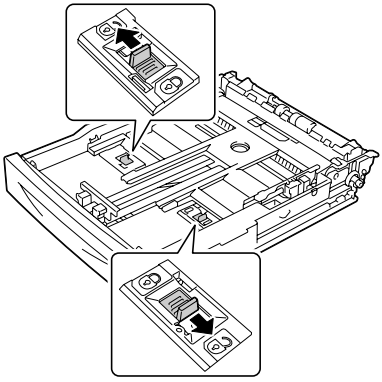

4 Hold the grip of the tray and pull its extendable part to the front until it reaches the end.

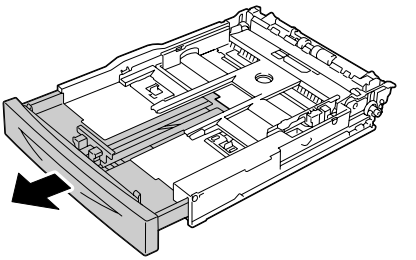

5 Squeeze the media guide (length) and slide it to the desired paper size.

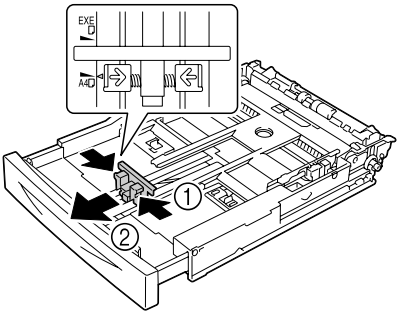

6 Squeeze the media guide (width) and slide it to the desired paper size.

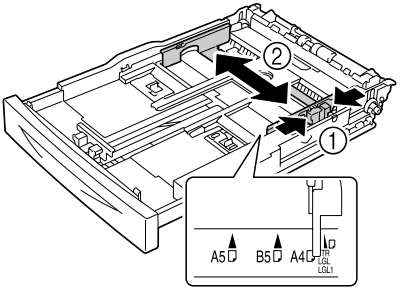

7 Load the banner paper face up in the tray, and then roll up the end of the paper so that it does not fall off the tray.

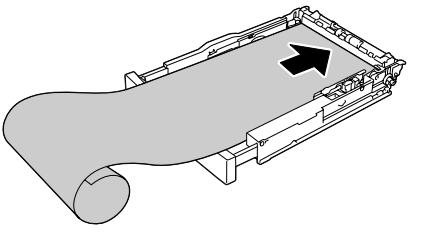

8 Push the tray completely into the printer.

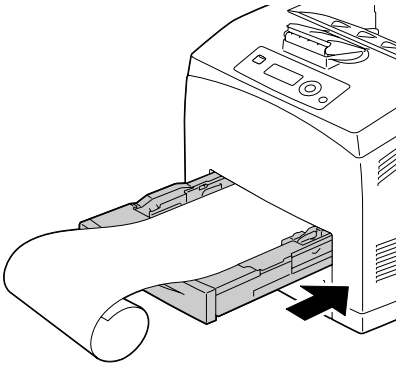

9 Select PAPER MENU/PAPER SOURCE/TRAY 1/PAPER SIZE and PAPER TYPE in the configuration menu, and then select the setting for the size and type of the media that is loaded. See also “PAPER MENU” on page 36.

Duplexing

Select paper with high opacity for duplex (double-sided) printing. Opacity refers to how effectively paper blocks out what is written on the opposite side of the page. If the paper has low opacity (high translucency), then the printed data from one side of the page will show through to the other side. Check your application for margin information. For best results, print a small quantity to make sure the opacity is acceptable.

Duplex (double-sided) printing can be done manually or can be done automatically with the duplex option installed and selected. For installing the duplex, refer to “Installing the Duplex” on page 205.

Note

For details on supported media types for duplex printing, see “Media Specifications” on page 84.

Duplexing envelopes, labels, thick paper3 or transparencies is not supported.

Duplex printing can be performed with enough memory (no less than 256 MB) installed in the printer.

How do I autoduplex?

You should verify that the duplex is physically installed on the printer to successfully duplex (double-sided) the job.

Check your application to determine how to set your margins for duplex (double-sided) printing.

The following Binding Position settings are available.

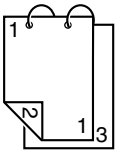	If “Short Edge” is selected, the pages will be laid out to flip at the top.
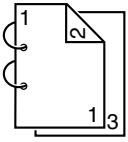	If “Long Edge” is selected, the pages will be laid out to flip at the side.

In addition, if “N-up” has been set to “Booklet”, autoduplex printing is performed.

The following Order settings are available when “Booklet” is selected.

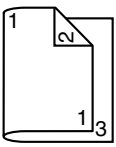	If “Left Binding” is selected, the pages can be folded as a left-bound booklet.
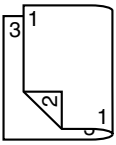	If “Right Binding” is selected, the pages can be folded as a right-bound booklet.

1 Load plain paper into the tray.

2 From the printer driver, specify duplex (double-sided) printing (Layout tab in Windows).

3 Click **OK**.

With autoduplexing, the back side is printed first, and then the front side is printed.

Output Tray

All printed media is output to the face-down output tray on top of the printer. This tray has a capacity of approximately 500 sheets (A4/Letter) of 80 g/m^2 (22 lb) paper.

If the media is stacked too high in the output tray, your printer may experience media misfeeds, excessive media curl, or static buildup.

Remove transparencies as soon as possible from the output tray to avoid static buildup.

Finishing

When the optional offset tray is installed, job separation and offset printing can be performed. For the installation procedure, refer to “Offset Tray” on page 214. Settings for job separation and offset printing can be specified by selecting JOB SEPARATION or FINISHING in PAPER MENU.

Use the following paper for job separation and offset printing.

Media Size	Width: 89 to 216 mm (3.5 - 8.5 inch) Length: 140 to 356 mm (5.5 - 14.0 inch)

Paper is fed to the sub output tray with job separation and offset printing.

Job Separation Printing

When paper is fed to the sub output tray, the pages are fed out shifted as shown below.

To perform job separation printing, select SUB TRAY in PAPER MENU/FINISHING.

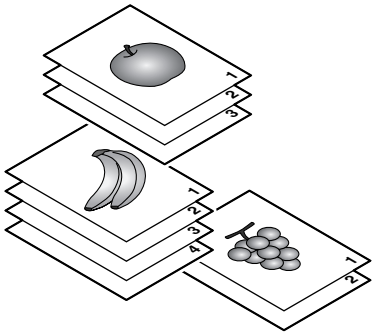

Offset Printing

If offset printing is selected, the paper is fed out shifted as shown below.

When PAPER MENU/COLLATE is set to ON, the pages are fed out in sets as shown below.

- When COLLATE is set to ON

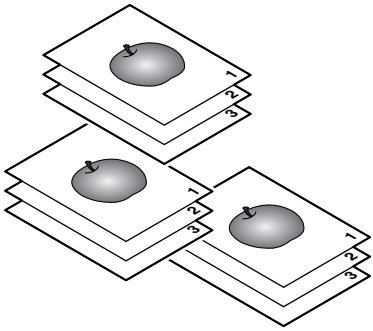

- When COLLATE is set to OFF

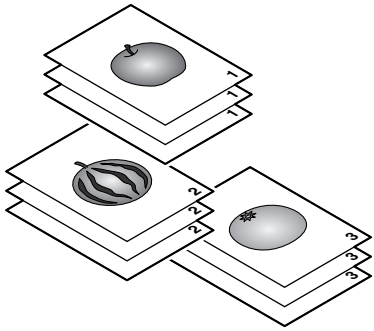

Media Storage

How do I store media?

- Keep media on a flat, level surface in its original wrapper until it is time to load it.

  Media that has been stored for a long time out of its packaging may dry up too much and cause misfeeding.

- If media has been removed from its wrapper, place it in its original packaging and store in a cool, dark place on a level surface.
- Avoid moisture, excessive humidity, direct sunlight, excessive heat (above 35°C [95°F]), and dust.
- Avoid leaning media against other objects or placing it in an upright position.

Before using stored media, do a trial print to check print quality.

7

Replacing Consumables

Replacing Consumables

Before replacing consumables, make sure that the power of the printer is turned off.

Note

Failure to follow instructions as outlined in this manual could result in voiding your warranty.

Note

If an error message (`TONER OUT`, `FUSER UNIT END OF LIFE`, etc.) appears, print out the configuration page, and then check the status of the consumables. For details on the error messages, refer to "Error Messages (Warning:)" on page 182. For details on printing the configuration page, refer to "Printing a Configuration Page" on page 150.

About toner cartridge

This printer uses a toner cartridge that includes the toner and the photosensitive drum. If the output image is light or blurred, the toner cartridge may be defective or damaged. In that case, you need to replace it with a new one.

Handle the toner cartridge carefully to avoid spilling toner inside the printer or on yourself.

Install only a new toner cartridge in your printer. If a used toner cartridge is installed, the indicator message will not clear and the supplies status in the Status Monitor will not be updated.

The toner is nontoxic. If you get toner on your skin, wash it off with cool water and a mild soap. If you get toner on your clothes, lightly dust them off as best as you can. If some toner remains on your clothes, use cool, not hot water, to rinse the toner off.

CAUTION

If you get toner in your eyes, wash it out immediately with cool water and consult a doctor.

Note

Do not use refilled toner cartridges or unapproved toner cartridges. Any damage to the printer or quality problems caused by a refilled toner cartridge or an unapproved toner cartridge will void your warranty. No technical support is provided to recover from these problems.

When replacing a toner cartridge, refer to the following table. For optimum print quality and performance, use only approved KONICA MINOLTA toner cartridge for your specific printer type, as listed in the table below. You can find your printer type and the toner cartridge part numbers on the consumables reorder label inside the front cover your printer.

Printer Type	Printer Parts Number	Toner Cartridge Type	Toner Cartridge Parts Number
AM	A0DX 013	High-Capacity Toner Cartridge - Black (K)	A0FP 013
EU	A0DX 023	High-Capacity Toner Cartridge - Black (K)	A0FP 023

For optimum print quality and performance, use only the corresponded TYPE genuine KONICA MINOLTA toner cartridge.

Keep toner cartridges:

- In their packaging until you're ready to install them.
- In a cool, dry location away from sunlight (due to heat).

  The maximum storage temperature is 35°C (95°F) and the maximum storage humidity is 85% (noncondensing). If the toner cartridge is moved from a cold place to a warm, humid place, condensation may occur, degrading print quality. Allow the toner to adapt to the environment for about one hour before use.
- Level during handling and storage.

  Do not hold, stand or store a cartridge on its ends or turn it upside down; the toner inside the cartridge may become caked or unequally distributed.

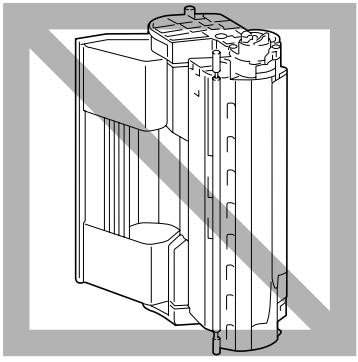

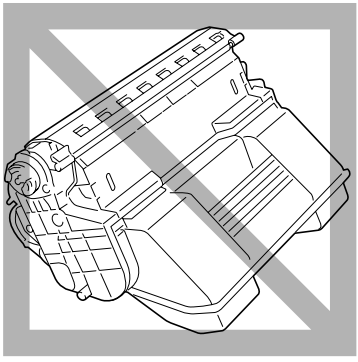

- Away from salty air and corrosive gases such as aerosols.

Replacing a Toner Cartridge

Note

Be careful not to spill toner while replacing a toner cartridge. If toner spills, immediately wipe it off with a soft, dry cloth.

If TONER LOW on the SYS DEFAULT MENU/ENABLE WARNING is set to ON, the message TONER LOW appears when the toner cartridge becomes near empty. Follow the steps below to replace the toner cartridge.

If TONER LOW on the SYS DEFAULT MENU/ENABLE WARNING is set to OFF, you are advised to replace the toner cartridge when the message TONER OUT appears.

1 Open the top cover.

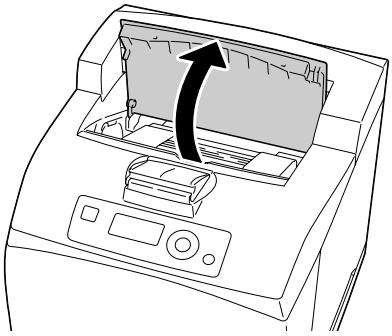

2 Hold the toner cartridge by the grip, and then pull it out slowly.

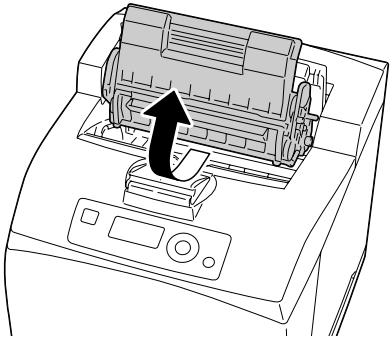

3 Take the new toner cartridge out of the box.

4 Holding it firmly with both hands, rock the toner cartridge left and right, forward and backward, to distribute the toner evenly.

Do not touch the developing roller of the toner cartridge; otherwise image quality may decrease.

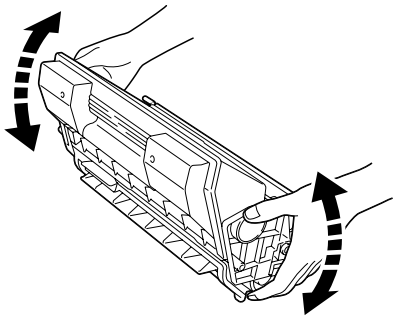

5 *Placing the toner cartridge on a flat surface, pull out the seal horizontally.*

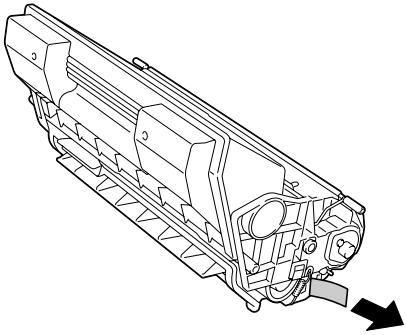

6 *Hold the toner cartridge by the grip, and then insert it into the slot inside the printer.*

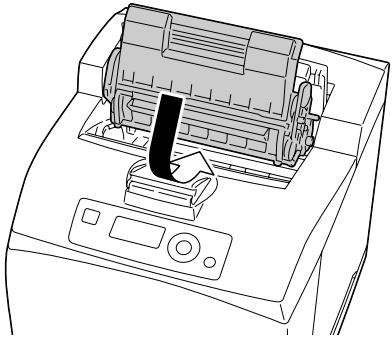

7 *Close the top cover securely.*

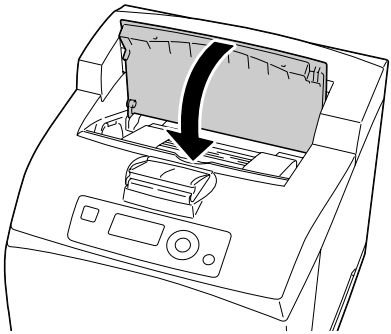

Note

Dispose of the used toner cartridge according to your local regulations. Do not burn the toner cartridge.
For details, refer to "About toner cartridge" on page 114.

Replacing the Fuser Unit

When it is time to replace the fuser unit, the message `FUSER UNIT END OF LIFE` appears. Printing can continue even after this message appears; however, since the print quality is reduced, the fuser unit should be replaced immediately.

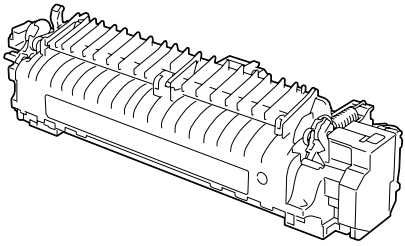

1 Turn off the printer and disconnect the power cord.

There are extremely hot parts within the machine. Before replacing the fuser unit, wait about 30 minutes after turning off the machine, and then check that the fusing section has reached room temperature; otherwise, you may get burnt.

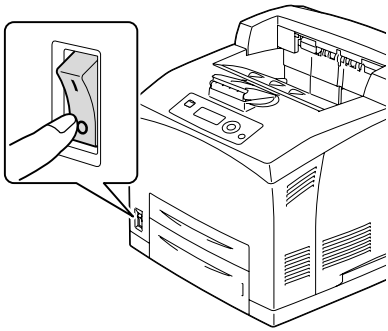

2 Lift the lever shown in the figure.

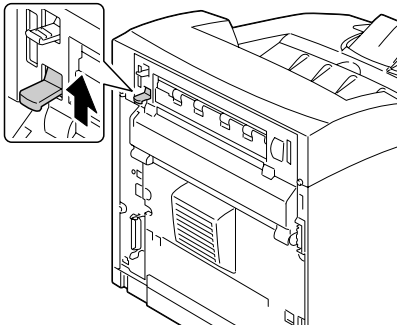

3 Open the rear cover.

Do not touch any parts inside the printer.

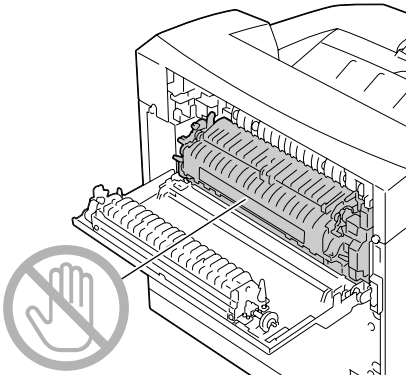

4 Pull down the 2 levers at the bottom of the fuser unit.

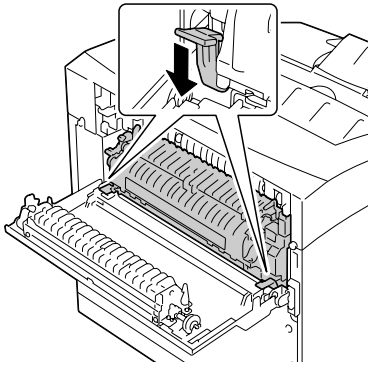

5 Remove the fuser unit slowly.

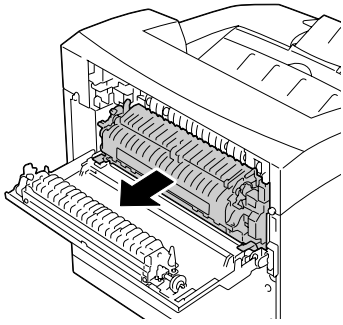

6 Prepare a new fuser unit.

Be careful not to touch the surface of the fuser roller.

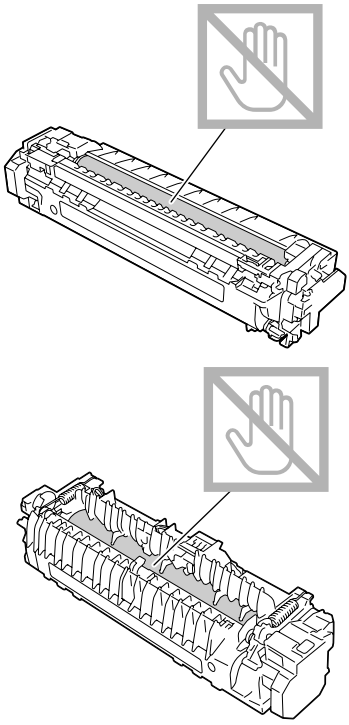

7 Insert the new fuser unit slowly.

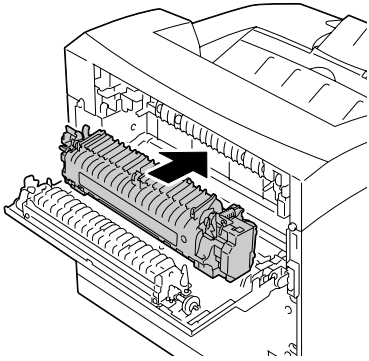

8 Lift up the 2 levers at the bottom of the fuser unit.

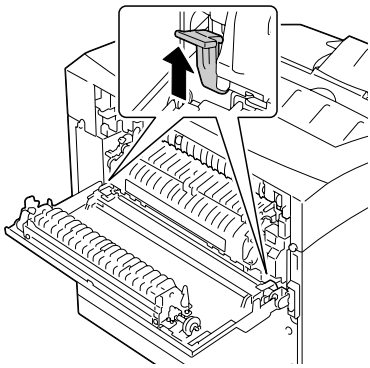

9 Push down the levers at both ends of the fuser unit to lock it.

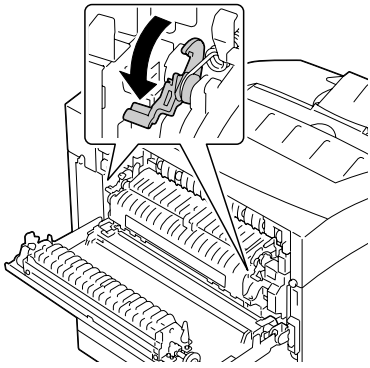

10 Close the rear cover.

Do not close the rear cover without installing the fuser unit. Forcibly closing the rear cover may damage the lever or the cover.

11 Reconnect the power cord, and turn on the printer.

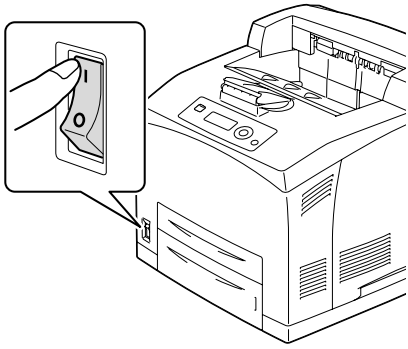

12 Reset the counter in the MAINTENANCE MENU/SUPPLIES/REPLACE/FUSER UNIT menu.

Replacing the Transfer Roller

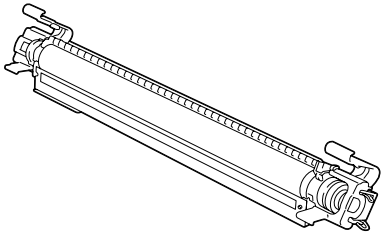

1 Open the top cover.

Do not touch any parts inside the printer.

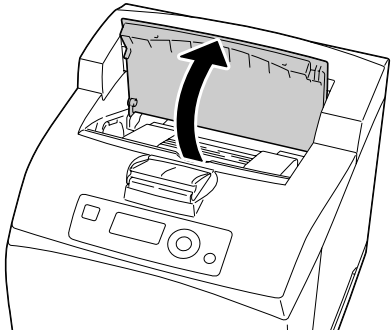

2 Hold the toner cartridge by the grip to pull it out slowly.

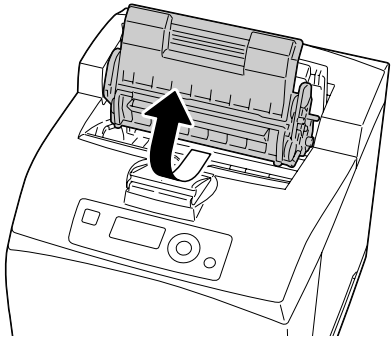

3 Pull the 2 levers on the upper part of the transfer roller, then squeeze the 2 levers on the bottom of the transfer roller and pull it out slowly towards you.

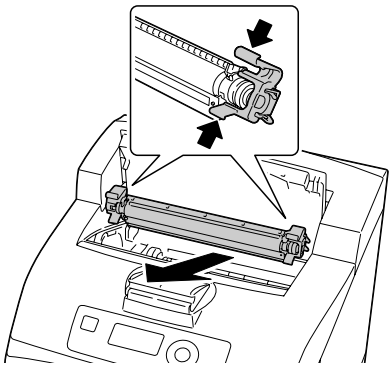

4 Pick up the new transfer roller by the levers at both ends, and then slot it in slowly.

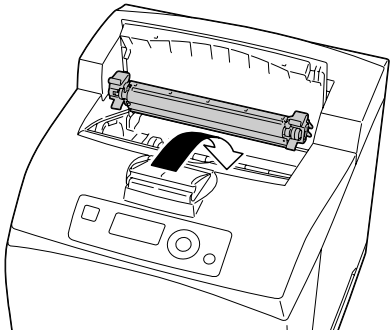

5 Hold the toner cartridge by the grip, and then insert it into the slot inside the printer.

Do not touch any parts inside the printer.

Ensure that the toner cartridge is firmly set.

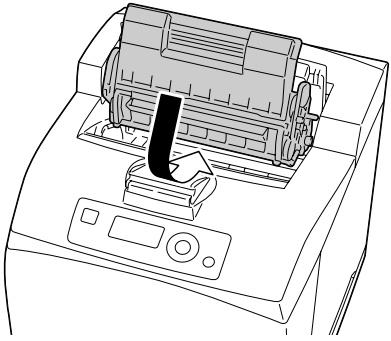

6 Close the top cover securely.

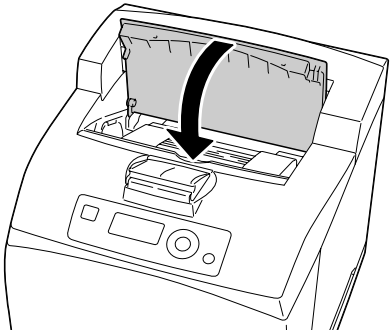

Replacing the Feed Roller

The feed roller is included as one of the regular replacement parts. There are two feed rollers inside the machine and one in the tray. All feed rollers are recommended to be replaced periodically.

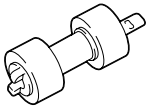

Replacing the Feed Roller (in the Tray)

1 Pull the tray out of the printer.

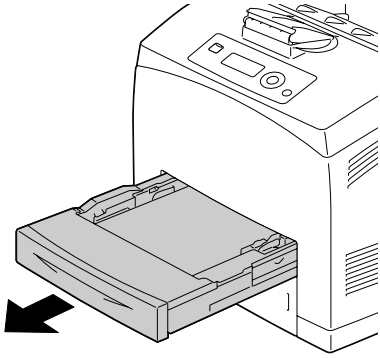

2 Remove the lid of the tray.

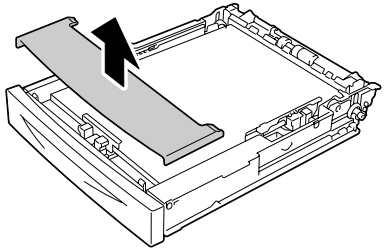

3 Remove any paper in the tray.

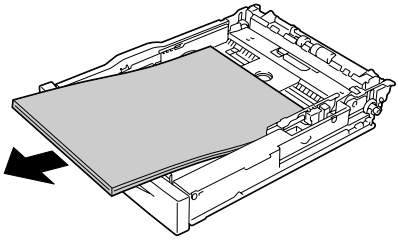

4 While pushing down the shaft of the feed roller, widen the tab of the feed roller to loosen it (1) and then slowly remove the feed roller from the shaft on the tray (2).

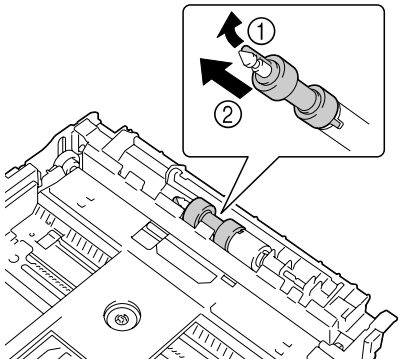

5 Hold the tab on the new feed roller and slowly push it into the shaft on the tray.

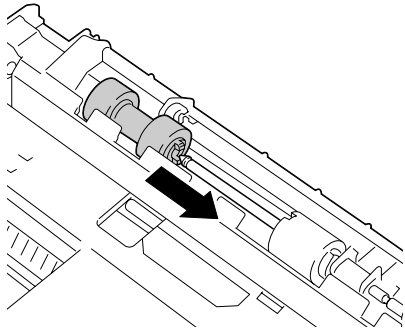

6 Aligning the small tabs on the feed roller with the slots of the shaft, push the feed roller completely in so that the tab fits into the slot.

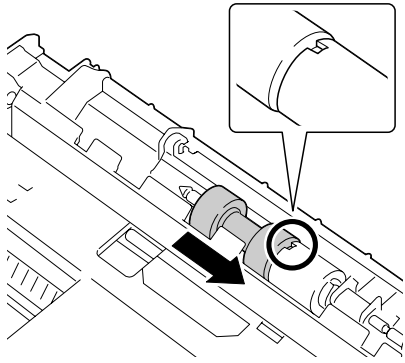

7 Load the paper face up in the tray.

Do not load the paper above the ↑ mark. For the information on the tray capacity for each media, see "Media Types" on page 85.

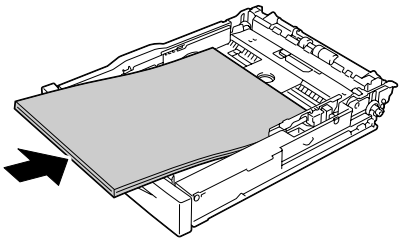

8 Reattach the lid of the tray.

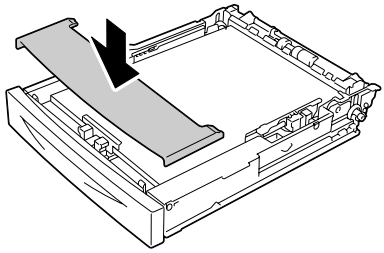

9 Push the tray completely into the printer.

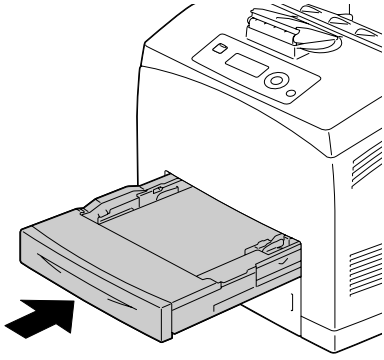

Replacing the Feed Roller (inside the Printer)

1 Open the top cover.

Do not touch any parts inside the printer.

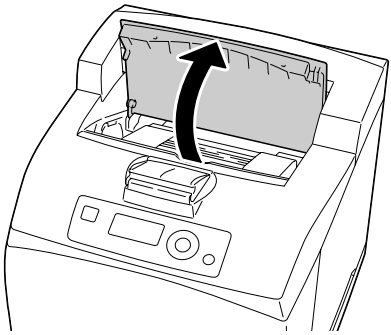

2 Hold the toner cartridge by the grip, and then pull it out slowly.

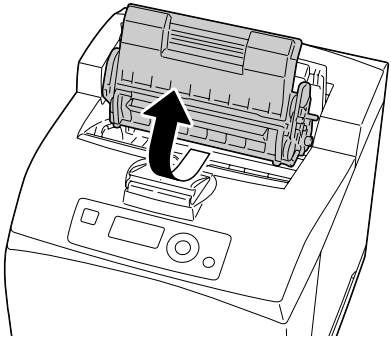

3 While pushing down the shaft of the feed roller, widen the tab of the feed roller to loosen it (1) and then slowly remove the feed roller from the shaft on the tray (2).

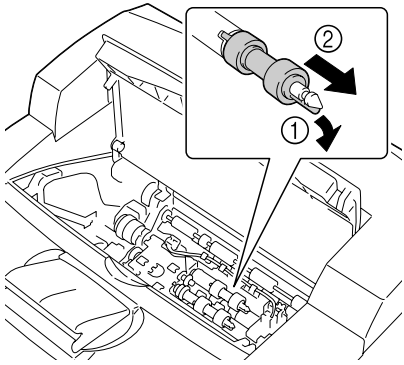

4 Hold the tab on the new feed roller and slowly push it into the shaft on the tray.

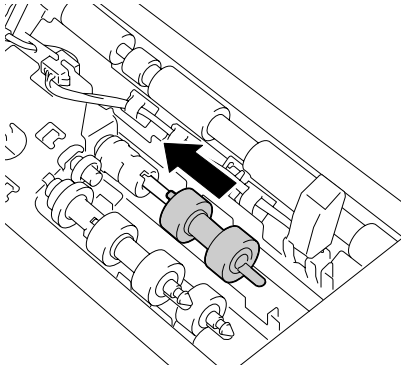

5 Aligning the small tabs on the feed roller with the slots of the shaft, push the feed roller completely in so that the tab fits into the slot.

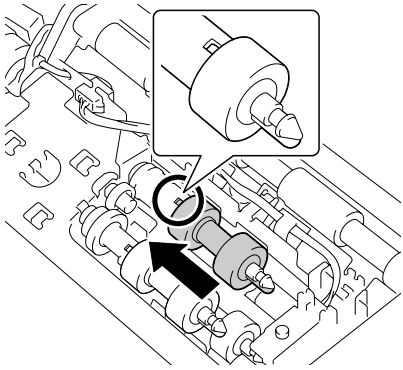

6 Hold the toner cartridge by the grip, and then insert it into the slot inside the printer.

Do not touch any parts inside the printer.

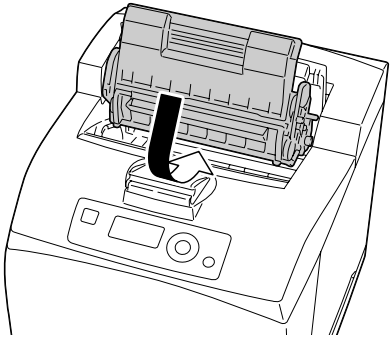

7 Close the top cover securely.

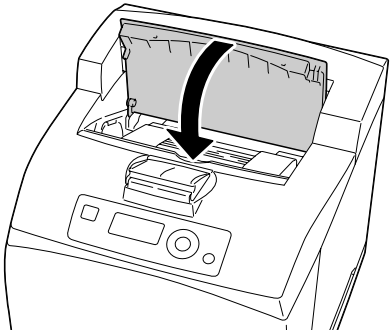

Replacing the Backup Battery

When the backup battery is at its end of life, the printer's date and time cannot be retained. Follow the procedure described below to replace the backup battery.

Note

Only use the coin-shaped 3V lithium battery CR2032. It's very important to protect the printer controller board and any associated circuit boards from electrostatic damage. Before performing this procedure, review the antistatic caution on page 191. In addition, always handle circuit boards by the edges only.

1 Turn off the printer and disconnect the power cord and interface cables.

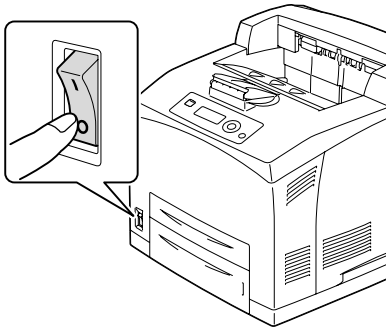

2 Using a screwdriver, loosen the screw of the right cover, located at the rear side.

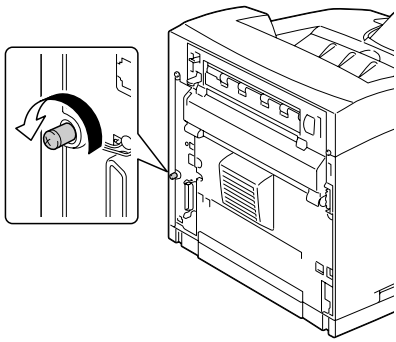

3 Remove the right side cover.

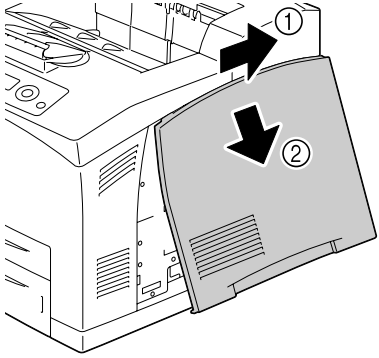

4 Using a screwdriver, loosen the two screws. (Do not remove them from the printer.)

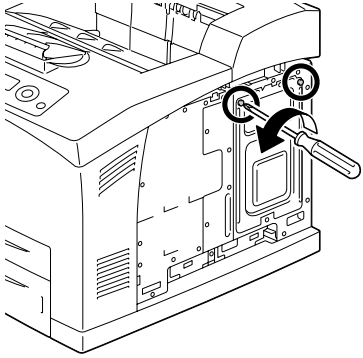

5 Remove the panel.

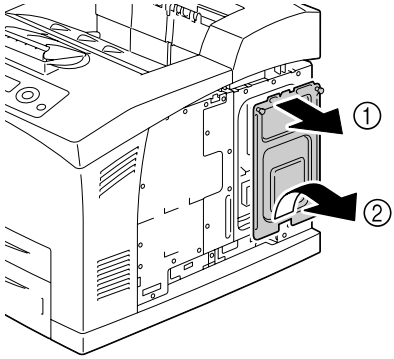

6 Remove the backup battery.

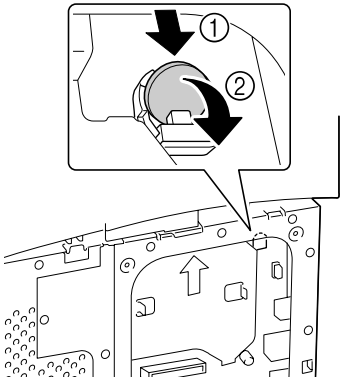

7 Insert a new backup battery.

When inserting the new backup battery, be sure that the + side faces front.

Risk of explosion if battery is replaced by an incorrect type. Dispose of used batteries according to your local regulations. Do not burn the backup battery.

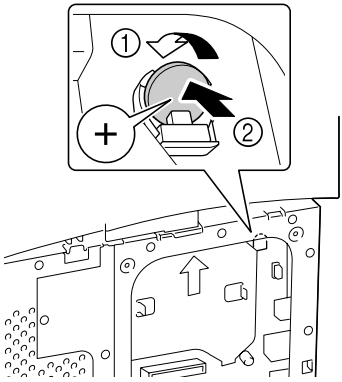

8 Reinstall the panel and tighten the two screws.

9 Attach the right side cover.

10 Reconnect all interface cables.

11 Reconnect the power cord, and turn on the printer.

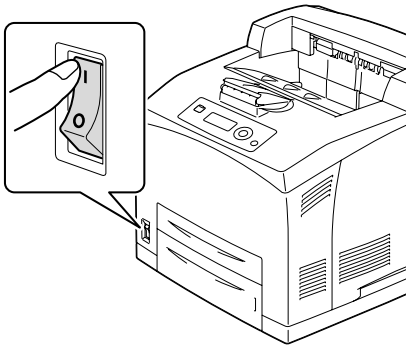

12 Use DATE on the SYS DEFAULT MENU/CLOCK menu to set the date, and use TIME on the SYS DEFAULT MENU/CLOCK menu to set the time.

8 Maintaining the Printer

Maintaining the Printer

CAUTION

Read all caution and warning labels carefully, making sure to follow any instructions contained in them. These labels are located on the inside of the printer's covers and the interior of the printer body.

Handle the printer with care to preserve its life. Abuse handling may cause damage and void your warranty. If dust and paper scraps remain on the inside or outside of the printer, printer performance and print quality will suffer, so the printer should be cleaned periodically. Keep the following guidelines in mind.

WARNING!

Turn off the printer, unplug the power cord, and disconnect all interface cables before cleaning. Do not spill water or detergent into the printer; otherwise the printer will be damaged and an electric shock may occur.

CAUTION

The fuser unit is hot. When the rear cover is opened, the fuser unit temperature drops gradually (one hour wait time).

- Be careful when cleaning the inside of the printer or removing media misfeeds, as the fuser unit and other internal parts may be very hot.
- Do not place anything on top of the printer.
- Use a soft cloth to clean the printer.
- Never spray cleaning solutions directly on the printer's surface; the spray could penetrate through the air vents of the printer and damage the internal circuits.
- Avoid using abrasive or corrosive solutions or solutions that contain solvents (such as alcohol and benzene) to clean the printer.
- Always test any cleaning solution (such as mild detergent) on a small inconspicuous area of your printer to check the solution's performance.
- Never use sharp or rough implements, such as wire or plastic cleaning pads.
- Always close the printer's covers gently. Never subject the printer to vibration.
- Do not cover the printer immediately after using it. Turn it off and wait until it cools down.

- Do not leave the printer's covers open for any length of time, especially in well-lit places; light may damage the toner cartridges.
- Do not open the printer during printing.
- Do not tap media stacks on the printer.
- Do not lubricate or disassemble the printer.
- Do not tilt the printer.
- Do not touch the electrical contacts, gears, or laser devices. Doing so may damage the printer and cause the print quality to deteriorate.
- Keep media in the output tray at a minimum level. If the media is stocked too high, your printer may experience media misfeeds and excessive media curl.
- Make sure two people are available to lift the printer when moving it.
  Keep the printer level to avoid toner spillage.

- When lifting up the printer, push the tray 1/2 completely into the printer and then lift the printer as shown in the right figure.

If an optional lower feeder unit is installed, remove it before lifting the printer.

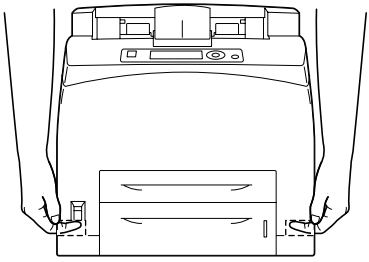

- If you get toner on your skin, wash it off with cool water and a mild soap.

CAUTION

If you get toner in your eyes, wash it out immediately with cool water and consult a doctor.

- Make sure any parts removed during cleaning are replaced before you plug in the printer.

Cleaning the Printer

CAUTION

Be sure to turn off the printer and unplug the power cord before cleaning.

Exterior

Control Panel

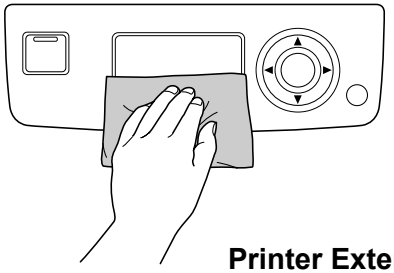

Ventilation Grill

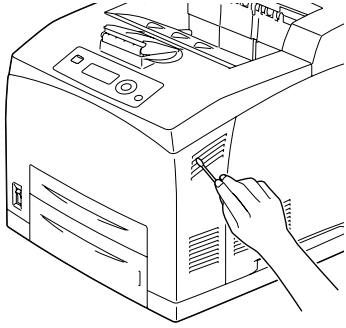

Printer Exterior

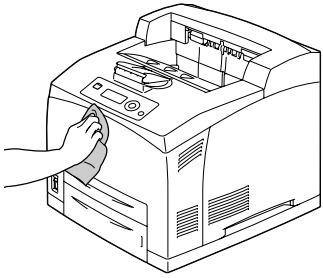

Cleaning the Feed Roller (inside the Tray)

The accumulation of paper dust and other debris on the media rollers can cause media-feeding problems.

1 Pull the tray out of the printer

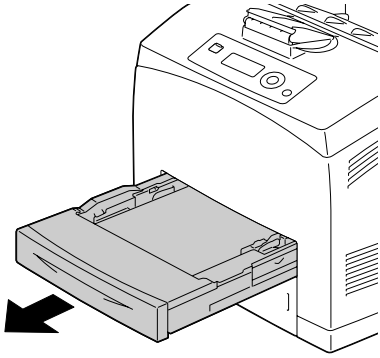

2 While pushing down the shaft of the feed roller, widen the tab of the feed roller to loosen it (1) and then slowly remove the feed roller from the shaft on the tray (2).

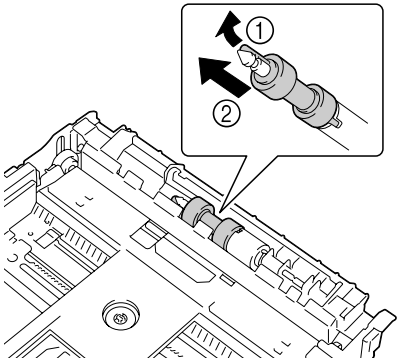

3 Clean the feed rollers by wiping them with a soft, dry cloth.

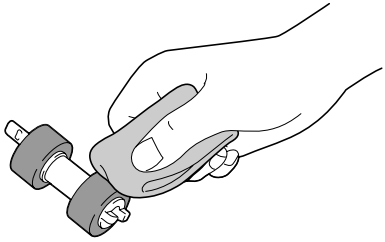

4 Hold the tab on the feed roller and slowly push it into the shaft on the tray.

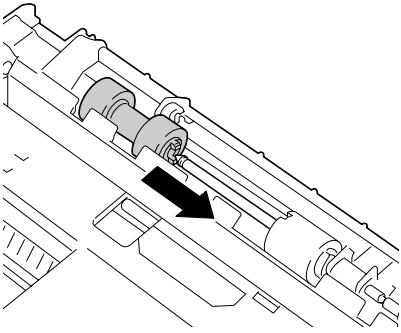

5 Aligning the small tabs on the feed roller with the slots of the shaft, push the feed roller completely in so that the tab fits into the slot.

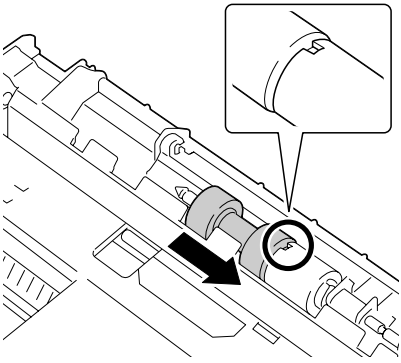

6 Push the tray completely into the printer.

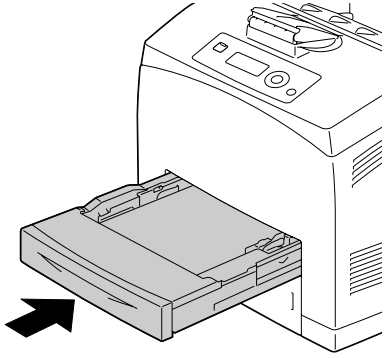

Cleaning the Feed Roller (inside the Printer)

1 Open the top cover.

Do not touch any parts inside the printer.

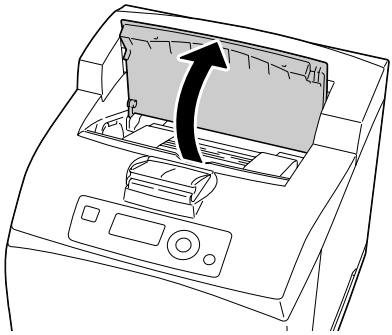

2 Hold the toner cartridge by the grip, and then pull it out slowly.

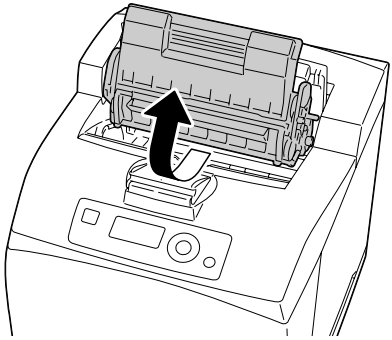

3 Clean the feed rollers by wiping them with a soft, dry cloth.

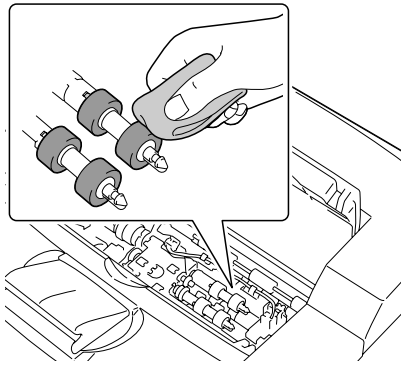

4 Hold the toner cartridge by the grip, and then insert it into the slot inside the printer.

Do not touch any parts inside the printer.

Ensure that the toner cartridge is firmly set.

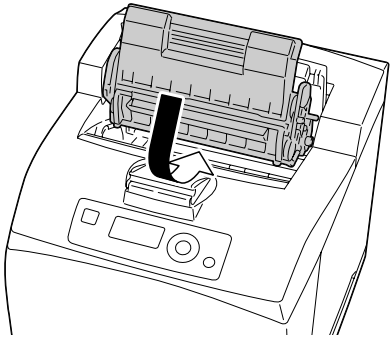

5 Close the top cover securely.

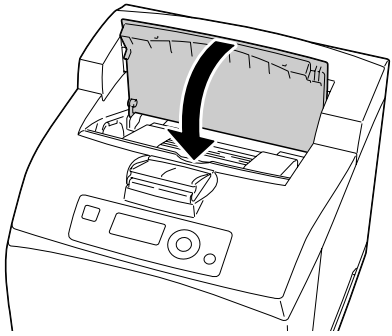

Cleaning the Duplex Feed Rollers

1 Lift the lever at the top left hand side of the duplex to unlock it and open the duplex cover.

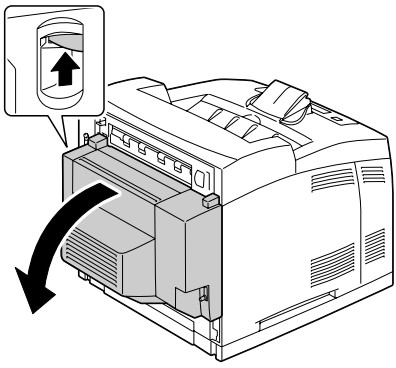

2 Clean the media feed roller by wiping them with a soft, dry cloth.

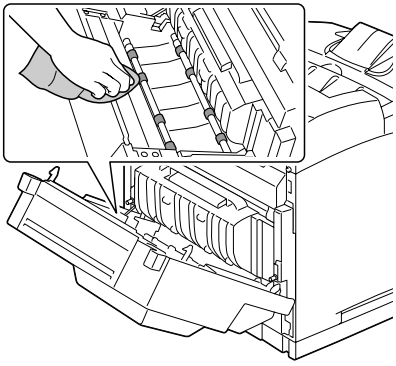

3 Close the duplex cover.

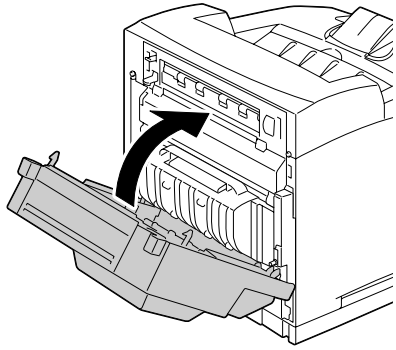

Cleaning the Offset Tray Feed Rollers

1 Pull the tab at the top left of the offset tray cover to open it.

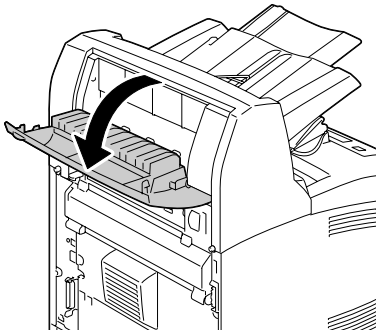

2 Clean the media feed roller by wiping them with a soft, dry cloth.

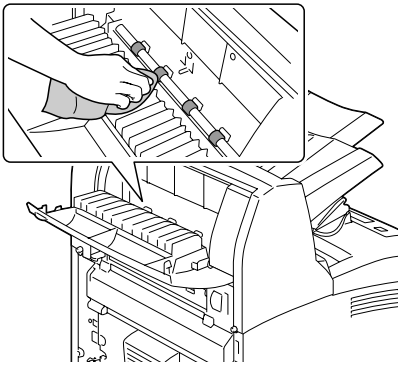

3 Close the offset tray cover.

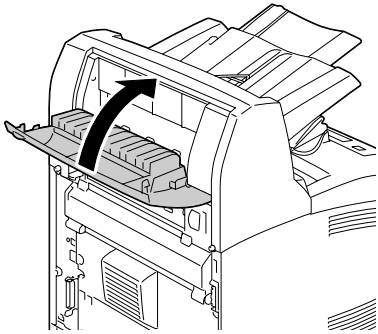

Cleaning the Laser Lens

1 Open the top cover.

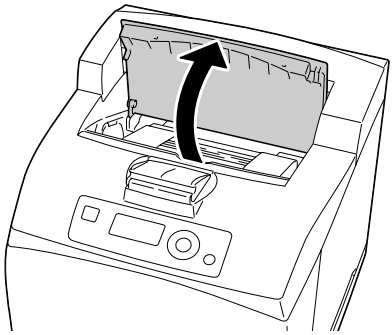

2 Hold the toner cartridge by the grip, and then pull it out slowly.

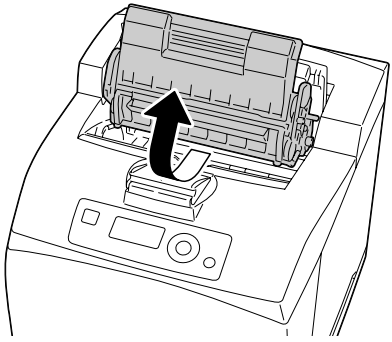

3 Clean the laser lens by wiping them with a soft, dry cloth.

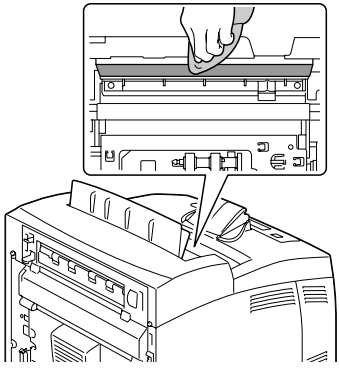

4 Hold the toner cartridge by the grip, and then insert it into the slot inside the printer.

Do not touch any parts inside the printer.

Ensure that the toner cartridge is firmly set.

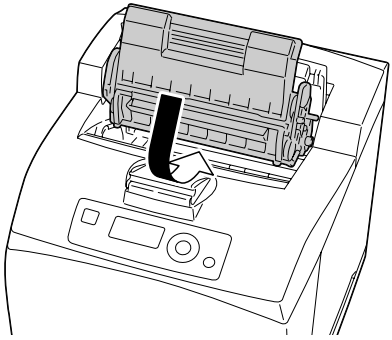

5 Close the top cover securely.

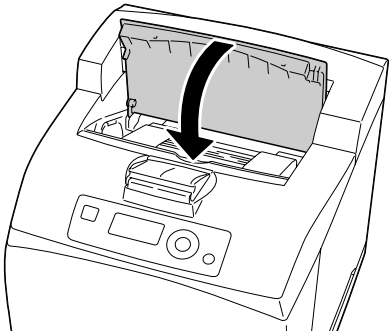

9 Troubleshooting

Introduction

This chapter provides information to aid you in resolving printer problems you may encounter, or at least guide you to the proper sources for help.

Printing the configuration page	Page 150
Preventing media misfeeds	Page 151
Understanding the media path	Page 152
Clearing media misfeeds	Page 153
Solving problems with media misfeeds	Page 169
Solving other problems	Page 171
Solving problems with printing quality	Page 176
Status, error, and service messages	Page 181

Printing a Configuration Page

Print a configuration page to verify the printer is printing correctly, or to check the printer configuration.

Press Key (once)	Until Display Reads
	READY
* Menu Select ↵	PRINT MENU If an optional hard disk kit is installed, the PROOF/PRINT MENU appears at the top of the menu. Press the ▽ key to select the PRINT MENU.
* Menu Select ↵	CONFIGRATION PG
* Menu Select ↵	PRINT
* Menu Select ↵	The configuration page prints and the printer goes back to READY.

Preventing Media Misfeeds

Make sure that...
Media matches the printer specifications.
Media is flat, especially on the leading edge.
The printer is on a hard, flat, level surface.
You store media in a dry location away from moisture and humidity.
You remove transparencies from the output tray immediately after printing to avoid static buildup.
You always adjust the media guides in the tray *after* inserting the media *(a guide not properly adjusted can cause poor print quality, media misfeeds, and printer damage).*
You load the media printing-side up in the tray *(Some manufacturers place an arrow on the end of the wrapper to indicate the printing side).*

Avoid...
Media that is folded, wrinkled, or excessively curled.
Double feeding *(remove the media and fan the sheets—they may be sticking together).*
Fanning transparencies since this causes static.
Loading more than one type/size/weight of media in a tray at the same time.
Overfilling the trays.
Allowing the output tray to overfill *(the output tray has a 500-sheet capacity—misfeeding may occur if you allow more than 500 sheets of media to accumulate at one time).*
Allowing the output tray to fill with more than a few transparencies.

Understanding the Media Path

Understanding the printer's media path will help you locate media misfeeds.

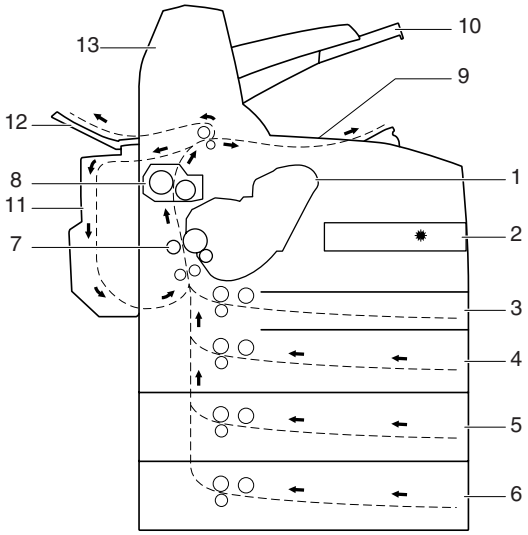

1	Toner cartridge	8	Fuser unit
2	Laser	9	Main output tray
3	Tray 1	10	Sub output tray
4	Tray 2	11	Duplex (optional)
5	Tray 3 (optional)	12	Face up tray
6	Tray 4 (optional)	13	Offset tray (optional)
7	Transfer roller		

Clearing Media Misfeeds

To avoid damage, always remove misfed media gently, without tearing it. Any piece of media left in the printer, whether large or small, can obstruct the media path and cause further misfeeds. Do not reload media that has misfed.

Note

The image is not fixed on the media before the fusing process. If you touch the printed surface, the toner may stick to your hands, so be careful not to touch the printed face when removing the misfed media. Make sure not to spill any toner inside the printer.

⚠ CAUTION

Unfused toner can dirty your hands, clothes, or anything else it gets on. If you accidentally get toner on your clothes, lightly dust them off as best as you can. If some toner remains on your clothes, use cool, not hot water, to rinse the toner off. If toner gets on your skin, wash it off with cool water and a mild soap.

⚠ CAUTION

If you get toner in your eyes, wash it out immediately with cool water and consult a doctor.

If, after clearing the media misfeed, the misfeed message in the control panel window persists, open and close the printer's covers. This should clear the misfeed message.

Media Misfeed Messages and Clearing Procedures

Media Misfeed Message	Page Reference
PAPER JAM TRAY1/2/3/4	Refer to “Clearing a Media Misfeed at the Paper Tray” on page 155.
PAPER JAM DUPLEX1/2	Refer to “Clearing a Media Misfeed at the Duplex” on page 158.
PAPER JAM FUSER/EXIT	Refer to “Clearing a Media Misfeed at the Fuser Unit” on page 160.
PAPER JAM TRANSFER	Refer to “Clearing a Media Misfeed at the Transfer Roller” on page 163.
PAPER JAM SUB EXIT	Refer to “Clearing a Media Misfeed at the Offset Tray” on page 166.

Clearing a Media Misfeed at the Paper Tray

1 Pull the tray out of the printer.

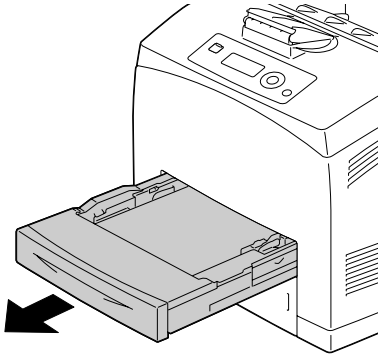

2 Remove the lid, and remove any wrinkled media from the tray.

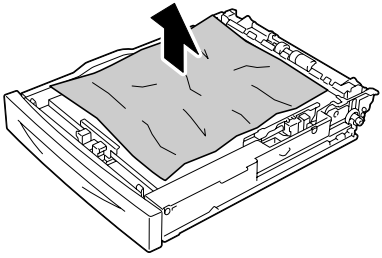

3 Remove any misfed media.

If any media is jammed at the optional lower feeder unit (tray 3/4), examine the interior of the tray.

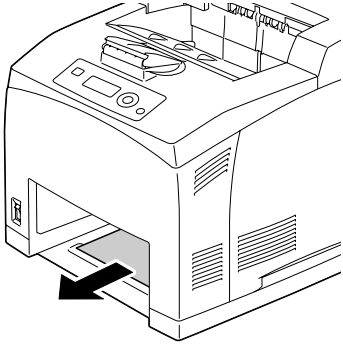

4 Remove all media from the tray.

5 Fan the media, and align its edges.

Do not fan transparencies.

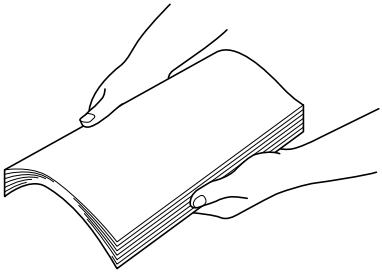

6 Load the media in the tray.

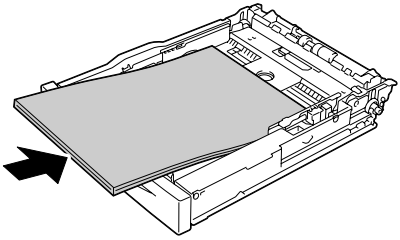

7 Reattach the lid of the tray.

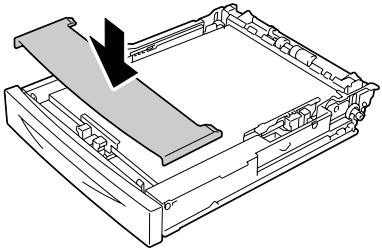

8 Push the tray completely into the printer.

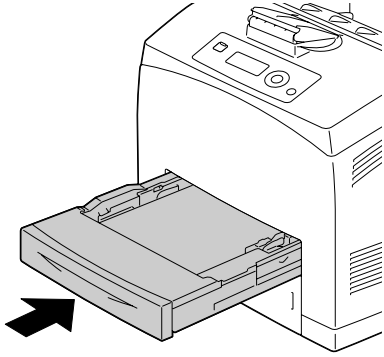

9 Open and close the top cover of the printer.

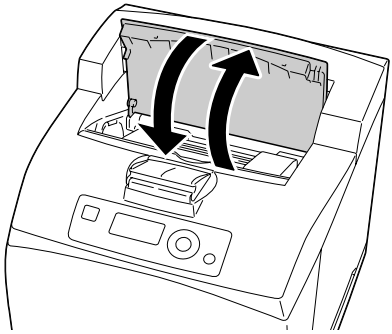

Clearing a Media Misfeed at the Duplex

PAPER JAM DUPLEX1 appearing in the display indicates a paper jam occurs at the paper exit.
PAPER JAM DUPLEX2 appearing in the display indicates a paper jam occurs at the paper exit or the interior of the top cover of the duplex.

At the paper exit

1 Examine the center output tray and remove any misfed media.

If media is torn, check for any remaining media.

If the paper is difficult to remove, proceed to the following section "At the interior of the duplex cover" to examine the interior of the duplex cover and remove the media.

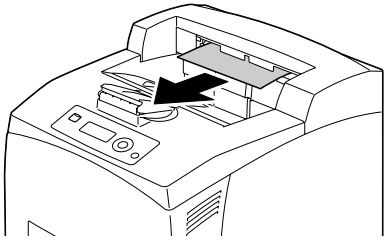

At the interior of the duplex cover

1 Lift the lever at the top left hand side of the duplex to unlock it and open the duplex cover.

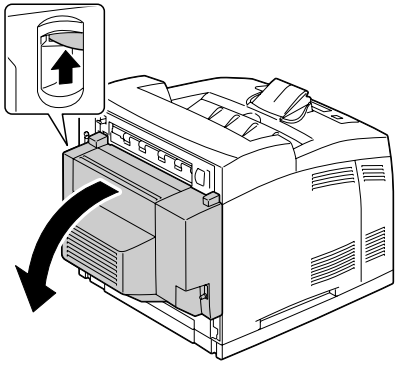

2 Examine the interior of the duplex cover and remove any misfed media.

If media is torn, check for any remaining media.

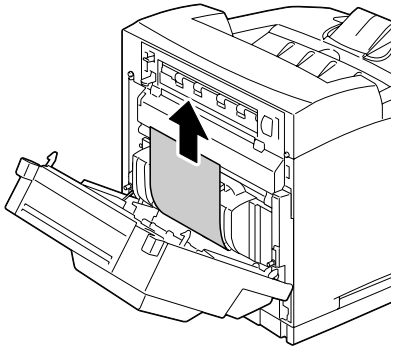

3 Close the duplex cover.

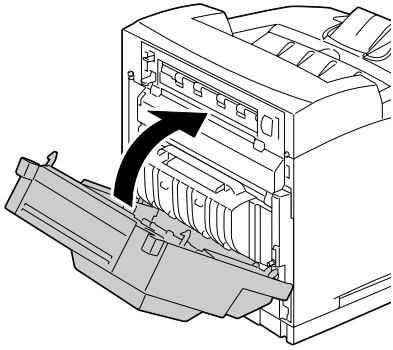

Clearing a Media Misfeed at the Fuser Unit

1 Remove any media from the center output tray.

If the duplex is installed, open the cover of the duplex first. Refer to "Clearing a Media Misfeed at the Duplex" on page 158.

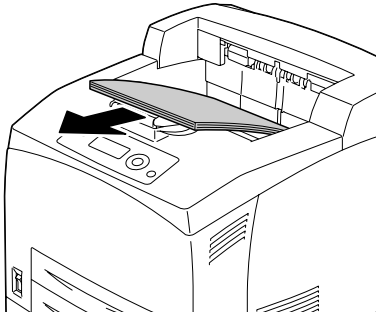

2 Lift the second lever from the top left corner of the back of the printer.

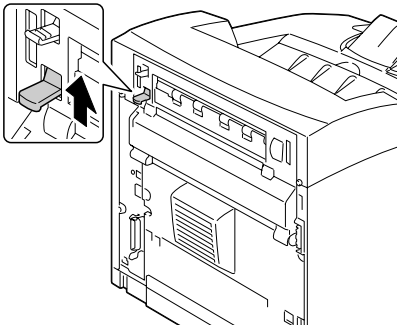

3 Open the rear cover.

Do not touch any parts inside the printer.

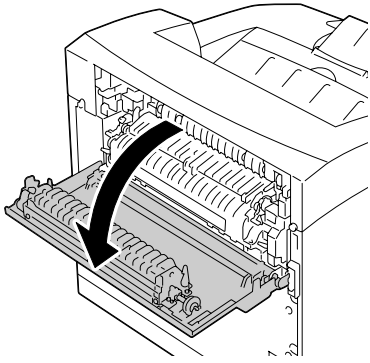

4 Open the cover of the fuser unit and remove any misfed media.

If media is torn, check for any remaining media.

Make sure that the levers at both ends of the fuser unit are returned to the positions they were in before clearing the jam.

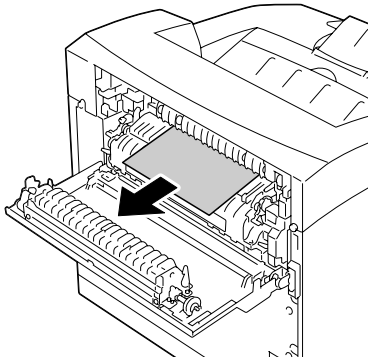

CAUTION

The area around the fuser unit is extremely hot.
Touching anything other than the indicated levers may result in burns. If you get burned, immediately cool the skin under cold water, and then seek professional medical attention.

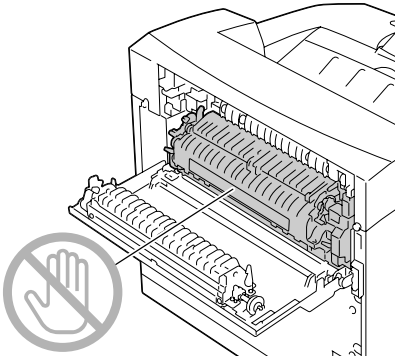

5 Close the rear cover.

Make sure that the levers at the rear of the printer are returned to the positions they were in before clearing the jam.

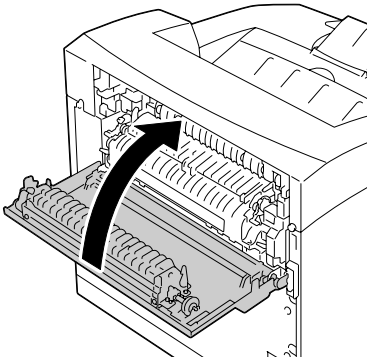

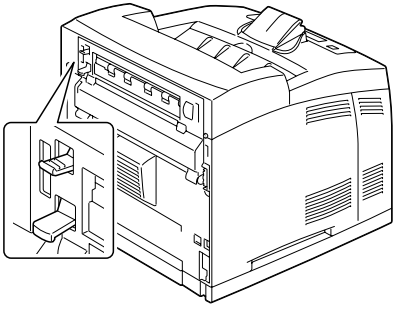

Clearing a Media Misfeed at the Transfer Roller

1 Remove any media from the center output tray.

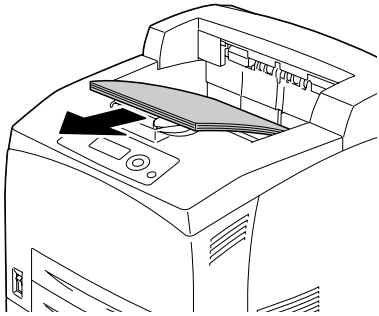

2 Open the top cover.

Do not touch any parts inside the printer.

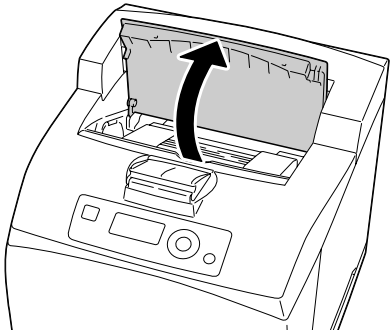

3 Hold the toner cartridge by the grip, and then pull it out slowly.

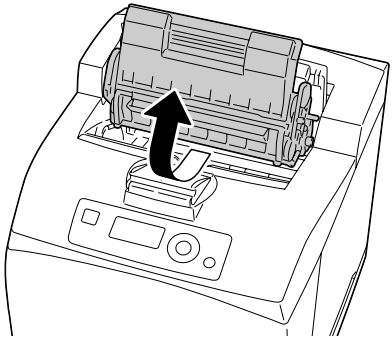

4 Examine the interior after taking out the toner cartridge and remove any misfed media.

Rotating the roller on the left side helps releasing misfed media for removal.

If media is torn, check for any remaining media.

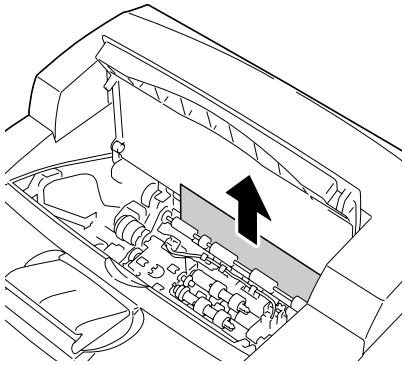

5 Hold the toner cartridge by the grip, and then insert it into the slot inside the printer.

Do not touch any parts inside the printer.

Ensure that the toner cartridge is firmly set.

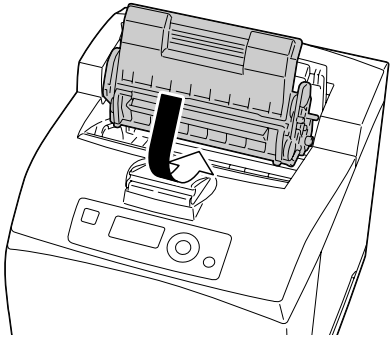

6 Close the top cover securely.

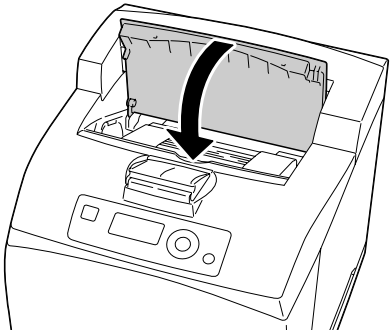

Note

Do not touch the surface of the transfer roller. Doing so may cause the print quality to deteriorate.

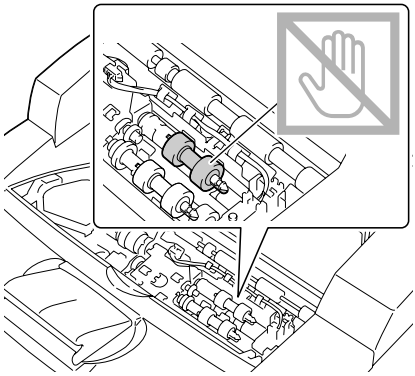

Clearing a Media Misfeed at the Offset Tray

1 Open the offset tray cover by pulling the tab at the top left of the cover.

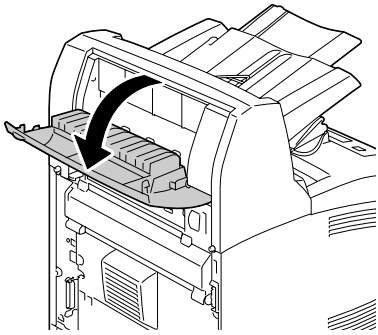

2 Remove any misfed media.

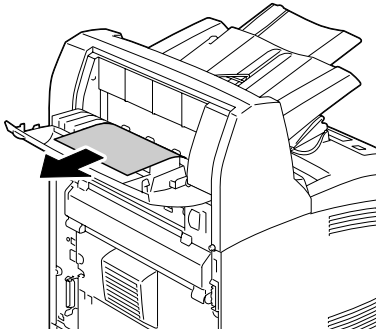

3 Close the offset tray cover.

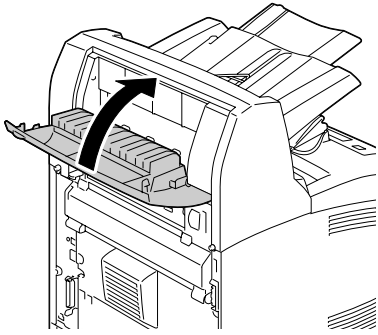

4 Lift the second lever from the top left corner of the back of the printer.

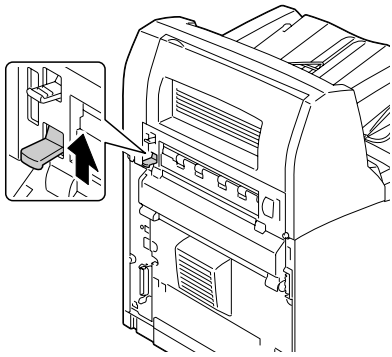

5 Open the rear cover.

Do not touch any parts inside the printer.

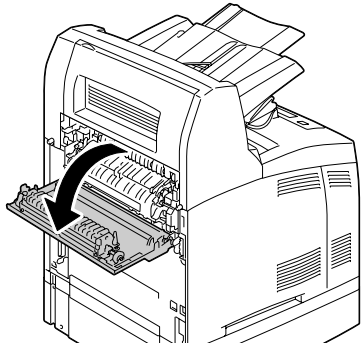

6 Remove any misfed media.

If media is torn, check for any remaining media.

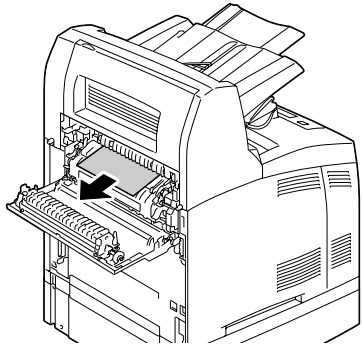

CAUTION

The area around the fuser unit is extremely hot.
Touching anything other than the indicated levers may result in burns. If you get burned, immediately cool the skin under cold water, and then seek professional medical attention.

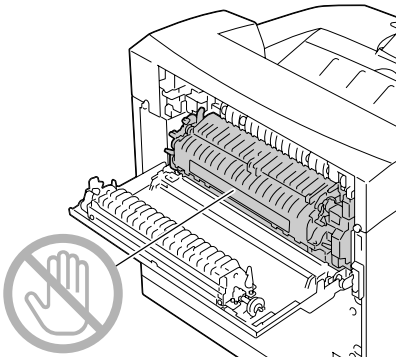

7 Close the rear cover.

Make sure that the levers at the rear of the printer are returned to the positions they were in before clearing the jam.

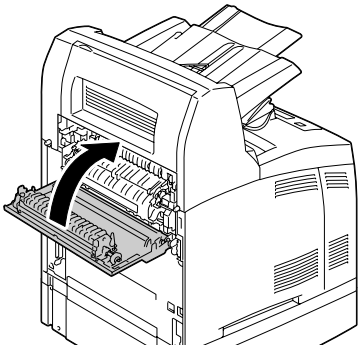

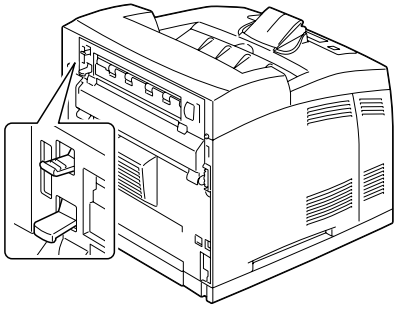

Solving Problems with Media Misfeeds

Frequent misfeeds in any area indicate that area should be checked, repaired, or cleaned. Repeated misfeeds may also happen if you're using unsupported print media.

Symptom	Cause	Solution
Several sheets go through the printer together.	The front edges of the media are not even.	Remove the media and even up the front edges, then reload it.
	The media is moist from humidity.	Remove the moist media and replace it with new, dry media.
	Too much static electricity is present.	Do not fan transparencies.
Media misfeed message stays on.	Top cover needs to be opened and closed again to reset the printer.	Open and close the top cover of the printer again.
	Some media remains misfed in the printer.	Recheck the media path and make sure that you have removed all of the misfed media.
Duplex misfeeds.	Unsupported media (wrong size, thickness, type, etc.) is being used.	Use KONICA MINOLTA-approved media. See "Media Specifications" on page 84.
		Only plain paper, 68-105 g/m^2 / 18-28 lb bond can be autoduplexed. See "Media Specifications" on page 84.
		Make sure that you have not mixed media types in a paper tray.
		Do not duplex (double-sided) envelopes, labels, thick stock, or transparencies.
	Media is still being misfed.	Recheck the media path inside the duplex option and make sure that you have removed all of the misfed media.

Symptom	Cause	Solution
Media is misfeeding.	The media is not correctly positioned in the tray.	Remove the misfed media and reposition the media properly in the tray.
	The number of sheets in the tray exceeds the maximum allowed.	Remove the excess media and reload the correct number of sheets in the tray.
	The media guides are not correctly adjusted to the media size.	Adjust the media guides in the tray to match the size of the media.
	Warped or wrinkled media is loaded in the tray.	Remove the media, smooth it out, and reload it. If it still misfeeds, do not use that media.
	The media is moist from humidity.	Remove the moist media and replace it with new, dry media.
Media is misfeeding.	Transparencies have collected static electricity in the tray.	Remove the transparencies and load them in the tray one sheet at a time. Do not fan transparencies before loading them.
	Unsupported media (wrong size, thickness, type, etc.) is being used.	Use KONICA MINOLTA-approved media. See “Media Specifications” on page 84.
	The media roller is dirty.	Clean the media supply roller. For more details, refer to “Cleaning the Feed Roller (inside the Tray)” on page 141.

Solving Other Problems

Symptom	Cause	Solution
Printer power is not on.	The power cord is not correctly plugged into the outlet.	Turn off the printer, confirm that the power cord is correctly plugged into the outlet, and then turn on the printer.
	Something is wrong with the outlet connected to the printer.	Plug another electrical appliance into the outlet and see whether it operates properly.
	The power switch is not correctly turned on (I position).	Turn the power switch off (O position), then turn it back to the on (I position).
	The printer is connected to an outlet with a voltage or frequency that does not match the printer specifications.	Use a power source with the specifications listed in appendix A, “Technical Specifications.”
Data was sent to the printer, but it doesn’t print.	An error message is displayed in the message window.	Handle according to the message displayed.
	A job may be cancelled if user authentication or account track settings are specified.	Click the User Authentication/Account Track button in the printer driver, and then type in the necessary information before printing.
The control panel displays TONER LOW much sooner than expected.	The toner cartridge may be defective or damaged.	Remove the toner cartridge and check it for damage. If it is damaged, replace it.
	You printed with heavy toner coverage.	See the specifications in Appendix A.
You can’t print the configuration page.	The tray is empty.	Check that at least Tray 1 is loaded with media, in place, and secure.
	The printer’s covers aren’t closed securely.	Make sure the covers are closed securely. Close all covers gently to avoid jarring the printer. Make sure that the toner cartridge is installed correctly when closing the center output tray.
	There is a media misfeed.	Clear the media misfeed.

Symptom	Cause	Solution
Printing from a USB memory device is not possible.	The file format (file extension) is not one that can be printed.	Only files with the format (extension) for JPEG, TIFF, XPS, or PDF are supported.
	MEMORY DIRECT for the printer is set to DISABLE.	Change the setting for INTERFACE MENU/MEMORY DIRECT to ENABLE.
	A public user is not specified for user authentication.	Contact the printer administrator.
Printing takes too much time.	The printer is set to a slow printing mode (for example, thick stock or transparency).	It takes more time to print on special media. When using regular paper, make sure that the media type is set properly in the driver.
	The printer is set to Energy Saver mode.	It takes time for printing to start in Energy Saver mode. If you do not want to use this mode, disable it. (SYS DEFAULT MENU/ENERGY SAVER menu)
	The job is very complex.	Wait. No action needed.
	The printer memory is insufficient.	Add more memory.
	A toner cartridge for a different region or an unapproved genuine toner cartridge is installed.	Install a correct KONICA MINOLTA toner cartridge approved for your specific printer.
Blank pages come out during printing.	The toner cartridge may be defective or empty.	Check the toner cartridge. The image will not print if it is empty.
	The wrong media is being used.	Check that the media type set in the driver matches the media loaded in the printer.

Symptom	Cause	Solution
Not all pages print.	The printer has the wrong kind of cable, or the printer is not configured for the correct cable and port.	Check your cable.
	The Cancel key was pressed.	Make sure no one pressed the Cancel key while your job was printing.
	The tray is empty.	Check that the trays are loaded with media, in place, and secure.
	A document is printed with an overlay file which has been created by an unsuitable driver.	Print the overlay file using a suitable driver.
Printer resets or turns off frequently.	The power cord is not correctly plugged into the outlet.	Turn off the printer, confirm that the power cord is correctly plugged into the outlet, and then turn on the printer.
	A system error occurred.	Contact Technical Support with the error information.

Symptom	Cause	Solution
You are experiencing duplex (double-sided) problems.	Media or settings are not correct.	For autoduplexing, make sure that you have a duplex option installed.
		Make sure that you are using correct media. ■ See “Media Specifications” on page 84. ■ Do not duplex (double-sided) envelopes, labels, postcards, thick paper 3, or transparencies. ■ Make sure that you have not mixed media types in a paper tray.
		Make sure that your document has more than one page.
		Make sure the duplex option is installed and declared in the Windows printer driver (Properties/Configure tab).
		In the Windows printer driver (Layout/Double-Sided), choose “Double-Sided.”
		For N-up on duplexed pages, choose Collate only in the Windows driver’s Paper Tab. Do not set collation in the application.
With N-up on multiple copies, the output is incorrect.	Both the driver and the application have been set for collation.	For N-up on multiple copies, choose Collate only in the Windows driver’s Paper Tab. Do not set collation in the application.
You hear unusual noises.	The printer is not level.	Place the printer on a flat, hard, level surface.
	The tray is not installed correctly.	Remove the tray that you are printing from and reinsert it completely into the printer.
	There is a foreign object stuck inside the printer.	Turn off the printer and remove the object. If you cannot remove it, contact Technical Support.

Symptom	Cause	Solution
The web-based utility cannot be accessed.	The PageScope Web Connection Administrator's password is incorrect.	The PageScope Web Connection Administrator password has a 6-character minimum and a 16-character maximum. For details of the PageScope Web Connection administrator password, refer to the Reference Guide on the Utilities and Documentation CD-ROM.
Media is wrinkled. 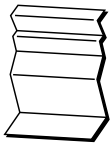	The media is moist from humidity or having water spilled on it.	Remove the moist media and replace it with new, dry media.
	The transfer roller or fuser unit is defective.	Check them for damage. If necessary, contact Technical Support with the error information.
	Unsupported media (wrong size, thickness, type, etc.) is being used.	Use KONICA MINOLTA-approved media. See "Media Specifications" on page 84.
The date and time is not correctly maintained on the printer.	The backup battery has reached the end of its life.	Replace the backup battery. For details, see "Replacing the Backup Battery" on page 132.
The pages that were fed out were not uniformly loaded.	There are large curls in the paper.	Remove the paper from the paper tray, turn it over, and then load it again.
	There are gaps between the media guides of the paper tray and the sides of the paper.	Slide the media guides of the paper tray against the sides of the paper so that there are no gaps.

Solving Problems with Printing Quality

Symptom	Cause	Solution
Nothing is printed, or there are blank spots on the printed page. 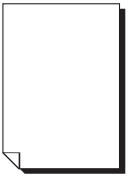	The toner cartridge may be defective or damaged.	Remove the toner cartridge and check for damage. If damaged, replace it.
	The media is moist from humidity.	Adjust the humidity for media storage. Remove the moist media and replace it with new, dry media.
	The media set in the printer driver mismatches the media loaded in the printer.	Load the correct media in the printer.
	The power source does not match the printer specifications.	Use a power source with the proper specifications.
	Several sheets are being fed at the same time.	Remove the media from the tray and check it for static electricity. Fan plain paper or other media (but not transparencies), and replace it in the tray.
	Media is not set properly in the tray(s).	Remove the media, tap it to straighten it out, return it to the tray, and realign the media guides.
Entire sheet is printed black.	The toner cartridge may be defective or damaged.	Remove the toner cartridge and check for damage. If damaged, replace it.

Symptom	Cause	Solution
Image is too light; there is low image density.	The media is moist from humidity.	Remove the moist media and replace it with new, dry media.
	There is not much toner left in the cartridge.	Replace the toner cartridge.
	The toner cartridge may be defective or damaged.	Remove the toner cartridge and check for damage. If damaged, replace it.
	The media type is set incorrectly.	When printing envelopes, labels, postcards, thick stock, or transparencies, specify the appropriate media type in the printer driver.
Image is too dark.	The toner cartridge may be defective or damaged.	Remove the toner cartridge and check for damage. If damaged, replace it.
Image is blurred; background is lightly stained.	The toner cartridge may be defective or damaged.	Remove the toner cartridge and check for damage. If damaged, replace it.
The print density is uneven. 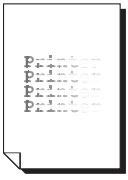	The toner cartridge may be defective or damaged.	Remove the toner cartridge and check for damage. If damaged, replace it.
	The printer is not level.	Place the printer on a flat, hard, level surface.

Symptom	Cause	Solution
Irregular print or mottled image appears. 	The media is moist from humidity.	Adjust the humidity in the media storage area. Remove the moist media and replace it with new, dry media.
	Unsupported media (wrong size, thickness, type, etc.) is being used.	Use KONICA MINOLTA-approved media. See “Media Specifications” on page 84.
	The toner cartridge may be defective or damaged.	Remove the toner cartridge and check for damage. If damaged, replace it.
There is insufficient fusing or the image comes off when rubbed. 	The media is moist from humidity.	Remove the moist media and replace it with new, dry media.
	Unsupported media (wrong size, thickness, type, etc.) is being used.	Use KONICA MINOLTA-approved media. See “Media Specifications” on page 84.
	Media type is set incorrectly.	When printing envelopes, labels, postcards, thick stock or transparencies, specify the appropriate media type in the printer driver.
There are toner smudges or residual images. 	The toner cartridge may be defective or damaged.	Remove the toner cartridge and check for damage. If damaged, replace it.

Symptom	Cause	Solution
There are toner smudges on the back side of the page (whether or not it has been duplexed). 	The media path is dirty with toner.	Print several blank sheets and the excess toner should disappear.
	The toner cartridge may be defective or damaged.	Remove the toner cartridge and check for damage. If damaged, replace it.
Abnormal areas (white, black) appear in a regular pattern. 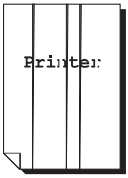	The toner cartridge may be defective or damaged.	Remove the toner cartridge and check for damage. If damaged, replace it.
Image defects. 	The toner cartridge may be leaking.	Remove the toner cartridge and check it for damage. If it is damaged, replace it.
	The toner cartridge may be defective or damaged.	Remove the toner cartridge and check for damage. If damaged, replace it.

Symptom	Cause	Solution
Lateral lines or bands appear on image. 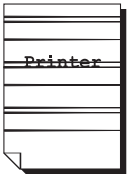	The printer is not level.	Place the printer on a flat, hard, level surface.
	The media path is dirty with toner.	Print several sheets and the excess toner should disappear.
	The toner cartridge may be defective or damaged.	Remove the toner cartridge and check for damage. If damaged, replace it.

If the problem is not resolved, even after all of the above have been performed, contact Technical Support with the error information.

Status, Error, and Service Messages

Status, error, and service messages are displayed in the control panel message window. They provide information about your printer and help you locate many problems. When the condition associated with a displayed message has changed, the message is cleared from the window.

Standard Status Messages

This message...	means...	do this...
CANCELLING JOB	The job is being cancelled.	No action needed.
COPYING	The printer is printing with the collating function.	
ENERGY SAVER	The printer is in Energy Saver mode to reduce power consumption during periods of inactivity. When a print job is received, the printer returns to normal power within 30 seconds.	
FIRMWARE UPDATE	The firmware is being updated.	
INITIALIZING	The printer is being initialized.	
OFFLINE	The printer is offline.	To print on a network, change the TELNET setting so it is online.
PRINTING	The printer is printing.	No action needed.
PROCESSING	The printer is processing data.	
READY	The printer is on and ready to receive data.	
REBOOTING	The printer is being restarted.	
WARMING UP	The printer is warming up.	

Error Messages (Warning: ⚠)

This message...	means...	do this...
DEVICE NOT SUPPORTED	An incompatible device is connected to the USB port of this printer.	Use a device compatible with the USB port of this printer.
FUSER UNIT END OF LIFE	The fuser unit has reached the end of its life.	Contact Technical Support with the error information.
HDD NEAR FULL	The hard disk is nearly full.	Delete print jobs saved on the hard disk.
HUBS NOT SUPPORTED	An incompatible USB hub is connected to the USB port of this printer.	Use a USB hub compatible with the USB port of this printer.
INCORRECT HDD	Since the hard disk was formatted with a different machine, the hard disk could not be used.	Replace the hard disk with one compatible with this machine, or select HDD FORMAT from SYS DEFAULT MENU and format the hard disk.
INCORRECT MEMORY CARD	Since the CompactFlash card was formatted with a different machine, the CompactFlash card could not be used.	Replace the CompactFlash card with one compatible with this machine, or select CARD FORMAT from SYS DEFAULT MENU and format the CompactFlash card.
MEMORY CARD NEAR FULL	The CompactFlash card is nearly full.	Delete resources (fonts, forms, etc.) which saved on the CompactFlash card by using Download Manager or PSWC.
NON SUPPORT CARD	Since incompatible CompactFlash card was inserted into the memory slot, the CompactFlash could not be used.	Use CompactFlash card compatible with this printer.

This message...	means...	do this...
PAPER EMPTY TRAY *X*	Tray X (Tray 1, 2, 3 or 4) is empty. (Appears when SYS DEFAULT MENU/ ENABLE WARN-ING/PAPER EMPTY/TRAY X is set to ON.)	Load media into the specified tray.
	Tray X (Tray 1, 2, 3 or 4) is not correctly installed. (Appears when SYS DEFAULT MENU/ ENABLE WARN-ING/PAPER EMPTY/TRAY X is set to ON.)	Correctly install the specified tray.
PAPER LOW X	The tray X (Tray 2, 3 or 4) paper is low. (Appears when SYS DEFAULT MENU/ ENABLE WARNING/ PAPER LOW/TRAY X is set to ON.)	Load the media into the tray.
TONER OUT	The toner cartridge is empty.	Replace the toner car-tridge.

This message...	means...	do this...
TONER LOW	The toner cartridge is low and should be replaced within 500 pages at 5% coverage of letter/A4 pages. (Appears when SYS DEFAULT MENU/ ENABLE WARNING/TONER LOW is set to ON.)	Prepare the specified toner cartridge.
UNABLE TO COLLATE JOB	The hard disk is full. Print jobs over 10,000 pages cannot be collated.	Print one copy of the file at a time.

Error Messages (Operator Call: ⚠)

This message...	means...	do this...
CHECK LEVER FACE UP TRAY IS SELECTED	The face up lever is raised when duplex printing or sub tray output is specified.	Pull the face up lever down.
COVER OPEN DUPLEX COVER	The duplex cover is open.	Close the duplex cover.
COVER OPEN FINISHER COVER	The offset tray cover is open.	Close the offset tray cover.
COVER OPEN REAR COVER	The printer's rear cover is open.	Close the rear cover.
COVER OPEN TOP COVER	The printer's top cover is open.	Close the top cover.
HOLD JOB ERROR UNABLE TO STORE JOB	The specified print job saved on the hard disk is sent while the hard disk is not installed.	Print jobs can be saved only if a hard disk is installed. If desired, install a hard disk.
HOLD JOB ERROR "OPTIONAL" PRESS CANCEL	When printing a stored job, the printer configuration was changed since the job was stored.	Change the printer configuration to that when the job was stored.
INCORRECT TRAY	The installed option tray is an unapproved type.	Turn off the power of the printer, and then remove the tray.
MEMORY FULL PRESS CANCEL	The printer has received more data than can be processed with its internal memory.	Press the Cancel key to cancel the print job. Decrease the amount of data to be printed (for example, by decreasing the resolution), and then try printing again. If that doesn't solve the problem, install an optional memory module.

This message...	means...	do this...
OUTPUT FULL REMOVE PAPER YYYY	The output tray is full of media.	Remove all media from the output tray.
PAPER EMPTY "SIZE" "MEDIA"	The specified tray is empty. (Appears when PAPER MENU/PAPER SOURCE/TRAY CHAINING ON is set.)	Load the correct media into the specified tray.
PAPER ERROR "SIZE" "MEDIA"	The media size/type set in the printer driver is different from the size/type of media loaded (Appears when PAPER MENU/PAPER SOURCE/TRAY CHAINING ON is set.)	Load the correct media size and type.
PAPER JAM DUPLEX1	Media has misfed in the duplex option.	Press the ▽ key to display the help screen. Follow the instructions in the help screen to remove the misfed media.
PAPER JAM DUPLEX2	Media has misfed in the duplex option.	
PAPER JAM FUSER/EXIT	Media has misfed leaving the fuser area.	
PAPER JAM SUB EXIT	Media has misfed in the feed section of the sub output tray.	
PAPER JAM TRAY*X*	Media has misfed while being pulled from the specified tray (Tray 1, 2, 3, or 4).	
PAPER JAM TRANSFER	Media has misfed in the transfer section.	
TONER OUT REPLACE TONER	The toner cartridge is completely empty.	Replace the toner cartridge.

This message...	means...	do this...
TONER MISSING CHECK TONER	The toner cartridge is not installed, or an unapproved toner cartridge is installed.	Install a correct KONICA MINOLTA toner cartridge.
TRAY *X* EMPTY "SIZE" "MEDIA"	The *X* (Tray 1, 2, 3 or 4) was specified with the printer driver for printing, but Tray *X* is empty. This message appears when the PAPER MENU/ PAPER SOURCE/ TRAY CHAINING menu is set to OFF.	Load the correct media into the specified tray.
TRAY*X* PAPER ERR "SIZE" "MEDIA"	The media size/type set in the printer driver is different from the size/type of media loaded. This message appears when the PAPER MENU/ PAPER SOURCE/ TRAY CHAINING menu is set to OFF.	Load the correct media size and type.
TRAY*X* SIZE ERR ADD "SIZE"	The media size set in the printer driver is different from the size of media loaded.	Load the correct media size into the specified tray.

Service Messages: ⚠

These messages indicate a more serious error that can only be corrected by a customer service engineer. If one of these messages appears, turn the printer off, then turn it on again. If the problem persists, contact your local vendor or authorized service provider.

This service message...	means...	do this...
SERVICE CALL *XXXX* "Error"	An error has been detected with the item indicated "*XXXX*" in the service message. Information about errors appears at the bottom of the message window.	Reboot the printer. This often clears the service message, and printer operation can resume. If the problem persists, contact Technical Support.

10 Installing Accessories

Introduction

Note

Use of accessories not manufactured or supported by KONICA MINOLTA will void your warranty.

This chapter provides information about the following accessories.

Option name	Explanation
Dual In-Line Memory Unit (DIMM)	256 MB: 9J05 151 128 MB: 9J05 152
Duplex	Auto duplexing
Lower Feeder Unit (Tray 3/4)	550-sheet tray included
Hard disk kit	40 GB Hard Disk
CompactFlash card	256 MB, 512 MB, 1 GB, 2GB, 4 GB
CF Adapter	Adapter for CompactFlash card.
Offset tray	Performs job separation and offset printing.

For details on the available options, refer to konicaminolta.com.

Note

A hard disk kit and a CF adapter cannot be installed to be used at the same time.
Installing accessories always requires that the printer and accessories are turned off and unplugged during installation.

Antistatic Protection

Note

It's very important to protect the printer controller board from electrostatic damage while performing any task involving the controller board.
Turn off all power switches first. If an antistatic wrist strap is provided in your printer option kit, attach one end of it to your wrist and the other end to the bare metal chassis on the back of your printer. Never attach the wrist strap to any piece of equipment with an electrical current present. Plastic, rubber, wood, painted metal surfaces, and telephones are not acceptable grounding points.
If you don't have an antistatic wrist strap, discharge your body's static electric charge by touching a grounded surface before you handle any printer boards or components. Also avoid walking around after grounding yourself.

Dual In-Line Memory Module (DIMM)

You may need additional memory (DIMM) for complex graphics and for duplex (double-sided) printing.

This printer detects only half of the amount of the installed memory.

Dual in-line memory module (or DIMM) is compact circuit board with surface-mount memory chips.

There is 256 MB of onboard memory and one available memory expansion slot. The memory can be expanded to a maximum of 384 MB (128 MB + 256 MB).

Installing a DIMM

Note

It's very important to protect the printer controller board and any associated circuit boards from electrostatic damage. Before performing this procedure, review the antistatic caution on page 191. In addition, always handle circuit boards by the edges only.

1 Turn off the printer and disconnect the power cord and interface cables.

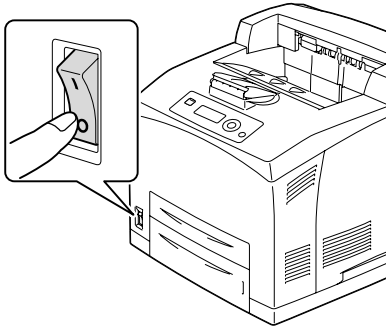

2 Using a screwdriver, loosen the screw of the right cover, located at the rear side.

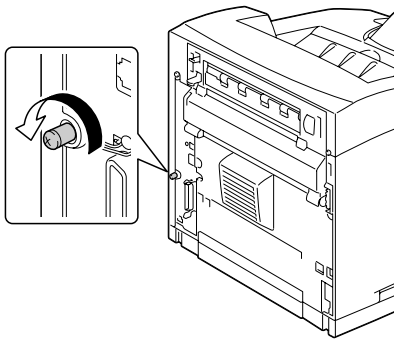

3 Remove the right side cover.

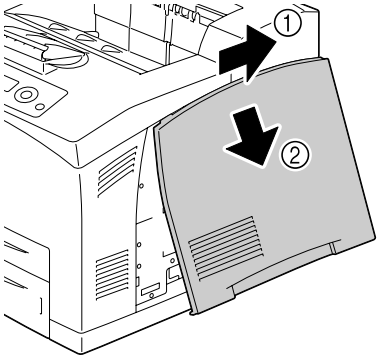

4 Using a screwdriver, loosen the two screws. (Do not remove them from the printer.)

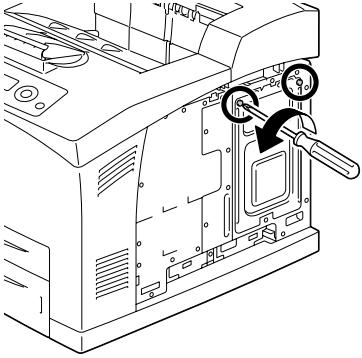

5 Remove the panel.

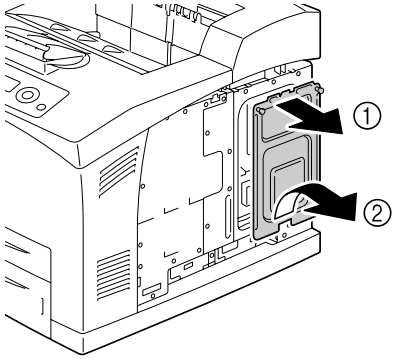

6 Insert the DIMM at an angle (about 45°) into the connector, making sure that the notch on the unit aligns with the tab on connector, and then press down carefully until it clicks into place.

Be sure to handle the DIMM by the edges only.

You will hear a click when the DIMM is properly placed.

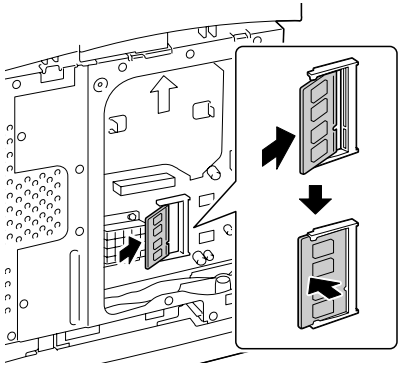

7 Reinstall the panel and tighten the two screws.

8 Attach the right side cover.

9 Reconnect all interface cables.

10 Reconnect the power cord, and turn on the printer.

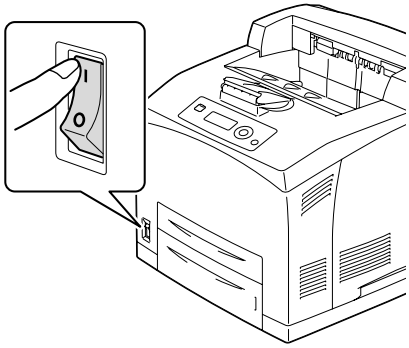

11 Declare the additional Printer Memory in the Windows printer driver (Properties/Configure tab).

12 Print a configuration page (`PRINT MENU/CONFIGURATION PG`) and verify that the total amount of the RAM installed in your printer is listed.

Hard Disk Kit

If you install a hard disk kit, the followings can be performed:

- Collate printing
- Job printing/saving
- Fonts/forms download
- User Authentication/Account Track
- Direct printing

A hard disk kit and a CF adapter cannot be installed simultaneously.

Installing the Hard Disk kit

Note

It's very important to protect the printer controller board and any associated circuit boards from electrostatic damage. Before performing this procedure, review the antistatic caution on page 191. In addition, always handle circuit boards by the edges only.

1 Turn off the printer and disconnect the power cord and interface cables.

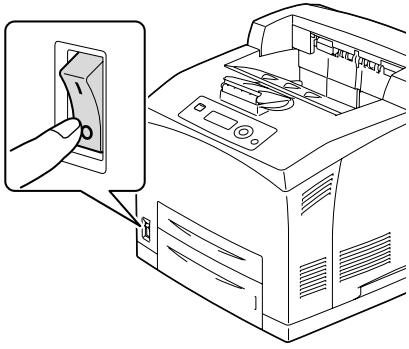

2 Using a screwdriver, loosen the screw of the right cover, located at the rear side.

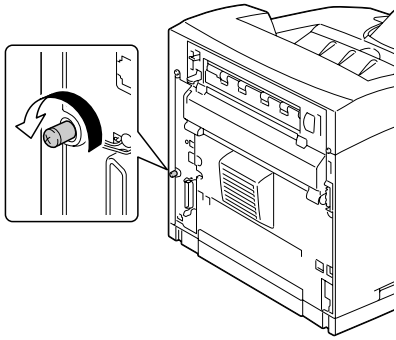

3 Remove the right side cover.

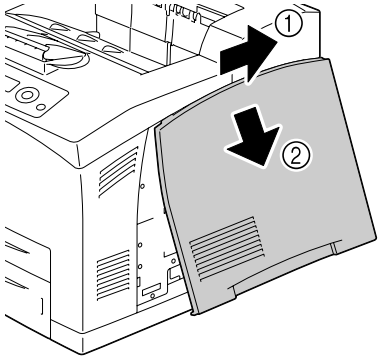

4 Using a screwdriver, loosen the two screws. (Do not remove them from the printer.)

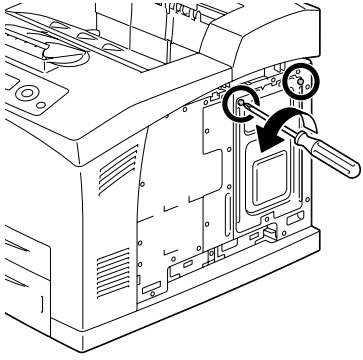

5 Remove the panel.

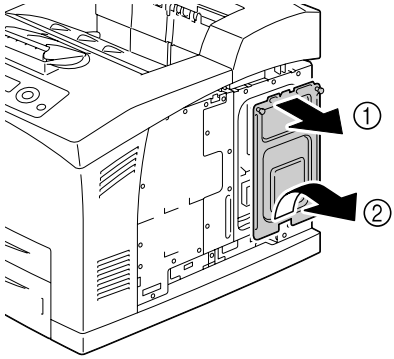

6 Plug the cable on the hard disk kit into the connector on the controller board.

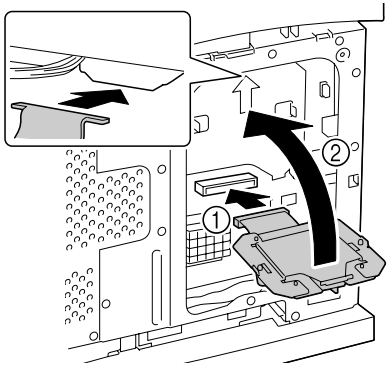

7 Mount the hard disk kit onto the controller board as shown in the figure, and then tighten the two screws.

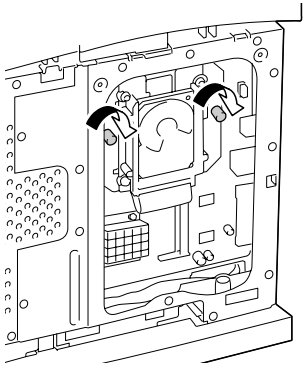

8 Reinstall the panel and tighten the two screws.

9 Attach the right side cover.

10 Reconnect all interface cables.

11 Reconnect the power cord, and turn on the printer.

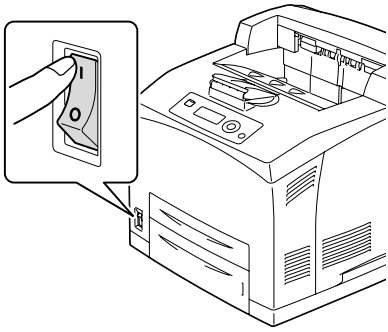

12 Declare the Hard Disk in the Windows printer driver (Properties/Configure tab).

CompactFlash

If you install a CF Adapter and CompactFlash card, the followings can be performed:

- Collate printing
- Fonts/forms download
- Authentication/Account Track
- Direct printing (including the use of PageScope Direct Print)

Only CompactFlash cards with a capacity of 256 MB, 512 MB, 1 GB, 2 GB or 4 GB can be used.

The job printing/saving function is not available with a CompactFlash card. This function requires that an optional hard disk kit be installed.

A hard disk kit and a CF adapter cannot be installed simultaneously.

Installing the CompactFlash card

Note

If a CompactFlash card has been used for a device other than this printer, the card is automatically formatted and all of its data is cleared when installed onto the printer controller board.

Note

It is very important to protect the printer controller board and any associated circuit boards from electrostatic damage. Before performing this procedure, review the antistatic caution on page 191. In addition, always handle circuit boards by their edges only.

1 Turn off the printer and disconnect the power cord and interface cables.

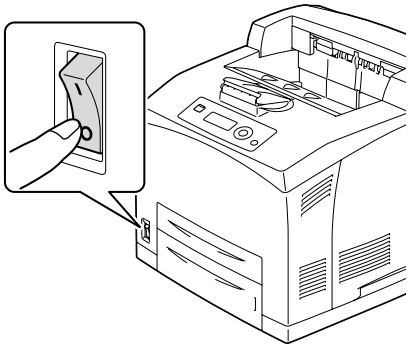

2 Using a screwdriver, loosen the screw of the right cover, located at the rear side.

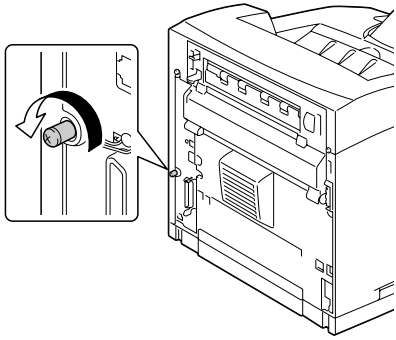

3 Remove the right side cover.

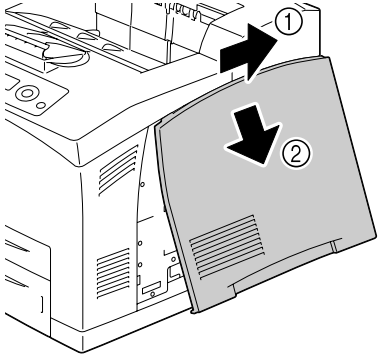

4 Using a screwdriver, loosen the two screws. (Do not remove them from the printer.)

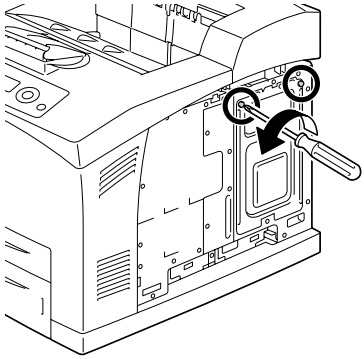

5 Remove the panel.

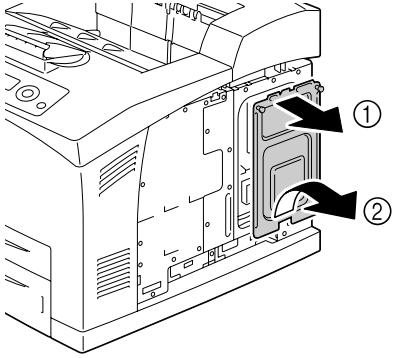

6 Plug the cable on the CF Adapter into the connector on the controller board.

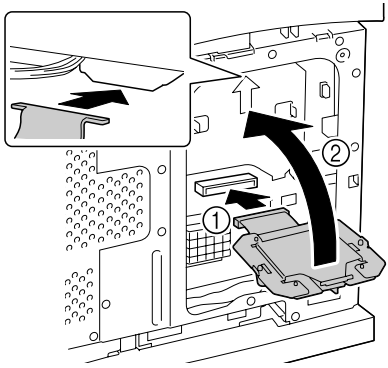

7 Mount the CF Adapter onto the controller board as shown in the figure, and then secure the screws.

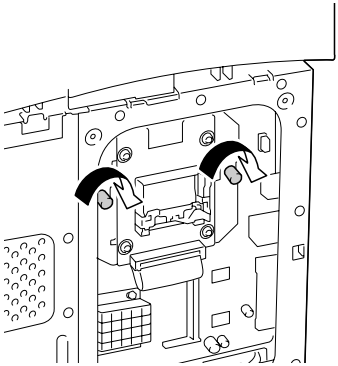

8 Fully insert the CompactFlash card into the appropriate slot. When the CompactFlash card is correctly inserted, the button on the side of the slot (circled in the illustration) slightly pops out.

Before removing the CompactFlash card, press this button.

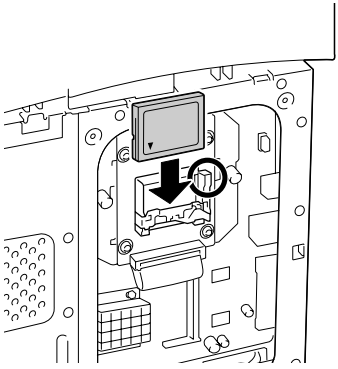

9 Reinstall the panel and tighten the two screws.

10 Attach the right side cover.

11 Reconnect all interface cables.

12 Reconnect the power cord, and turn on the printer.

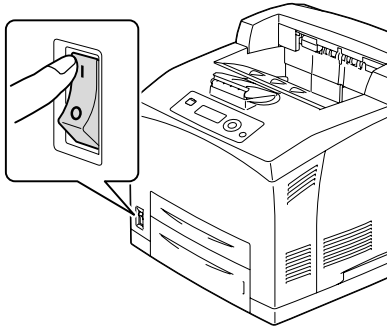

13 Declare the Memory card in the Windows printer driver (Properties/Configure tab).

Duplex

Duplex (double-sided) printing can be performed automatically with the duplex and enough memory installed. For details, refer to “Duplexing” on page 108.

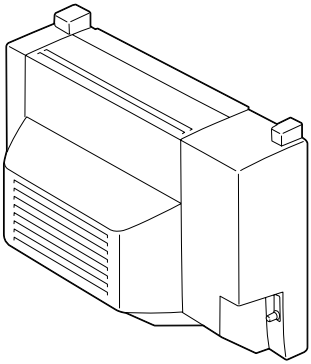

Installing the Duplex

1 Turn off the printer and disconnect the power cord and interface cables.

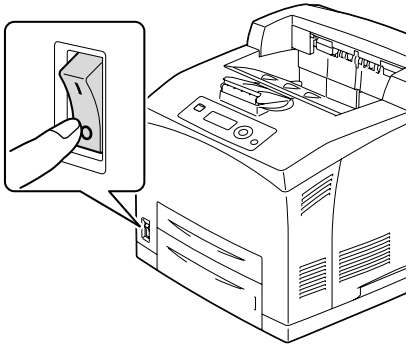

2 Pushing the two tabs as shown in the figure, remove the rear cover of the printer.

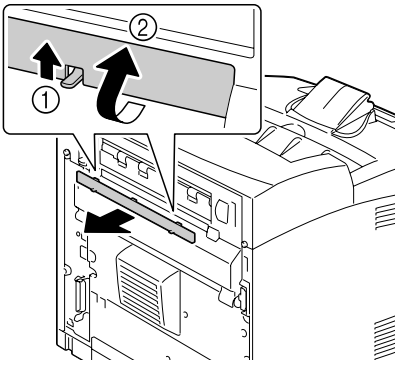

3 Remove the connector cover of the printer as shown in the figure.

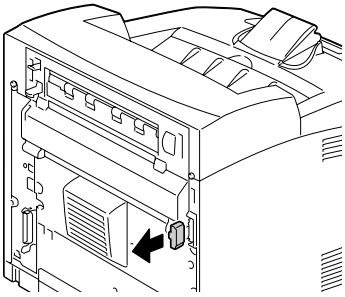

4 Insert the right and left tabs at the bottom of the duplex into the holes at the back of the printer, and then align the top of the duplex with the printer.

Ensure that the connector of the duplex is connected to the connector of the printer.

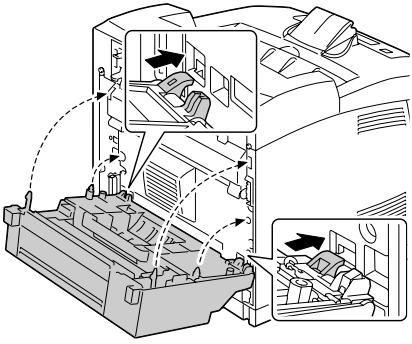

5 Tighten the two screws at the both ends of the bottom of the duplex.

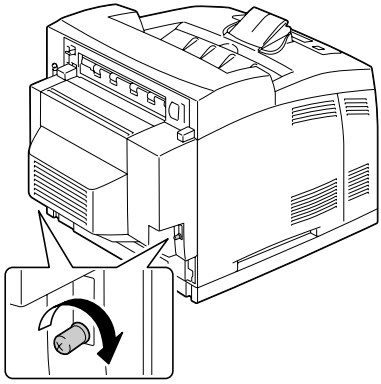

6 Reconnect all interface cables.

7 Reconnect the power cord, and turn on the printer.

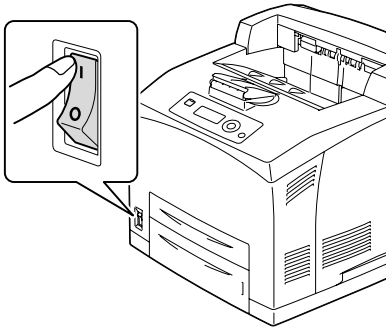

8 Declare the Duplex in the Windows printer driver (Properties/Configure tab).

Lower Feeder Unit

You can install up to two optional lower feeder units (Trays 3 and 4). Each lower feeder unit increases your printer's media feed capacity by A4/550 sheets.

Kit Contents

- Lower feeder unit with a tray (A4/550-sheet capacity)
- Fasteners (x 4)

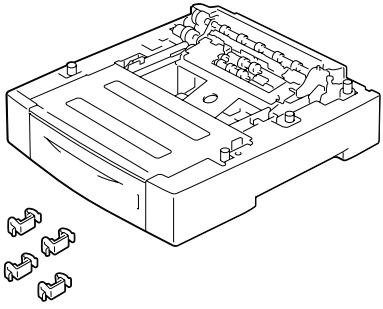

Installing the Lower Feeder Unit

Note

Since consumables are installed in the printer, be sure to keep the printer level when moving it in order to prevent accidental spills.

1 Turn off the printer and disconnect the power cord and interface cables.

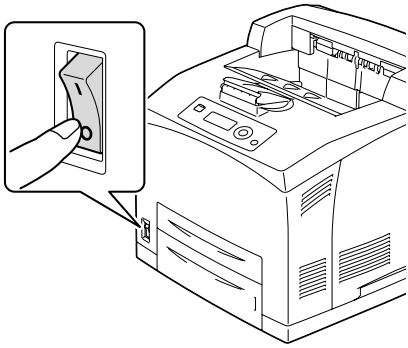

2 Place the feeder unit to be installed at the lower level on a flat location.

If you install only one lower feeder unit, proceed to Step 6.

3 Lift up the feeder unit to be installed at the higher level by holding the parts as shown in the figure.

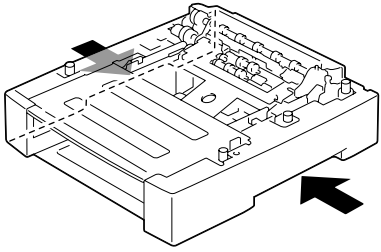

4 Align the front and back corners of the top and bottom feeder units, and slowly lower the top unit so that the guide pins at the 4 corners of the bottom unit fit into the holes of the base plate of the top unit.

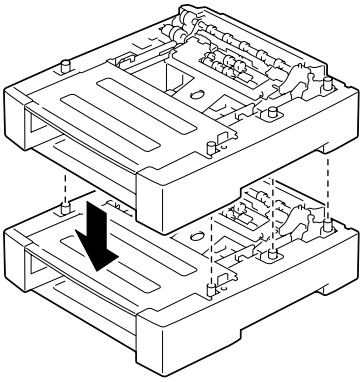

5 Securely insert the fasteners into the 2 locations inside the top feeder unit and 2 locations at the back of the feeder units.

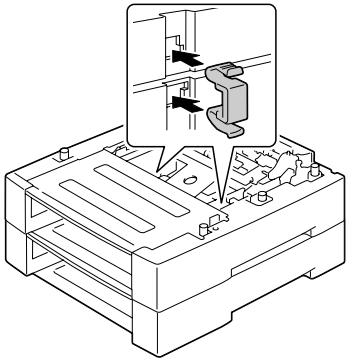

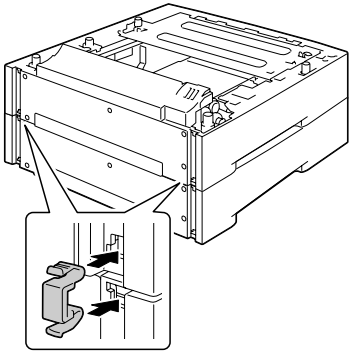

6 Pull out the trays.

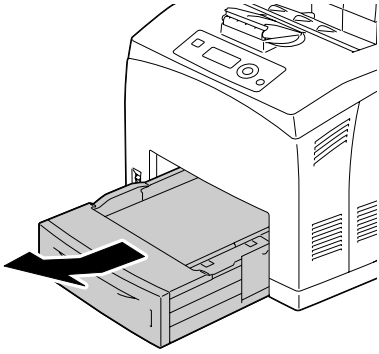

7 Lift up the printer by holding the recessed areas at both sides of the printer as shown in the figure.

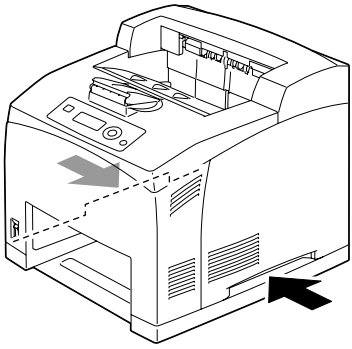

8 With another person's help, place the printer on top of the lower feeder unit, making sure that the positioning pins on the lower feeder unit correctly fit into the holes on the bottom of the printer.

The printer must be lowered gently. Otherwise, the interior parts may be damaged.

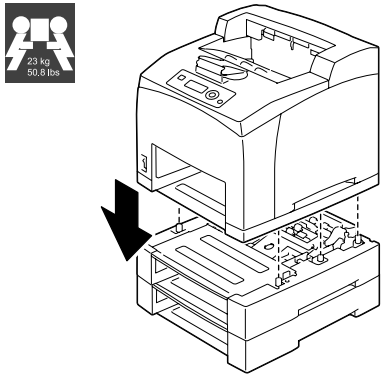

WARNING!

This printer weighs approximately 23 kg (50.8 lbs) when it is fully loaded with consumables. The printer must be lifted by two people.

9 Insert the fasteners into the 2 locations inside and 2 locations at the back of the printer.

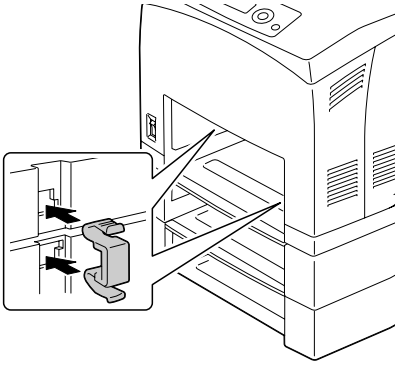

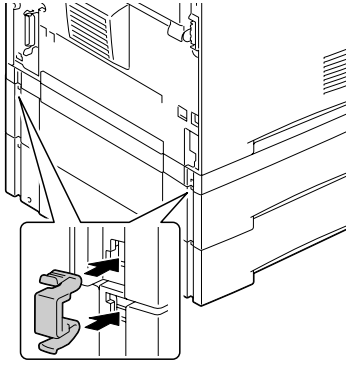

10 Push the trays completely into the printer.

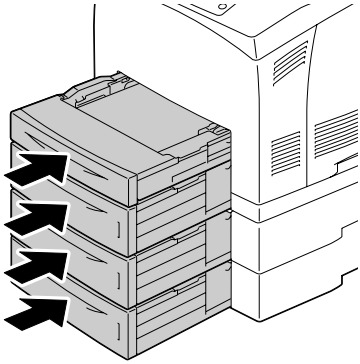

11 Reconnect all interface cables.

12 Reconnect the power cord, and turn on the printer.

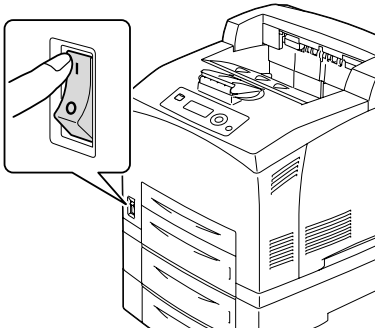

13 Declare Paper Source Unit 3/4 in the Windows printer driver (Properties/ Configure tab).

Offset Tray

When the offset tray is installed, job separation and offset printing can be performed.

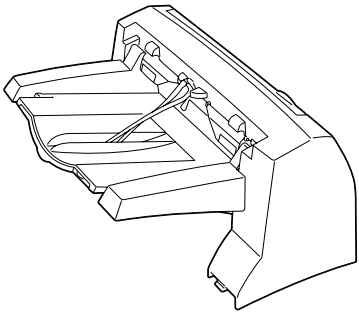

Installing the Offset Tray

1 Turn off the printer and disconnect the power cord and interface cables.

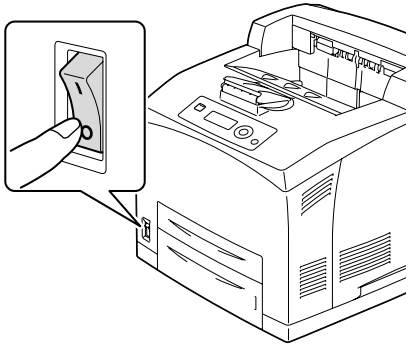

2 Loosen the right and left thumbscrews as shown in the figure to remove the top cover of the paper exit.

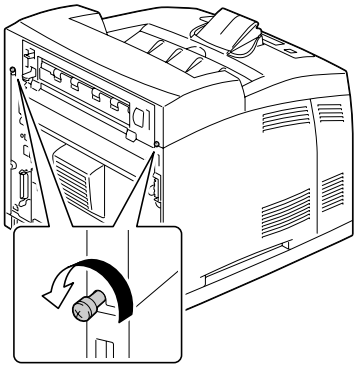

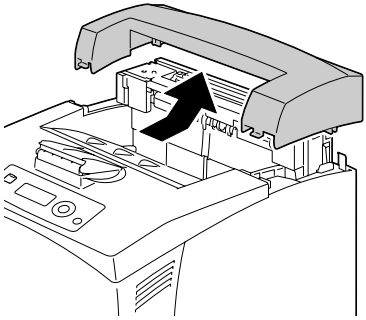

3 Insert the right and left tabs of the offset tray into the holes at the top of the printer and slowly put the offset tray down to the top of the printer.

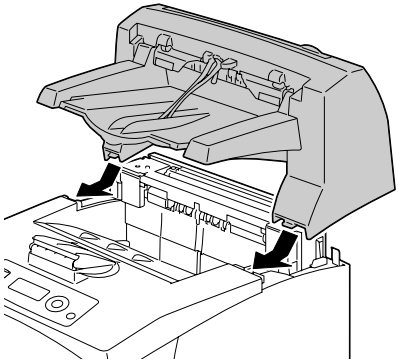

4 Tighten the two screws at both ends of the bottom of the offset tray.

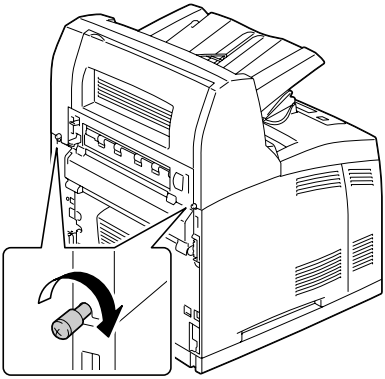

5 Draw the extension tray (1).

When printing a thick paper, you can flip the stopper as shown in the figure below (2).

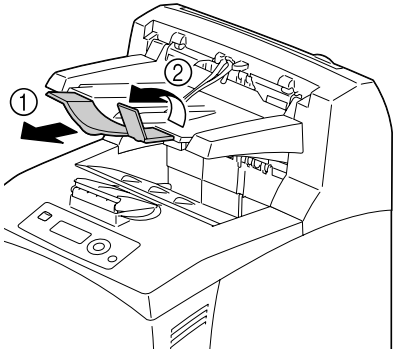

6 Reconnect all interface cables.

7 Reconnect the power cord, and turn on the printer.

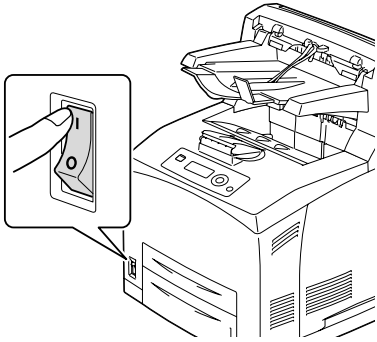

8 Declare Offset Tray in the Windows printer driver (Properties/Configure tab).

Appendix A

Technical Specifications

Printer

Type	Desktop A4 laser beam printer	
Print system	Semiconductor laser beam scanning system	
Exposure system	Laser diode and polygon mirror scanning	
Developing system	Electro photographic System (roller charging, single component magnetic toner development)	
Resolution	600 dpi × 600 dpi × 1 bit 1200 dpi × 1200 dpi × 1 bit	
First print output time	Simplex	9.4 seconds for A4/Letter plain paper
	Duplex	12.7 seconds for A4 plain paper 12.6 seconds for Letter plain paper
Print speed (unit: ppm (Page Per Minute))	Simplex	43 ppm for A4 plain paper 45.1 ppm for Letter plain paper
	Duplex	26.4 ppm for A4 plain paper 27.2 ppm for Letter plain paper

Media sizes	• Letter • Legal • Statement • Executive • A4 • A5 • A6 • B5 (JIS) • B6 • Folio • SP Folio • Foolscap • UK Quarto • Government Letter • Government Legal • 16K • Kai 16 • Kai 32 • Japanese Postcard • Japanese Postcard-D • B5 (ISO) • Envelope #10 • Envelope DL • Envelope C5 • Envelope C6 • Envelope Chou #3 • Envelope Monarch • Envelope Chou #4 • Envelope You #4 • Custom size Tray 1 Width: 76.2-215.9 (3.87 - 8.5 inch) Length: 127.0-900 (5.83 - 35.43 inch) Tray 2/3/4 Width: 98.4-215.9 (3.0 - 8.5 inch) Length: 148.0-355.6 (5.0 - 14.0 inch)

Paper/Media	• Plain paper 68-105 g/m^2 (18-28 lb bond) • Recycled 68-105 g/m^2 (18-28 lb bond) • Transparencies • Envelopes • Label • Thick 1 (106-159 g/m^2 / 28-42 lb bond) • Thick 2 (160-216 g/m^2 / 43-57 lb bond) • Thick 3 (106-216 g/m^2 / 28-57 lb bond) • Postcard • Thin paper (64-67 g/m^2 / 17- 18 lb bond)	
Paper supply	Tray 1	Plain/Recycled paper: 150 sheets Transparency: 100 sheets Envelope: 15 sheets Labels: 100 sheets Thick paper: 60 sheets Postcard: 55 sheets Thin paper: 150 sheets Banner paper: 1 sheet
	Tray 2/ 3/4	Plain/Recycled paper: 550 sheets Transparency: 100 sheets Envelope: 80 sheets Labels: 290 sheets Thick paper: 160 sheets Postcard: 200 sheets Thin paper: 550 sheets
Output tray capacity	Standard configuration	Main output tray: 500 sheets (Plain paper: 80 g/m^2 / 22 lb) Face up tray: 70 sheets (Plain paper: 80 g/m^2 / 22 lb)
	Optional offset tray installed	Sub output tray: 500 sheets (Plain paper: 80 g/m^2 / 22 lb)
Operating temperature	10 to 35°C (50 to 95°F)	
Operating humidity	15 to 85%	
Power supply	120 V, 50 to 60 Hz 220 to 240 V, 50 to 60 Hz	

Power consumption	110 V: 1240W or less 220 V: 1300W or less Energy saving mode: 120 V: 15W or less 230 V: 19W or less
Amperage	120 V: 12.5 A or less 220 - 240 V: 6 A or less
Acoustic Noise	Printing: 56.1 dB or less Standby: 28 dB or less
External dimensions (Standard configuration)	Height: 404.3 mm (15.9") Width: 421.8 mm (16.6") Depth: 465.4 mm (18.3")
Weight	Printer: approximately 21 kg (46.4. lb) (without comsumables) approximately 23 kg (50.8 lb) (with comsumables)
Interface	USB 2.0 (High Speed) compliant, 10Base-T/100Base-TX/1000Base-T Ethernet, Parallel, Host USB (USB device printing)
Standard memory	128 MB

Consumable Life Expectancy Chart

Item	Average Life Expectancy
Toner cartridge	**Standard in-box Cartridge**: About 6,000 sheets (Continuous) **Replacement Cartridge (High-Capacity):** About 17,000 sheets (Continuous)
Media feed roller	About 200,000 sheets (Continuous)
Transfer roller	
Fuser unit	

The values shown for the toner cartridge indicate the number of pages for simplex printing using A4/Letter-size media with 5% coverage. The actual life may differ (be shorter) depending on the printing conditions (coverage, paper size, etc.), differences in the printing method, such as continuous printing or intermittent printing (when print jobs of one page are often printed), or the type of paper used, for example, thick paper. In addition, the life will be affected by the temperature and humidity of the operating environment.

Our Concern for Environmental Protection

As an ENERGY STAR® Partner, we have determined that this machine meets the ENERGY STAR Guidelines for energy efficiency.

What is an ENERGY STAR product?

An ENERGY STAR product has a special feature that allows it to automatically switch to a “low-power mode” after a period of inactivity. An ENERGY STAR product uses energy more efficiently, saves you money on utility bills and helps protect the environment.

Index

A

Accessories
- CompactFlash 200
- DIMMs 192
- Hard disk Kit 196
- Lower feeder unit 208

Antistatic protection 191

C

CompactFlash 200
Configuration menu 30
- Feed roller 126
- Fuser unit 118
- Toner cartridge 116
- Transfer roller 124

Consumables
- Backup battery 132

Control panel 26

D

Dual in-line memory module 192
Duplexing 108

E

Electrostatic discharge 191
Envelopes 87
Error messages 182

F

Finishing 110

H

Hard disk Kit 196

I

Imageable area 92

L

Labels 88
Loading media 93
Lower feeder unit 208

M

Maintenance 138
Media
Clearing misfeeds 153
Imageable area 92
Loading 93
Path 152
Preventing misfeeds 151
Media misfeed
Duplex 158
Fuser Unit 160
Offset Tray 166
Paper Tray 155
Transfer roller 163
Media path 152
Media storage 112
Media type
Envelopes 87
Labels 88
Plain paper 85
Postcards 89
Thick stock 87
Thin paper 90
Transparencies 91
Memory Direct 80
Message window 28
Messages 181
Misfeed problems 169
Clearing 153
Media path 152
Preventing 151

O

Output tray 109

P

Plain paper 85
Postcards 89
Preventing media misfeeds 151
Print quality 176
Printer
Parts 4
Printer driver (Postscript, PCL) 16
Advanced tab 17
Basic tab 17
Cover page tab 18
Displaying 15
Layout tab 18
Other tab 20
Quality tab 19
Uninstalling 14
Watermark/Overlay tab 19

S

Service messages 188
Status monitor 22
Opening 22
Using 22

T

Thick stock 87
Thin paper 90
Transparencies 91
Troubleshooting 149