LG
Life's Good

OWNER'S MANUAL

Mini Hi-Fi System

Please read this manual carefully before operating your set and retain it for future reference.

MODEL
OJ45

MFL69981402

www.lg.com

Safety Information

CAUTION: TO REDUCE THE RISK OF ELECTRIC SHOCK DO NOT REMOVE COVER (OR BACK) NO USER-SERVICEABLE PARTS INSIDE REFER SERVICING TO QUALIFIED SERVICE PERSONNEL.

This lightning flash with arrowhead symbol within an equilateral triangle is intended to alert the user to the presence of uninsulated dangerous voltage within the product's enclosure that may be of sufficient magnitude to constitute a risk of electric shock to persons.

The exclamation point within an equilateral triangle is intended to alert the user to the presence of important operating and maintenance (servicing) instructions in the literature accompanying the product.

WARNING: TO PREVENT FIRE OR ELECTRIC SHOCK HAZARD, DO NOT EXPOSE THIS PRODUCT TO RAIN OR MOISTURE.

CAUTION: The apparatus should not be exposed to water (dripping or splashing) and no objects filled with liquids, such as vases, should be placed on the apparatus.

WARNING: Do not install this equipment in a confined space such as a book case or similar unit.

CAUTION: Do not use high voltage products around this product. (ex. Electrical swatter) This product may malfunction due to electrical shock.

CAUTION: This product employs a Laser System. To ensure proper use of this product, please read this owner's manual carefully and retain it for future reference. Shall the unit require maintenance, contact an authorized service center.
Use of controls, adjustments or the performance of procedures other than those specified herein may result in hazardous radiation exposure. To prevent direct exposure to laser beam, do not try to open the enclosure.

CAUTION: Do not block any ventilation openings. Install in accordance with the manufacturer's instructions.
Slots and openings in the cabinet are provided for ventilation and to ensure reliable operation of the product and to protect it from over heating. The openings shall be never be blocked by placing the product on a bed, sofa, rug or other similar surface. This product should not be placed in a built-in installation such as a bookcase or rack unless proper ventilation is provided or the manufacturer's instruction has been adhered to.

NOTICE: For safety marking information including product identification and supply ratings, please refer to the main label on the bottom or the other surface of the product.

CAUTION concerning the Power Cord

Check the specification page of this owner's manual to be certain of the current requirements.

Do not overload wall outlets. Overloaded wall outlets, loose or damaged wall outlets, extension cords, frayed power cords, or damaged or cracked wire insulation are dangerous. Any of these conditions could result in electric shock or fire. Periodically examine the cord of your device, and if its appearance indicates damage or deterioration, unplug it, discontinue use of the device, and have the cord replaced with an exact replacement part by an authorized service center. Protect the power cord from physical or mechanical abuse, such as being twisted, kinked, pinched, closed in a door, or walked upon. Pay particular attention to plugs, wall outlets, and the point where the cord exits the device.

The Power Plug is the disconnecting device. In case of an emergency, the Power Plug must remain readily accessible.

This device is equipped with a portable battery or accumulator.

Safety way to remove the battery or the battery from the equipment: Remove the old battery or battery pack, follow the steps in reverse order than the assembly. To prevent contamination of the environment and bring on possible threat to human and animal health, the old battery or the battery put it in the appropriate container at designated collection points. Do not dispose of batteries or battery together with other waste. It is recommended that you use local, free reimbursement systems batteries and accumulators. The battery shall not be exposed to excessive heat such as sunshine, fire or the like.

CAUTION: No naked flame sources, such as lighted candles, should be placed on the apparatus.

Symbols

~	Refers to alternating current(AC).
⎓	Refers to direct current(DC).
⧈	Refers to class II equipment.
⏻	Refers to stand-by.
I	Refers to "ON" (power).
ϟ	Refers to dangerous voltage.

Table of Contents

1 Getting Started

2 Safety Information
6 Unique Features
6 Playable file Requirement
6 – Music file requirement
7 – Compatible USB Devices
7 – USB device requirement
8 Remote control
10 Top panel
12 Front panel
12 Rear panel

2 Connecting

13 Optional Equipment Connection
13 – USB Connection

3 Operating

14 Basic Operations
14 – CD/USB Operations
14 – Auto Play
15 – Selecting a folder and an MP3/WMA file
16 Using BLUETOOTH® wireless technology
16 – Listening to music stored on the Bluetooth devices
19 Radio Operations
19 – Listening to the radio
19 – Improving poor FM reception
19 – Presetting the Radio Stations
19 – Deleting all the saved stations
20 Sound adjustment
20 – Setting the sound mode
21 Advanced Operations
21 – Programmed Playback
22 Other Operations
22 – Turn off the sound temporarily
22 – Displaying file information
22 – LIGHTING
22 – Auto power down
23 – AUTO POWER On
23 – Auto function change

4 Troubleshooting

24 Troubleshooting
24 – General

5 Appendix

25 General specifications
26 Trademarks and Licenses
27 Maintenance
27 – Notes on Discs
27 – Handling the Unit

Unique Features

BLUETOOTH®

Listens to music stored on your **Bluetooth** device.

Playable file Requirement

Music file requirement

MP3/WMA file compatibility with this unit is limited as follows.

- Sampling frequency : within 8 to 48 kHz (MP3), within 8 to 44.1 kHz (WMA)
- Bit rate : within 8 to 320 kbps (MP3), 8 to 192 kbps (WMA)
- Maximum files : Data CD : 999 / USB : 999
- Maximum folders : Data CD : 99 / USB : 99
- File extensions : ".mp3"/ ".wma"
- Certain MP3/WMA files may not be played depending on the type or format of the file.
- CD-ROM file format : ISO 9660/ JOLIET
- We recommend that you use Easy-CD Creator, which creates an ISO 9660 file system.

The DTS is not supported. In case of DTS audio format, audio is not output.

You have to set the disc format option to [Mastered] in order to make the discs compatible with the LG players when formatting rewritable discs. When setting the option to Live File System, you cannot use it on LG players.

(Mastered/Live File System : Disc format system for Windows Vista)

Compatible USB Devices

- MP3 Player : Flash type MP3 player.
- USB Flash Drive :
  Devices that support USB2.0 or USB1.1.
- The USB function of this unit does not support all USB devices.

USB device requirement

- Devices which require additional program installation when you have connected it to a computer, are not supported.
- Do not extract the USB device while in operation.
- For a large capacity USB, it may take longer than a few minute to be searched.
- To prevent data loss, back up all data.
- If you use a USB extension cable or USB hub, the USB device is not recognized.
- Using NTFS file system is not supported. (Only FAT(16/ 32) file system is supported.)
- This unit recognizes up to 999 files.
- External HDD, Card readers, Locked devices, or hard type USB devices are not supported.
- USB port of the unit cannot be connected to PC. The unit cannot be used as a storage device.
- Some USB may not work with this unit.

Remote control

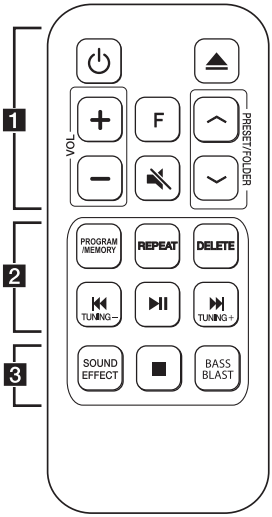

1

(Standby) **:** Turns the power on or off.

(Open/Close) **:** Opens and closes the disc tray.

VOL (Volume) **+/- :** Adjusts speaker volume.

F (Function) **:** Selects the function and input source.

Input source / Function	Display
Disc	CD
USB	USB
Bluetooth	BT
Radio	FM

(Mute)**:** Mutes the sound.

PRESET/FOLDER ∧/∨ :

- Chooses a preset number for a radio station. (Page 19)
- Searches for a folder of MP3/WMA files. When a CD/USB containing MP3/WMA files in several folders is being played, press **PRESET/FOLDER ∧/∨** on the remote control or **PRESET/FOLDER <**/**>** on the unit to select the folder you want to play.

Replacement of battery

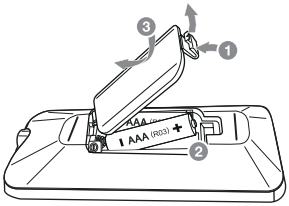

Remove the battery cover on the rear of the remote control, and insert the battery with ⊕ and ⊖ matched correctly.

2

PROGRAM/MEMORY :

- Stores radio stations. (Page 19)
- Creates a programmed list you want to listen to. (Page 21)

REPEAT : Listens to your tracks/files repeatedly or randomly.

DELETE :

- Deletes a song on the programmed list.
- Deletes all the saved stations.

TUNING-/+ : Selects the radio stations.

⏮/⏭ (Skip/Search) **:**

- Skips backward or forward.
- Searches for a section within a track/file.

⏯ (Play/Pause) **:**

- Starts or pauses playback.
- Selects stereo/mono.

3

SOUND EFFECT : Chooses sound impressions.

■ (Stop) **:** Stops playback.

BASS BLAST : Press to select BASS effect directly.

Top panel

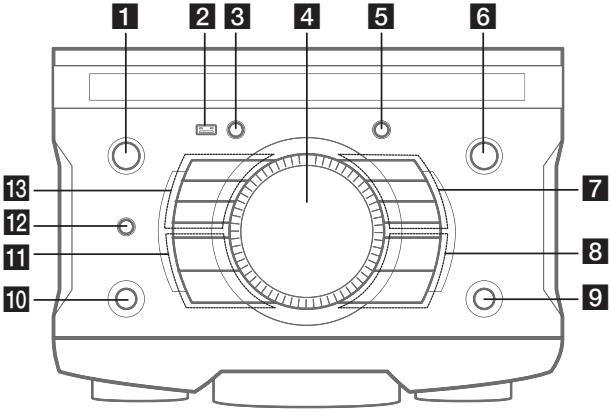

1 ⏻ (Standby)
Turns the power on or off.

2 USB Port
You can play sound files by connecting the USB device.

3 **PROGRAM/MEMORY**
- Stores radio stations. (Page 19)
- Creates a programmed list you want to listen to. (Page 21)

4 **MASTER VOLUME**
Adjust speaker volume.

5 **DELETE :**
- Deletes a song on the programmed list.
- Deletes all the saved stations.

6 **F** (Function)
Selects the function and input source.

Input source / Function	Display
Disc	CD
USB	USB
Bluetooth	BT
Radio	FM

7 **PRESET/FOLDER >**
- Chooses a preset number for a radio station. (Page 19)
- Searches for a folder of MP3/WMA files. When a CD/USB containing MP3/WMA files in several folders is being played, press **PRESET/FOLDER ∧/∨** on the remote control or **PRESET/FOLDER <**/**>** on the unit to select the folder you want to play.

SOUND EFFECT
Chooses sound impressions.

BASS BLAST
Press to select BASS effect directly.

8 >II (Play/Pause)
- Starts or pauses playback.
- Selects stereo/mono.

>>I (Skip/Search)
- Skips forward.
- Searches for a section within a track/file.
- Selects the radio stations.

9 ⏏ (Open/Close)
Opens and closes the disc tray.

10 LIGHTING
Turns on/off the lighting effects.

11 ☐ (Stop)
Stops playback

I<< (Skip/Search)
- Skips backward.
- Searches for a section within a track/file.
- Selects the radio stations.

12 ᛒ BLUETOOTH
Press to select **Bluetooth** function

13 PRESET/FOLDER <
- Chooses a preset number for a radio station. (Page 19)
- Searches for a folder of MP3/WMA files. When a CD/USB containing MP3/WMA files in several folders is being played, press **PRESET/FOLDER** ∧/∨ on the remote control or **PRESET/ FOLDER** <**/**> on the unit to select the folder you want to play.

INFO
- Sees information about your music. An MP3 file often come with ID3 tag. The tag gives the Title, Artist, Album or Time information.
- Sees **Bluetooth** device name of the unit in READY.
- Sees the name of connected all **Bluetooth** device in **Bluetooth** mode.

REPEAT
Listens to your tracks/files repeatedly or randomly.

Front panel

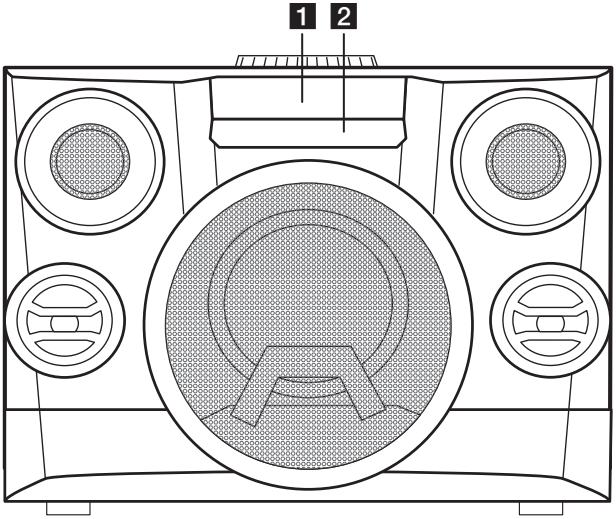

1 Display window

2 Disc tray

Rear panel

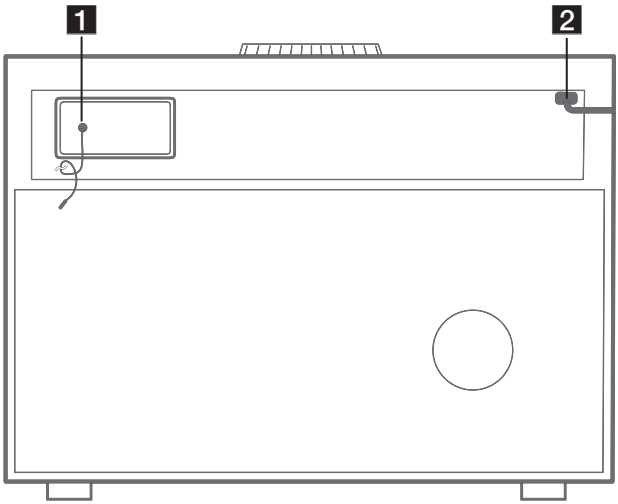

1 FM ANTENNA

2 POWER IN

Optional Equipment Connection

USB Connection

Connect a USB device (or MP3 player, etc.) to the USB ports on the unit.

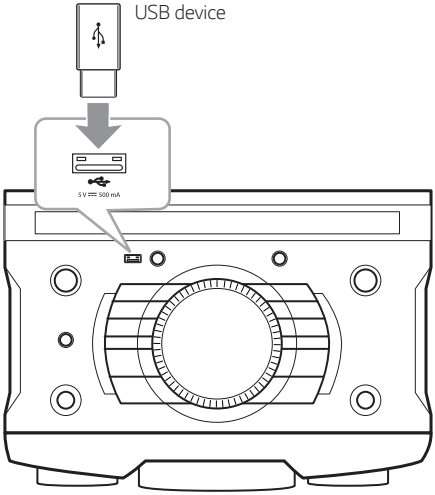

Note

Removing the USB device from the unit :

1. Choose a different function/mode or press ■ on the remote control or ☐ on the unit once.
2. Remove the USB device from the unit.

Basic Operations

CD/USB Operations

1. Insert the disc by pressing ⏏ on the remote control or ⏏ on the unit.
   Or connect the USB device to the USB port.
2. Select CD or USB function by pressing **F**.

To	Do this
Stop	Press ■ on the remote control or ☐ on the unit.
Playback	Press ▶II on the remote control or >II on the unit.
Pause	Press ▶II on the remote control or >II on the unit during playback.
Searching for a section within a track/file	Press and hold I◀◀/▶▶I on the remote control or I<<</>>I on the unit during playback and release it at the point you want to listen to.
Skipping to the next/previous track/file	- In stop status, Press I◀◀/▶▶I on the remote control or I<<</>>I on the unit to go to the next/previous track/file. - During playback, Press ▶▶I on the remote control or >>I on the unit to go to the next track/file. Playing less than 2 seconds, press I◀◀ on the remote control or I<< on the unit to go to the previous track/file. Playing after 3 seconds, press I◀◀ on the remote control or I<< on the unit to go to the beginning of the track/file.
Playing repeatedly or randomly	Press **REPEAT** repeatedly, the display will be changed in the following order. ONE → ALL → SHUFFLE → OFF

Note

- When you play programmed list, only ONE and ALL are available.
- If you leave the disc tray open for 5 minutes, it will close automatically.

Auto Play

- AUDIO/MP3/WMA CD is played automatically after disc tray is open and then closed.
- Automatically switches to the CD function if disc tray is open and then closed when there is no disc in disc tray.

Selecting a folder and an MP3/WMA file

On the unit

1. Press **PRESET/FOLDER <**/**>** repeatedly until a desired folder appears.
2. Press **>II** to play it. The first file of folder wil be played.

On the remote control

1. Press **PRESET/FOLDER Λ/V** repeatedly until a desired folder appears.
2. Press **►II** to play it. The first file of folder wil be played.

Note

- CD / USB Folders/Files are recognized as below.

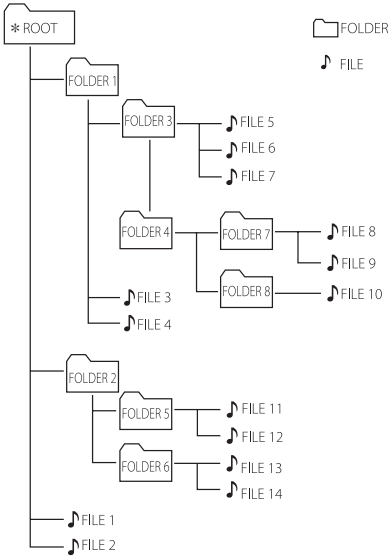

- If there is no file in a folder, the folder will not appear.
- Folders will be presented as the following order,
  ROOT → FOLDER 1 → FOLDER 3 → FOLDER 7 → FOLDER 8 → FOLDER 5 → FOLDER 6
- File will be played from ♪ file No.1 to ♪ file No.14 one by one.
- *ROOT : The first screen you can see when a computer recognize the CD/USB is "ROOT".
- Files and folders will be presented in order recorded and may be presented differently according to the record circumstances.

Using BLUETOOTH® wireless technology

About Bluetooth

Bluetooth is wireless communication technology for short range connection.

The sound may be interrupted when the connection interfered by the other electronic wave or you connect the **Bluetooth** in the other rooms.

Connecting individual devices under **Bluetooth** wireless technology does not incur any charges. A mobile phone with **Bluetooth** wireless technology can be operated via the Cascade if the connection was made via **Bluetooth** wireless technology.

- Available Devices : Smart phone, MP3, Notebook, etc.
- Version : 4.1
- Codec : SBC

Bluetooth Profiles

In order to use **Bluetooth** wireless technology, devices must be able to interpret certain profiles. This unit is compatible with following profile.

A2DP (Advanced Audio Distribution Profile)

Listening to music stored on the Bluetooth devices

Pairing your unit and Bluetooth device

Before you start the pairing procedure, make sure the **Bluetooth** feature is activated on your **Bluetooth** device. Refer to your **Bluetooth** device's user guide. Once a pairing operation is performed, it does not need to be performed again.

1. Turn on the unit.

Note

When Bluetooth connection lock is activated, you can search **Bluetooth** device in BT function.

2. Operate the **Bluetooth** device and perform the pairing operation. When searching for this unit with the **Bluetooth** device, a list of the devices found may appear in the **Bluetooth** device display depending on the type of **Bluetooth** device. Your unit appears as "LG OJ45(XX)".

Note

- XX means the last two digits of **Bluetooth** address. For example, if your unit has a **Bluetooth** address such as 9C:02:98:4A:F7:08, you will see "LG OJ45 (08)" on your **Bluetooth** device.
- Depending on the **Bluetooth** device type, some devices may have a different pairing process. Enter the PIN code (0000) as needed.
- You can connect this unit with up to 2 Android phones simultaneously using the same method as described above, only in the **Bluetooth** function.
- The multi pairing connection is only supported on Android phones. (Multi pairing connection may not be supported depending on the connected device specifications.)
- During multi pairing connection, phones are muted.

3. When this unit is successfully connected with your **Bluetooth** device, "PAIRED" appears on the display window and change to **Bluetooth** device name soon. Then "BT" will appear on the display window.

Note

- "PAIRED" will momentarily appear on the display when you connect other devices for multi pairing.
- If the device name is unavailable, "_" will be displayed.

4. Listen to music.
   To play a music stored on your **Bluetooth** device, refer to your **Bluetooth** device's user guide.

Note

- When using **Bluetooth** technology, you have to make a connection between the unit and the **Bluetooth** device as close as possible and keep the distance.
  However, it may not work well in certain situations as described below :
  - There is an obstacle between the unit and the **Bluetooth** device.
  - There is a device using same frequency with **Bluetooth** technology such as a medical equipment, a microwave or a wireless LAN device.
- You should connect your **Bluetooth** device to this unit again when you restart it.
- Even if this unit connected up to 2 **Bluetooth** devices in the **Bluetooth** mode, you can play and control music by using only one of the connected devices.

Bluetooth connection lock (BT LOCK)

You can limit **Bluetooth** connection to only BT (**Bluetooth**) function to prevent unintended **Bluetooth** connection.

To turn on this function, press and hold ▶II on the remote control or >II on the unit for about 5 seconds in BT (**Bluetooth**) function.
"BT LOCK" appears then you can limit **Bluetooth** connection.

To turn off this function, press and hold ▶II on the remote control or >II on the unit for about 5 seconds in BT (**Bluetooth**) function.
"BT UNLOCK" appears.

Note

- The sound may be interrupted when the connection has interference from other electronic devices.
- Depending on the type of the device, you may not be able to use the **Bluetooth** function.
- You can enjoy wireless system using phone, MP3, Notebook, etc.
- The more distance between the unit and the **Bluetooth** device, the lower the sound quality becomes.
- **Bluetooth** connection will be disconnected when the unit is turned off or the **Bluetooth** device gets far from the unit.
- When **Bluetooth** connection is disconnected, connect the **Bluetooth** device to the unit again.
- When a **Bluetooth** device is not connected, "READY" appears on the display window.
- When you use the **Bluetooth** function, adjust the volume to a proper level on the **Bluetooth** device.
- When entering **Bluetooth** function, this unit automatically connect to **Bluetooth** device which is connected the last. (Auto connection may not be supported depending on the connected device specifications.)

Radio Operations

Be sure that FM aerial is connected.

Listening to the radio

1. Press **F** until FM appears in the display window. The last received station is tuned in.
2. Auto tuning :
   Press and hold **TUNING-/+** on the remote control or **I<</>>I** on the unit for about two seconds until the frequency indication starts to change, then release. Scanning stops when the unit tunes in a station.

   Or

   Manual tuning :
   Press **TUNING-/+** on the remote control or **I<</>>I** on the unit repeatedly.
3. Adjust the volume by pressing **VOL +/-** on the remote control or by rotating volume knob on the unit repeatedly.

Improving poor FM reception

Press **►II** on the remote control or **>II** on the unit. This will change the tuner from stereo to mono and usually improve the reception.

Presetting the Radio Stations

You can preset 50 stations for FM.

Before tuning, make sure to turn down the volume.

1. Press **F** until FM appears in the display window.
2. Select the desired frequency by pressing **TUNING -/+** on the remote control or **I<</>>I** on the unit.
3. Press **PROGRAM/MEMORY**. A preset number will blink in the display window.
4. Press **PRESET/FOLDER Λ/V** on the remote control or **PRESET/FOLDER <>** on the unit to select the preset number you want.
5. Press **PROGRAM/MEMORY**. The station is stored.
6. Repeat steps 2 to 5 to store other stations.
7. To listen a preset station, press **PRESET/FOLDER Λ/V** on the remote control or **PRESET/FOLDER <>** on the unit.

Deleting all the saved stations

1. Press and hold **DELETE** for three seconds. "DEL ALL" will flash up on the unit display.
2. Press **DELETE** to erase all the saved radio stations
   "DELETED ALL" will flash up on the unit display.

Sound adjustment

Setting the sound mode

This system has a number of pre-set surround sound fields. The displayed items for the equalizer may be different depending on sound sources and effects.

You can select a desired sound mode by using **SOUND EFFECT**.

On Display	Description
POP CLASSIC ROCK JAZZ	This program lends an enthusiastic atmosphere to the sound, giving you the feeling you are at an actual rock, pop, jazz or classic concert.
BASS (BASS BLAST)	Reinforces the treble, bass and surround sound effect.
STANDARD	You can enjoy optimized sound.

Note

You can directly select BASS (BASS BLAST) effect by pressing **BASS BLAST.**

Advanced Operations

Programmed Playback

The program function enables you to store your favorite files from any disc or USB device.

A program can contain 20 tracks/files.

Making Programmed list

1. Press **PROGRAM/MEMORY** in stop status.
2. Press **⏮/⏭** on the remote control or **|≪/≫|** on the unit to select a track/file.
3. Press **PROGRAM/MEMORY** to save and select a next track/file.
4. Repeat steps 2 - 3 to store other tracks/files.

To play the programmed list, Press **▶II** on the remote control or **>II** on the unit after you make the list.

Note

When making or modifying the programmed list, REPEAT mode is off.

Editing Programmed list

1. Press **PROGRAM/MEMORY** in stop status.
2. Press **PROGRAM/MEMORY**. Or **PRESET/FOLDER Λ/V** on the remote control or **PRESET/FOLDER <\/>** on the unit to edit.
3. Press **⏮/⏭** on the remote control or **|≪/≫|** on the unit.
4. Press **PROGRAM/MEMORY** once again.
5. Repeat steps 2 - 4 to store other tracks/files.

To play the programmed list, Press **▶II** on the remote control or **>II** on the unit after you make the list.

Deleting Programmed list

Deleting function only works in the edit mode.

1. Press **PROGRAM/MEMORY** in stop status.
2. Select a song by pressing **PROGRAM/MEMORY** repeatedly. Or **PRESET/FOLDER Λ/V** on the remote control or **PRESET/FOLDER <\/>** on the unit repeatedly.
3. Press **DELETE** while a song is selected.

Note

- Programmed list is cleared in the case below.
  - Removing the disc or the USB device.
  - Unplugging the power cord.
  - Changing to a different function.
  - Turning off and on the unit.

Other Operations

Turn off the sound temporarily

Press 🔇 on the remote control to mute your sound.

You can mute your unit, for example, to answer the telephone, the "🔇X" will appear in the display window.

To cancel it, press 🔇 on the remote control again or change the volume level.

Displaying file information (ID3 TAG)

While playing an MP3 file containing file information, you can display the information by pressing **INFO** on the unit.

LIGHTING

This function offers a party atmosphere by operating the lighting on the unit.

Press **LIGHTING** on the unit.

VOLCANO → POLICE → THUNDER → PSYCHE → CHAOS → OFF

Note

- Lighting function is available in all functions.
- Lighting mode retains its previous mode when you first press **LIGHTING** on the unit, press again to change modes.

Auto power down

This unit will turn itself off to save electricity in the case were the main unit is not connected to an external device and is not used for 15 minutes.

AUTO POWER On

This unit automatically turns on by an input source : **Bluetooth**

If you try to connect your **Bluetooth** device, this unit turns on and connects your **Bluetooth** device. You can play your music.

Note

- Depending on the connected device, this function may not operate.
- Depending on the connected device, the unit turns on but **Bluetooth** function may not be connected.
- If you disconnect **Bluetooth** connection by this unit, some **Bluetooth** devices try to connect to the unit continually. Therefore it is recommended to disconnect the connection before turning off the unit.
- If you have already paired with this unit, automatically this unit can turn on by an input source when this unit is turned off.
- If you turn off the unit by pressing the power button for more than 5 seconds, Auto Power On function is disabled. To activate it, turn on the unit.

Auto function change

This unit recognizes input signals such as **Bluetooth**, and then changes suitable function automatically.

When you try to connect Bluetooth device

When you try to connect your **Bluetooth** device to this unit, **Bluetooth** function is selected. Play your music on the **Bluetooth** device.

Note

- This function only works with devices that were previously connected.
- If the **Bluetooth** connection lock function is set, **Bluetooth** connection will be only available on **Bluetooth** function.

Troubleshooting

General

Problem	Cause & Solution
The unit does not work properly.	• Turn off and on the unit. • Disconnect the power cord of this unit and then try connecting again. • Previous setting may not be saved when device power is shut off.
No Power.	• The power cord is not plugged in. Plug in the power cord. • Check whether electricity failed. Check the condition by operating other electronic devices.
No sound.	• Check whether you select right function. Press function button and check the selected function.
The unit does not start playback.	• An unplayable disc is inserted. Check the playable disc. • No disc is inserted. Insert a disc. • The disc is dirty. Clean the disc. (Page 27) • The disc is inserted upside down. Place the disc with the label or printed side facing upwards.
Radio stations cannot be tuned in properly.	• The signal strength of the radio station is too weak. Tune to the station manually. • No stations have been preset or preset stations have been cleared (when tuning by scanning preset channels). Preset some radio stations, see page 19 for details.
The remote control does not work properly.	• The remote control is too far from the unit. Operate the remote control within about 7 m (23 feet). • There is an obstacle in the path of the remote control and the unit. Remove the obstacle. • The batteries in the remote control are exhausted. Replace the batteries with new ones.
No speaker light.	• Check the light effects by pressing **LIGHTING.**

General specifications

General	
Power requirements	Refer to the main label on the unit.
Power consumption	Refer to the main label on the unit.
Dimensions (W x H x D)	Approx. 464.6 mm x 332.2 mm x 357 mm (18.3 inch x 13 inch x 14 inch) With foot
Operating temperature	5 °C to 35 °C (41 °F to 95 °F)
Operating humidity	60 %

Tuner	
FM Tuning Range	87.5 to 108.0 MHz or 87.50 to 108.00 MHz

System	
Frequency Response	40 to 20,000 Hz
Signal-to-noise ratio	More than 75 dB
Dynamic range	More than 75 dB
Bus Power Supply (USB)	5 V ⎓ 500 mA

Amplifier (RMS Output power)	
Total output	120 W RMS
Front	25 W RMS × 2 (4 Ω at 4 KHz, 10 % THD)
Subwoofer	70 W RMS × 1 (4 Ω at 100 Hz, 10 % THD)

- Design and specifications are subject to change without notice.

Trademarks and Licenses

The **Bluetooth®** word mark and logos are registered trademarks owned by the Bluetooth SIG, Inc. and any use of such marks by LG Electronics is under license. Other trademarks and trade names are those of their respective owners.

Maintenance

Notes on Discs

Handling Discs

Never stick paper or tape on the disc.

Storing Discs

After playing, store the disc in its case. Do not expose the disc to direct sunlight or sources of heat and never leave it in a parked car exposed to direct sunlight.

Cleaning Discs

Fingerprints and dust on the disc can cause poor picture quality and sound distortion. Before playing, clean the disc with a clean cloth. Wipe the disc from the center to out.

Do not use strong solvents such as alcohol, benzine, thinner, commercially available cleaners, or anti-static spray intended for old vinyl records.

Handling the Unit

When shipping the unit

Please save the original shipping carton and packing materials. If you need to ship the unit, for maximum protection, re-pack the unit as it was originally packed at the factory.

Keeping the exterior surfaces clean

Do not use volatile liquids such as insecticide spray near the unit. Wiping with strong pressure may damage the surface. Do not leave rubber or plastic products in contact with the unit for a long period of time.

Cleaning the unit

To clean the player, use a soft, dry cloth. If the surfaces are extremely dirty, use a soft cloth lightly moistened with a mild detergent solution. Do not use strong solvents such as alcohol, benzine, or thinner, as these might damage the surface of the unit.

Maintaining the Unit

The unit is a high-tech, precision device. If the optical pick-up lens and disc drive parts are dirty or worn, the picture quality could be diminished. For details, please contact your nearest authorized service center.

LG

Life's Good