Landis+Gyr Gridstream RF Series IV Mesh Extender Installation and User Guide

Publication: 98-1178 Rev AA

Limitation on Warranties and Liability

Information in this document is subject to change without notice. This manual or any part of it thereof may not be reproduced in any form unless permitted by contract or by written permission of Landis+Gyr.

In no event will Landis+Gyr be liable for any incidental, indirect, special, or consequential damages (including lost profits) arising out of or relating to this publication or the information contained in it, even if Landis+Gyr has been advised, knew, or should have known of the possibility of such damages.

Landis+Gyr Gridstream RF Series IV Mesh Extender Installation and User Guide			
Publication: 98-1178 Rev AA			
Revision History			
Modification Date	**Revision**	**Description**	**Author**
5/14/2012	AA	Work in progress	Kim Utesch
Landis+Gyr 6436 County Road 11 Pequot Lakes, MN 56472 Website: www.landisgyr.com E-mail: solutionsupport.na@landisgyr.com Technical Support: 1-888-390-5733			

Table of Contents

1

Introduction and Overview

Overview

The Landis+Gyr Gridstream RF Series IV Mesh Extender is a 600mW radio transceiver operating in the 902-928 MHz unlicensed ISM band in conjunction with other Landis+Gyr Gridstream RF radios. It is designed to extend the range of the network in rural environments, where the distance between neighboring endpoints is too great for them to communicate reliably.

Figure 1 - 1. Landis+Gyr Gridstream RF Series IV Mesh Extender

FCC and Industry Canada Compliance

FCC Class B

This device complies with Part 15 of the FCC rules. Operation is subject to the following two conditions:

1. This device may not cause harmful interference, and
2. This device must accept any interference received, including interference that may cause undesired operation.

This equipment has been tested and found to comply with the limits for a Class B digital device, pursuant to Part 15 of the FCC Rules. These limits are designed to provide reasonable protection against harmful interference in a residential installation. This equipment generates, uses, and can radiate radio frequency energy and, if not installed and used in accordance with the Instructions, may cause harmful interference to radio communications. However, there is no guarantee that interference will not occur in a particular installation. If this equipment does cause harmful interference to radio or television reception, which can be determined by turning the equipment off and on, the user is encouraged to try to correct the interference by one or more of the following measures:

- Reorient or relocate the receiving antenna.
- Increase the separation between the equipment and receiver.
- Consult Landis+Gyr or an experienced radio technician for help

WARNING: Changes or modifications to this device not expressly approved by Landis+Gyr could void the user's authority to operate the equipment.

RF Exposure

This equipment complies with FCC radiation exposure limits set forth for an uncontrolled environment. This equipment should be installed and operated with minimum distance 22cm between the radiator and your body. This transmitter must not be co-located or operating in conjunction with any other antenna or transmitter.

Industry Canada

This device complies with Industry Canada licence-exempt RSS standard(s). Operation is subject to the following two conditions: (1) this device may not cause interference, and (2) this device must accept any interference, including interference that may cause undesired operation of the device.

Under Industry Canada regulations, this radio transmitter may only operate using an antenna of a type and maximum (or lesser) gain approved for the transmitter by Industry Canada. To reduce potential radio interference to other users, the antenna type and its gain should be so chosen that the equivalent isotropically radiated power (e.i.r.p.) is not more than that necessary for successful communication.

This radio transmitter 5294A-NG6R2S4 has been approved by Industry Canada to operate with the antenna types listed below with the maximum permissible gain and required antenna impedance for each antenna type indicated. Antenna types not included in this list, having a gain greater than the maximum gain indicated for that type, are strictly prohibited for use with this device.

Approved Antenna: Landis+Gyr 106119-000: Antenna, Whip, 5 dBi Gain,

Le présent appareil est conforme aux CNR d'Industrie Canada applicables aux appareils radio exempts de licence. L'exploitation est autorisée aux deux conditions suivantes : (1) l'appareil ne doit pas produire de brouillage, et (2) l'utilisateur de l'appareil doit accepter tout brouillage radioélectrique subi, même si le brouillage est susceptible d'en compromettre le fonctionnement.

Conformément à la réglementation d'Industrie Canada, le présent émetteur radio peut fonctionner avec une antenne d'un type et d'un gain maximal (ou inférieur) approuvé pour l'émetteur par Industrie Canada. Dans le but de réduire les risques de brouillage radioélectrique à l'intention des autres utilis-

ateurs, il faut choisir le type d'antenne et son gain de sorte que la puissance isotrope rayonnée équivalente (p.i.r.e.) ne dépasse pas l'intensité nécessaire à l'établissement d'une communication satisfaisante.

Le présent émetteur radio (5294A-NG6R2S4) a été approuvé par Industrie Canada pour fonctionner avec les types d'antenne énumérés ci-dessous et ayant un gain admissible maximal et l'impédance requise pour chaque type d'antenne. Les types d'antenne non inclus dans cette liste, ou dont le gain est supérieur au gain maximal indiqué, sont strictement interdits pour l'exploitation de l'émetteur.

Référence: 106119-000: Antenne fouet, 5dBi, 915MHz, N Con., 50 ohms

Standards Compliance

The Gridstream RF Series IV Mesh Extender contains Smart Utility Network (SUN) 802.15.4g ready hardware.

2
Installation

For All Installations

Proper planning and thorough preparation are critical to successful installation of the Landis+Gyr Gridstream RF Series IV Mesh Extender (Extender).

Safety Overview

Prior to starting the installation process, you must develop and launch an installer safety training plan for initial, refresher and ongoing safety training. Ensure that installers receive appropriate initial and refresher training to meet their specific safety-related responsibilities. You must provide safety training when:

- An existing installer assumes new duties for which he or she has not previously received training.
- New processes and methodologies representing new risks are introduced into the installation environment.
- Previously unidentified risks are reported

The installation supervisory team assumes responsibility for ensuring that installers are properly trained, authorized, and continually qualified to perform their work. The team must also take responsibility for the safety of their installers and to assure safe work methodologies. Installers must understand that their supervisor's responsibility does not relieve them from their individual responsibility to perform the work safely and to follow all safety rules and procedures applicable to their work

Safety Precautions

Each individual utility will have its own interpretation of local codes and regulations governing the installation and placement of equipment on a power distribution pole. The utility or municipality determines the final guidelines of where to install the . Know and follow the utility or municipality guidelines before installing the Extender.

WARNING: Follow all local safety precautions for working around high voltage lines.

CAUTION: Follow all FCC regulations for placement of the Extender on the pole.

Extender Installation Overview

The final guidelines provided by the utility or municipality determine where the Extender can be installed. It is the installer's responsibility to know and follow the utility or municipality guidelines before installing the Extender.

The utility provides installation information for every Extender to be installed, such as:

- Street address or Latitude/Longitude of site location.
- Type of mounting (wood pole, streetlight pole, building, etc.)
- Access method (bucket truck or climbed manually).

Power Requirements

Verify that the power source between 120 VAC and 240 VAC. Power source must have a constant supply of voltage.

NOTE: Poles selected for Extender installation must have a constant supply of voltage. Many streetlights are fed by a switched source that is controlled by a master switch, elsewhere. A pole that is powered only half a day, everyday will produce a failure condition.

Antenna

The Extender requires an antenna to communicate with the endpoints and to relay information from the endpoint to the host application. The antenna is mounted directly to the top of the Extender enclosure by means of an N-type connector. Only the authorized antenna (provided with the Extender) may be used. The Extender may be orientated with the antenna either up or down to obtain the best communication path for your location.

NOTE: If the Extender is mounted upside down (antenna up), always inspect and verify the presence of an O-ring on the antenna base. The O-ring is included with the antenna. Verify that the O-ring has no physical deformities that could compromise the water tight seal at the base of the antenna.

Parts and Materials

When receiving system components, carefully inspect the packaging and contents for any damage, and file any necessary damage claims with the shipper. The table below lists all Extender-related installation parts. (However, not all parts shown will necessarily be needed in every installation.)

Table 2-1. Extender Installation Components

Description	Part Number	Qty
Series IV Mesh Extender, Packaging, 10' AC Power Cable	45-1215	1

Table 2-1. Extender Installation Components

Description		Part Number	Qty
45-1215 Components	Antenna-Whip	106119-000	1
	Cable Assembly, AC Power, UME, 10', #10AWG Solid	19-1196	1
	Series IV Mesh Extender	26-1903	1
Series IV Mesh Extender, Packaging, Without Power Cable		45-1216	1
45-1216 Components	Antenna-Whip	106119-000	1
	Series IV Mesh Extender	26-1903	1
Landis+Gyr RF Mesh Extender Mounting Kit, Street Light Arm		45-1098	1
45-1098 Components	Nut, Serrated Hex Flange Lock Nut, 1/4-20UNC, SS	101983-025	2
	Washer, 1/4” Flat 1/16 Thick, SS	22-0421	2
	Washer, Spring Lock, ID .26", SS	22-1147	2
	Washer, ID .266", OD .563" X .056", SS	22-1151	2
	Bolt, Hex Head, 1/4-20 x 3/4”, SS	22-1160	2
	Bracket, Mounting, Wood Pole ***(Optional: Sold Separately)***	22-1299	0
	Bracket, Streetlight Pole Mount	28-1312	1
	V-Bolt, ¼-20”, Pole Mount, 1.5” to 4” Pipe Diameter	28-1313	1
	Cable Tie, 5.6 inch Length, UV, Nylon, Black	30-0055	2
Landis+Gyr RF Mesh Extender Hardware Kit		45-1093	1
45-1093 Components	Conn, Ground Barrel Lug,1 /4inch	16-1306	1
	Screw, 1/4-20 X 3/4", Phillips, Pan Head, SS	22-1146	3
	Washer, Spring Lock, ID.26", SS	22-1147	2
	Screw, 10-32 X 3/8", Phillips, Pan Head, Self Tapping, SS	22-1148	1
	Washer, ID .266", OD .563" X .056", SS	22-1151	2
	Mounting Bracket	28-1287	1
	Cable Tie, 5.6 inch Length, UV, Nylon, Black	30-0055	2
Landis+Gyr RF Mesh Extender Antenna, Whip, 5 dBi 915 MHz, N Type		106119-000	1
Landis+Gyr RF Mesh Extender AC Power Cable Assembly, 30’		19-1221	1
Landis+Gyr RF Mesh Extender Streetlight Cable Assembly, 6’		19-1216	1
Landis+Gyr RF Mesh Extender Streetlight Cable Assembly, 18’		19-1214	1

NOTE: 45-1216 does not come with a power cable. Your choice of optional cable assemblies available are 19-1214, 19-1216, or 19-1221.

Attach Extender to Standard Mounting Bracket

1. Install the Extender to the mounting bracket in the orientation as shown in Figure 2 - 1:
   - Insert screw (A), with a spring washer (B) and a flat washer (C) in the center hole of each side of the Extender and align to the pem nuts in the mounting bracket (D).

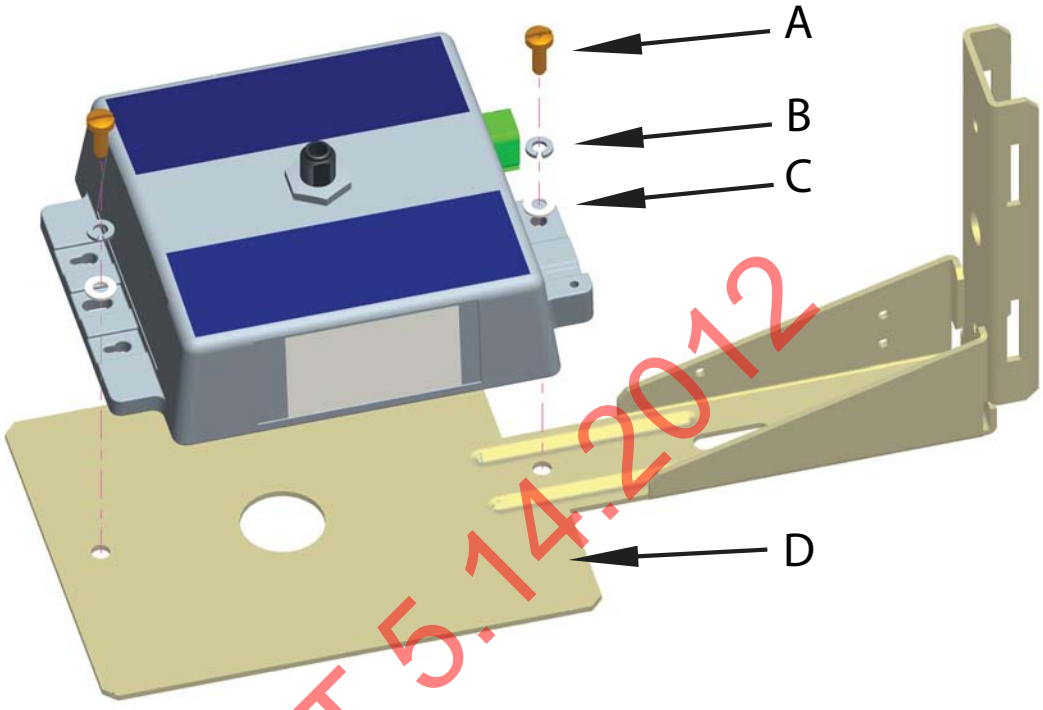

Figure 2 - 1. Attach Extender to the Mounting Bracket

2. Insert the plug of the AC cable (E) into the AC socket (F).

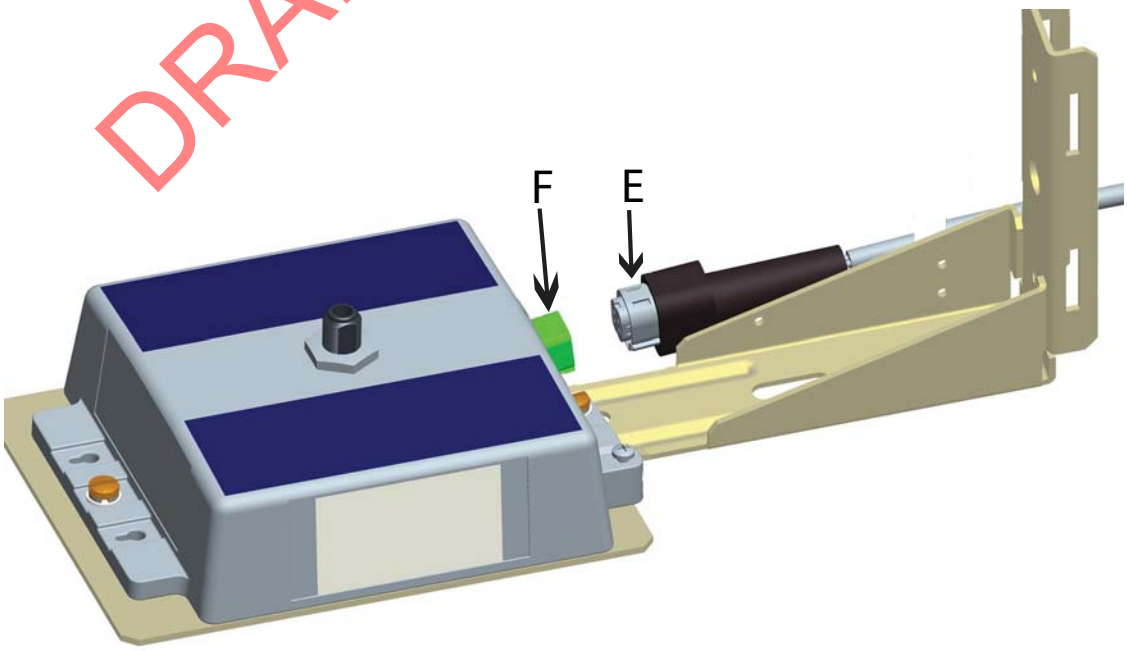

Figure 2 - 2. Attach AC Cable

NOTE: Be sure to push the plug all the way in and feel a click to lock the AC cable.

3. Insert and tighten two UV stable tie wraps (G) to attach the AC cable, while making sure the cable is straight and not twisted up or down relative to its mating connector.

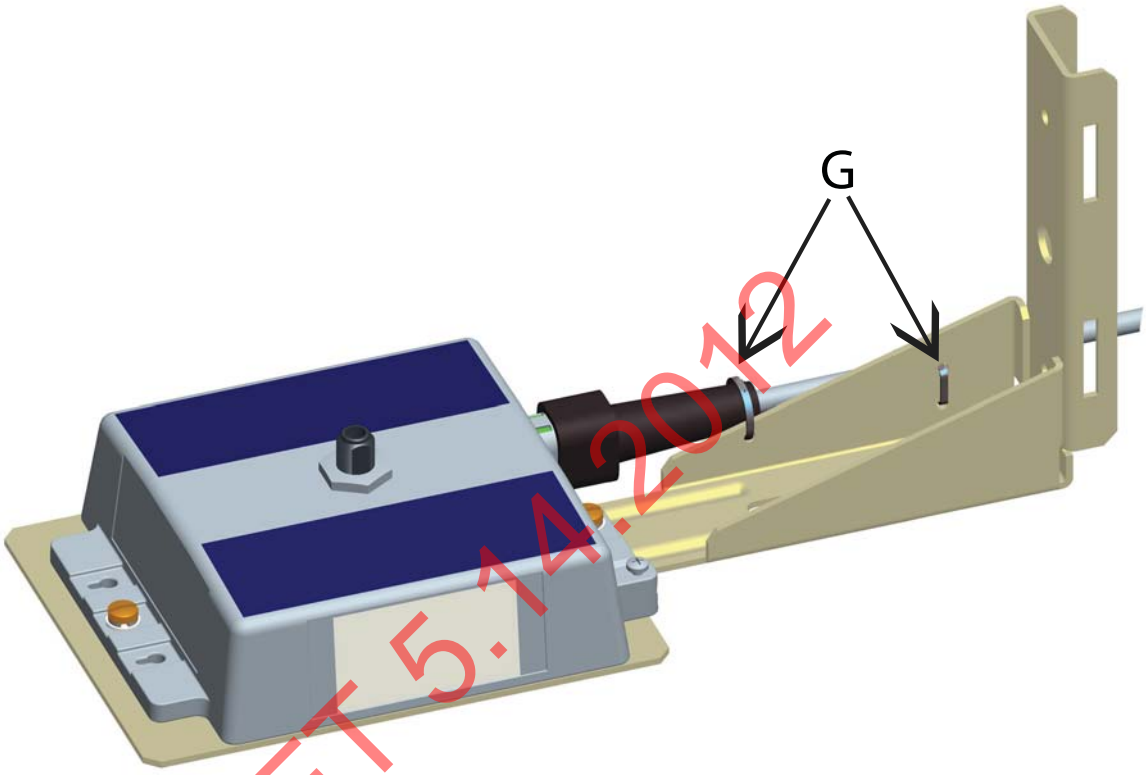

Figure 2 - 3. Tighten Cable Ties

Grounding (Optional)

If a ground wire is required for your installation, a 6 AWG solid copper wire is recommended.

1. Install a 6 AWG solid copper wire ground connector (A) by tightening the screw (B).
2. Insert the grounding wire (C) through the ground connector and into the small hole in the enclosure (D).
3. Insert and tighten the screw (E) to fix the wire as shown.
4. Tighten the set screw (F) on the ground connector.

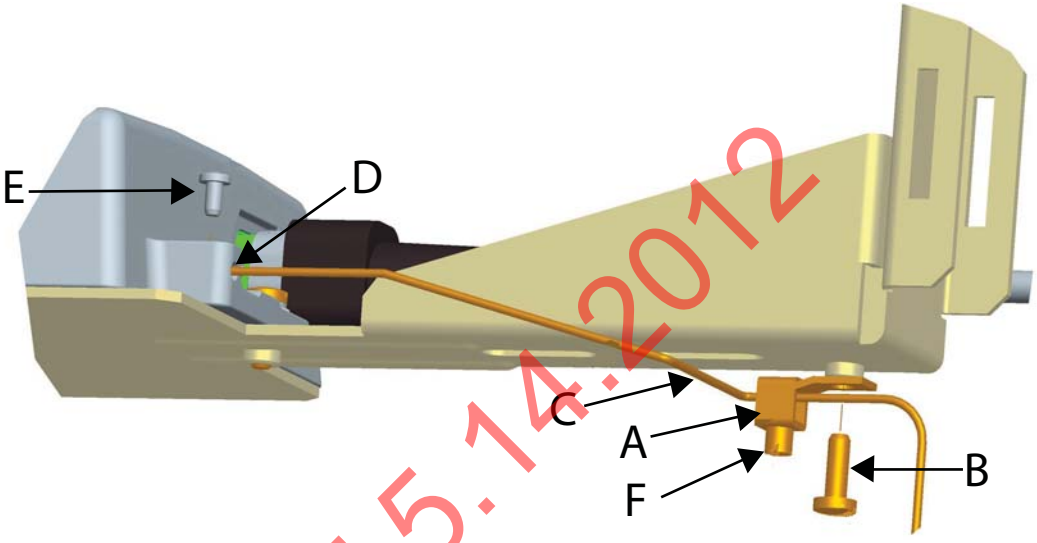

Figure 2 - 4. Install Ground Connector

Wood Pole Mount Installation

Required Tools

- Installation sheet
- Extender & applicable installation kit
- Extender power cable
- Extender antenna
- Optinal 6 AWG solid copper ground wire
- Personal protection equipment
- Power disconnect box
- Power drill with level, 3/4 inch augur bit
- Adjustable-end wrenches
- Standard socket wrench set
- Wire strippers
- Screwdrivers

- Volt meter
- 5/8” DA bolt with two nuts and washers
- Miscellaneous hardware as required for installation and grounding

Wood Pole Installation Procedure

The following procedure details Extender installation on a standard wood utility pole. Ensure that required tools and materials are on hand and available.

1. Mount the Extender and grounding components, if required, to the mounting bracket with the hardware provided.
2. Drill one, 3/4-inch diameter hole in the utility pole. The hole must be centered side-to-side on the pole. Hole must be straight and level through the middle of pole.
3. Hold the Extender and mounting bracket in place and insert 5/8-inch DA bolt through the center mounting bracket hole. Place washers and nuts on both side of the pole.

Figure 2 - 5. Attach Mounting Bracket to Wood Pole

NOTE: The Extender may be mounted with either an Up or Down antenna orientation to obtain the best communication path for your location.

4. Tighten the bolt on side of pole opposite the Extender firmly.

NOTE: 1/4” lag bolts may be used on the top and bottom holes of the mounting bracket for extra stability.

5. Mount the optional power disconnect box on the pole according to local codes and best practices.

6. Attach the wires from the Extender to the screws on the terminal blocks inside the power disconnect box. Provide enough tension relief and a drip loop on the power cable below the power disconnnect box.

Figure 2 - 6. Sample Power Disconnect Option

- For any cables in an assembly, allow some slack to rest below metal parts. The slack is called a “drip loop”. With a drip loop, water from rain and condensation drips from the cable without damaging associated mechanical equipment.

7. With the power disconnect switch in the **OFF** (open) position, make the connection between the Extender, power disconnect switch, and power source according to local codes and best practices.

- Installations where the power cable is wired directly to the power source must be sealed with waterproofing compound to prevent water ingress into the power cable.

8. Securely hand tighten the included antenna on the antenna mounting connector of the Extender.

- If the Extender is mounted upside down (antenna up), always inspect and verify the presence of an O-ring on the antenna base. The O-ring is included with the antenna. Verify that the O-ring has no physical deformities that could compromise the water tight seal at the base of the antenna.
- The antenna should never be more than 10° off in any direction from being perpendicular to the ground.

Figure 2 - 7. Attach Antenna

9. Connect the grounding wire, if required, to the pole ground or neutral ground as local code allows. If no ground wire is present, install a 8’ by 5/8” copper clad steel ground rod and connect with the proper clamp. Attach the ground wire to the pole with the proper staples and standard spacing.

A. Be sure to avoid right angle or sharp bends in routing the ground wire.

B. Bond this ground wire to the power neutral if local rules require.

10. Secure power cable to pole as needed.

NOTE: While securing the power cable to the pole, care must be taken to NOT DAMAGE the outer jacket of the power cable. A nick in the outer jacket will allow water to migrate inside the power disconnect switch and flood it.

Provide enough tension relief and a drip loop for the power cable.

11. Energize the Extender by moving the power disconnect to the ON (closed) position in the installed power disconnect box.

Metal Pole Mount Installation

Required Tools

- Installation sheet
- Extender & applicable installation kit
- Extender power cable
- Extender antenna
- UV stable tie wraps
- 6 AWG solid copper ground wire (optional)
- Personal protection equipment
- Power disconnect box
- Adjustable-end wrenches
- Standard socket wrench set
- Wire strippers
- Steel bands
- Steel banding tool
- Screwdrivers
- 6 AWG solid copper wire ground connector (optional)
- Miscellaneous hardware as required for installation and grounding

Metal Pole Installation Procedure

The following procedure details Extender installation on a standard metal utility pole. Ensure that required tools and materials are on hand and available.

1. Mount the Extender and grounding components, if required, to the mounting bracket with the hardware provided.
2. Install two stainless steel pole mount band clamps (A) through the slots on the back of the mounting bracket (B) and secure around pole. The Extender should be straight and level on the pole.

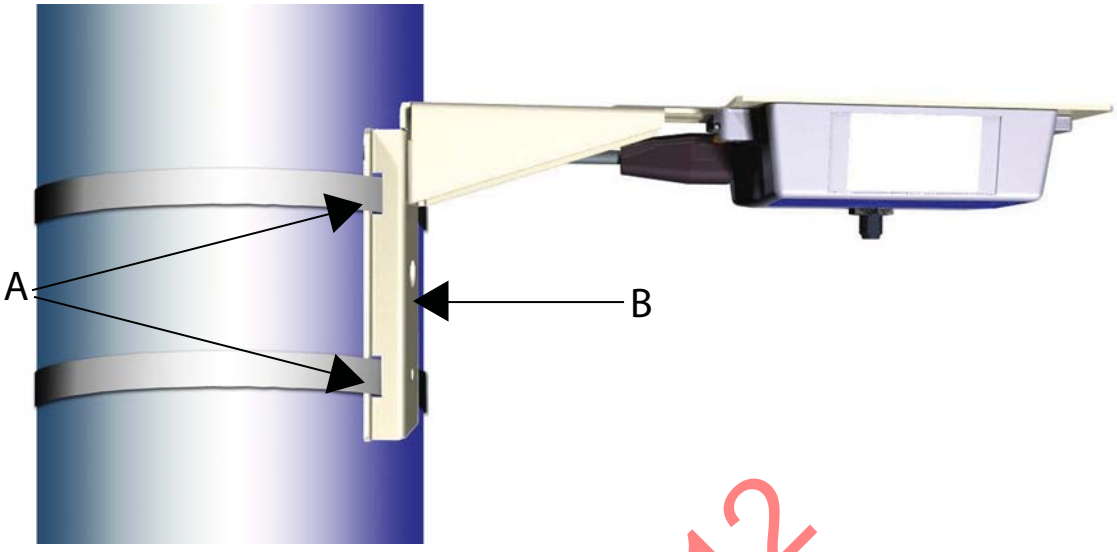

Figure 2 - 8. Steel Pole Mount

3. Hold the Extender and mounting brackets in place and tighten band clamps.
   - The Extender may be mounted with either an Up or Down antenna orientation to obtain the best communication path for your location.
4. Mount the optional power disconnect box on the pole with stainless steel band and brackets or non-corrosive bolts to tapped holes, according to local codes and best practices.
5. Attach the wires from the Extender to the screws on the terminal blocks inside the power disconnect box.
   - For any cables in an assembly, allow some slack to rest below metal parts. The slack is called a “drip loop”. With a drip loop, water from rain and condensation drips from the cable without damaging associated mechanical equipment.
6. With the power disconnect switch in the OFF (open) position, make the connection between the Extender, power disconnect switch, and power source according to local codes and best practices.
   - Installations where the power cable is wired directly to the power source must be sealed with waterproofing compound to prevent water ingress into the power cable.
7. Using UV stable tie wraps, secure the power cable to the pole.
   - Landis+Gyr recommends tie wraps that are 1/2” to 3/4” wide.
   - While securing the power cable to the pole, care must be taken to NOT DAMAGE the outer jacket of the power cable. A nick in the outer jacket will allow water to migrate inside the power disconnect switch and flood it.
   - Provide enough tension relief and a drip loop for the power cable.
8. Securely hand tighten the included antenna on the antenna mounting connector on the Extender.
   - The antenna should never be more than 10° off in any direction from being perpendicular to the ground.
   - If the Extender is mounted upside down (antenna up), always inspect and verify the presence of an O-ring on the antenna base. The O-ring is included with the antenna. Verify that the O-ring has no physical deformities that could compromise the water tight seal at the base of the antenna.

9. Connect the grounding wire, if required, to the pole ground or neutral ground as local code allows. If no ground wire is present, install a 8’ by 5/8” copper clad steel ground rod and connect with the proper clamp. Attach the ground wire to the pole with the proper staples and standard spacing.

A. Be sure to avoid right angle or sharp bends in routing the ground wire.

B. Bond this ground wire to the power neutral if local rules require.

10. Energize the Extender by moving the power disconnect to the ON (closed) position in the installed power disconnect box.

Streetlight Arm Mount Installation

VERIFY this street light has power 24/7 and is NOT remotely switched.

Mount Extender to Streetlight Bracket

The following procedure details Extender installation on a standard steetlight arm. Ensure that required tools and materials are on hand and available.

1. Attach the Extender to the streetlight mounting bracket.

A. Insert bolt (A), with a spring washer (B) and a flat washer (C) in the center hole of each side of the Extender and align to the holes in the mounting bracket (D).

B. Tighten the screws with a torque of 45 in. lb.

C. Insert the connector of the AC power cable (E) into the AC power socket (F). Be sure to push the connector all the way down until you feel a click which indicates the power cable is fully engaged.

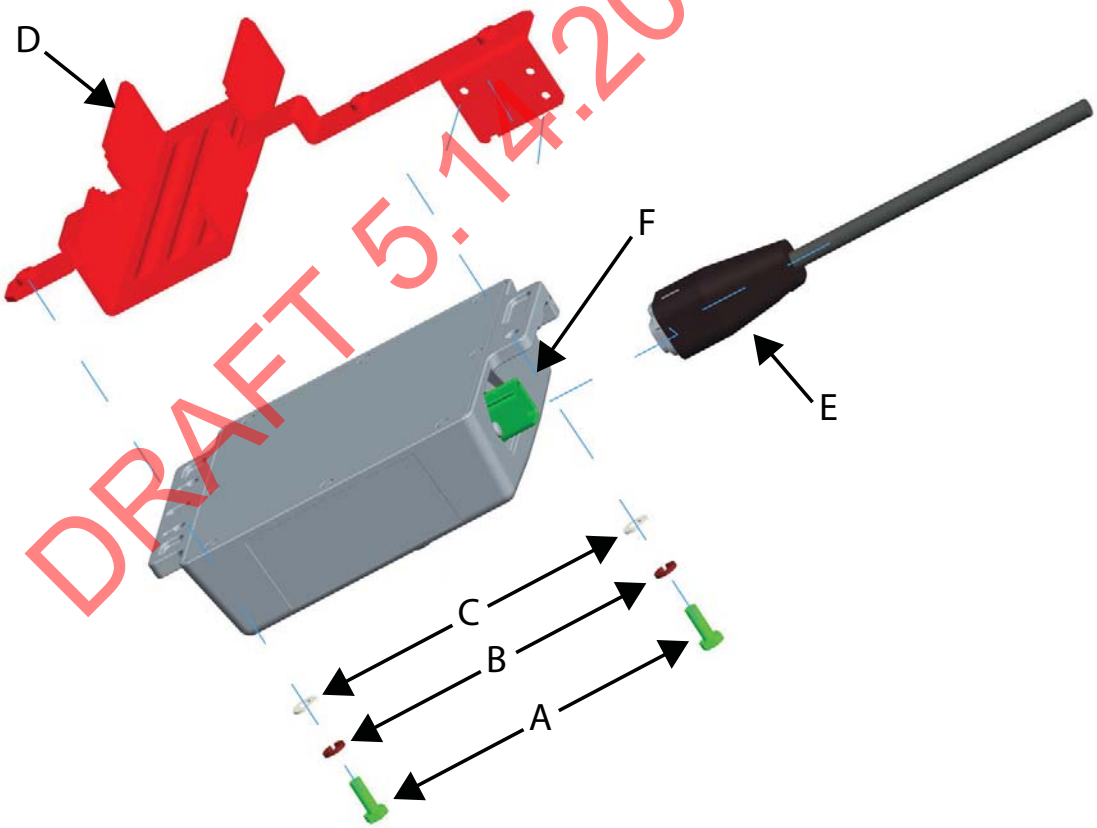

Figure 2 - 9. Mount to Streetlight Bracket

Mount on Streetlight Arm

The Extender may be mounted with either an Up or Down antenna orientation to obtain the best communication path for your location.

1. Attach the Extender to the streetlight arm.
   - **A.** Place the V-Bolt (A) over the streetlight arm and through the holes in the streetlight bracket.
   - **B.** Hold Extender in position and place washers (B) and nuts (C) on the threaded ends of the bolts and torque to 45 +/- 5 lbs.
   - **C.** Tighten the two tie wraps (D) to fix the power cable to the bracket, while making sure the cable is straight and not twisted up or down relative to its mating connector.
   - **D.** Securely hand tighten the included antenna (E) on the antenna mounting connector of the Extender.

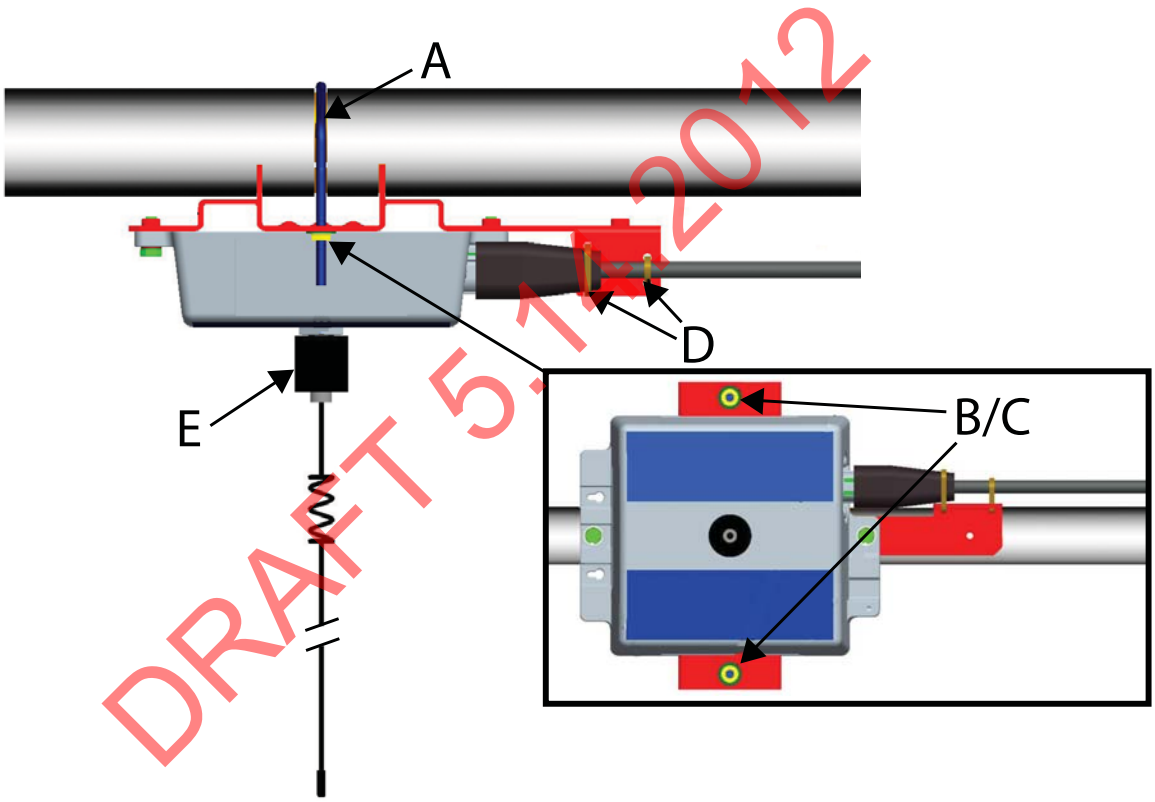

Figure 2 - 10. Mount to Streetlight Arm

NOTE: The antenna should never be more than 10° off in any direction from being perpendicular to the ground.

If the Extender is mounted upside down (antenna up), always inspect and verify the presence of an O-ring on the antenna base. The O-ring is included with the antenna. Verify that the O-ring has no physical deformities that could compromise the water tight seal at the base of the antenna.

2. To connect the adapter, remove the photocell on the existing light head.
3. Install the adapter.
4. Lock it into place by turning clockwise.

5. Re-install the photocell in the same manner.
6. Using UV stable tie wraps, secure the power cable to the light head.
   - Landis+Gyr recommends that tie wraps be the steroid version - about 1/2” to 3/4” wide and very thick.
   - While securing the power cable to the streetlight arm, care must be taken to NOT DAMAGE the outer jacket of the power cable. A nick in the outer jacket will allow water to migrate inside the Extender or the adapter.
   - Provide enough tension relief and a drip loop for the power cable.

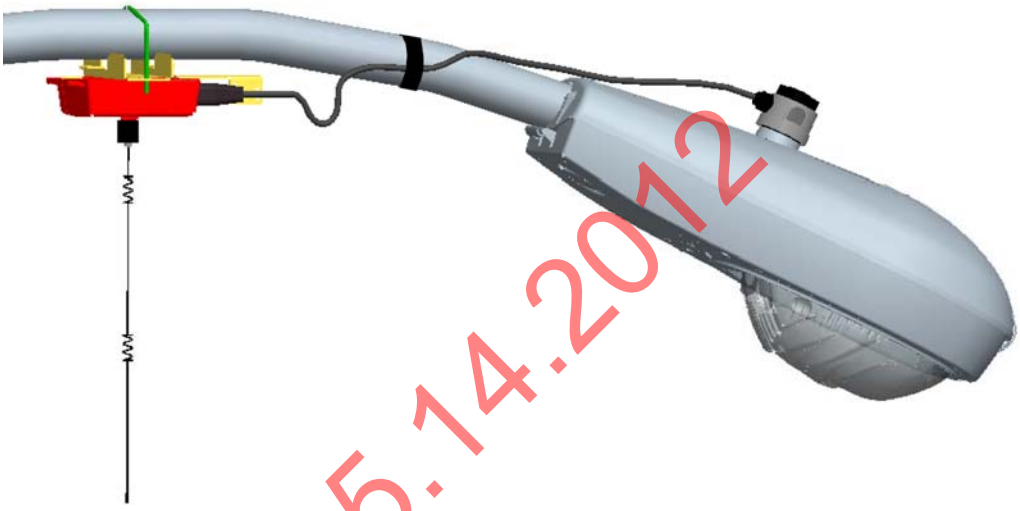

Figure 2 - 11. Extender Mounted on Streetlight Arm

Grounding (Optional)

If a ground wire is required for your installation, a 6 AWG solid copper wire is recommended.

1. Install a 6 AWG solid copper wire ground connector (A) by tightening the screw (B).
2. Insert the grounding wire (C) through the ground connector and into the small hole in the enclosure (D).
3. Insert and tighten the screw (E) to fix the wire as shown.
4. Tighten the set screw (F) on the ground connector.

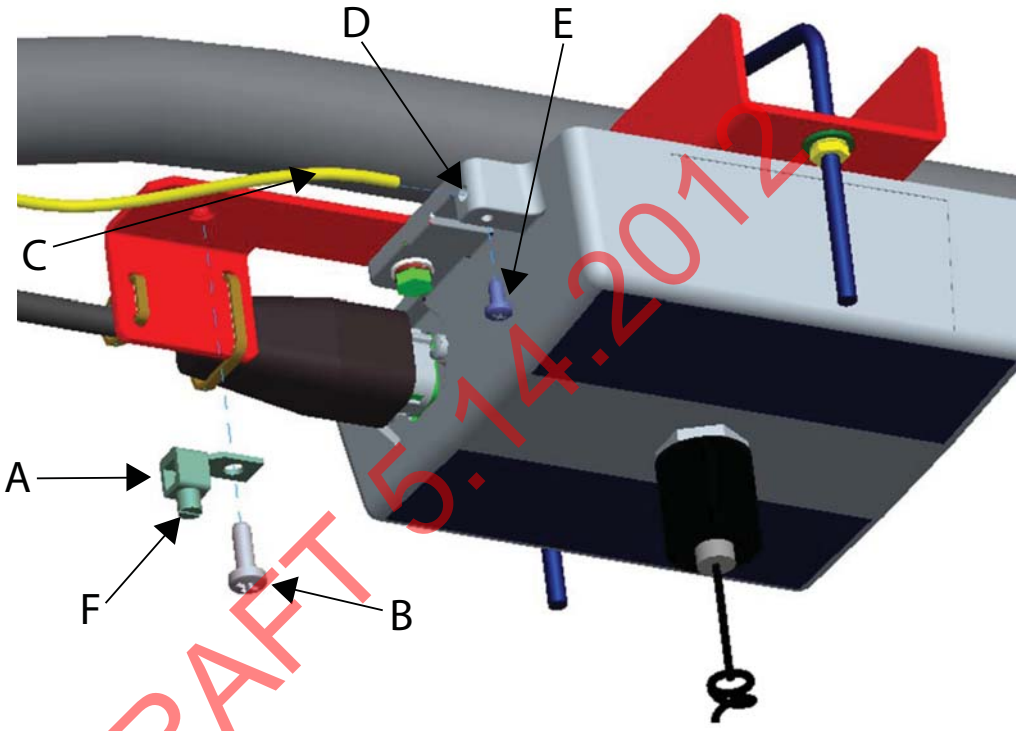

Figure 2 - 12. Attach Ground Wire

3

RadioShop and Endpoint Testing Manager (ETM)

Configuration Using RadioShop

Wireless Configuration

RadioShop 5.3 (or later), may be used for network configuration of the Extender.

After the Extender has been installed, you may use a computer to connect to a local head-end radio (IWR), which will then be used to communicate with the Extender over the air.

For further assistance on how to connect to your local head-end radio, please refer to the latest RadioShop user's manual.

Connect to Your Local Radio using RadioShop

Connect the LAN Packet Protocol port of your IWR to your computer's serial port using a serial cable. Once the radio is powered up, you can launch RadioShop on your computer. RadioShop will now connect to your local head-end radio (IWR).

1. Open RadioShop.
2. From RadioShop home select the **Head-End Mgmt** tab.
3. Click **Discover** > **Force Scan** > **Discover Entry Points**, or click **Start**.

NOTE: When the Select COM Ports for Discovery window opens, select the COM port on your computer that is connected to the radio, and then click **OK**.

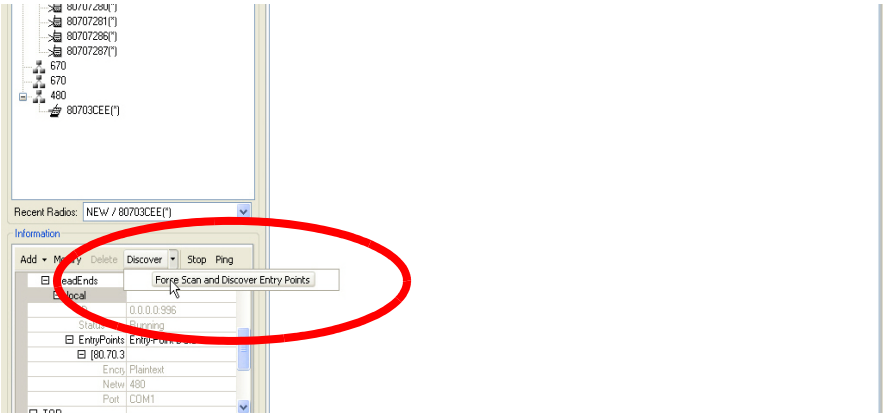

Figure 3 - 1. Connecting to Head-End Radio

4. Once connected, the local radio's LAN address will appear on the list at the top left-hand side of the screen, and a radio configuration report will be displayed in the main window.

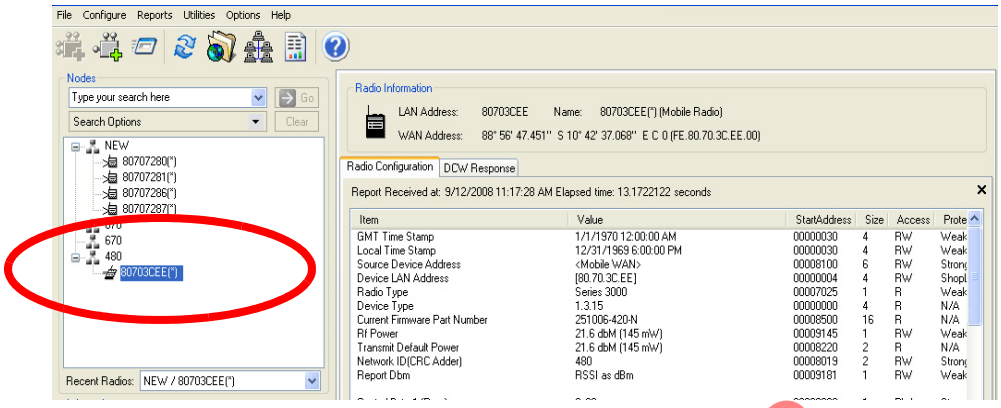

Figure 3 - 2. Local Radio LAN Address

5. If your Extender is new, you must make sure your Local Radio is on Network ID 670.

NOTE: In the example above, the Network Id of the Local Radio is 450. It must be changed to 670 to be able to communicate with a new Extender. If the Extender already has been assigned a network ID, the radio must be changed to match.

Configure Local Radio to Match the Extender Network ID

To change the Network ID of the Local Radio, perform the following steps.

NOTE: All Landis+Gyr Gridstream radios, including the Extender, ship with a default network ID, or CRC, of 670. In order to communicate with the new Extender, your local radio will have to be reconfigured to match the network ID (670) of the Extender. After reconfiguring the Extender to match the customer's unique network ID, the local radio will need to be reset to its original network ID.

1. Select **Configure** > **Change Network Id (CRC)...**, the Network ID Wizard is displayed.

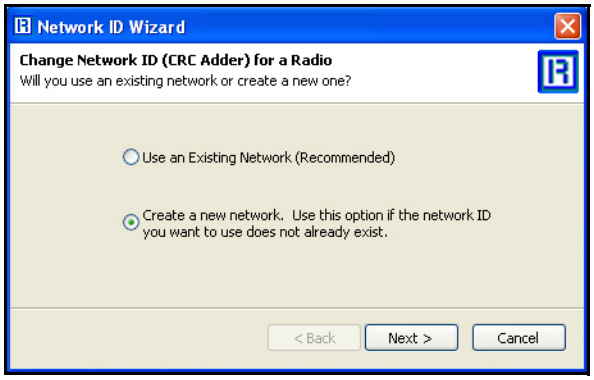

Figure 3 - 3. Specify New Network

2. Click **Next**.
3. Specify 670 or Extender's ID for both the Network ID and Name of the new network, and click **Next** to continue.

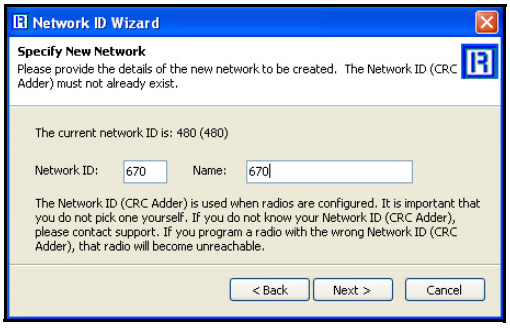

Figure 3 - 4. Network ID 670

4. The Final Confirmation window will open. Click **Next**.

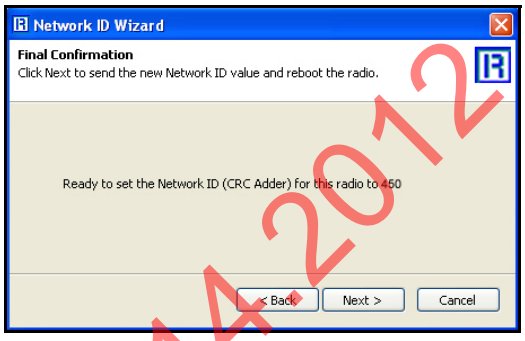

Figure 3 - 5. Final Confirmation Window

5. A confirmation message verifies that the new Network ID has been assigned to the radio. Click **Finish** to return to RadioShop.

Figure 3 - 6. Click Finish to Finalize Configuration

6. RadioShop will reboot your Local Radio and run another Radio Configuration Report.
7. Make sure the Network ID of your Local Radio has changed. If the Radio Configuration Report times out, run another one.

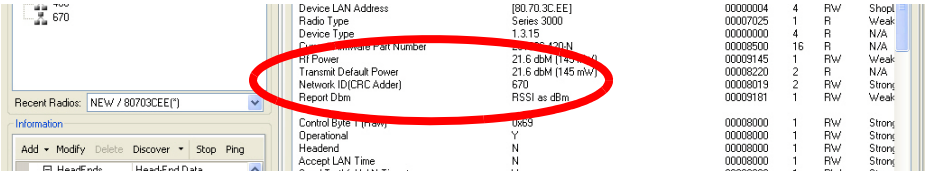

Figure 3 - 7. Network ID is Now 670

Adding New Radios to RadioShop

You can now add the Extender to the RadioShop database.

1. Make sure your local radio is highlighted on the Nodes Pane.
2. Click Generate WAN Nodes Report.
3. From RadioShop home click **Utilities** > **Radio** > **Discover Neighbors**.

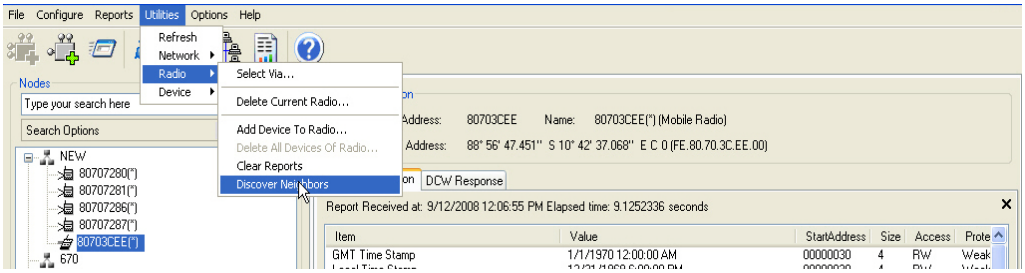

Figure 3 - 8. Discovering Neighbors

4. Once discovered, the Extender's LAN Address will show up on the Nodes pane.

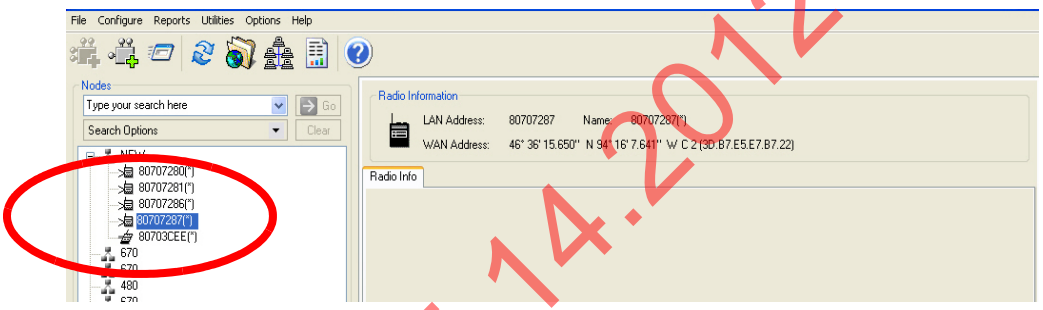

Figure 3 - 9. Extender Added to Nodes Pane

5. Highlight the new Extender, and click **Reports** > **Configuration** > **Radio** to verify that you can communicate with the Extender.

Locate your Extender using RadioShop

The Extender must be connected to power for configuration.

1. Click **Generate WAN Nodes Report** on the toolbar.
2. Right-Click your **Local Radio** and click **Discover Neighbors**.
3. Click your **Extender's LAN ID**.
4. Generate a Radio Configuration Report to make sure that you can communicate with your Extender.

Using ETM

If someone could tell me what ETM is used for regarding this product, I can probably find the appropriate content.

4

Extender Configuration in Command Center

Overview

Similar to endpoints, Extenders will auto-register to Command Center. After the Extender has been installed, it will attempt to auto register. For the Extender auto registration to complete successfully, the following prerequisites must be observed.

- Correct Network ID must be coded into the Extender
- The Extender must be in Operational Mode
- The Extender must be loaded with Firmware version 4.0a .11 or later
- No WAN Address loaded into the Extender
- No GEO coordinates (LAT/LONG), loaded into the Extender

To complete the auto-registration process, a Meter Manufacturer File (MMF) must be imported into Command Center.

Importing Extenders into Command Center

Meter Manufacturer File

The Meter Manufacturer File provides Command Center with information on the Extender ID and the module serial number. This file is not currently provided at the time the Extenders are purchased, and must be created using the MMF.csv template.

Create a Meter Manufacturer Data File

1. Click **Operations** > **Import** > **Meter Manufacturer Data** to display the Import Meter Manufacturer Data screen shown in Figure 4 - 1.

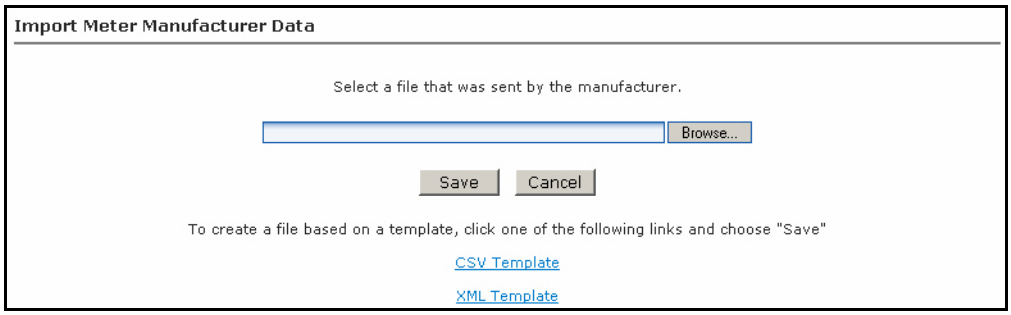

Figure 4 - 1. Import Meter Manufacturer Data

2. Click the **CSV Template** link.
3. Select **Save** and designate the file location.
4. Open up the saved **.CSV** file with Microsoft Excel.
5. Fill in the columns with the appropriate data. Each row in the document represents one Extender (or Endpoint) and should only contain data related to that specific unit. Required fields are Customer Number and AMR Serial Number.
6. Click the **Save** button and close your file.

Import the Meter Manufacturer File

1. Click **Operations** > **Import** > **Meter Manufacturer Data** to display the Import Meter Manufacturer Data screen.
2. Click the **Browse** button to navigate to, and select, the file that you just created.
3. Click the **Save** button to import the file into the database.

   The Meter Manufacturer Data Import (Upload Complete) window will appear displaying the Error Summary (if applicable) and Successful Entries. Figure 4 - 2

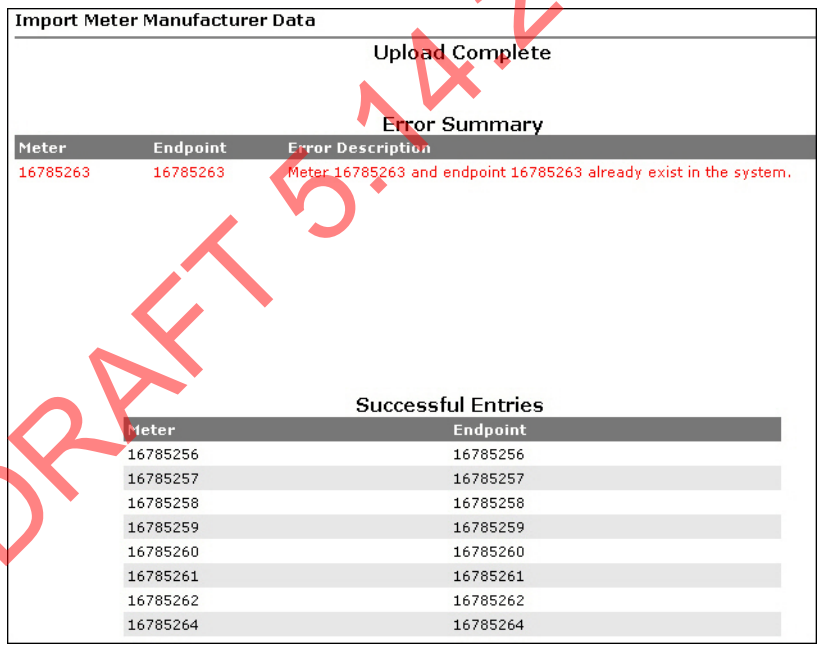

Figure 4 - 2. Upload Complete Window

4. Successful entries will be added to inventory and will be displayed on the dashboard as Inventory status.

Generating the Import Installation File (IIF) - Optional

When a Extender has been physically installed in the field, certain data may be reported back to the Command Center staff in order to generate the IIF. The IIF is not required when deploying a layered network, but provides useful data for monitoring deployments.

Create an Import Installation File

Following is the procedure to create An Import Installation File.

1. From Command Center home, select **Operations** > **Import** > **Import Installation File**.

   The Import Installation File window will open.

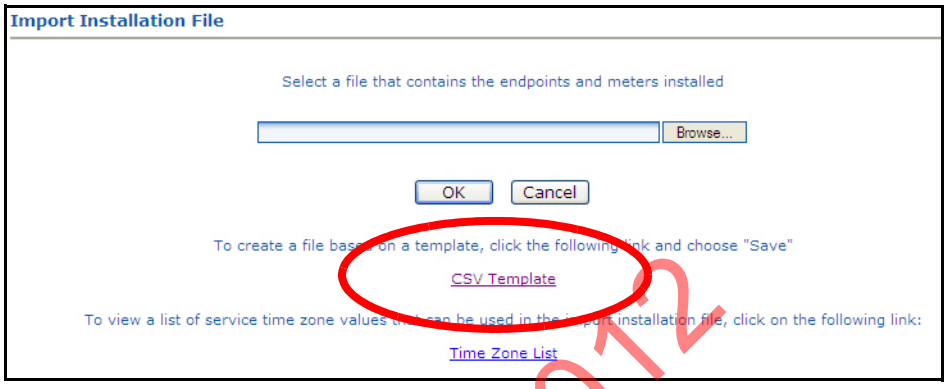

Figure 4 - 3. Import Installation Window

2. Click the **CSV Template** link.
3. Select **Save** and designate the file location.
4. Open up the saved **.CSV** file with Microsoft Excel.
5. Fill in the columns with the appropriate data. Each row in the document represents one Extender (or Endpoint) and should only contain data related to that specific unit.

CSV File Fields

Table 4-1.

Data	Format	Format/Description
User ID*	AlphaNum (30)	Login assigned by the utility for the installer. Utility may elect to use “1” for System usage
Installation Date*	Date MM/DD/YYYY 12/26/2009	Actual date the meter was installed. This date is used in various Command Center reports to track deployment statistics.
Installation Time*	Time HHMM AM/PM 11:12 AM	Actual time the meter was installed. This date is used in various Command Center Reports to track deployment statistics.
Change Out meter number	AlphaNum (20)	The meter being replaced with a new meter. Meter change out information is displayed in the notes section of the endpoint information screen.
Change Out meter kWh	AlphaNum (20)	The kWh reading on the meter being replaced Meter change out kWh information is displayed in the notes section of the endpoint information screen. Variable Character

Table 4-1.

Data	Format	Format/Description
Installed Meter Number*	AlphaNum (20)	Meter number of the new meter being installed. This meter must exist in Command Center prior to importing the Import Installation File. Must parse to Decimal format
Installed Endpoint Serial Number*	Decimal (9)	The serial number of the new meter being installed. Note: Endpoint serial numbers must be converted from Hex to Decimal.
Installed Meter kWh	Decimal (9)	Initial reading of the new meter.
Service Latitude	Decimal (12,8)	GPS latitude
Service Longitude	Decimal (12,8)	GPS longitude.
Service Location	AlphaNum (100)	Meter service location.
Service Time Zone*	See formatting below.	The service time zone may be entered to specify the correct time zone for the service location.

WARNING: Required fields are UserID, Installed Date, InstalledTime, InstalledMeterNo, and InstalledEndpointSN, Time Zone. If these fields are not populated, the file will not be processed. For geo-coded routing Latitude, Longitude and Service Location are required. Service Location is required if the Latitude and Longitude fields are populated. Command Center will ignore the latitude and longitude values if Service Location is not provided.

Importing the IIF

After the IIF has been created and saved, it must be imported into Command Center.

1. From Command Center home, select **Operations** > **Import** > **Import Installation File**.

   The Import Installation File window will open.

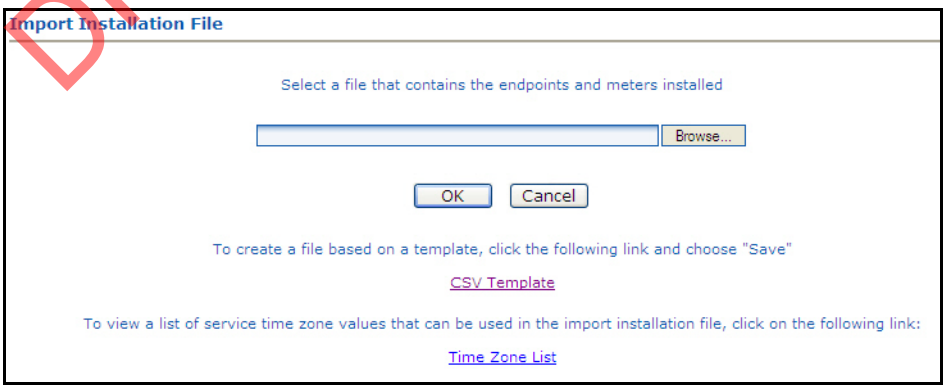

Figure 4 - 4. Import Installation File Window

2. Enter the path to the location of the **Import Installation File** created earlier.

...or...

3. Click the **Browse** button to navigate to the location of the desired file.

4. Click **Save** to upload the file.
5. The Extender described in the IIF should now appear in Command Center. The Extender should display the data entered for it and have the status 'Installed'.

Time Zone

In order to report readings time correctly, the Extender must be programmed with the appropriate time zone. This is achieved by sending commands to the Extender that indicates the time zone in which the endpoint is installed and whether Daylight Savings Time (DST) is observed in the given time zone.

The meter installer should include the endpoint time zone in the Installation File. To make it easy for installers to specify a time zone, the Time Zone List link will open a document that displays a list of valid time zone designations by country.

1. From Command Center home, select **Operations** > **Import** > **Import Installation File**.

   The Import Installation File window will open.

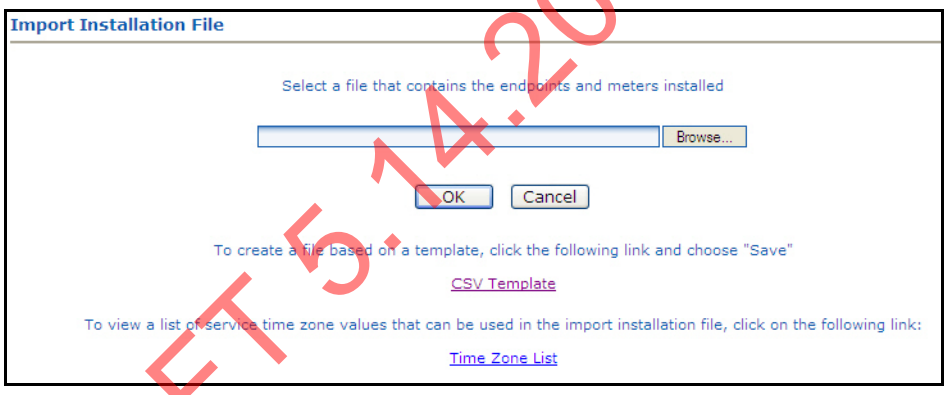

Figure 4 - 5. Import Installation File Window

2. Click on the **Time Zone List** Link. The TimeZonesForInstallation window will open.

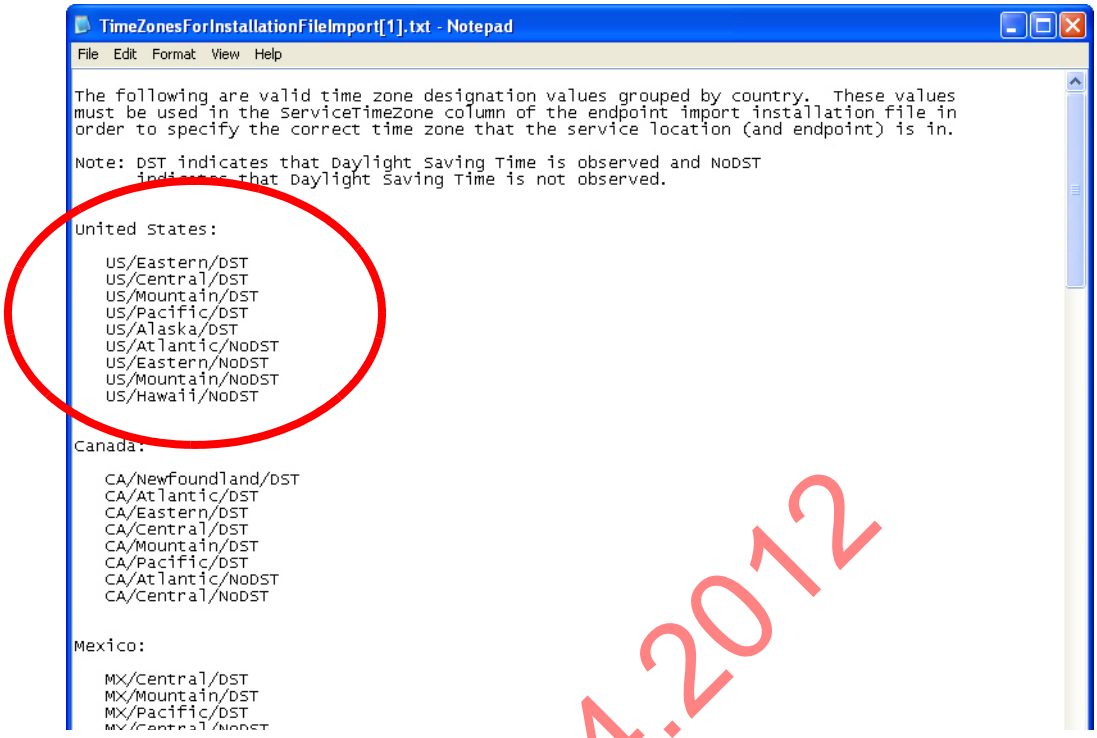

Figure 4 - 6. Time Zone List

3. Note the correct Time Zone Value for your IIF.

Extender Management

The RF Mesh Endpoint Information screen will also provide information about the Extenders and Mesh Extenders in the utility's RF Mesh system. This screen summarizes information about a selected Extender and provides an interface for sending commands to the Extender.

Following is the procedure to view Gridstream RF Endpoint Information for a Extender from main Command Center screen:

1. From Command Center home, select **Operations** > **Endpoints**. The Endpoint/Meter Selection window will open.

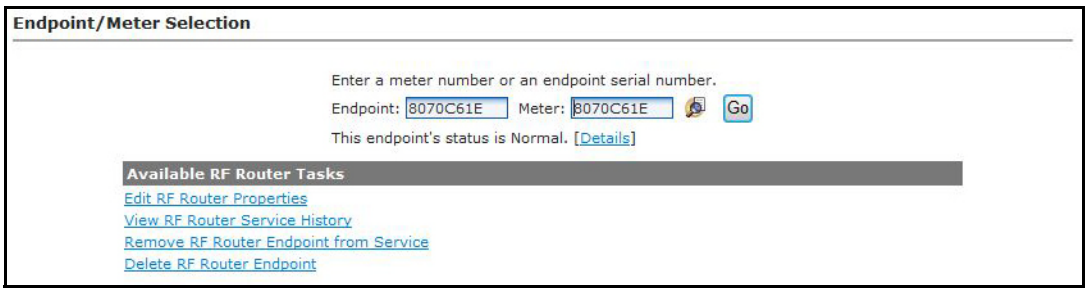

Figure 4 - 7. Endpoint/Meter Selection

2. Enter the Extender **Serial Number** or **Meter Number**
3. Click **Go**. The Endpoint/Meter Selection screen will refresh and display tasks available for the Extender.

4. Click the **Details** link. The Gridstream RF Endpoint Information Screen will open for the Extender, shown in Figure 4 - 8

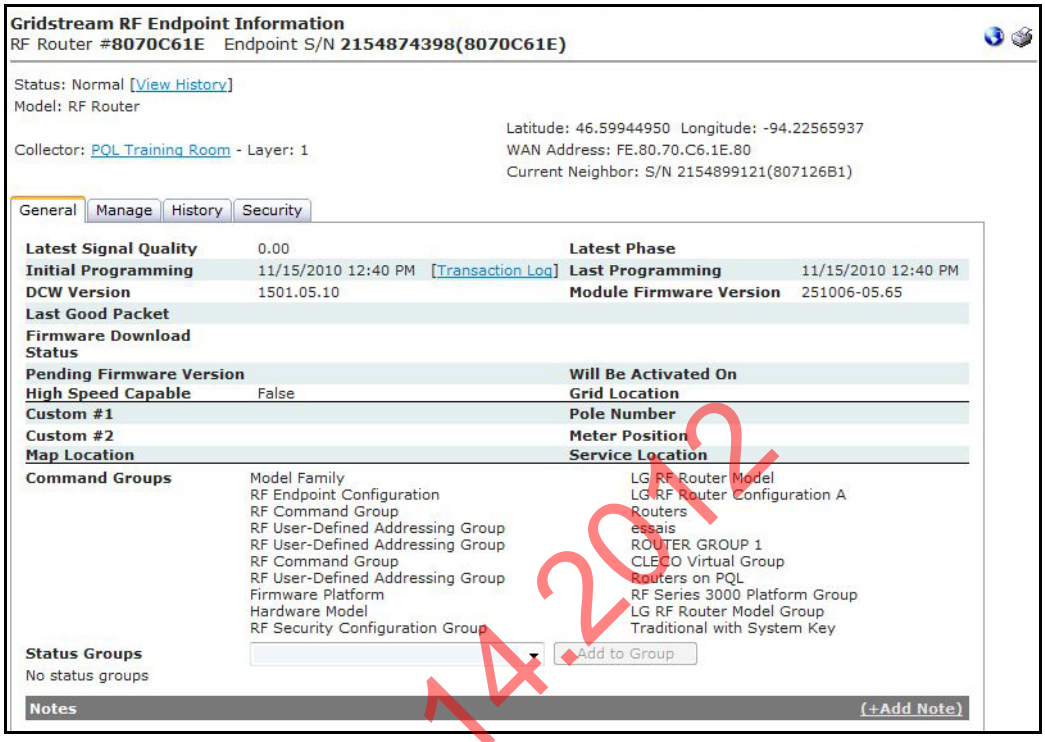

Figure 4 - 8. Gridstream RF Endpoint Information

The following information is displayed:

- **Status**. Displays the current status of the Extender. Select the View History link to see the Status Changes window.
- **Model**. Displays the model type.
- **Collector**. Displays the name of the collector the Extender has most recently used for communication. Select the Collector link to view the Collector screen.
- **Latitude/Longitude**. Displays the latitude and longitude of the endpoint.
- **WAN Address**. Displays the mobile WAN address assigned to the Extender.

The following tabs are available:

- **General**. The General Settings screen displays the endpoint's current settings.
- **Manage**. The Manage screen allows the user to issue commands to the current Extender, as well as, view commands previously issued.
- **History**. The History screen displays history of commands, events and errors logged by the Extender.
- **Security**. The Security tab will be displayed to only the users with security permissions.

General Settings Tab

Figure 4 - 9. General Settings Tab

The General Settings tab displays current Extender settings. Data displayed includes:

- **Latest Signal Quality**. N/A
- **Latest Phase**. N/A
- **Initial Programming**. Indicates the date the Extender was originally programmed and deployed in the field.
- **Last Programming**. Displays the last date the Extender was programmed.
- **Last Good Packet**. Indicates the date of the last good packet received from this Extender.
- **Firmware download status**: This will display the progress of a new firmware download.
- **Pending Firmware Version**. Indicates the firmware version currently queued for download to the Extender.
- **Will be active on**. Indicates the date the pending firmware version will be downloaded to the Extender.
- **Grid Location**. Displays the Extender's grid location (if applicable).
- **Pole Number**. Displays the Extender's pole number (if applicable).
- **Meter Position**. Displays the Extender's position (if applicable)
- **Custom #1**. User defined data field (if applicable)
- **Custom #2**. User defined data field (if applicable)
- **Service Location**. Displays the Extender's service location number (if applicable).
- **Command Groups**. Displays the Extenders command group membership. A Extender may be a member of 8 command groups.
- **Notes**. Lists notes entered by the user.

Manage Tab

The Manage screen, allows the user to issue commands to the current Extender, as well as, view commands previously issued.

The following commands may be issued to the Extender:

- **Ping**. This command returns a basic response from the Extender. This command is useful in determining if communication is available to the Extender via the mesh network.
- **Get Network Stats**. The Get Network Stats command response. provides useful diagnostic information on how the Extender is performing within the network.
- **Get Endpoint Info**. The Get Endpoint Information command will provide firmware and DCW versions.
- **Get WAN Node List**. The Get WAN Node List command response, shown in Figure 4 - 10, displays the total number of devices communicating with this Extender, and details of the top ten devices. This provides useful information for determining how the Extender is functioning within the mesh.

Figure 4 - 10. Get WAN Nodes List command response

- **Set WAN Address**. This command allows the utility to set the WAN address (latitude and longitude) of the Extender.
- **Endpoint Firmware Download**. This commands allows the user to select the desired firmware to be downloaded. The user may also choose to immediately download the firmware or specify an activation date, as shown in Figure 4 - 11.

Figure 4 - 11. Endpoint Firmware Download command

- **DCW Download**. This command allows the utility to send a selected DCW to the Extender.

History Tab

The History Tab, shown in Figure 4 - 12, provides a list of the events and errors that have been logged by this Extender.

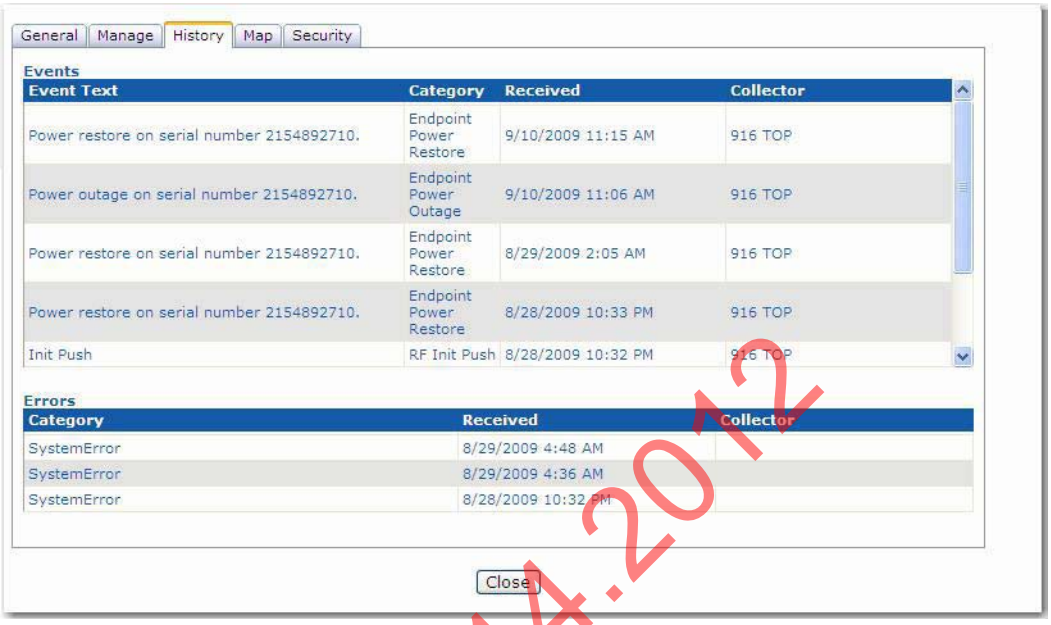

Figure 4 - 12. Extender History tab

Remove Extender from Command Center

This function allows the user to remove a deployed Extender from service. The removed Extender can either be put back into inventory or archived.

1. From Command Center, select **Operations** > **Endpoints**. The Endpoint/Meter Selection window will open.
2. Enter the Extender serial number in the Endpoint field.
3. Click **GO**. The Available Tasks list will appear.

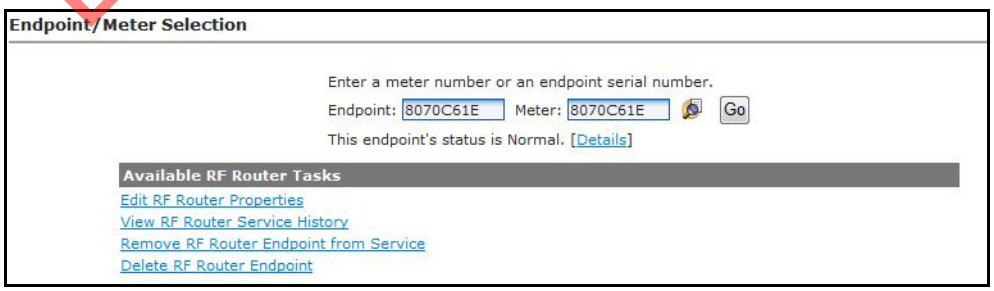

Figure 4 - 13. Endpoint Meter/Selection Available Tasks

4. From the Available Tasks, select the **Remove Endpoint** from Service link. The Remove Endpoint From Service window will open.

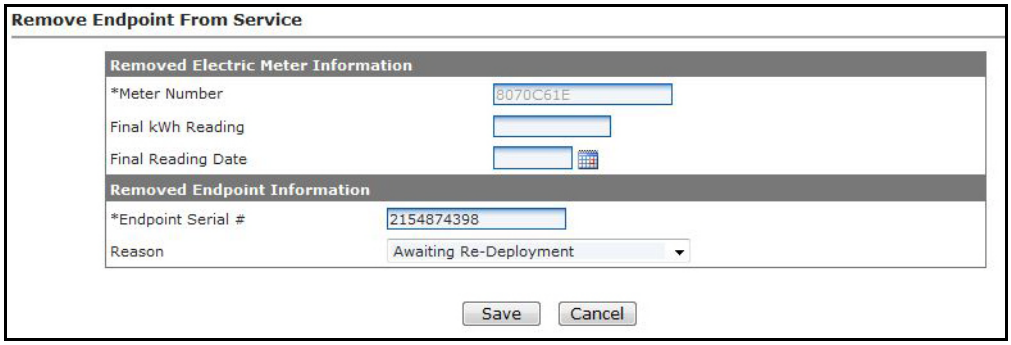

Figure 4 - 14. Remove Endpoint From Service

5. Enter Removed Electric Meter Information:
   - **A. Enter the Final kWh Reading**. N/A.
   - **B. Enter the Final Reading Date**. N/A.
   - **C. Enter Removed Endpoint Information**. Select a reason for the removal from the drop down list box.
   - **D. Awaiting Redeployment**. This option will transition the endpoint to Inventory status.
   - **E. Permanently Remove From Service**. This option will archive the endpoint. An endpoint in archived status will not be included in any Command Center reports.
6. Click **Save** to save changes. A message indicating the success or failure of the removal will be displayed.

5

Product Specifications

Series IV Mesh Extender Specifications

Electrical	Voltage	120-277 VAC	
Transmitter	**Frequency (MHz)**	**Condition**	**Specification**
RF Output, Minimum	902-928	Referenced to Antenna Input, CW conducted power at the N connector	+27.5 dBm
RF Output, Typical			+29.81 dBm
Frequency Range	f0		902.2~927.9 MHz
Frequency Deviation			+/- 4.95 to +/-57.6 kHz, depending on data rate
Output Impedance			50 ohms
Frequency Stability		-40C~+85C	f0 +/-3ppm
Receiver			
Data Rates	9.6, 19.2, 38.4, 115.2 kbps		
Frequency Stability	-40C ~ +85C		f0 +/- 3ppm
Receiver Sensitivity	9.6 kbps	-110 dBm typ / -107 dBm min	
	19.2 kbps	-108 dBm typ / -105 dBm min	
	38.4 kbps	-105 dBm typ / -102 dBm min	
	115.2 kbps	-100 dBm typ / -97 dBm min	
IIP3	915		>-30 dBm
Adjacent Channel Rejection			>35 dB
Worst Case Image Rejection			>20 dB
Standards Compliance	FCC Title 47 CFR Part 15.247	Radio Frequency Devices, Subparts A - General and B - Unintentional Radiators	
SUN Mode			50kbps

Environmental	General Environmental	Outdoor, rain-protected, sunlight-exposed
	Operating Temperature Range	-40 to +85C
	Storage Temperature Range	-40 to +85C
	Humidity	0 to 95% relative humidity, non-condensing
Mechanical	Size	8.75 x 7 x 2.25 inches, typical
	Weight	2.8 lbs., typical
	Enclosure Material/Type	Aluminum/NEMA-4
	Color	Gray
	Mounting Options	Wood pole, Metal pole, Streetlight arm

Technical Support

Landis+Gyr has a team of professionals who are full-time experts on our products. They work hard to find you answers quickly and provide you with the best technical solutions available.

How to Contact Us

Assistance can be obtained using any of the following methods.

- Technical Support toll-free hotline at: 1-888-390-5733
- Email: solutionsupport.na@landisgyr.com
- Internet: www.landisgyr.com

Troubleshooting

The Extender has been designed as a field replaceable unit. As such, there are no serviceable parts in the unit.

If you suspect parts within the Extender have failed:

1. Perform a visual inspection to determine if there are any indications of damage to the unit.
2. Verify that AC power is being supplied to the unit. If there is power then proceed to step 3.
3. Try to connect with a locally connected IWR configured the same Network ID as the Extender. If after 5 minutes, the locally connected IWR does not acquire the Extender in its neighbors list, the Extender should be replaced.

For additional assistance for this product, contact Technical Support.